WALKING BRICK

13041

374+PCS/PZS



R/C REMOTE CONTROL

OPEN



Qr code APP (APP二维码)

Need the apple version 9.0 and above,the android version 5.0 and above.

* This APP supports most of the mainstream Android models on the market, but due to the large number of Android models, different models of systems and hardware reasons, there may be some models do not support, specificaccording to the actual test!

宇 星 模 王

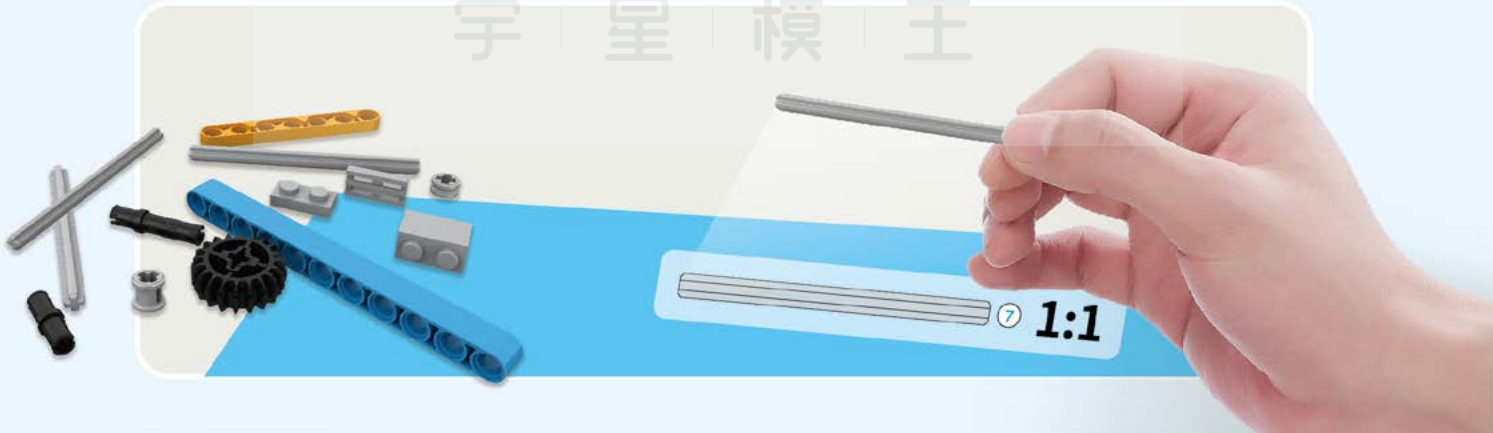

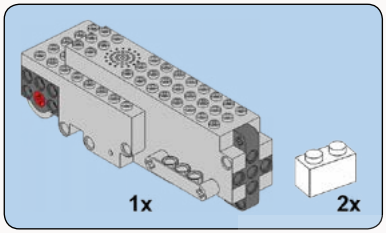

1

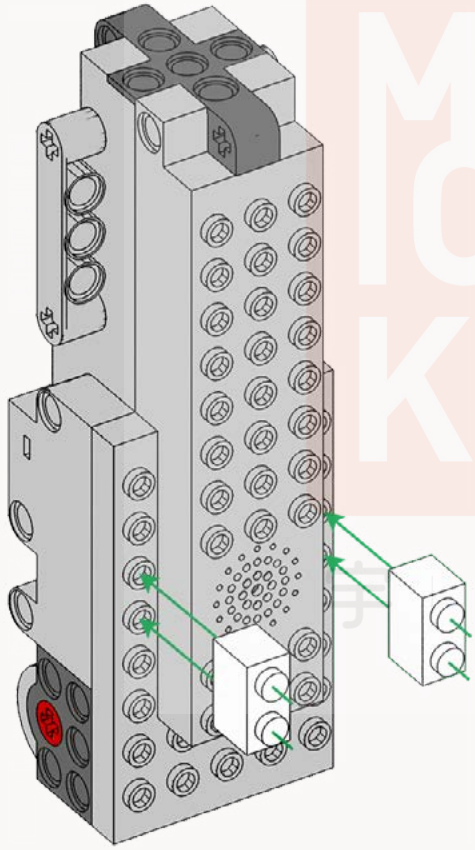

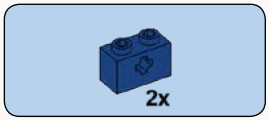

2

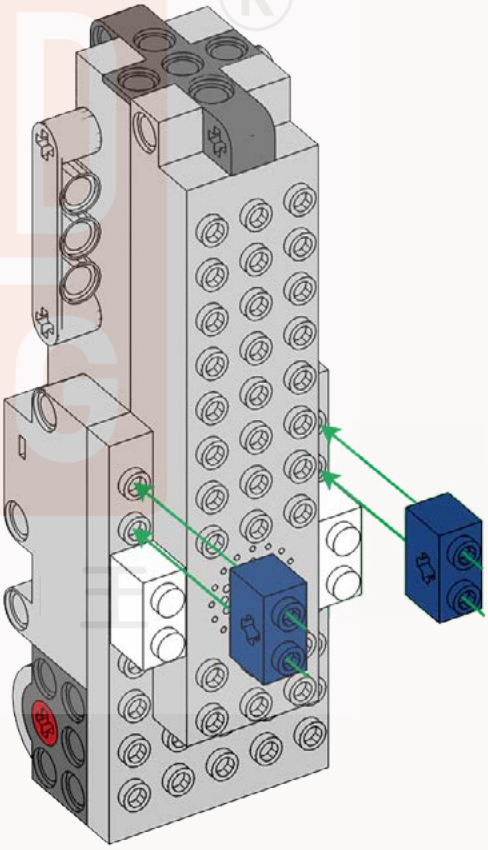

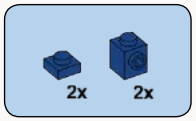

3

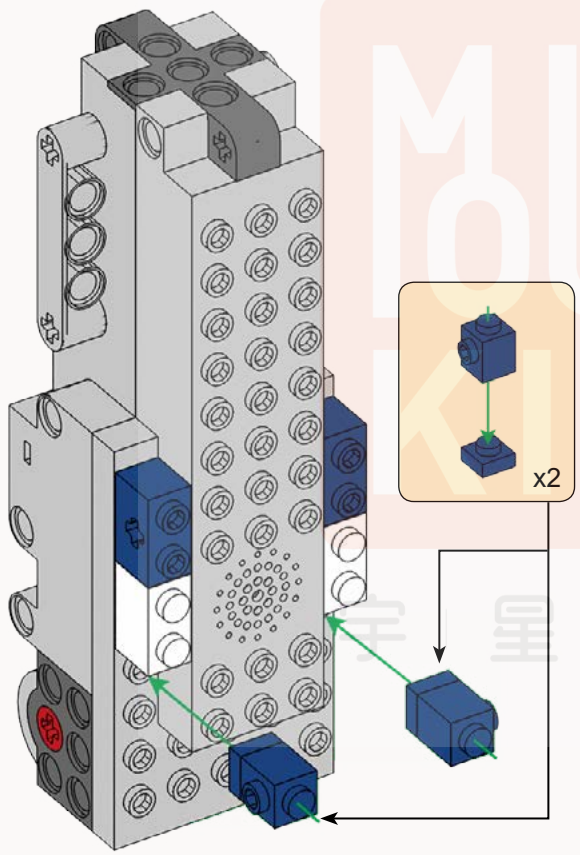

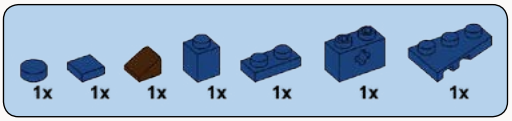

4

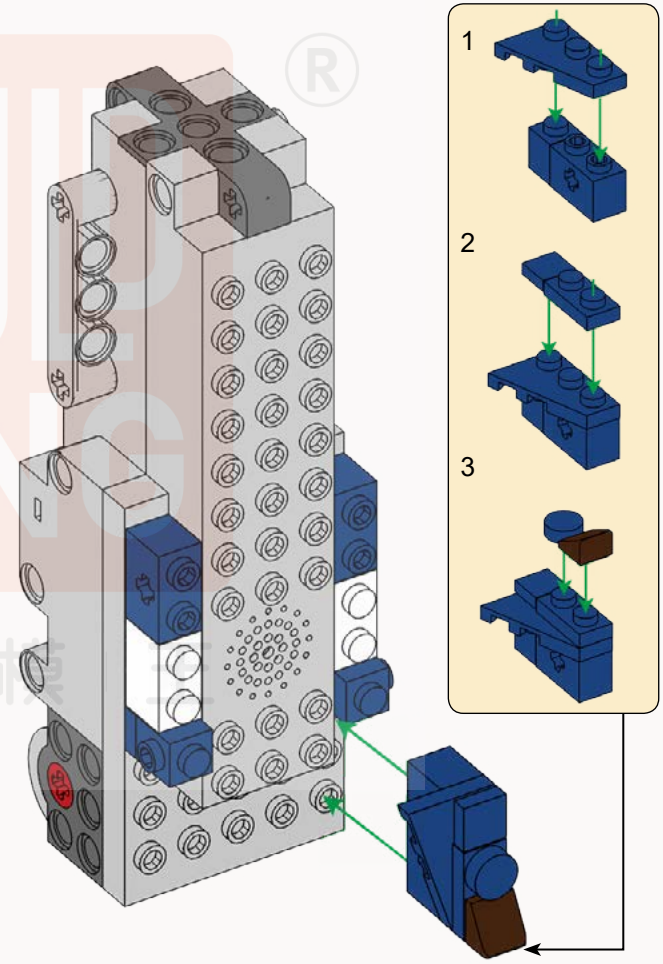

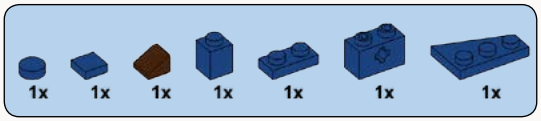

5

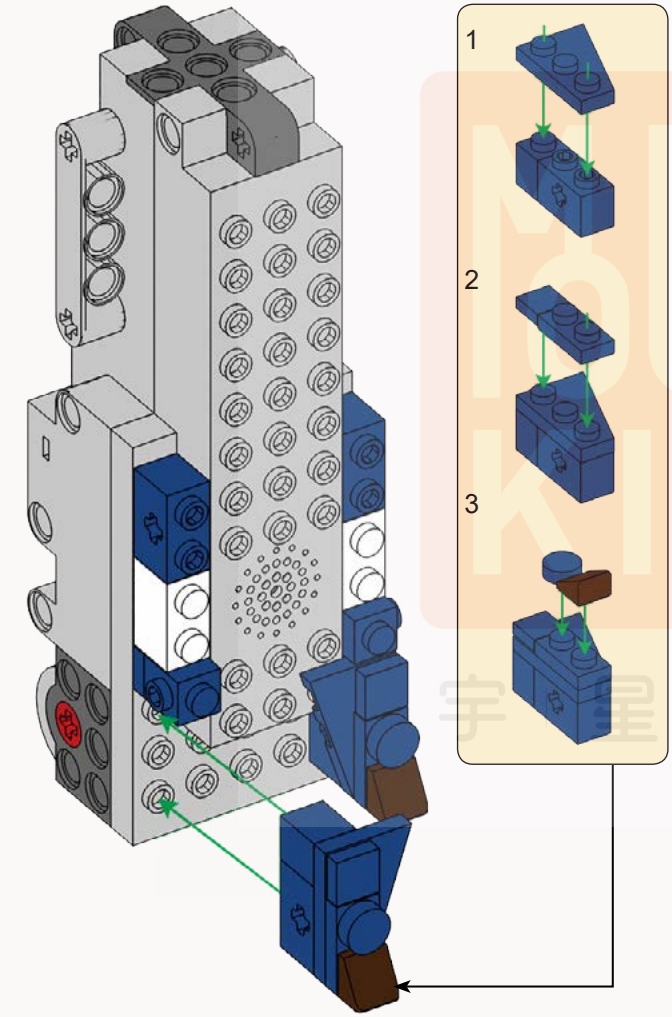

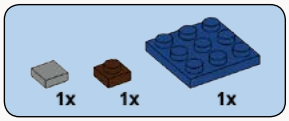

6

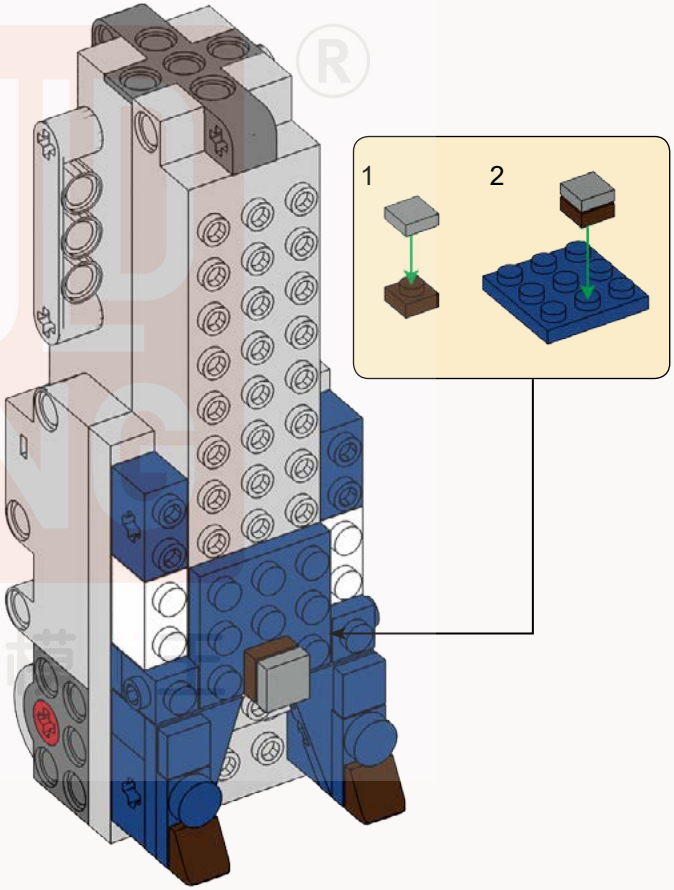

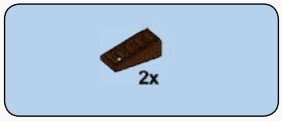

7

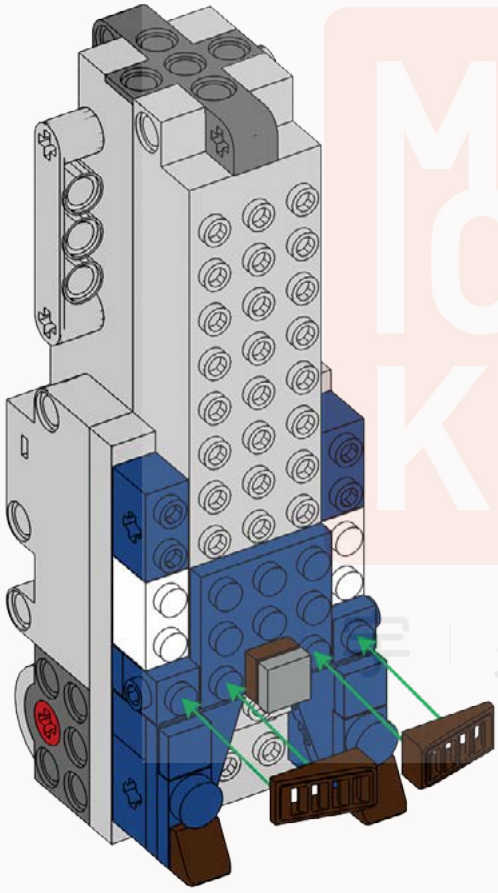

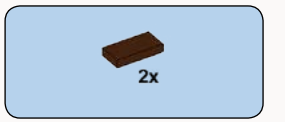

8

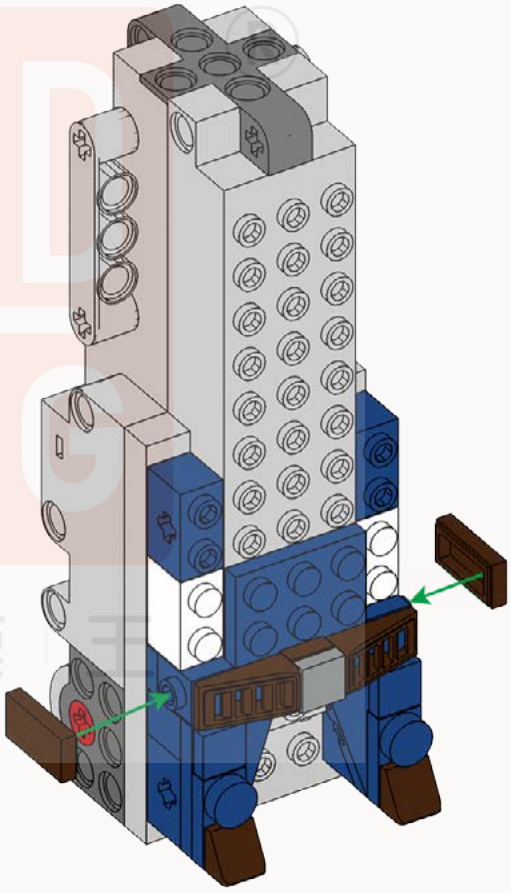

MOULD KING
宇星模王

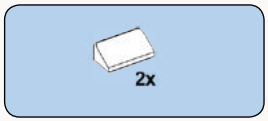

9

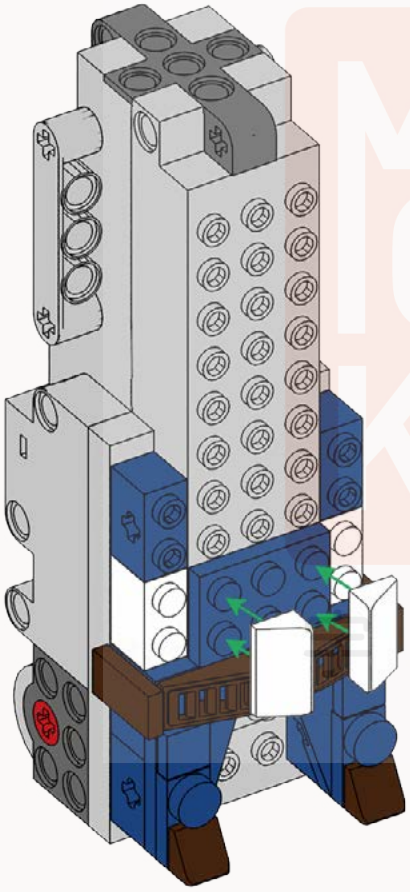

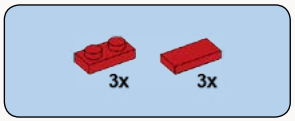

10

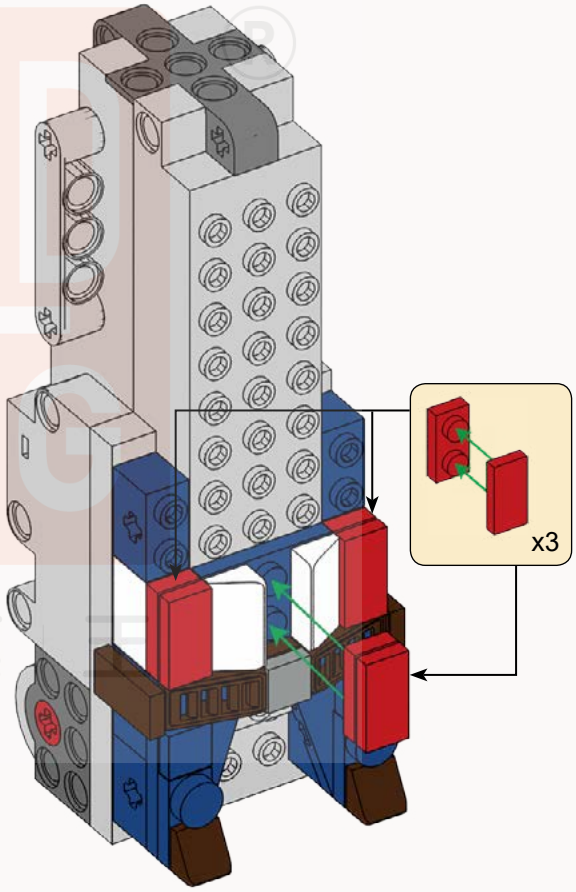

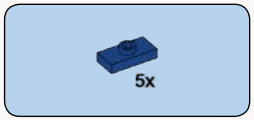

11

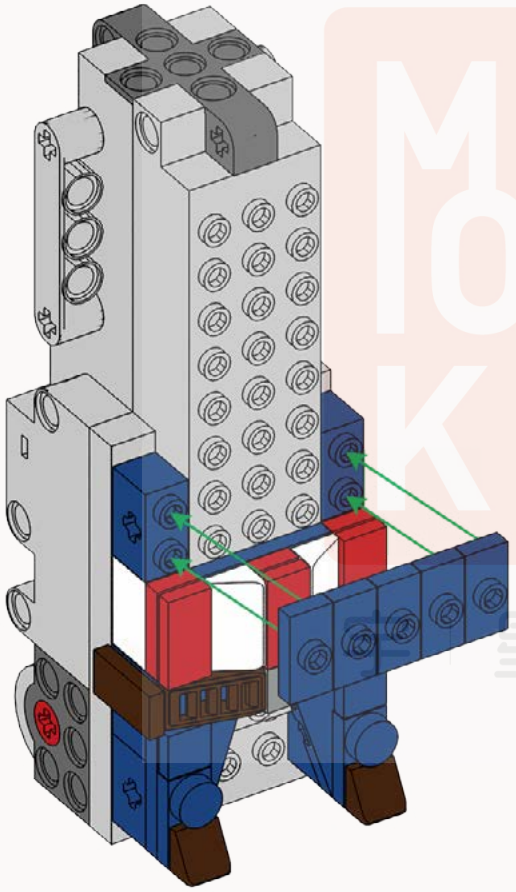

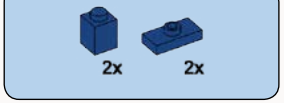

12

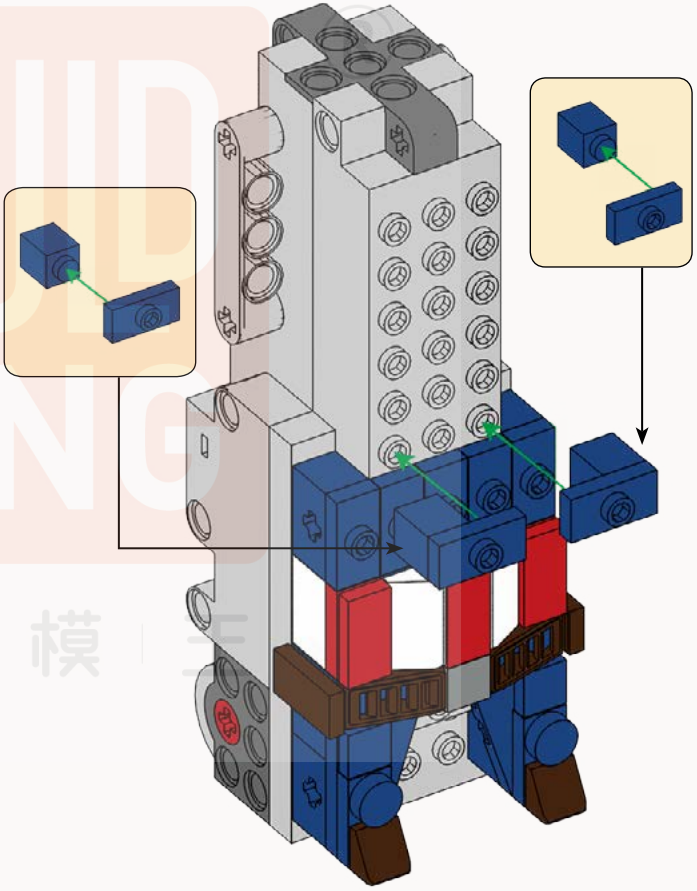

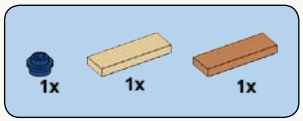

13

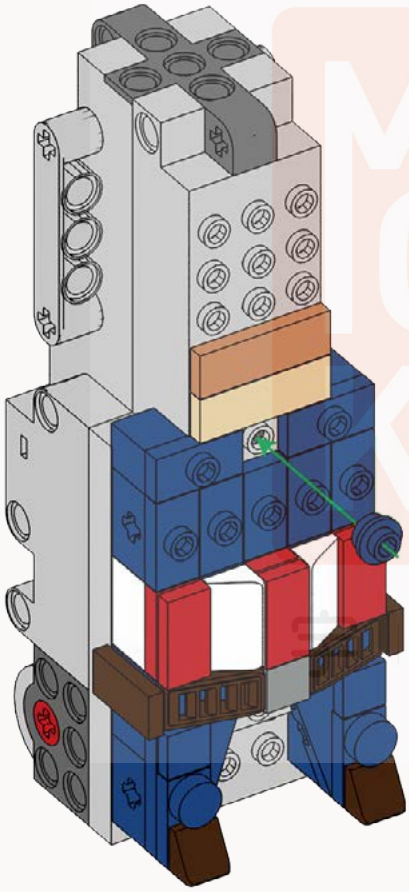

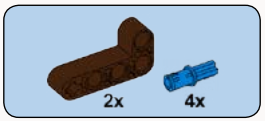

14

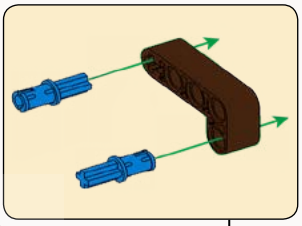

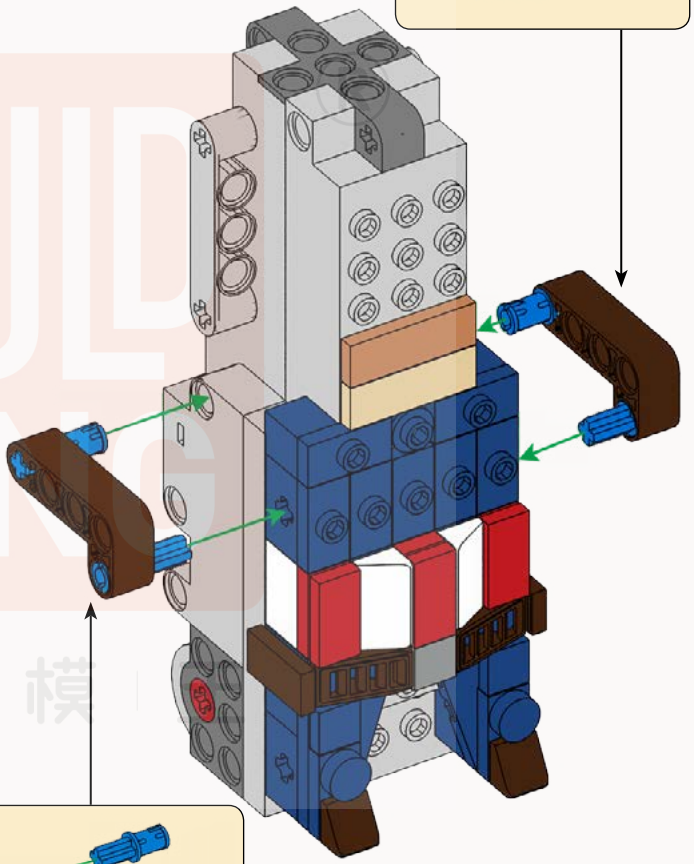

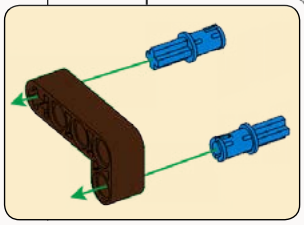

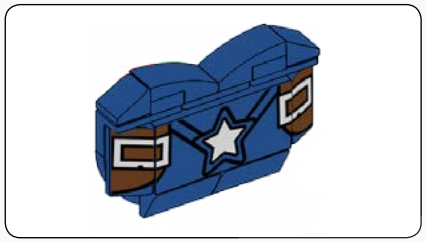

15

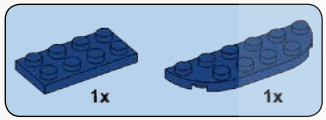

1

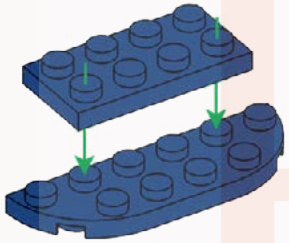

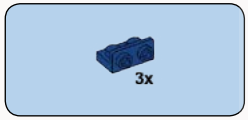

2

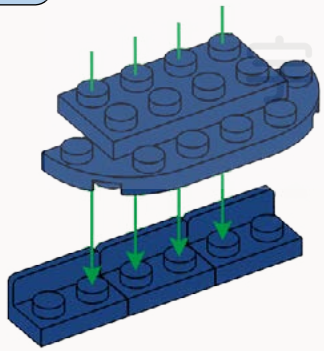

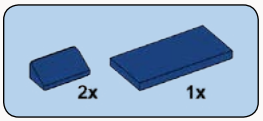

3

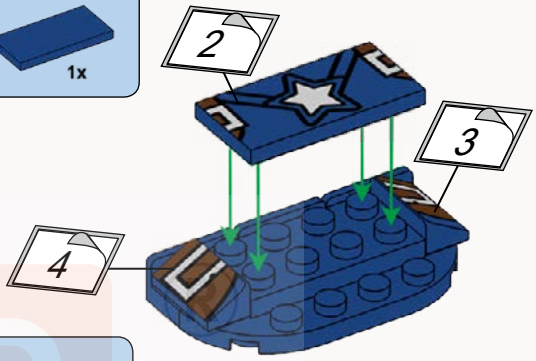



4

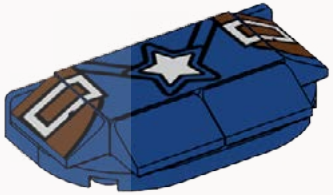

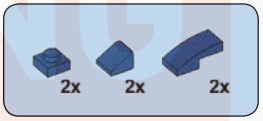

5

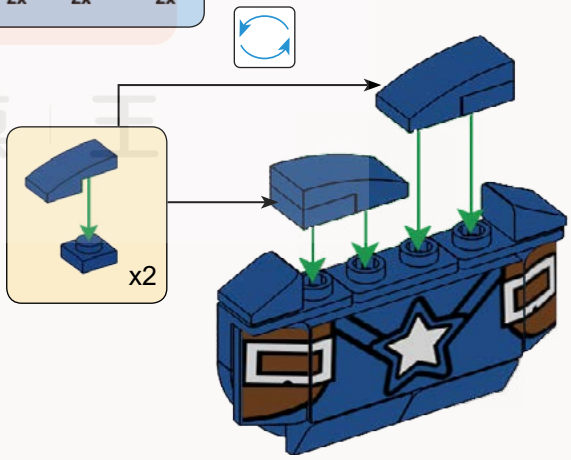

16

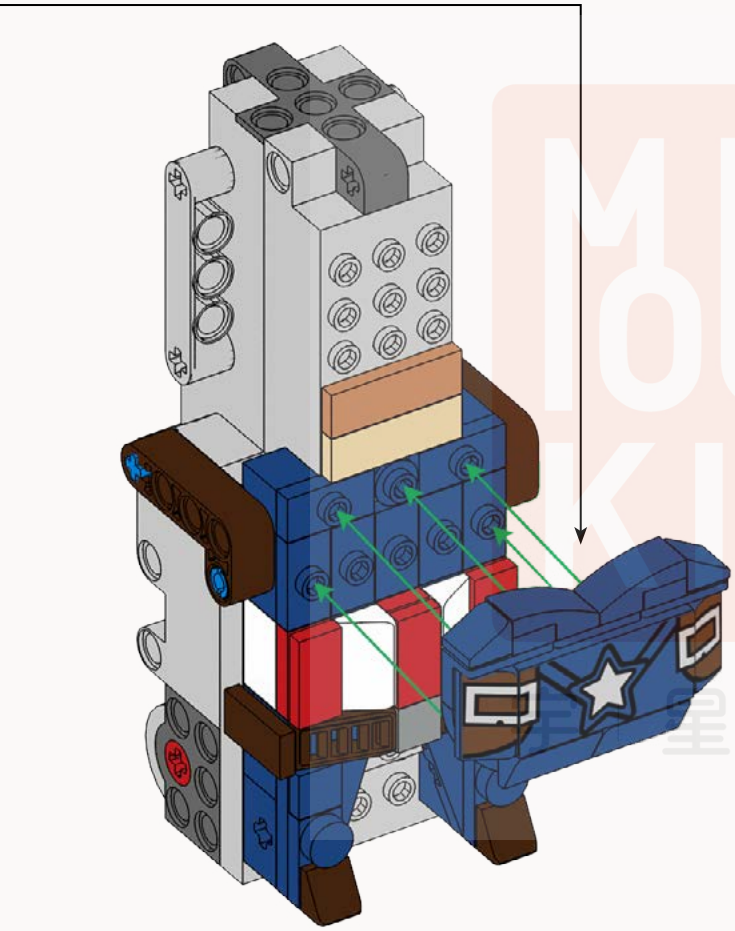

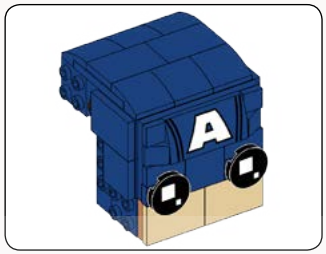

17

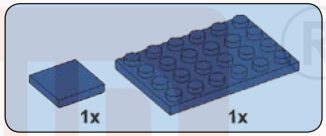

1

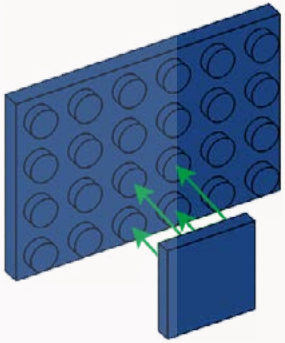

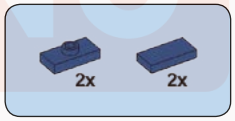

2

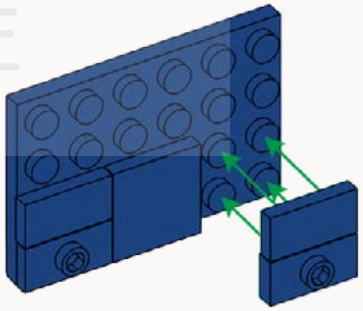

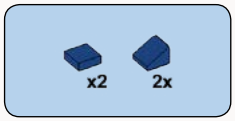

3

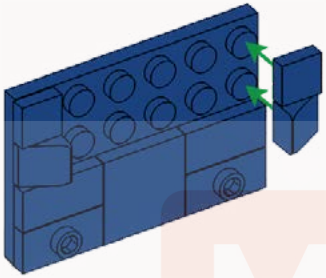

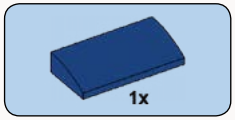

4

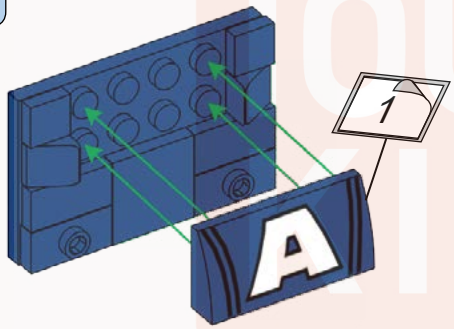

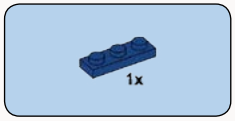

5



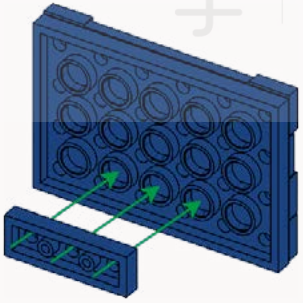

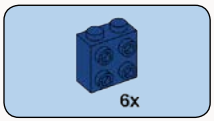

6

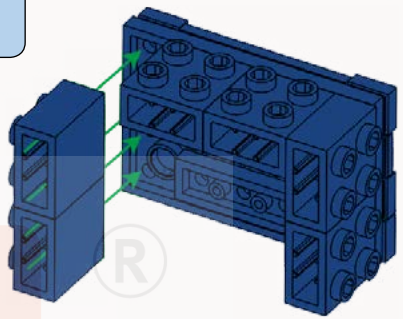

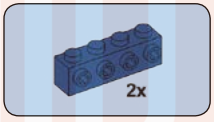

7

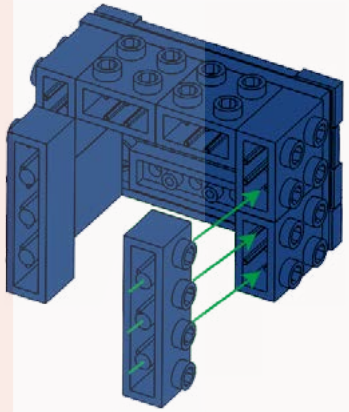

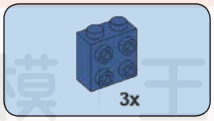

8

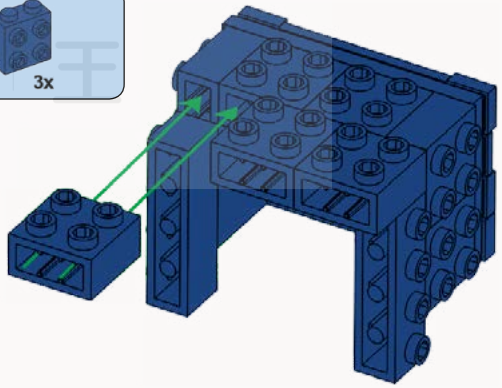



9

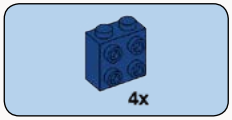

10

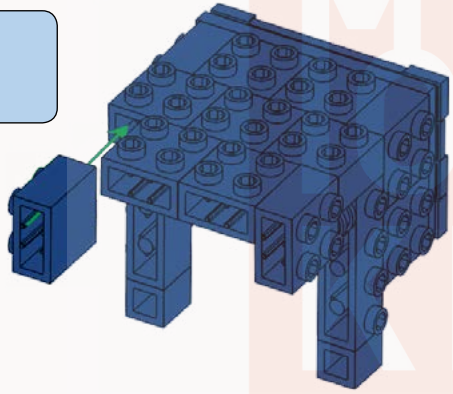

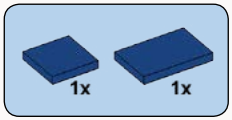

11



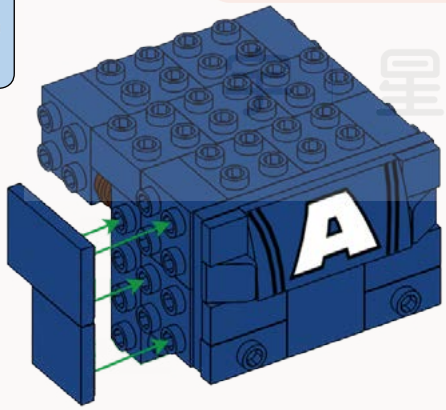

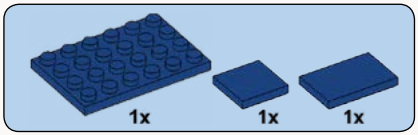

12



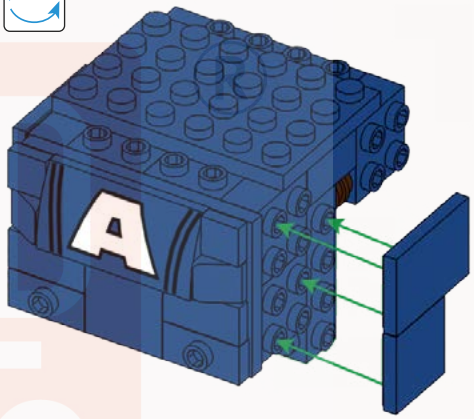

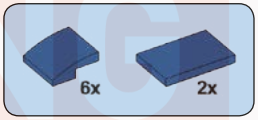

13

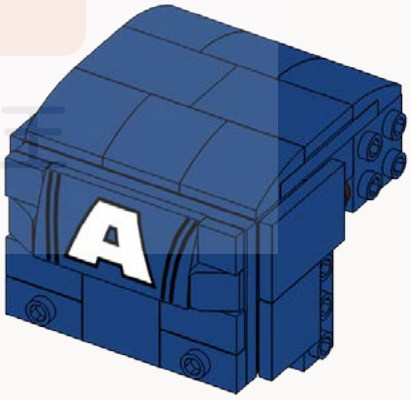

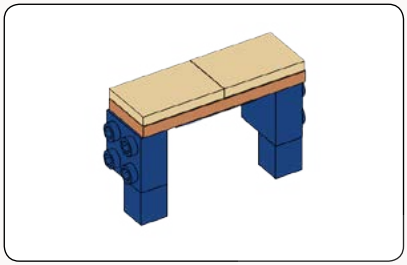

18

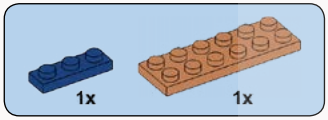

1

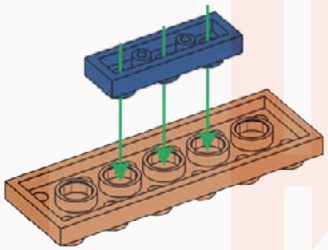

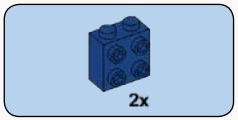

2

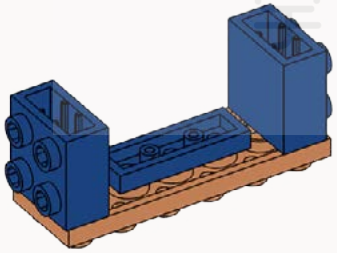

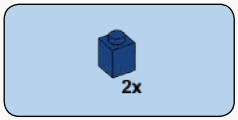

3

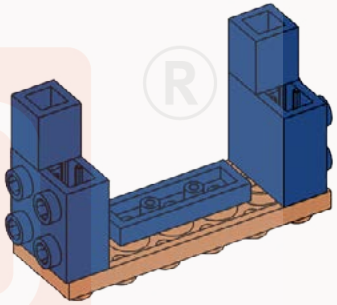

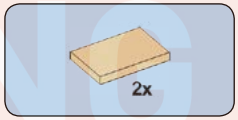

4

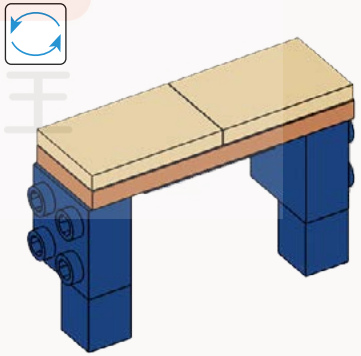

5

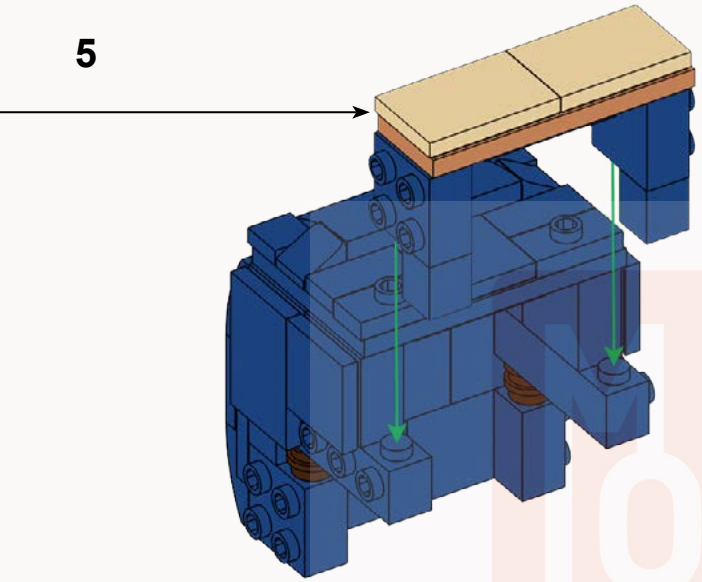

2x

6

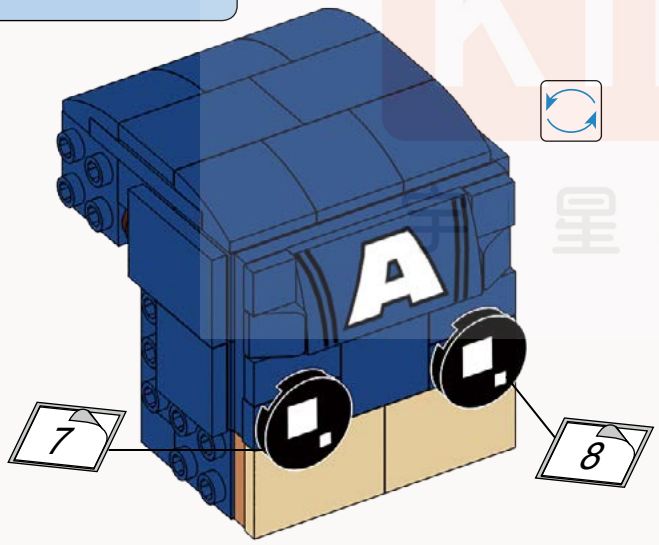

19

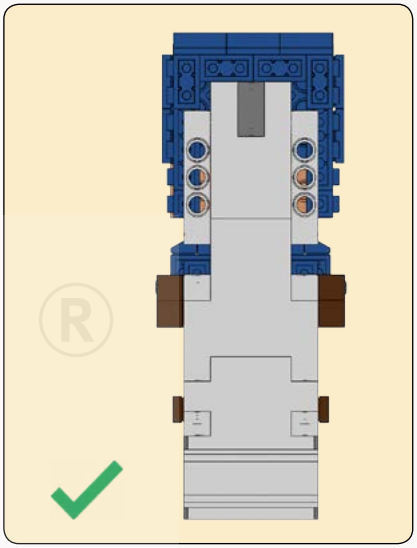

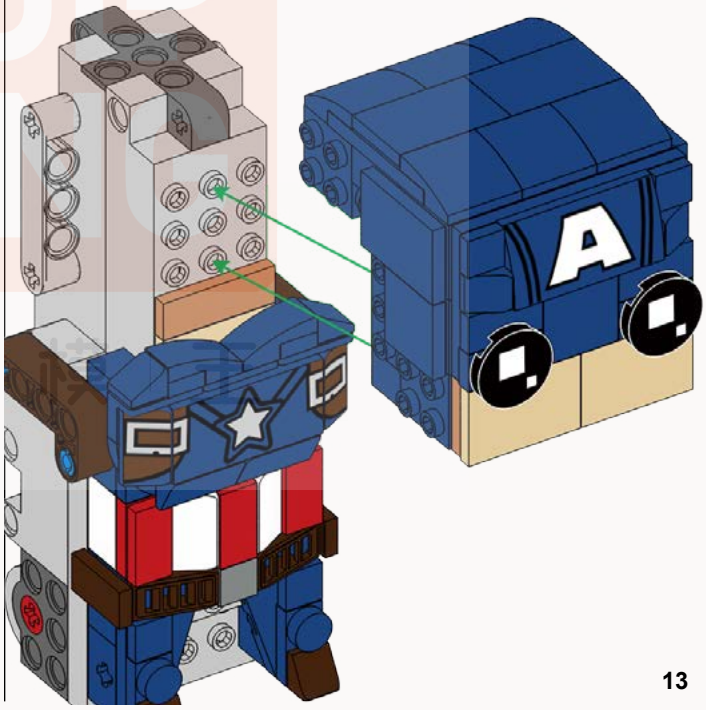

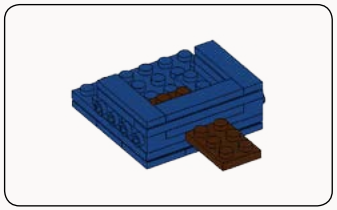

20

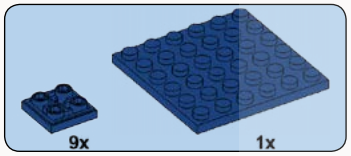

1

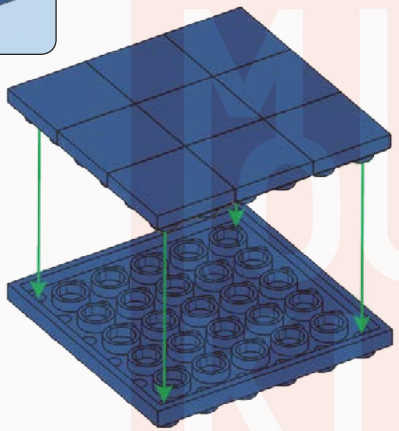

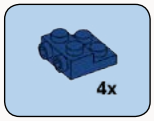

2

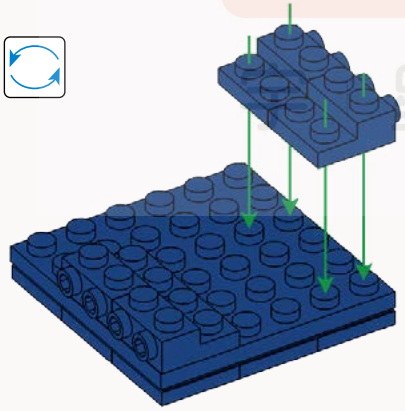



3

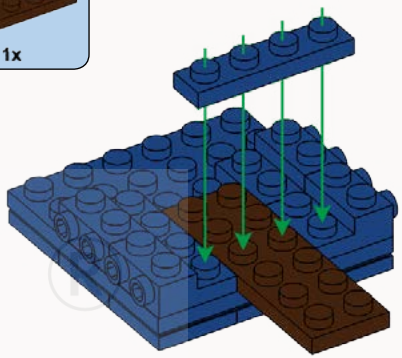

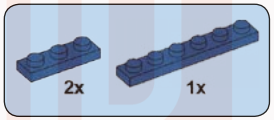

4

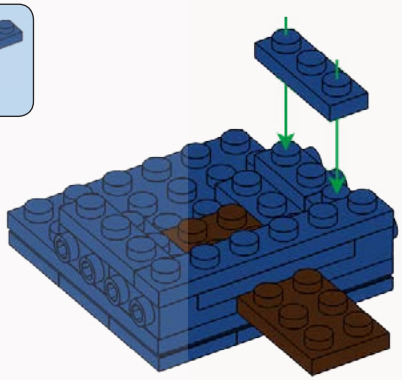

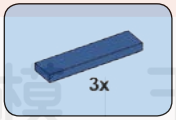

5

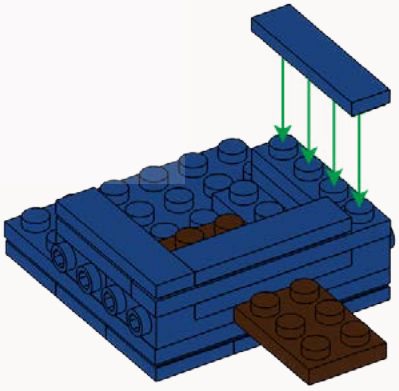

21

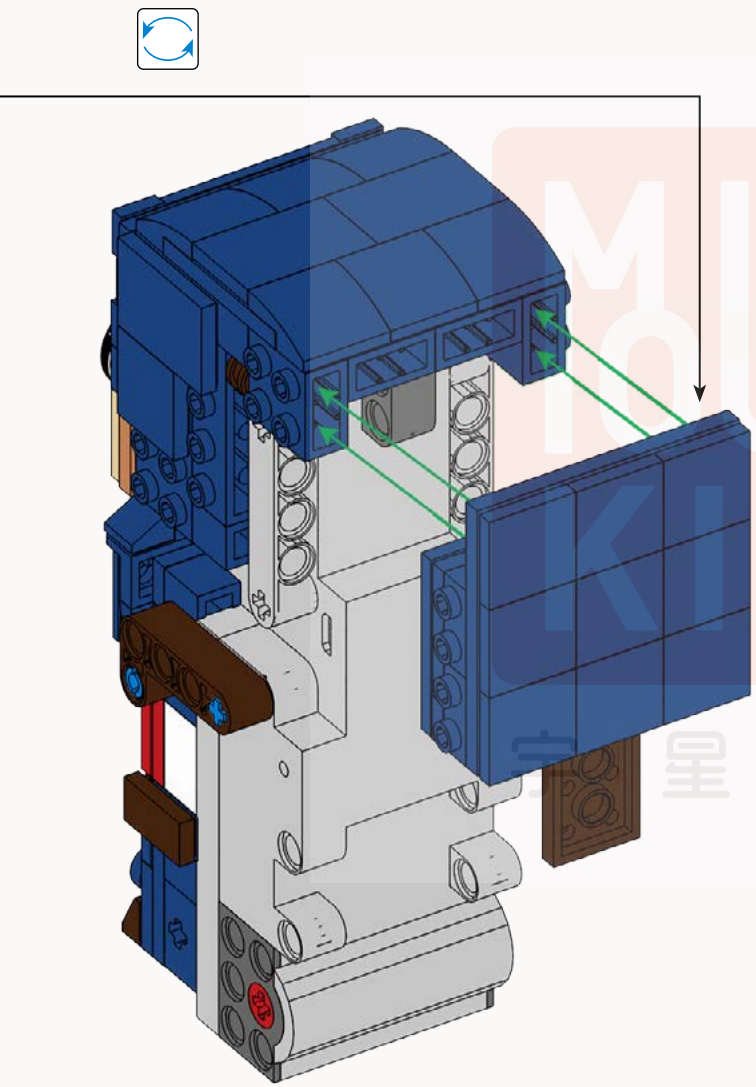

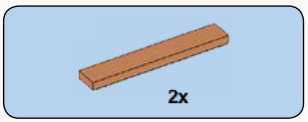

22

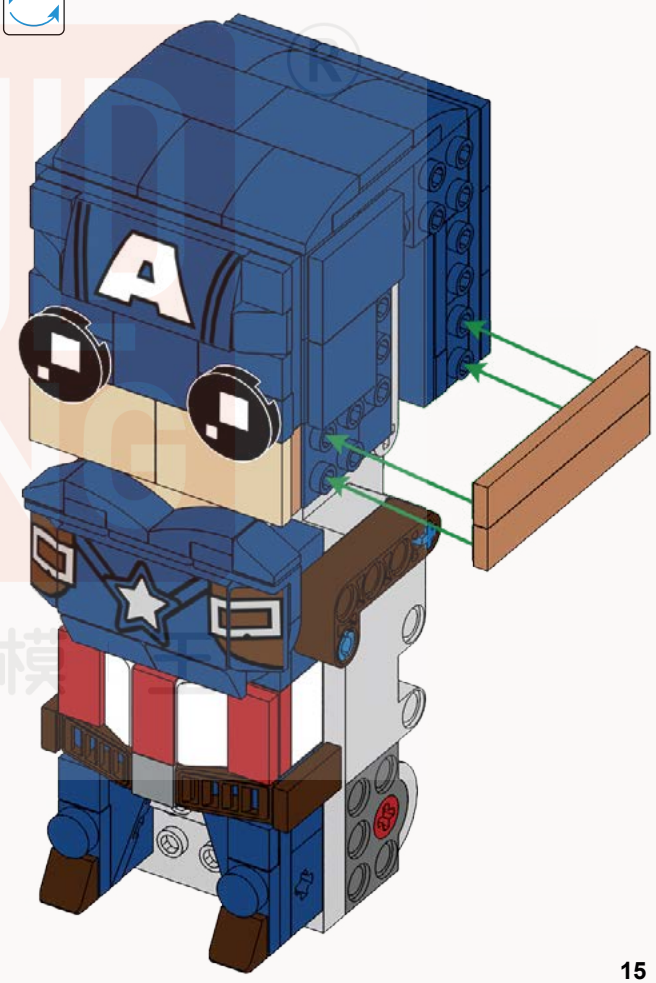

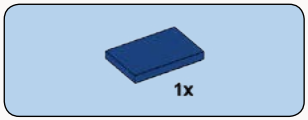

23

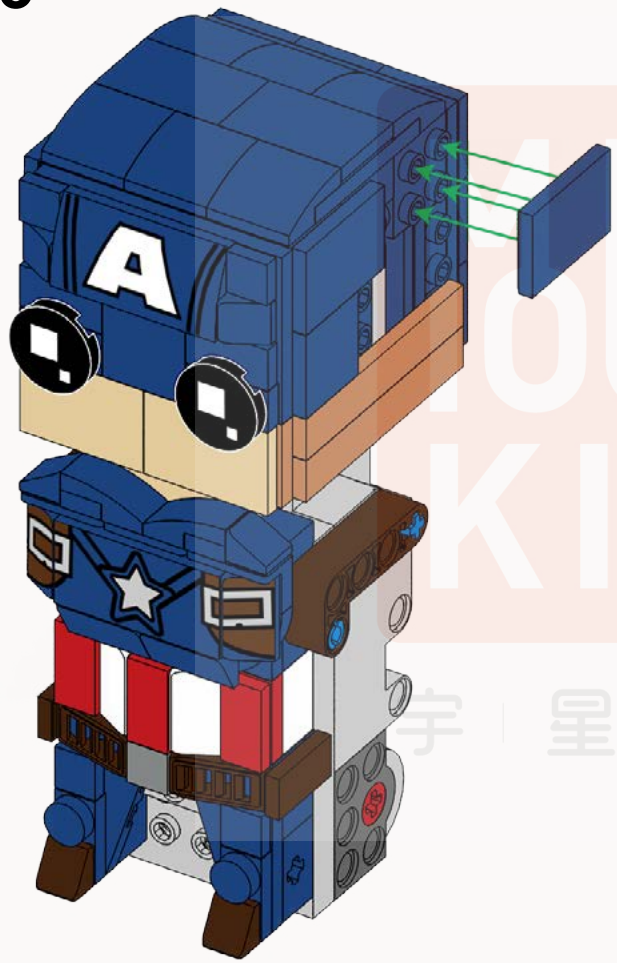

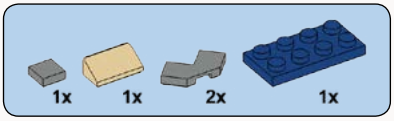

24

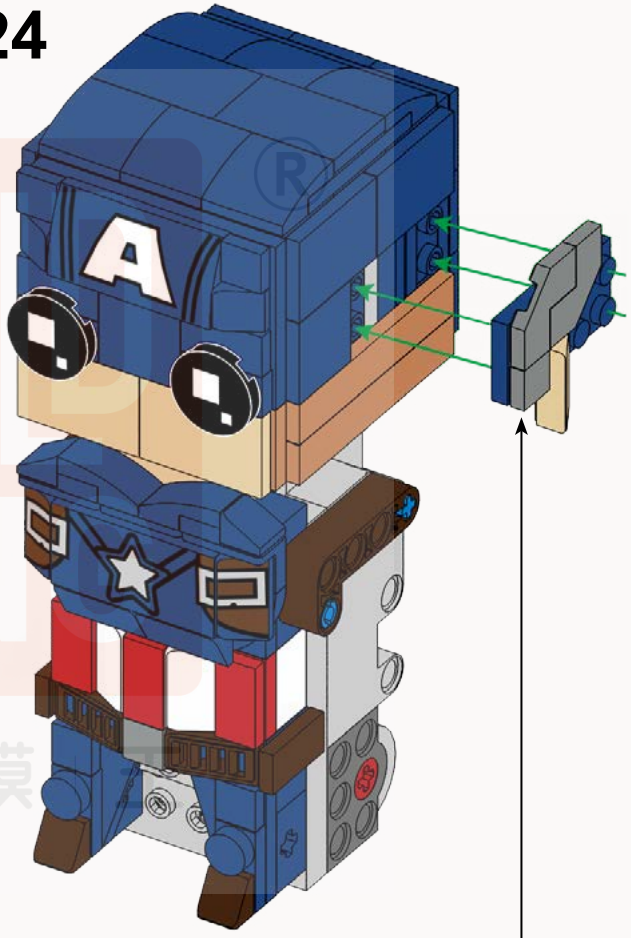

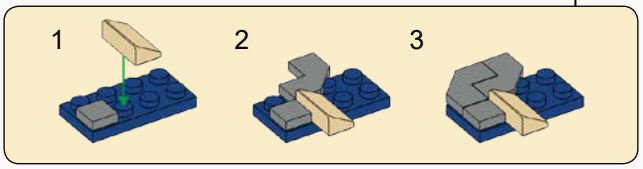

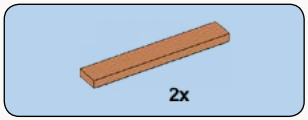

25

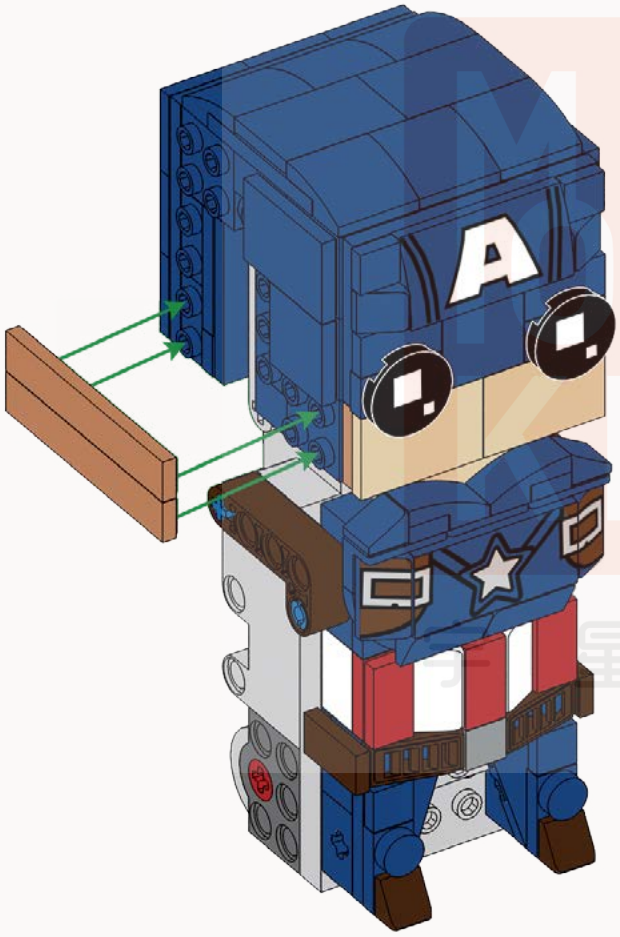

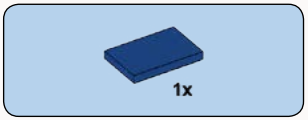

26

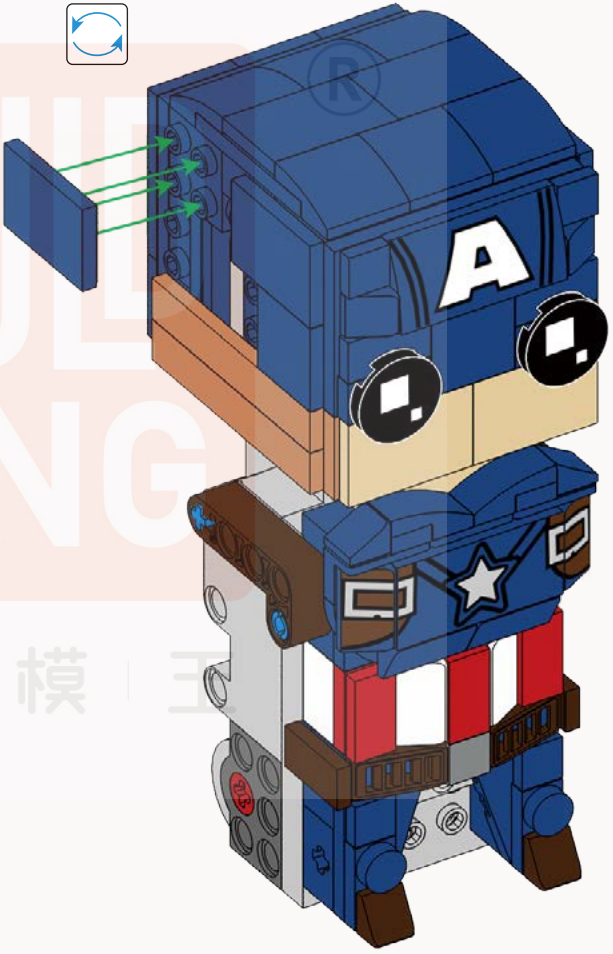

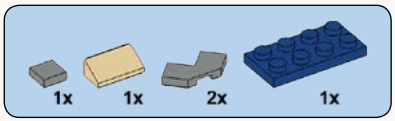

27

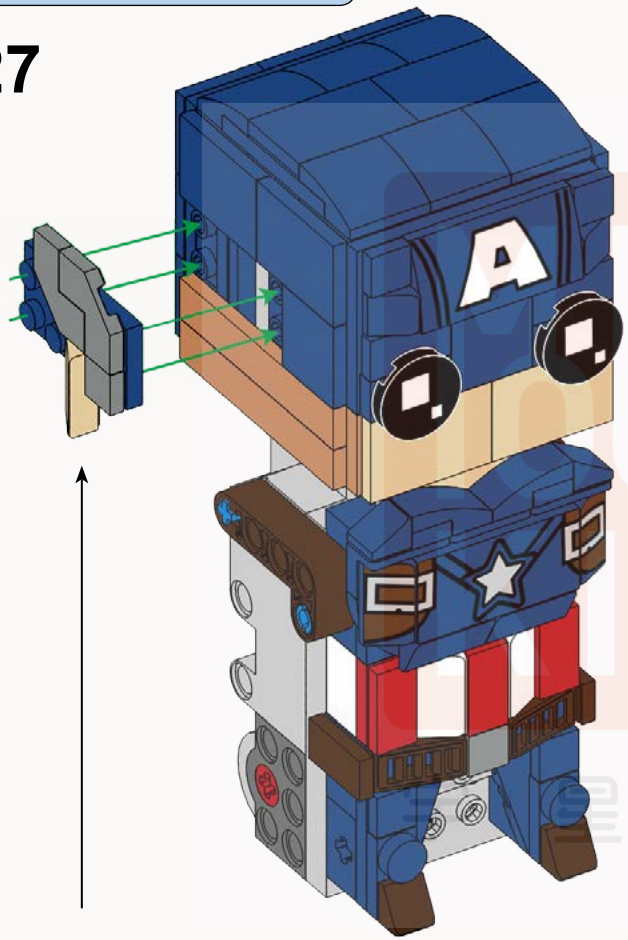

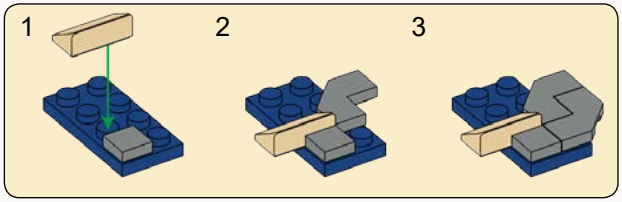

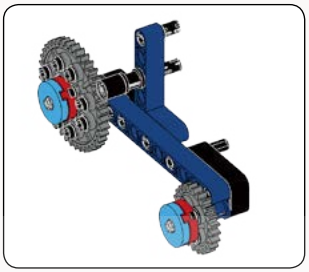

28

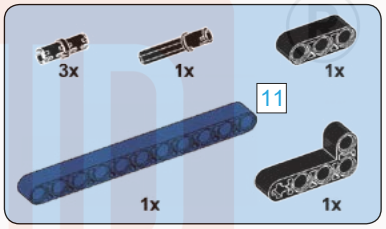

1

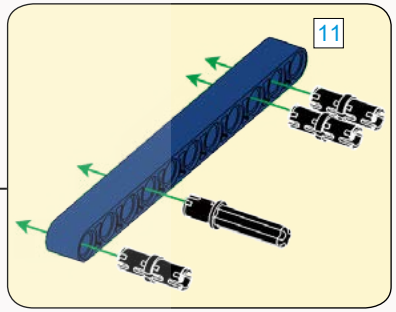

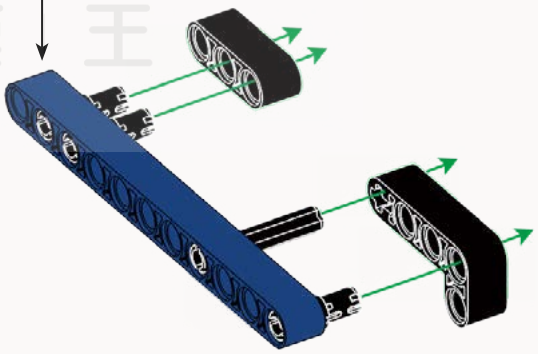

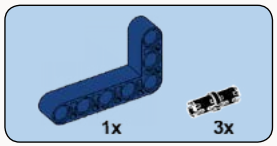

2



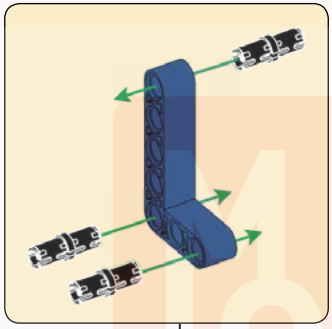

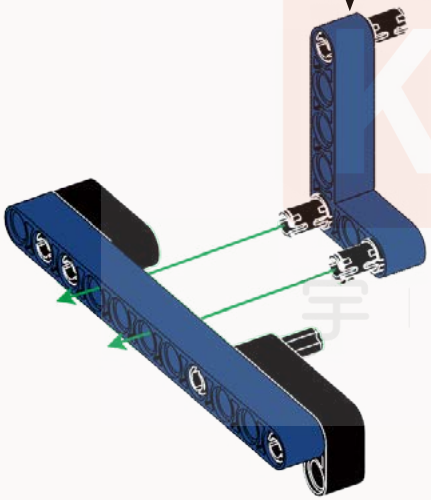

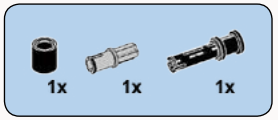

3

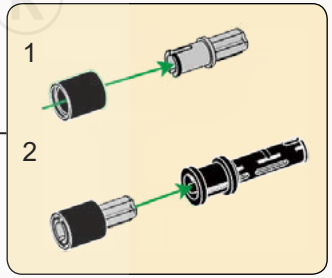

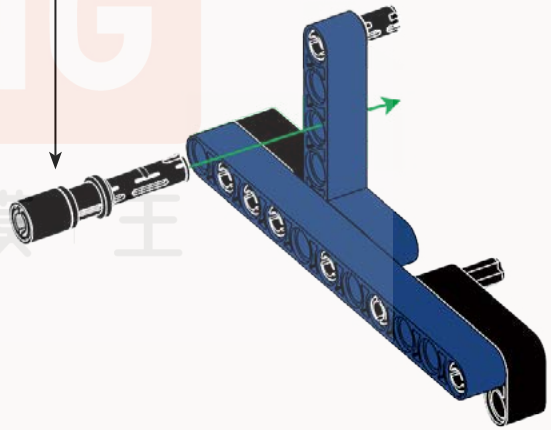

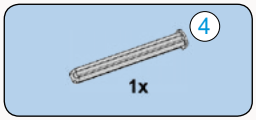

4

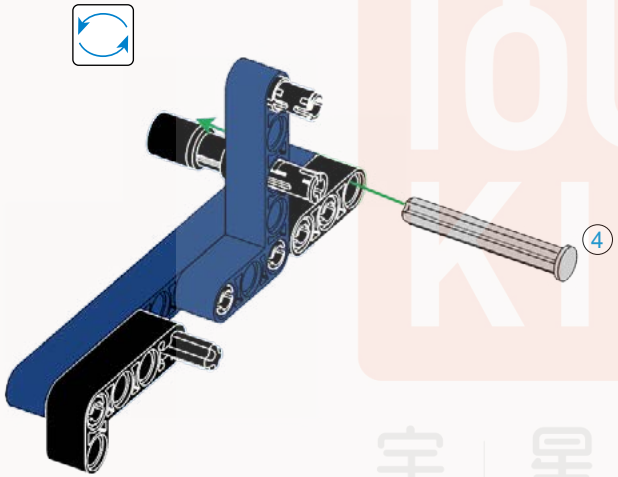

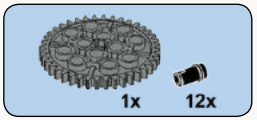

5

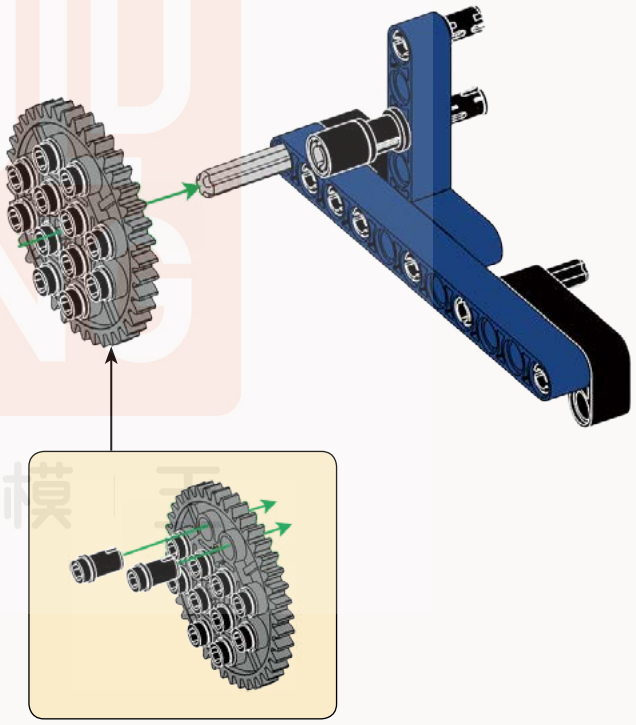

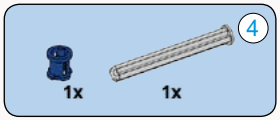

6

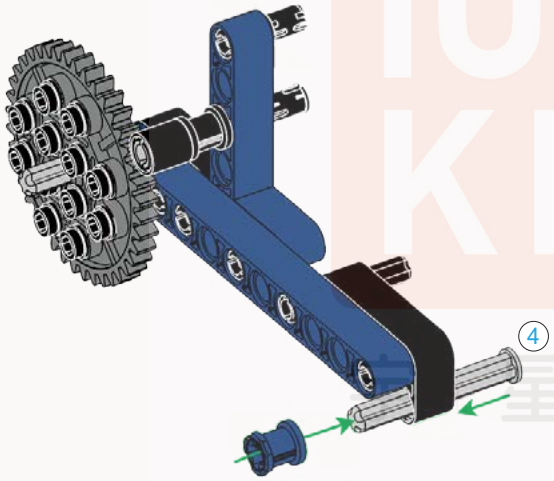

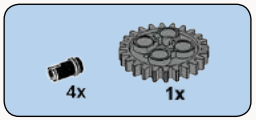

7

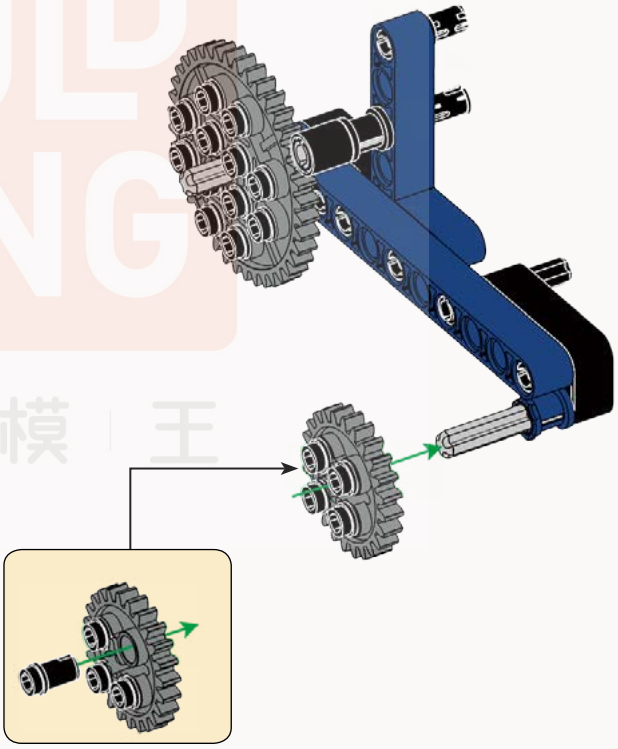

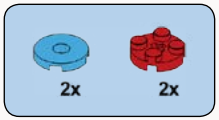

8

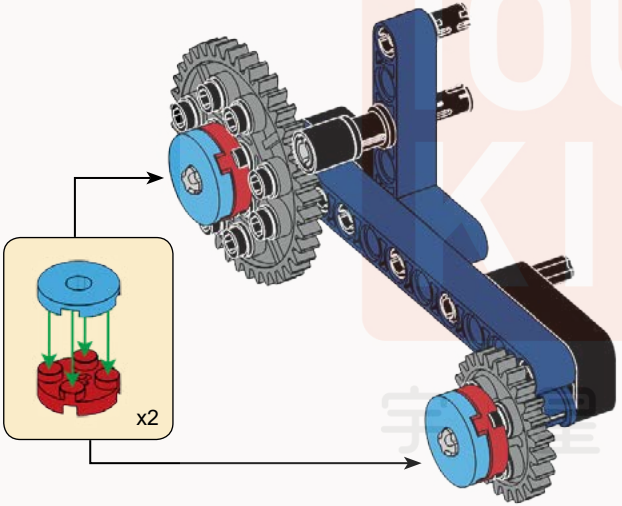

29

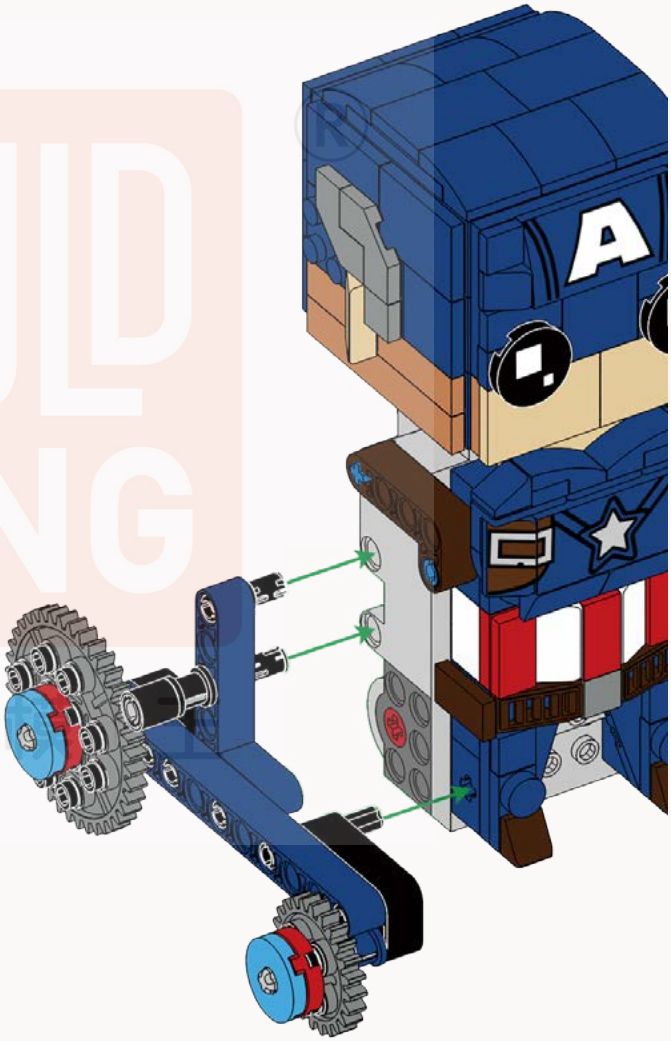

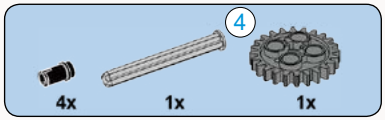

30

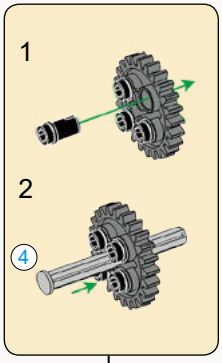

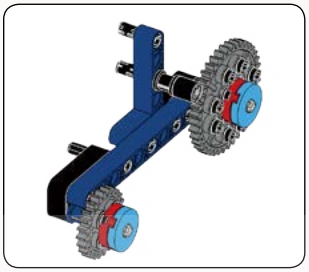

31

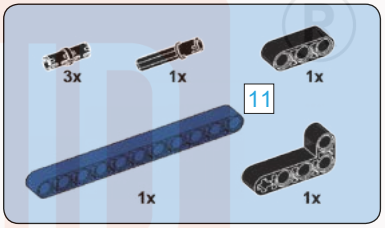

1

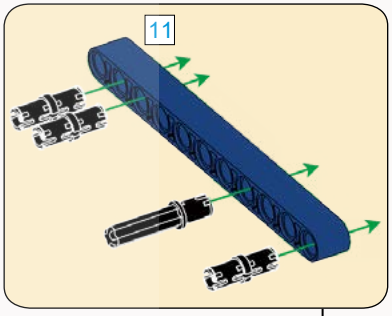

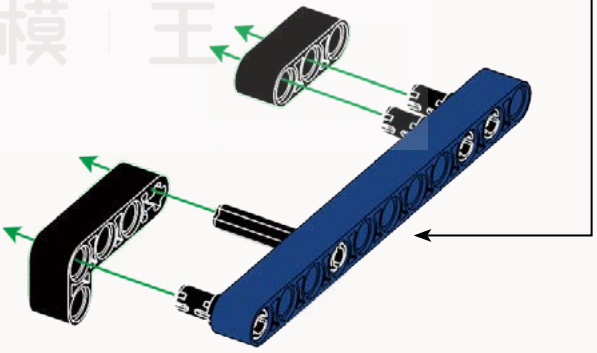

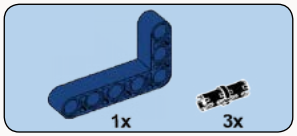

2

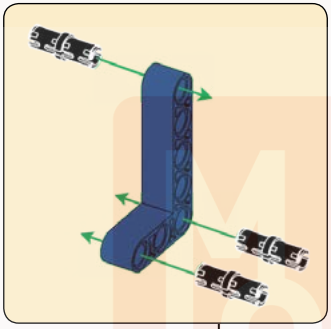



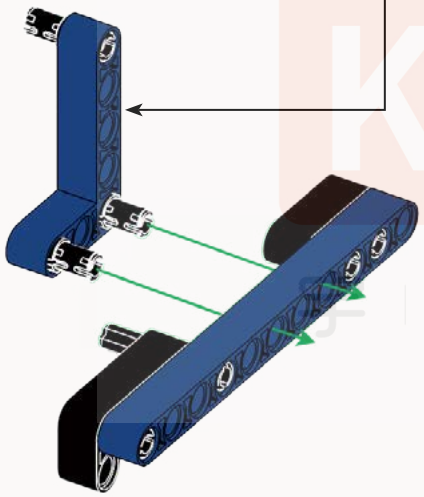

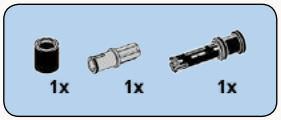

3

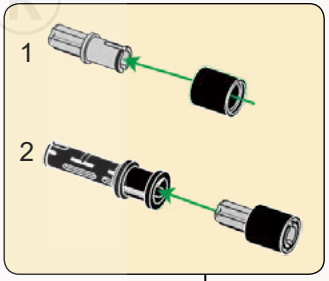

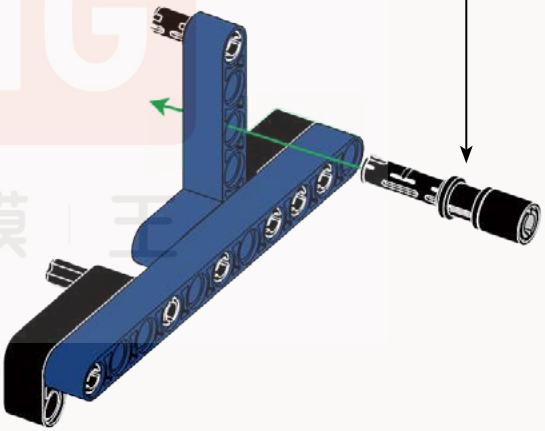

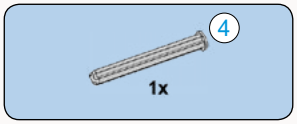

4

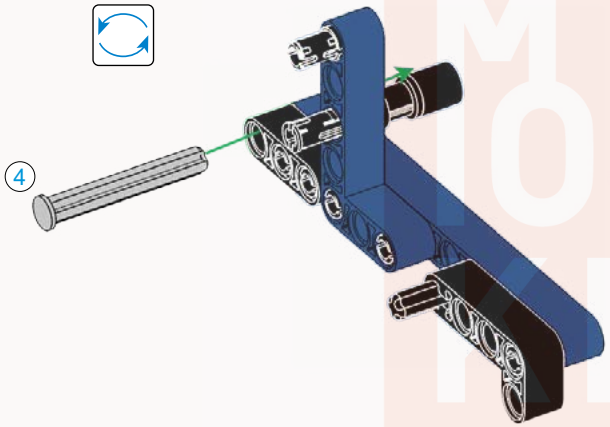

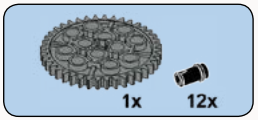

5

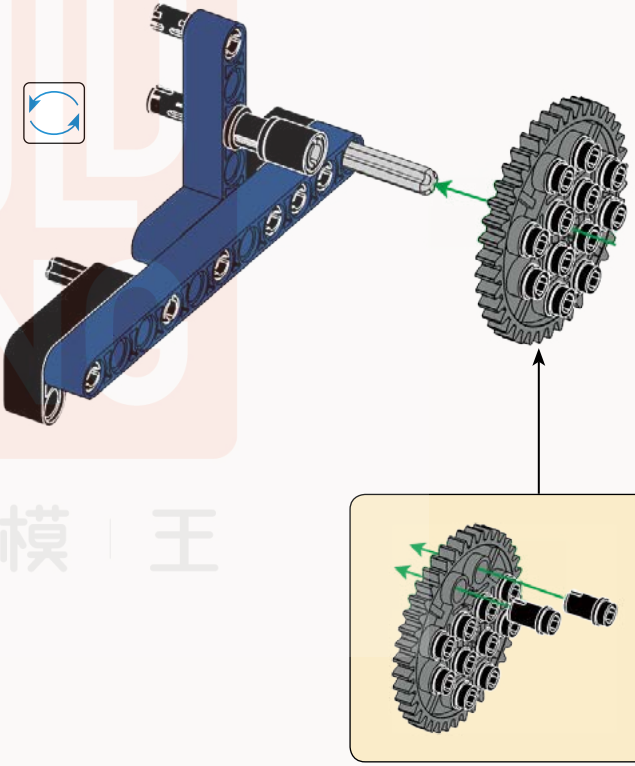

MOULD KING ®
宇 星 模 王

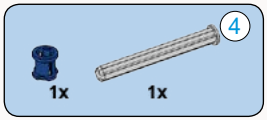

6

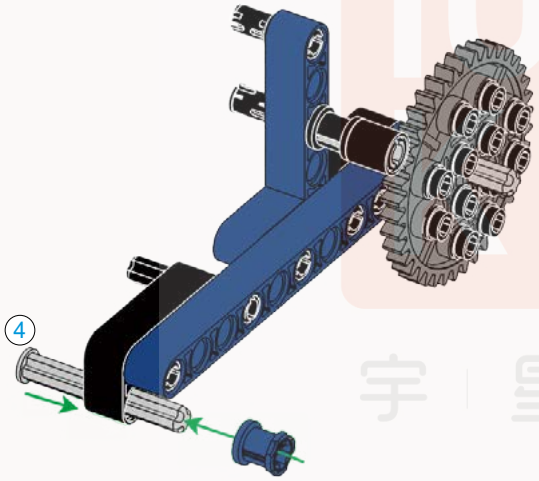

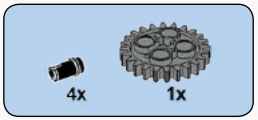

7

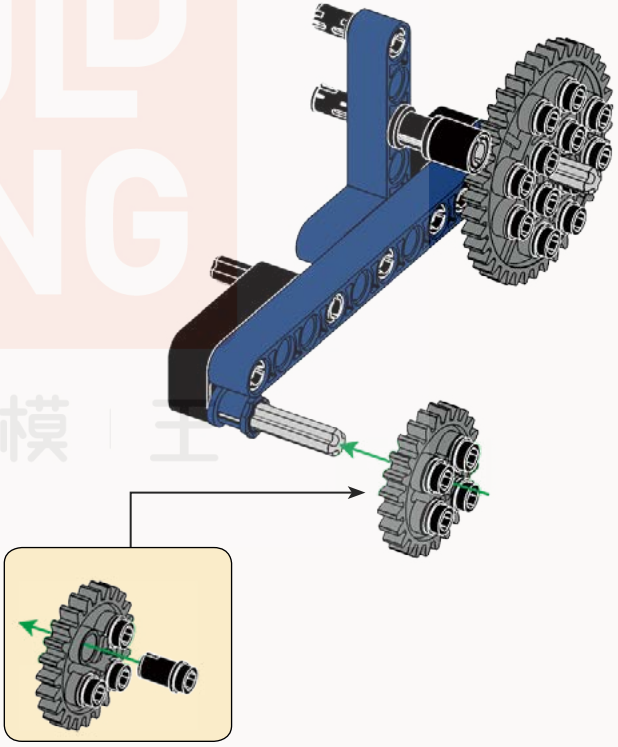

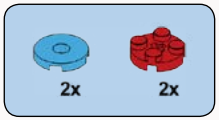

8

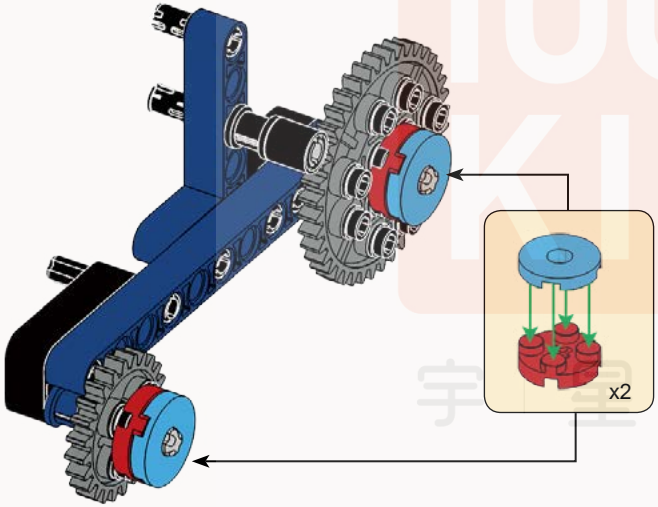

32

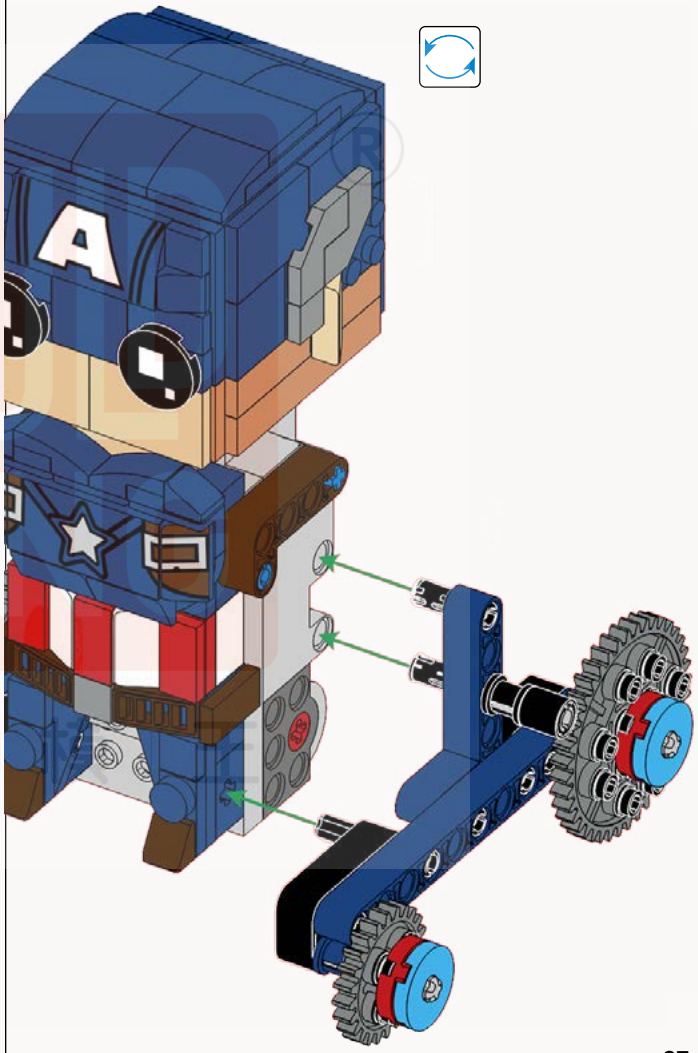

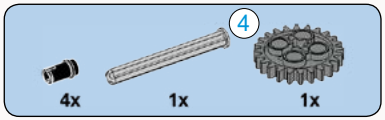

33

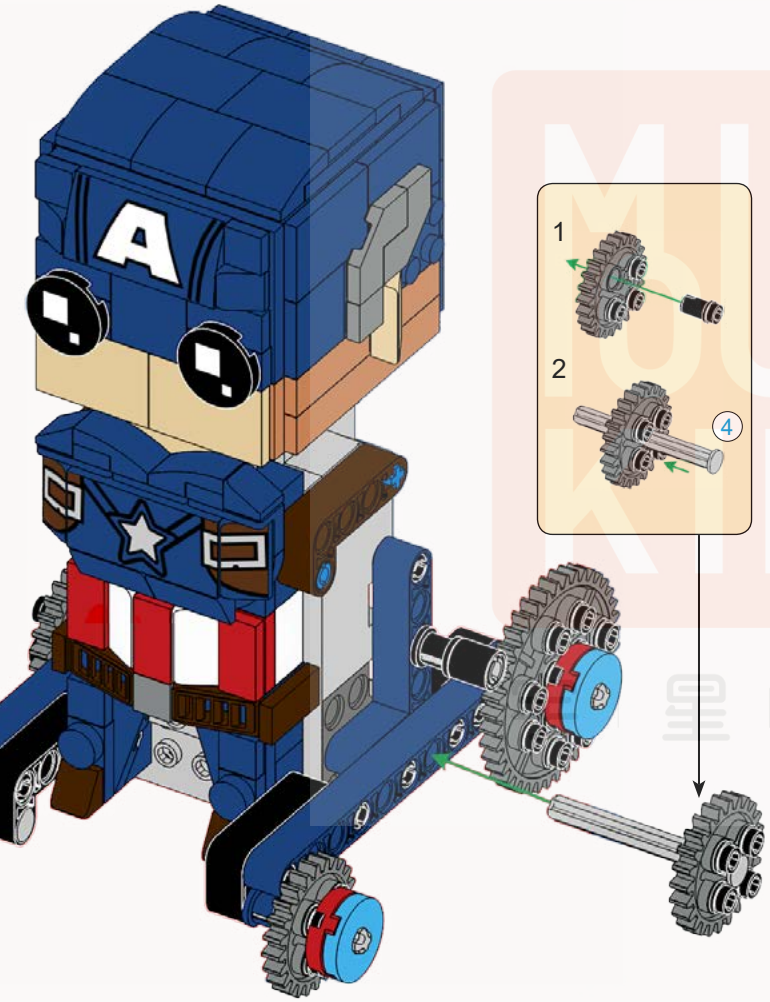



34

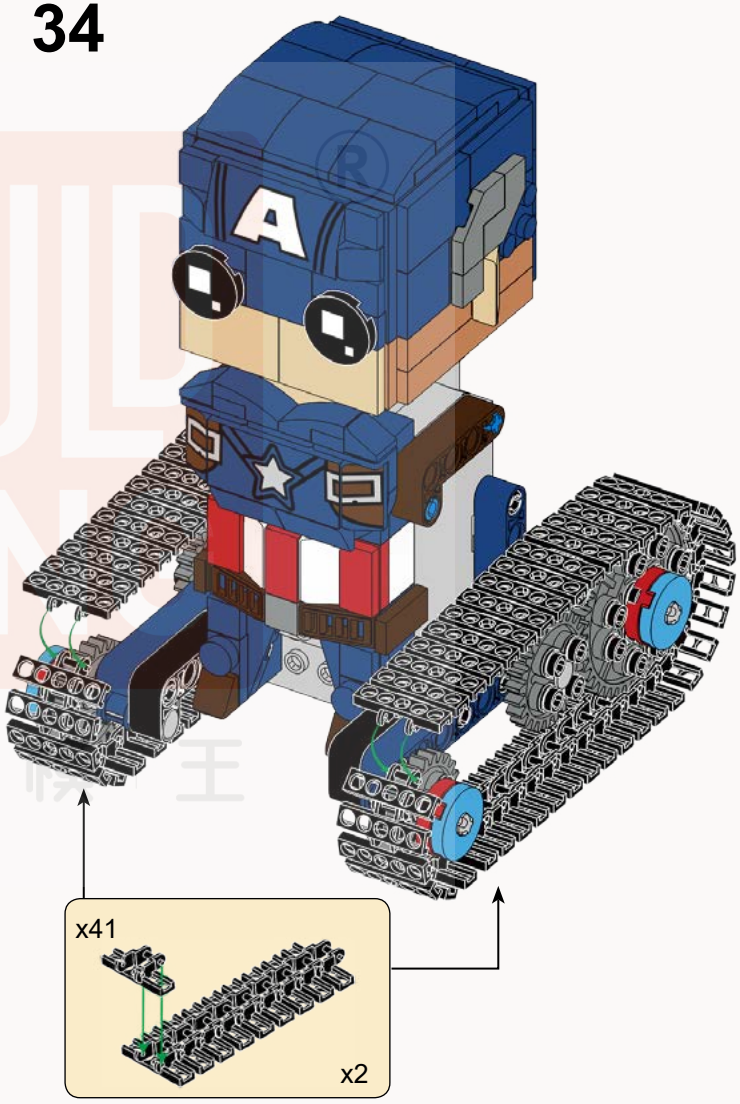

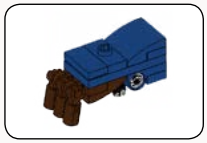

35

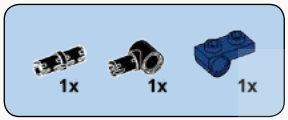

1

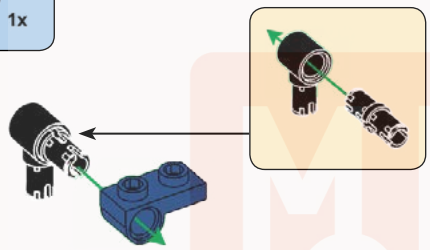

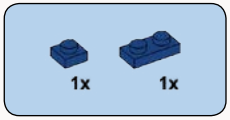

2

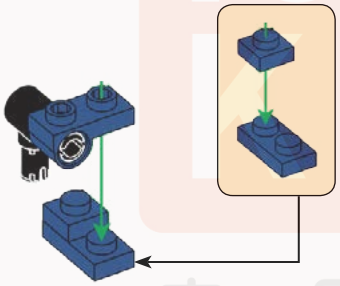

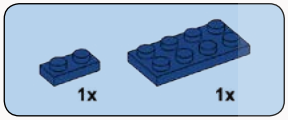

3

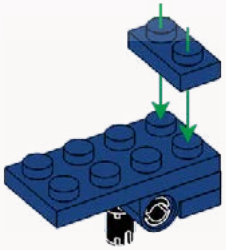

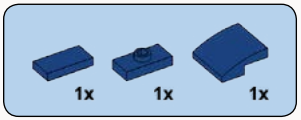

4

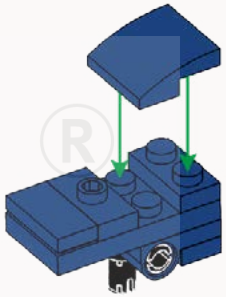

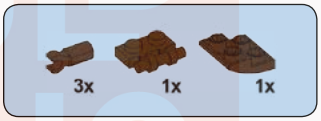

5

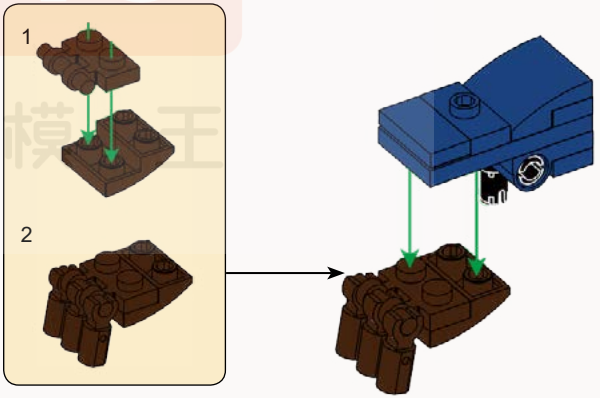

36

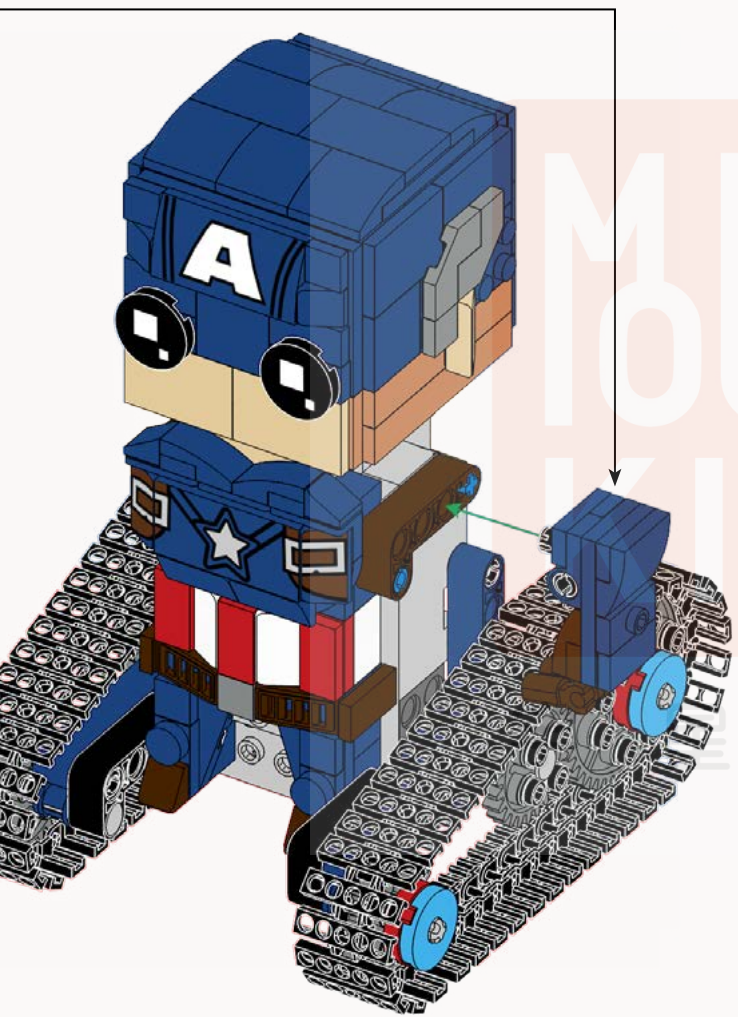

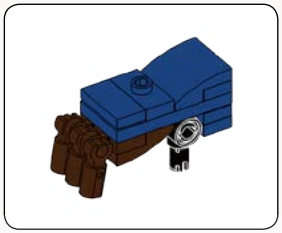

37

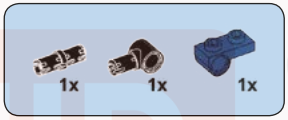

1

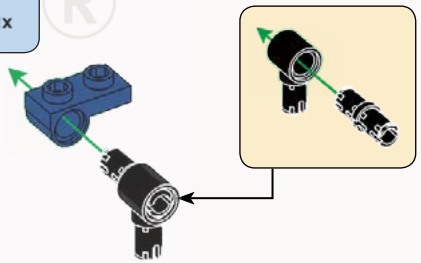

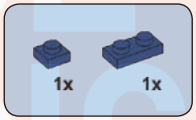

2

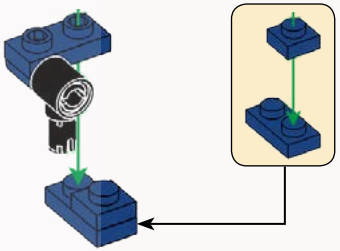

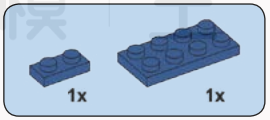

3

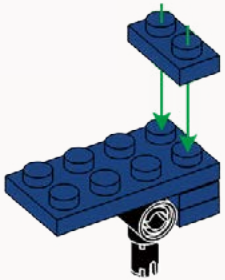

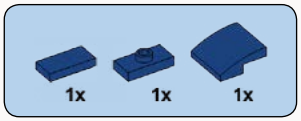

4

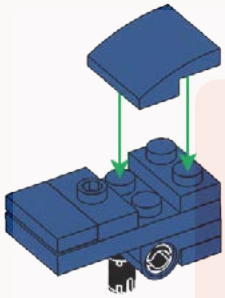

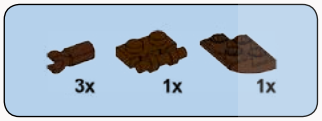

5

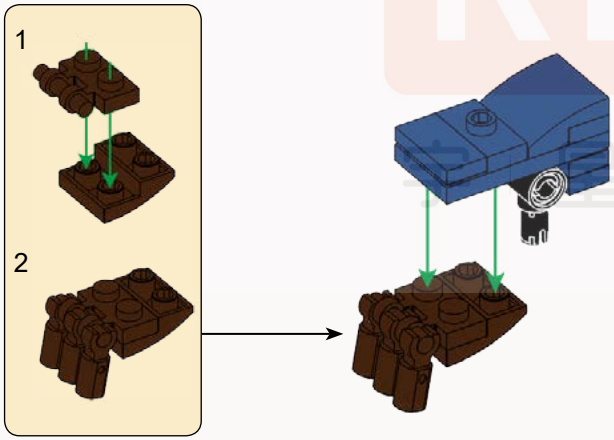

38

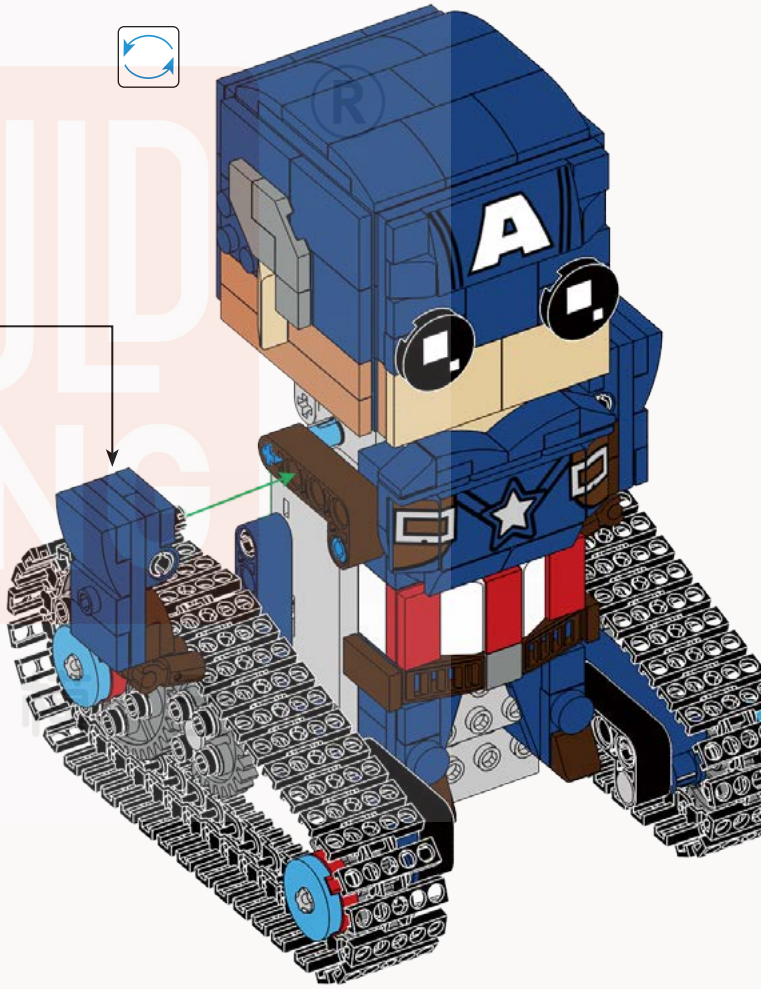

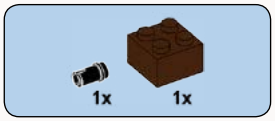

39

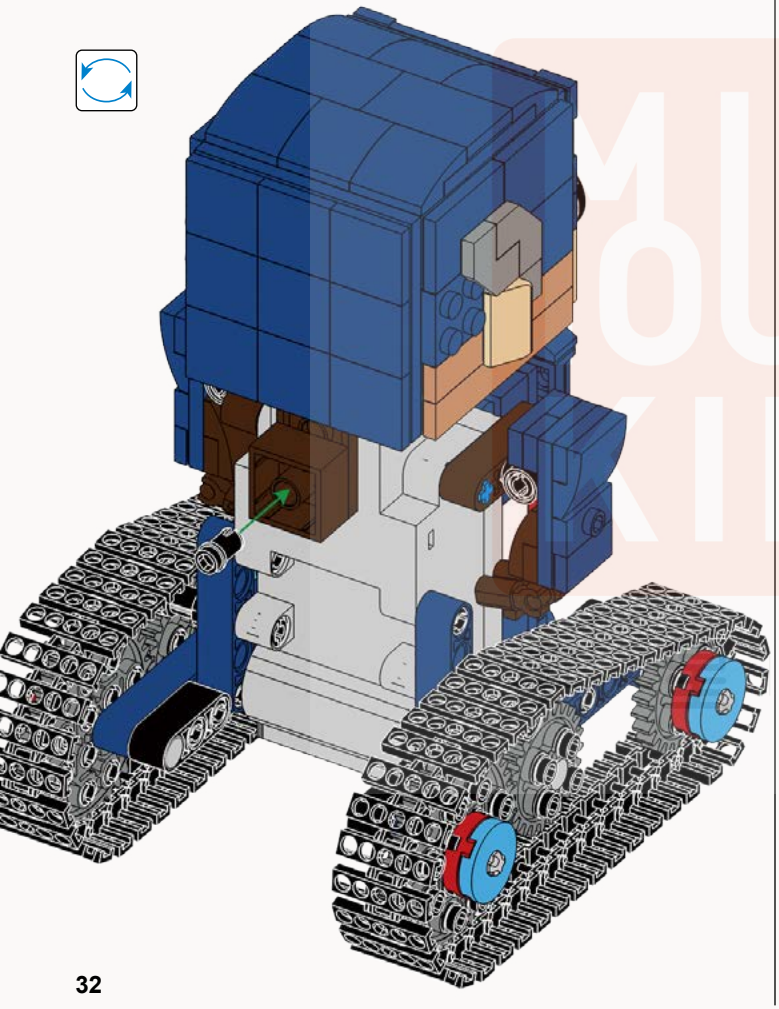

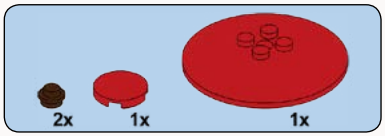

40

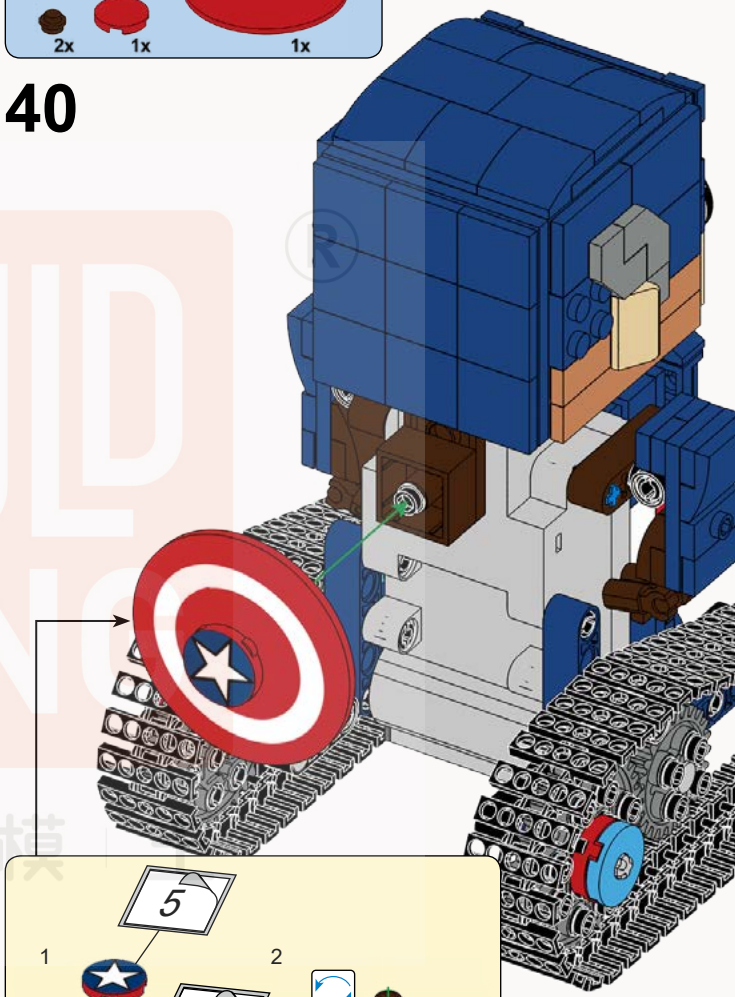

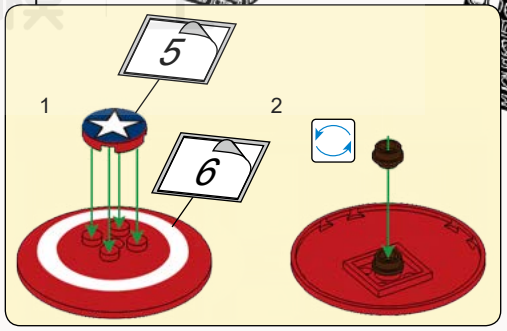

4x
x4
x2
2x
2x
4
6x
2x
1x
2x
1x
4x
1x
3x
4x
4x
2x
3x

3x
1x
4x
1x
41x
2x
14x
82x
2x
2x
2x
2x
2x
2x
6x
2x

1x
6x
2x
2x
2x
2x
1x
2x
1x
2x
2x
1x
6x
4x
4x
4x
6x

11x
2x
4x
2x
6x
2x
3x
4x
4x
8x
9x
3x
15x
4x
1x
1x

1x
3x
6x
1x
1x
5x
2x
1x
2x
1x
1x
2x
1x

2x
1x
1x
1x
2x

374PCS



13038 Iron-block Man



13039 Spider-block Man



13040 Super-block Man



13041 Pentagram-block Man



13042



13043



13044



13045

R/C REMOTE CONTROL