MOULD KING®

宇 星 模 王

17045

4579+ Pcs/Pza

宇星工程系列

MODELS 重型堆高机

NO.HEAVY-DUTY FORKLIFT

DANGER
STAY CLEAR

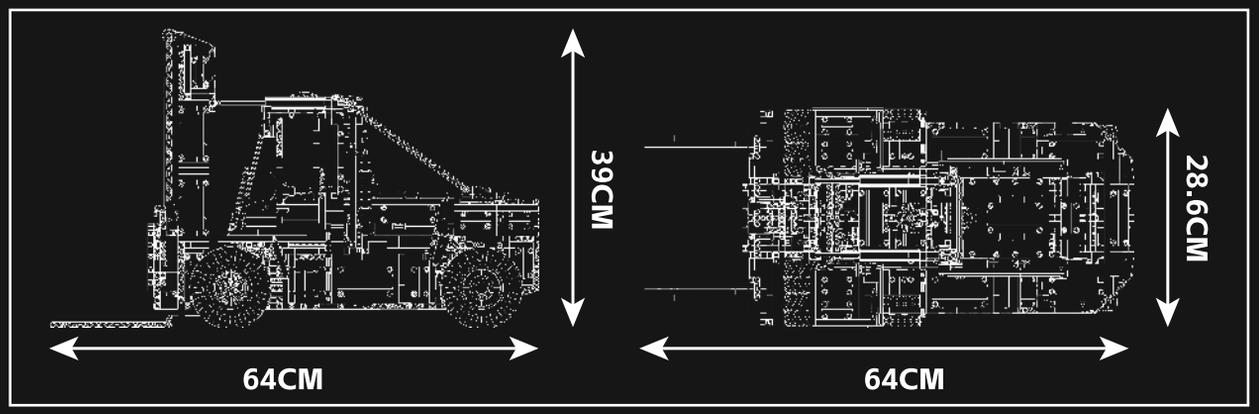

1:6的产品尺寸

宇星模王全新动力系统MK CONTROL+，
霍尔电机来袭！

现在，您可以体验别出心裁的操作乐趣：
通过APP进行角度旋转控制，实现精准操控；
设定软件限位功能，定义电机运动范围；
体验在线升级功能，随时让模块保持最新状态；
设置储存功能，保留您的个性化配置；
开启广播连接功能，一触即连，无需繁琐操作；
拥有独立的APP界面，为您量身定制，
操作更加直观.....
让您的套装栩栩如生的秘诀，
就在MK CONTROL+！

原型数据

负载能力(磅):	7200磅
满载最大爬坡能力 (%):	14%
直角堆垛通道宽度(英寸):	315in
满载最大提升速度 (FPM):	25fph
满载最大行驶速度 (MPH):	21.1mph
提升高度(英寸):	441in
总宽度(英寸):	91.1-132in

7200系列重型叉车是一款专为应对最具挑战性的物料搬运任务而设计的高性能设备。这款叉车以其卓越的载重能力、强大的动力系统和高效的操作性能而著称，是重工业环境中不可或缺的工具。7200系列的最大载重能力可达72000磅，这使其成为处理大型、重型货物的理想选择。它配备了强劲的发动机，确保即使在满载情况下也能保持良好的行驶和升降性能。此外，这款叉车的设计注重操作者的舒适性和安全性，配备了宽敞的驾驶舱、直观的控制界面和多项安全功能，包括坚固的顶部保护架和高效的制动系统。7200系列还特别注重操作的灵活性和效率。它具有出色的操控性，能够在狭窄空间内灵活转动，且其直角堆垛功能使得在仓库环境中的操作尤为高效。此外，该系列叉车的维护设计简单便捷，易于日常保养和快速故障排除，大大降低了停机时间。

7200系列重型叉车不仅代表了重型设备领域的顶级技术实力，也体现了其对用户需求和工作效率的深入理解。无论是在建筑工地、大型仓储还是工业生产线，7200系列都能提供强大的支持，是高效和可靠物料搬运的理想选择。

The 7200 series heavy-duty forklift is a high-performance piece of equipment designed specifically to handle the most challenging material handling tasks. Renowned for its exceptional load capacity, powerful drive system, and efficient operational performance, this forklift is an indispensable tool in heavy industrial environments.With a maximum load capacity of 72,000 pounds, the 7200 series is an ideal choice for handling large, heavy goods. It is equipped with a robust engine that ensures good driving and lifting performance, even when fully loaded. Moreover, this forklift is designed with the operator's comfort and safety in mind, featuring a spacious cabin, an intuitive control interface, and several safety features, including a sturdy overhead guard and an efficient braking system.The 7200 series also focuses on flexibility and efficiency in operation. It has excellent maneuverability, capable of agile movements in tight spaces, and its right-angle stacking ability makes it particularly efficient in warehouse environments. Additionally, the series is designed for easy maintenance, facilitating routine upkeep and quick troubleshooting, significantly reducing downtime.

In summary, the 7200 series heavy-duty forklift represents not only the pinnacle of heavy equipment technology but also demonstrates a deep understanding of user needs and work efficiency. Whether on construction sites, large warehouses, or industrial production lines, the 7200 series provides robust support and is an ideal choice for efficient and reliable material handling.

Qr code APP（APP二维码）

Supports Apple iOS 12.0 and above, Android 8.0 and above, HarmonyOS 2.0 and above.

* This APP supports most of the mainstream Android models on the market,but due to the large number of Android models, different models of systemsand hardware reasons, there may be some models do not support, specificaccordingto the actualtest!

广东宇星科技
Mould King

产品资讯
Product Information

积木补件
Brick Replacement Service

售后服务
After-sales Service

Customer Service
客 户 服 务
www.yx-mk.com

酷砖家
BriXpert

"酷砖家"是宇星模王设立的特殊标识，代表着产品的独特性和原创性。每一款带有"酷砖家"标志的积木套装，都由宇星的原创团队或者与宇星有密切合作的全球顶尖设计师亲自设计或授权。这个标识是我们对消费者的承诺，确保他们可以享受到独一无二且高品质的积木拼搭体验。

“Bri X pert”is a special mark established by MOULD KING, representing the uniqueness and originality of the product. Every building set with the "Bri X pert" logo is personally designed or authorized by MOULD KING's innovative team or world-class designers who work closely with MOULD KING. This logo is our commitment to consumers, ensuring that they can enjoy a unique and high-quality building experience.

OPEN

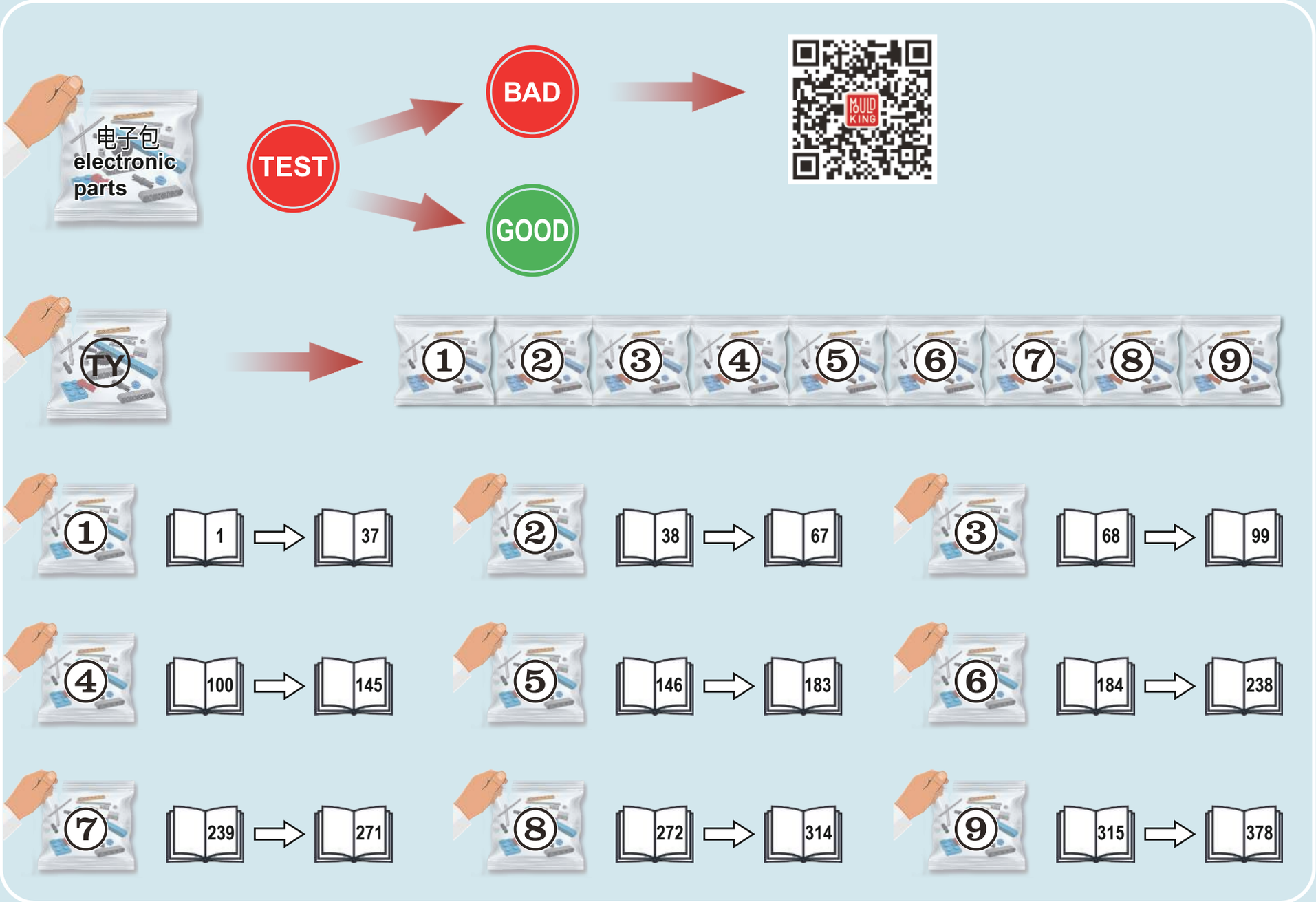
电子包
electronic
parts
TEST
BAD
GOOD
TY
1
2
3
4
5
6
7
8
9
1 → 37
38 → 67
68 → 99
100 → 145
146 → 183
184 → 238
239 → 271
272 → 314
315 → 378

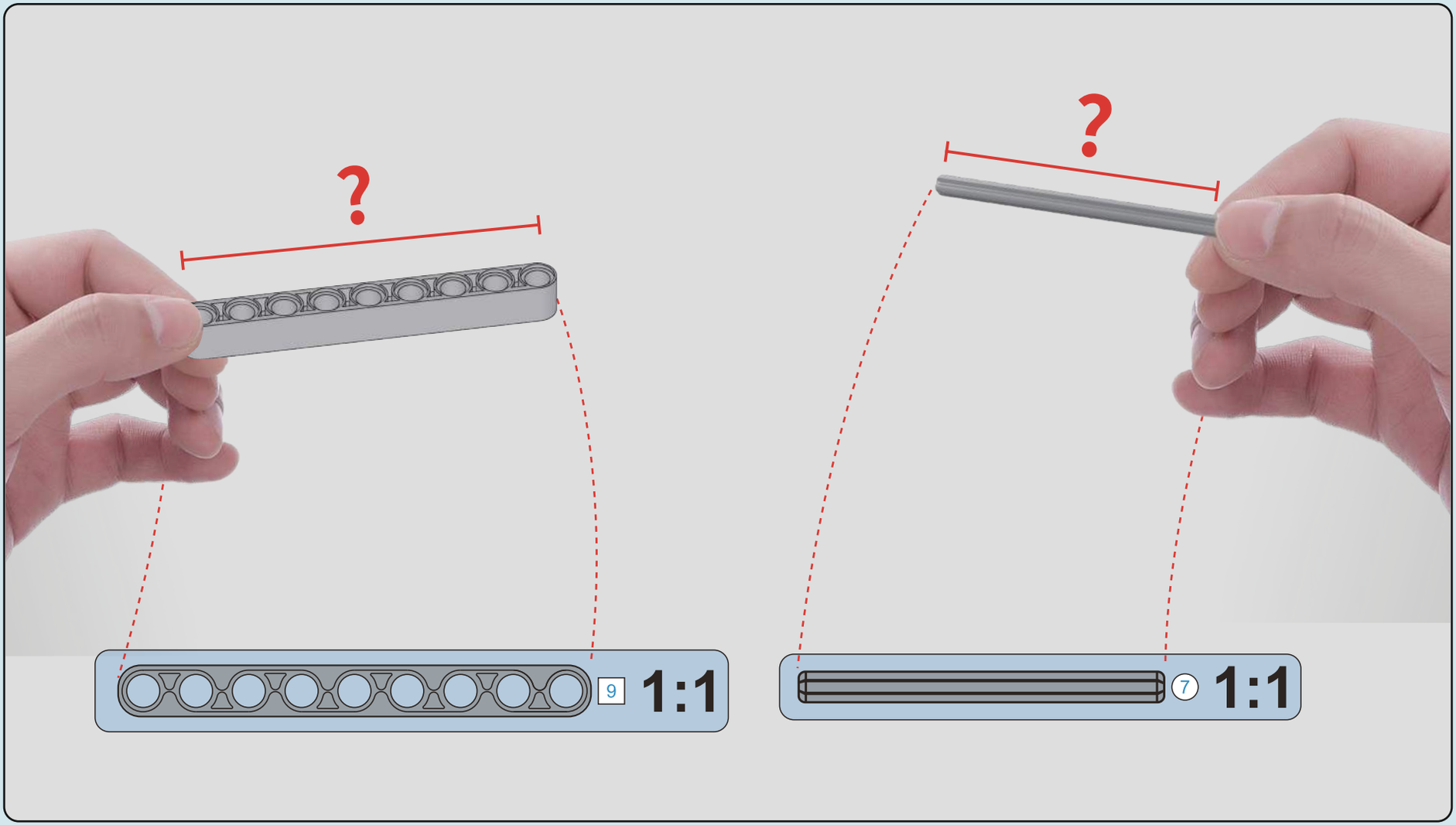

若零件旁有该符号，根据您组装的产品颜色，可能需将列出的零件替换为该颜色方块中的颜色零件。
If there is this symbol next to a part, depending on the color of the product you are assembling, you may need to replace the listed parts with the color parts in the colored block.

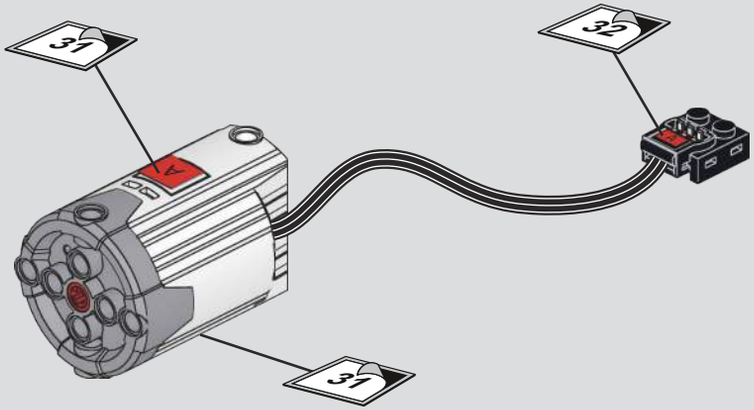
31
32
A
31

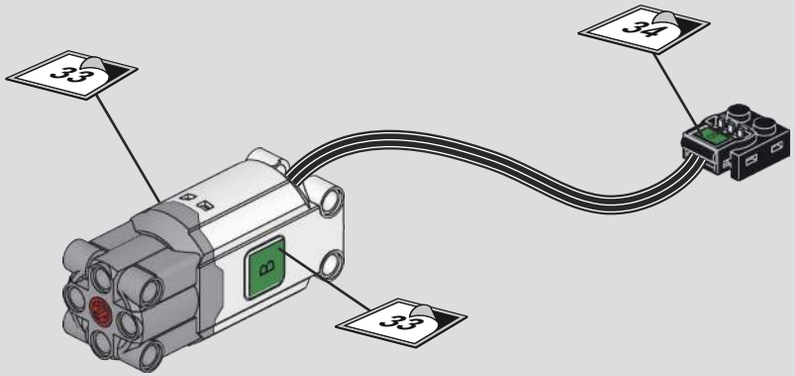
33
34
B
33

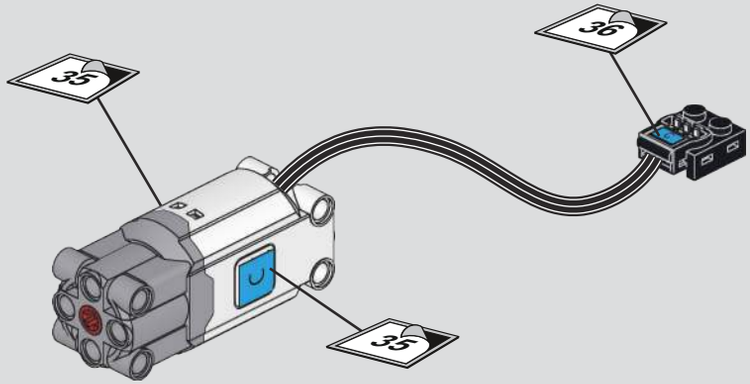
35
36
C
35

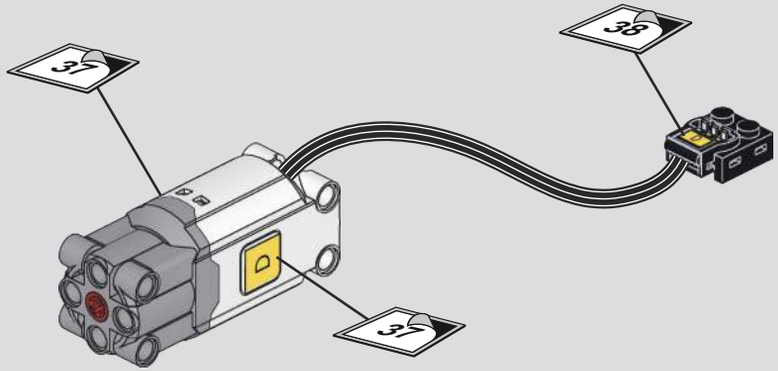
37
38
D
37

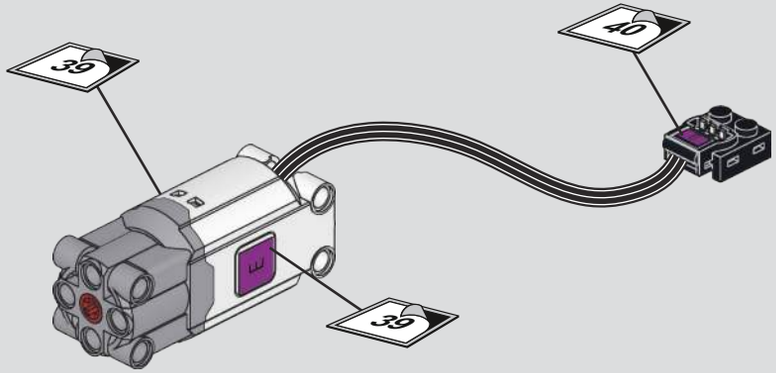
39
40
E
39

拼装前需测试所有电子件功能是否正常

Test all electronic components for functionality before assembly.

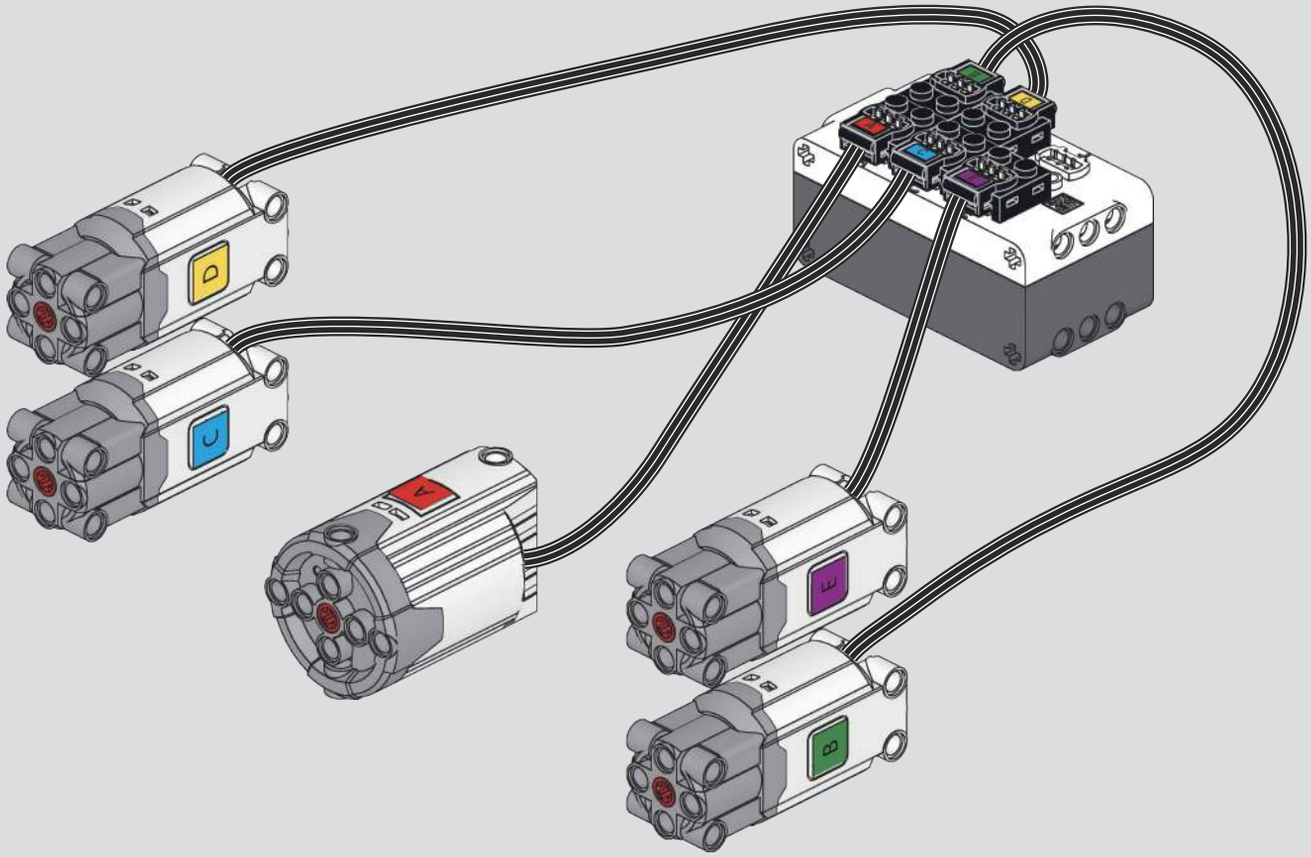

请扫描此二维码，获取并仔细查看H6.0模块的操作说明书。

Please scan this QR code to obtain and carefully review the operation manual for the H6.0 module.

0-1

进入APP，点击左上角图标

Enter the APP and click the icon in the upper left corner

0-2

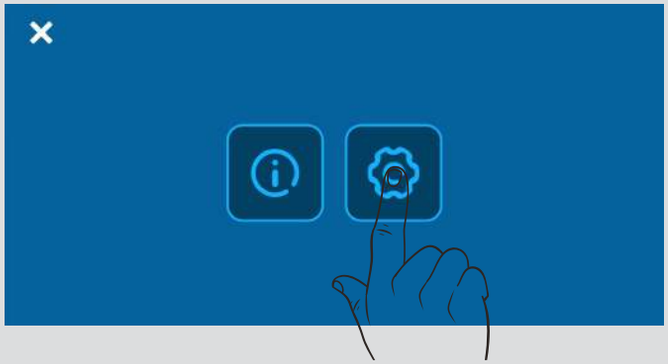

点击图标进入设置

Click the icon to enter the settings

0-3

点击最上面，更改系统语言

Click above to change the system language

0-4

系统语言可支持简体中文与英文

The system language can support simplified Chinese and English

1-1

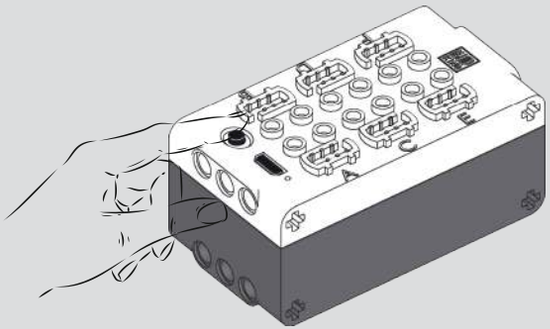

点击模块中间按钮，灯光闪烁

Click the button in the middle of the module, and the light flashes

1-2

进入APP，点击手动选择设备

Enter the APP and click to select the device manually

1-3

选择H6. 0模块
Select H6.0 module

1-4

点击右上角红色蓝牙
Click the red Bluetooth in the upper right corner

1-5

点击YX-XXXXX
Click on YX-XXXXX

1-6

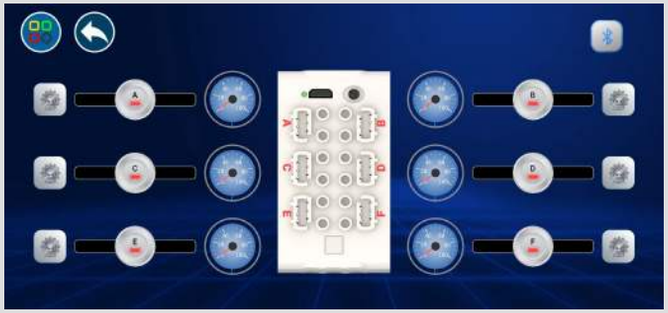

右上角显示蓝色蓝牙便是与模块连接成功
The blue Bluetooth in the upper right corner indicates successful connection with the module

1-7

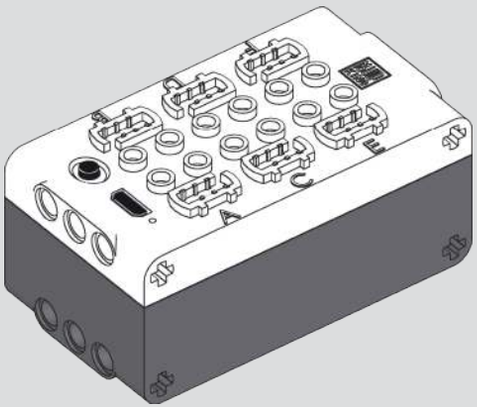

与APP连接成功的模块会保持稳定灯光，
可以测试各个电机运行是否正常

The module successfully connected to the APP will maintain stable light, Can test whether each motor operates normally

2

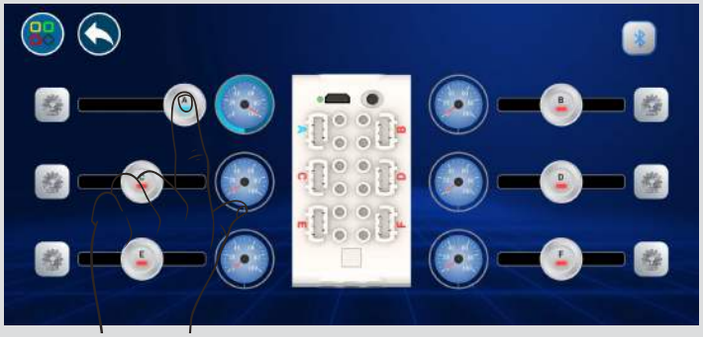

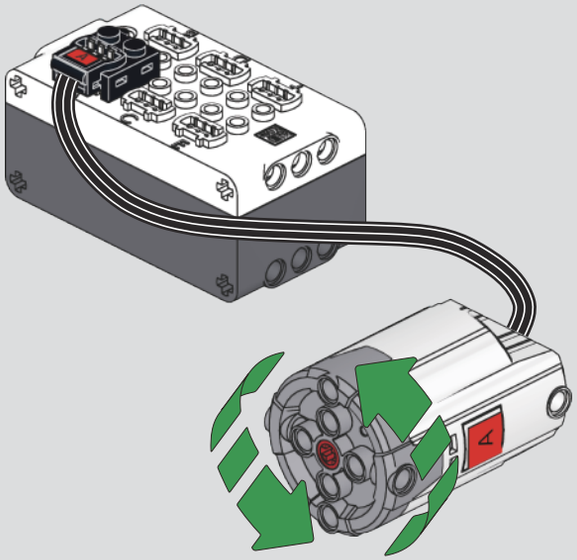

把A电机接口按压到模块的A处，APP操作界面将A摇杆往右移动，
电机向左旋转

Press the A motor interface to A of the module, move the A rocker to the right on the APP operation interface, and rotate the motor to the left

---

3

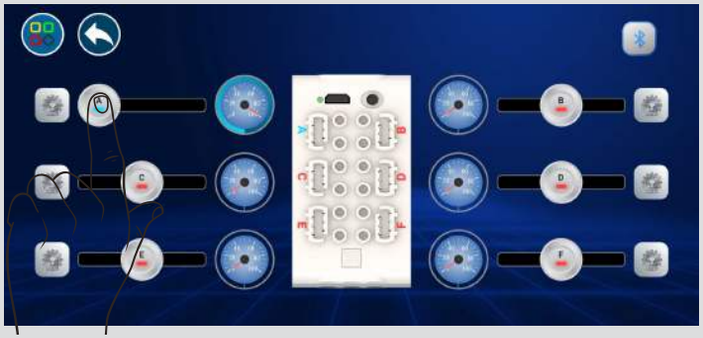

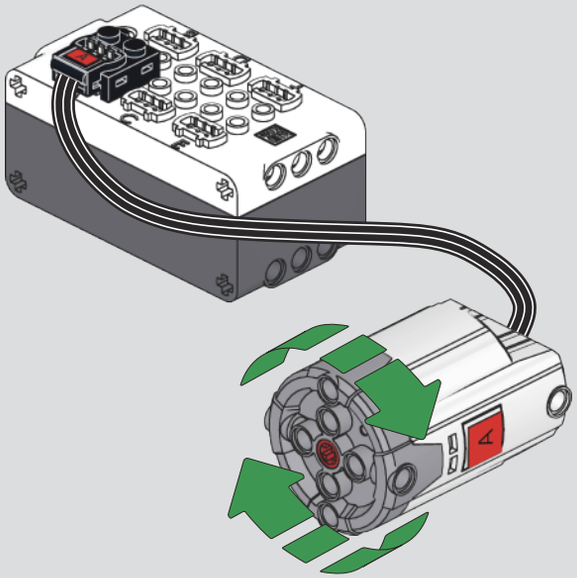

APP操作界面将A摇杆往左移动，电机向右旋转，
A号电机运行正常便可从模块取下

The APP operation interface moves the A rocker to the left, the motor rotates to the right, and the A # motor can be removed from the module when it operates normally

4

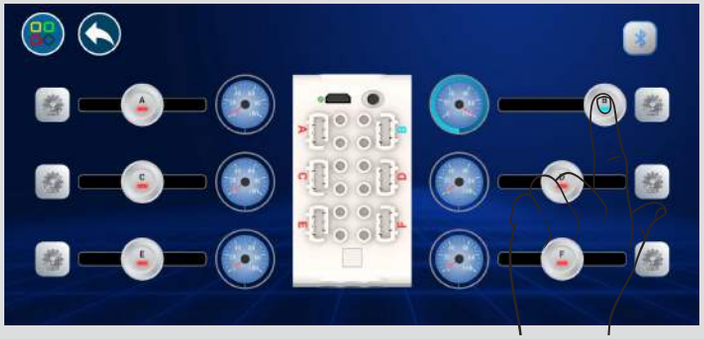

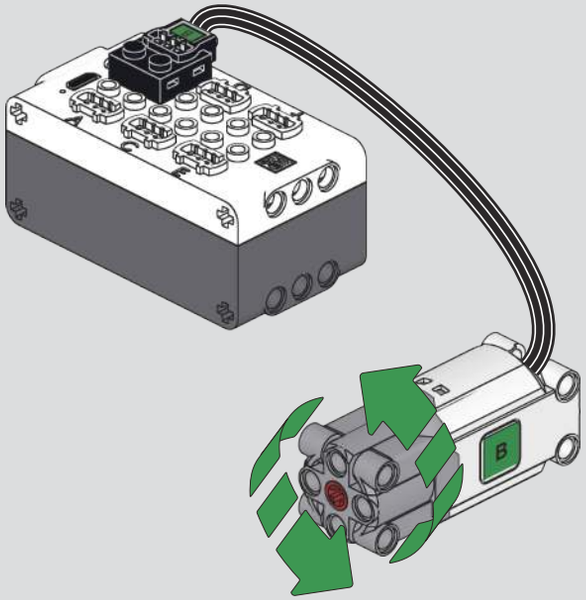

把B电机接口按压到模块的B处，APP操作界面将B摇杆往右移动，
电机向左旋转

Press the B motor interface to B of the module, move the B rocker to the right on the APP operation interface, and rotate the motor to the left

---

5

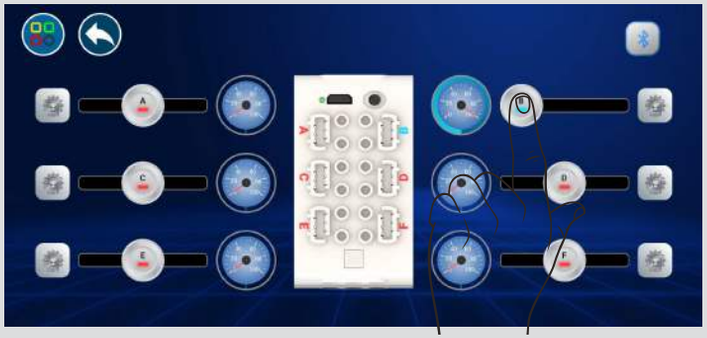

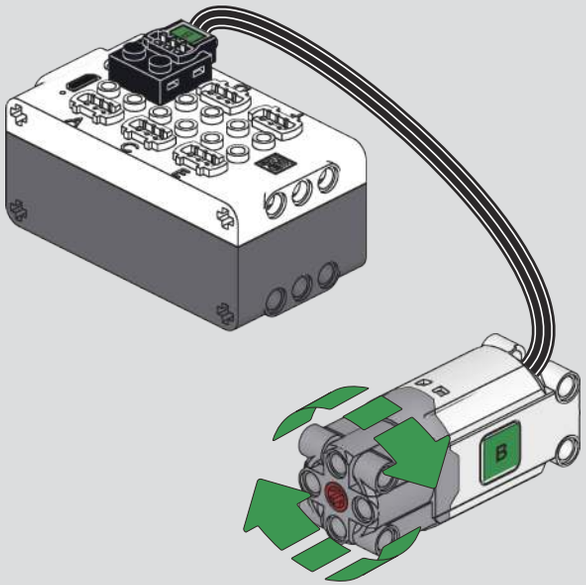

APP操作界面将B摇杆往左移动，电机向右旋转，
B号电机运行正常便可从模块取下

The APP operation interface moves the B rocker to the left, the motor rotates to the right, and the B # motor can be removed from the module when it operates normally

6

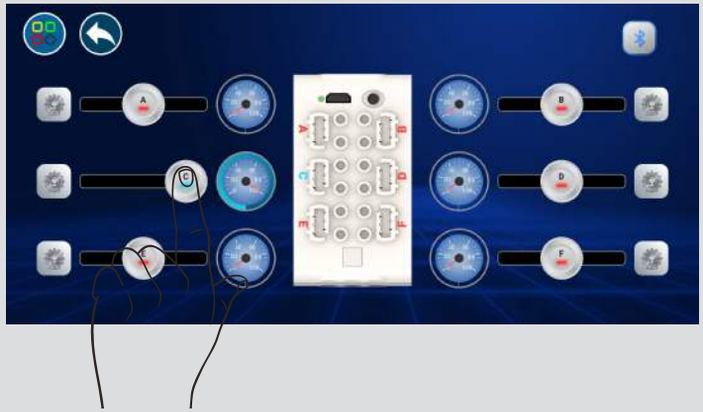

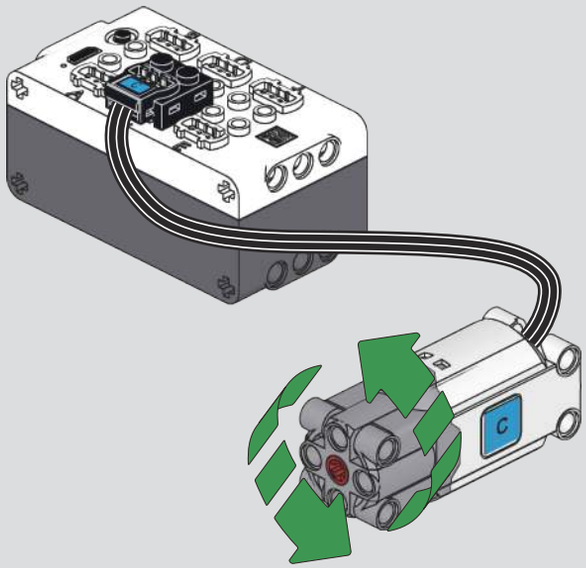

把C电机接口按压到模块的C处，APP操作界面将C摇杆往右移动，
电机向左旋转

Press the C motor interface to C of the module, move the C rocker to the right on the APP operation interface, and rotate the motor to the left

---

7

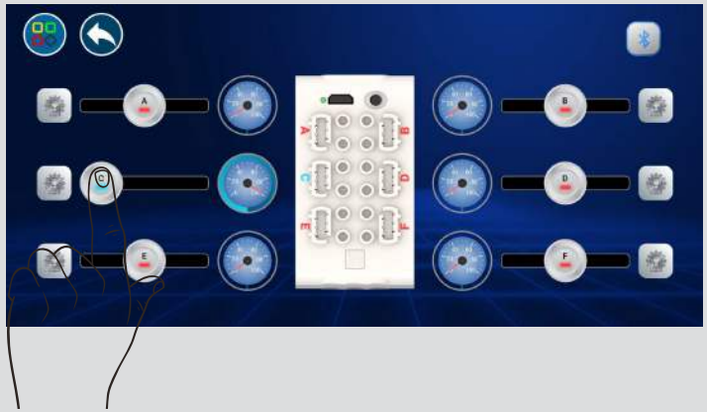

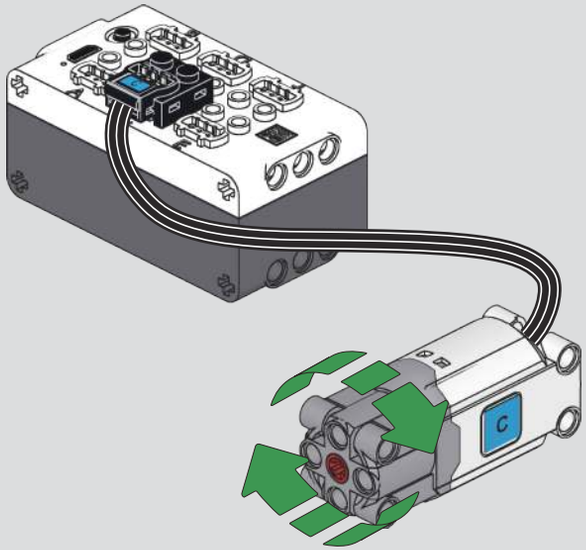

APP操作界面将C摇杆往左移动，电机向右旋转，
C号电机运行正常便可从模块取下

The APP operation interface moves the C rocker to the left, the motor rotates to the right, and the C # motor can be removed from the module when it operates normally

8

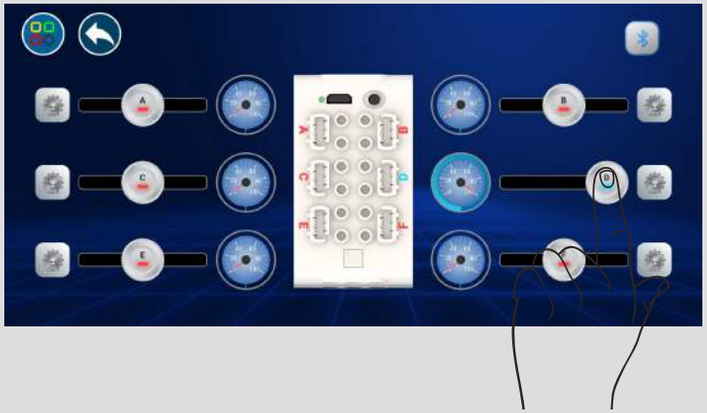

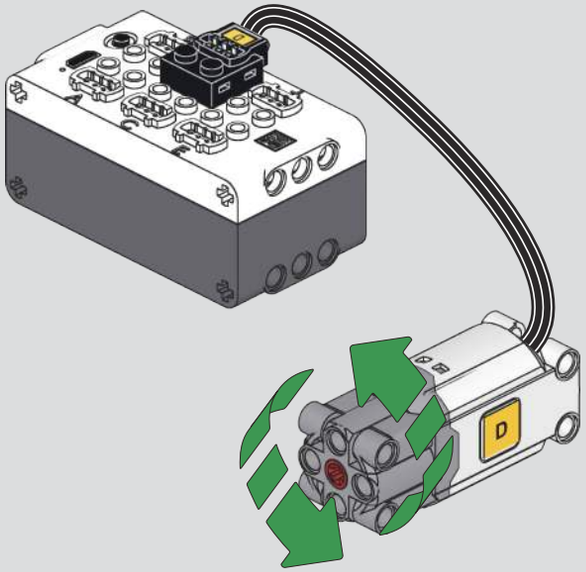

把D电机接口按压到模块的D处，APP操作界面将D摇杆往右移动，
电机向左旋转

Press the D motor interface to D of the module, move the D rocker to the right on the APP operation interface, and rotate the motor to the left

9

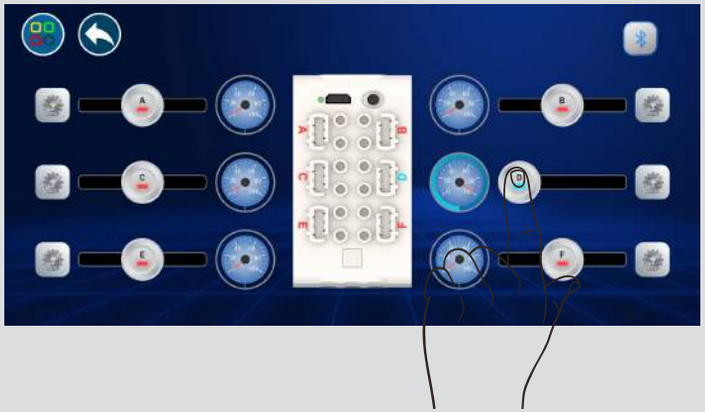

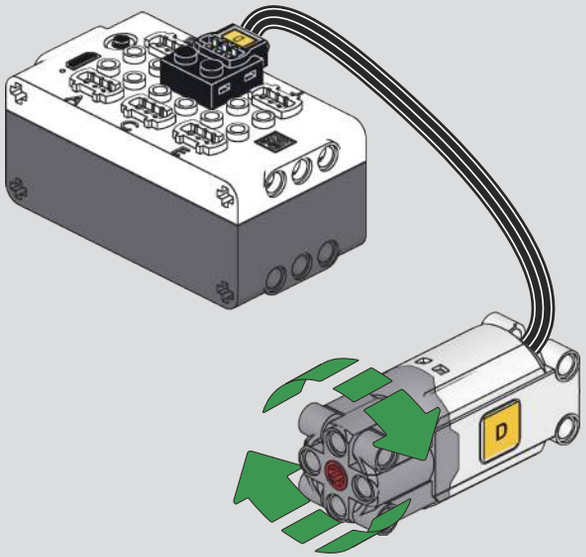

APP操作界面将D摇杆往左移动，电机向右旋转，
D号电机运行正常便可从模块取下

The APP operation interface moves the D rocker to the left, the motor rotates to the right, and the D # motor can be removed from the module when it operates normally

10

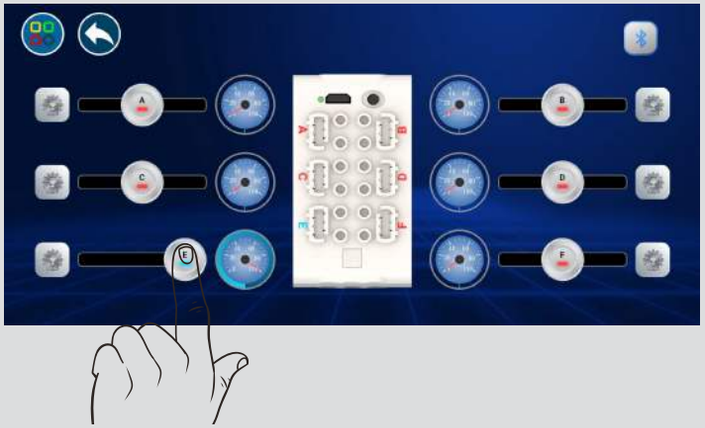

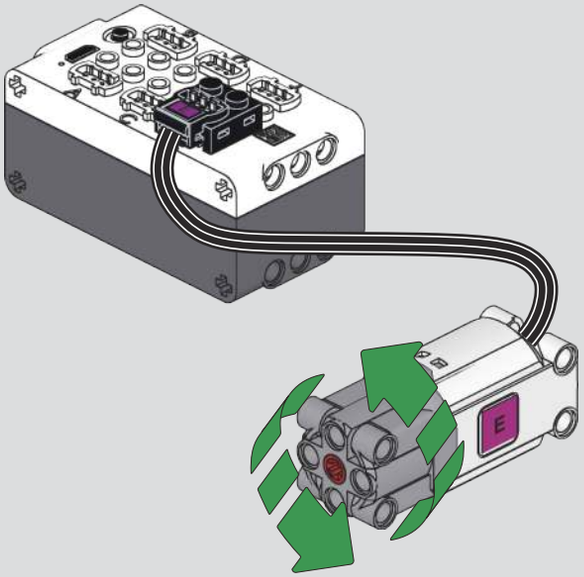

把E电机接口按压到模块的E处，APP操作界面将E摇杆往右移动，
电机向左旋转

Press the E motor interface to E of the module, move the E rocker to the right on the APP operation interface, and rotate the motor to the left

---

11

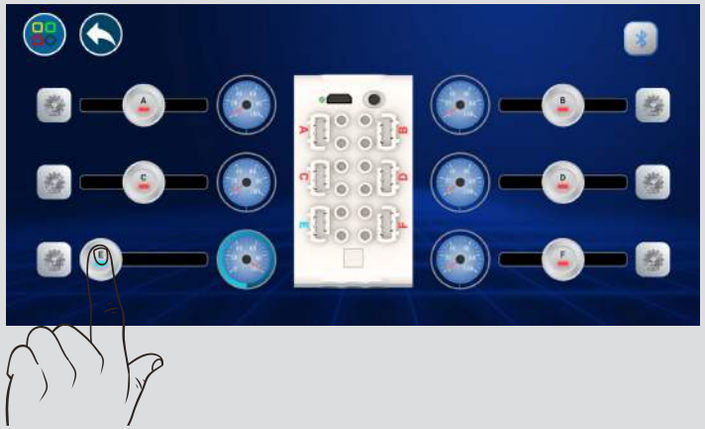

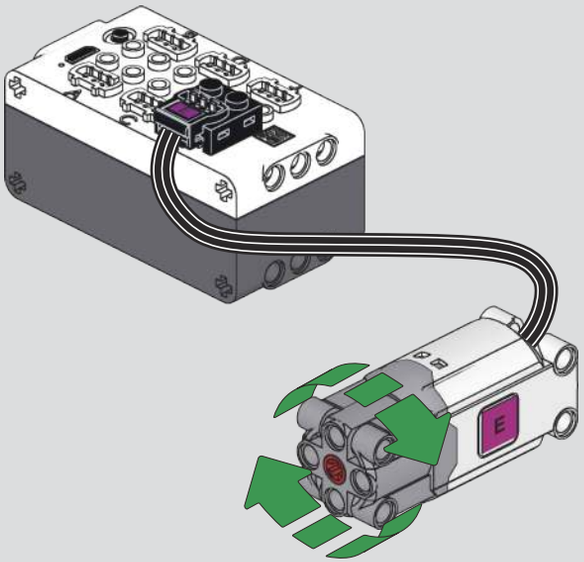

APP操作界面将E摇杆往左移动，电机向右旋转，
E号电机运行正常便可从模块取下

The APP operation interface moves the E rocker to the left, the motor rotates to the right, and the E # motor can be removed from the module when it operates normally

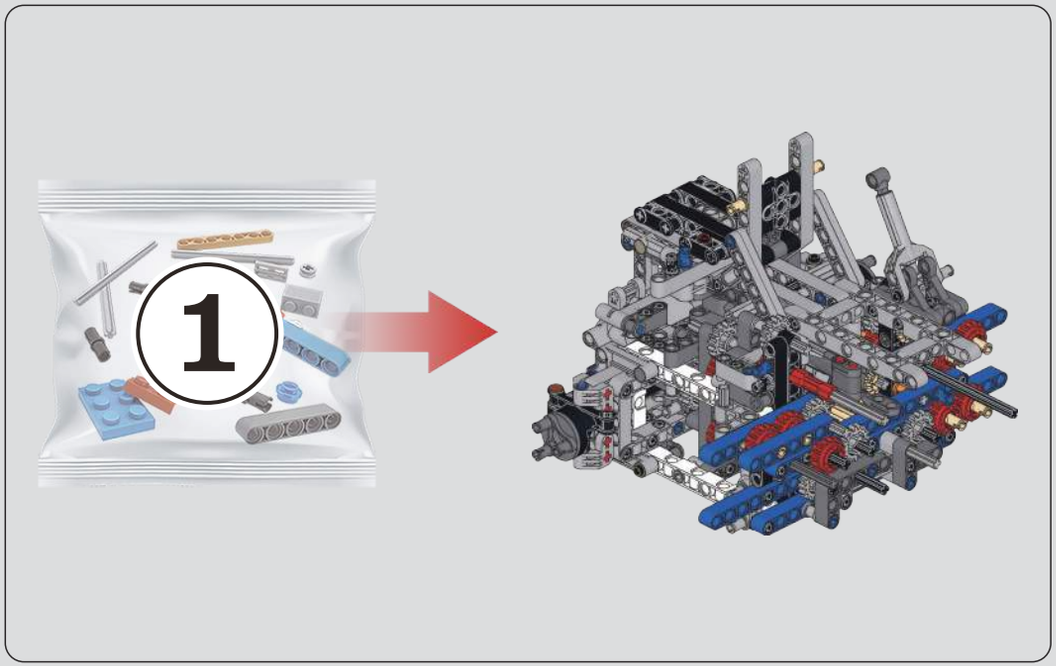
1

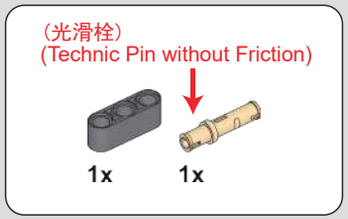
（光滑栓）
(Technic Pin without Friction)
1x
1x

1

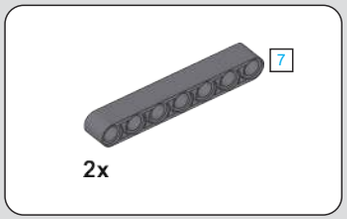
7
2x

2

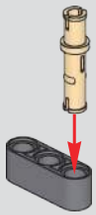

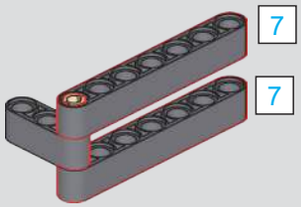
7
7

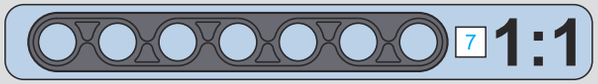
7
1:1

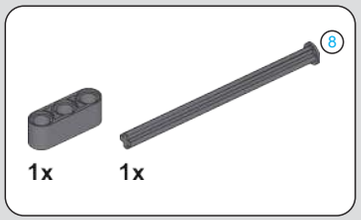
8
1x
1x

3

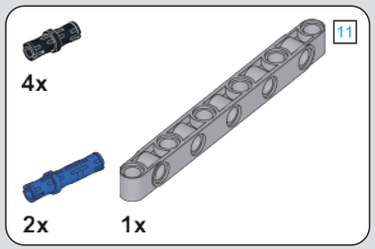
11
4x
2x
1x

4

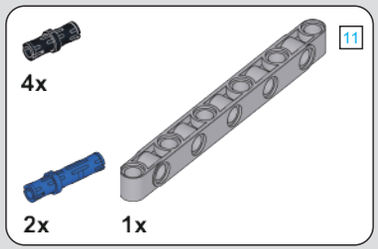
11
4x
2x
1x

5

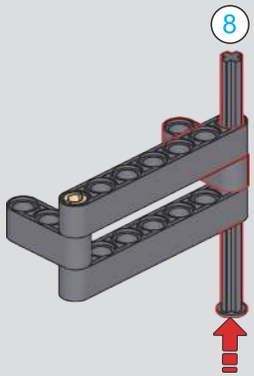
8

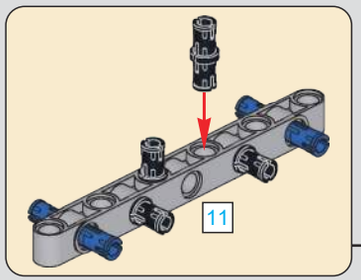
11

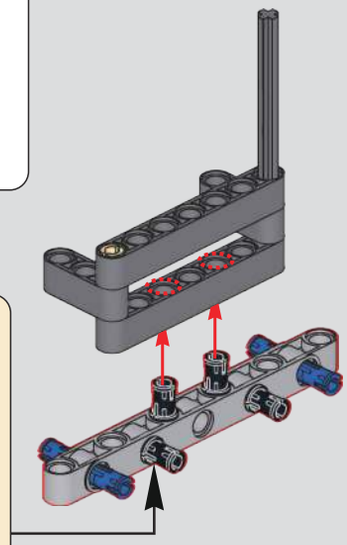

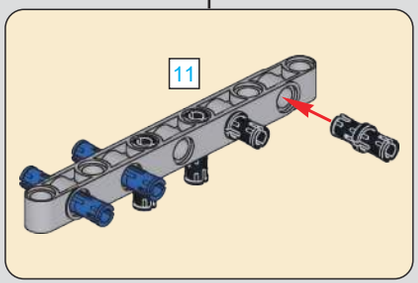
11

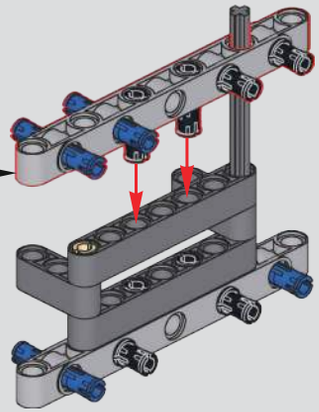

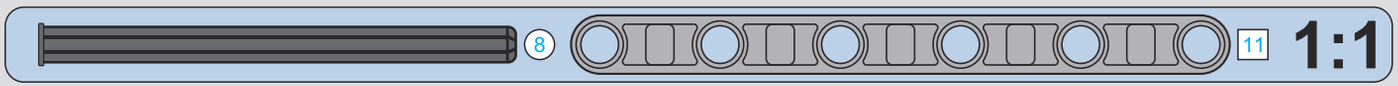
8
11
1:1

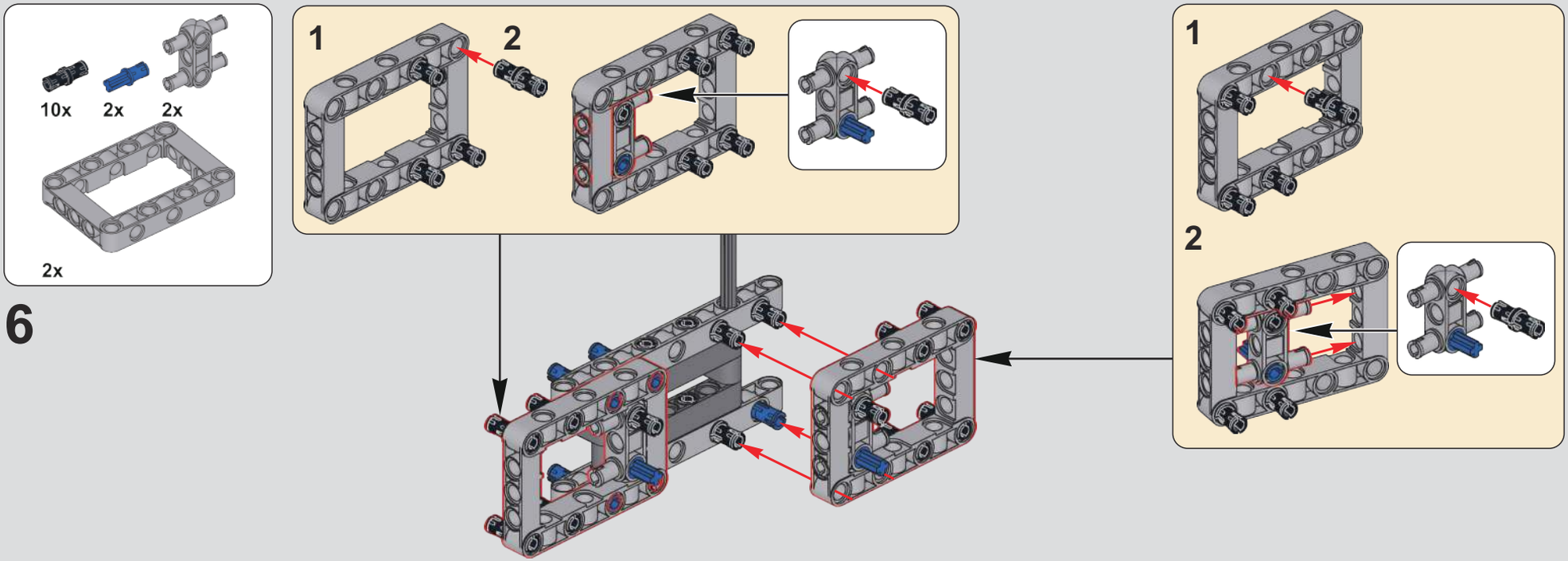

6

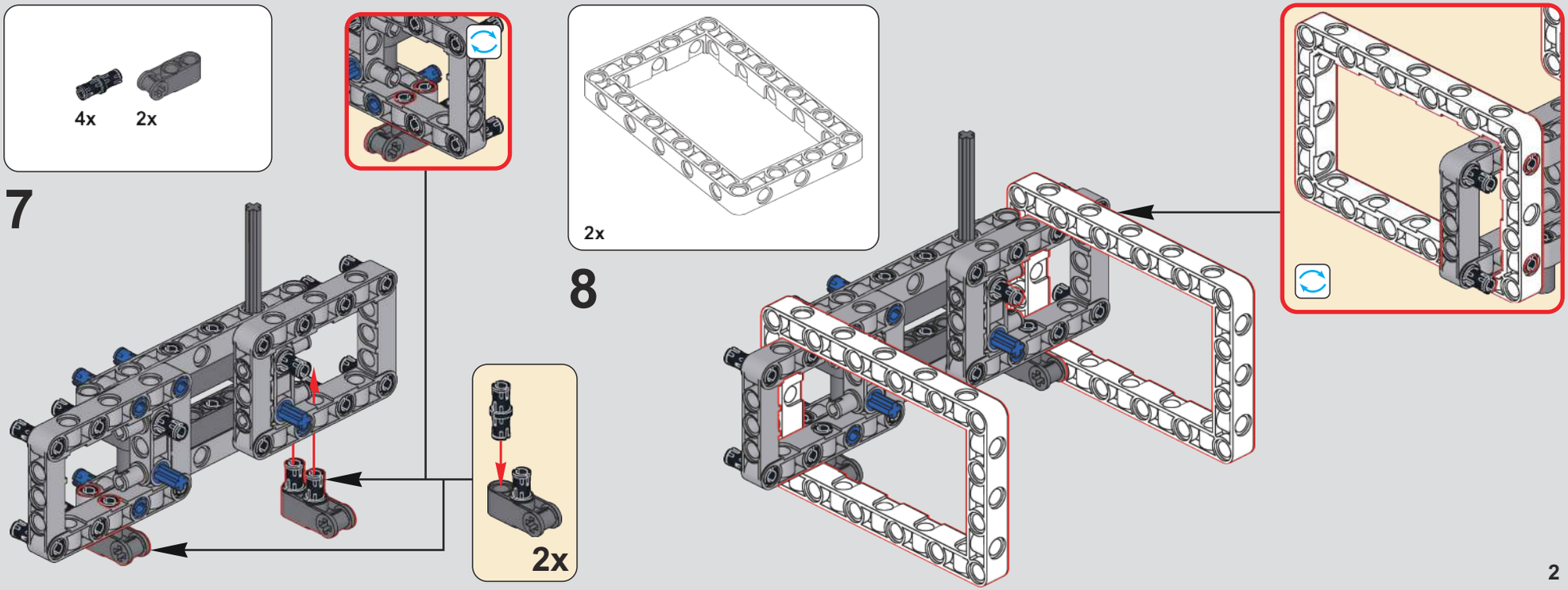

7

8

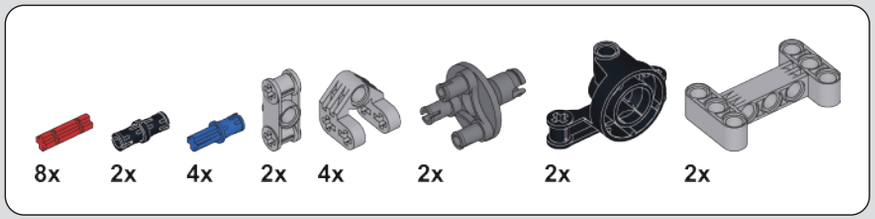

9

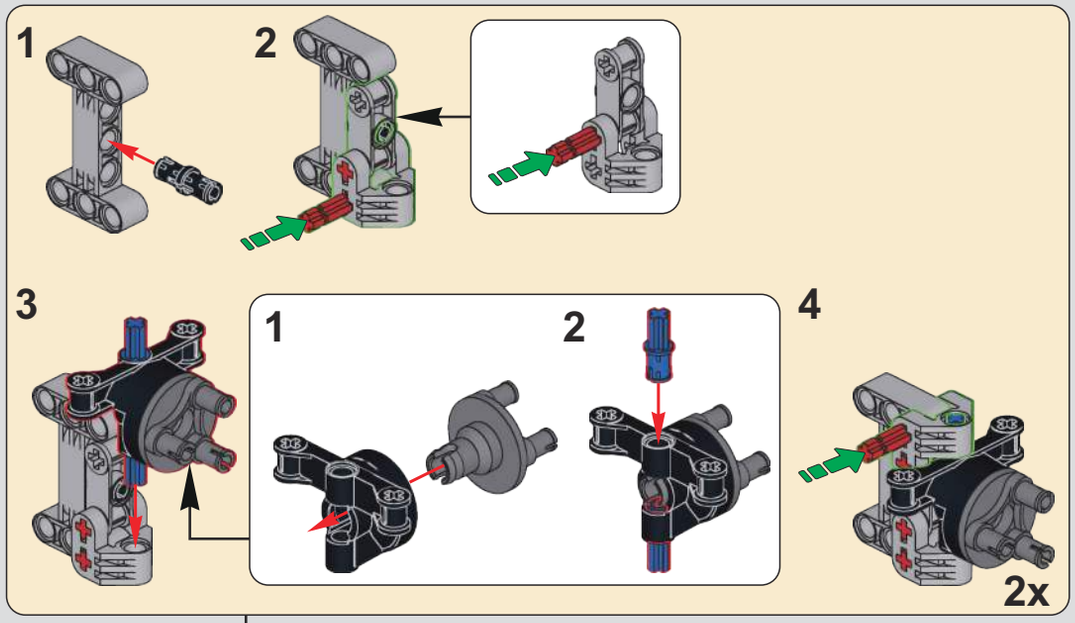

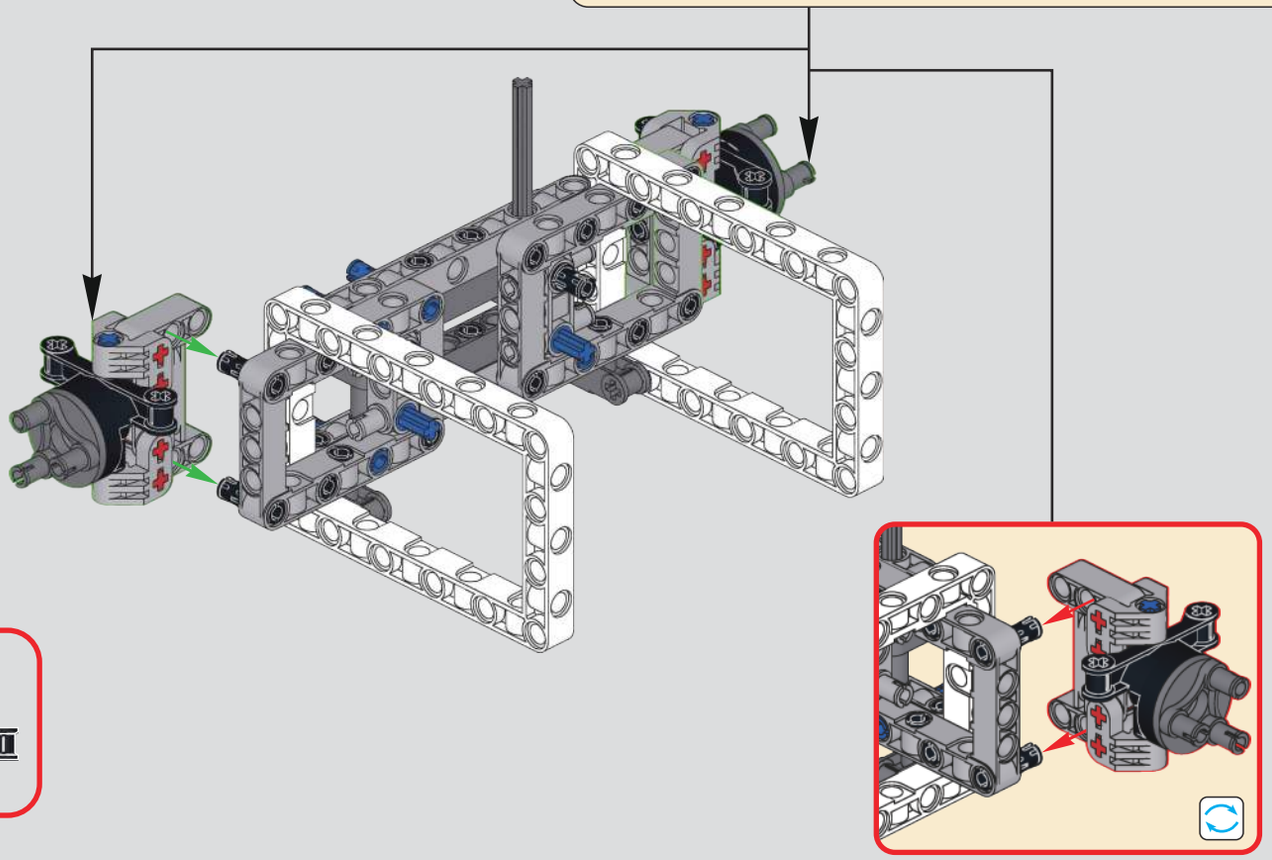

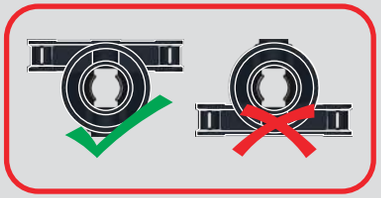

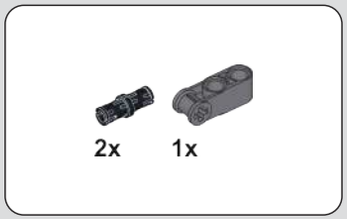

10

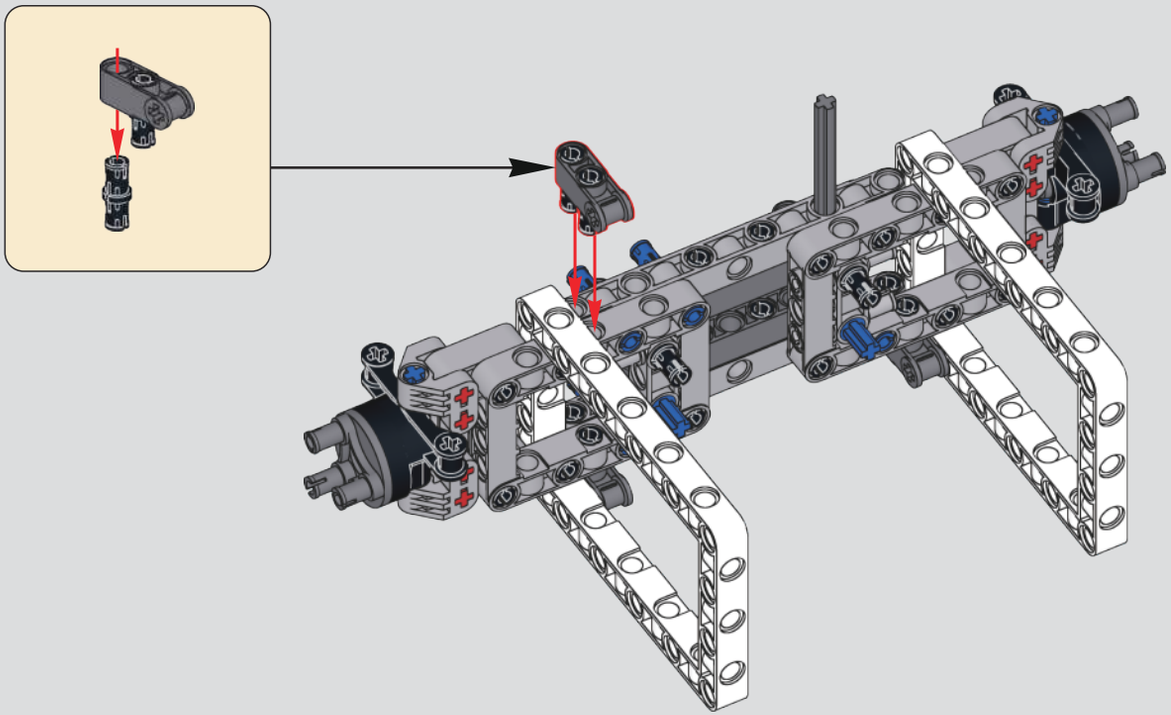

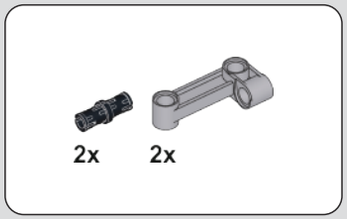

11

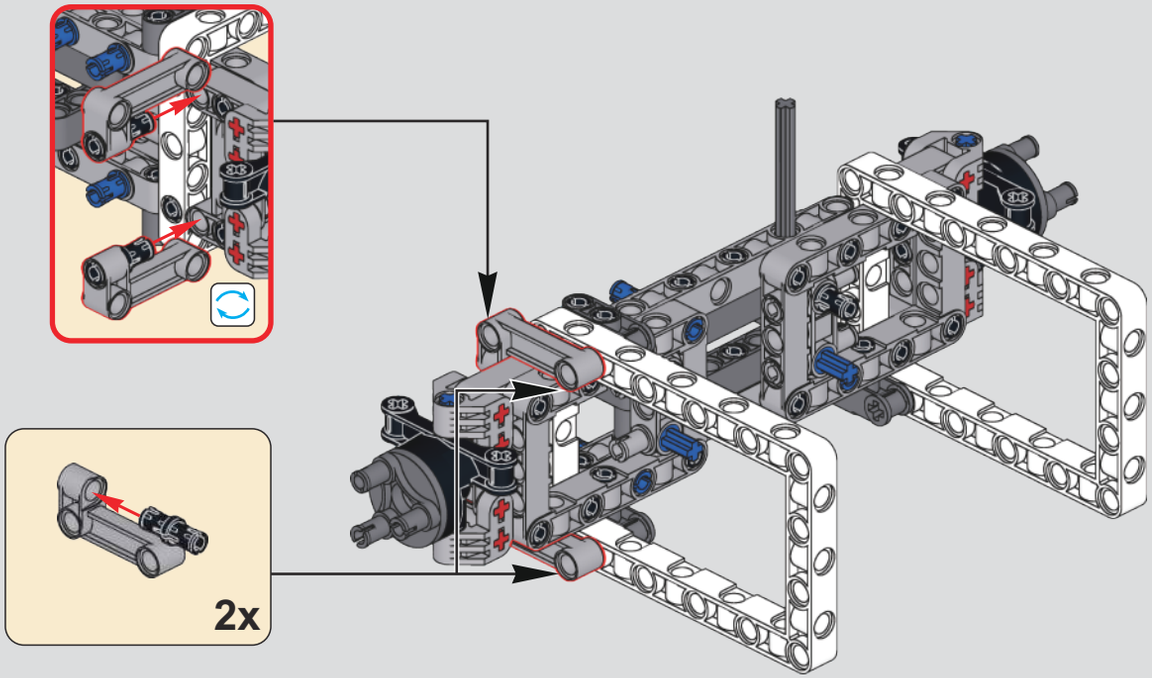

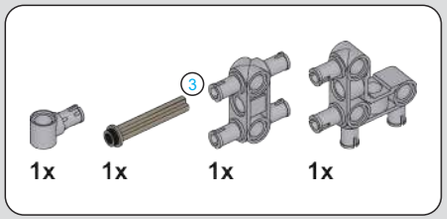

12

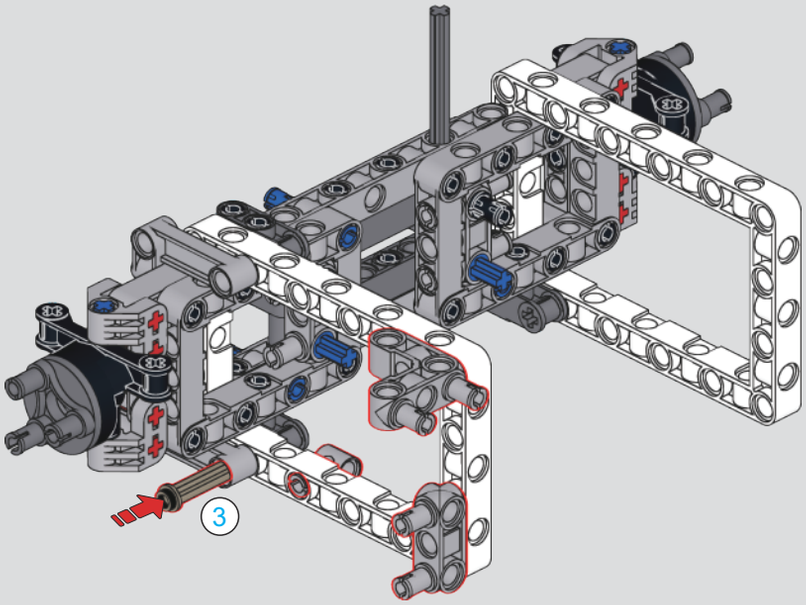

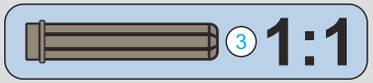

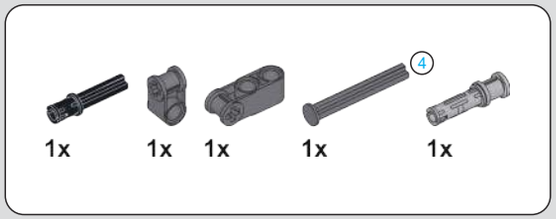

13

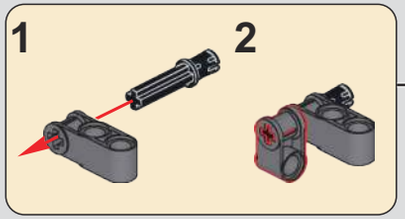

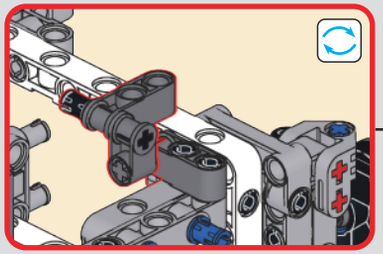

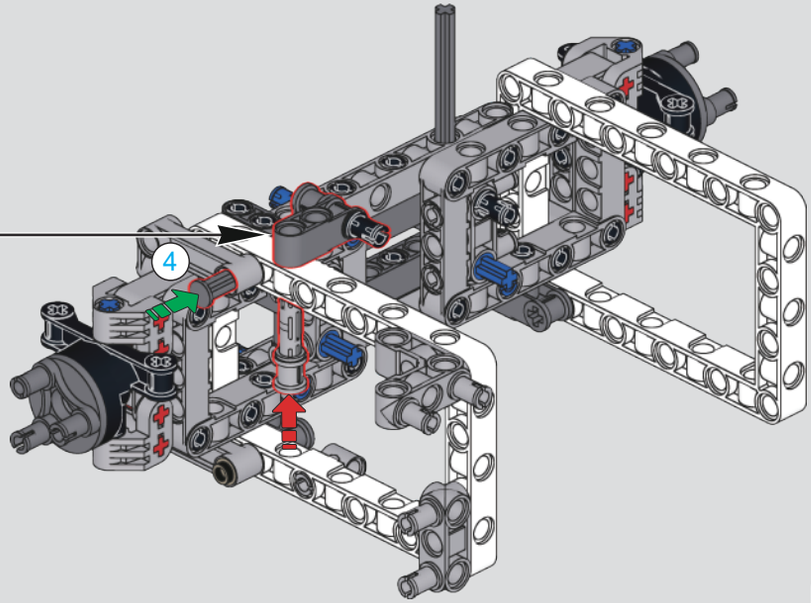

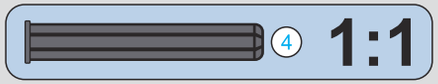

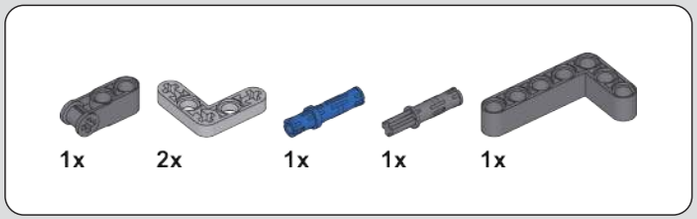

14

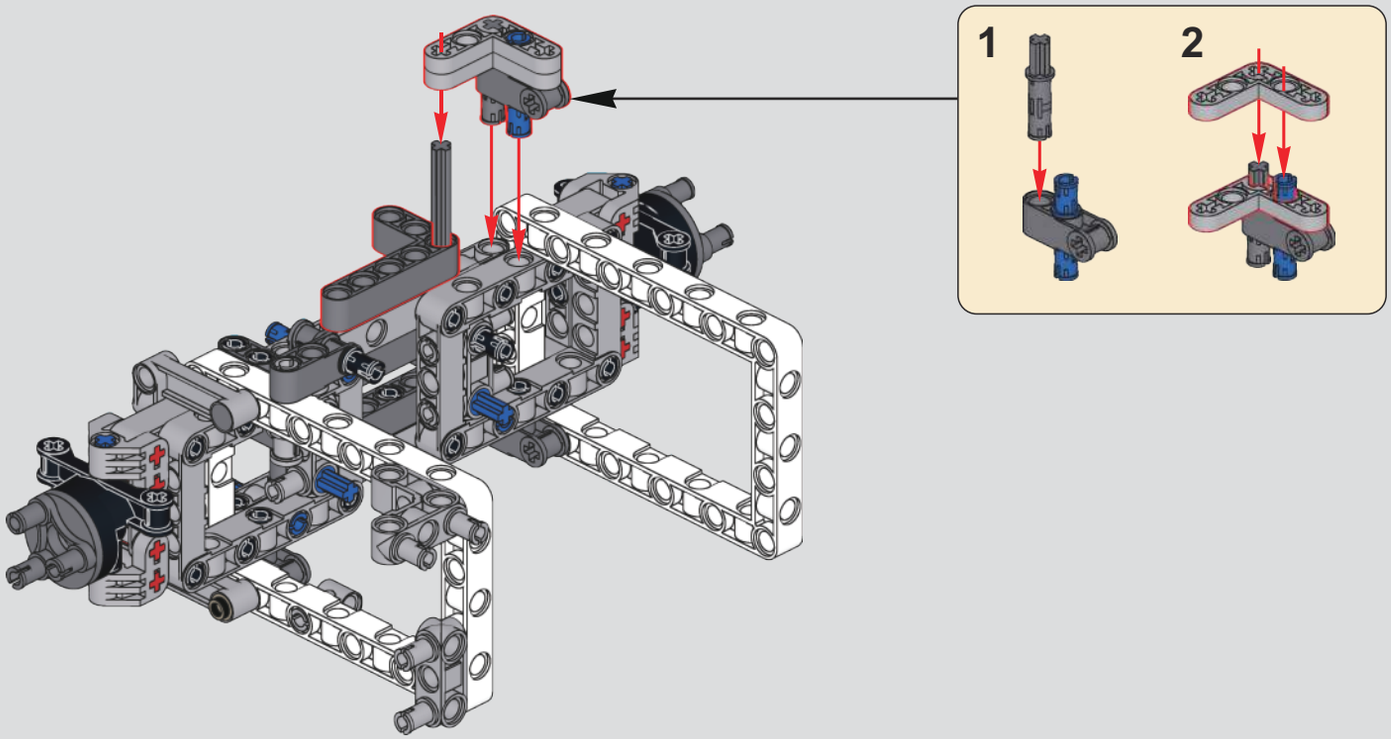

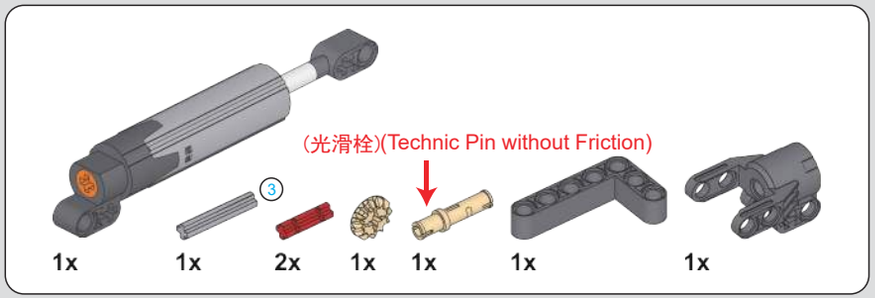
(光滑栓)(Technic Pin without Friction)
3
1x
1x
2x
1x
1x
1x
1x

15

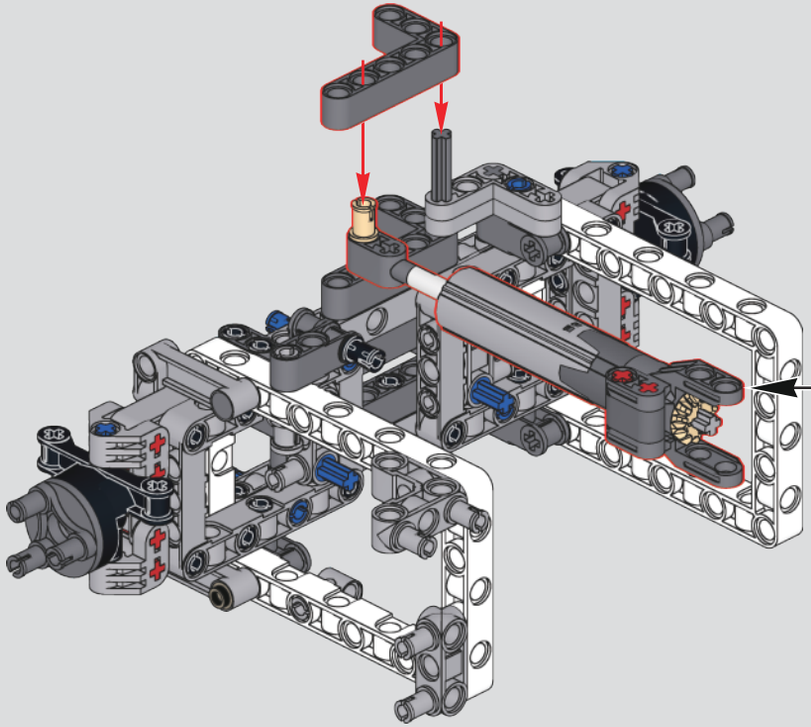

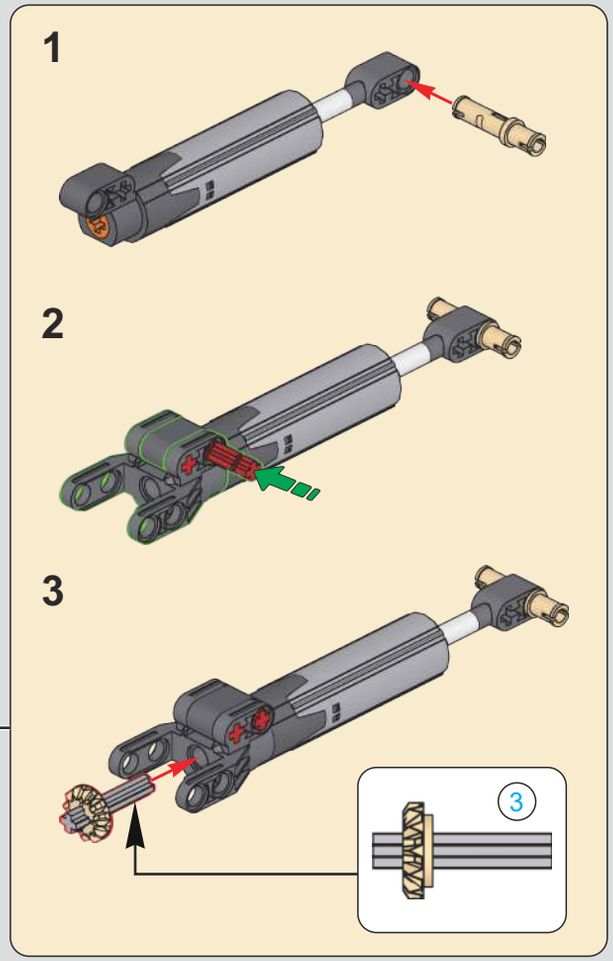
1
2
3
3

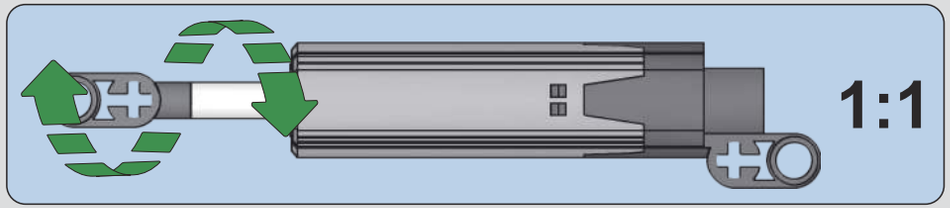
1:1

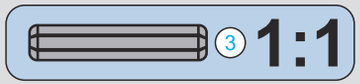
3
1:1

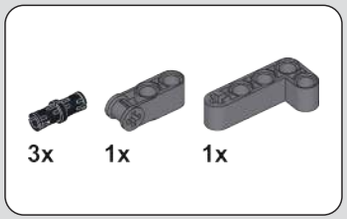

16

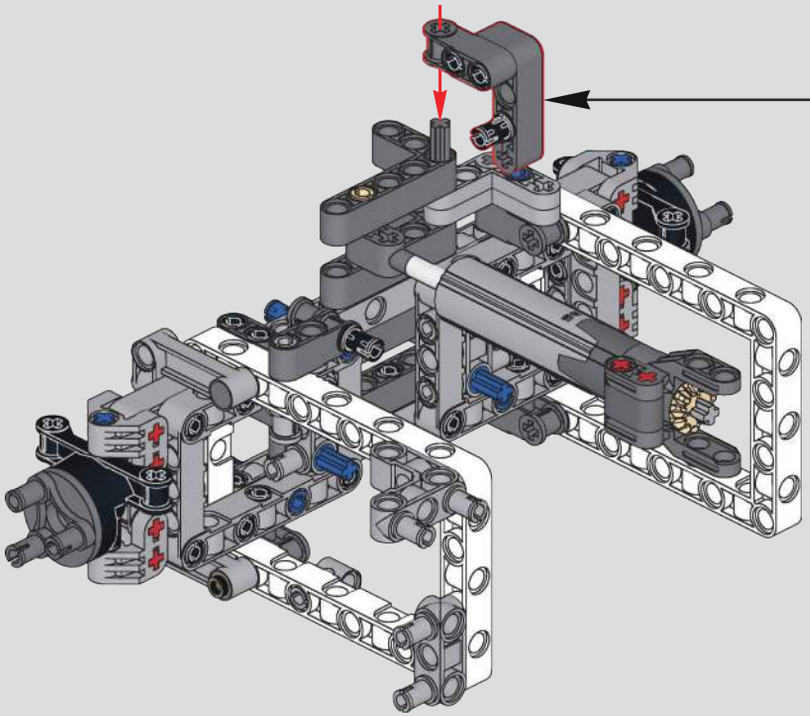

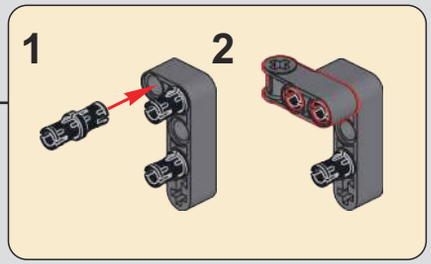

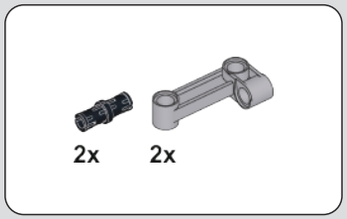

17

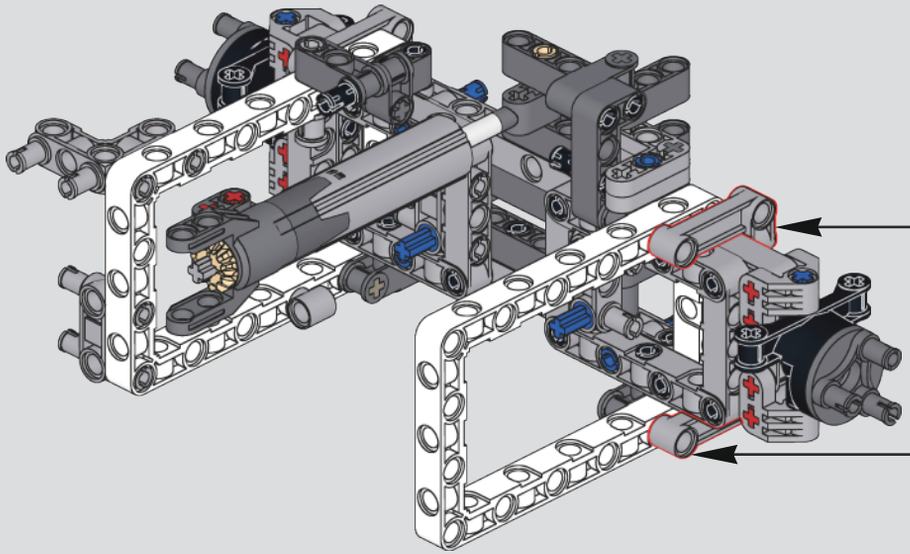

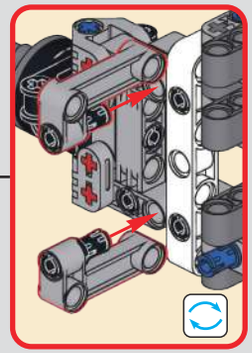

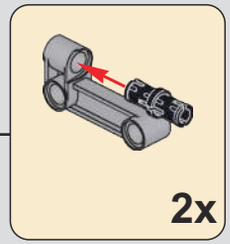

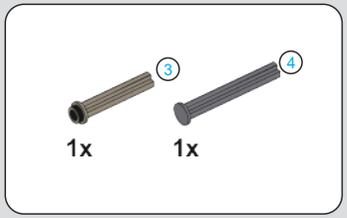

18

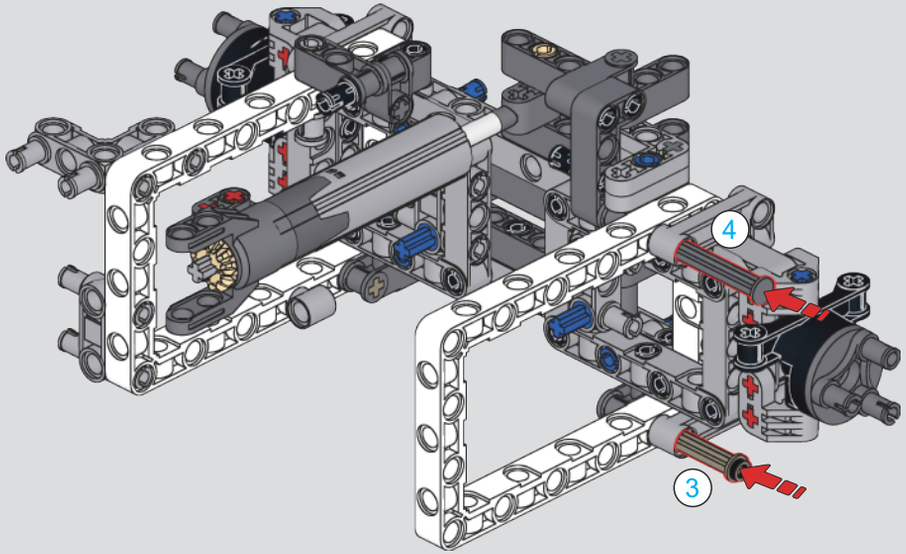

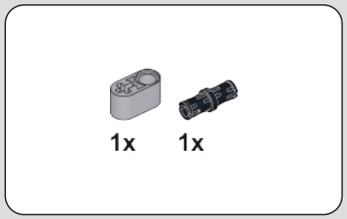

19

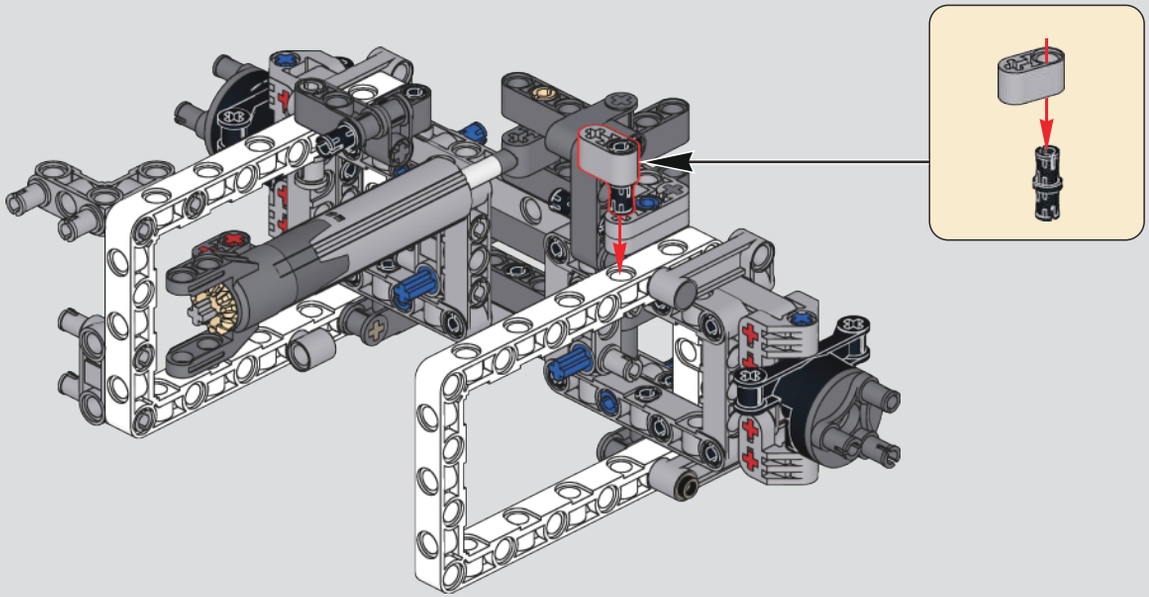

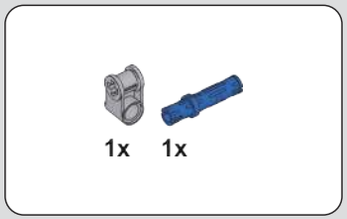

20

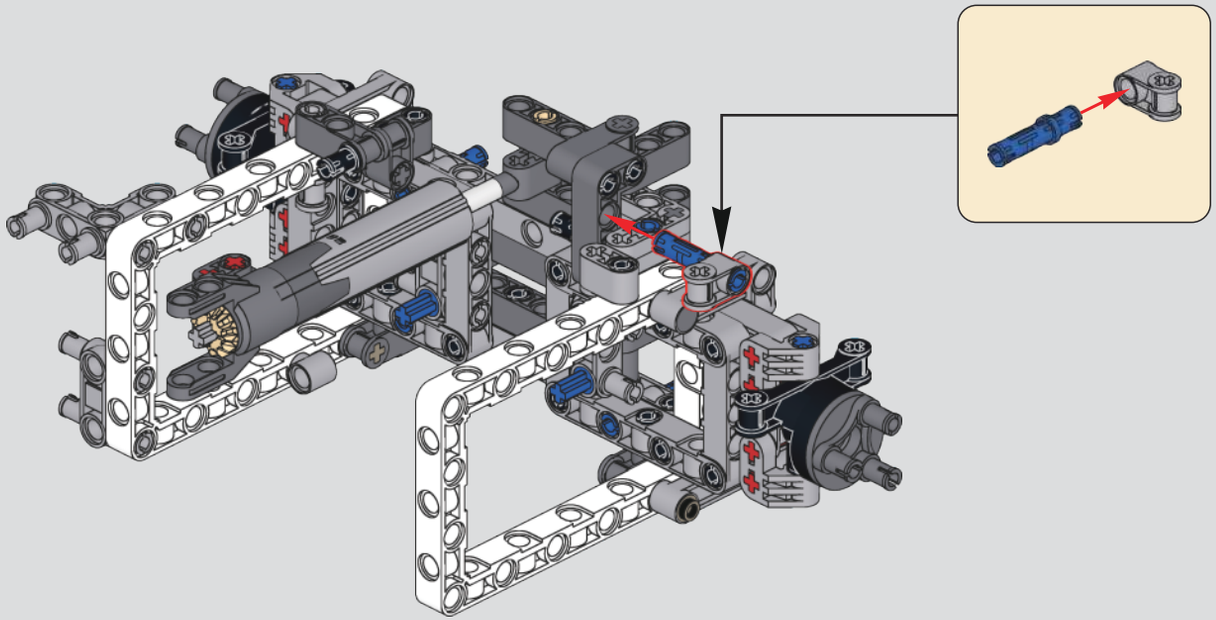

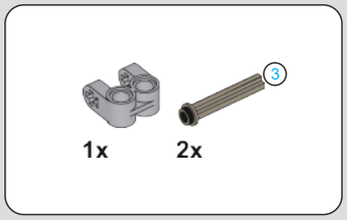

21

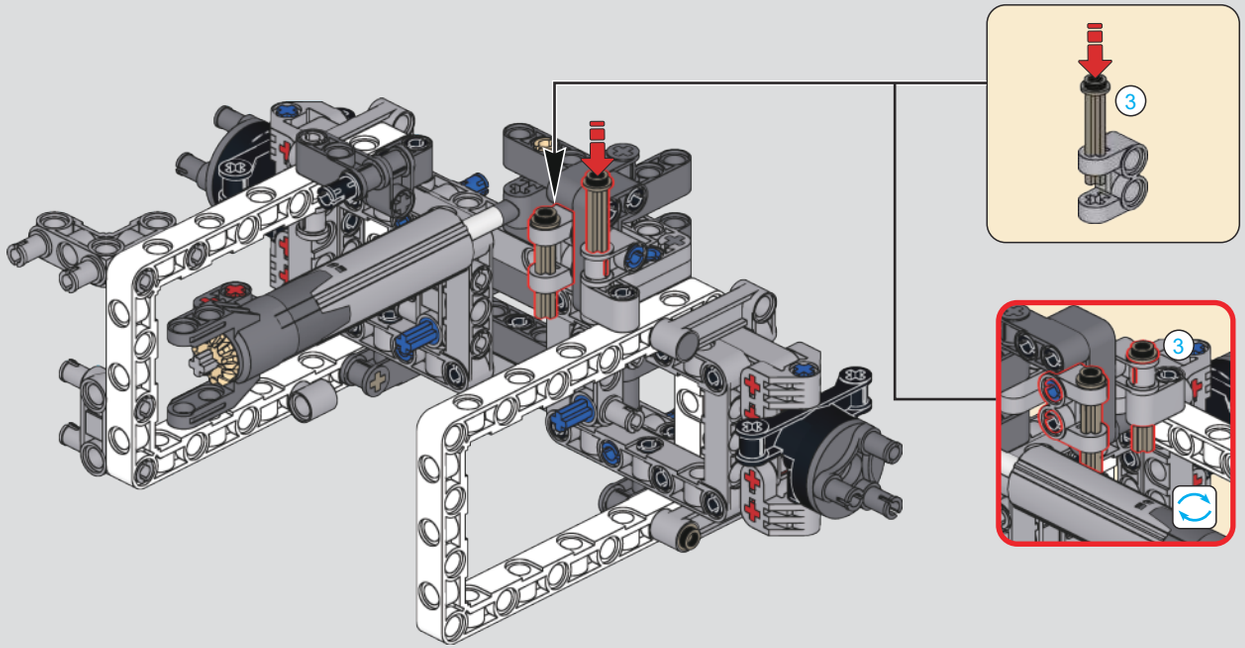

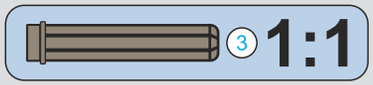

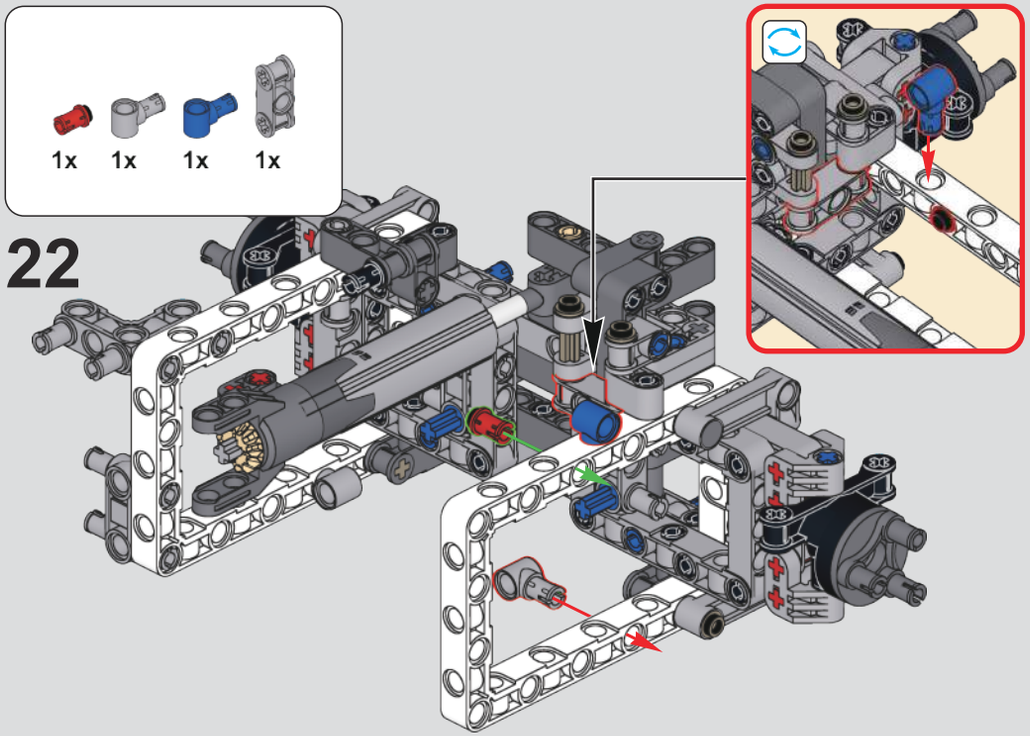
1x
1x
1x
1x
22

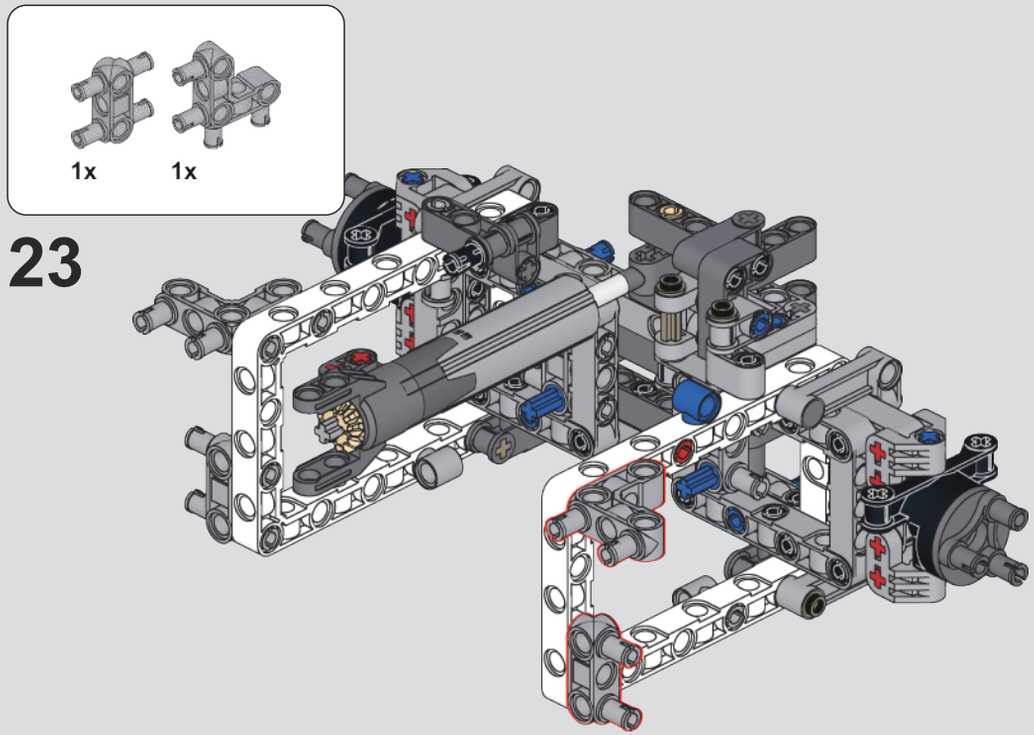
1x
1x
23

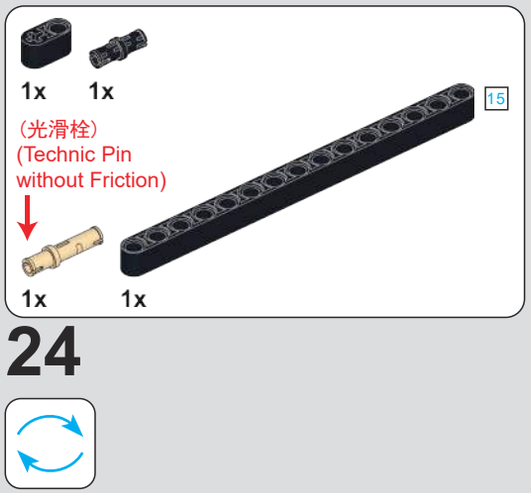
1x
1x
(光滑栓)
(Technic Pin
without Friction)
1x
1x
15
24

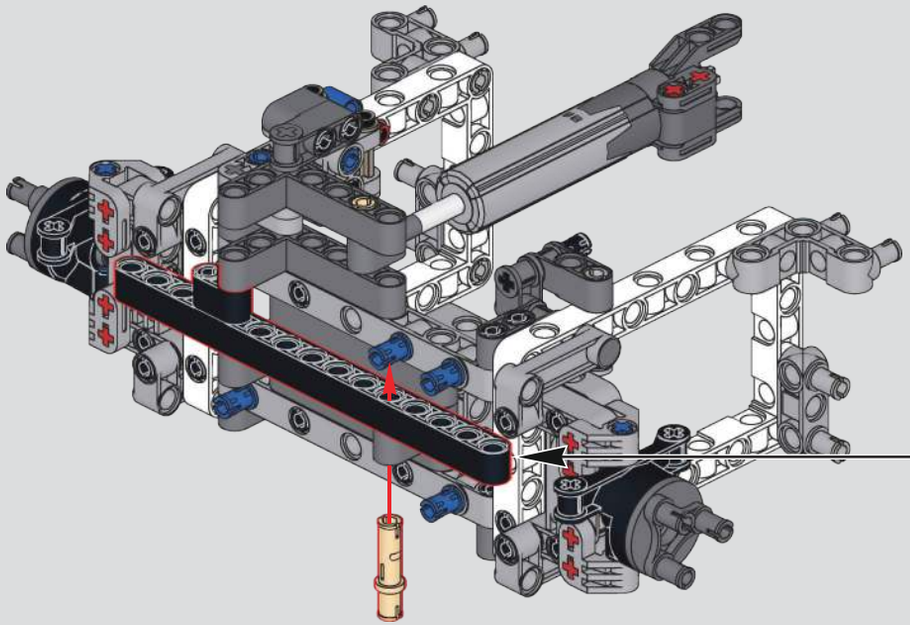

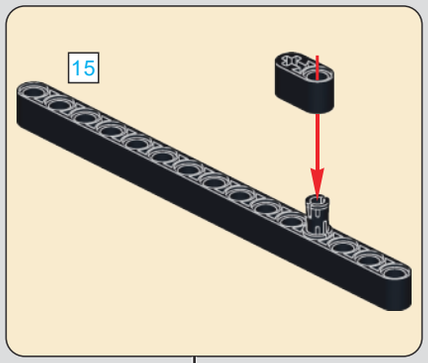
15

15
1:1

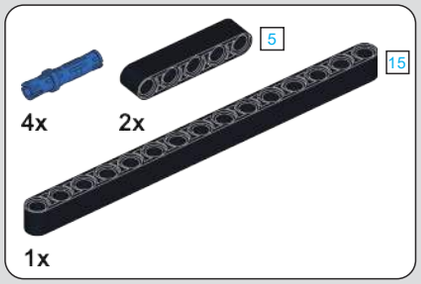

25

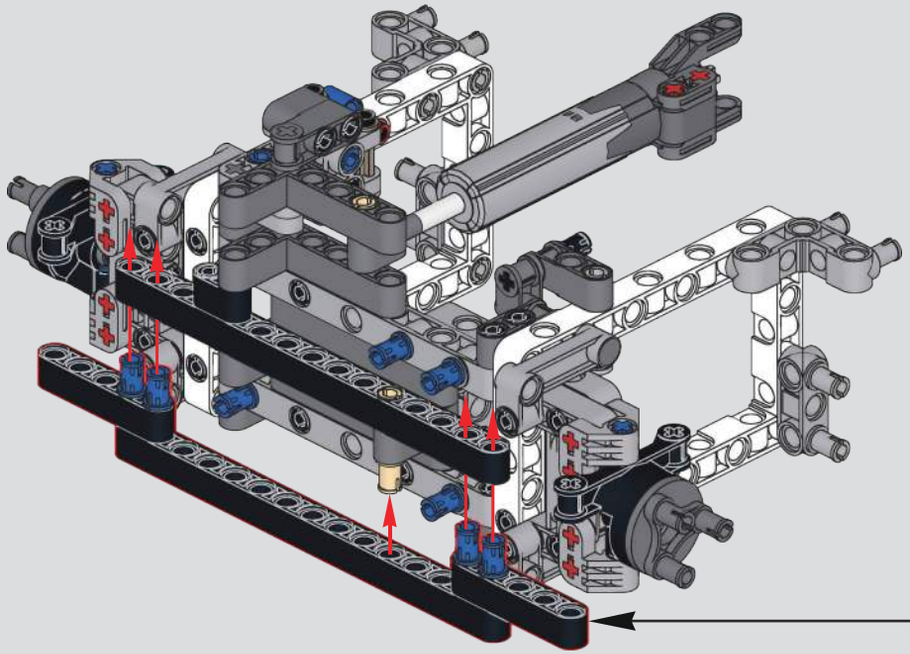

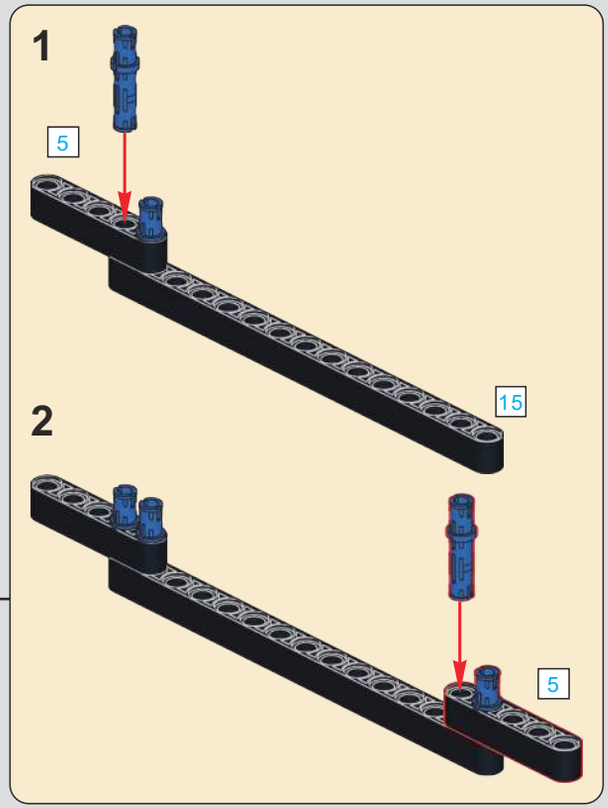

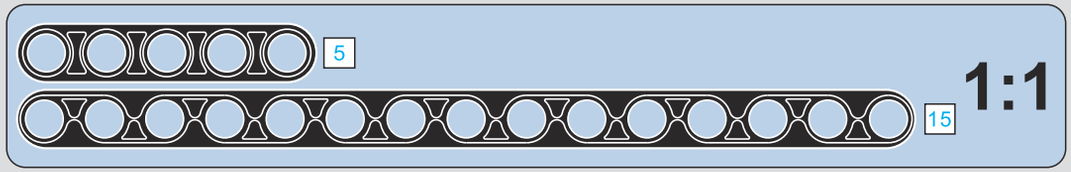

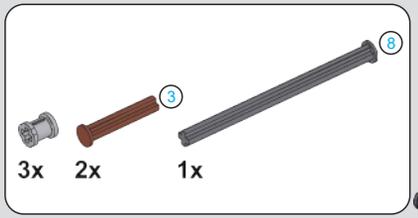

26

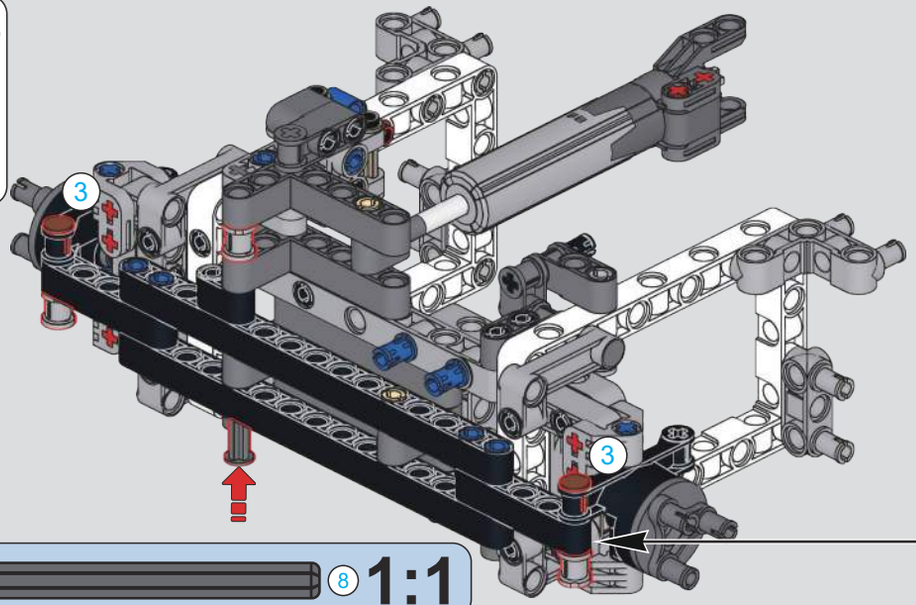

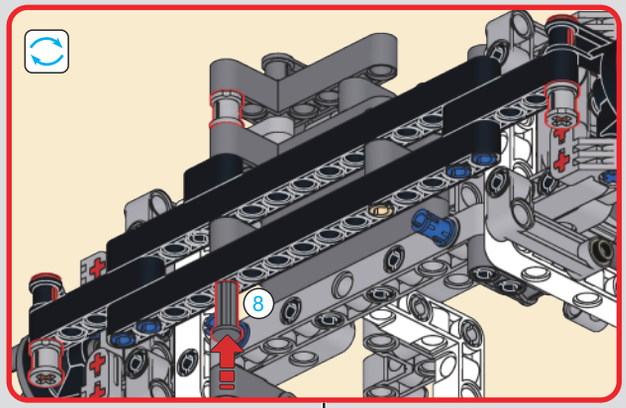

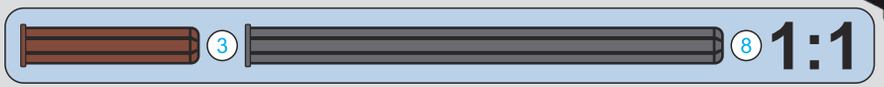

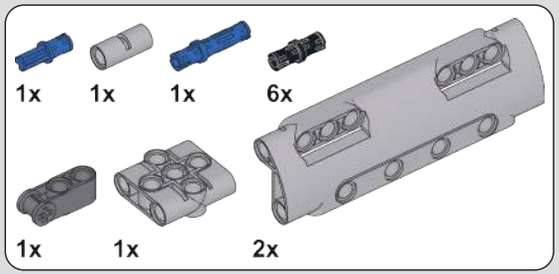

27

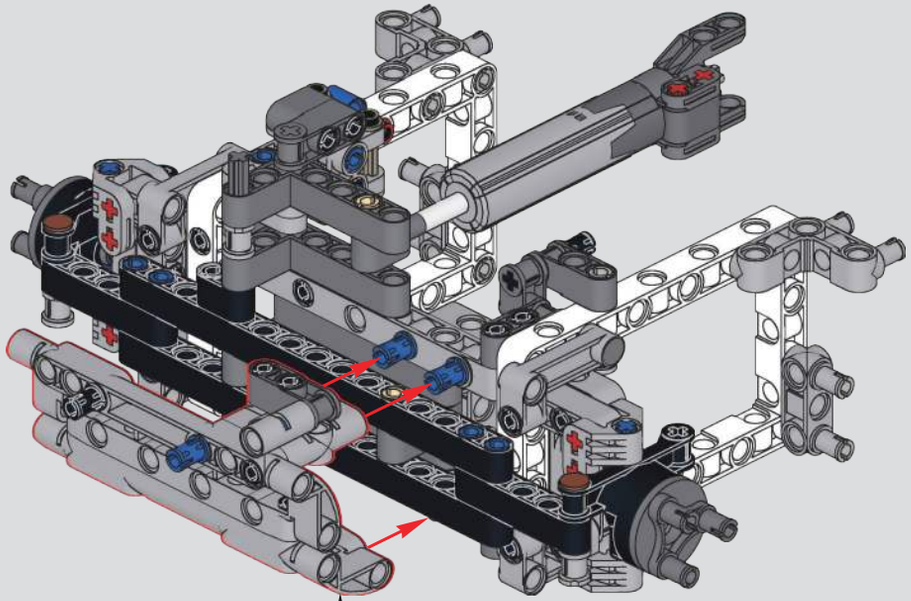

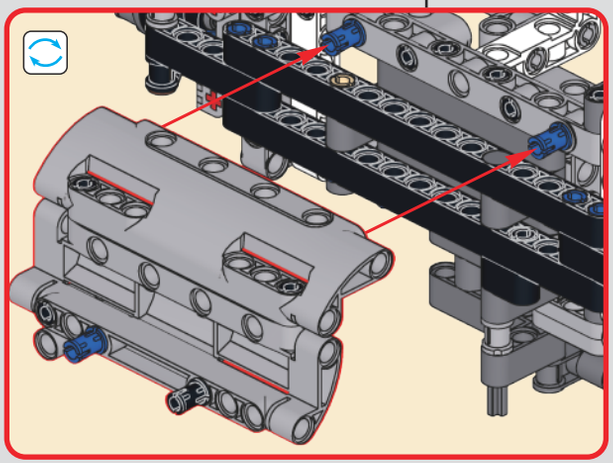

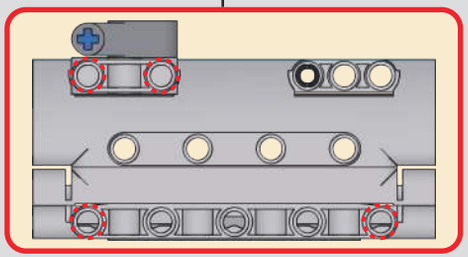

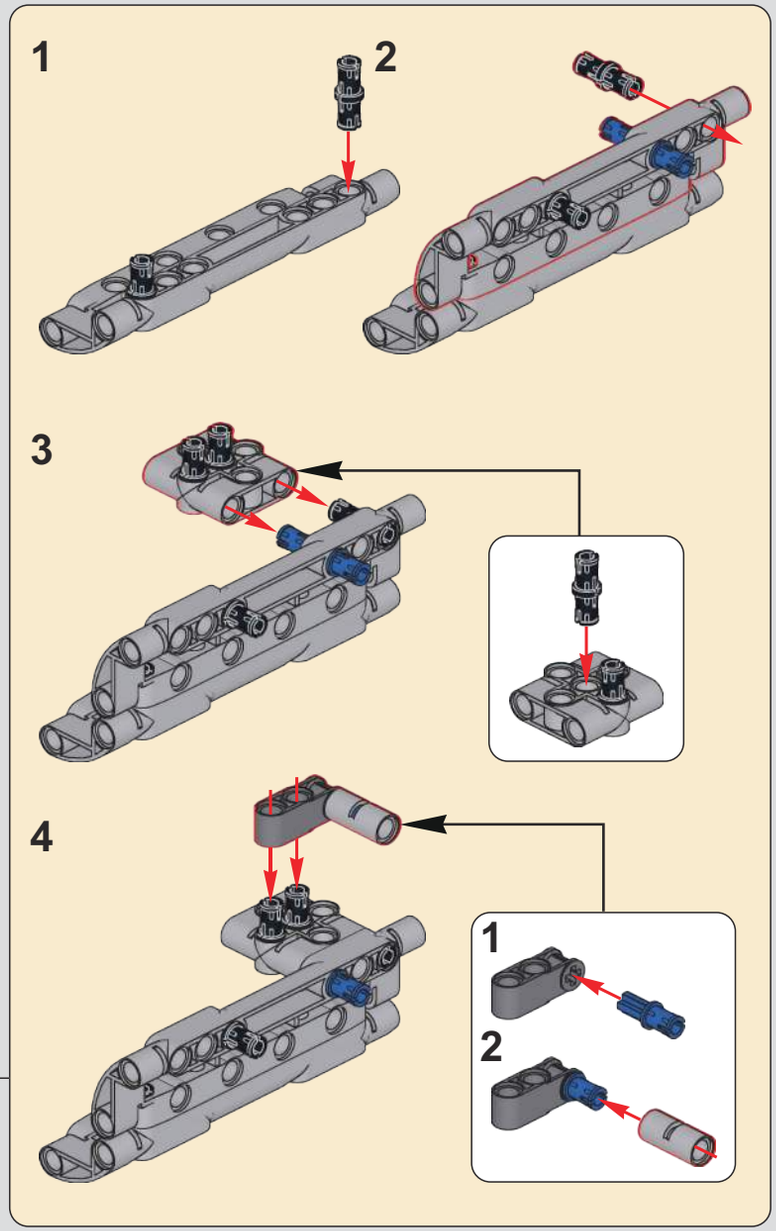

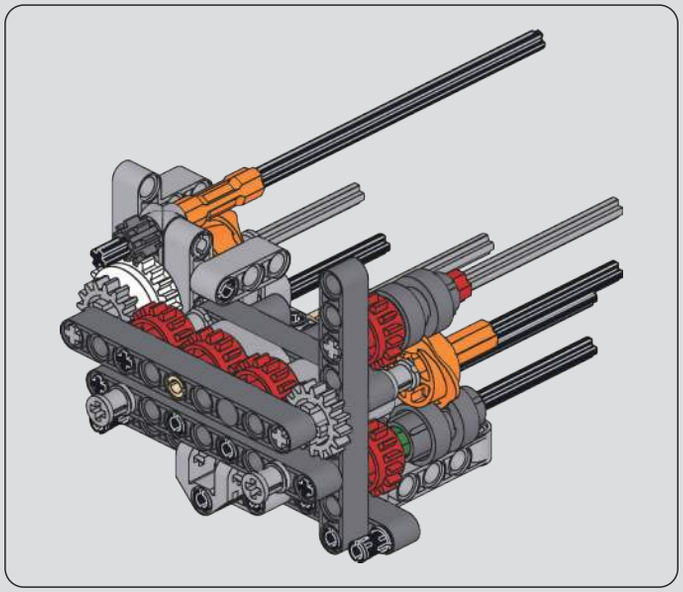

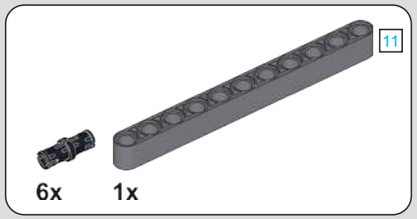

28

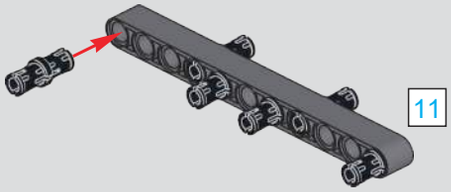

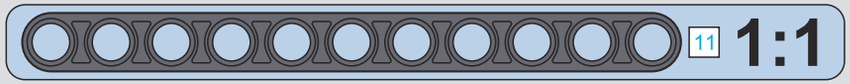

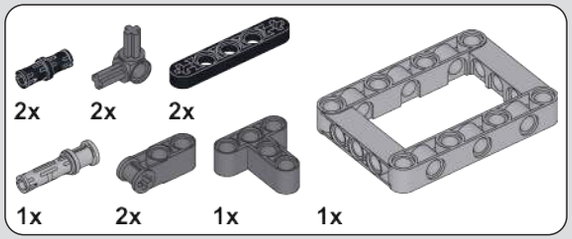

29

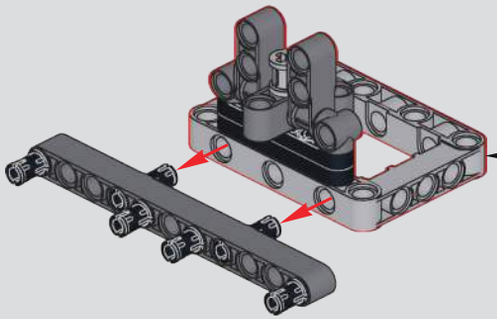

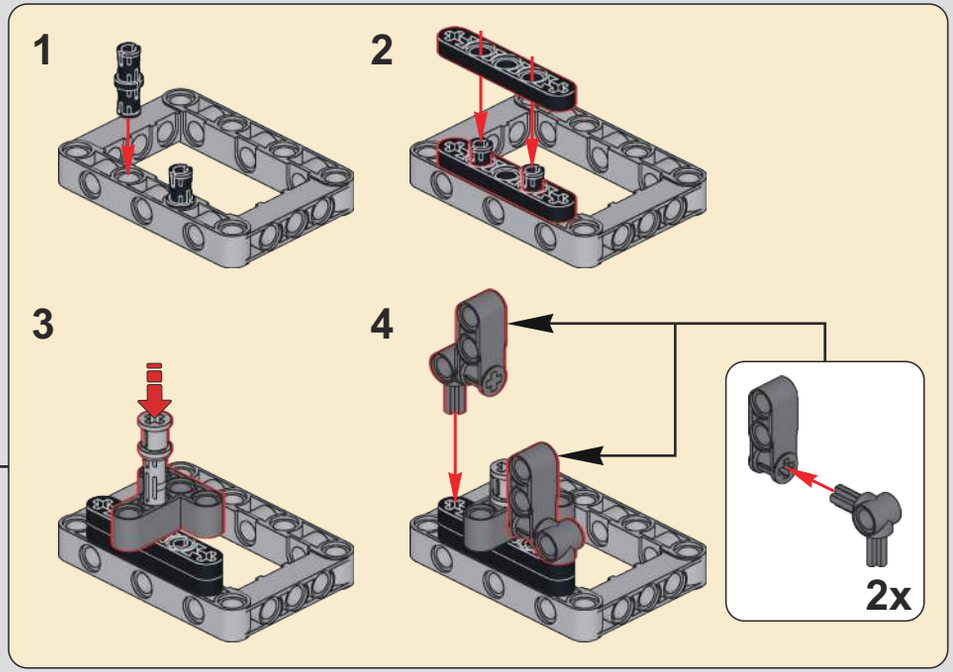

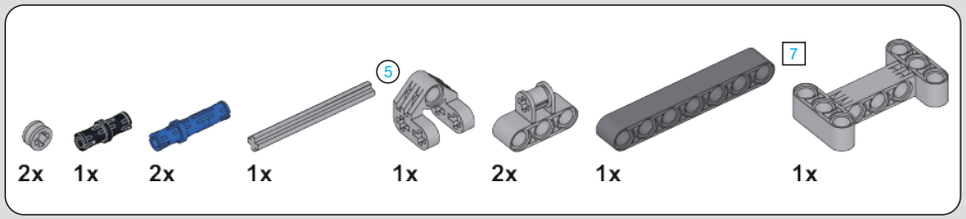
2x
1x
2x
1x
5
1x
2x
1x
7
1x

30

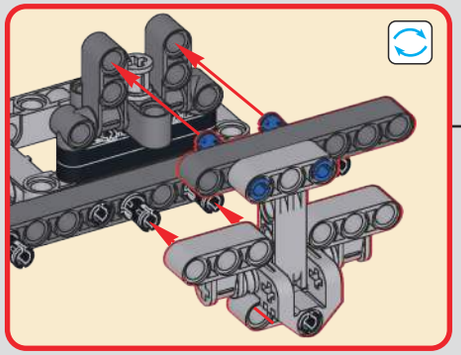

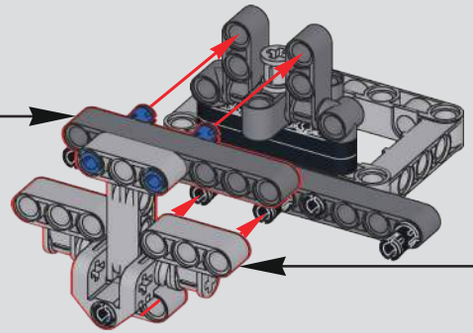

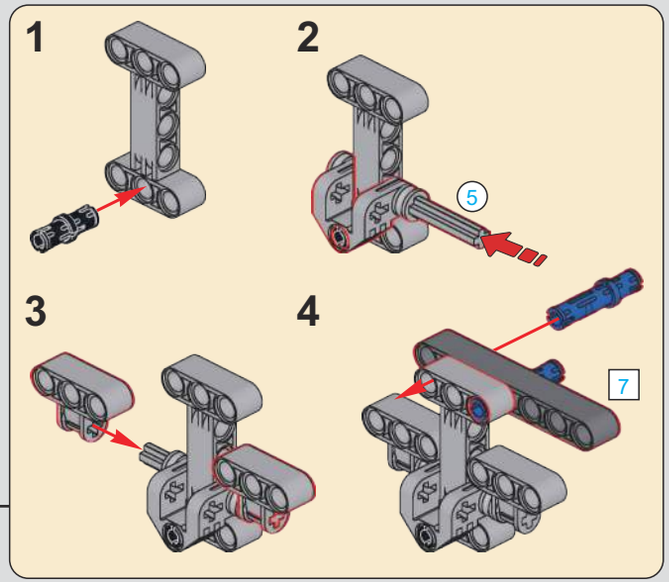
1
2
5
3
4
7

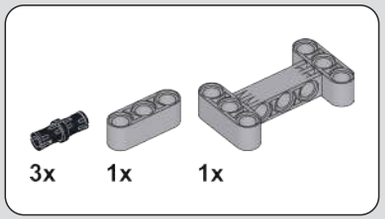
3x
1x
1x

31

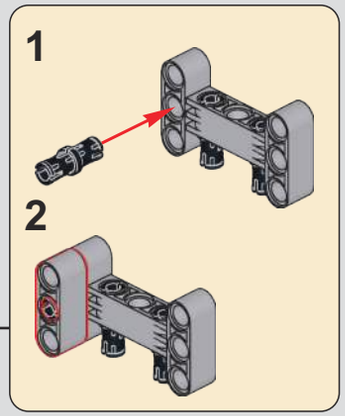
1
2

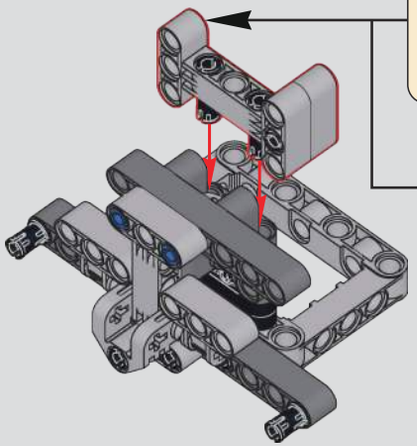

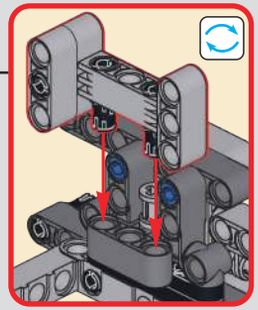

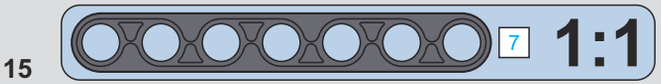
7
1:1

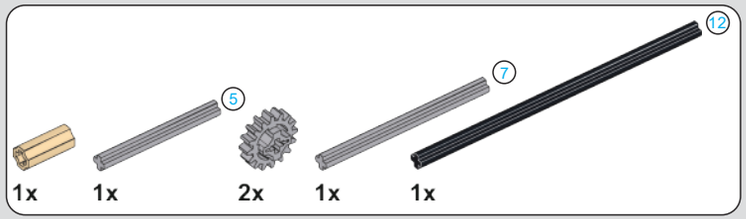
1x
1x
5
2x
1x
7
1x
12

32

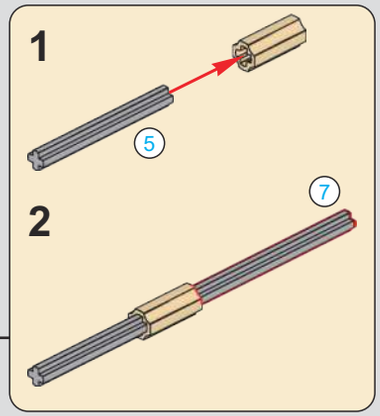
1
5
2
7

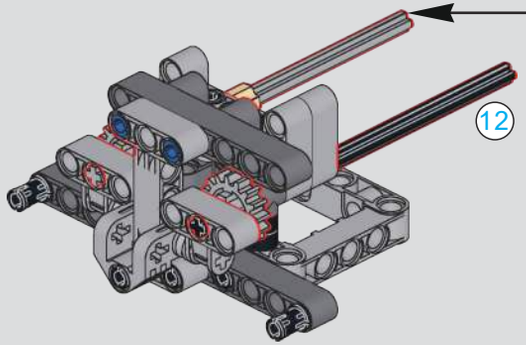
12

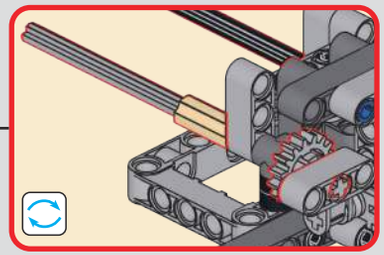

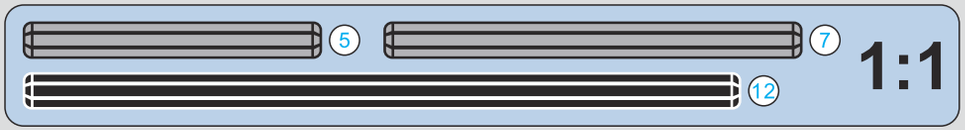
5
7
12
1:1

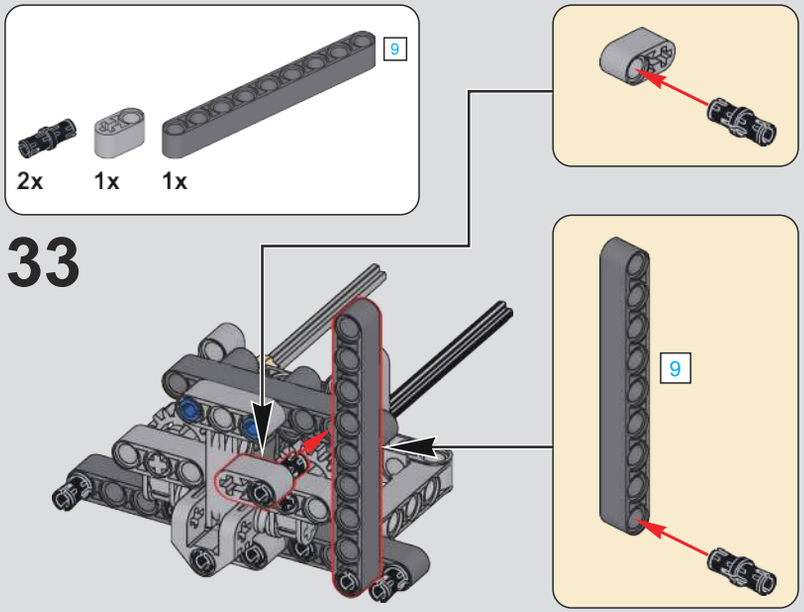
9
2x
1x
1x
33
9

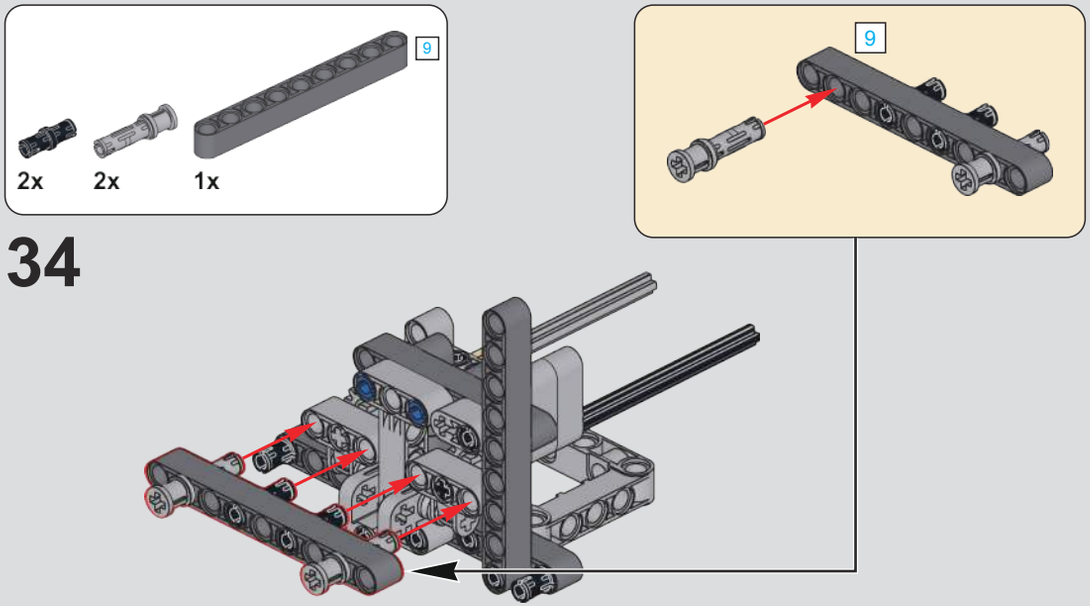
9
2x
2x
1x
34
9

9
6
1:1

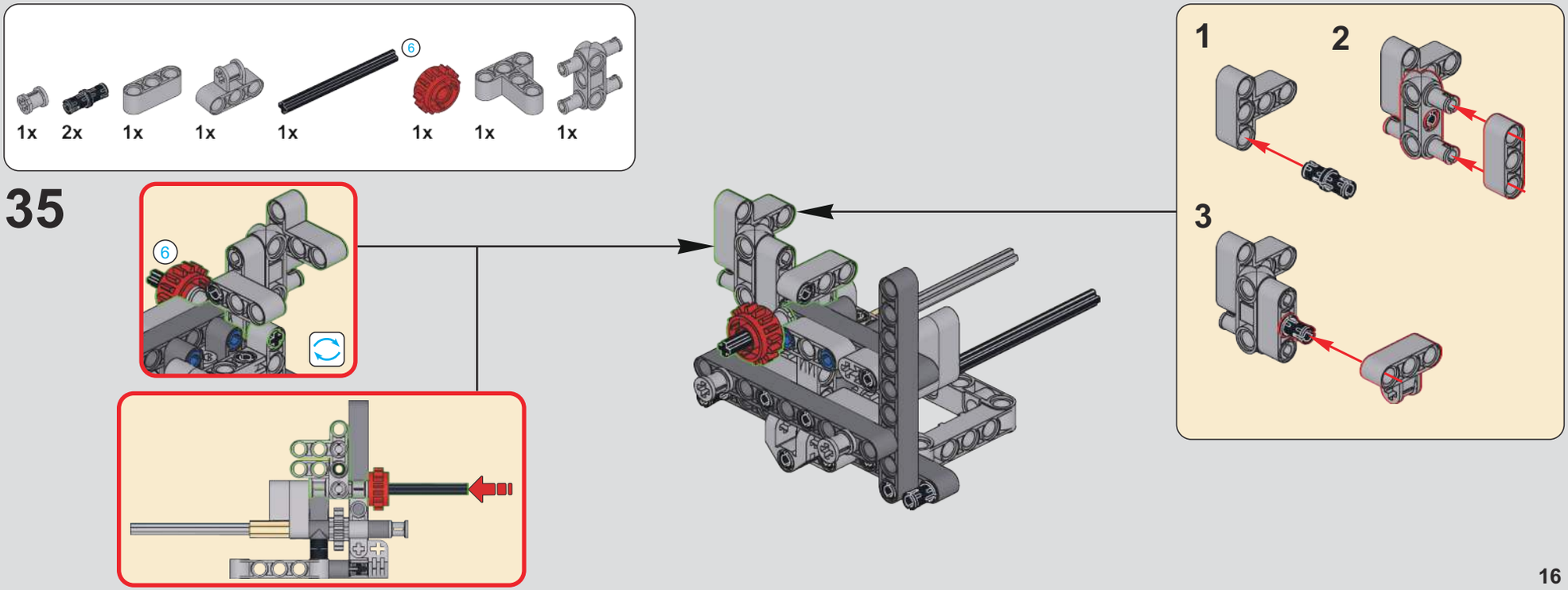
6
1x
2x
1x
1x
1x
1x
1x
1x
35
6
1
2
3

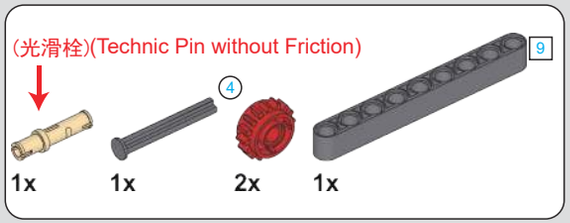
(光滑栓)(Technic Pin without Friction)
9
4
1x
1x
2x
1x

36

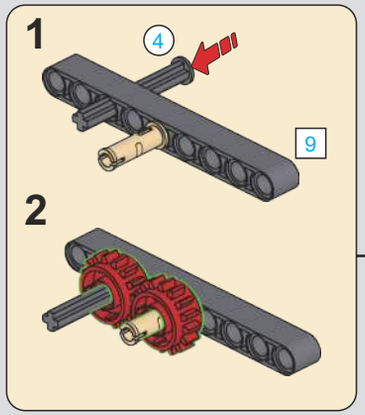
1
4
9
2

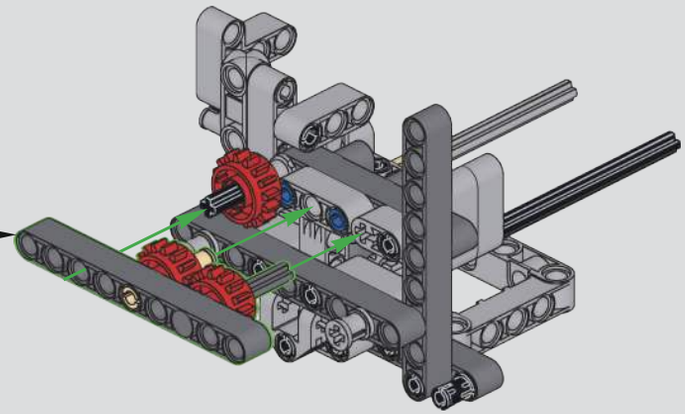

9
4
1:1

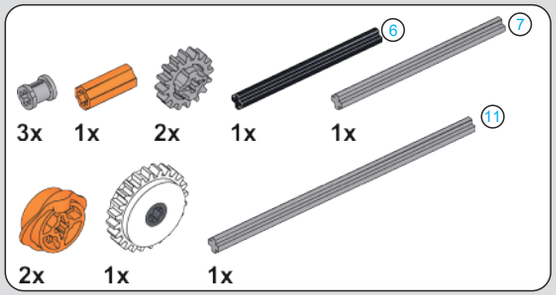
6
7
3x
1x
2x
1x
1x
11
2x
1x
1x

37

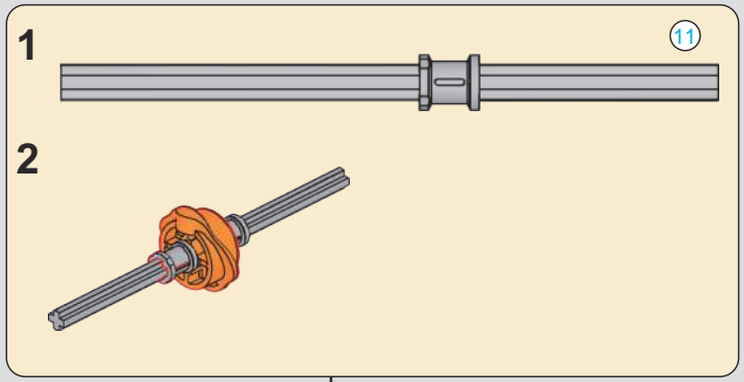
1
11
2

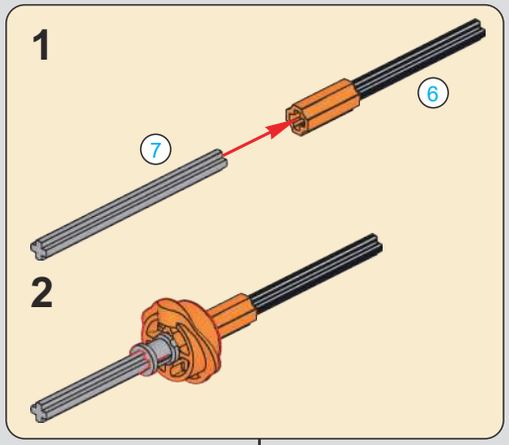
1
6
7
2

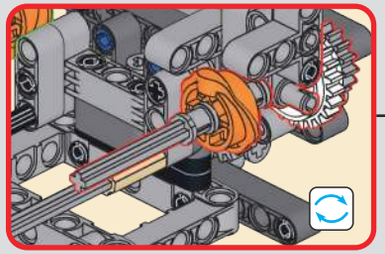

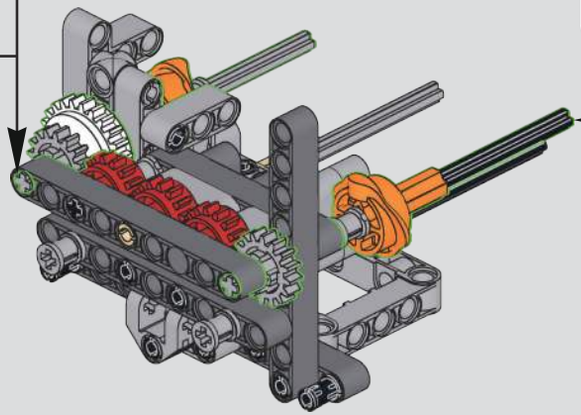

6
7
11
1:1

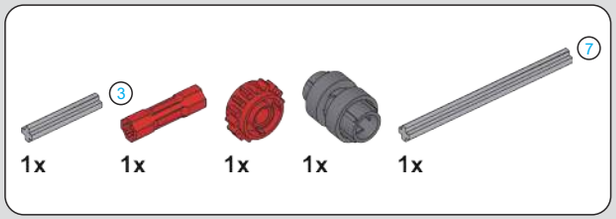

38

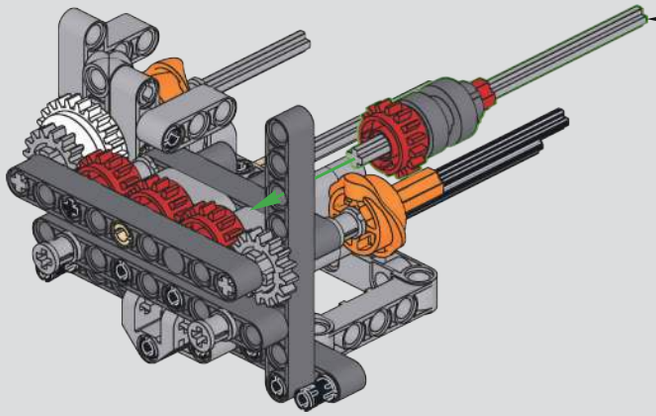

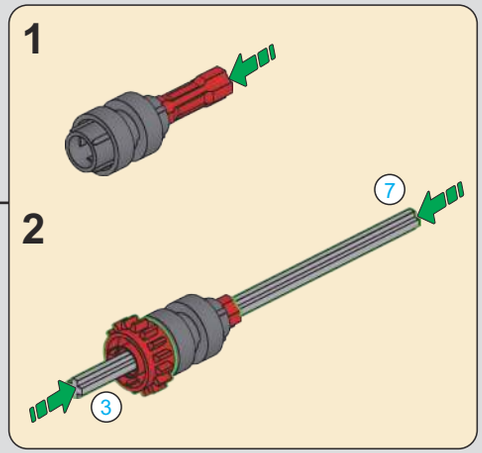

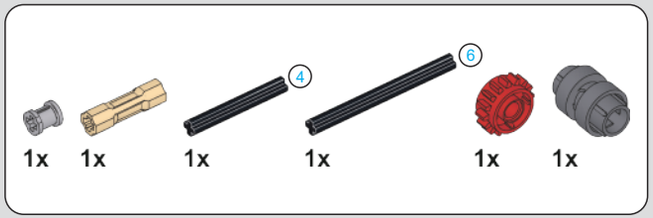

39

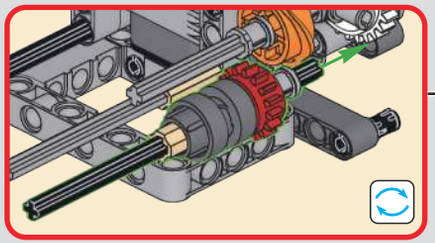

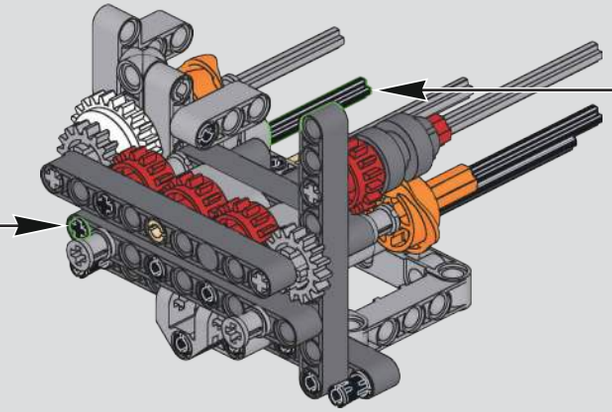

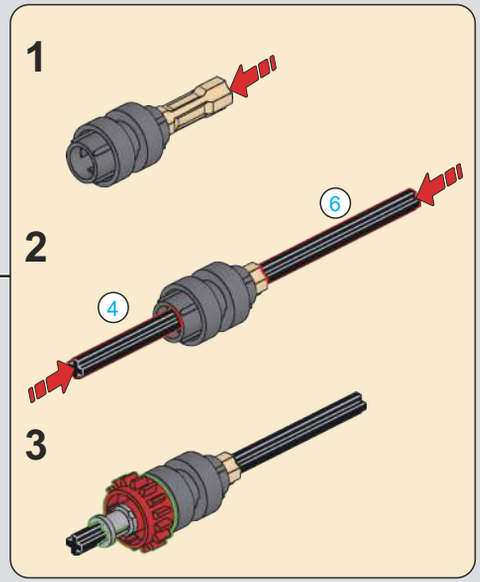

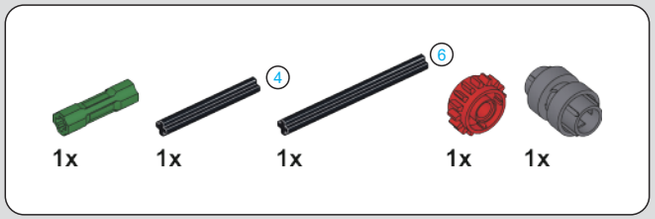

40

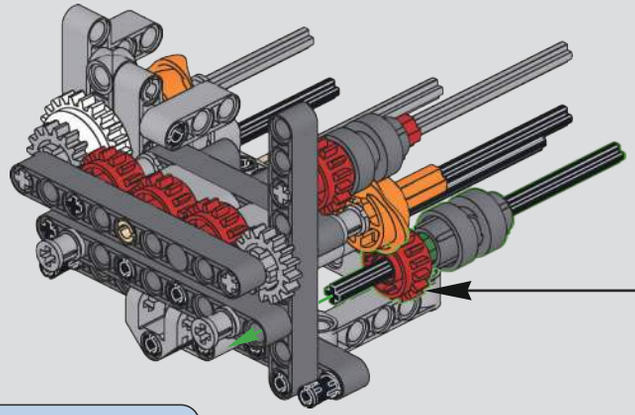

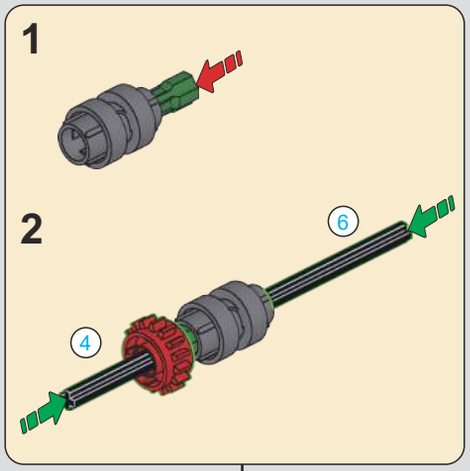

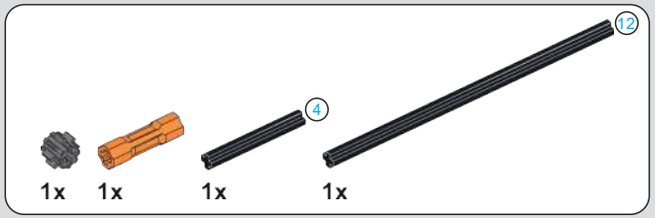

41

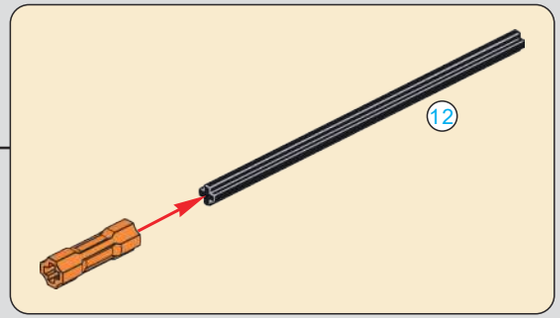

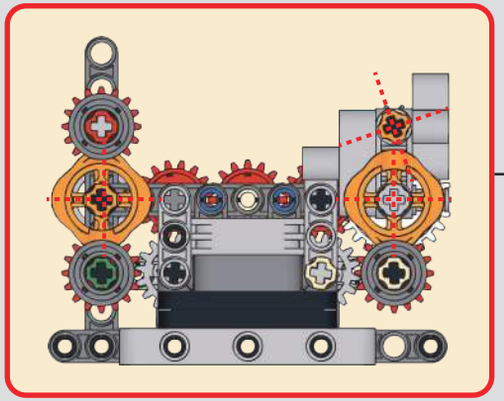

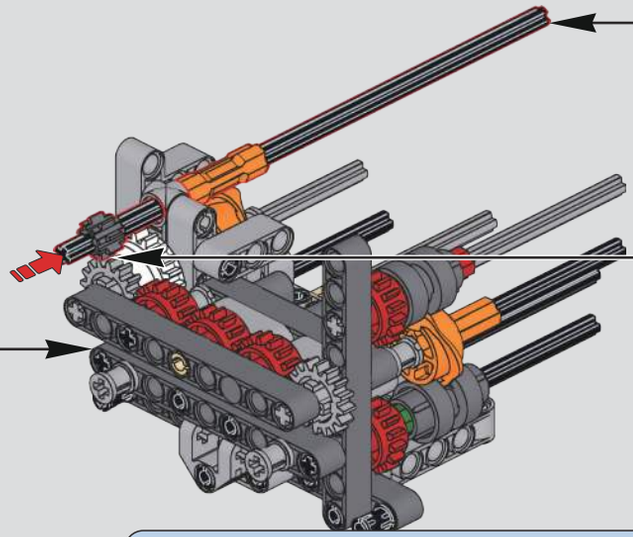

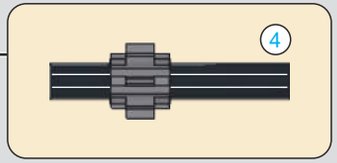

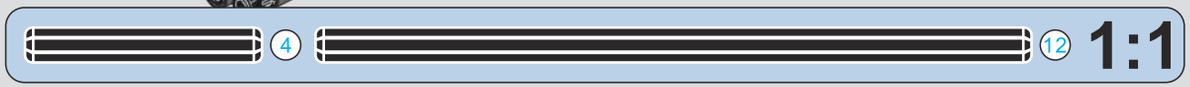

42

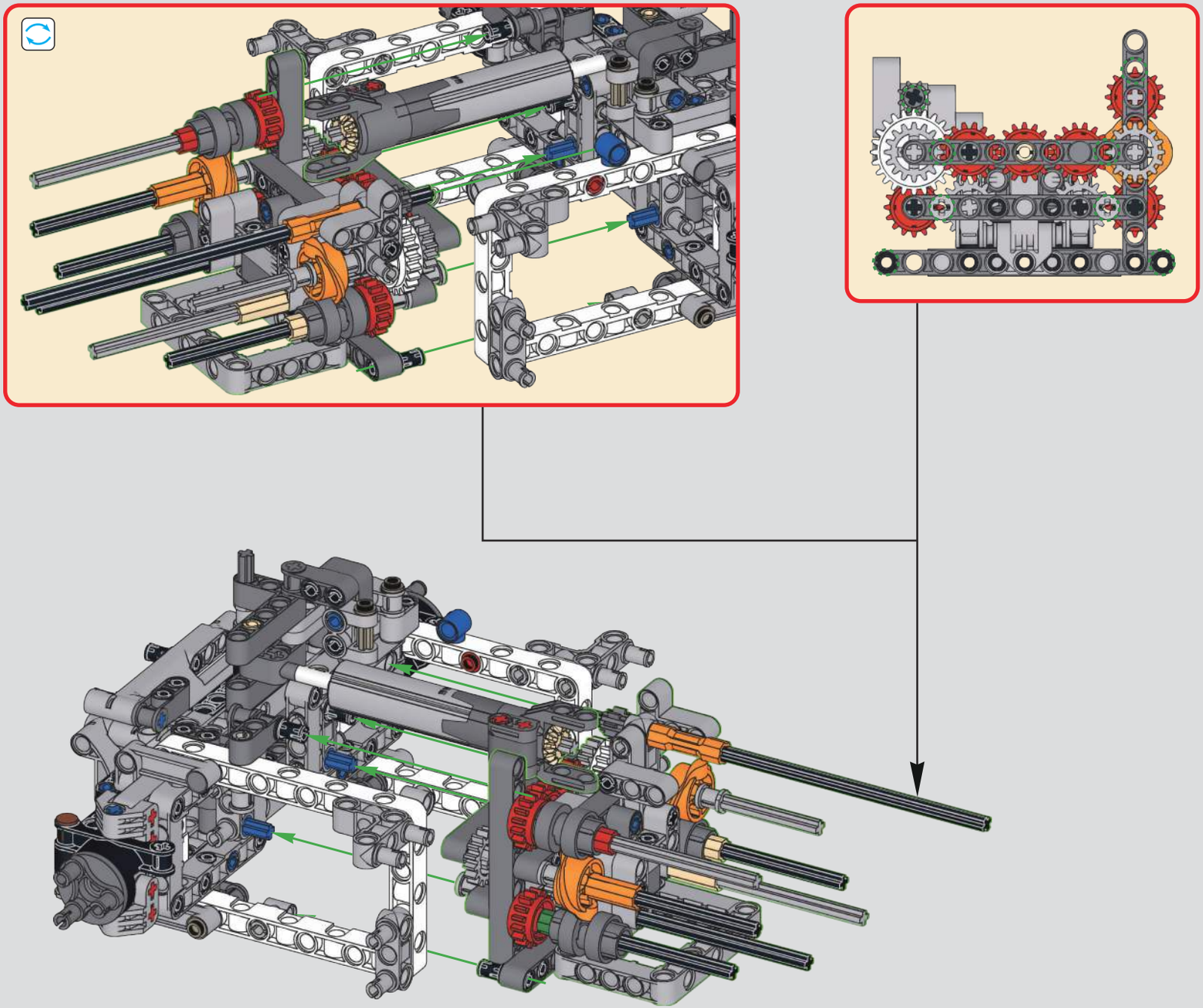

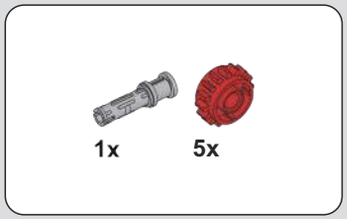

43

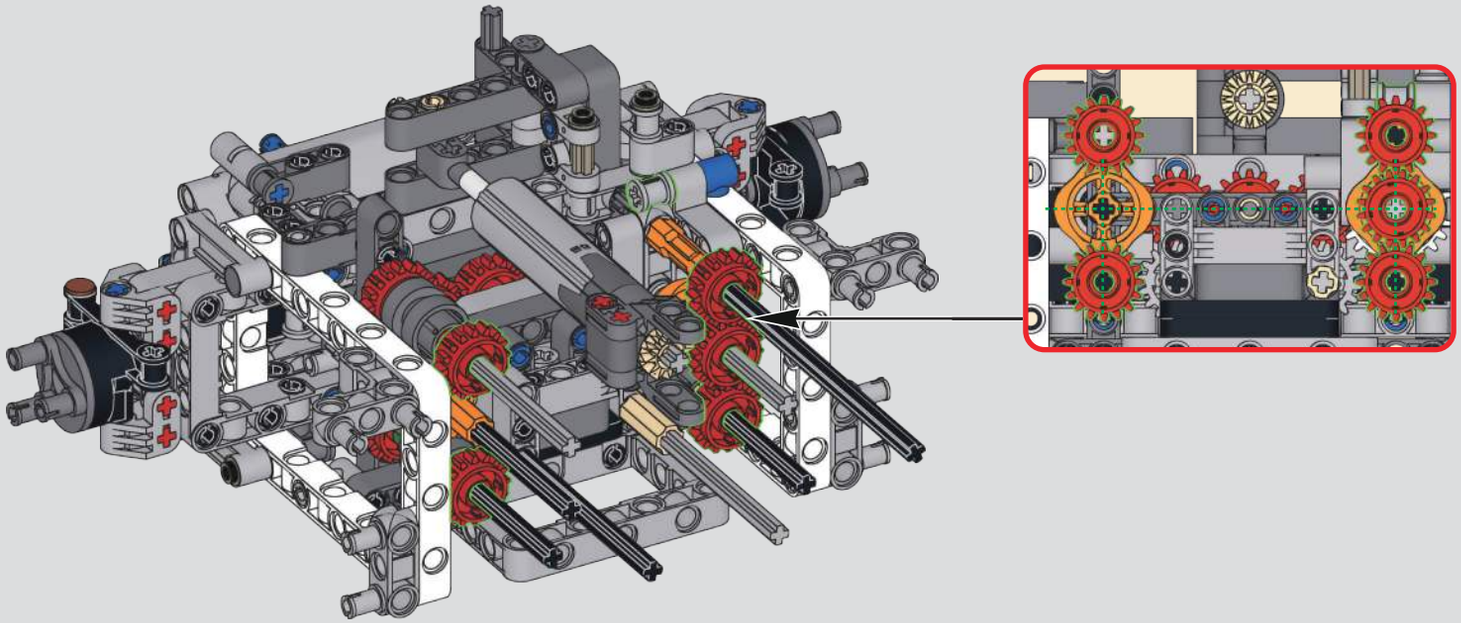

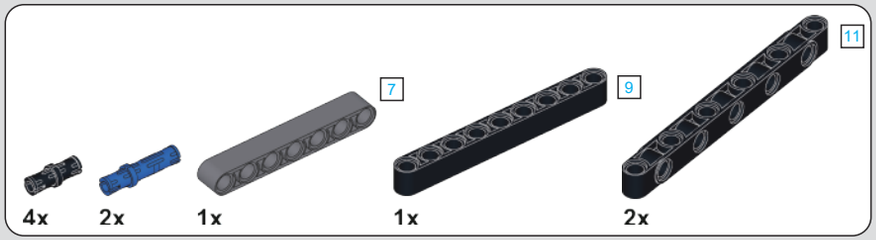

44

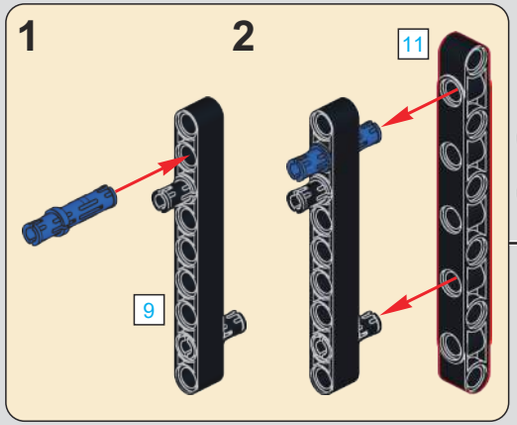

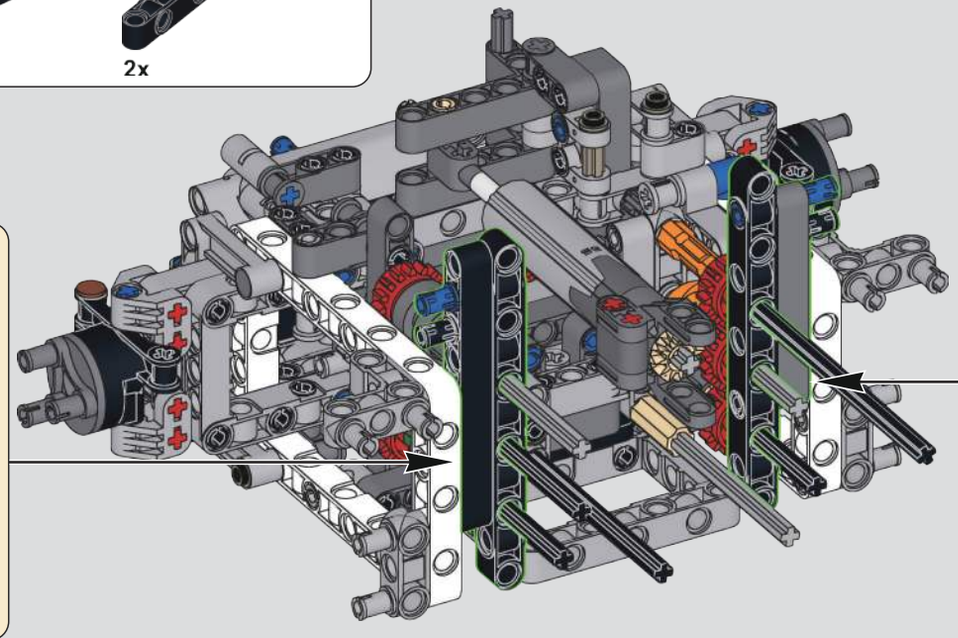

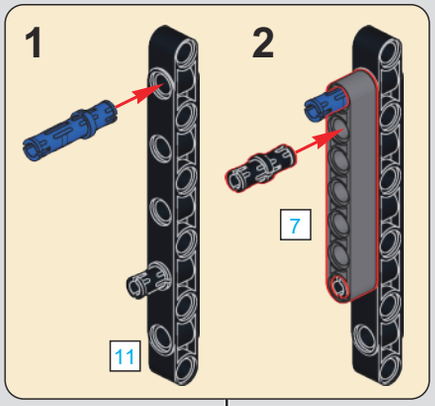

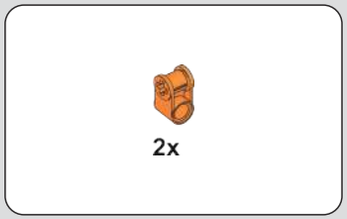

45

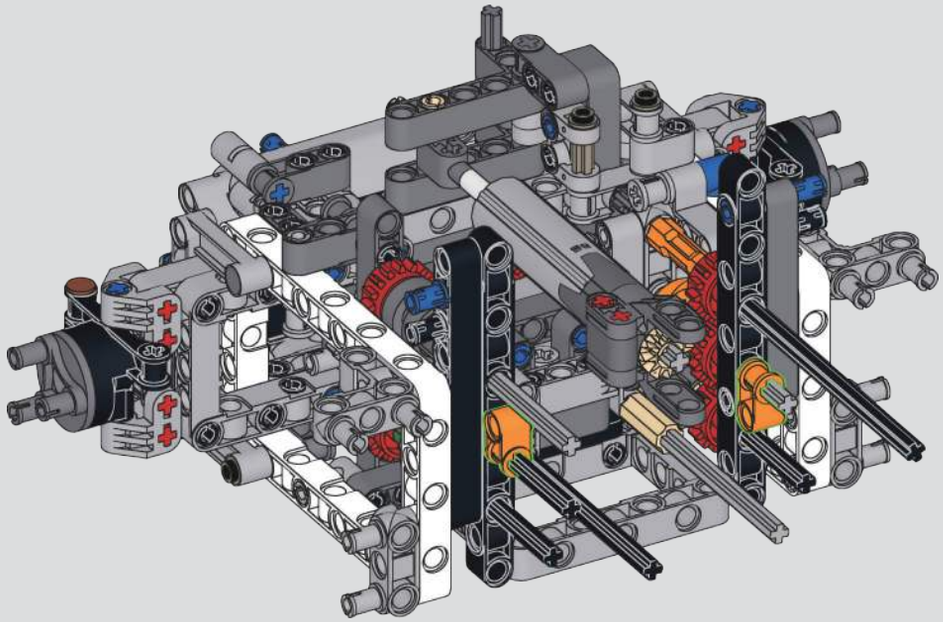

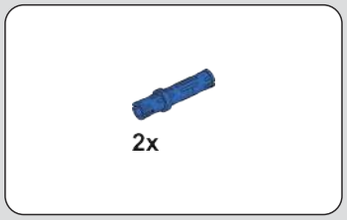

46

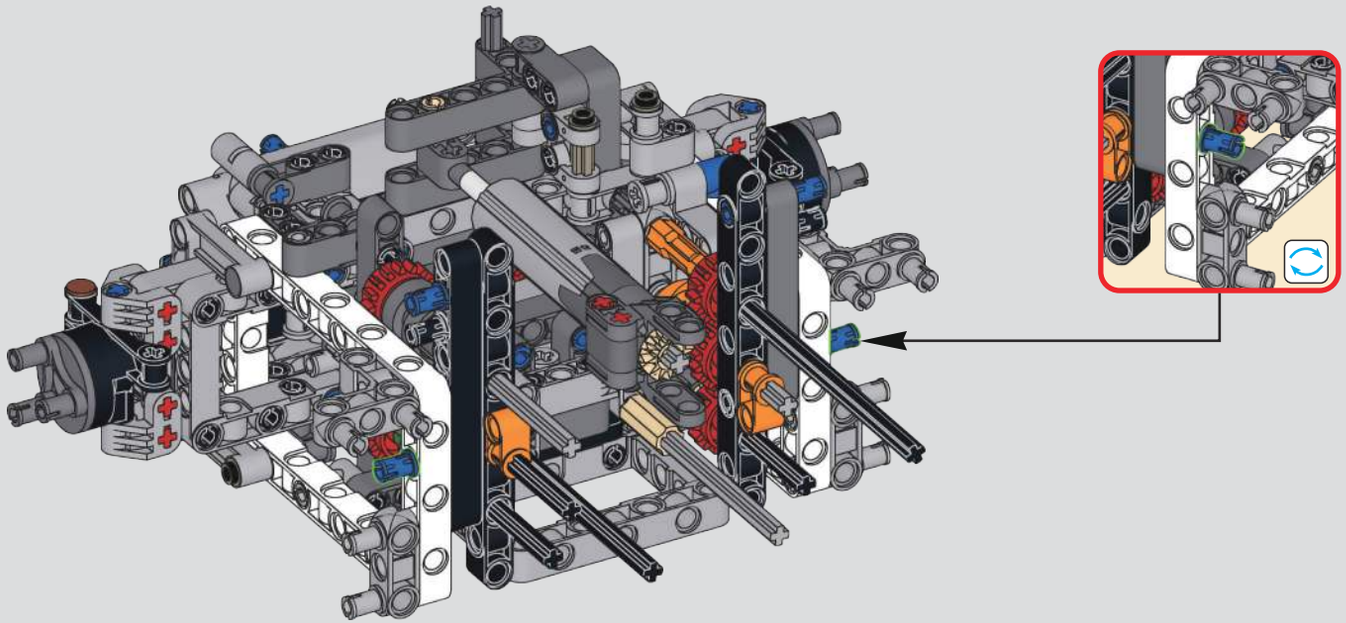

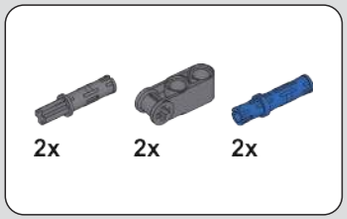

47

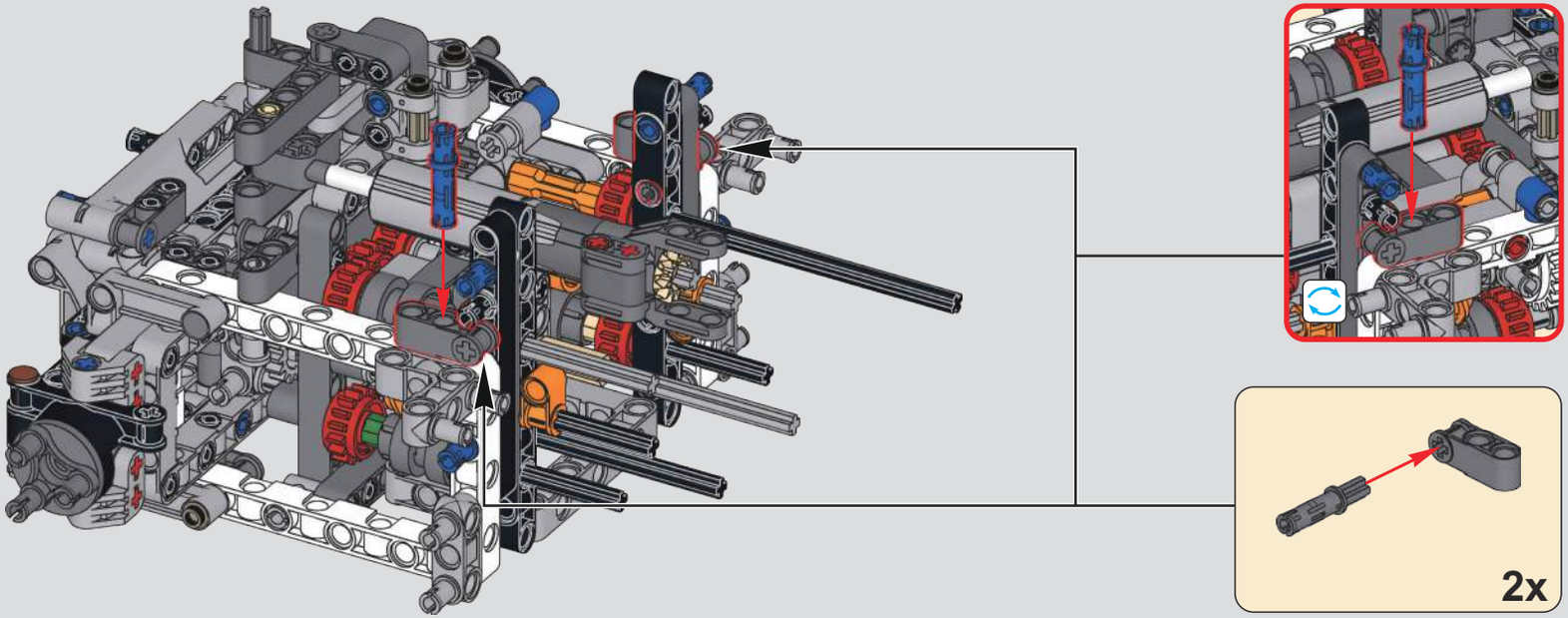

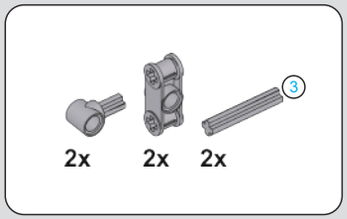

48

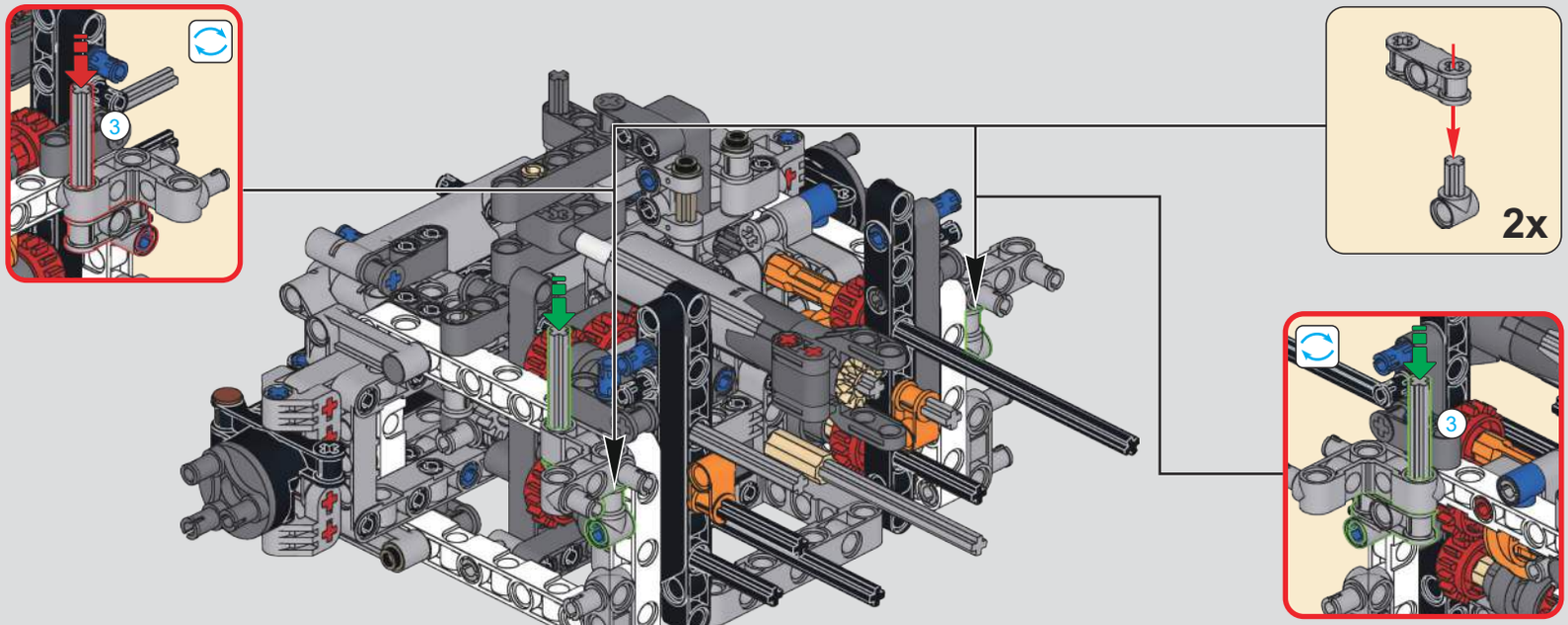

3 1:1

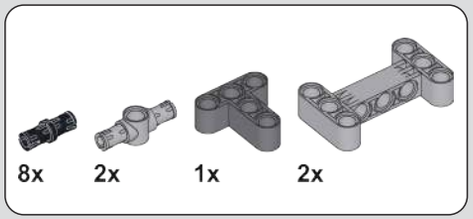

49

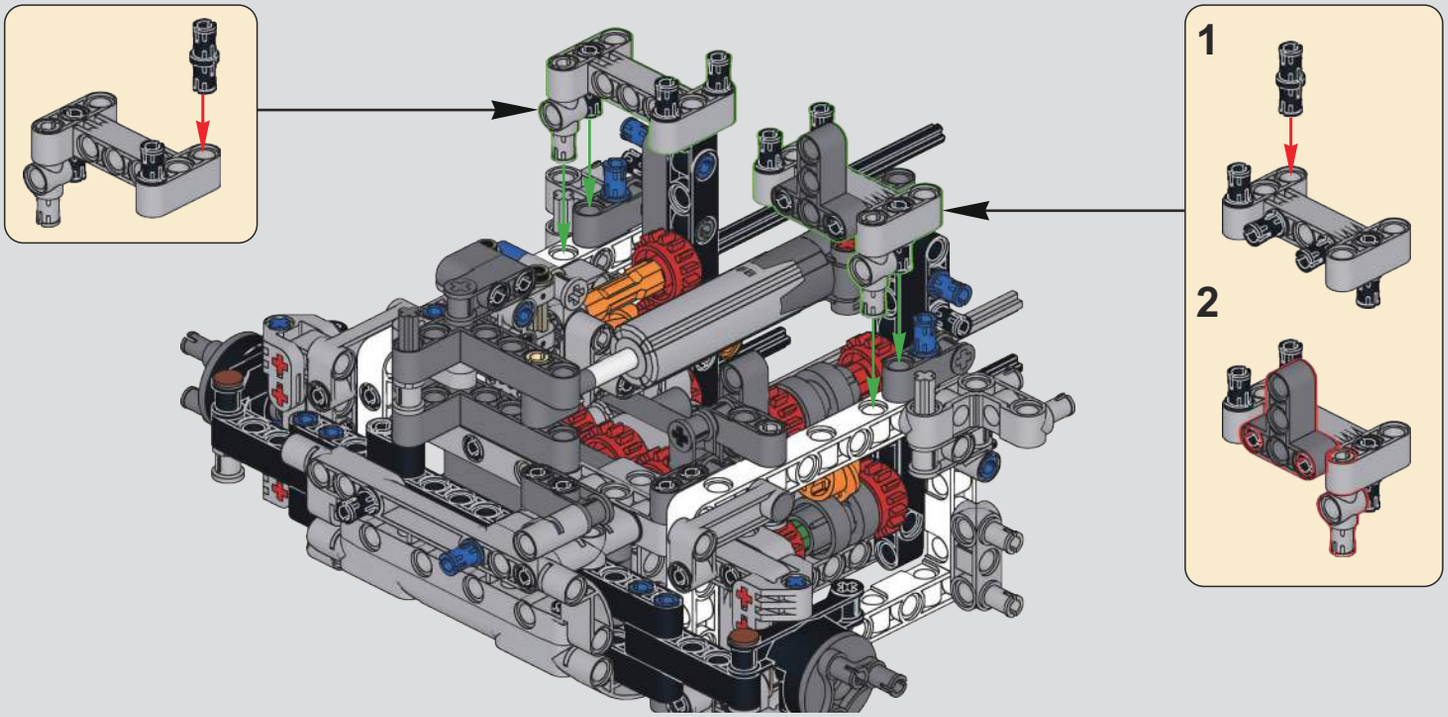

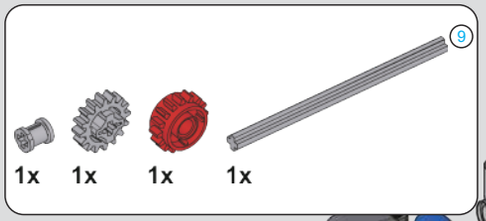

50

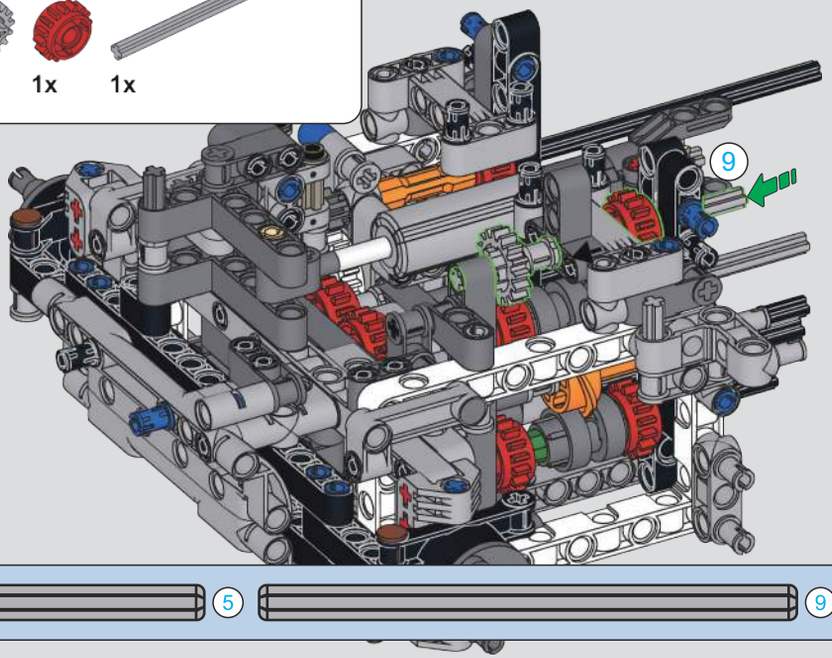

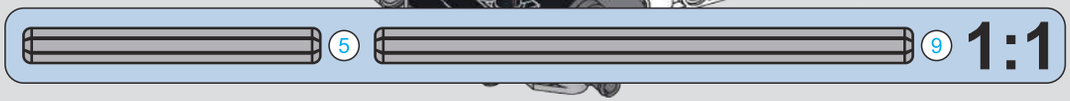

51

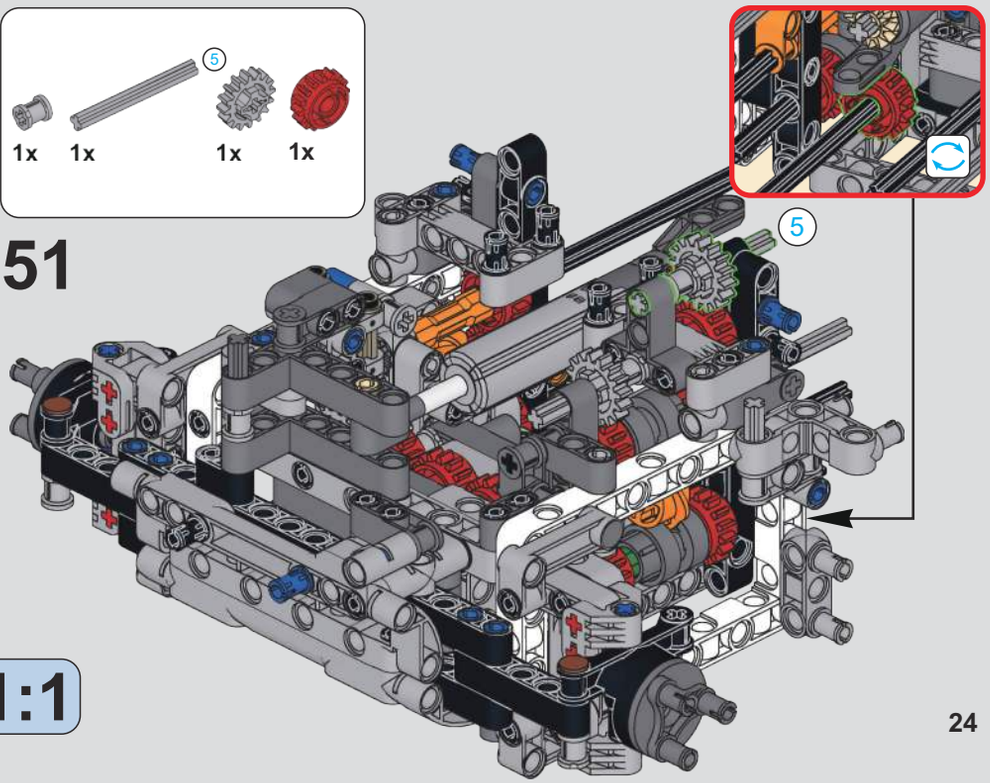

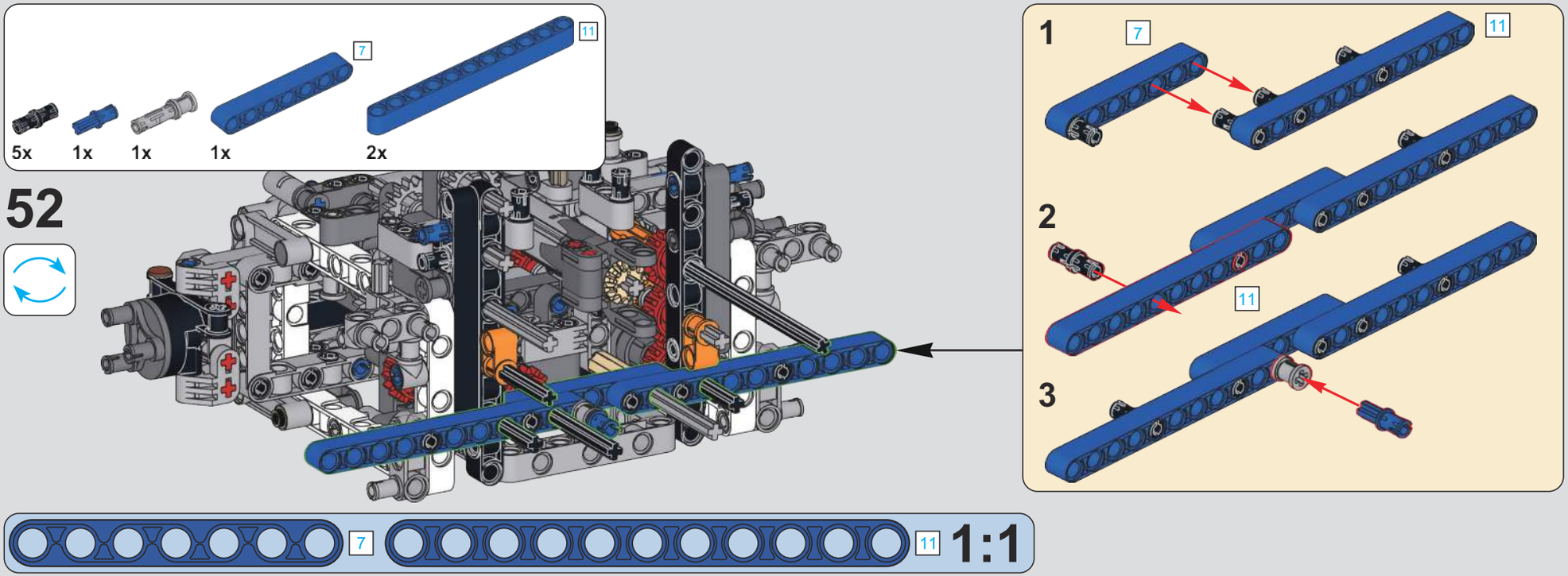
5x
1x
1x
1x
7
2x
11
52
1
7
11
2
11
3
7
11
1:1

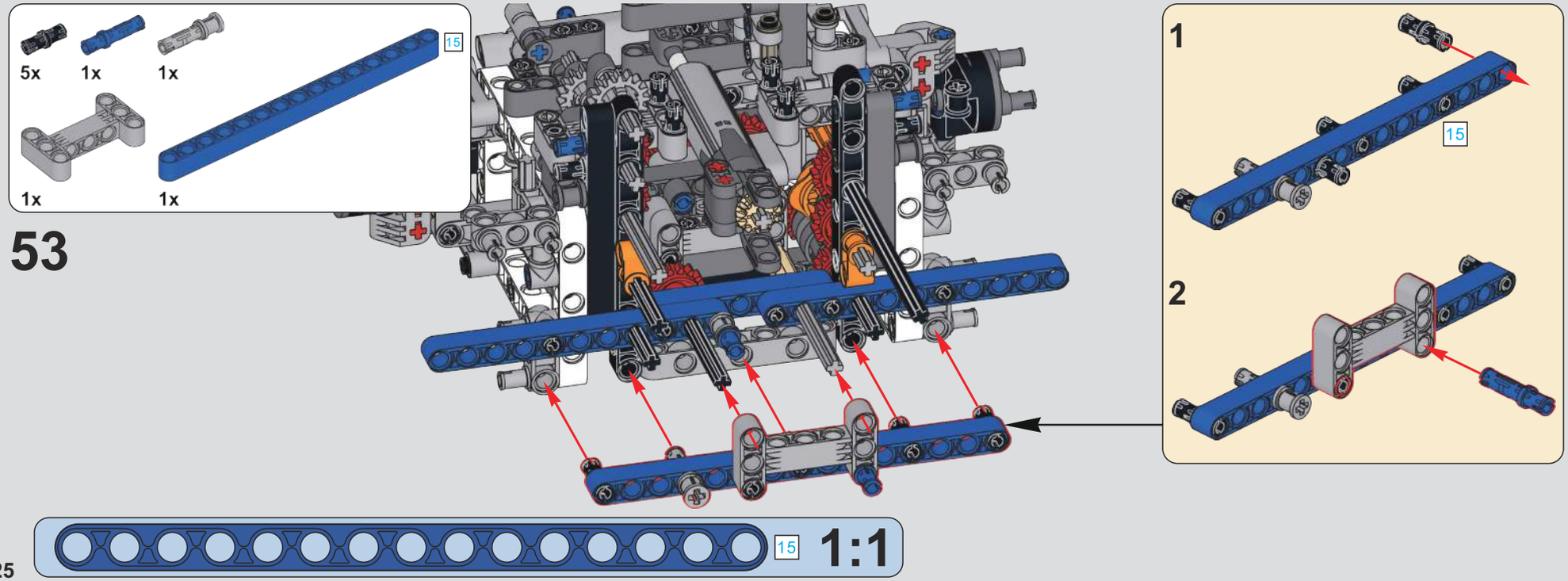
5x
1x
1x
15
1x
1x
53
1
15
2
15
1:1

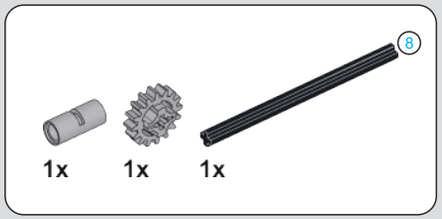

54

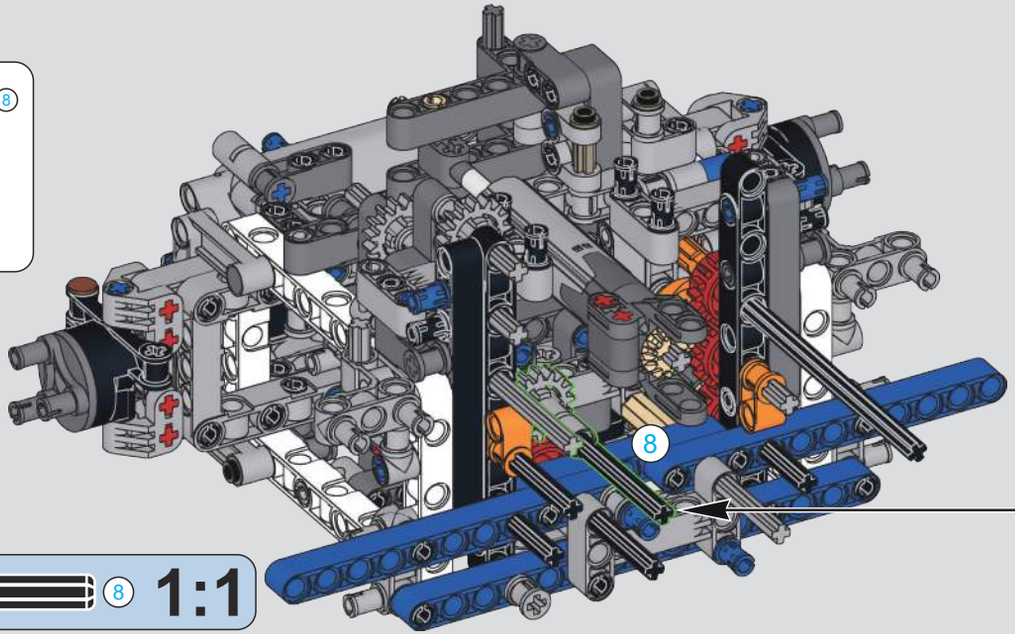

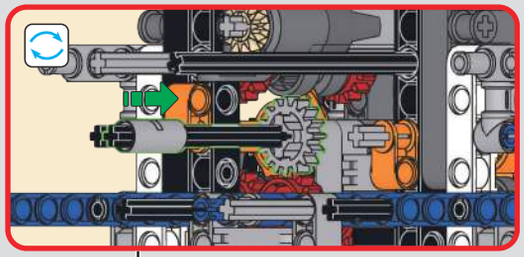

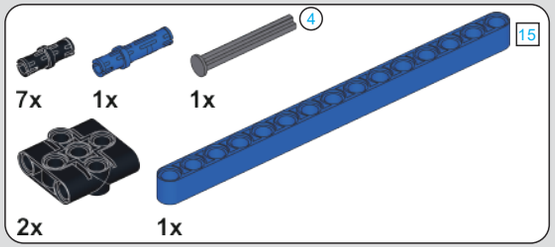

55

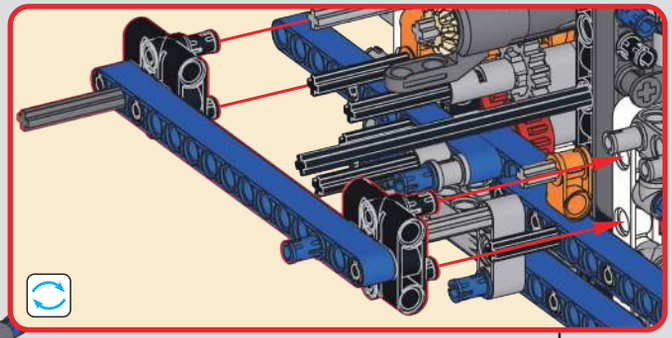

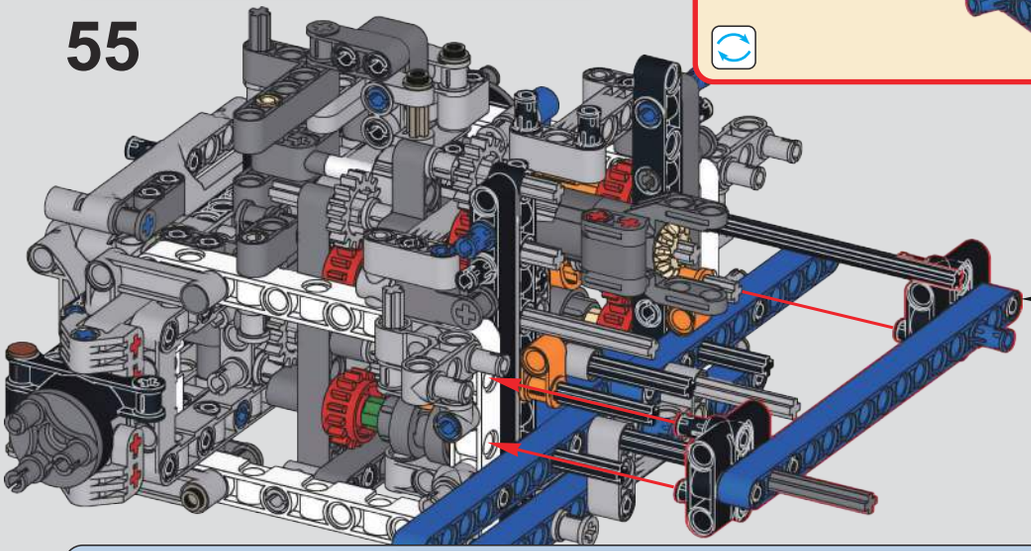

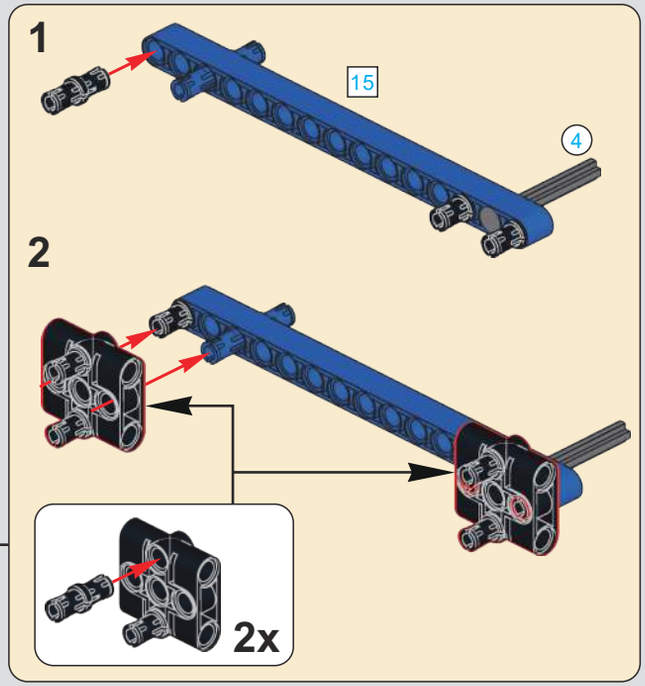

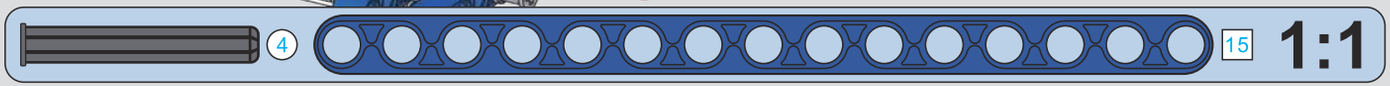

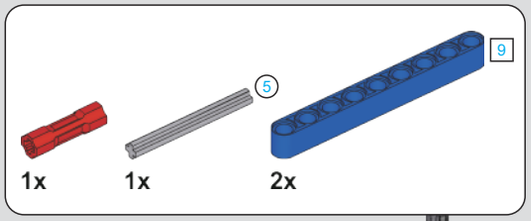

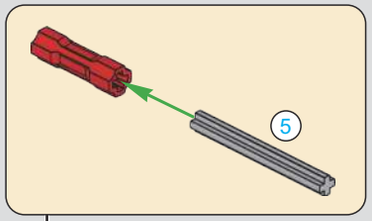

56

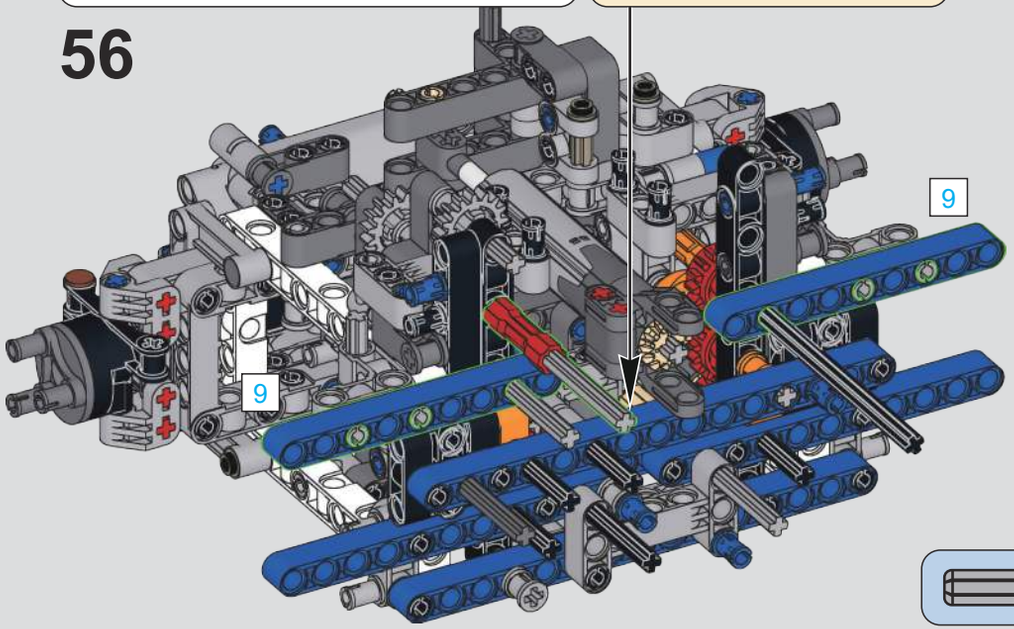

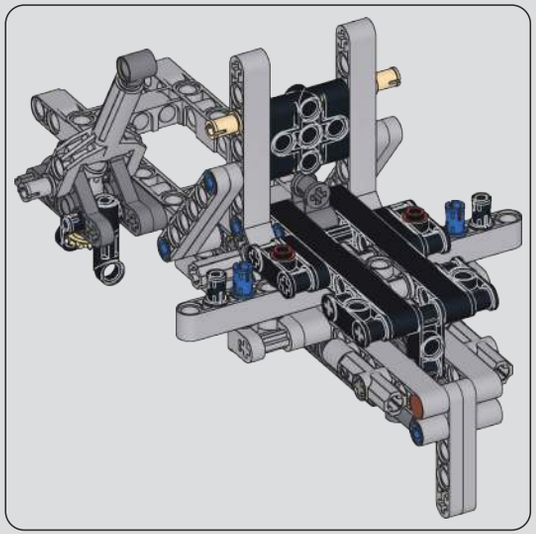

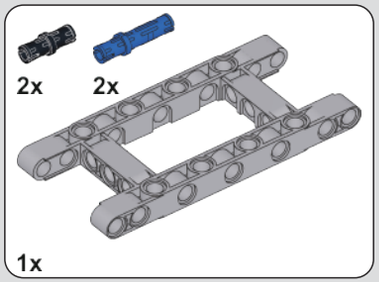

57

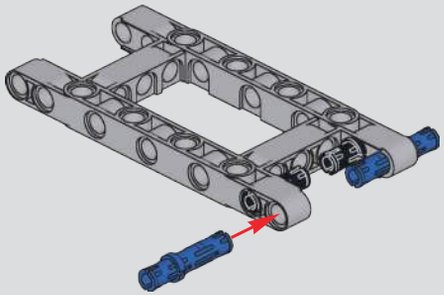

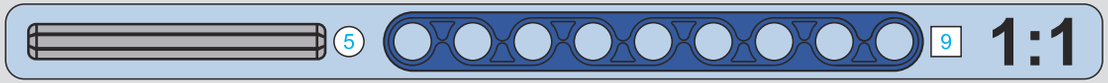

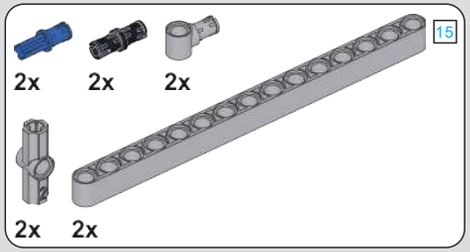

58

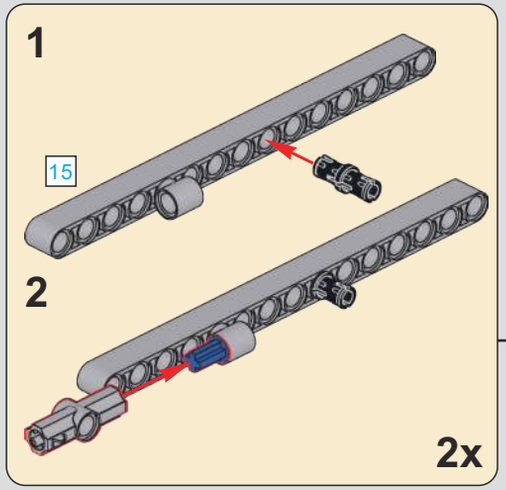

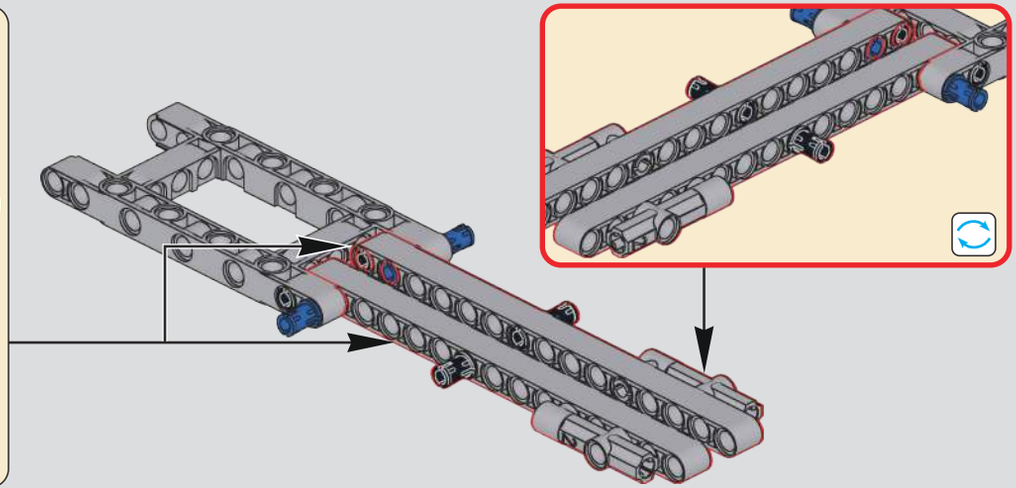

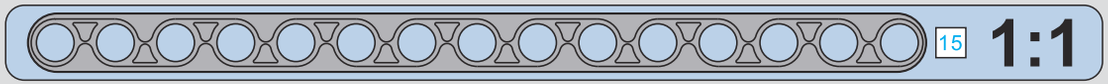

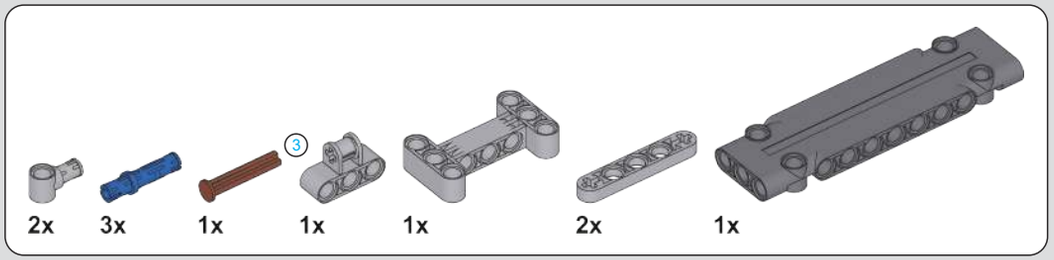

59

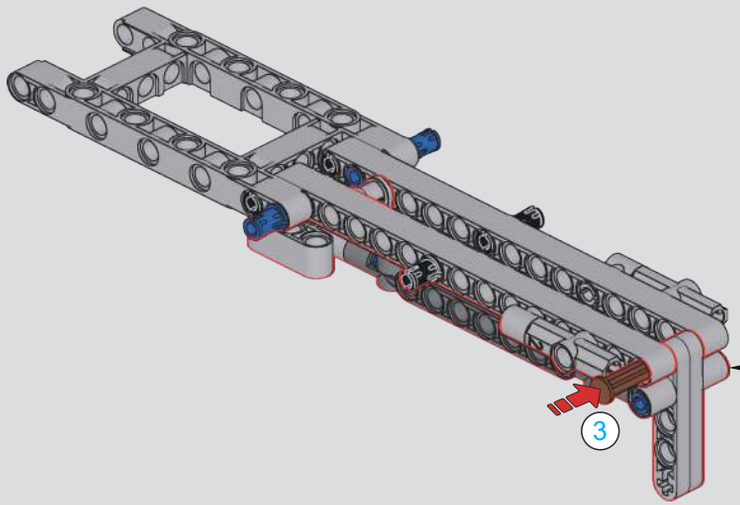

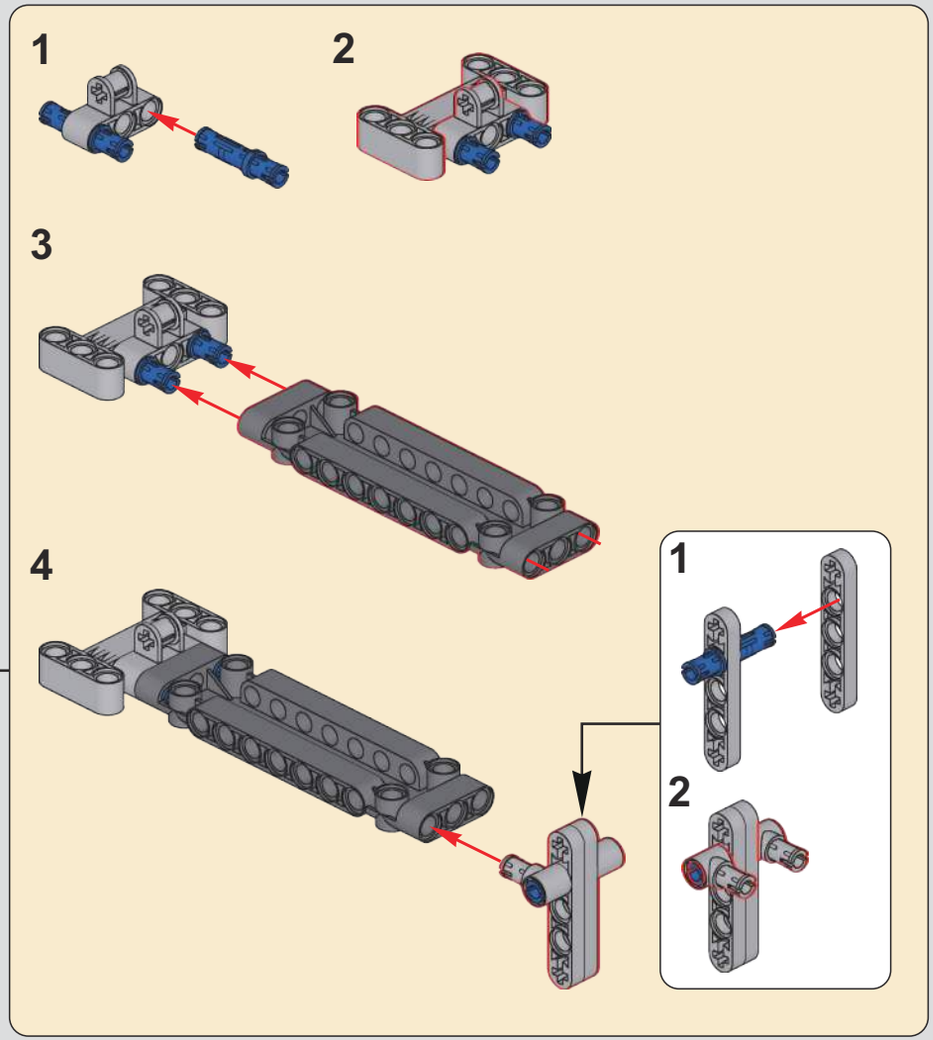

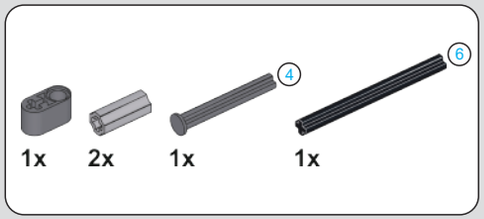
4
6
1x
2x
1x
1x

60

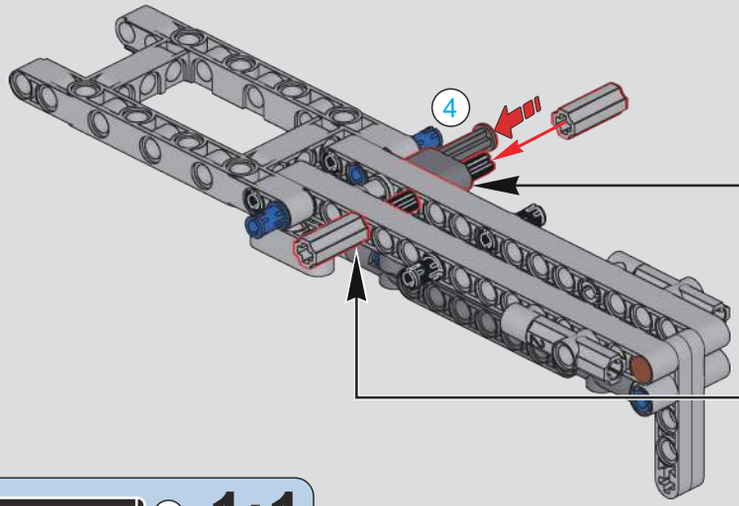
4

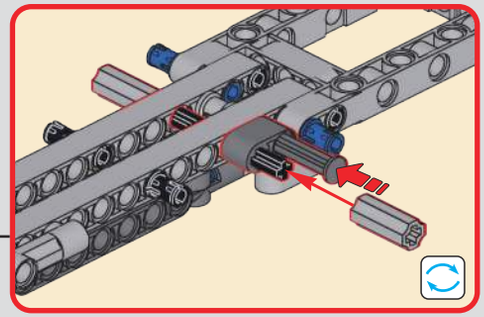

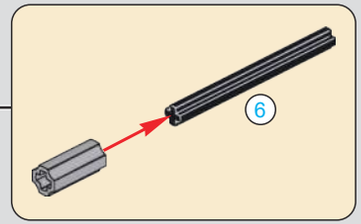
6

4
6
1:1

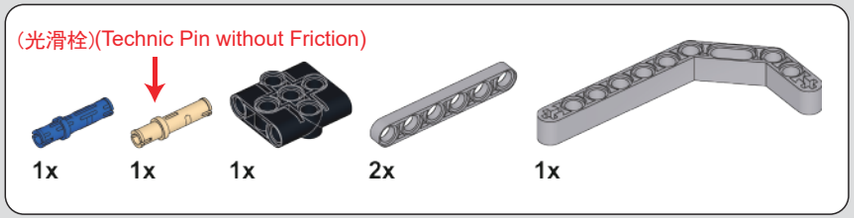
(光滑栓)(Technic Pin without Friction)
1x
1x
1x
2x
1x

61

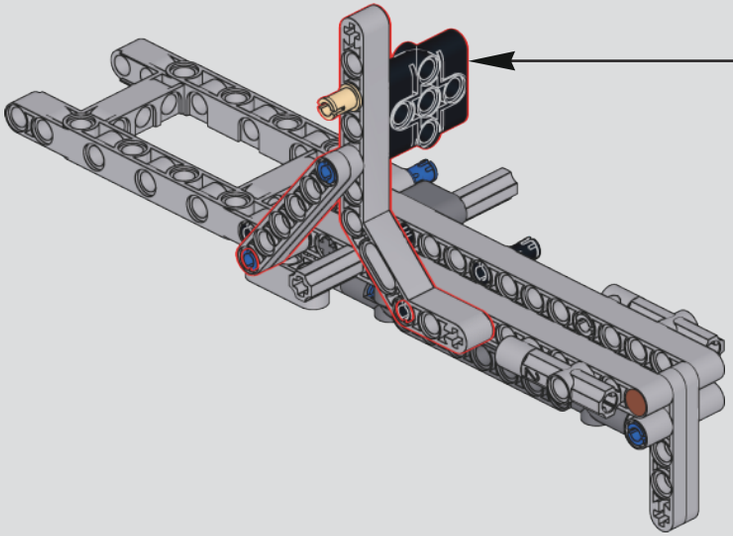

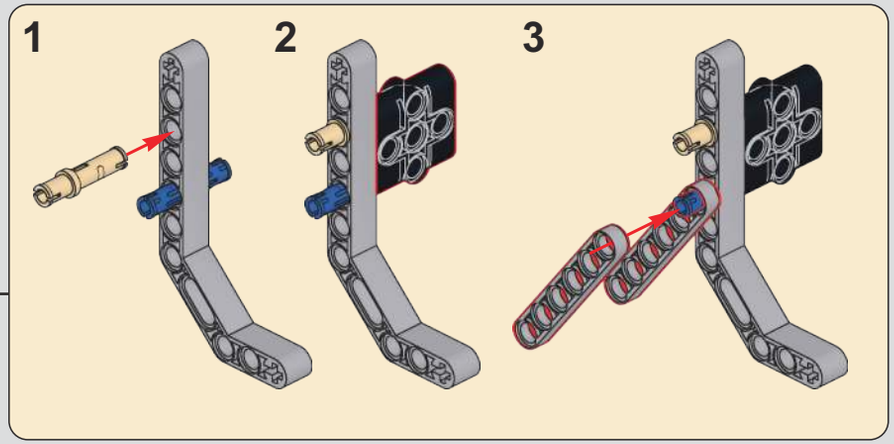
1
2
3

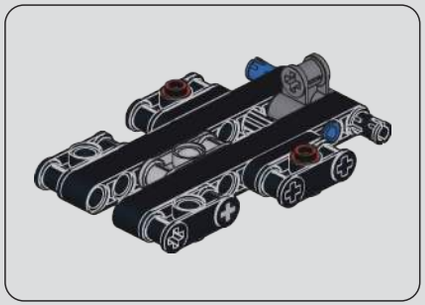

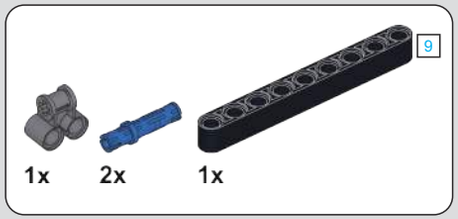

62

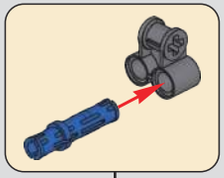

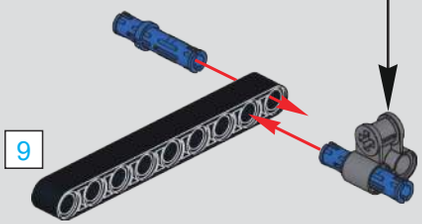

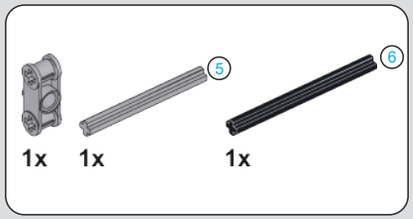

63

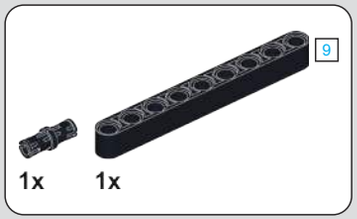

64

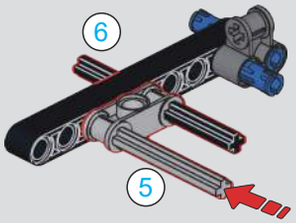

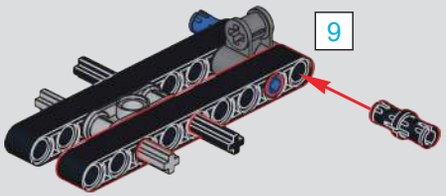

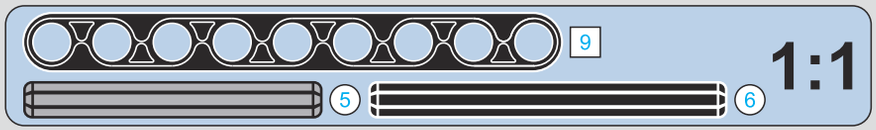

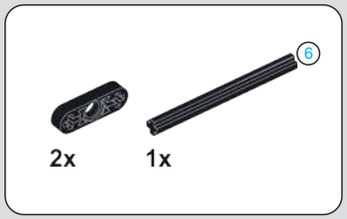

65

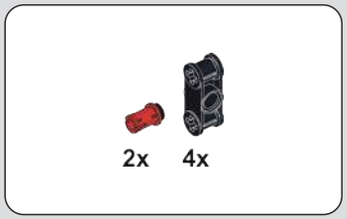

66

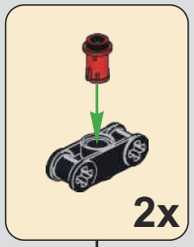

67

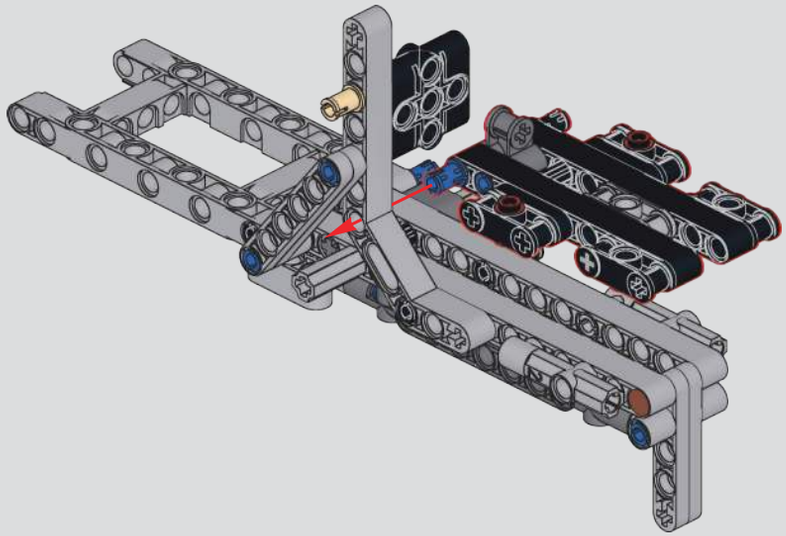

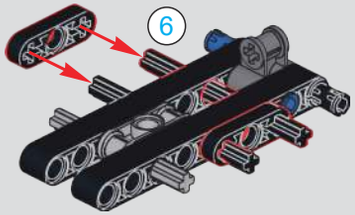

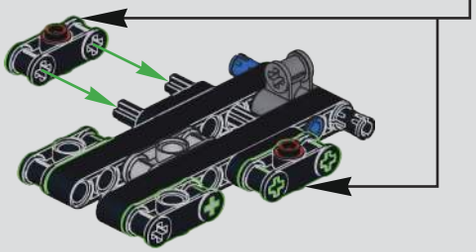

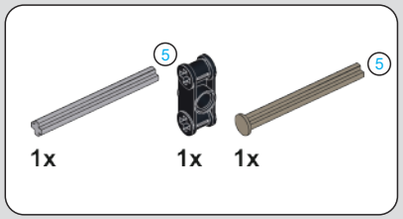
5
5
1x
1x
1x

68

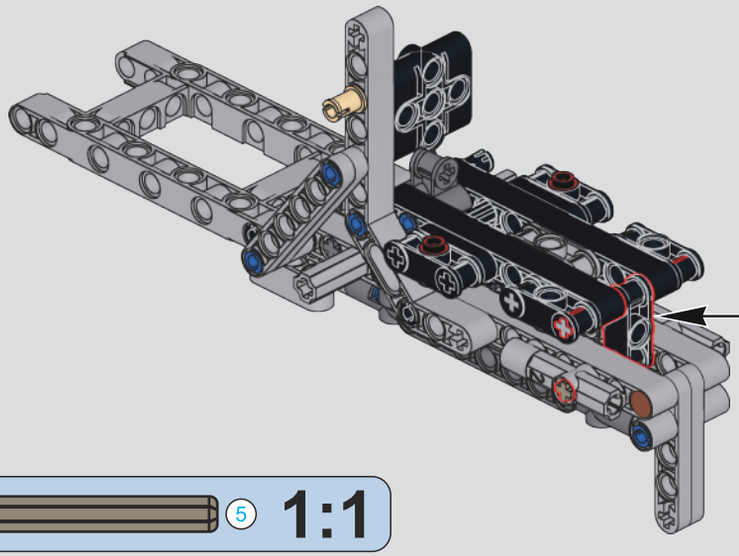

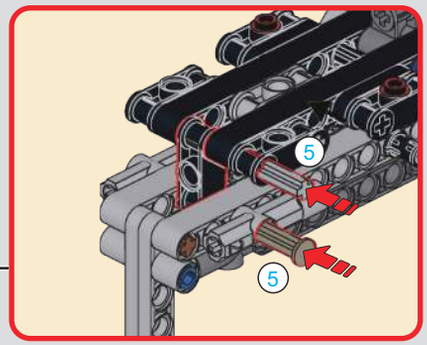
5
5

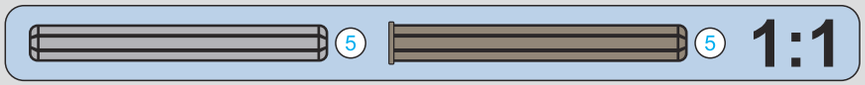
5
5
1:1

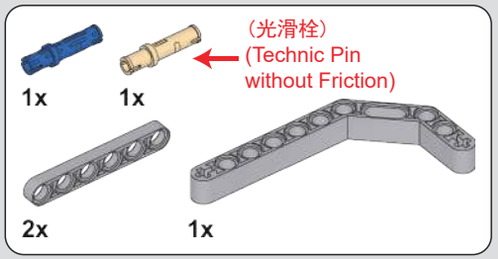
1x
1x
(光滑栓)
(Technic Pin
without Friction)
2x
1x

69

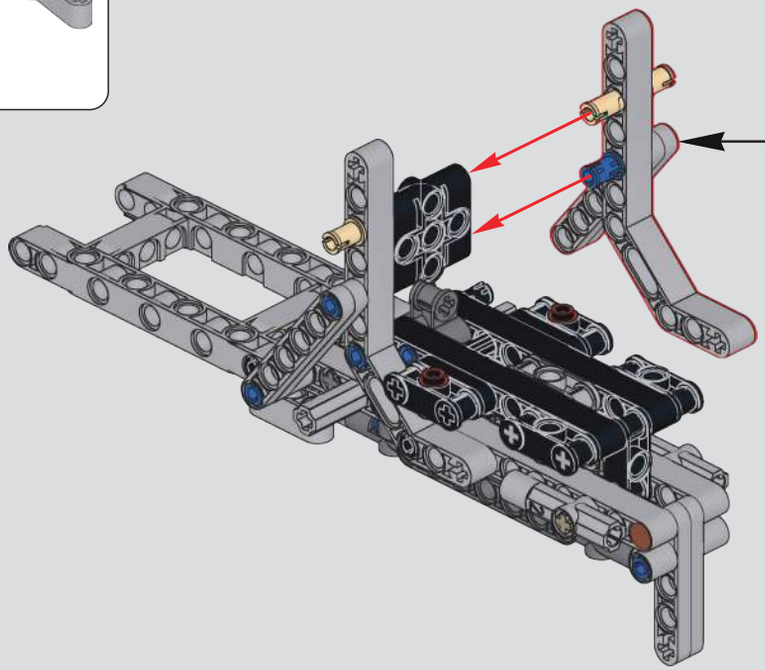

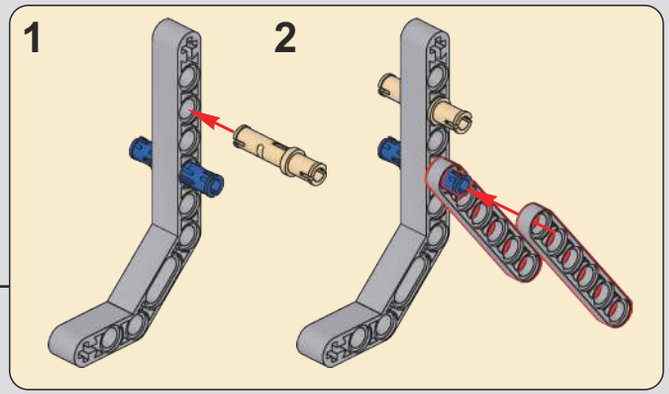
1
2

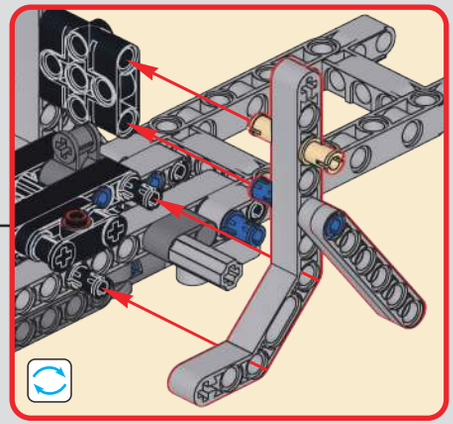

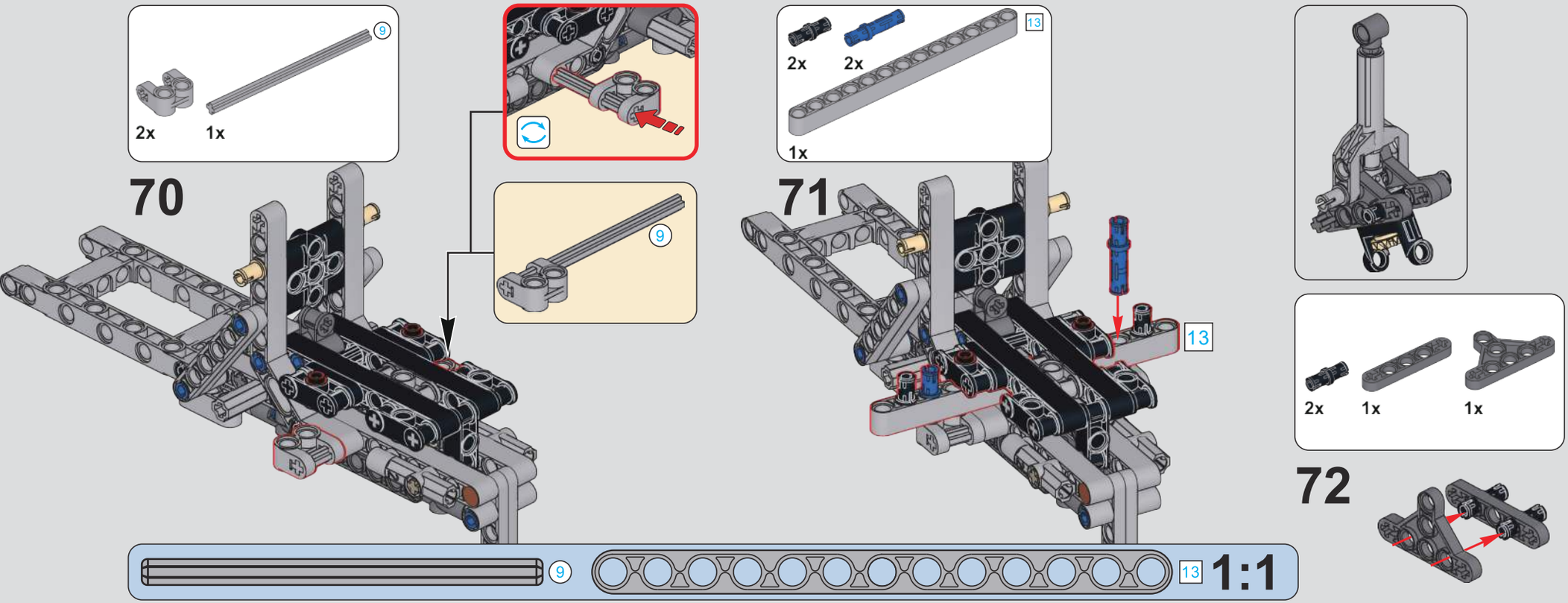
70
2x
1x
9
71
2x
2x
1x
13
72
2x
1x
1x
1:1

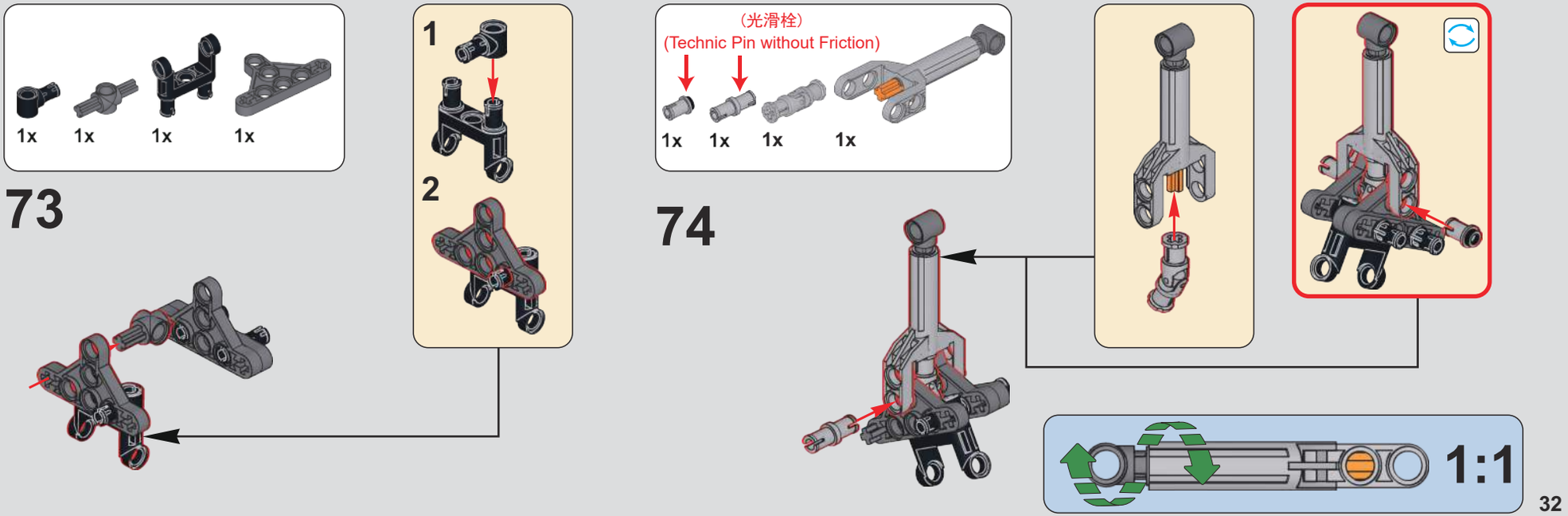
73
1x
1x
1x
1x
1
2
74
(光滑栓)
(Technic Pin without Friction)
1x
1x
1x
1x
1:1

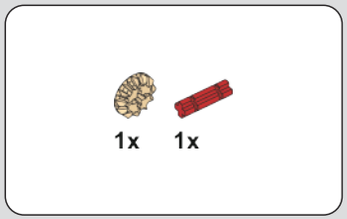

75

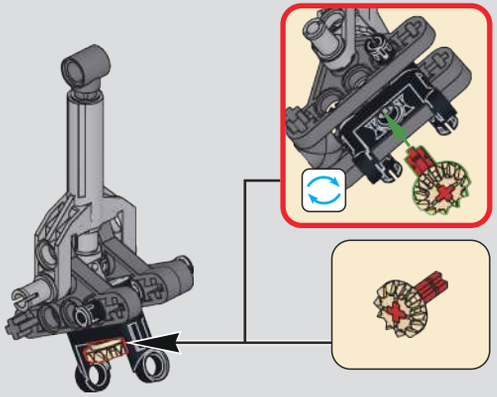

76

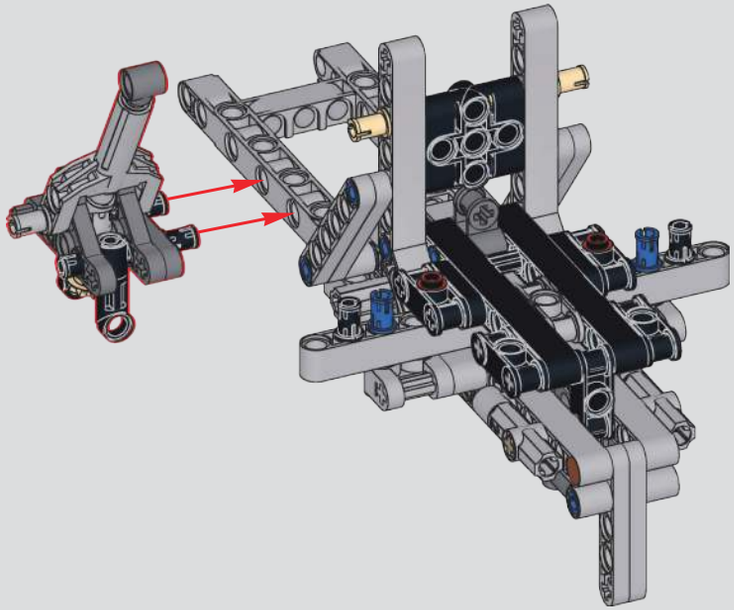

77

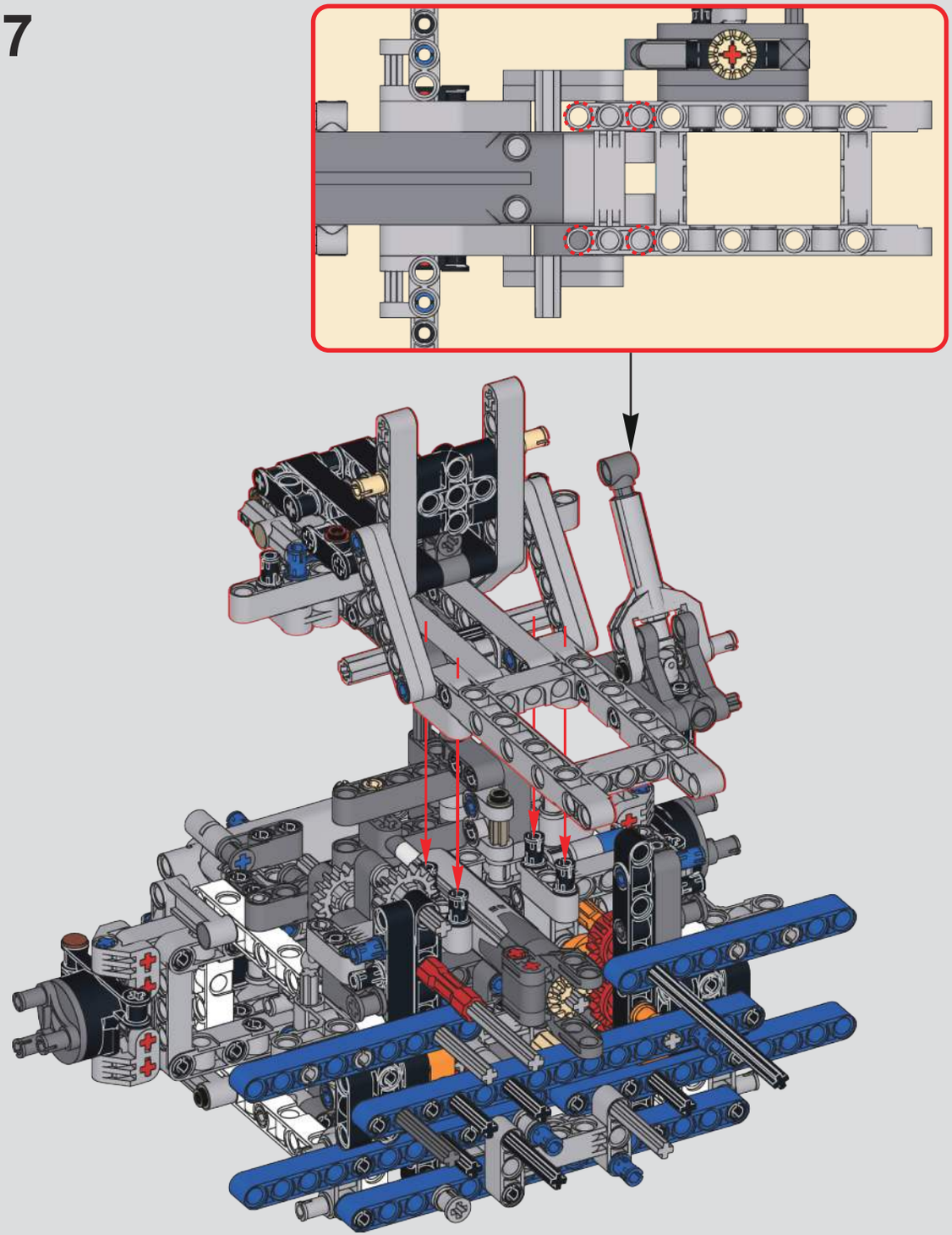

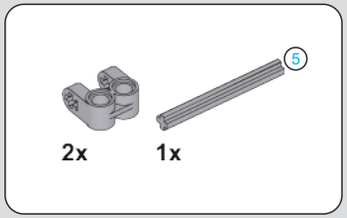

78

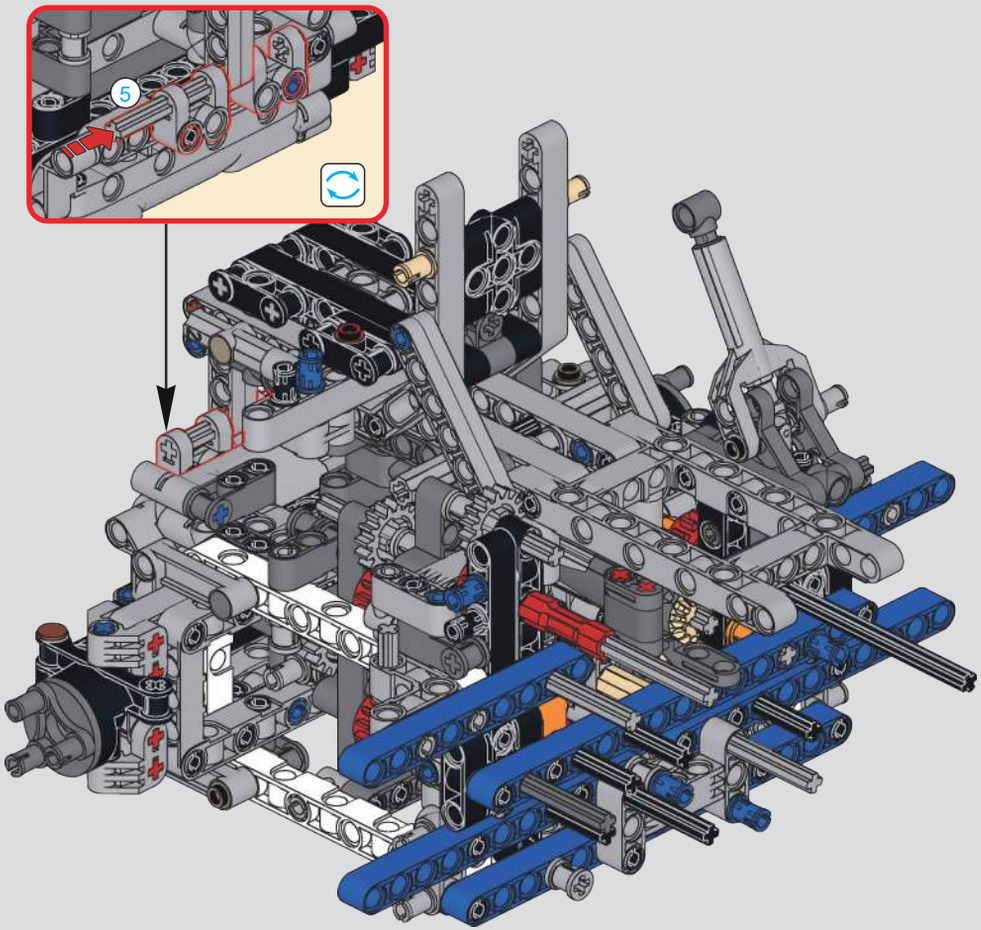

79

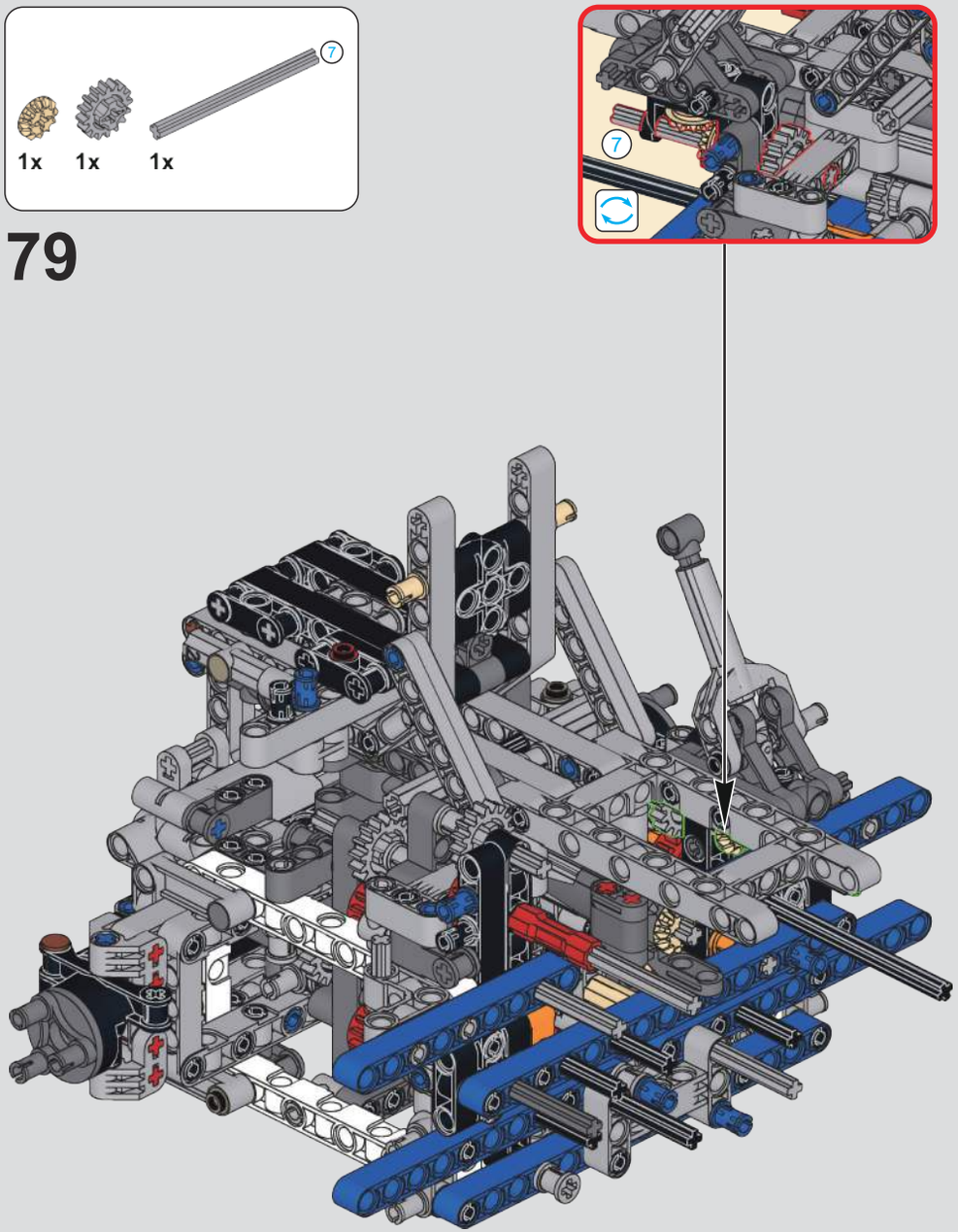

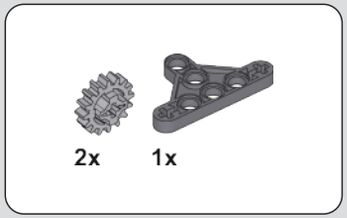

80

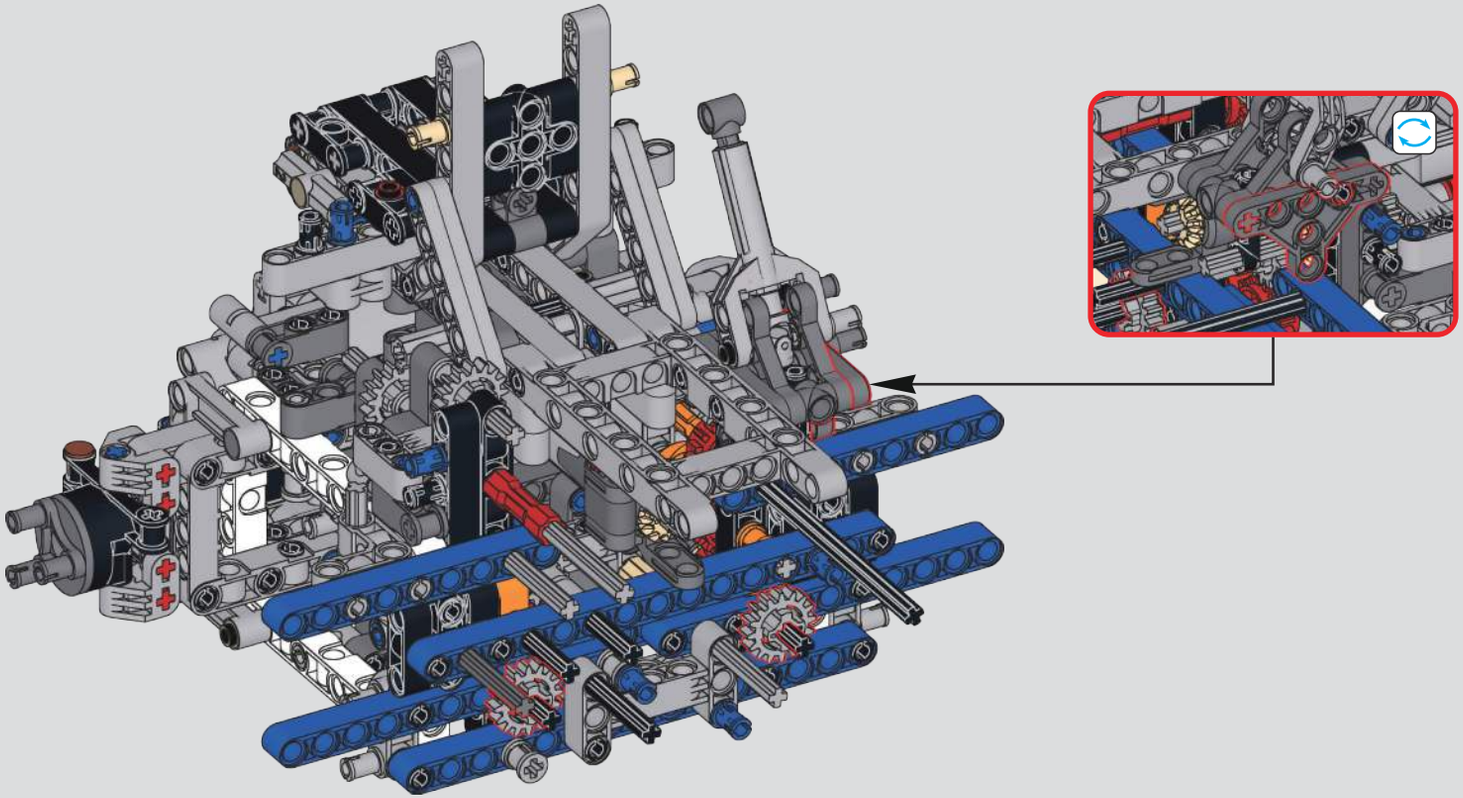

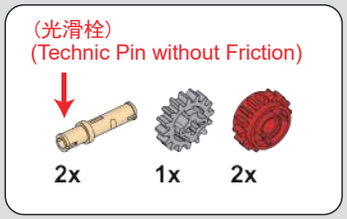

81

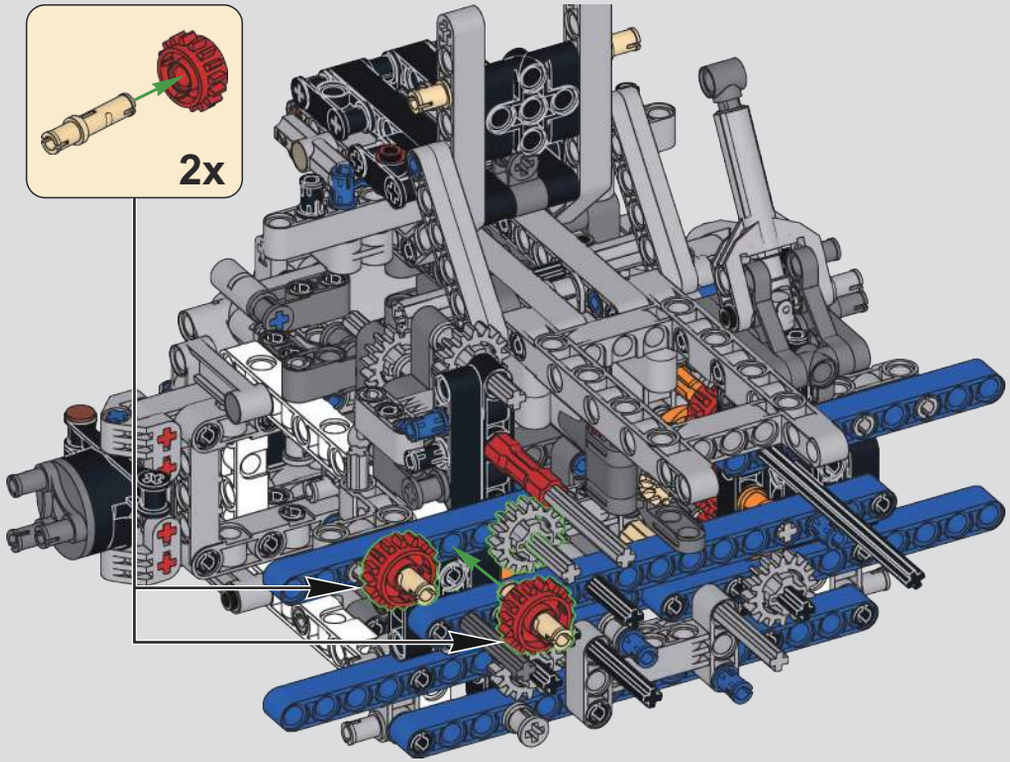

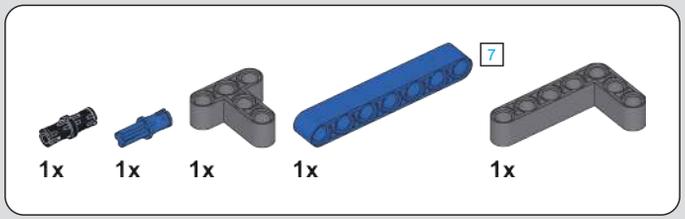

82

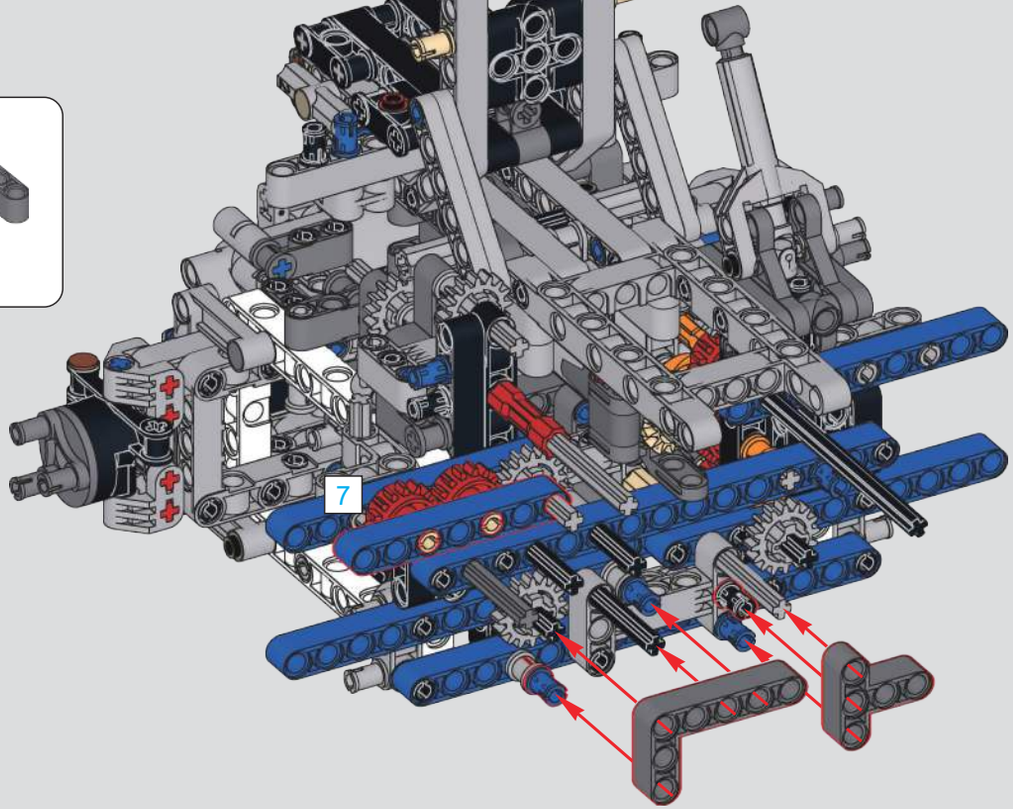

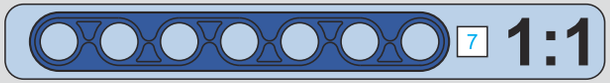

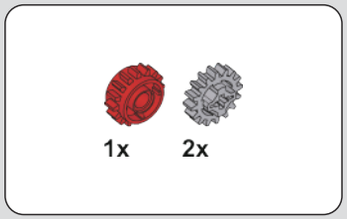

83

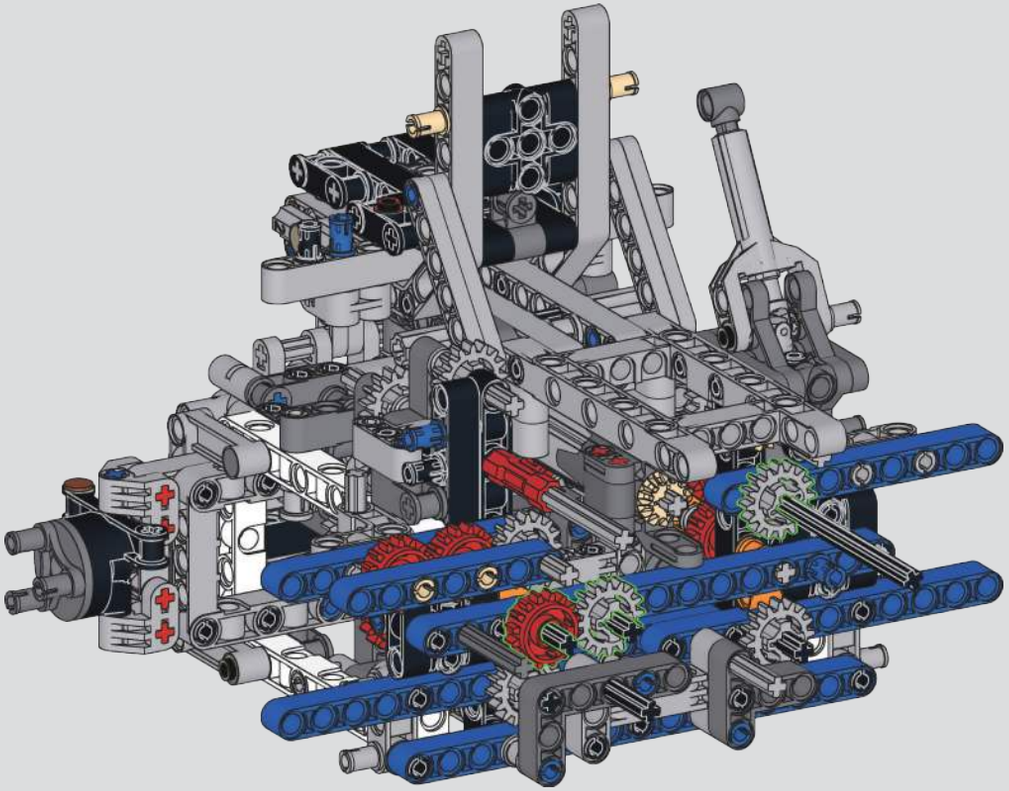

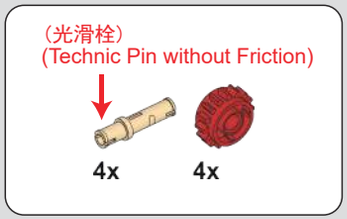

84

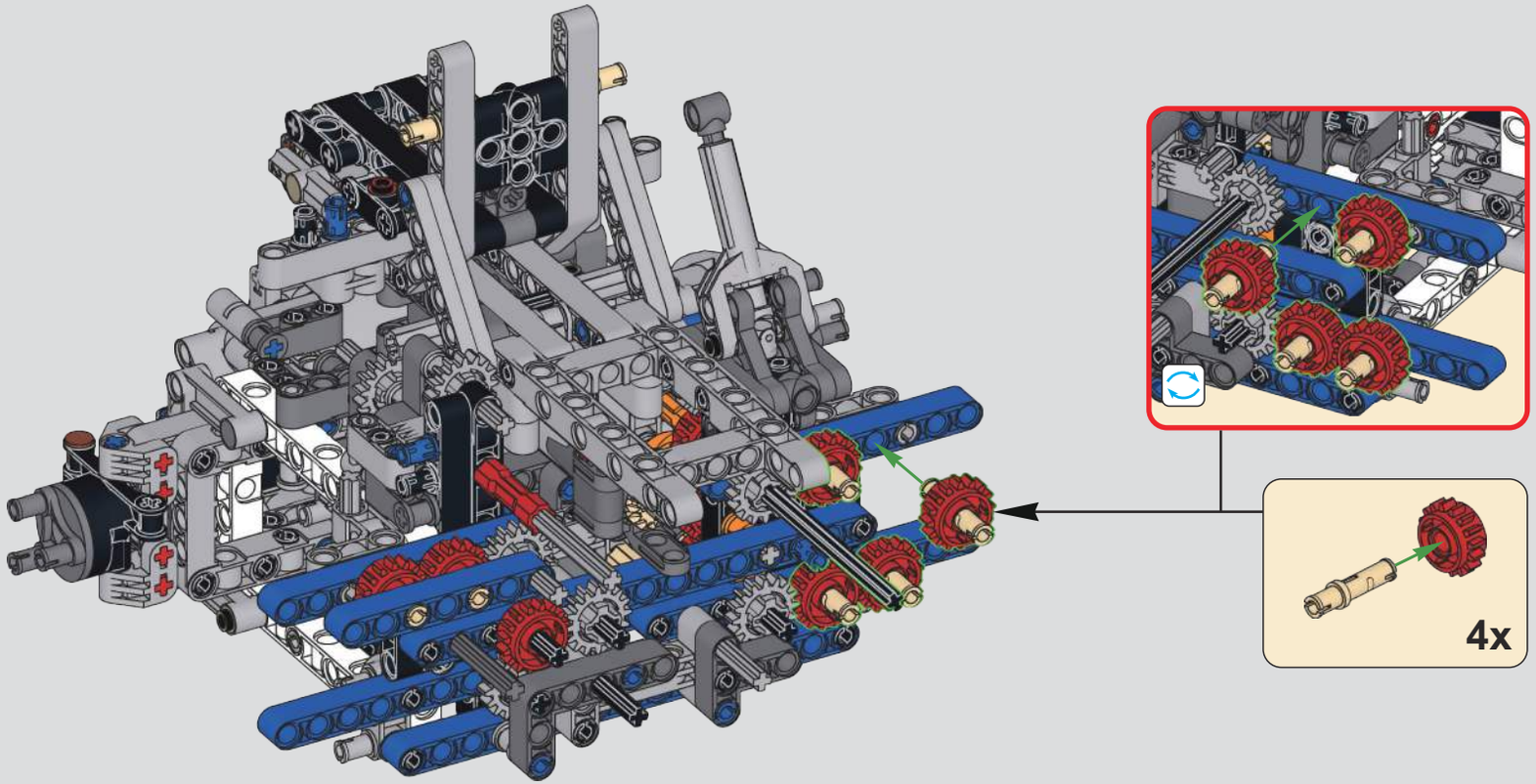

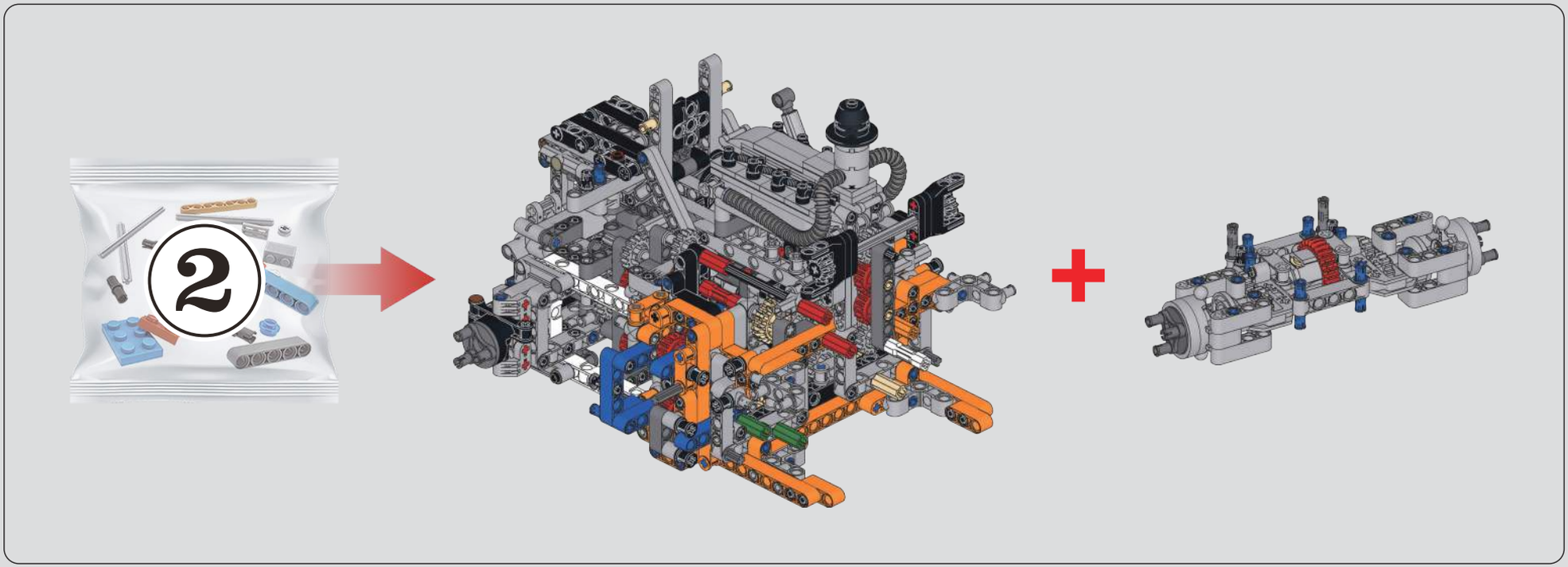

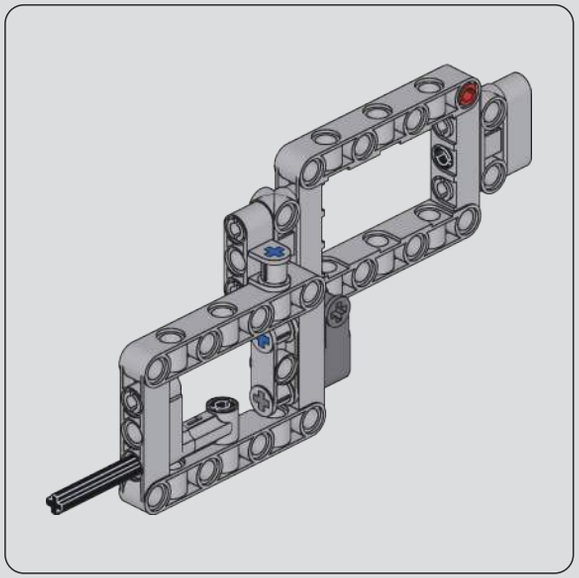

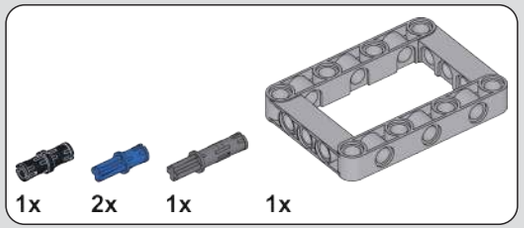

85

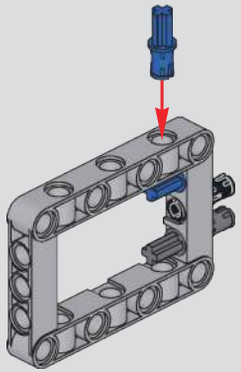

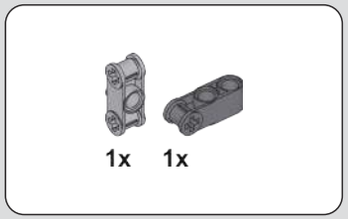

86

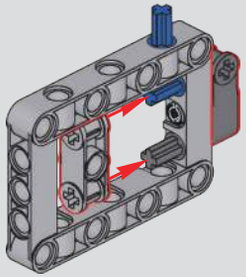

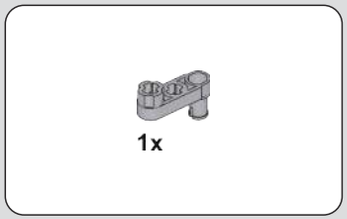

87

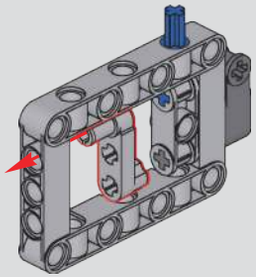

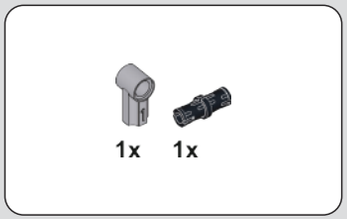

88

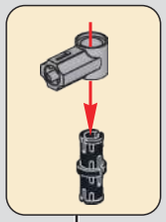

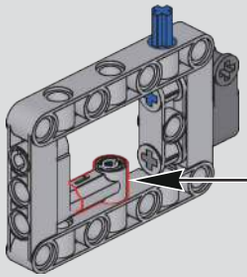

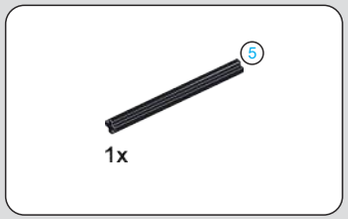

89

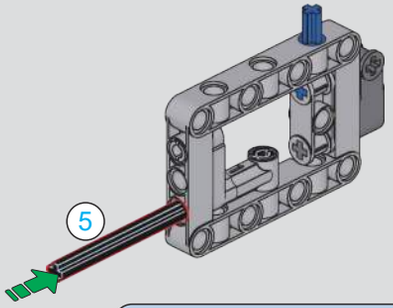

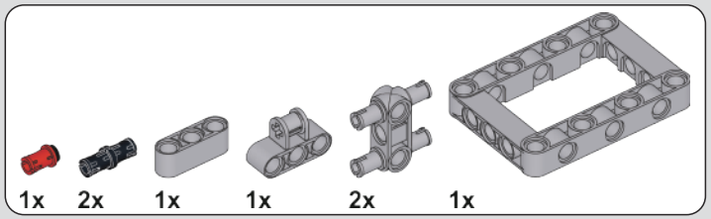

90

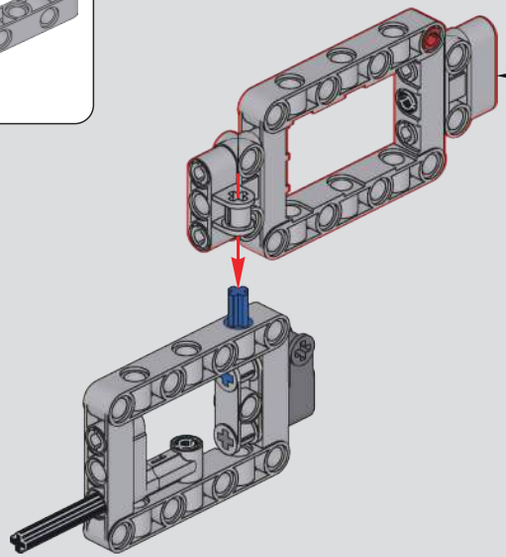

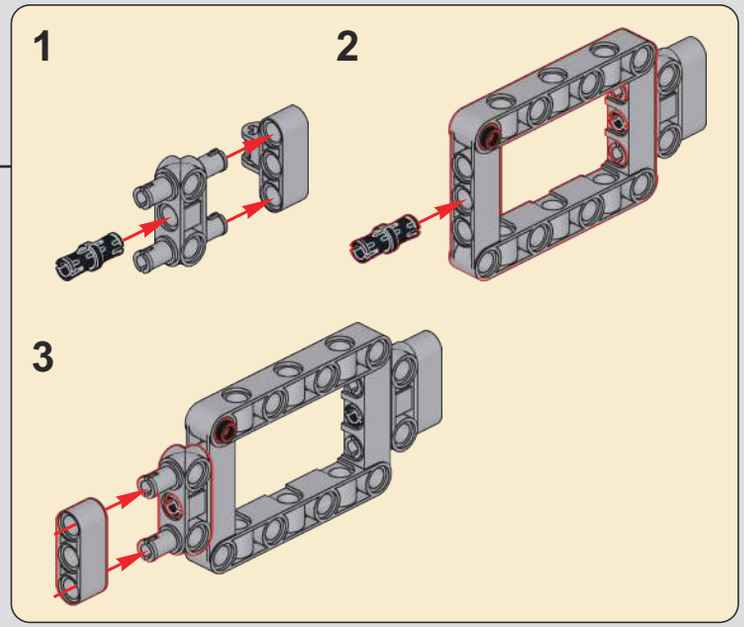

91

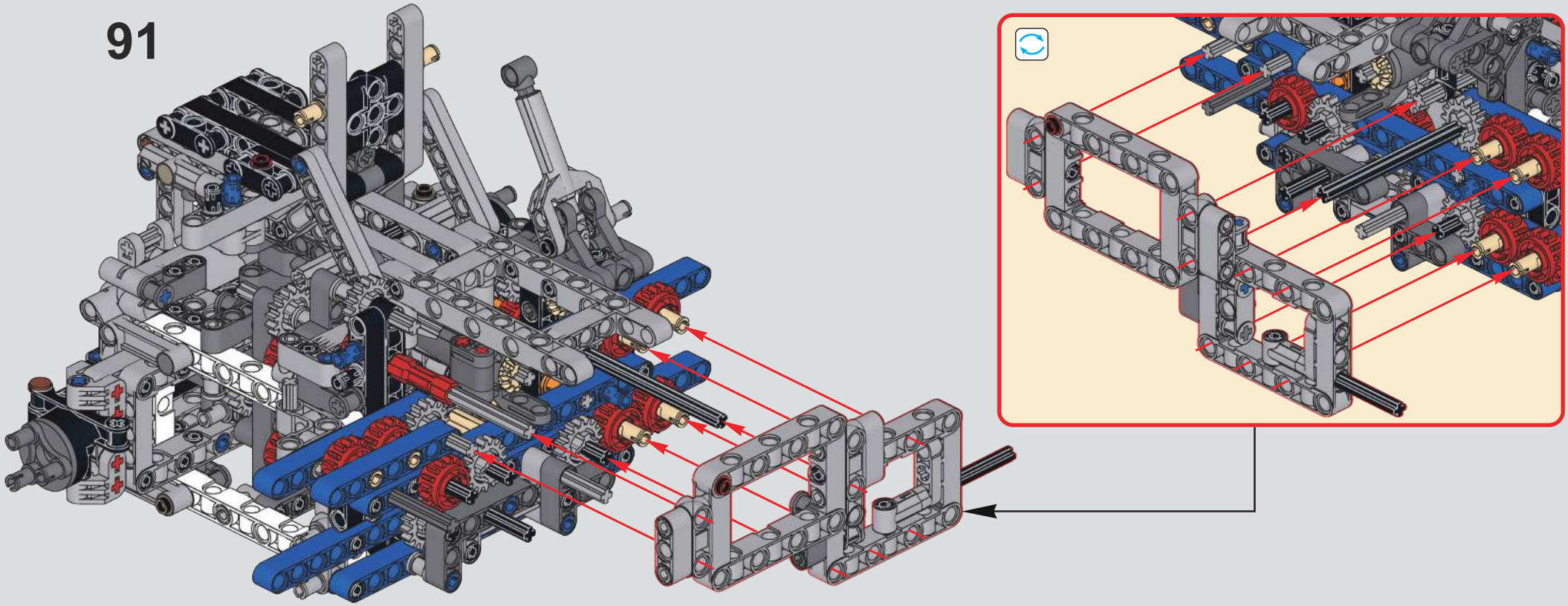

92

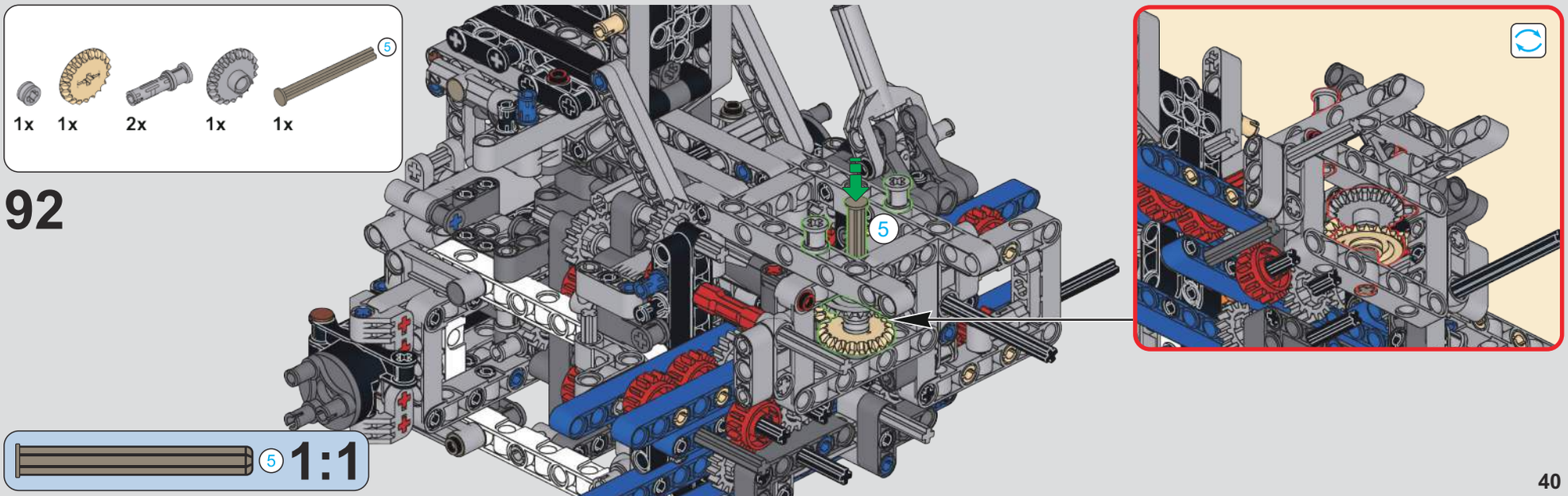

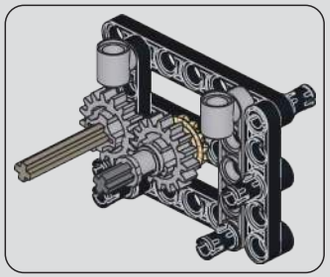

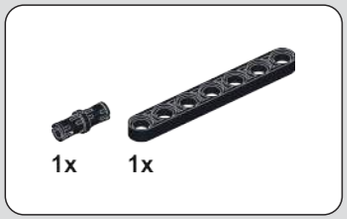

93

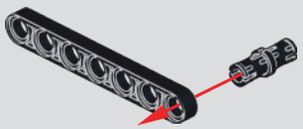

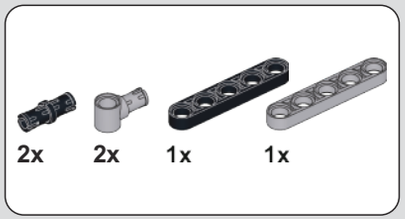

94

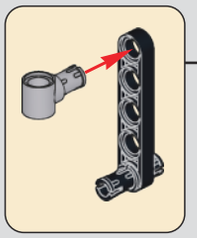

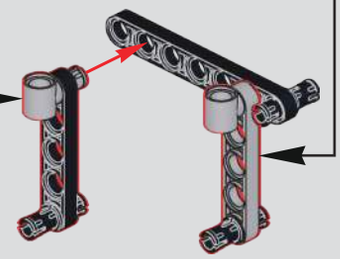

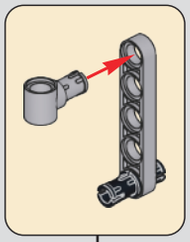

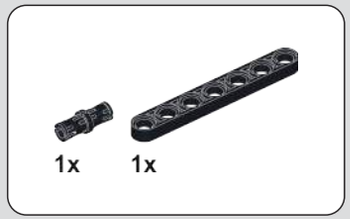

95

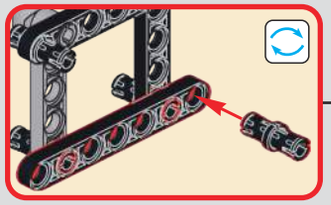

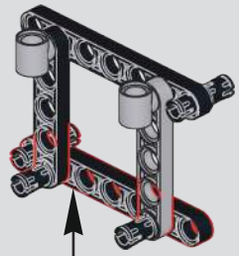

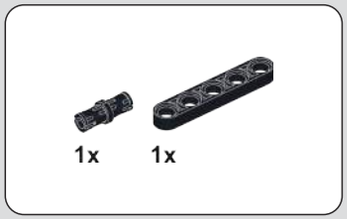

96

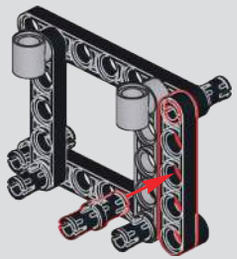

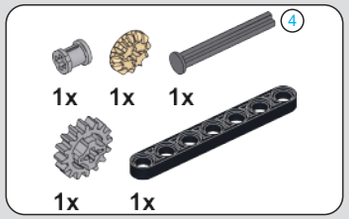

97

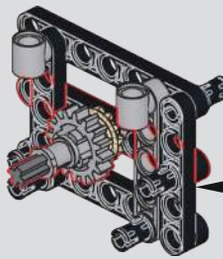

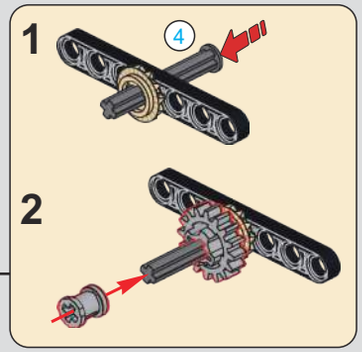

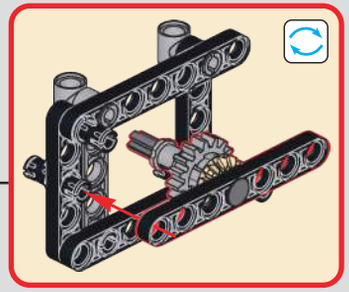

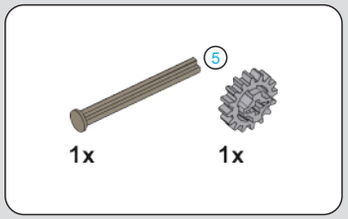

98

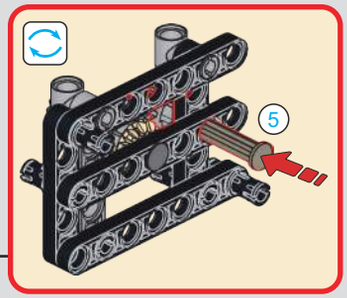

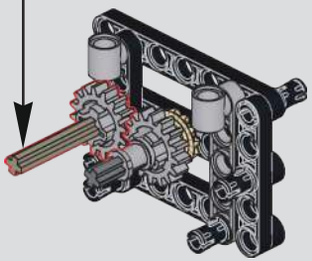

99

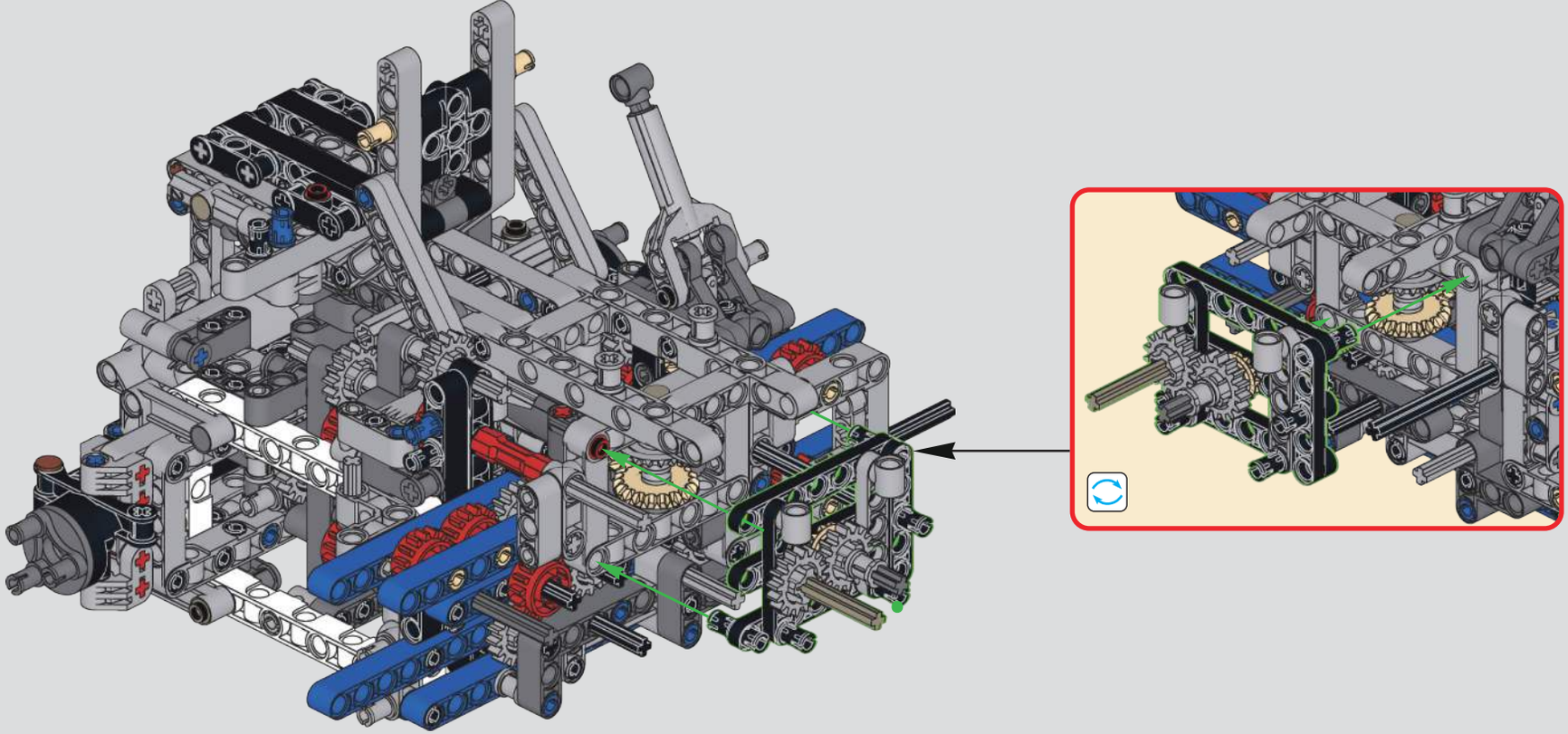

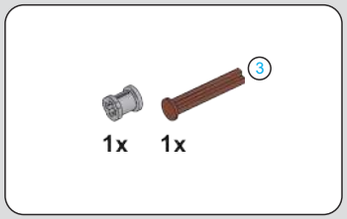

100

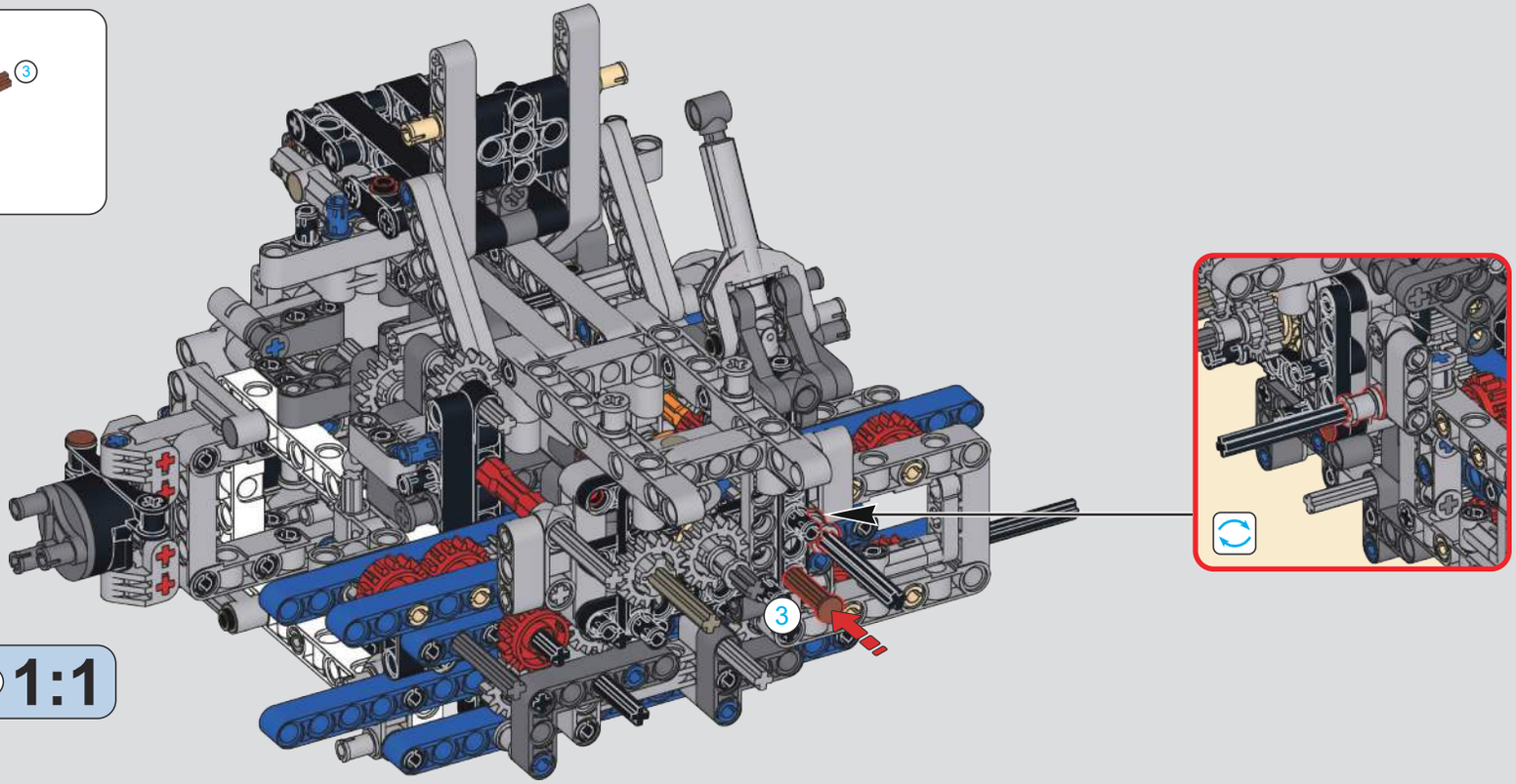

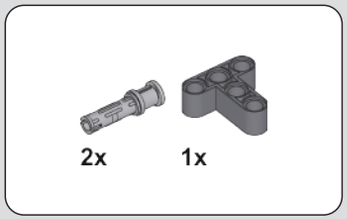

101

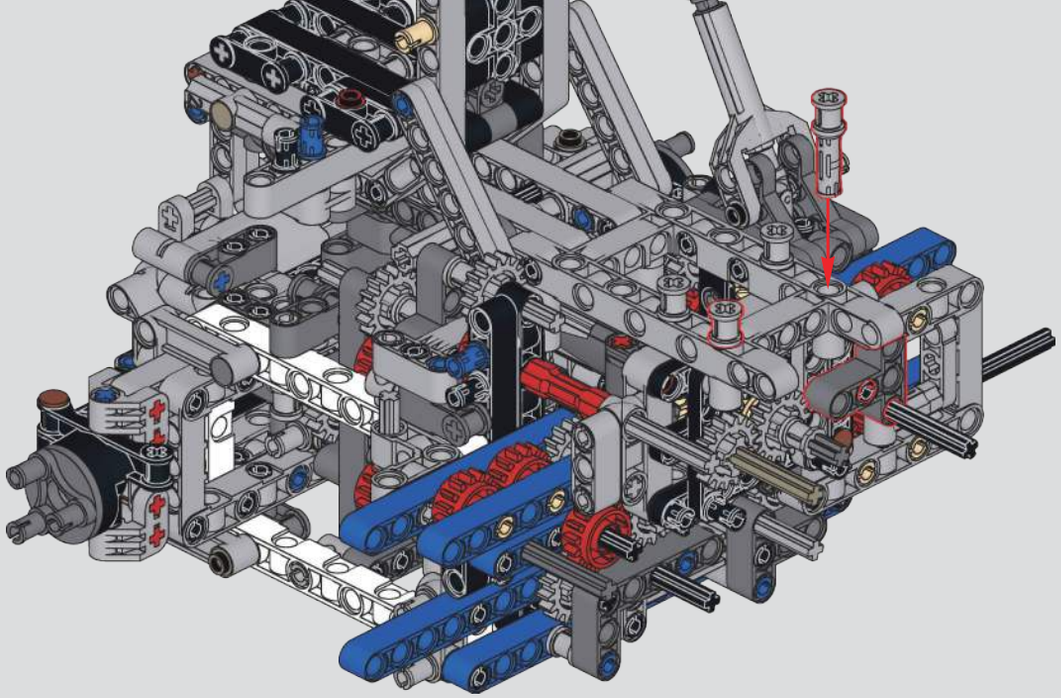

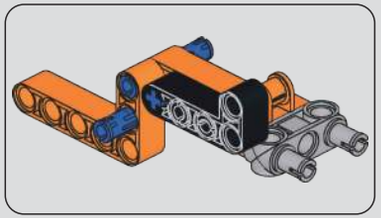

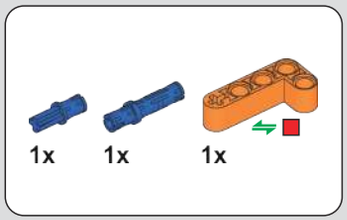

102

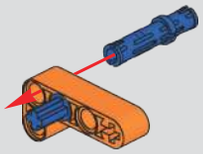

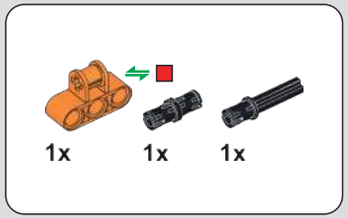

103

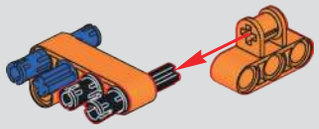

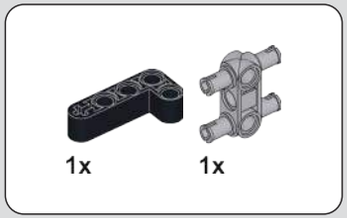

104

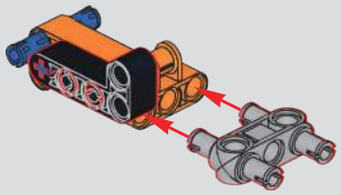

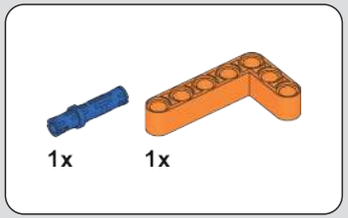

105

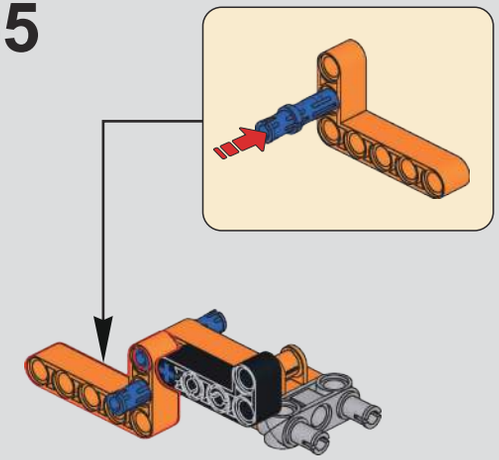

106

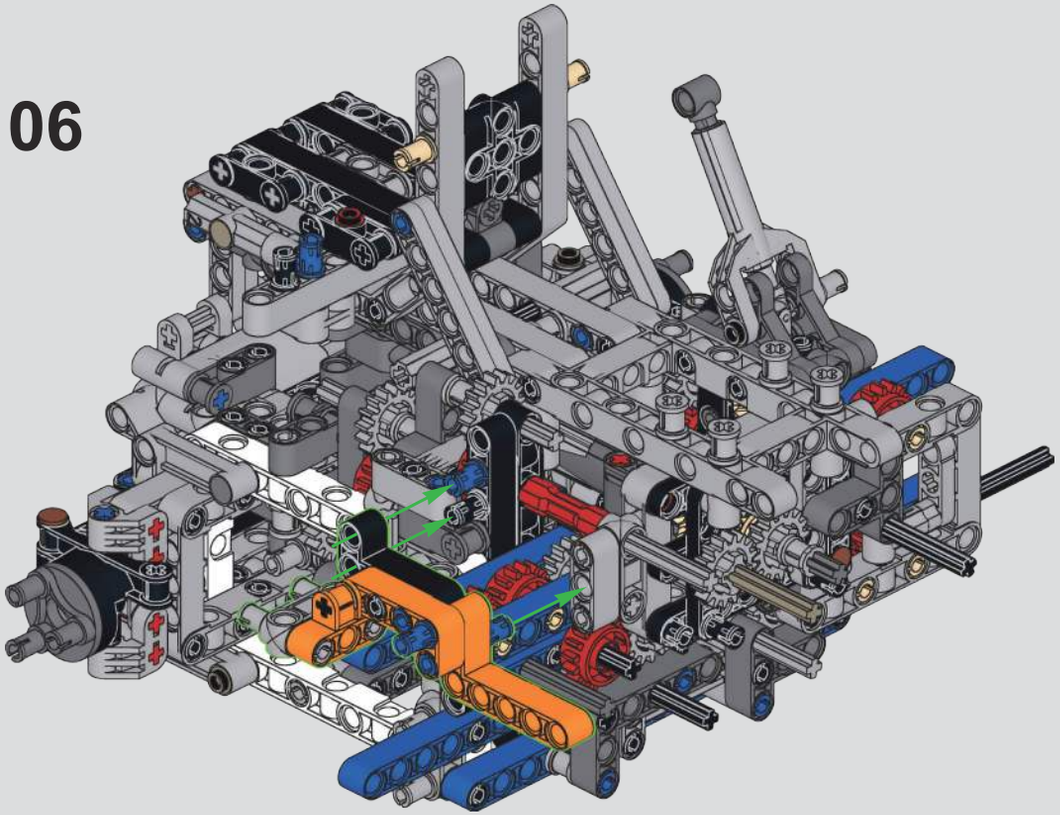

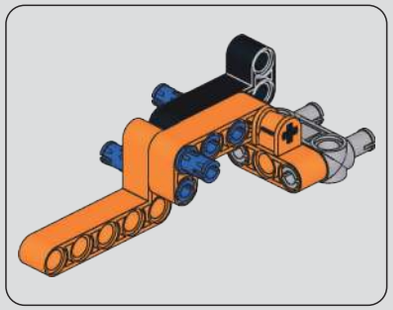

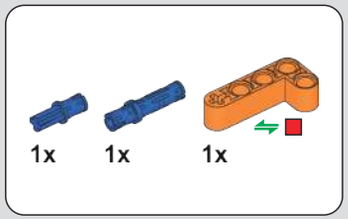

107

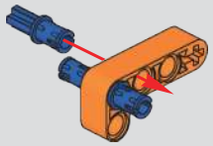

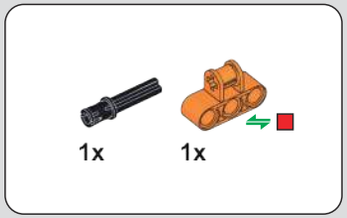

108

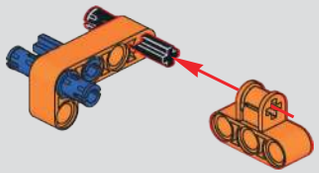

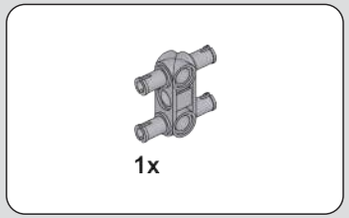

109

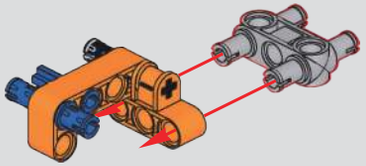

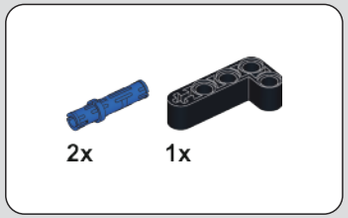

110

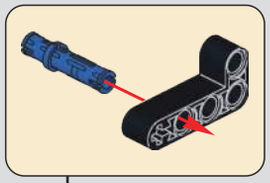

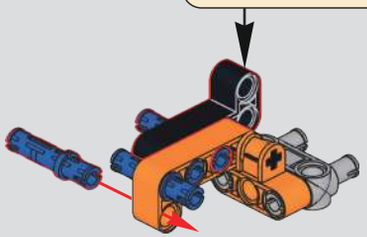

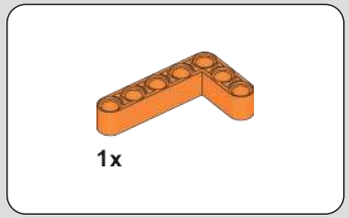

111

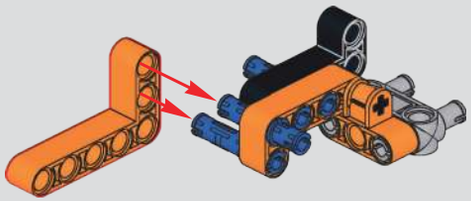

112

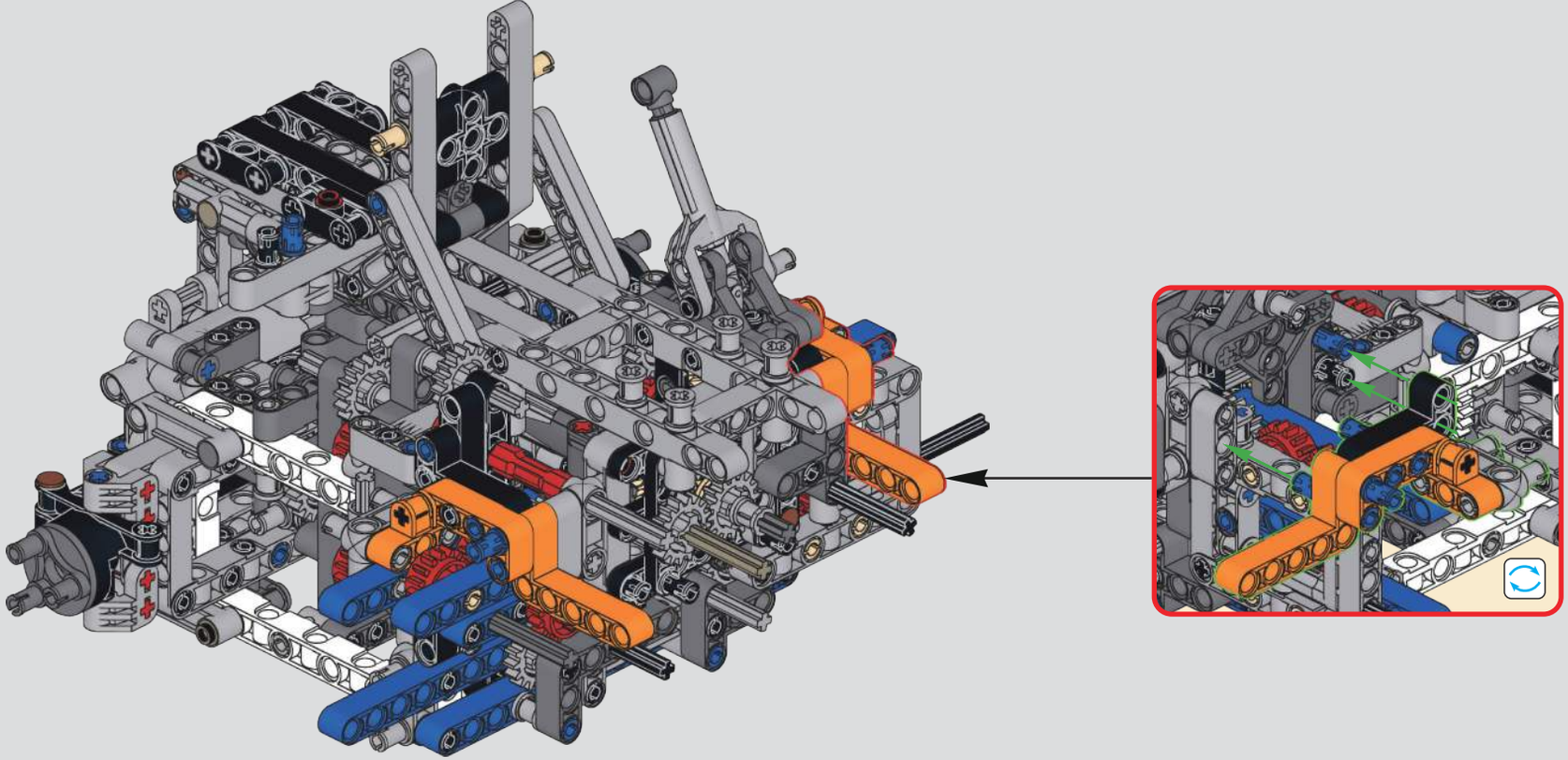

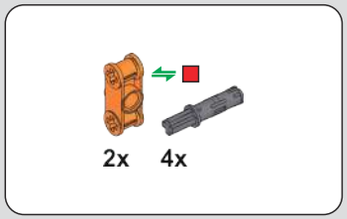

113

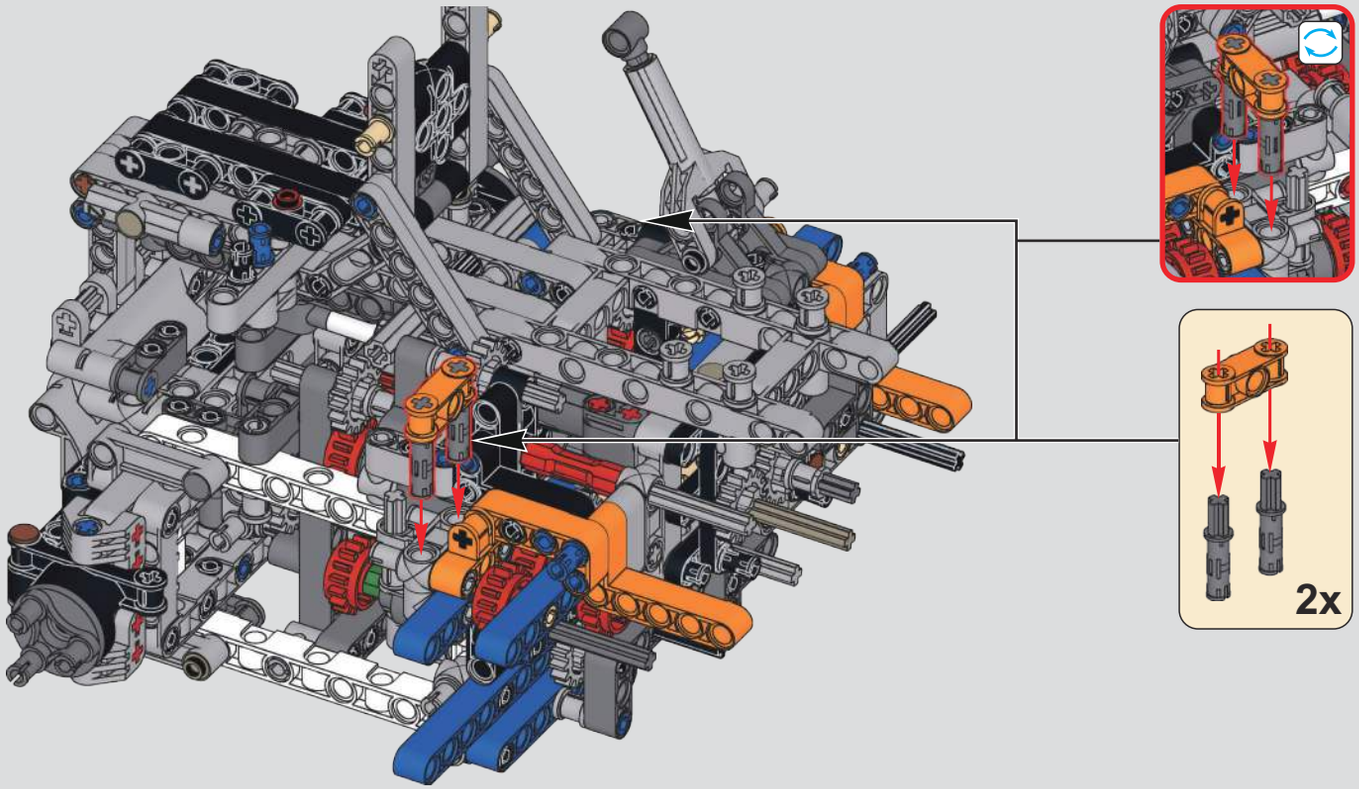

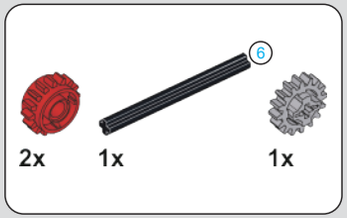

114

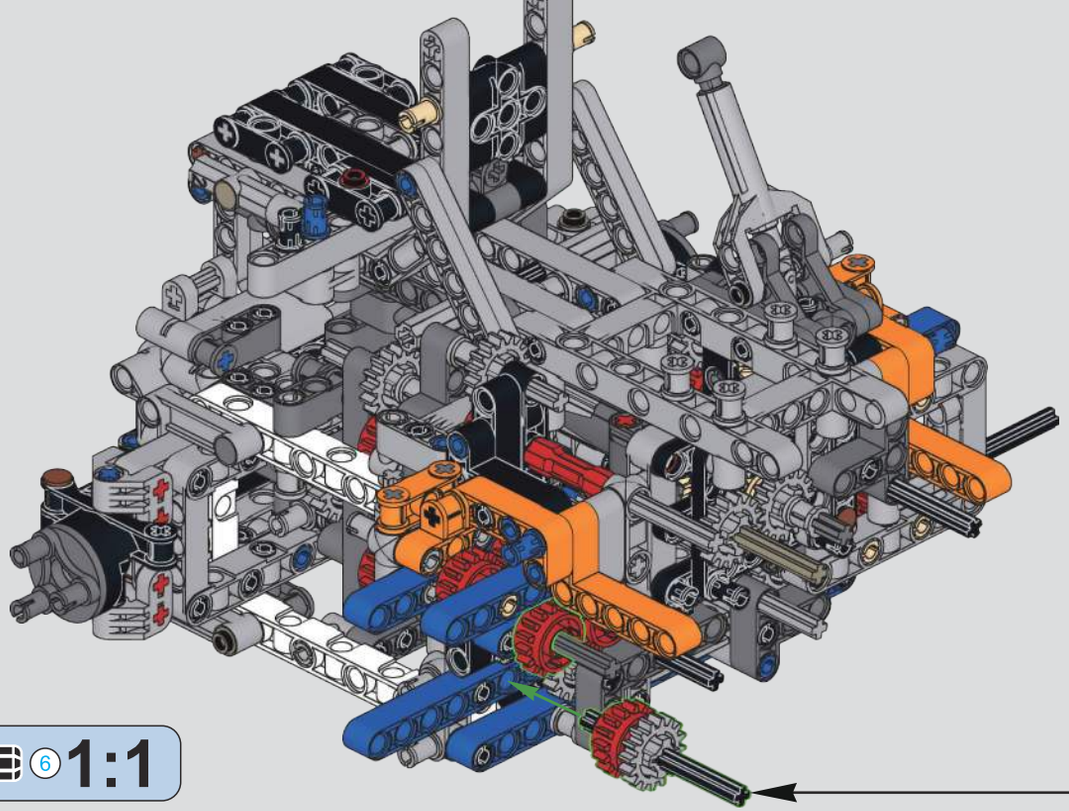

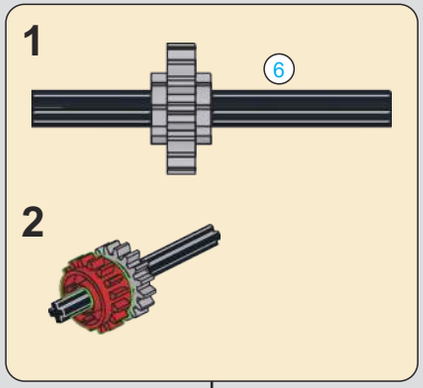

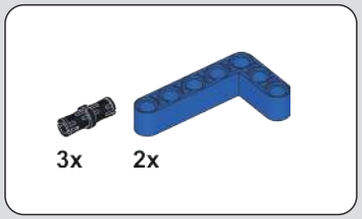

115

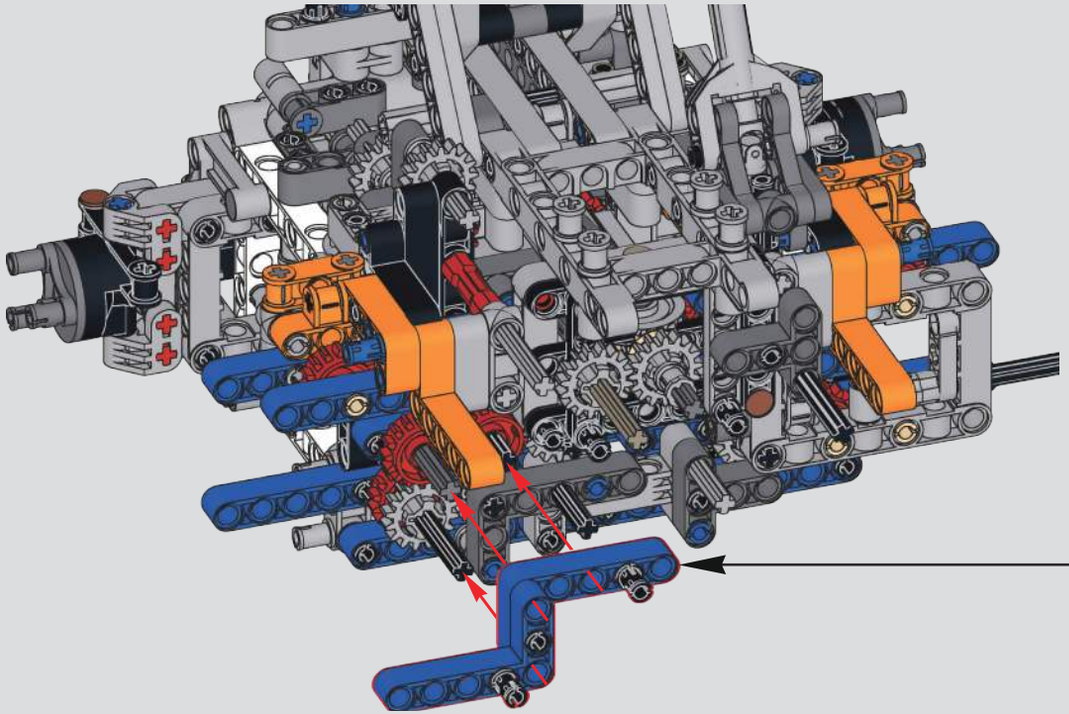

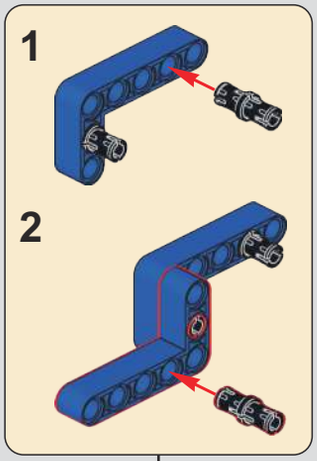

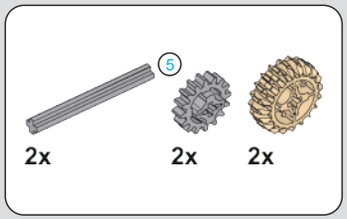

116

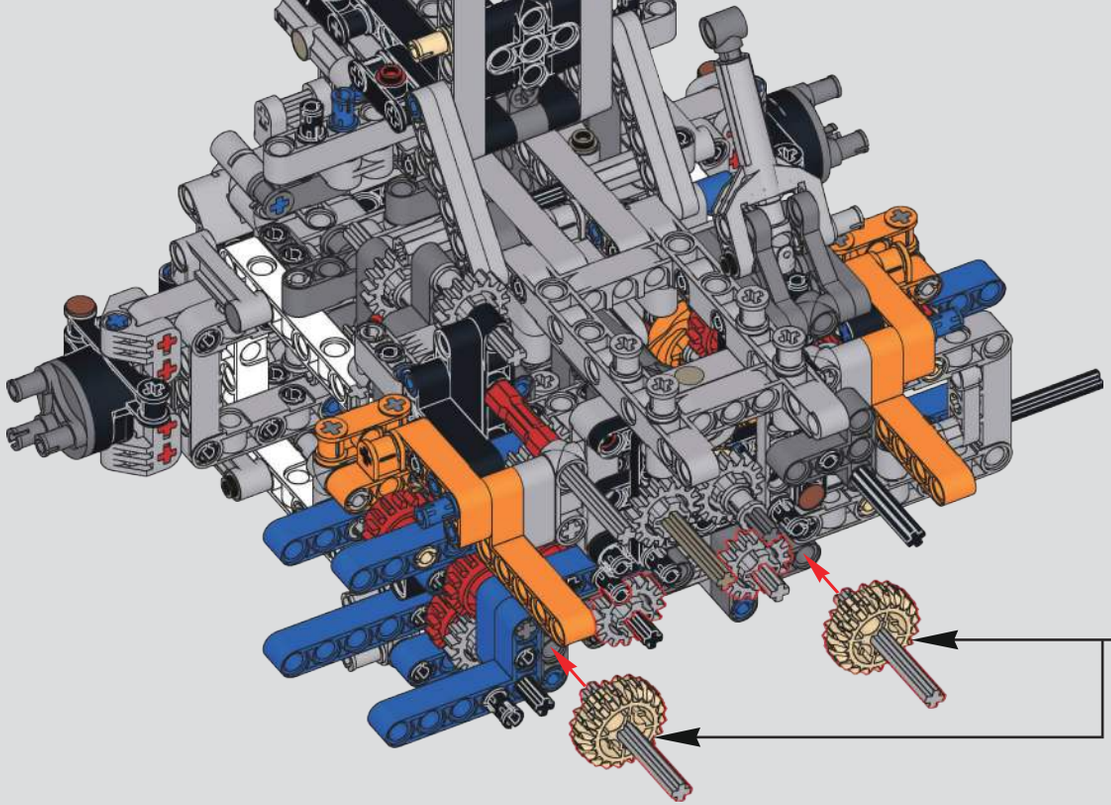

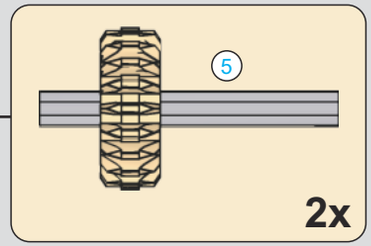

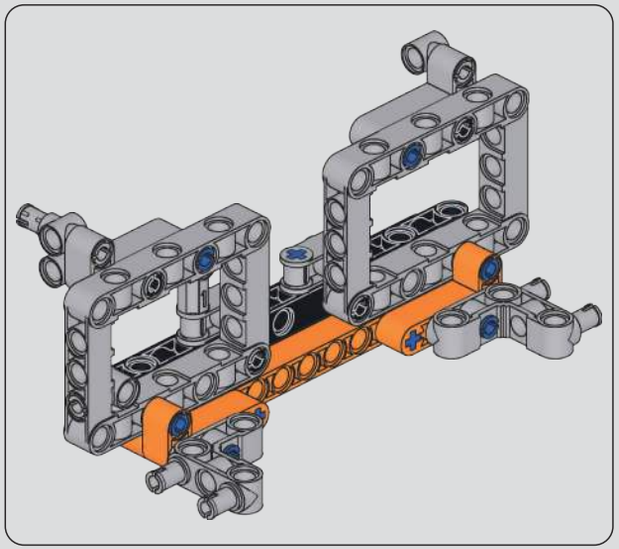

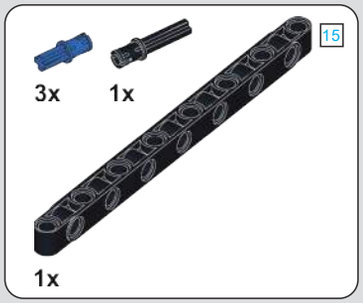

117

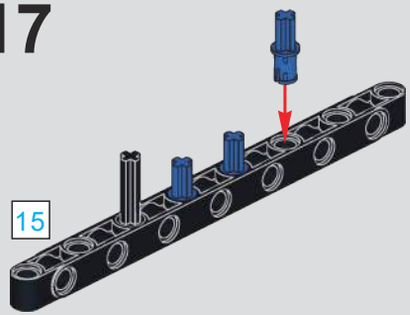

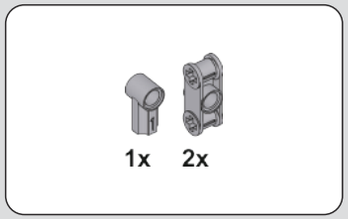

118

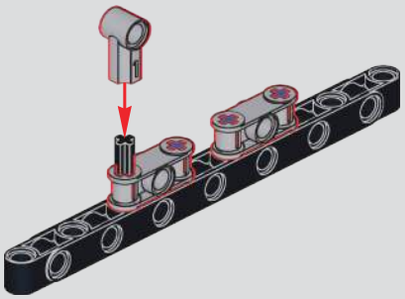

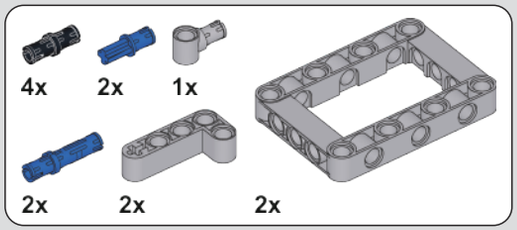

119

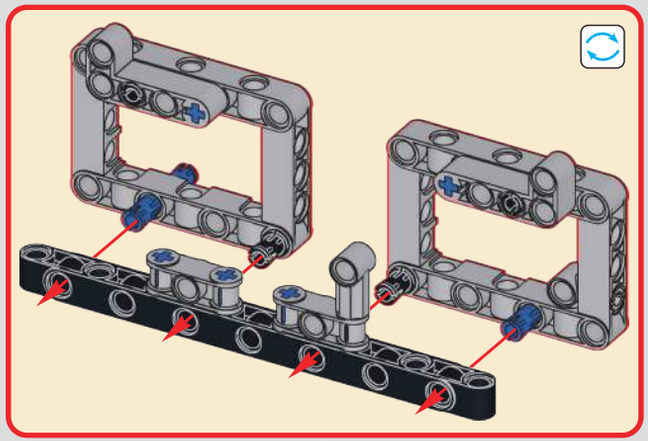

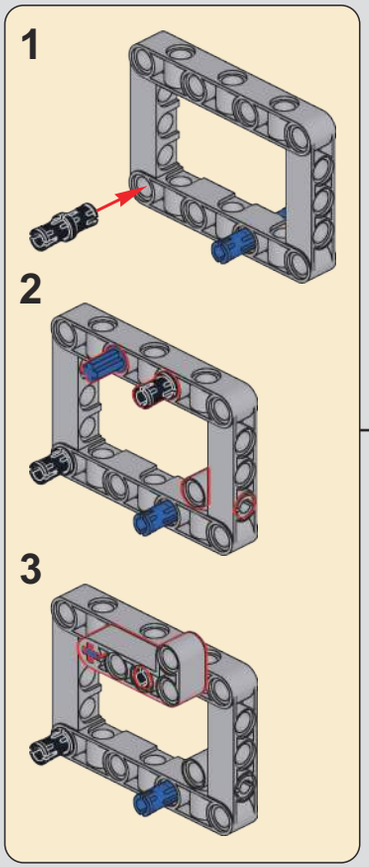

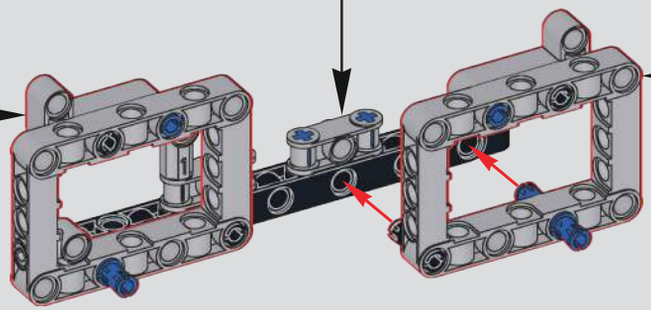

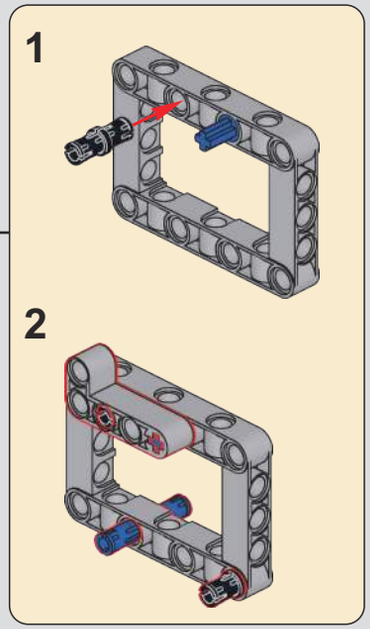

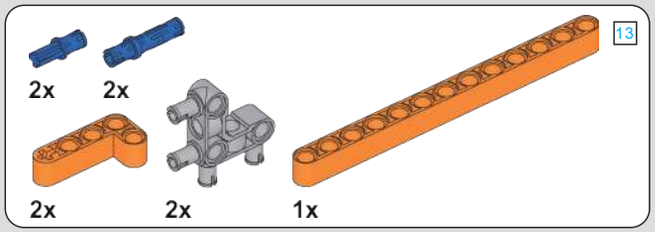

120

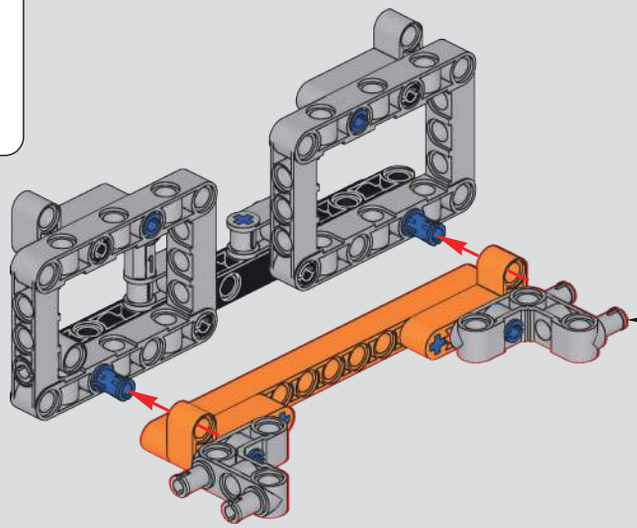

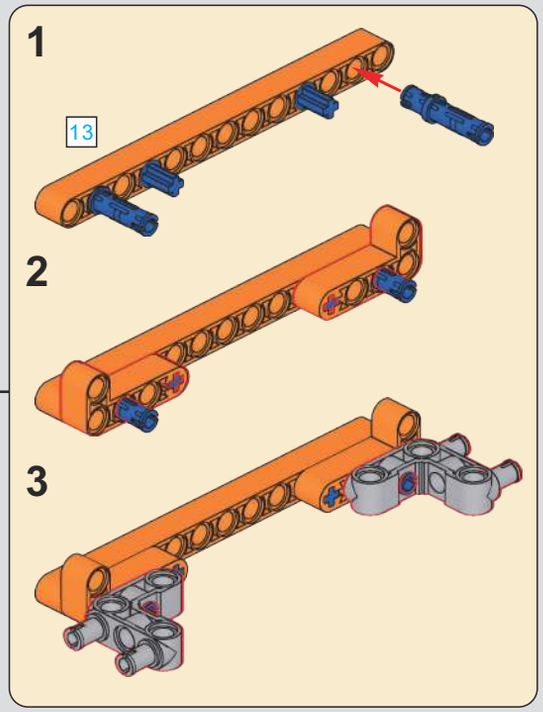

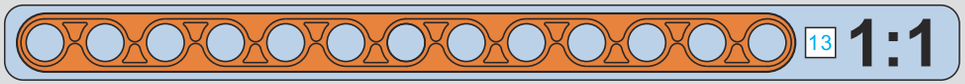

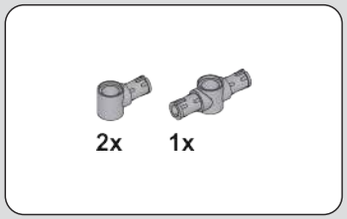

121

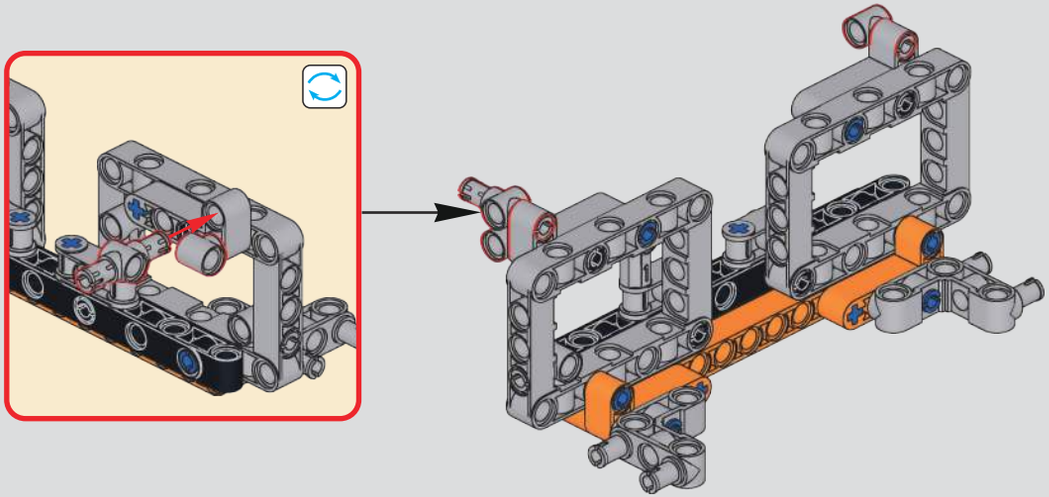

122

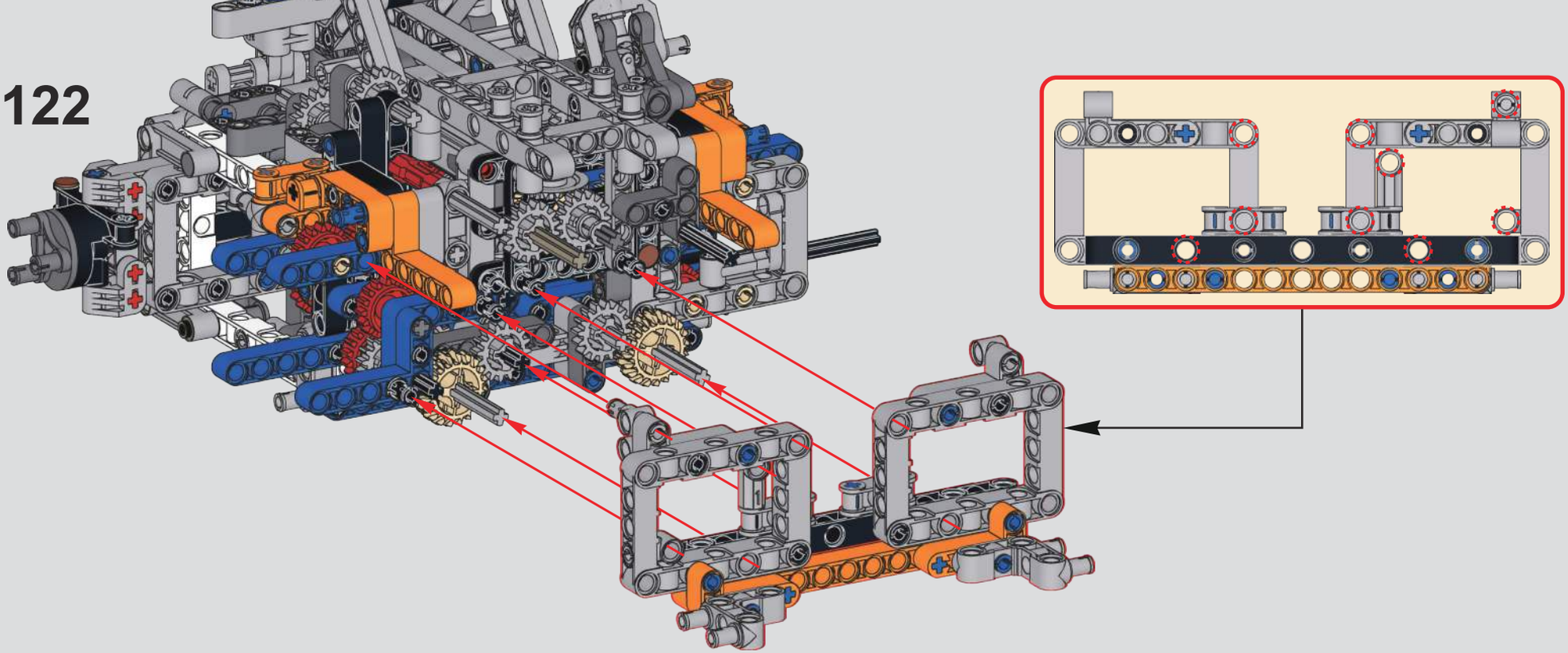

123

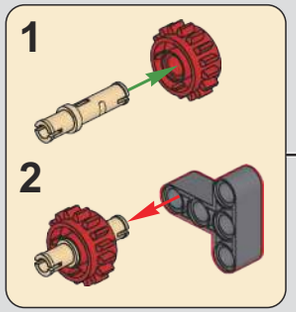

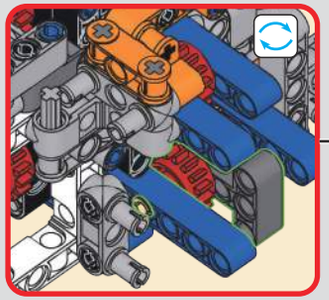

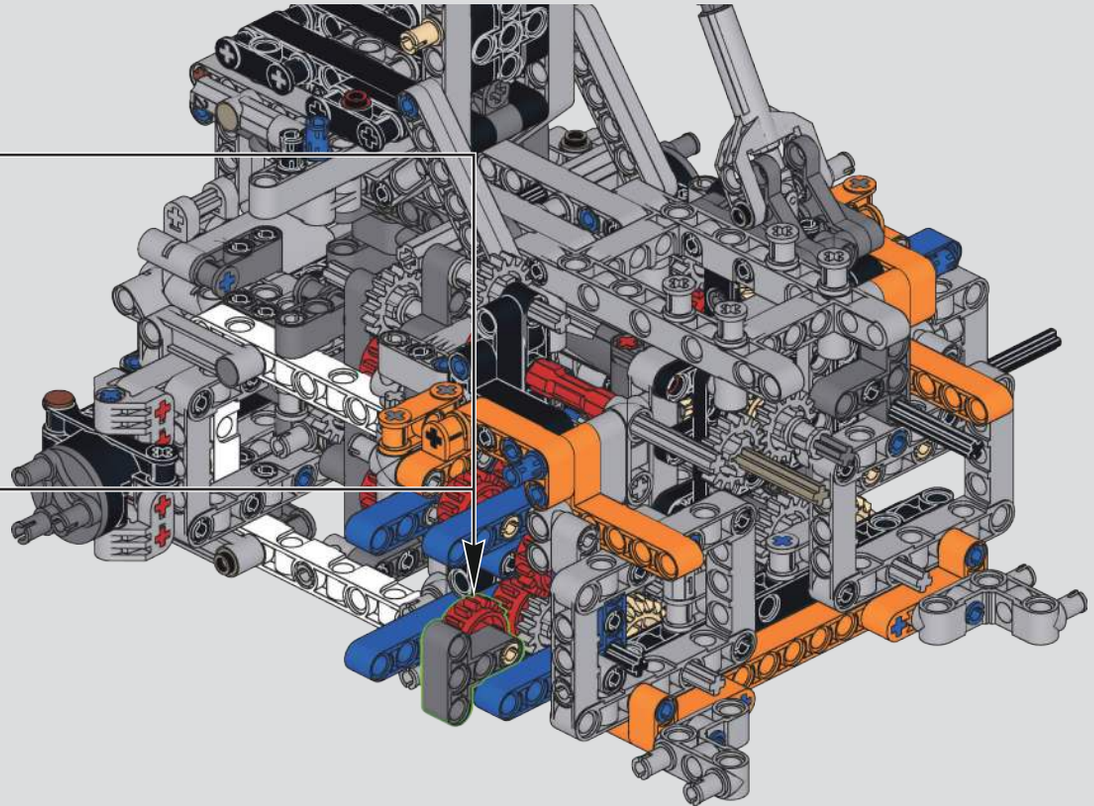

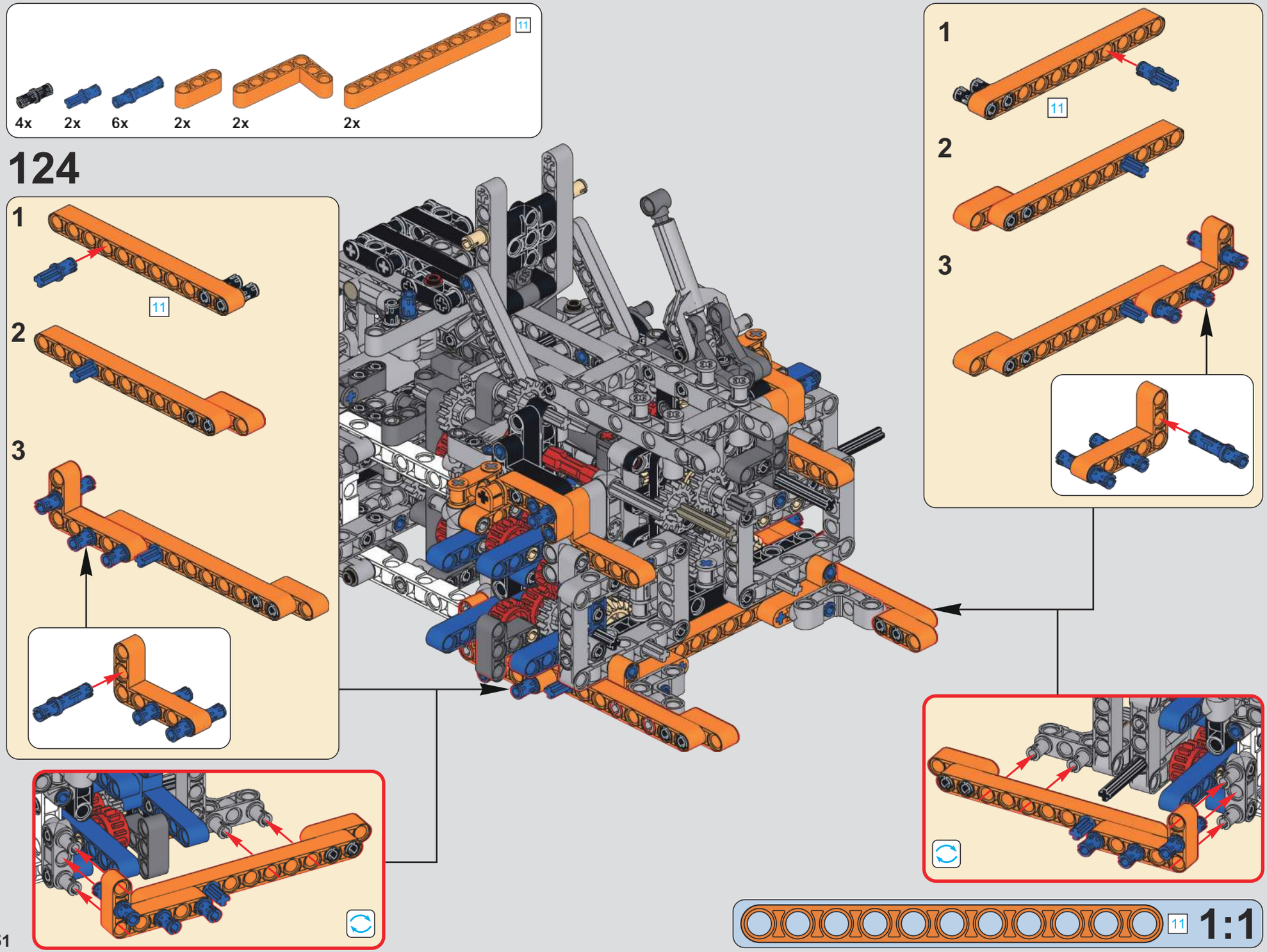
11
4x
2x
6x
2x
2x
2x
124
1
11
2
3
1
11
2
3
11
1:1

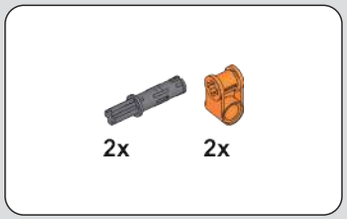

125

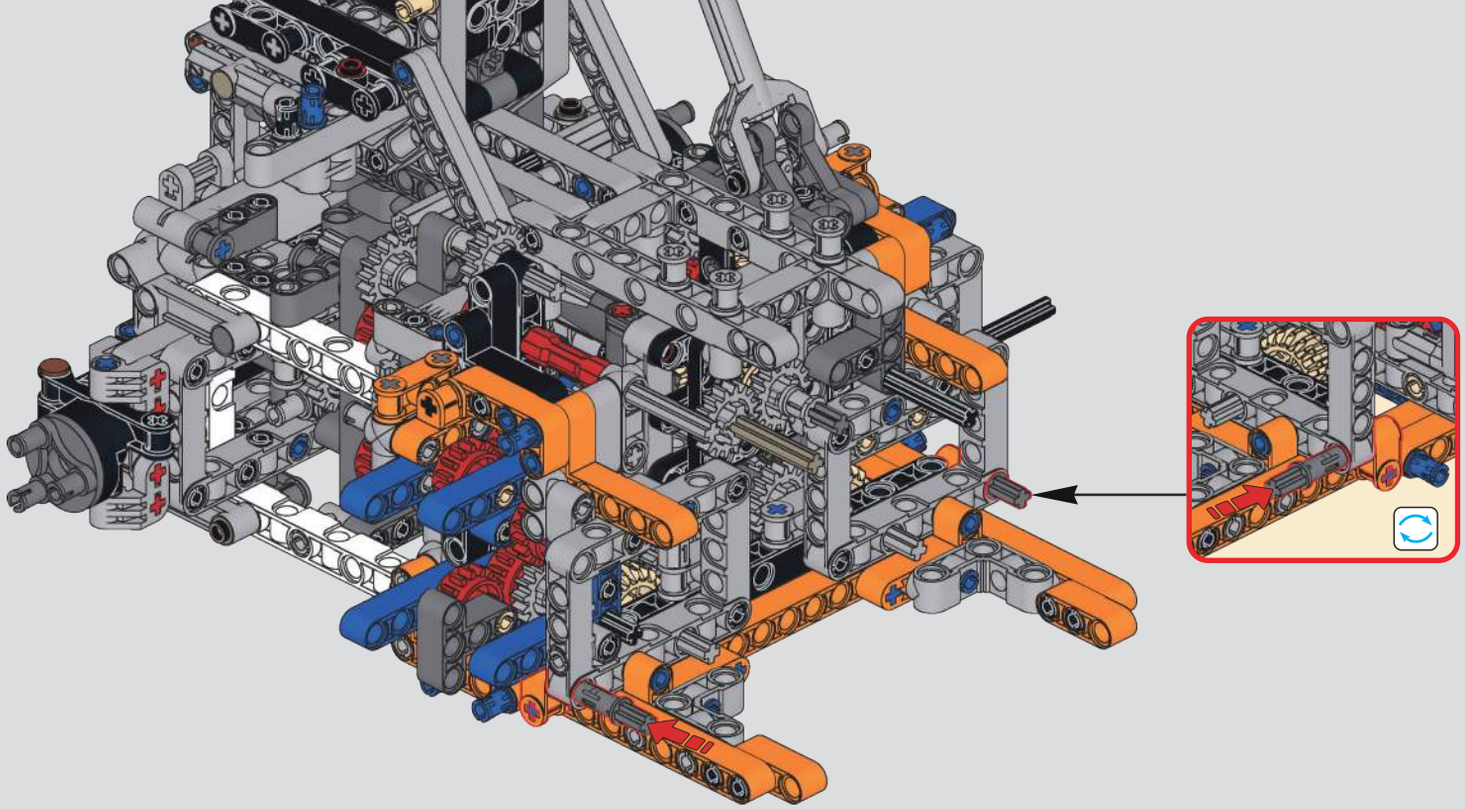

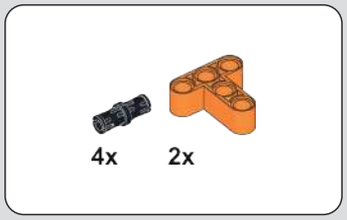

126

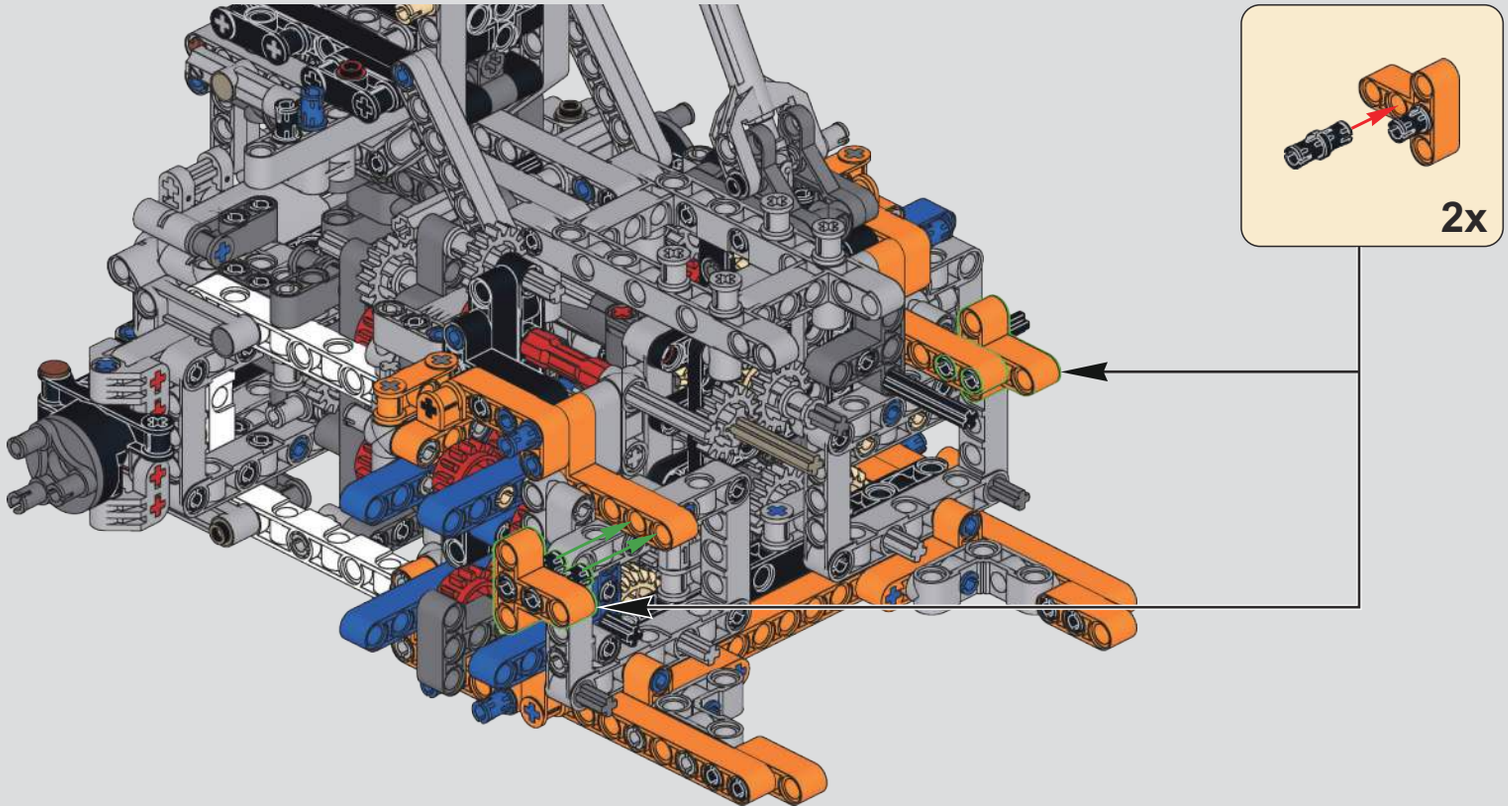

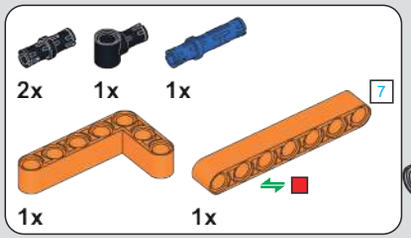

127

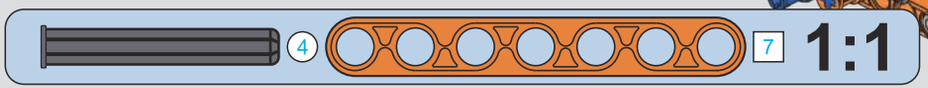

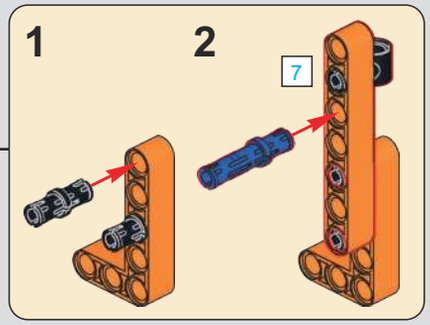

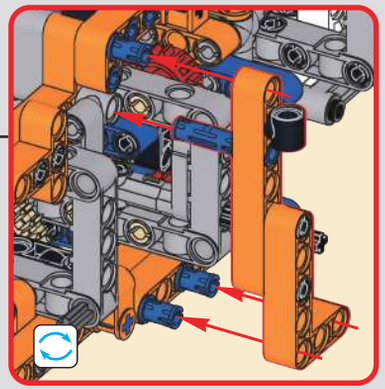

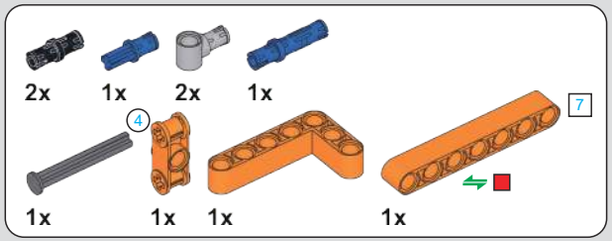

128

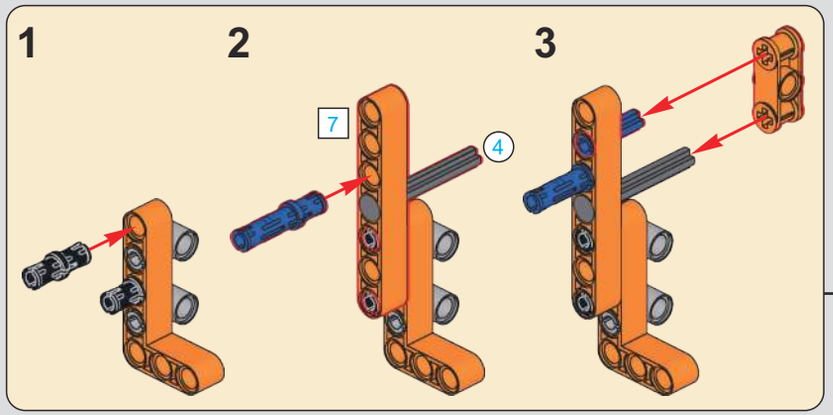

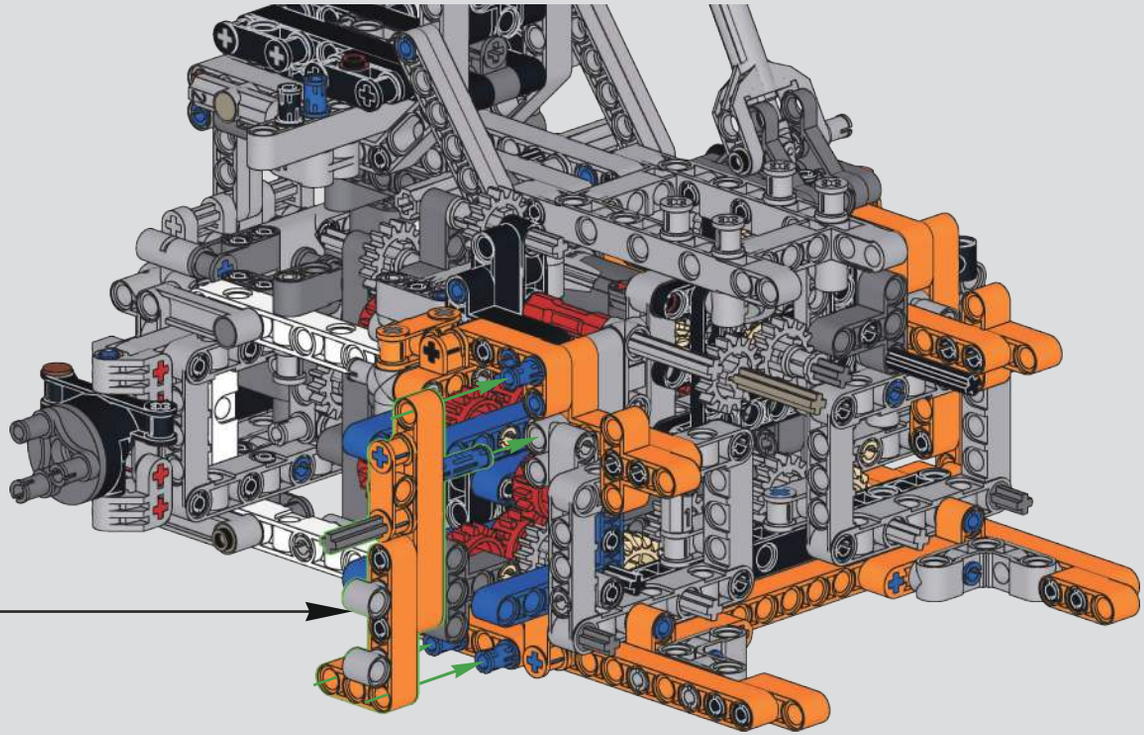

129

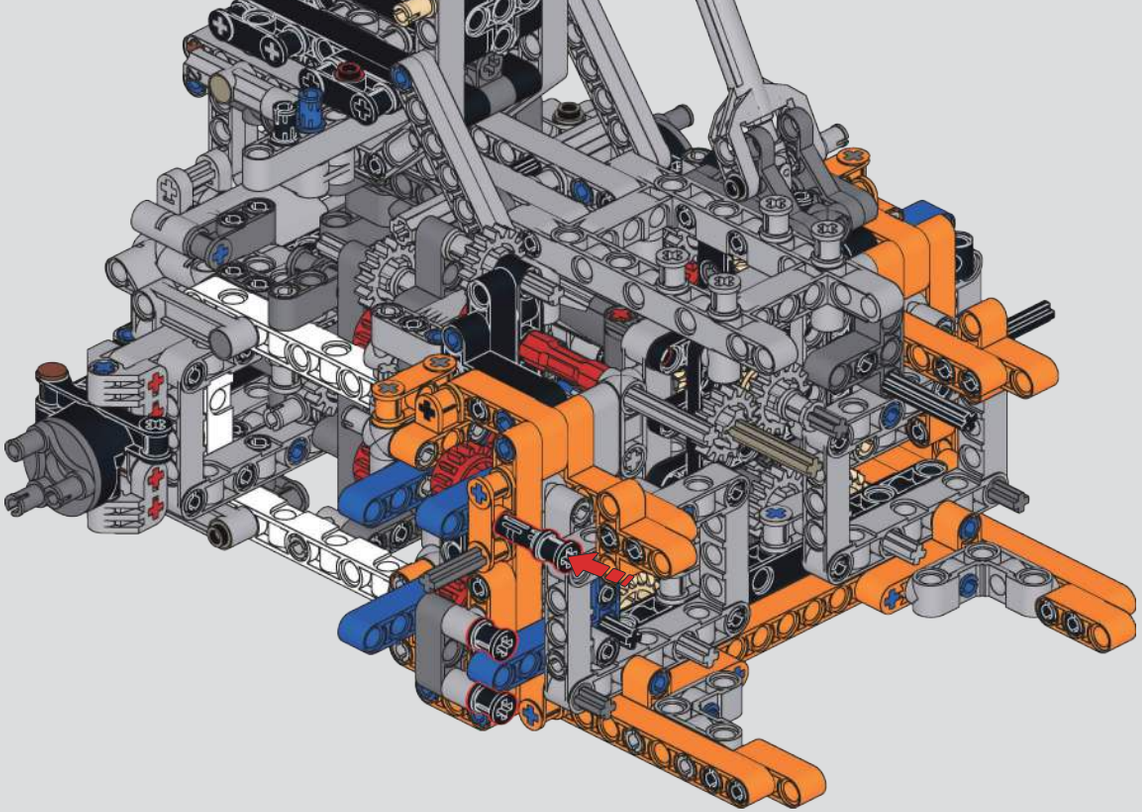

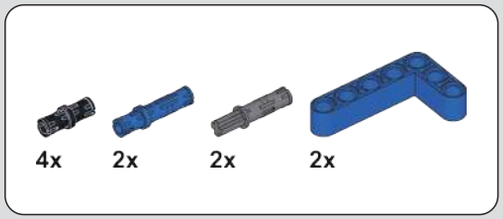

130

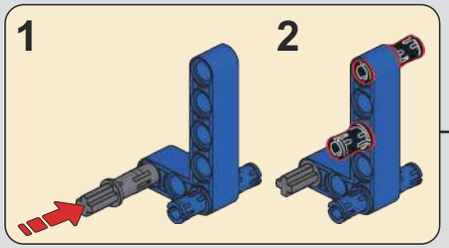

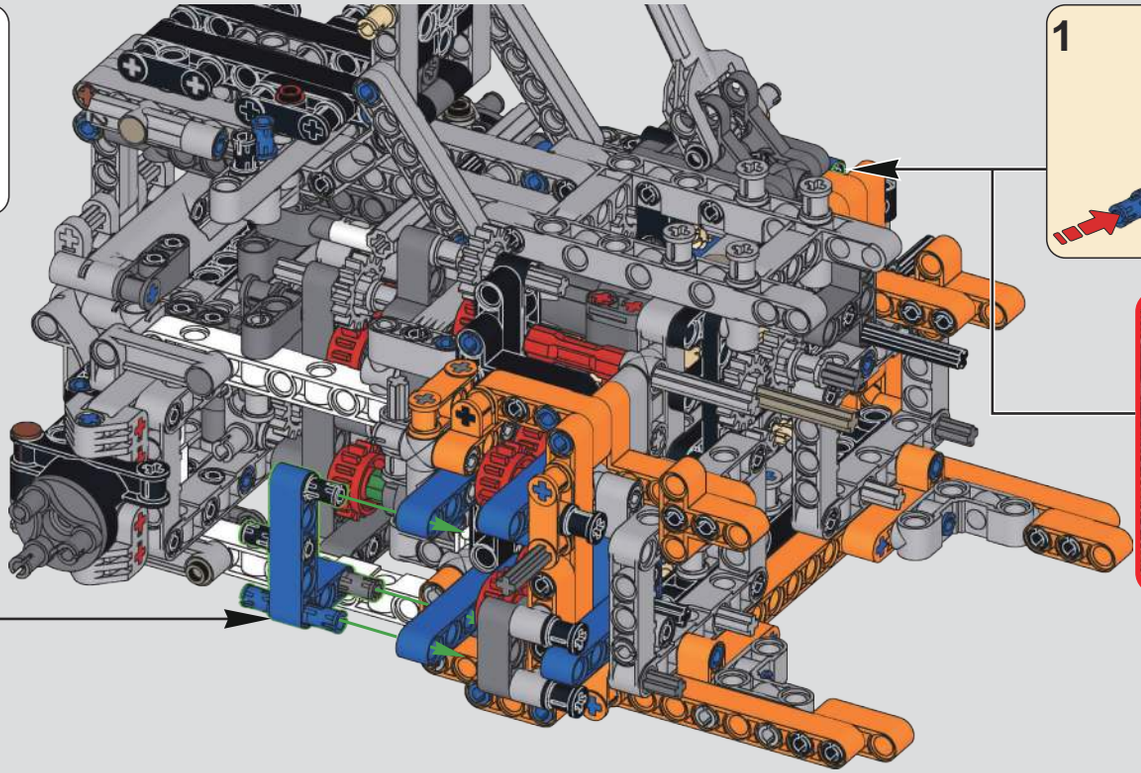

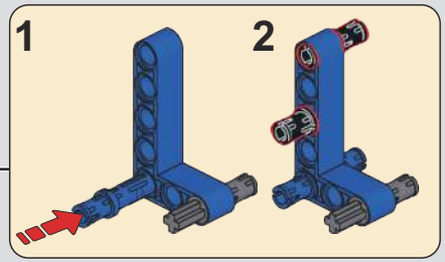

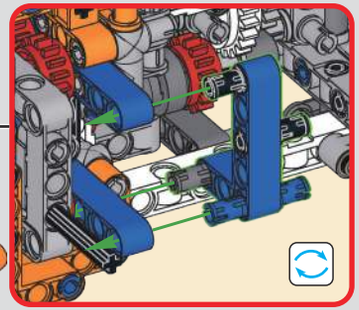

131

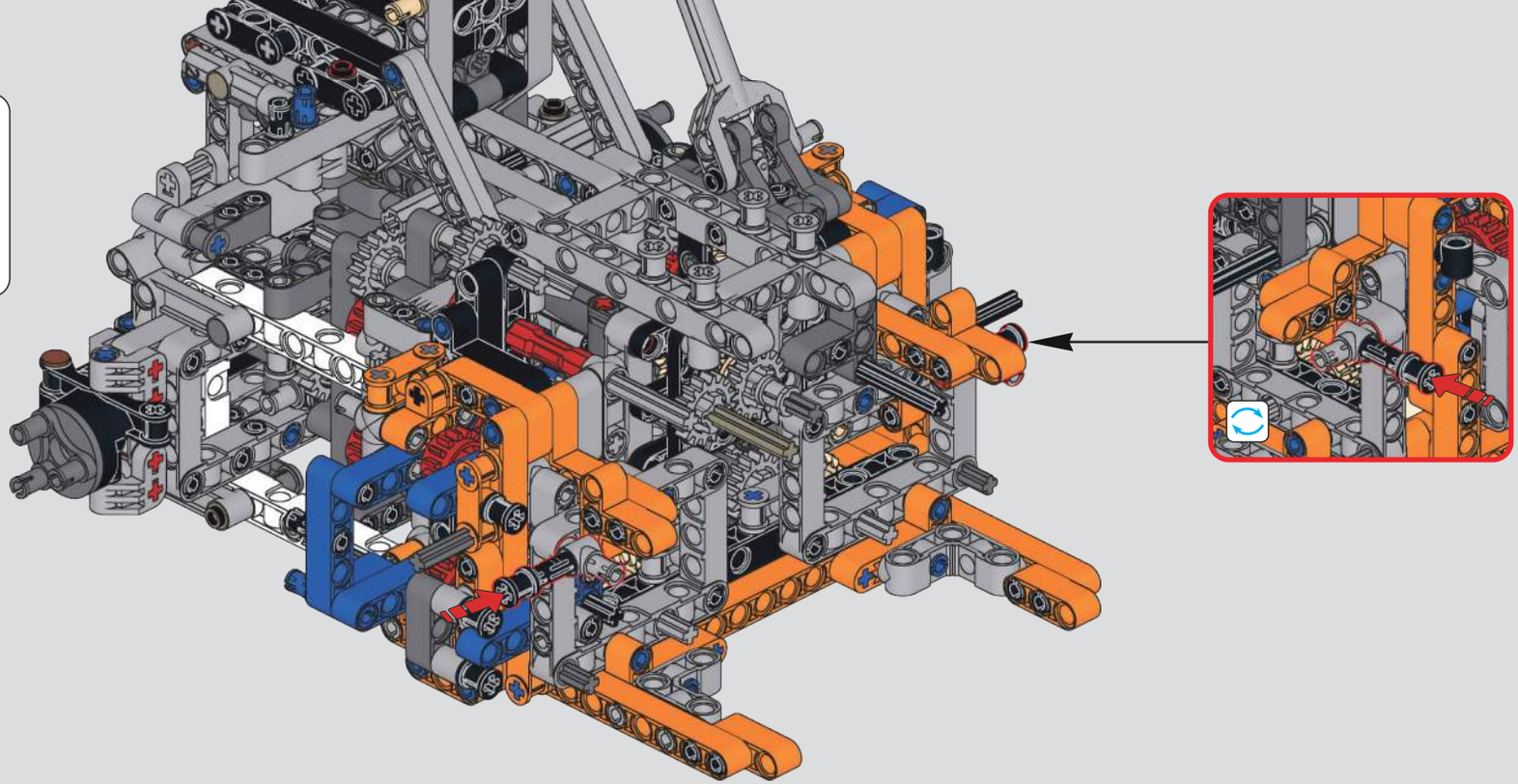

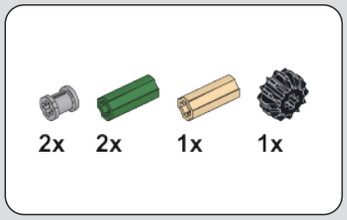

132

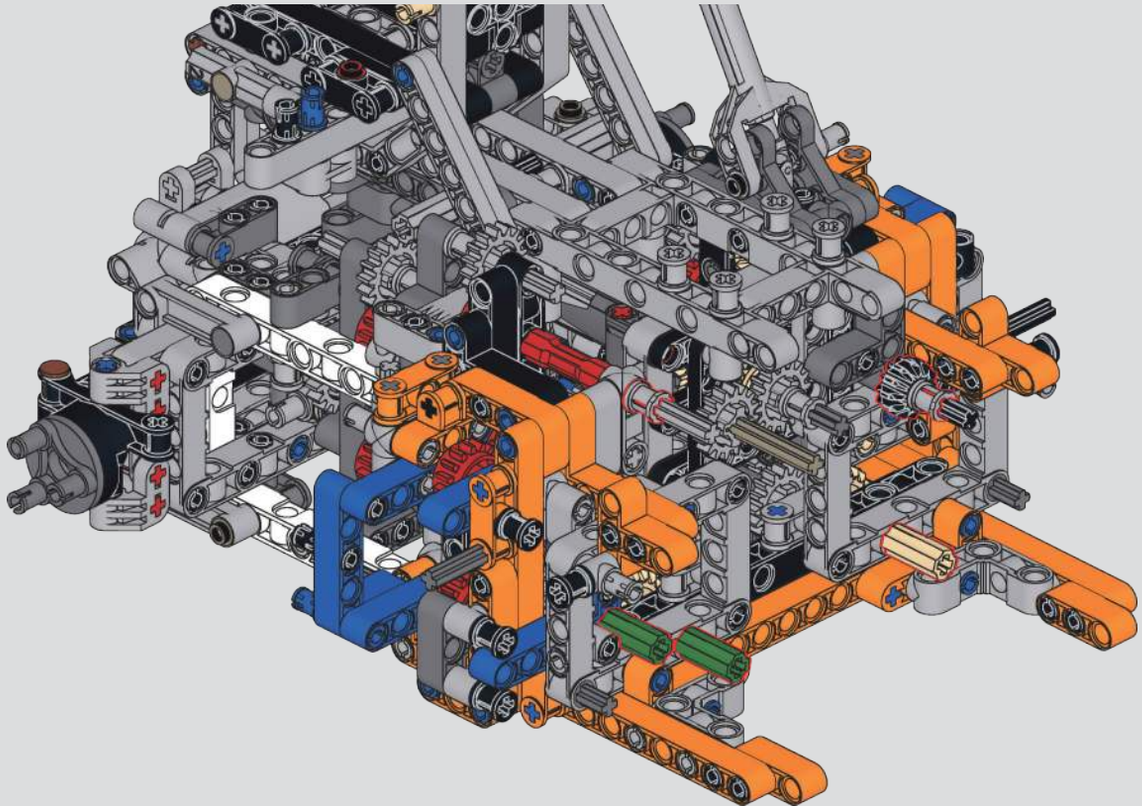

1:1

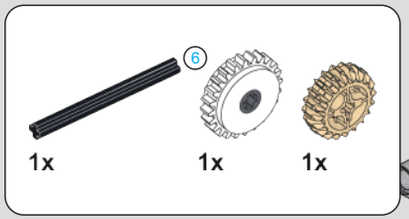

133

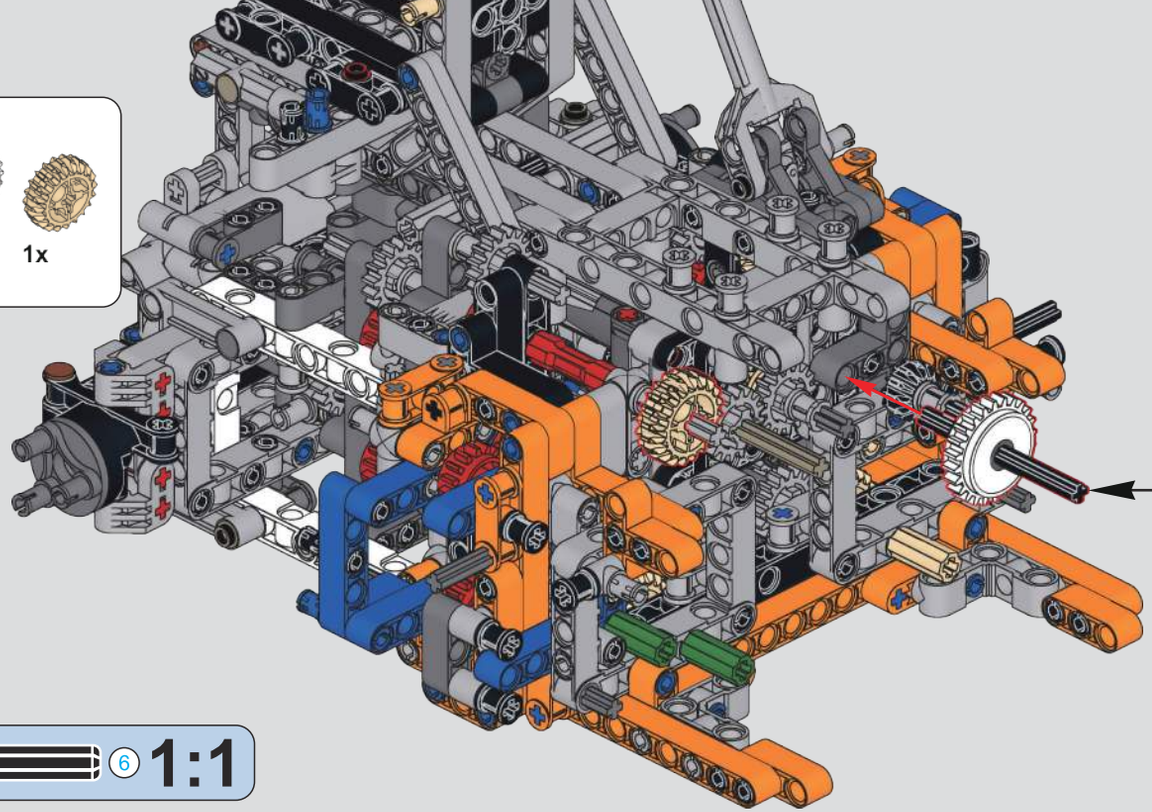

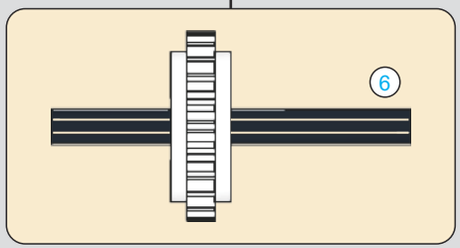

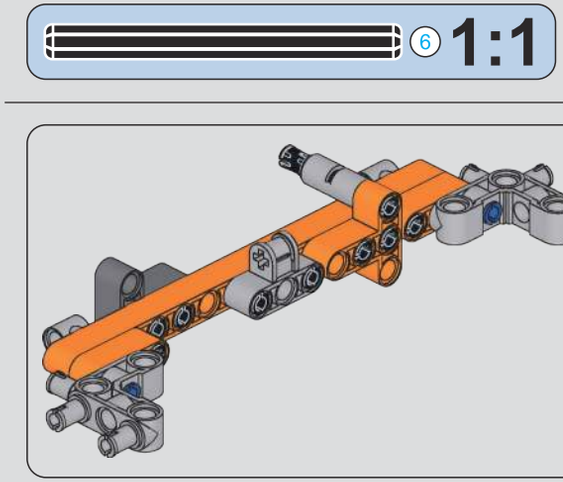

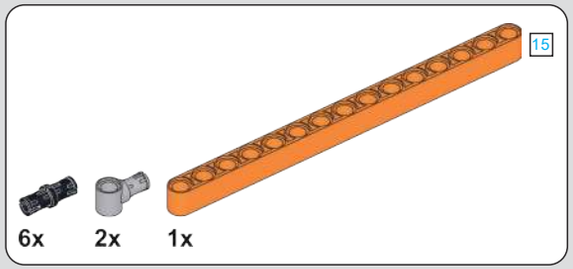

134

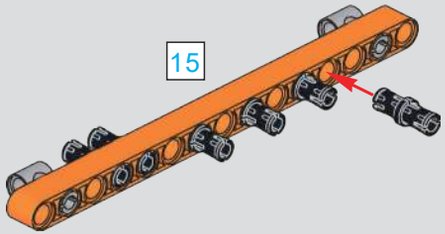

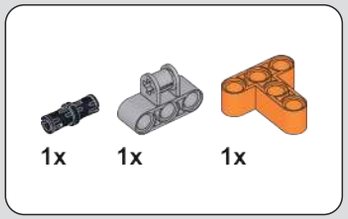

135

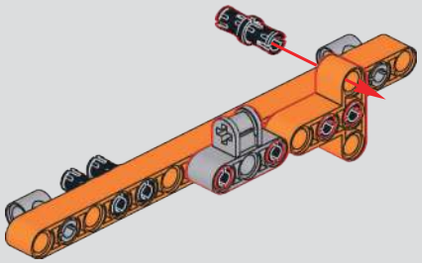

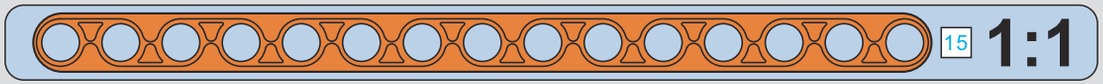

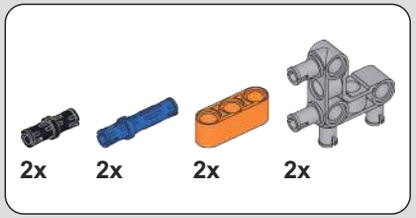

136

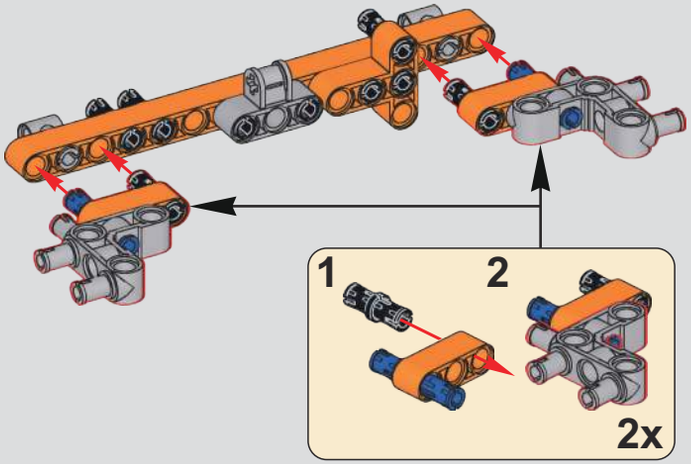

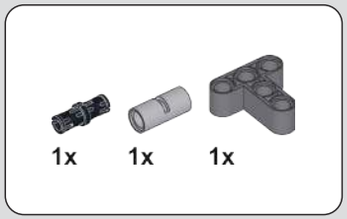

137

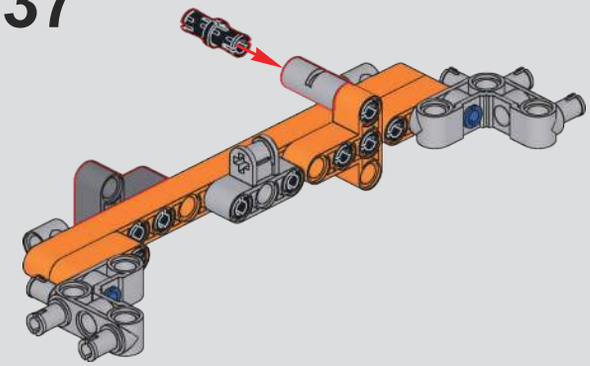

138

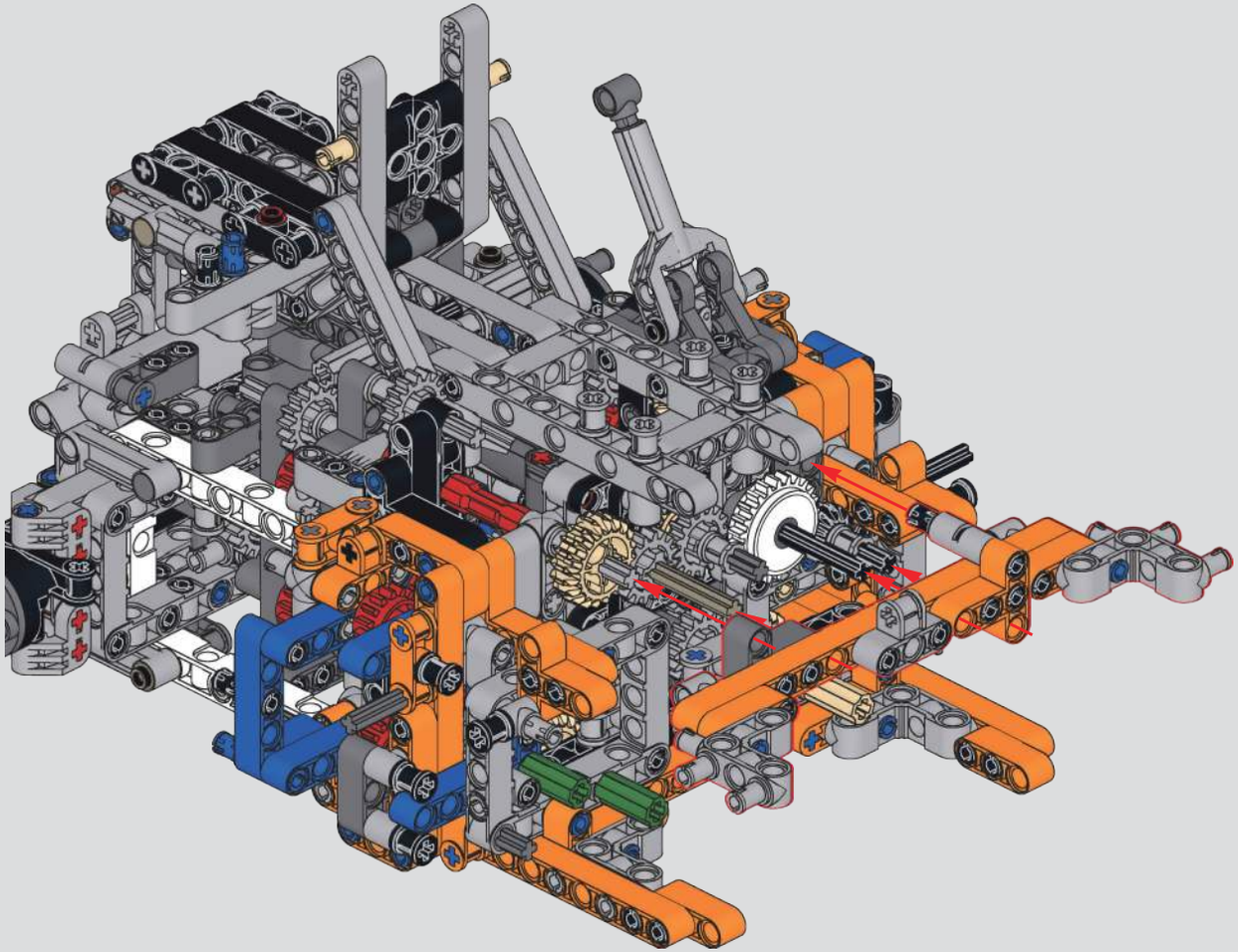

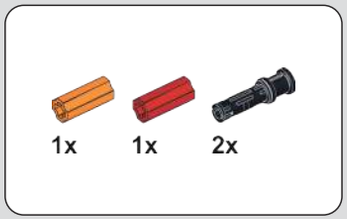

139

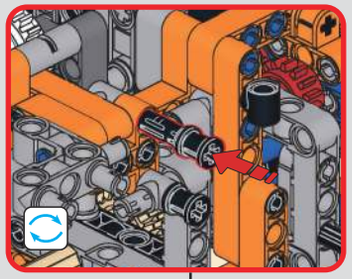

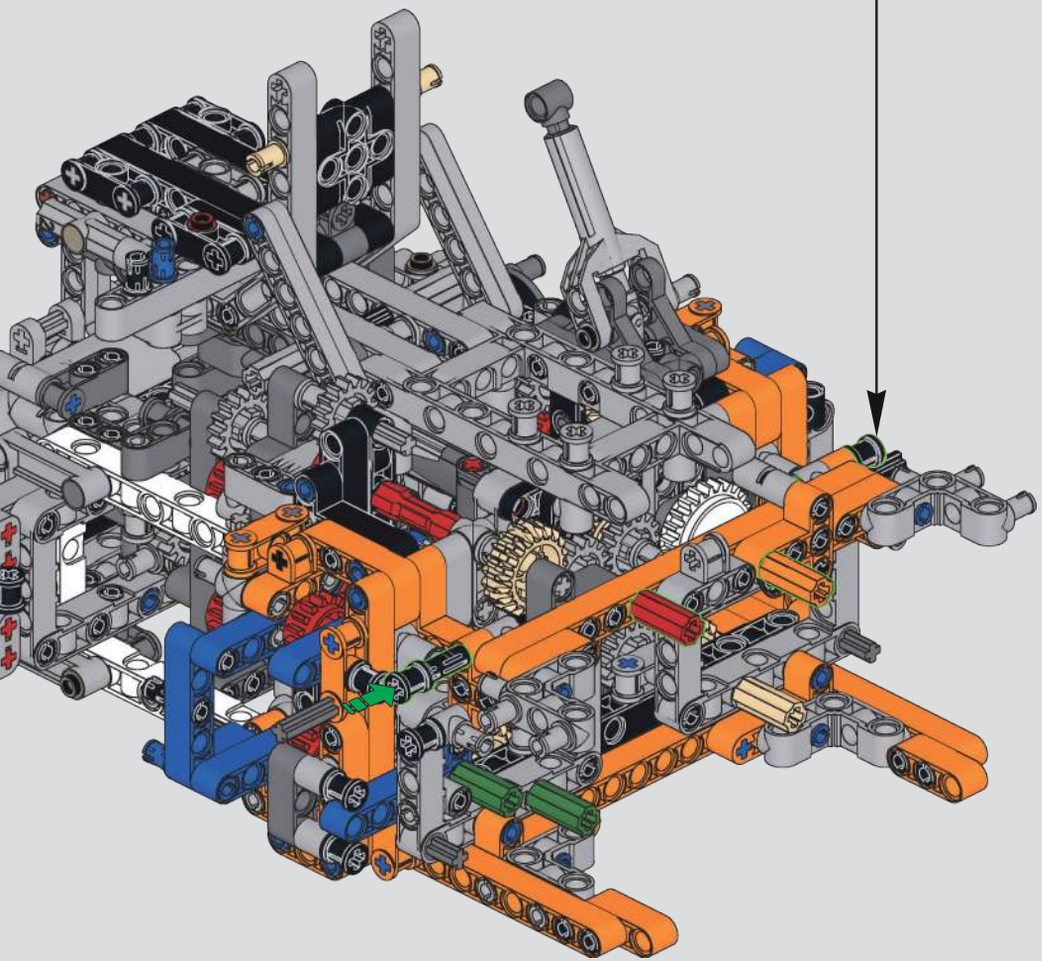

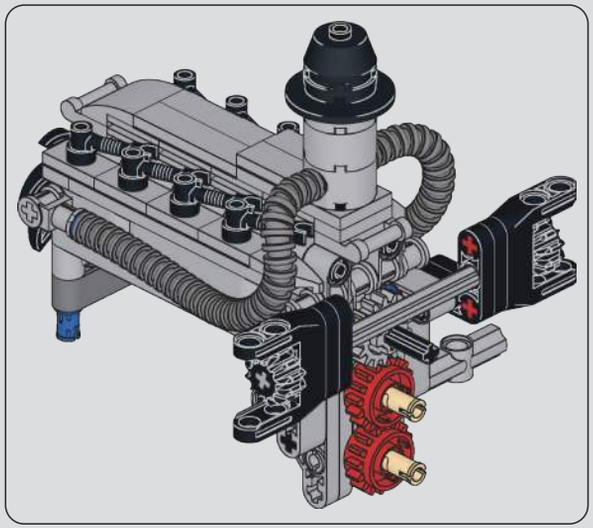

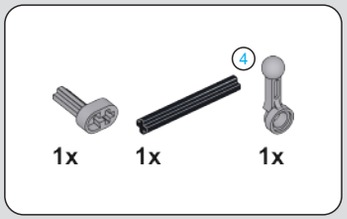

140

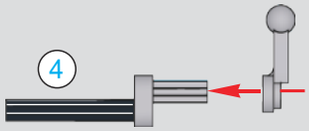

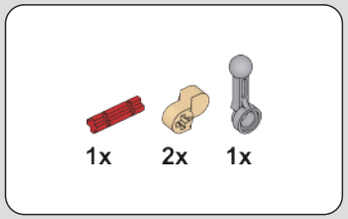

141

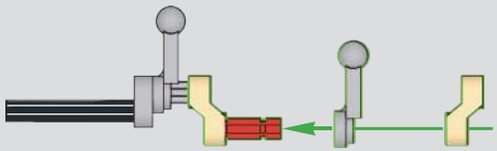

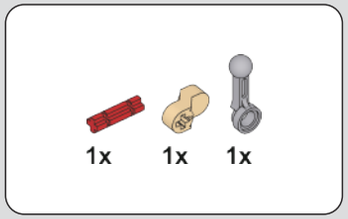

142

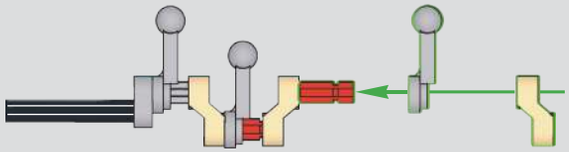

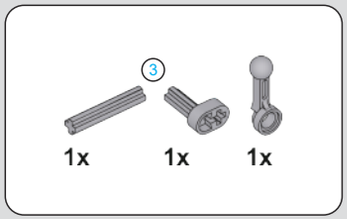

143

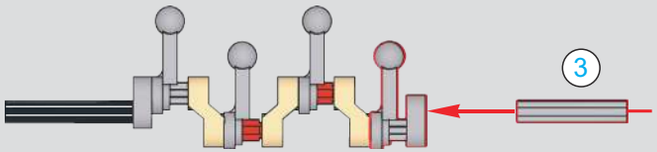

144

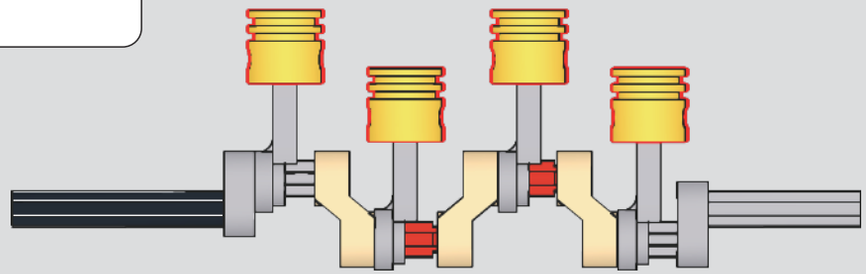

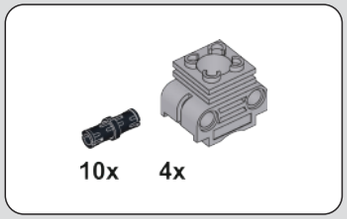

145

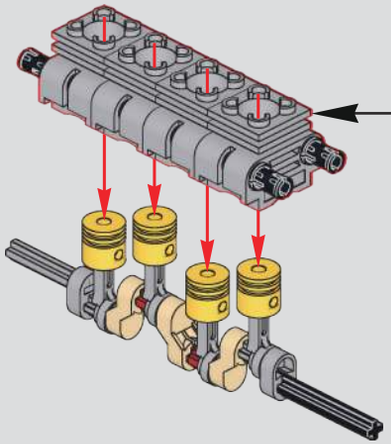

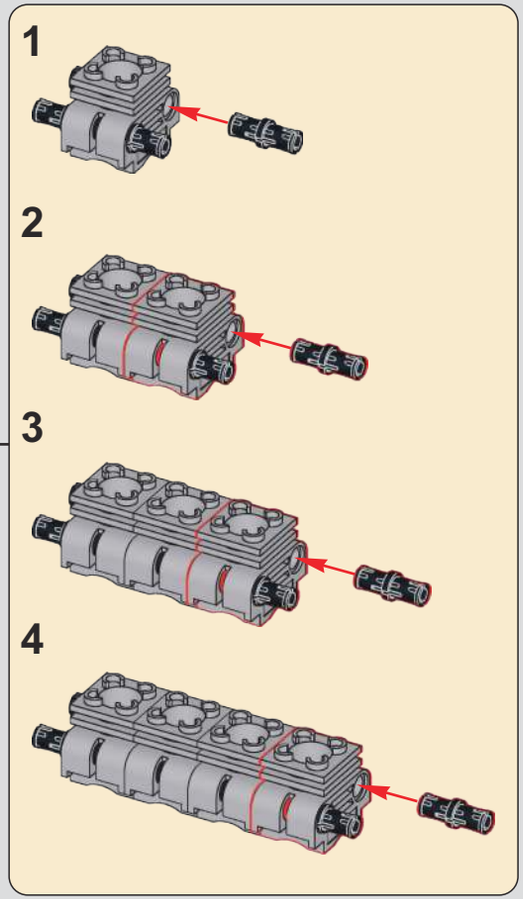

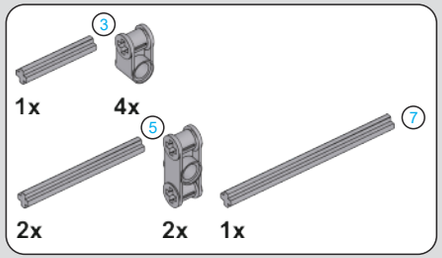

146

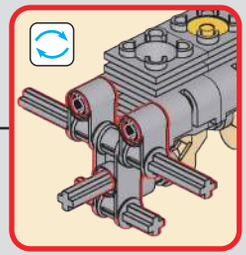

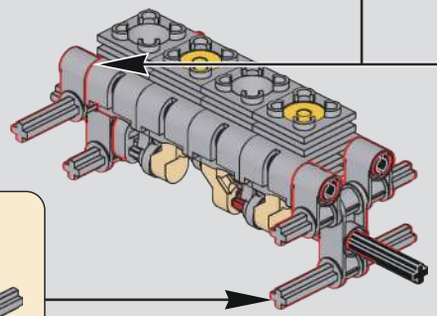

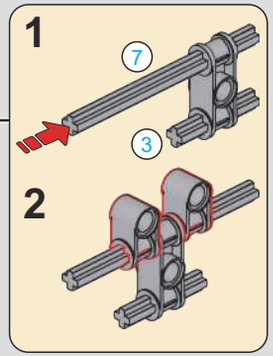

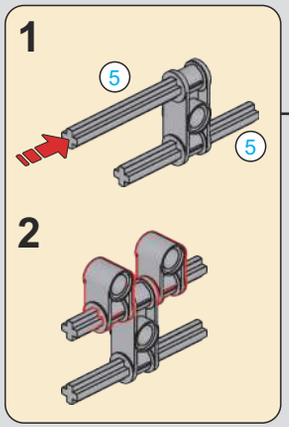

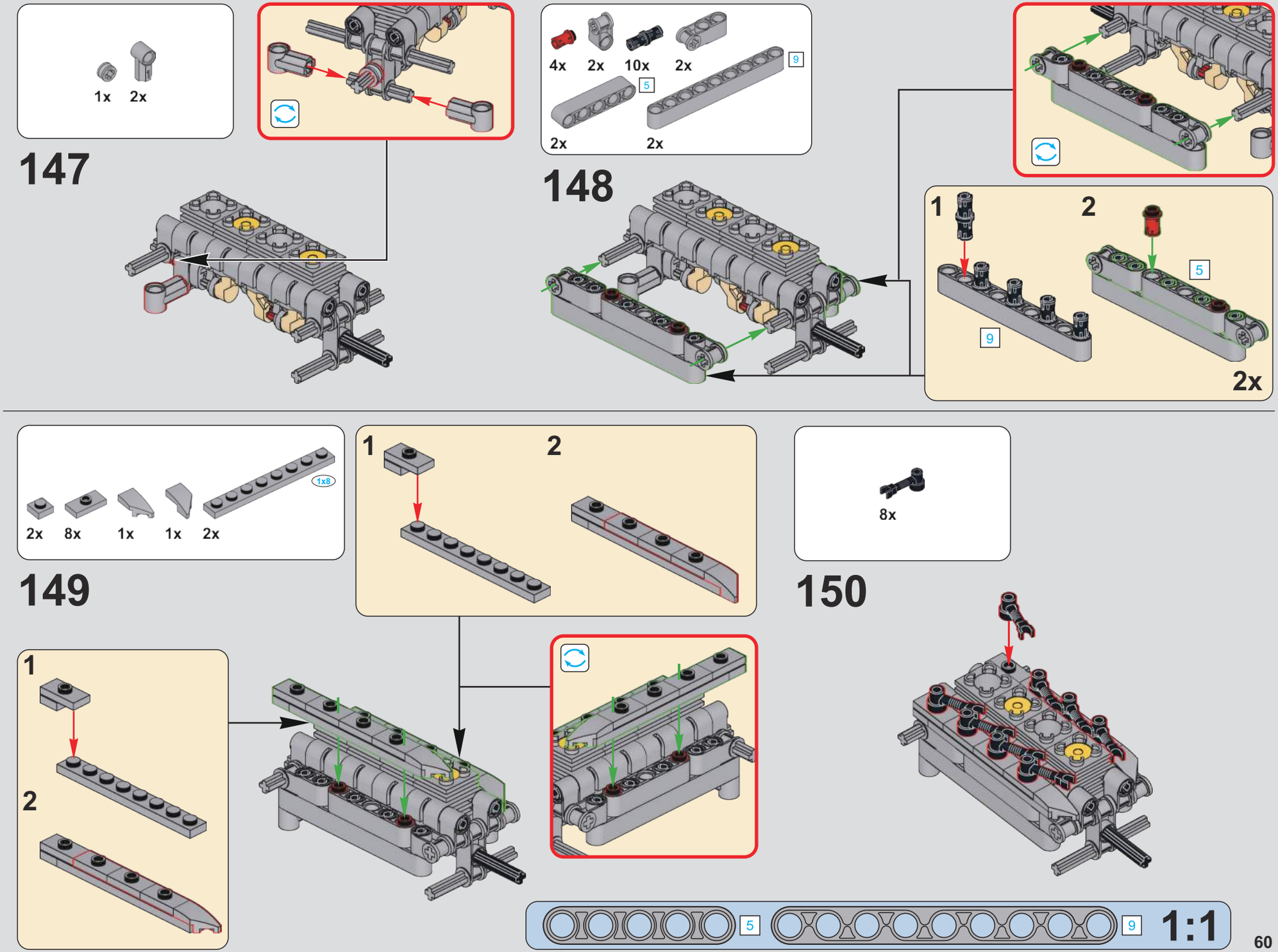
1x
2x
147
4x
2x
10x
2x
5
9
2x
2x
148
1
2
5
9
2x
2x
8x
1x8
2x
8x
1x
1x
2x
149
1
2
150
1
2
5
9
1:1

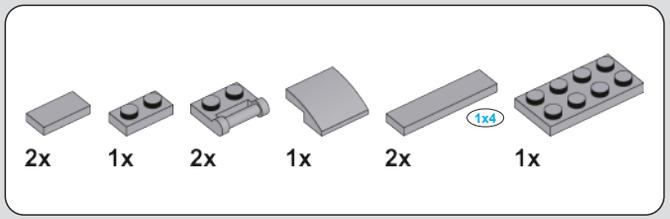

151

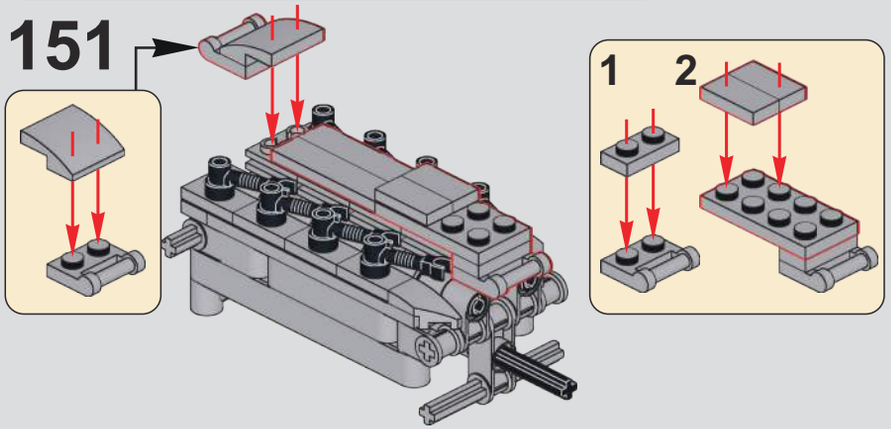

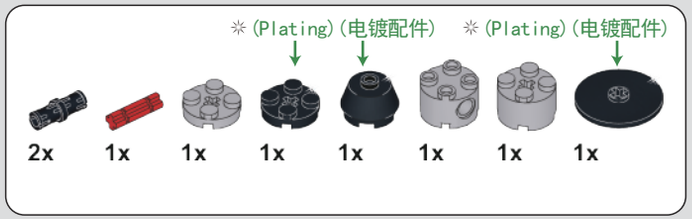

152

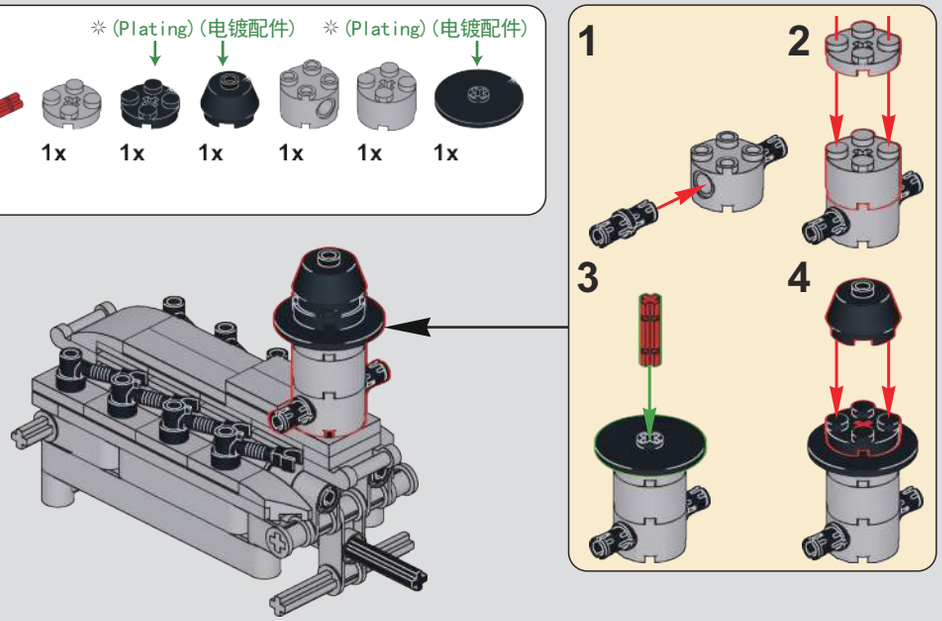

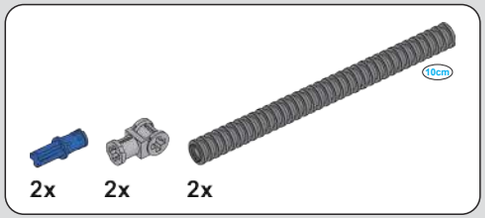

153

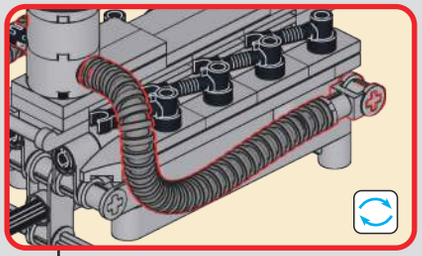

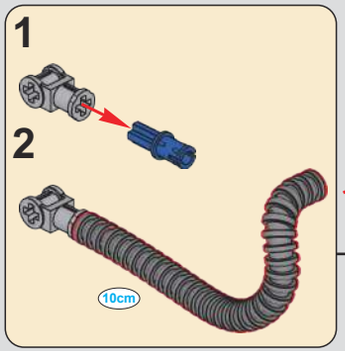

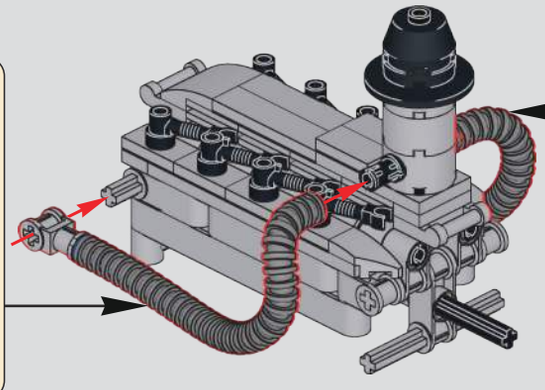

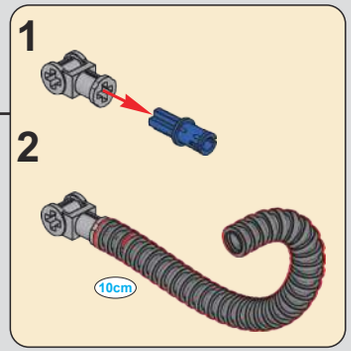

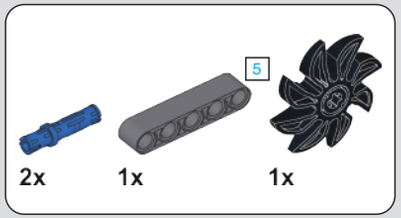

154

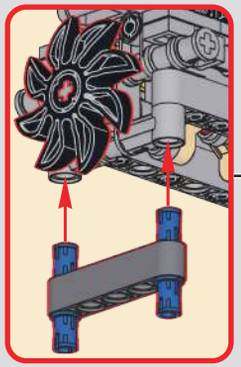

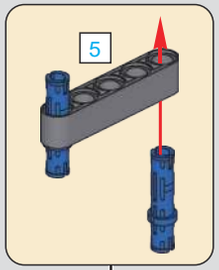

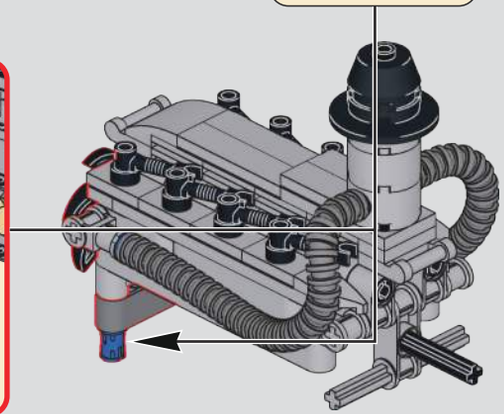

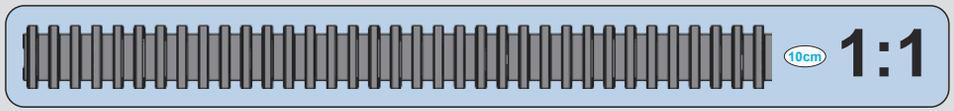

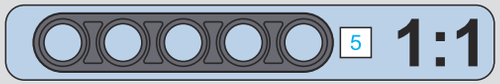

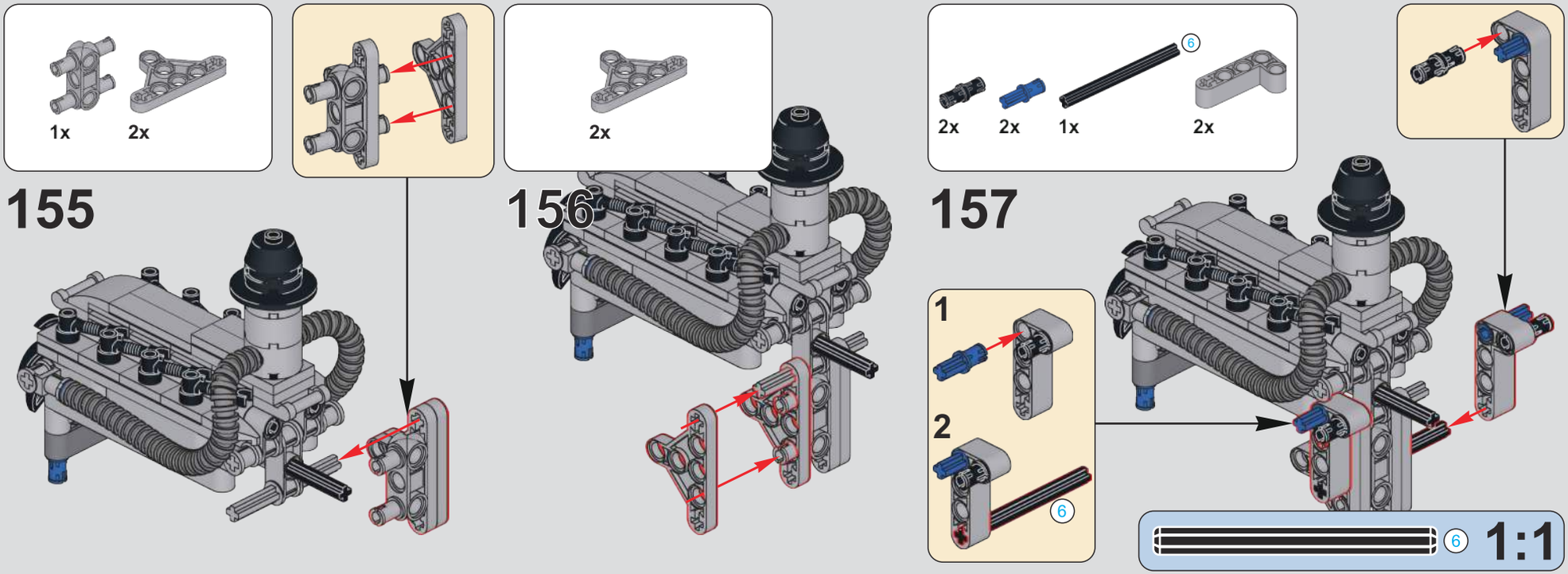
1x
2x
155
2x
156
2x
2x
1x
6
2x
157
1
2
6
6
1:1

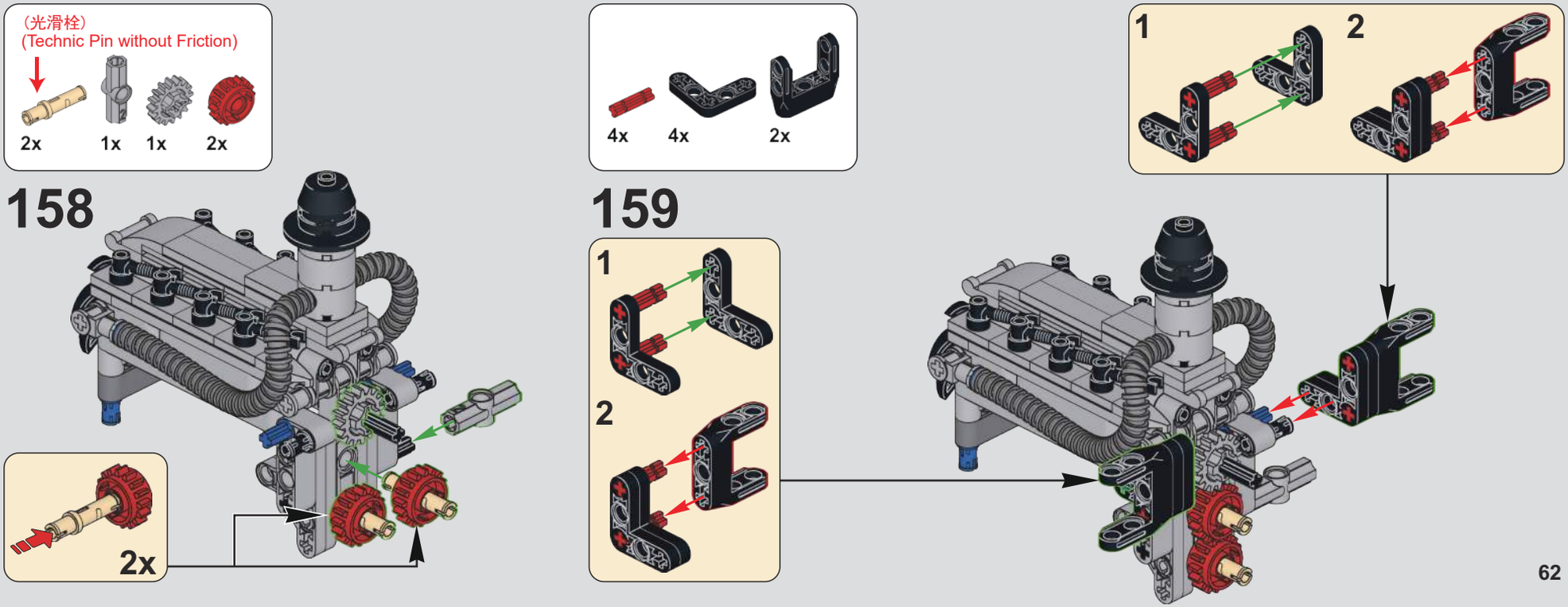
(光滑栓)
(Technic Pin without Friction)
2x
1x
1x
2x
158
2x
4x
4x
2x
159
1
2
1
2

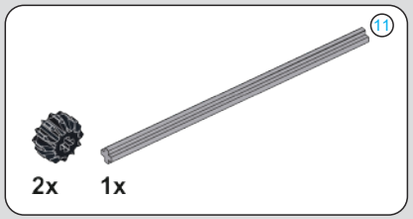

160

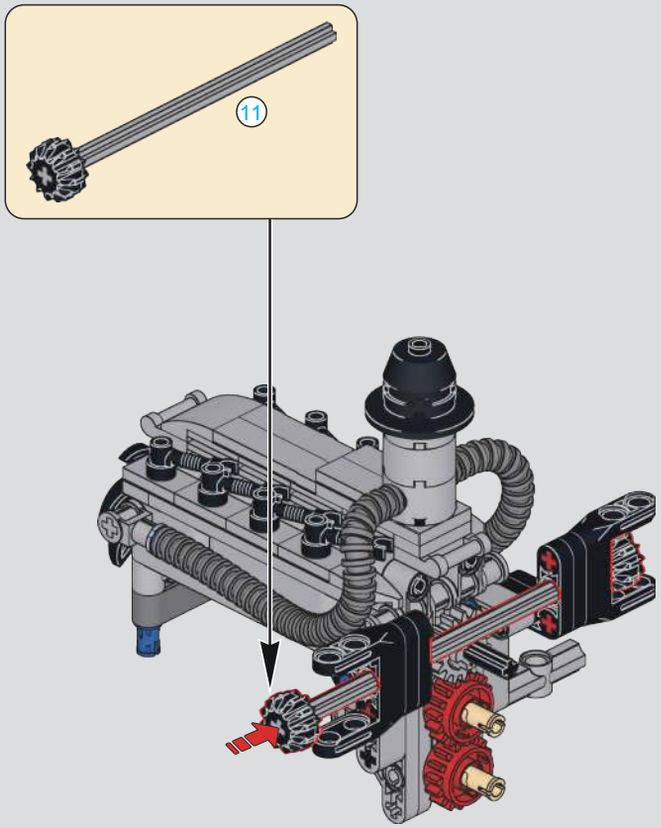

161

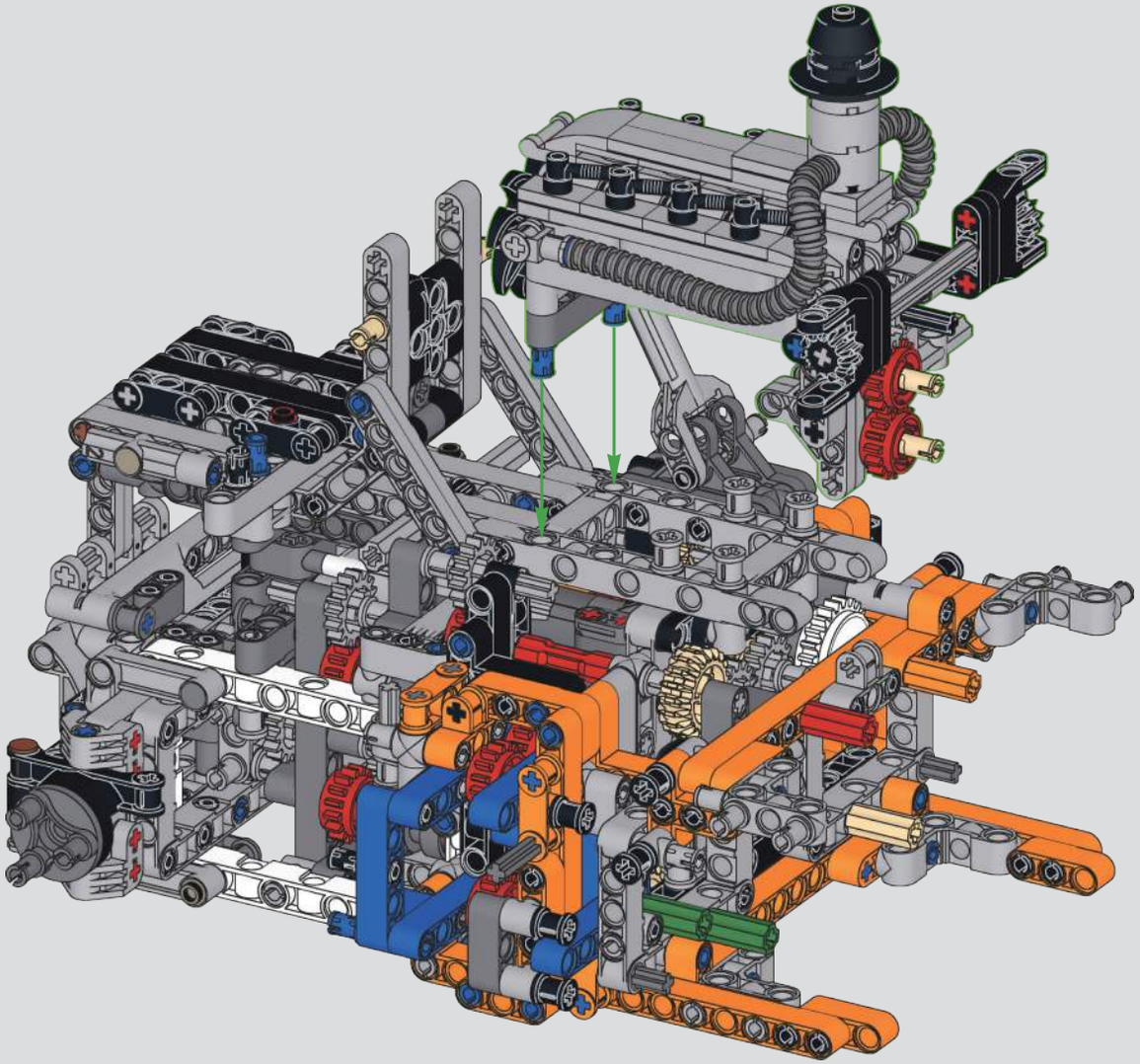

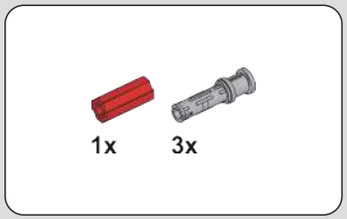

162

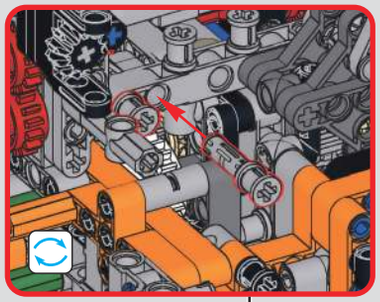

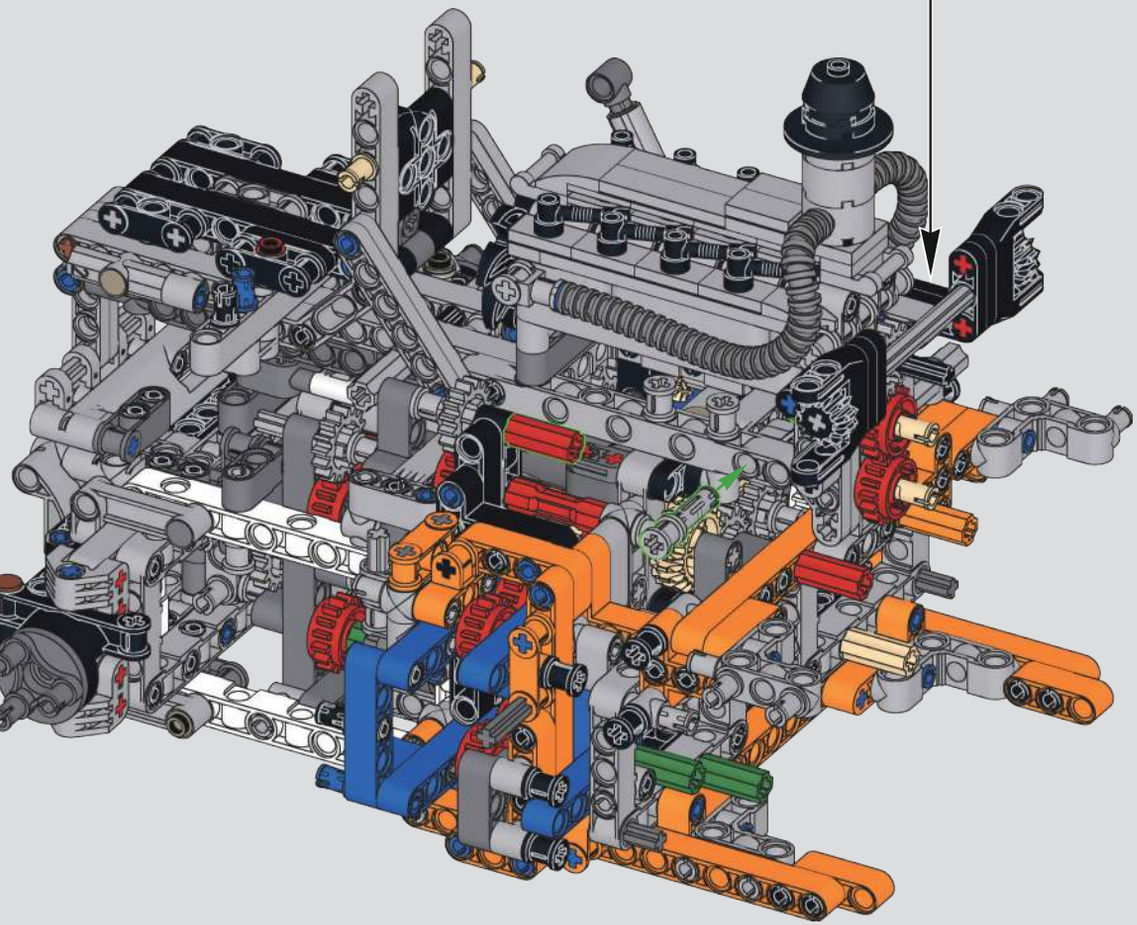

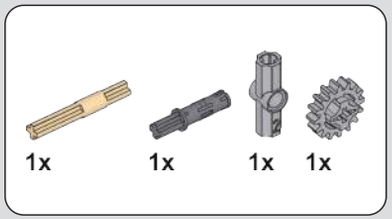

163

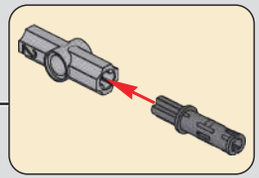

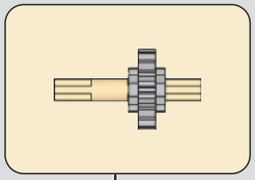

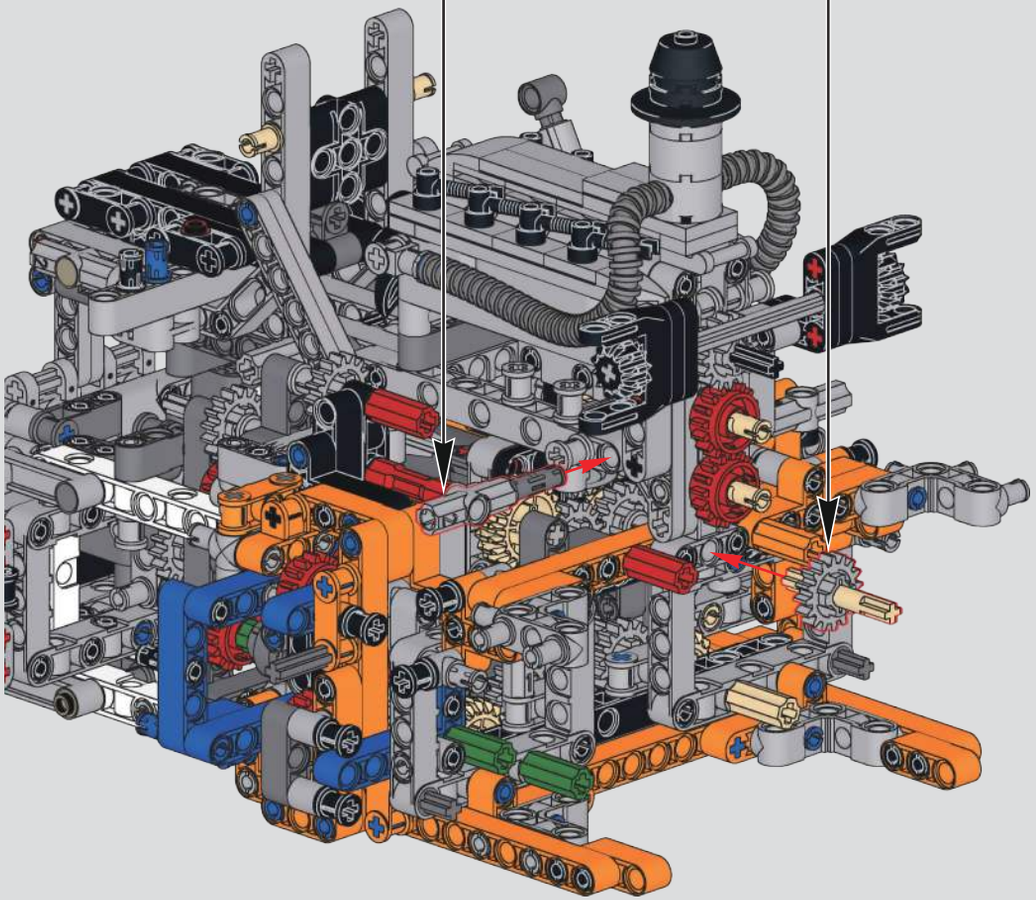

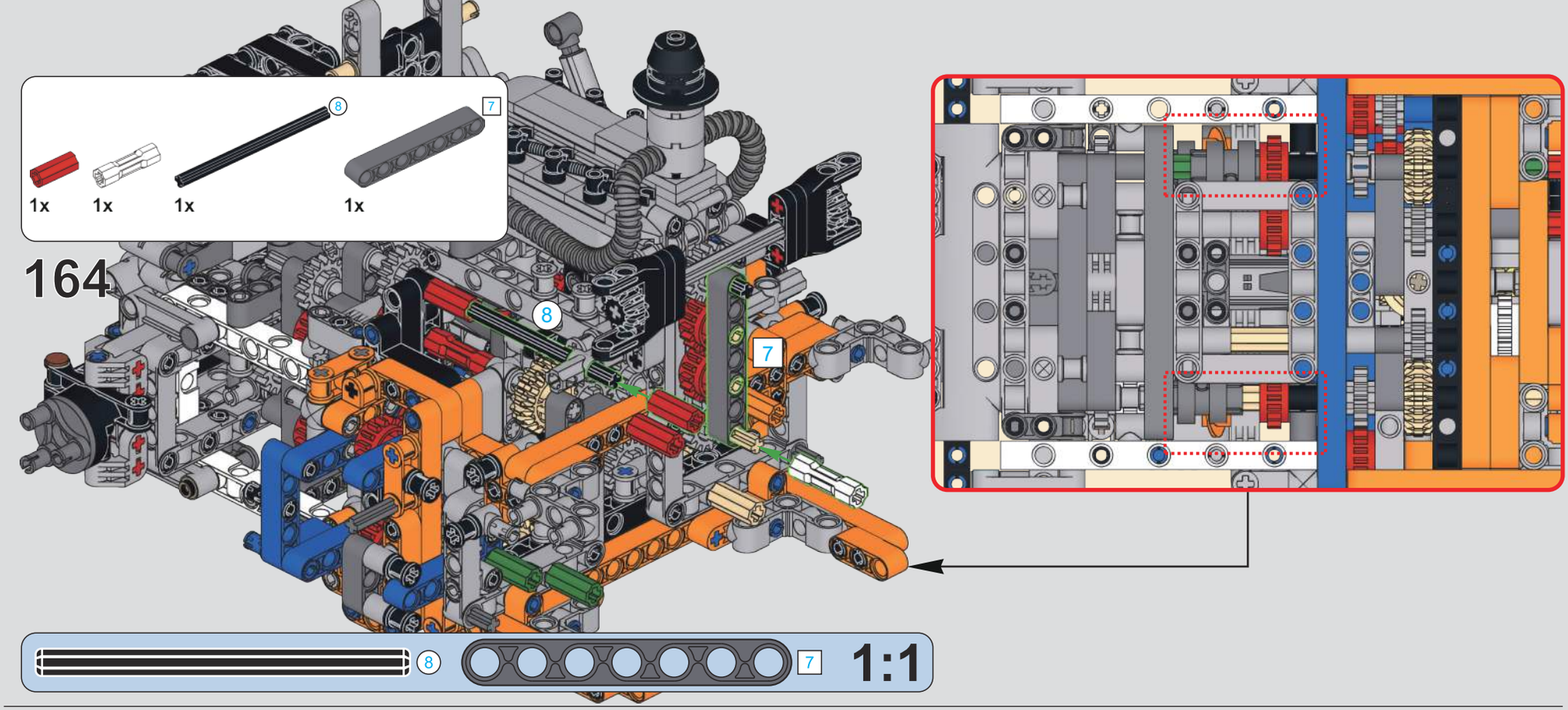

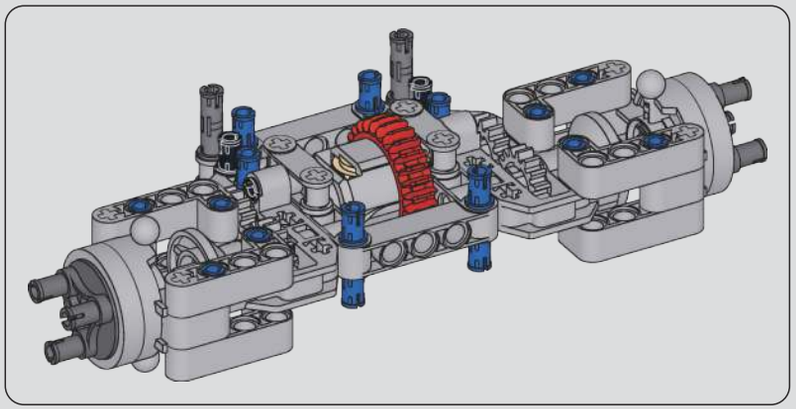

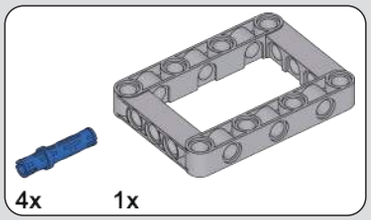

165

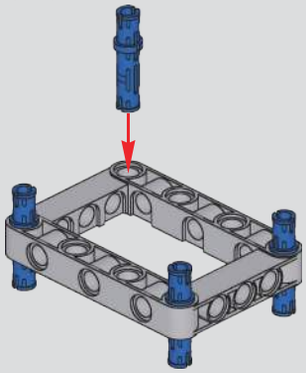

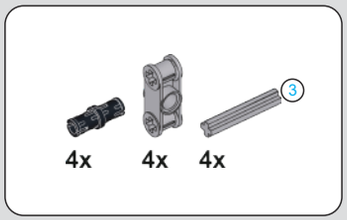

166

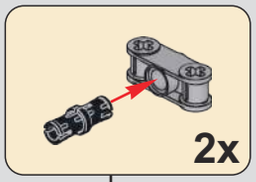

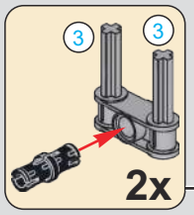

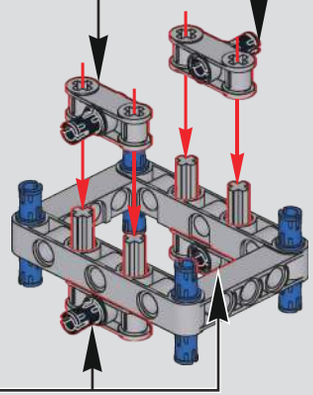

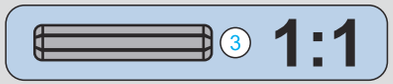

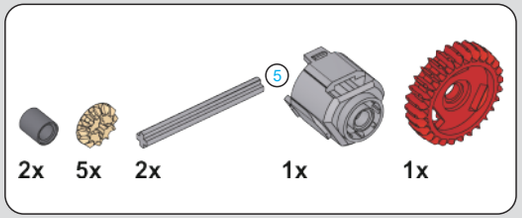
2x
5x
2x
5
1x
1x

167

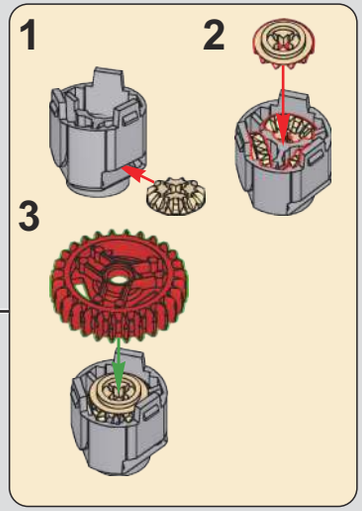
1
2
3

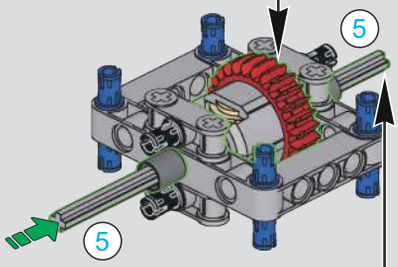
5
5

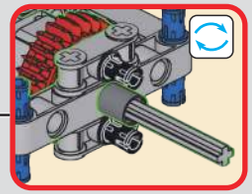

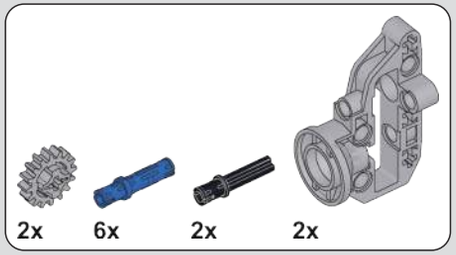
2x
6x
2x
2x

168

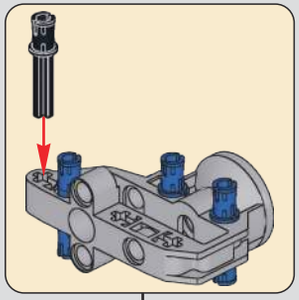

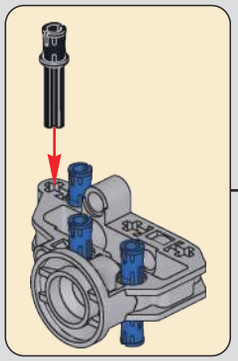

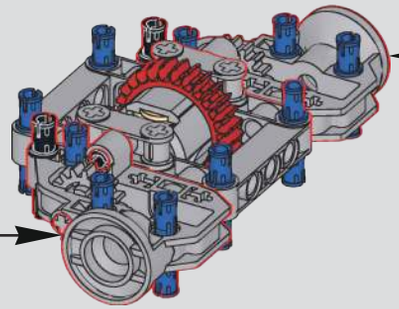

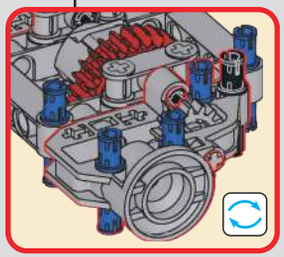

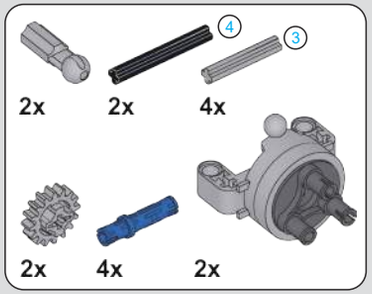
4
3
2x
2x
4x
2x
4x
2x

169

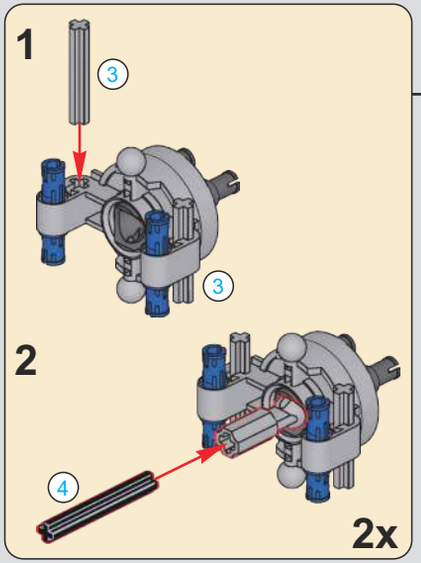
1
3
3
2
4
2x

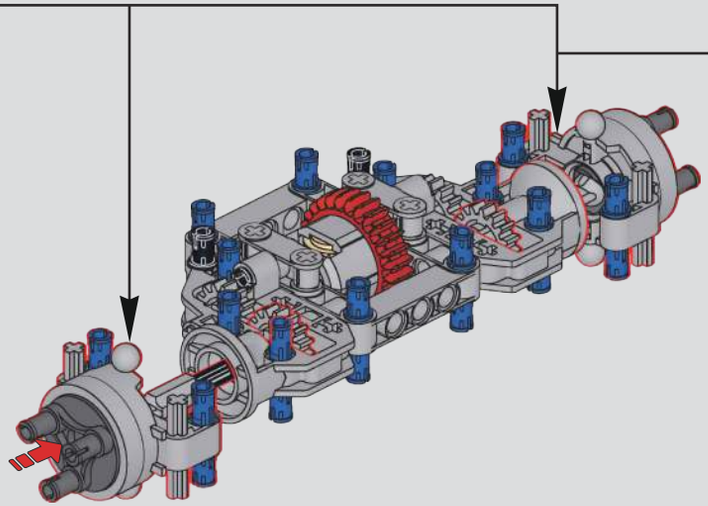

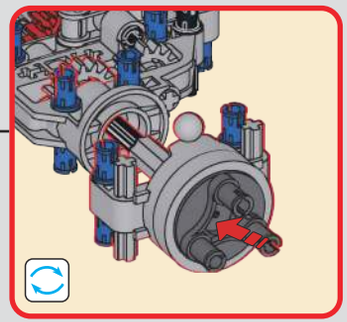

3
4
5
1:1

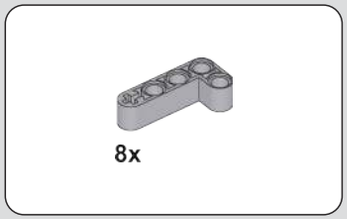

170

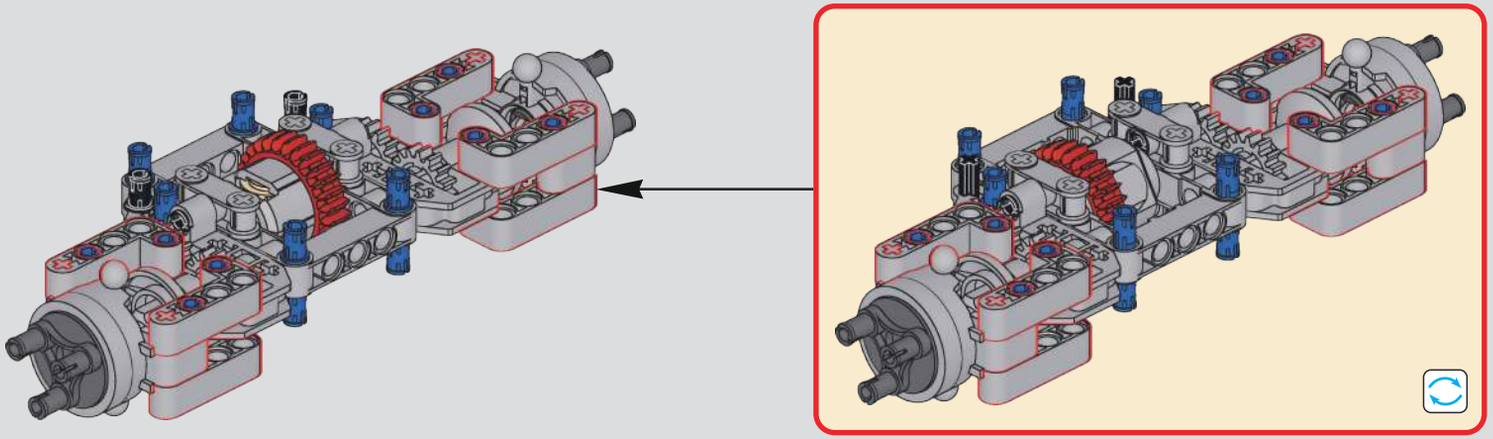

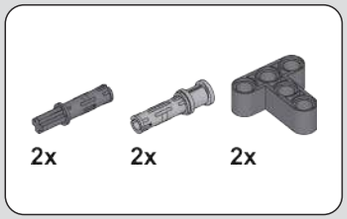

171

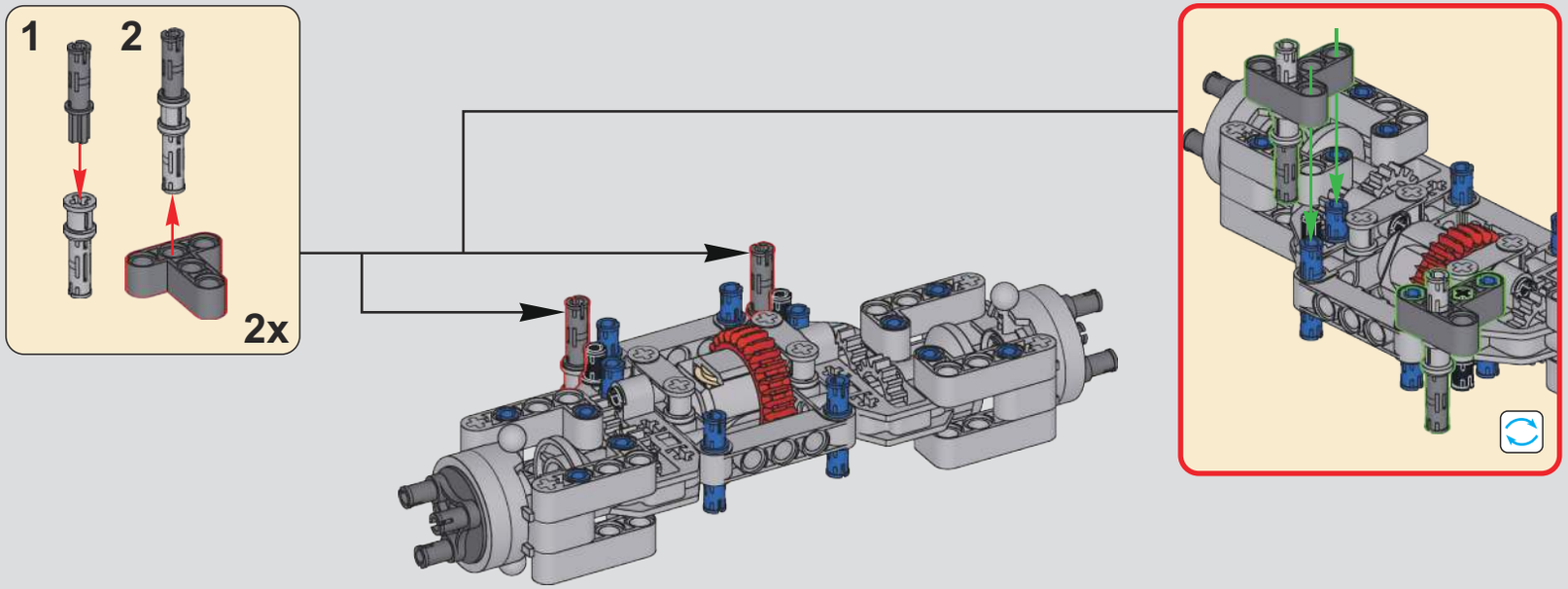

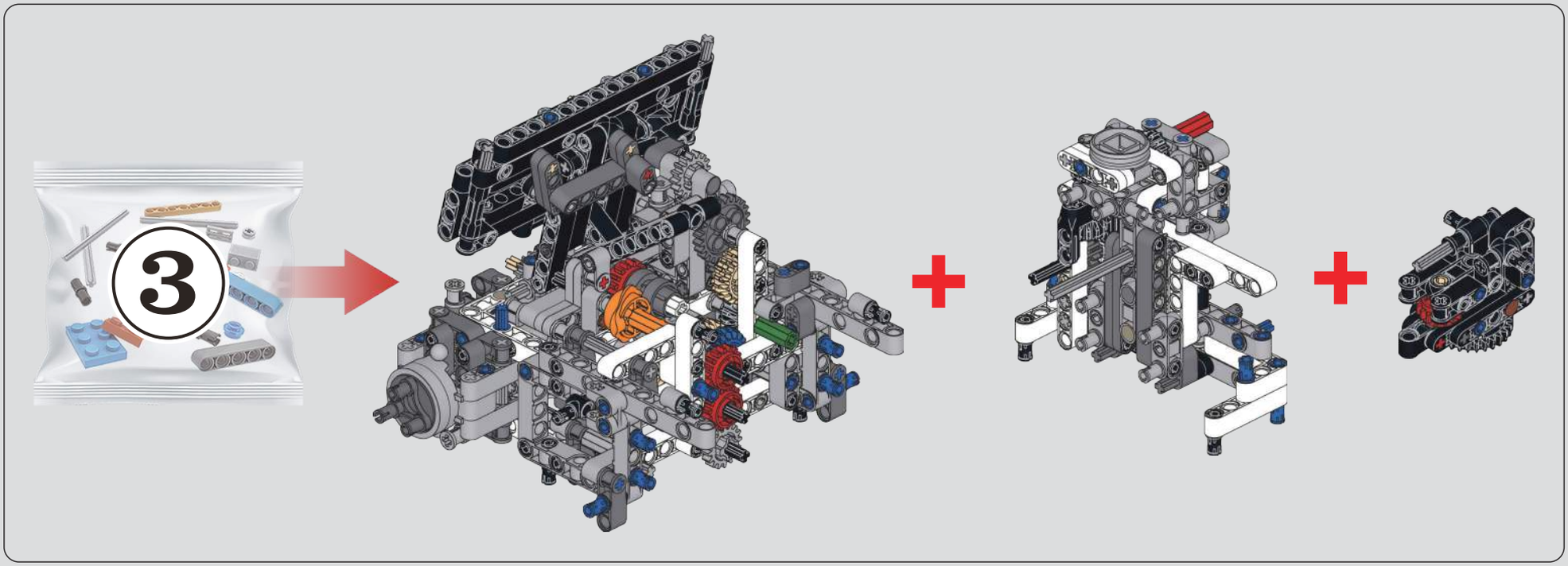

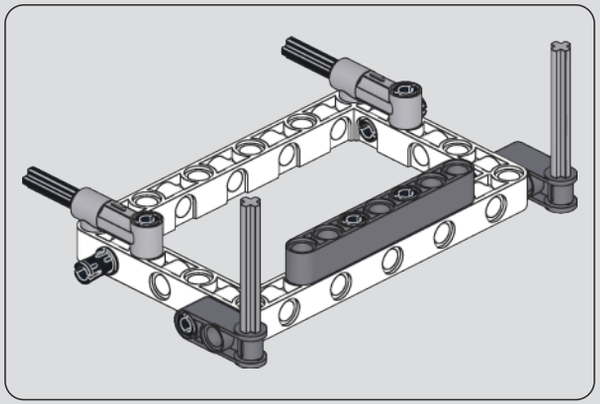

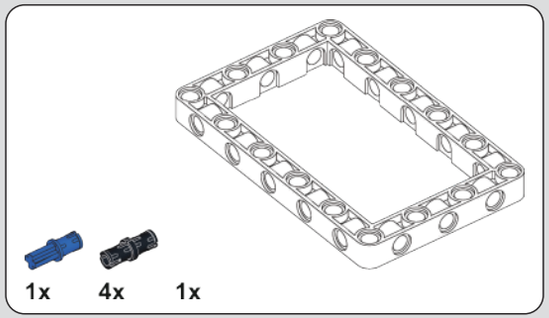

172

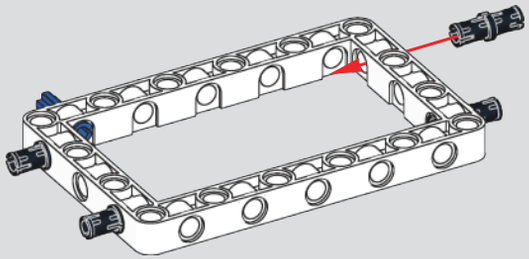

173

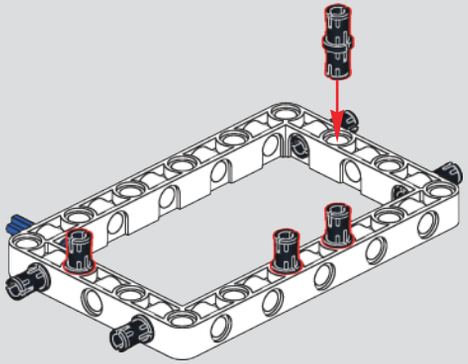

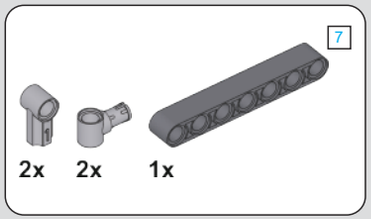

174

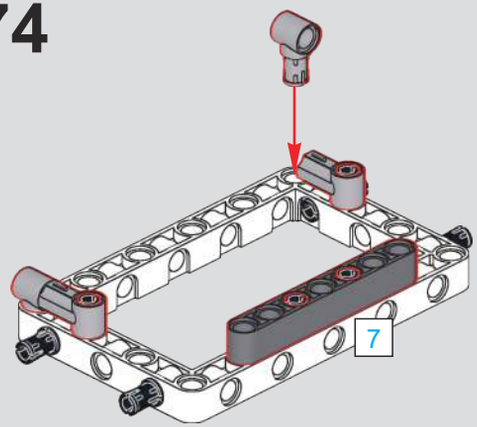

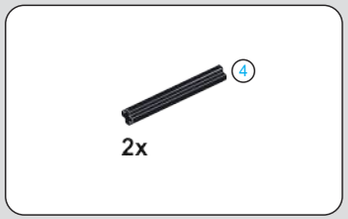

175

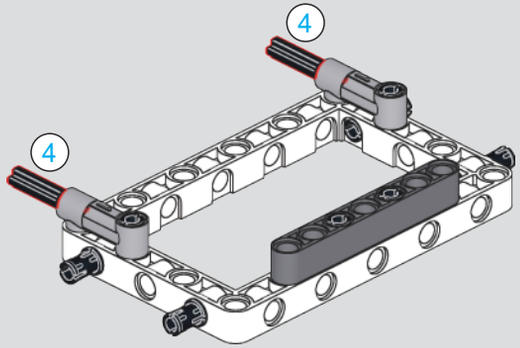

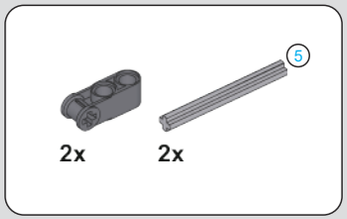

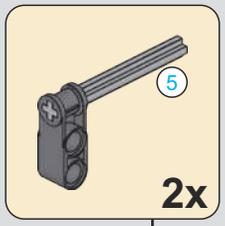

176

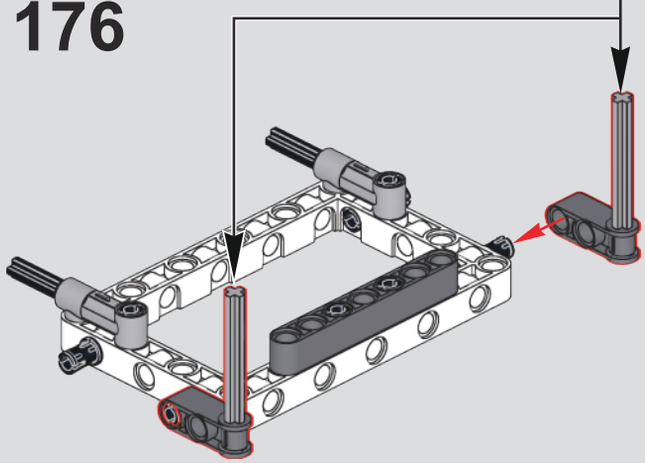

177

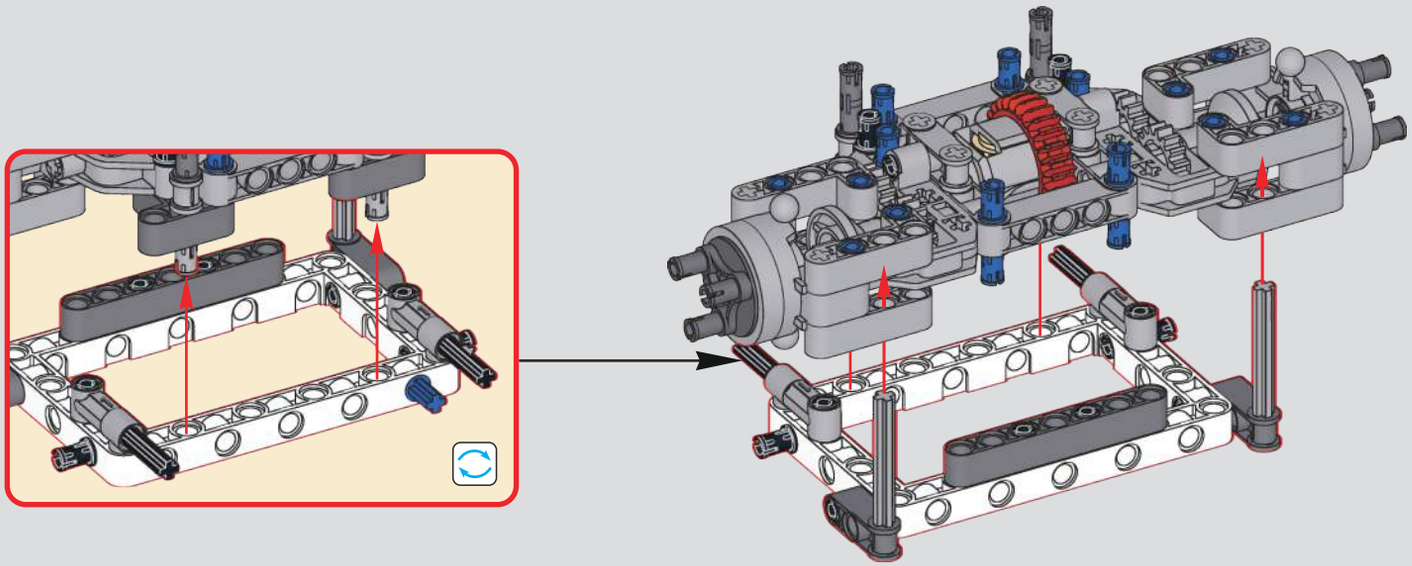

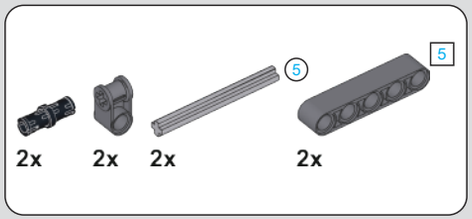

178

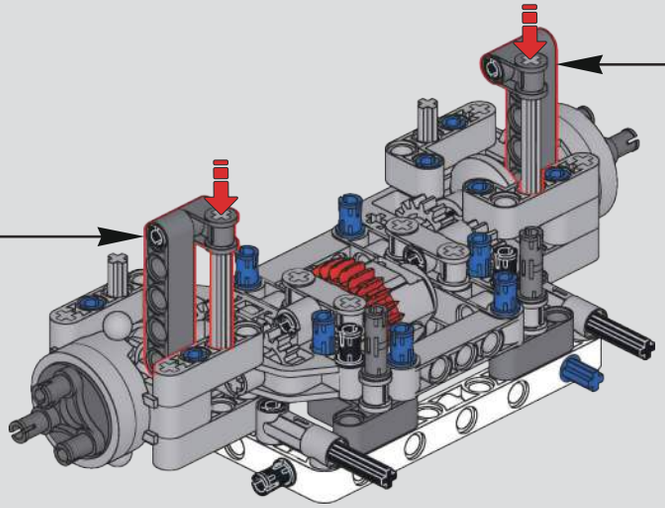

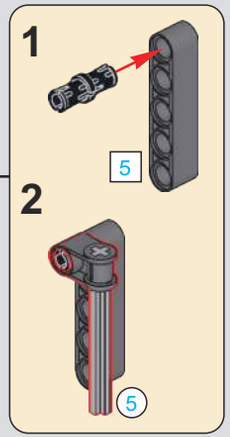

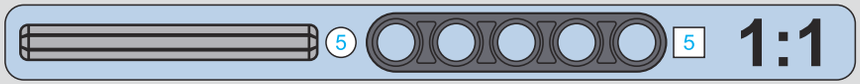

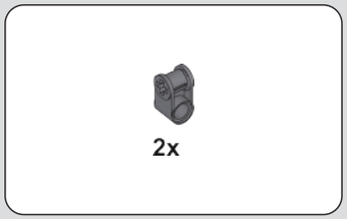

179

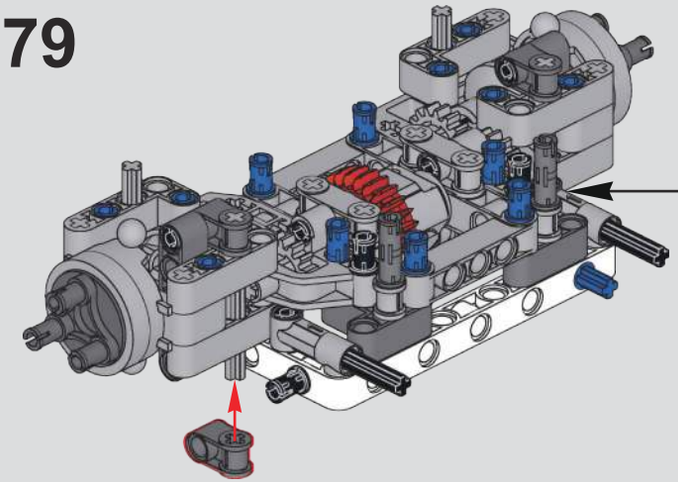

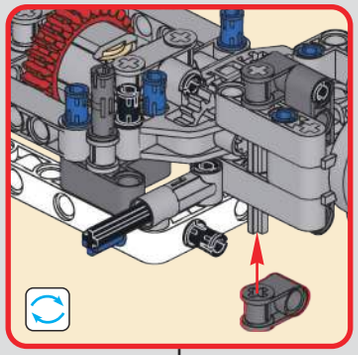

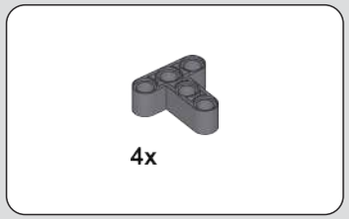

180

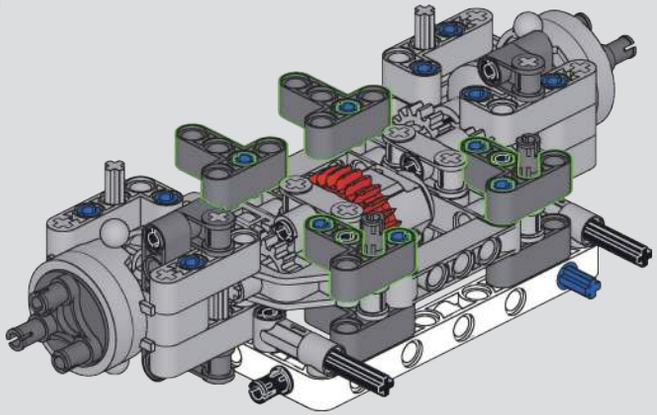

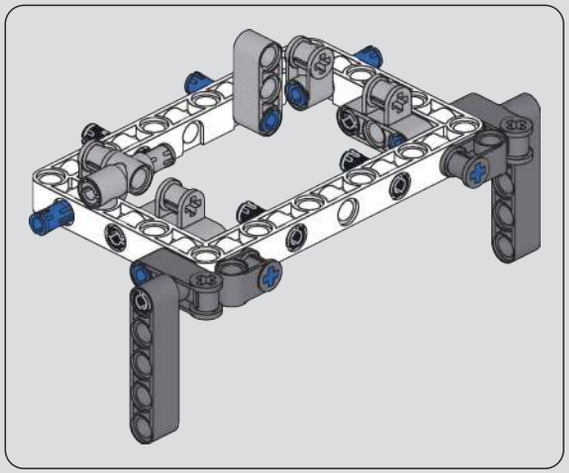

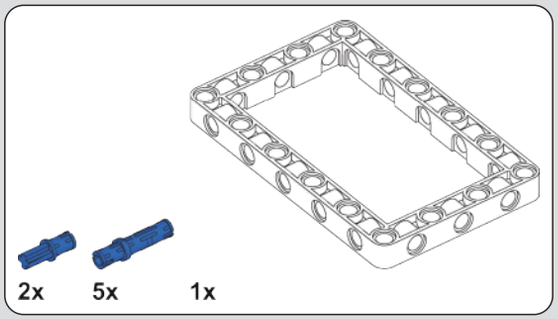

181

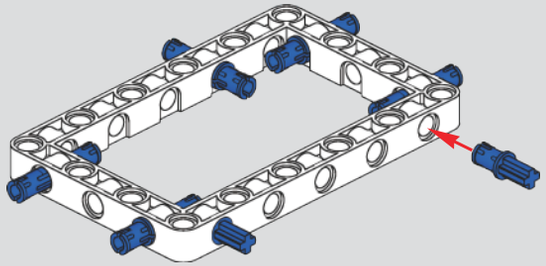

182

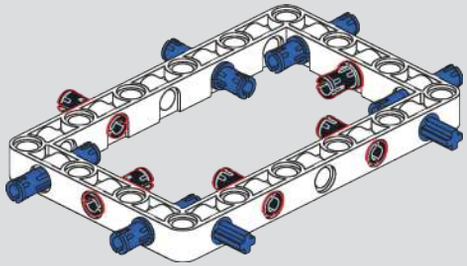

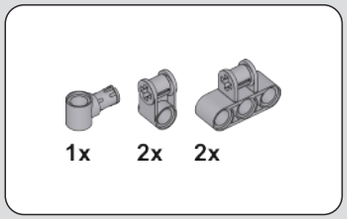

183

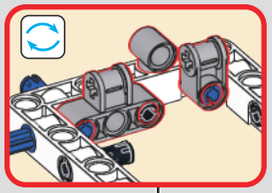

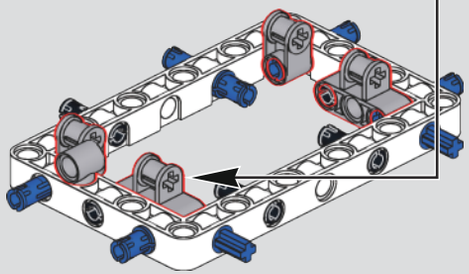

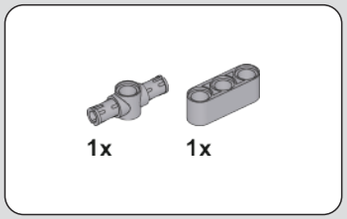

184

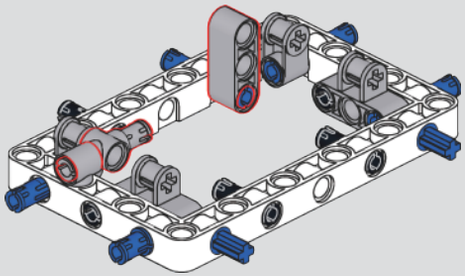

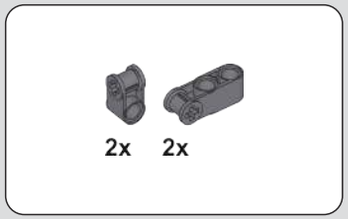

185

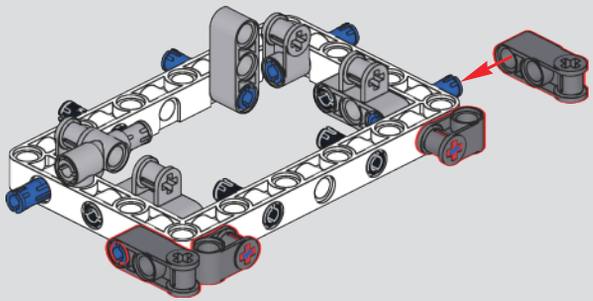

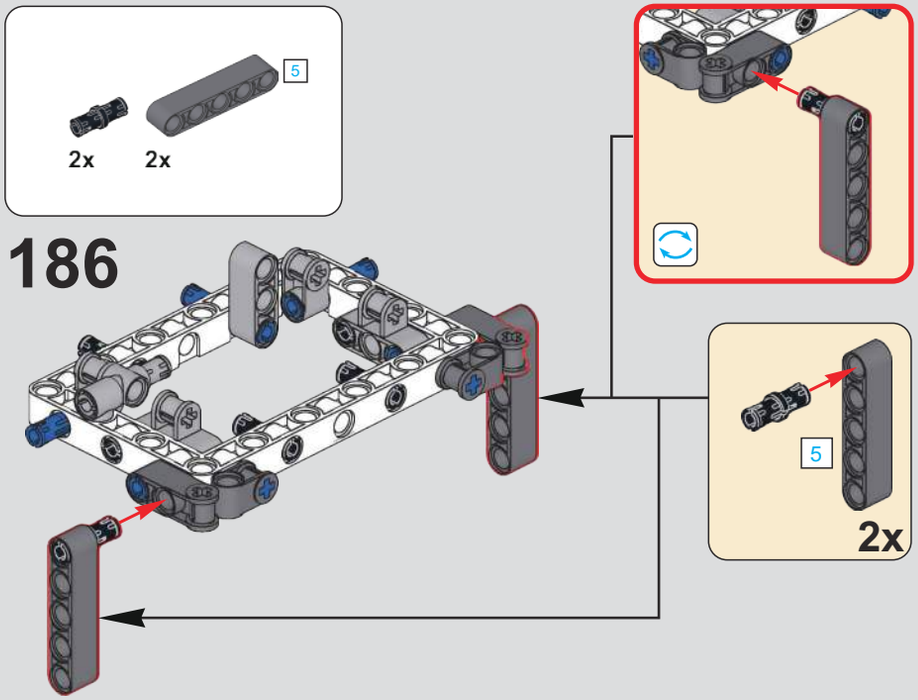
2x
2x
5
186
5
2x

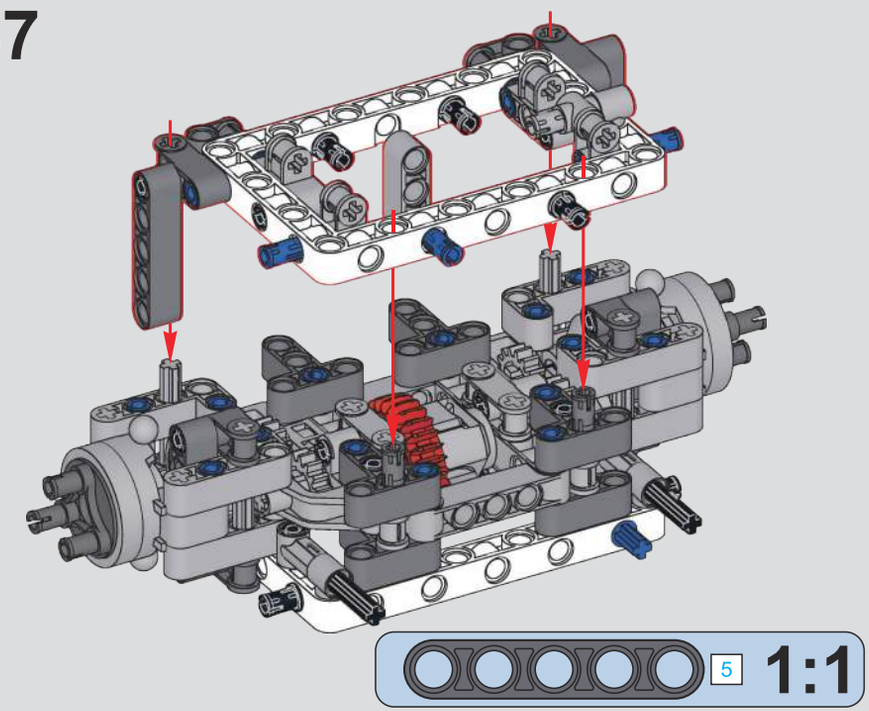
187
5
1:1

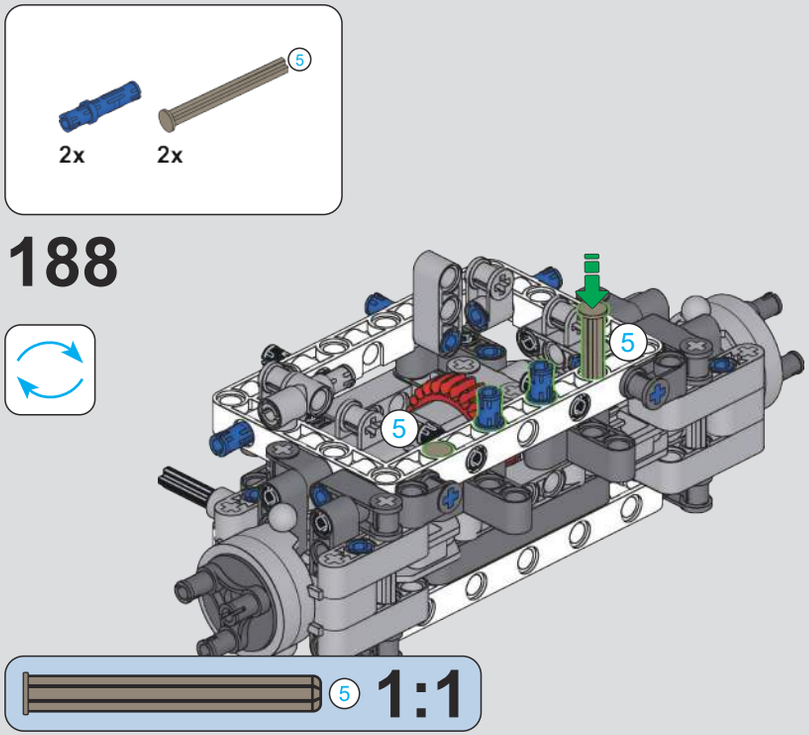
2x
2x
5
188
5
5
5
1:1

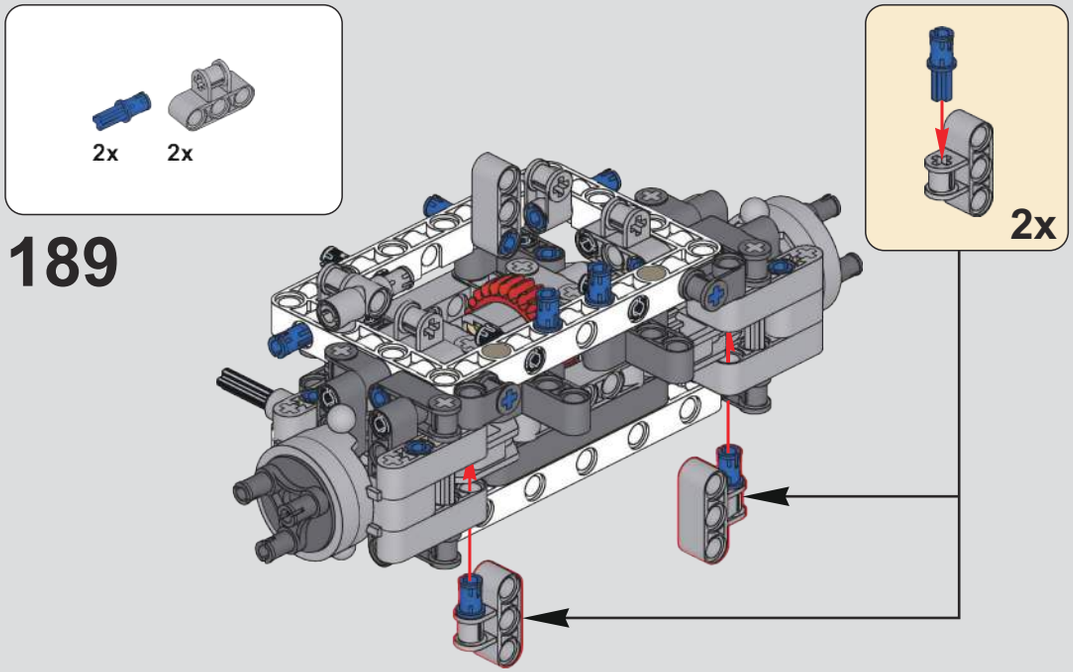
2x
2x
189
2x

190

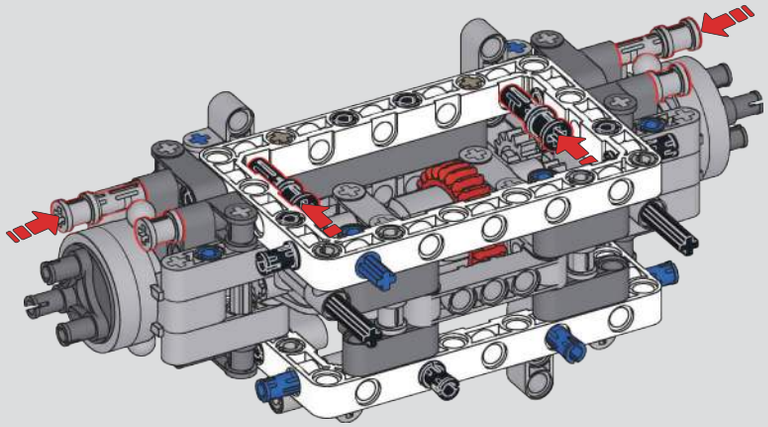

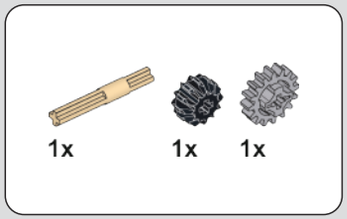

191

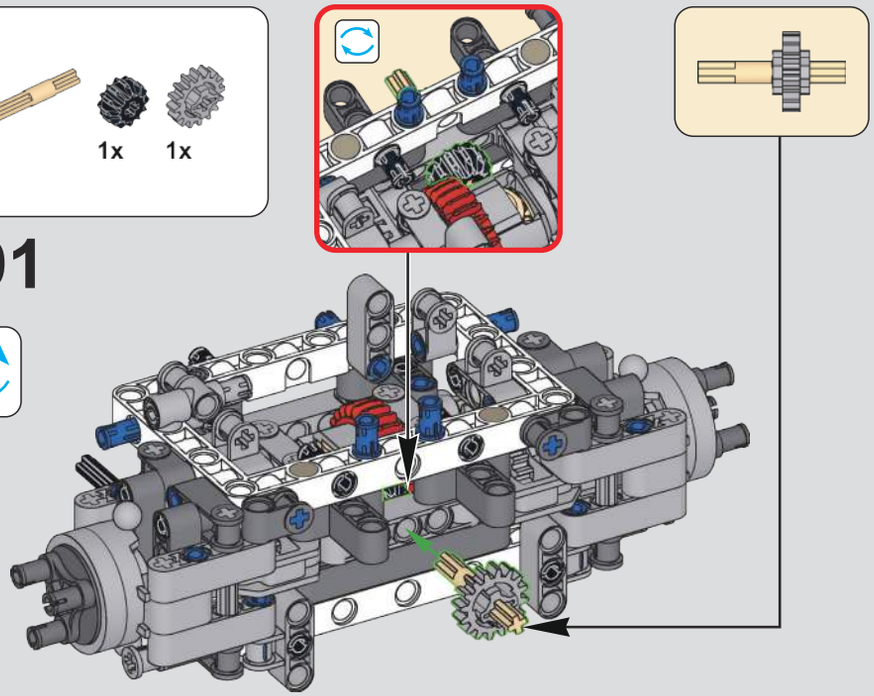

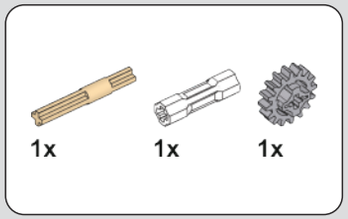

192

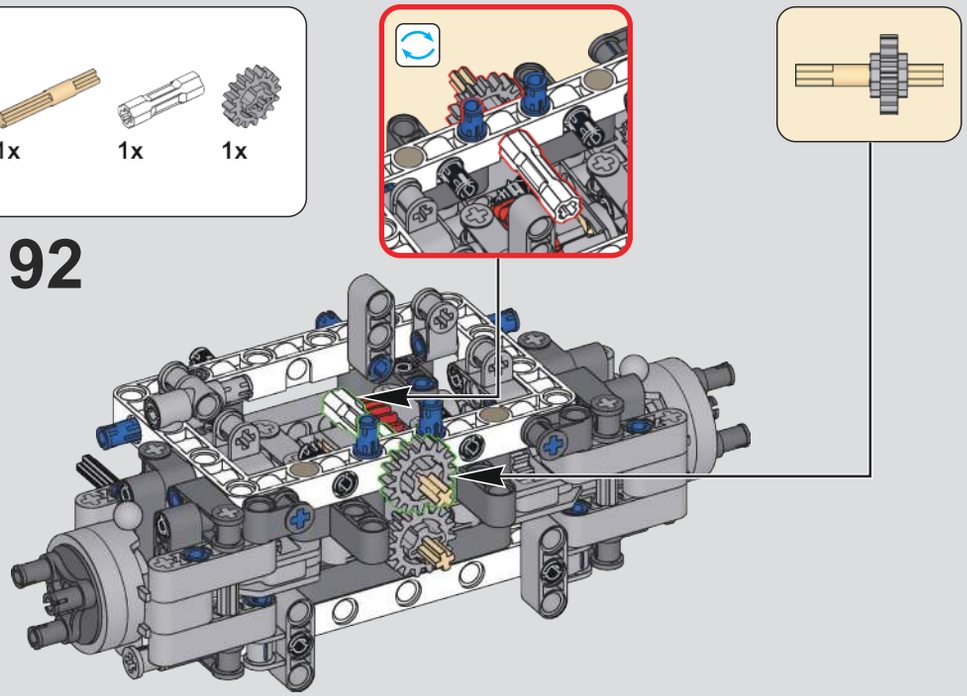

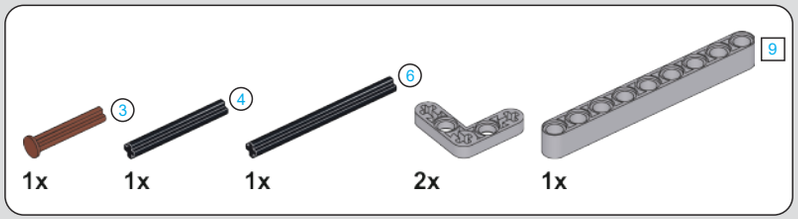

193

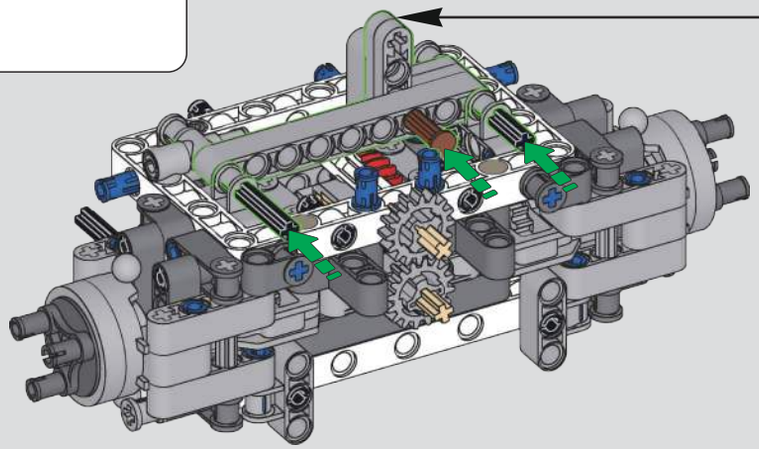

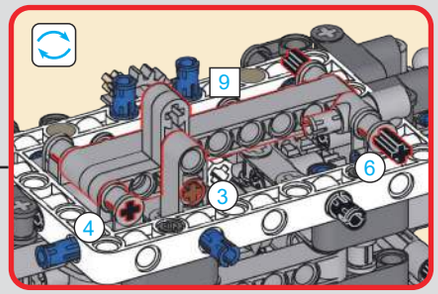

194

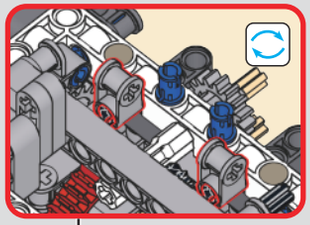

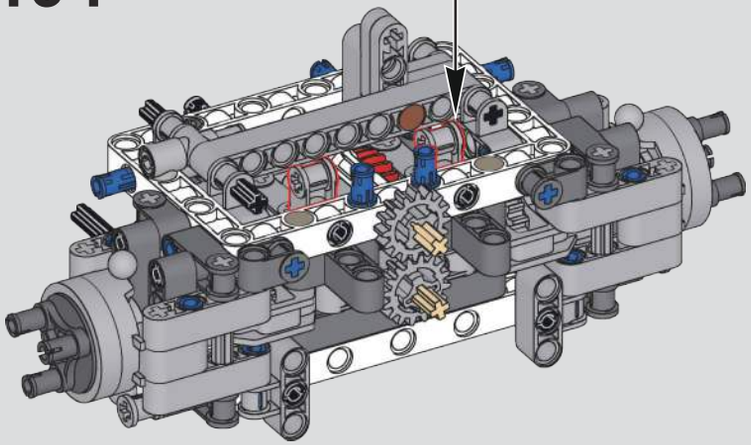

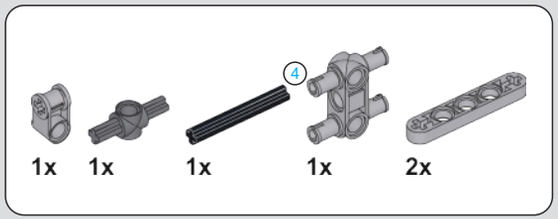

195

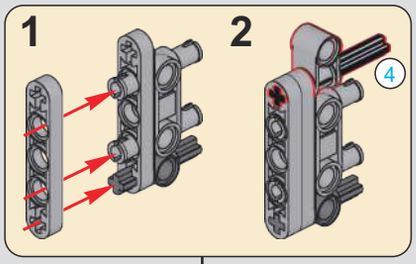

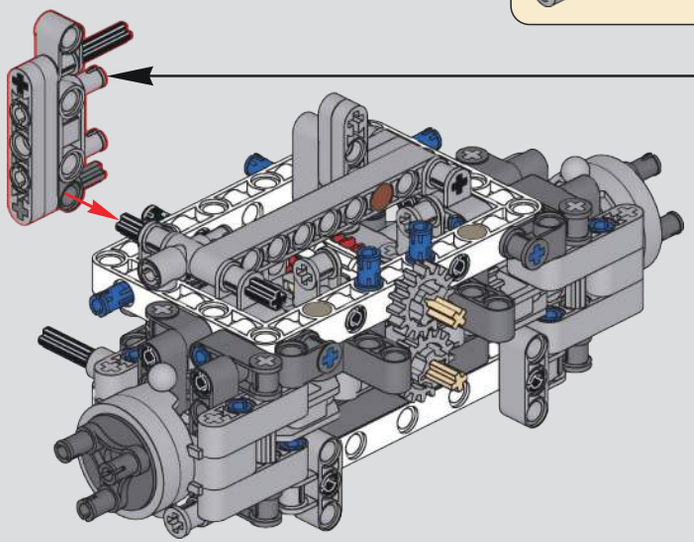

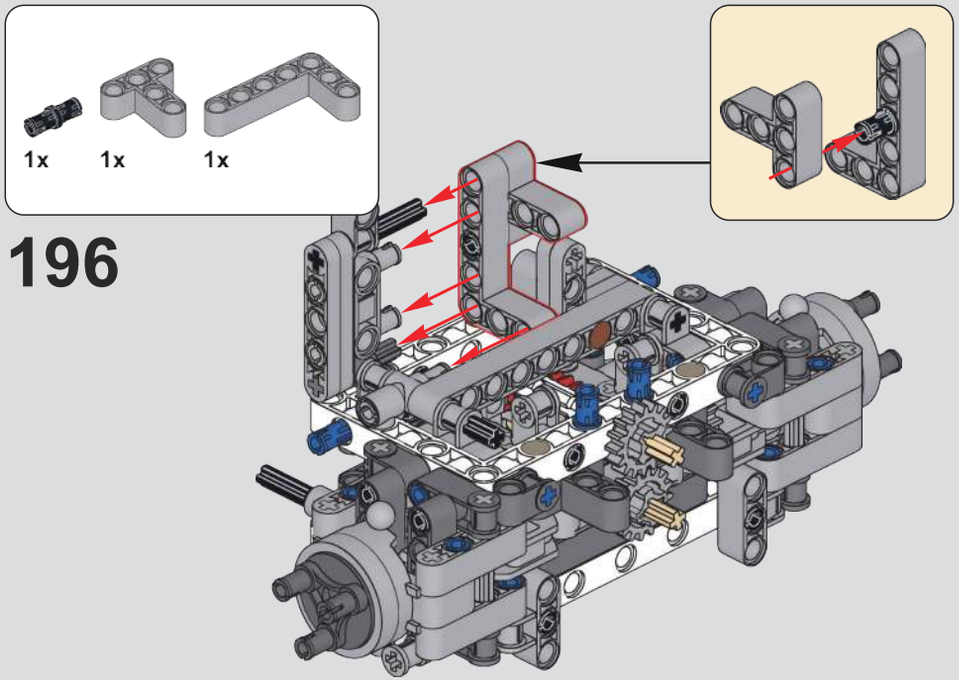
1x
1x
1x
196

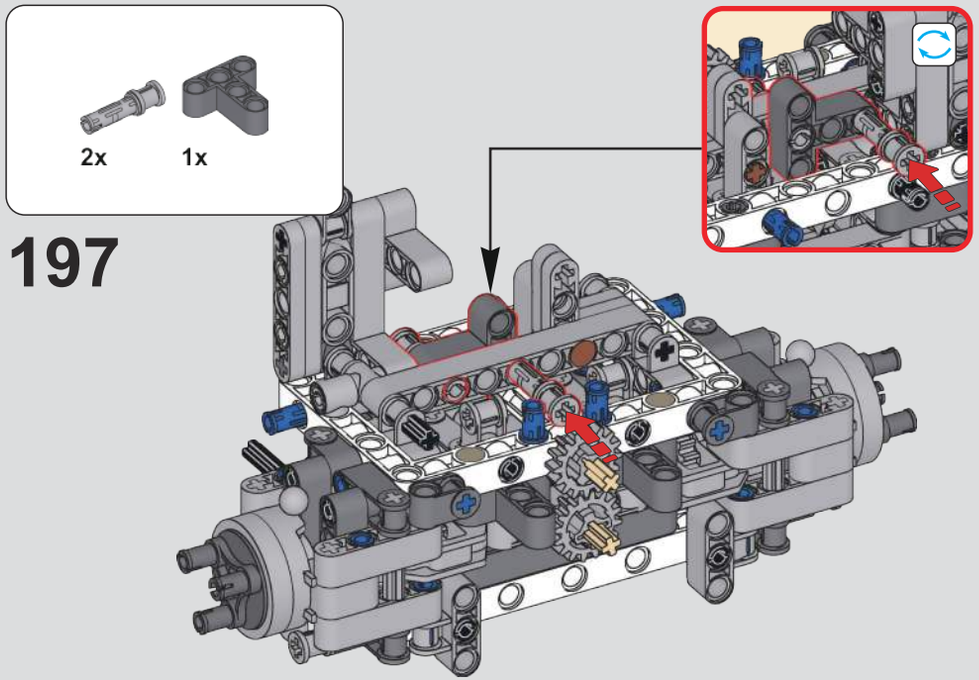
2x
1x
197

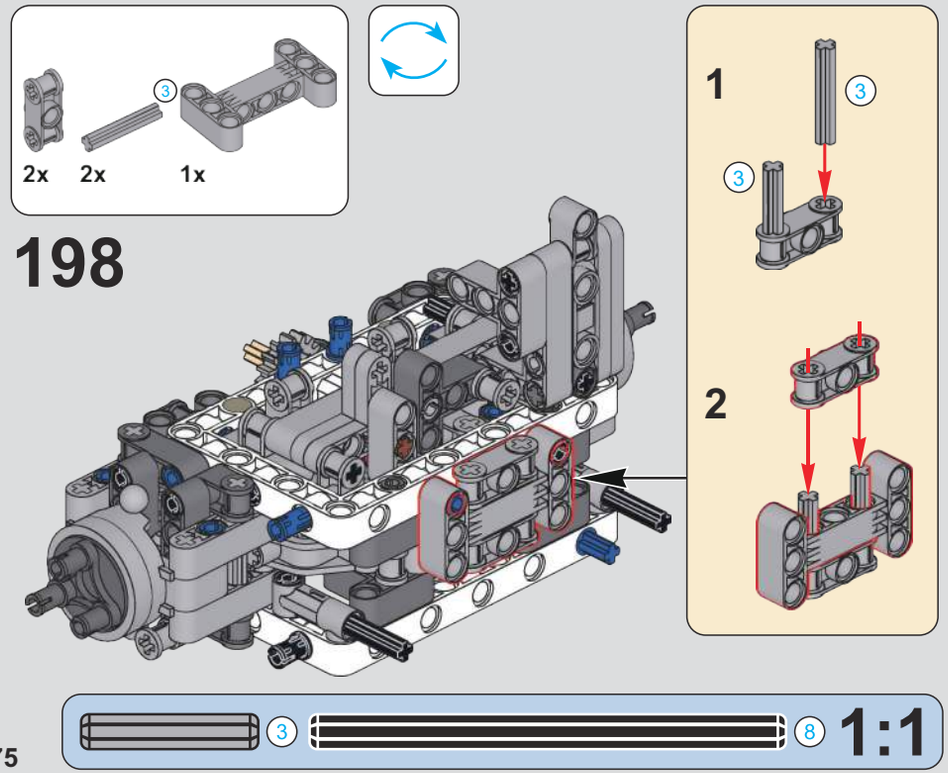
3
2x
2x
1x
198
1
3
3
2
3
8
1:1

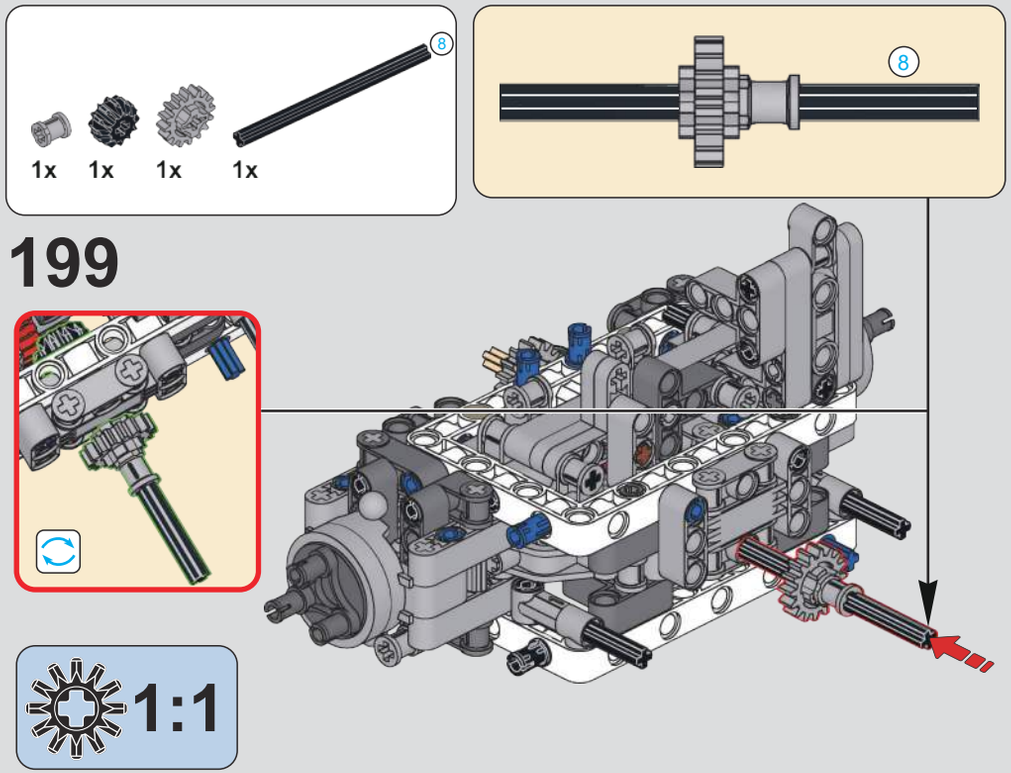
8
1x
1x
1x
1x
8
199
1:1

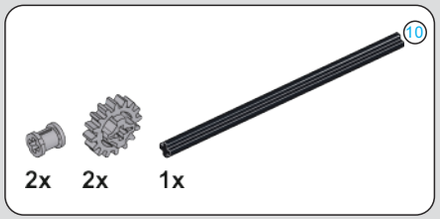

200

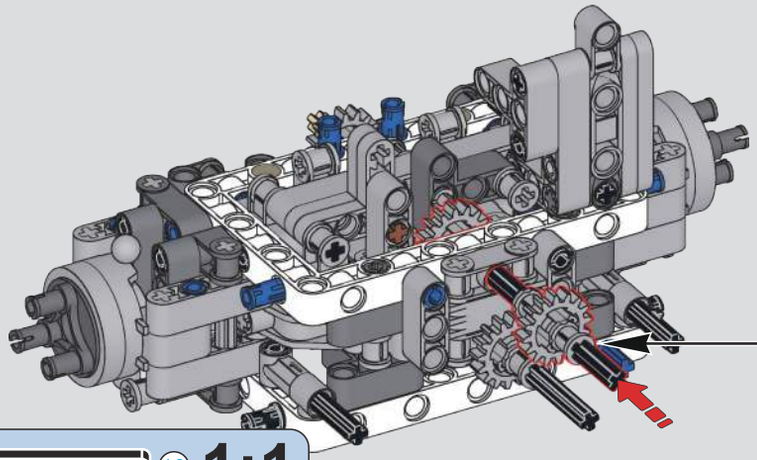

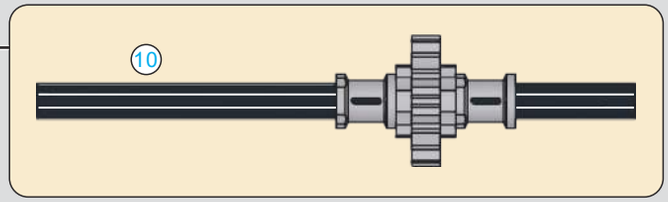

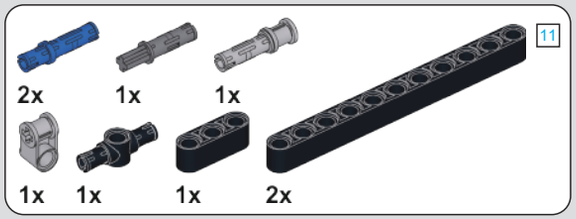

201

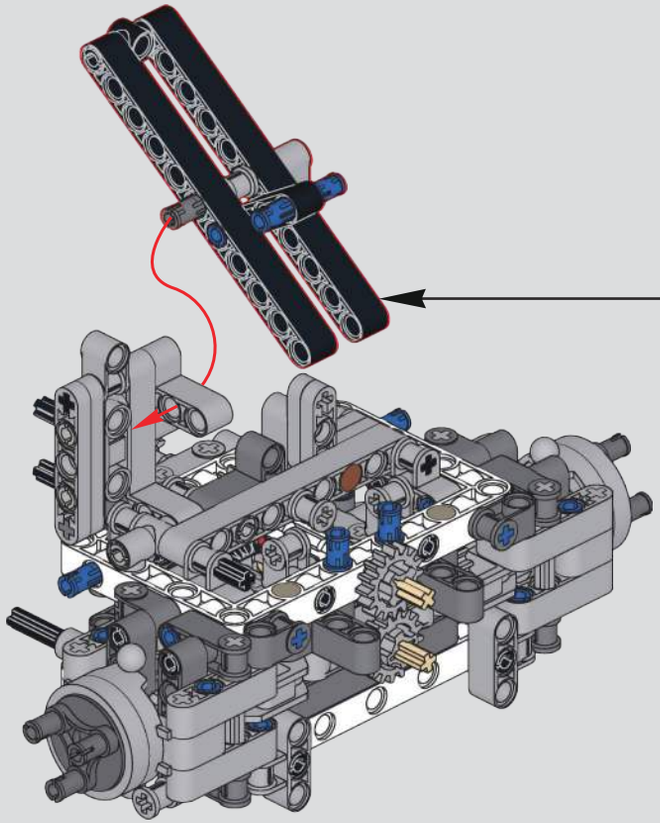

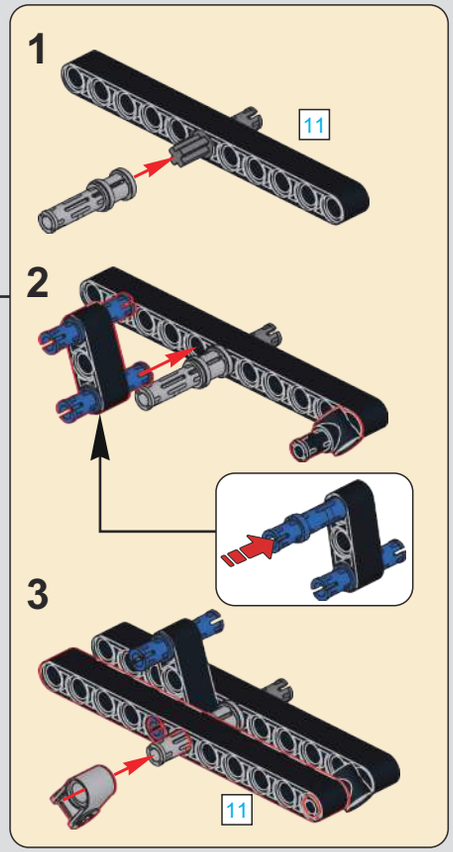

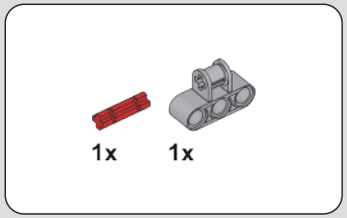

202

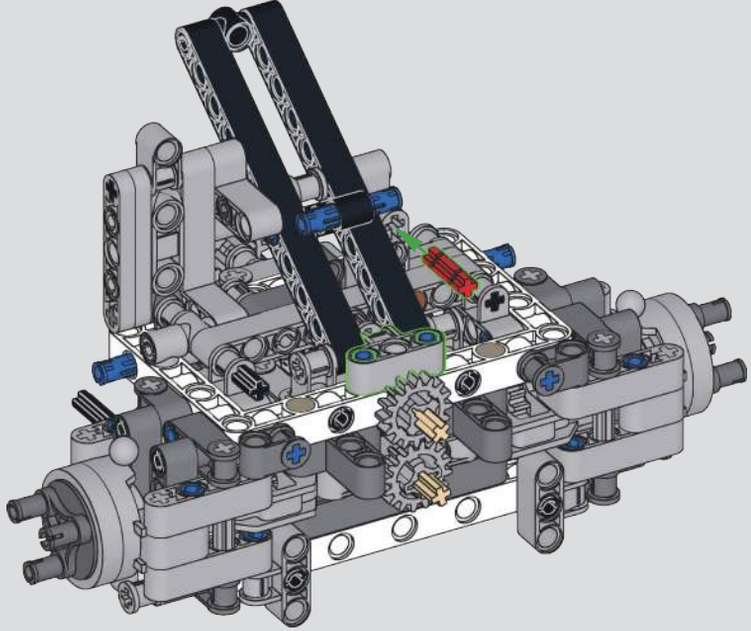

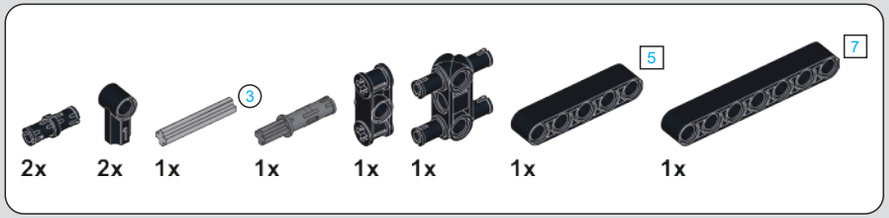

203

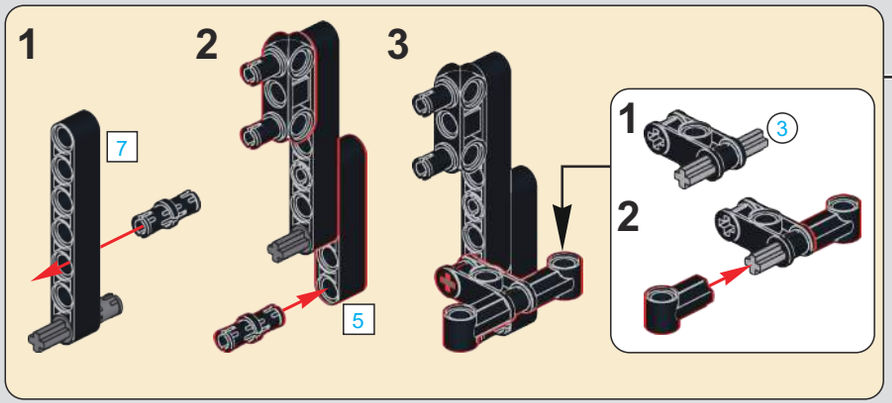

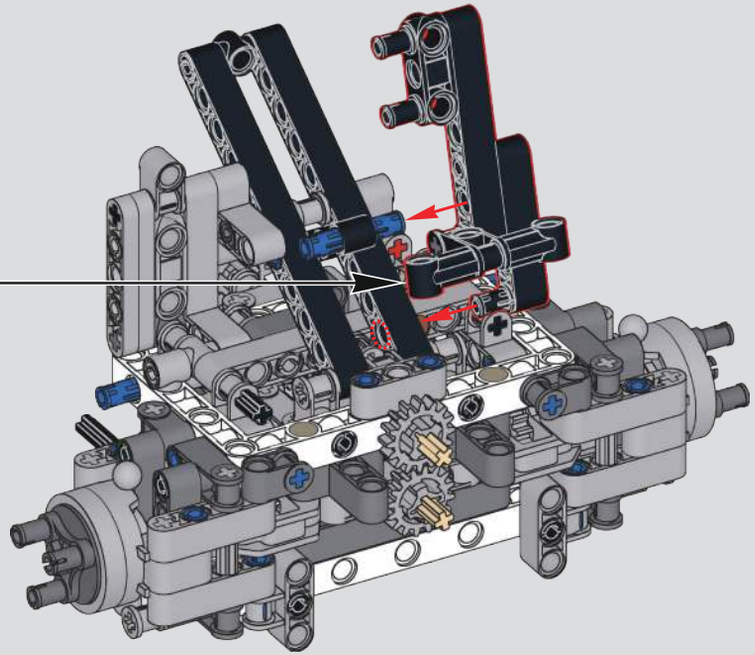

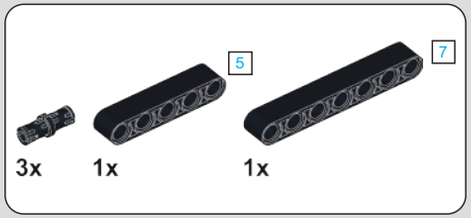

204

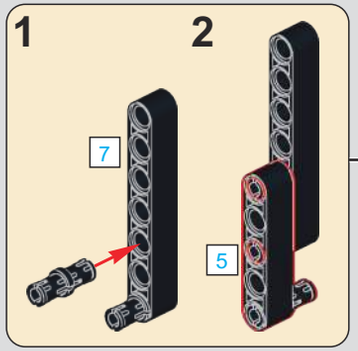

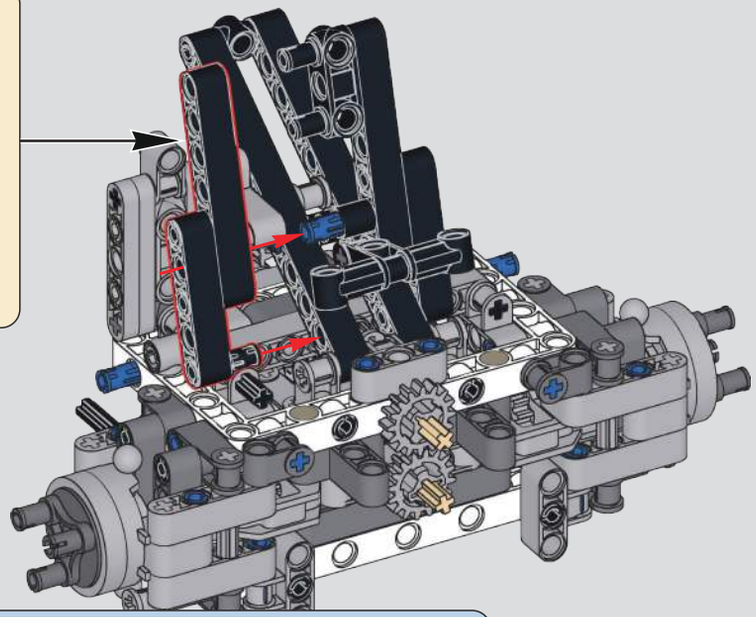

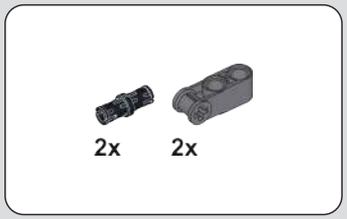

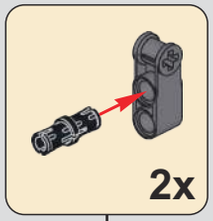

205

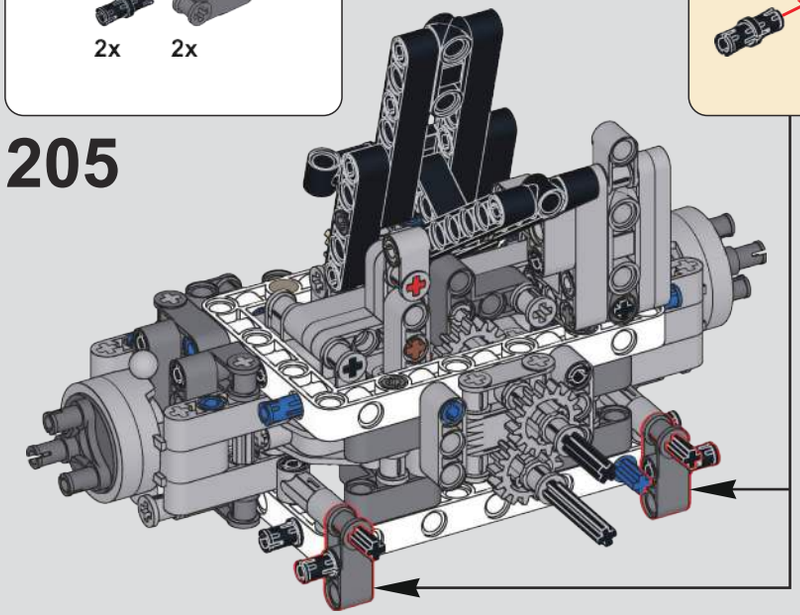

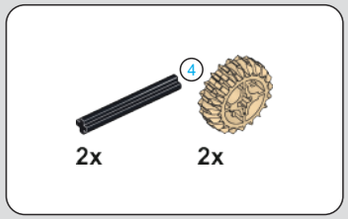

206

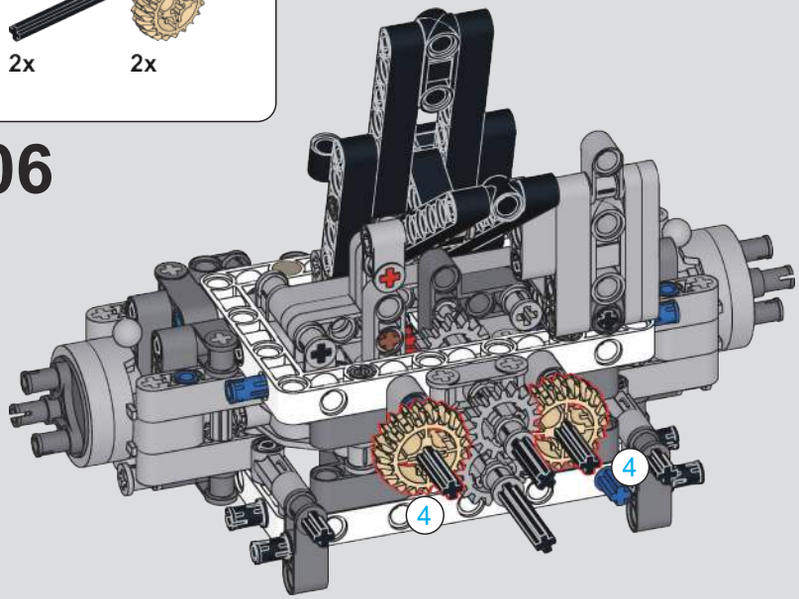

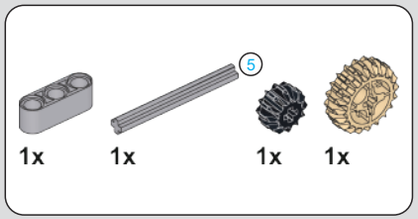

207

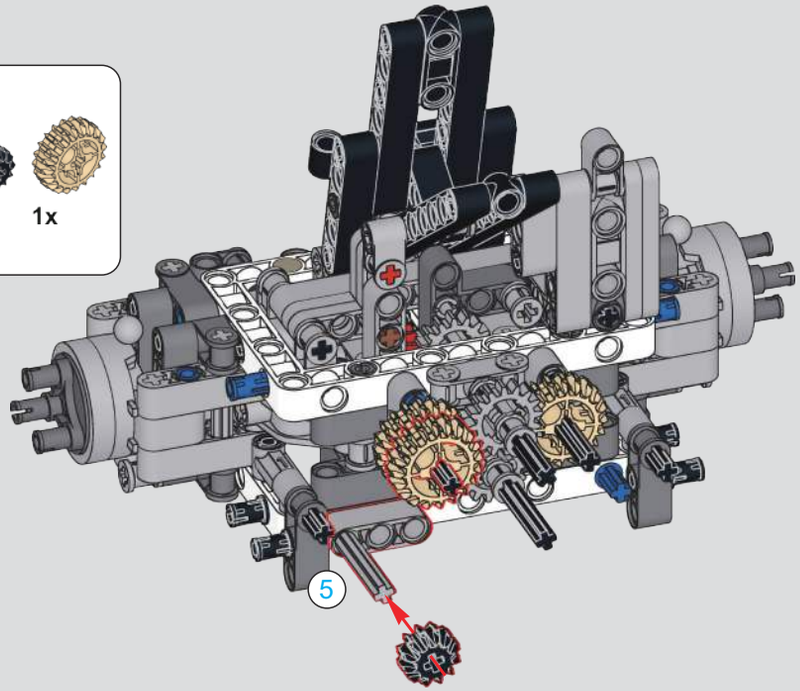

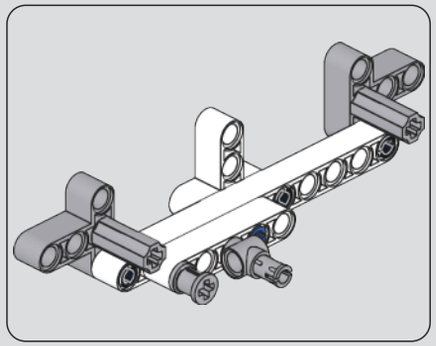

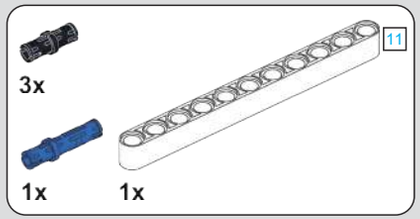

208

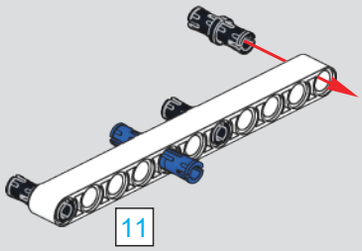

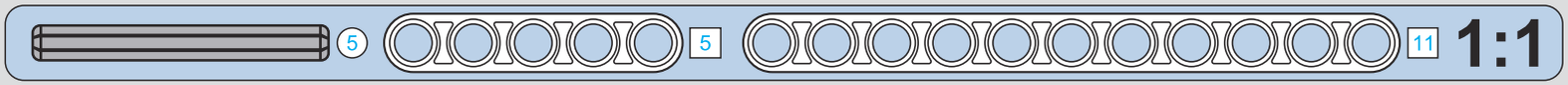

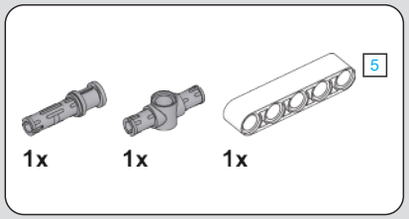

209

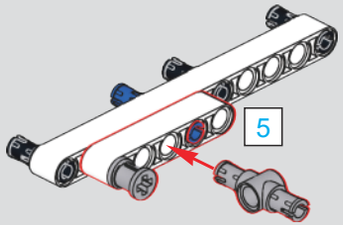

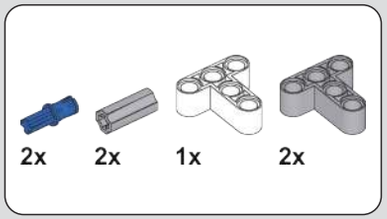

210

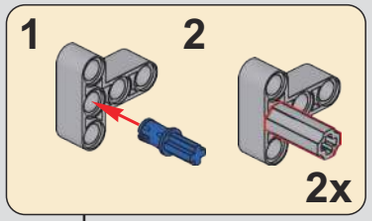

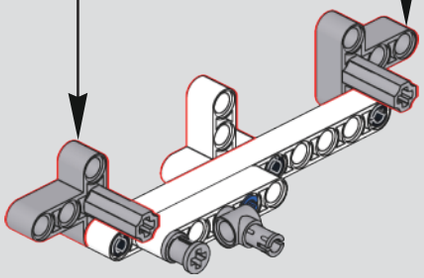

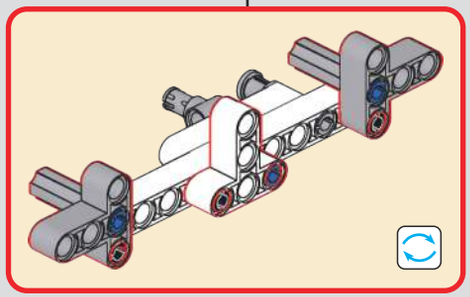

211

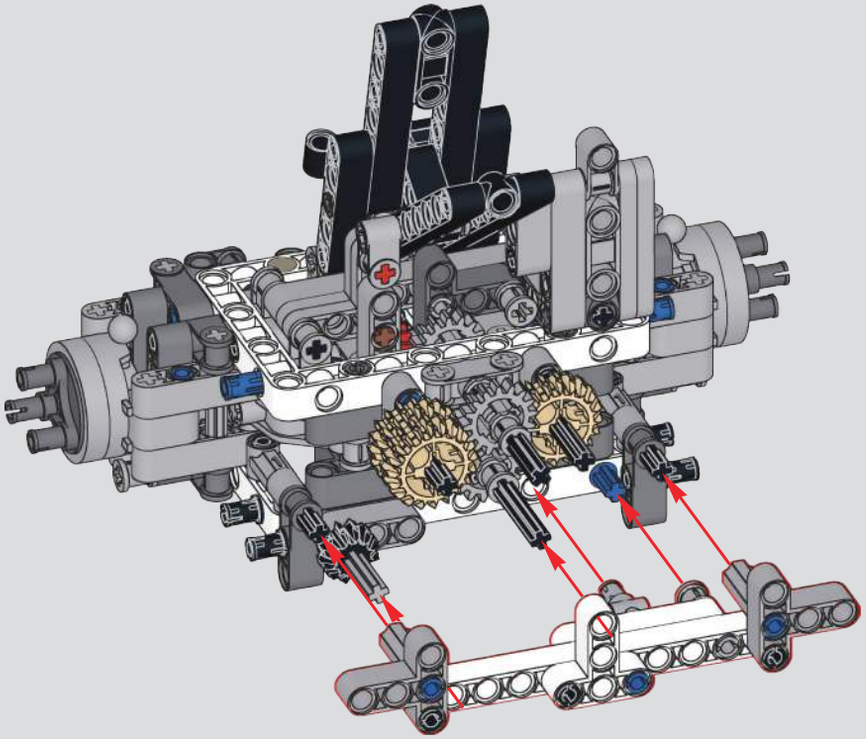

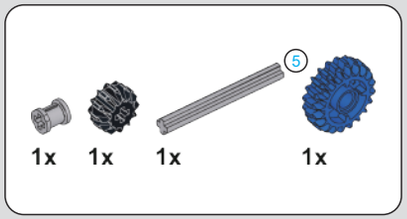

212

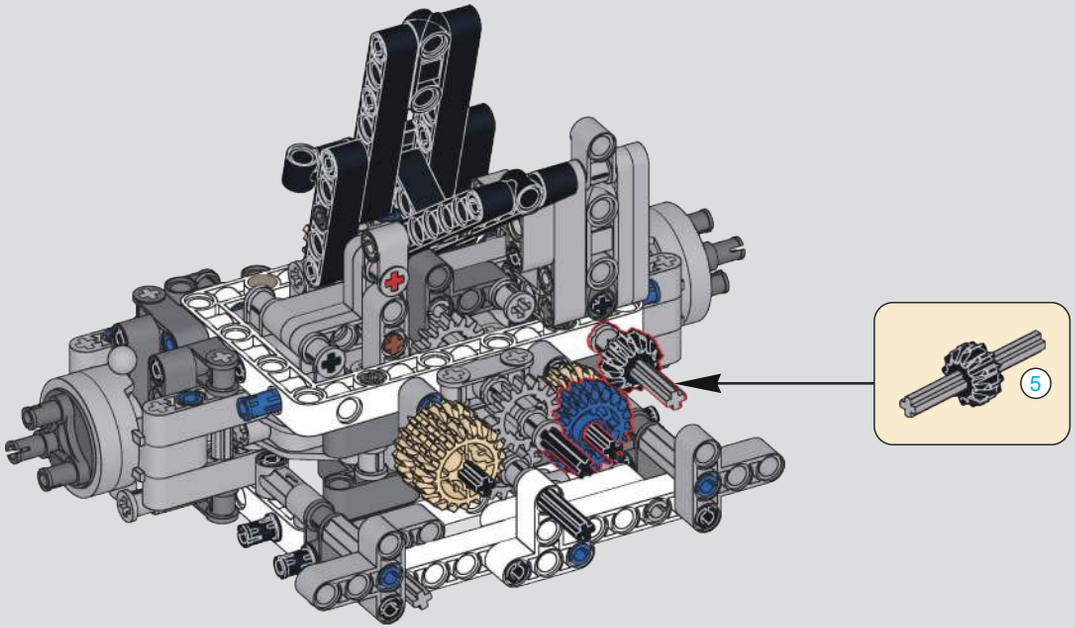

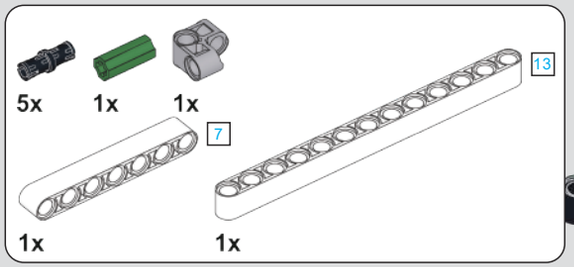

213

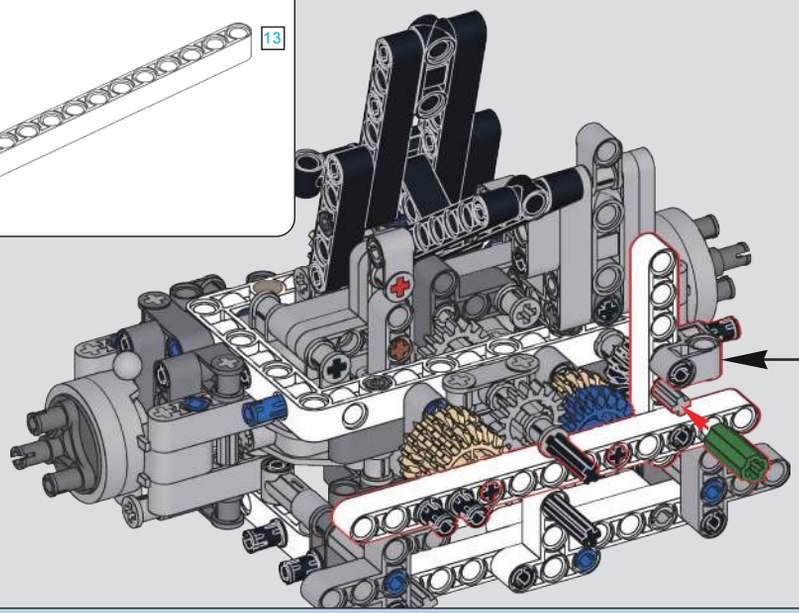

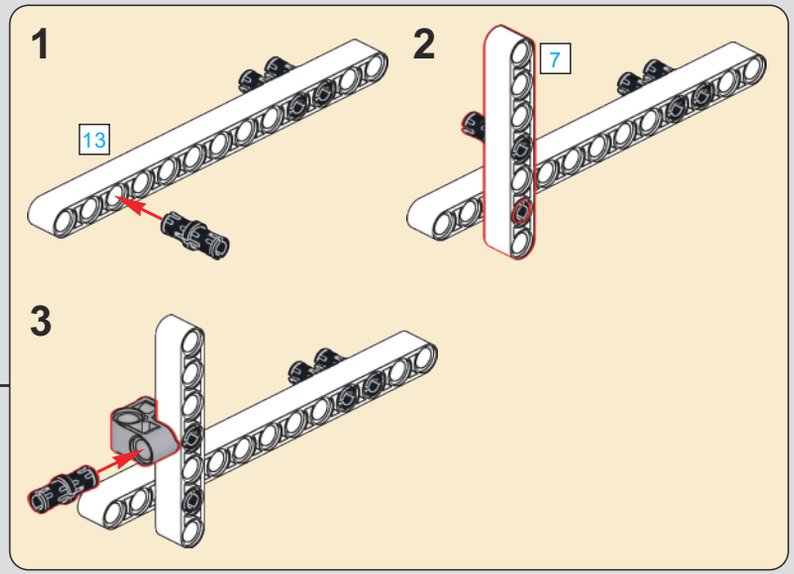

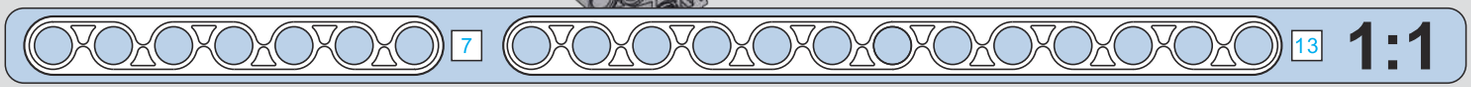

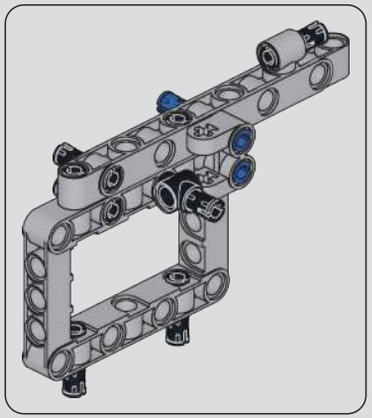

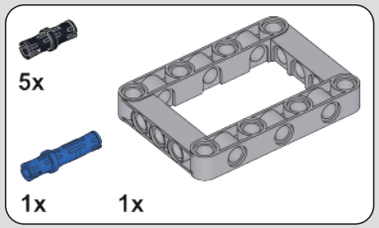

214

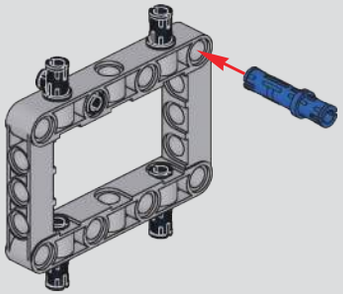

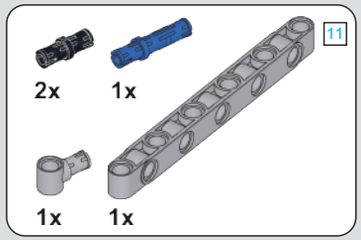

215

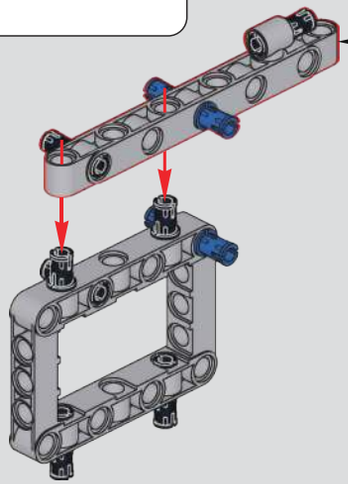

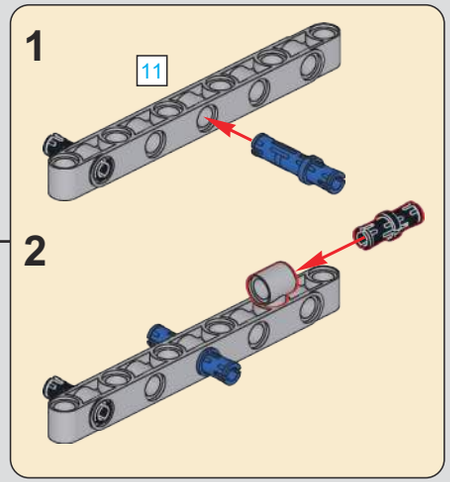

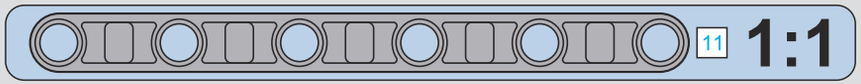

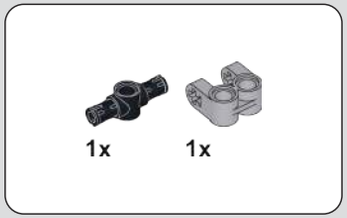

216

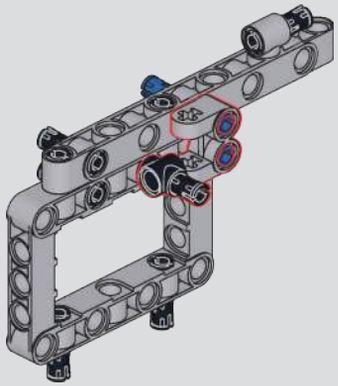

217

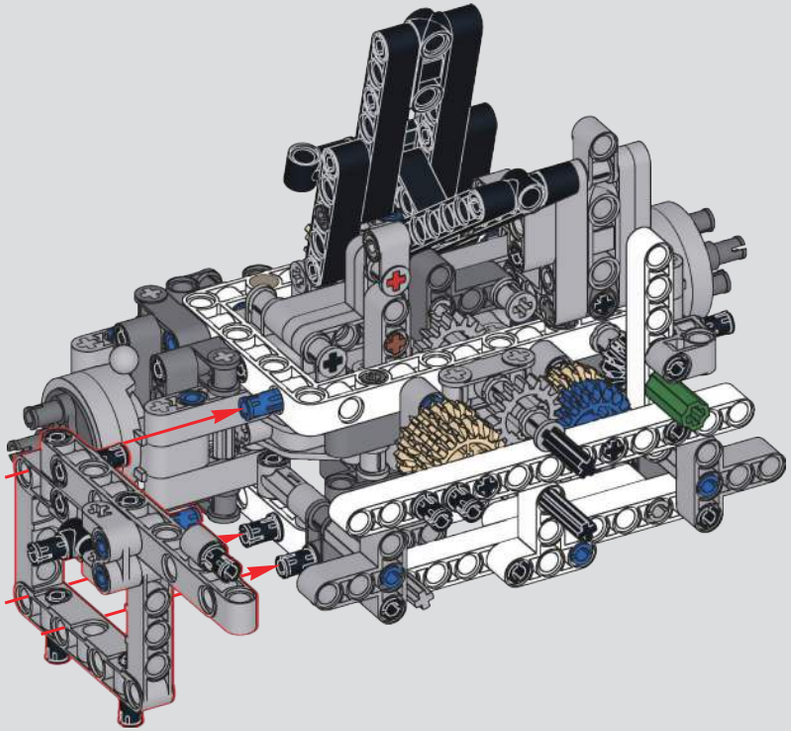

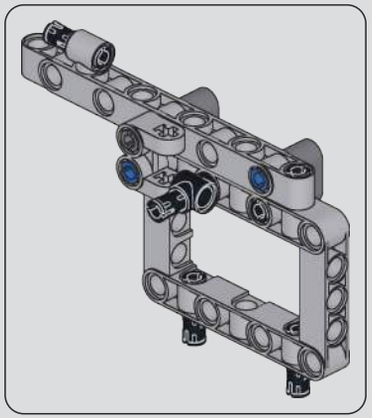

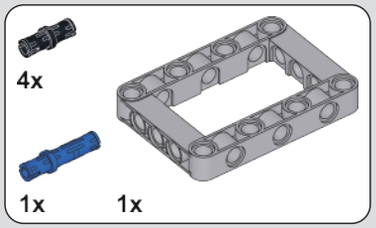

218

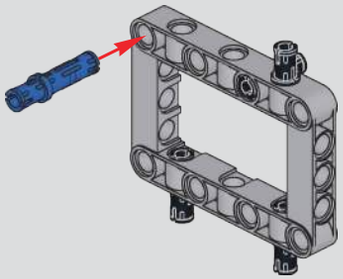

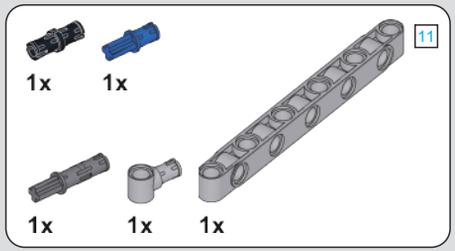

219

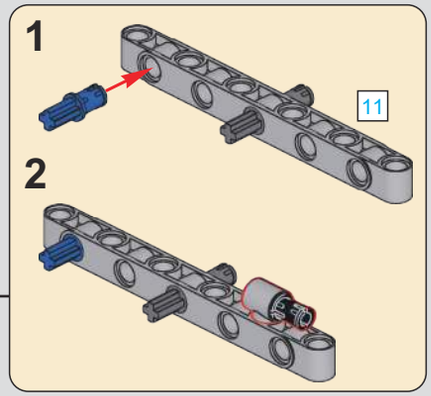

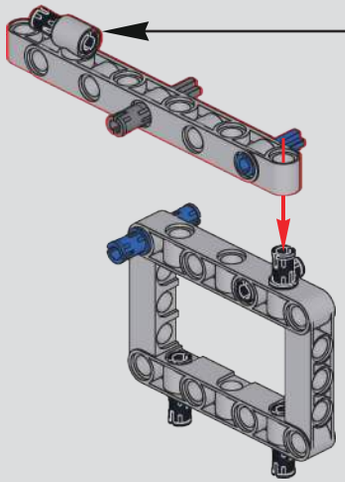

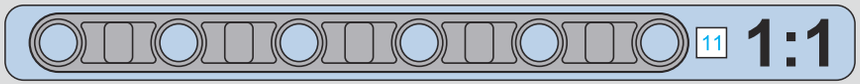

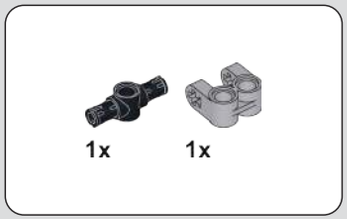

220

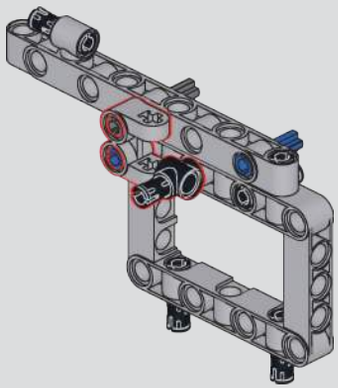

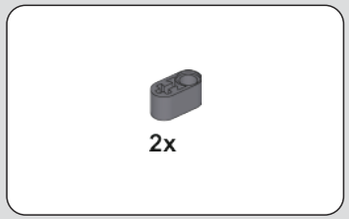

221

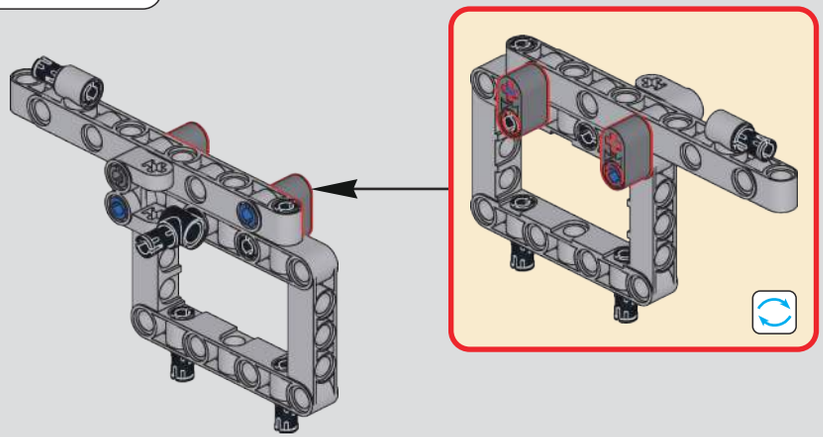

222

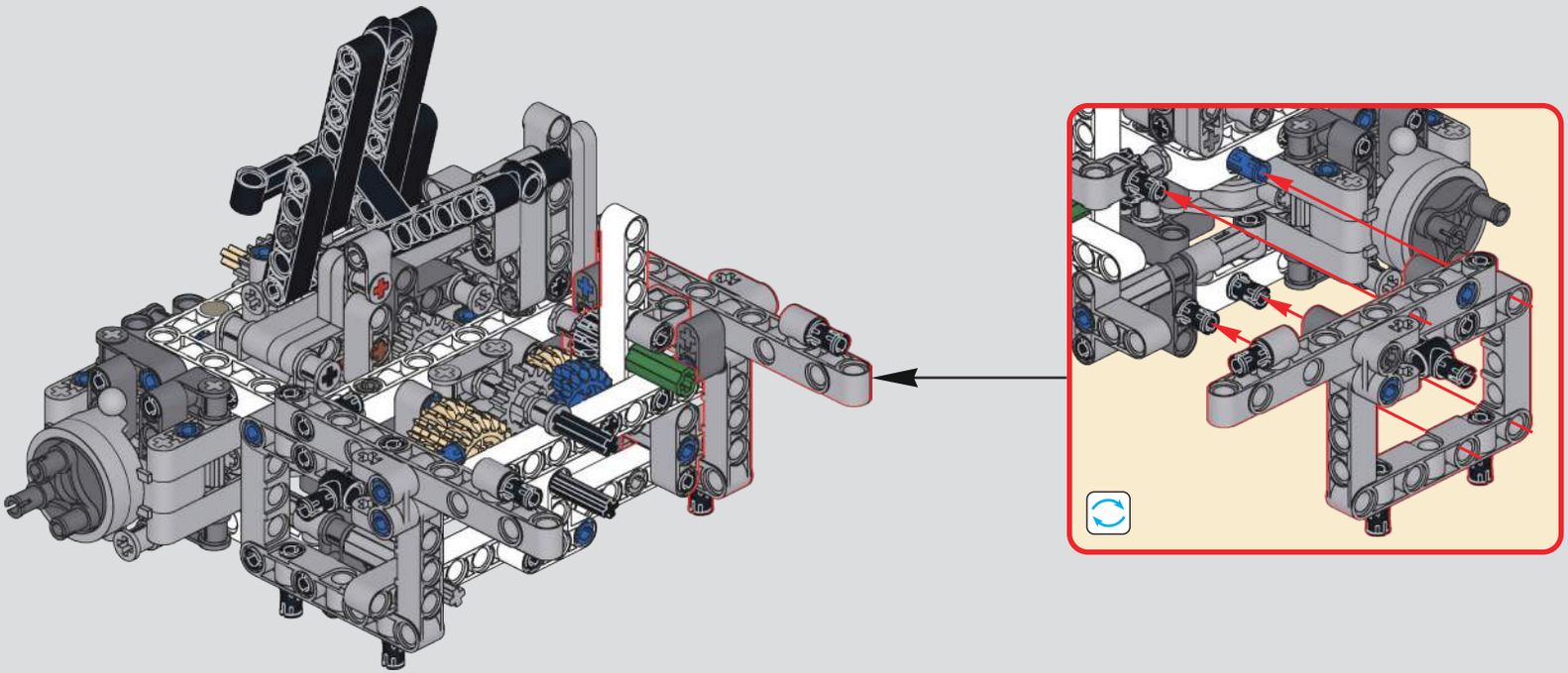

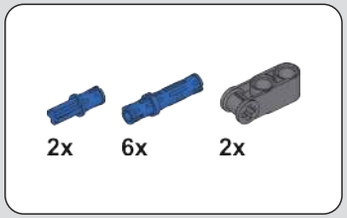

223

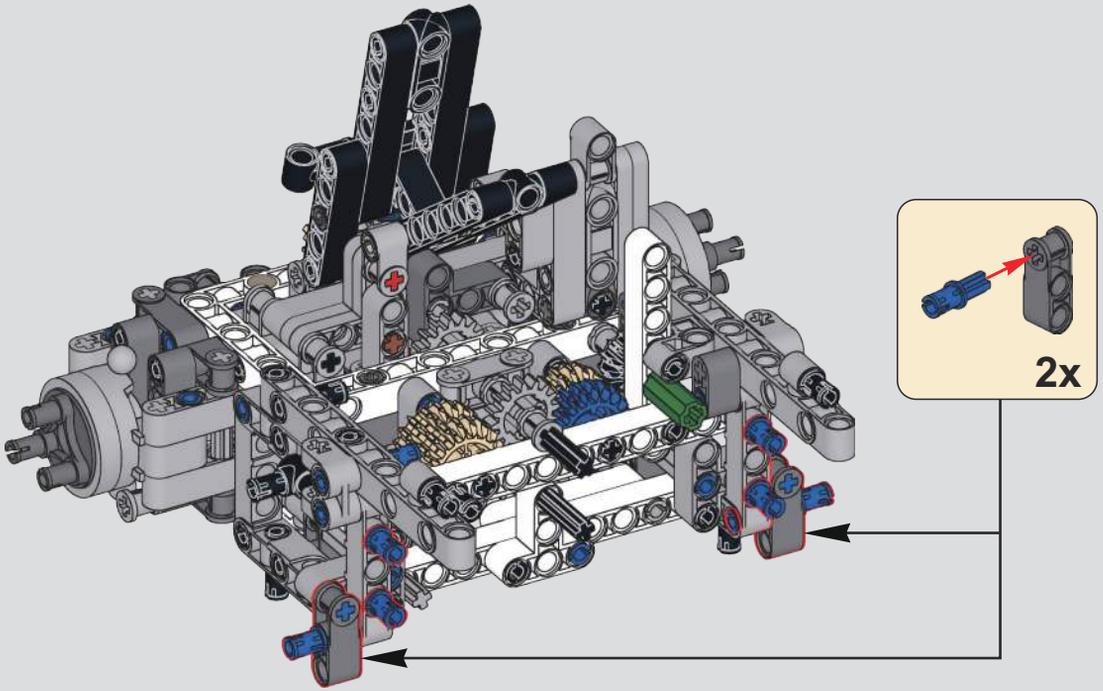

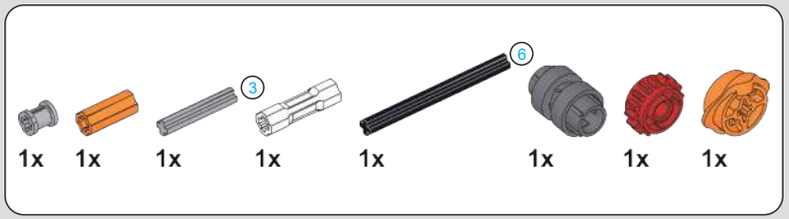

224

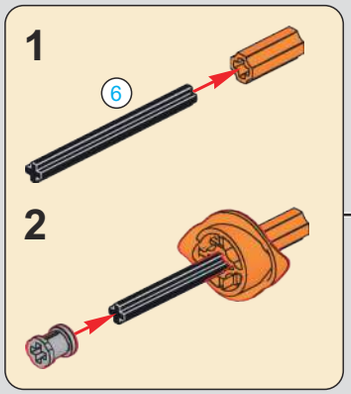

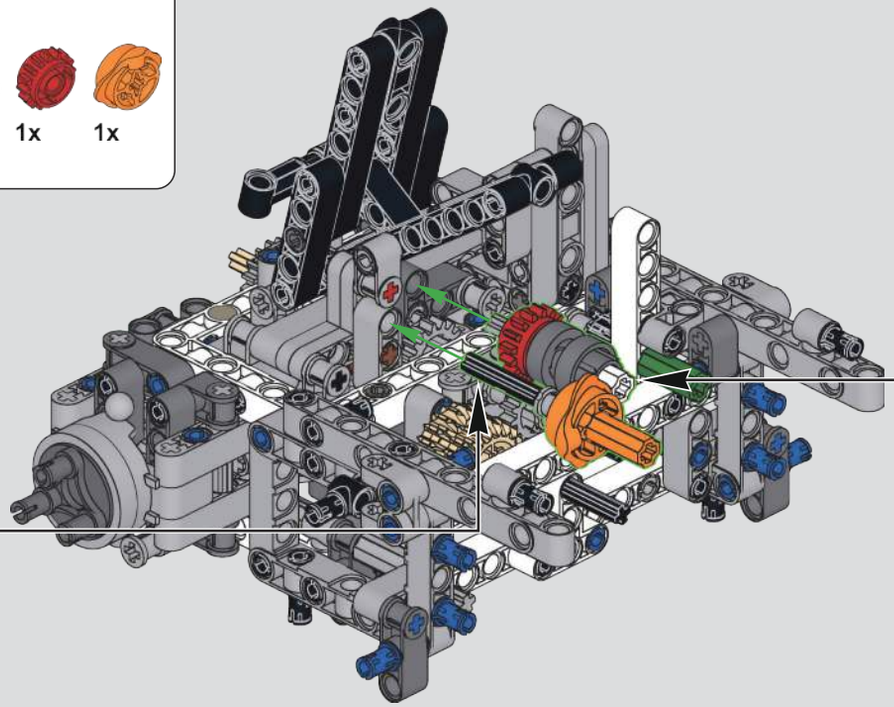

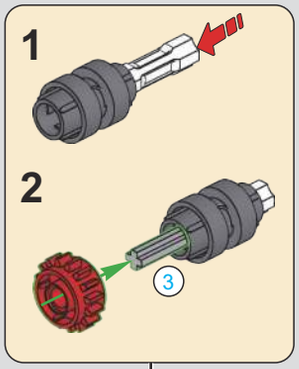

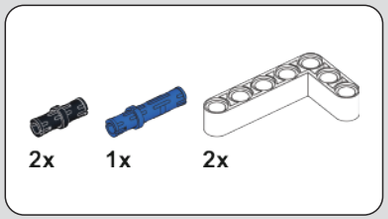

225

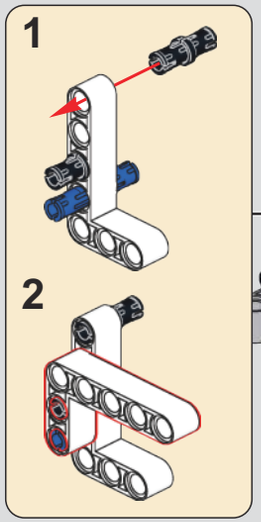

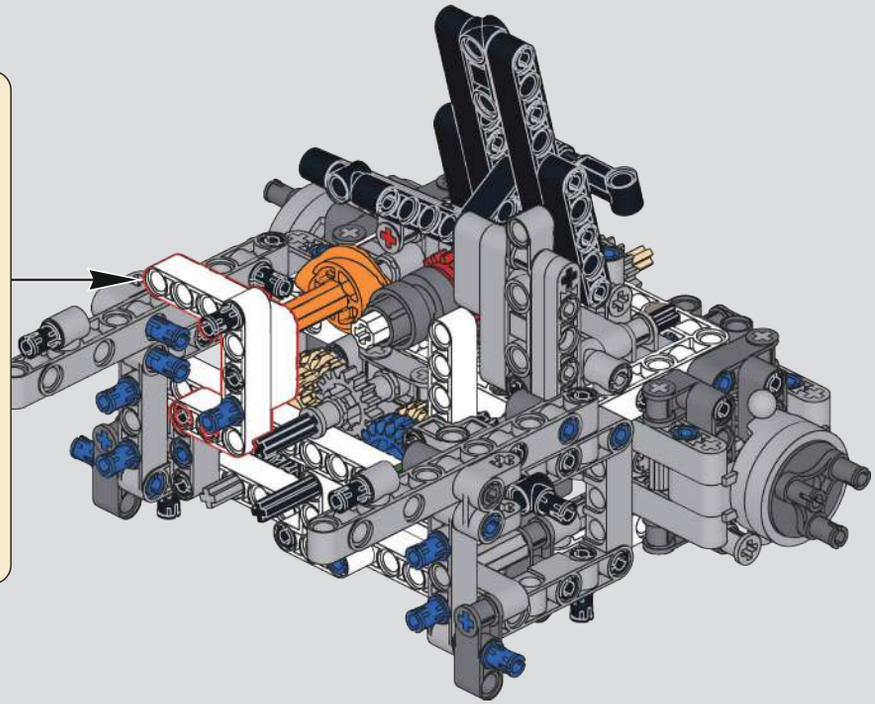

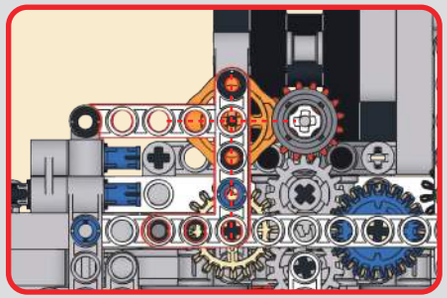

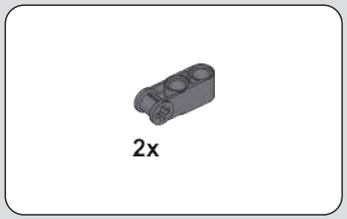

226

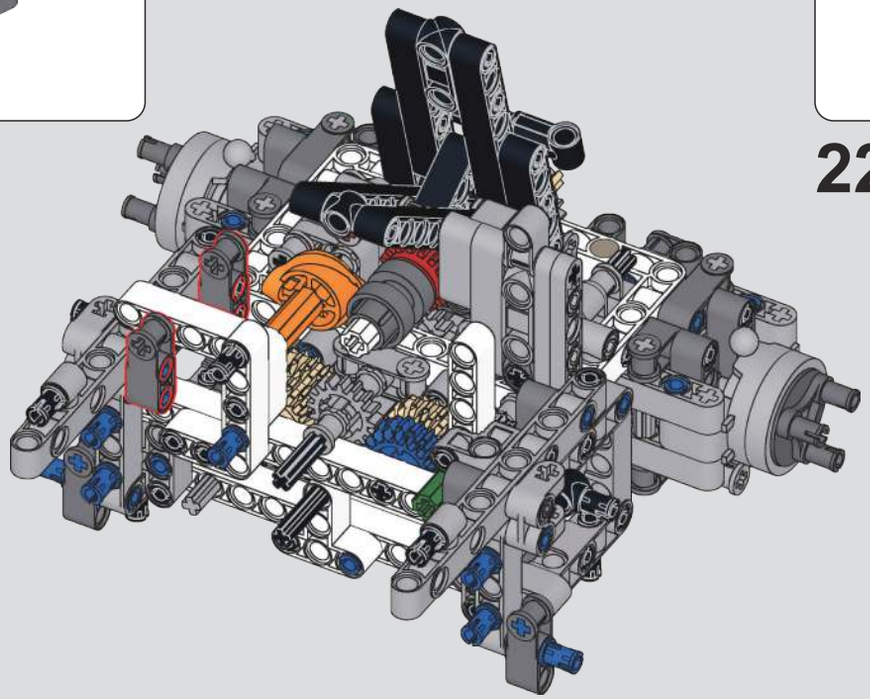

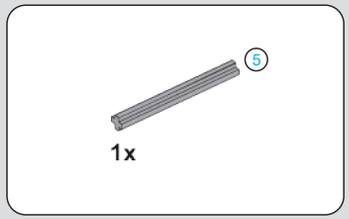

227

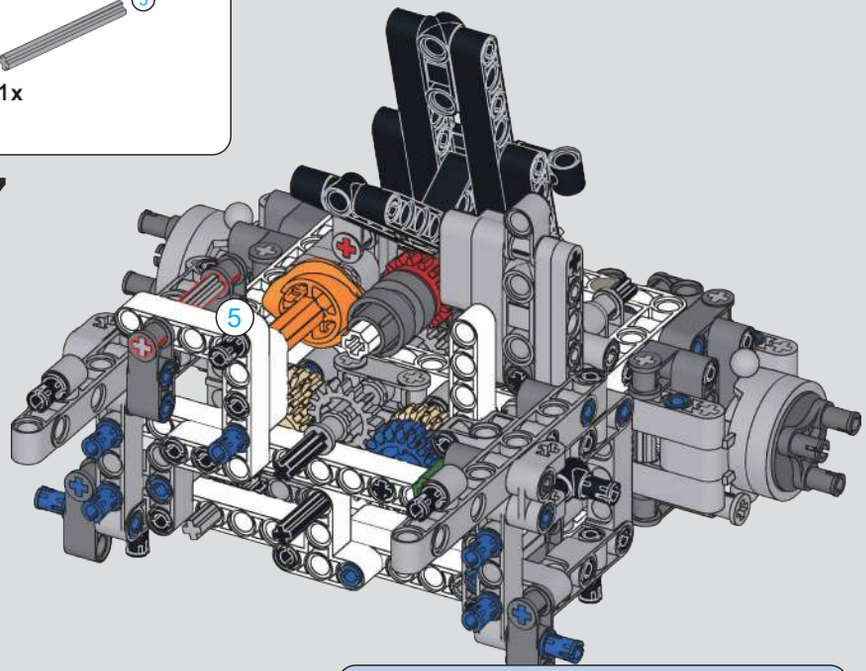

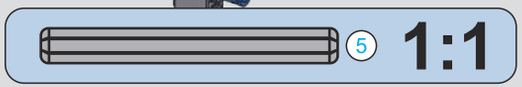

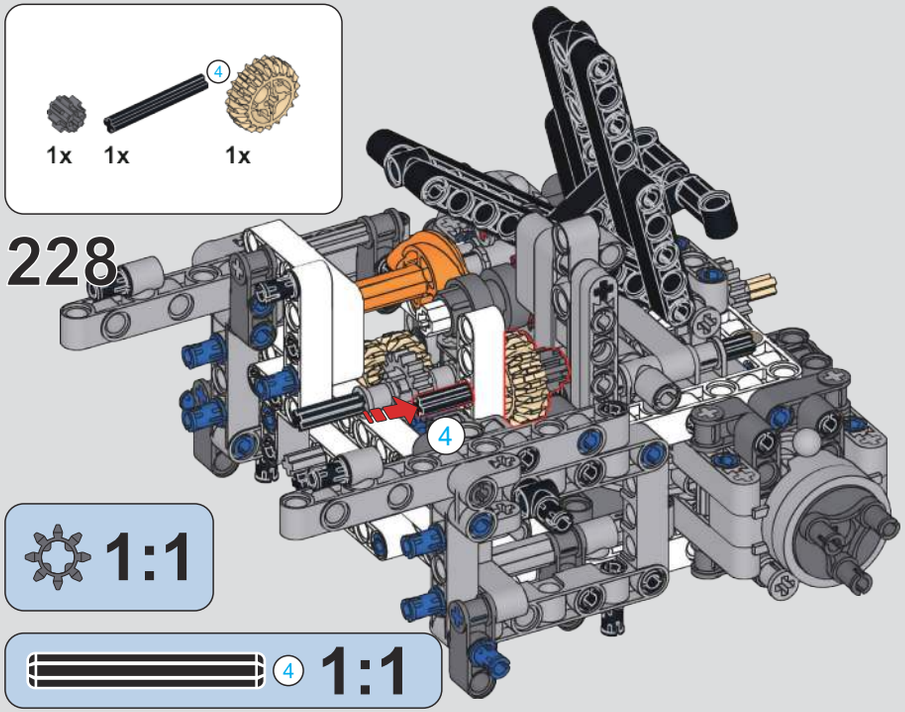
1x
1x
4
1x
228
4
1:1
4
1:1

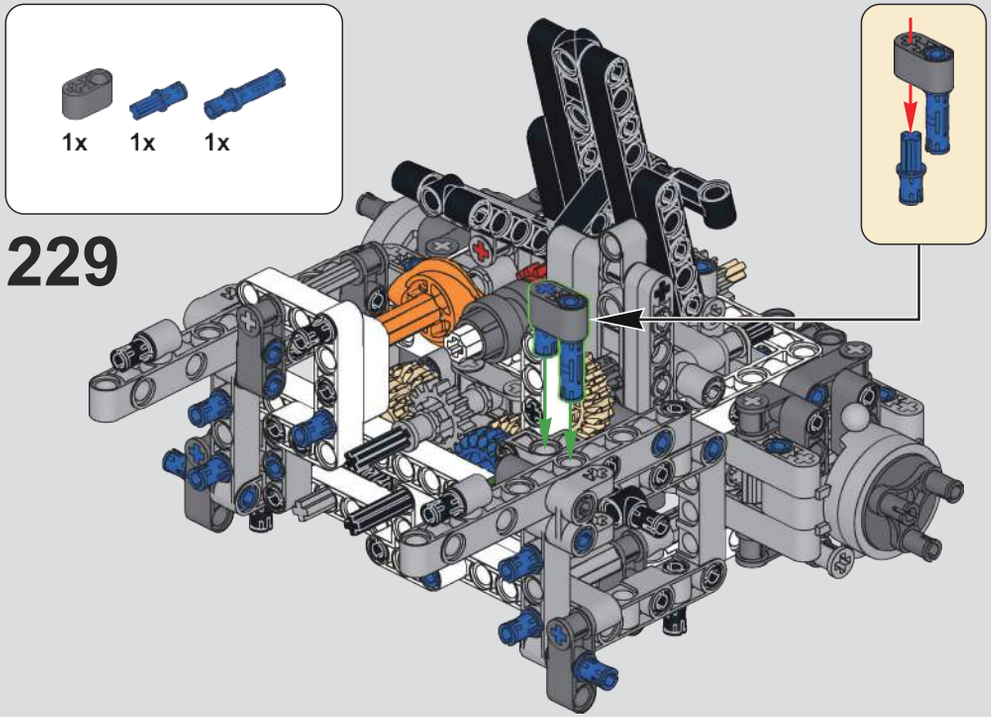
1x
1x
1x
229

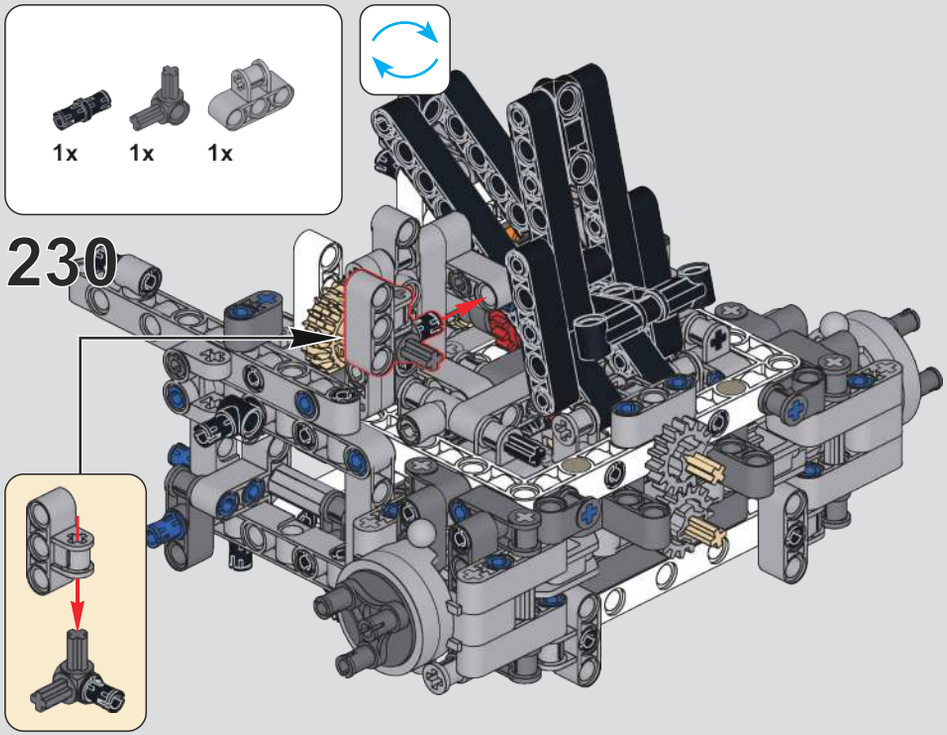
1x
1x
1x
230

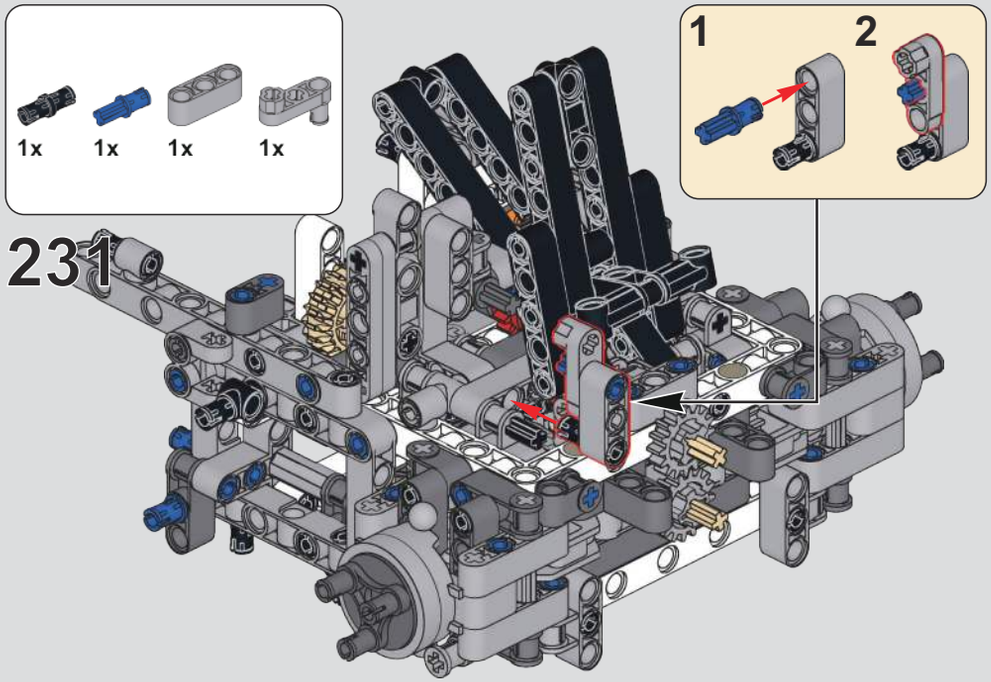
1x
1x
1x
1x
1
2
231

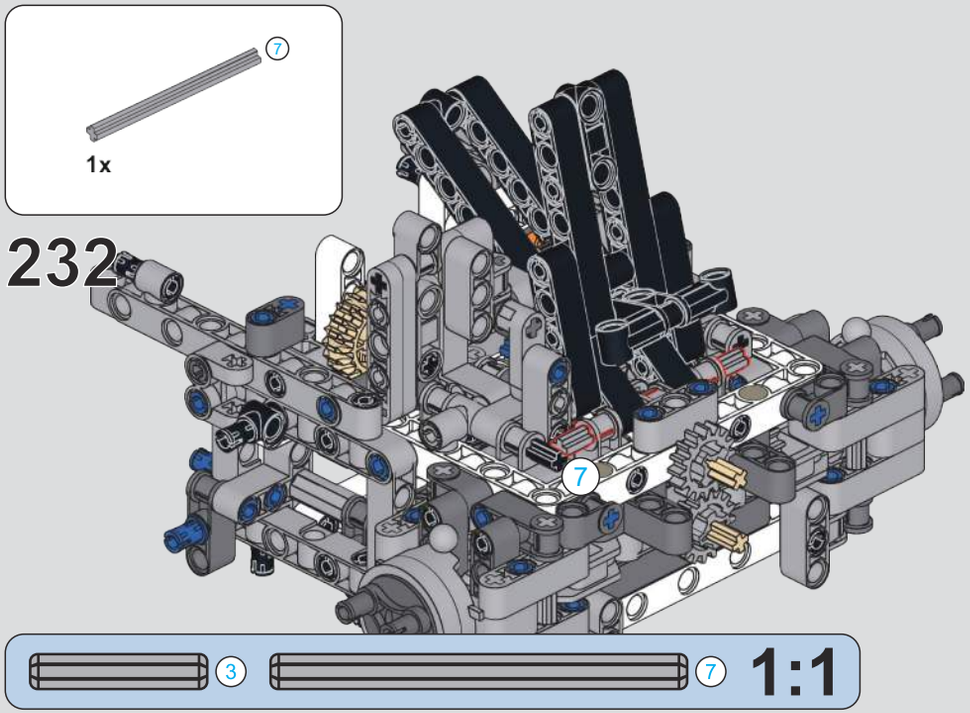
7
1x
232
7
3
7
1:1

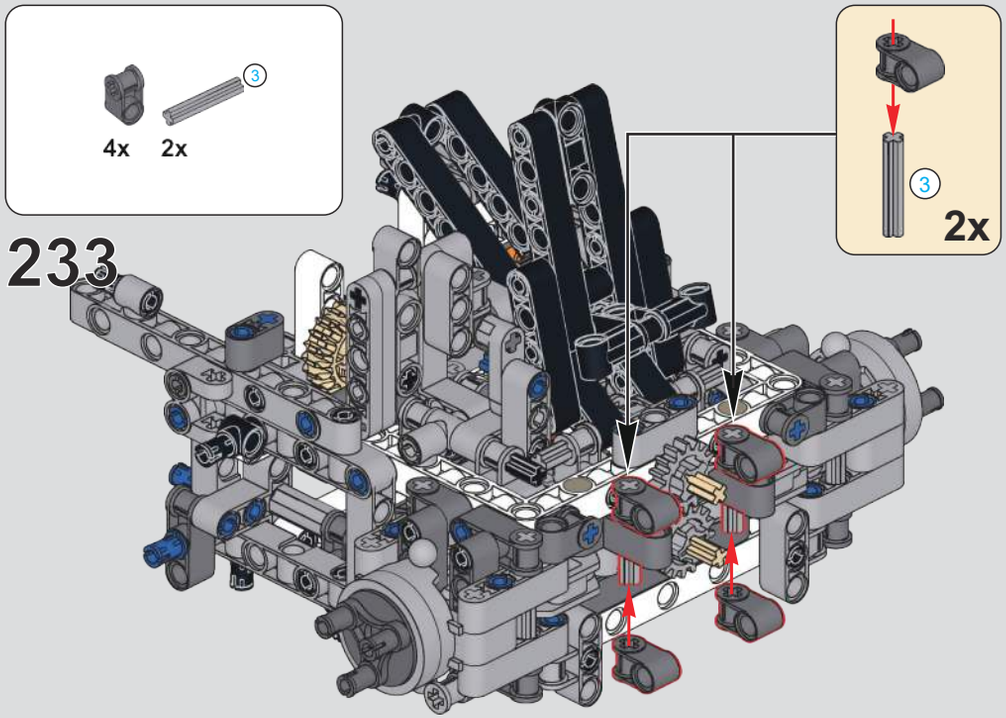
3
4x
2x
233
3
2x

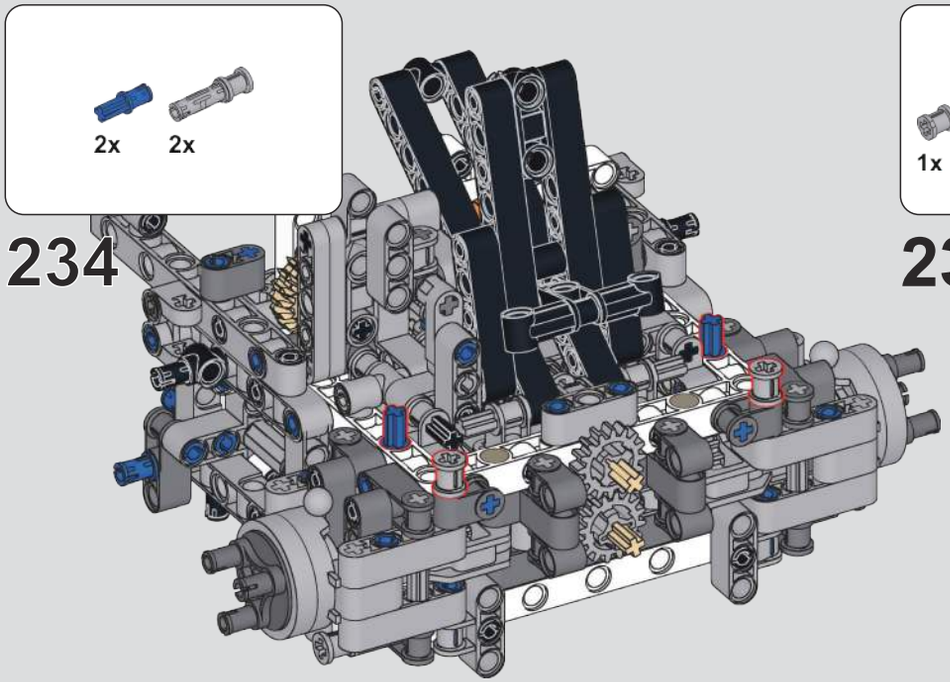
2x
2x
234

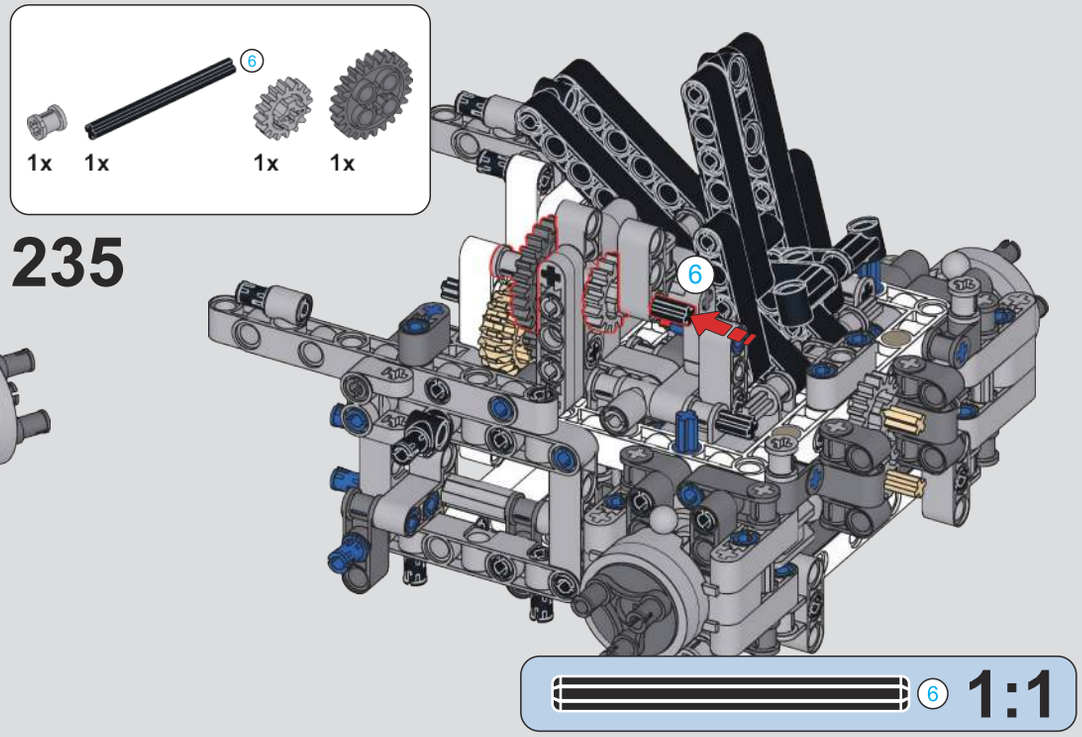
6
1x
1x
1x
1x
235
6
6
1:1

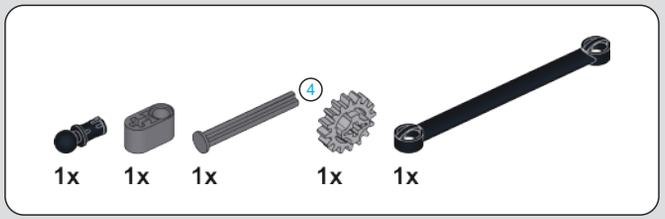

236

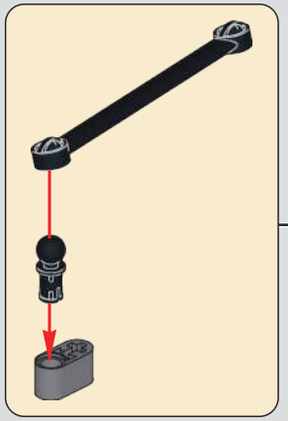

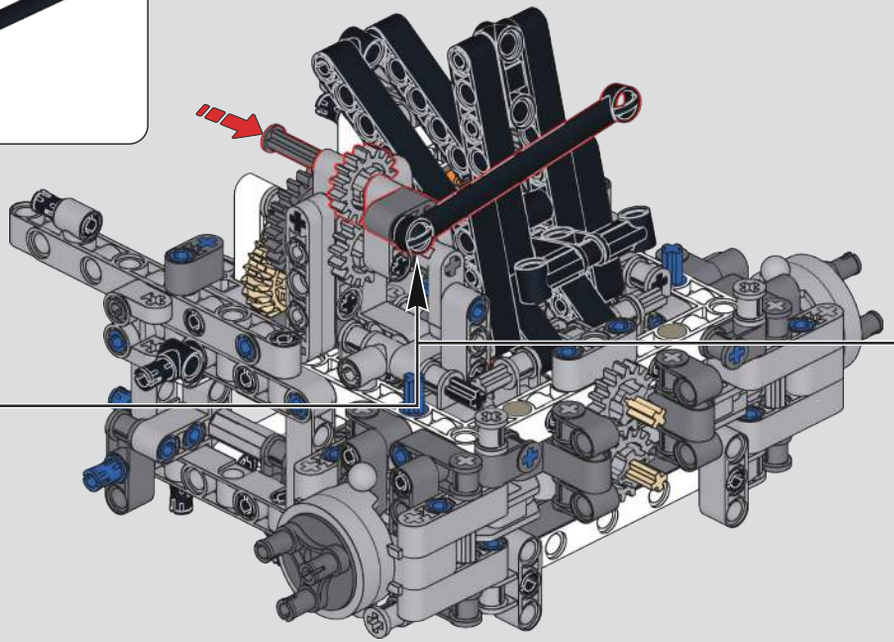

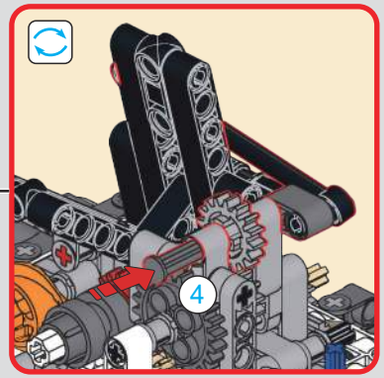

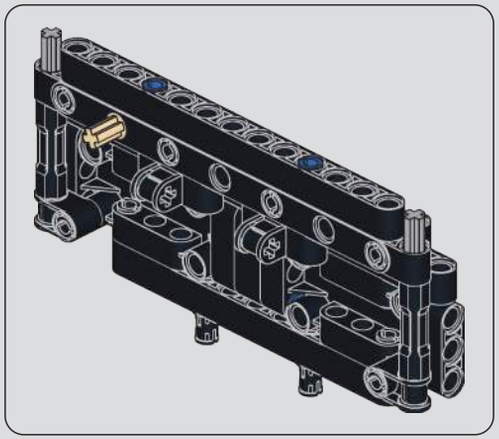

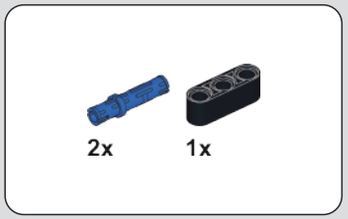

237

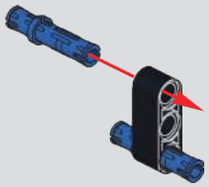

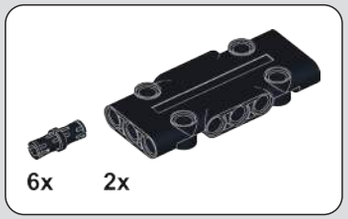

238

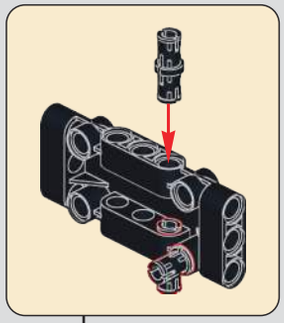

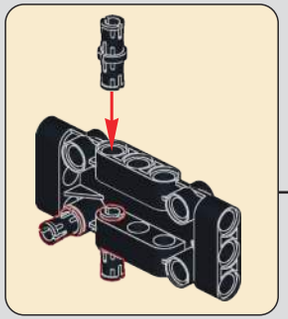

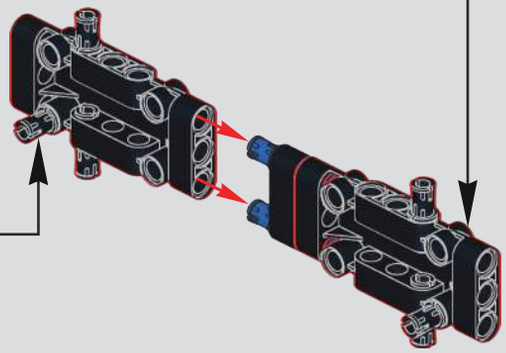

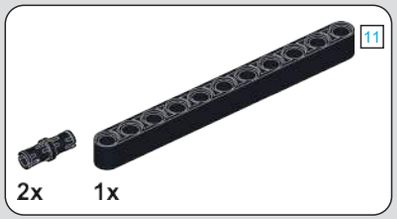

239

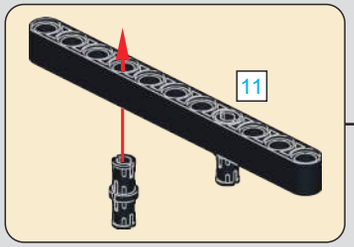

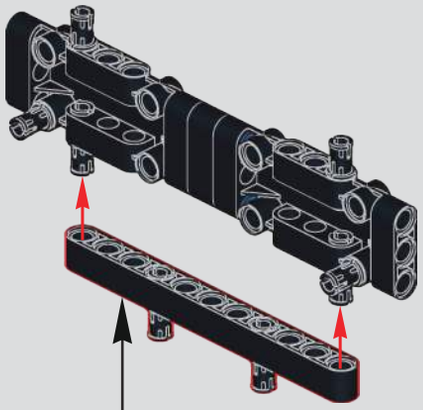

240

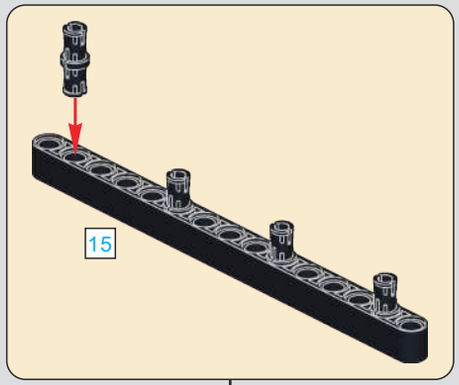

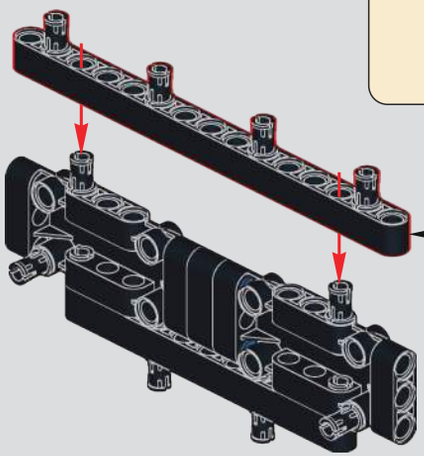

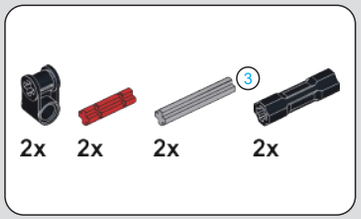

241

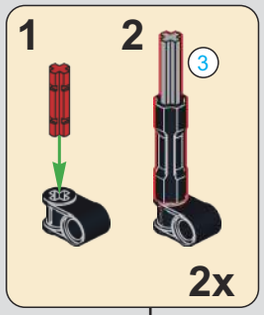

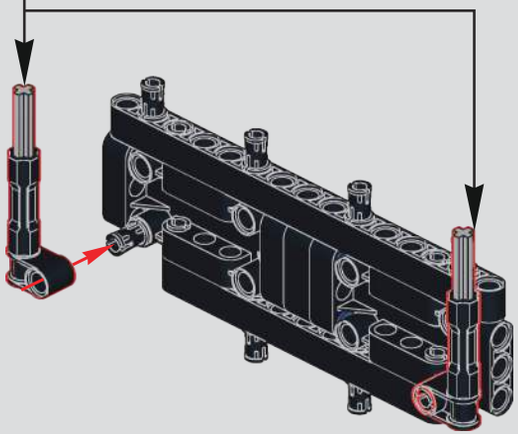

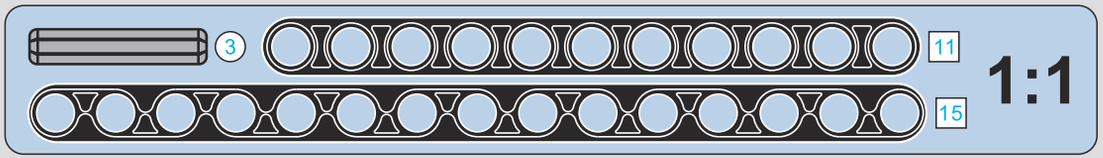

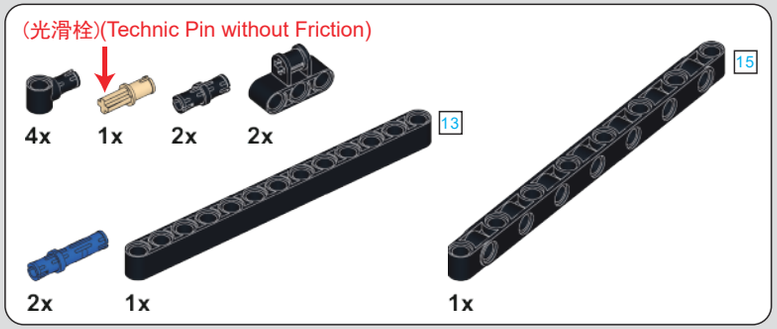
(光滑栓)(Technic Pin without Friction)
4x
1x
2x
2x
13
15
2x
1x
1x

242

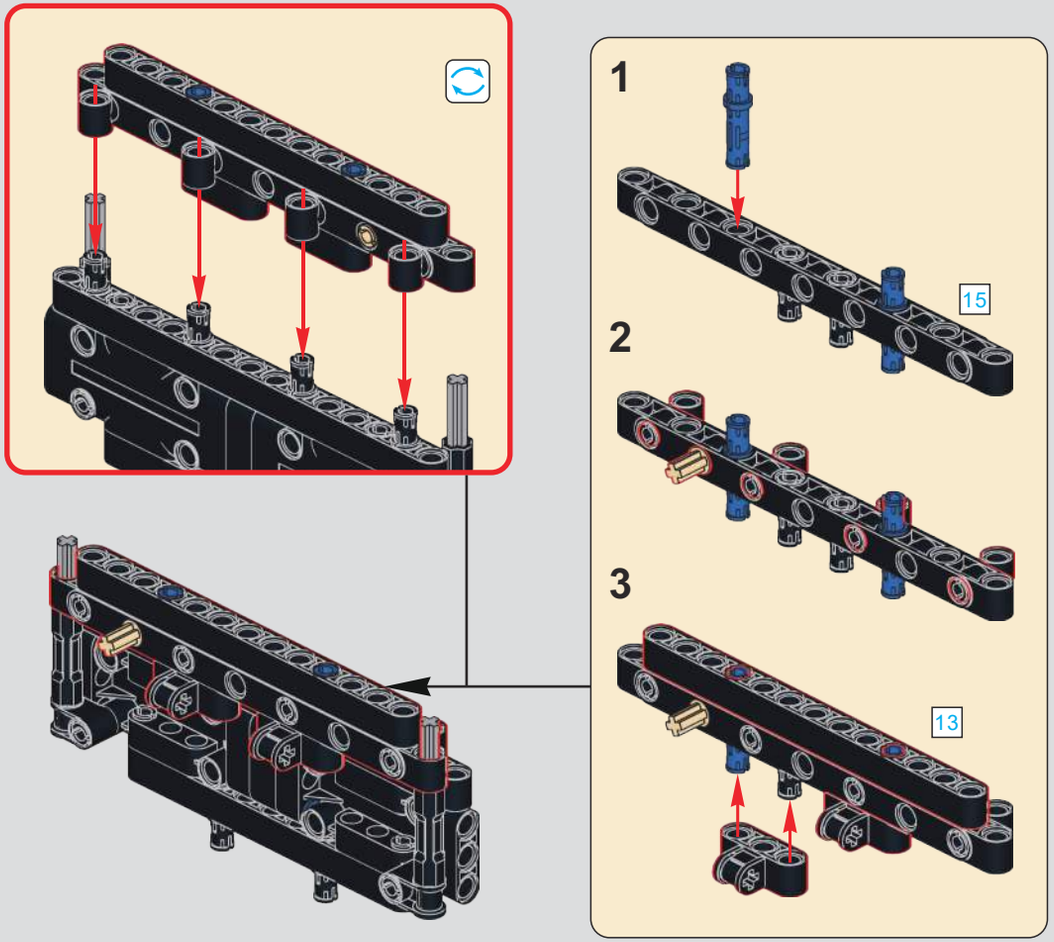
1
15
2
3
13

243

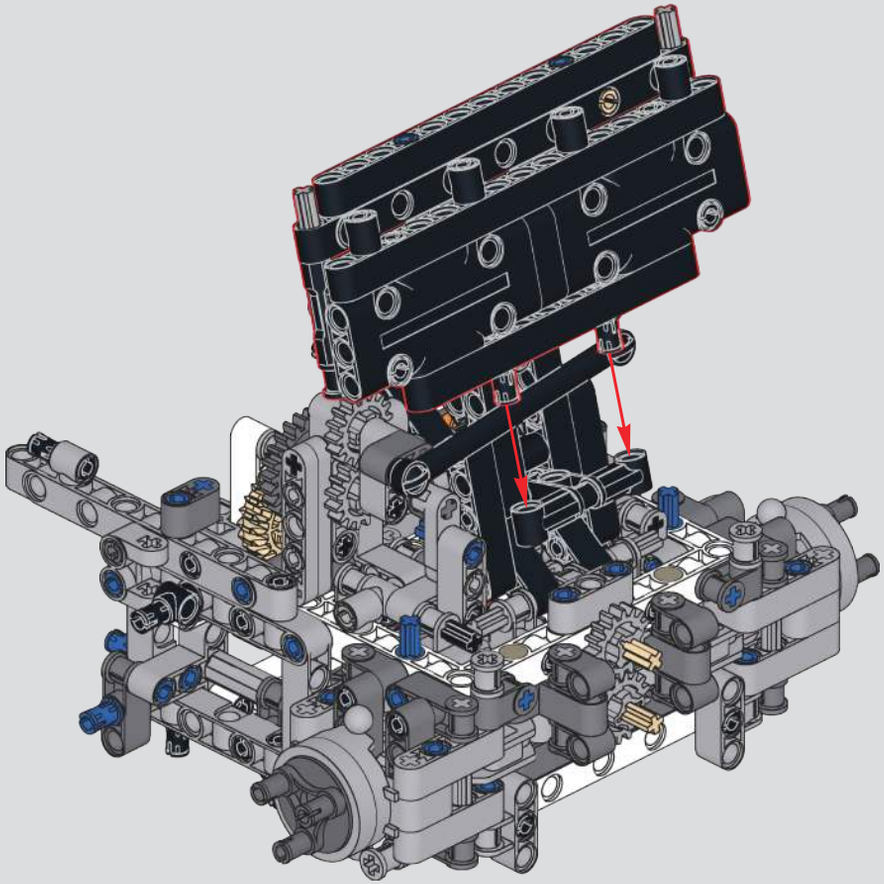

13
15
1:1

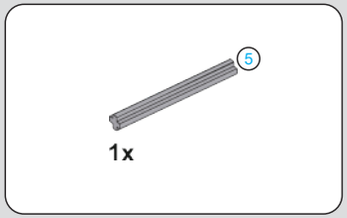
5
1x

244

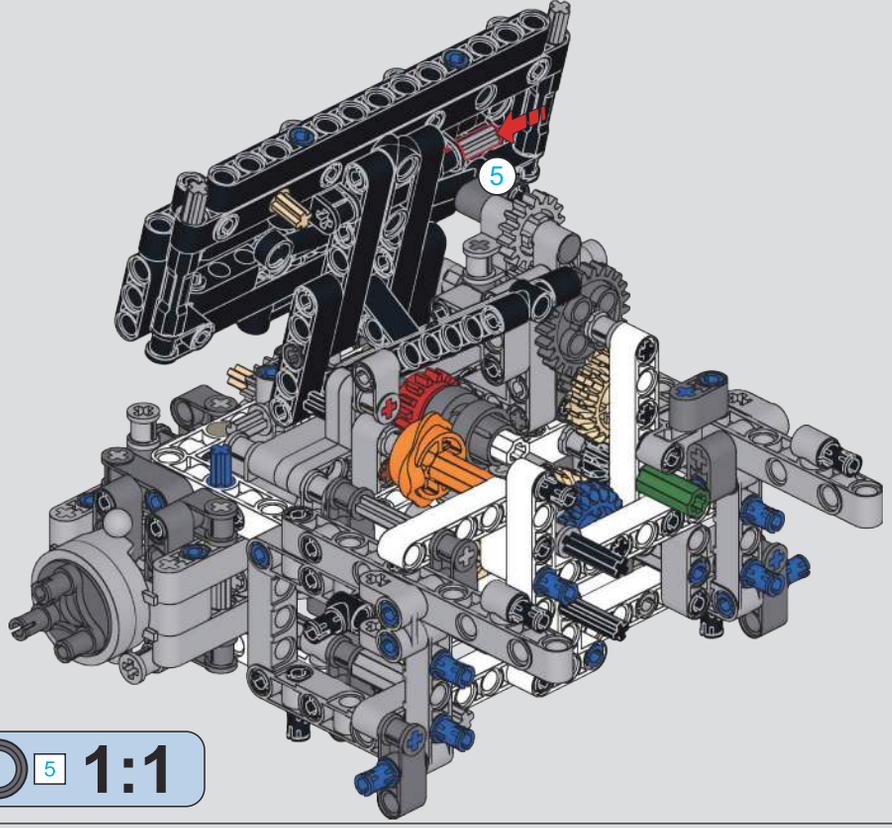
5

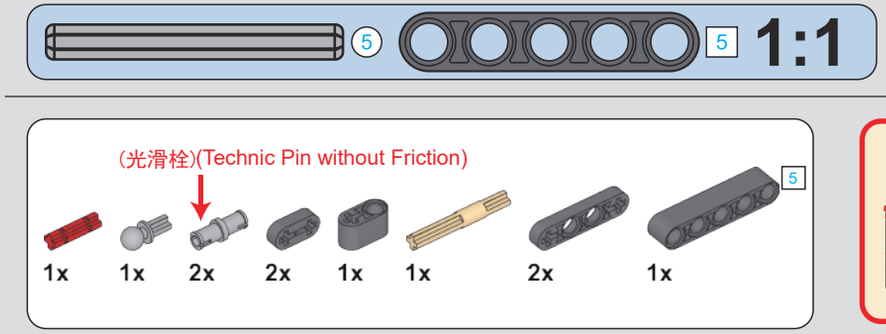
5
5
1:1

(光滑栓)(Technic Pin without Friction)
5
1x
1x
2x
2x
1x
1x
2x
1x

245

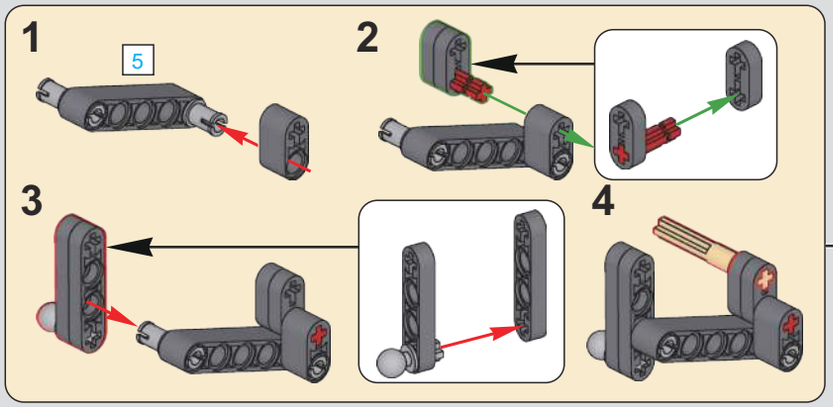
1
5
2
3
4

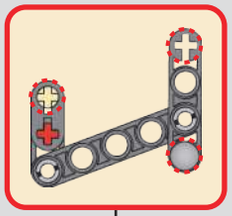

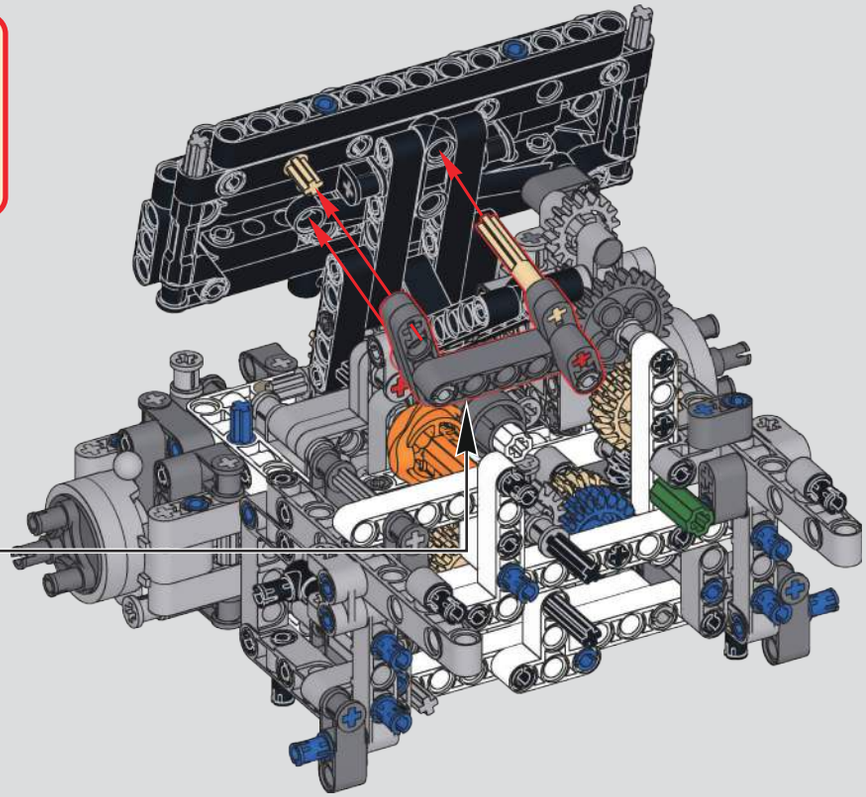

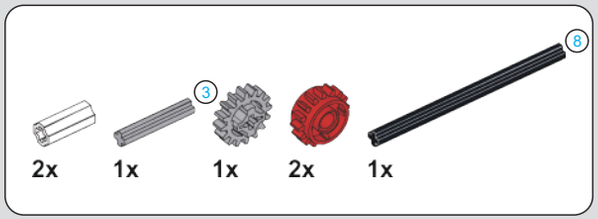

246

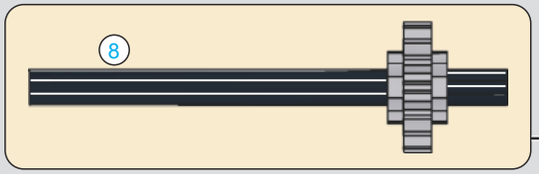

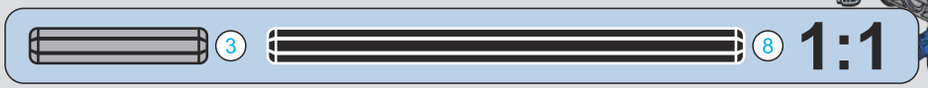

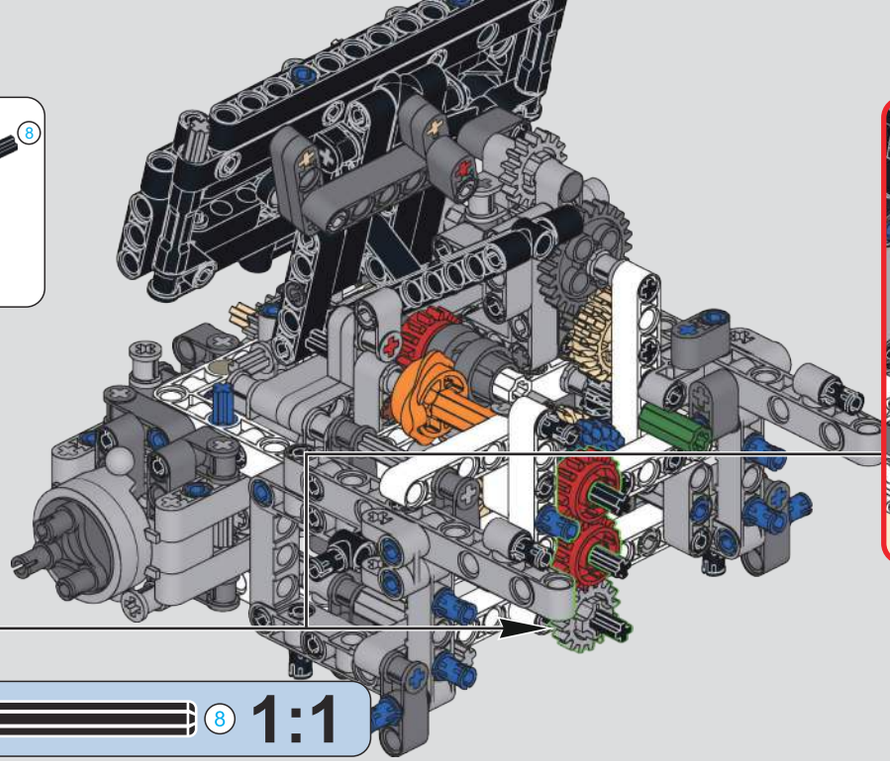

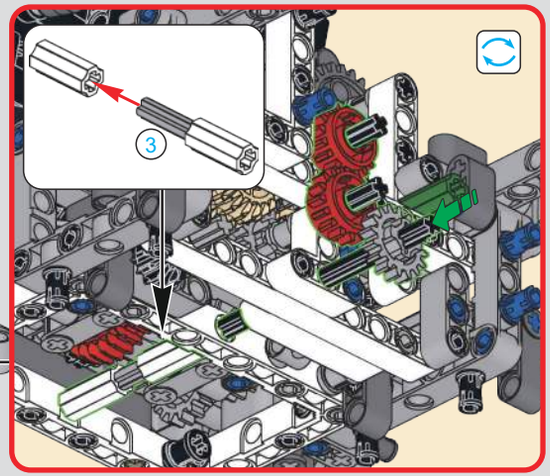

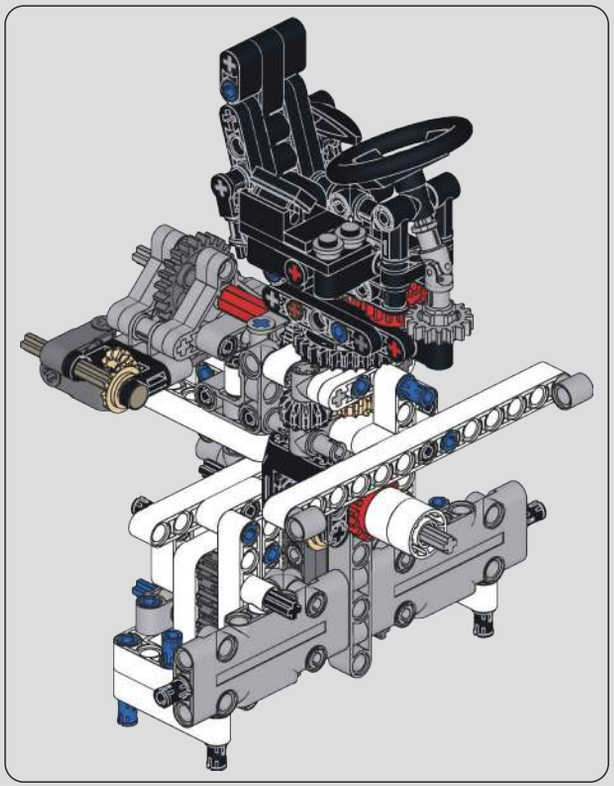

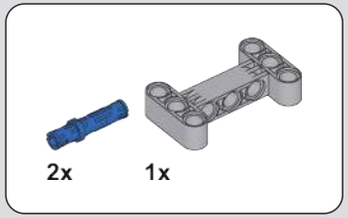

247

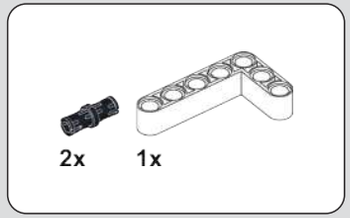

248

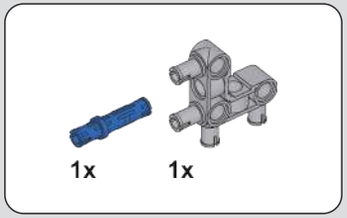

249

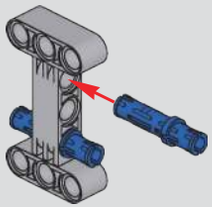

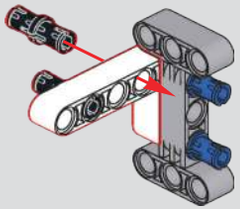

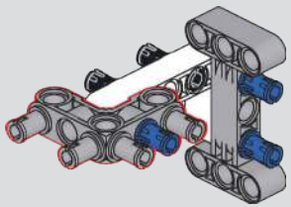

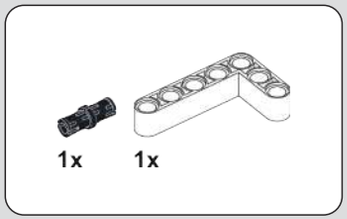

250

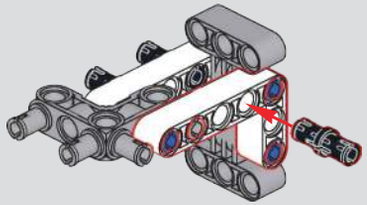

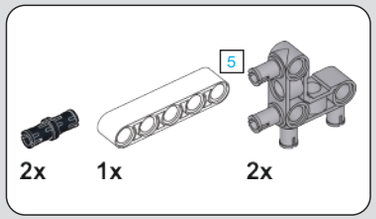

251

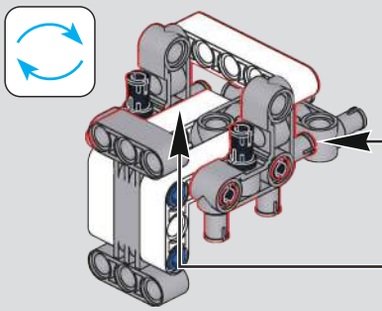

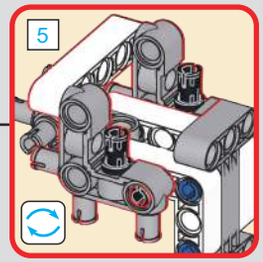

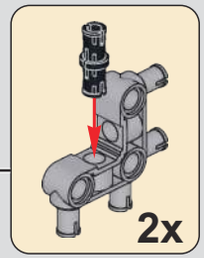

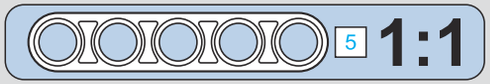

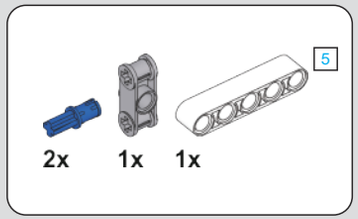

252

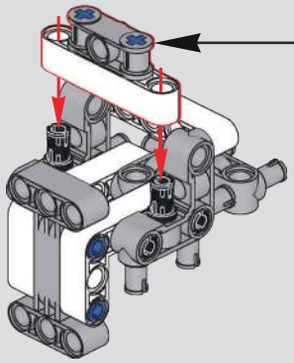

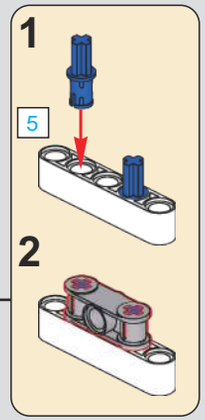

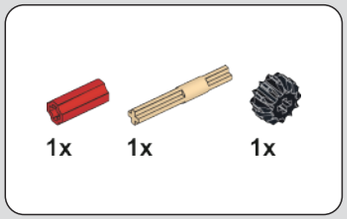

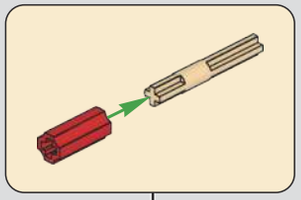

253

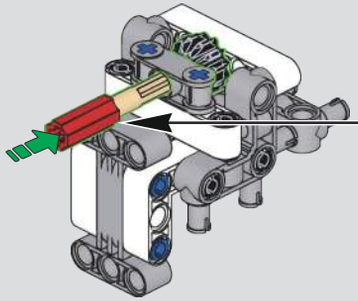

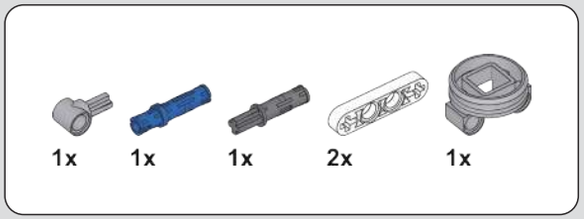

254

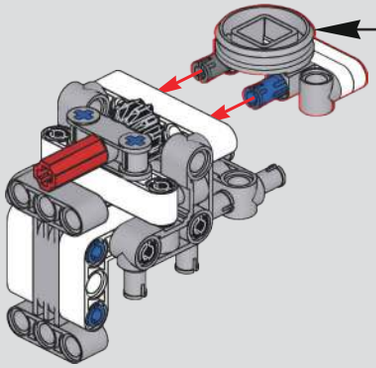

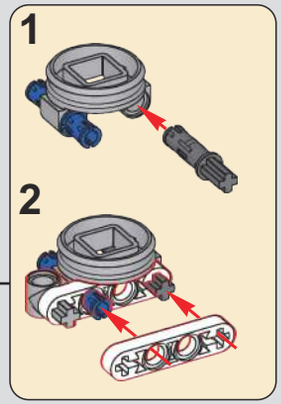

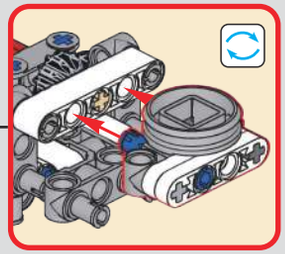

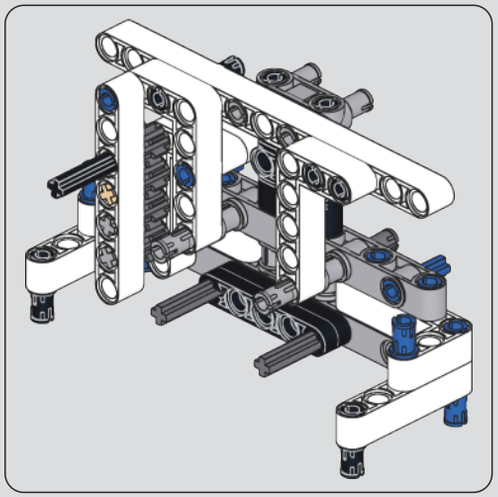

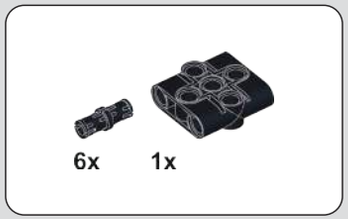

255

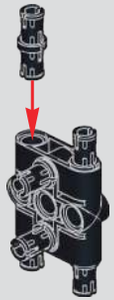

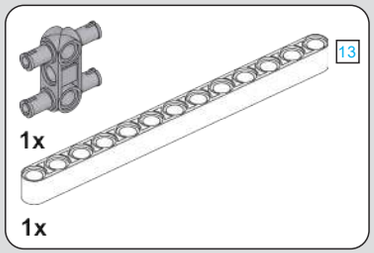

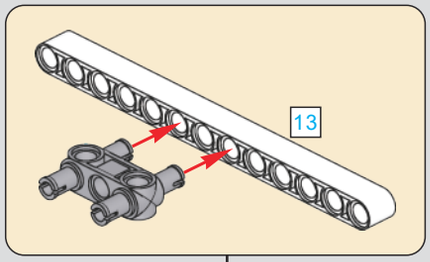

256

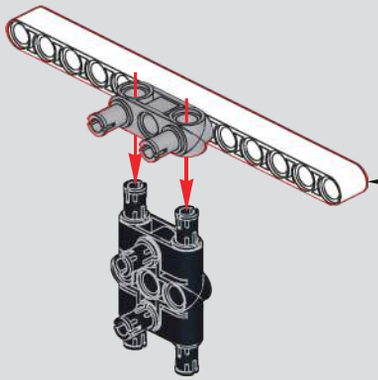

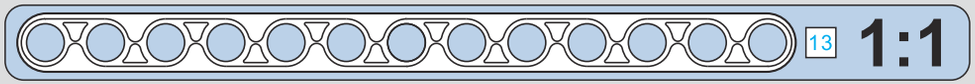

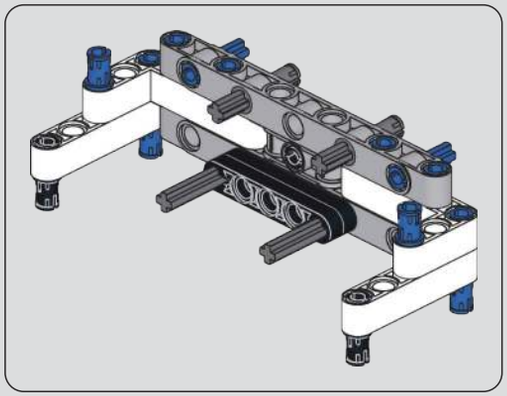

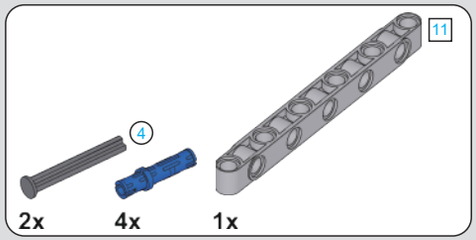

257

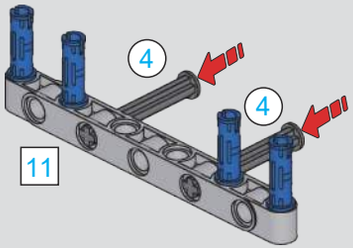

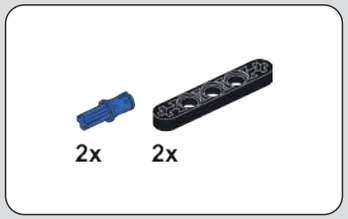

258

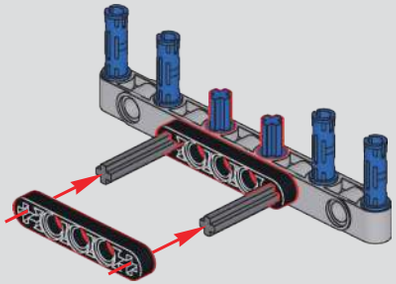

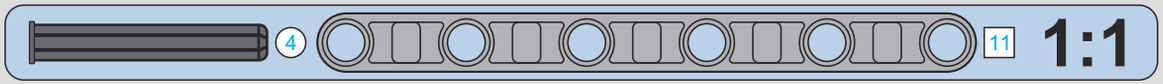

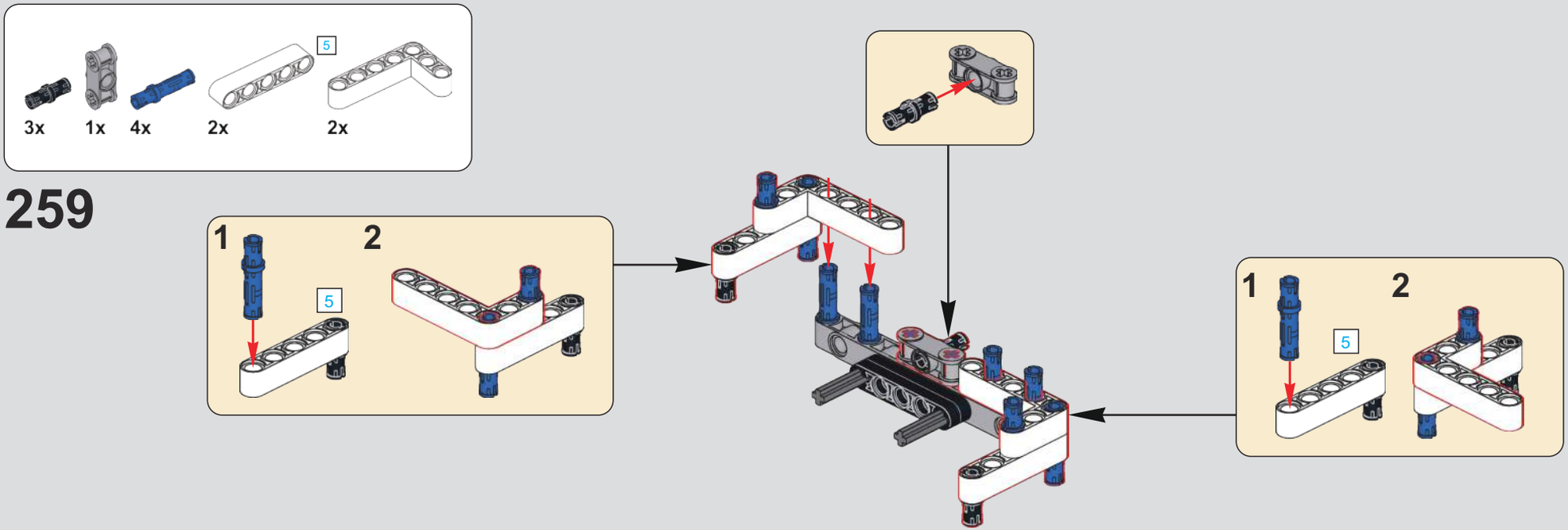
3x
1x
4x
2x
5
2x
259
1
2
5
1
2
5

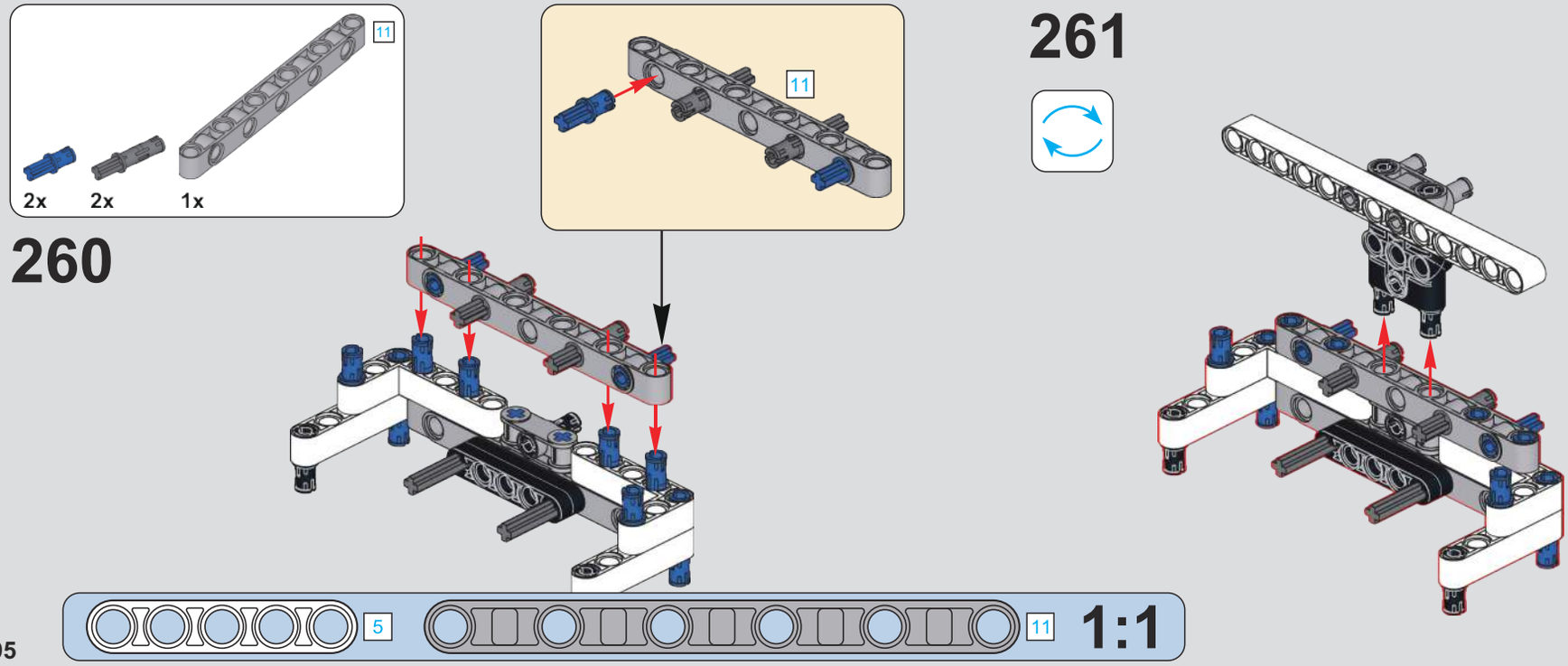
11
2x
2x
1x
260
11
261
5
11
1:1

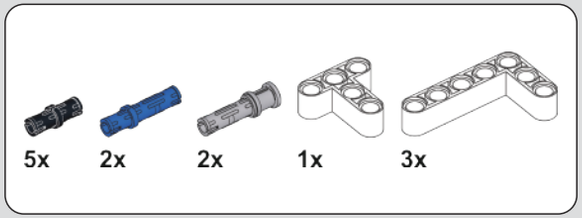

262

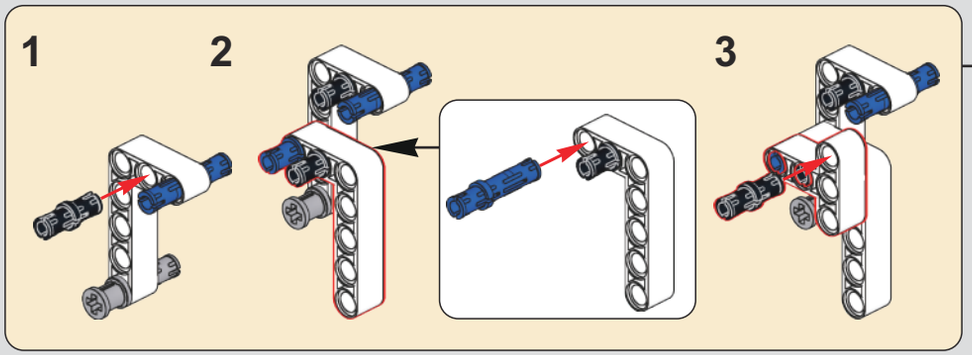

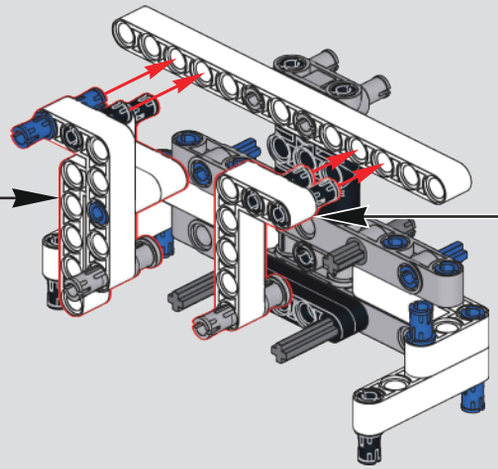

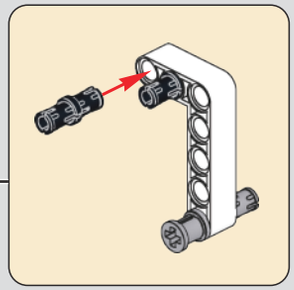

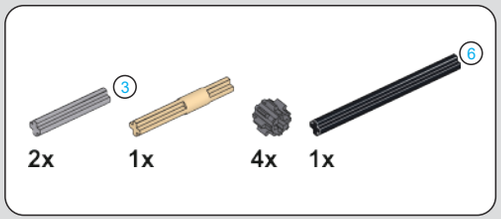

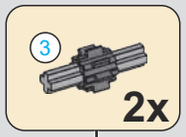

263

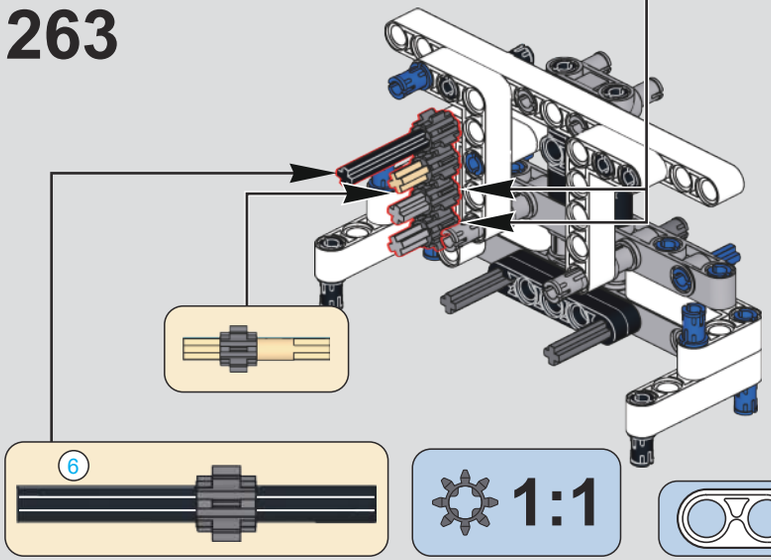

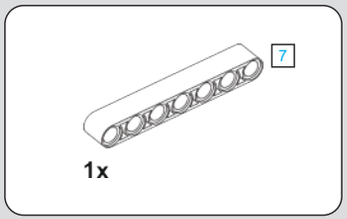

264

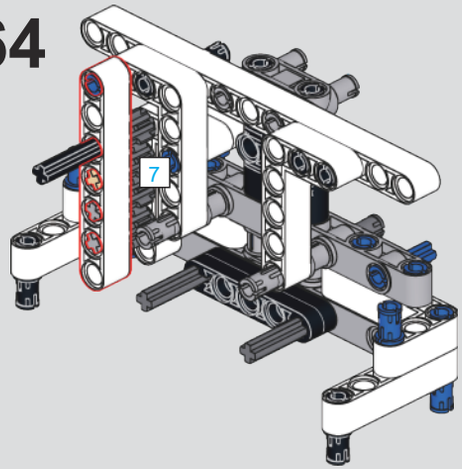

265

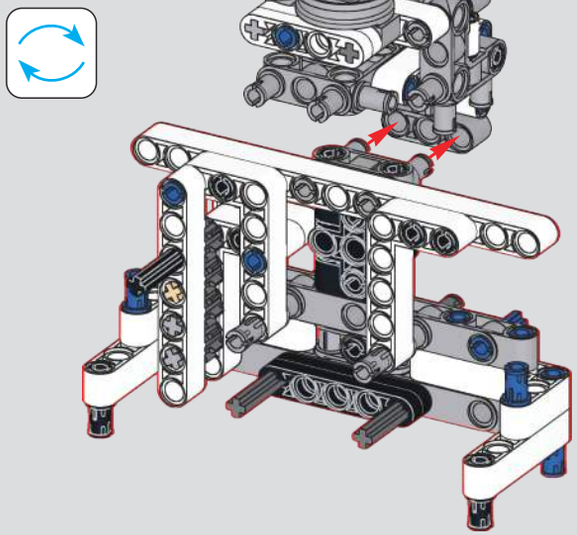

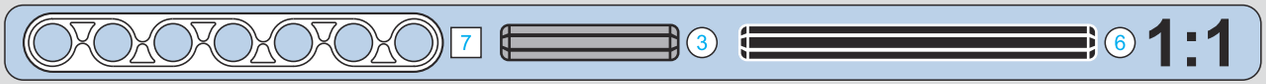

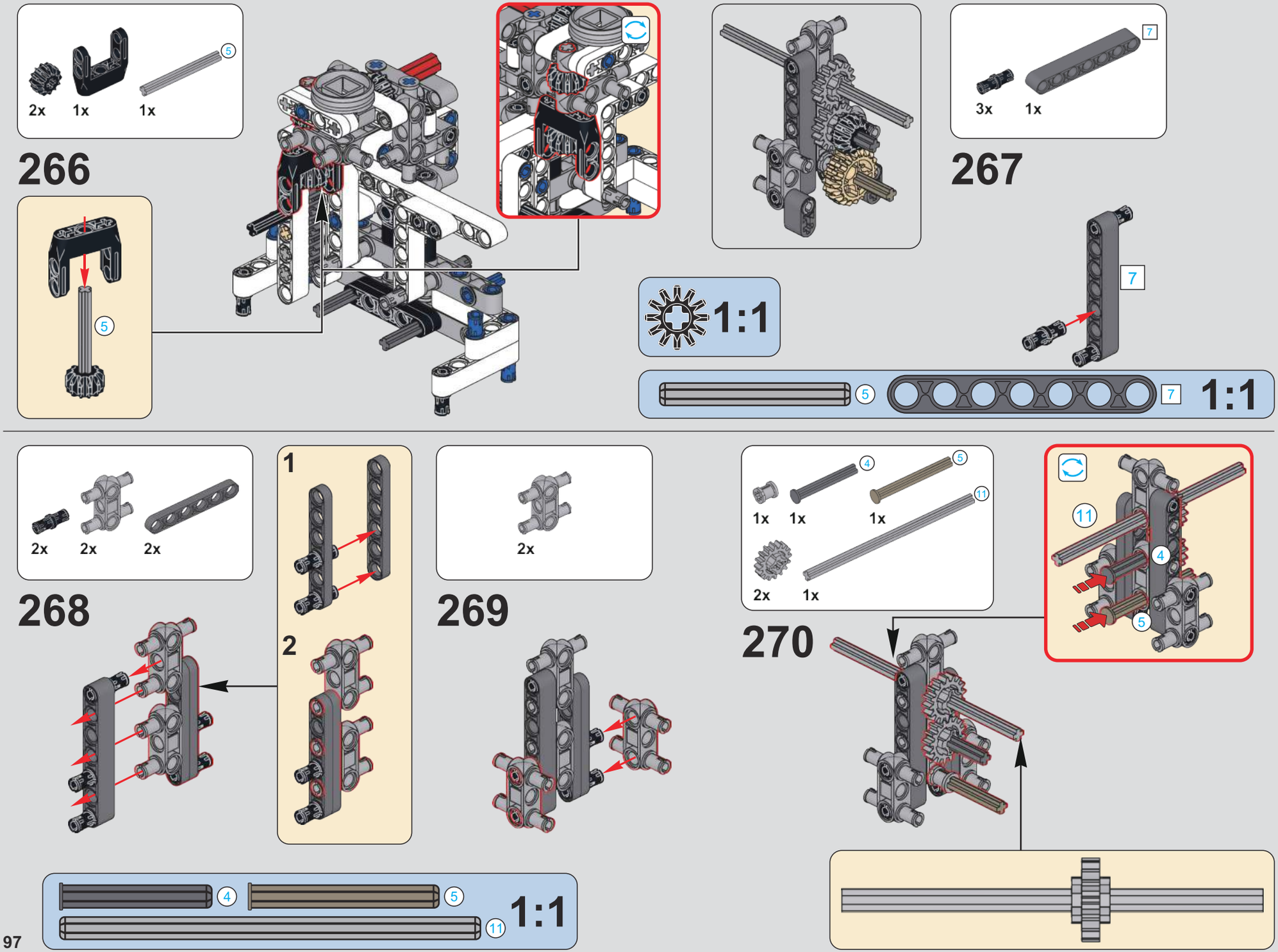
2x
1x
1x
5
266
5
1:1
3x
1x
7
267
7
5
7
1:1
2x
2x
2x
268
1
2
2x
269
1x
1x
1x
2x
1x
4
5
11
270
11
4
5
4
5
11
1:1

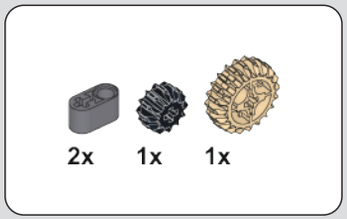

271

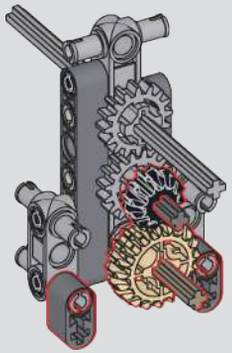

1:1

272

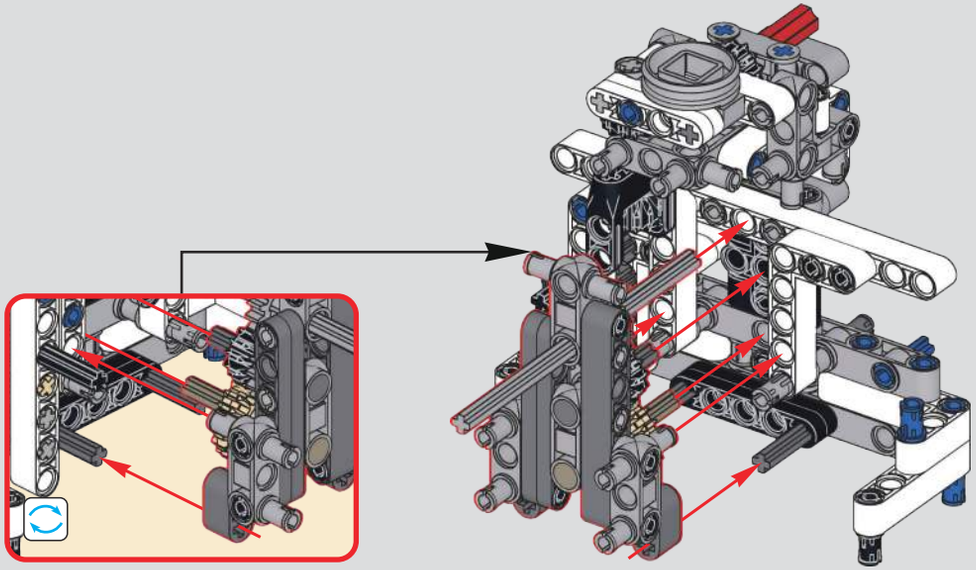

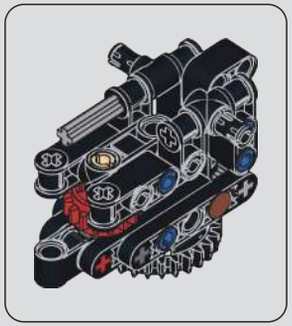

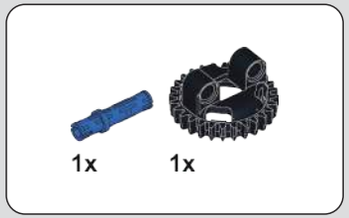

273

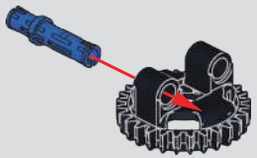

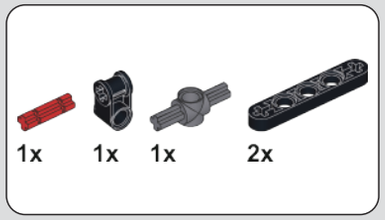

274

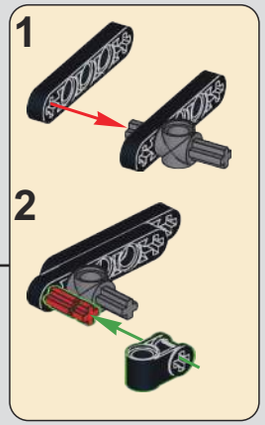

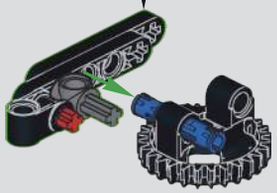

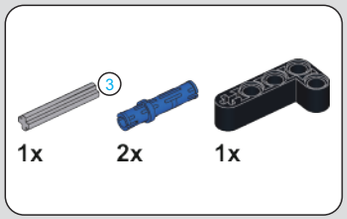

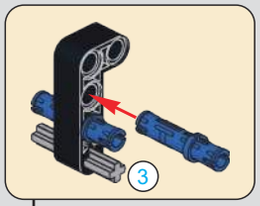

275

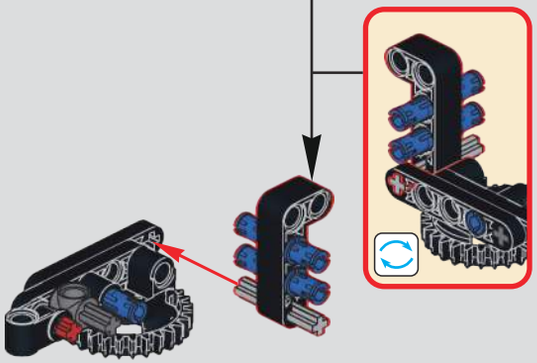

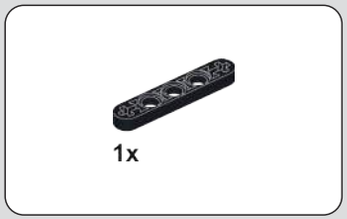

276

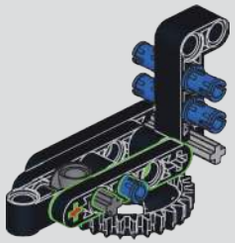

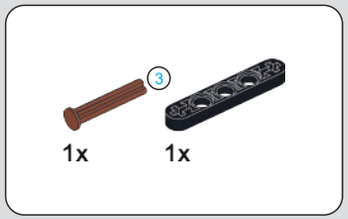

277

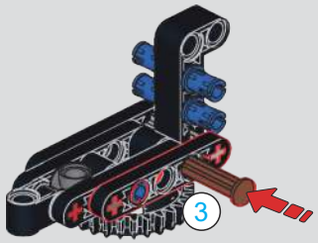

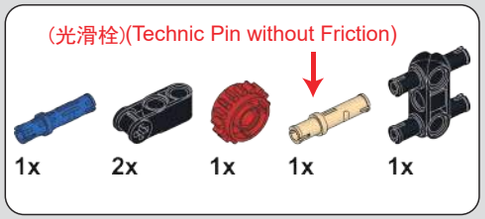

278

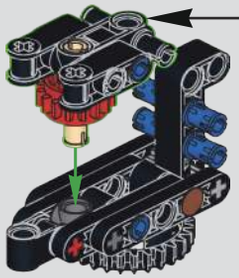

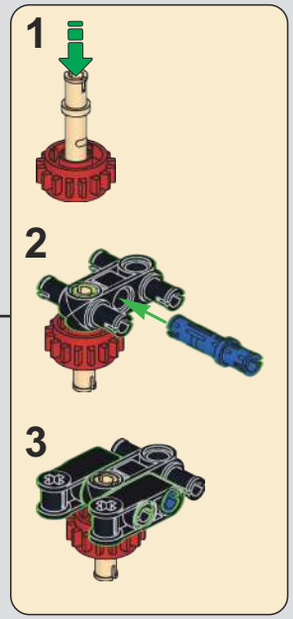

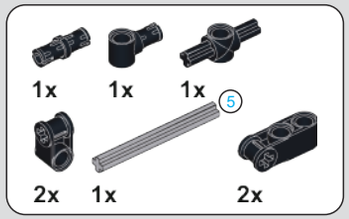

279

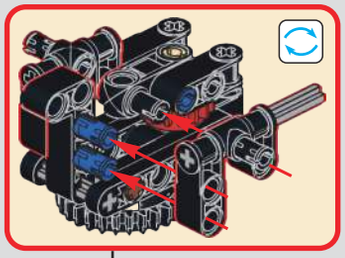

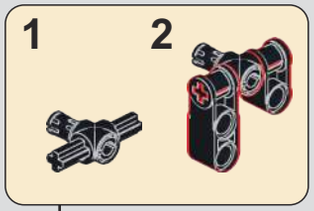

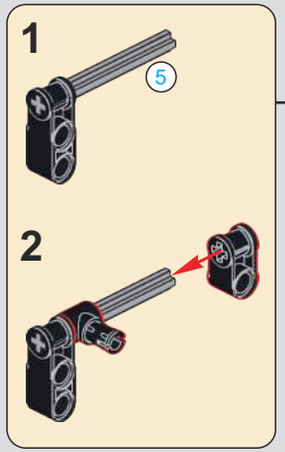

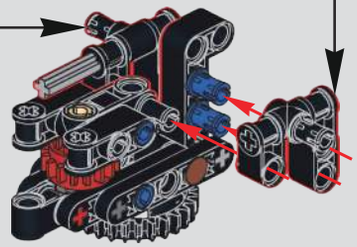

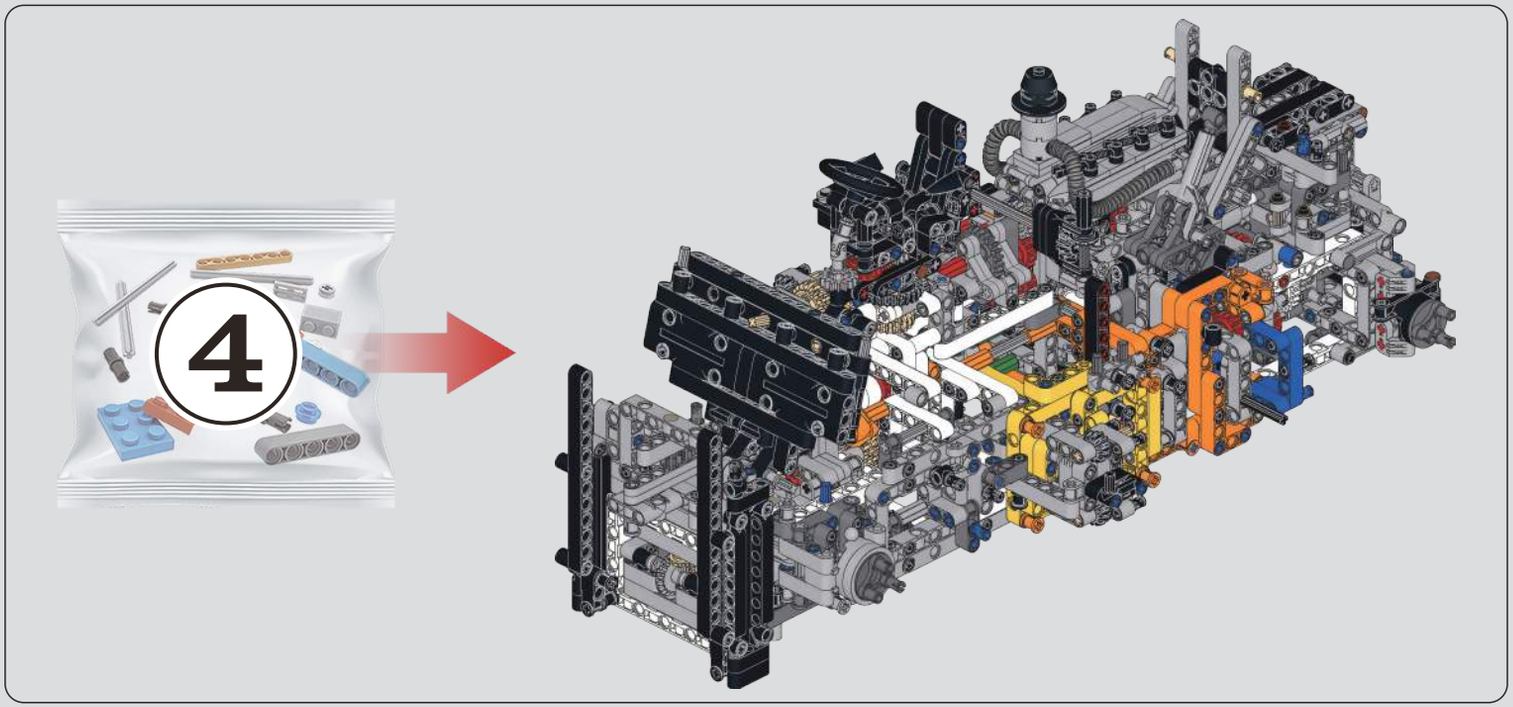

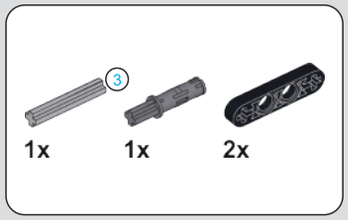

280

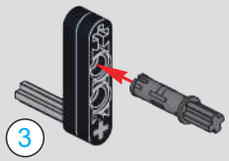

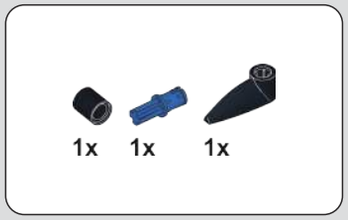

281

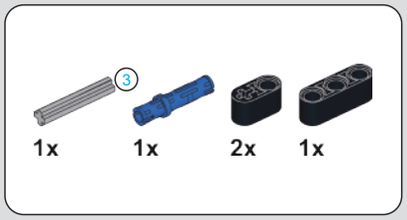

282

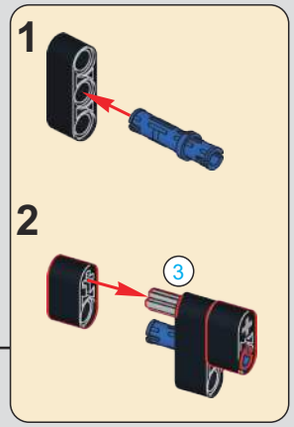

283

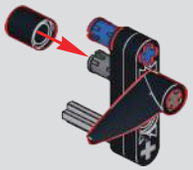

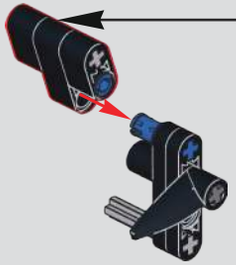

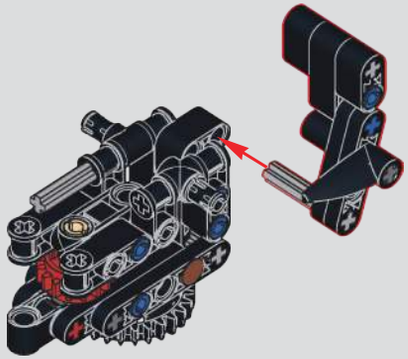

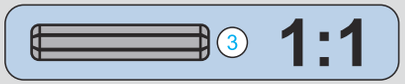

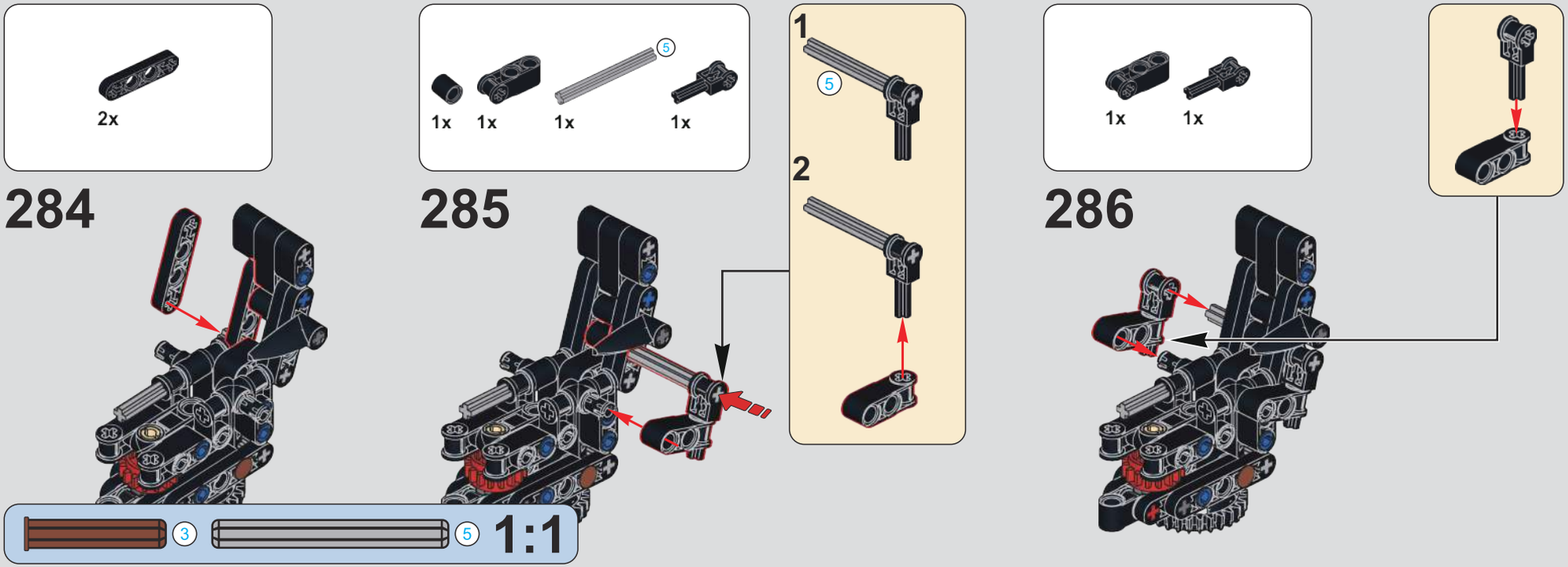
2x
284
1x 1x 1x 1x
5
285
1
2
1x 1x
286
3
5
1:1

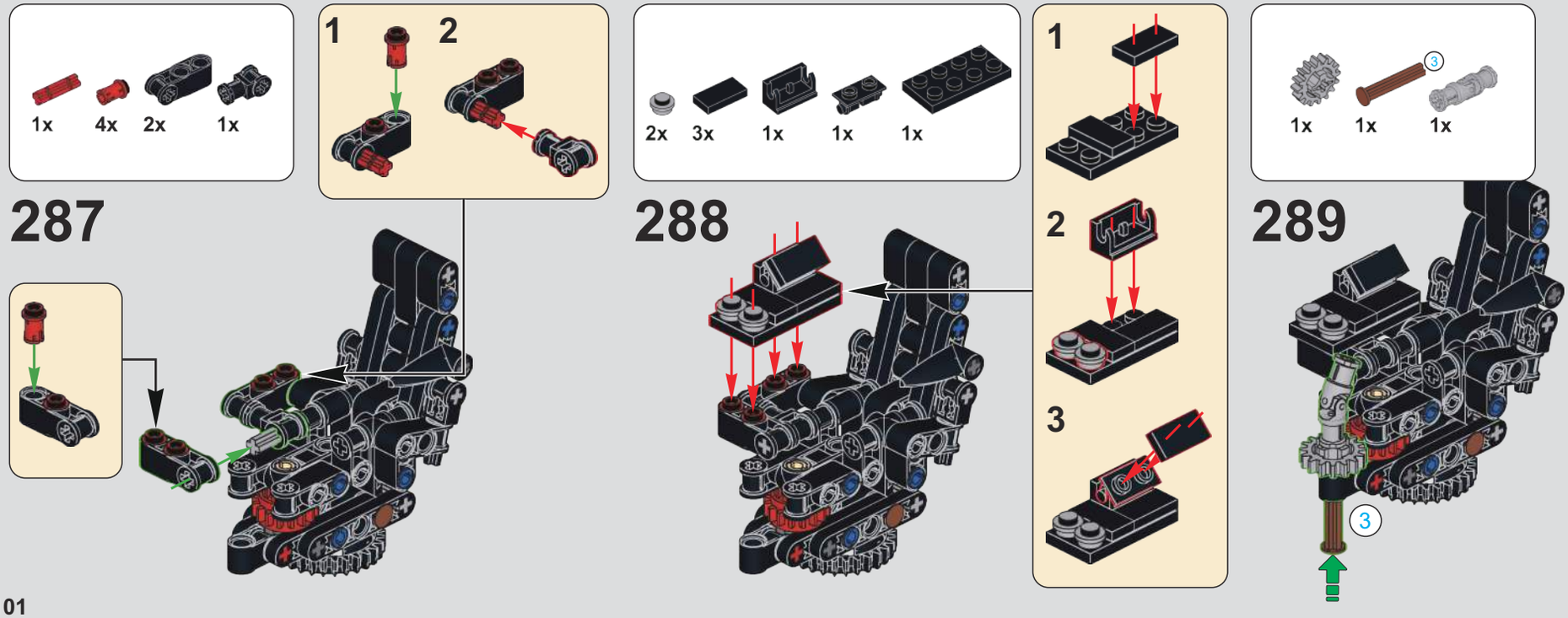
1x 4x 2x 1x
287
1
2
2x 3x 1x 1x 1x
288
1
2
3
1x 1x 1x
3
289

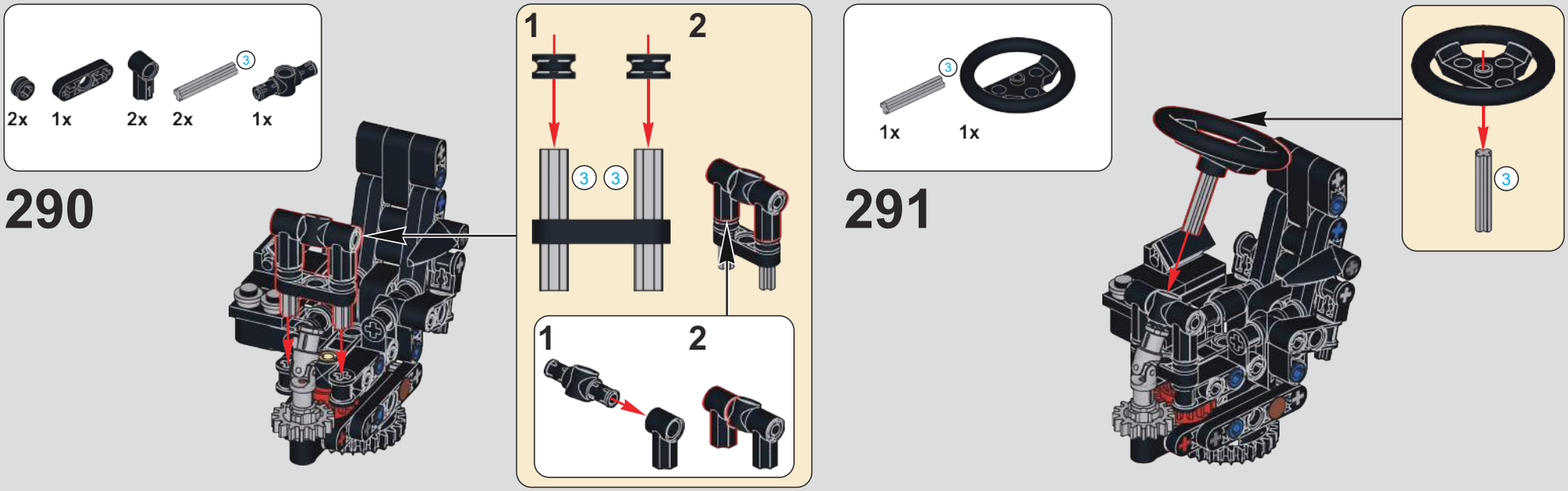
2x 1x 2x 2x 1x
290
1 2
1 2
1x 1x
291

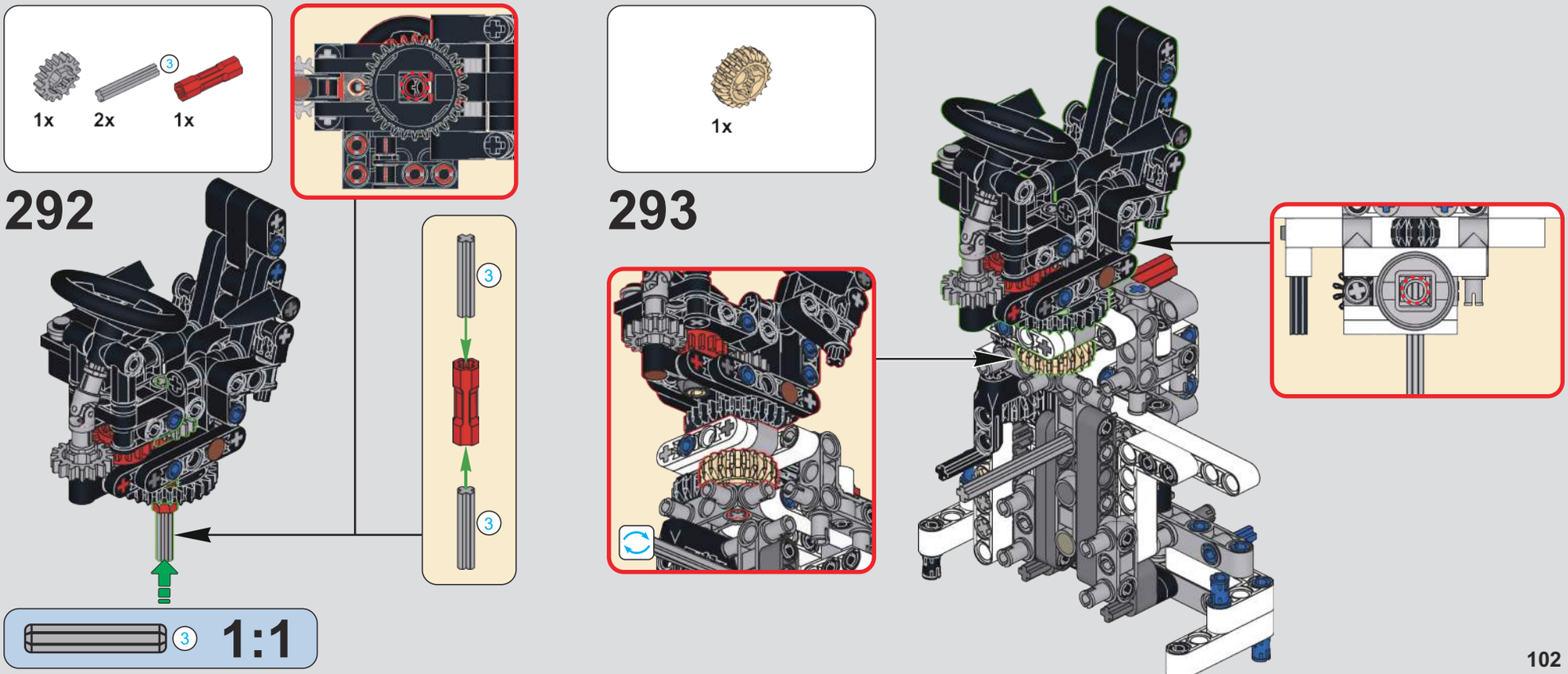
1x 2x 1x
292
1:1
1x
293

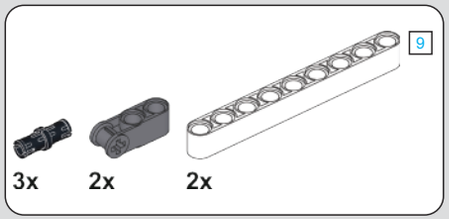

294

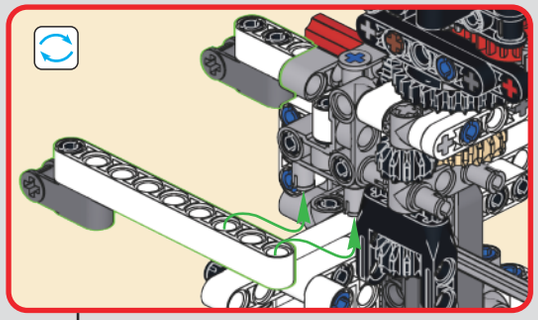

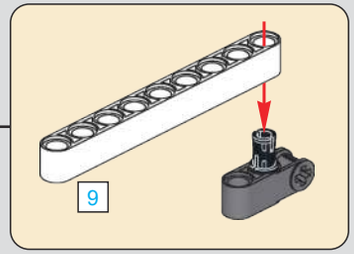

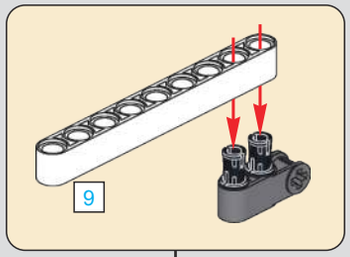

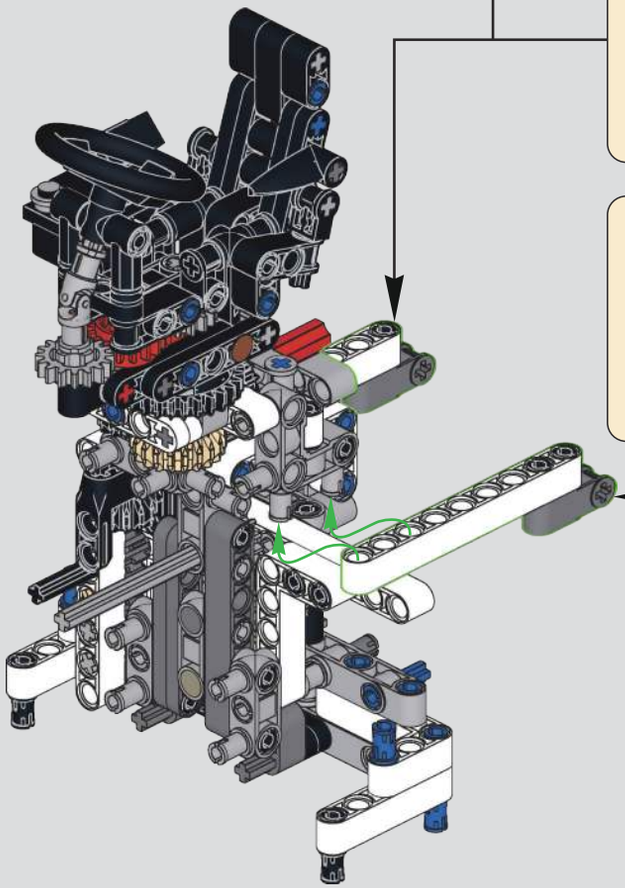

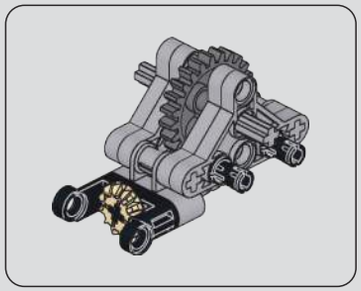

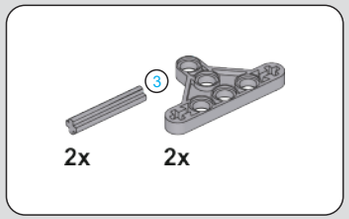

295

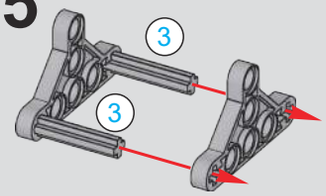

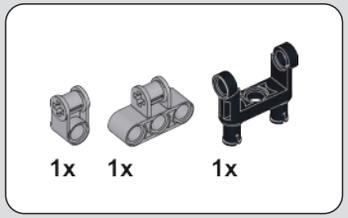

296

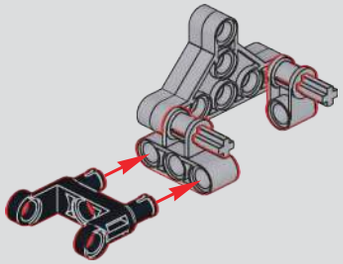

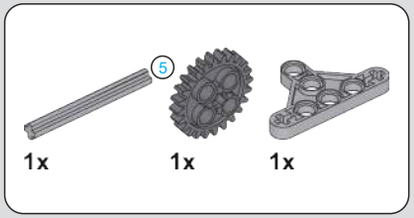

297

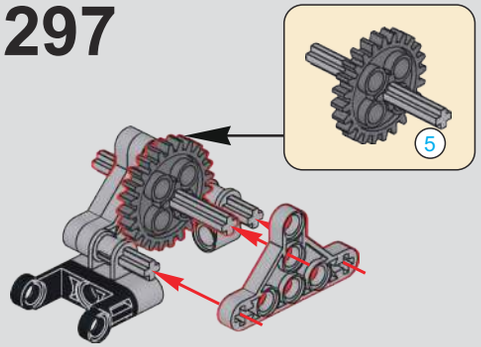

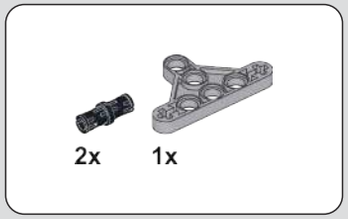

298

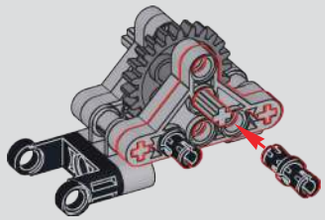

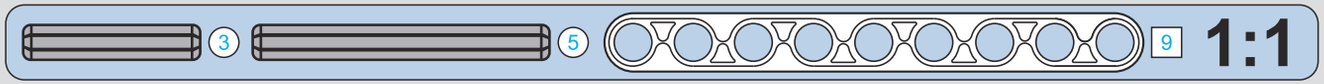

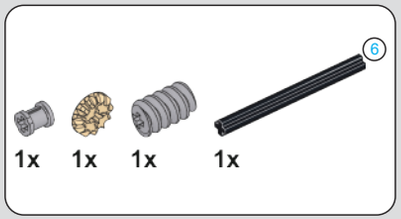

299

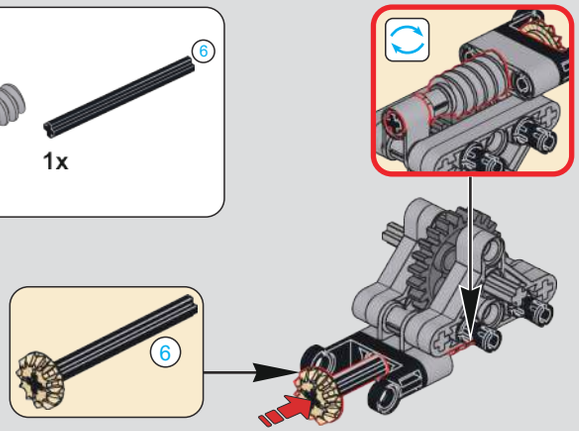

300

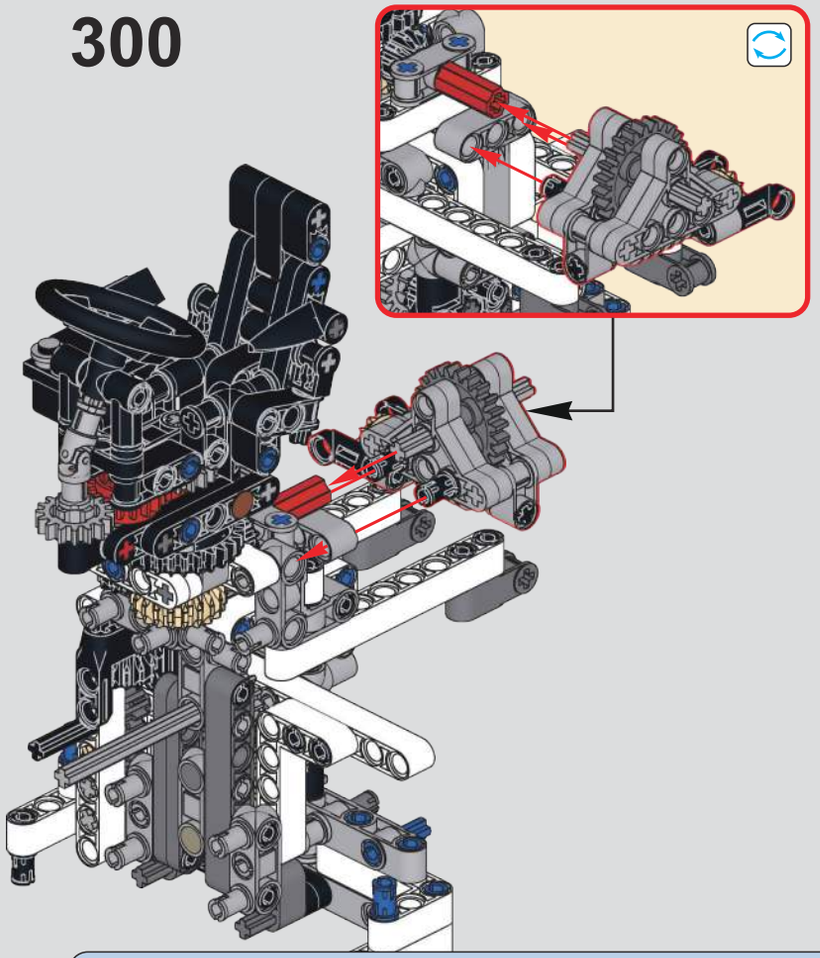

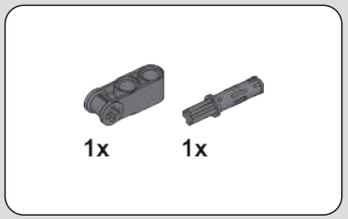

301

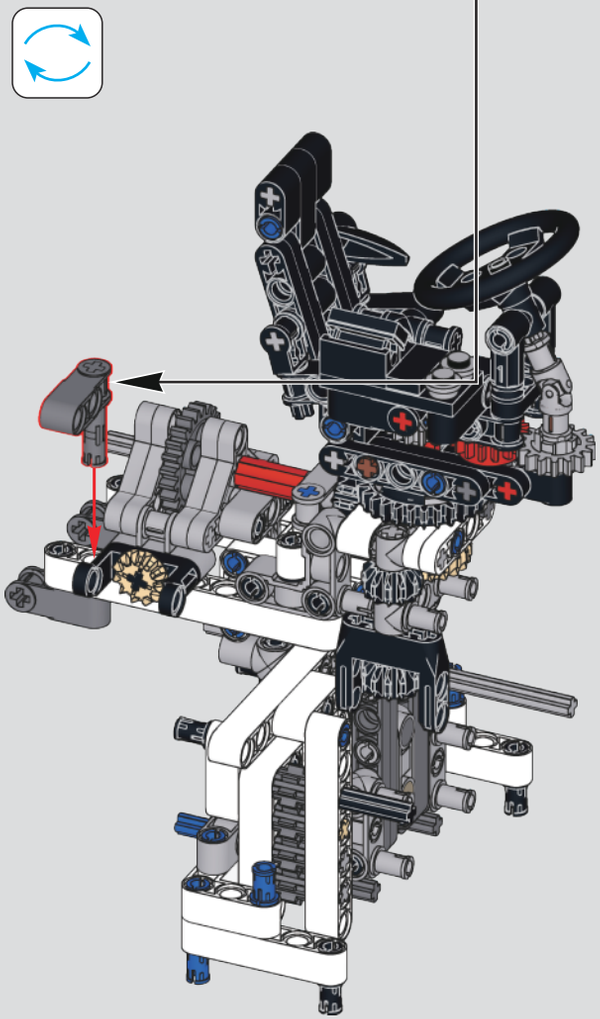

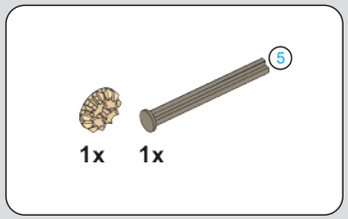

302

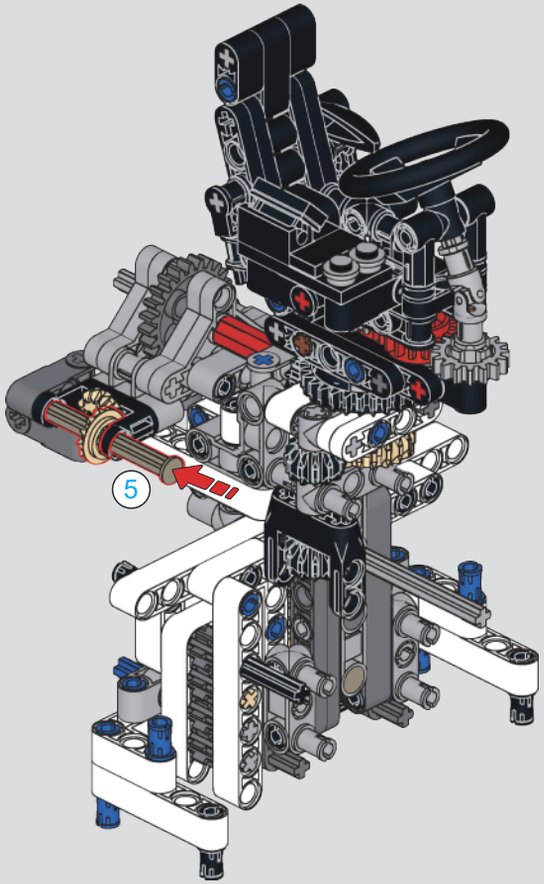

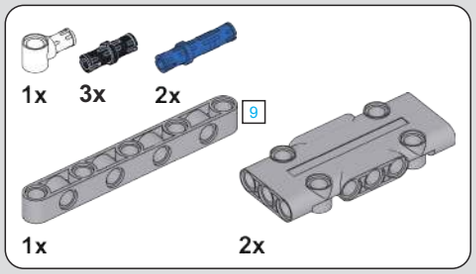

303

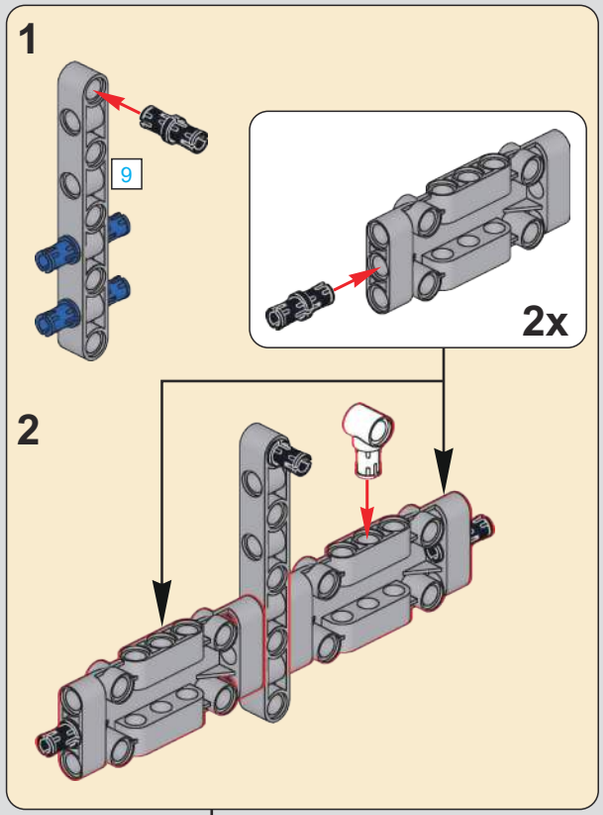

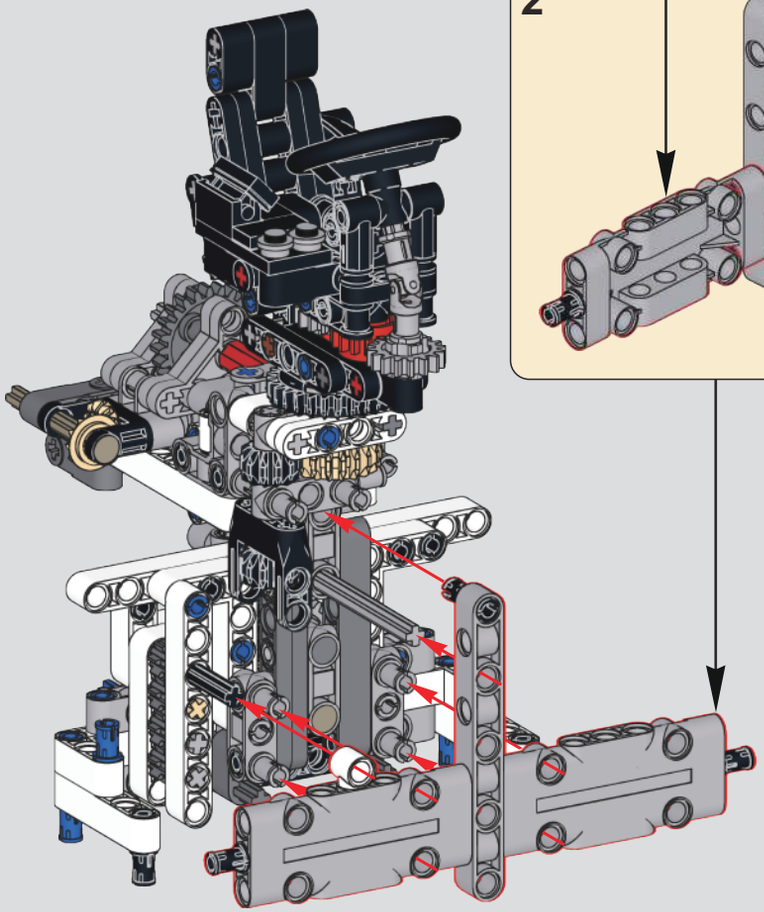

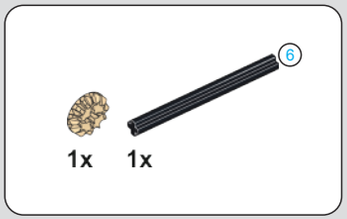

304

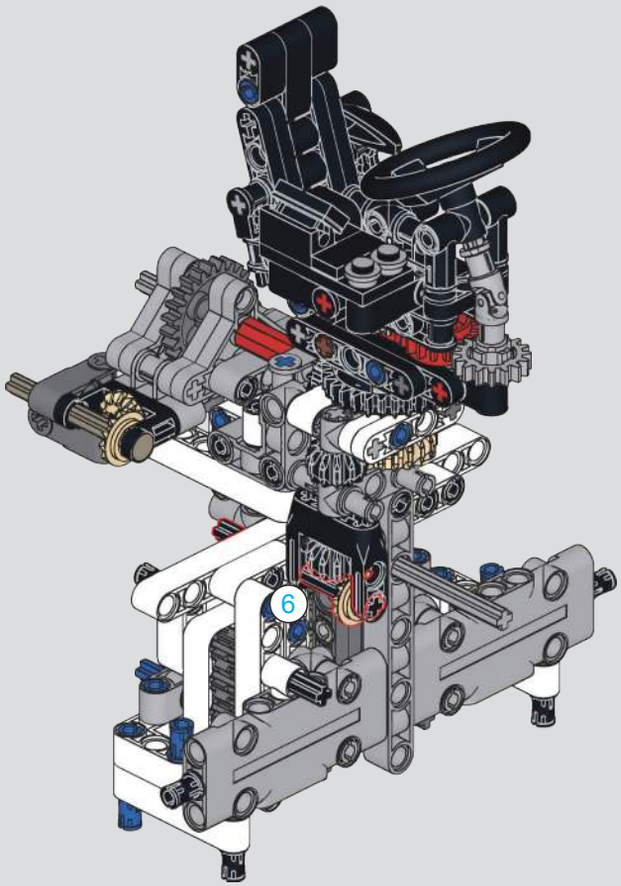

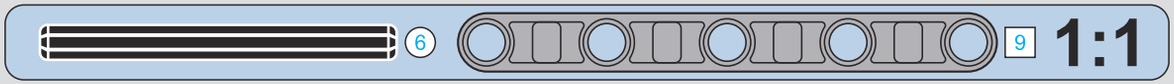

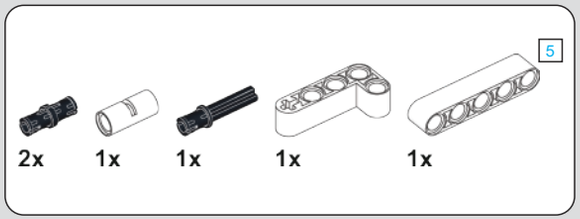

305

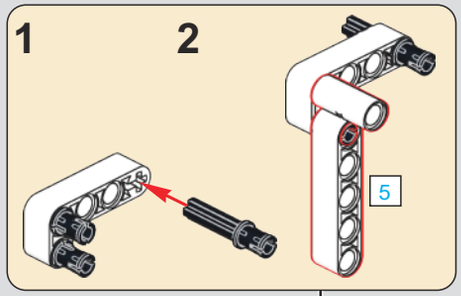

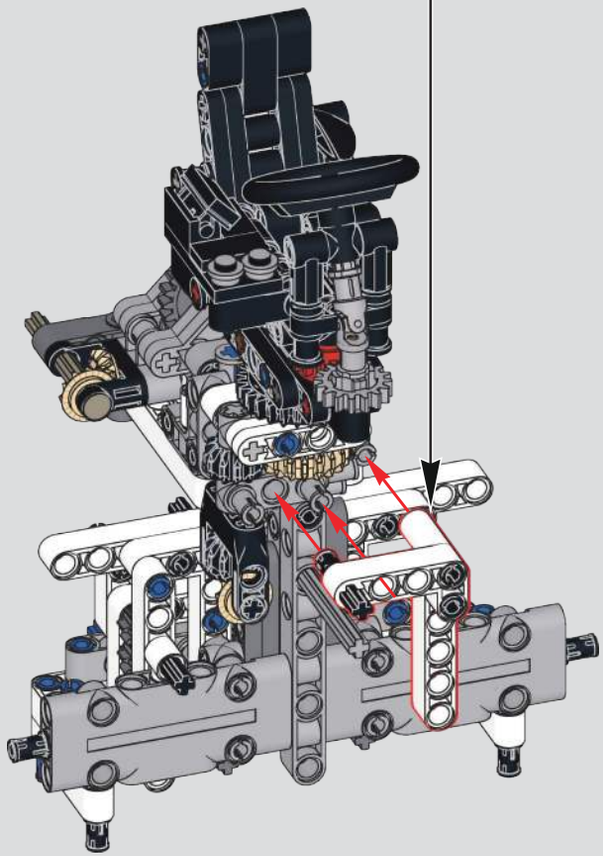

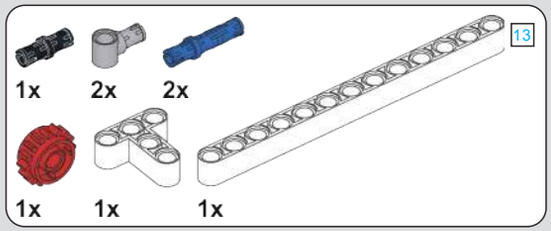

306

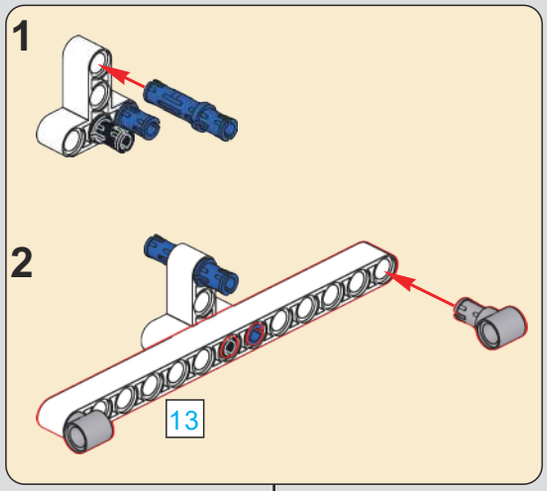

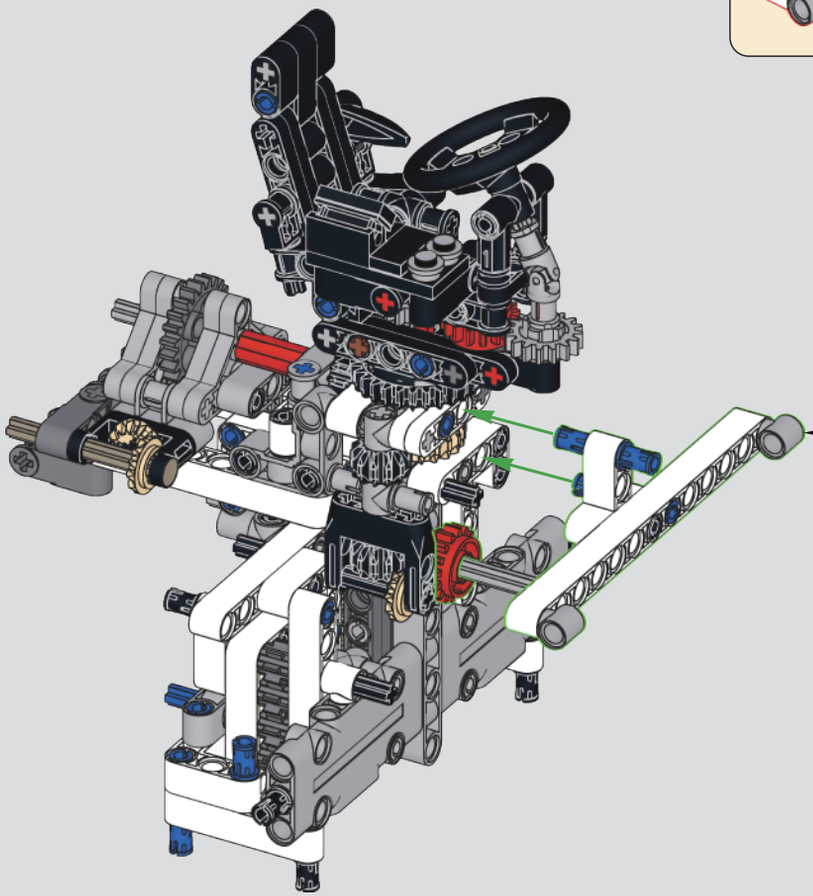

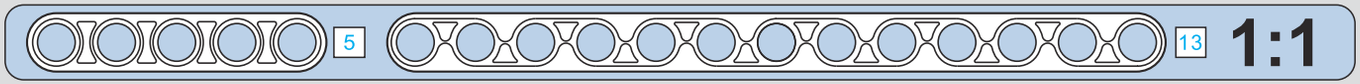

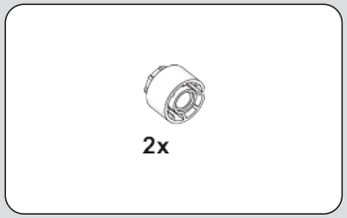

307

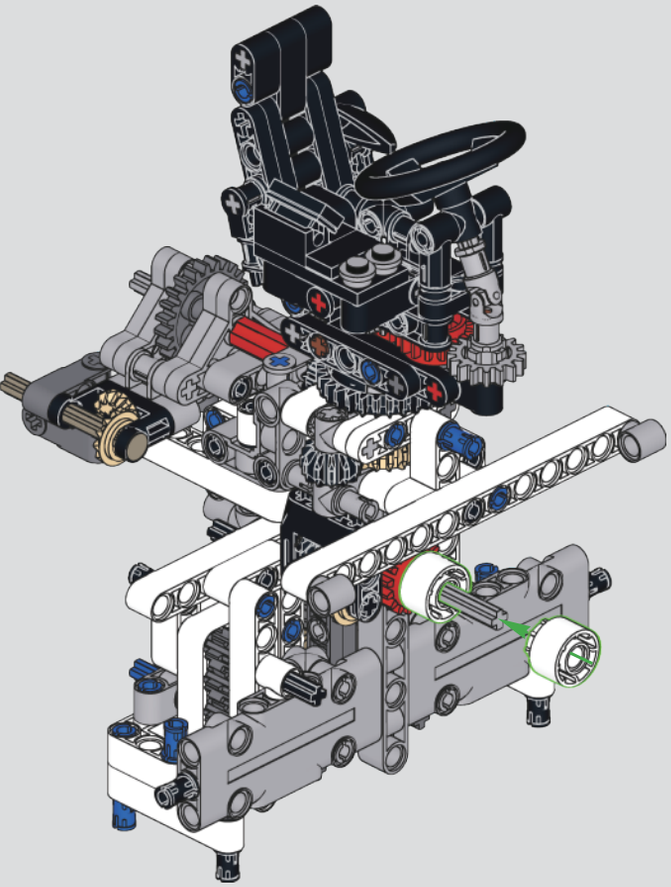

308

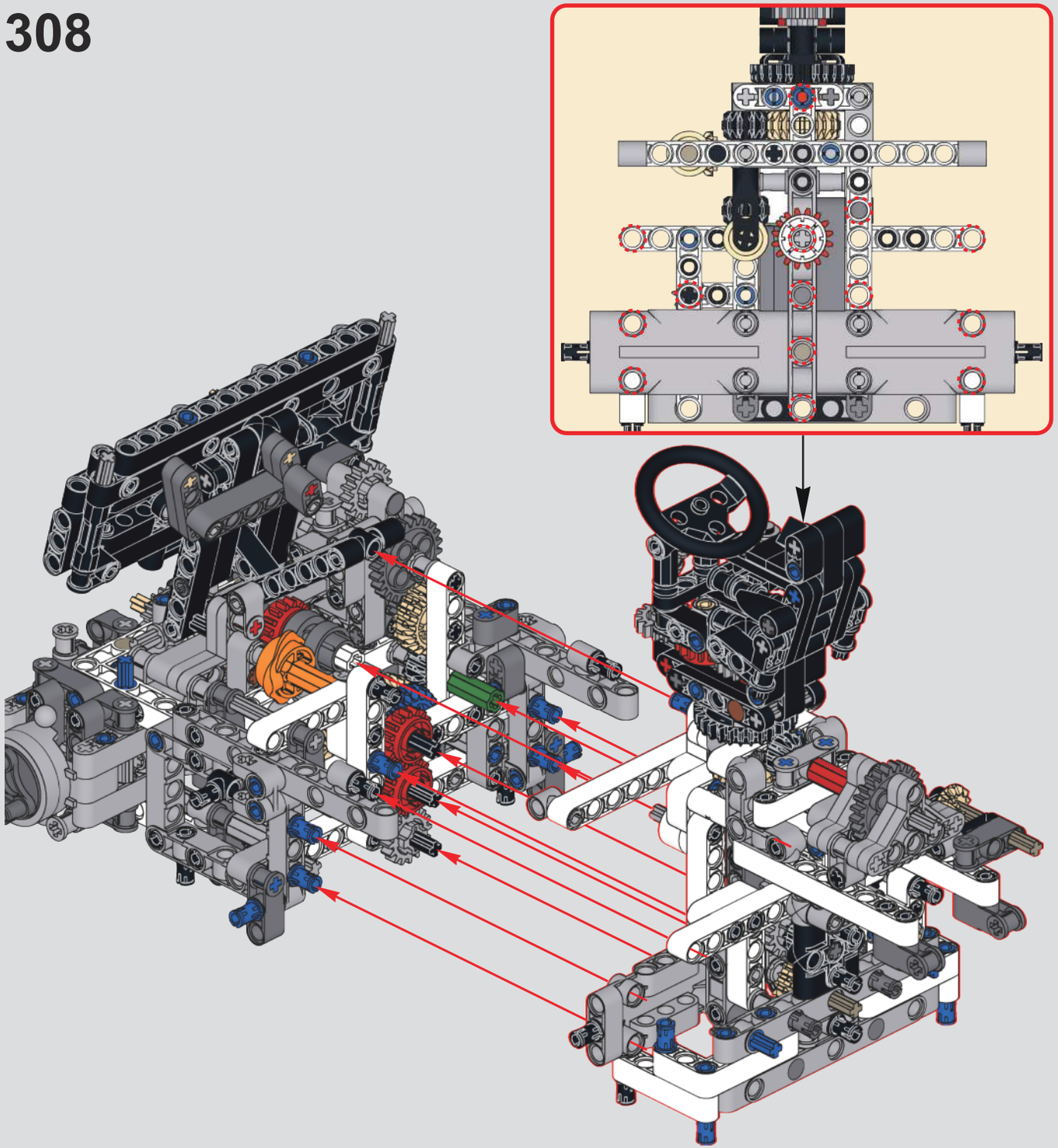

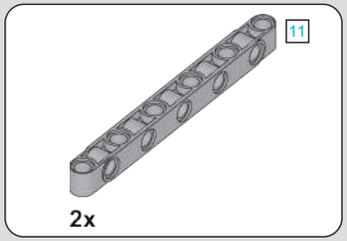

309

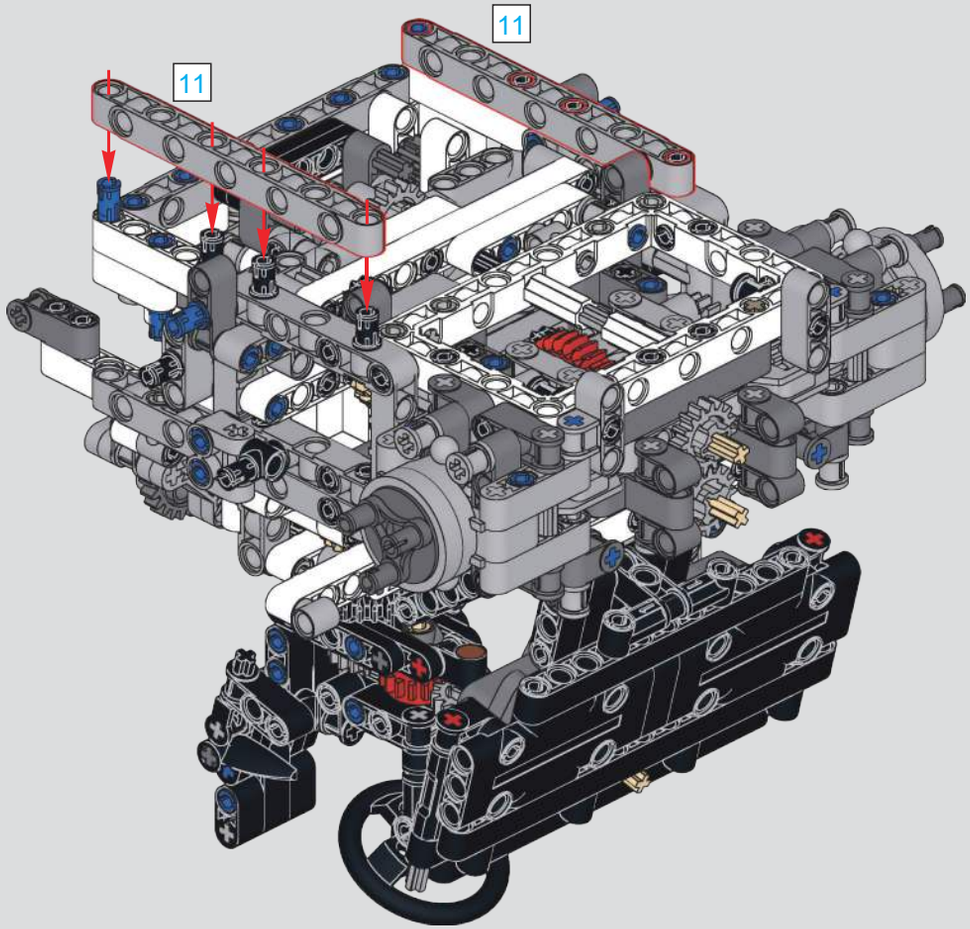

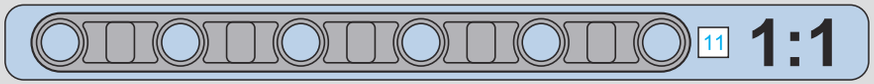

310

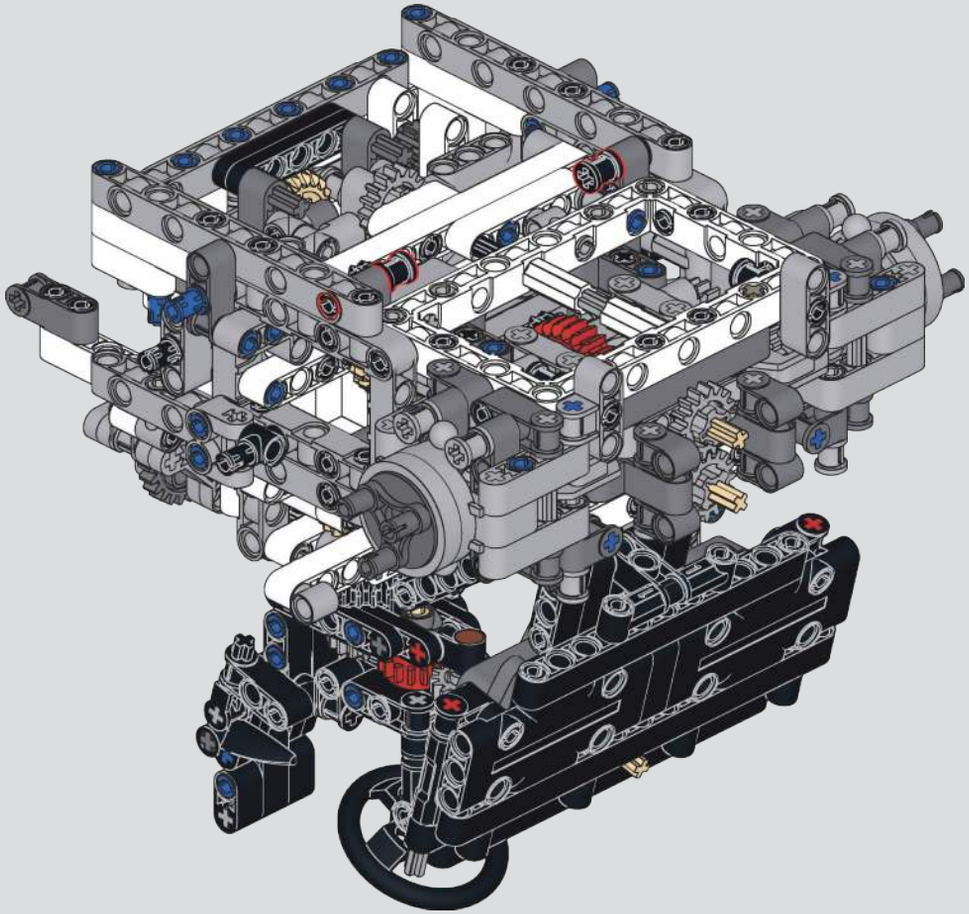

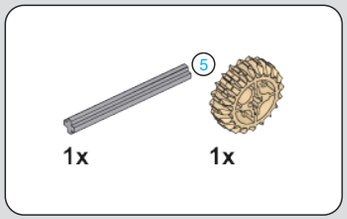

311

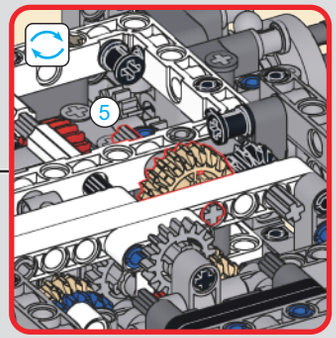

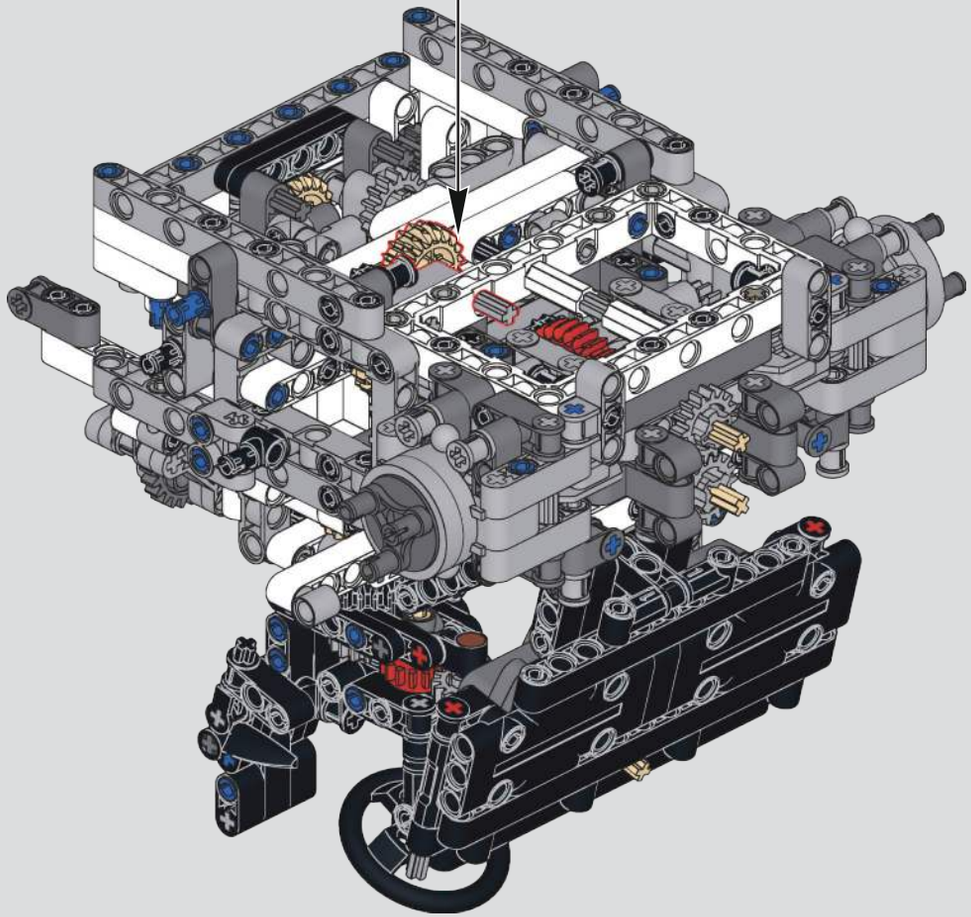

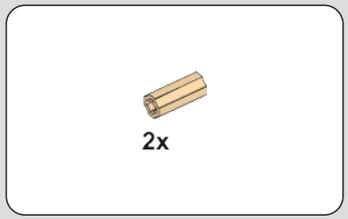

312

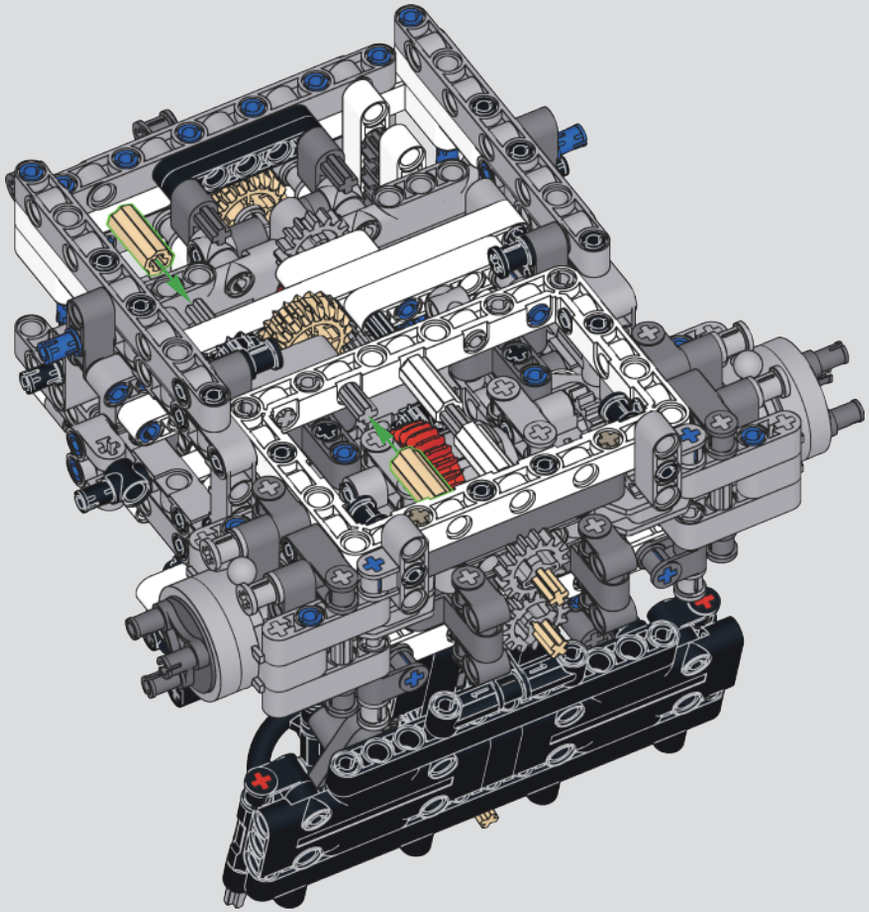

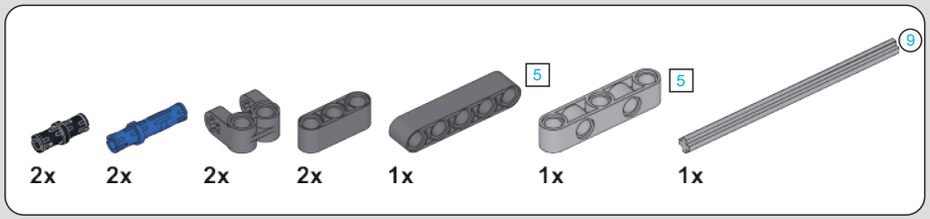

313

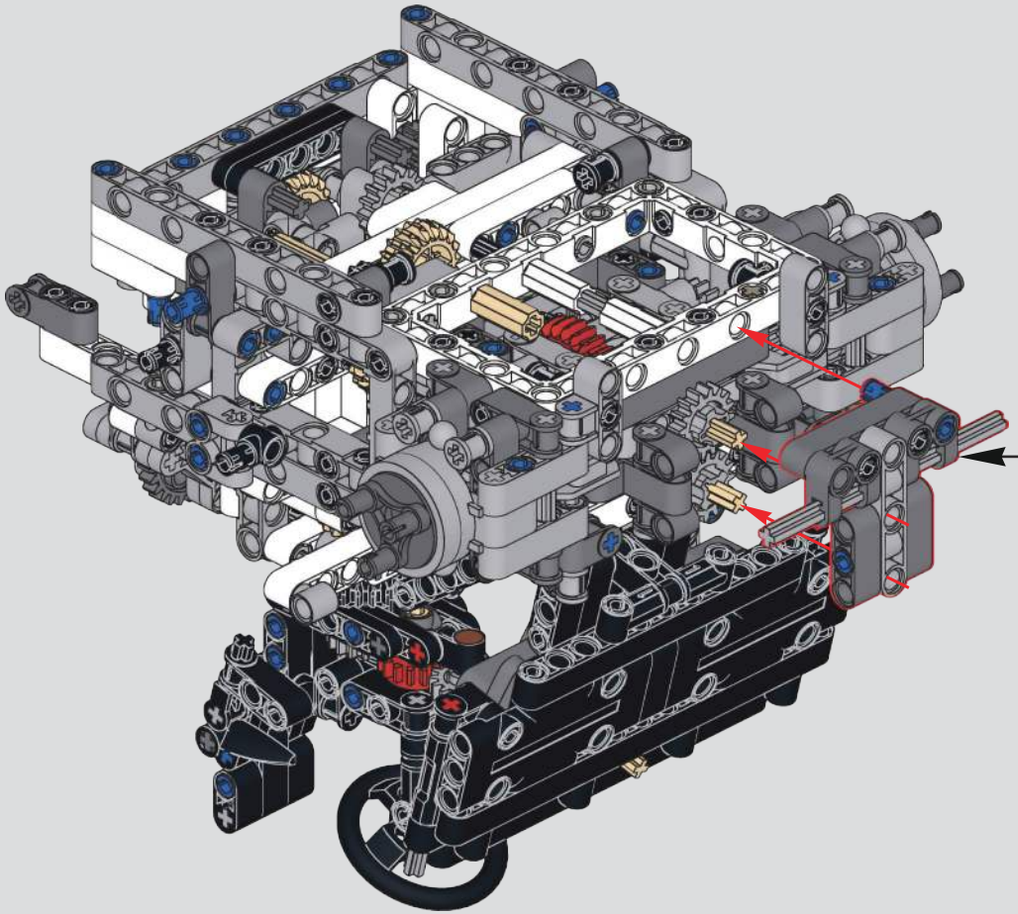

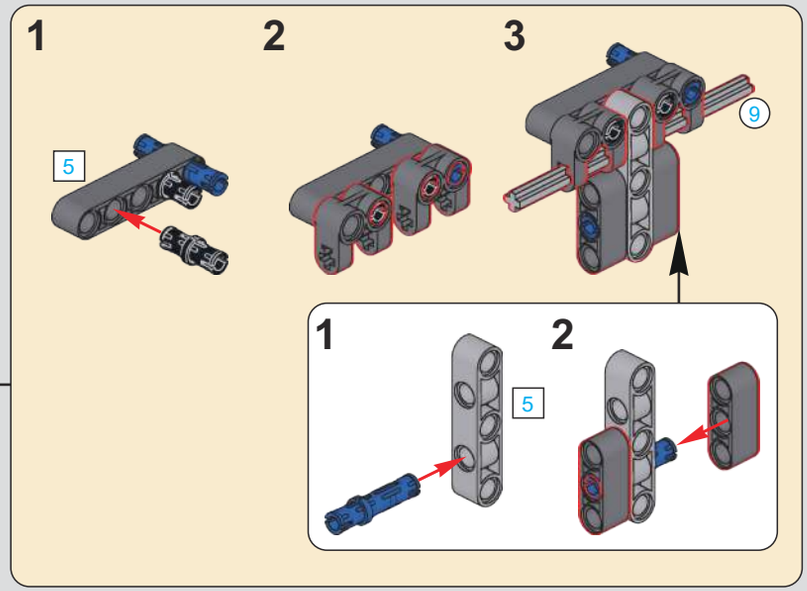

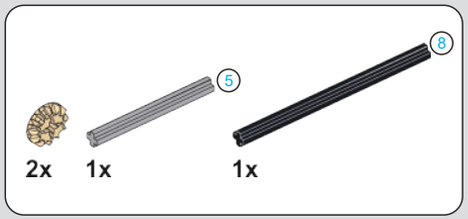

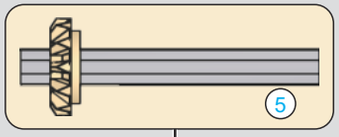

314

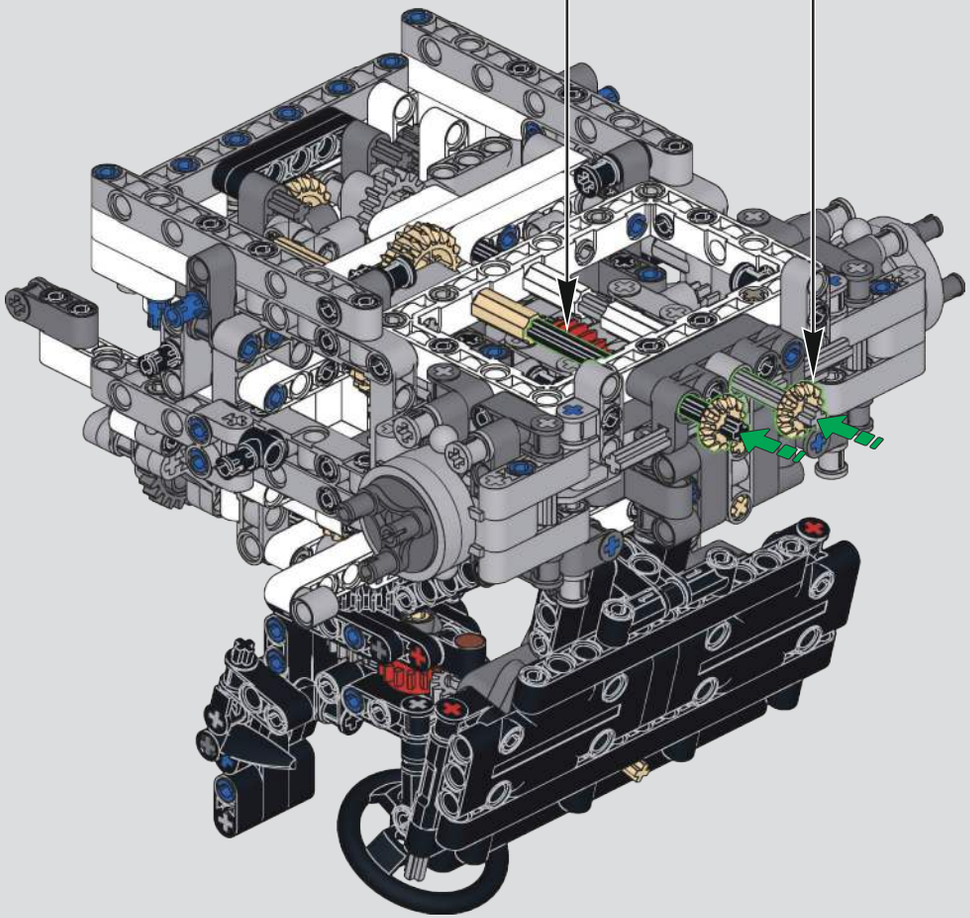

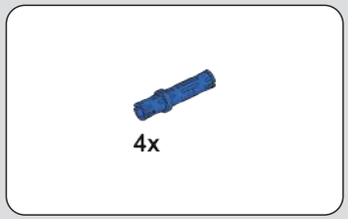

315

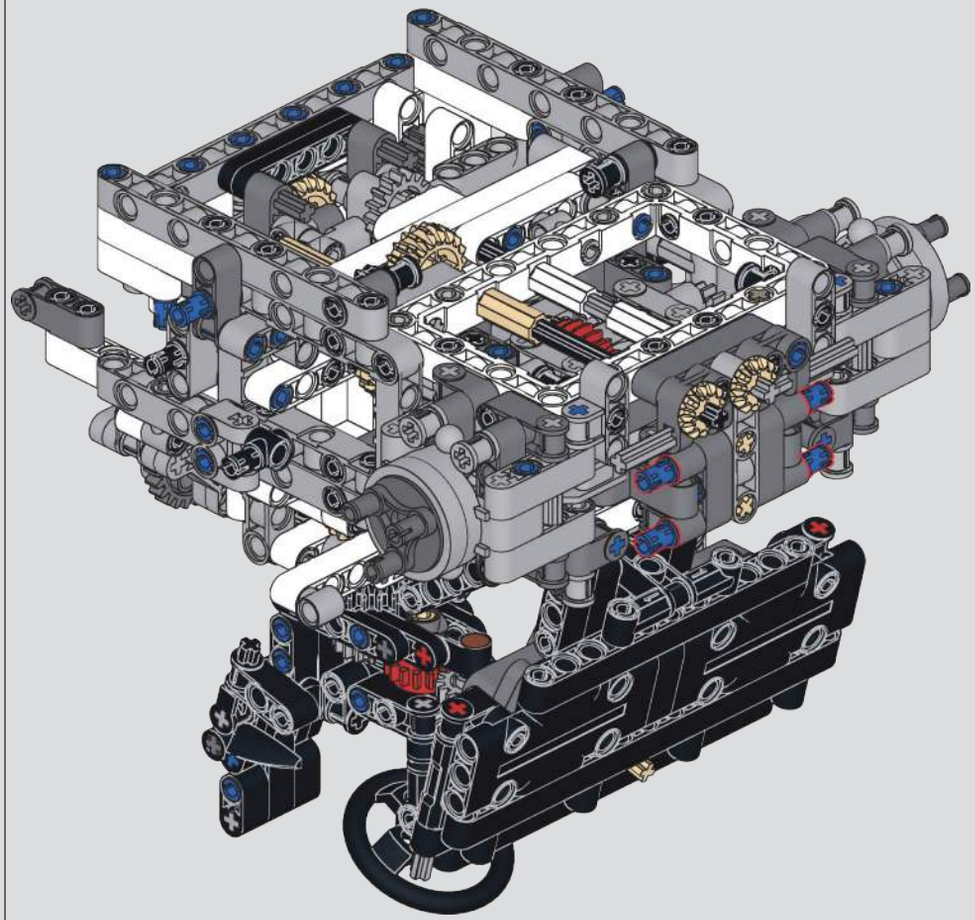

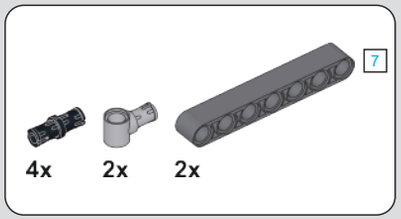

316

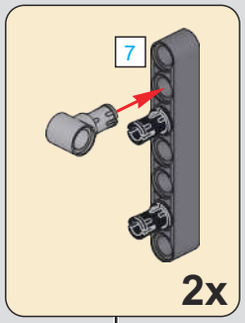

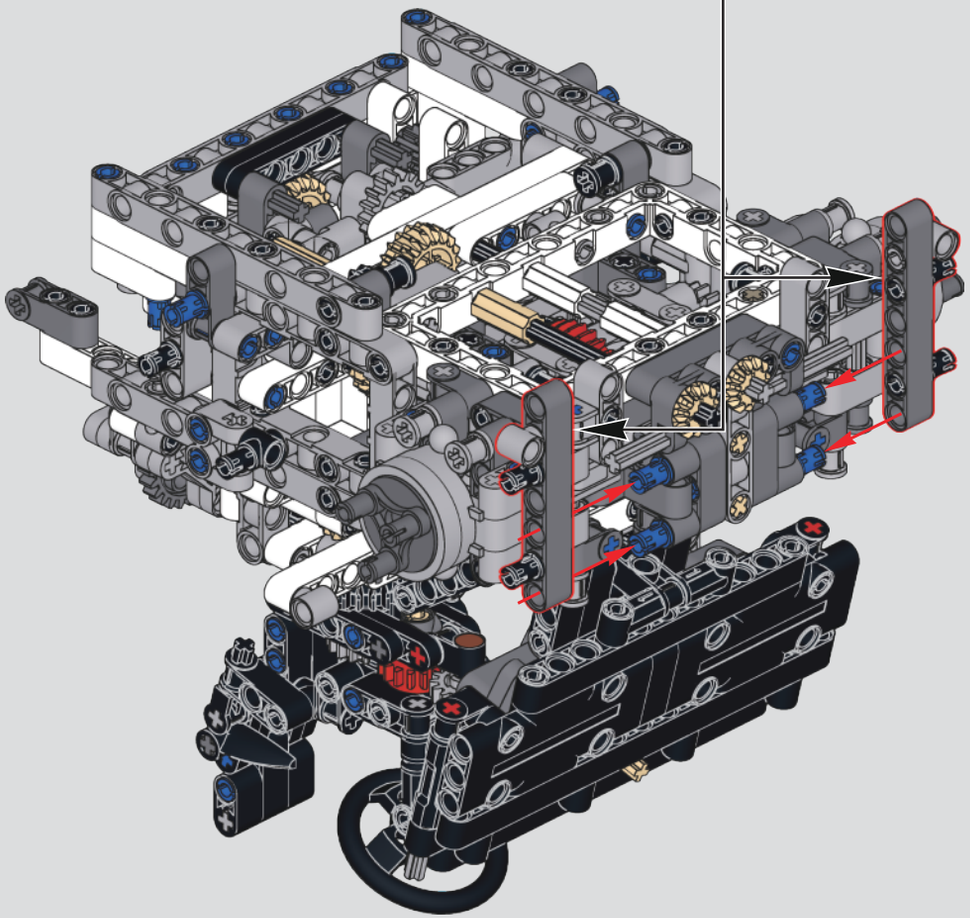

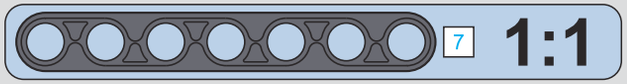

317

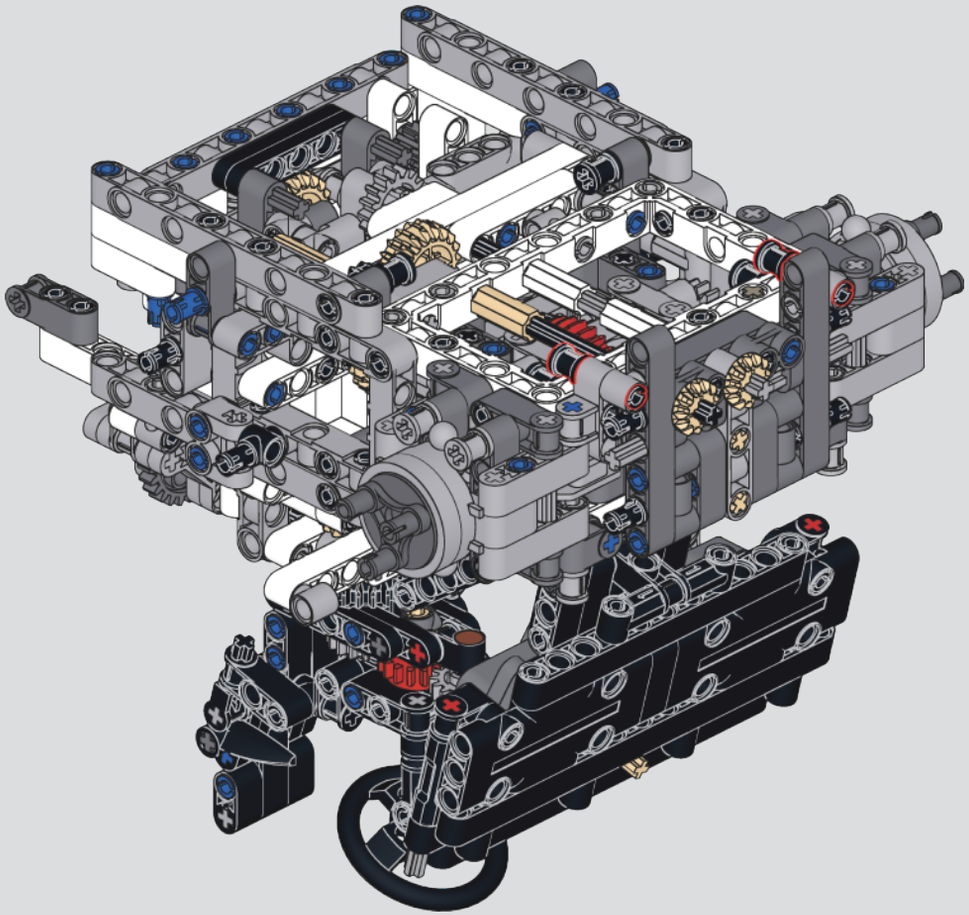

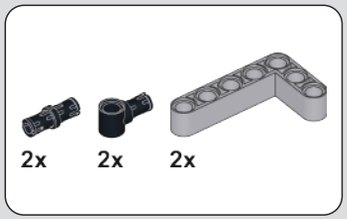

318

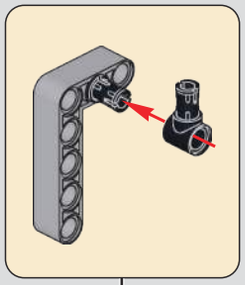

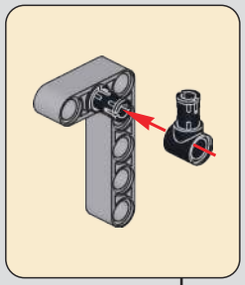

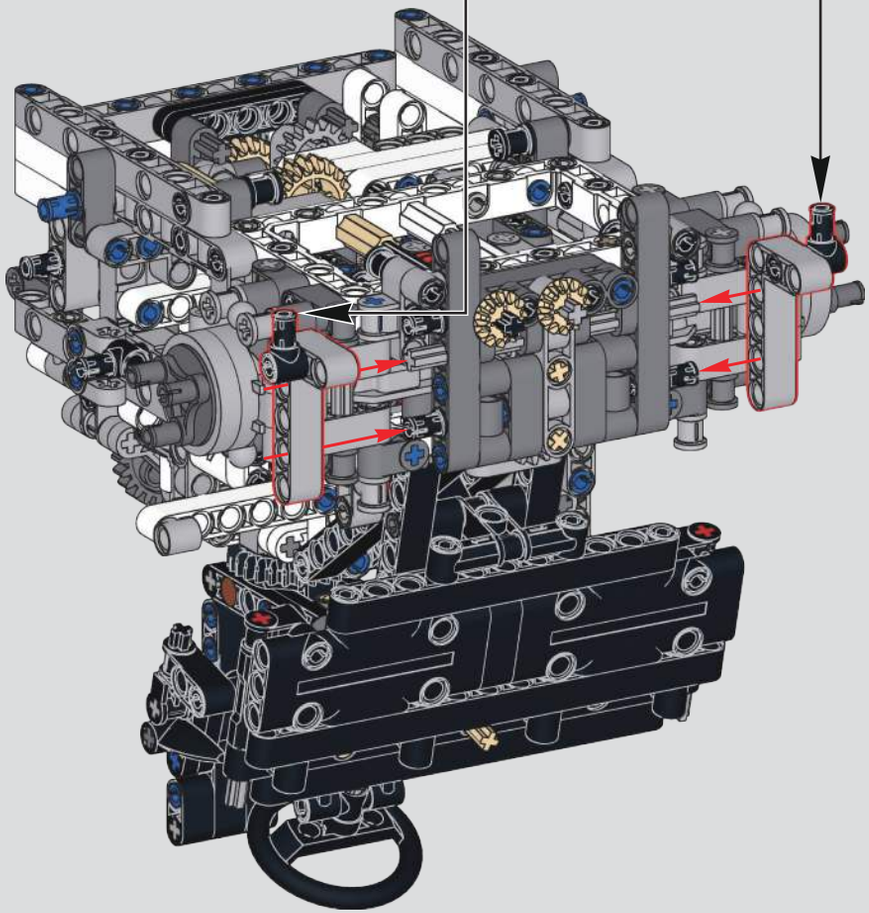

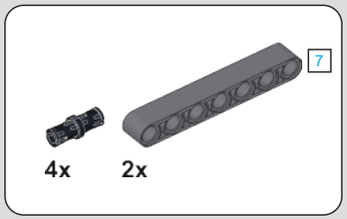

319

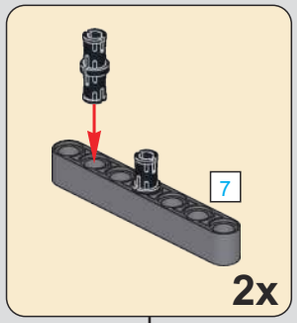

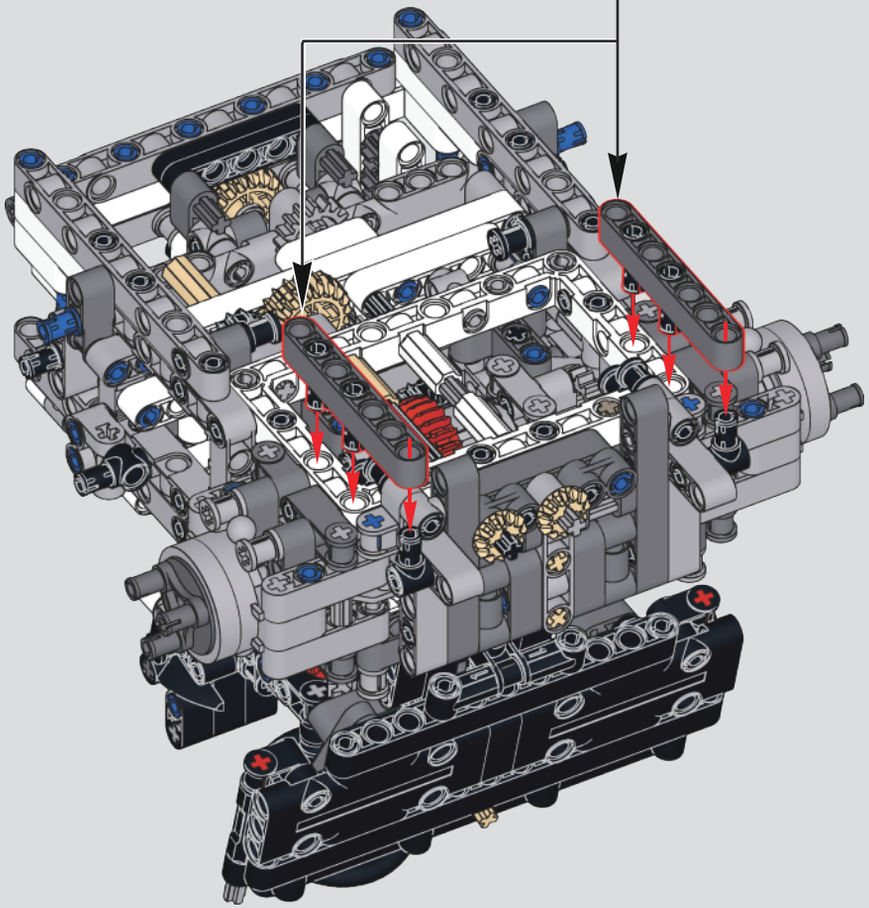

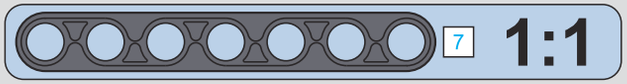

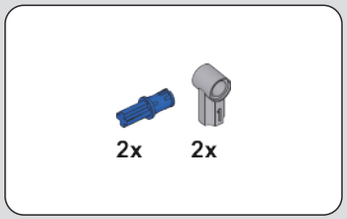

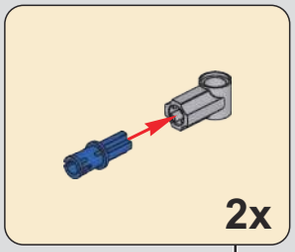

320

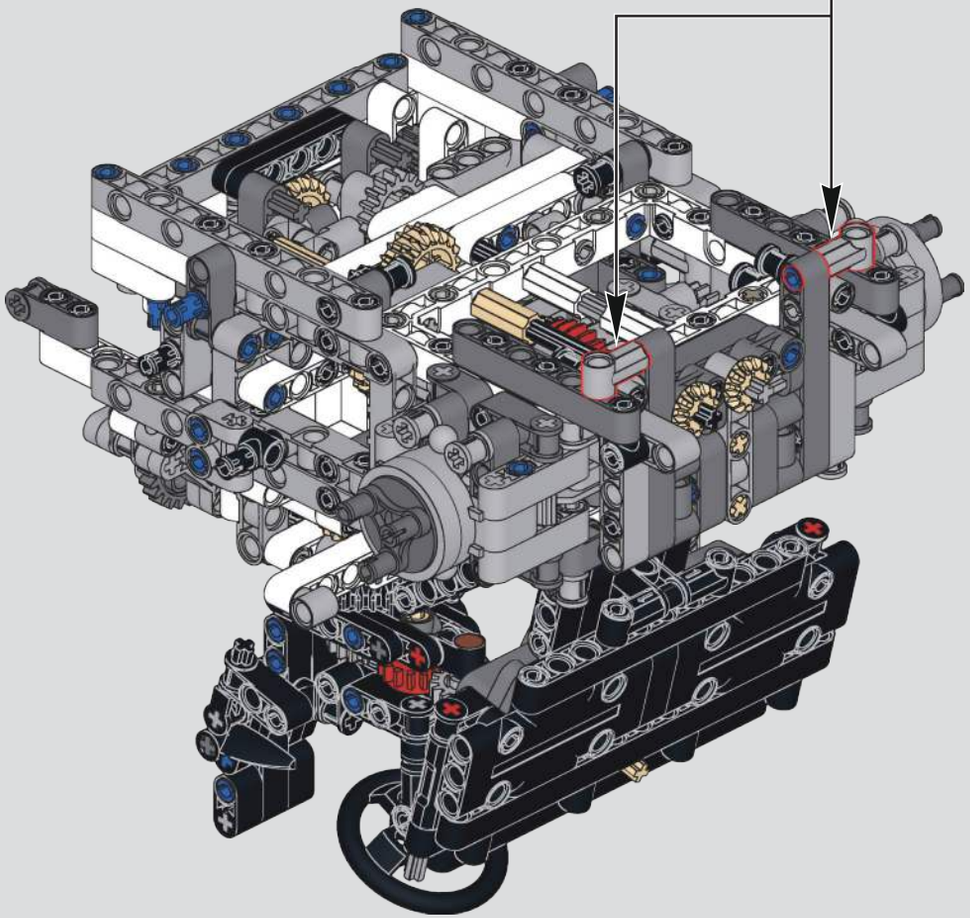

321

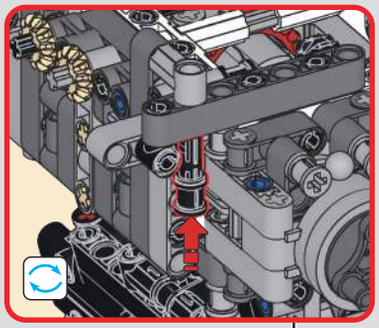

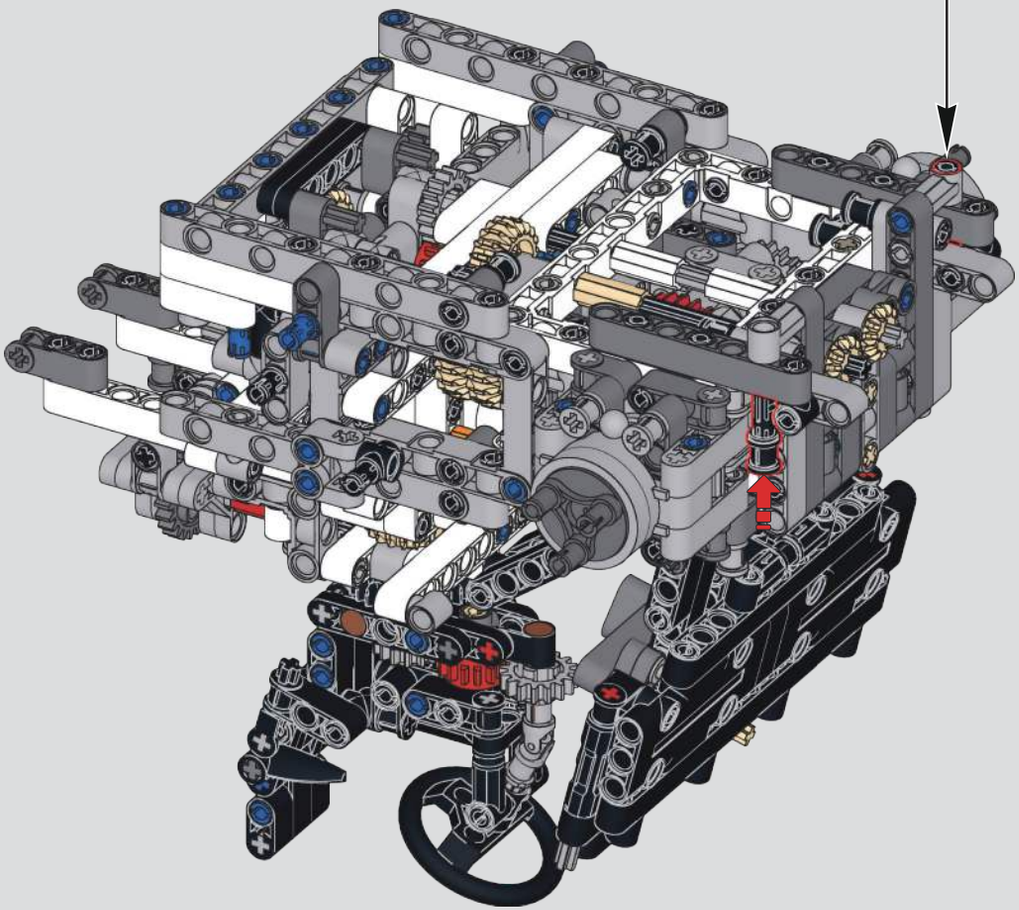

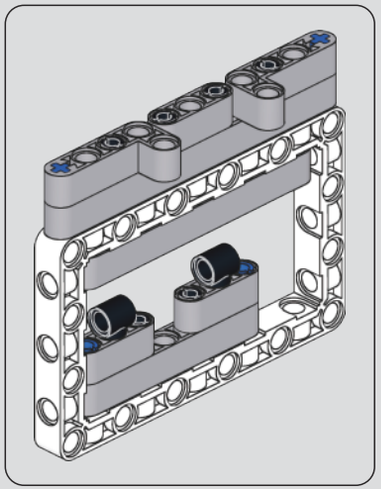

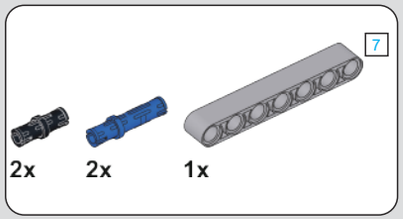

322

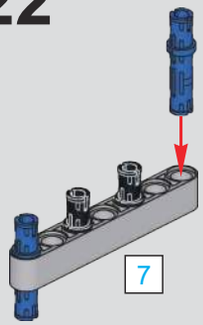

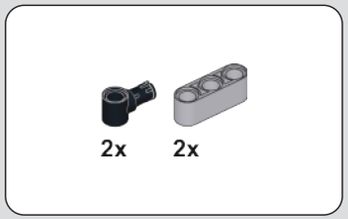

323

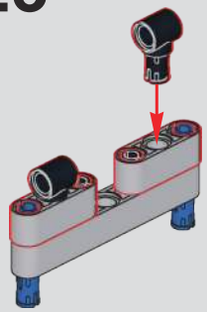

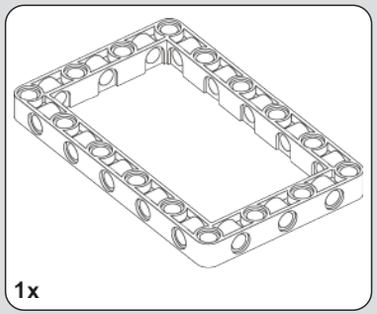

324

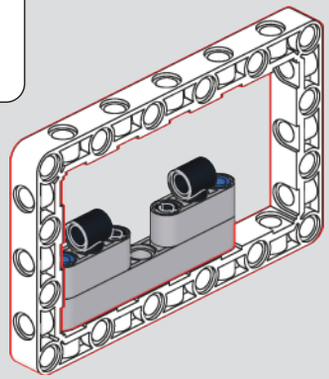

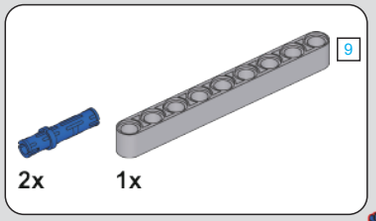

325

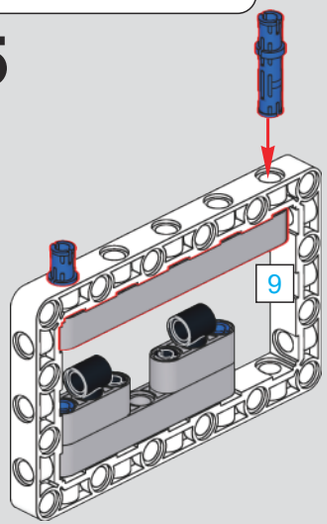

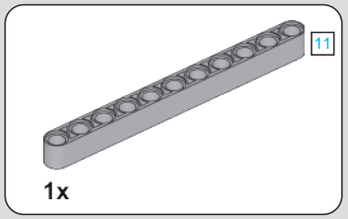

326

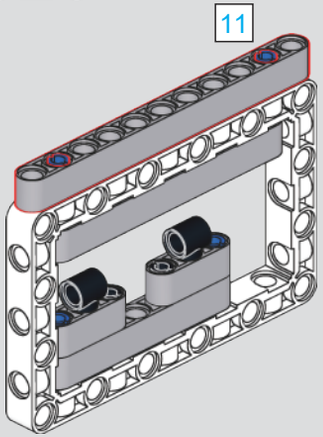

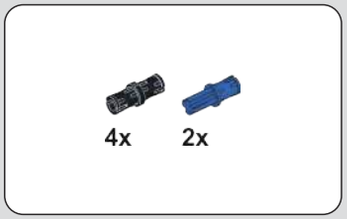

327

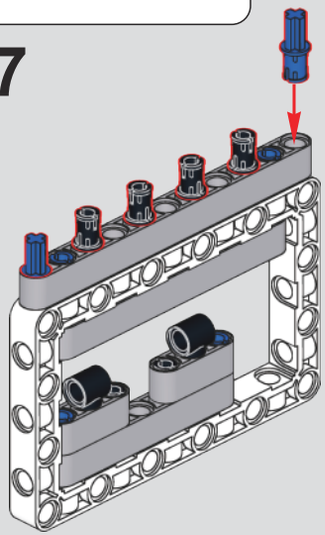

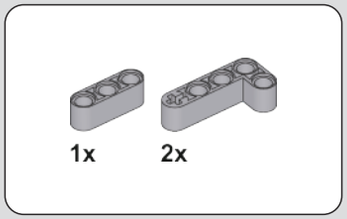

328

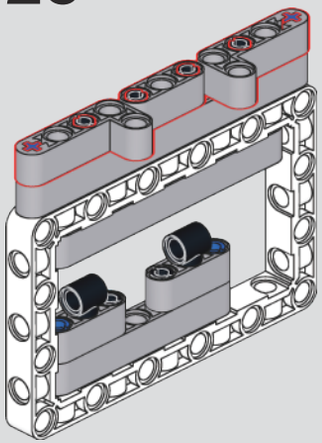

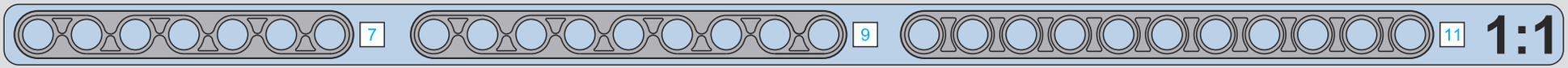

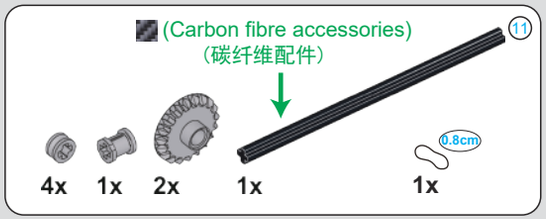
(Carbon fibre accessories)
(碳纤维配件)
11
0.8cm
4x
1x
2x
1x
1x

329

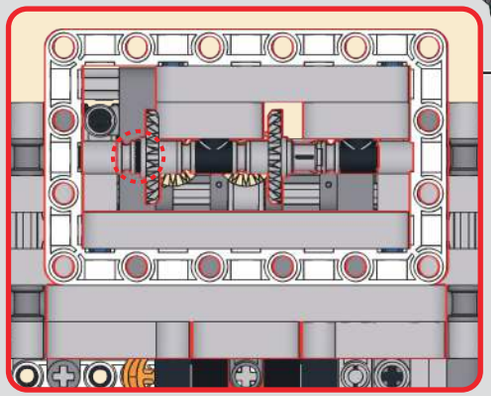

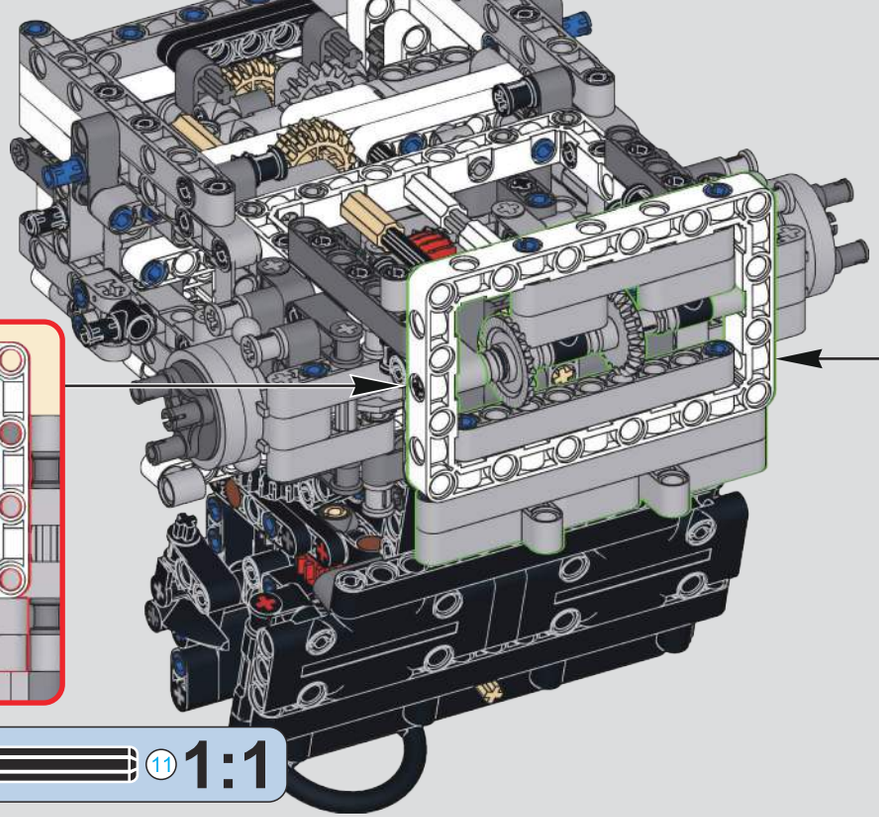

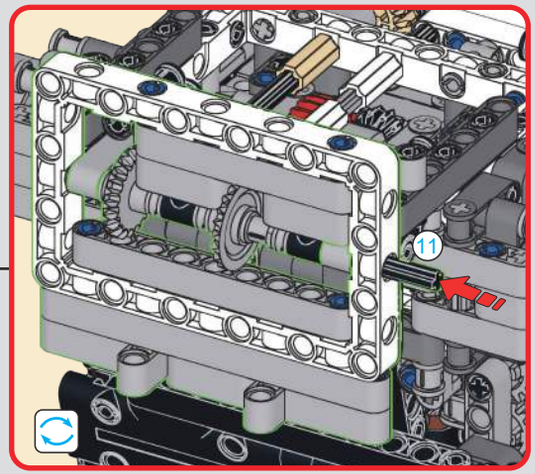
11

11
1:1

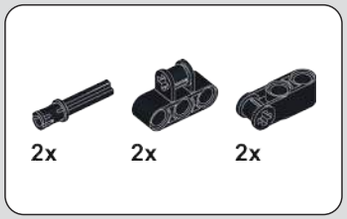
2x
2x
2x

330

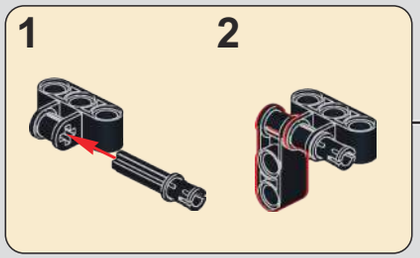
1
2

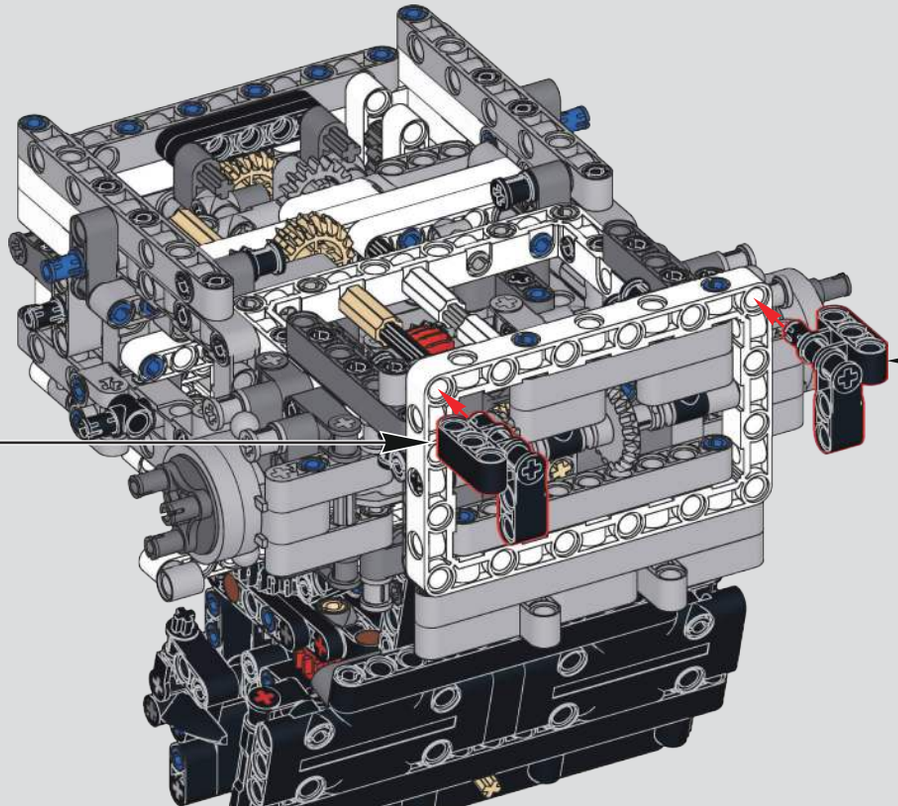

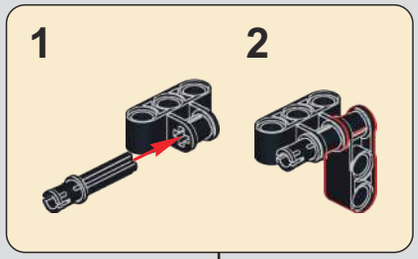
1
2

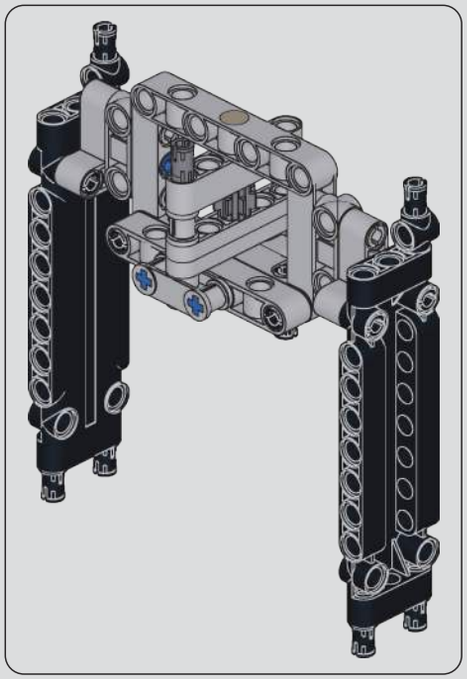

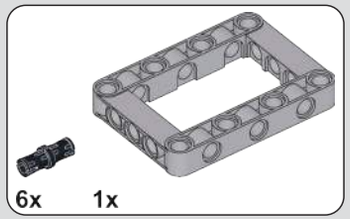

331

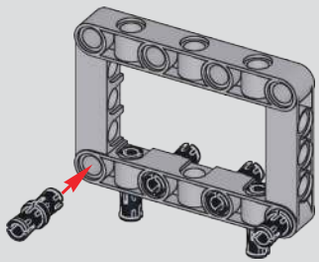

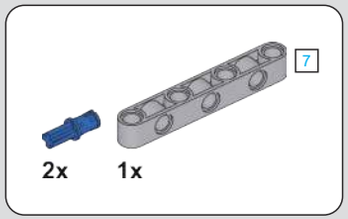

332

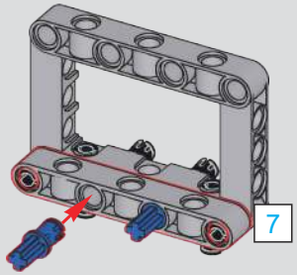

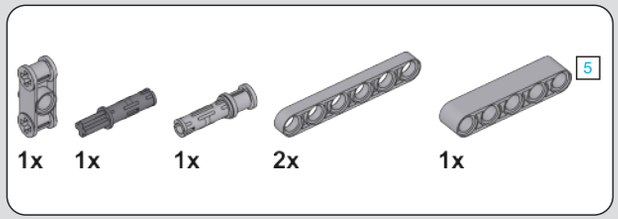

333

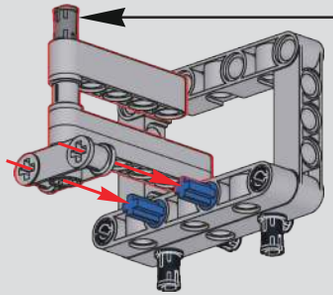

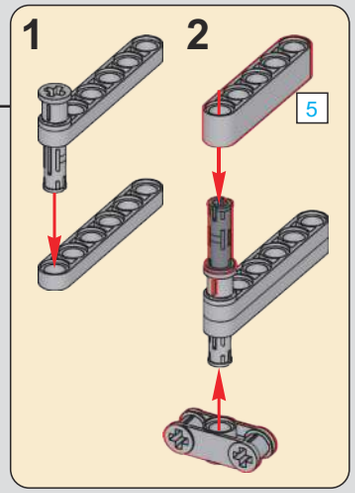

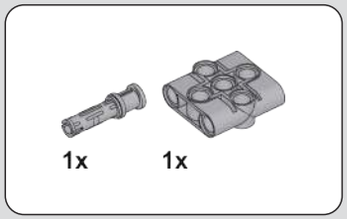

334

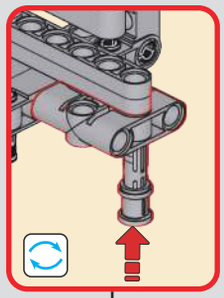

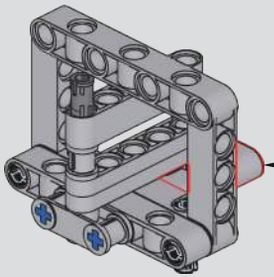

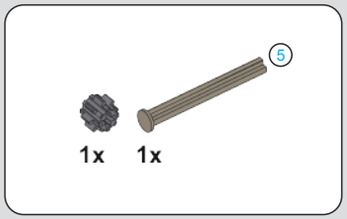

335

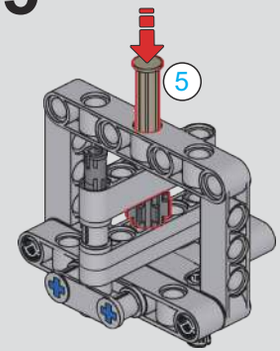

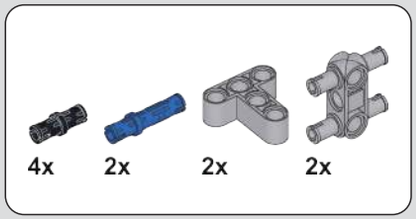

336

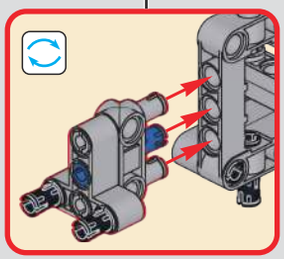

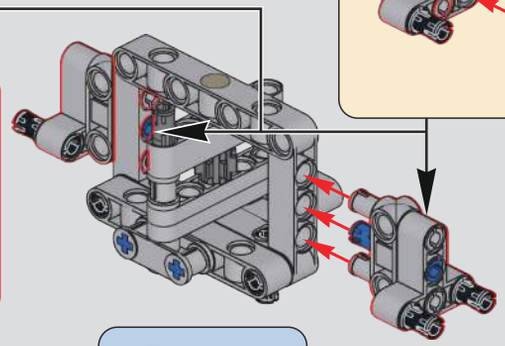

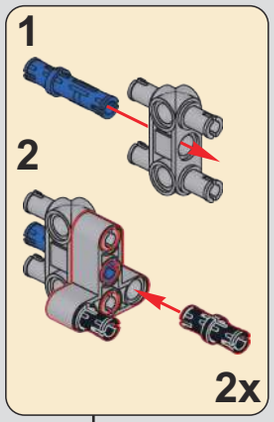

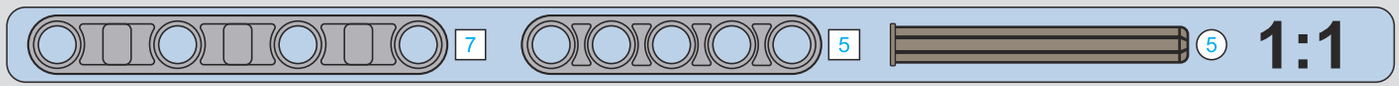

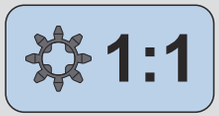

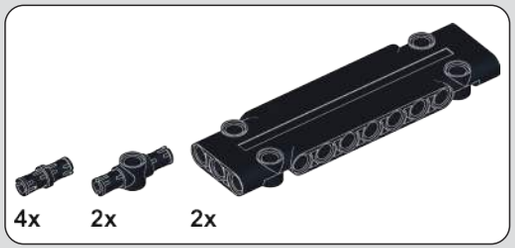

337

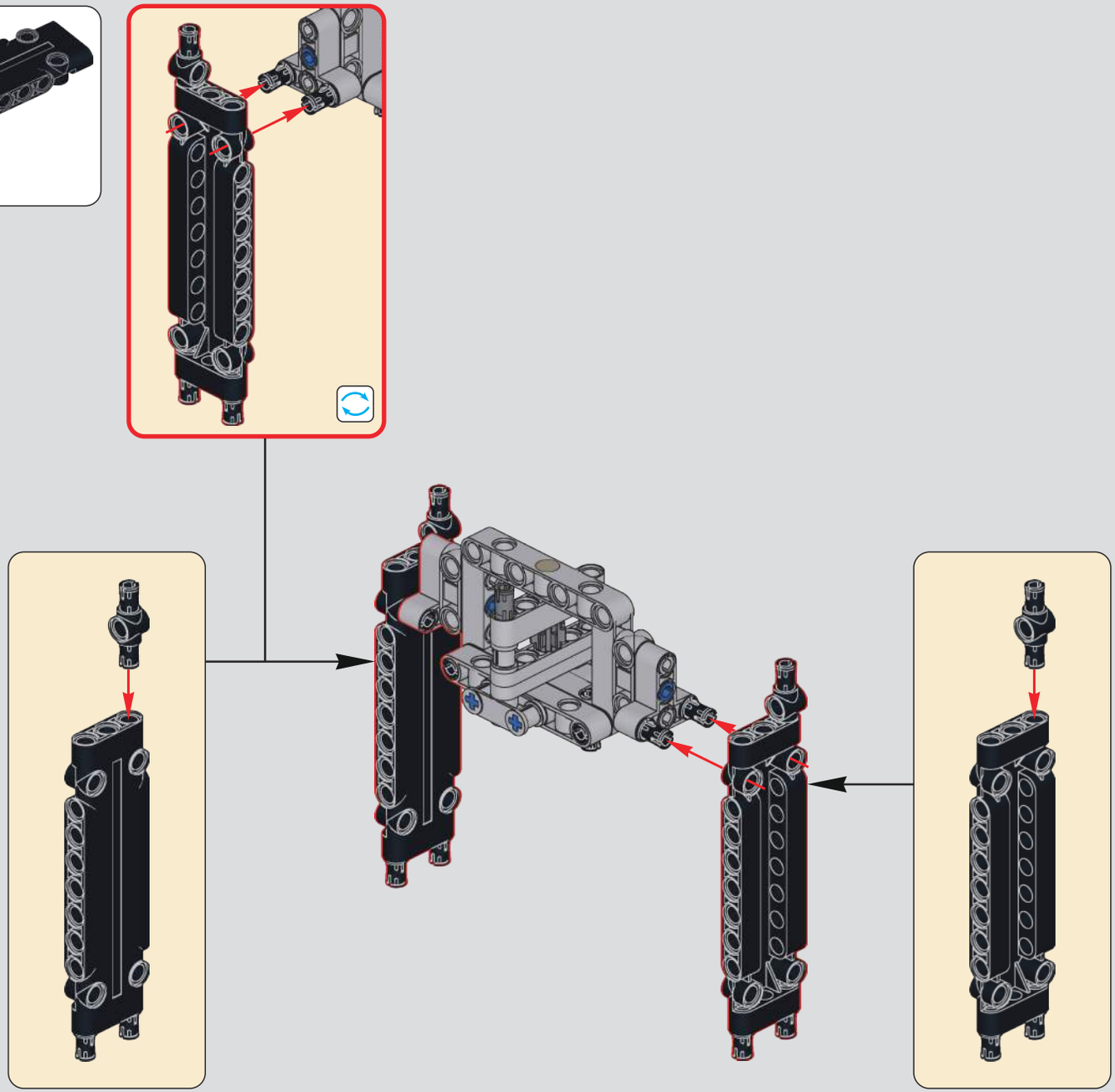

338

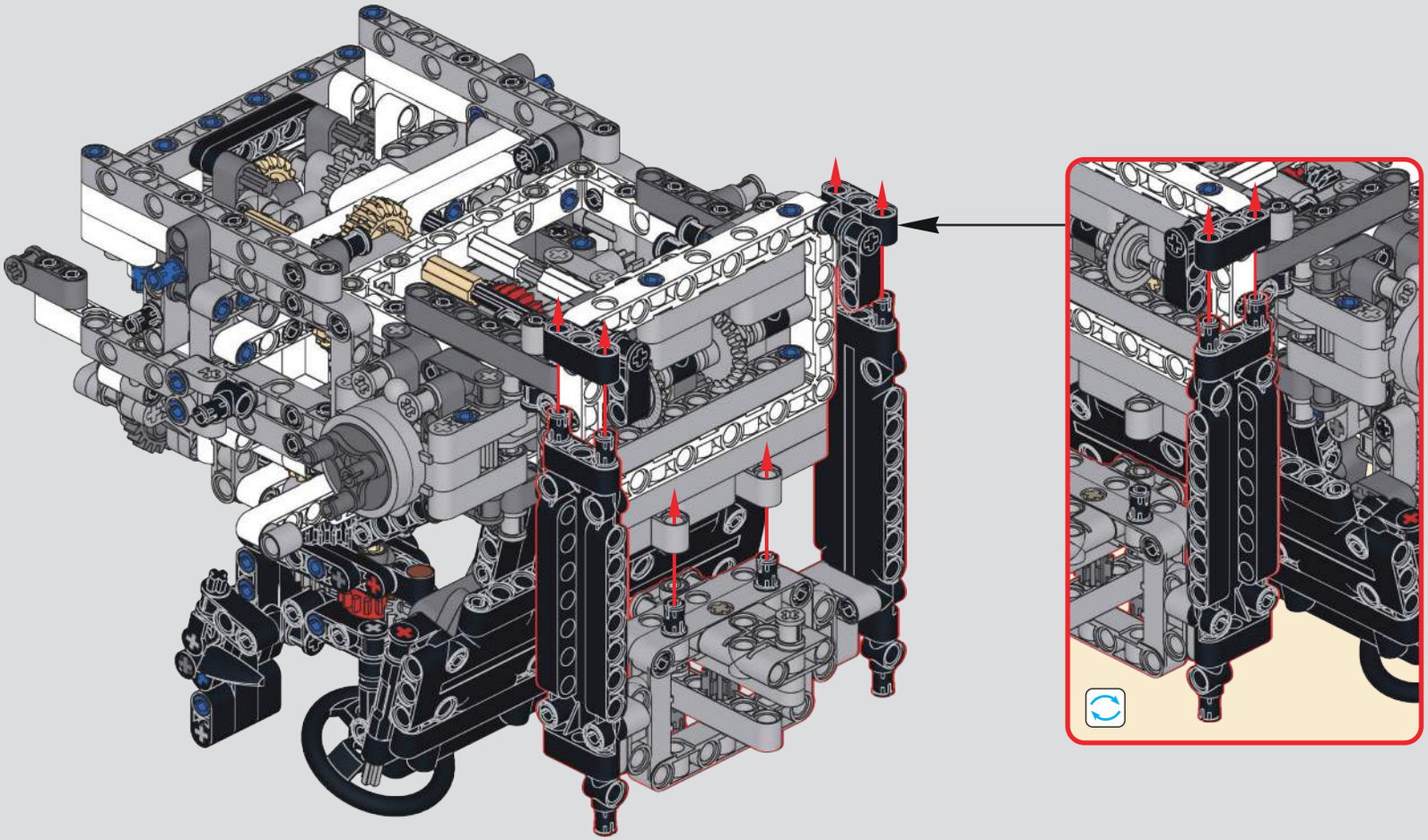

339

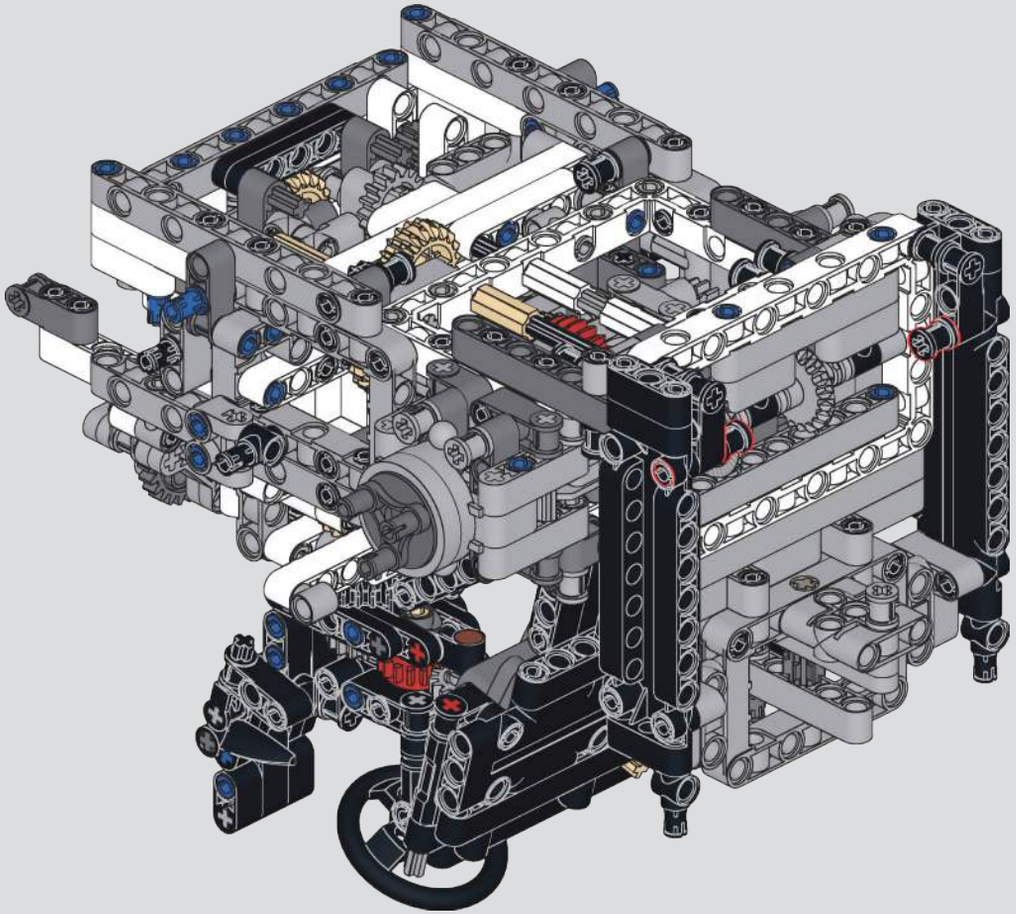

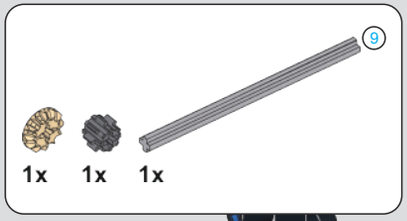

340

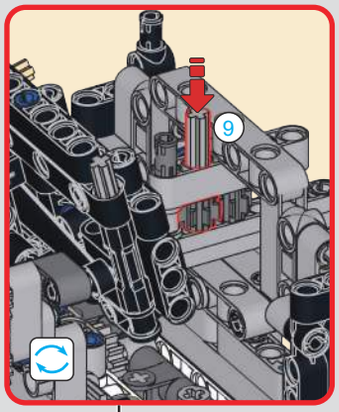

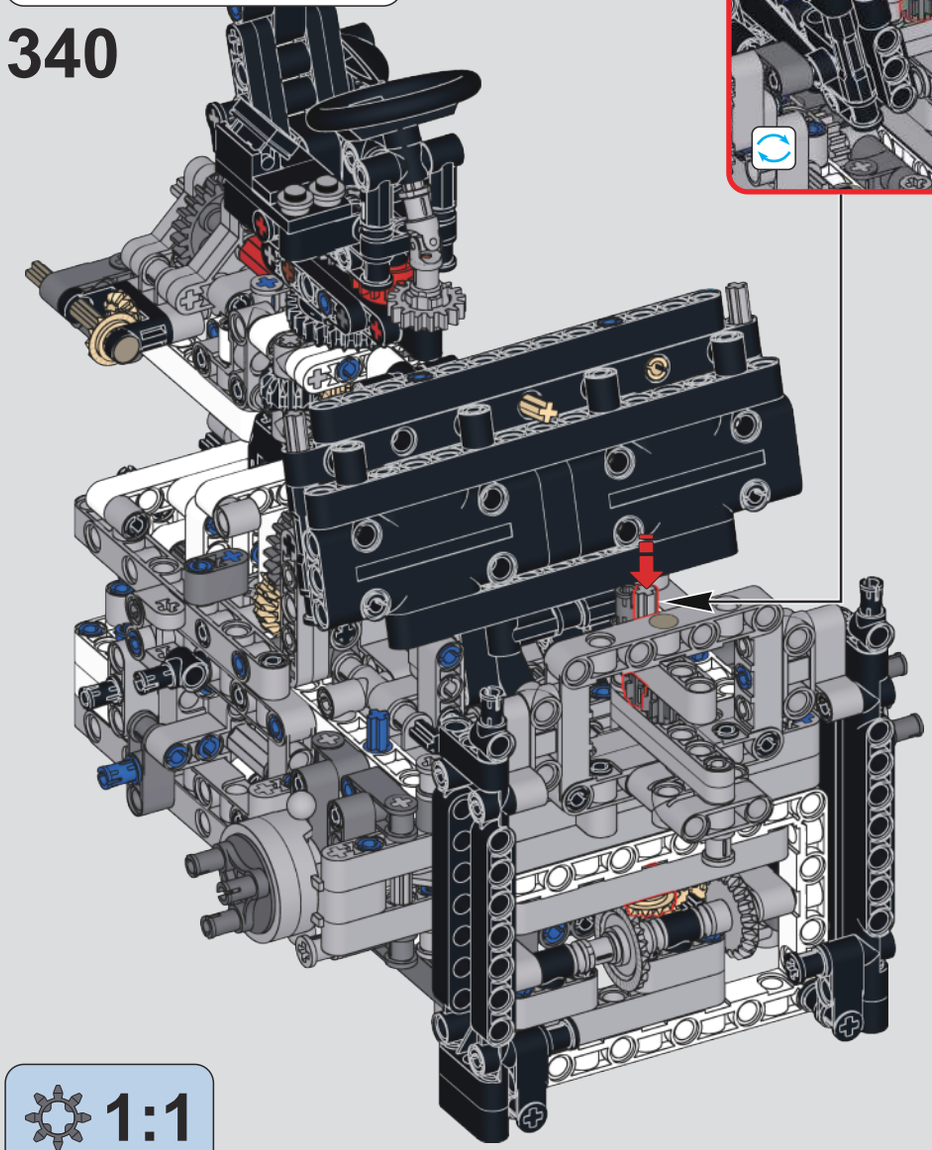

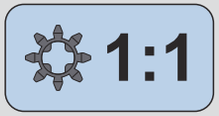

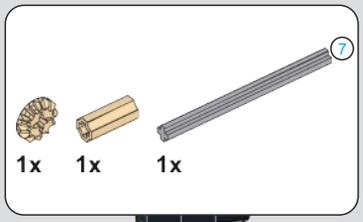

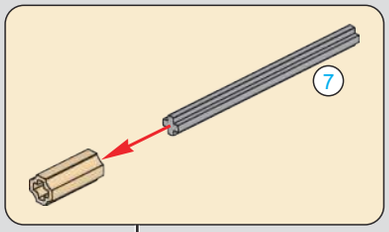

341

342

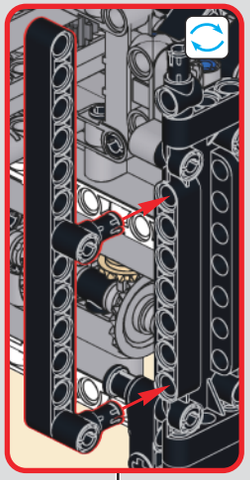

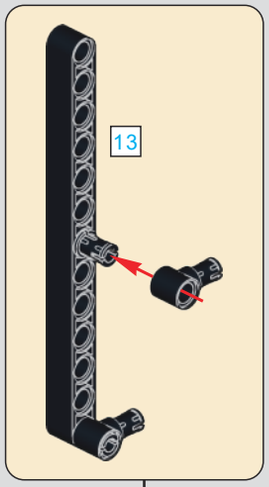

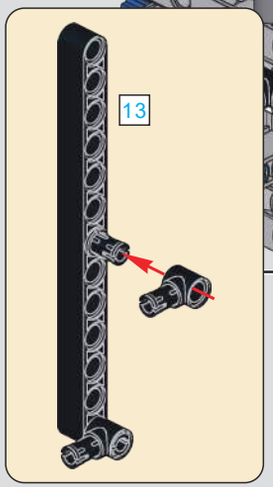

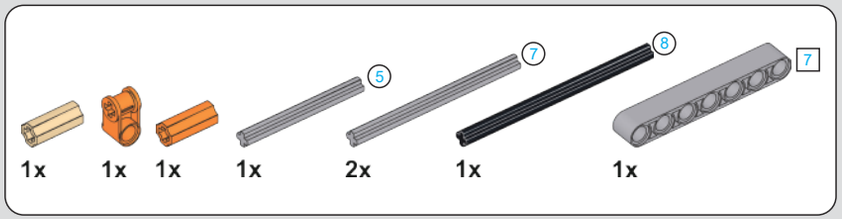

343

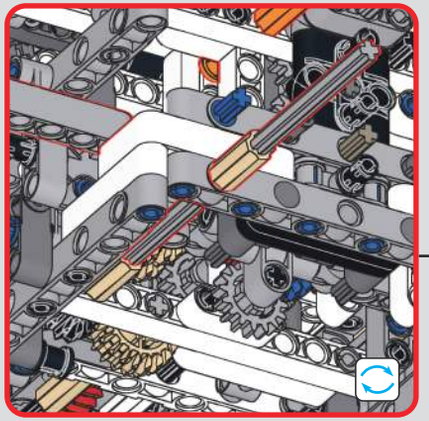

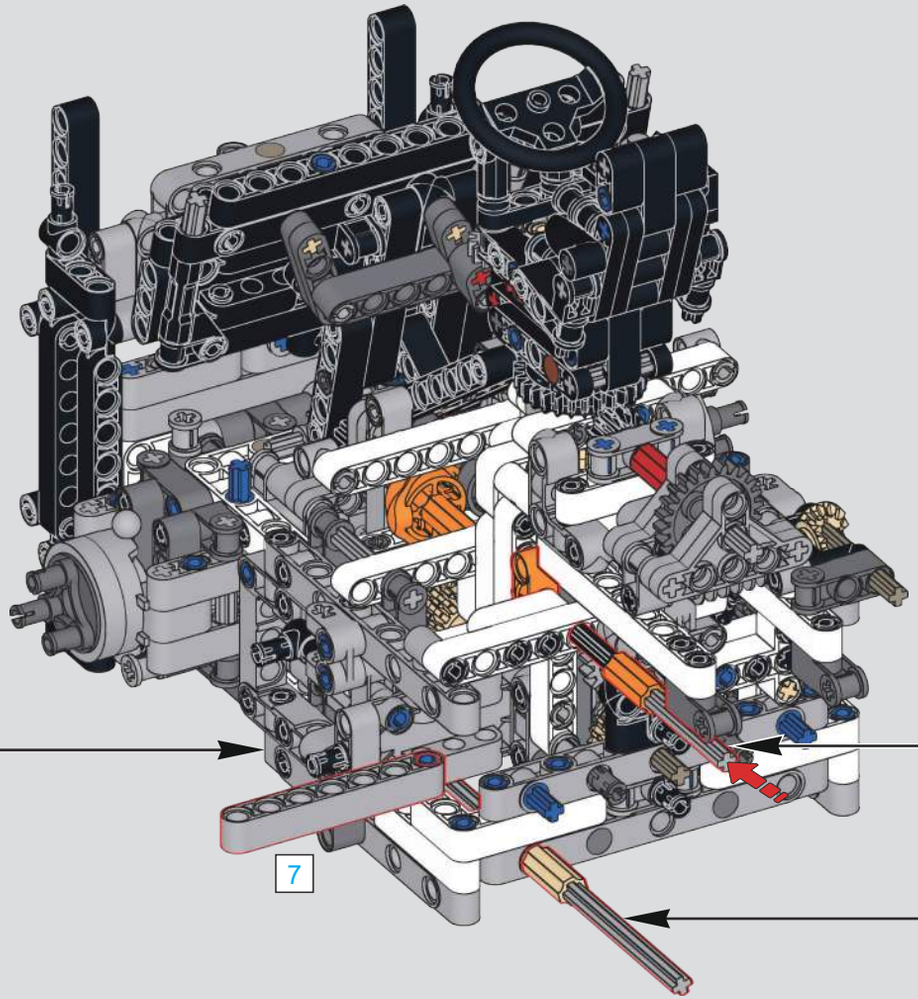

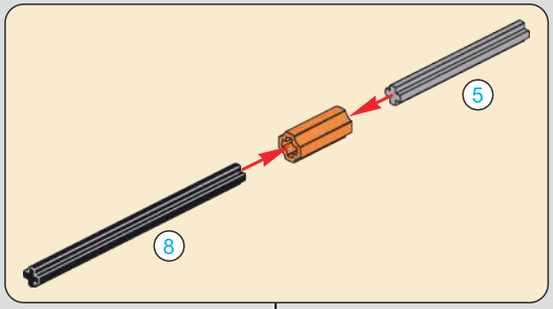

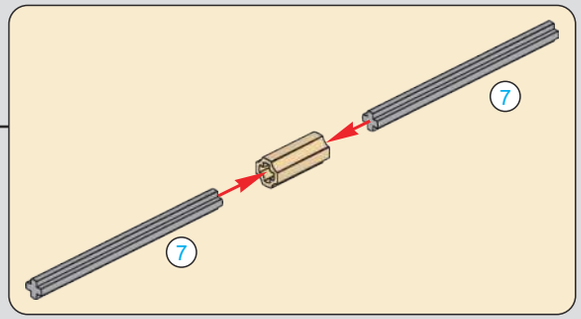

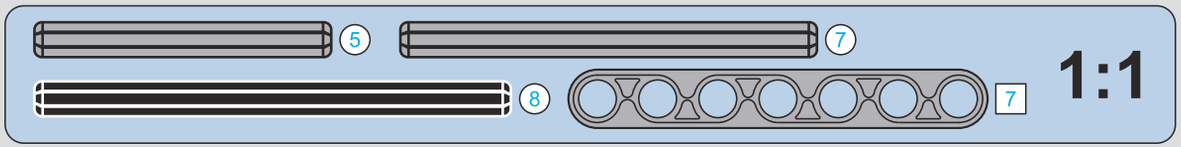

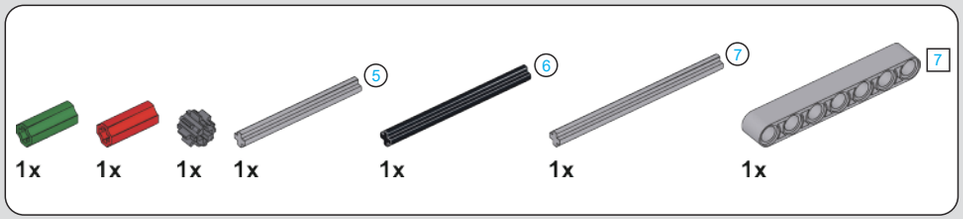

344

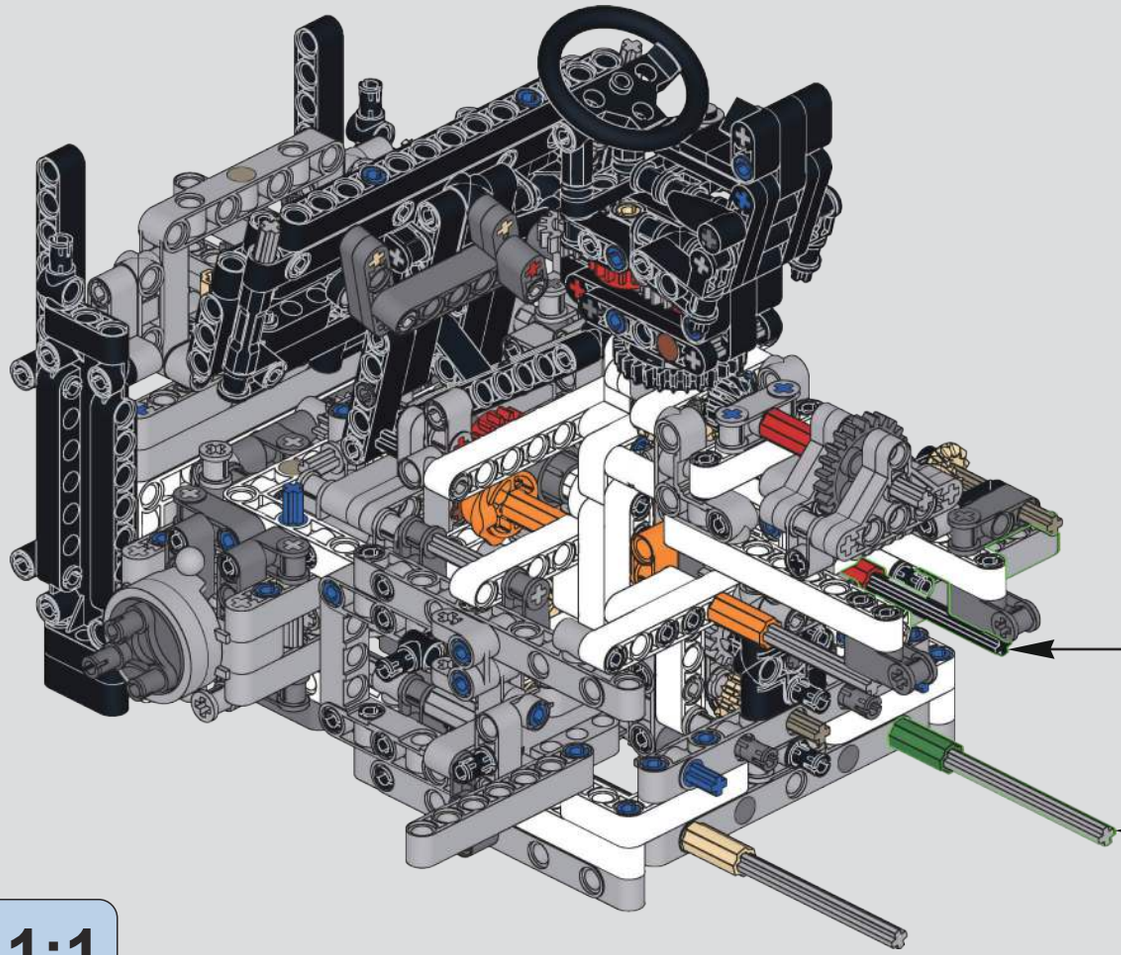

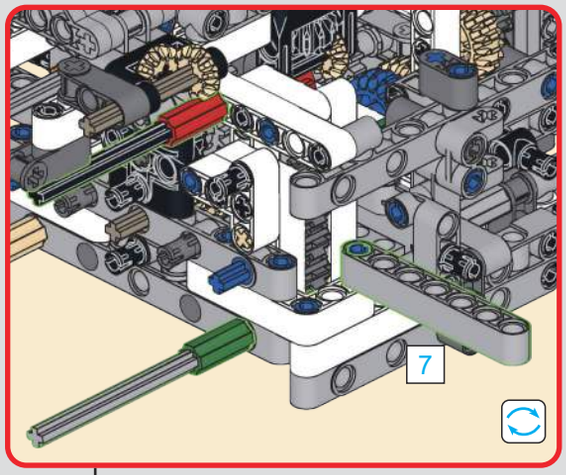

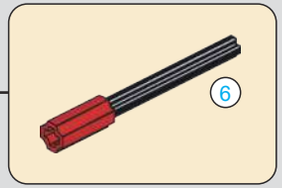

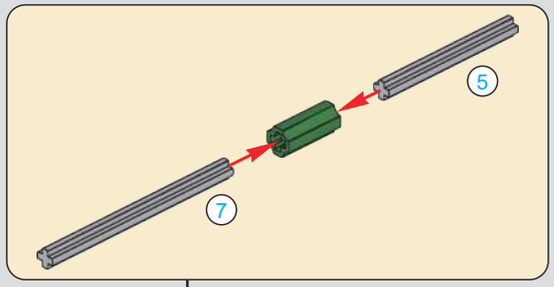

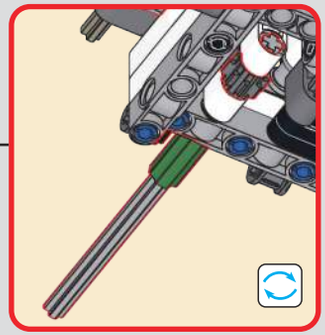

1:1

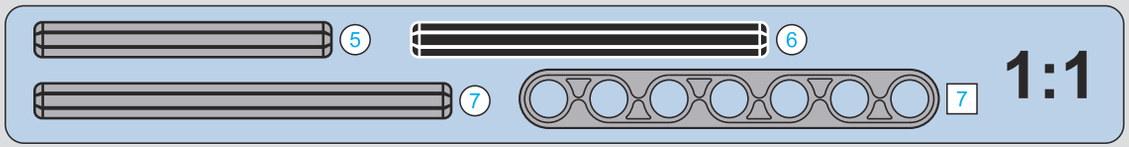

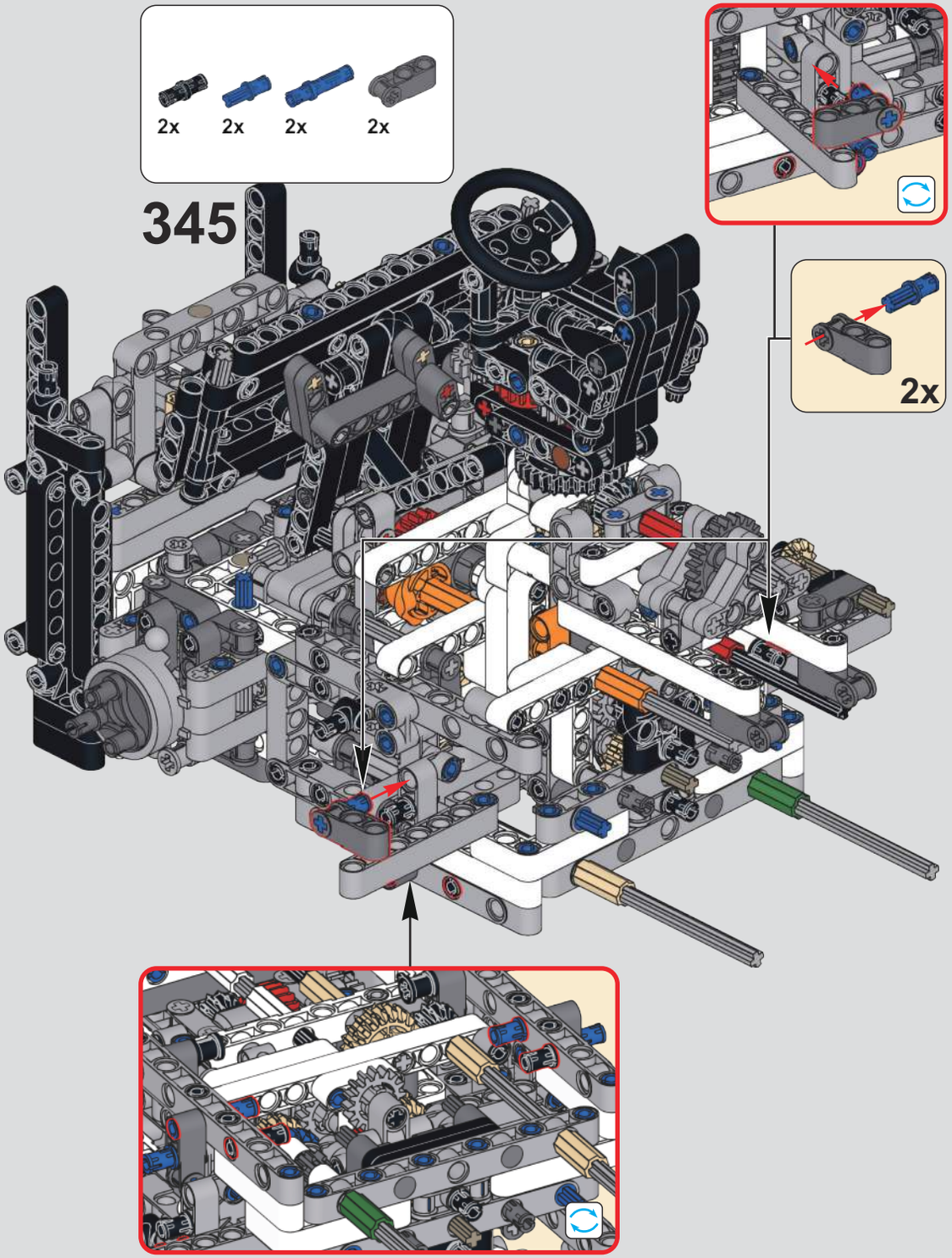
2x
2x
2x
2x
345
2x

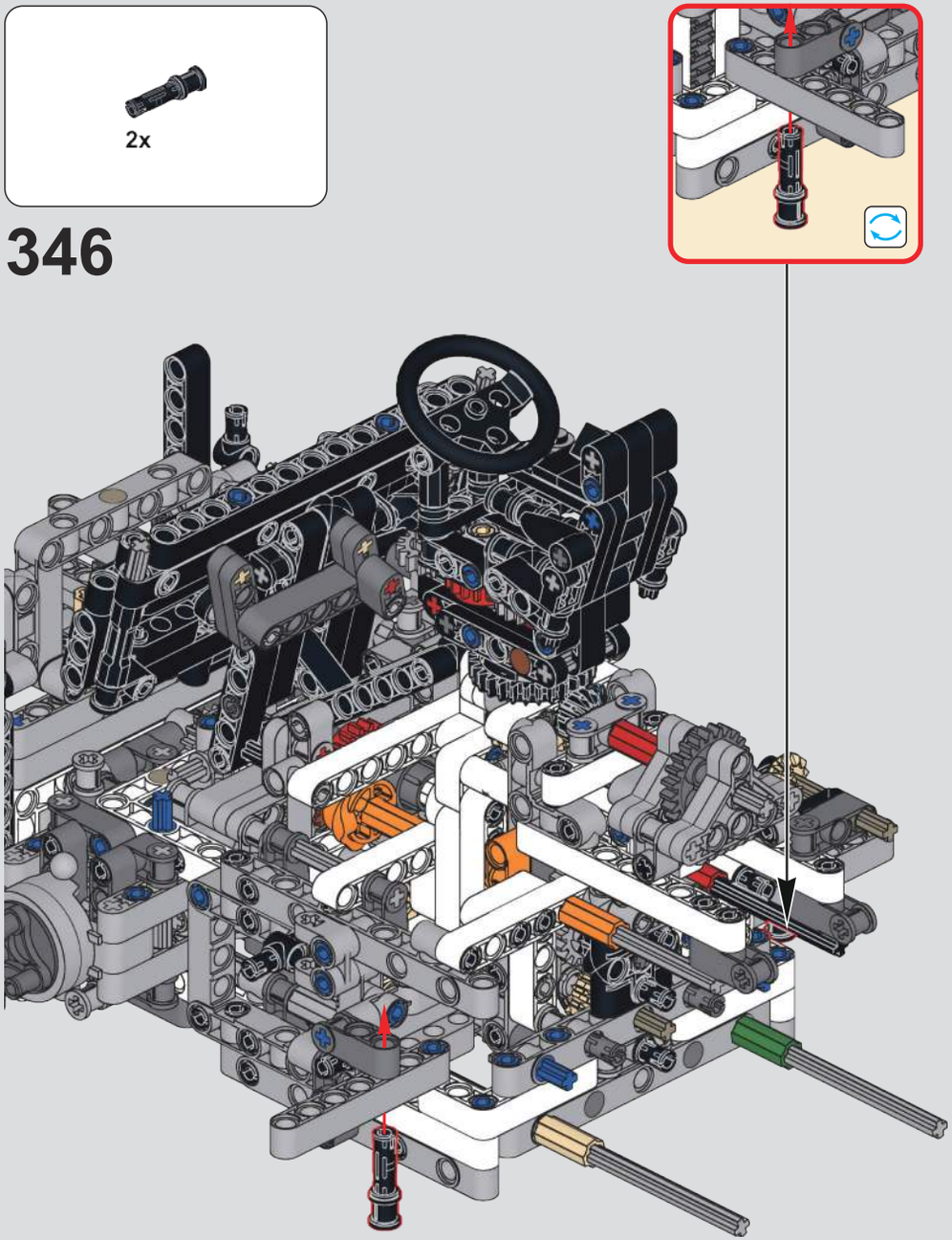
2x
346

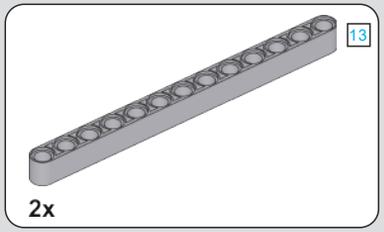

347

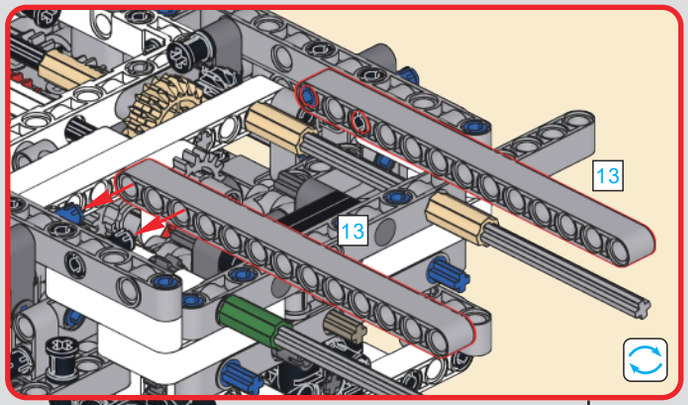

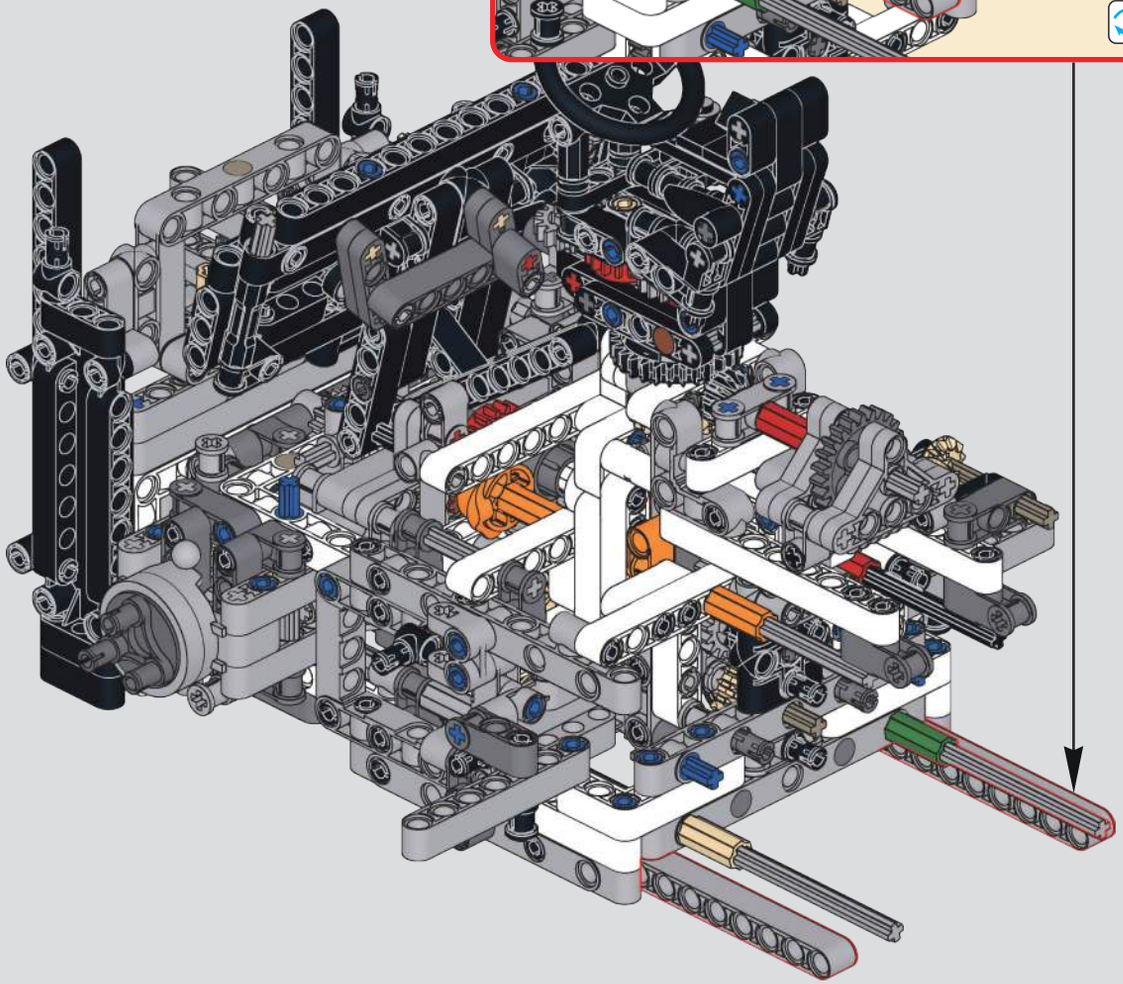

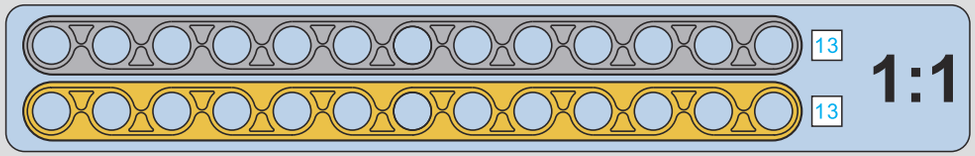

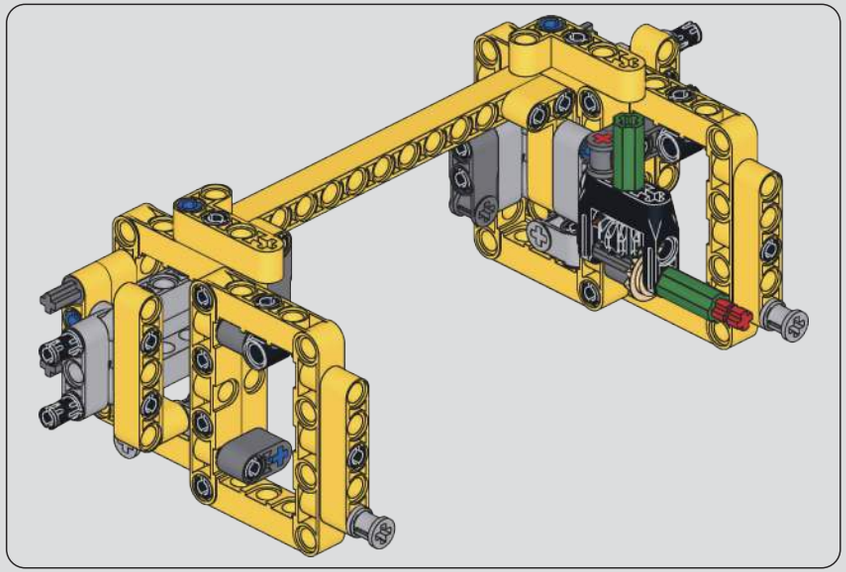

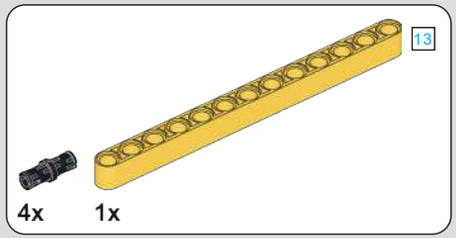

348

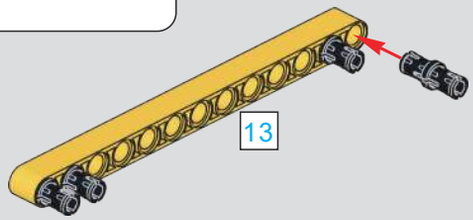

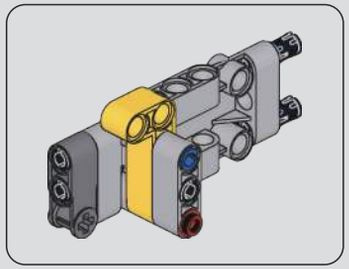

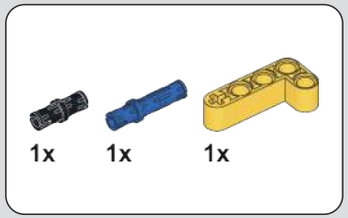

349

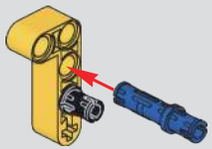

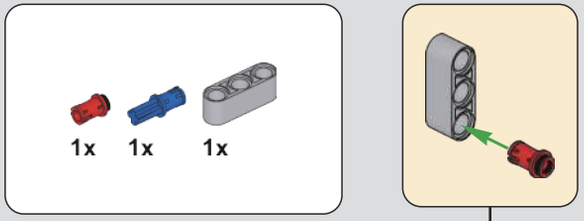

350

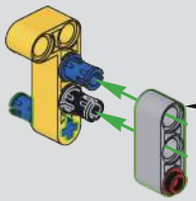

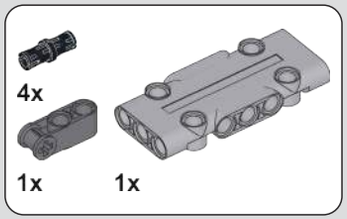

351

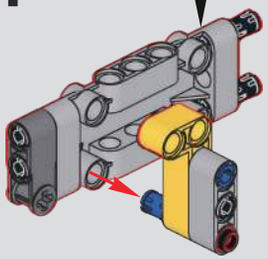

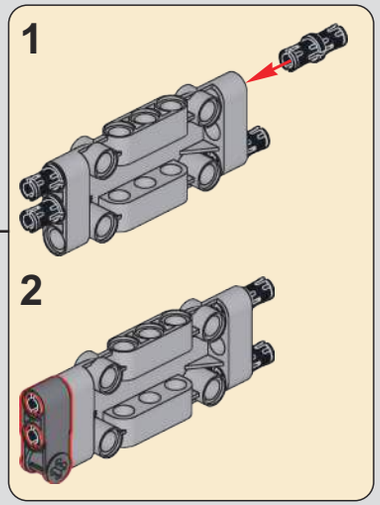

352

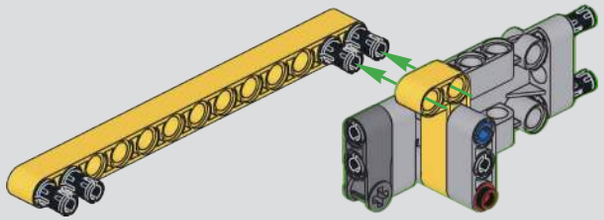

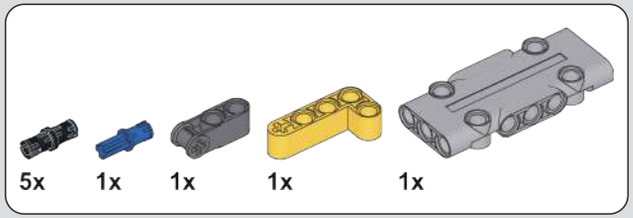

353

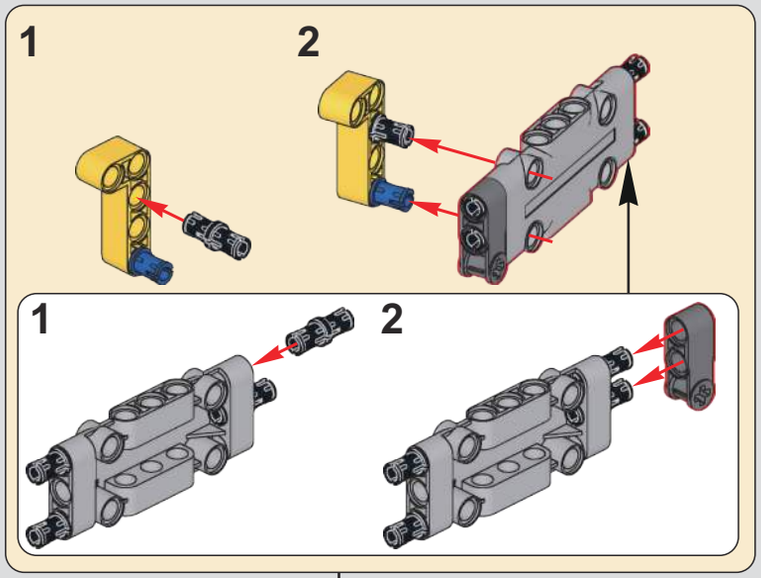

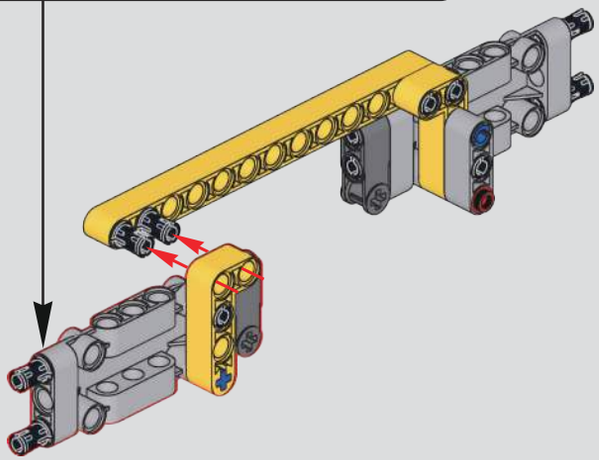

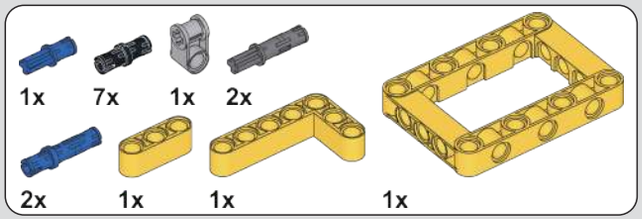

354

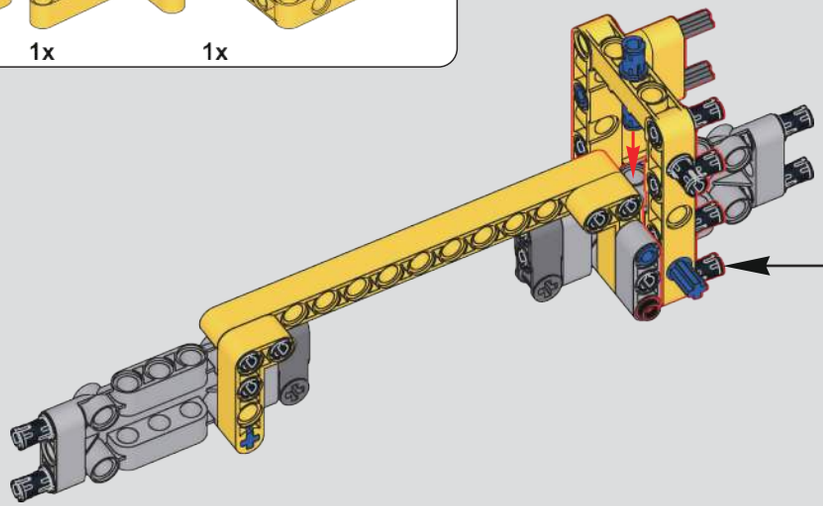

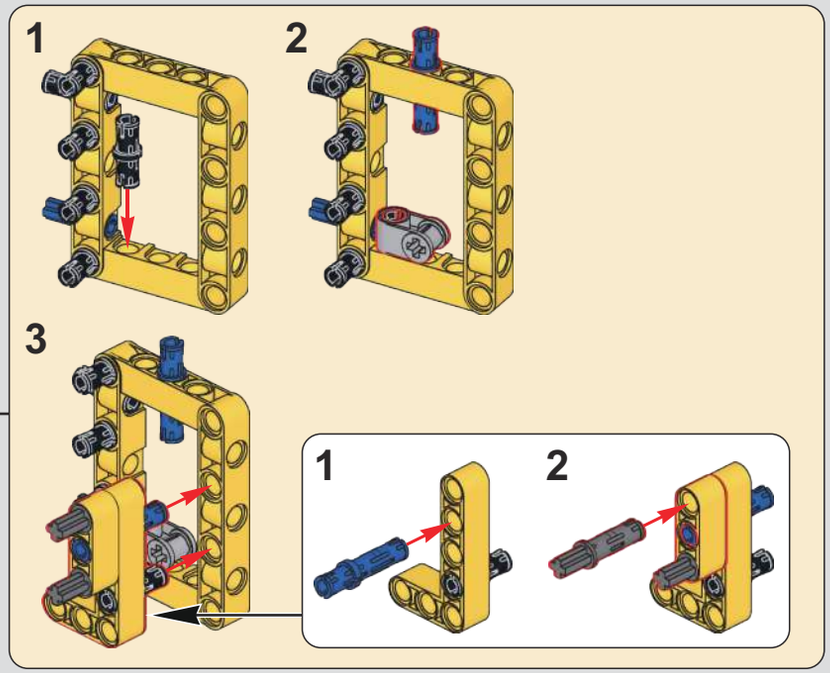

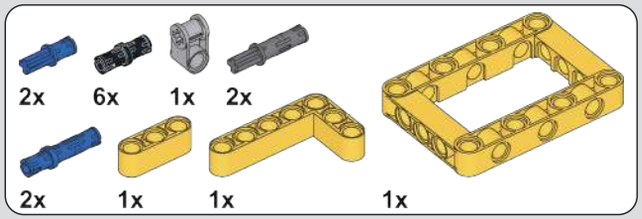

355

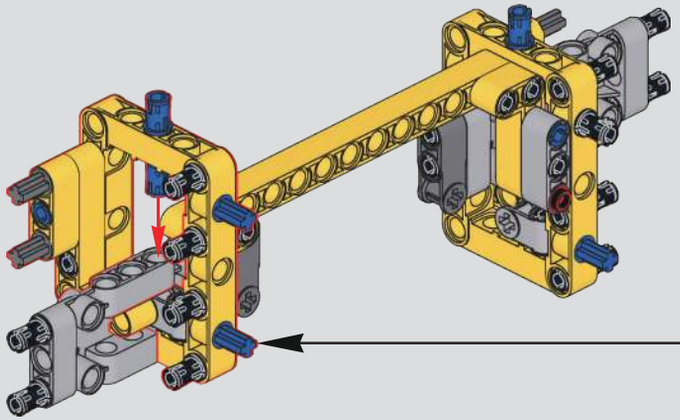

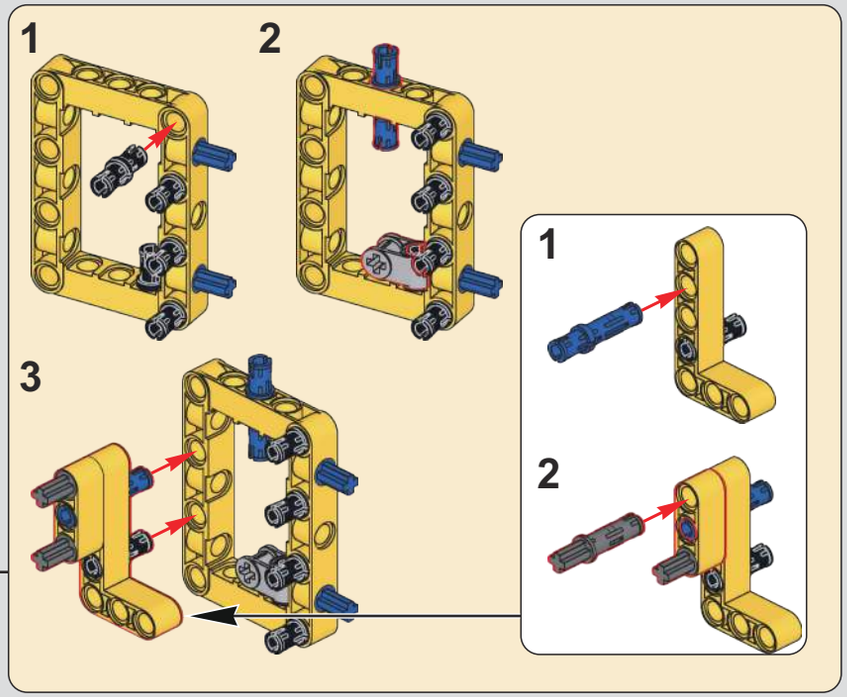

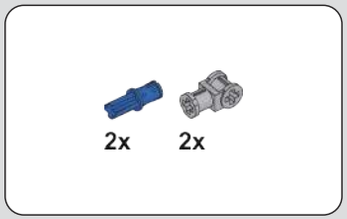

356

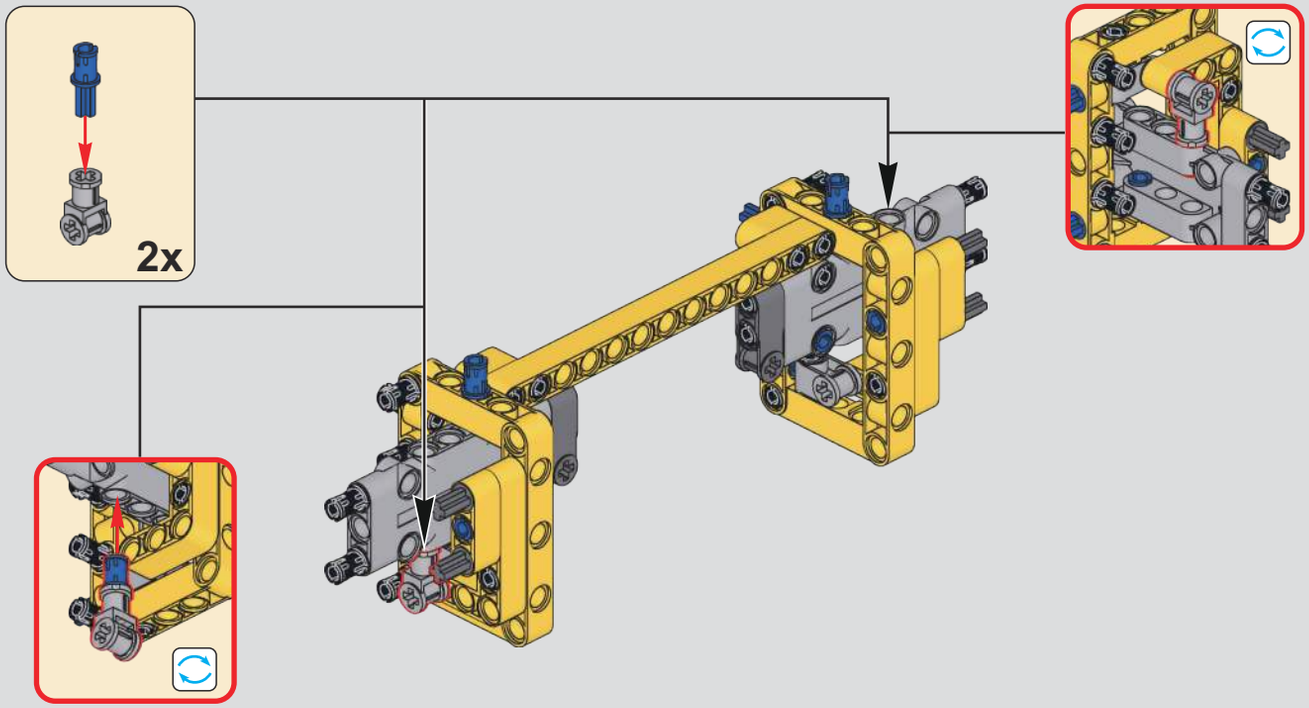

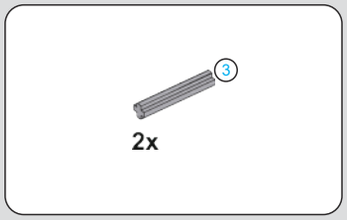

357

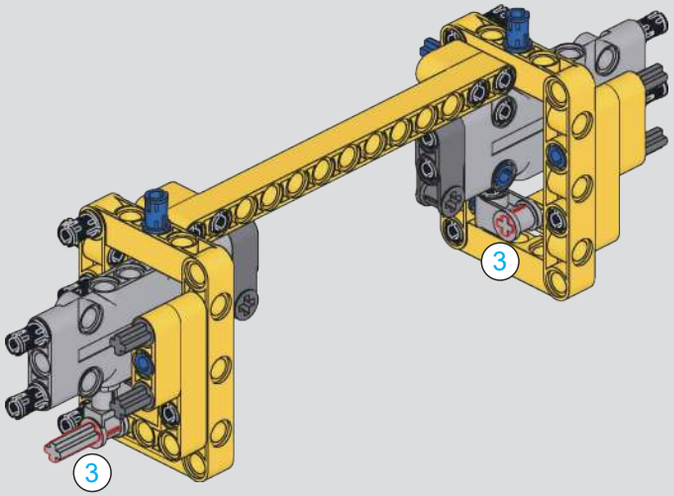

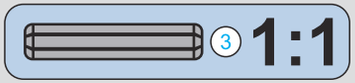

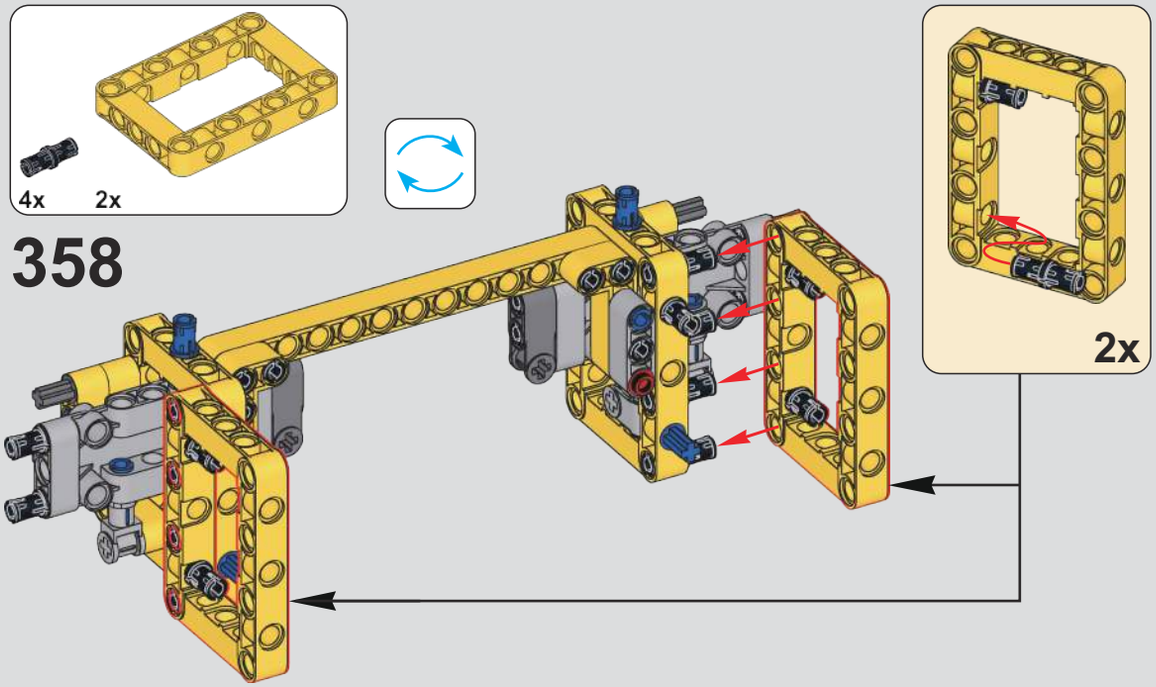
4x
2x
358
2x

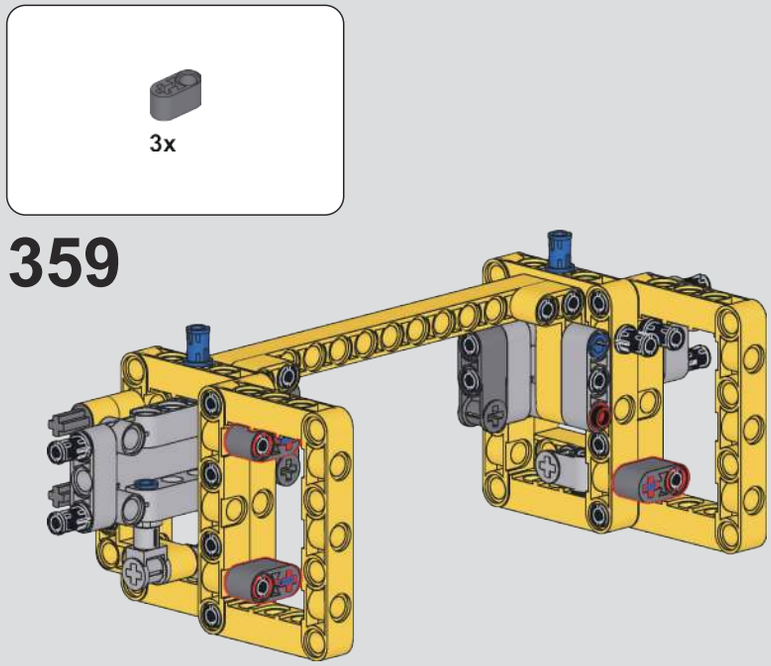
3x
359

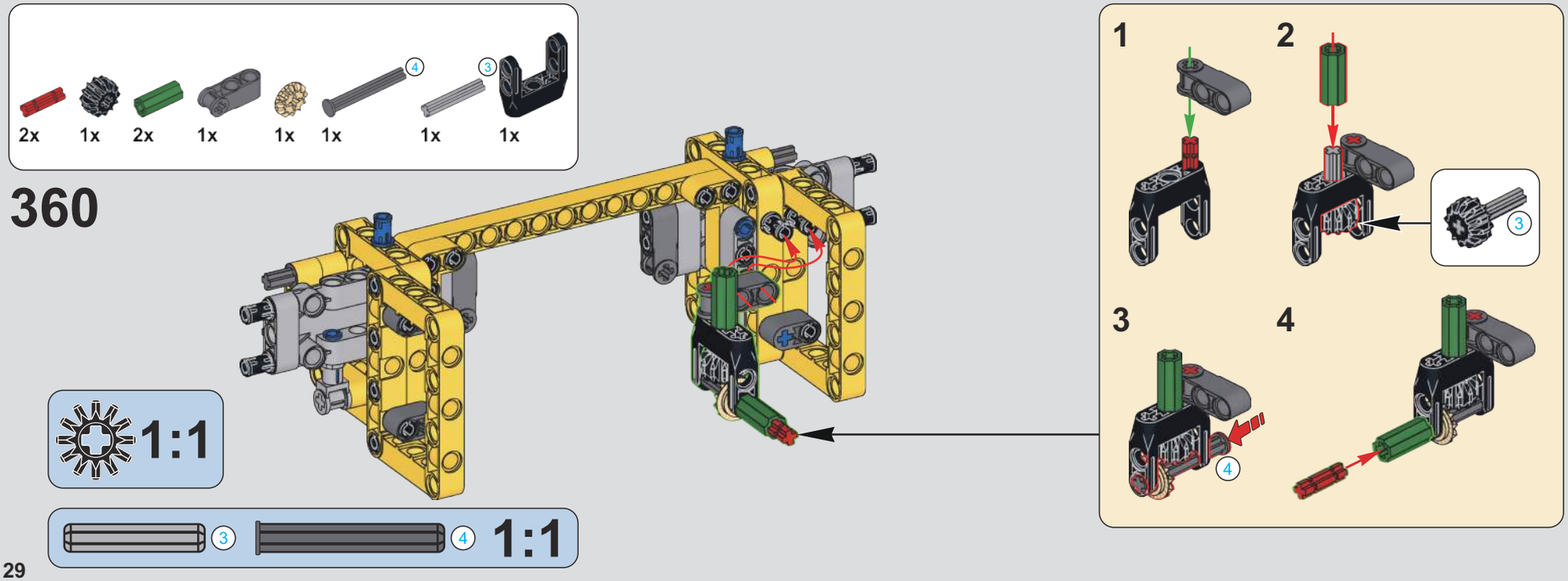
2x
1x
2x
1x
1x
1x
1x
1x
360
1
2
3
4
1:1
1:1

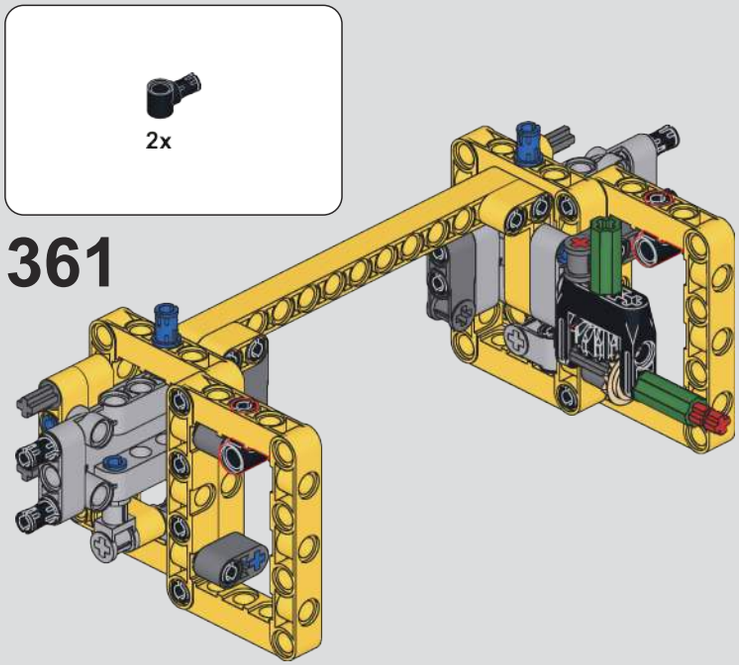
2x
361

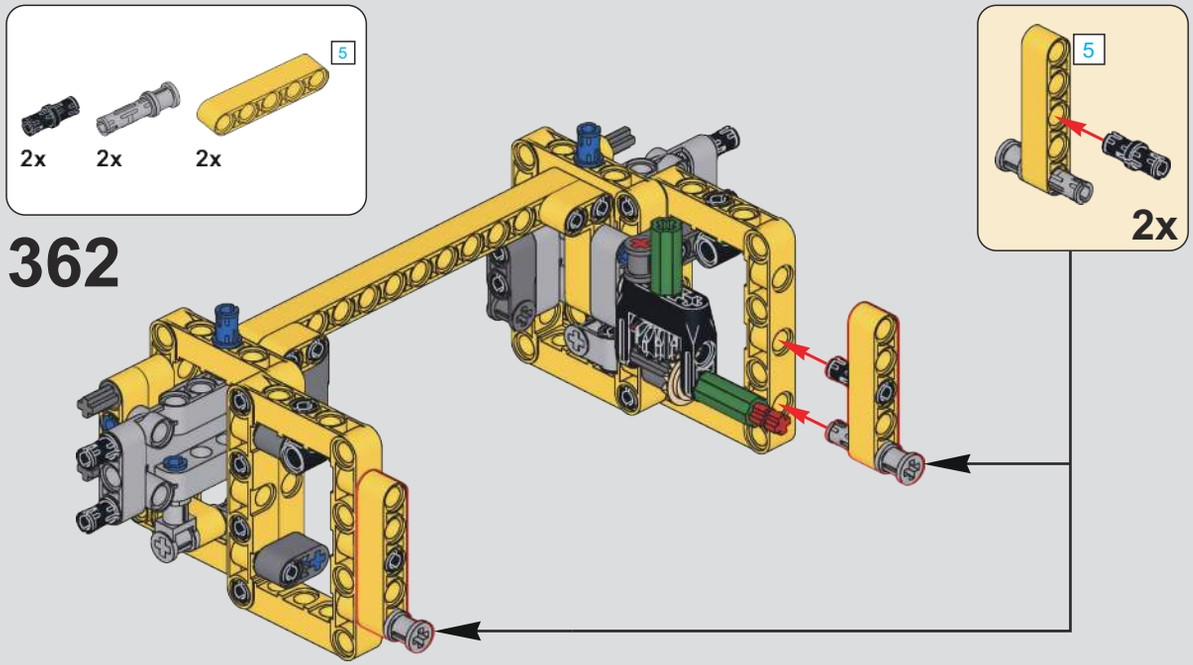
5
2x
2x
2x
362
5
2x

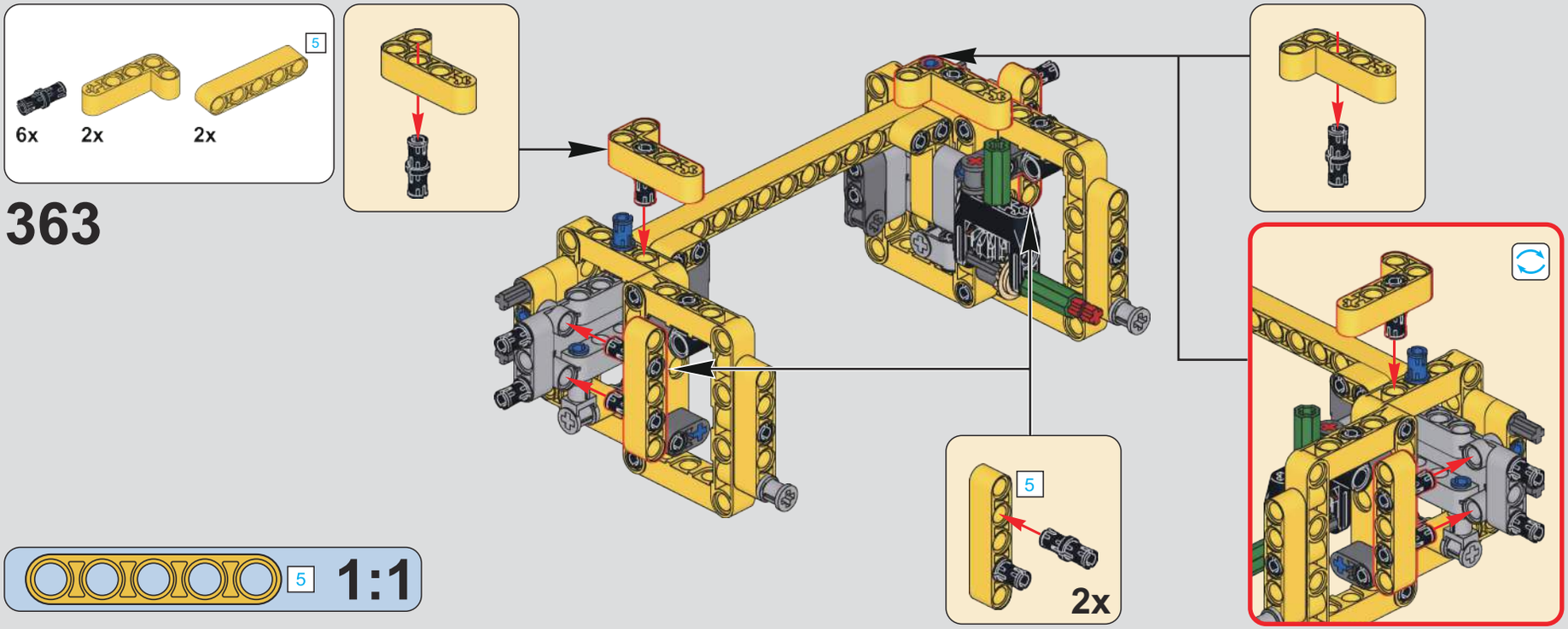
5
6x
2x
2x
363
5
2x
5
1:1

364

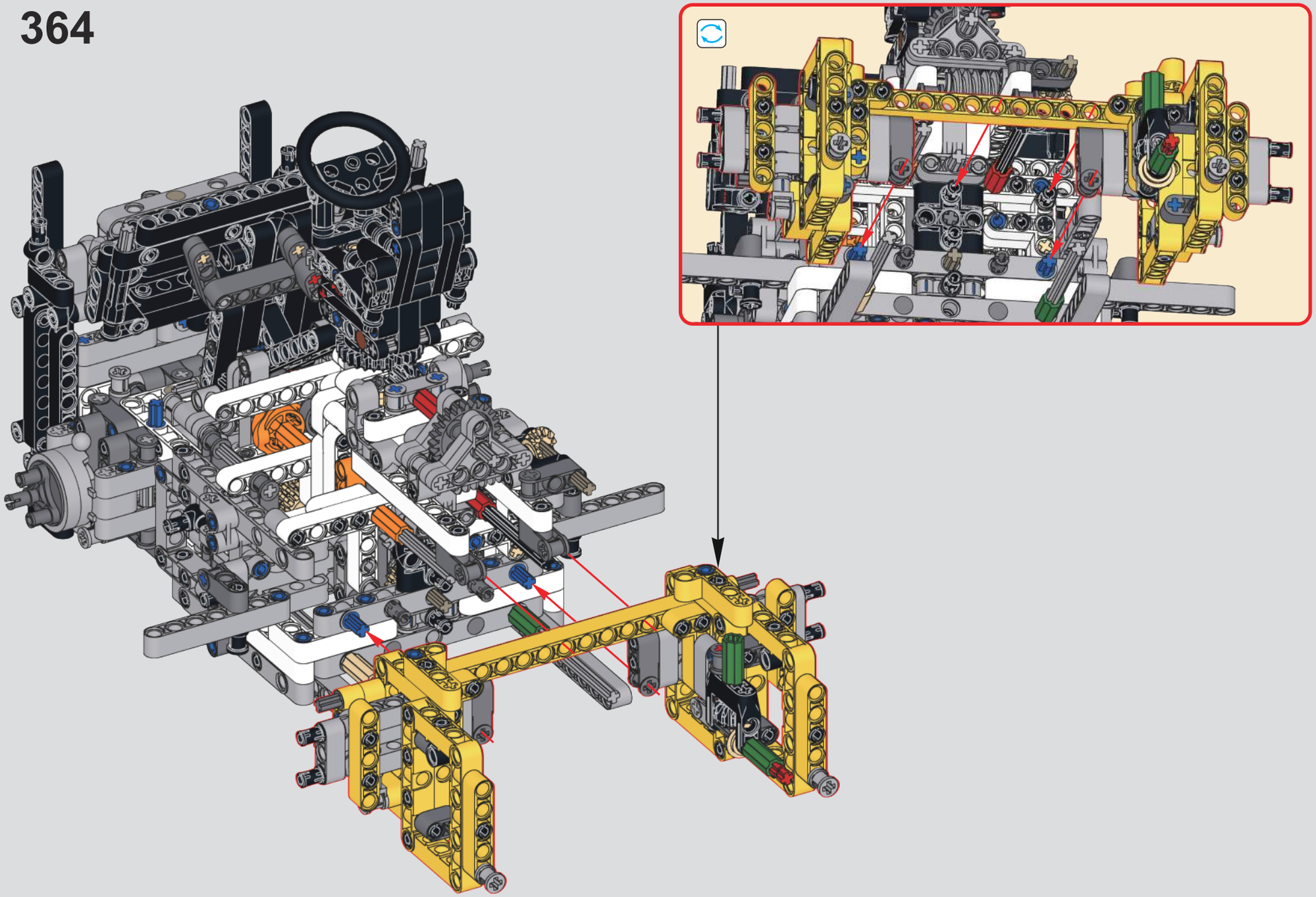

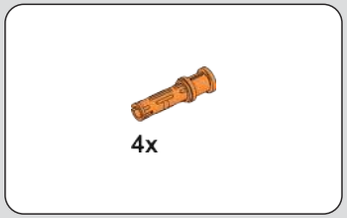

365

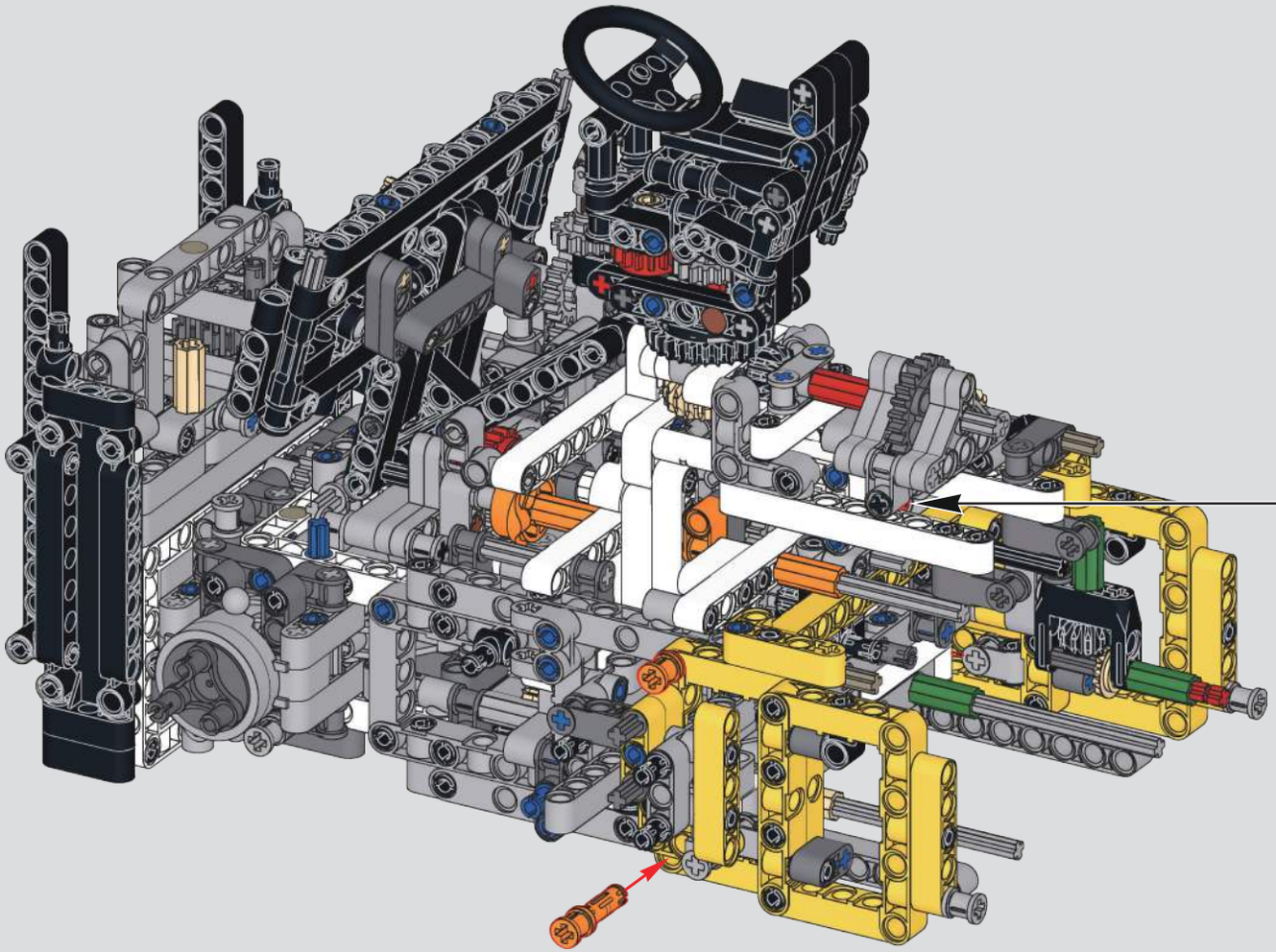

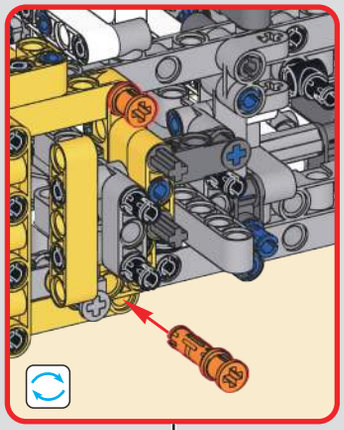

366

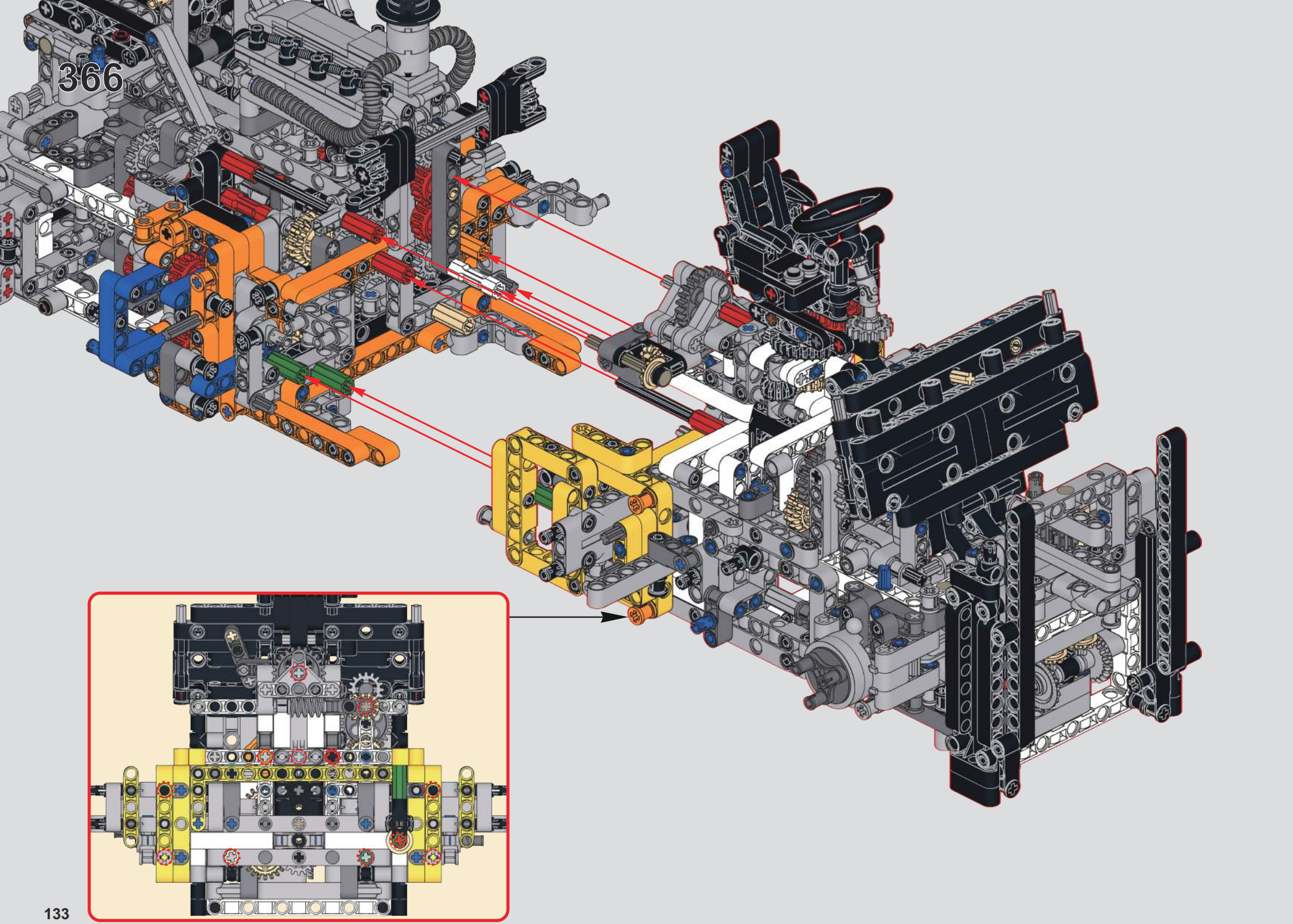

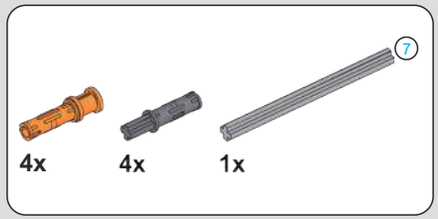

367

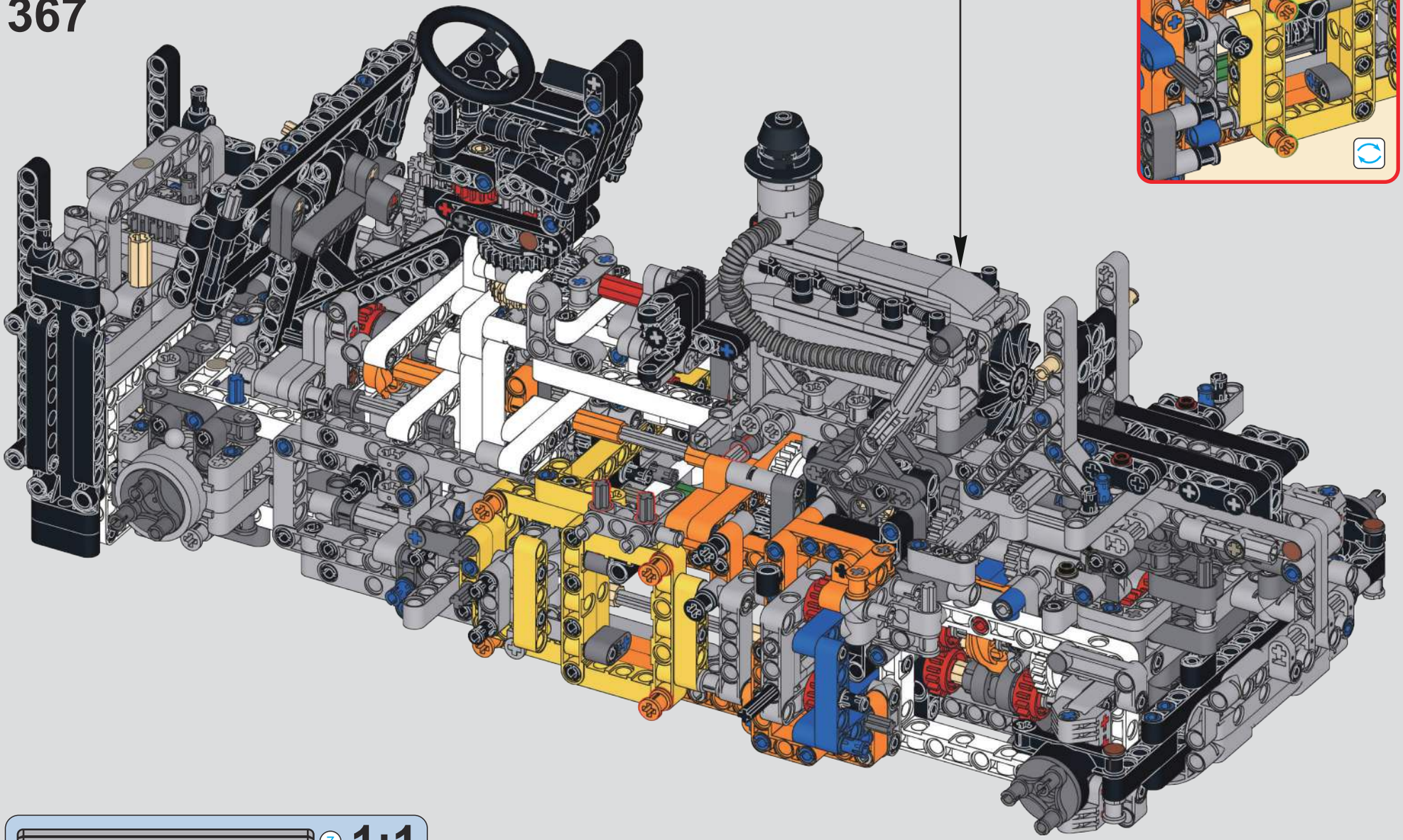

4x

368

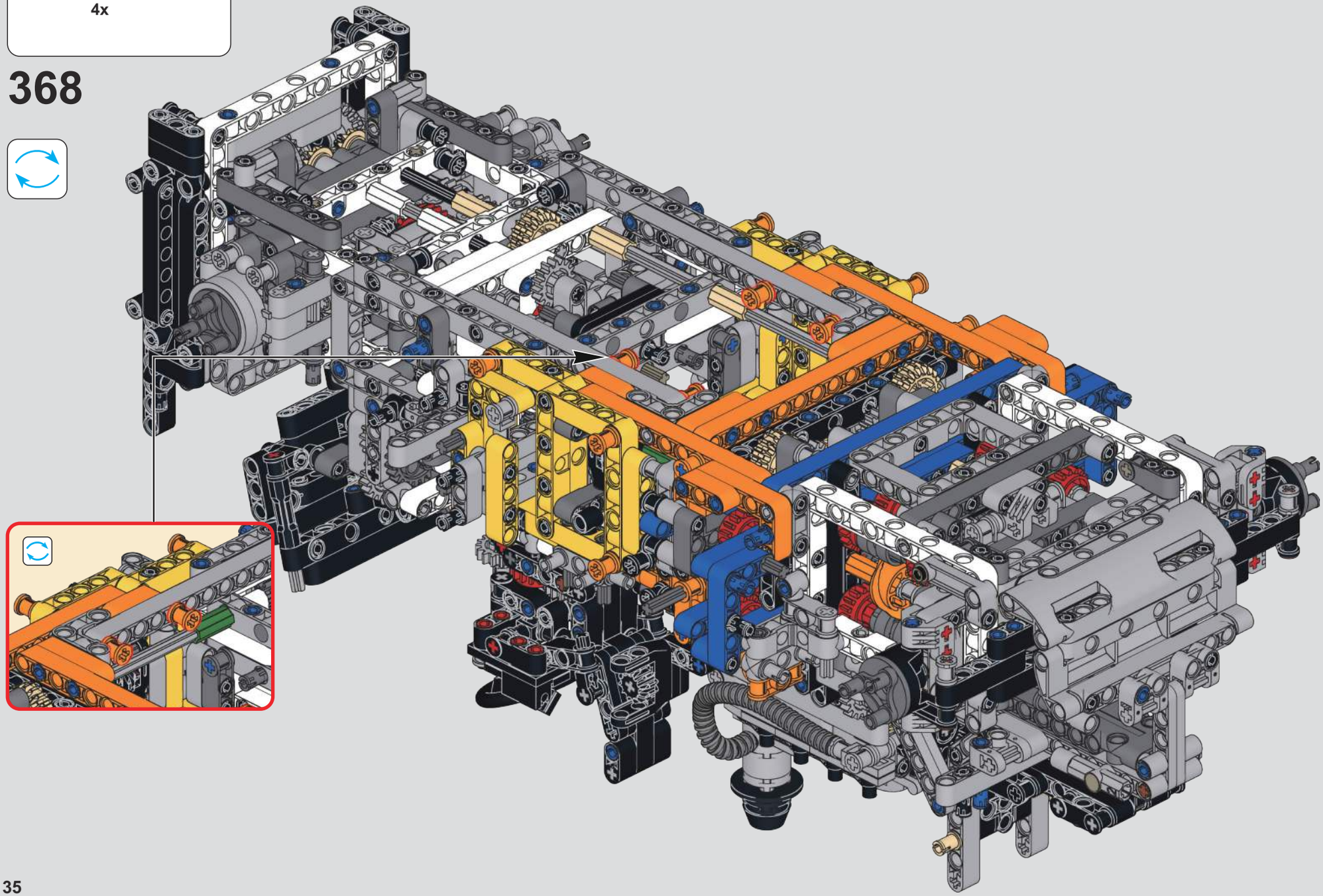

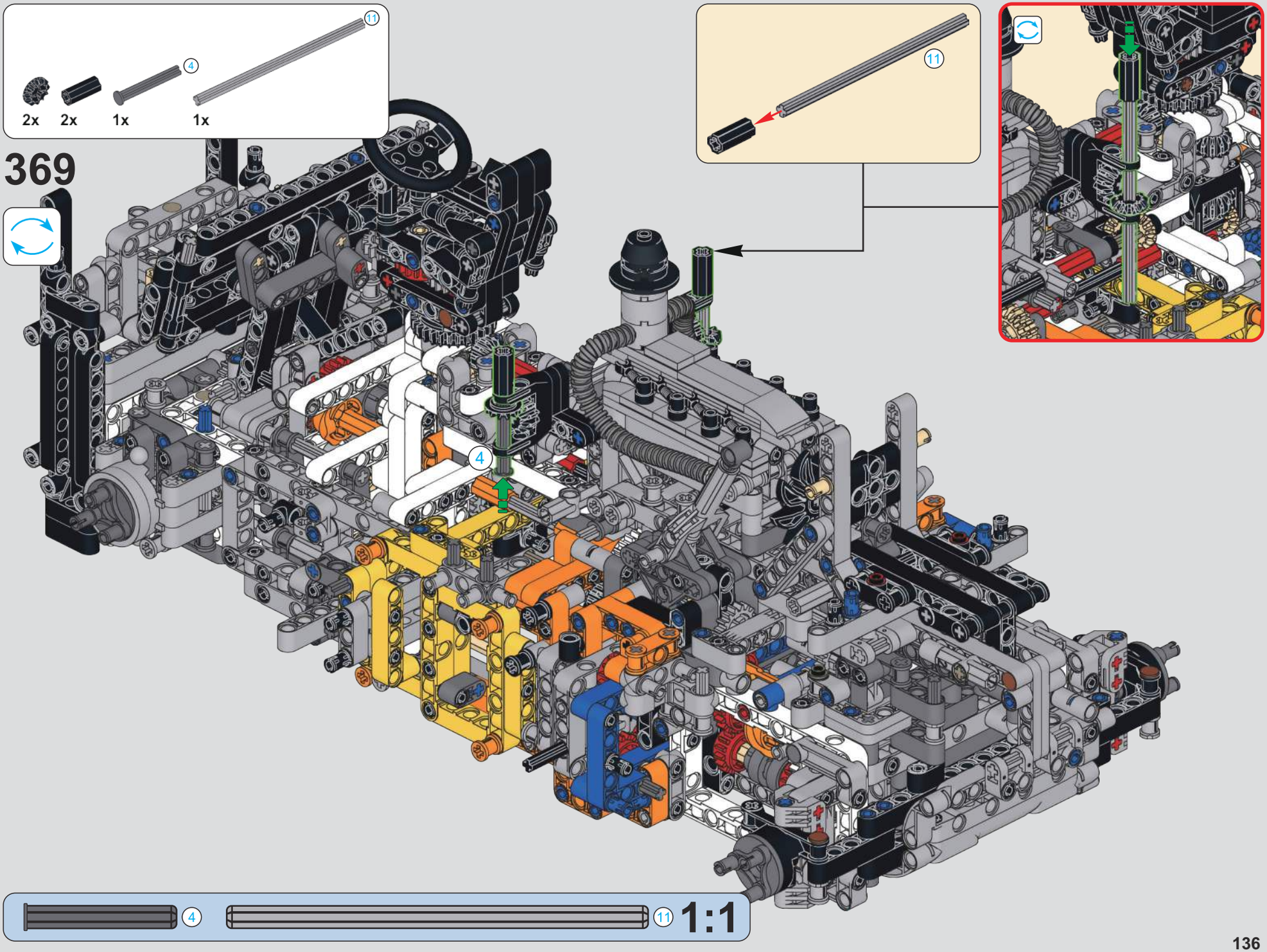
369
2x
2x
1x
4
1x
11
11
4
4
11
1:1

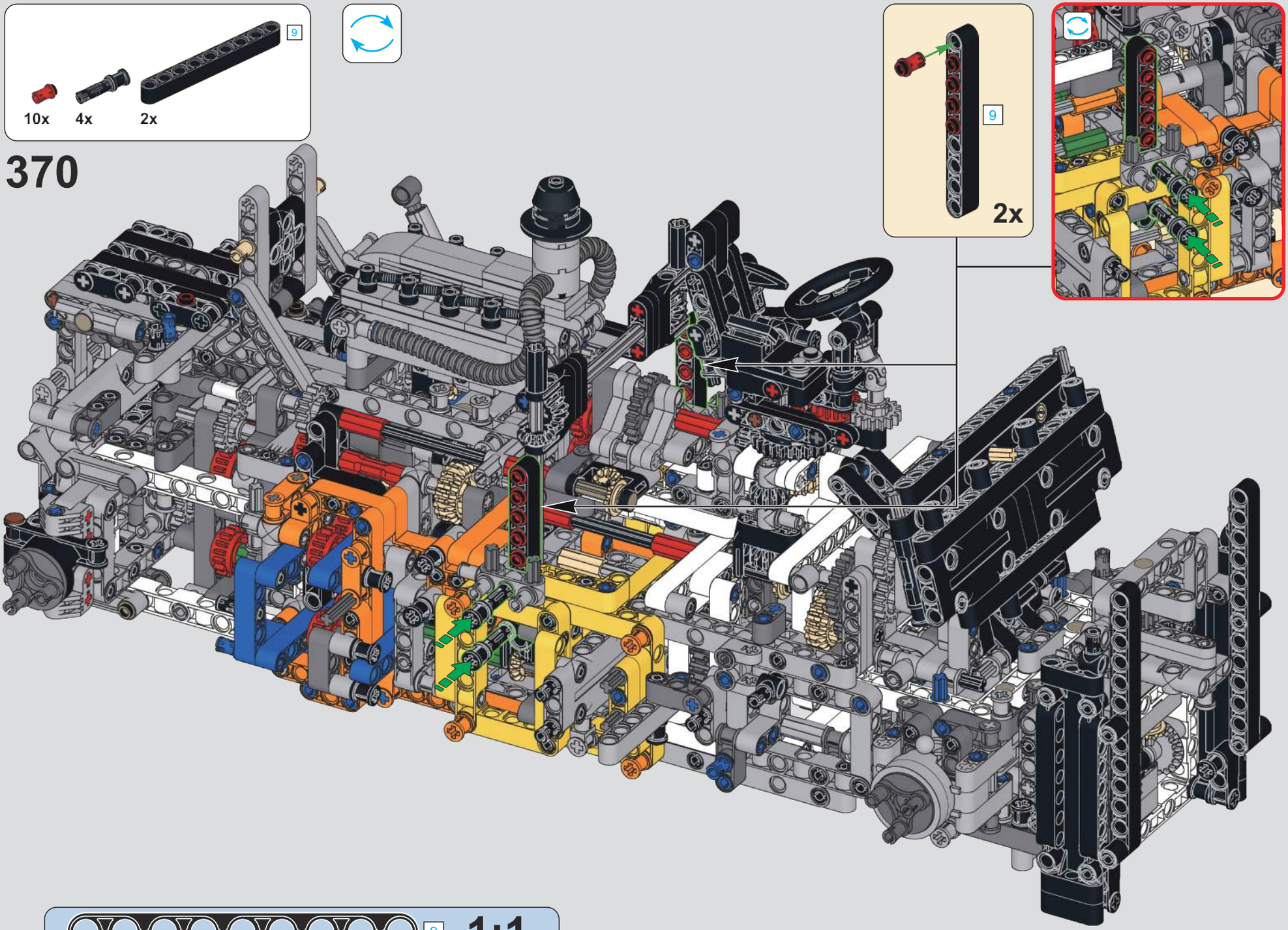
9
10x
4x
2x
370
9
2x
9
1:1

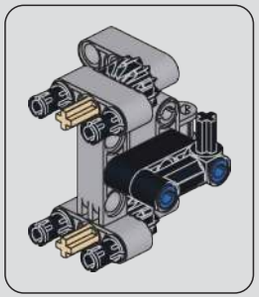

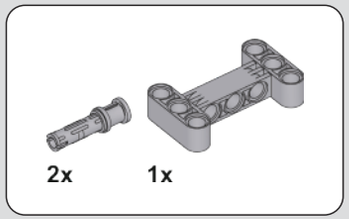

371

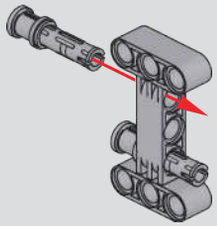

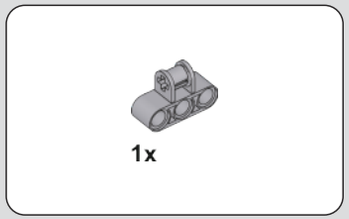

372

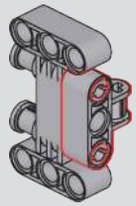

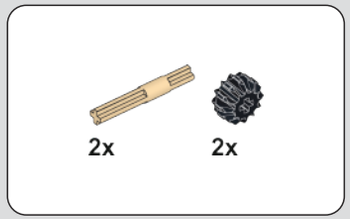

373

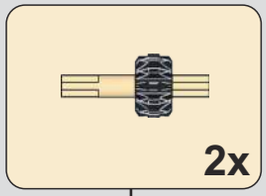

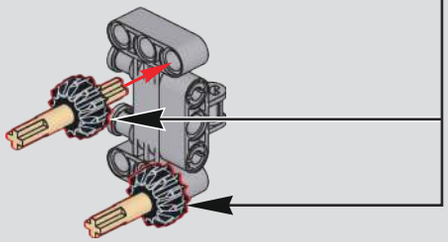

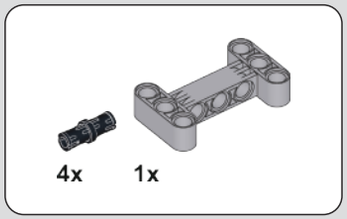

374

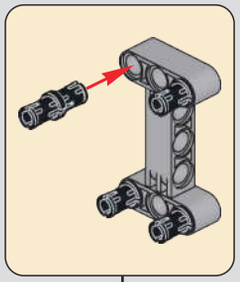

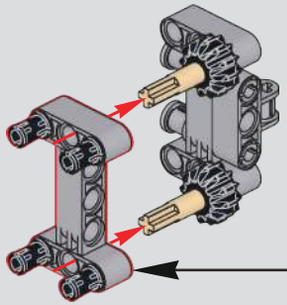

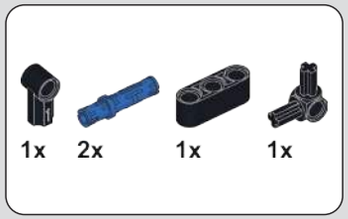

375

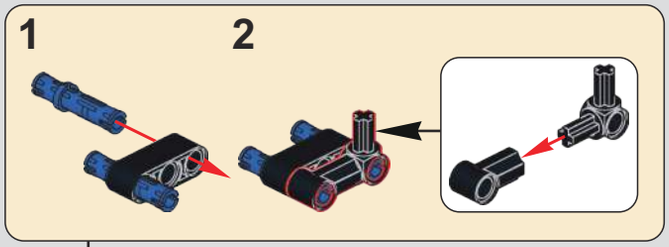

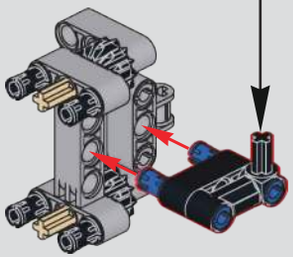

376

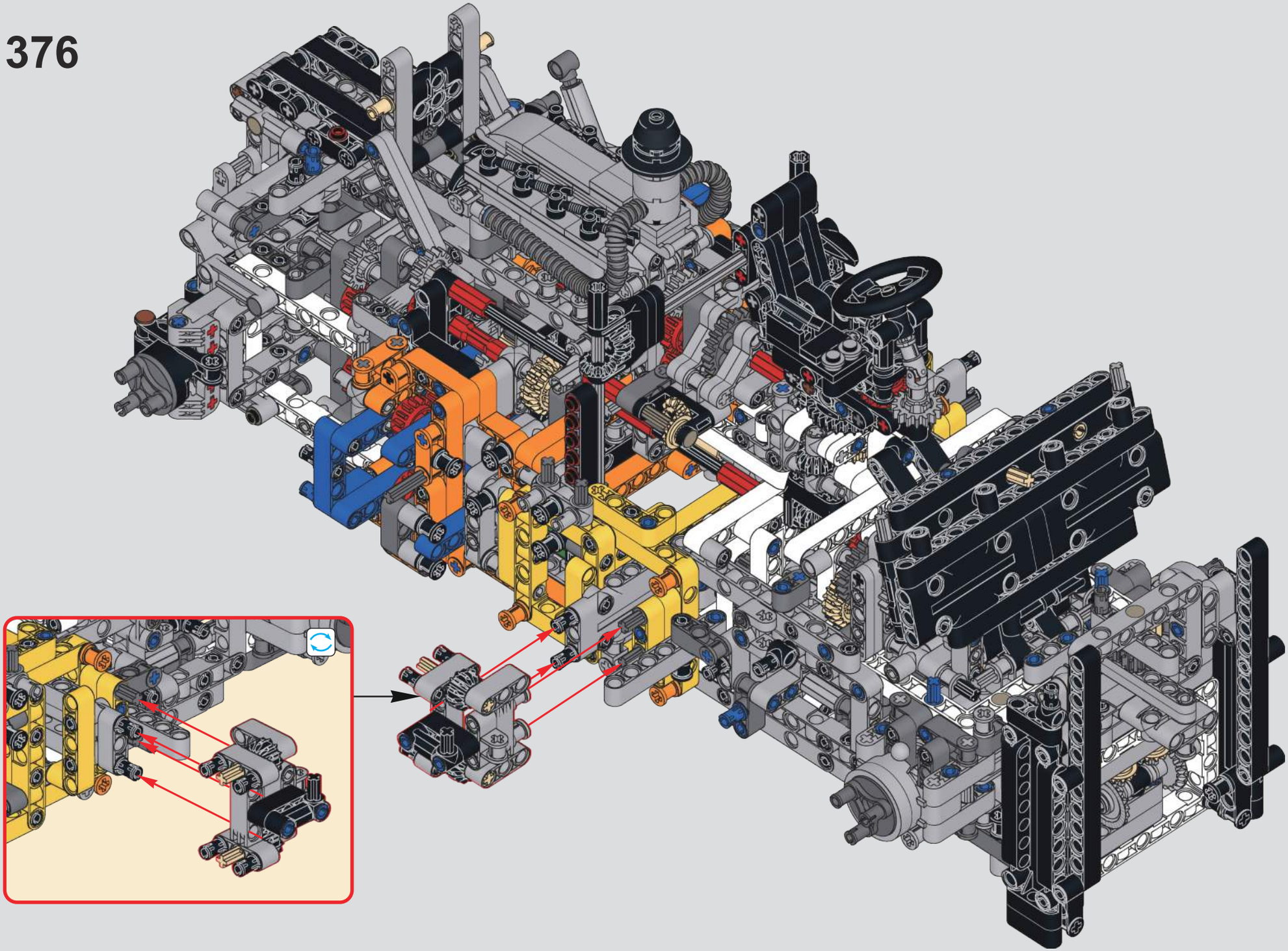

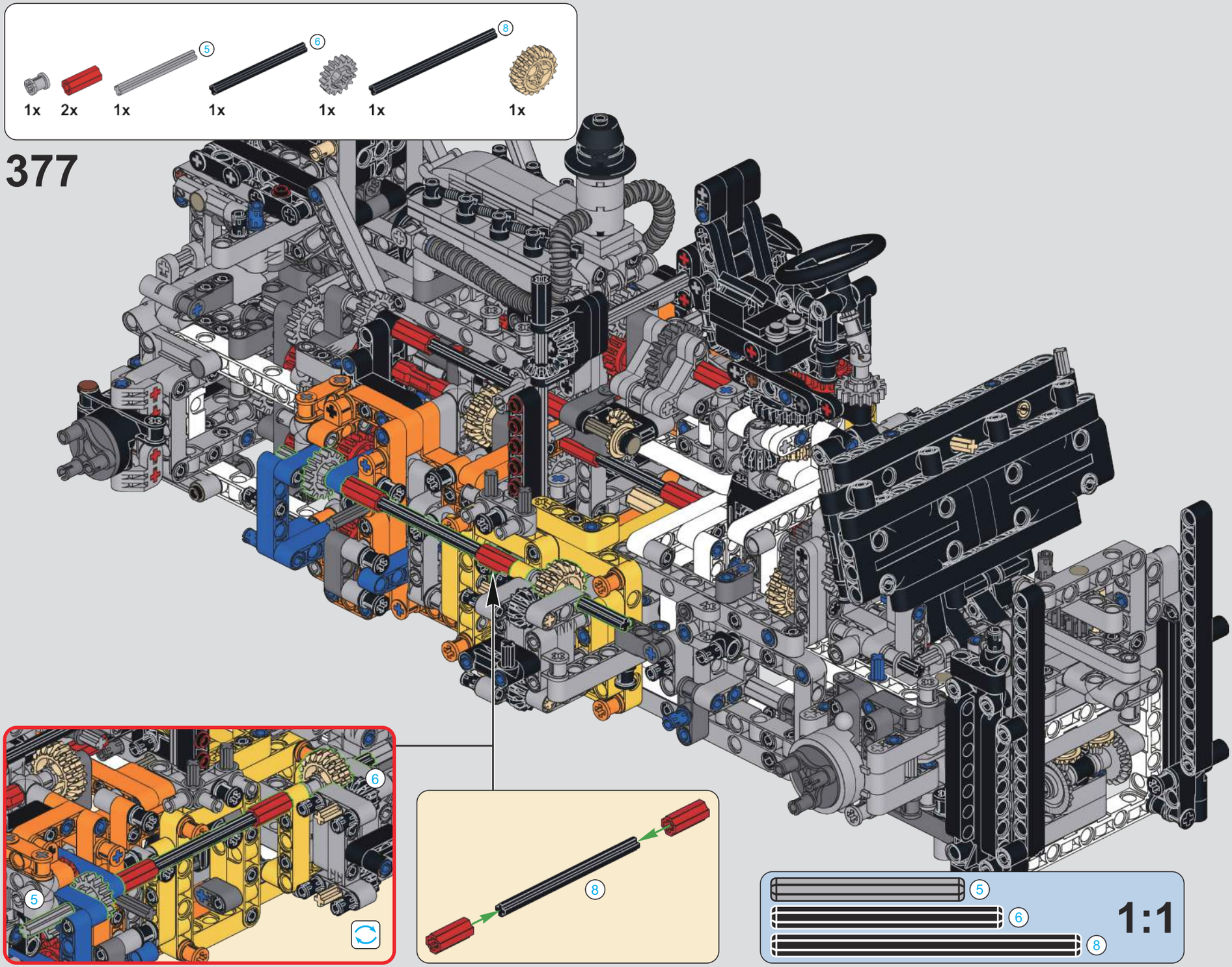
1x
2x
5
1x
6
1x
1x
8
1x
377
5
6
8
5
6
8
1:1

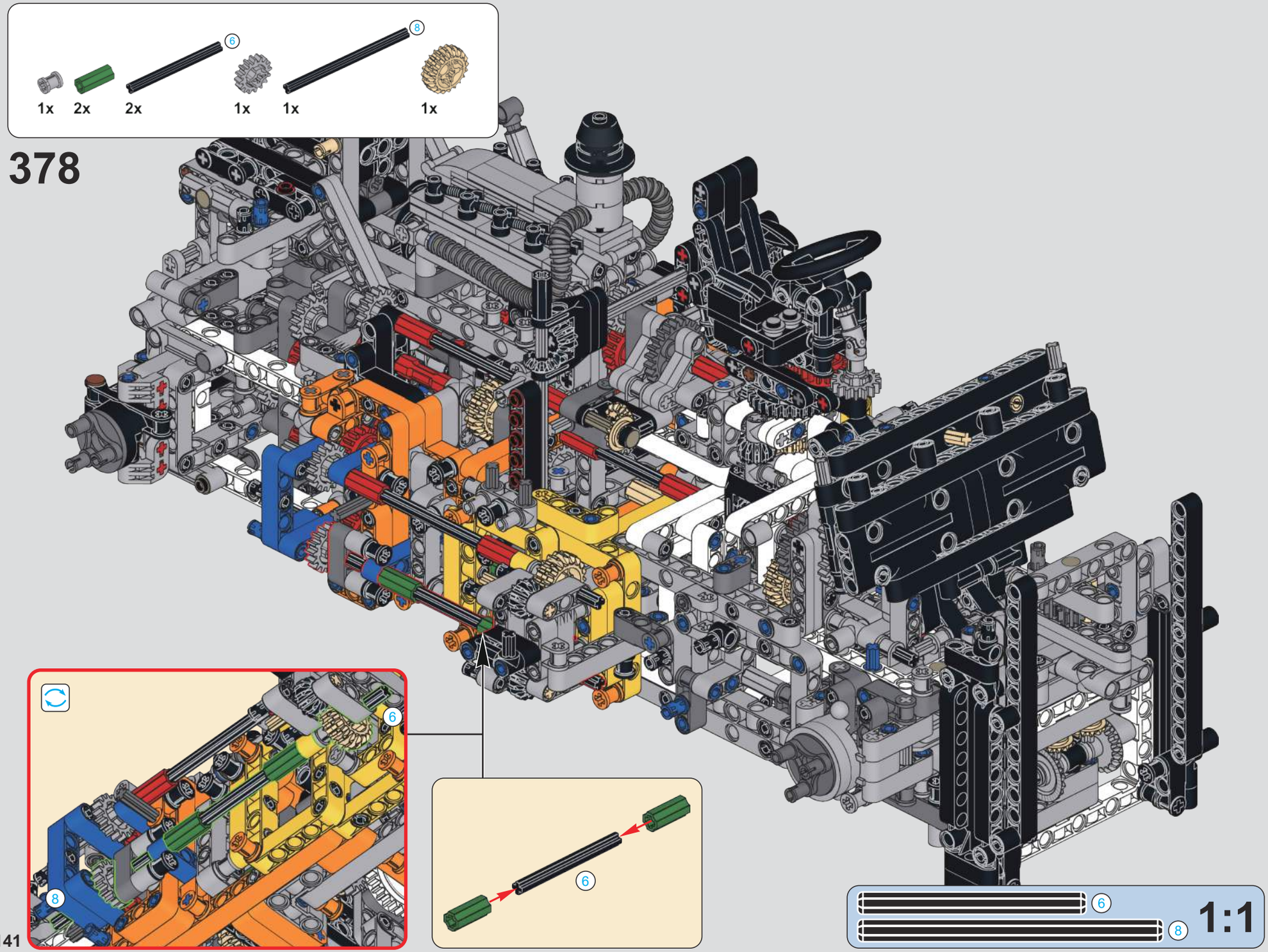
6
8
1x
2x
2x
1x
1x
1x
378
6
8
6
6
8
1:1

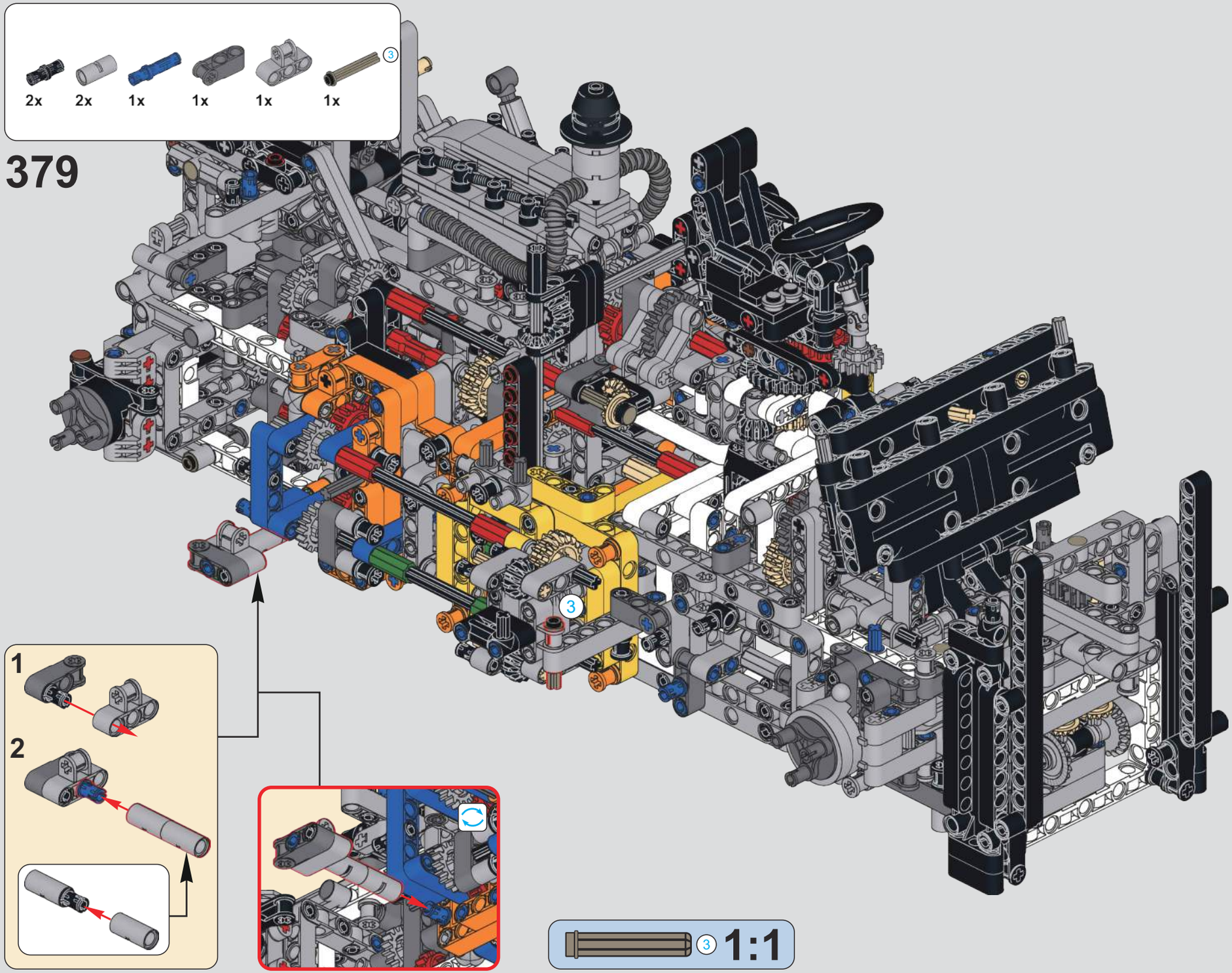
2x
2x
1x
1x
1x
1x
3
379
1
2
3
3
1:1

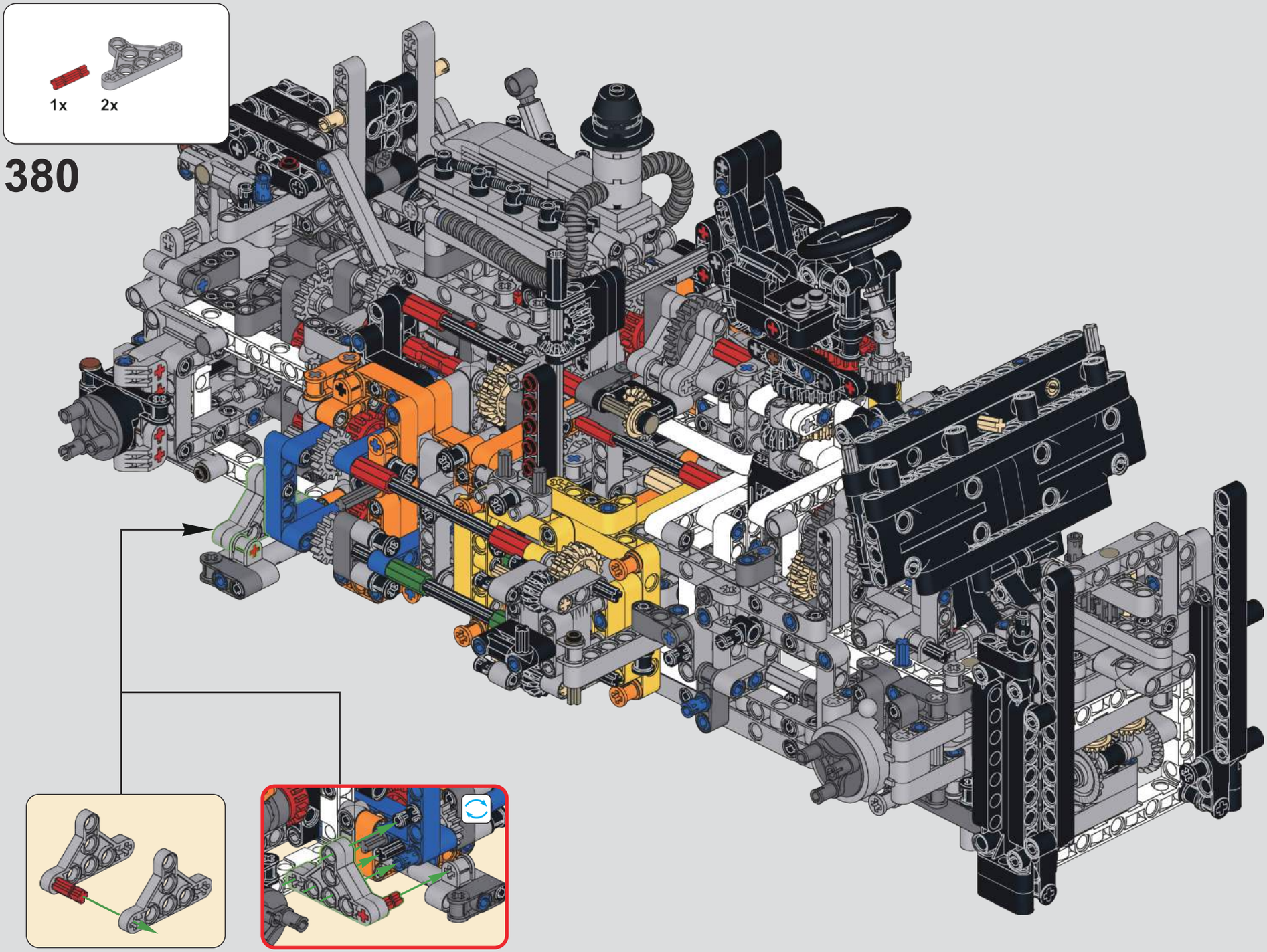

380

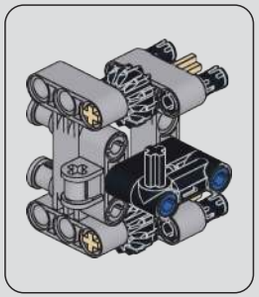

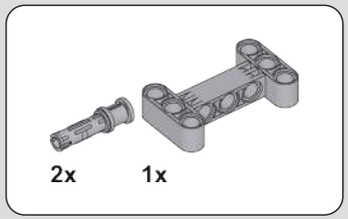

381

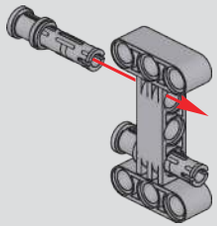

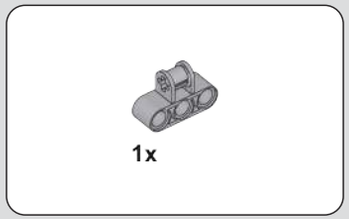

382

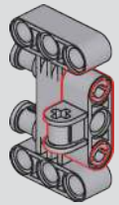

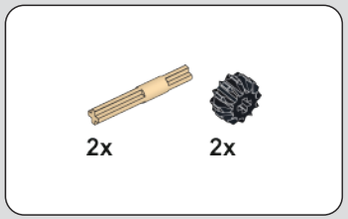

383

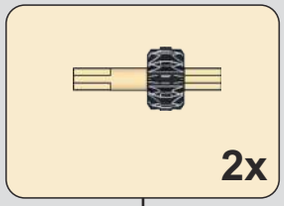

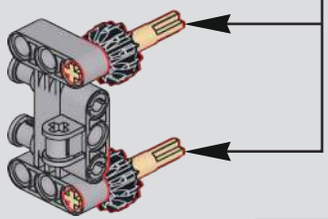

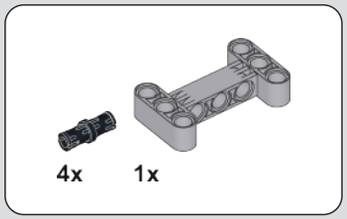

384

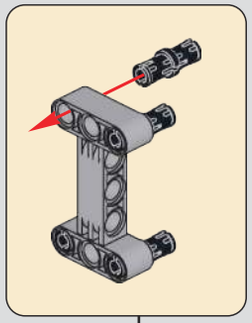

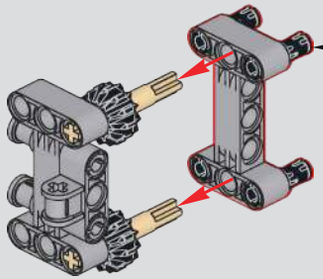

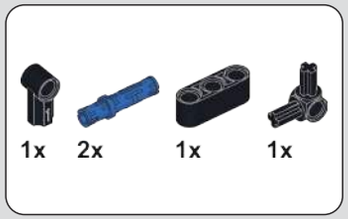

385

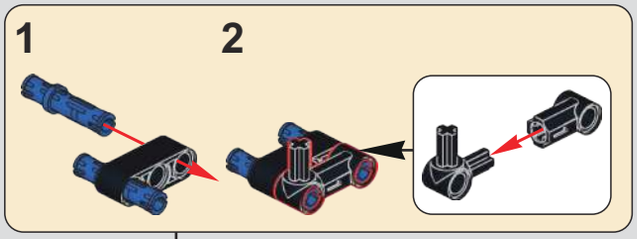

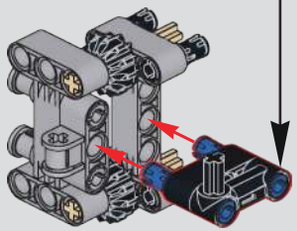

386

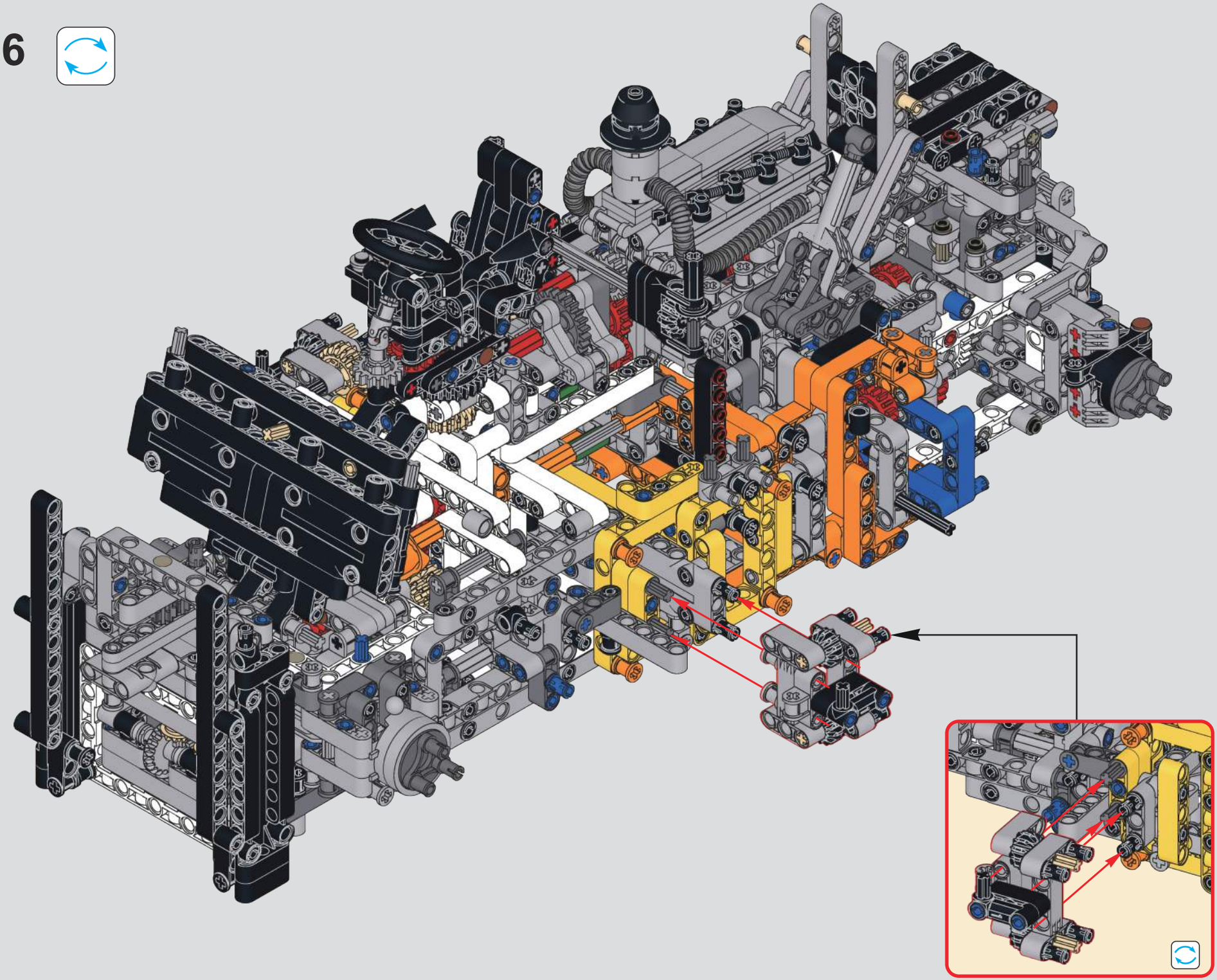

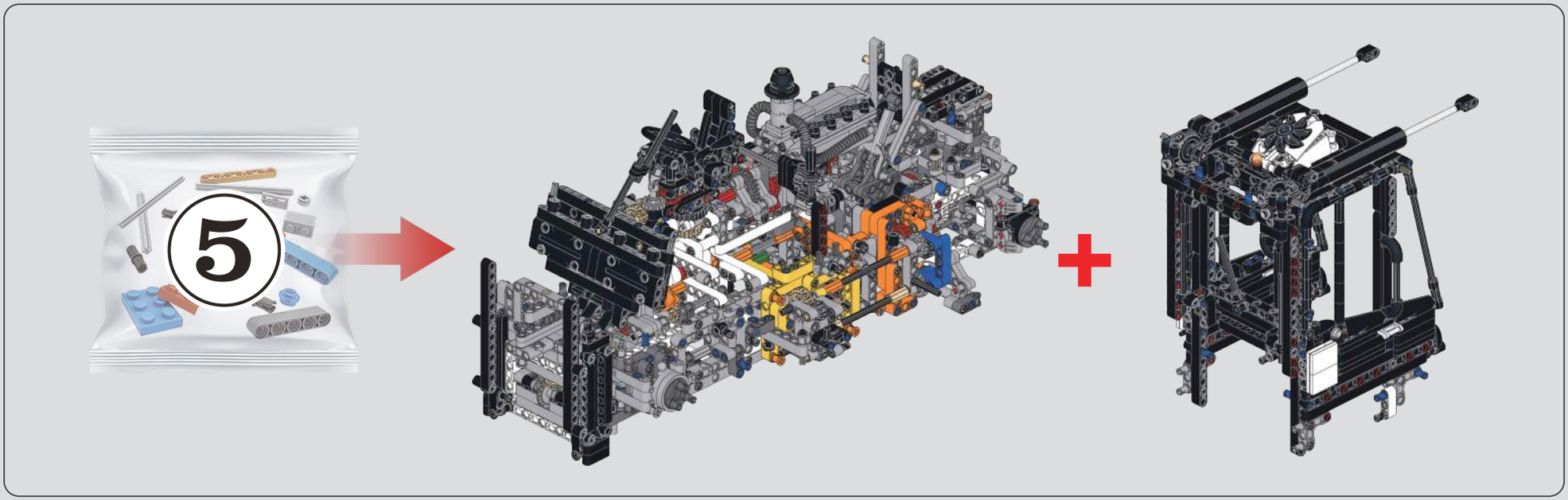
5

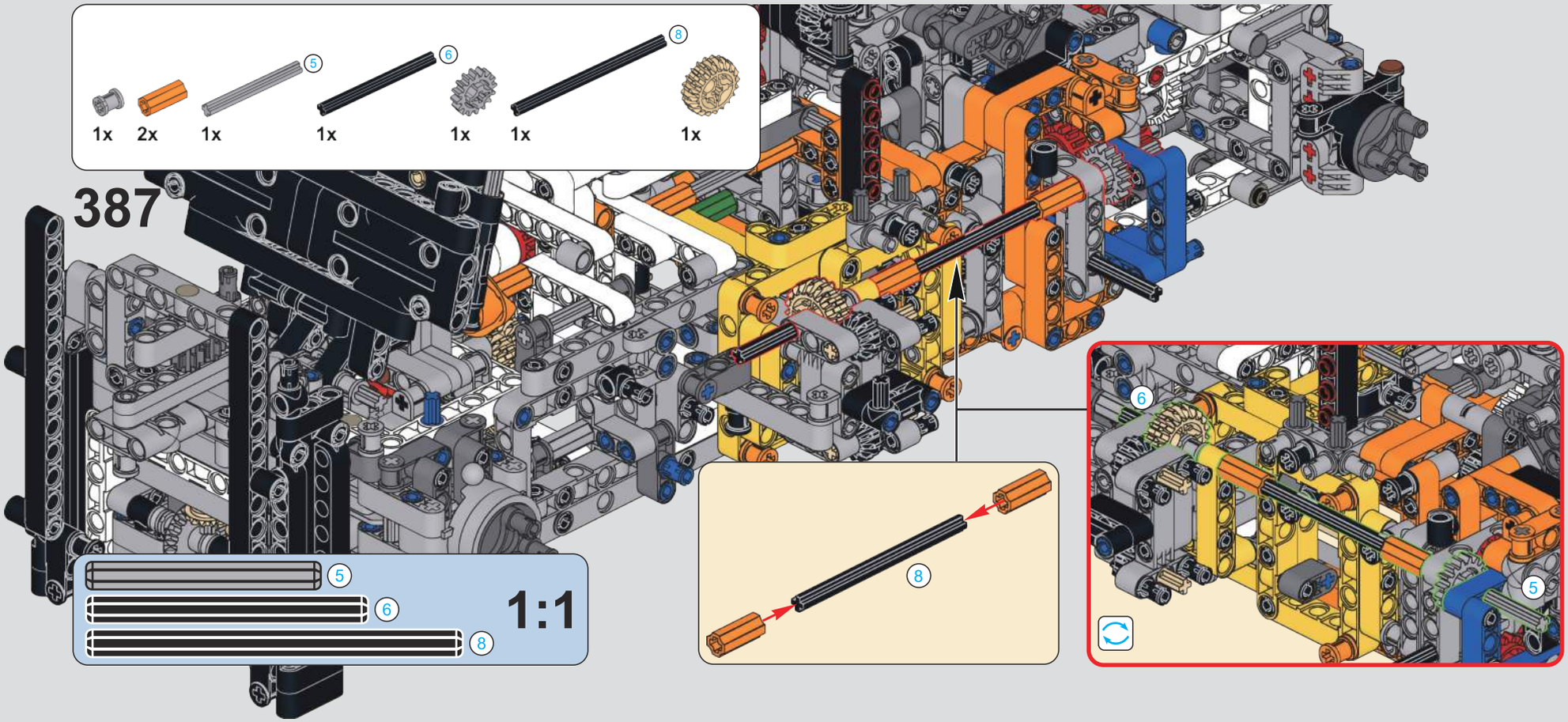
1x
2x
5
1x
6
1x
1x
8
1x
387
5
6
8
1:1
8
6
5

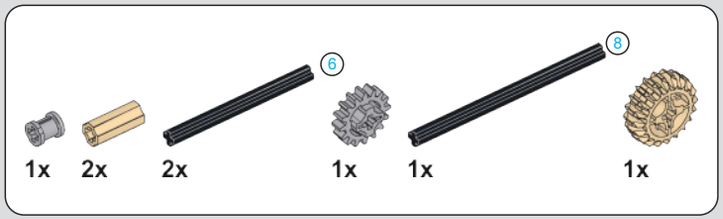

388

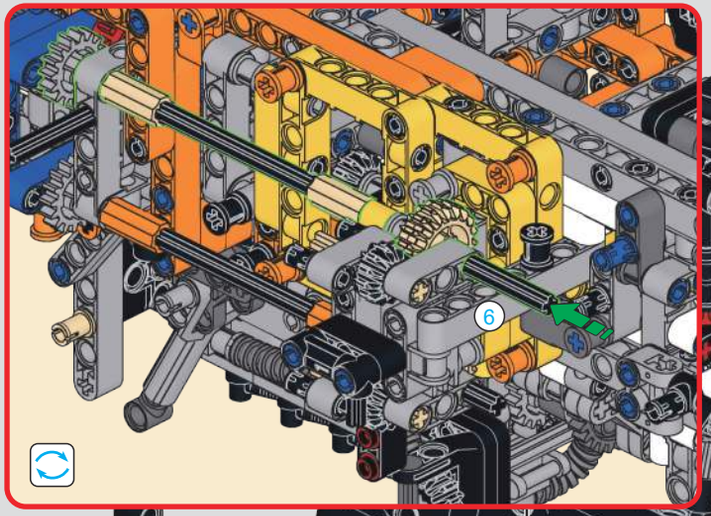

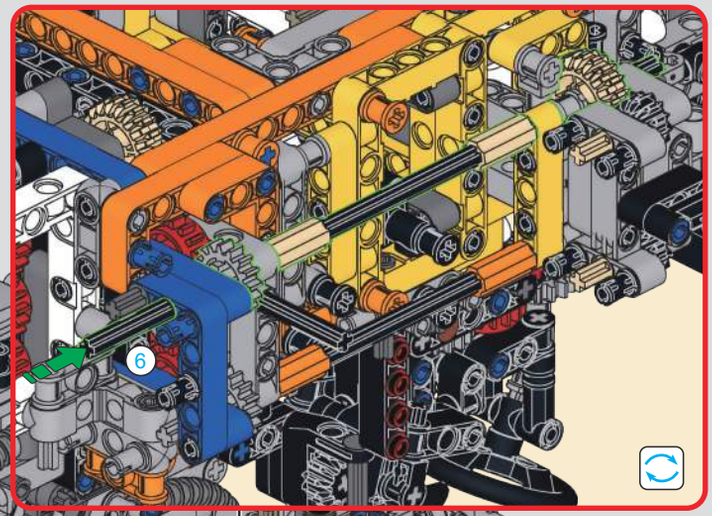

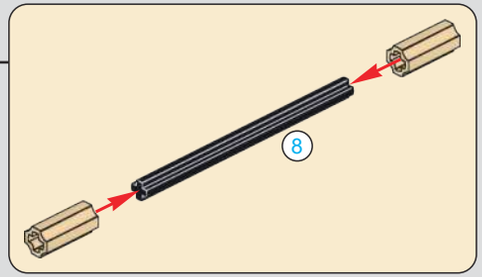

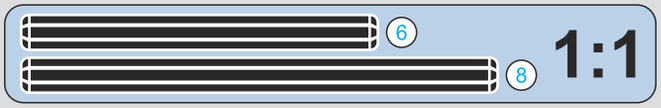

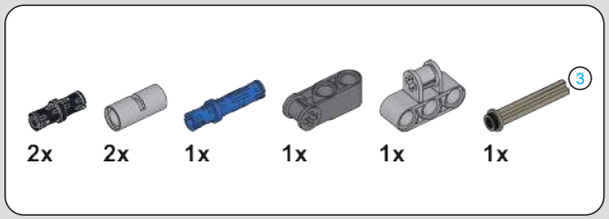

389

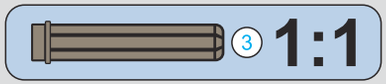

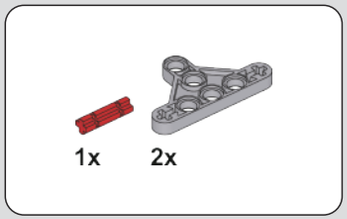

390

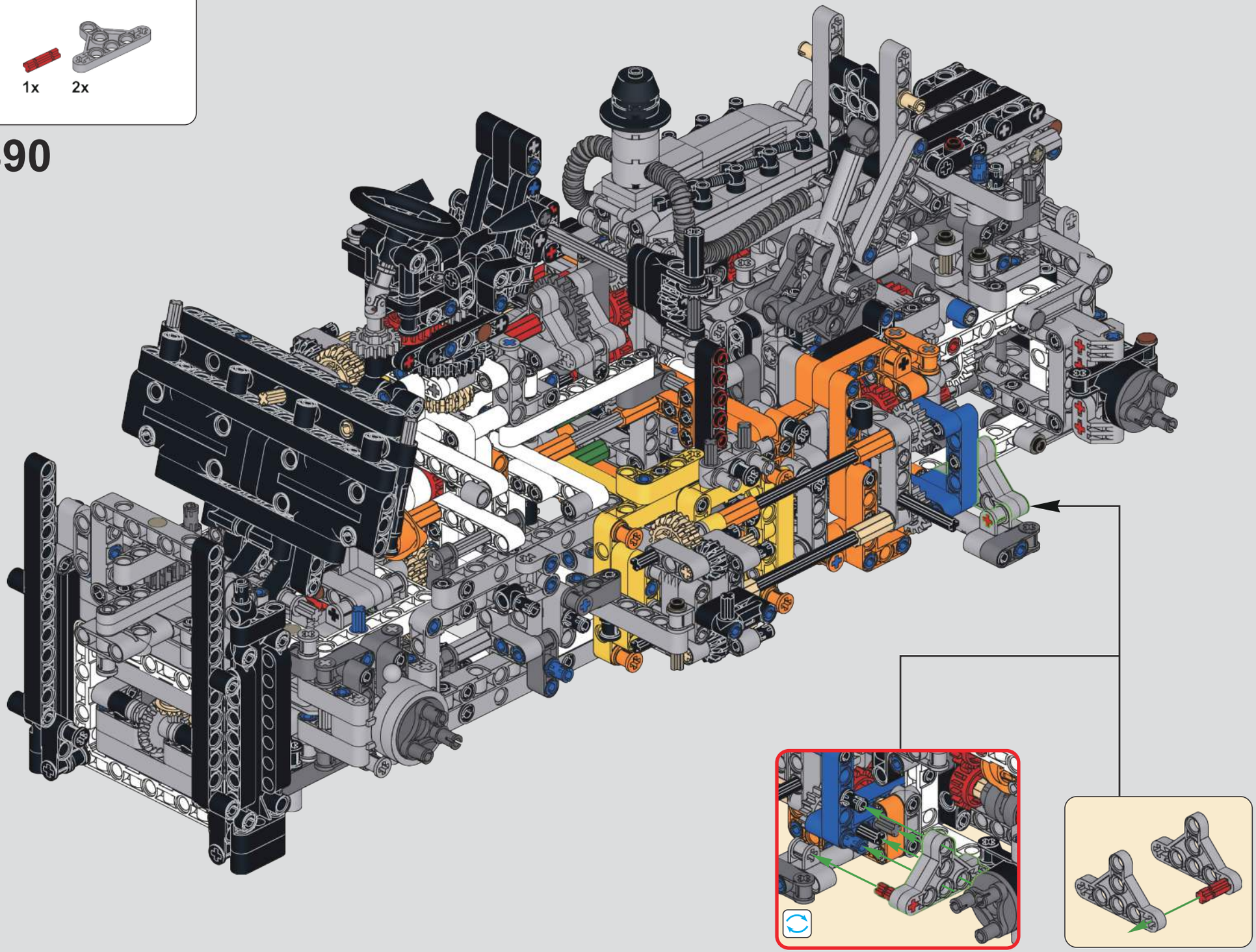

391

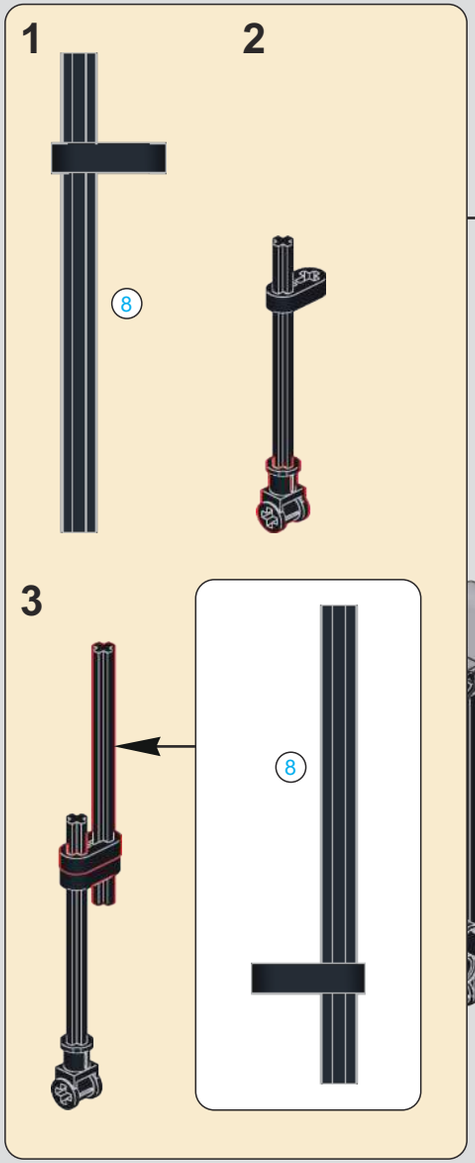

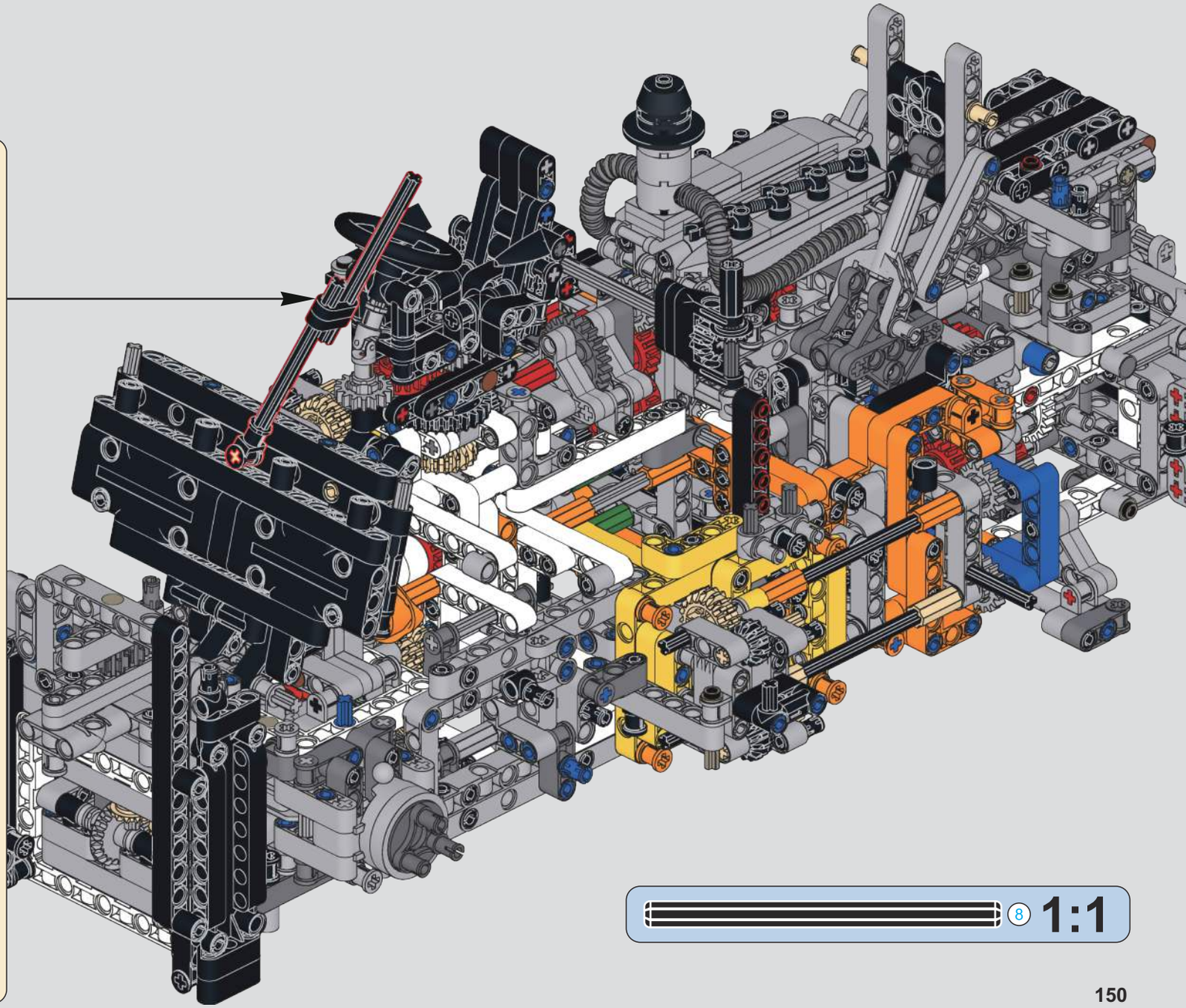

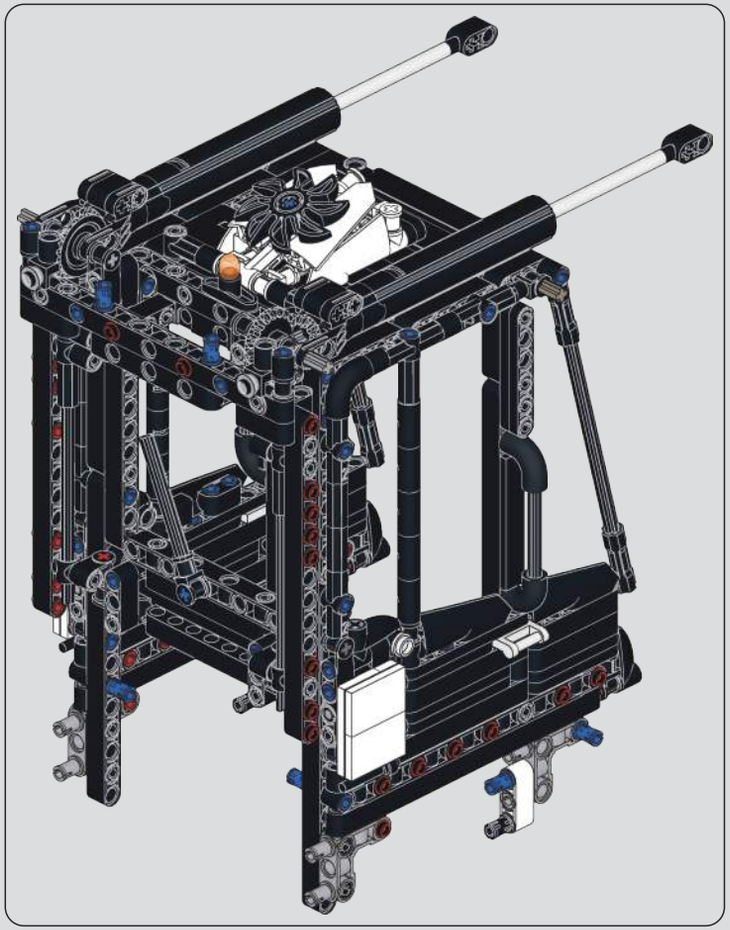

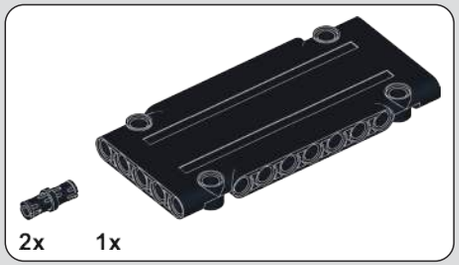

392

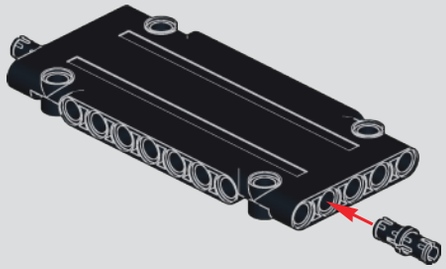

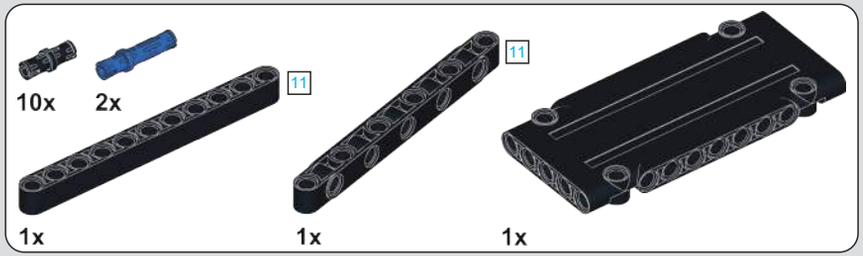

393

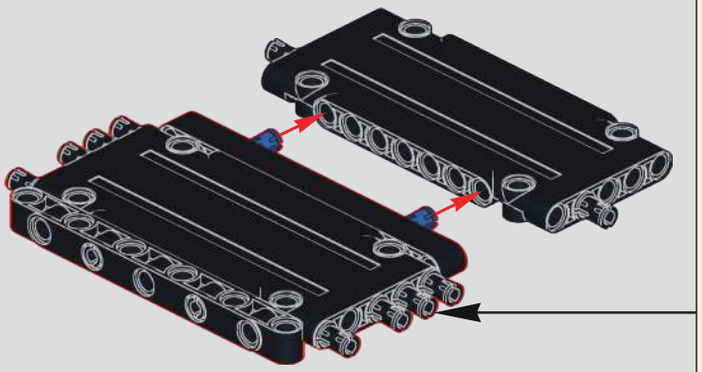

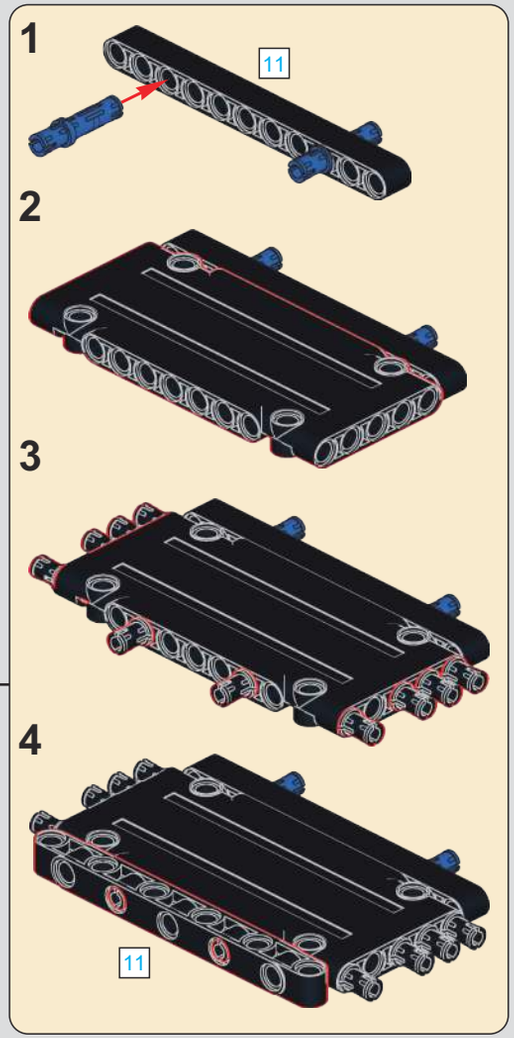

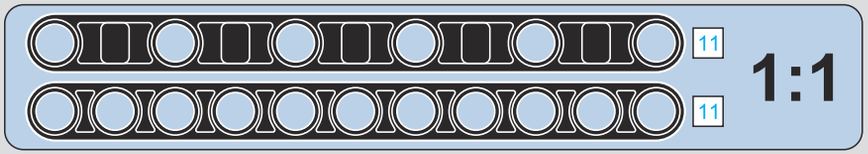

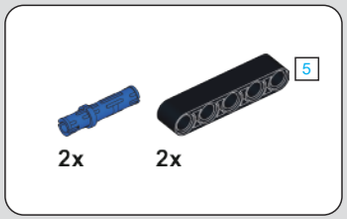

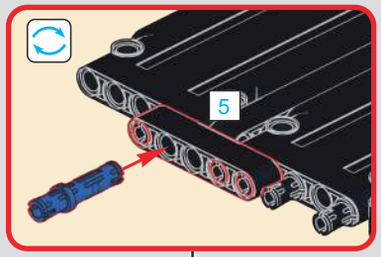

394

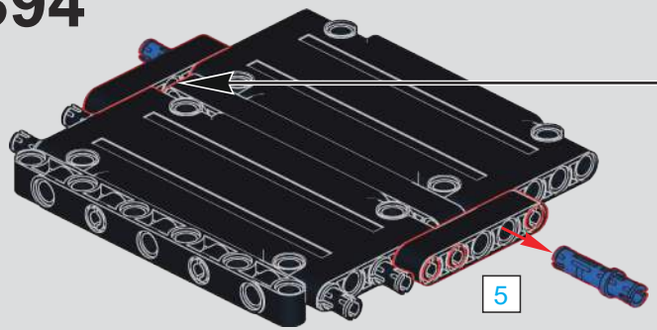

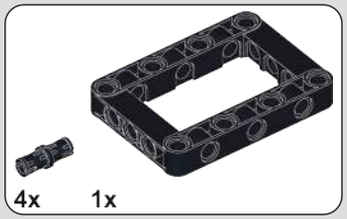

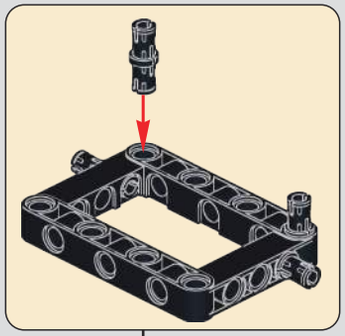

395

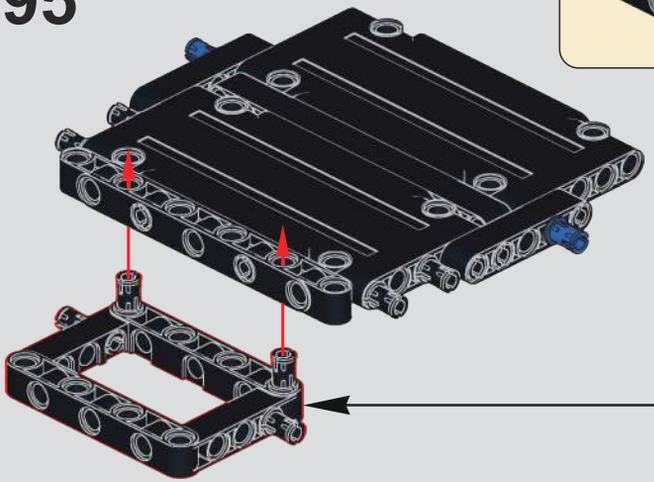

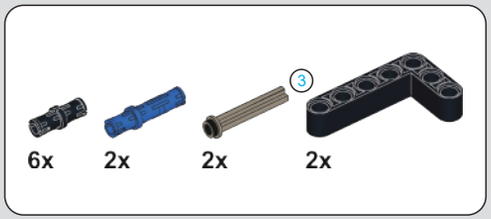

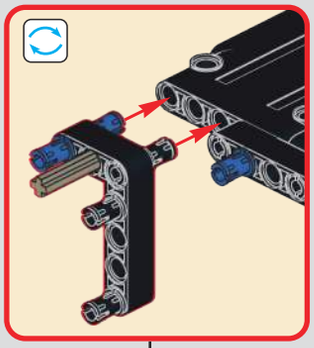

396

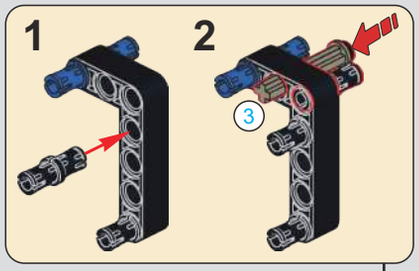

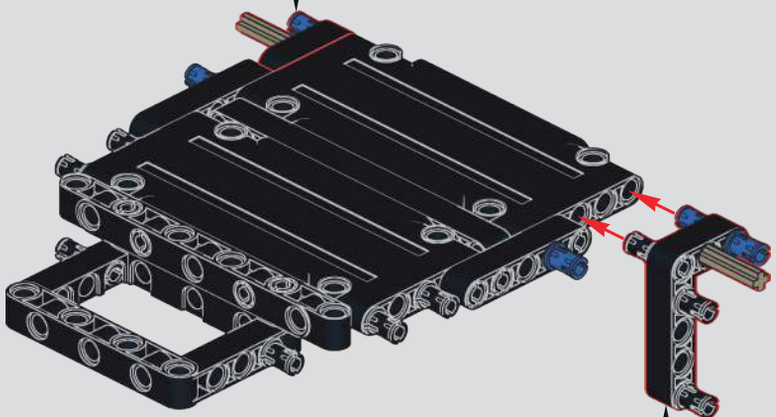

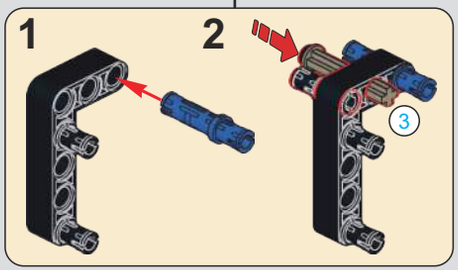

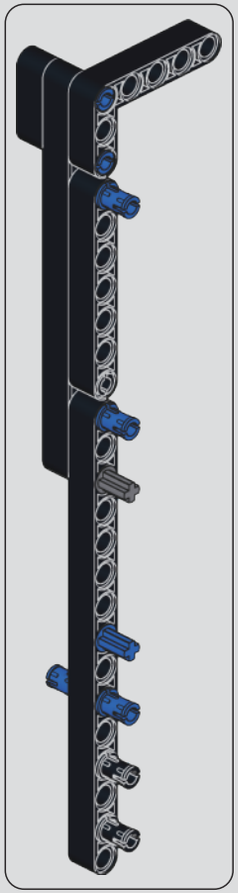

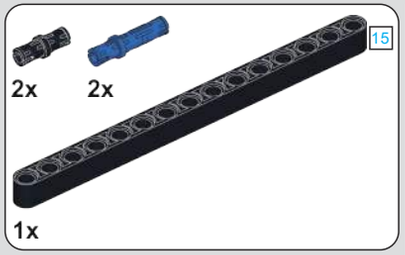

397

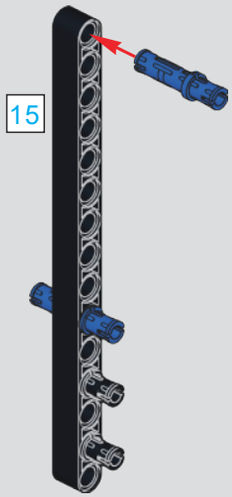

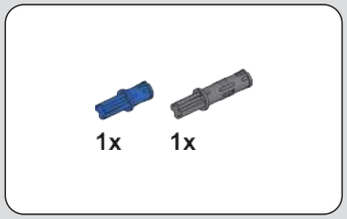

398

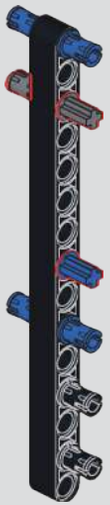

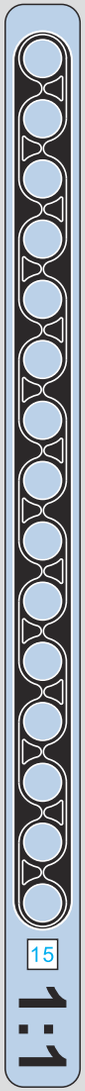

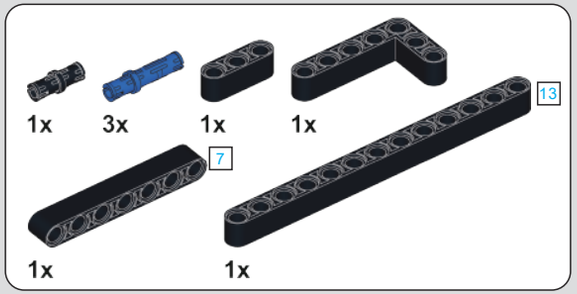

399

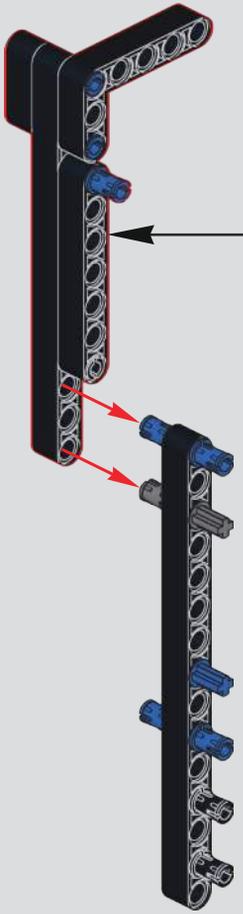

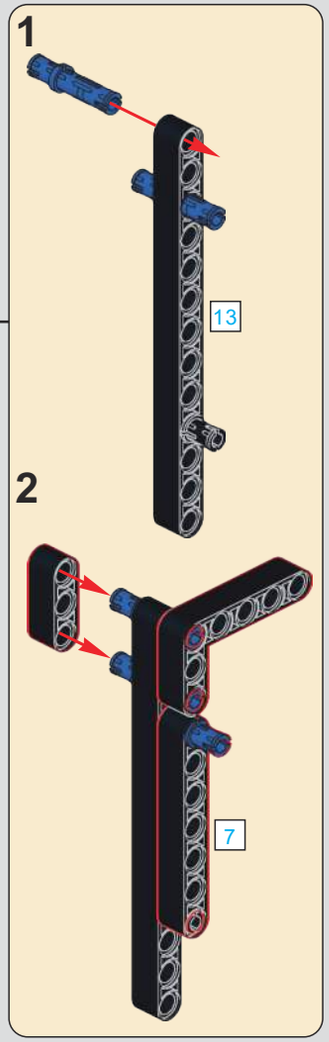

400

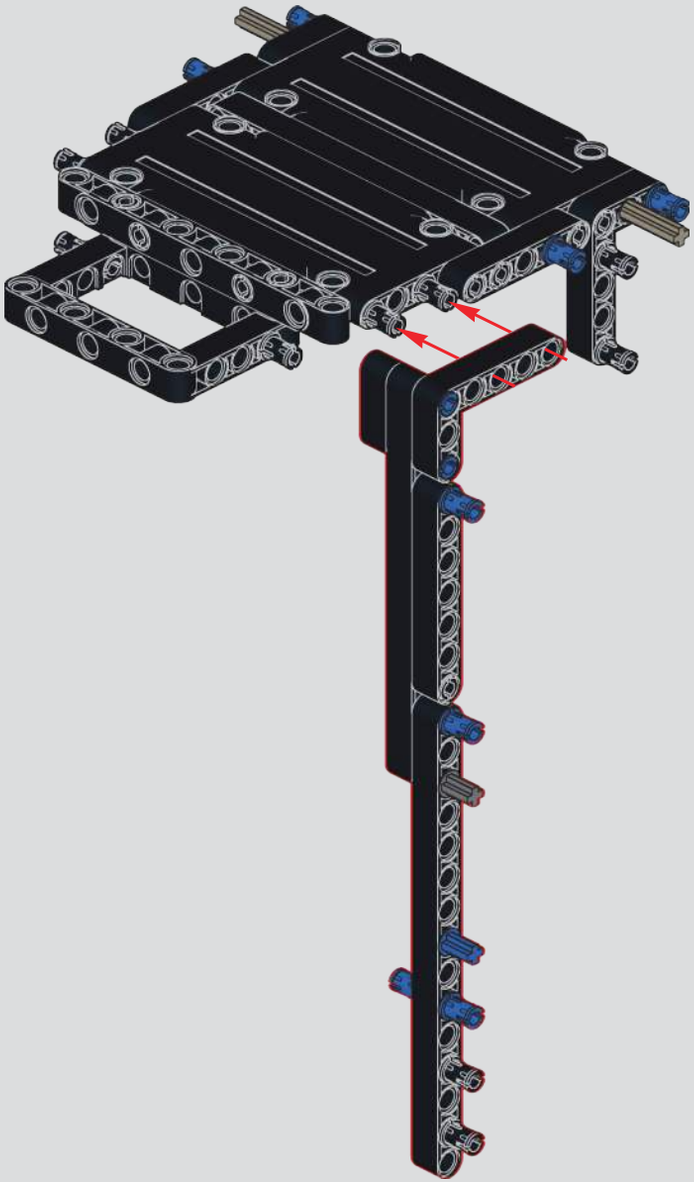

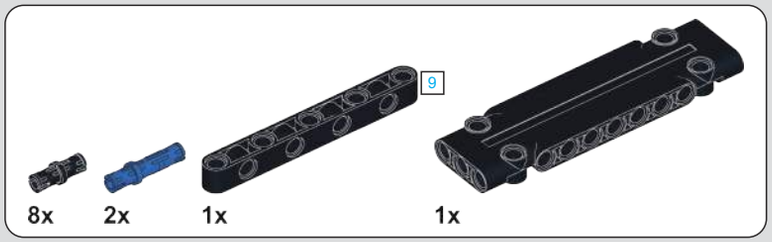

401

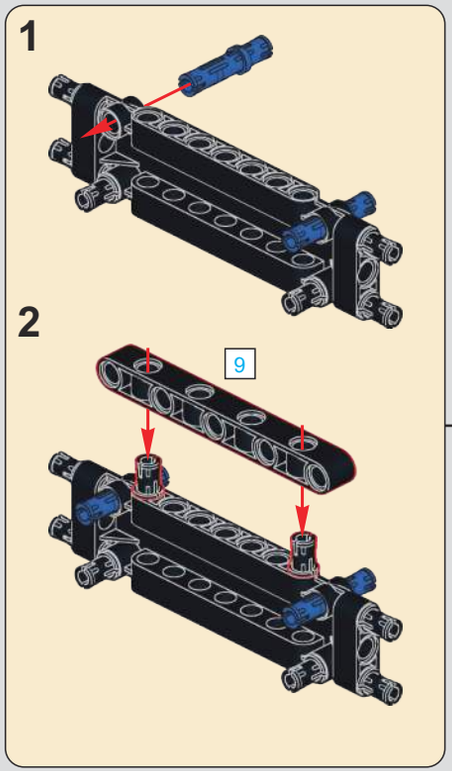

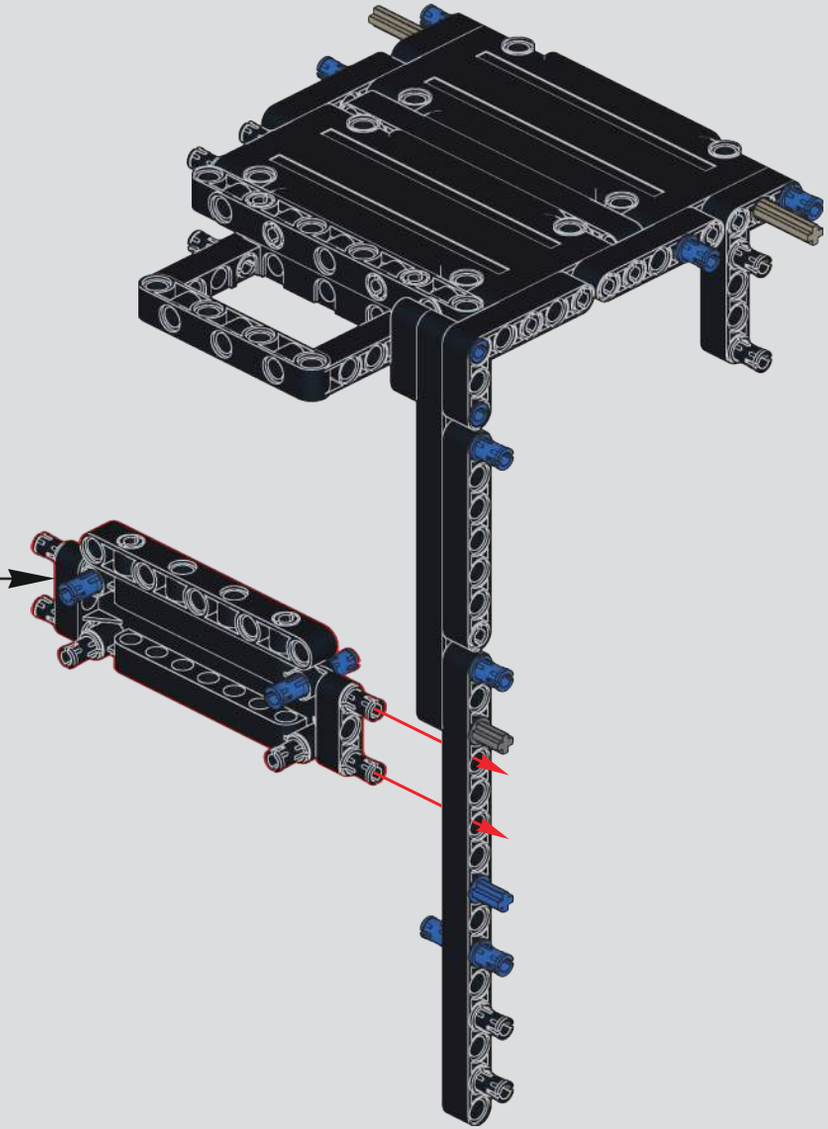

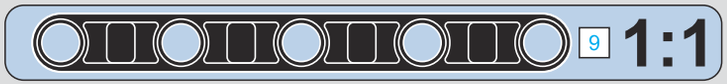

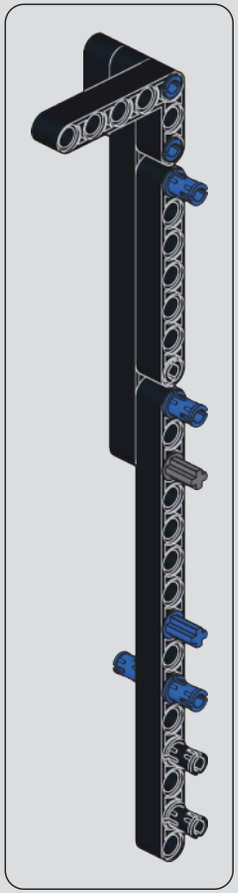

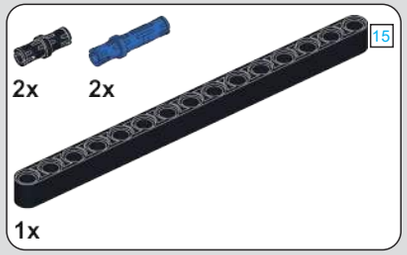

402

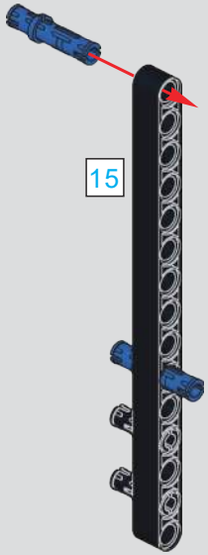

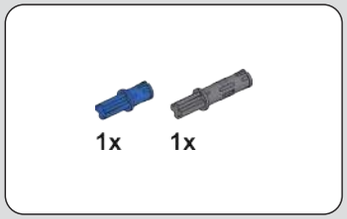

403

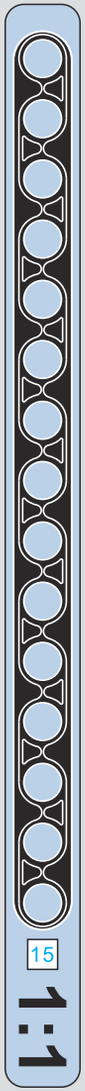

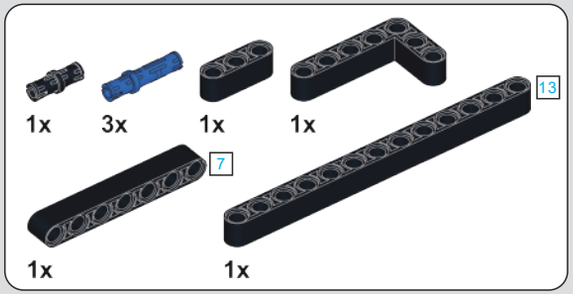

404

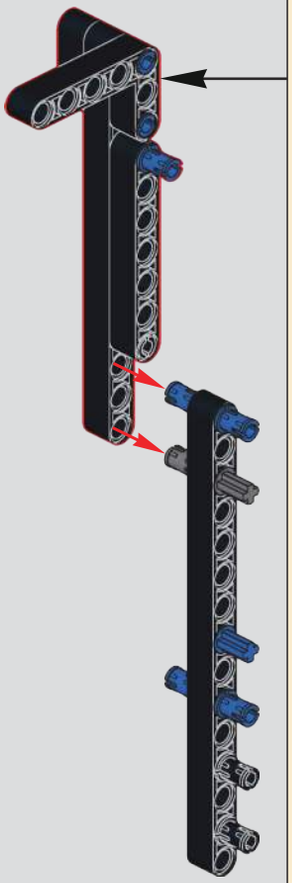

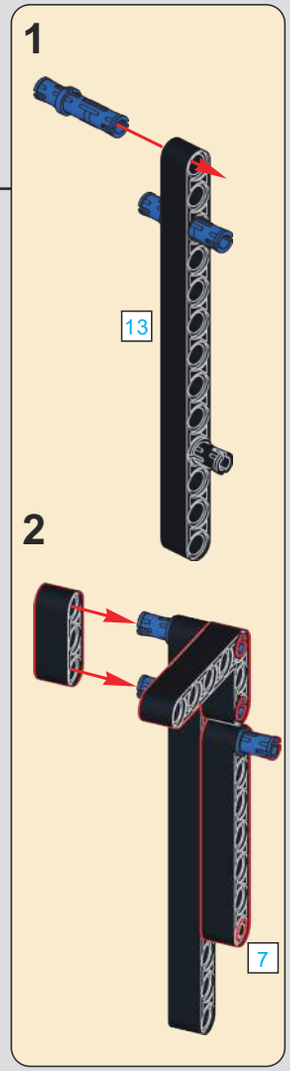

405

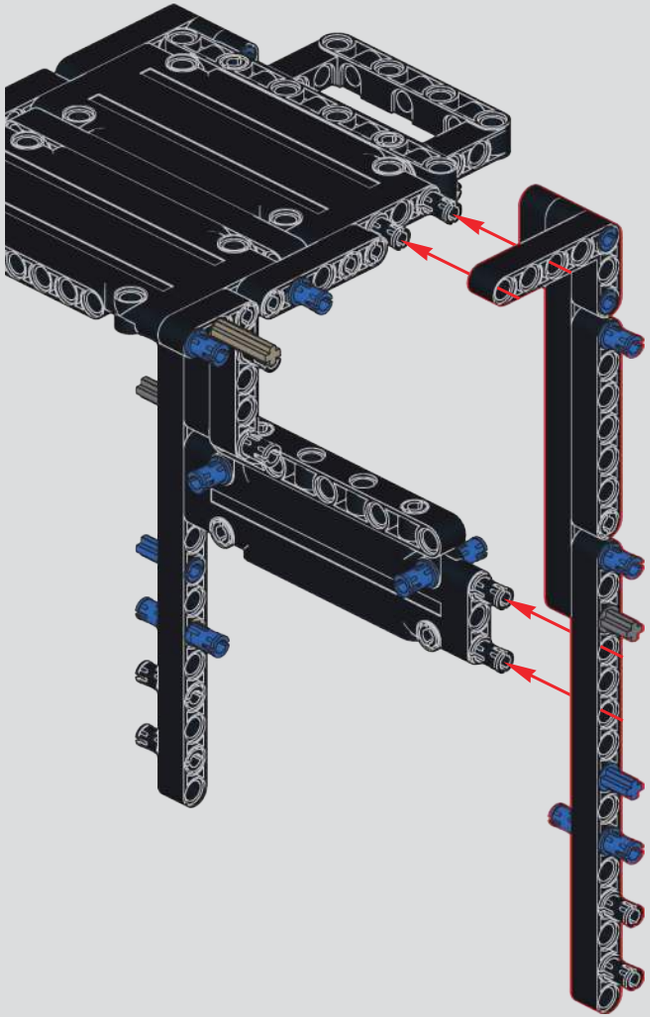

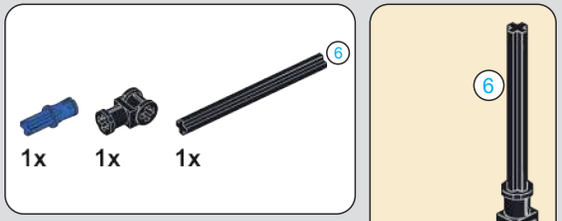

406

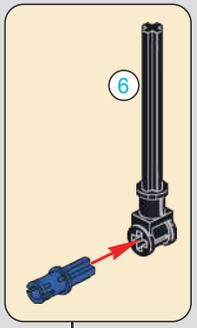

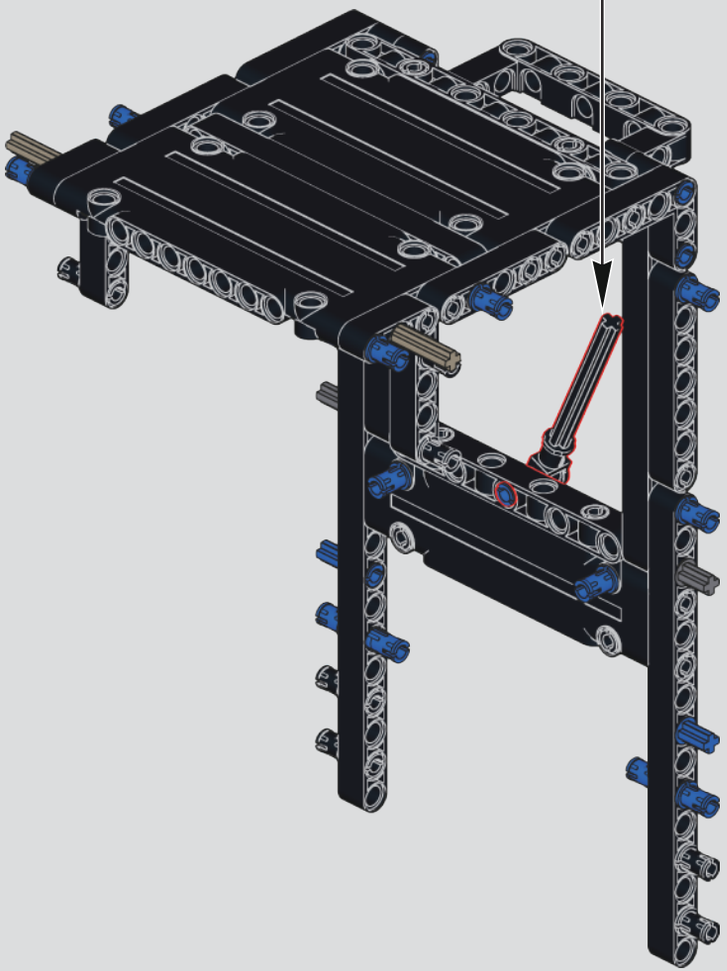

407

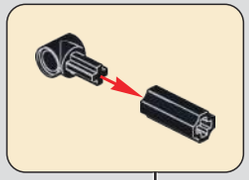

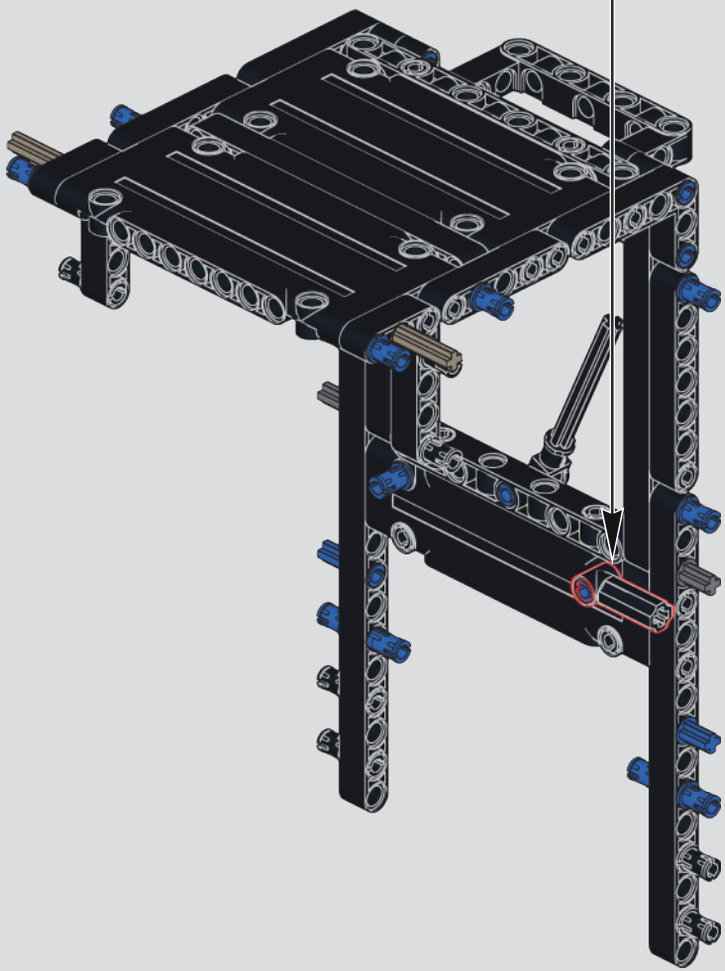

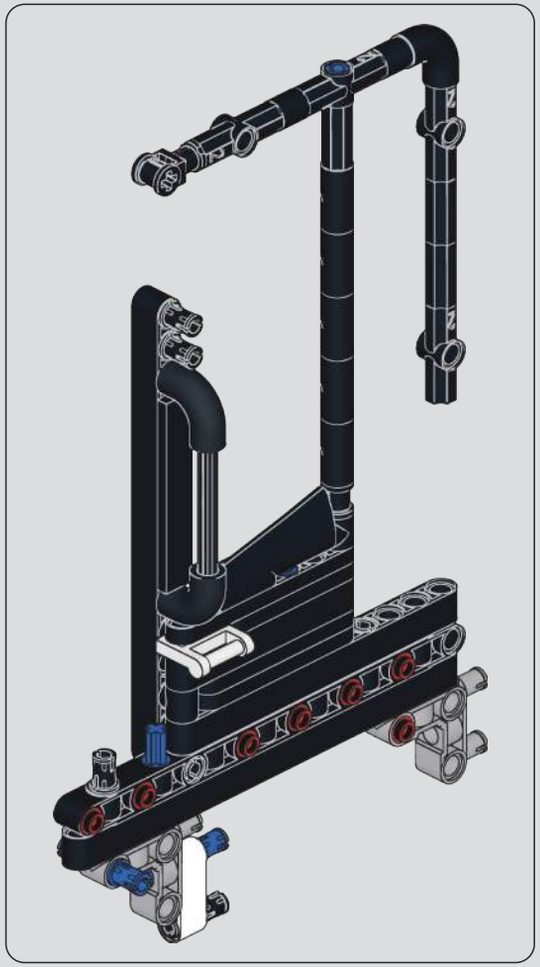

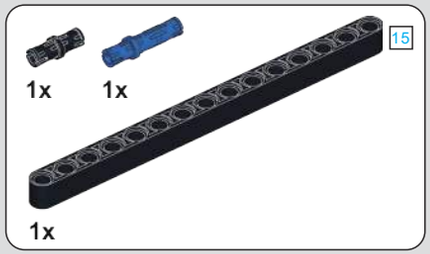

408

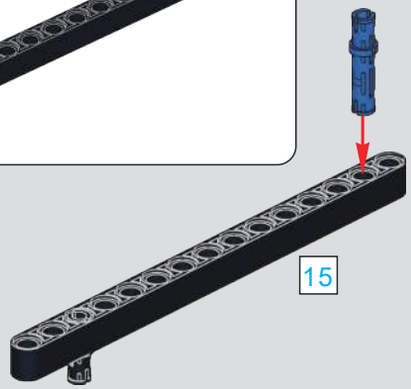

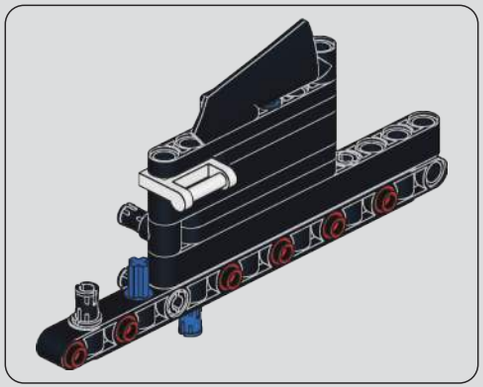

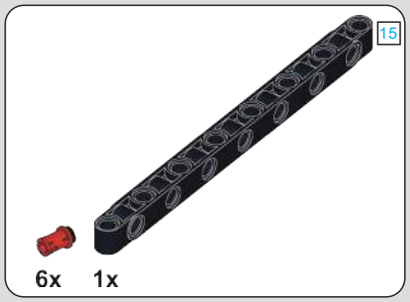

409

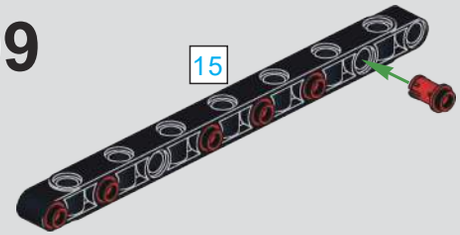

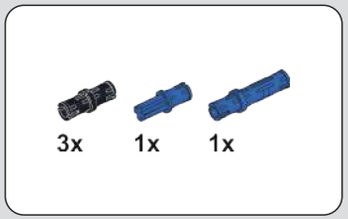

410

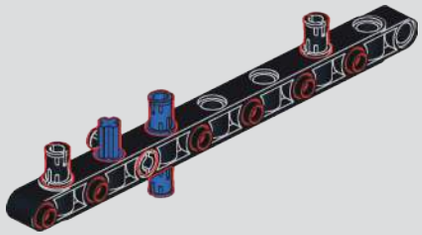

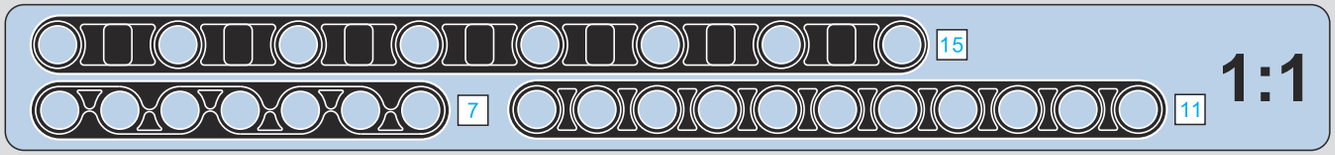

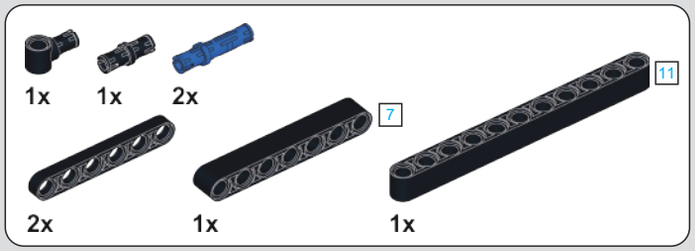

411

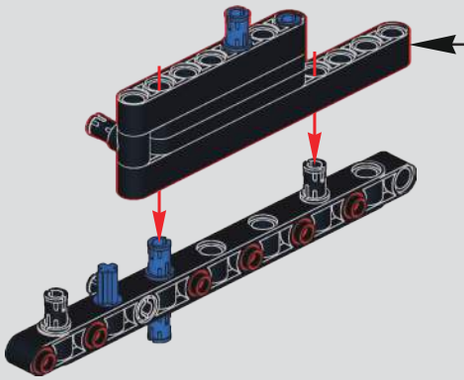

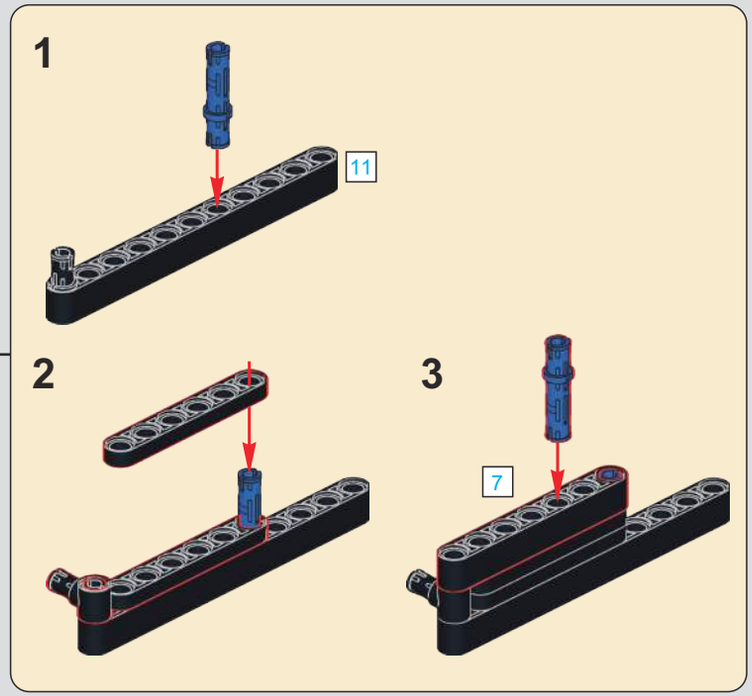

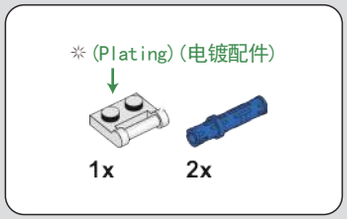

412

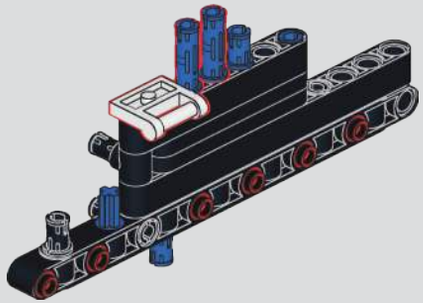

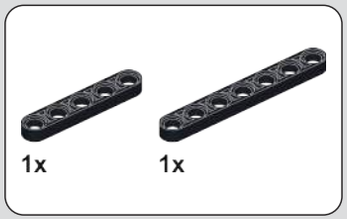

413

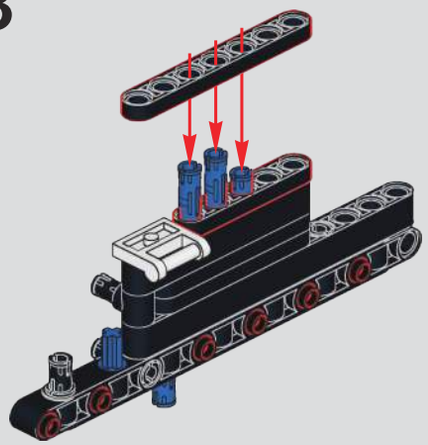

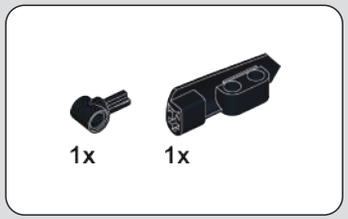

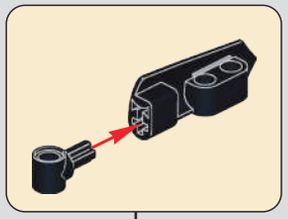

414

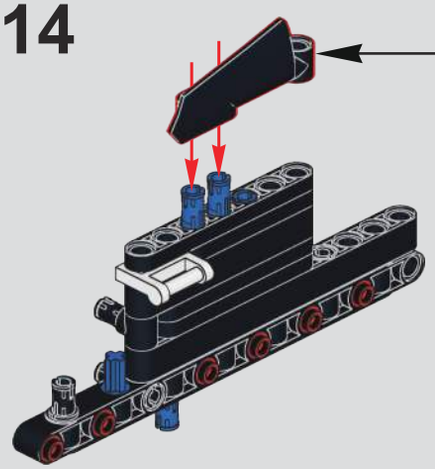

415

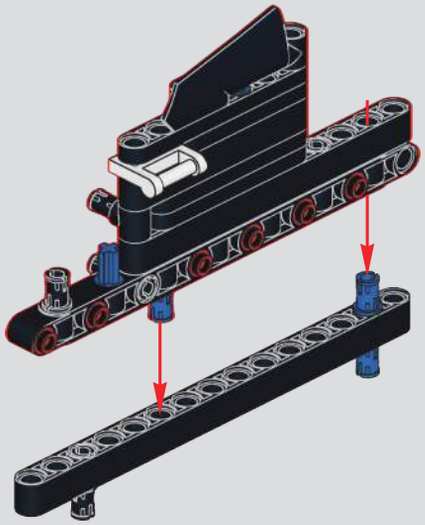

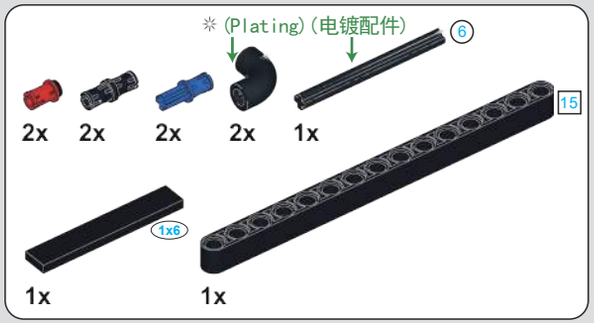

416

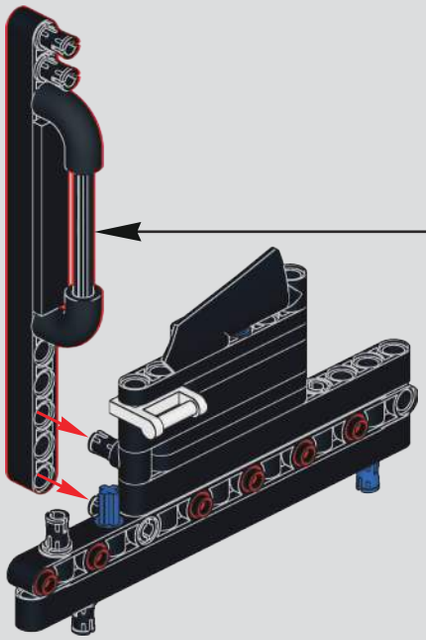

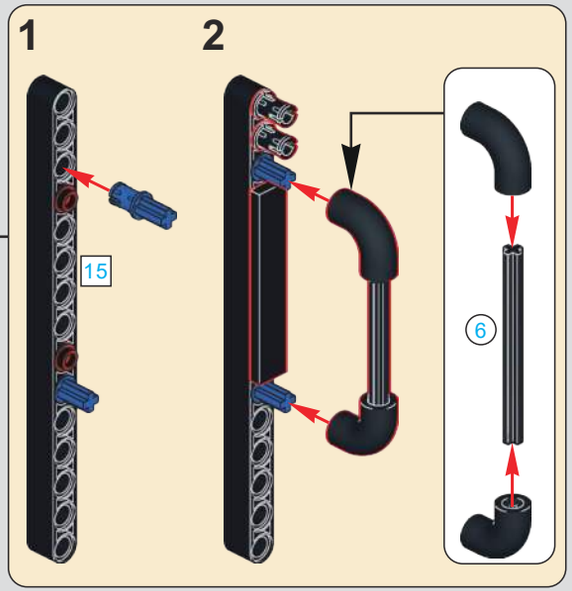

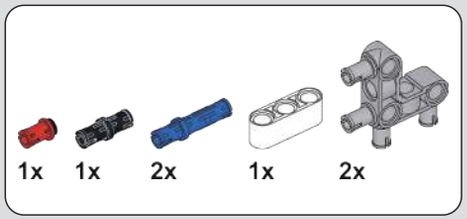

417

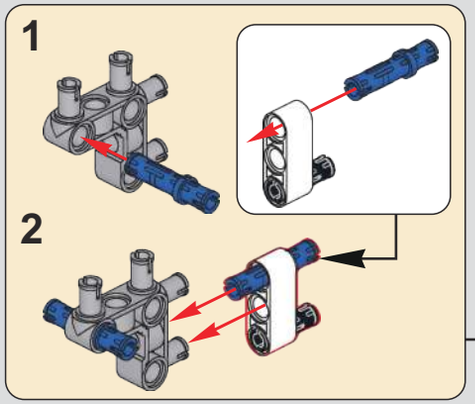

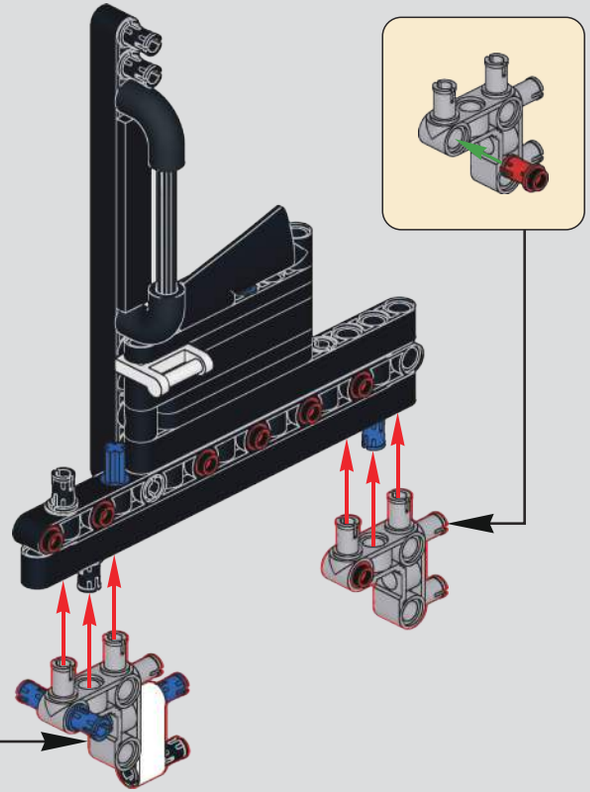

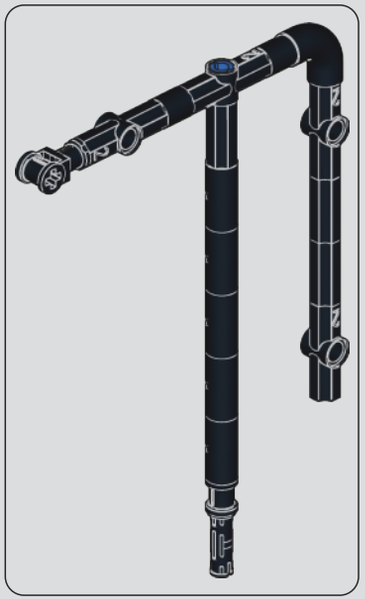

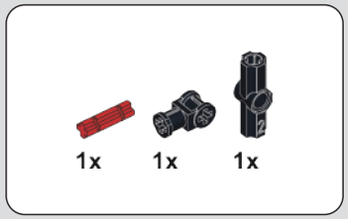

418

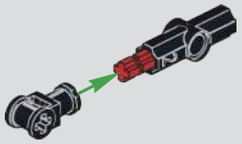

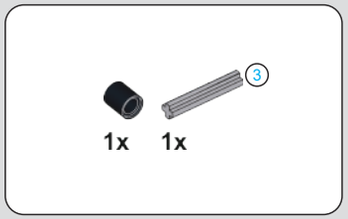

419

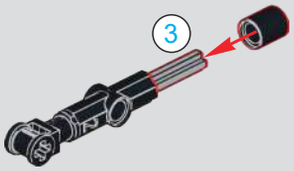

420

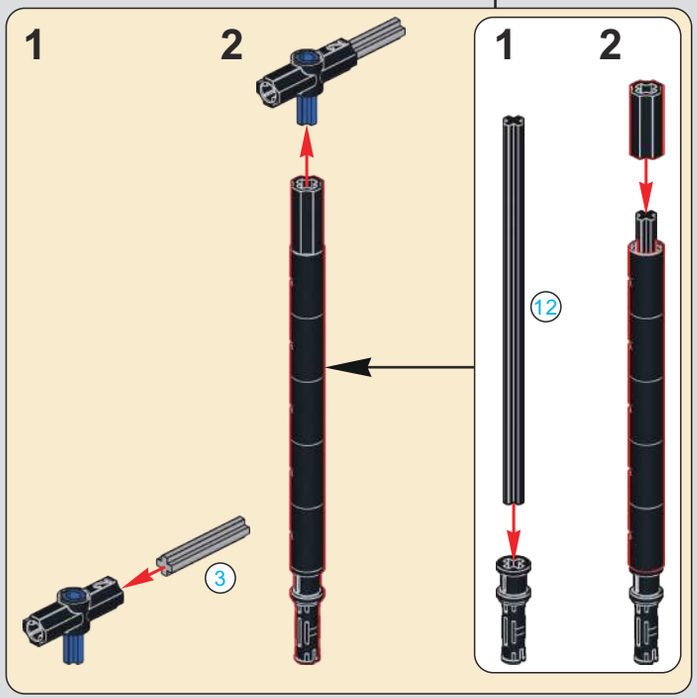

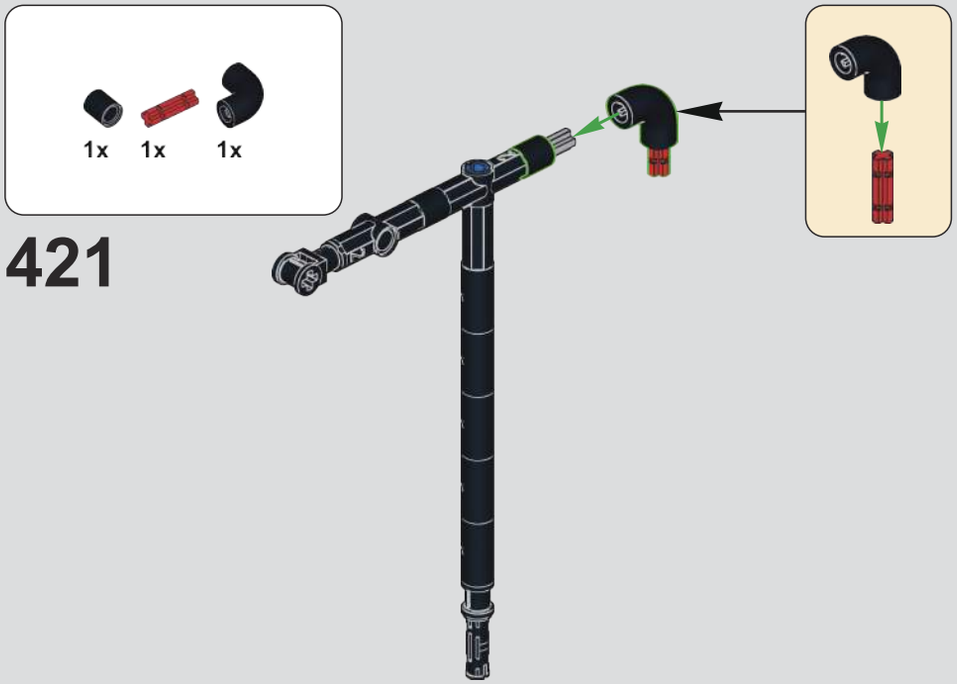

421

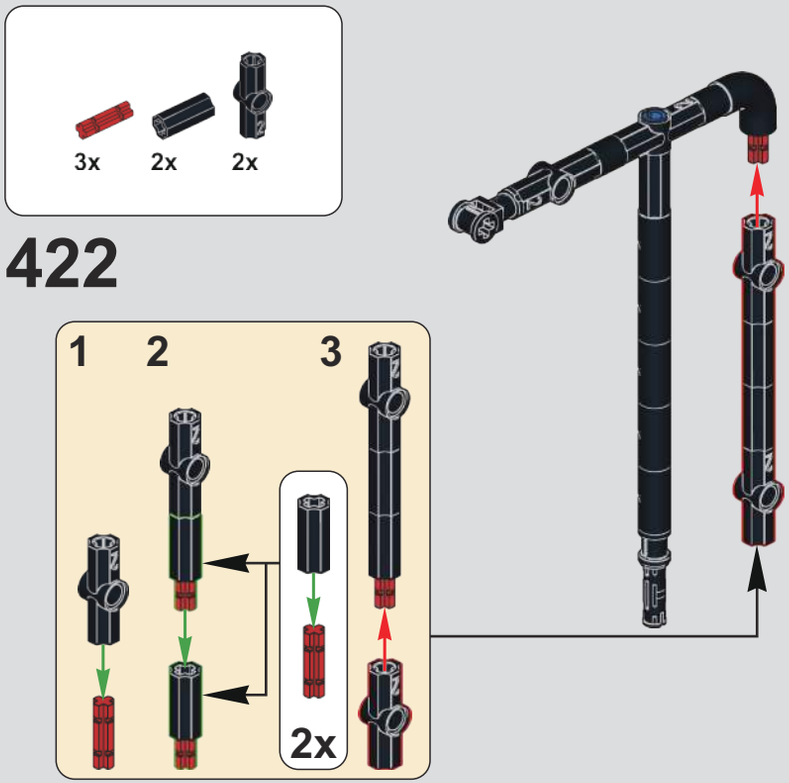

422

423

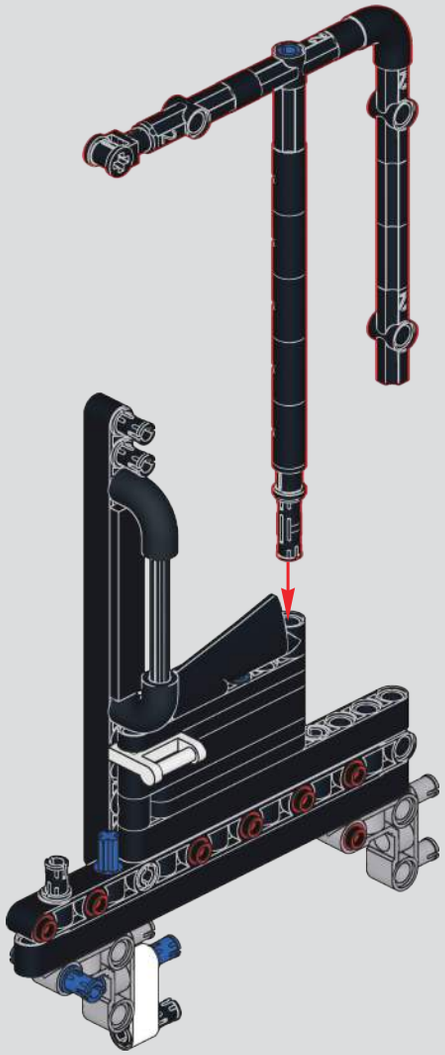

424

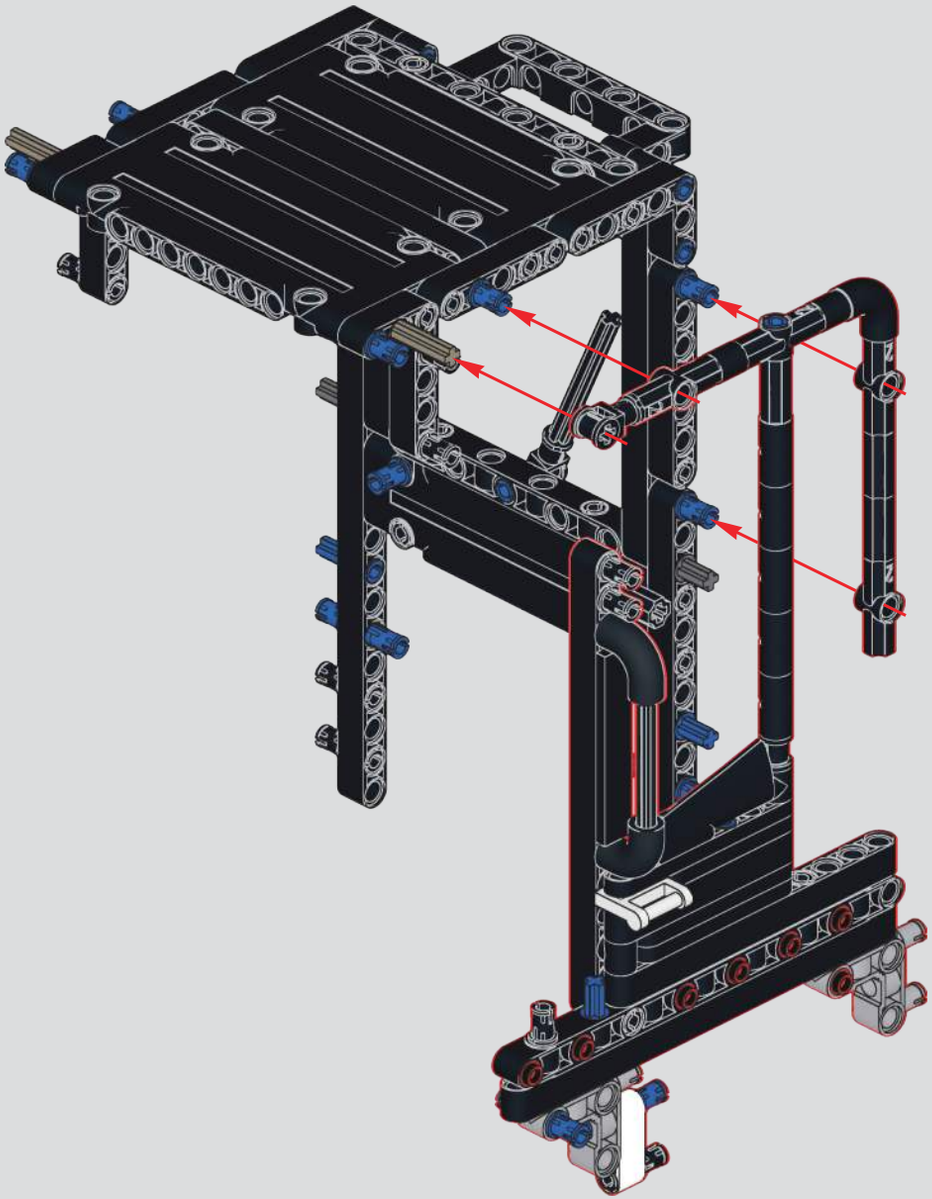

425

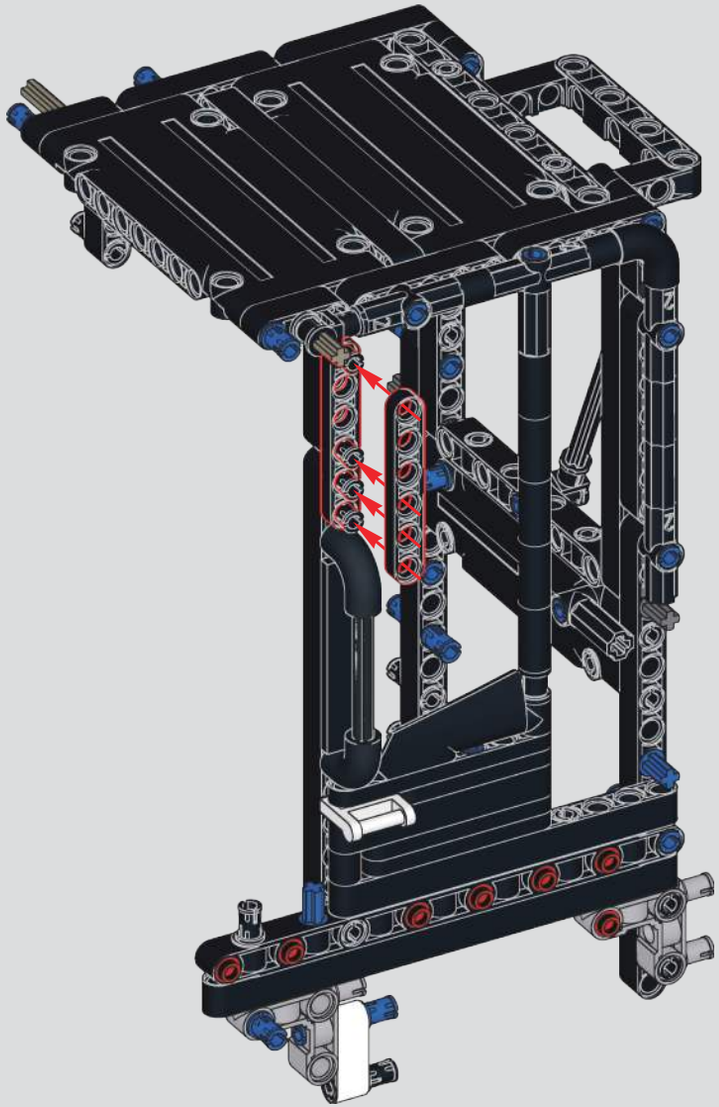

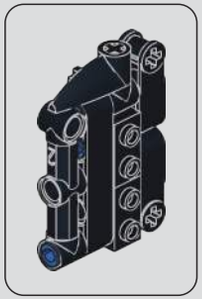

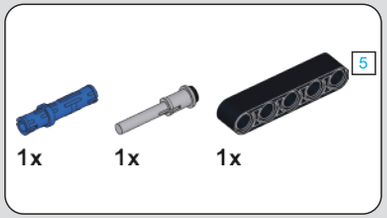

426

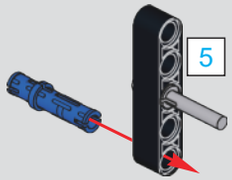

427

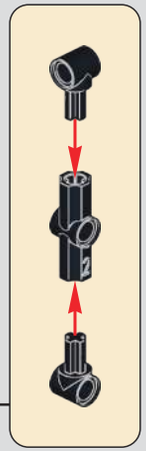

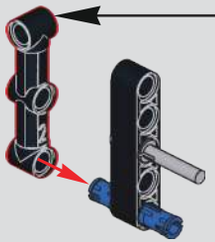

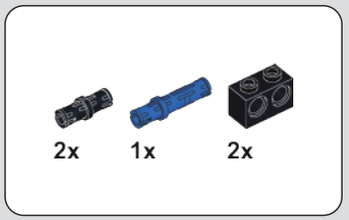

428

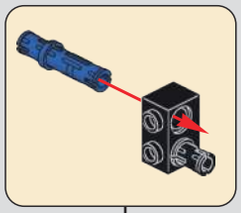

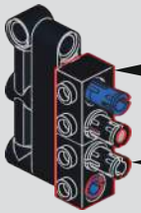

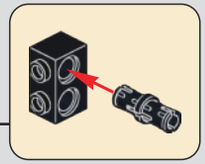

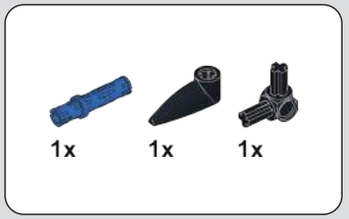

429

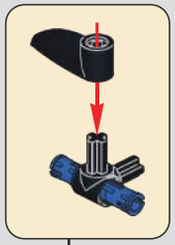

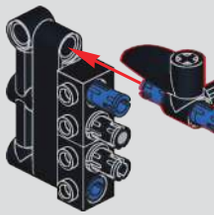

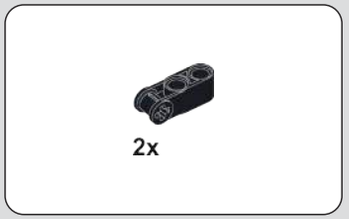

430

431

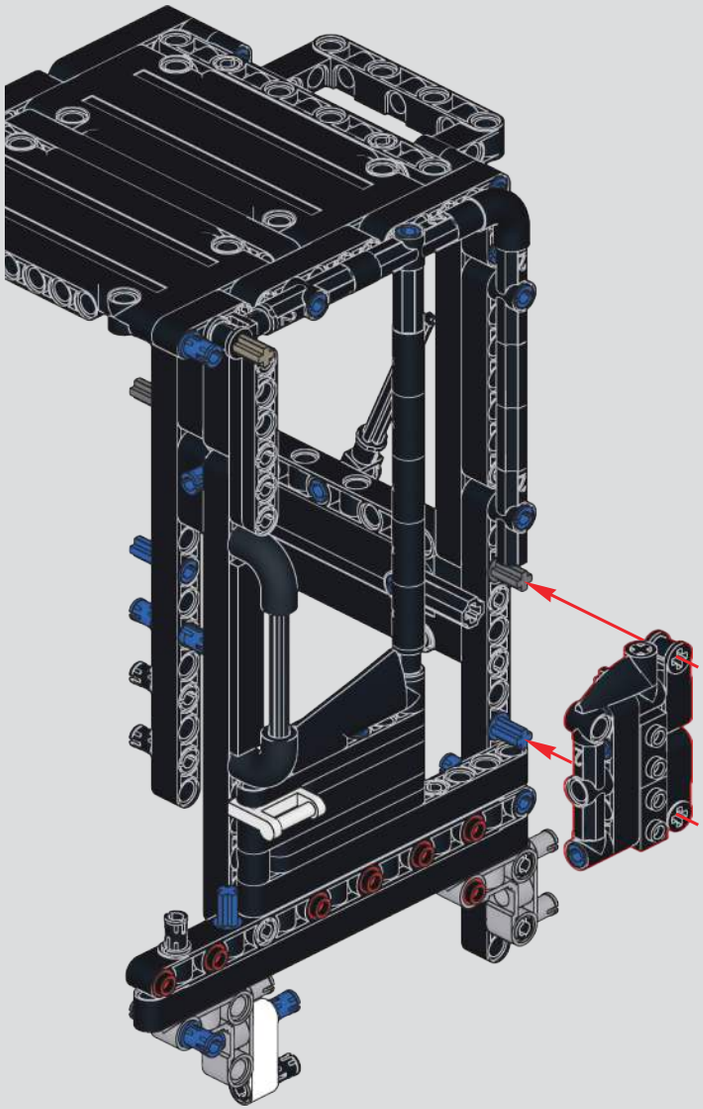

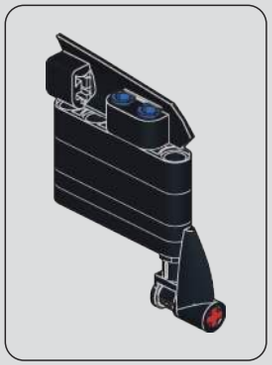

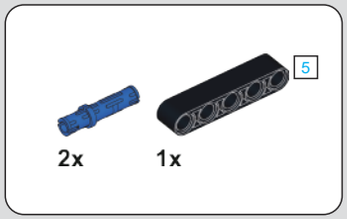

432

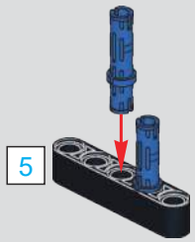

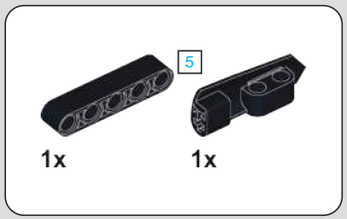

433

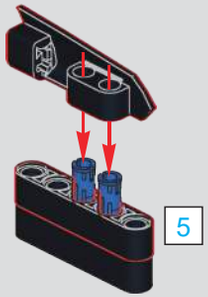

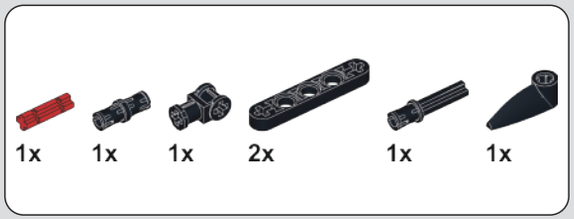

434

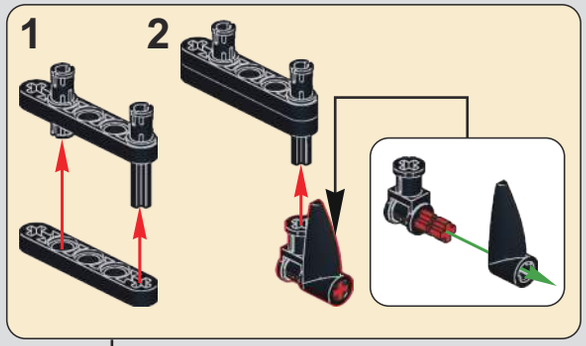

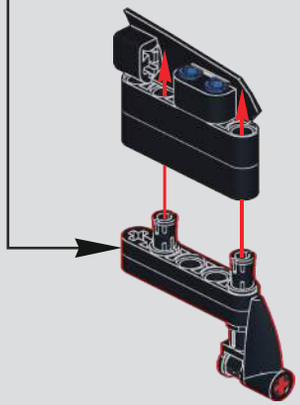

435

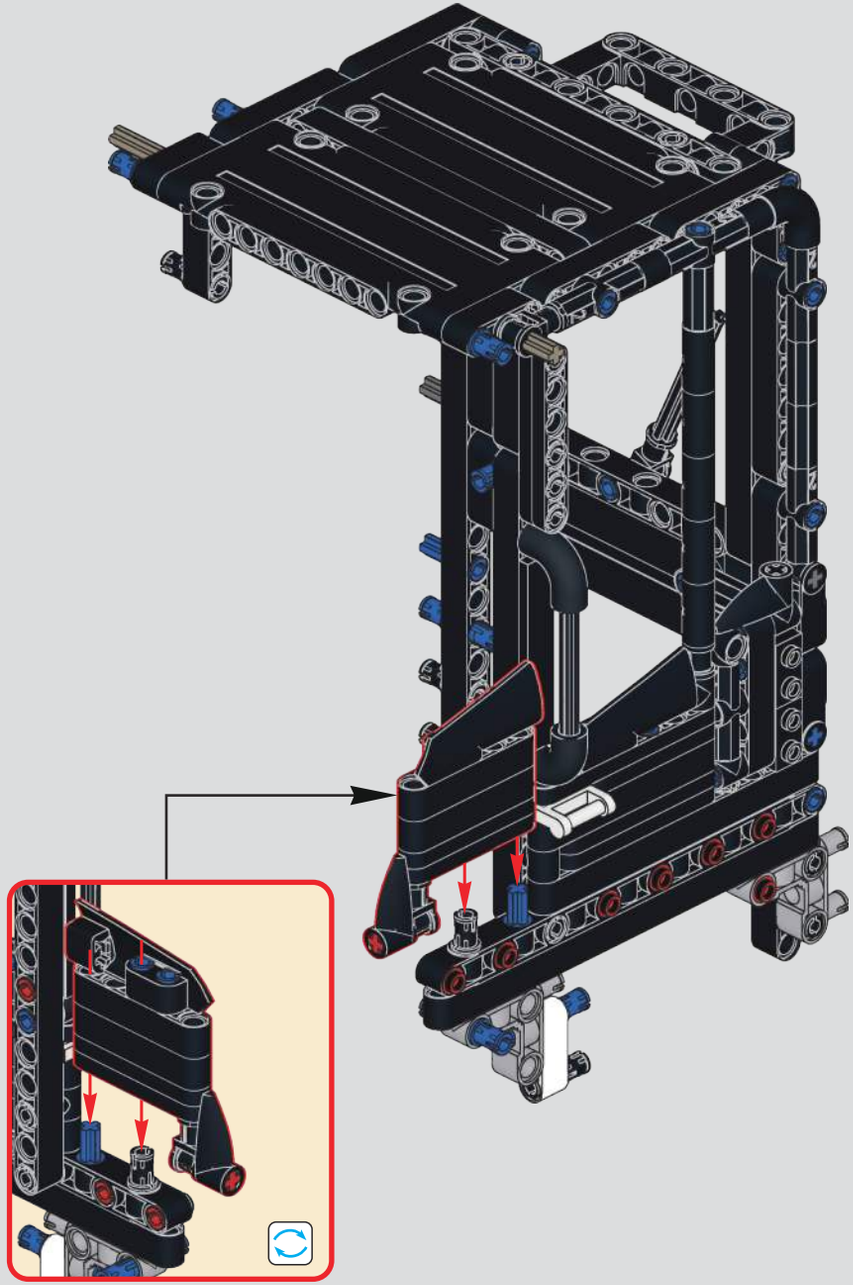

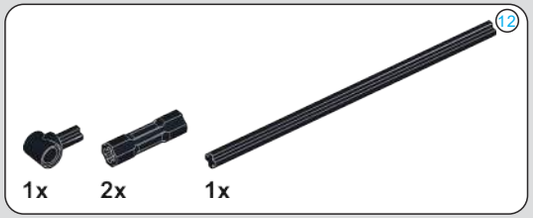

436

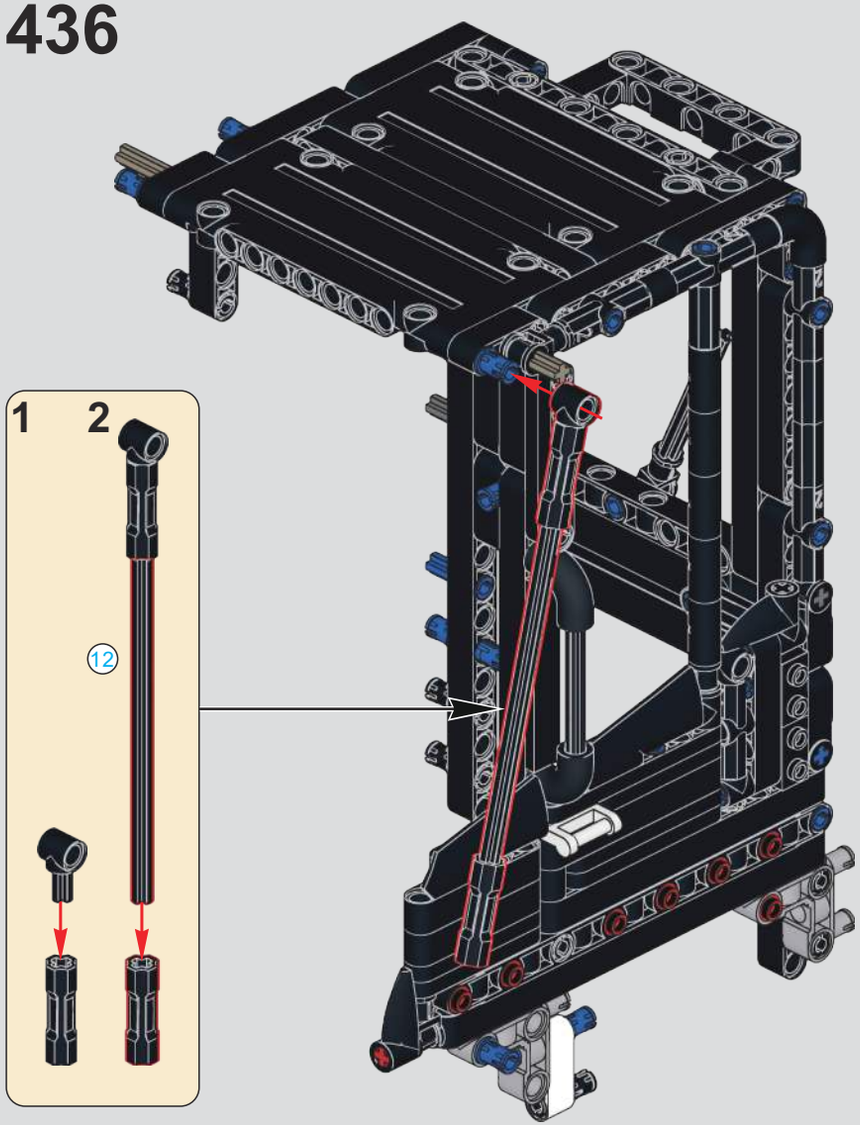

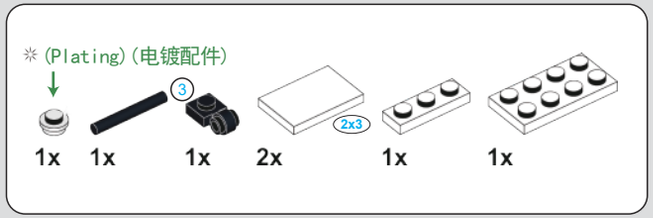

437

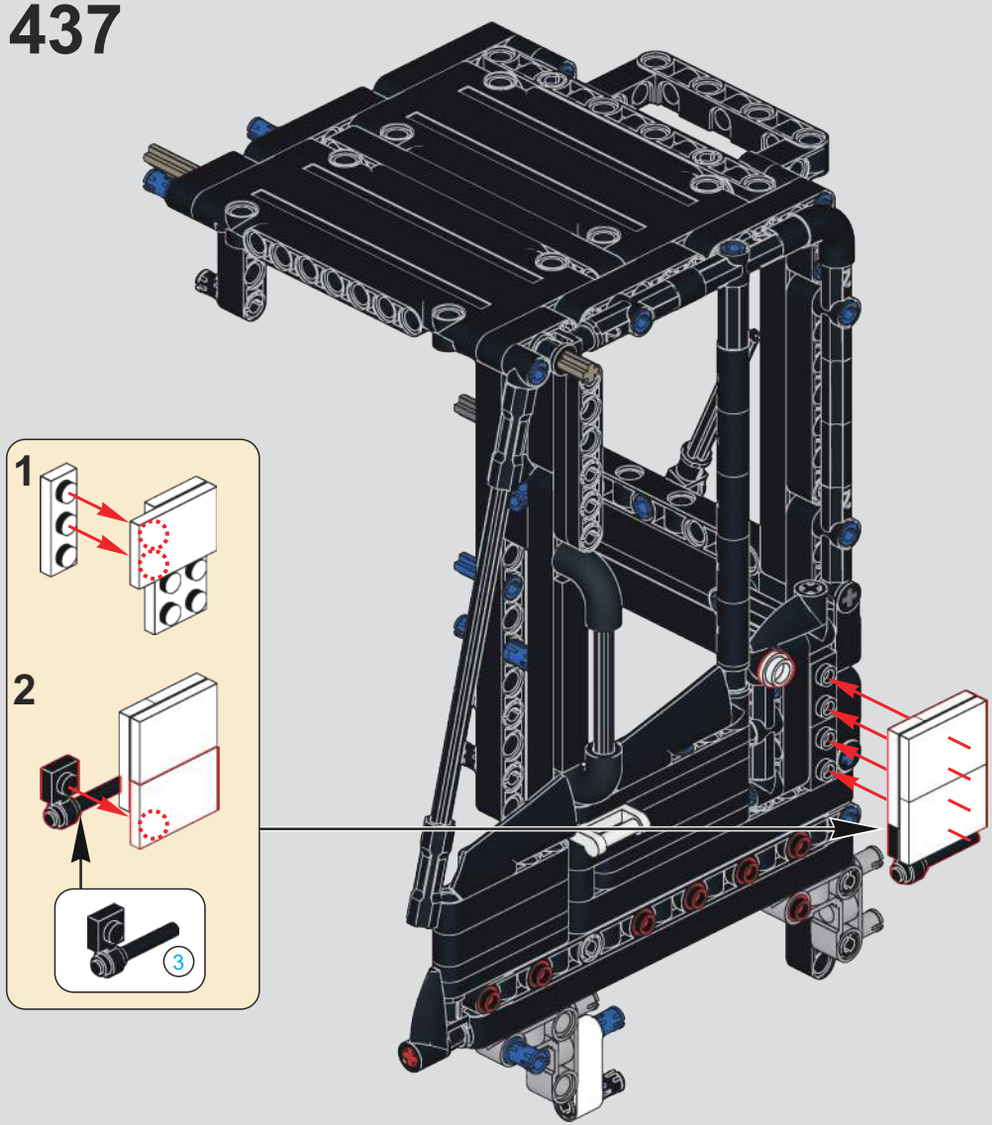

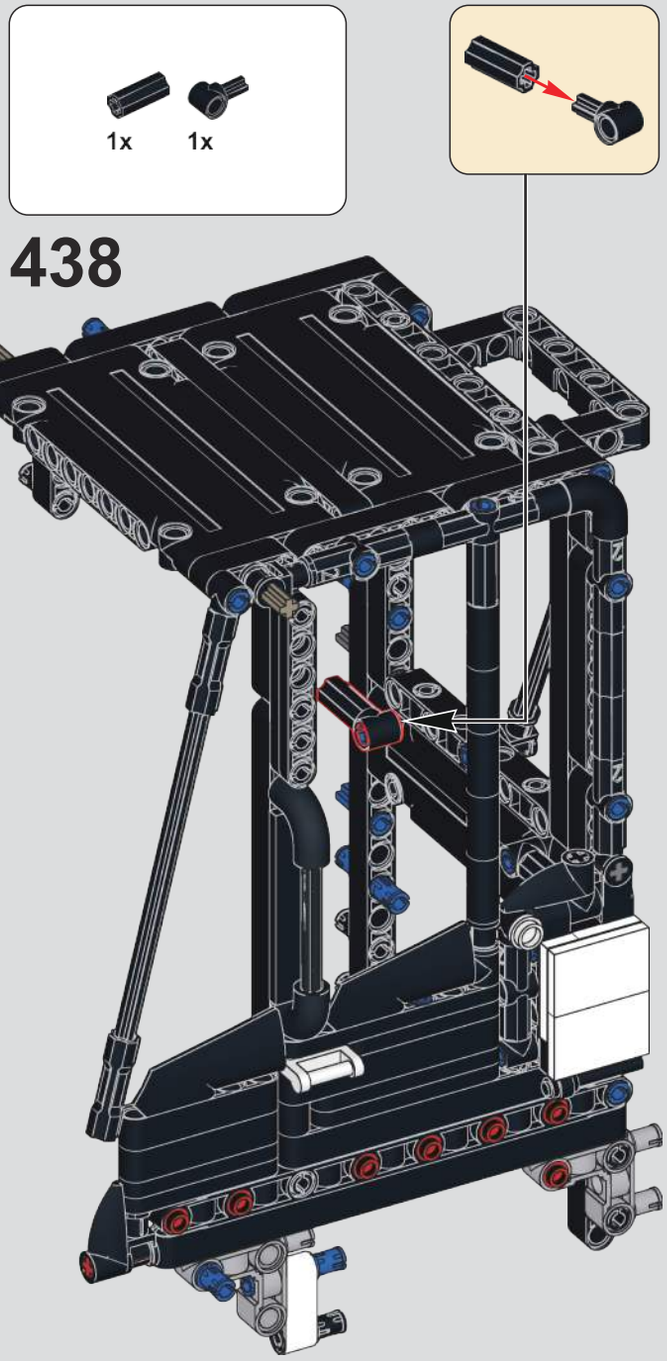
1x
1x
438

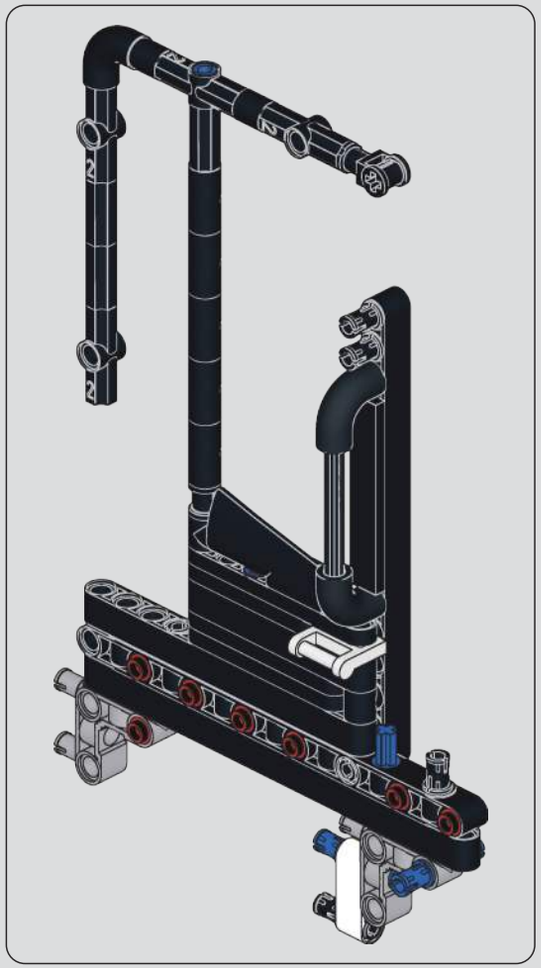

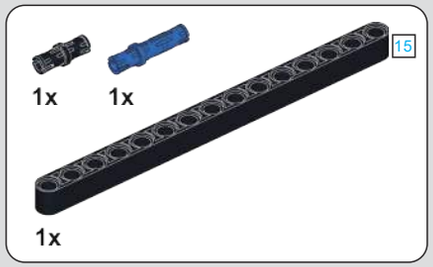
1x
1x
15
1x

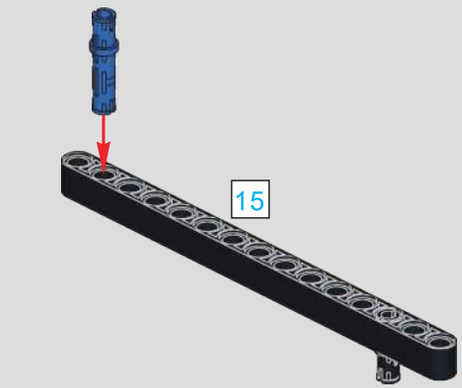
439
15

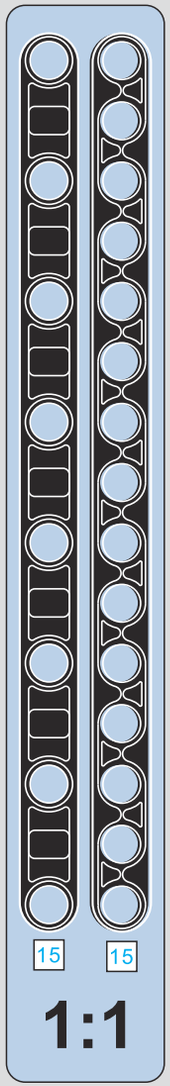
15
15
1:1

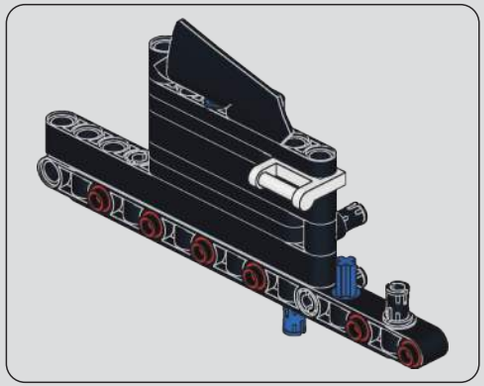

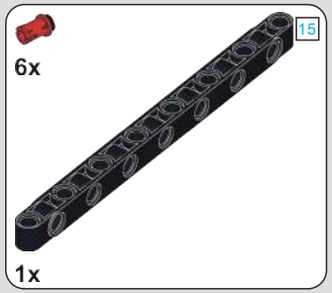
15
6x
1x

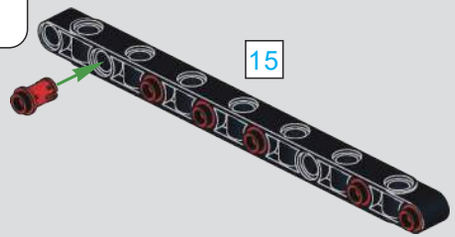
440
15

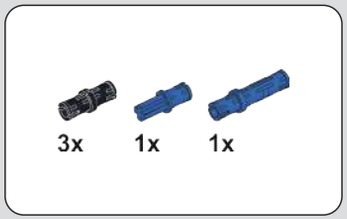

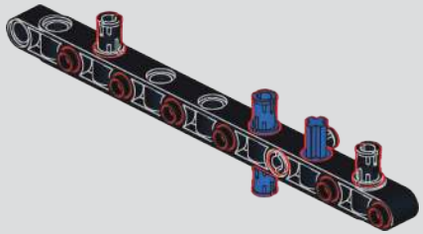

441

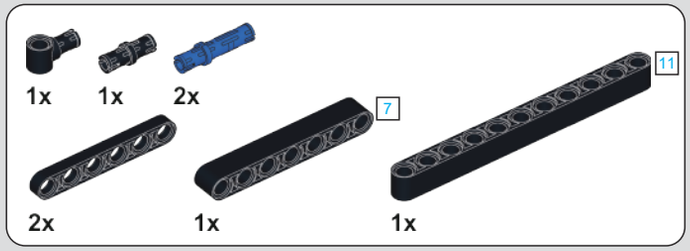

442

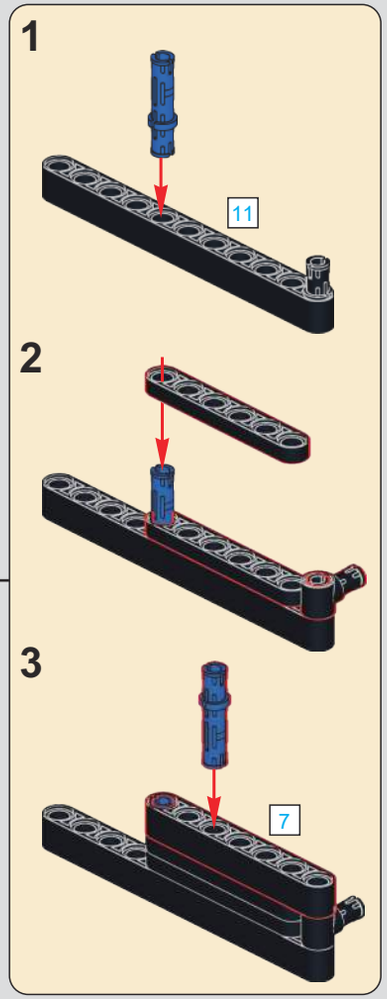

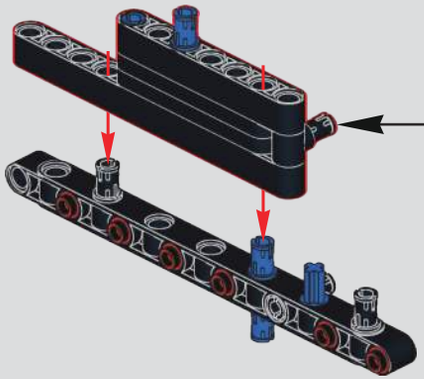

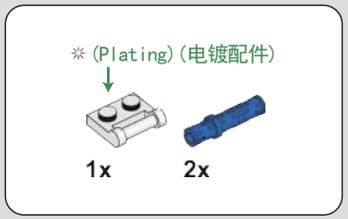

443

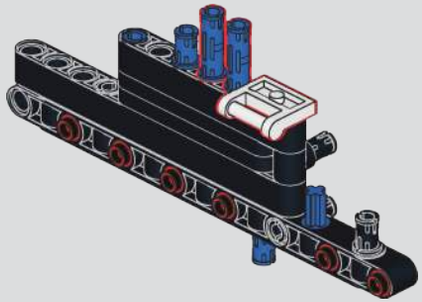

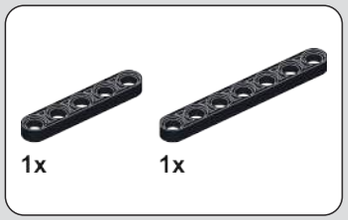

444

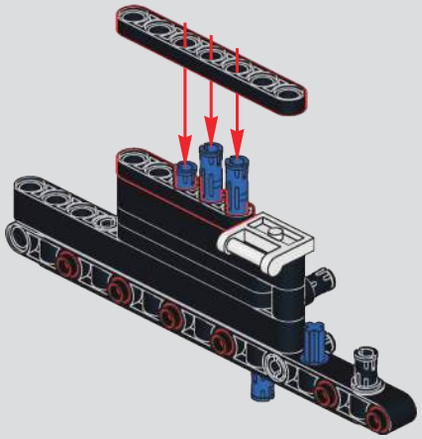

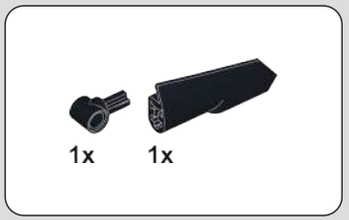

445

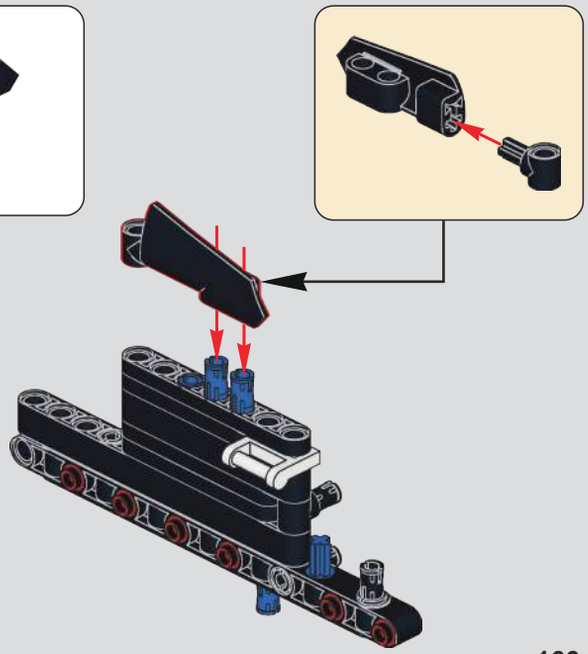

446

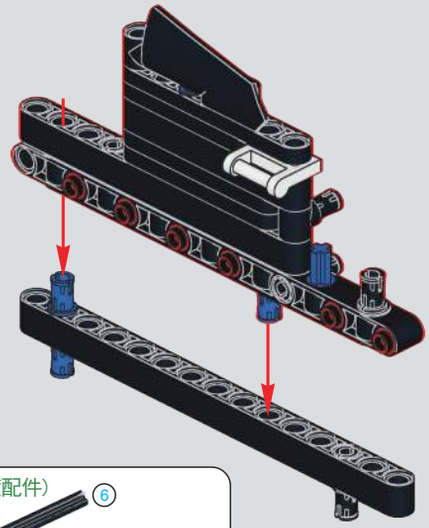

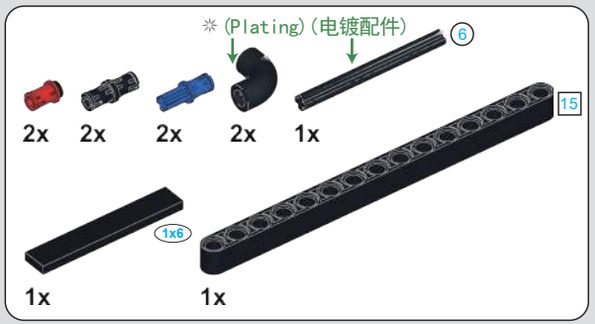
※ (Plating) (电镀配件)
6
2x
2x
2x
2x
1x
15
1x6
1x
1x

447

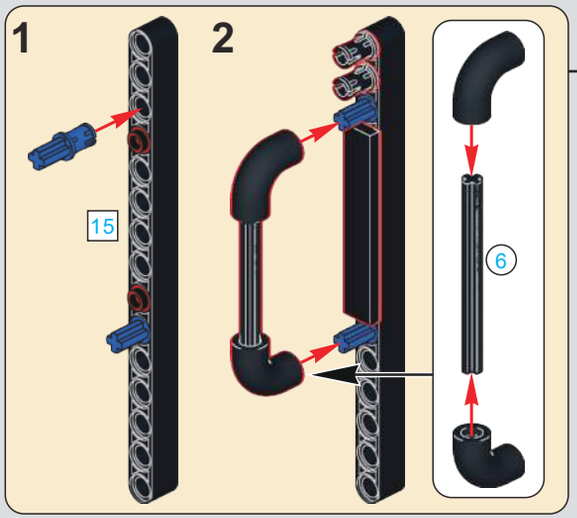
1
2
15
6

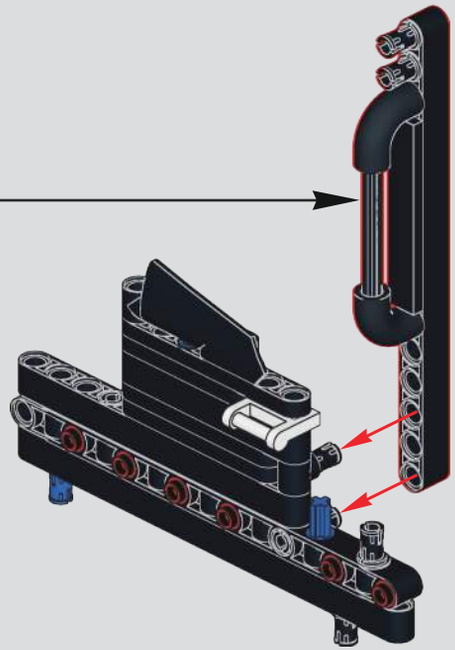

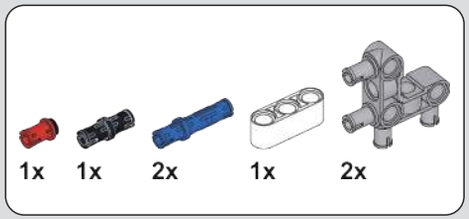
1x
1x
2x
1x
2x

448

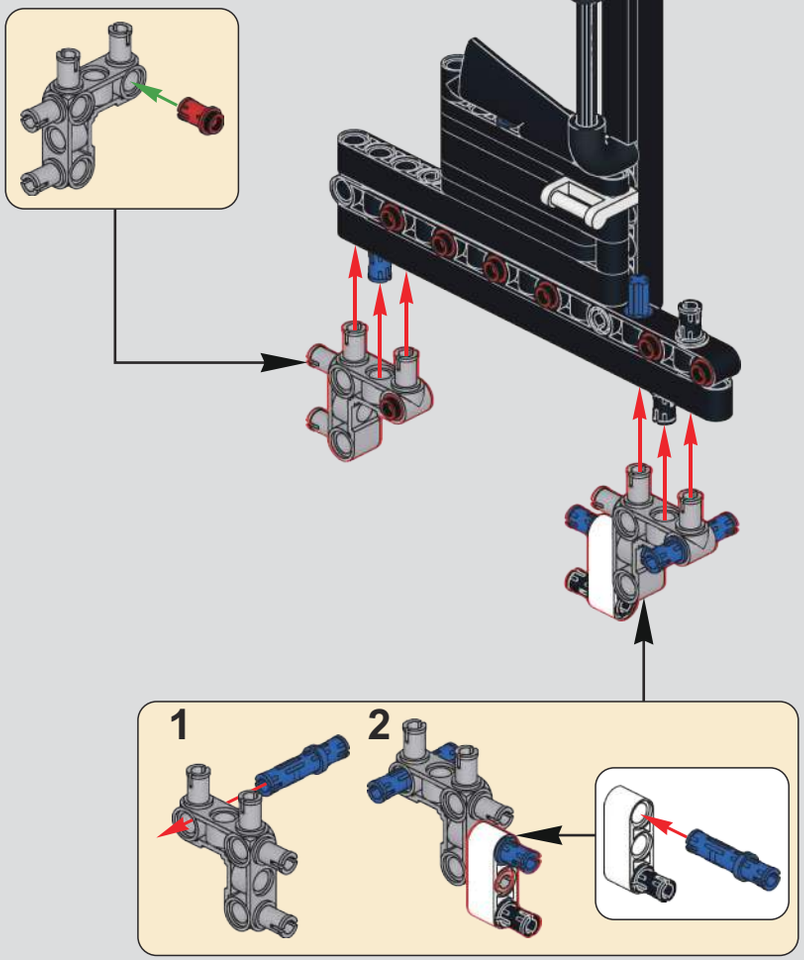
1
2

6
15
1:1

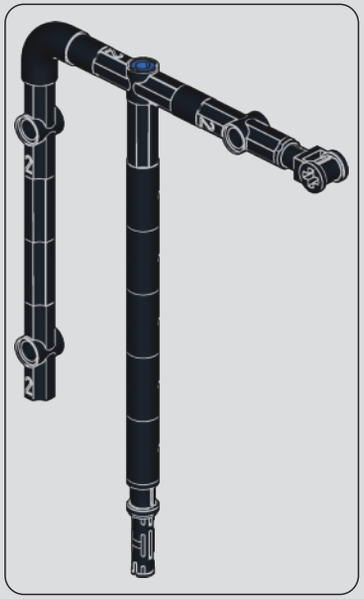

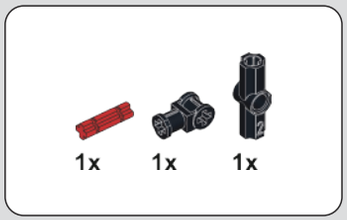

449

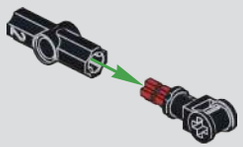

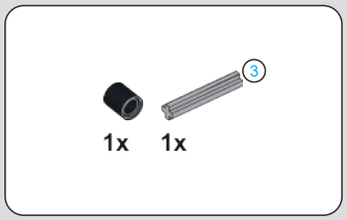

450

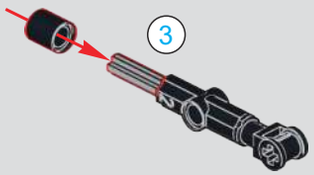

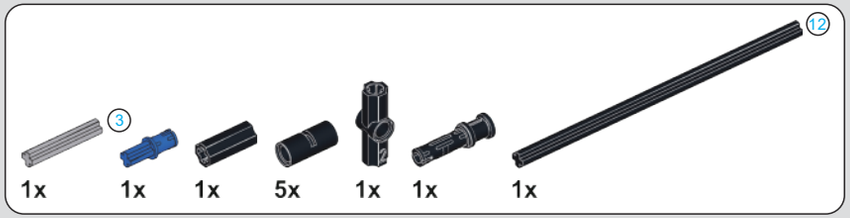

451

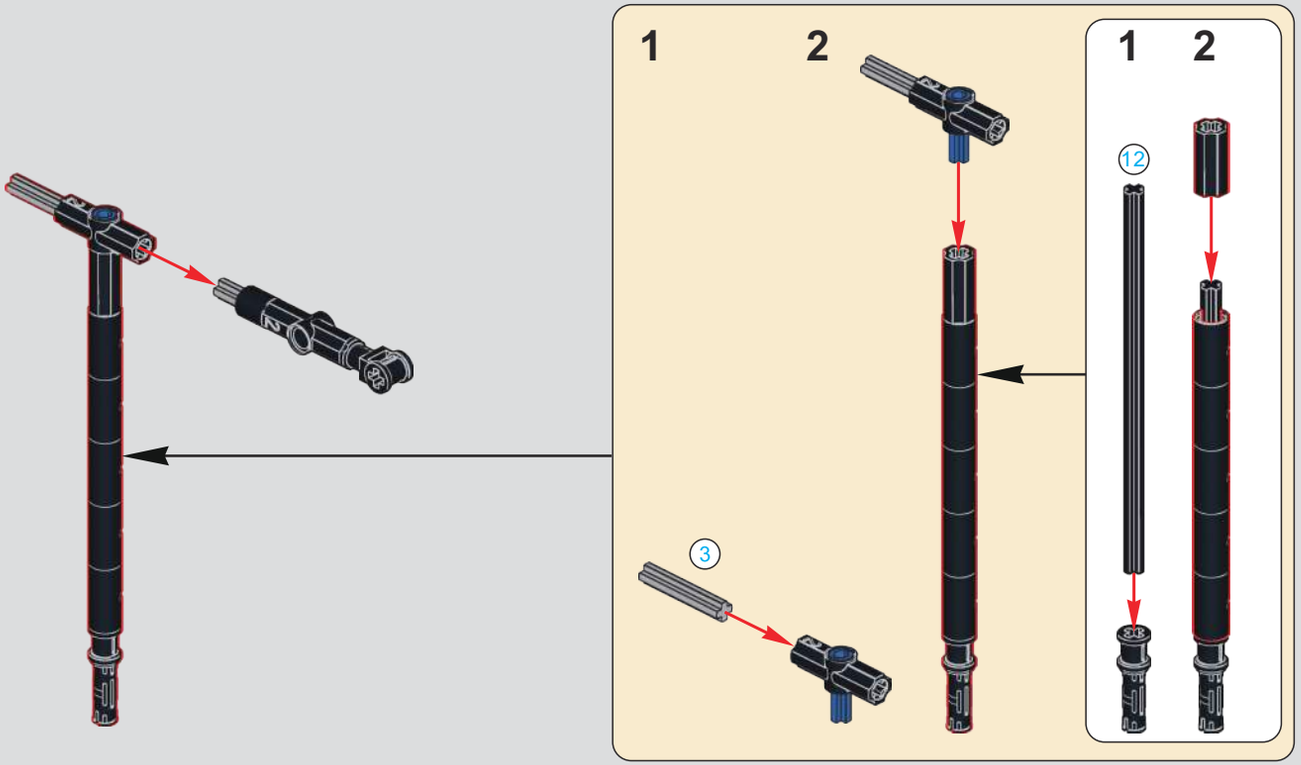

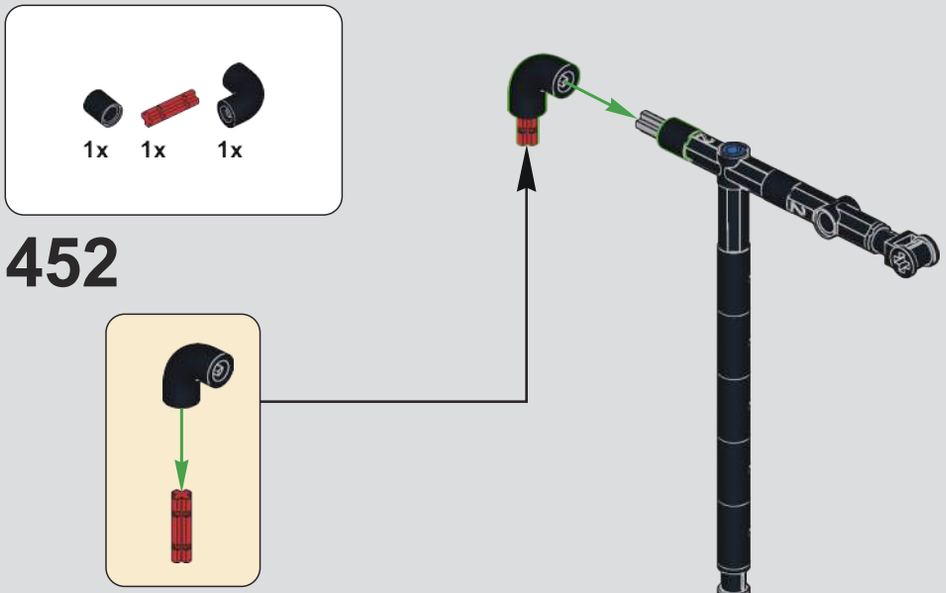

452

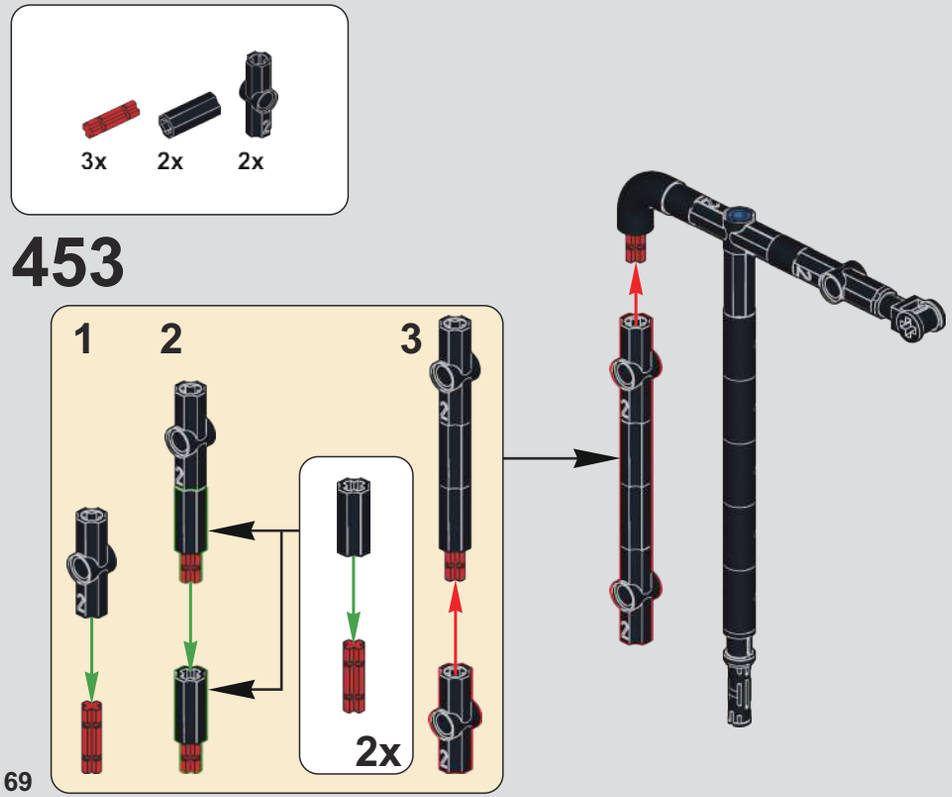

453

454

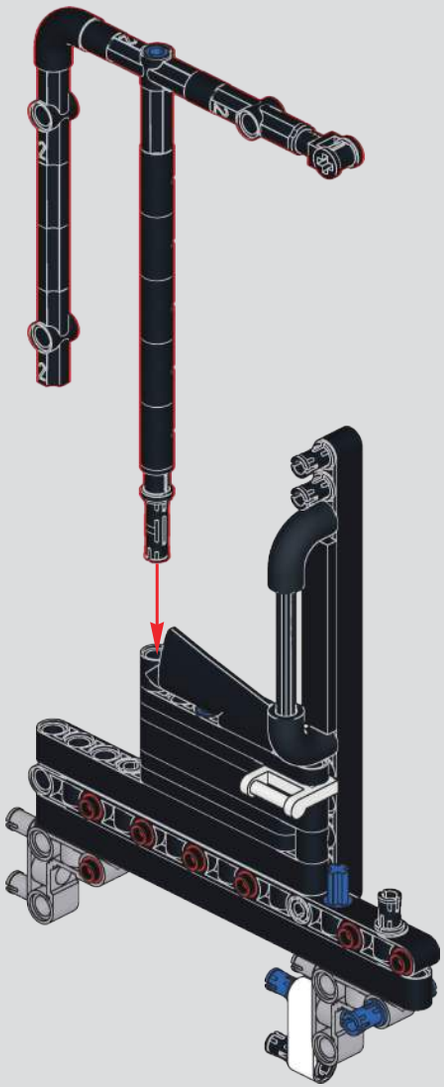

455

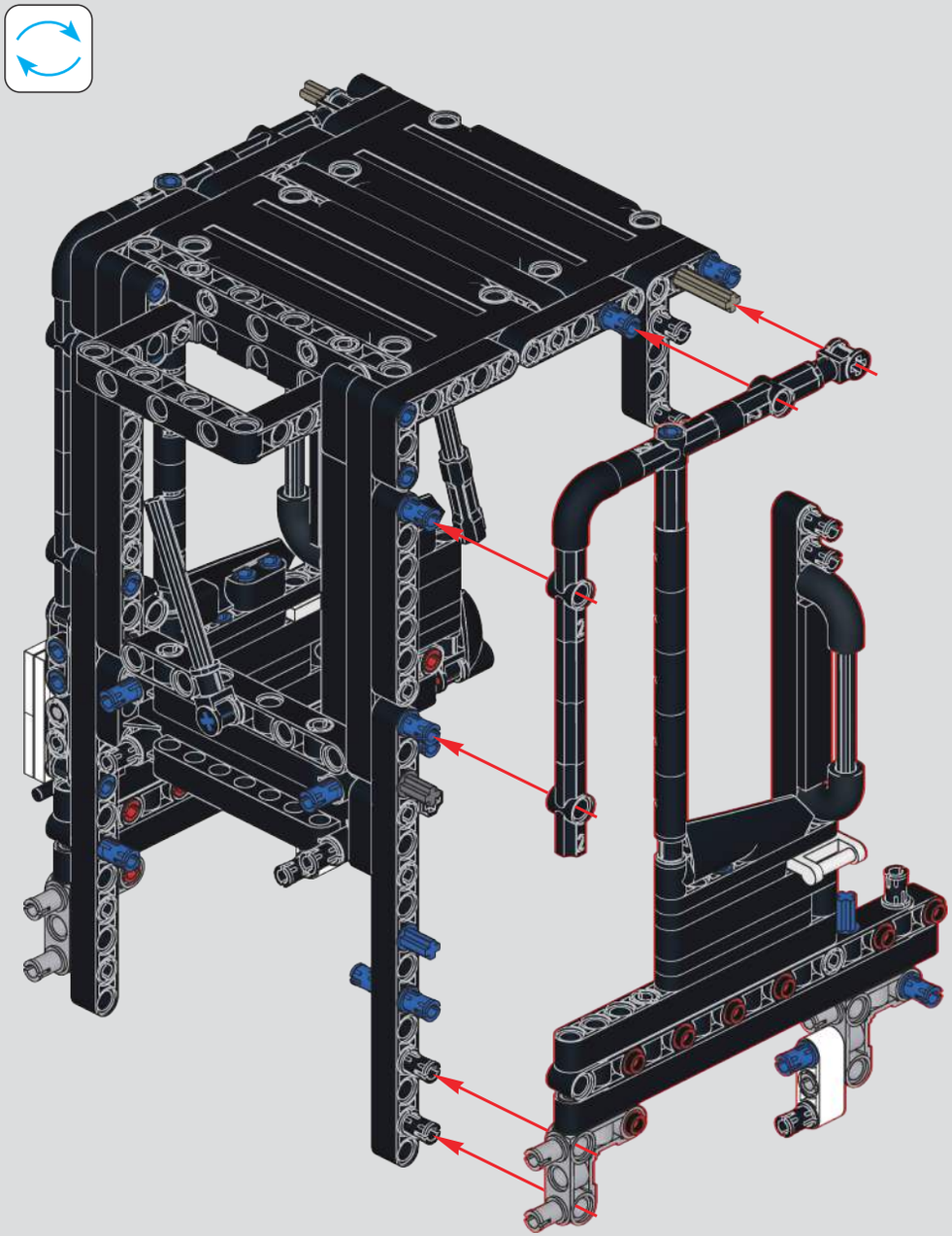

456

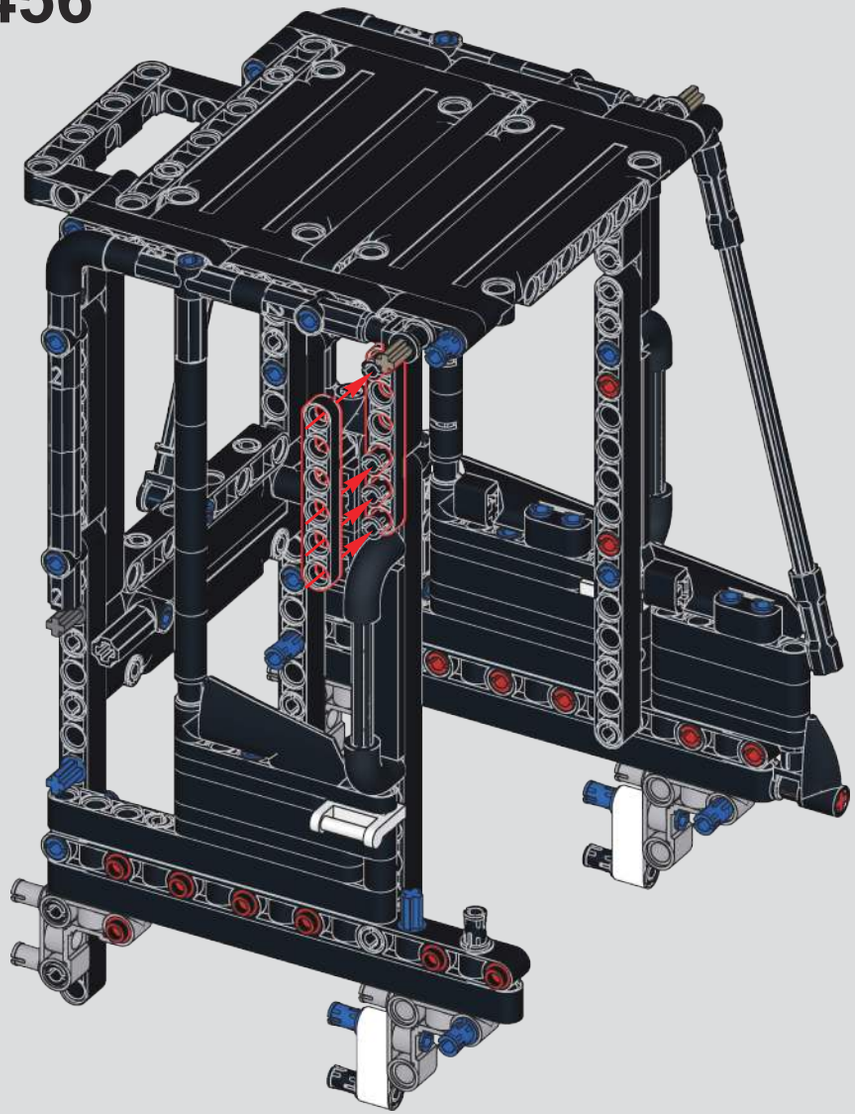

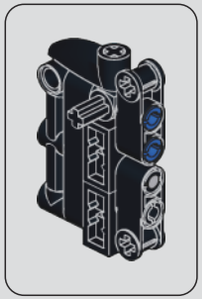

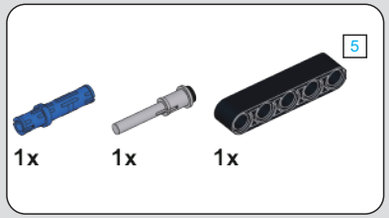

457

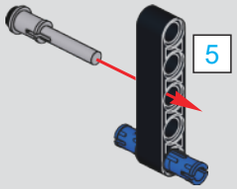

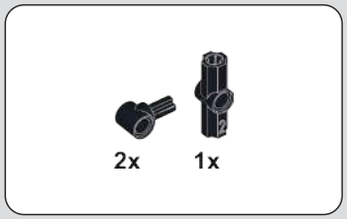

458

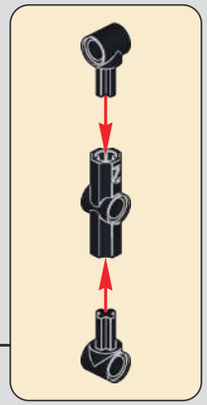

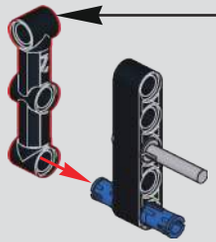

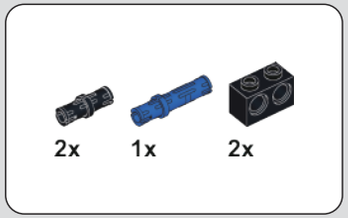

459

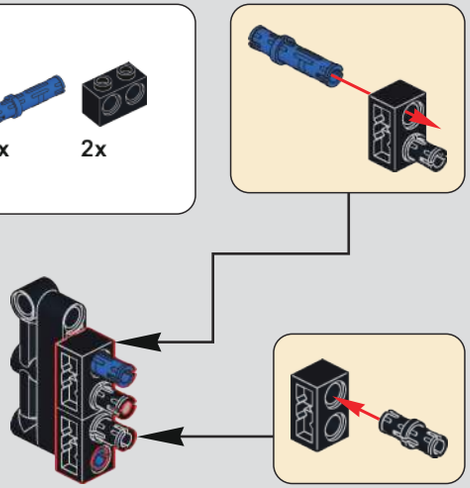

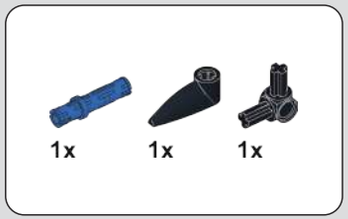

460

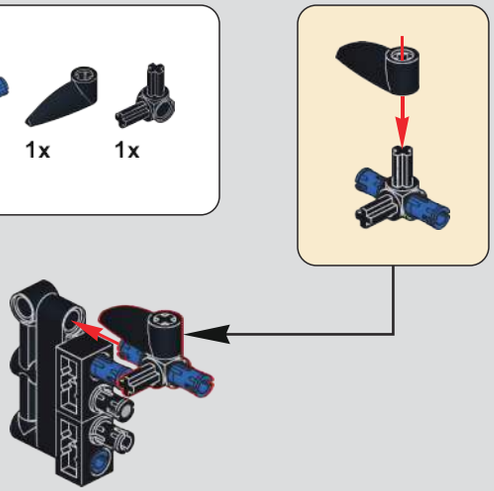

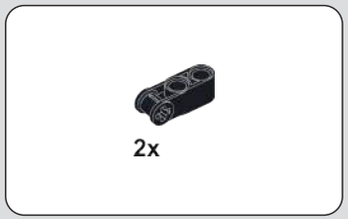

461

462

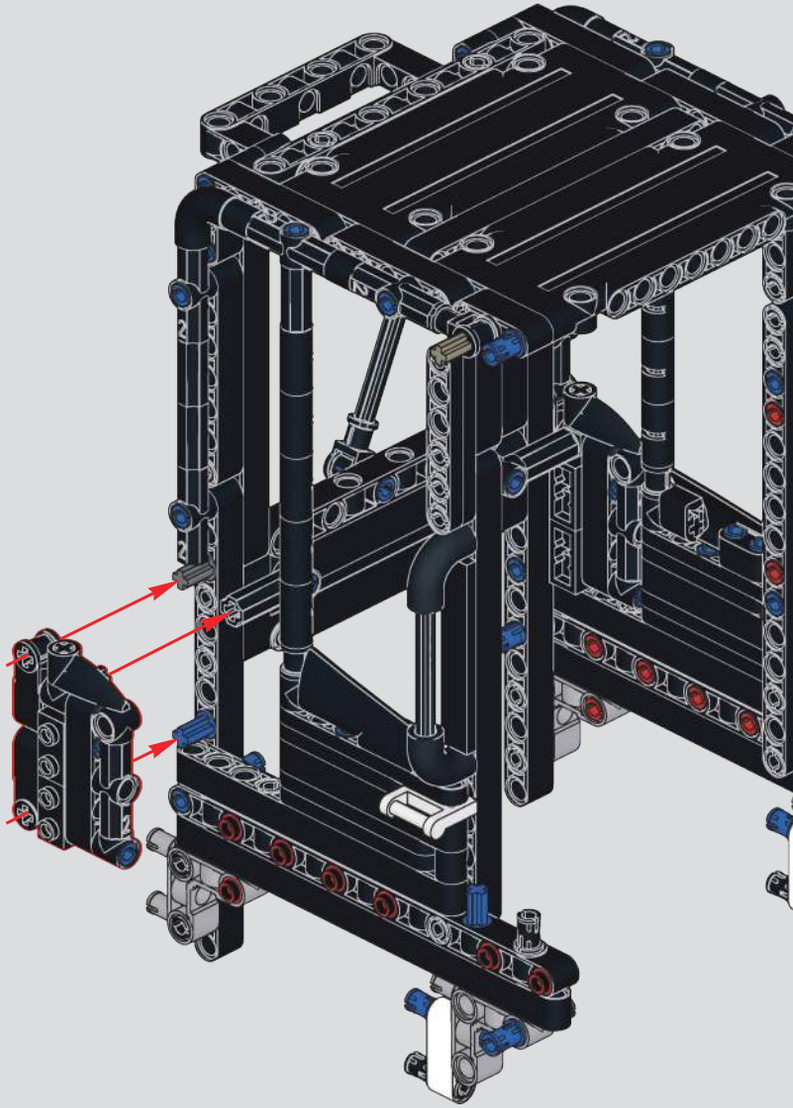

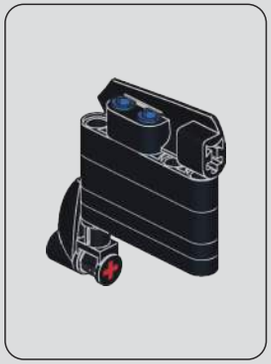

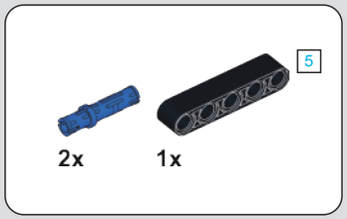

463

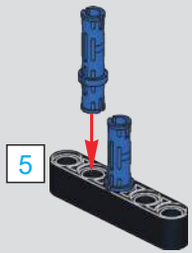

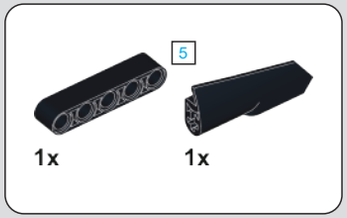

464

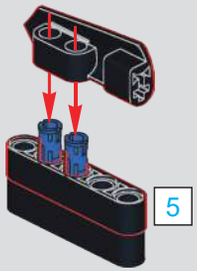

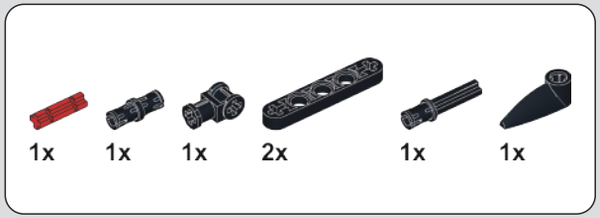

465

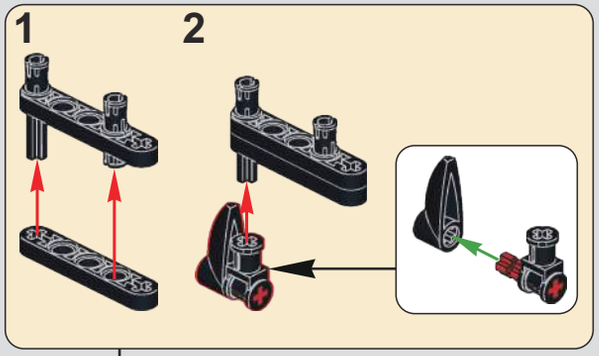

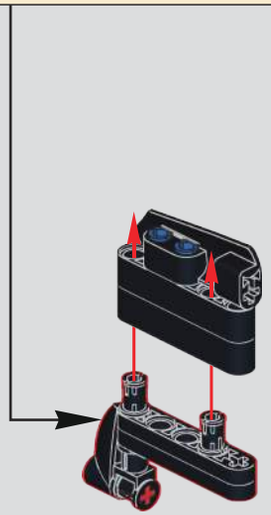

466

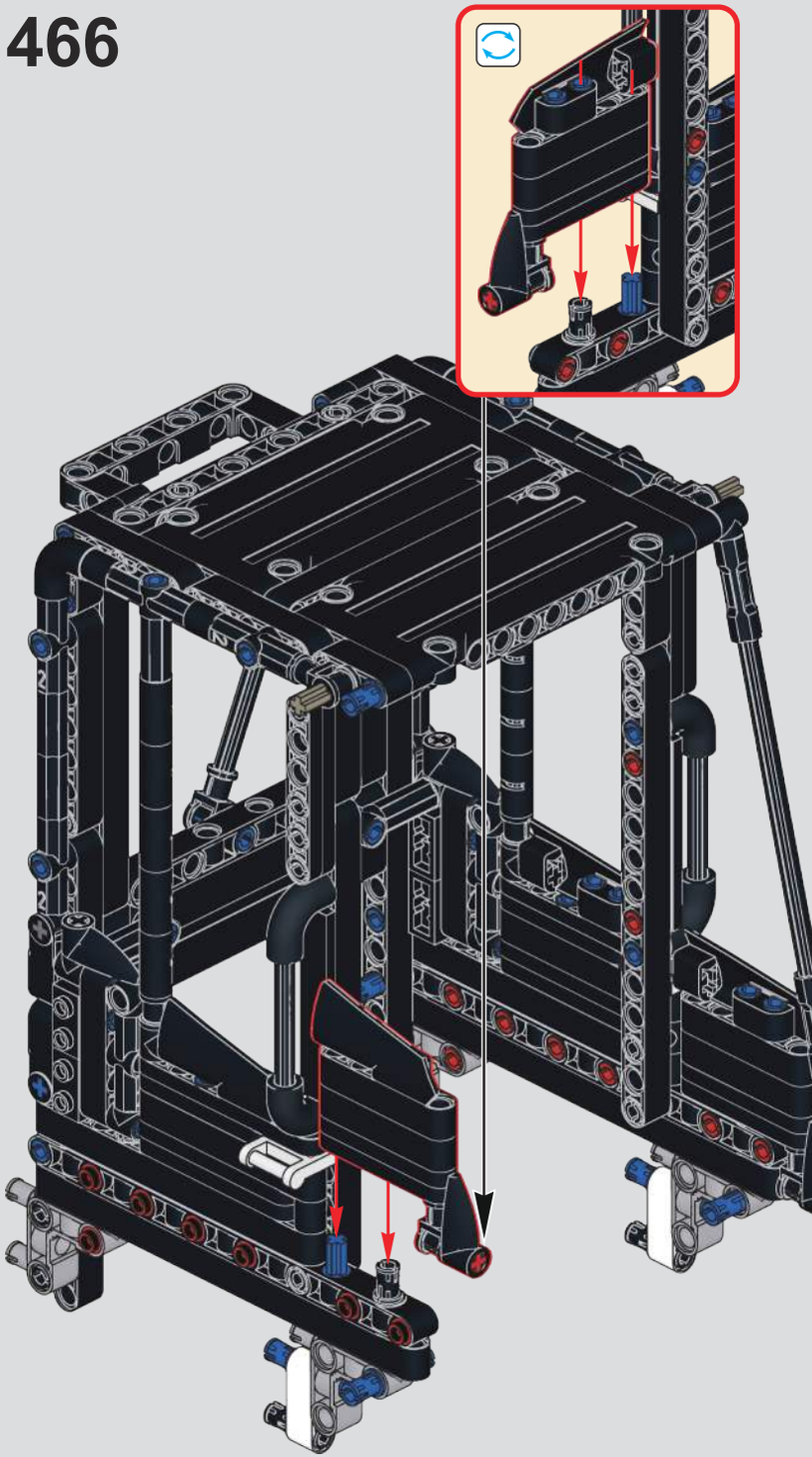

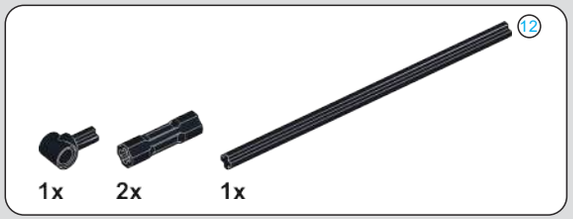

467

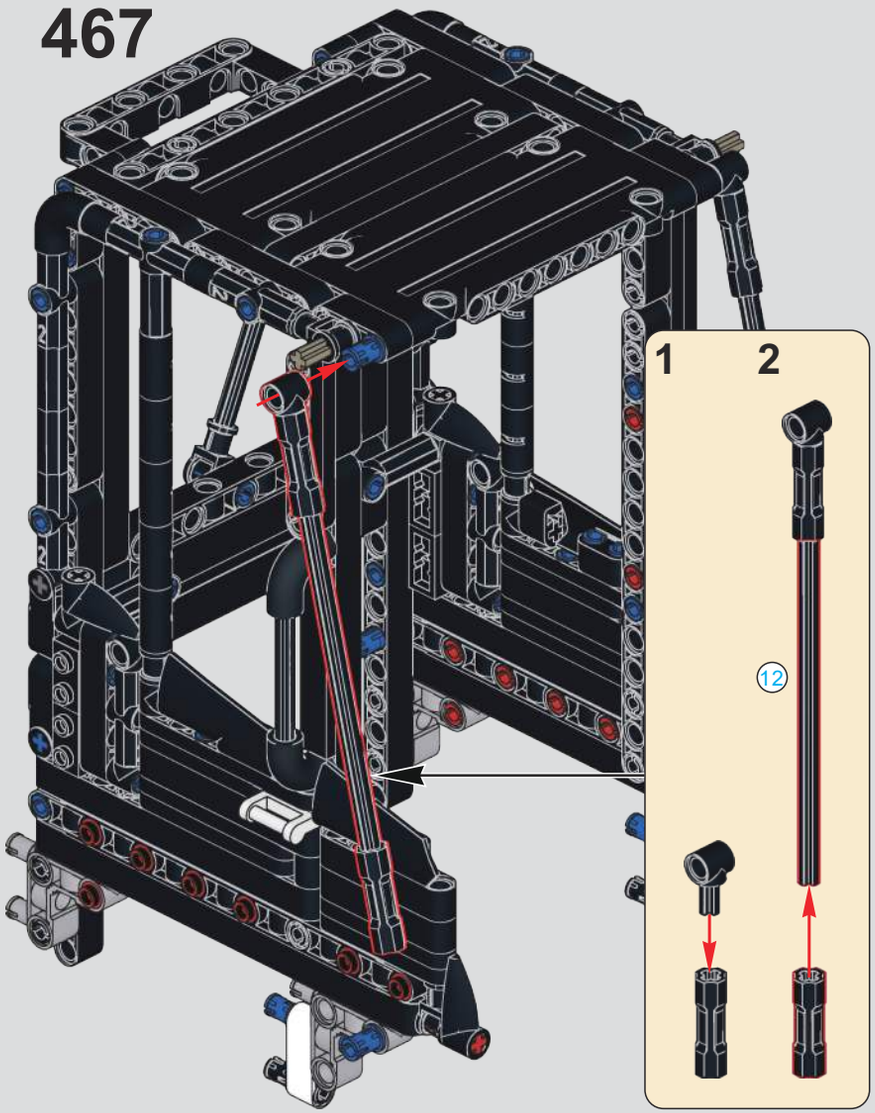

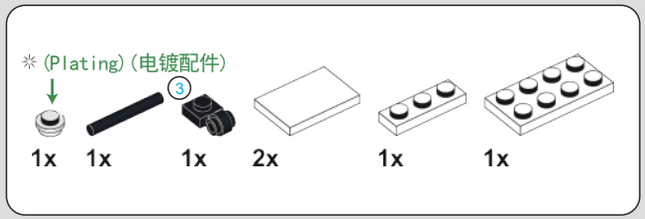

468

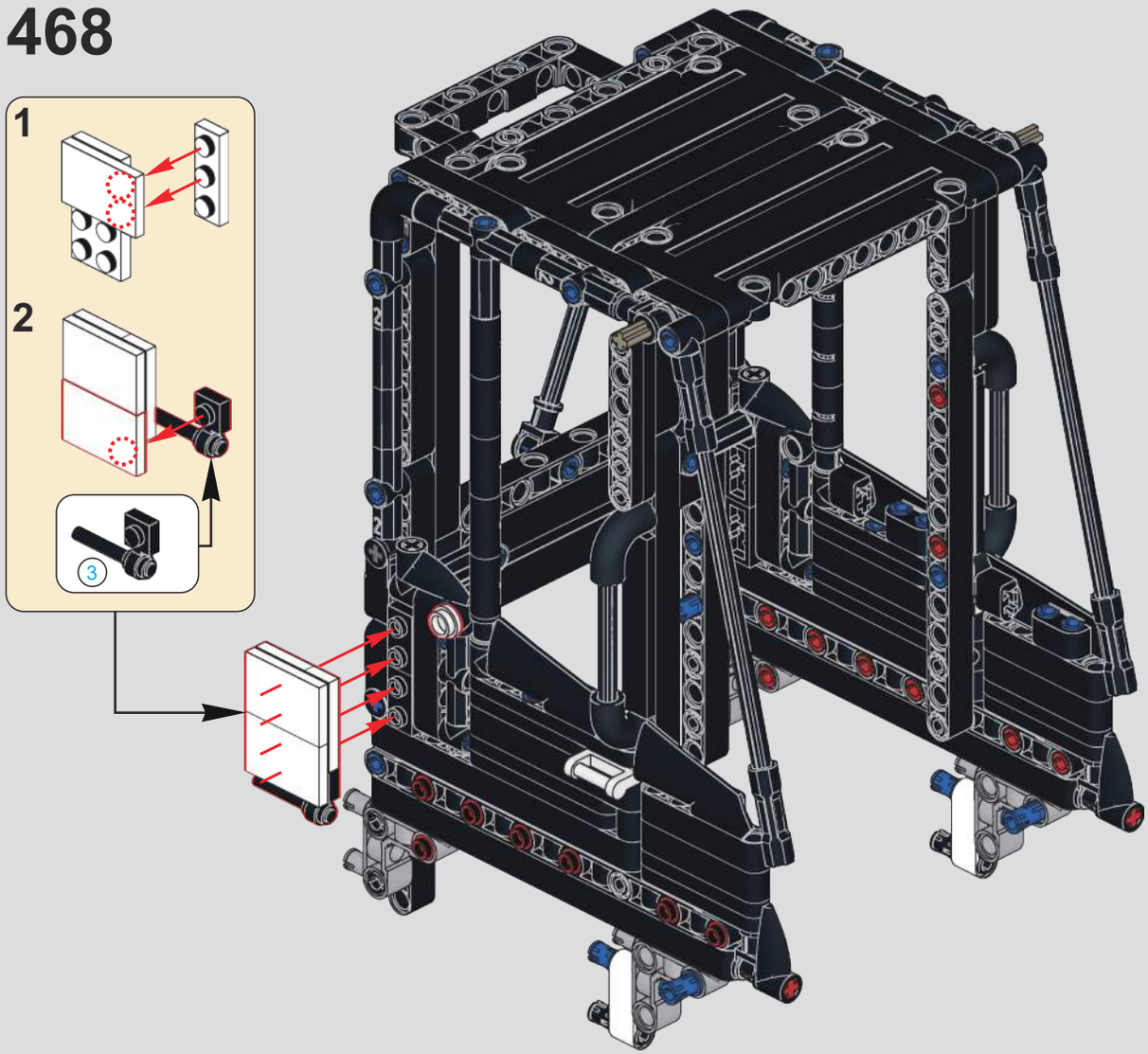

469

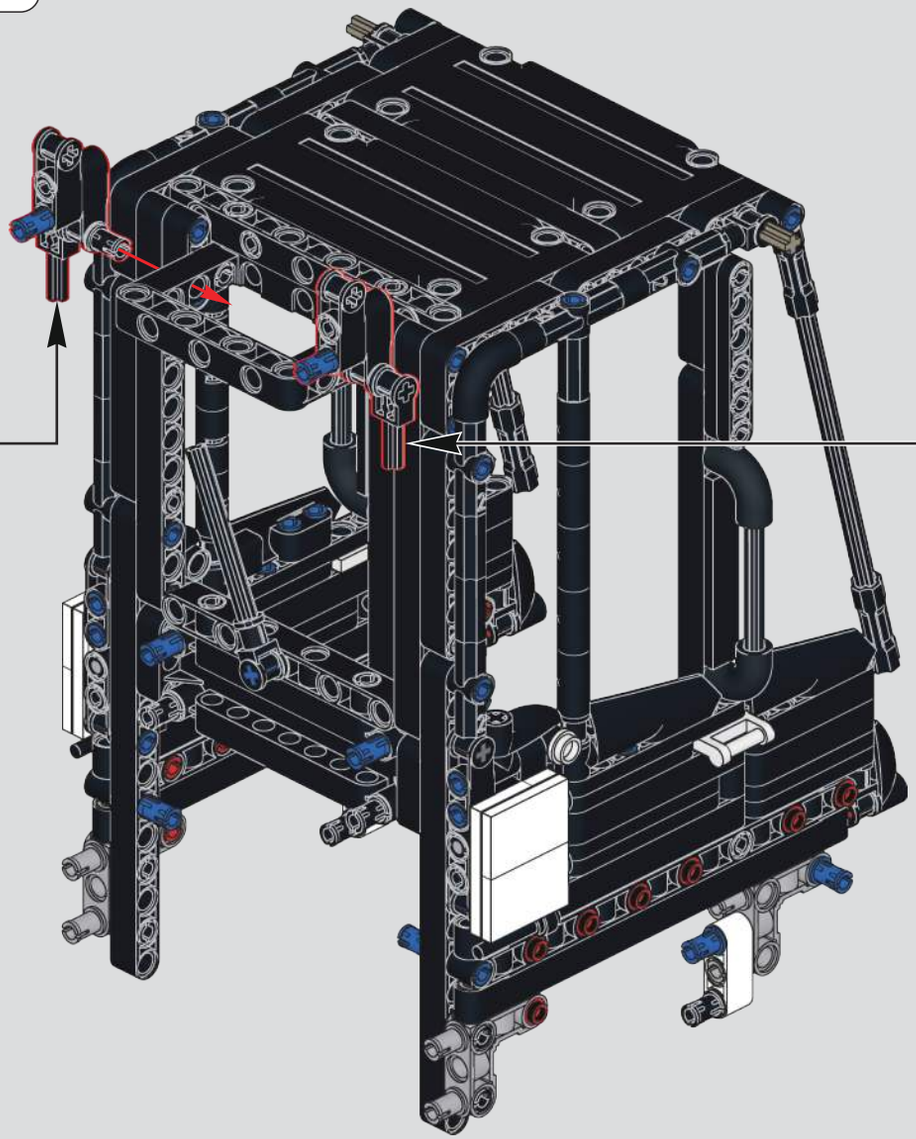

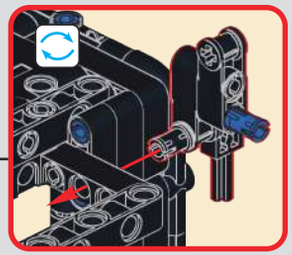

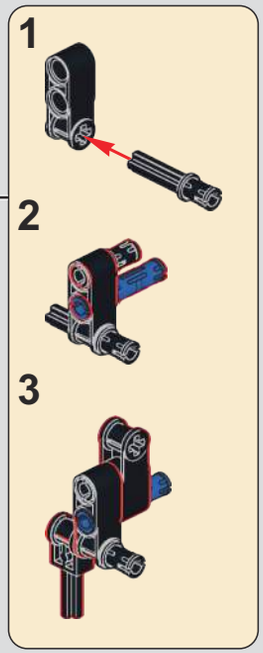

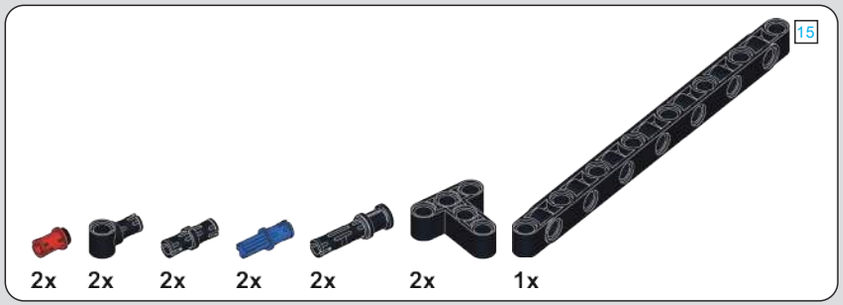

470

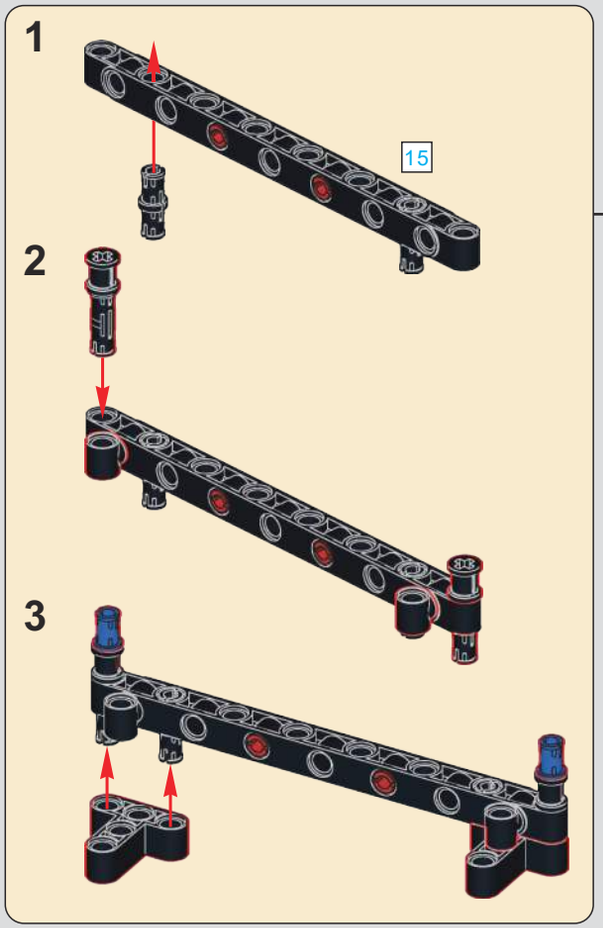

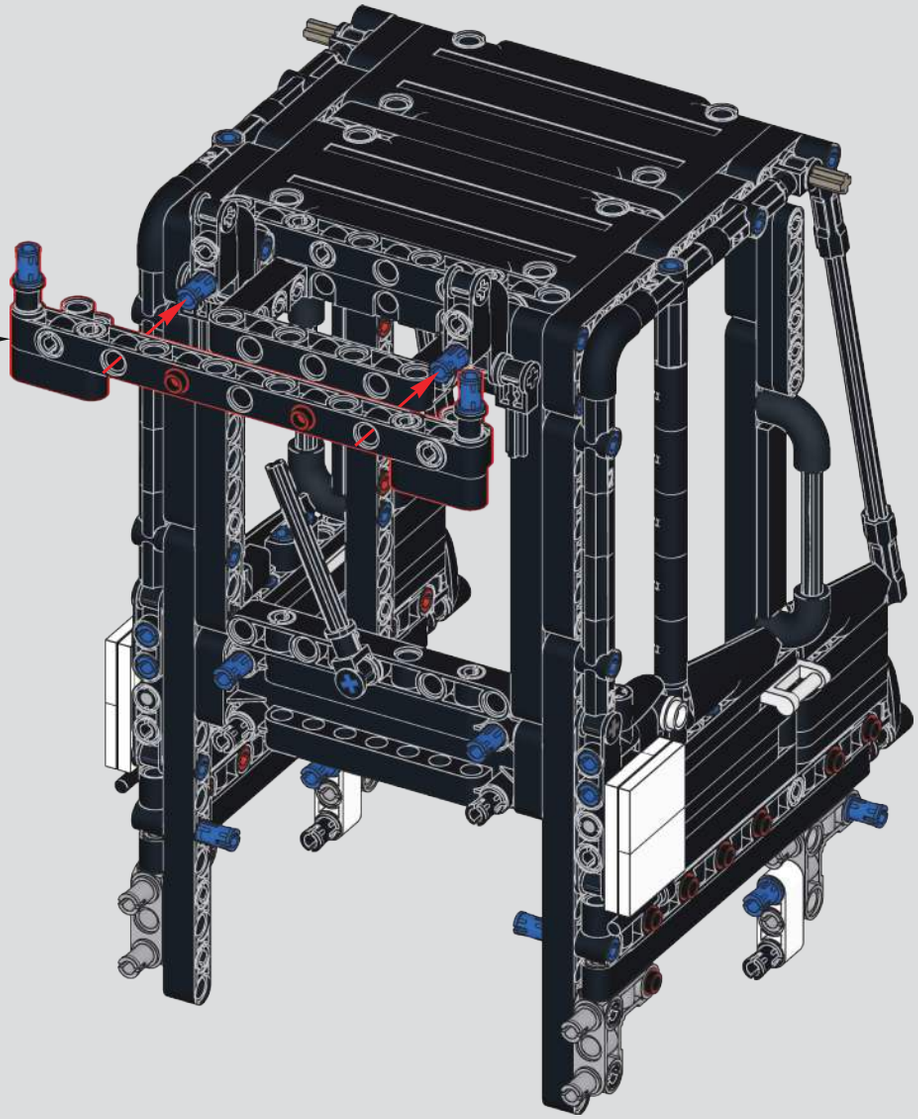

2x

471

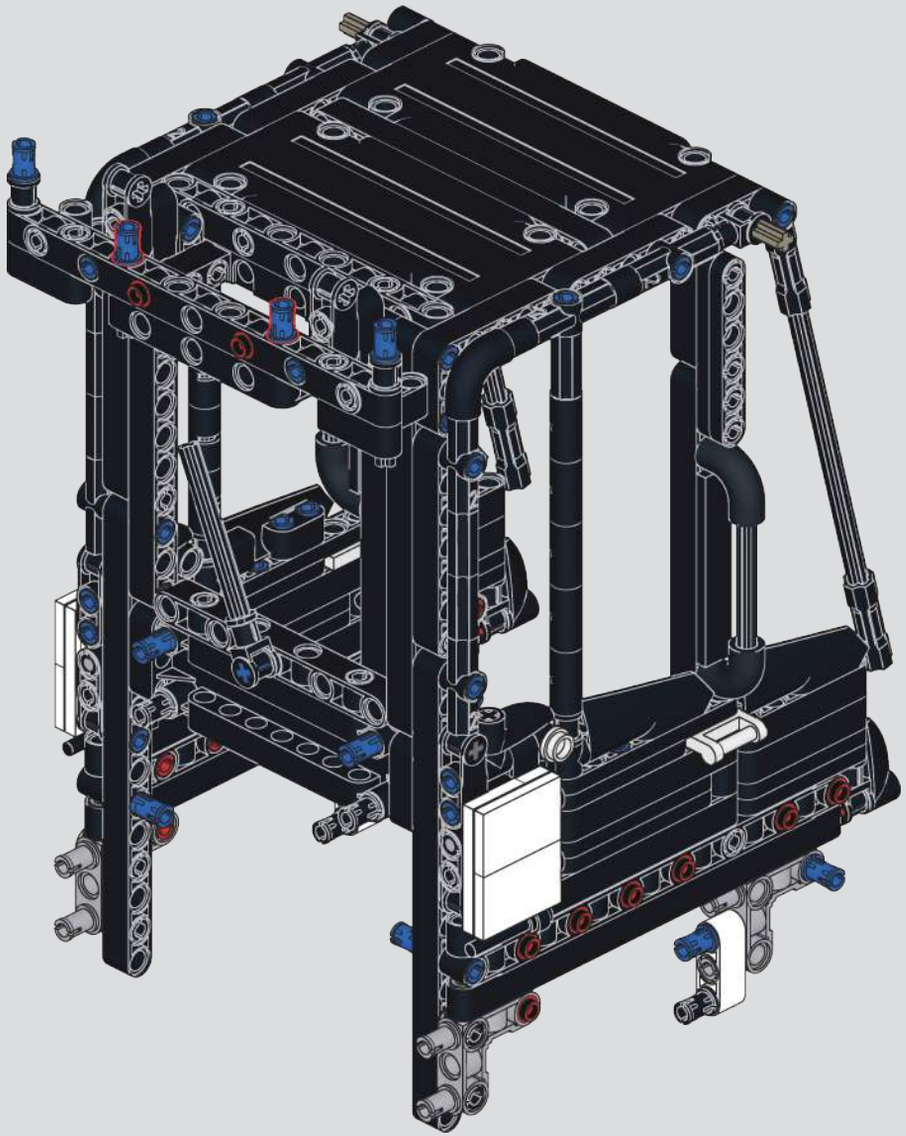

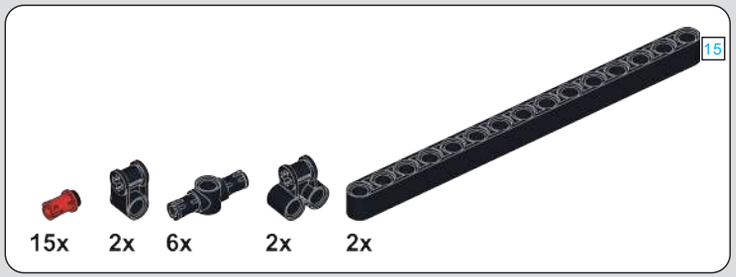

472

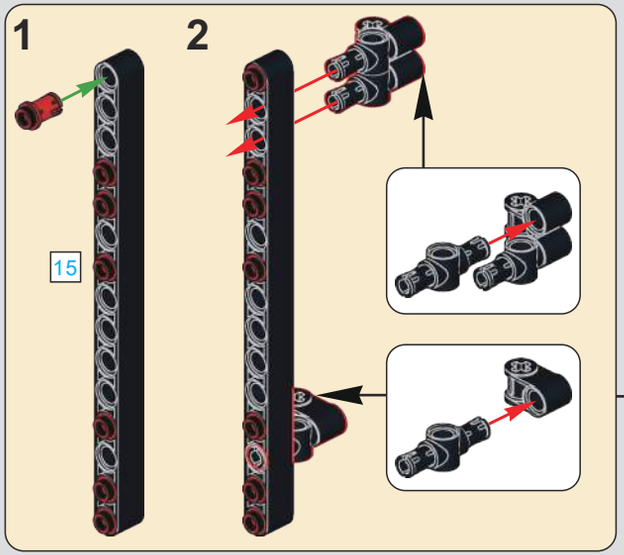

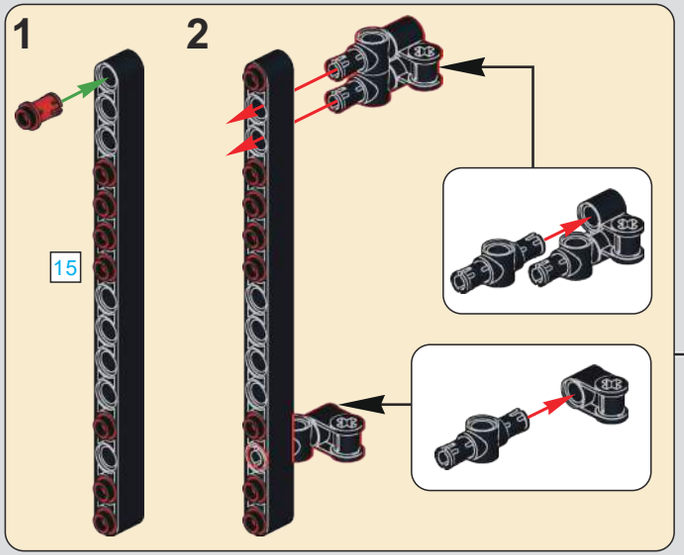

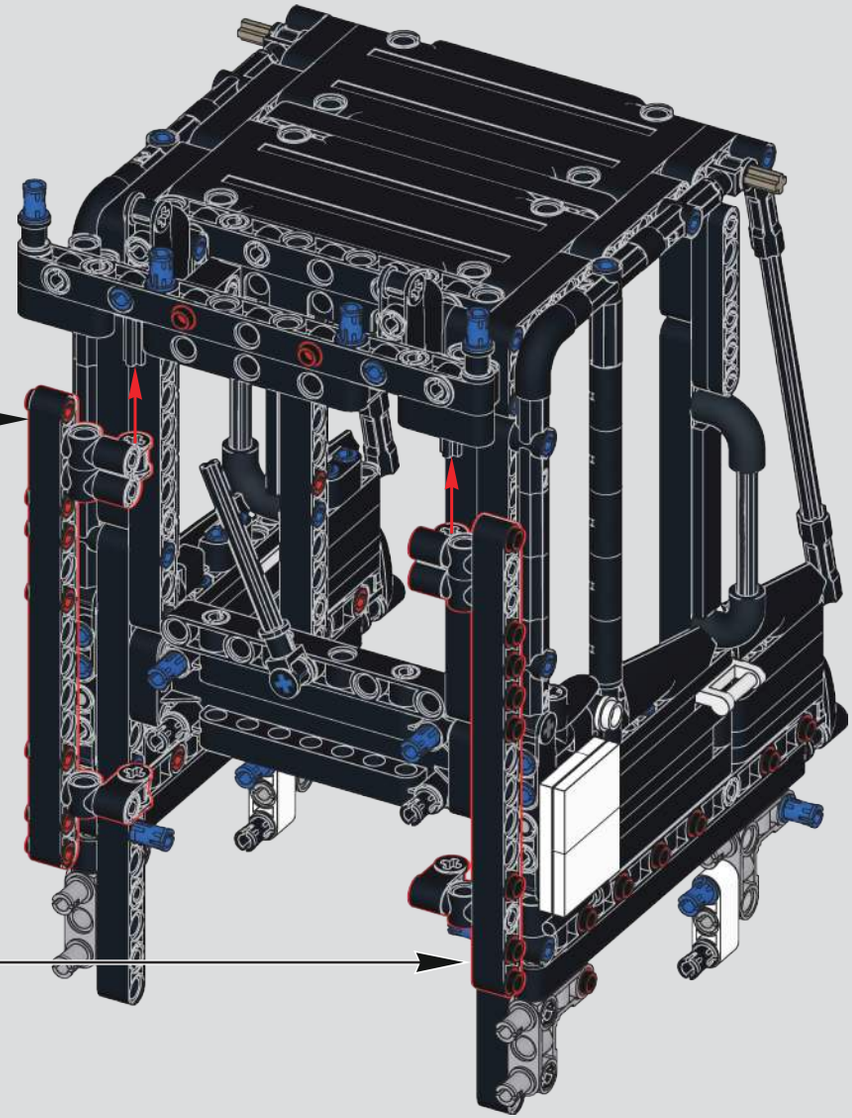

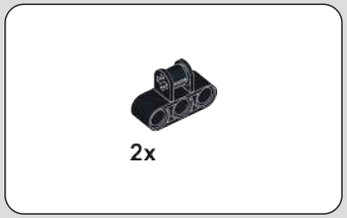

473

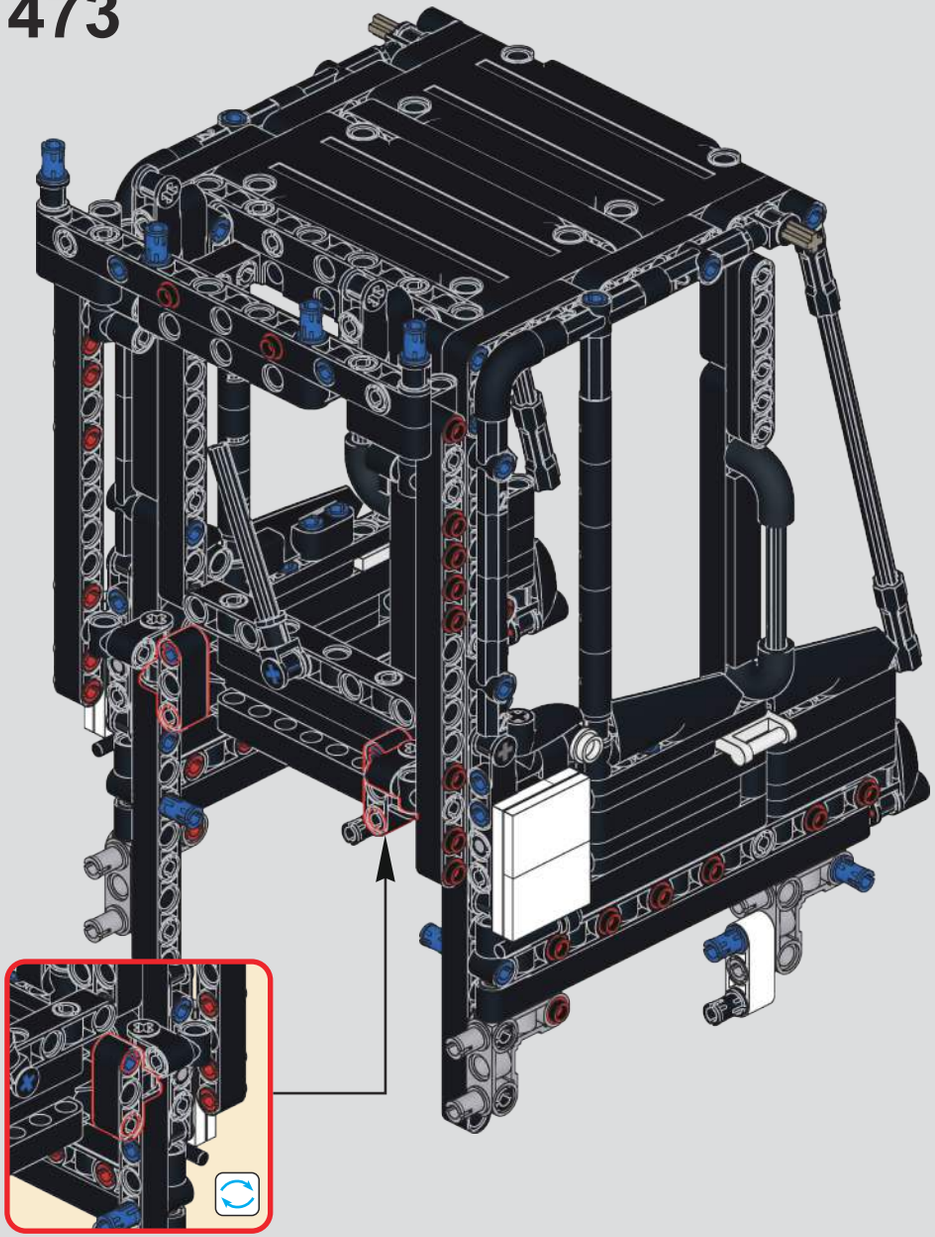

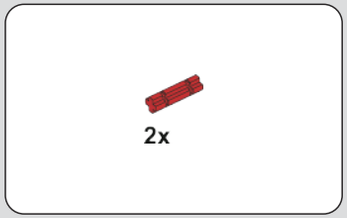

474

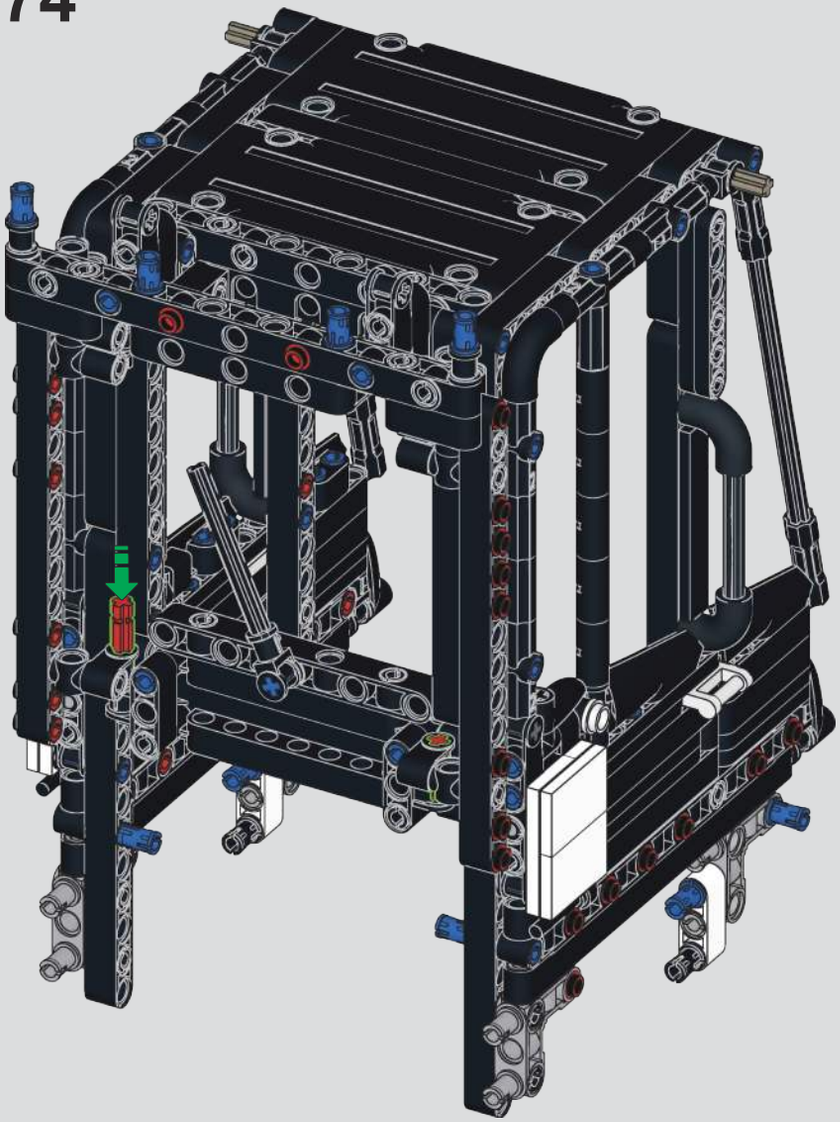

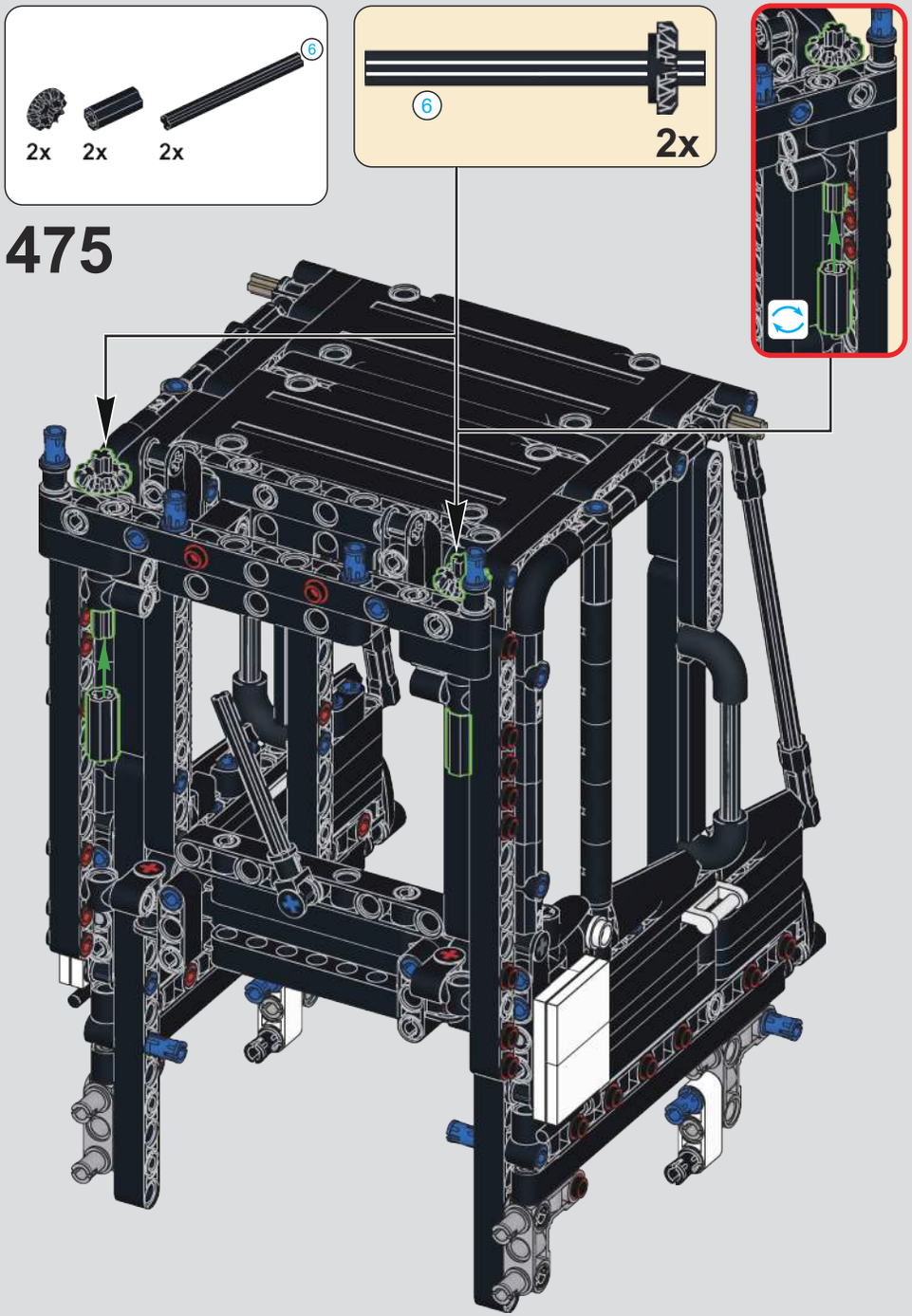

475

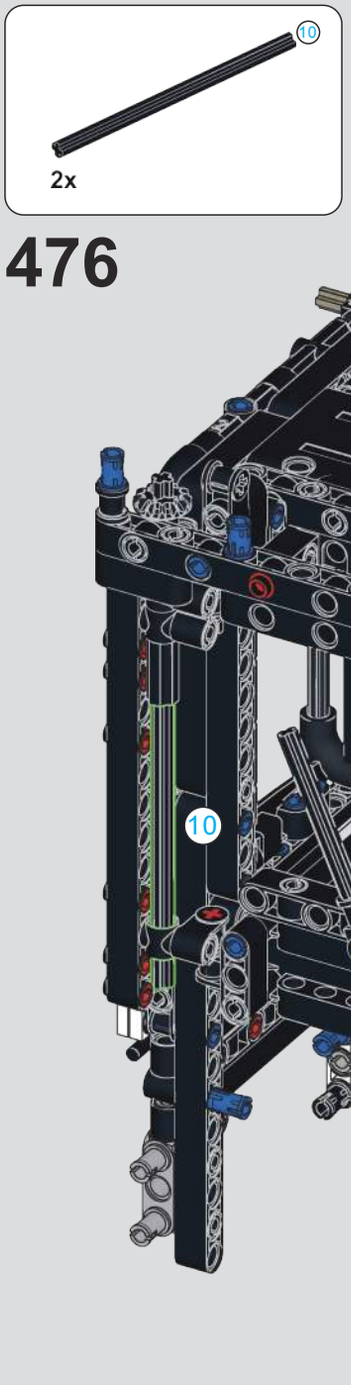

476

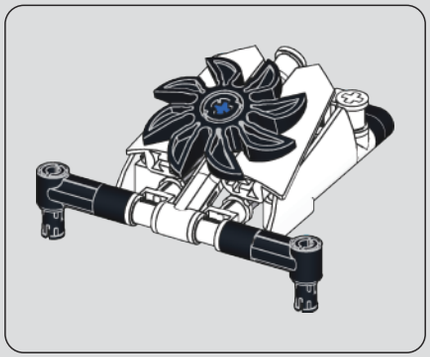

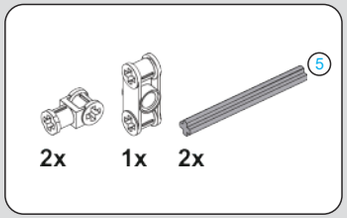

477

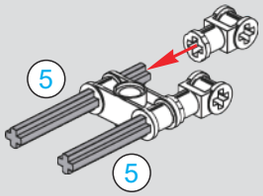

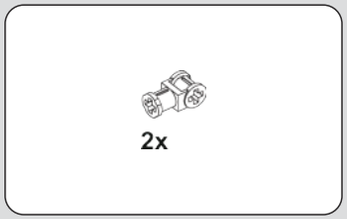

478

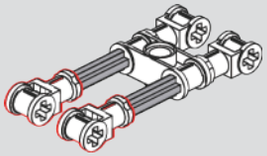

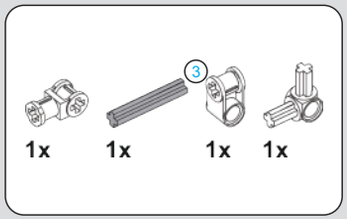

479

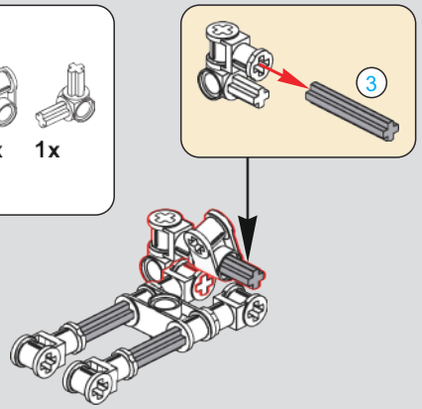

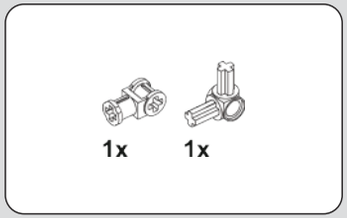

480

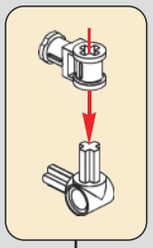

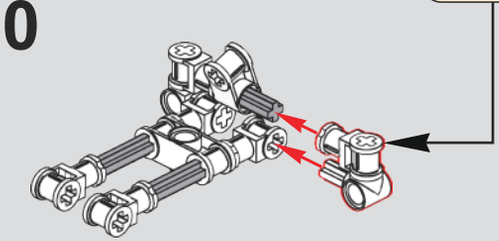

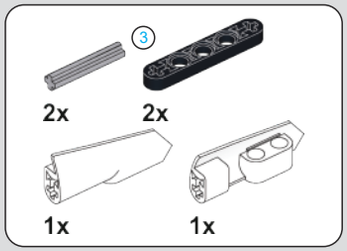

481

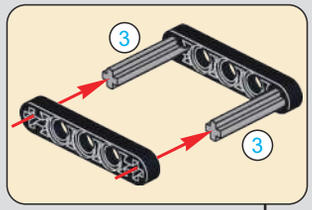

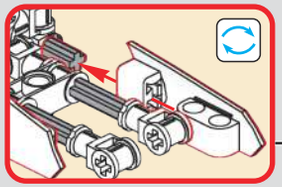

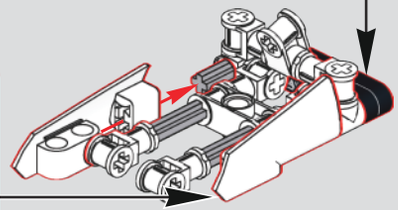

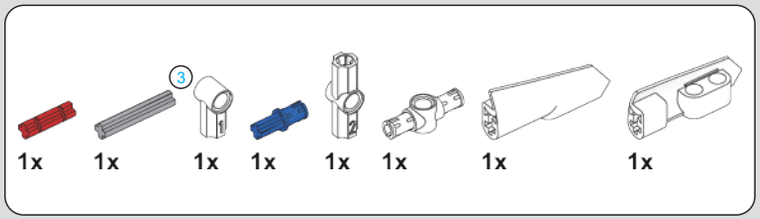

482

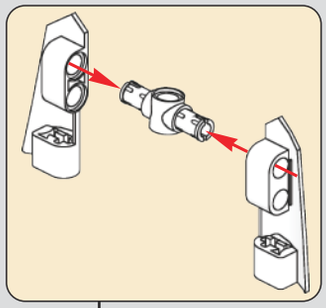

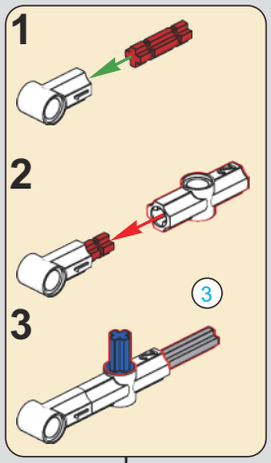

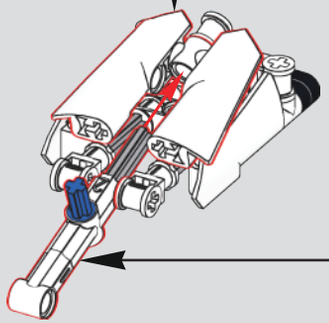

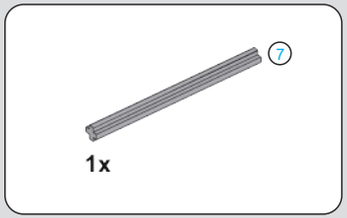

483

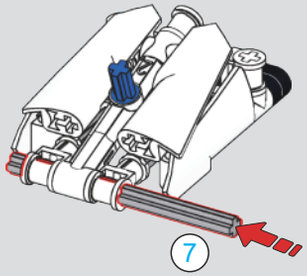

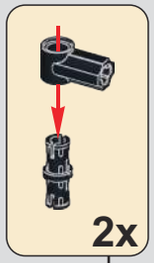

484

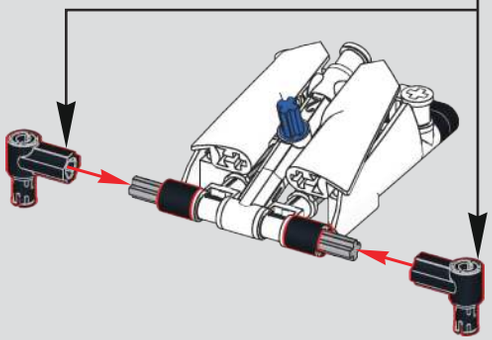

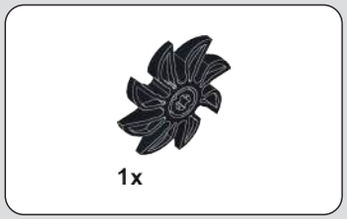

485

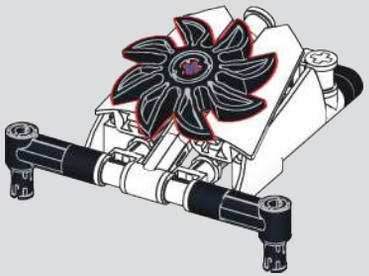

486

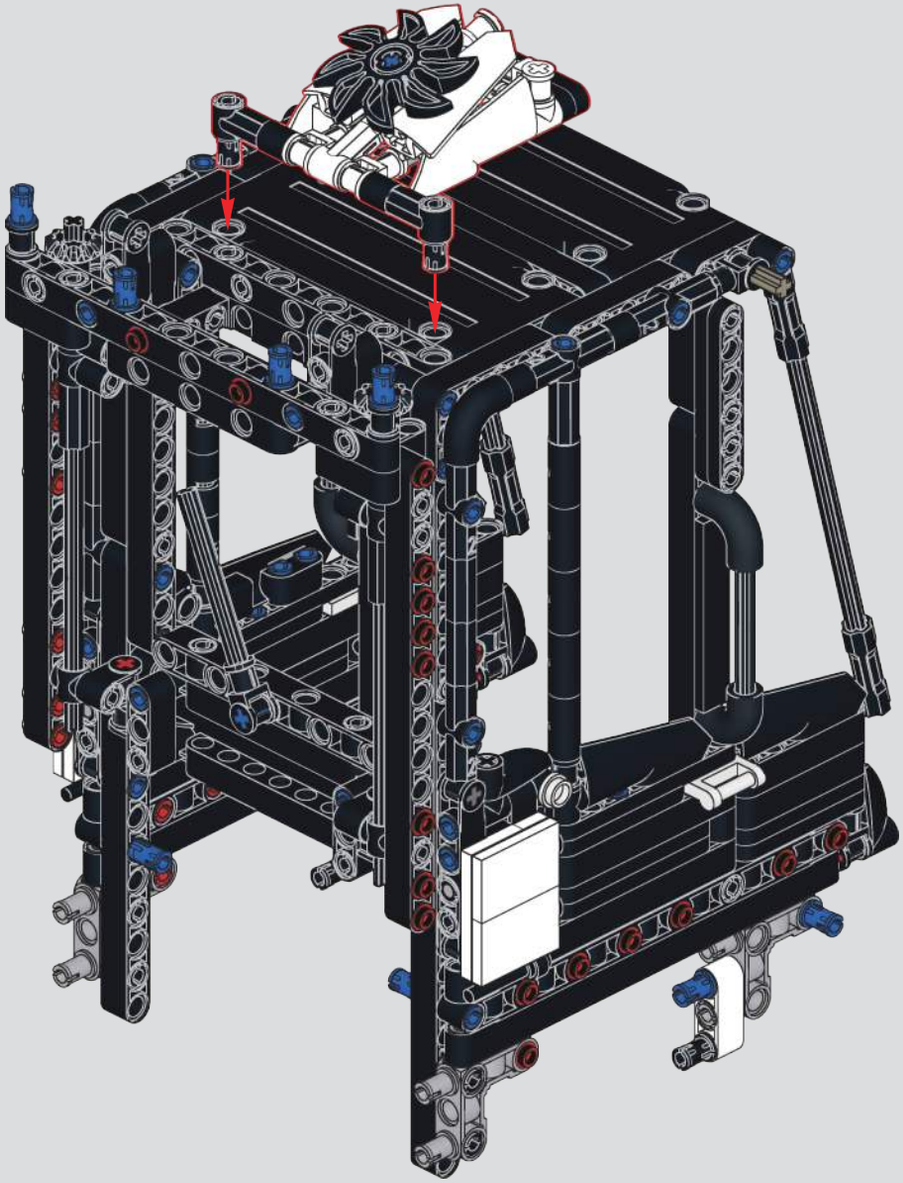

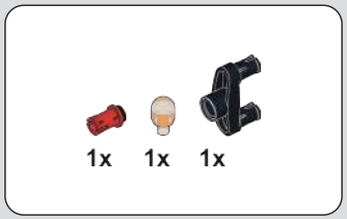

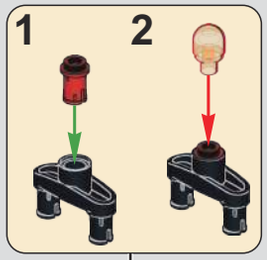

487

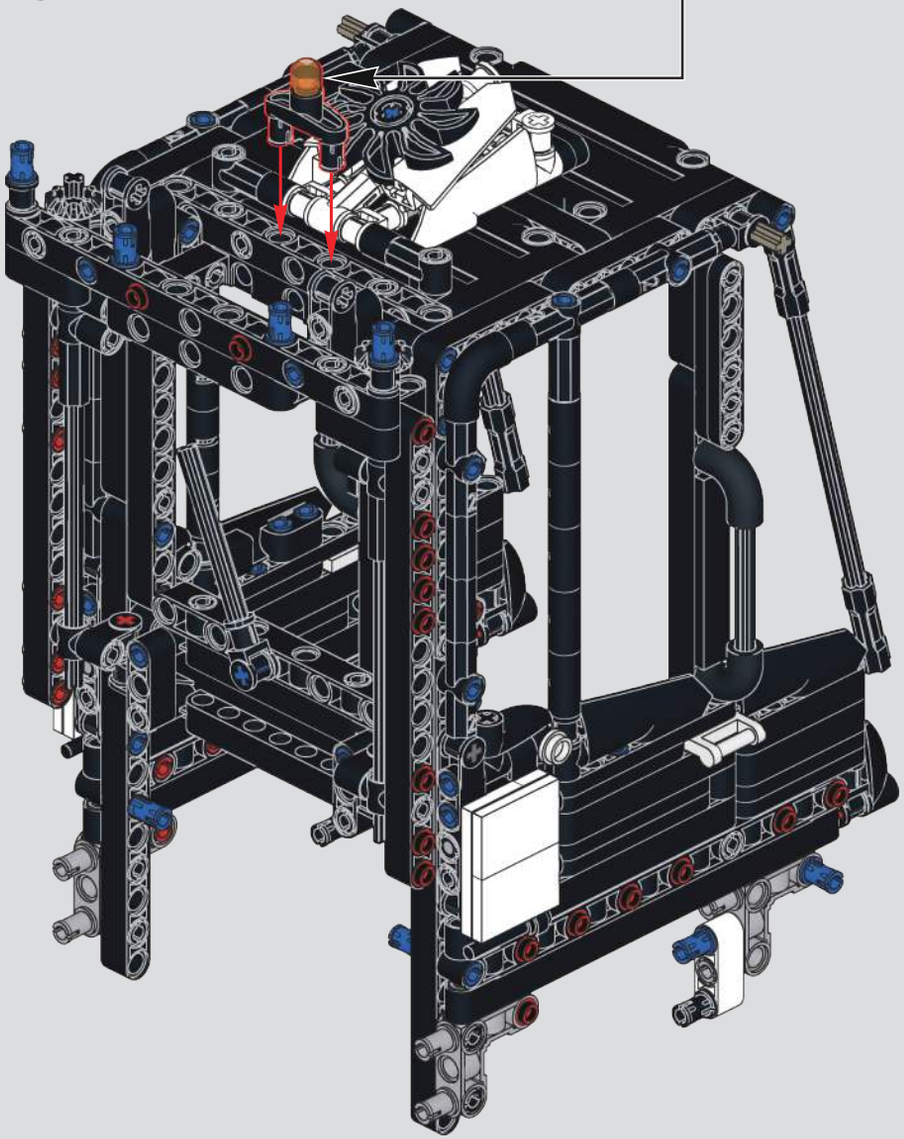

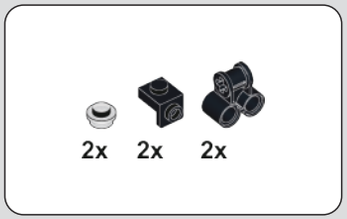

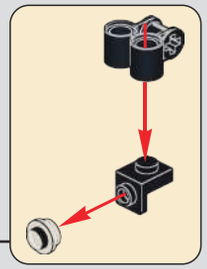

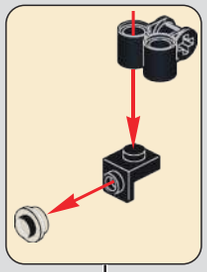

488

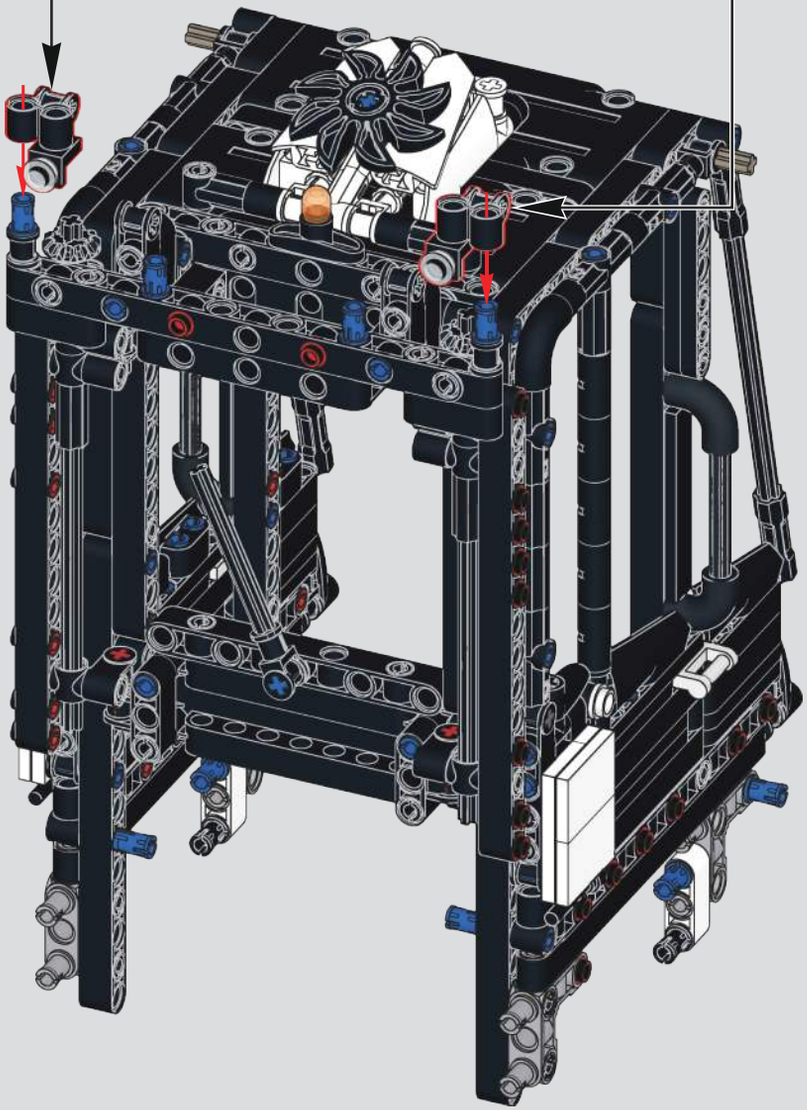

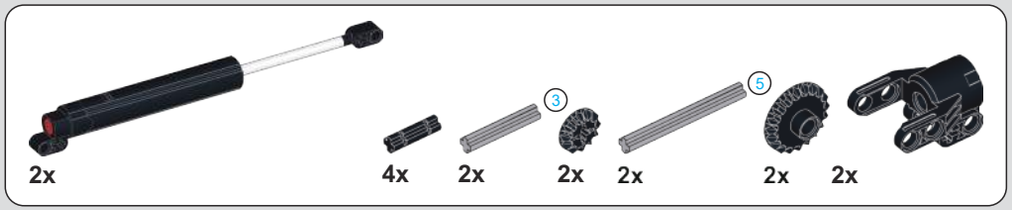

489

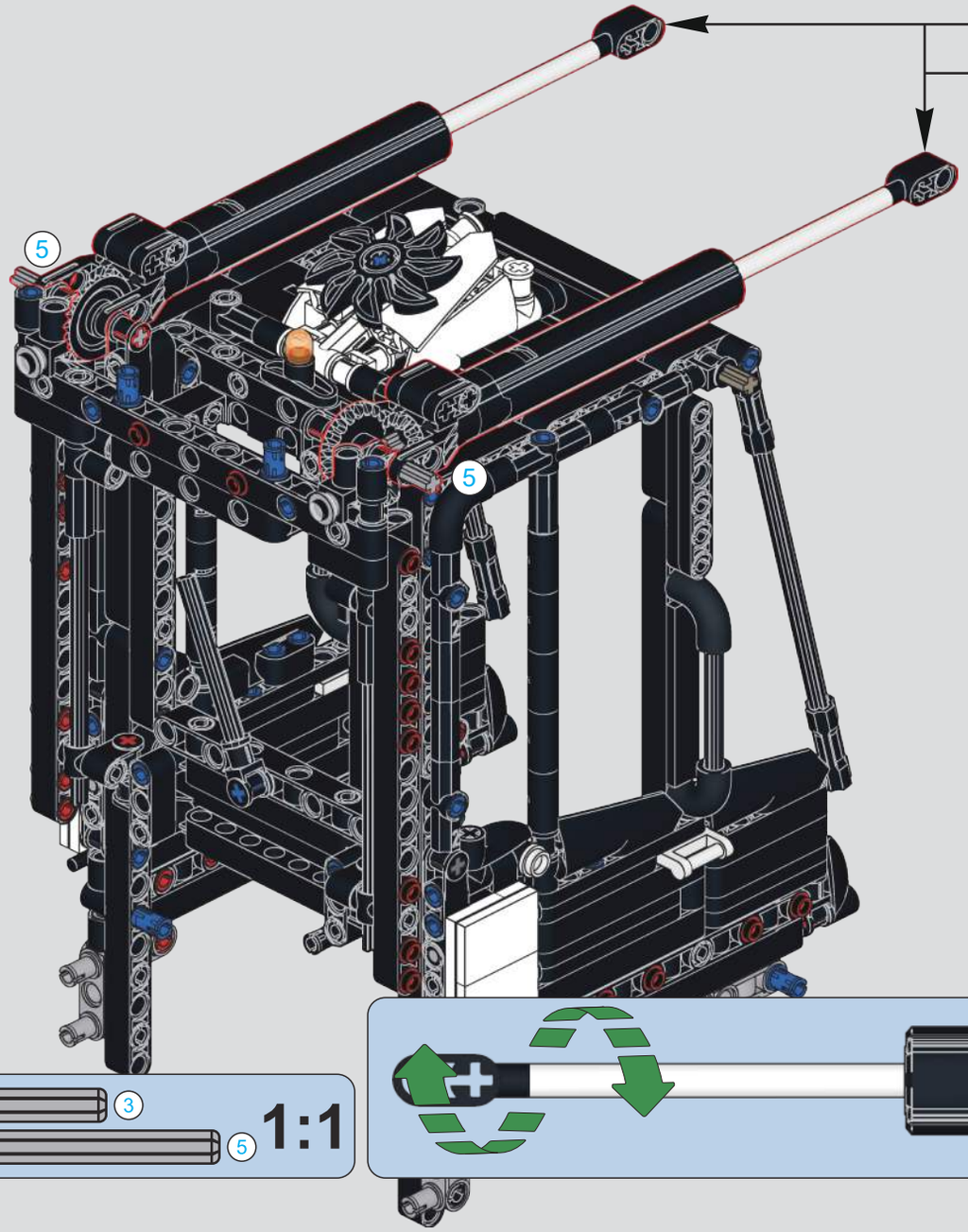

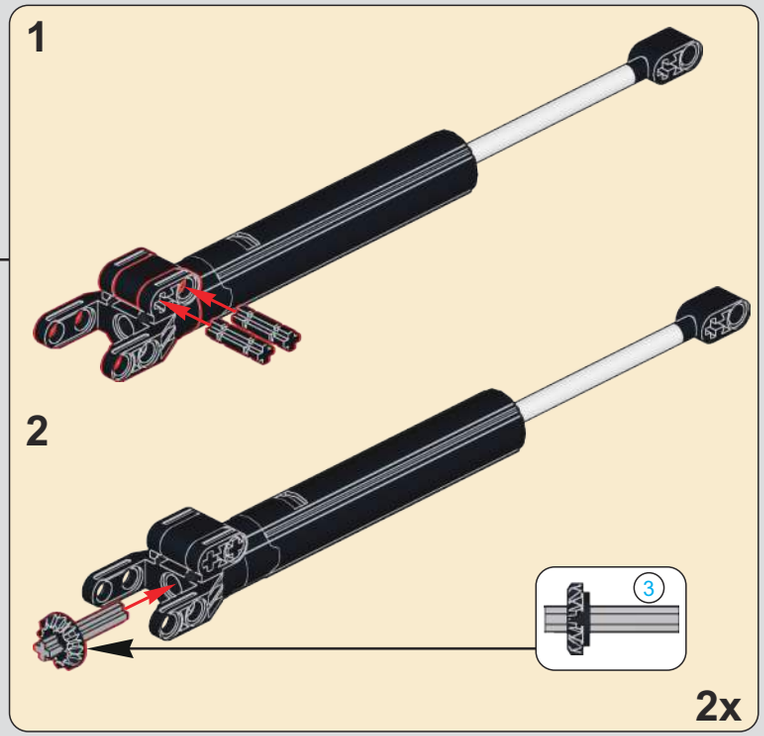

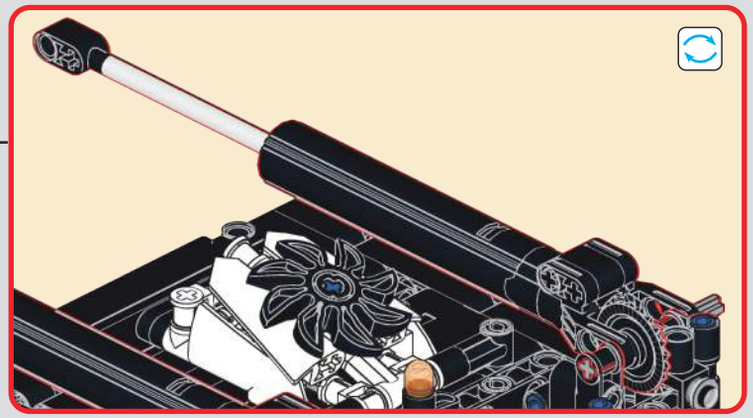

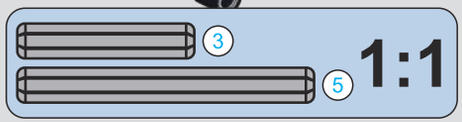

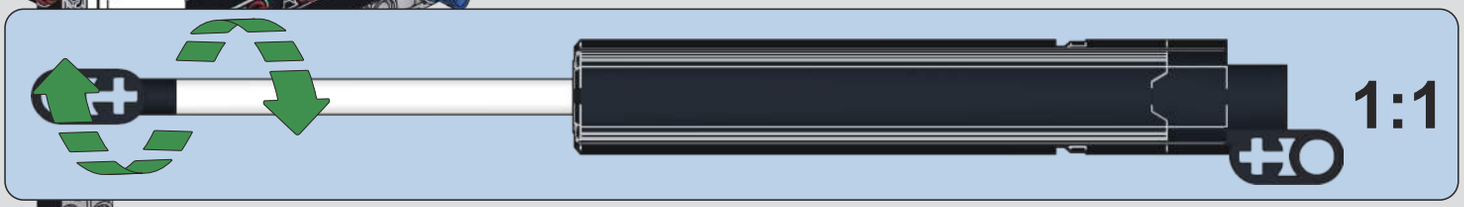

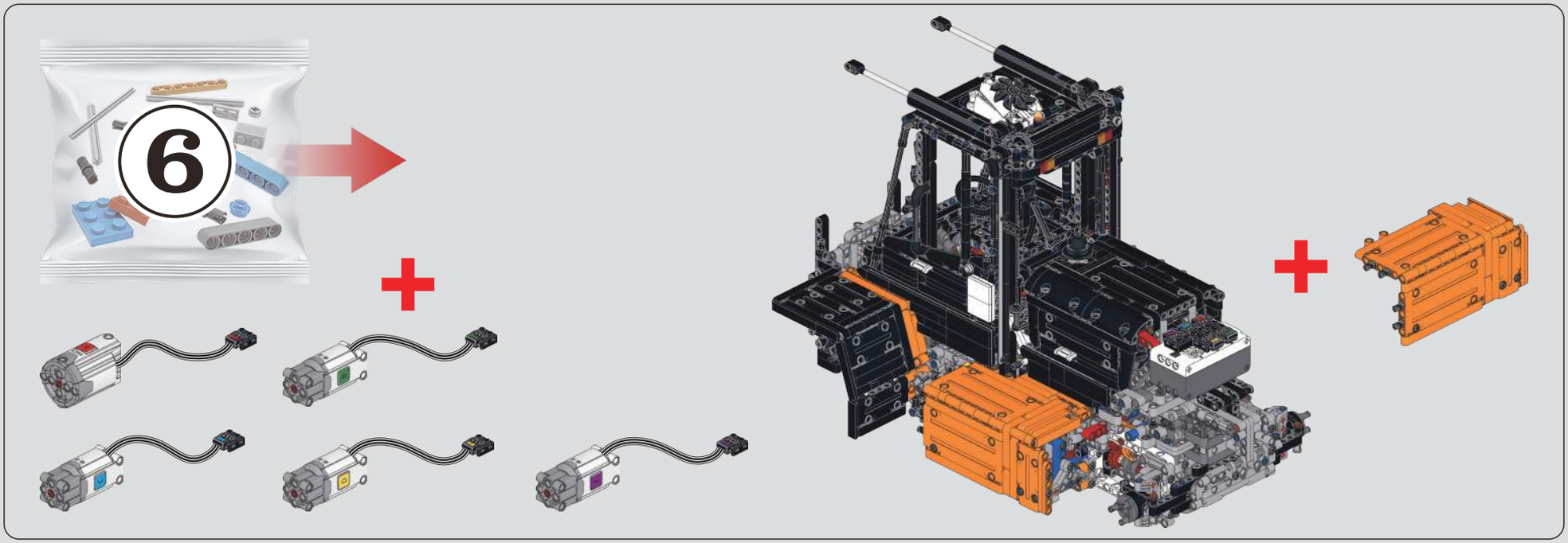

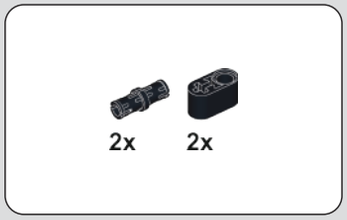

490

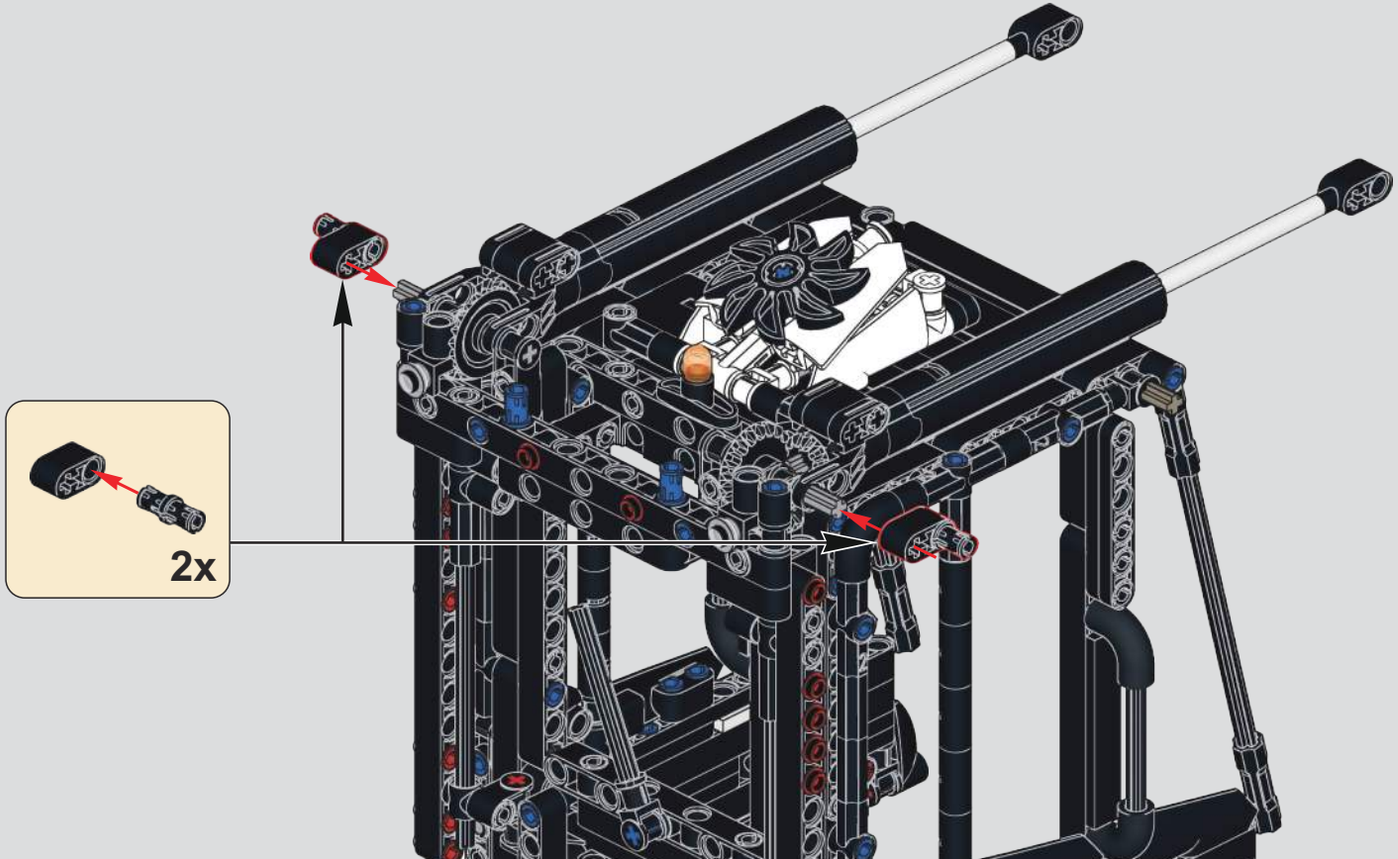

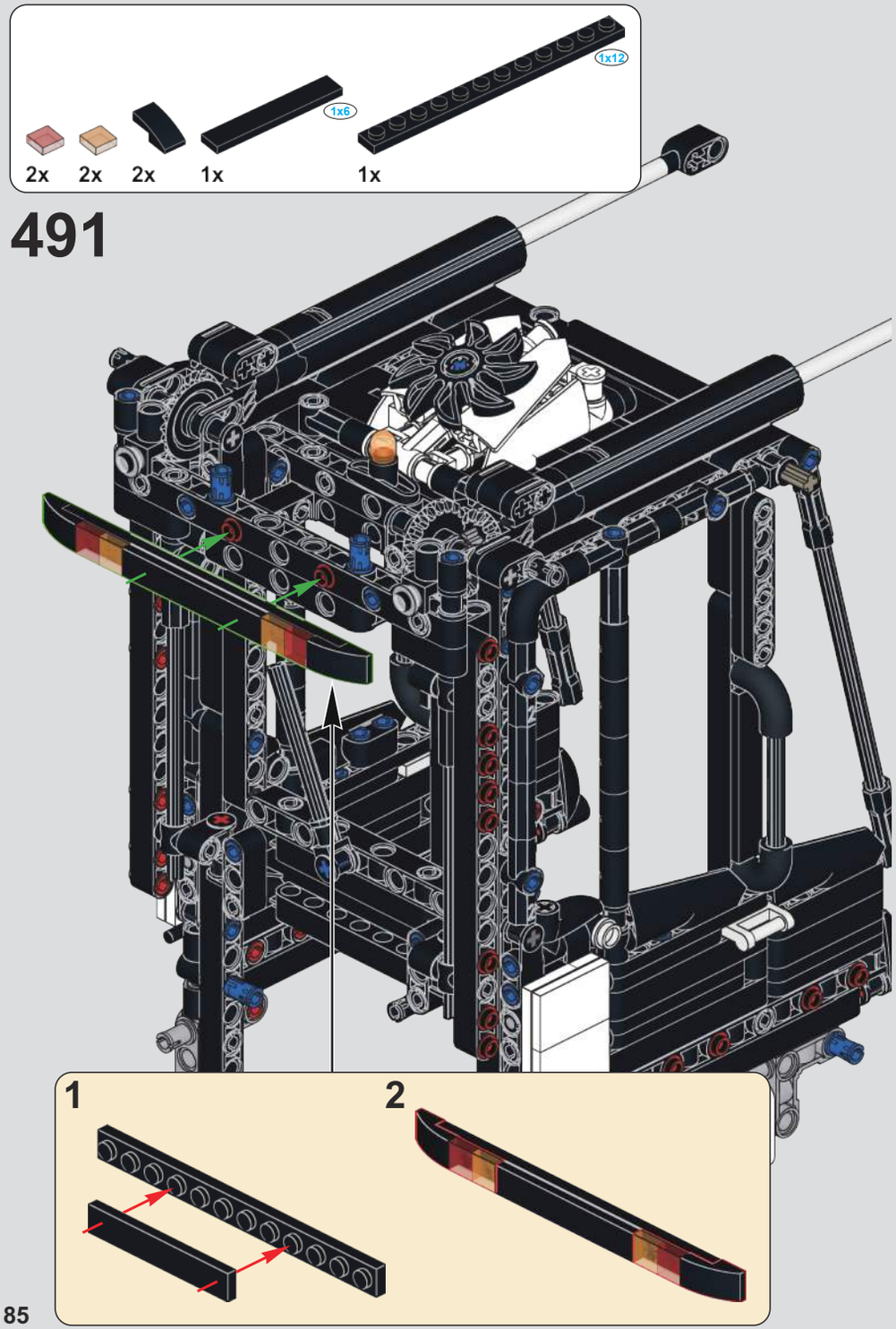
2x
2x
2x
1x
1x6
1x
1x12
491
1
2

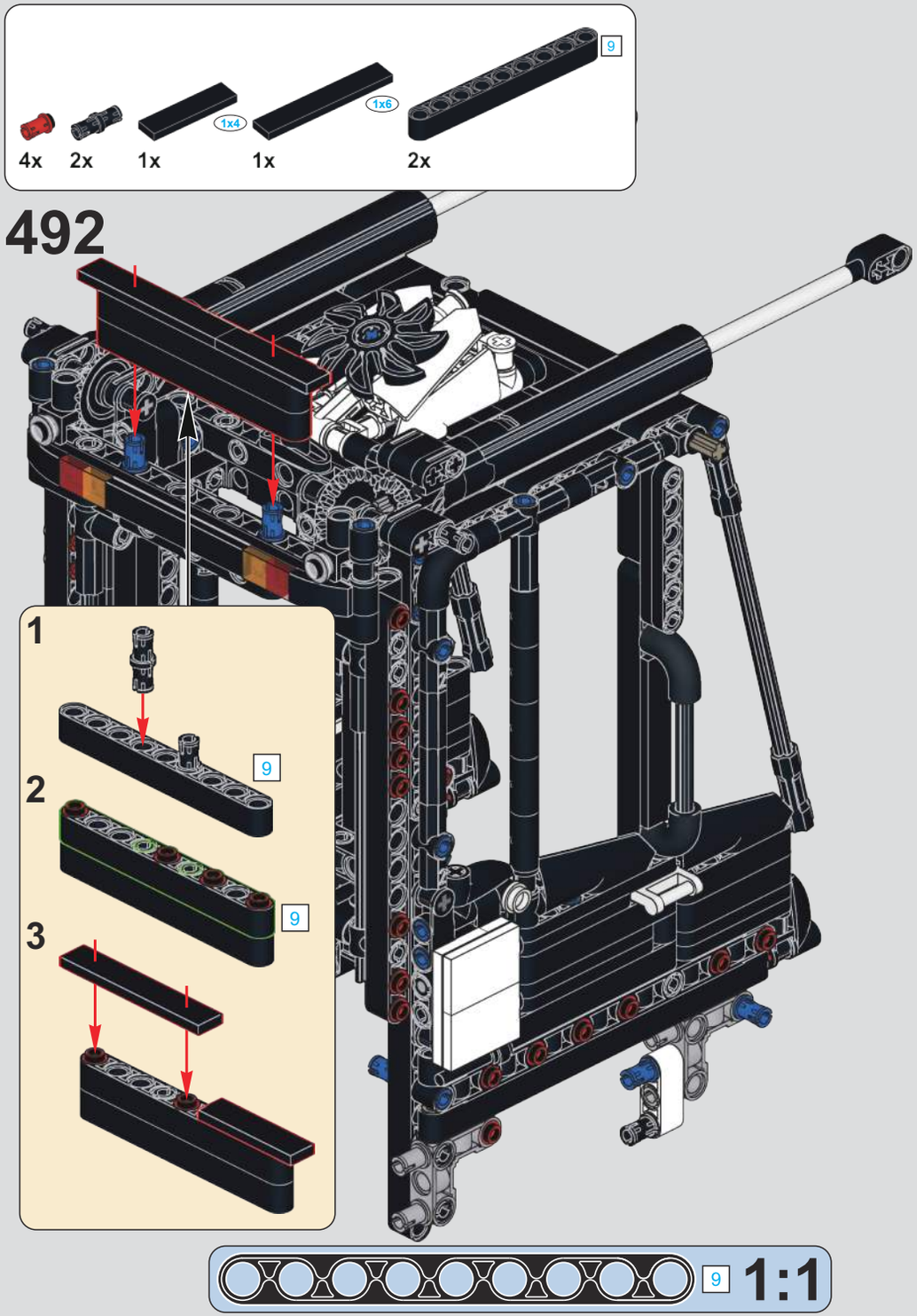
4x
2x
1x
1x4
1x
1x6
2x
9
492
1
2
3
9
9
9
1:1

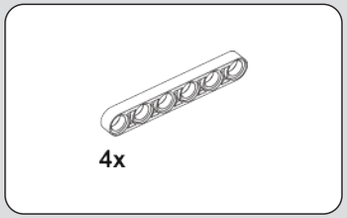

493

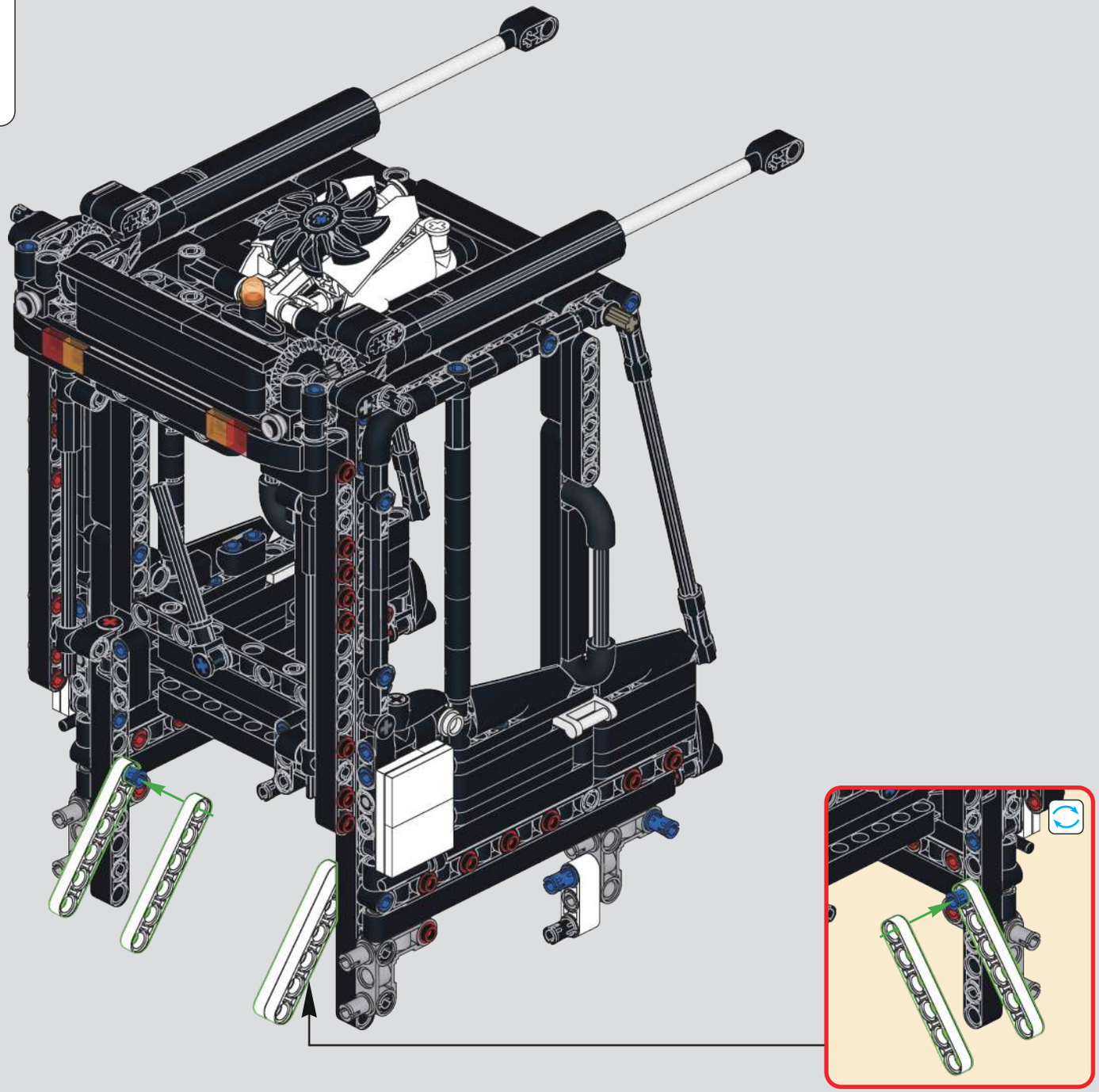

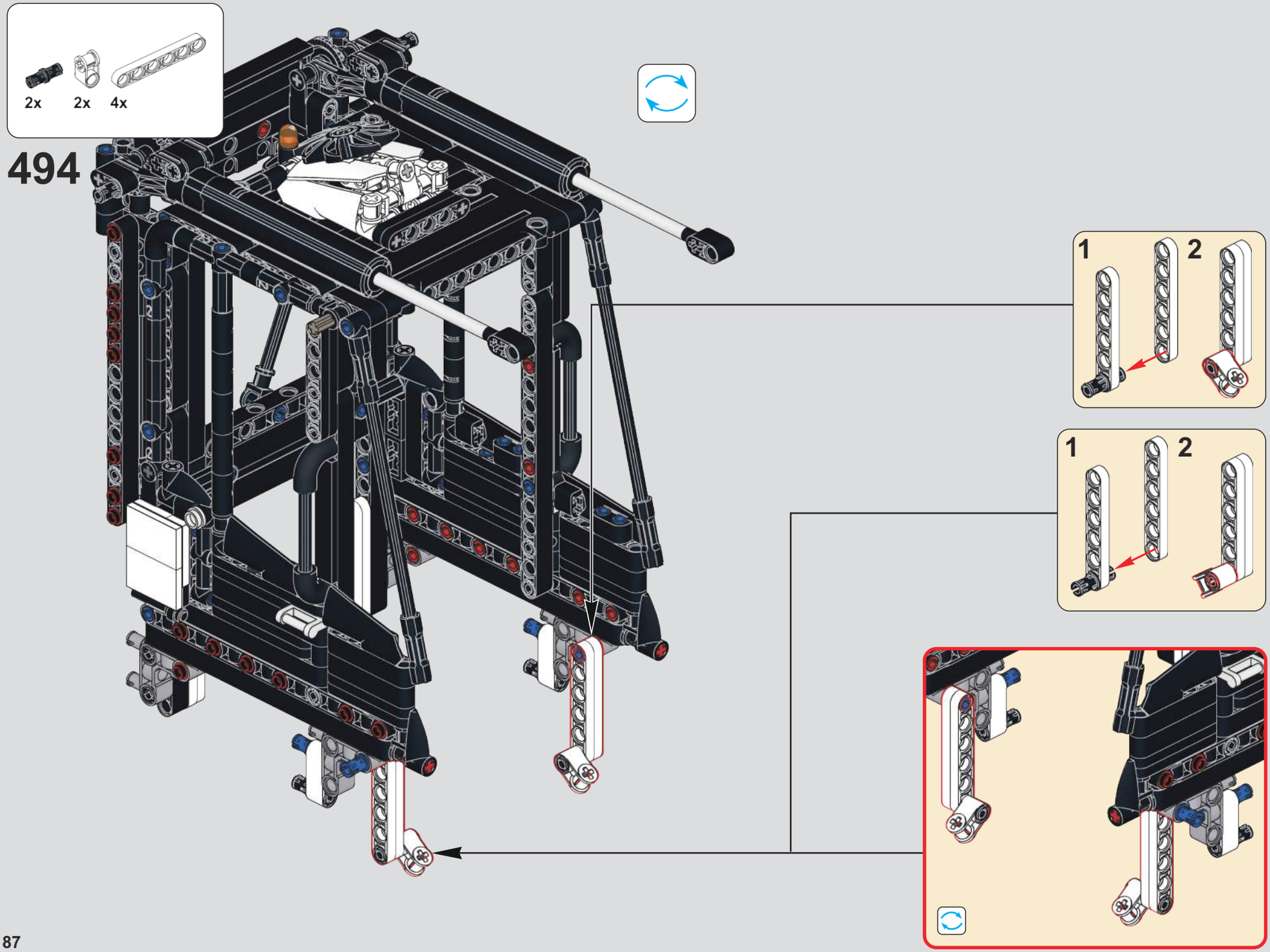
2x
2x
4x
494
1
2
1
2

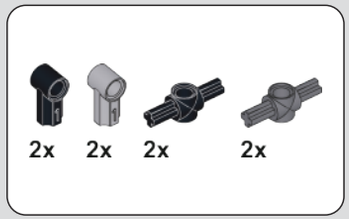

495

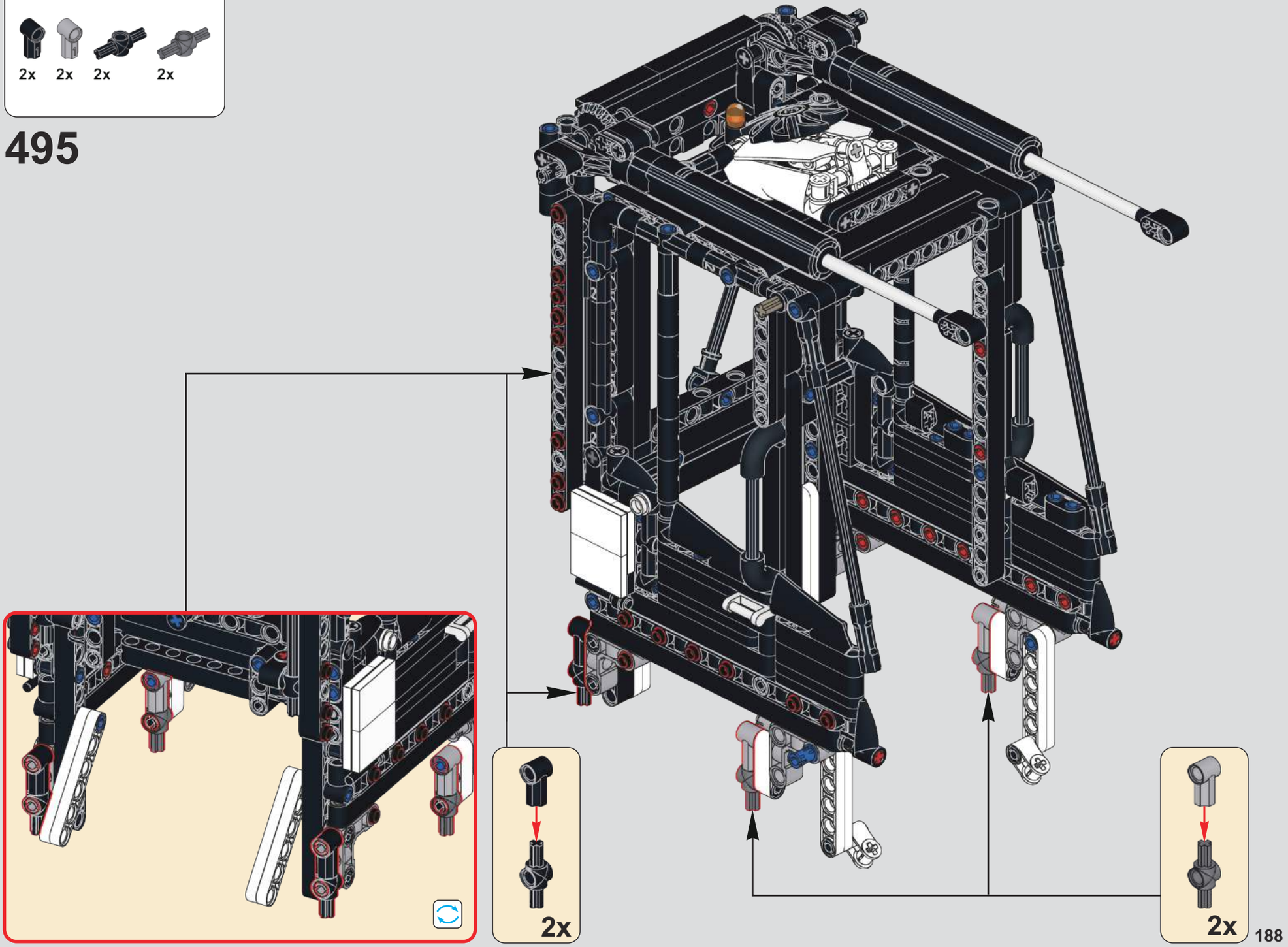

496

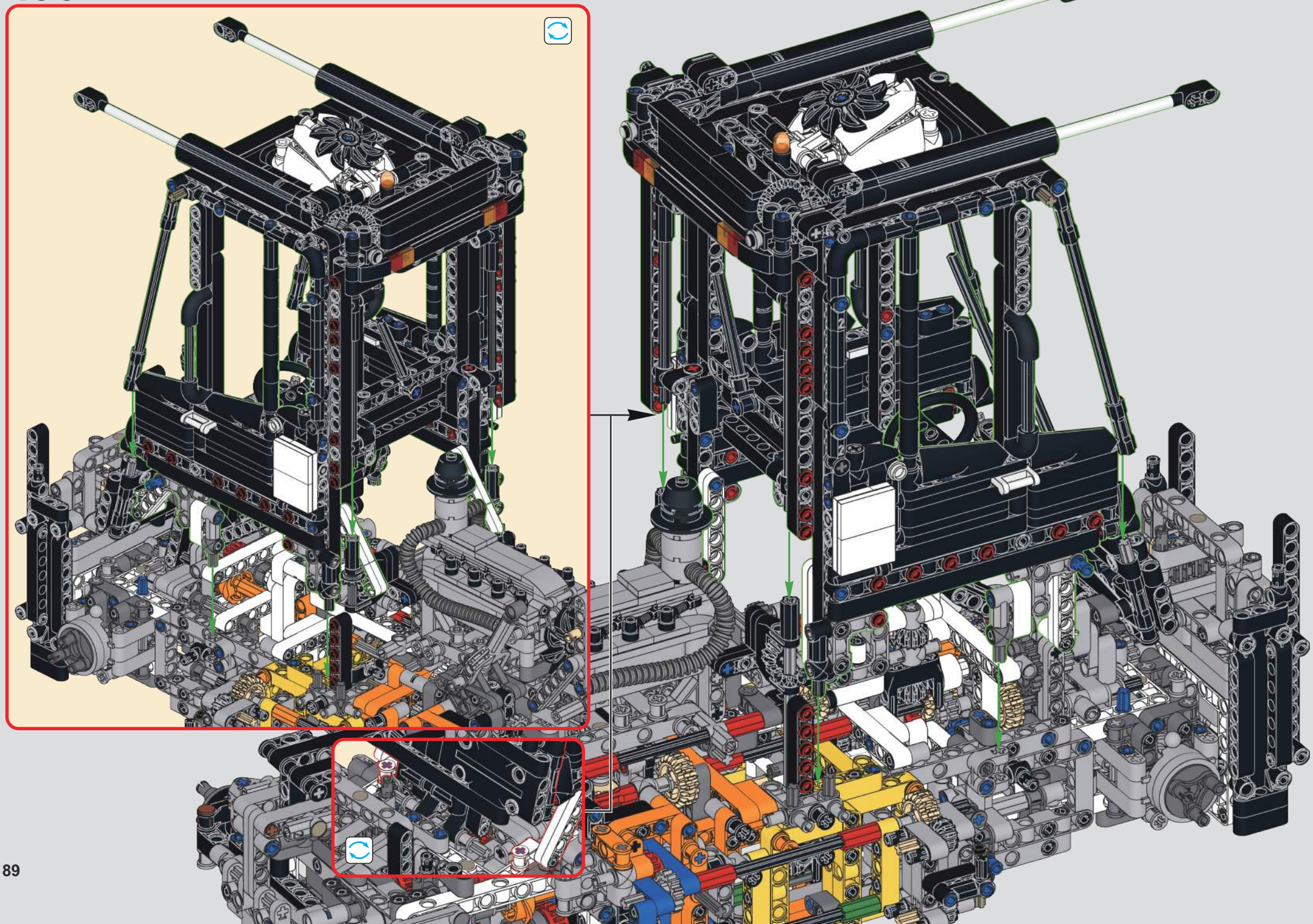

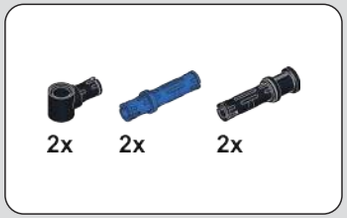

497

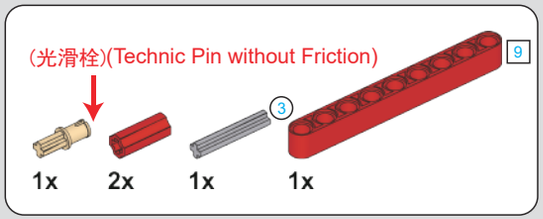

498

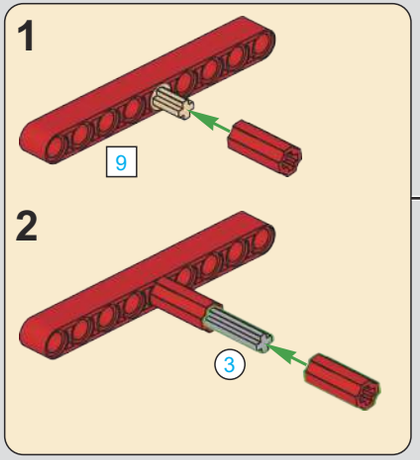

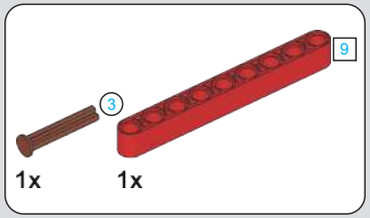

499

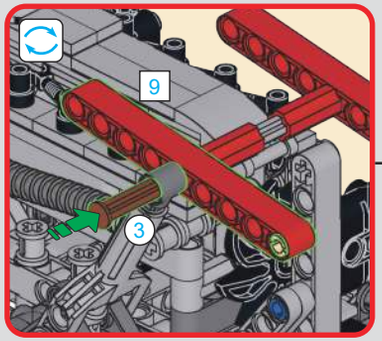

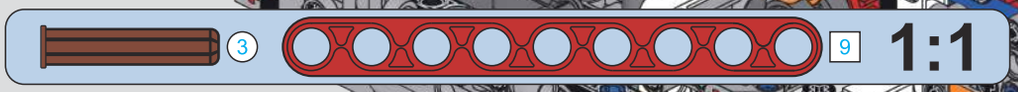

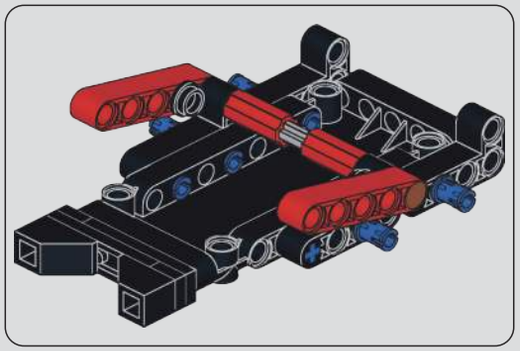

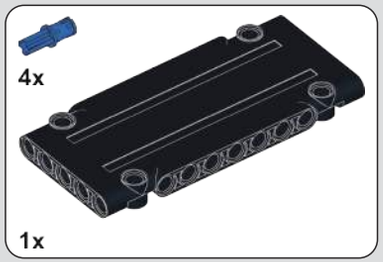

500

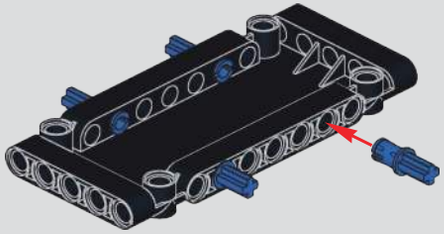

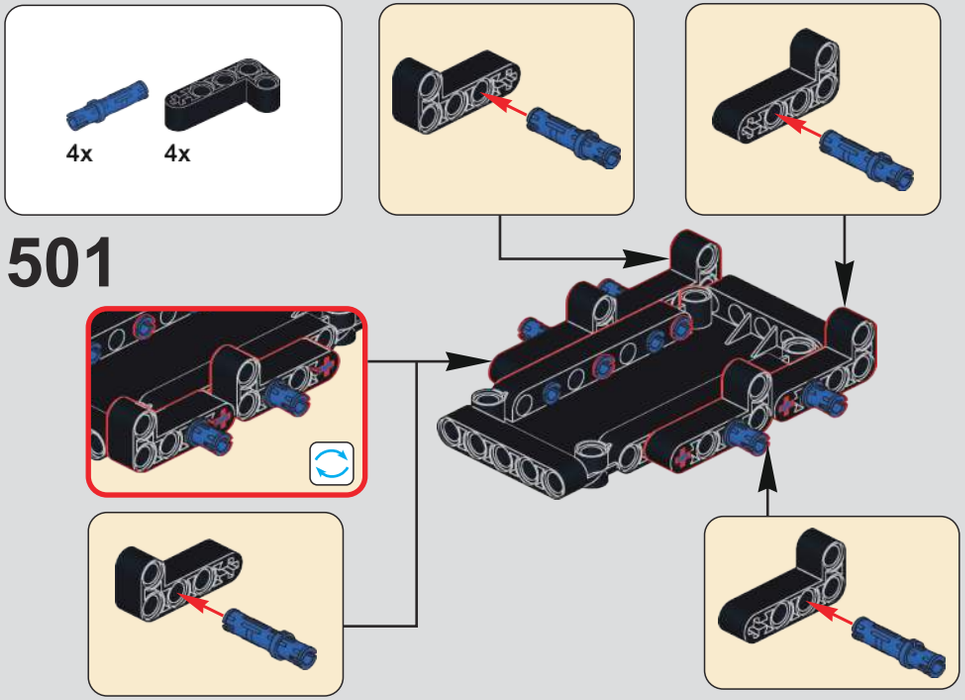

501

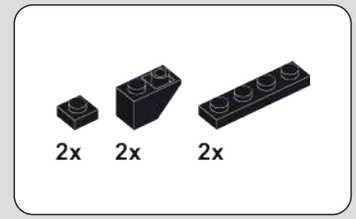

502

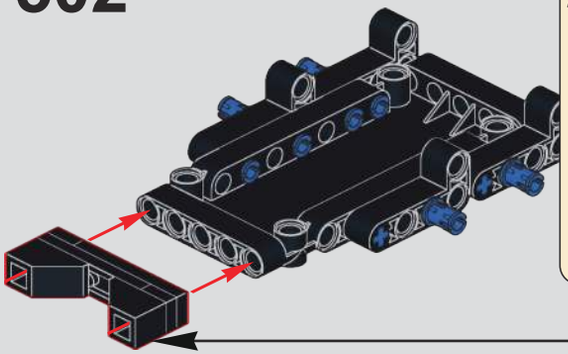

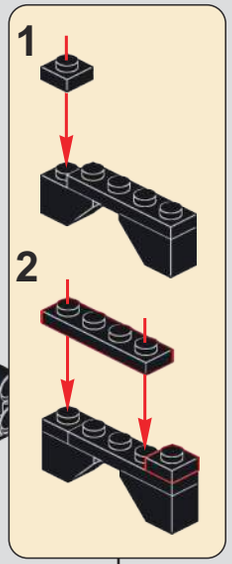

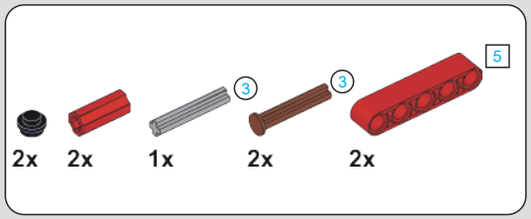

503

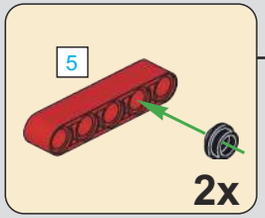

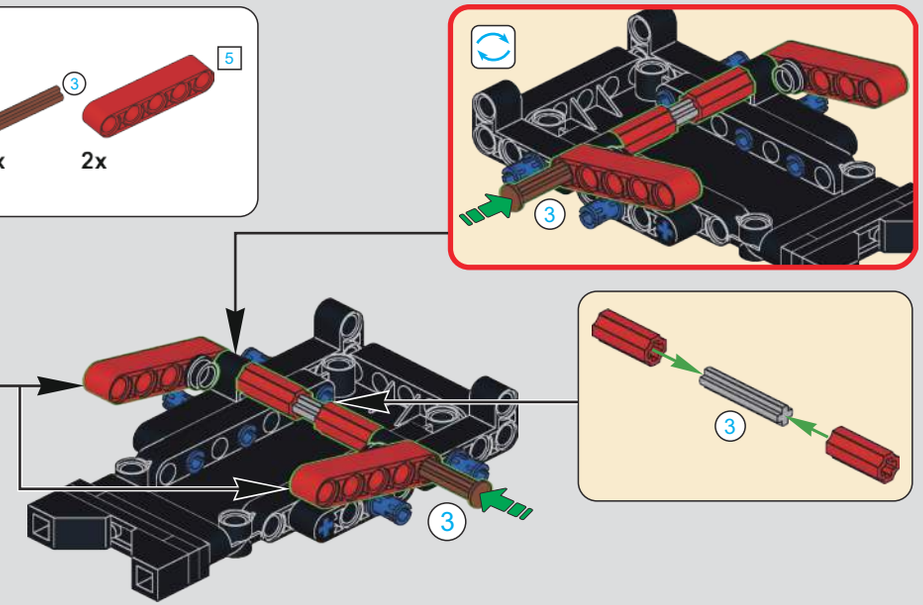

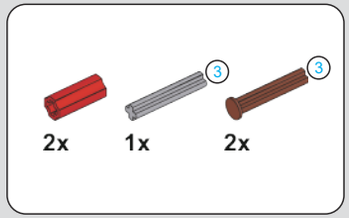

504

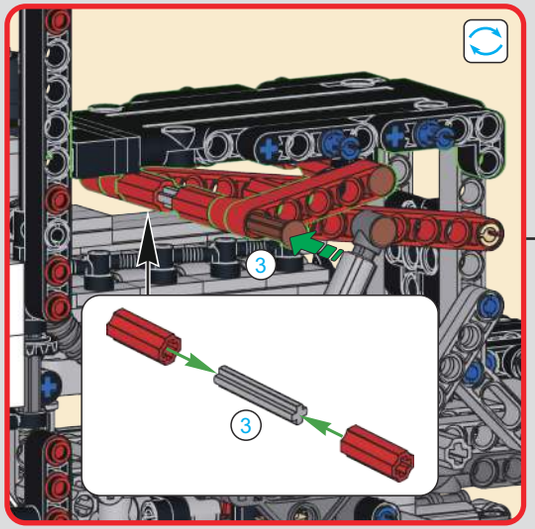

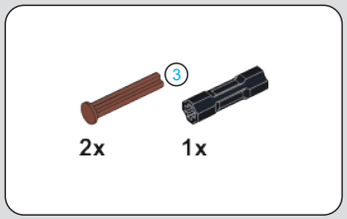

505

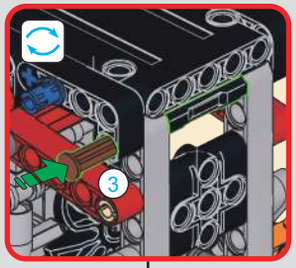

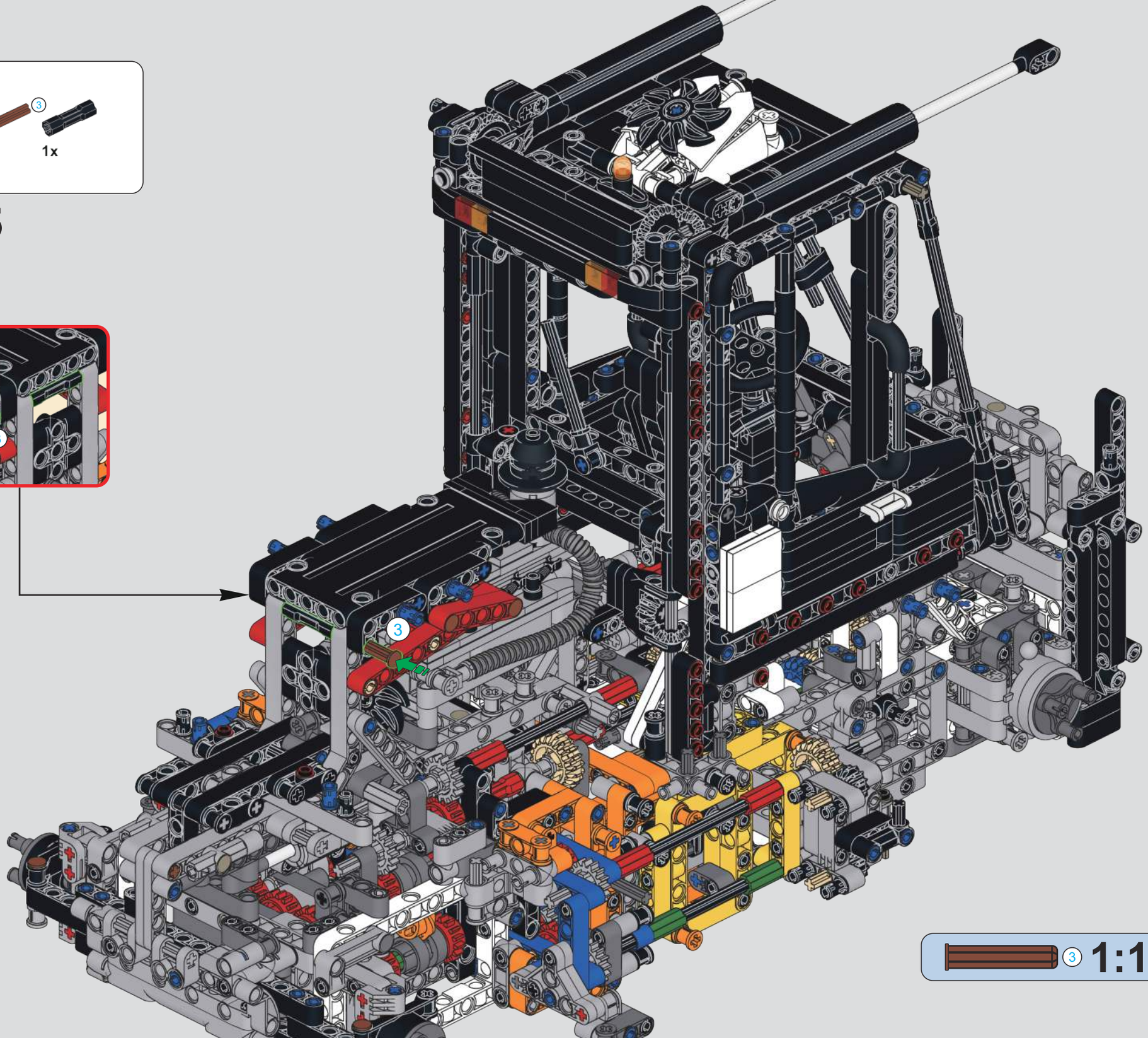

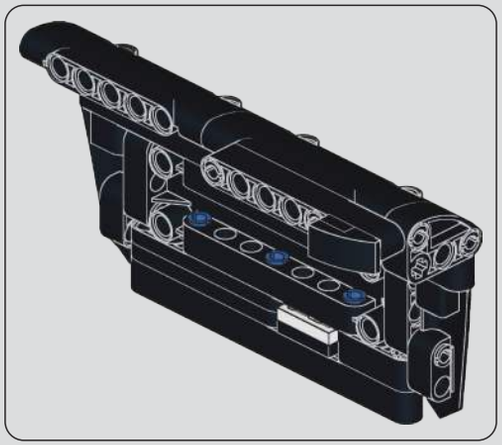

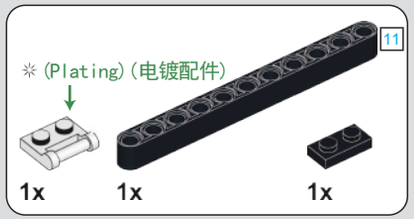

506

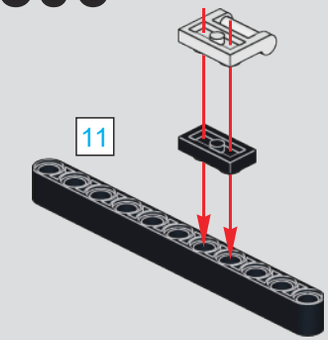

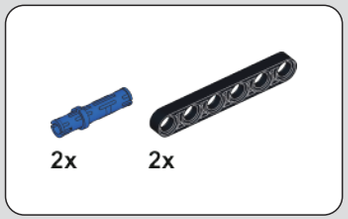

507

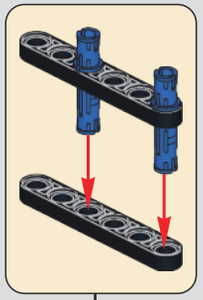

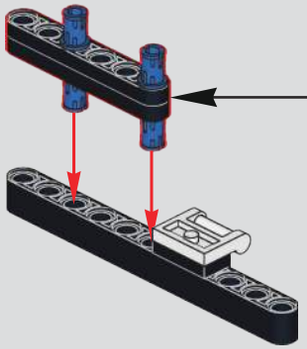

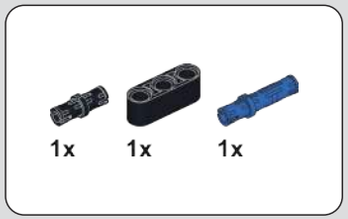

508

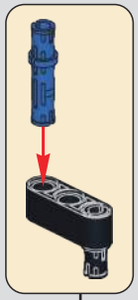

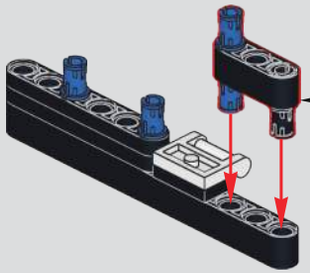

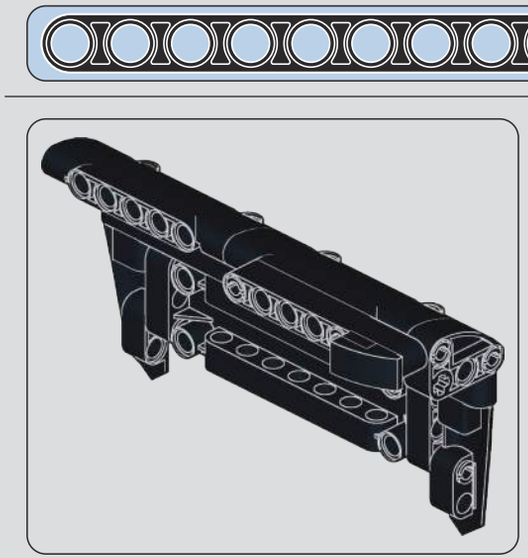

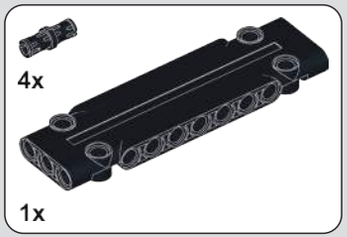

509

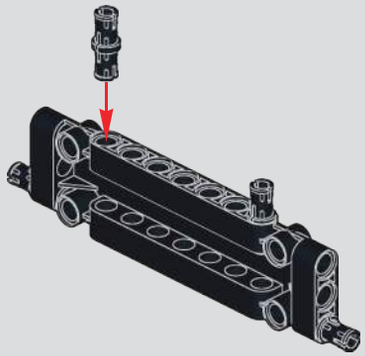

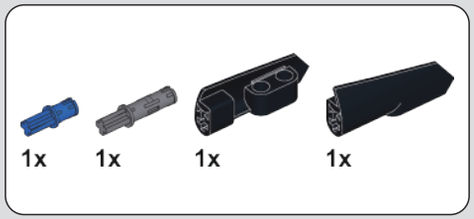

510

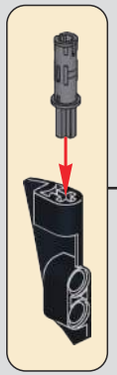

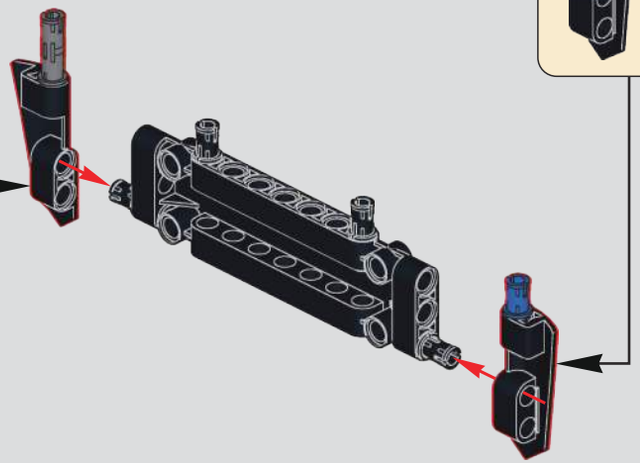

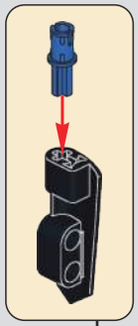

11 1:1

511

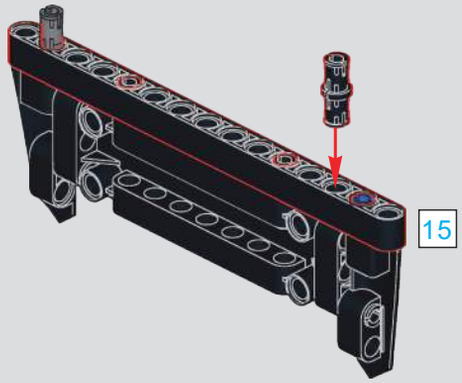

513

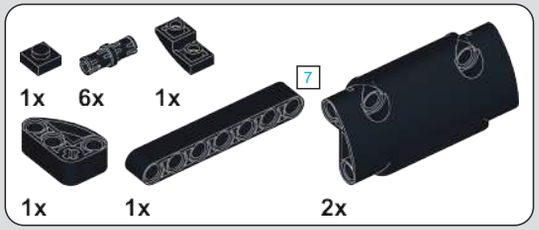

512

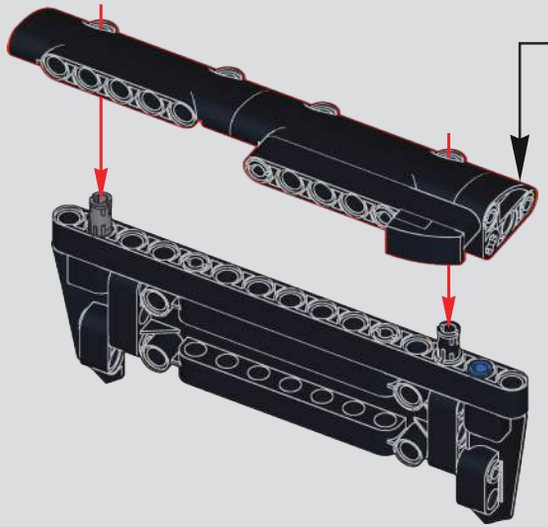

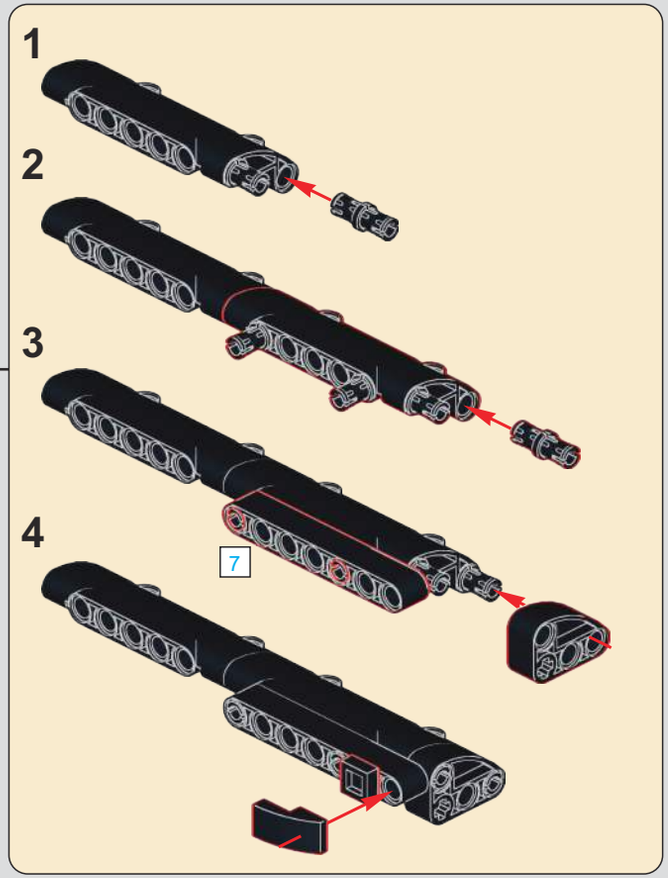

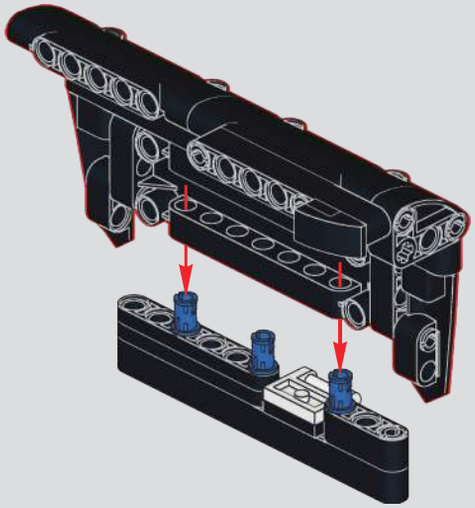

514

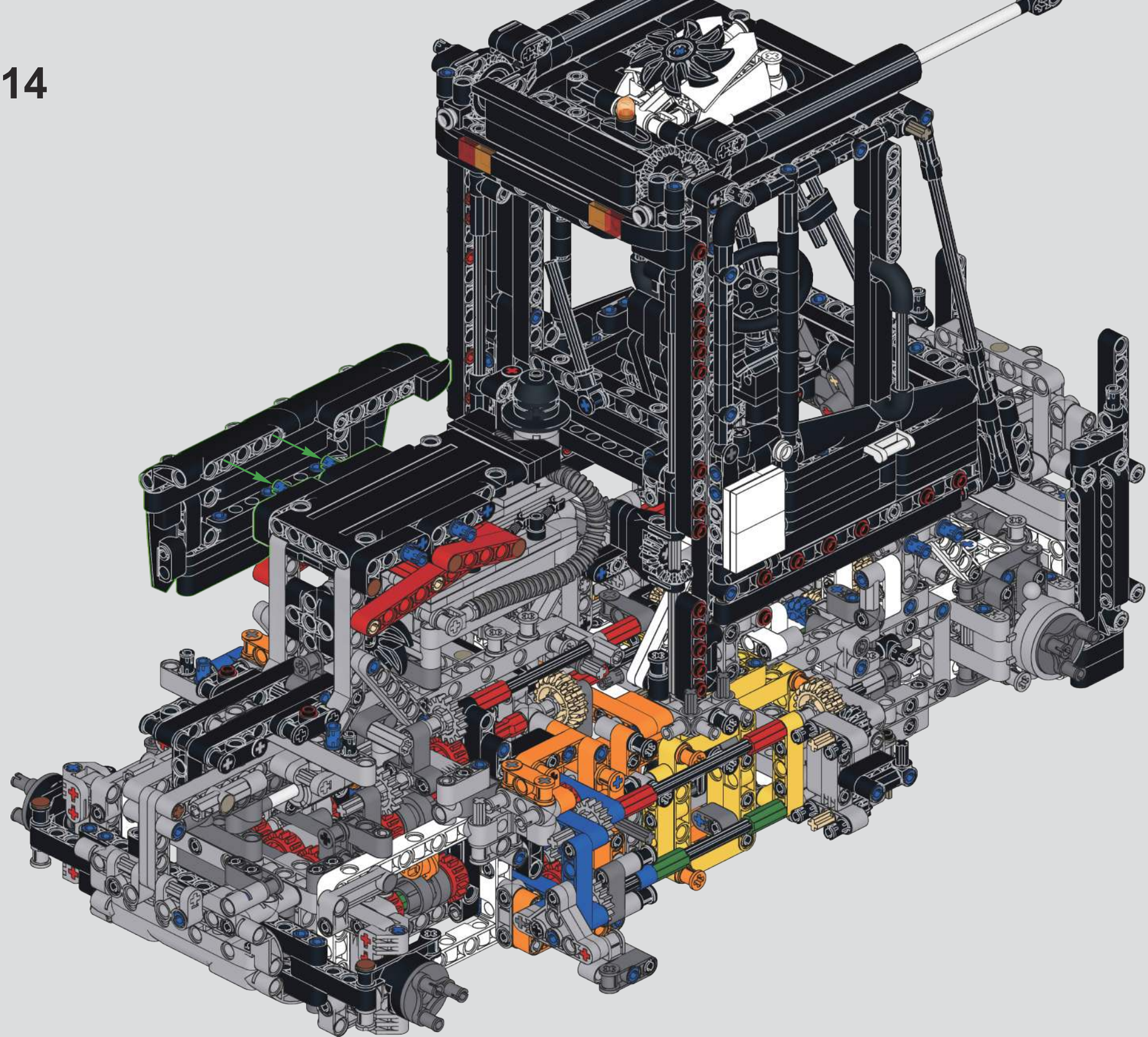

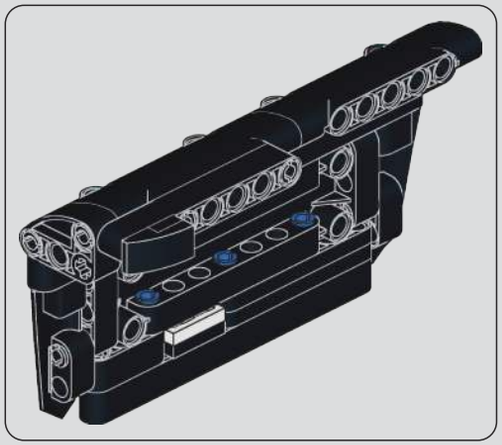

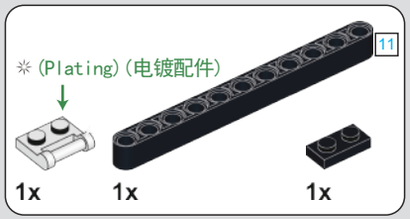

515

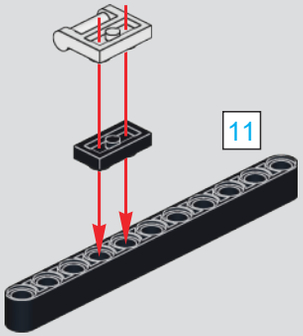

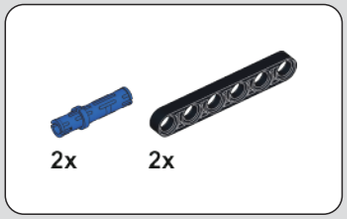

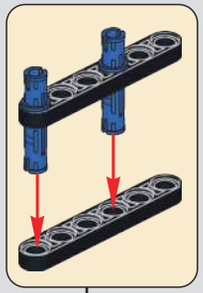

516

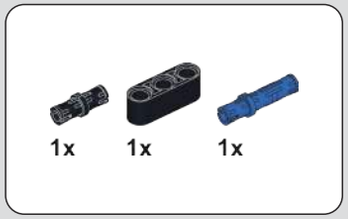

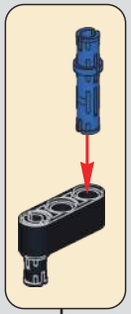

517

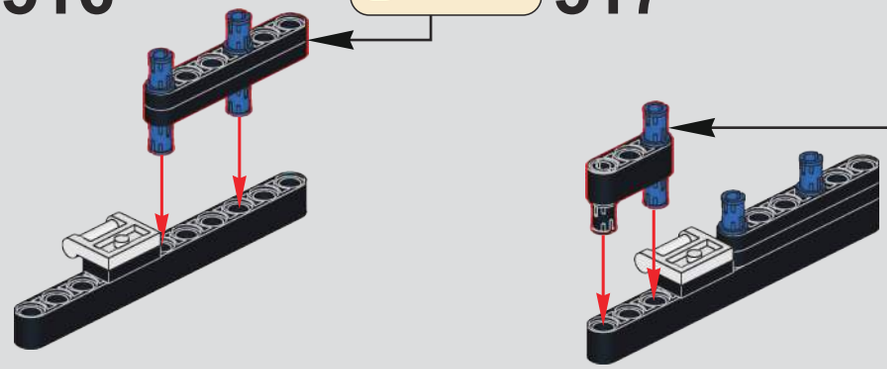

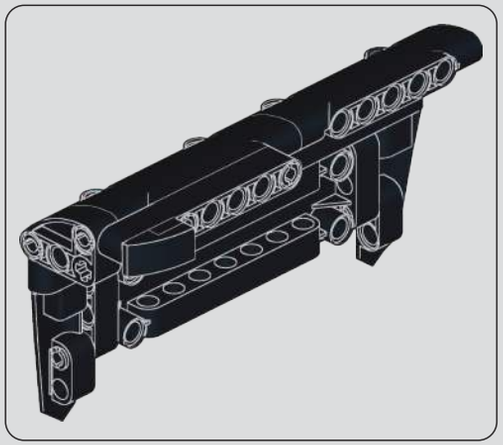

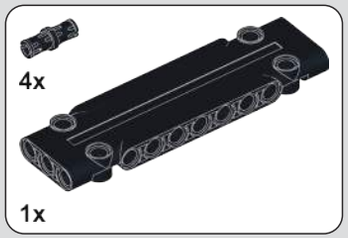

518

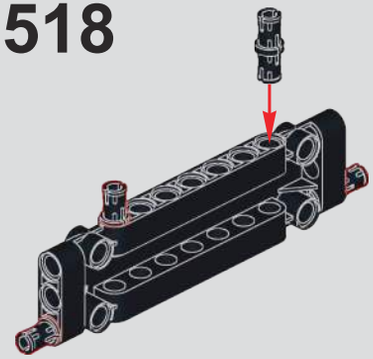

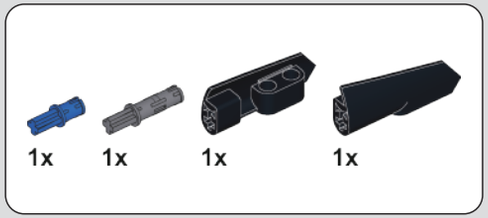

519

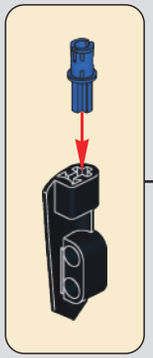

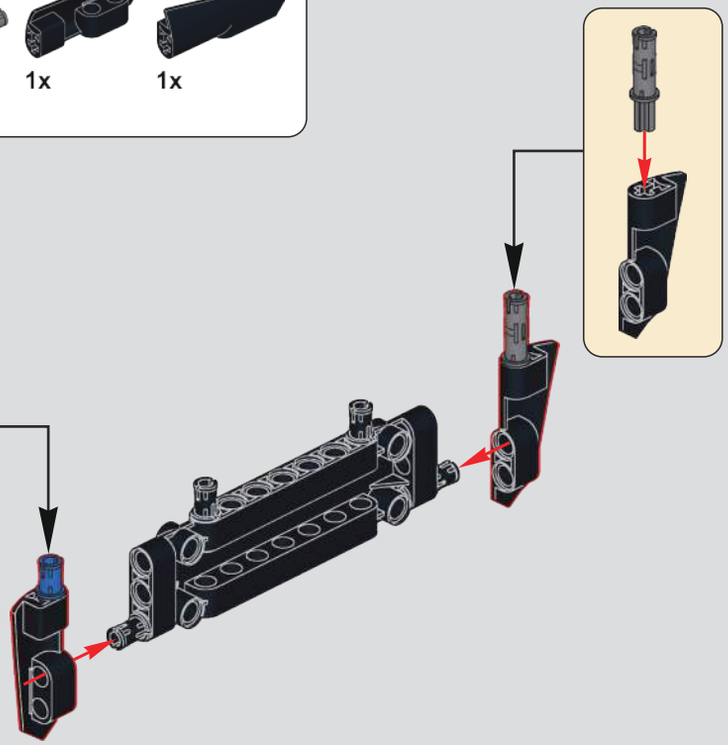

520

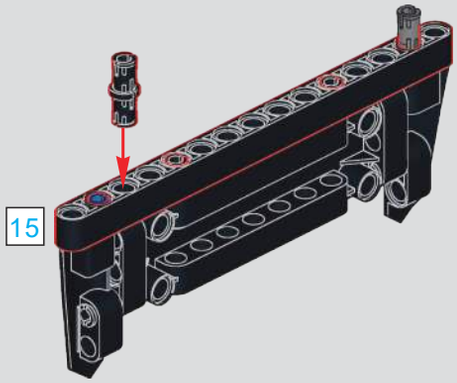

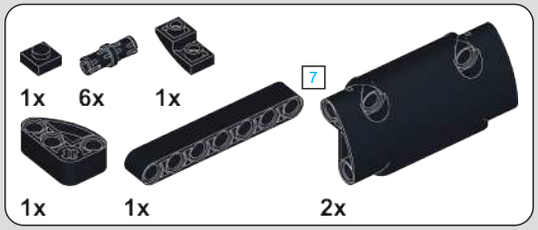

521

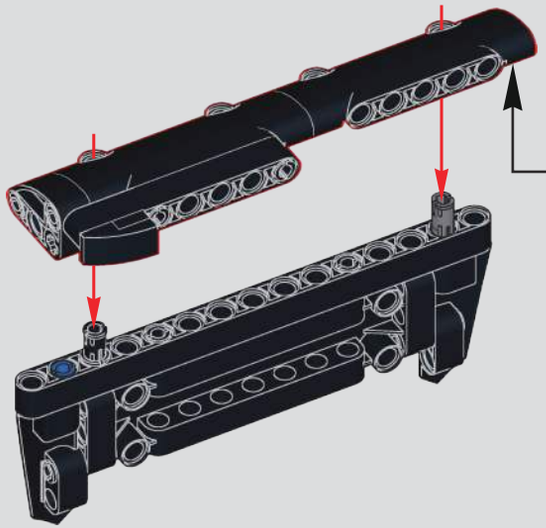

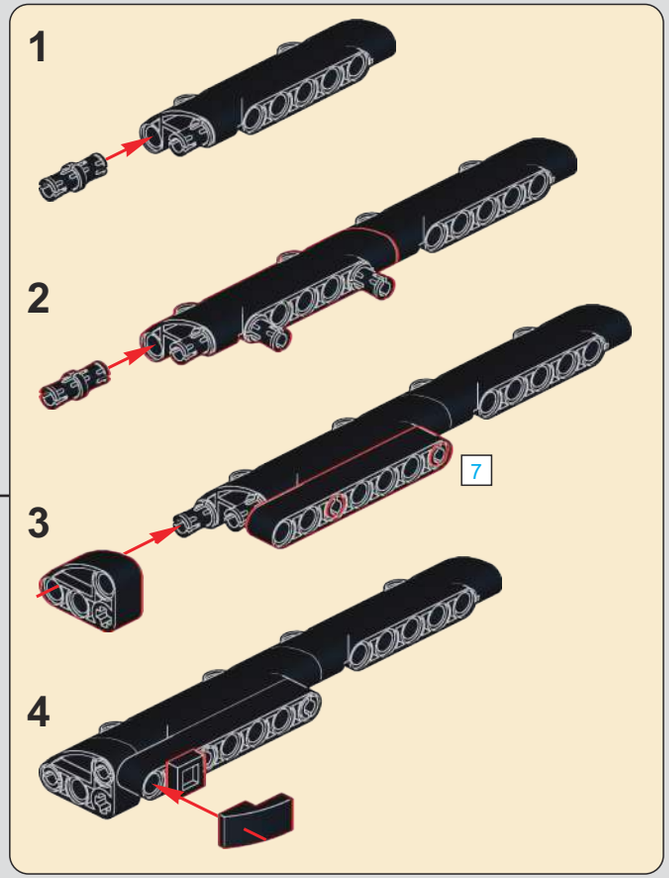

522

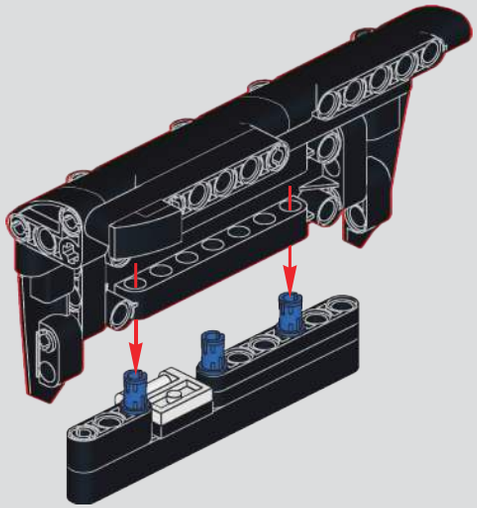

523

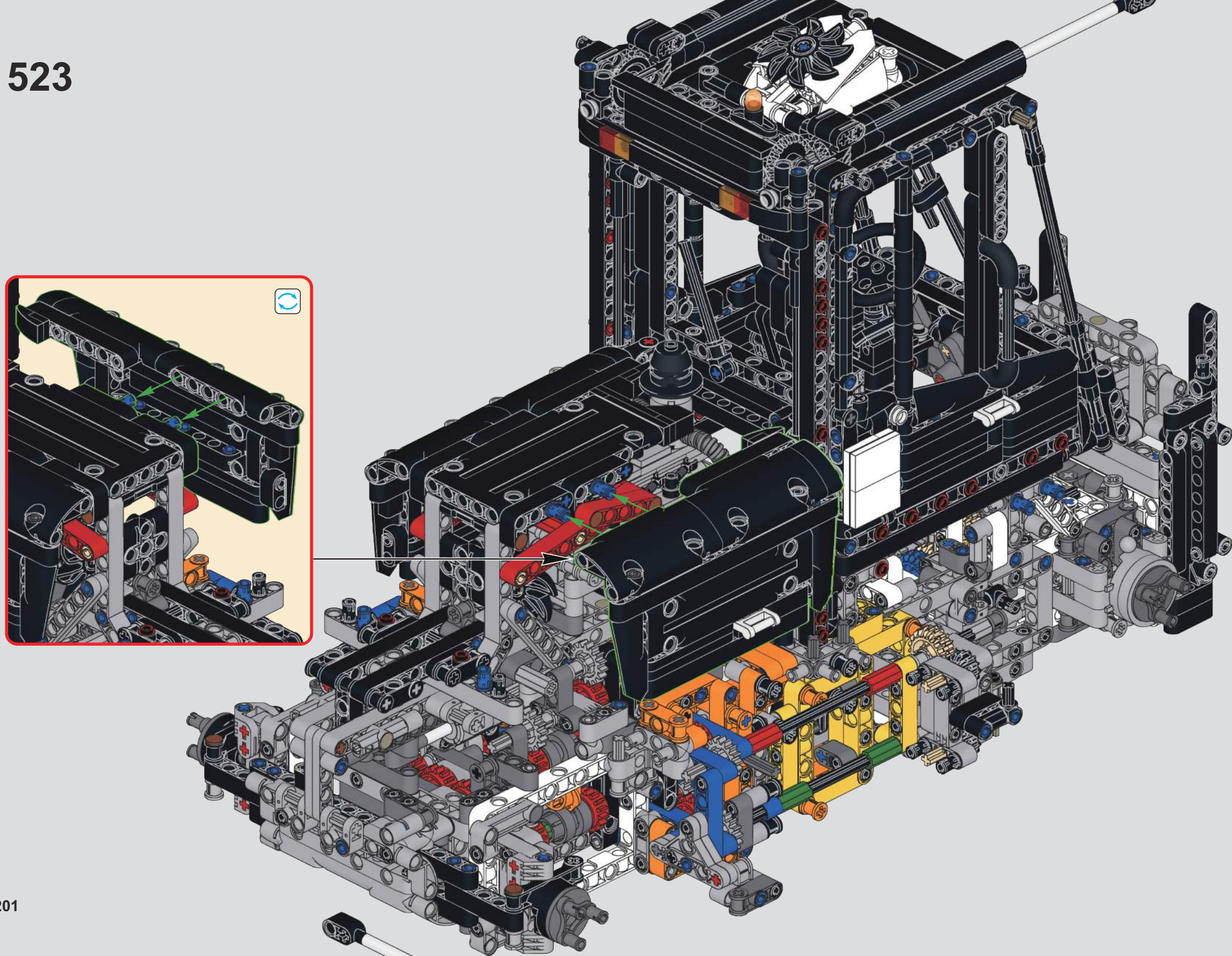

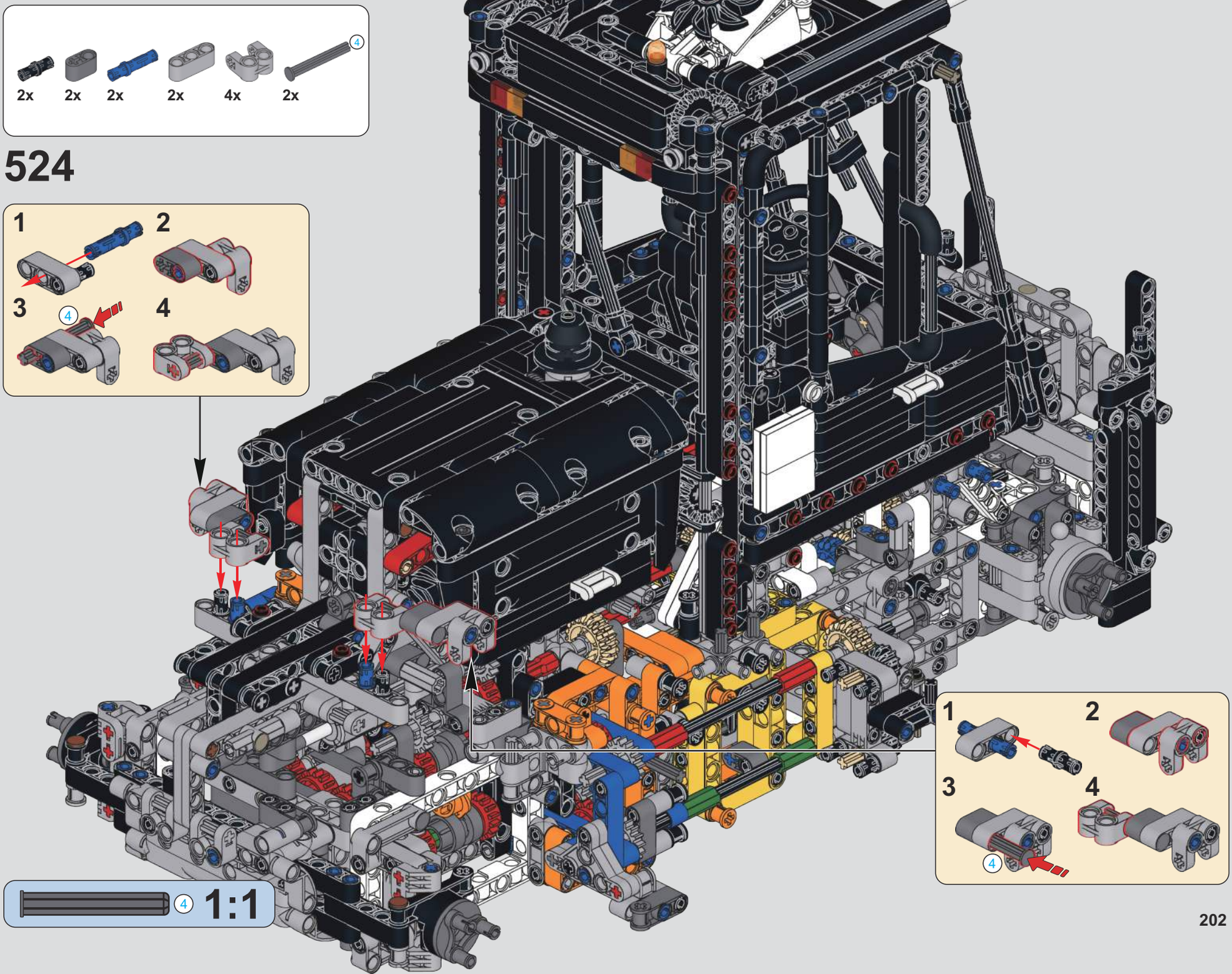
2x
2x
2x
2x
4x
2x
4
524
1
2
3
4
4
1
2
3
4
4
4
1:1

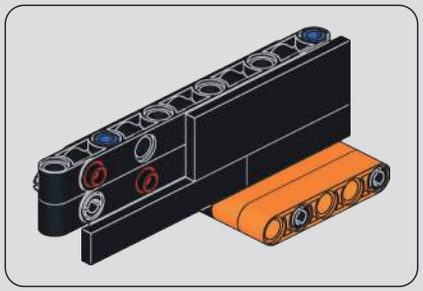

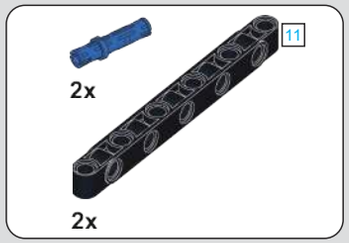

525

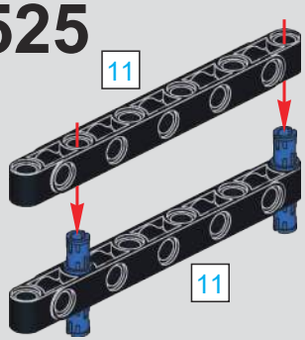

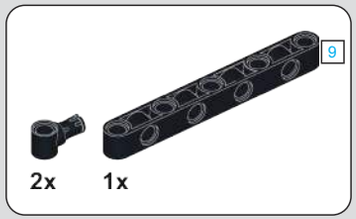

526

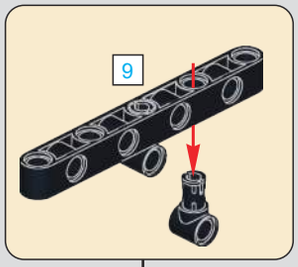

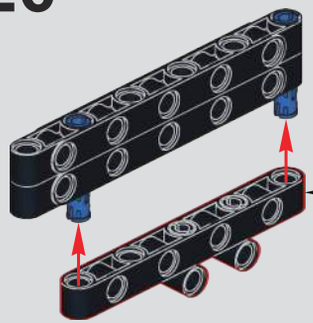

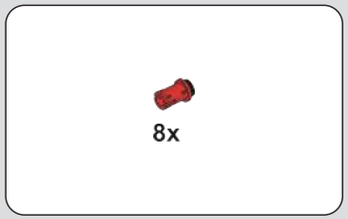

527

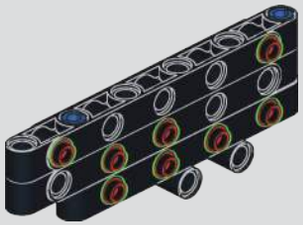

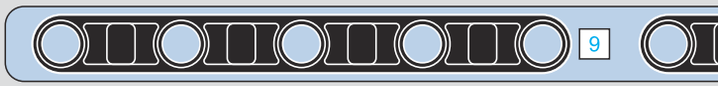

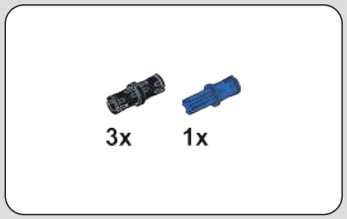

528

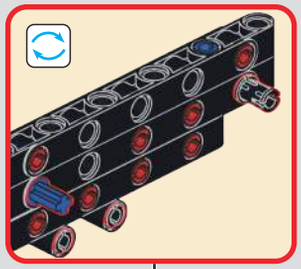

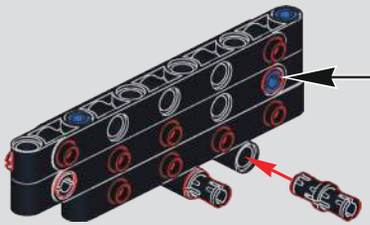

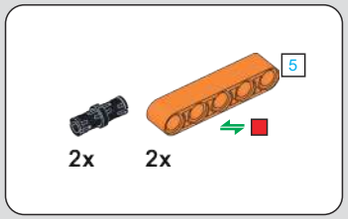

529

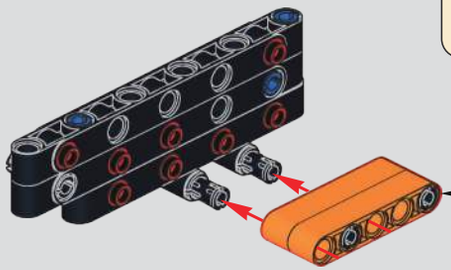

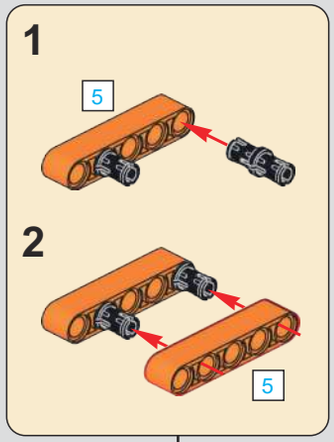

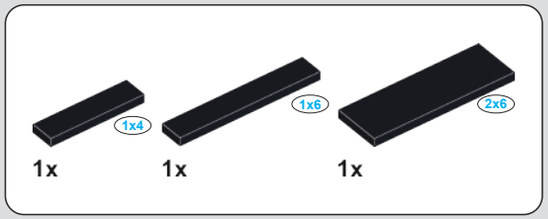

530

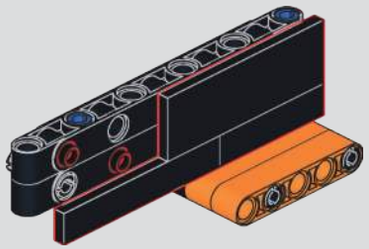

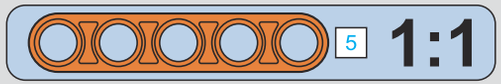

531

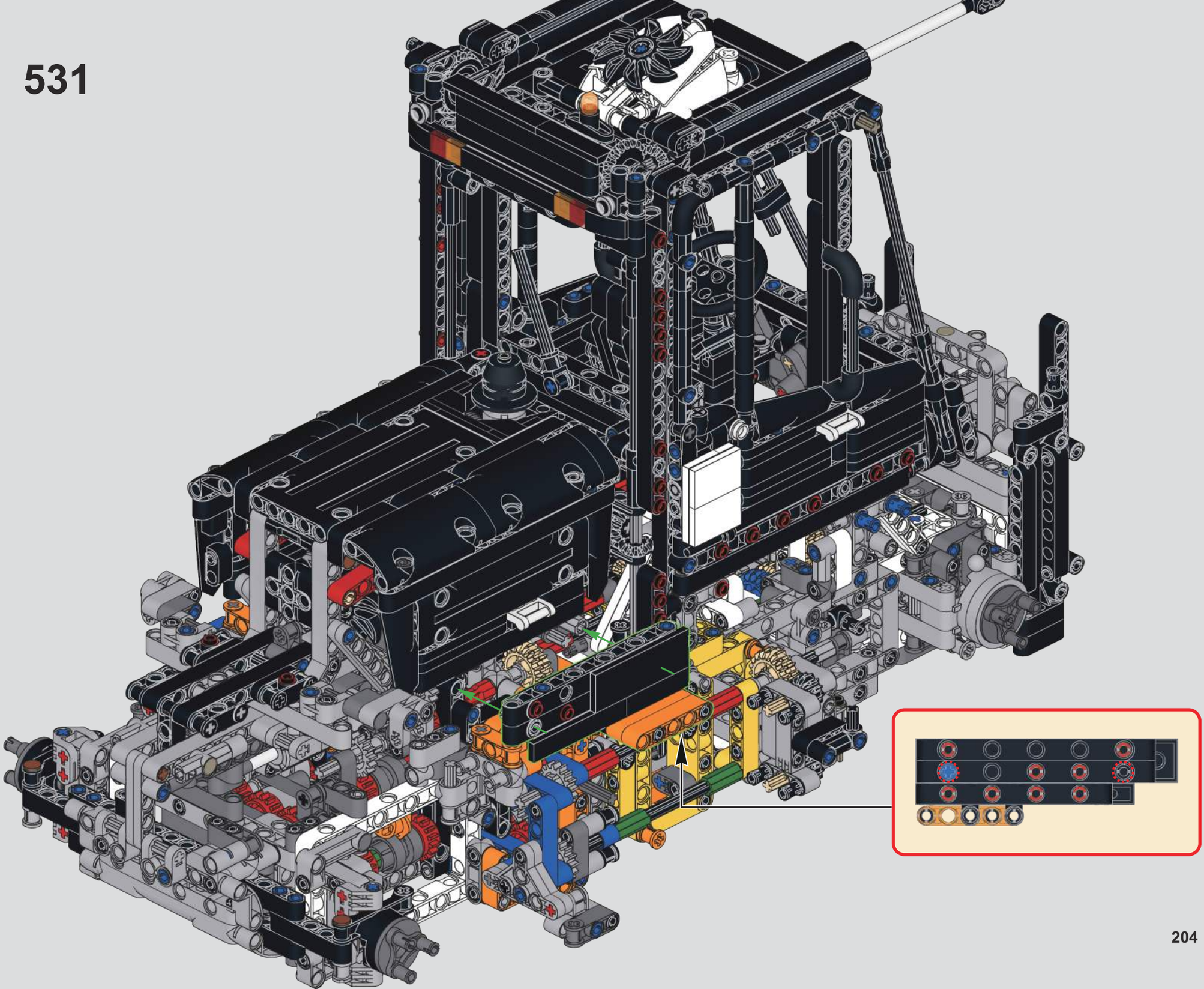

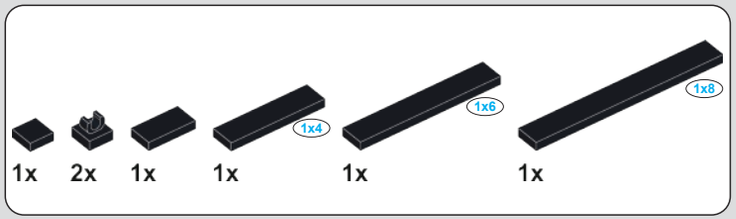

532

533

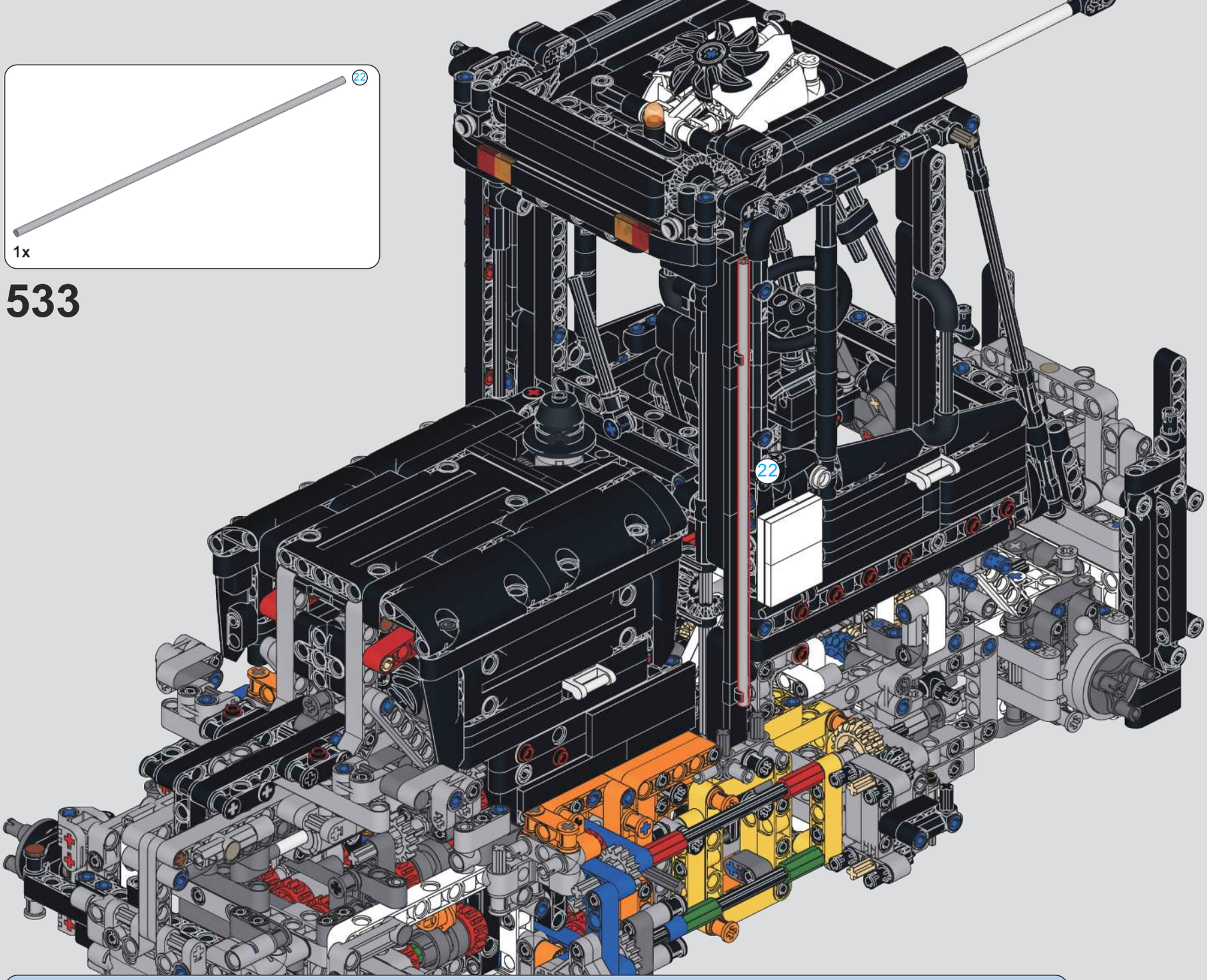

22 1:1

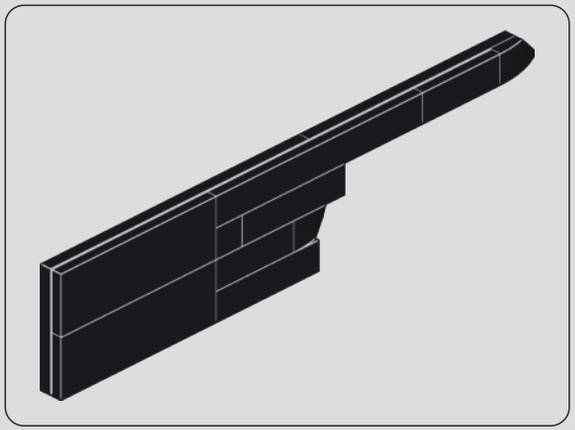

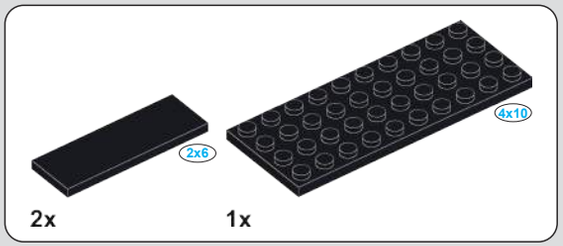

534

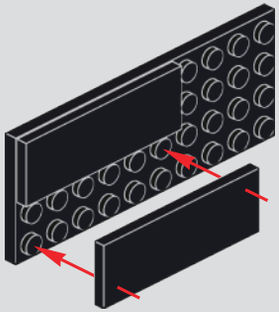

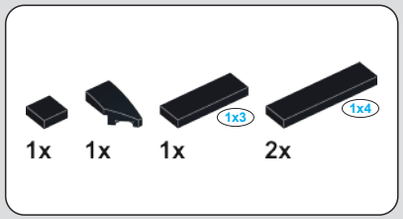

535

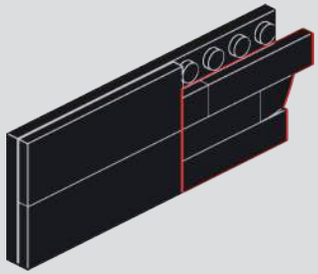

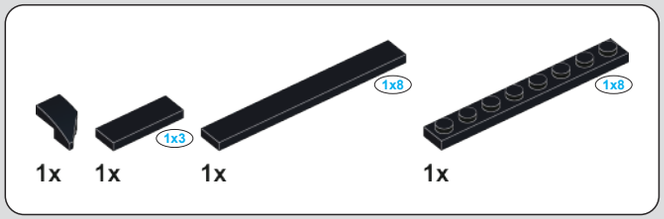

536

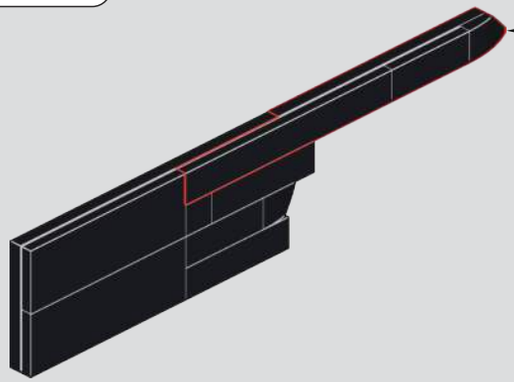

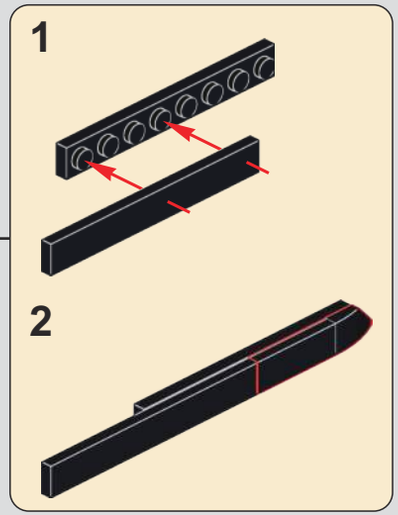

537

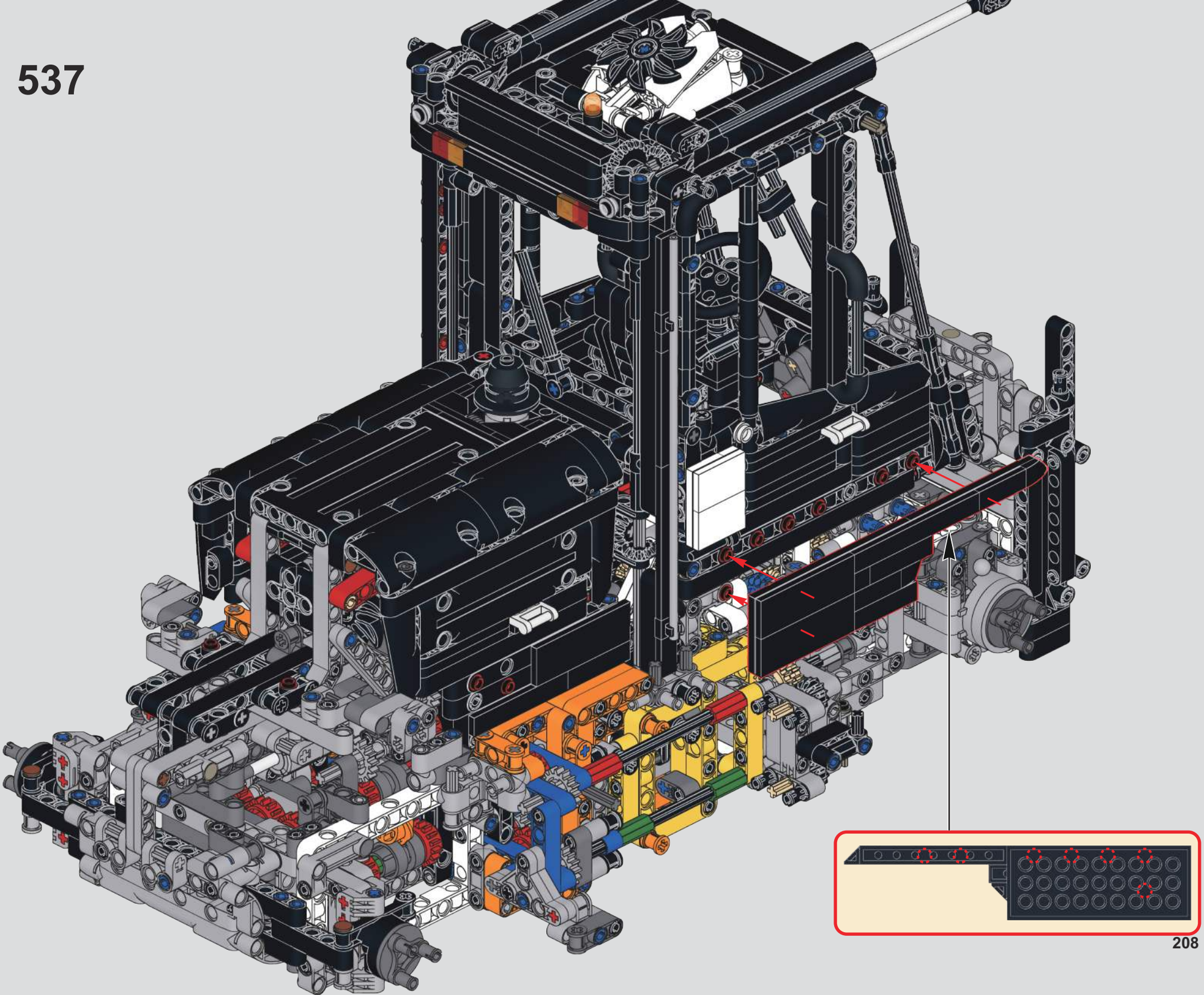

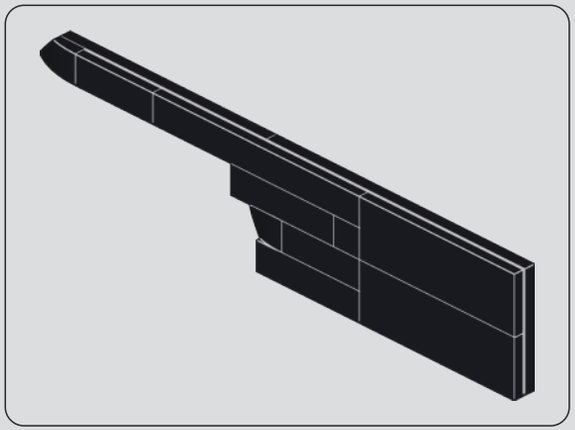

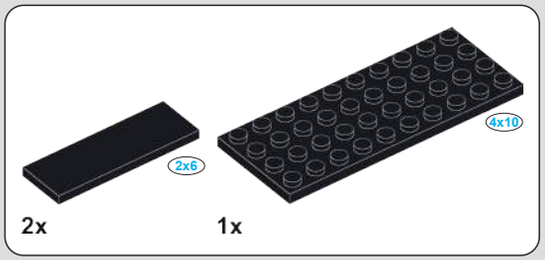

538

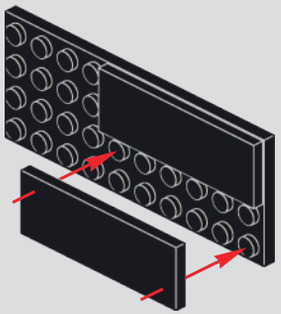

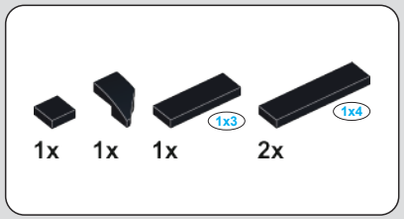

539

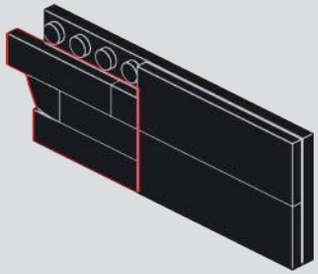

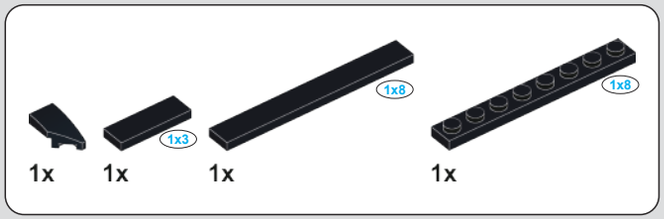

540

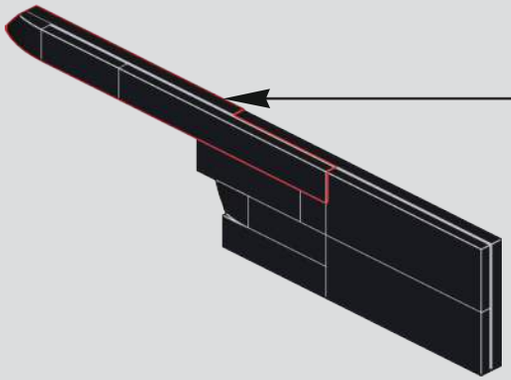

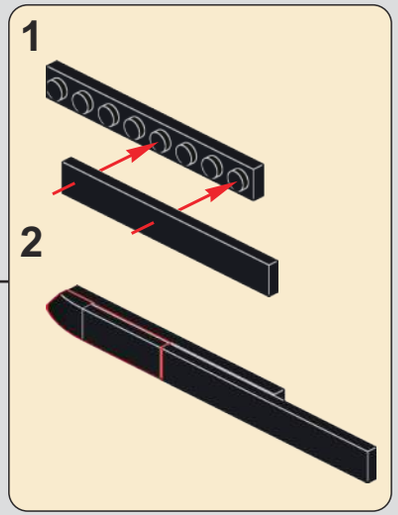

541

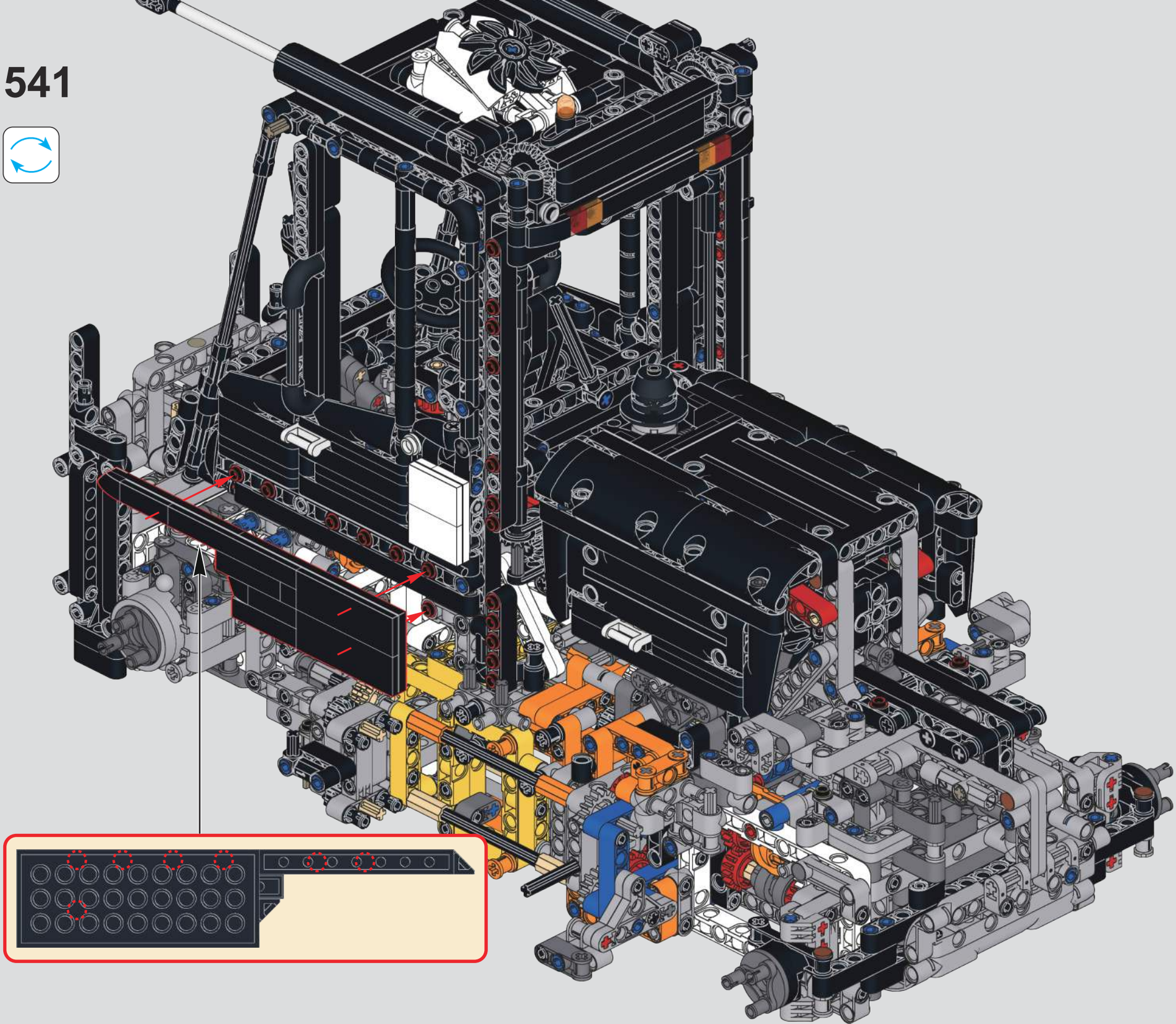

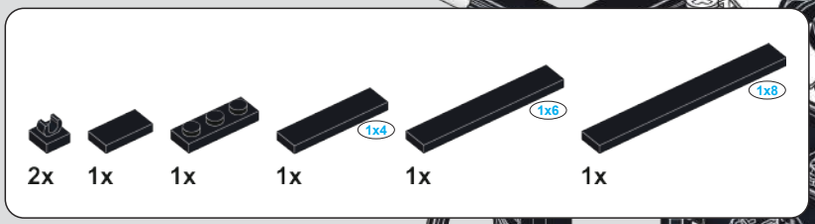

542

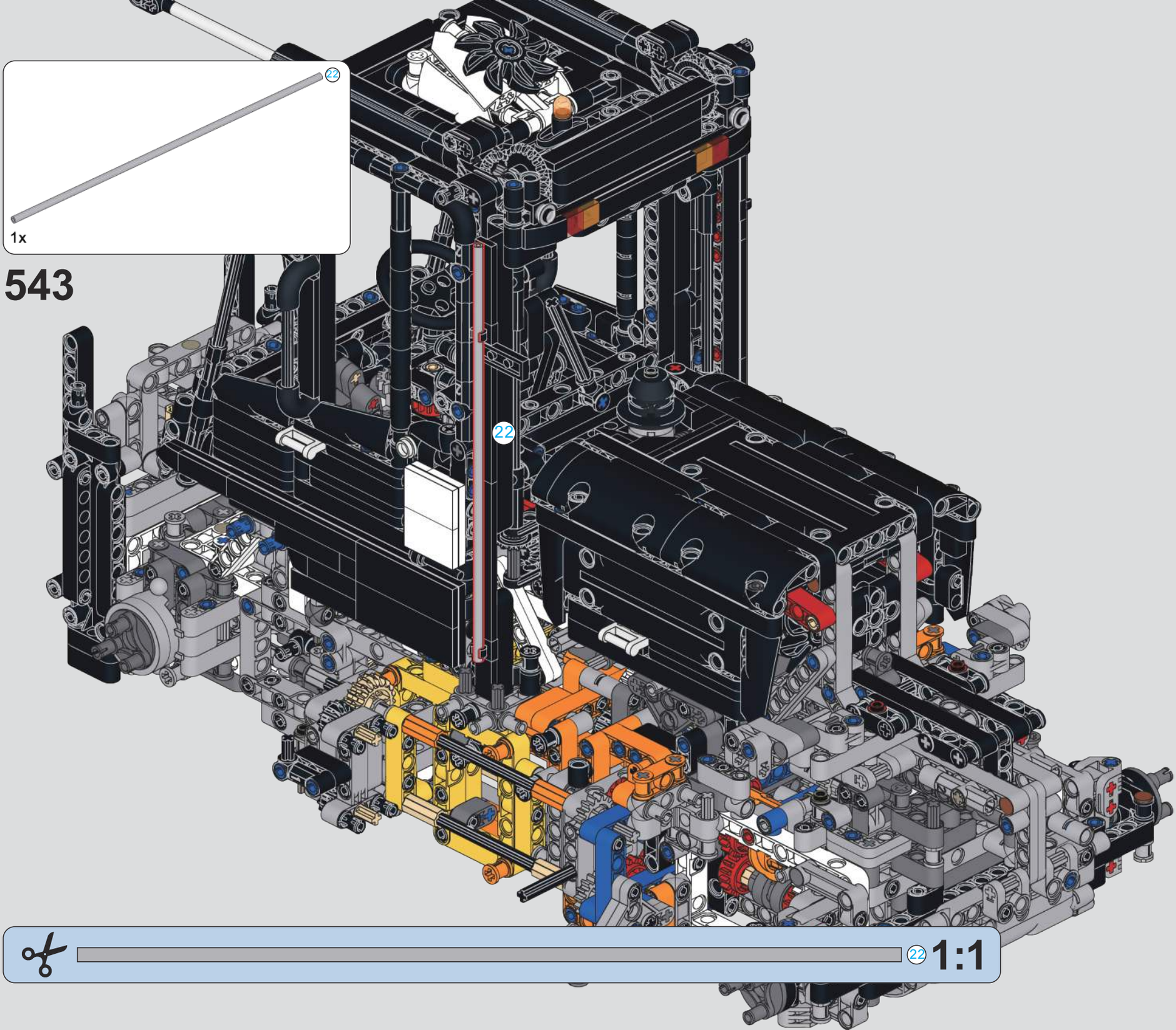
22
1x
543
22
22
1:1

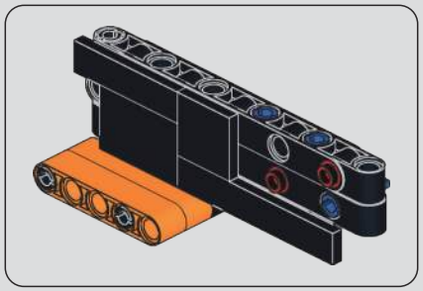

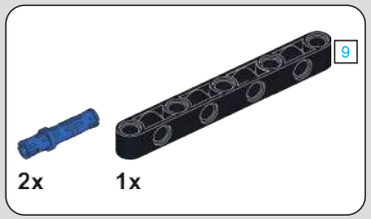

544

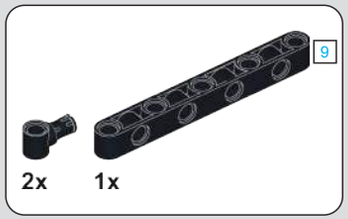

545

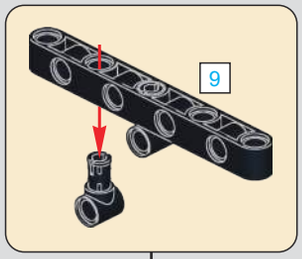

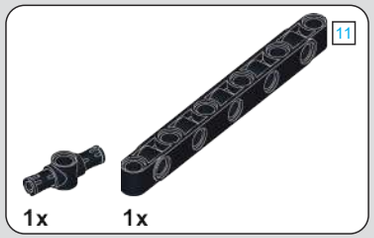

546

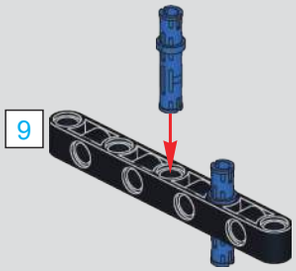

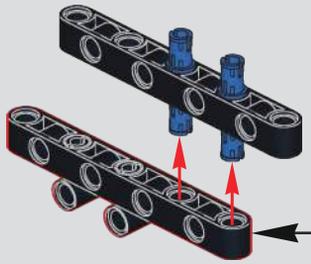

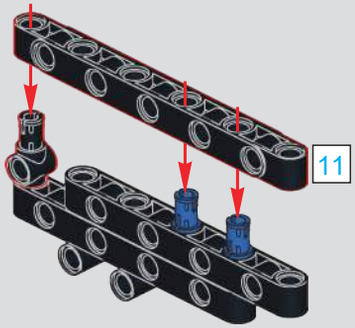

547

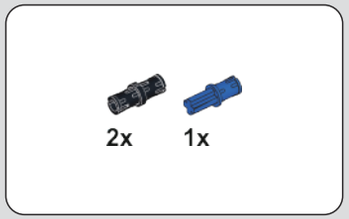

548

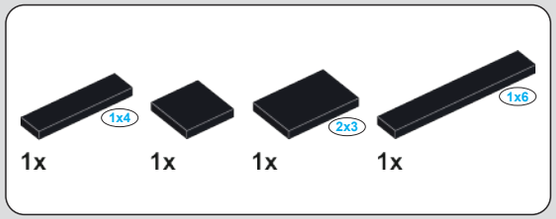

549

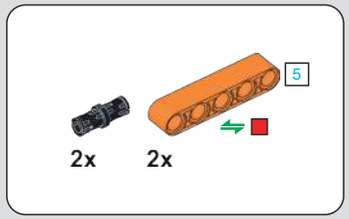

550

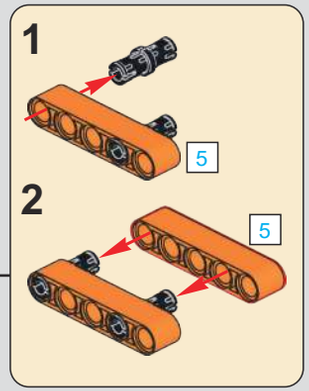

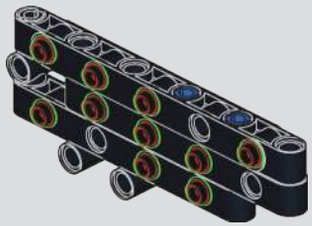

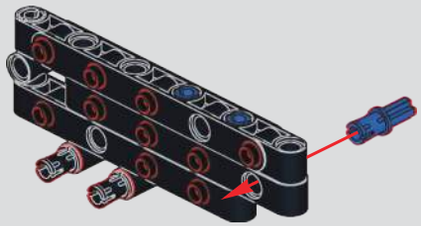

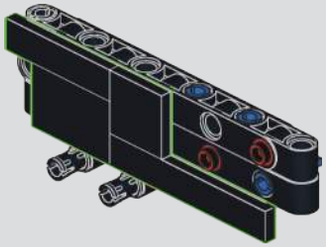

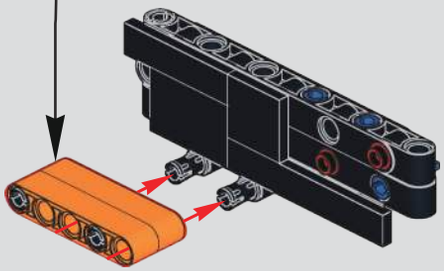

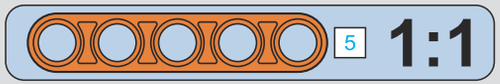

551

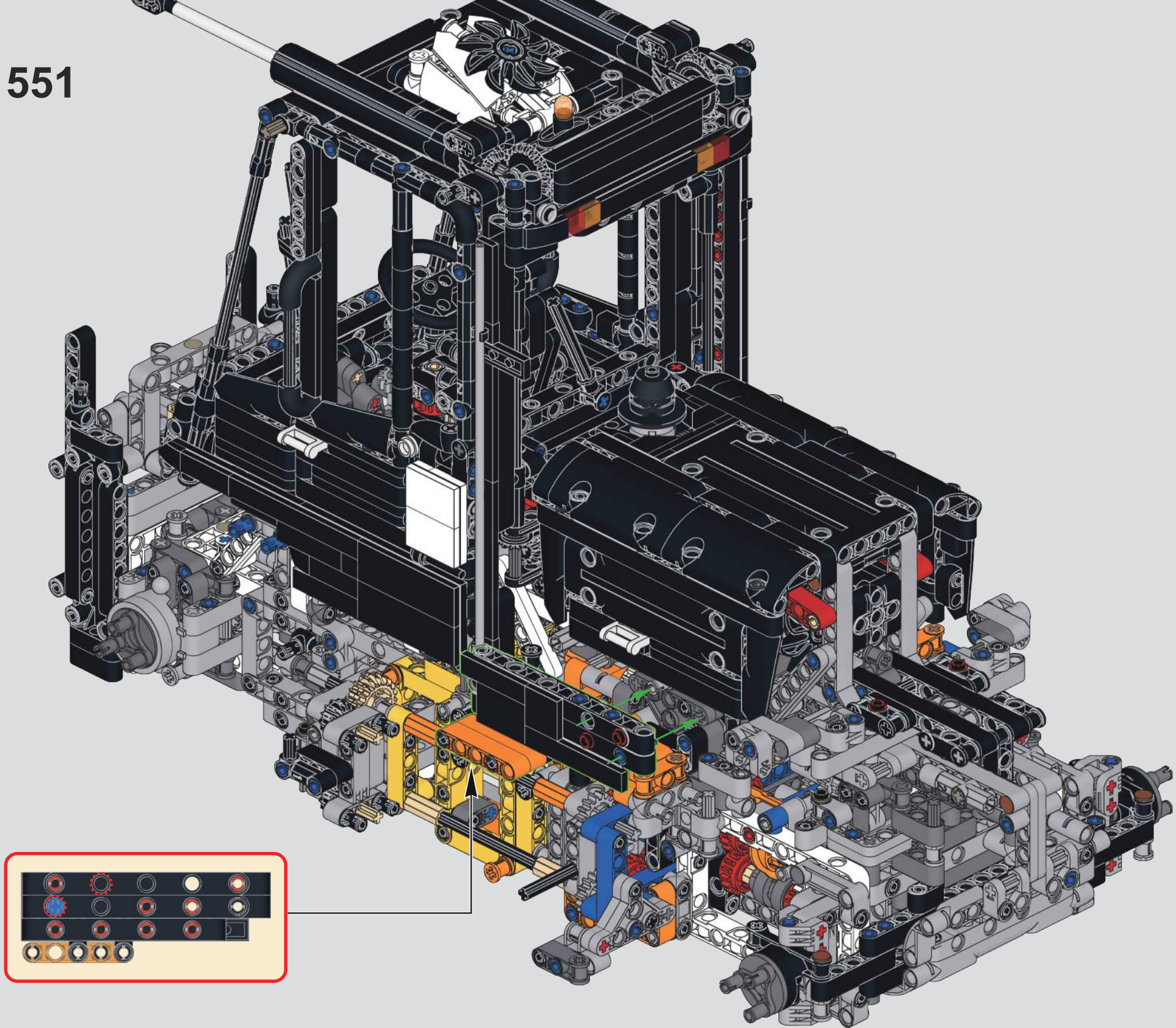

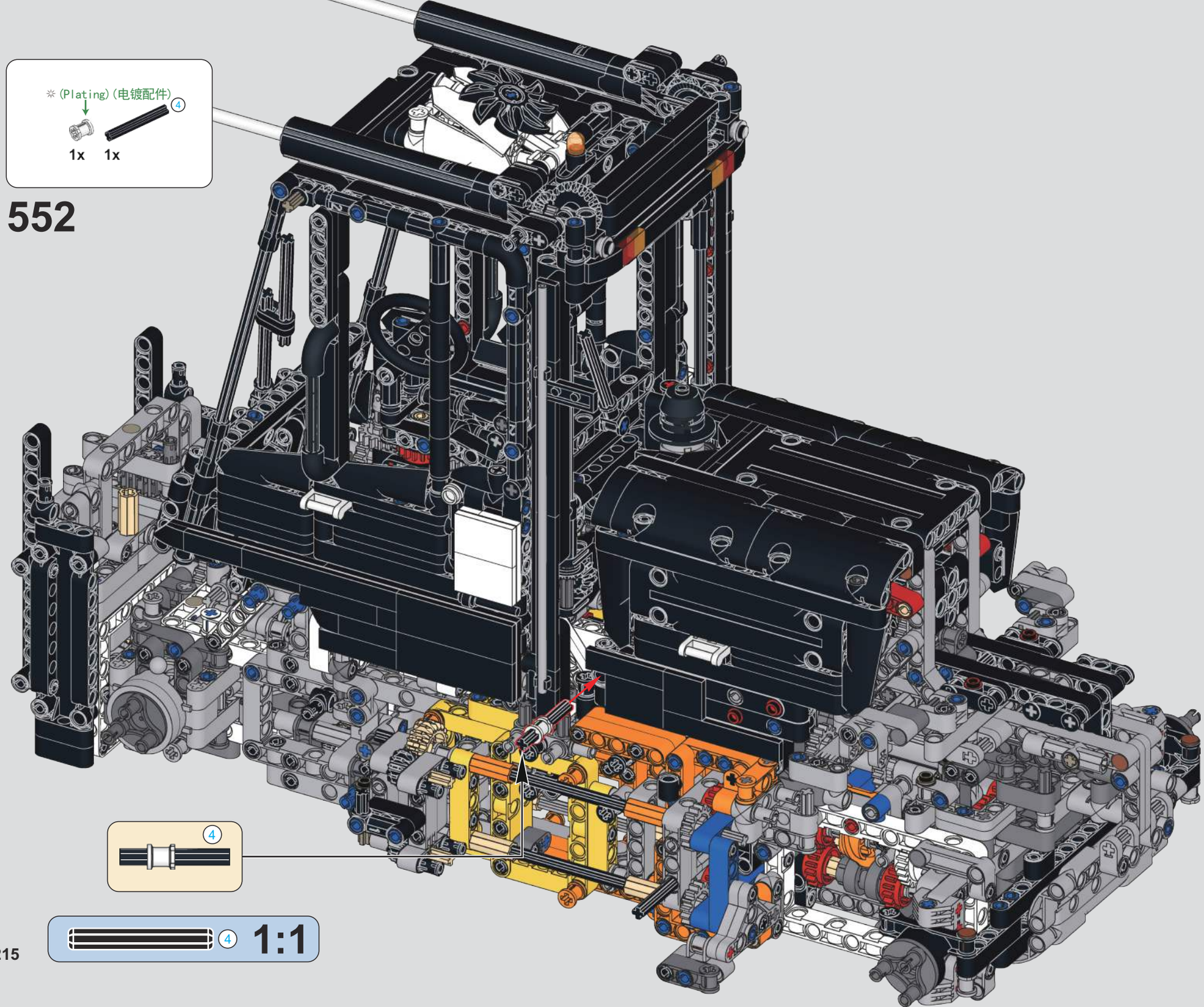
※(Plating)(电镀配件)
4
1x
1x
552
4
4
1:1

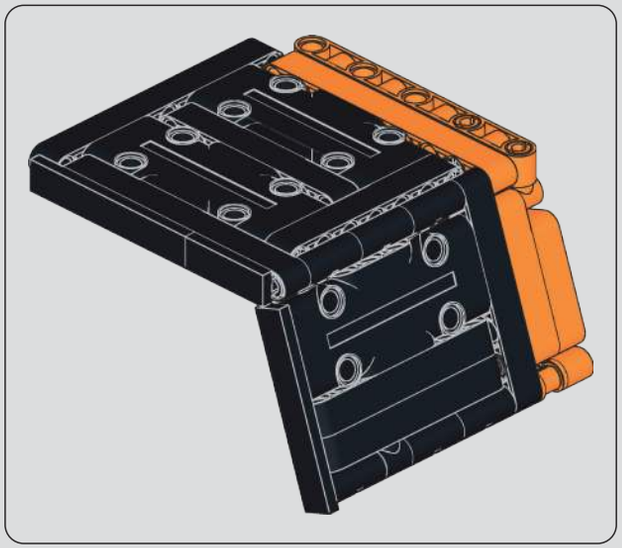

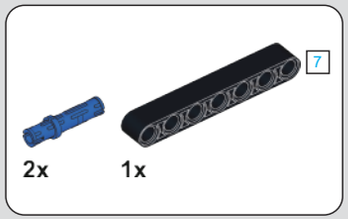

553

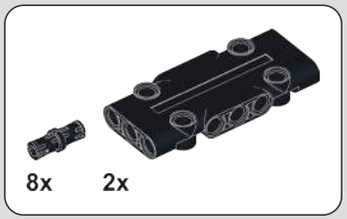

554

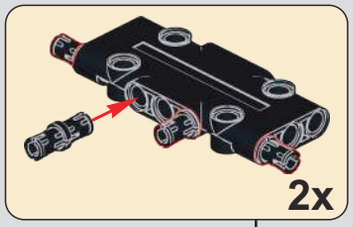

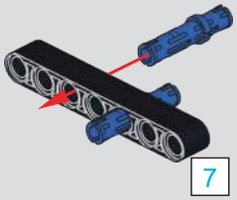

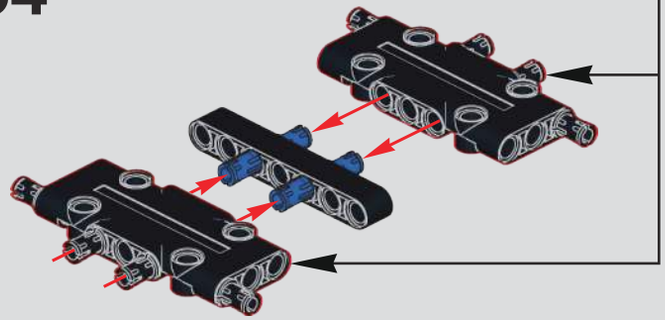

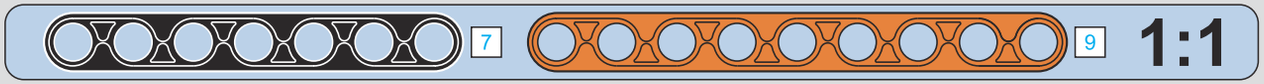

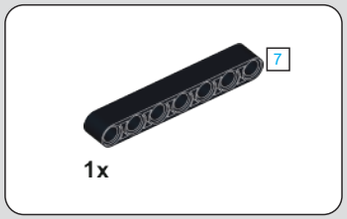

555

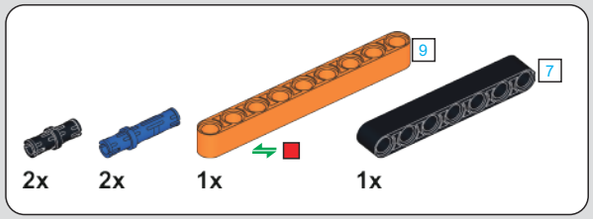

556

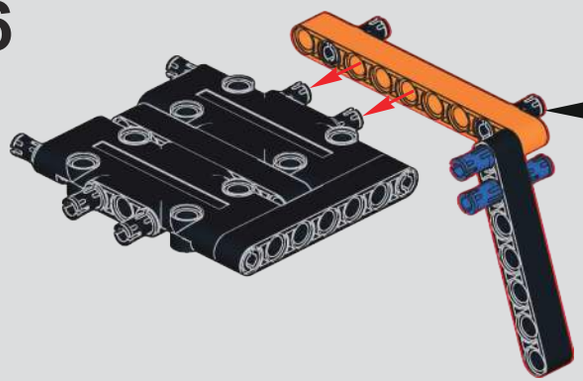

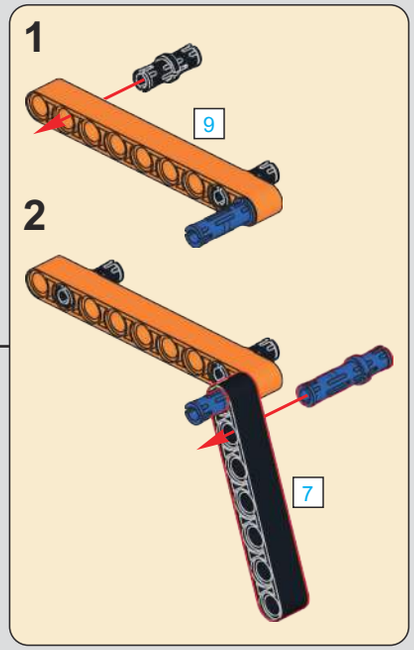

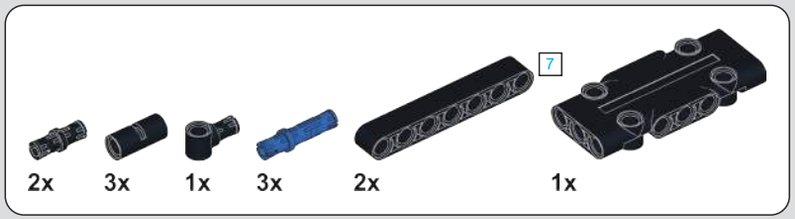

557

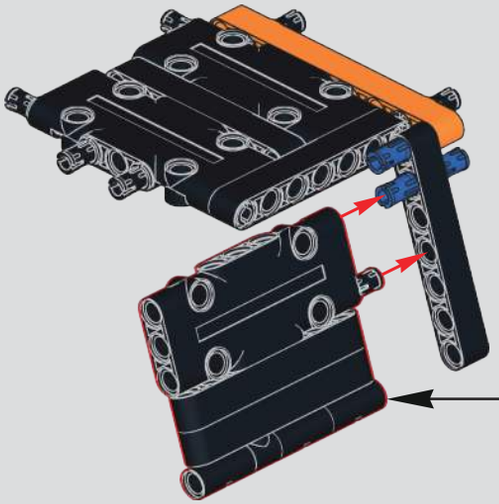

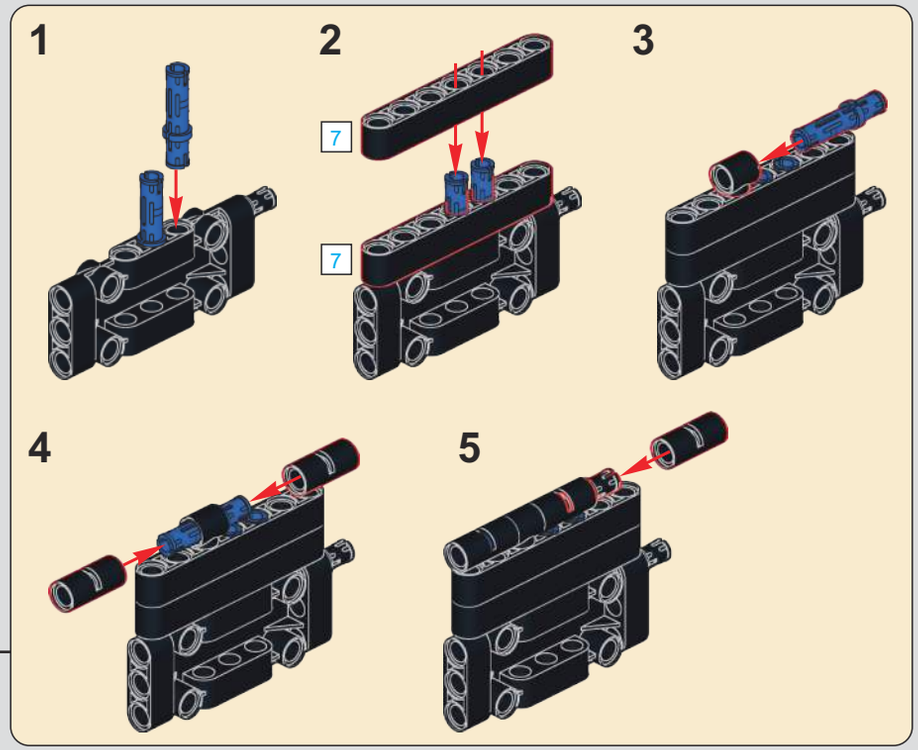

558

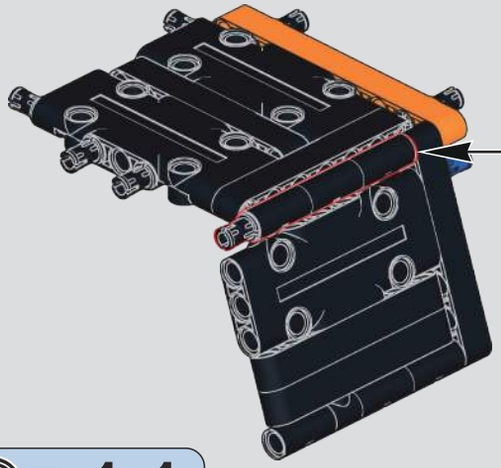

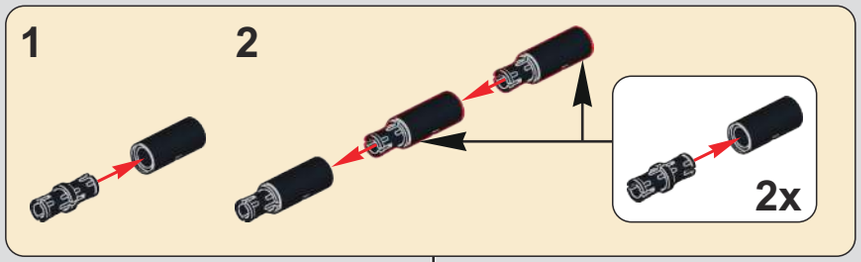

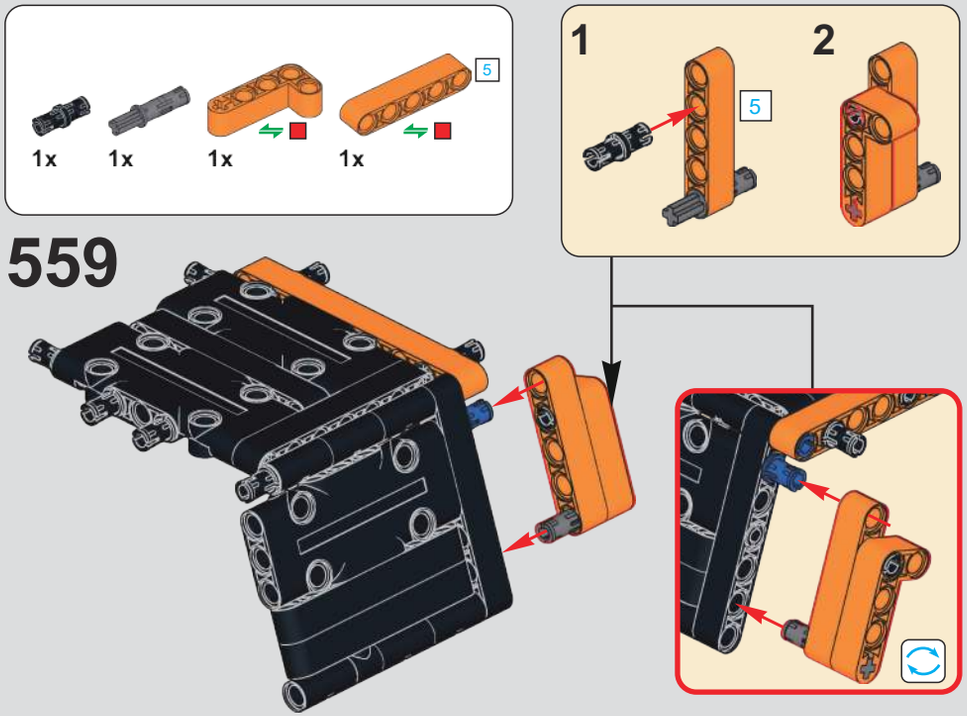

559

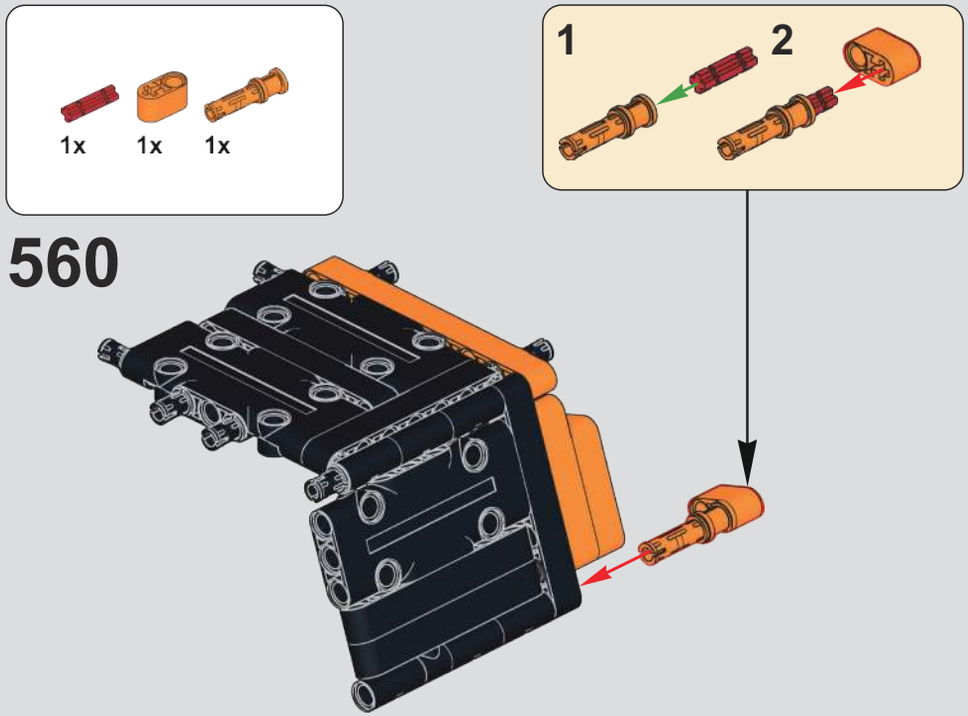

560

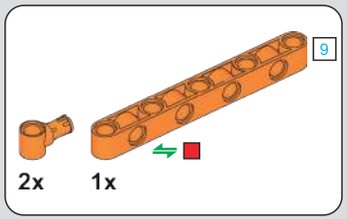

561

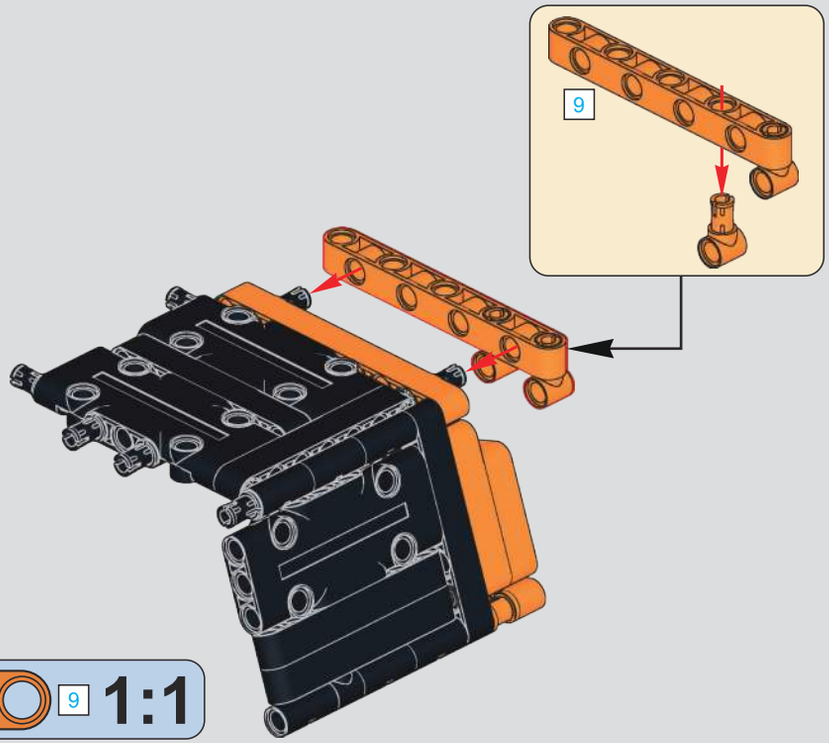

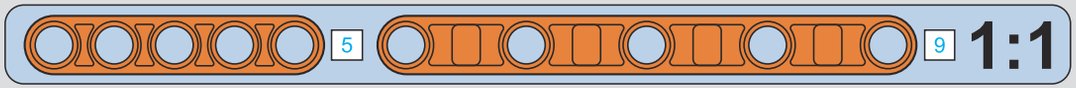

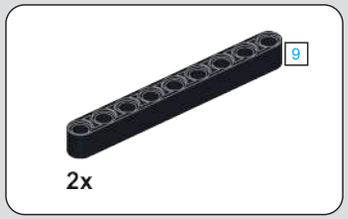

562

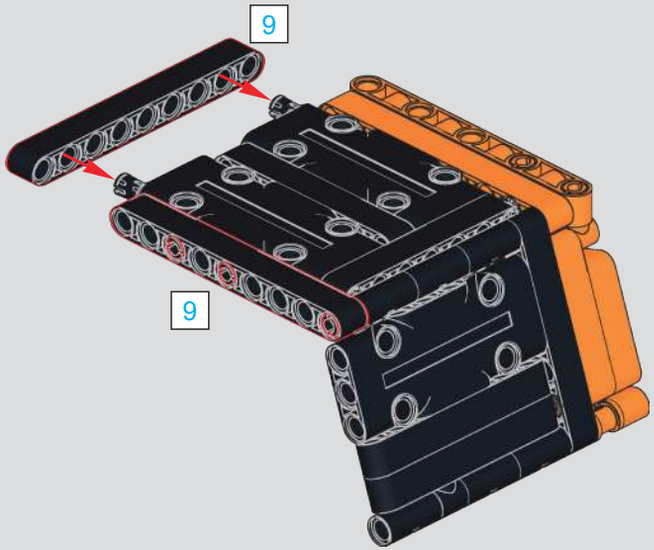

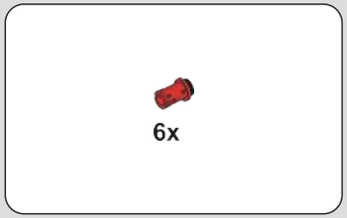

563

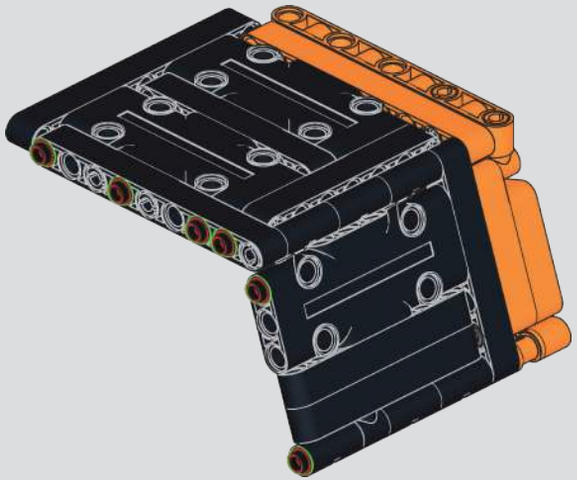

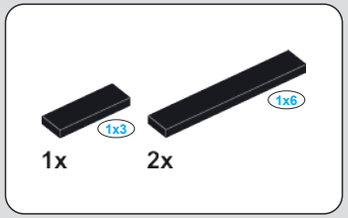

564

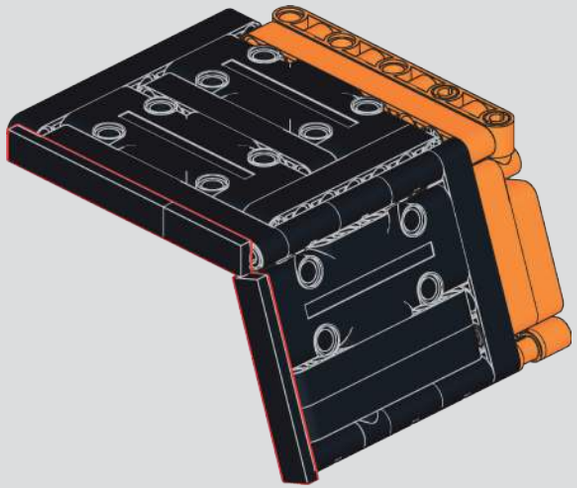

565

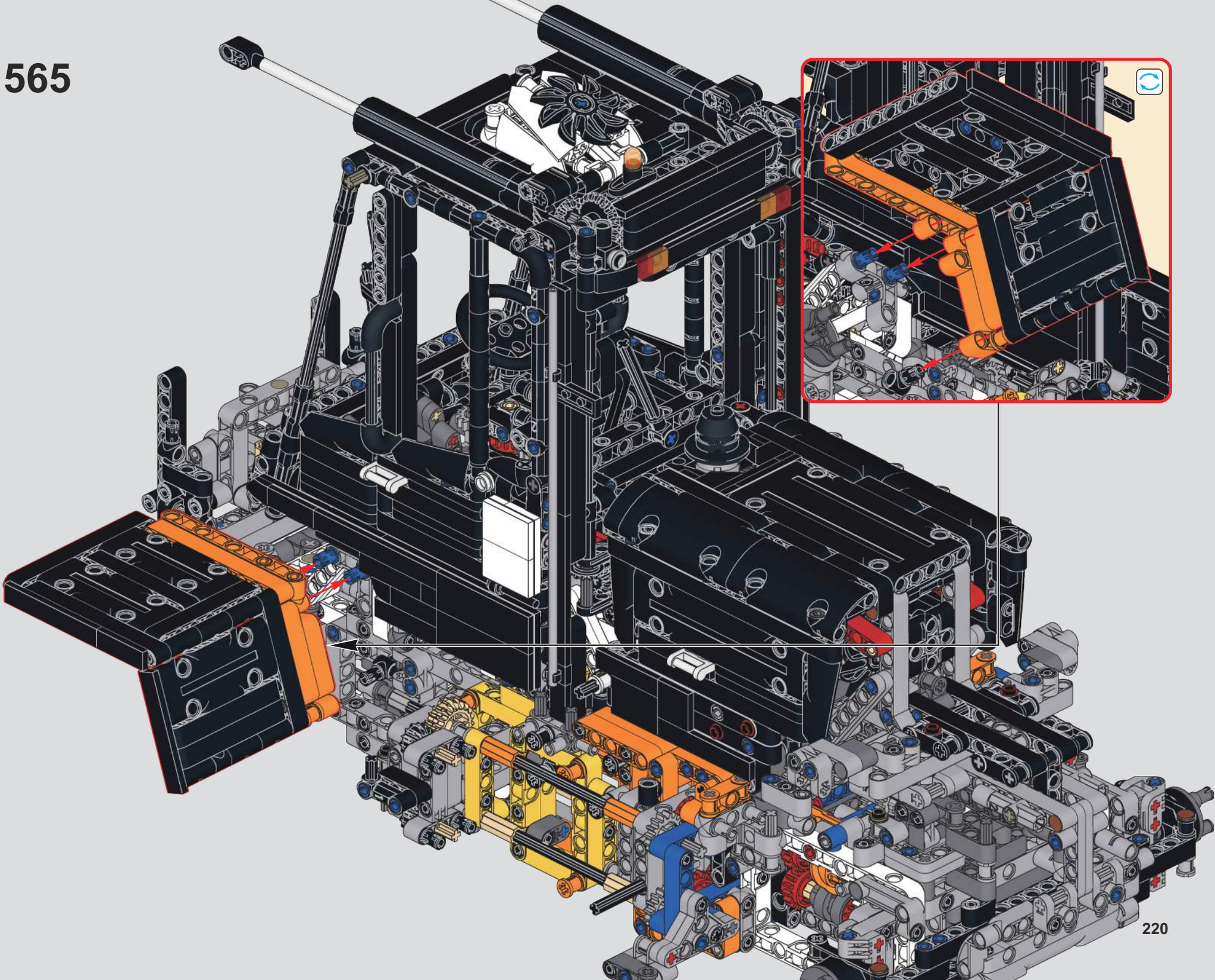

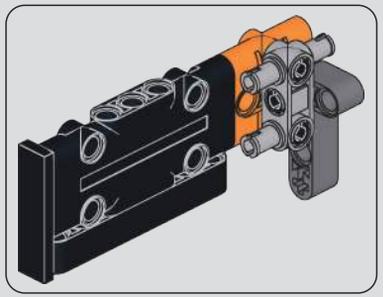

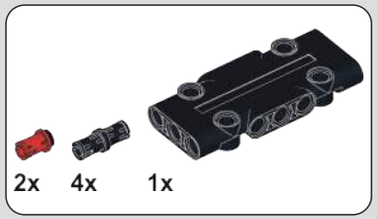

566

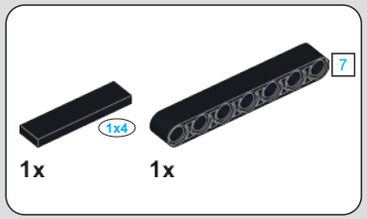

567

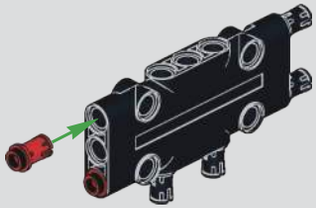

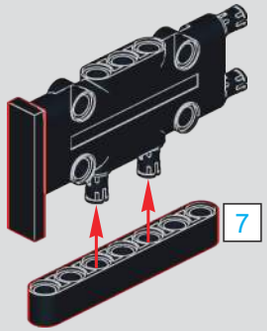

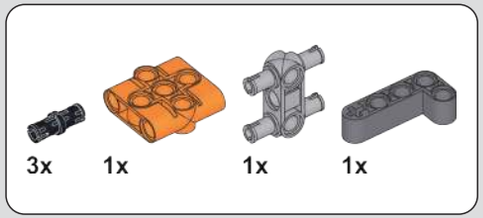

568

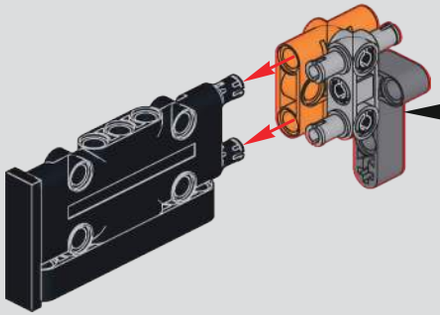

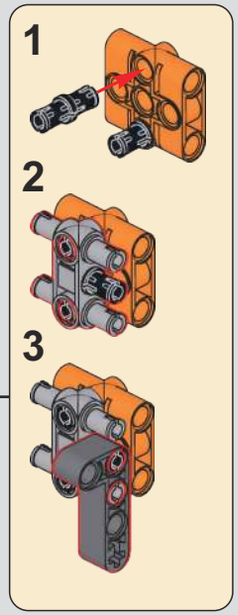

569

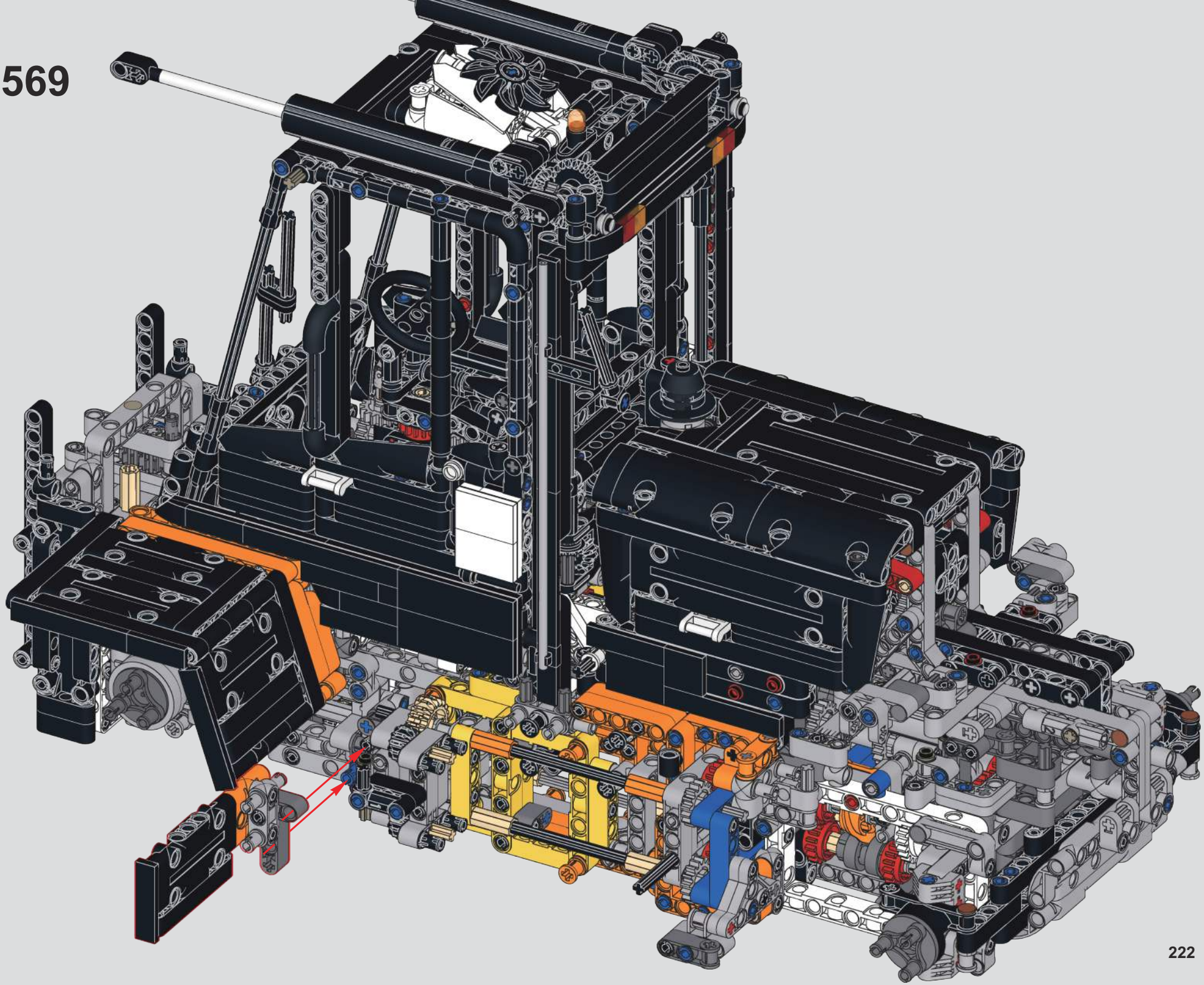

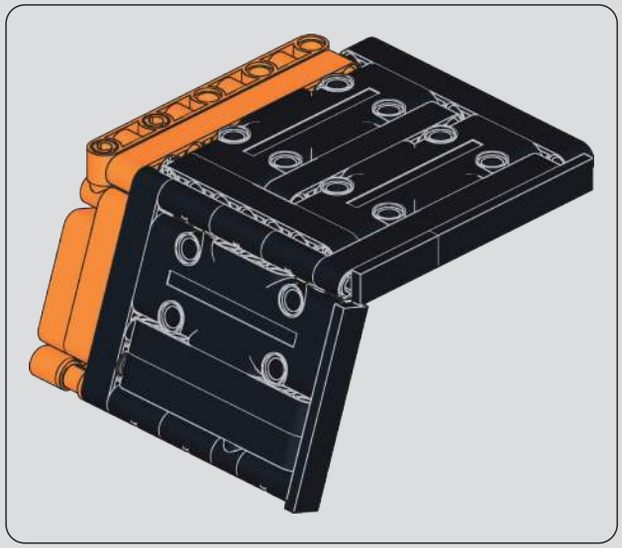

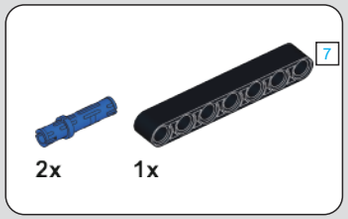

570

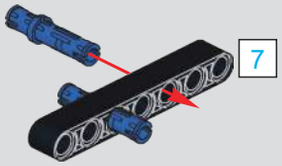

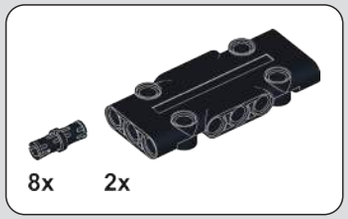

571

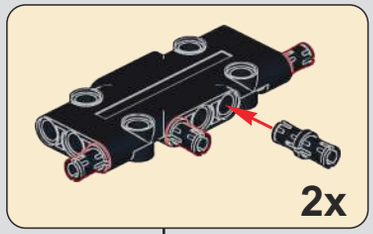

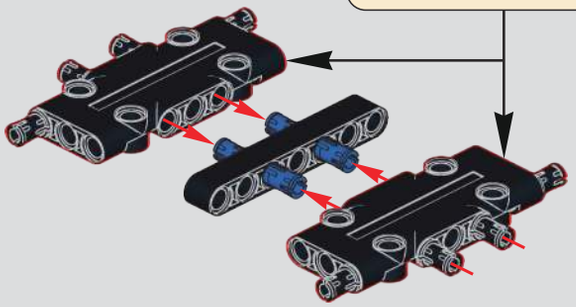

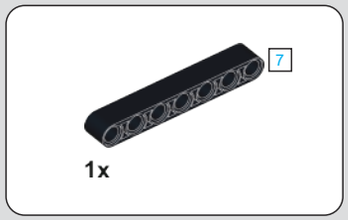

572

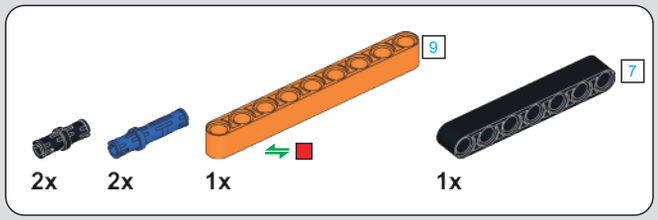

573

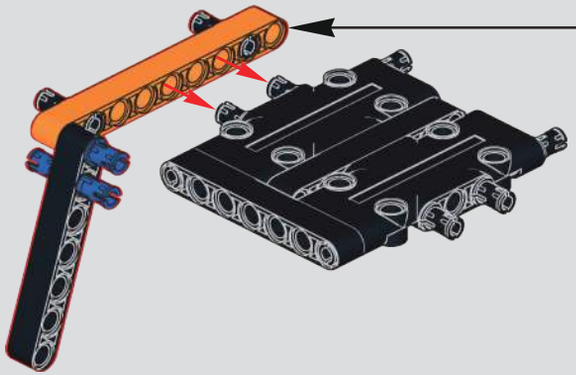

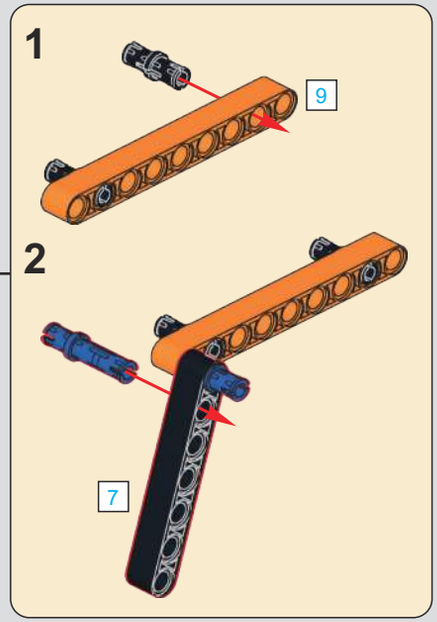

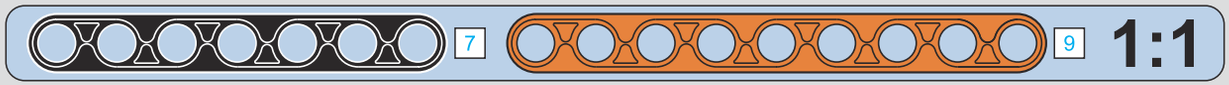

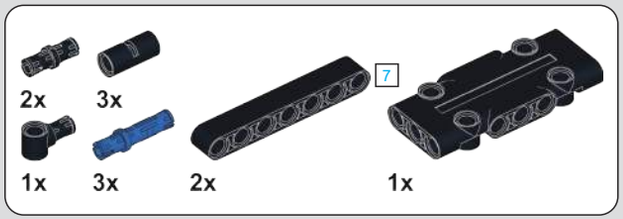

574

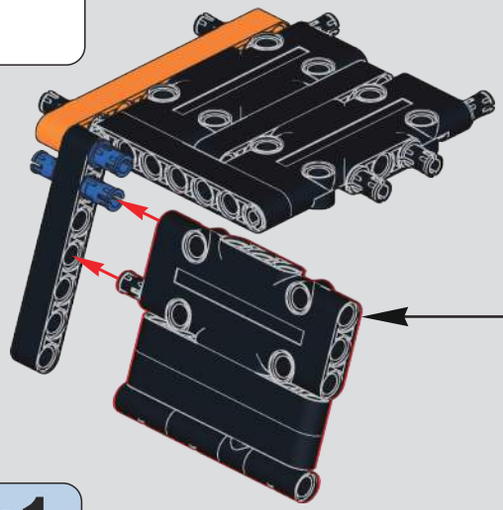

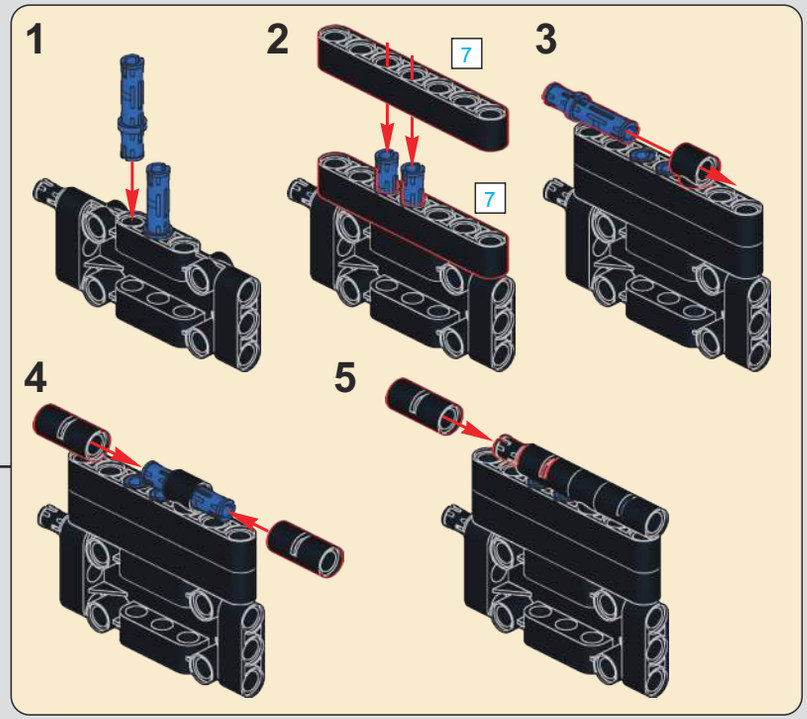

575

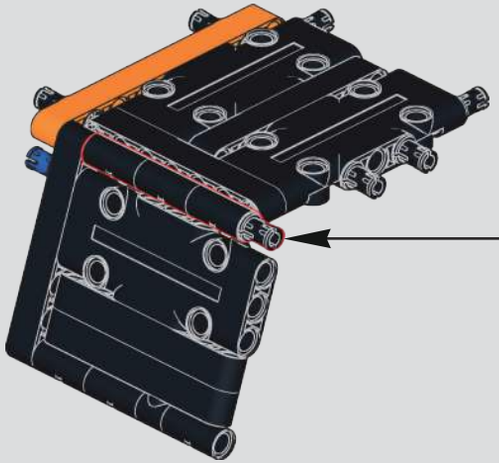

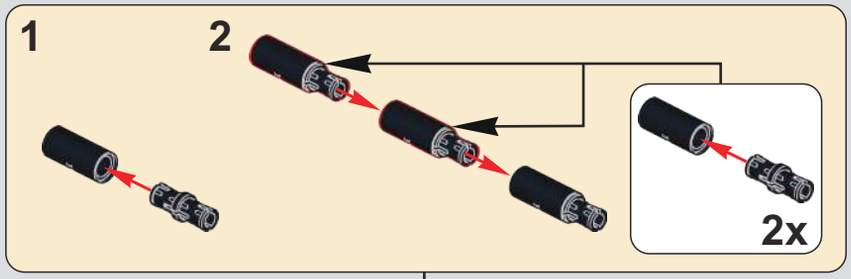

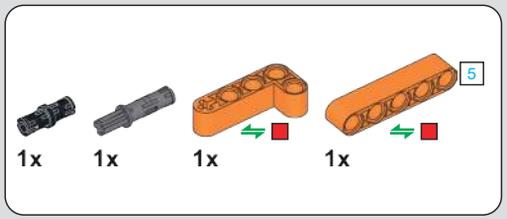

576

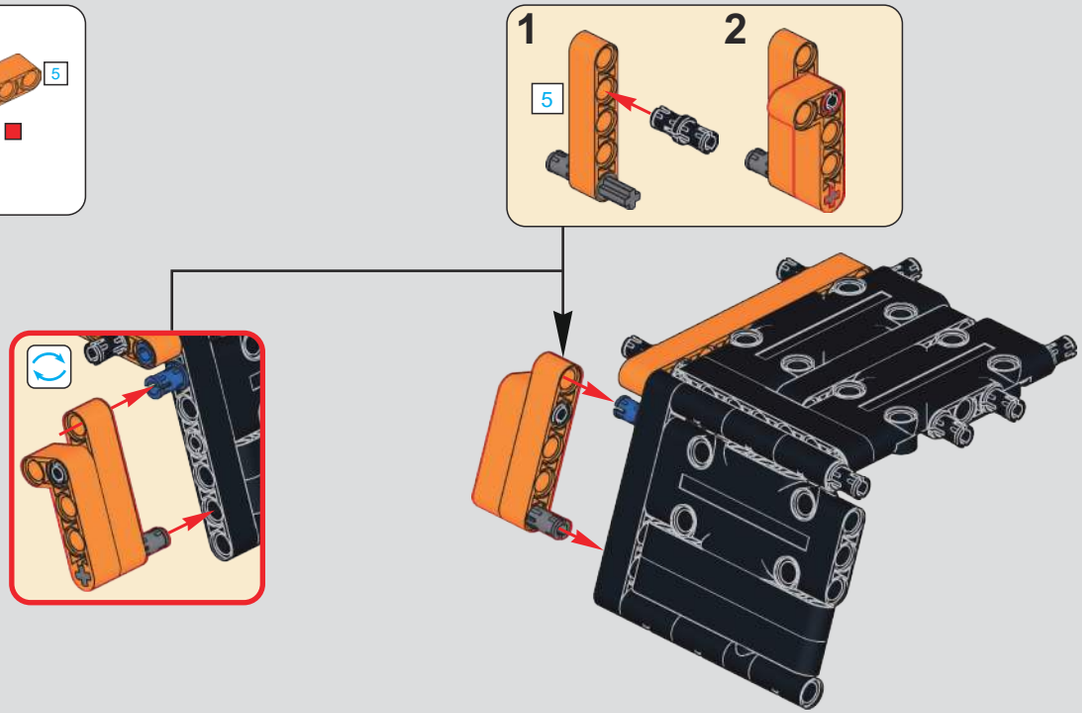

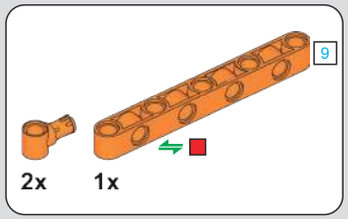

577

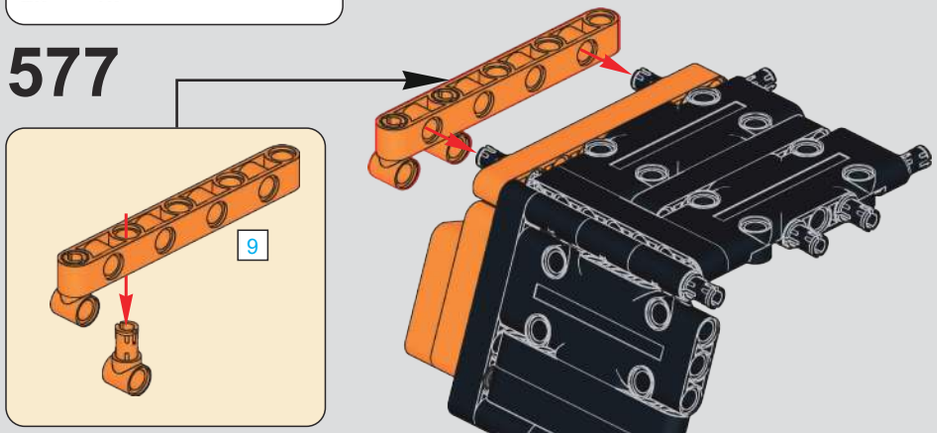

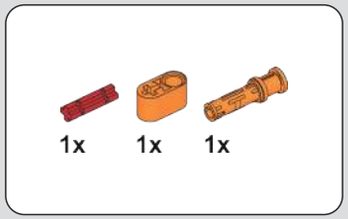

578

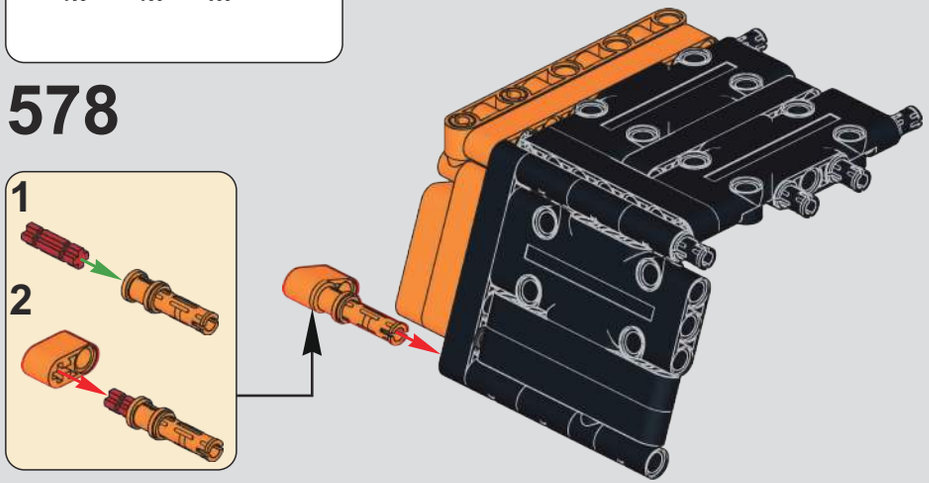

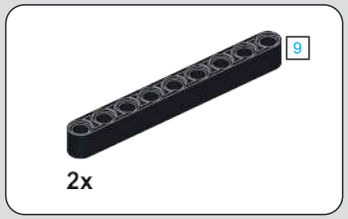

579

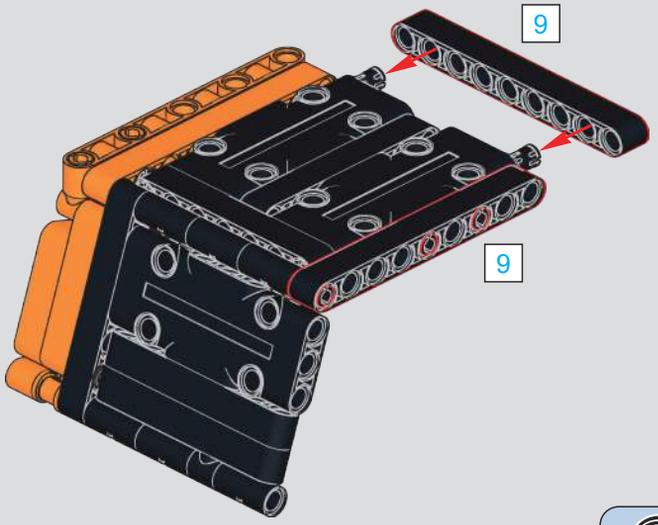

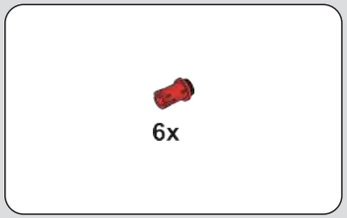

580

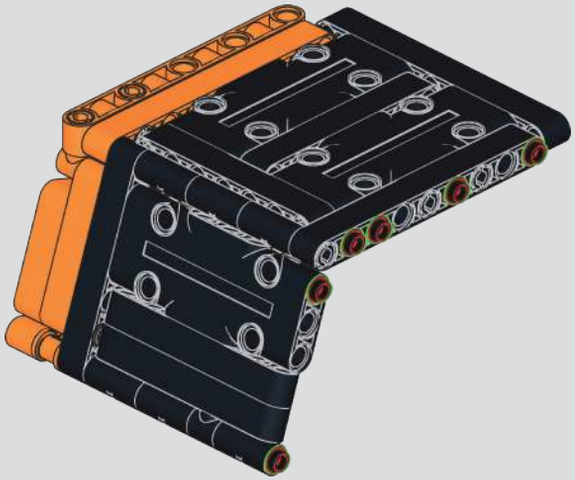

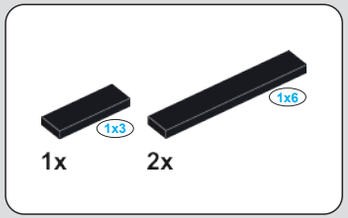

581

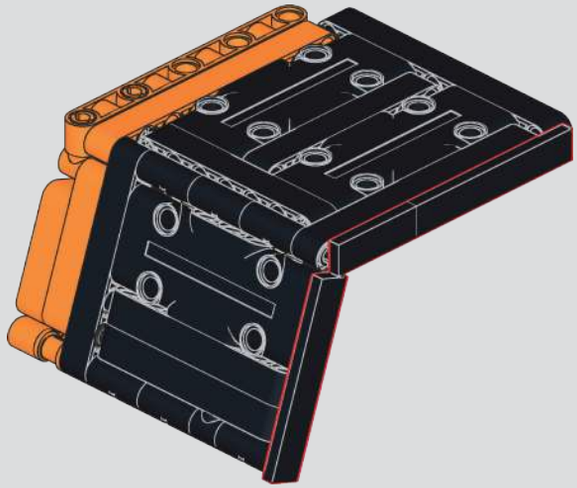

582

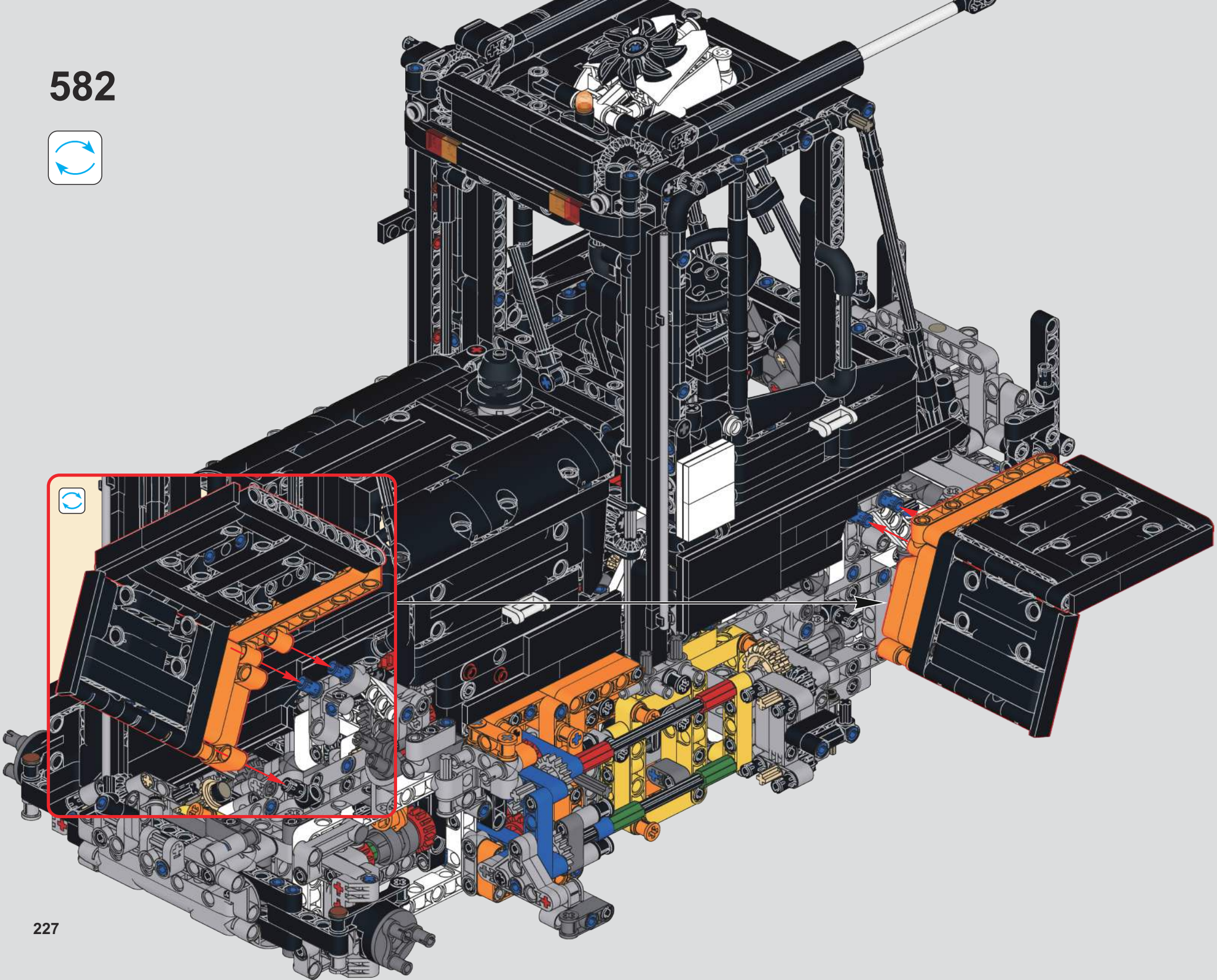

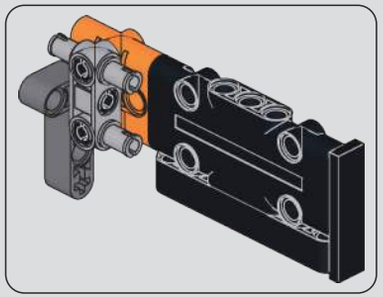

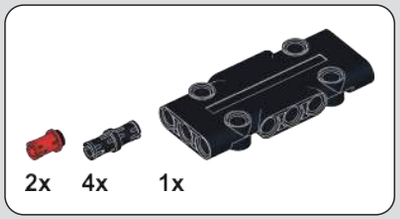

583

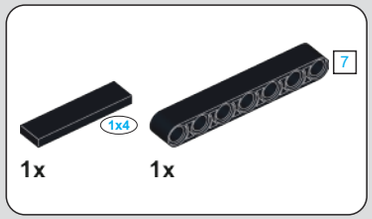

584

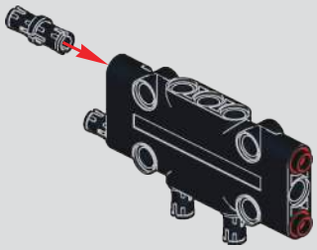

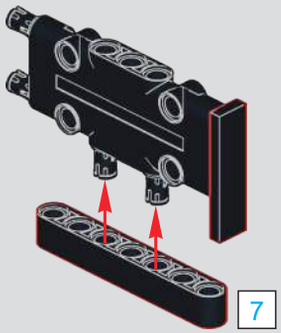

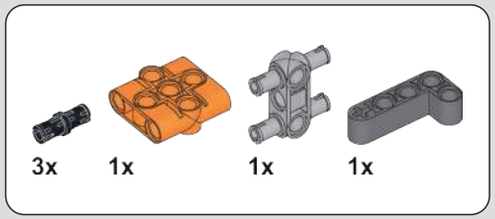

585

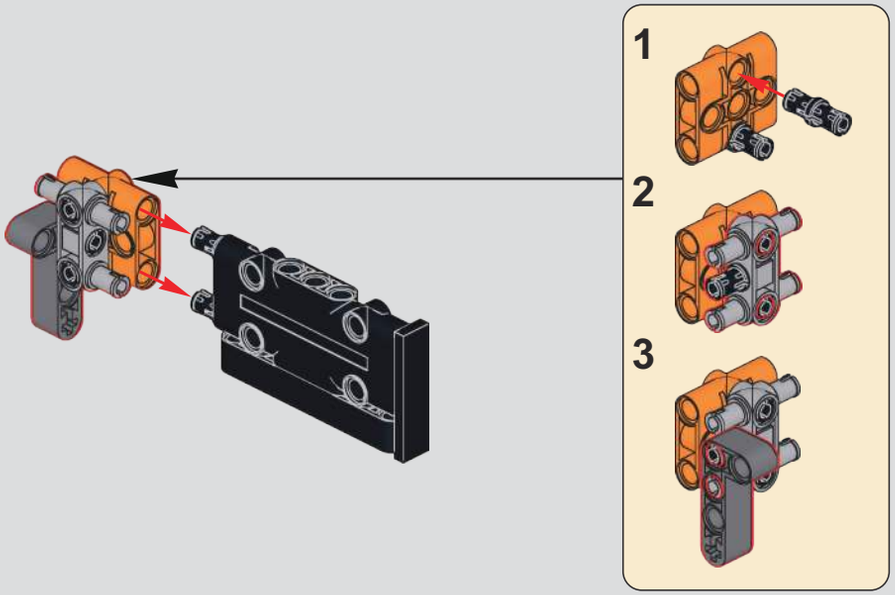

586

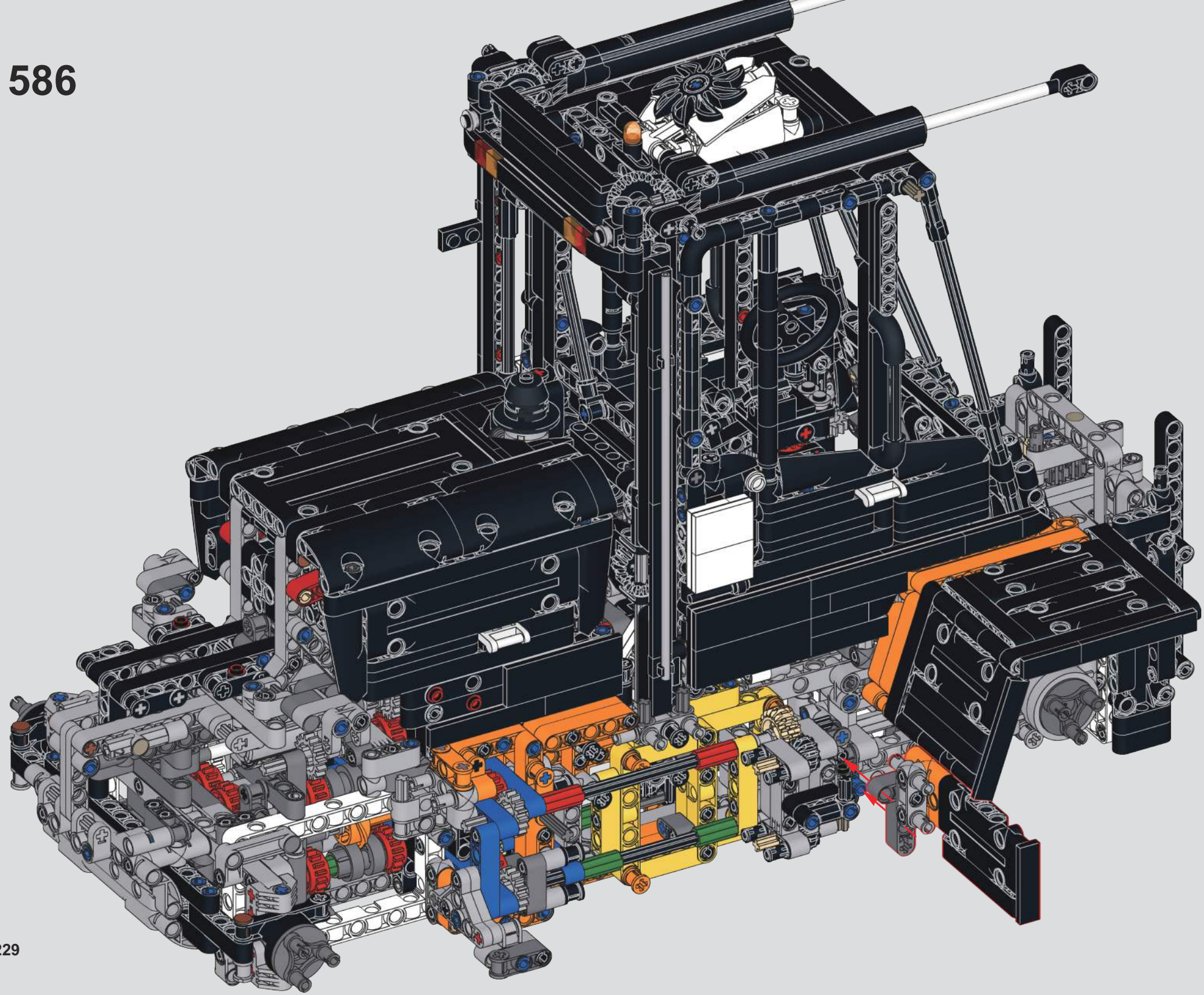

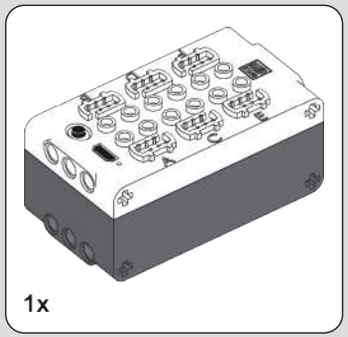

587

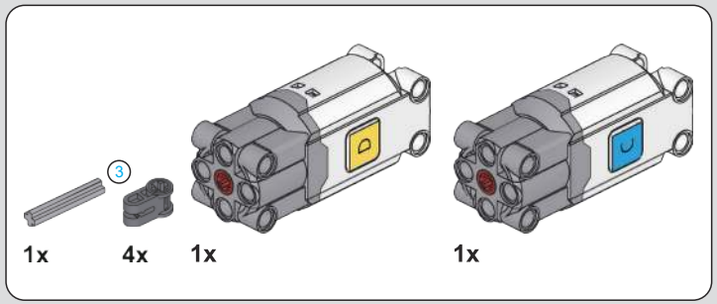

588

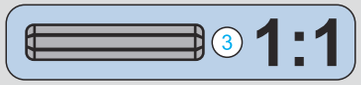

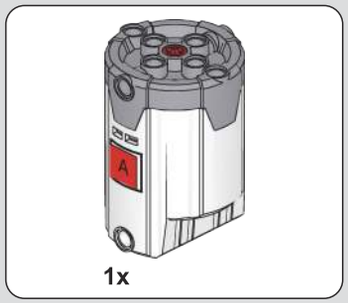

589

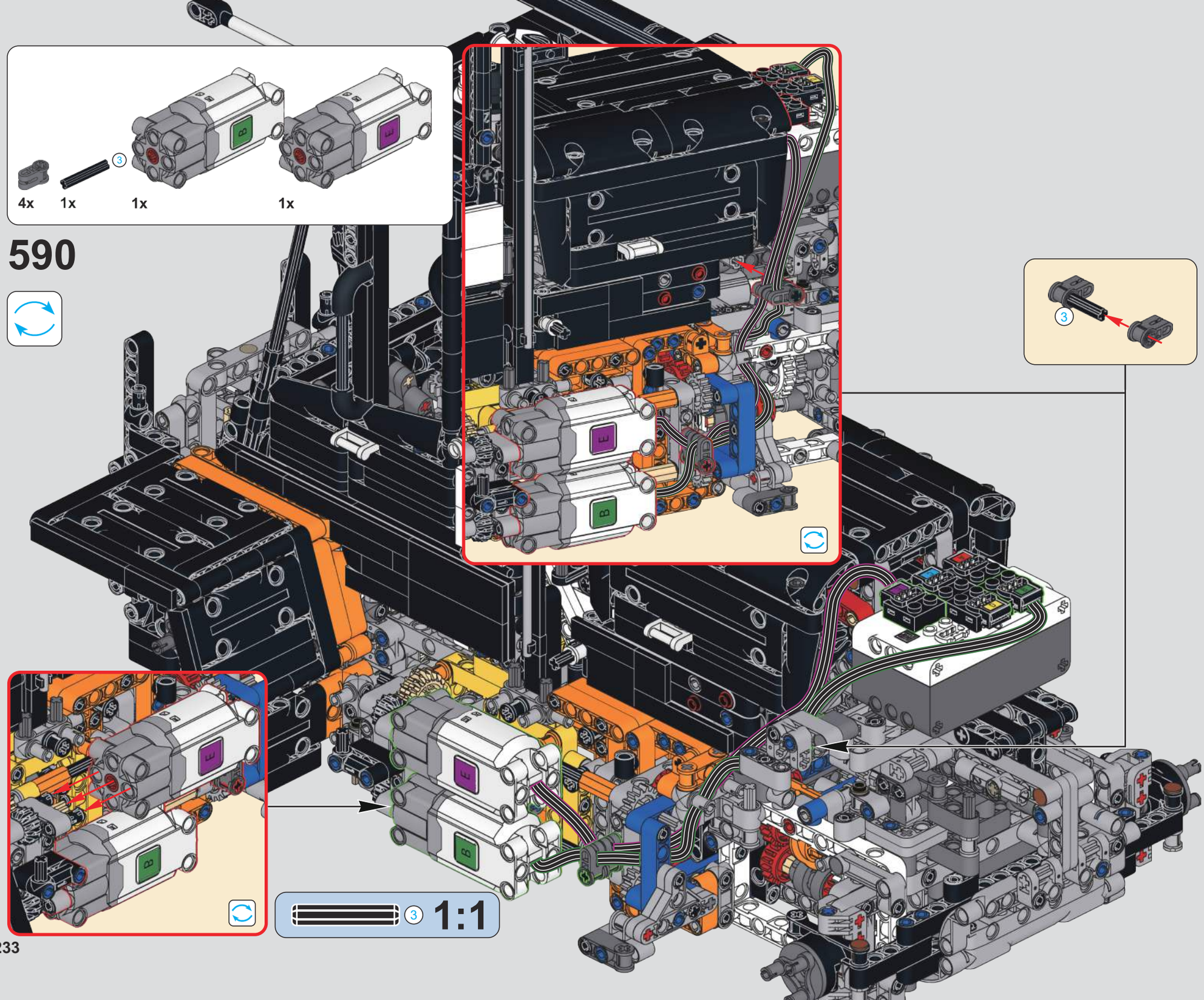
4x
1x
3
1x
1x
590
3
3
1:1

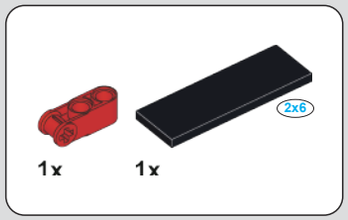

591

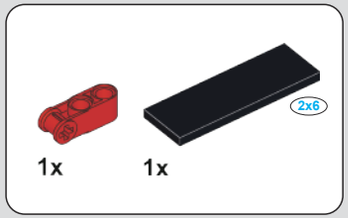

592

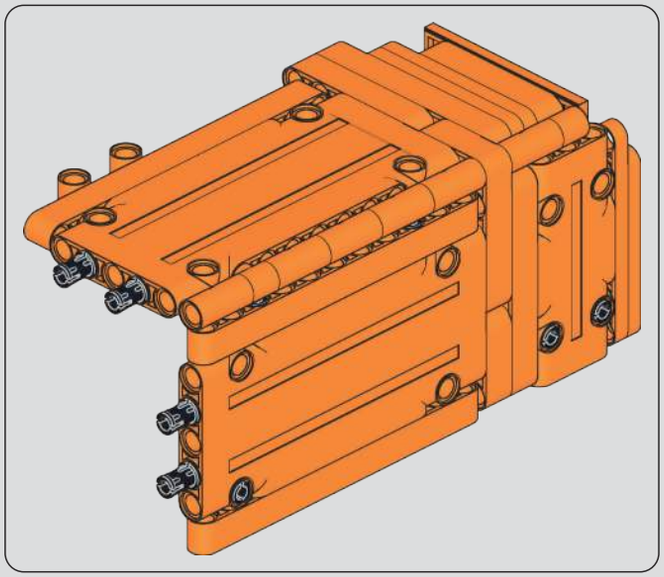

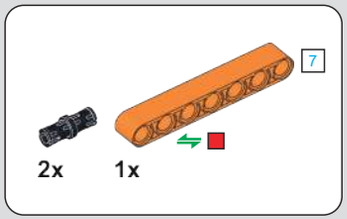

593

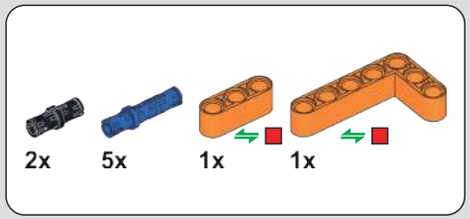

594

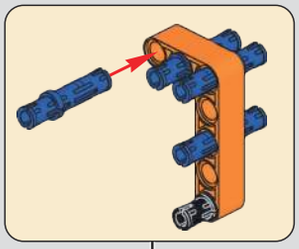

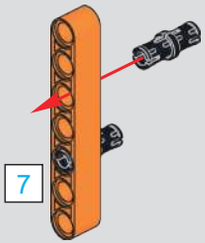

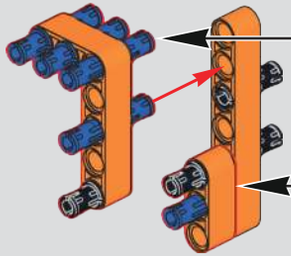

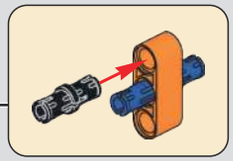

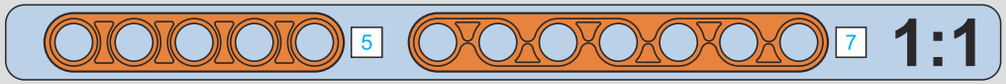

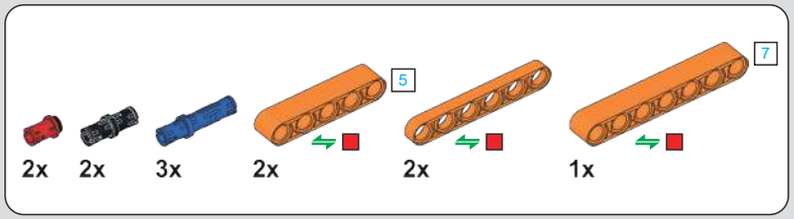

595

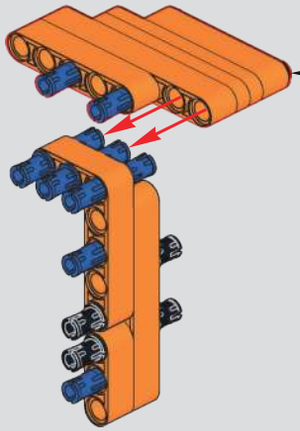

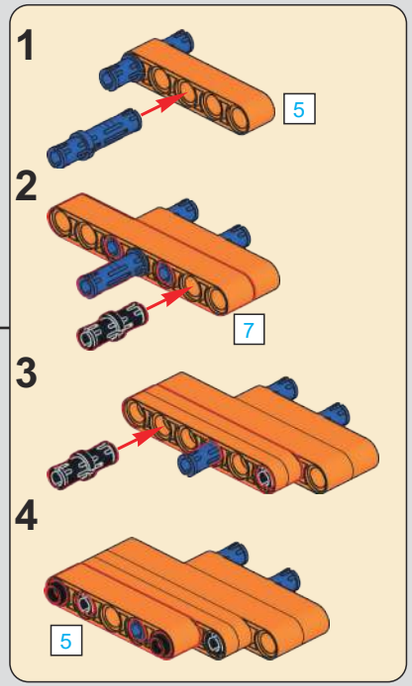

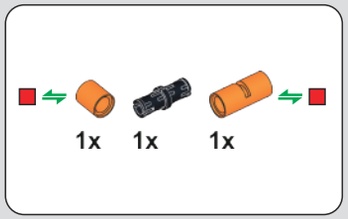

596

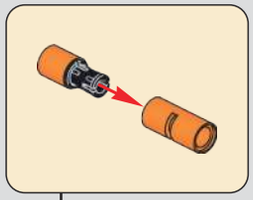

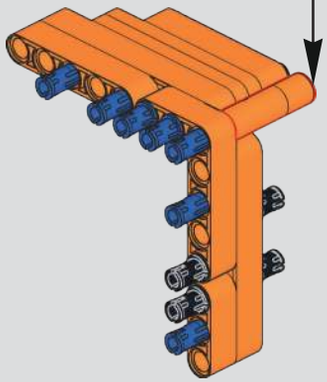

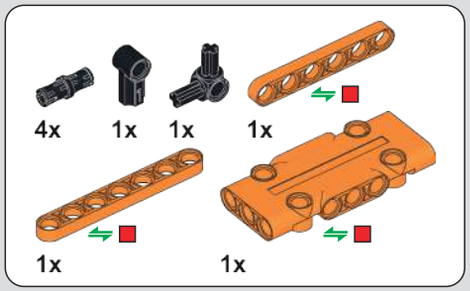

597

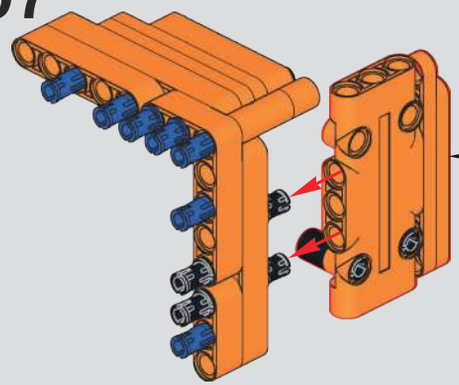

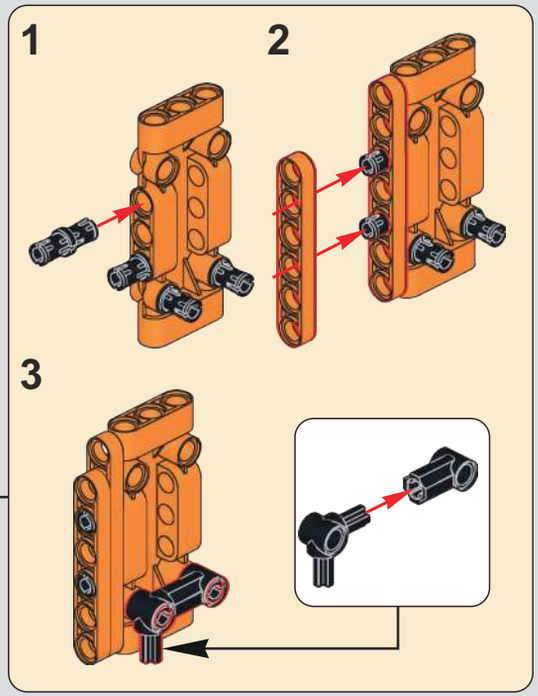

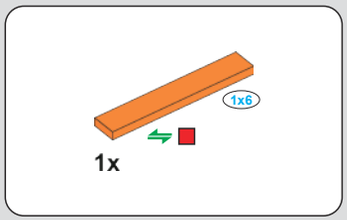

598

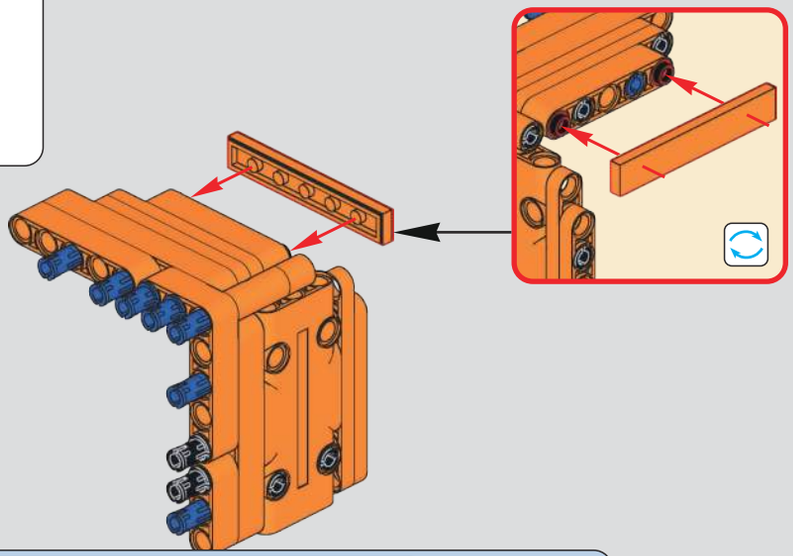

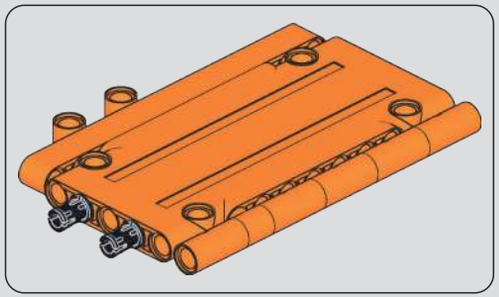

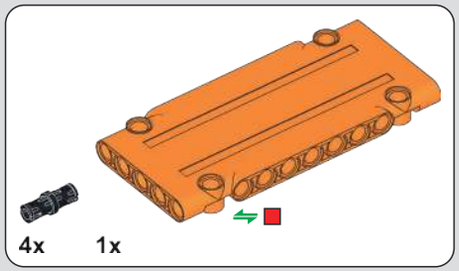

599

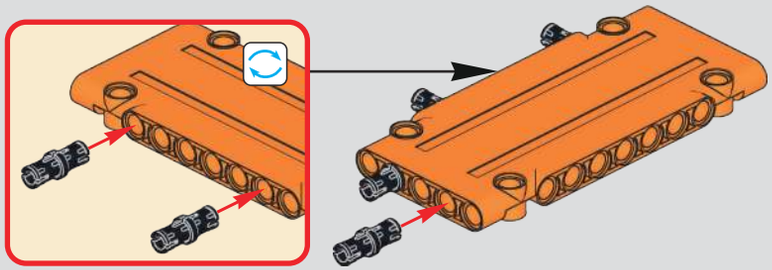

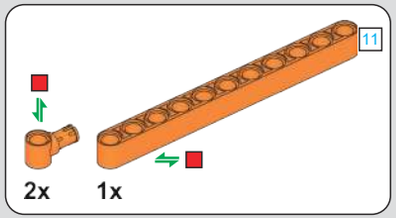

600

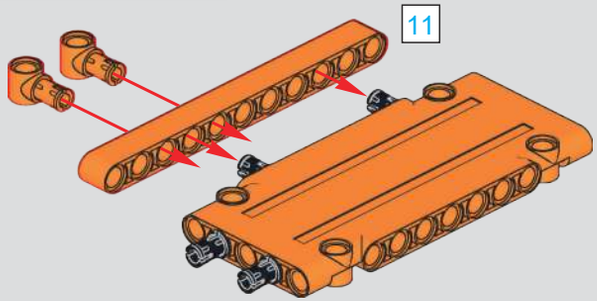

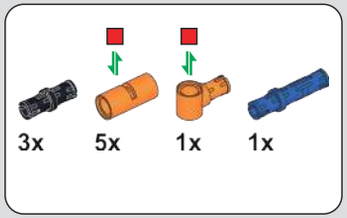

601

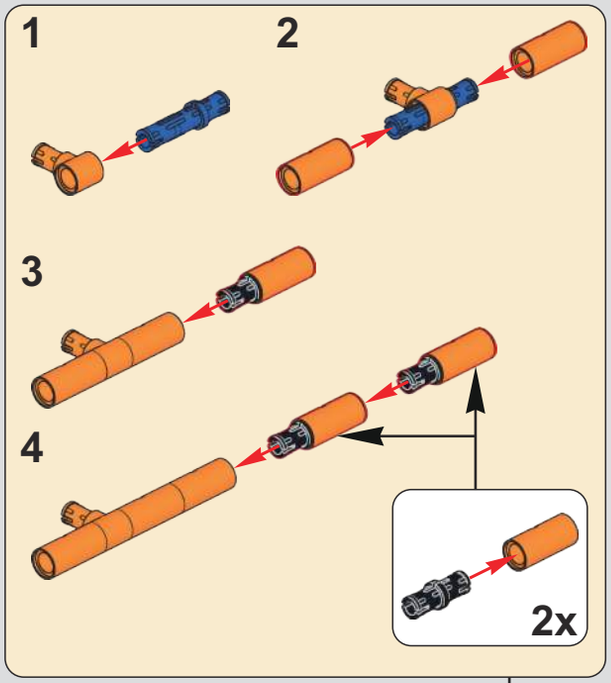

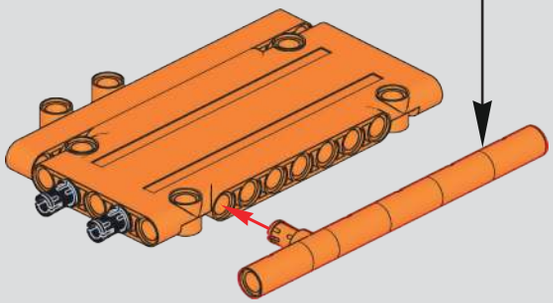

602

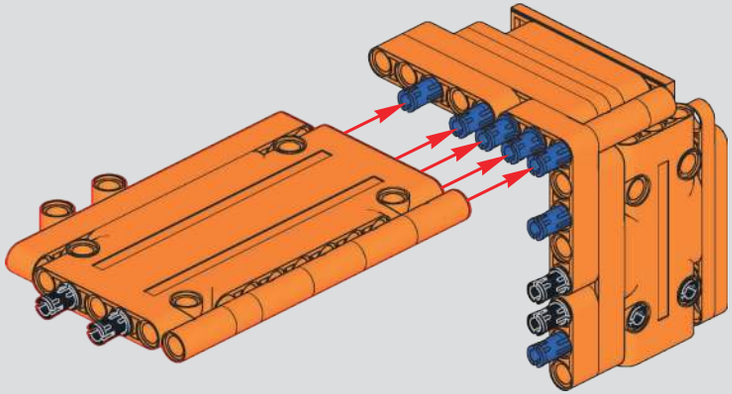

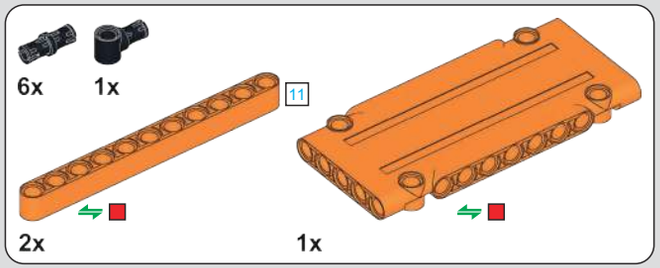

603

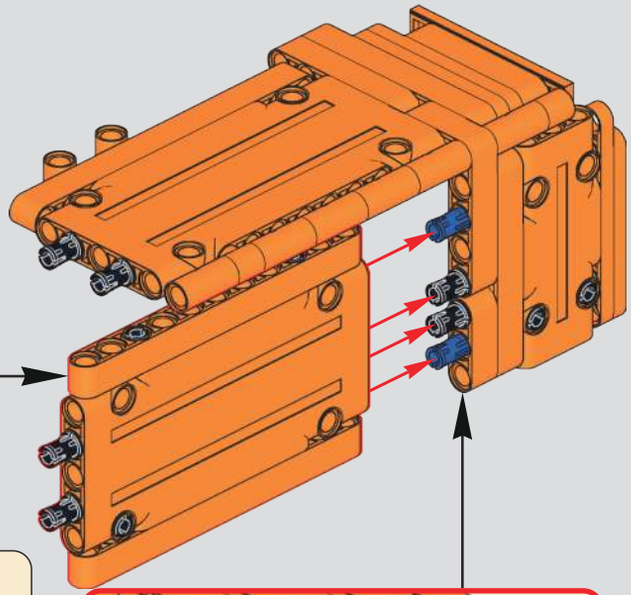

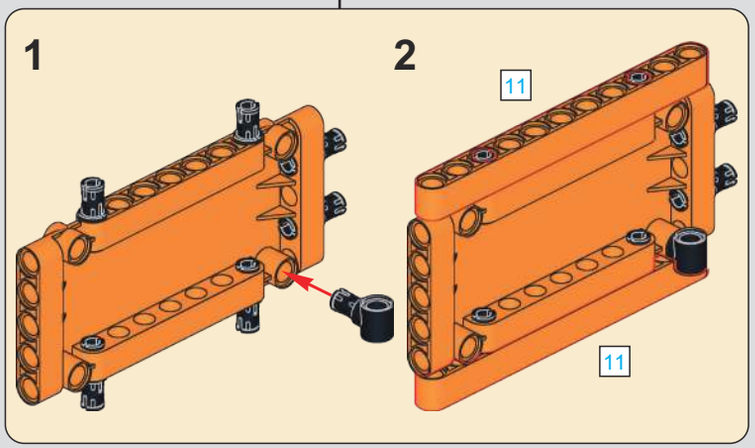

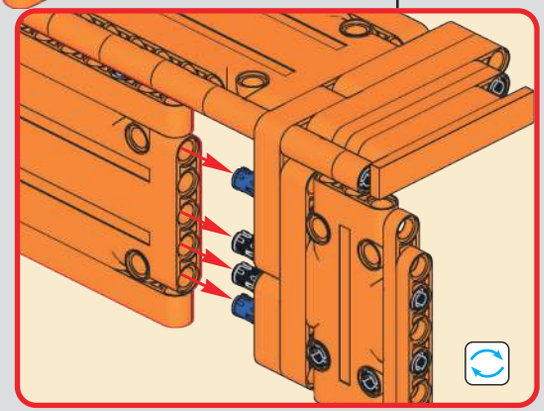

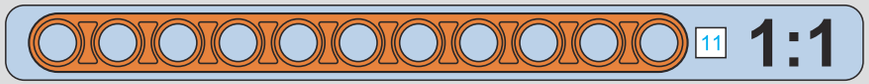

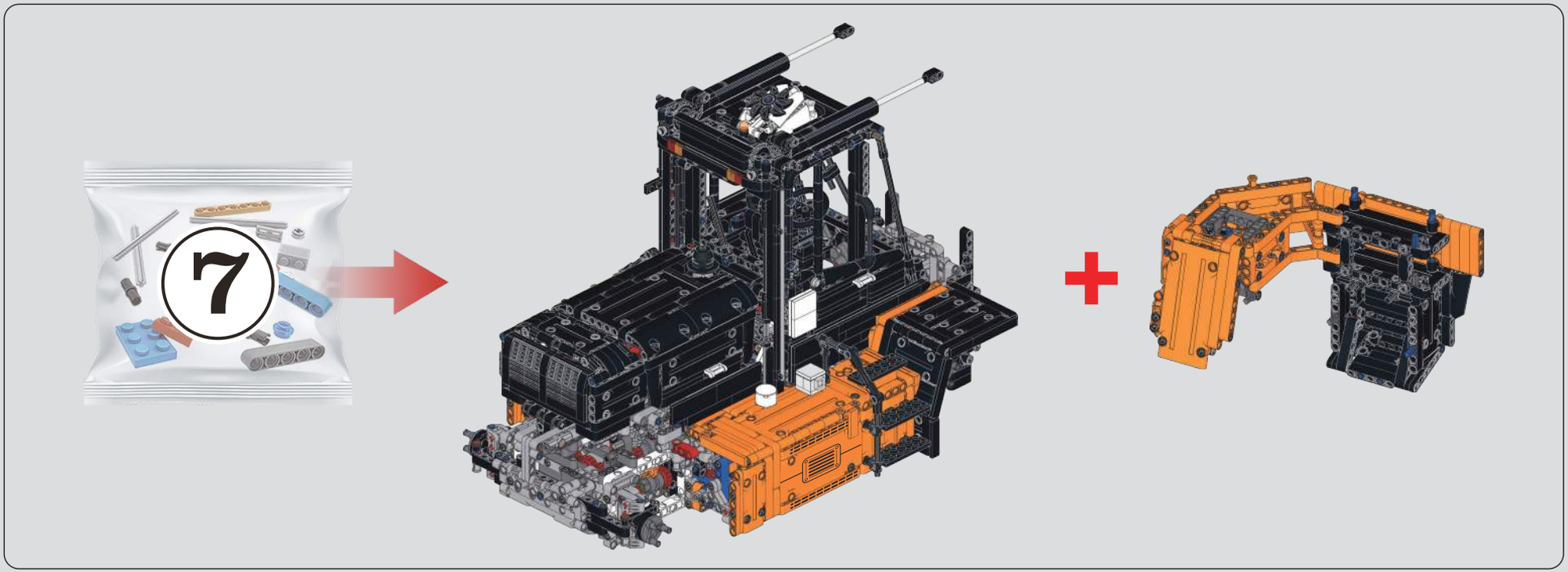
7

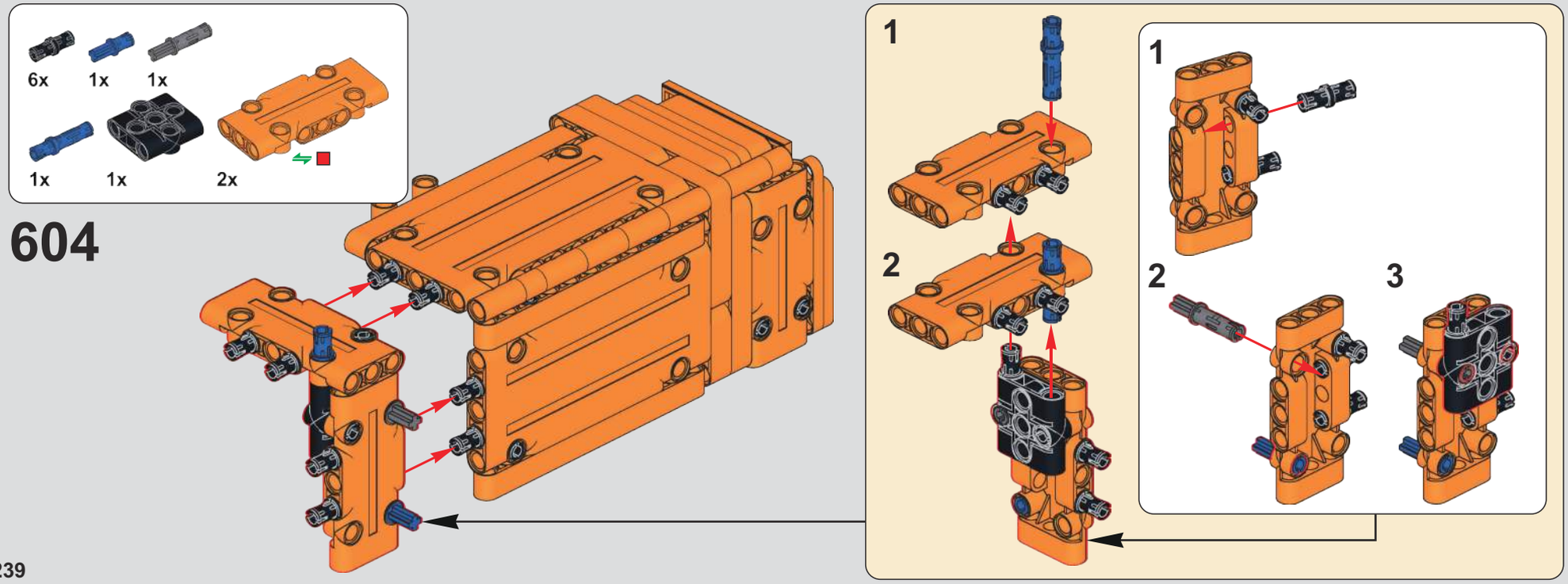
6x
1x
1x
1x
1x
2x
604
1
2
1
2
3

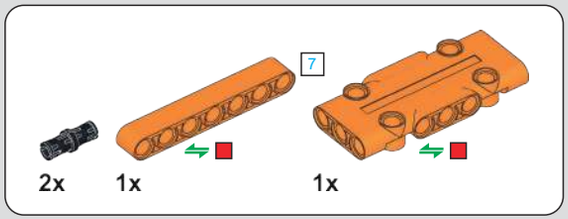

605

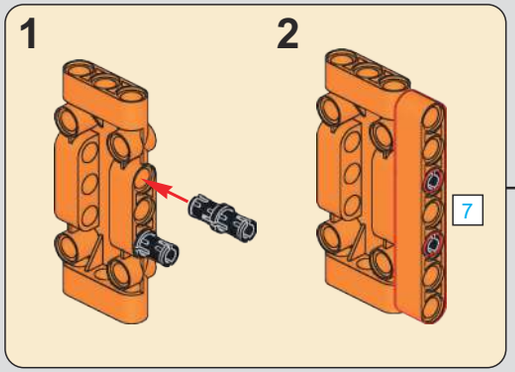

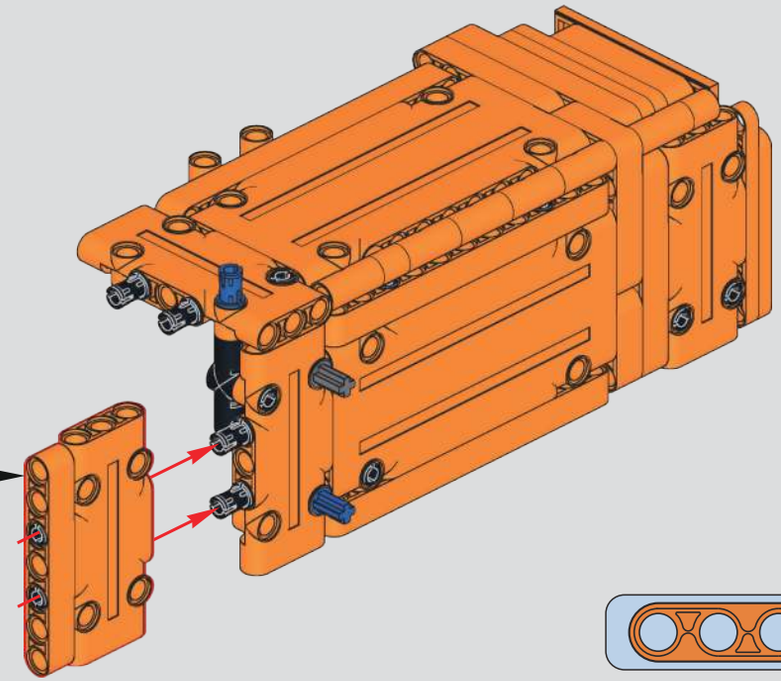

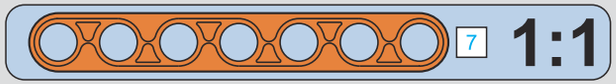

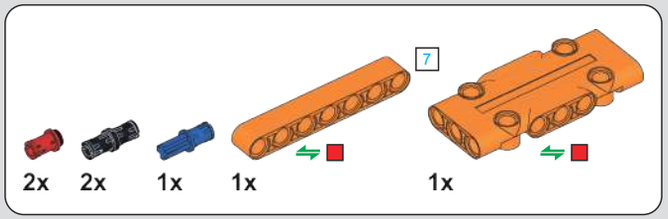

606

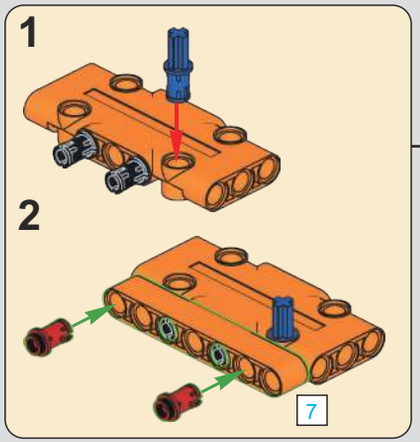

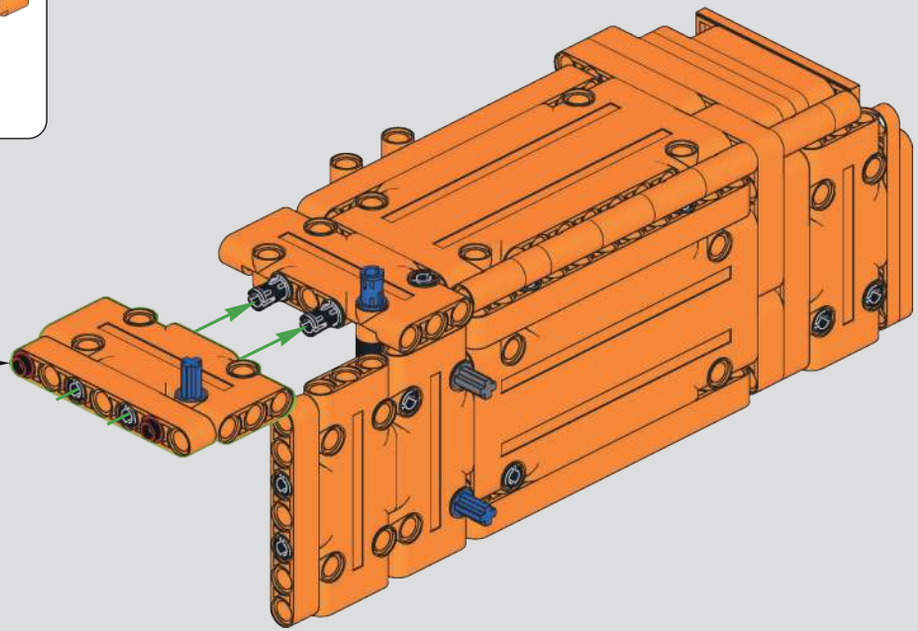

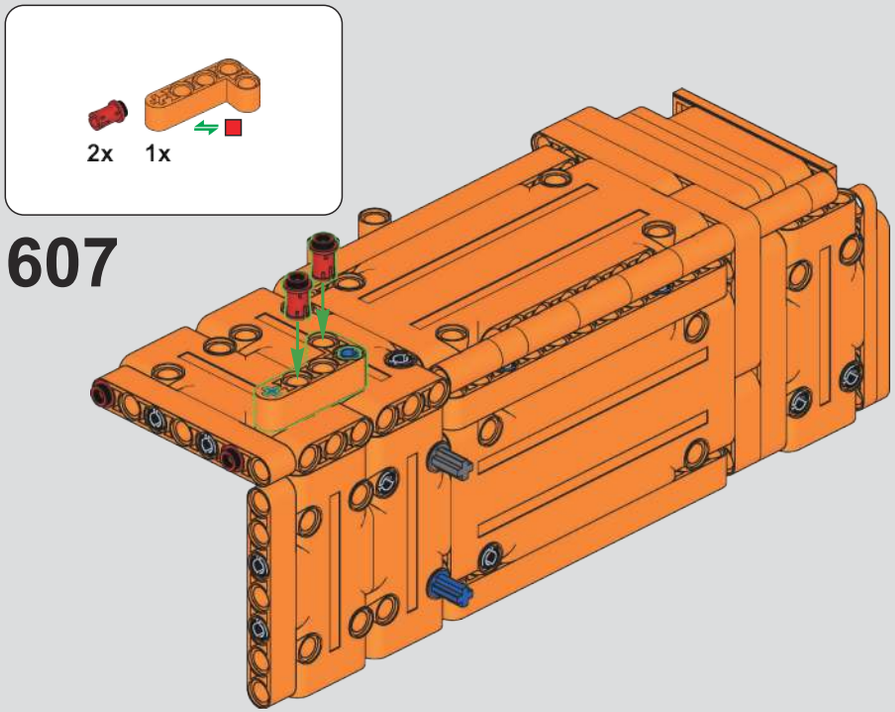

607

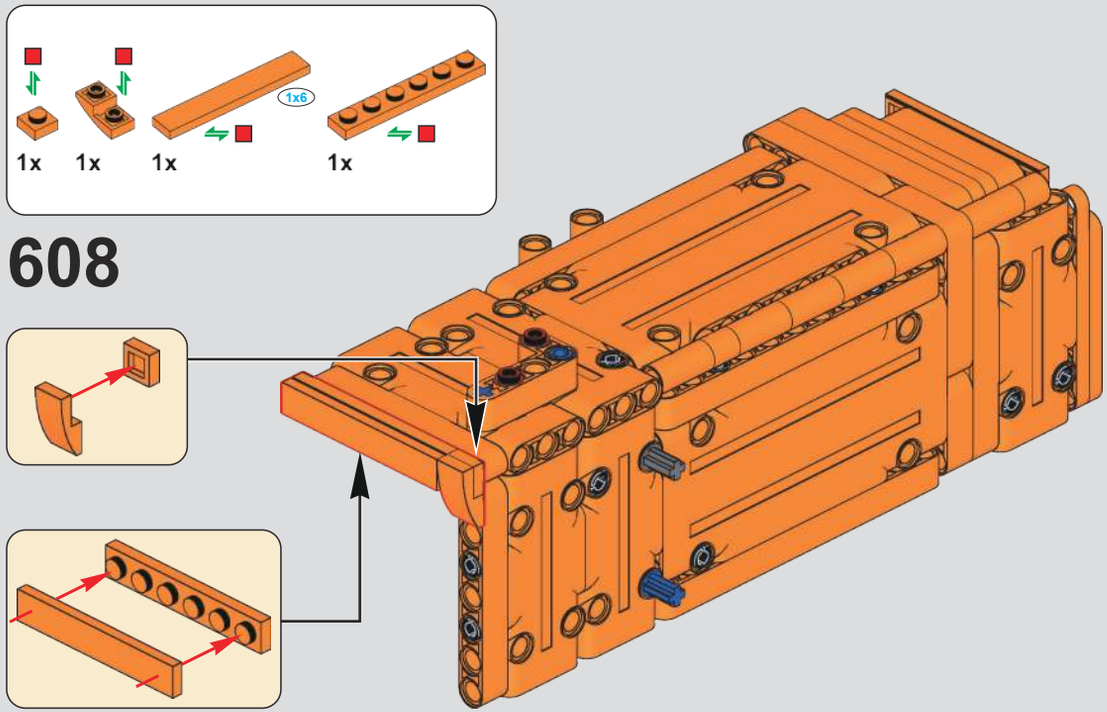

608

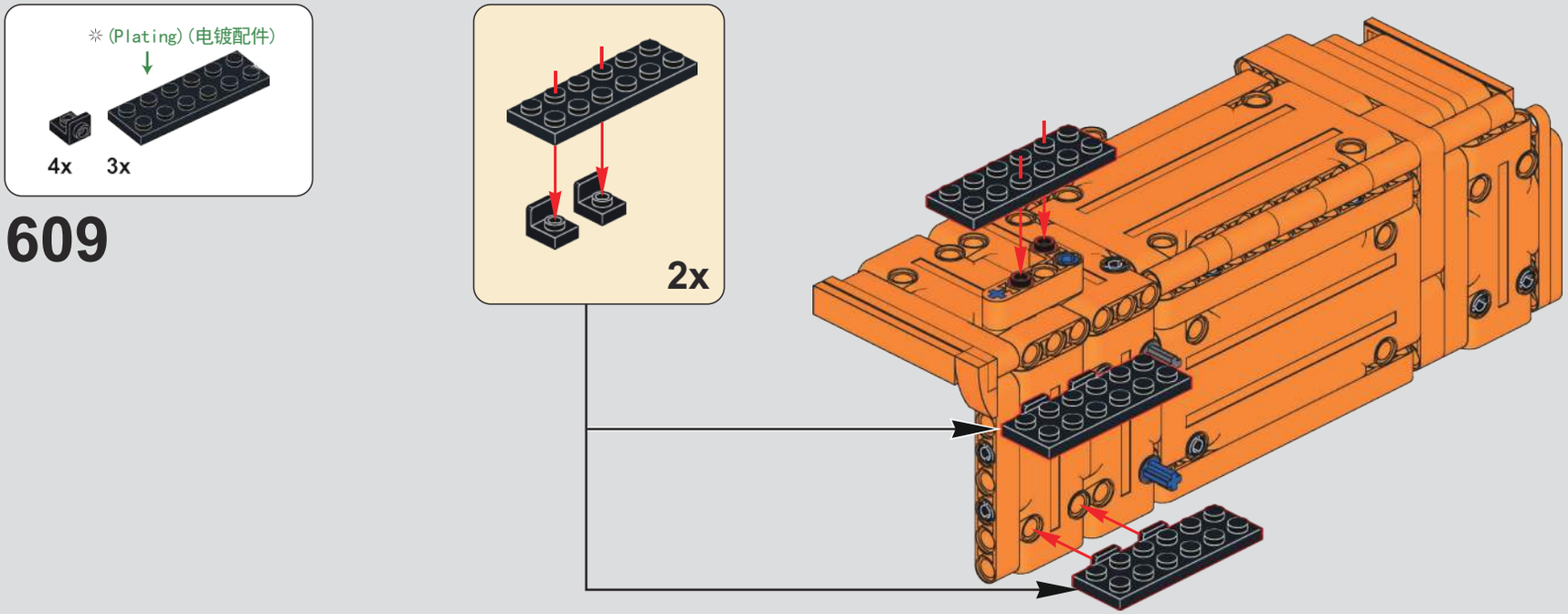

609

※ (Plating) (电镀配件)
4
1x
1x
1x

610

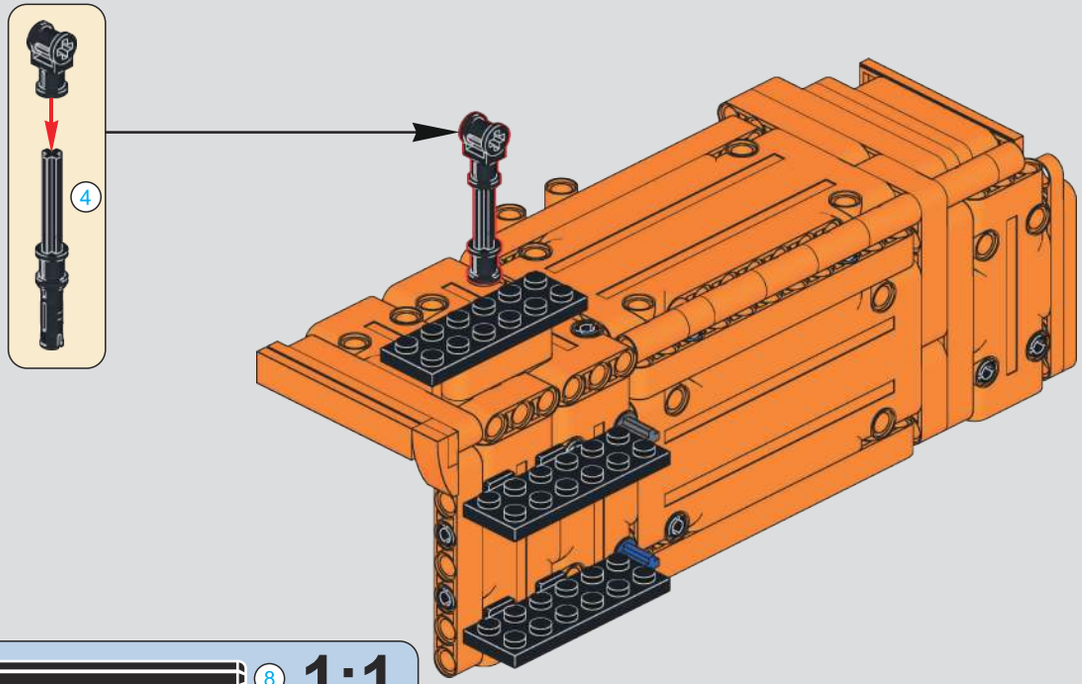
4

4
8
1:1

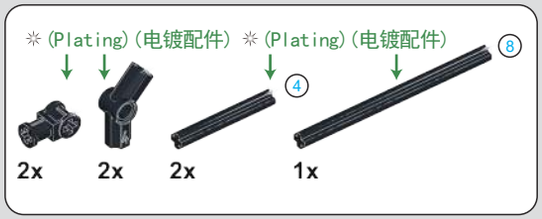
※ (Plating) (电镀配件)
※ (Plating) (电镀配件)
8
4
2x
2x
2x
1x

611

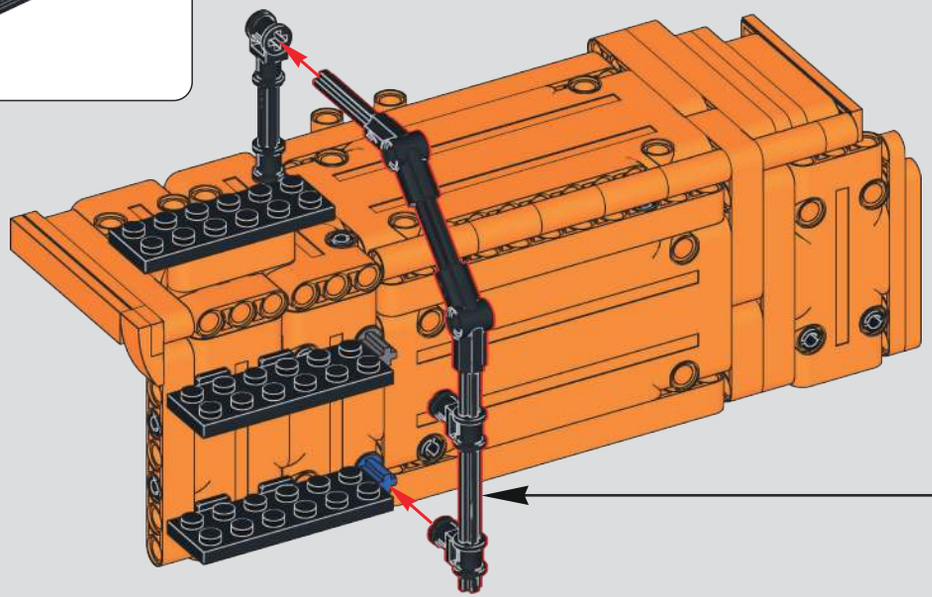

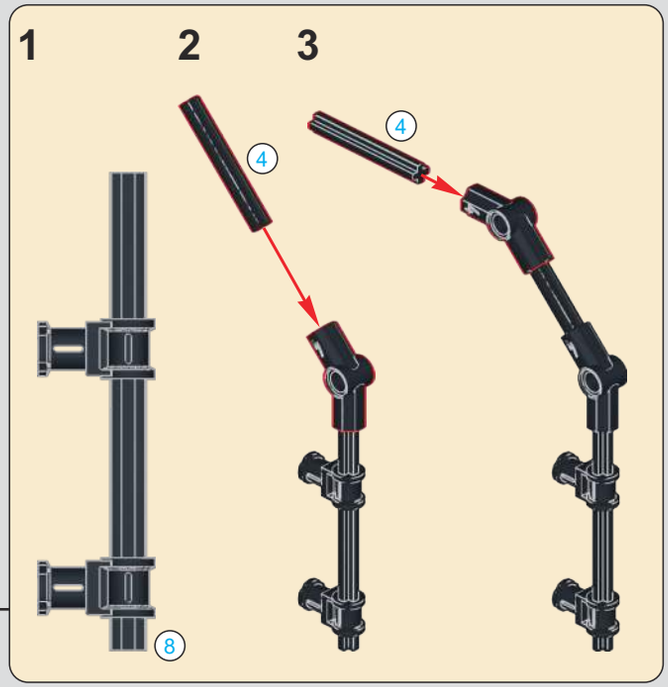
1
2
3
4
4
8

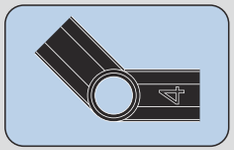

612

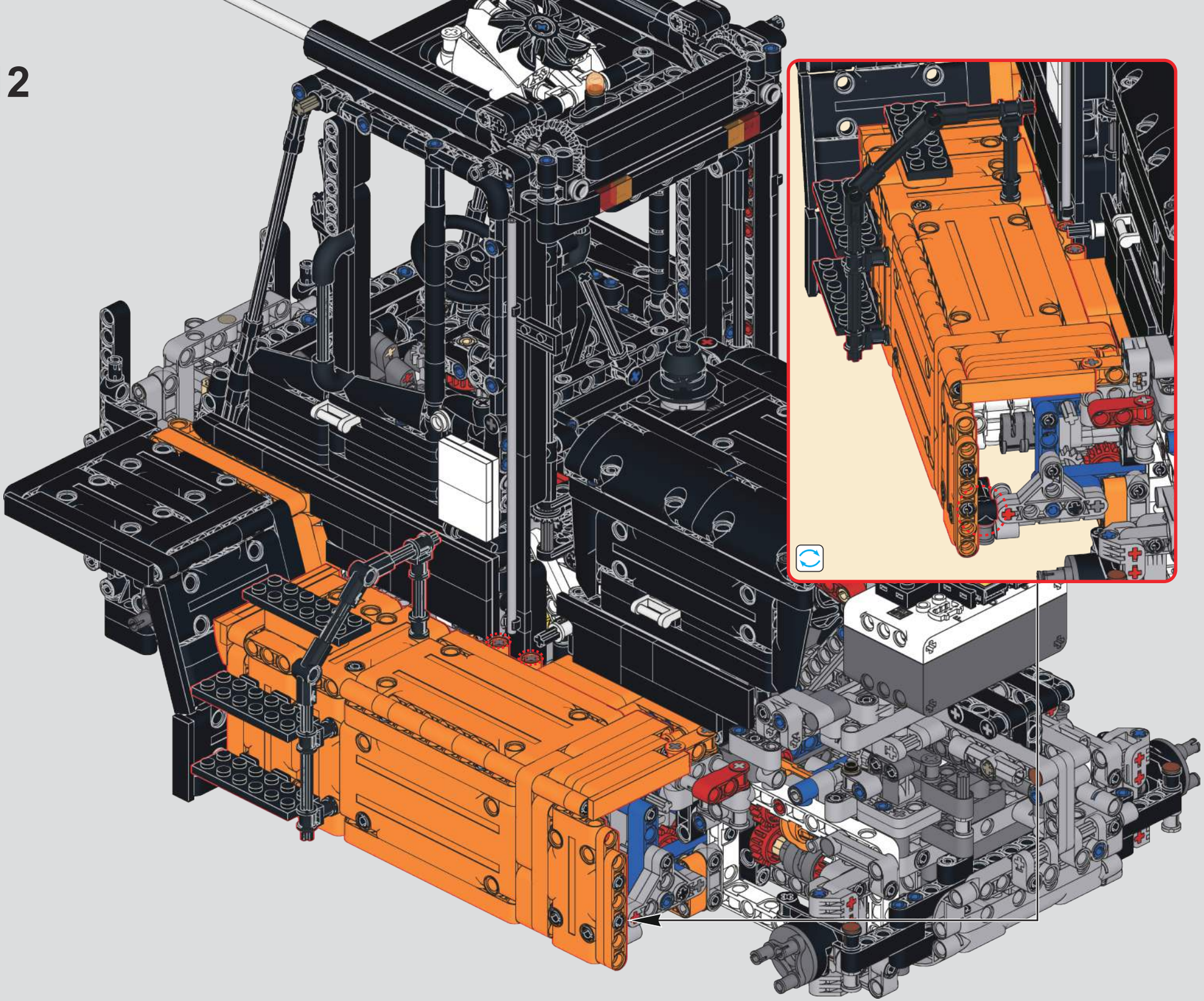

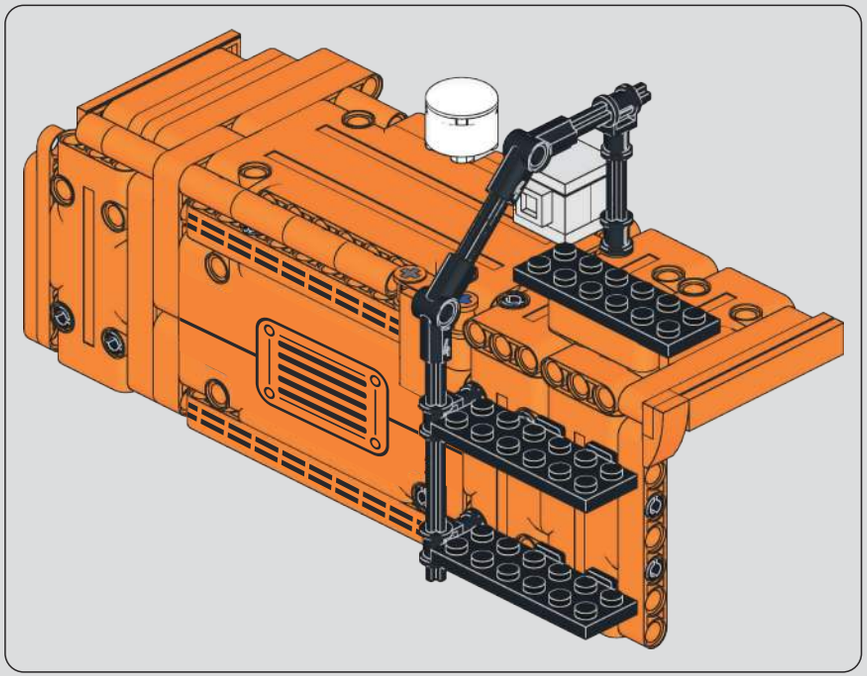

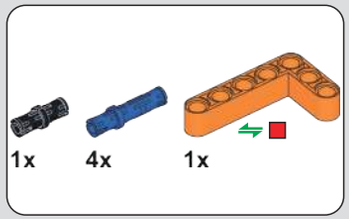

613

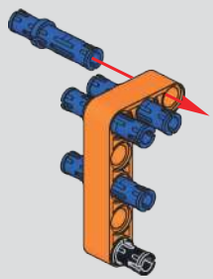

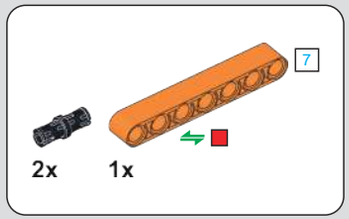

614

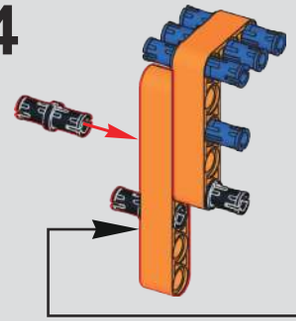

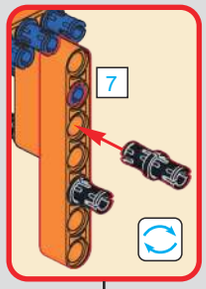

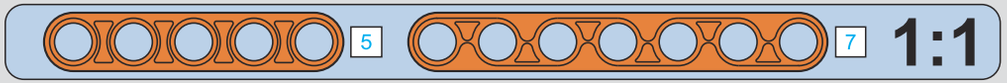

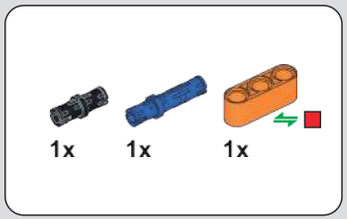

615

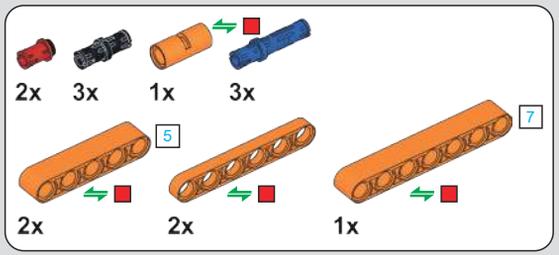

616

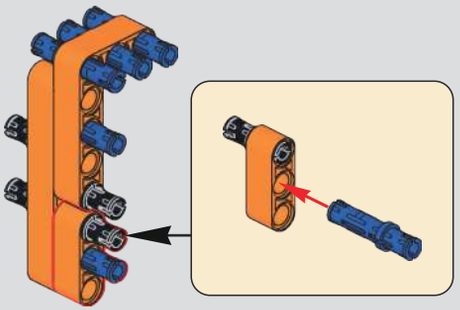

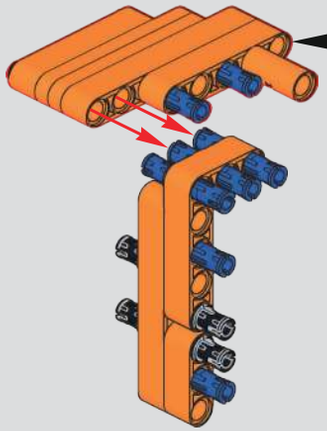

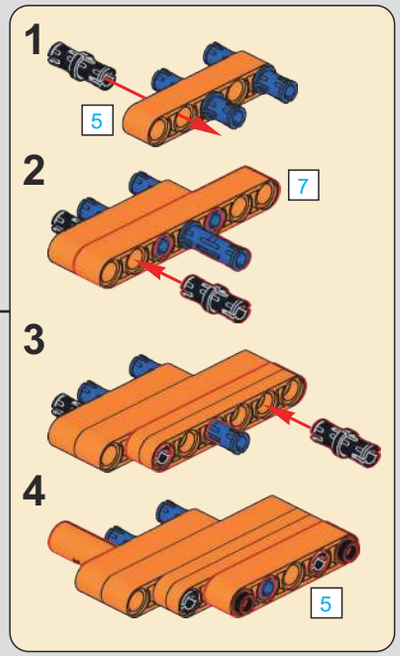

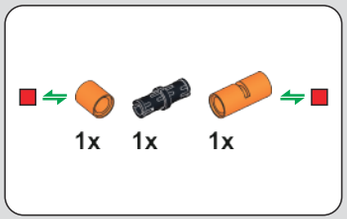

617

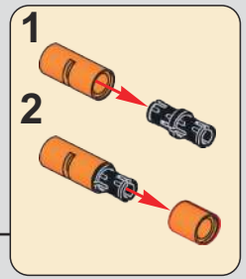

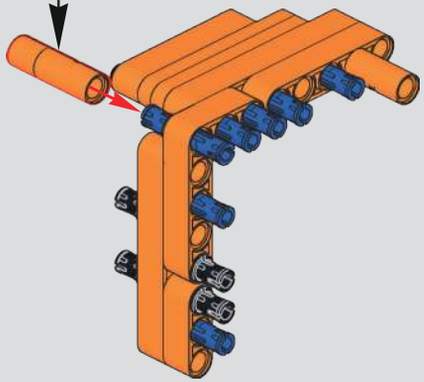

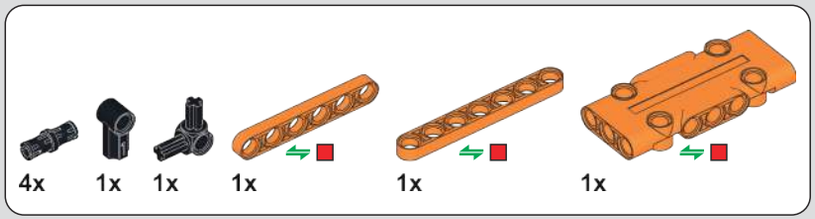

618

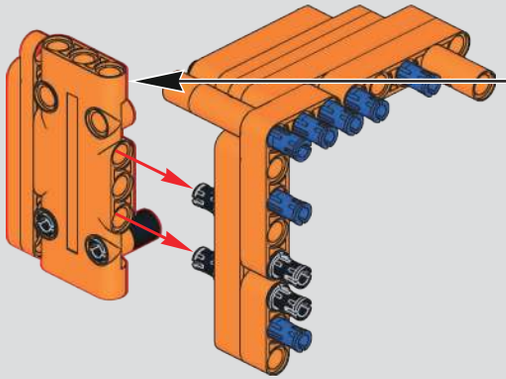

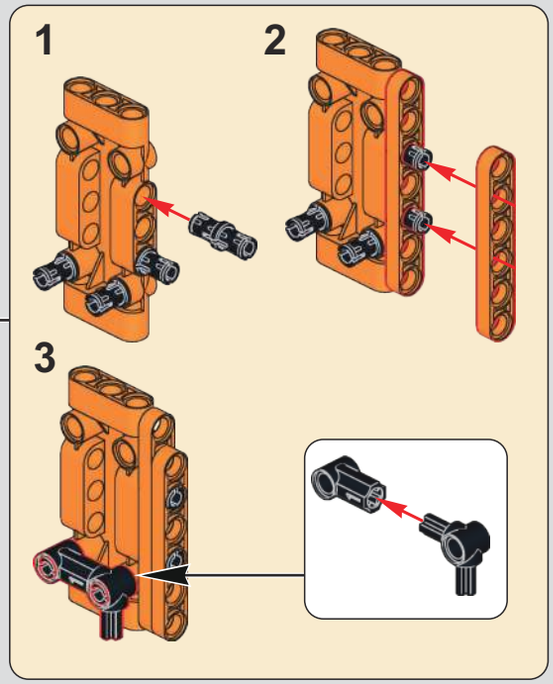

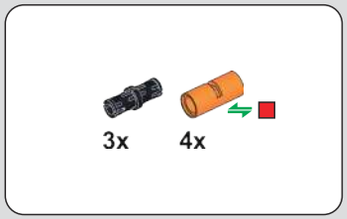

619

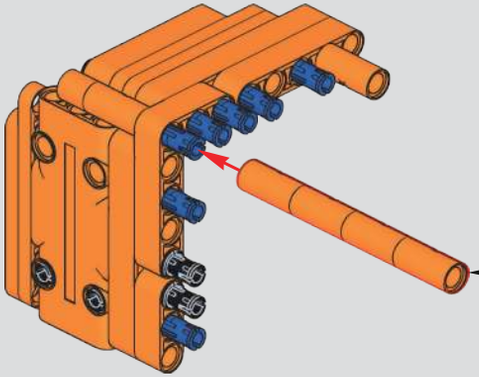

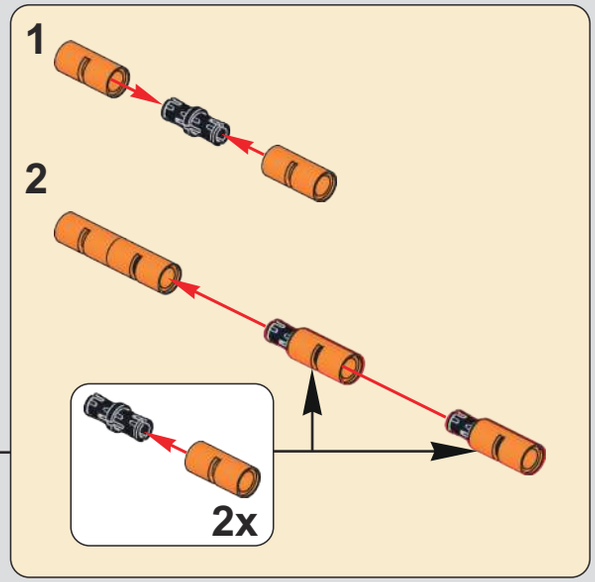

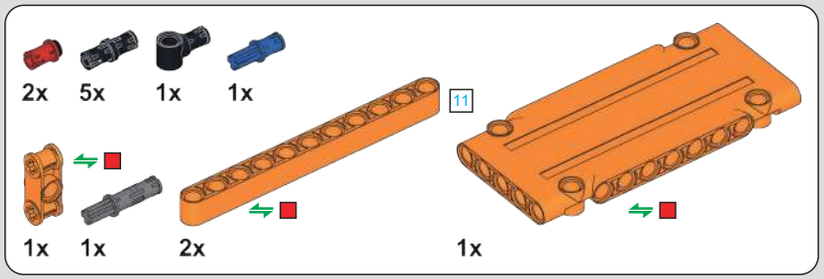

620

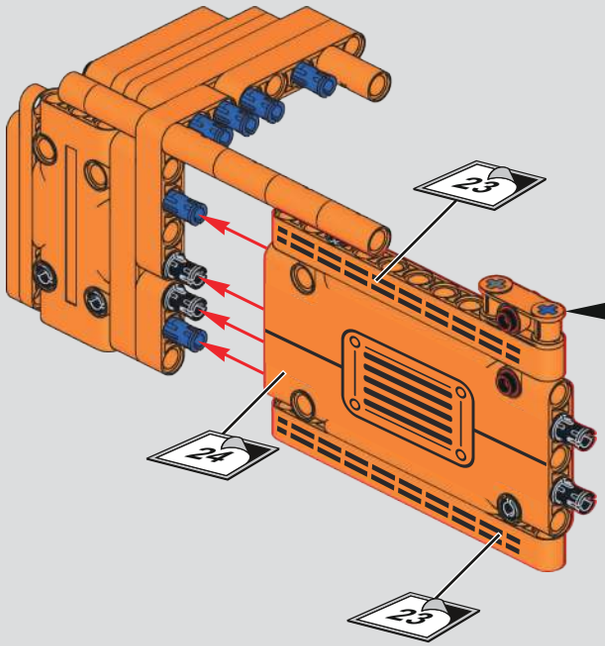

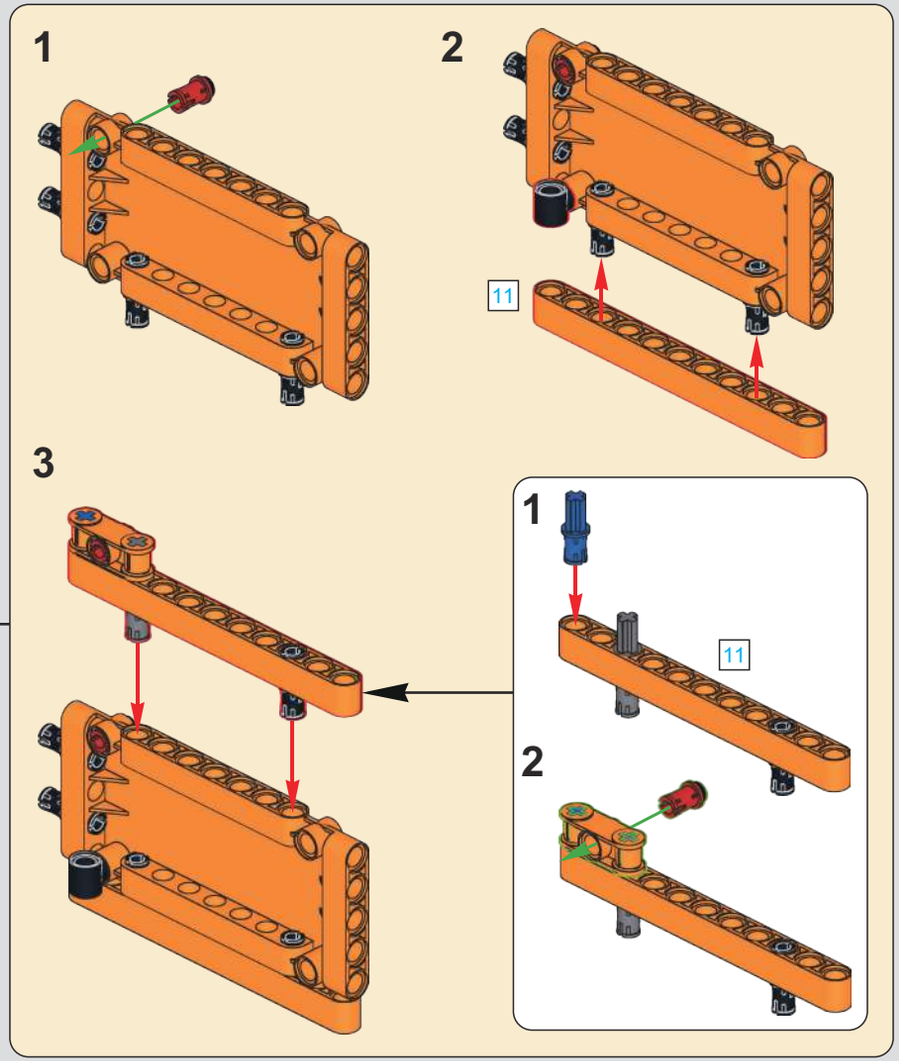

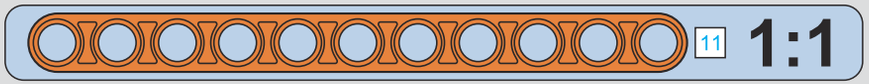

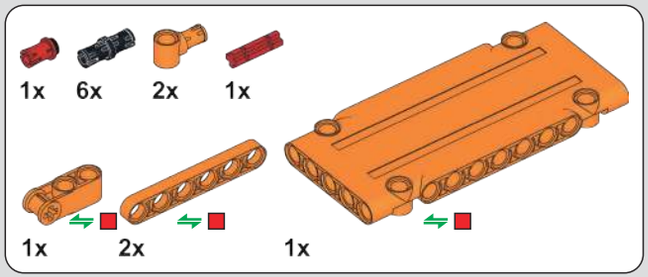

621

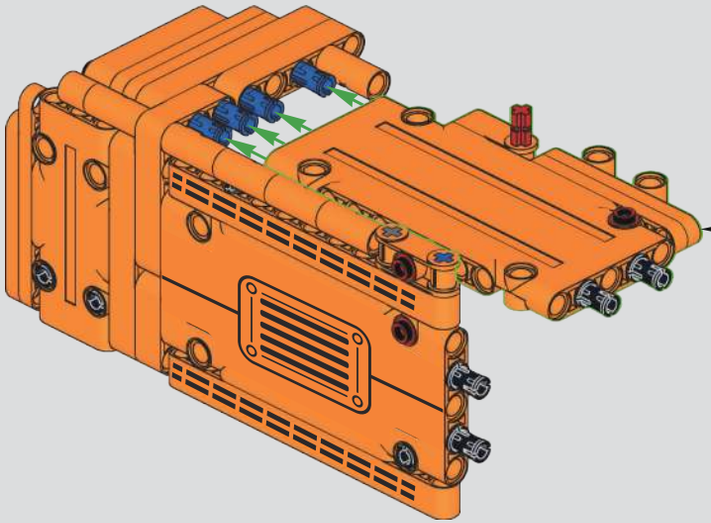

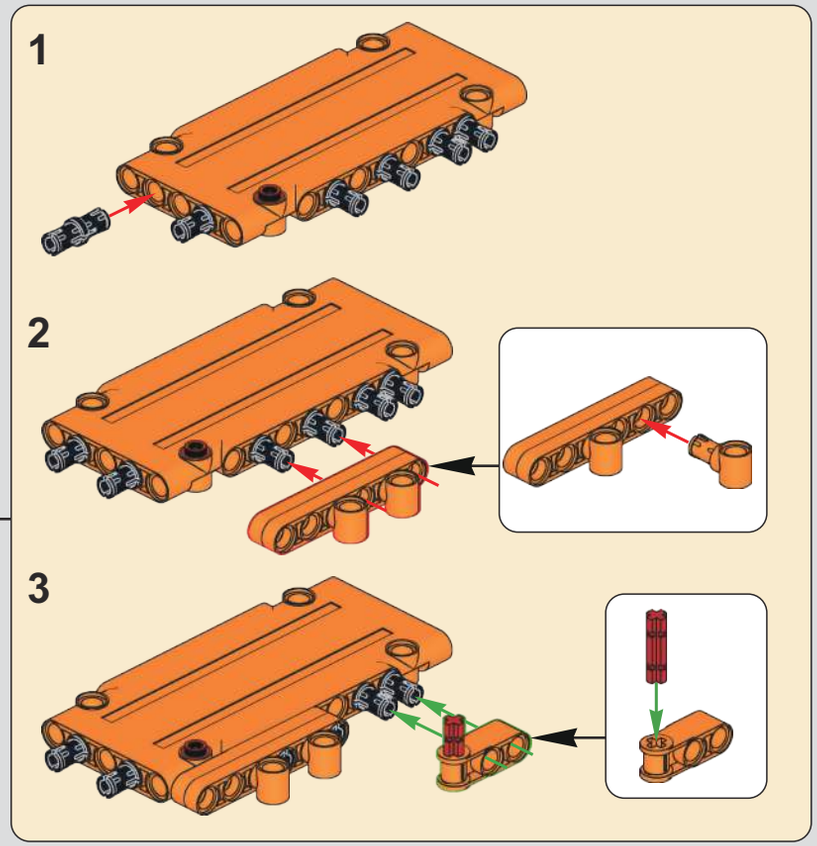

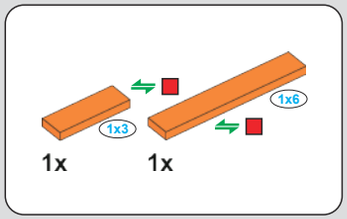

622

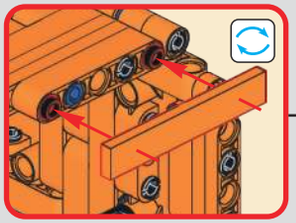

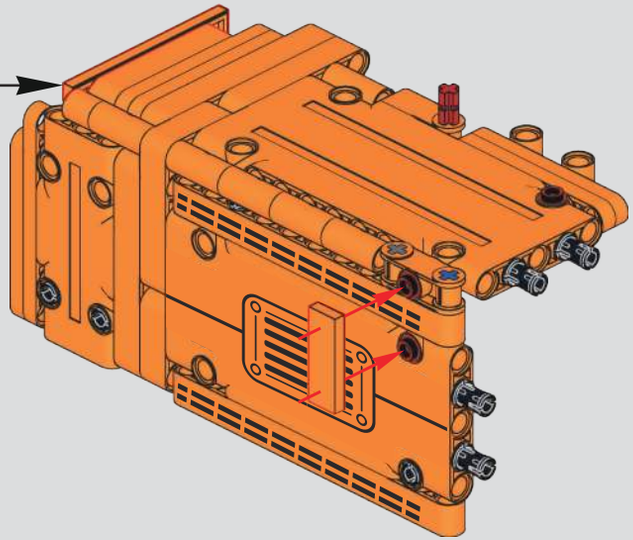

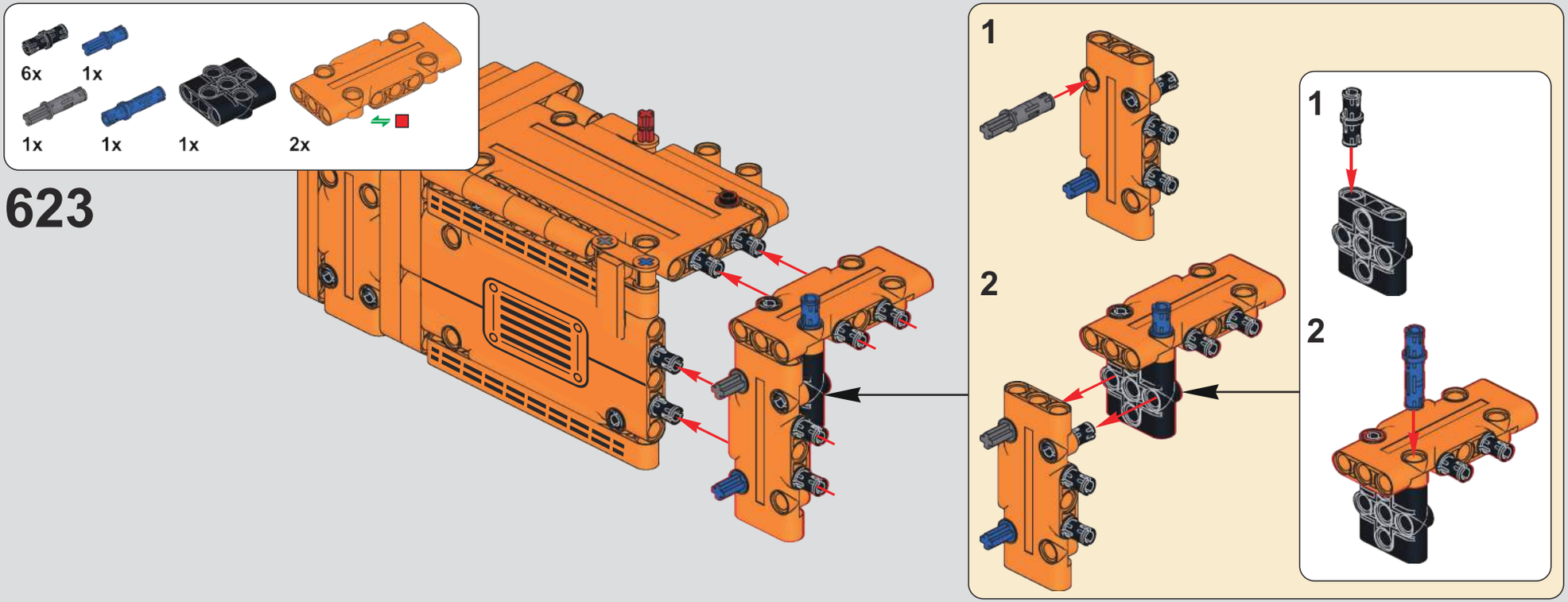
6x
1x
1x
1x
1x
2x
623
1
2
1
2

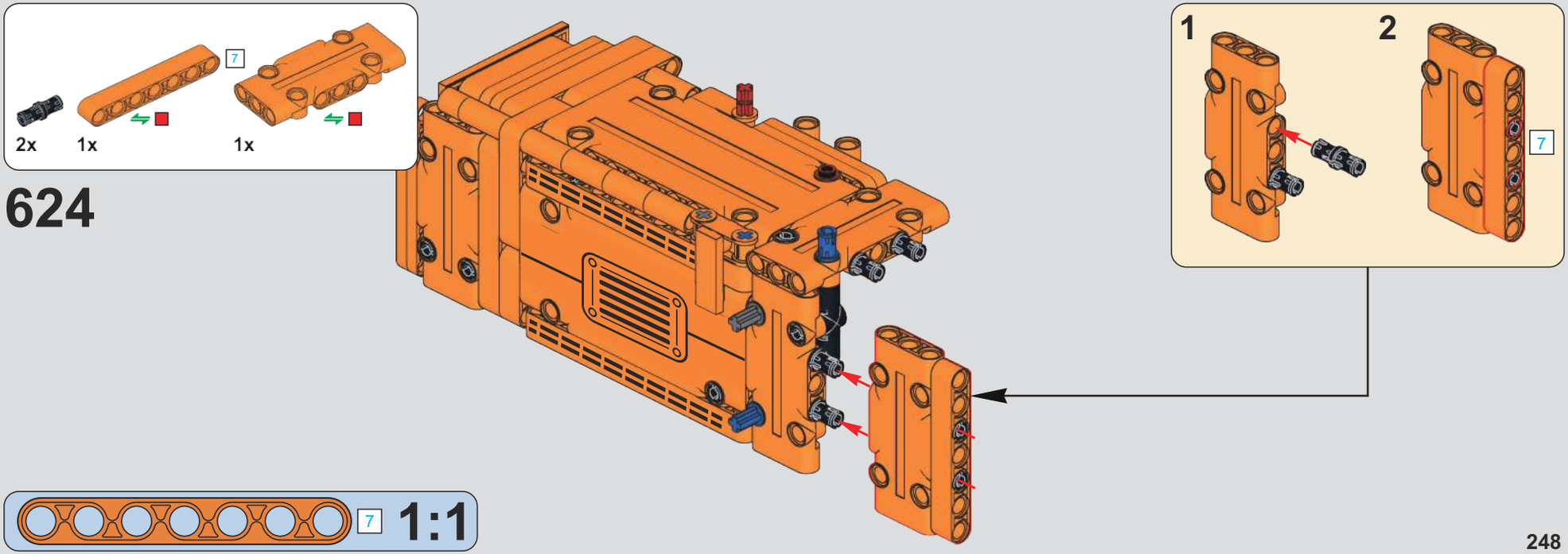
2x
1x
7
1x
624
1
2
7
7
1:1

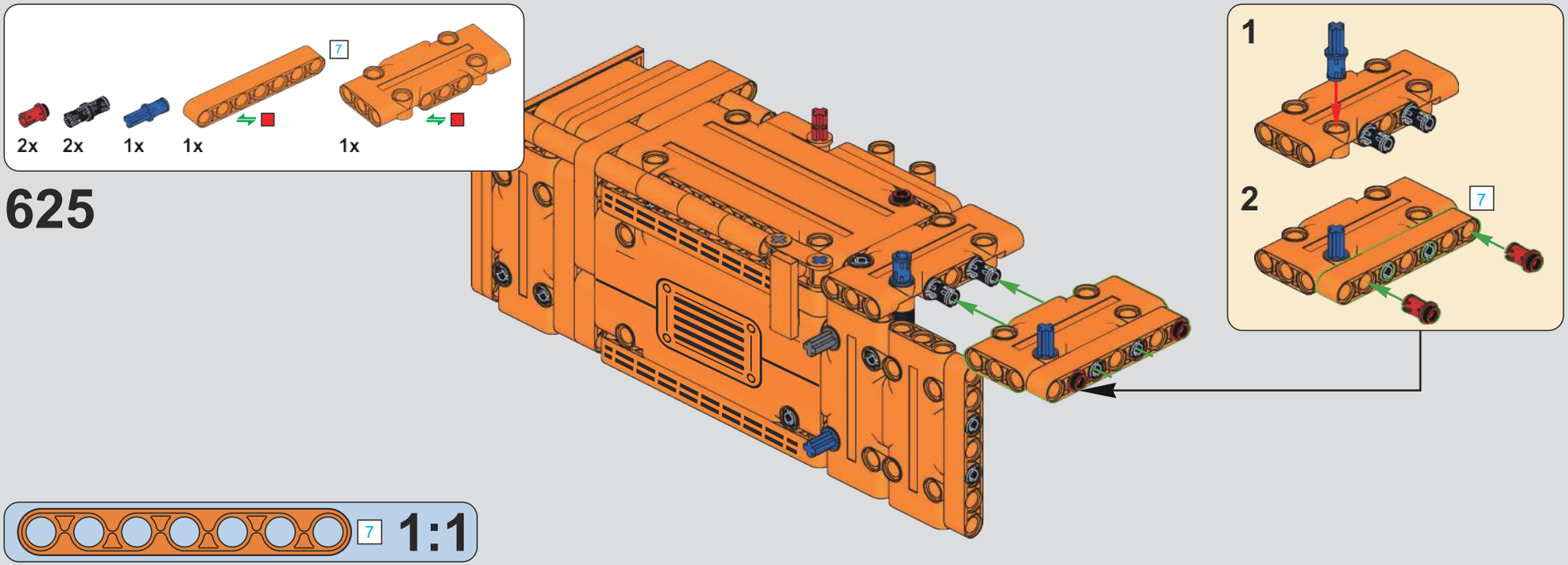
2x
2x
1x
1x
7
1x
625
1
2
7
7
1:1

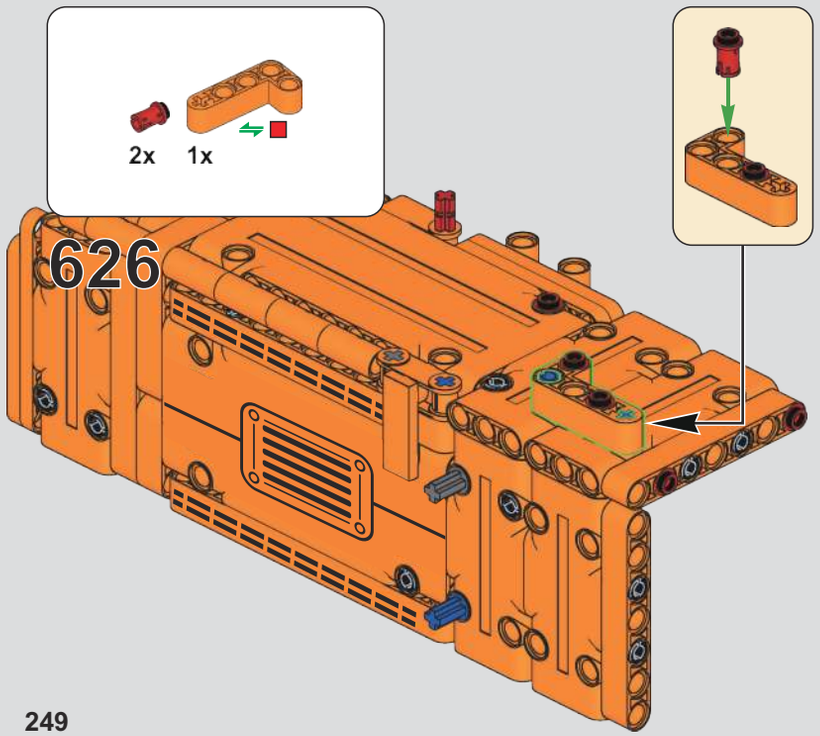
2x
1x
626

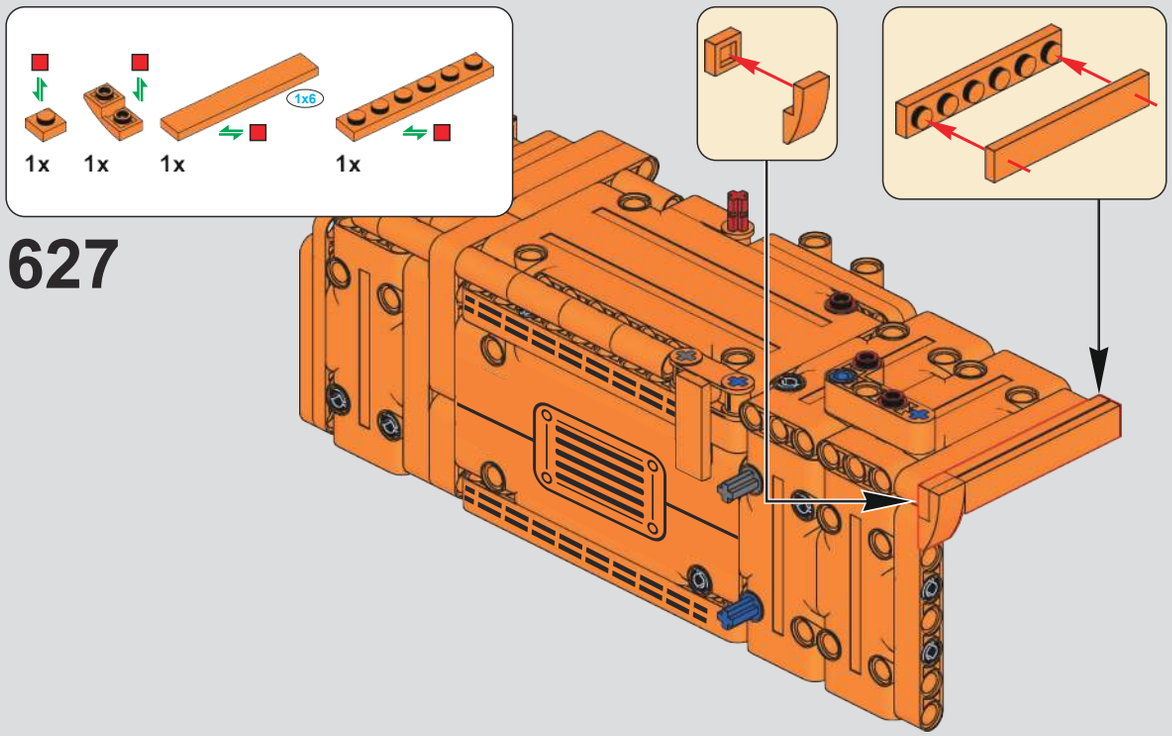
1x
1x
1x
1x6
1x
627

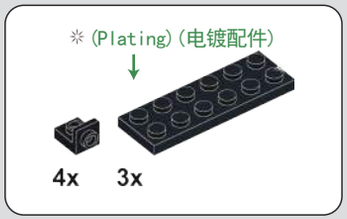
※ (Plating) (电镀配件)
4x
3x

628

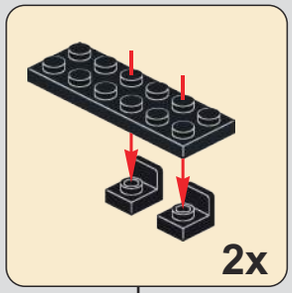
2x

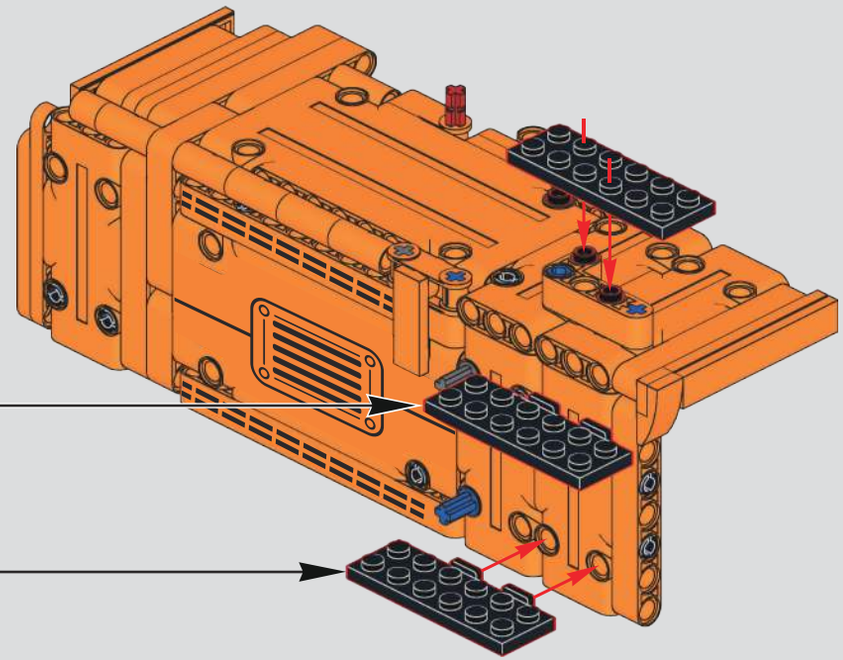

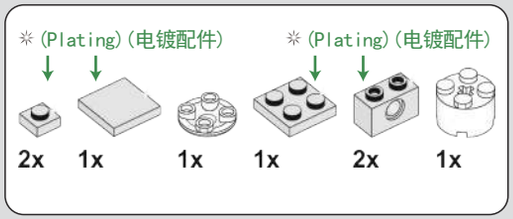
※ (Plating) (电镀配件)
※ (Plating) (电镀配件)
2x
1x
1x
1x
2x
1x

629

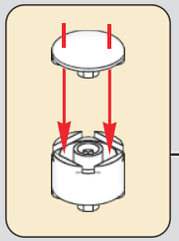

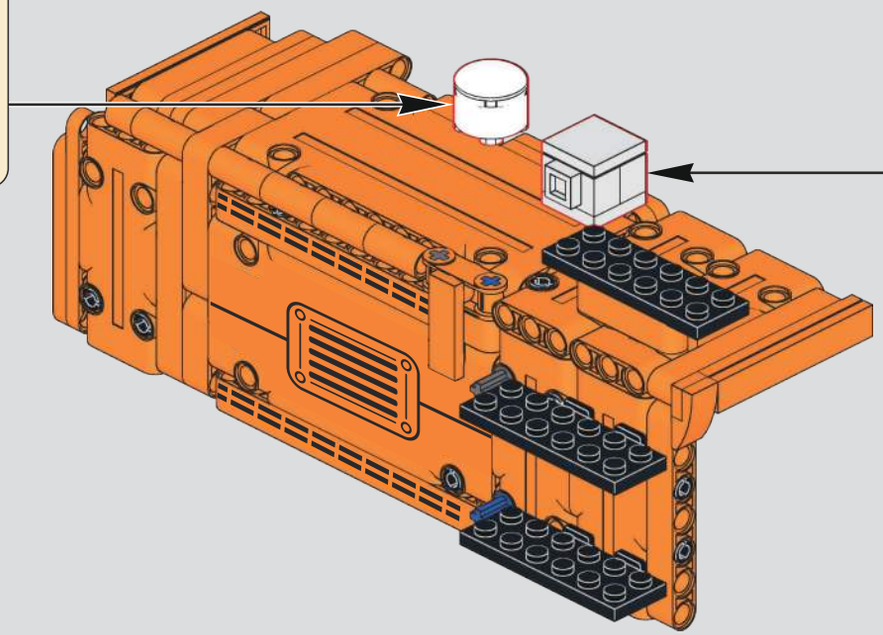

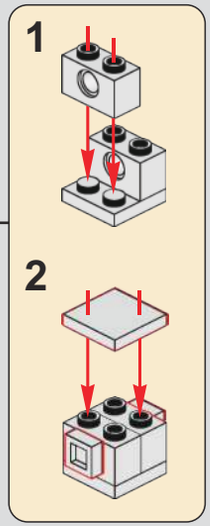
1
2

※ (Plating) (电镀配件)
4
1x
1x
1x

630

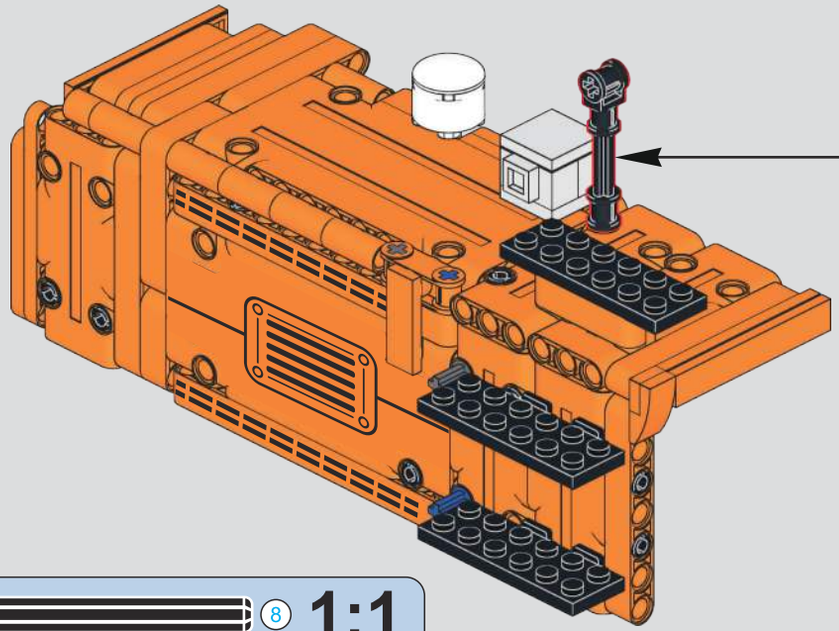

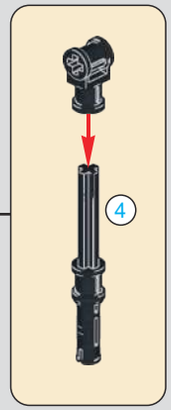
4

4
8
1:1

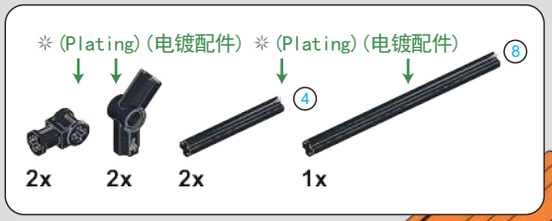
※ (Plating) (电镀配件)
※ (Plating) (电镀配件)
8
4
2x
2x
2x
1x

631

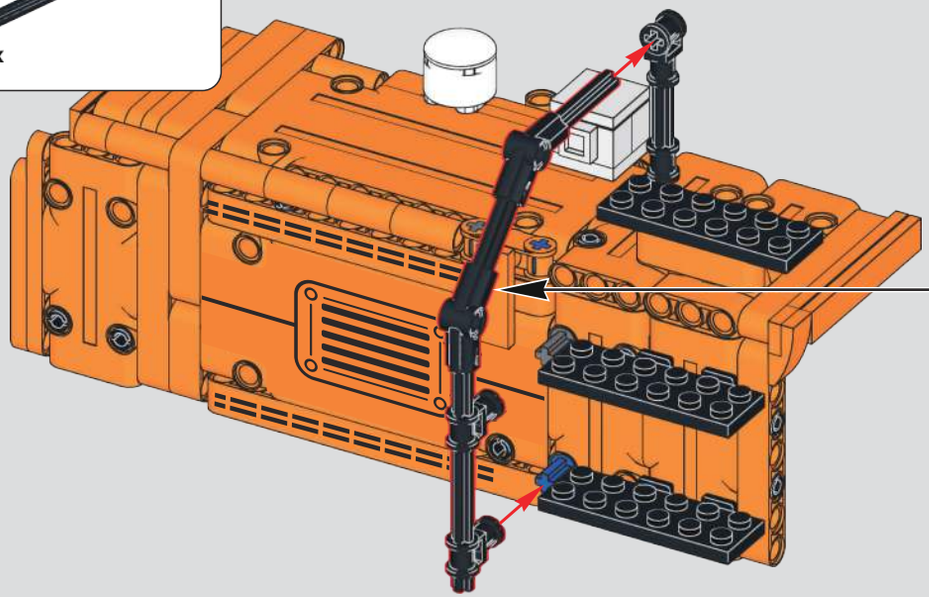

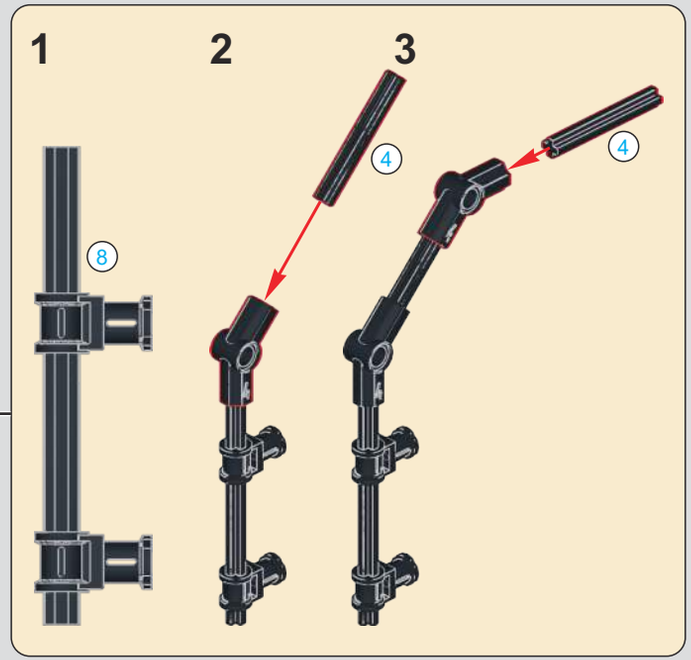
1
2
3
8
4
4

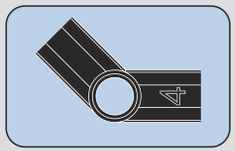

632

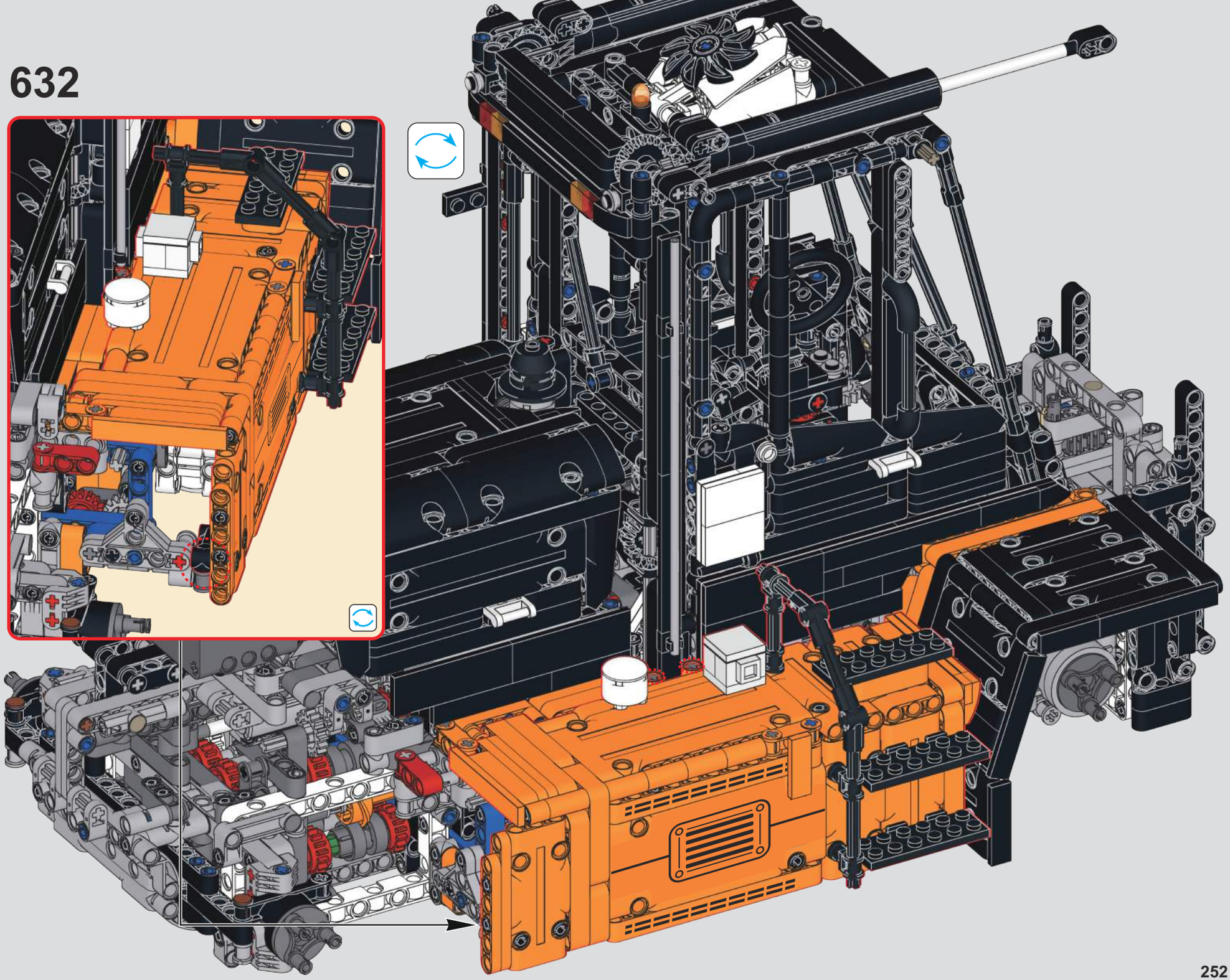

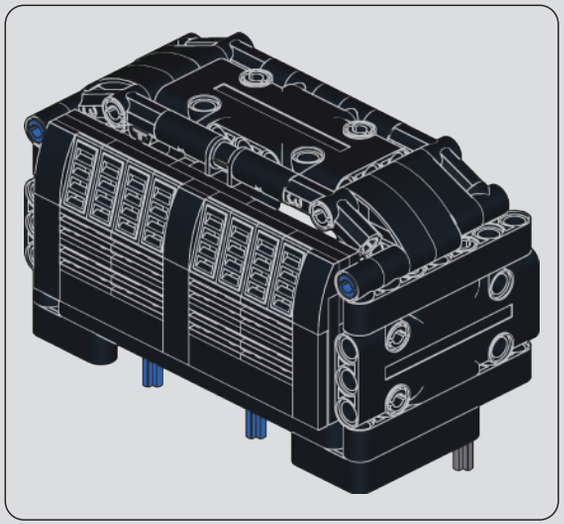

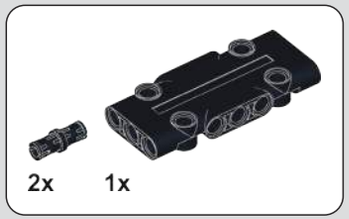

633

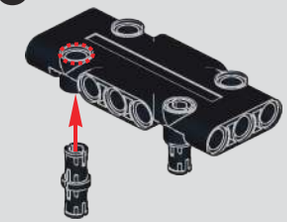

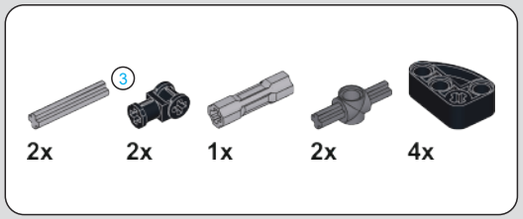

634

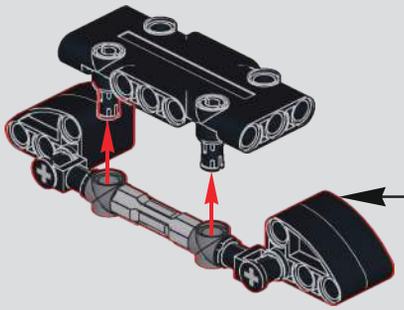

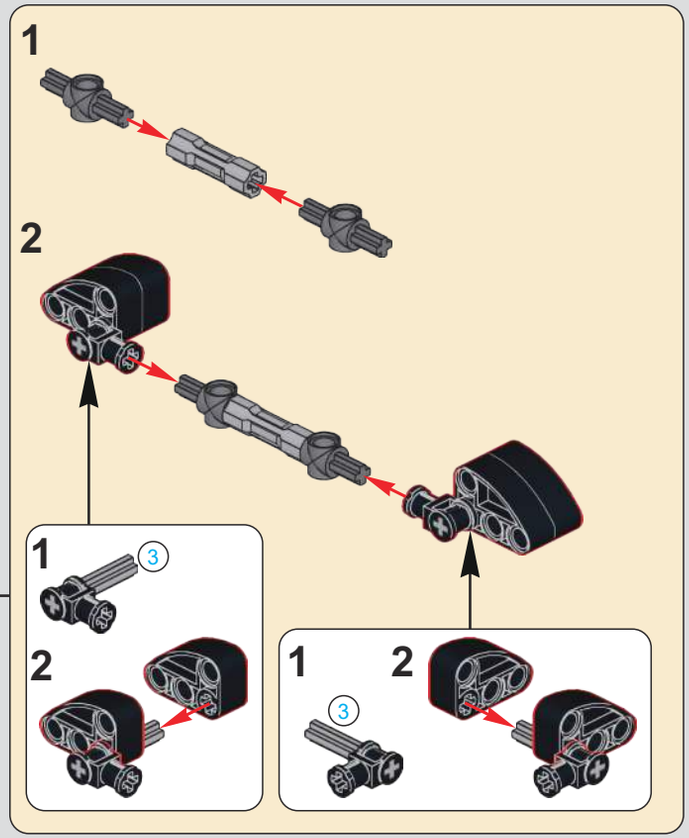

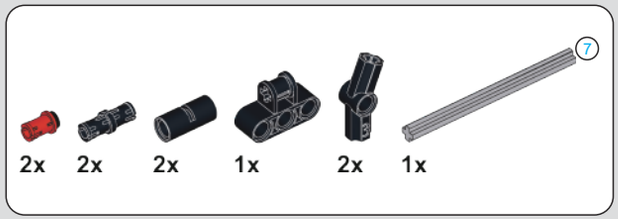

635

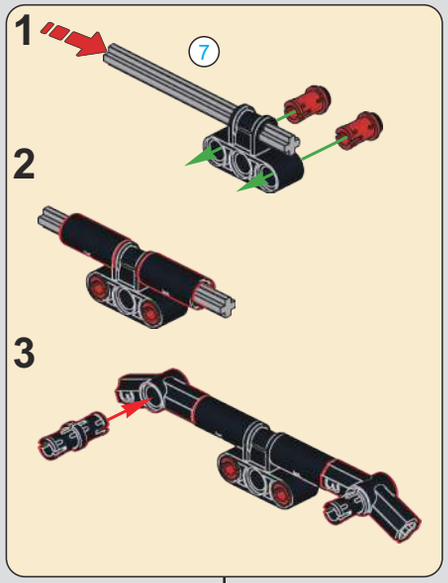

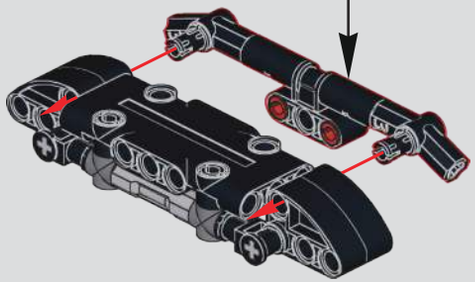

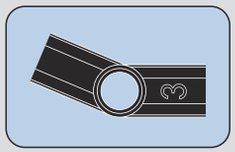

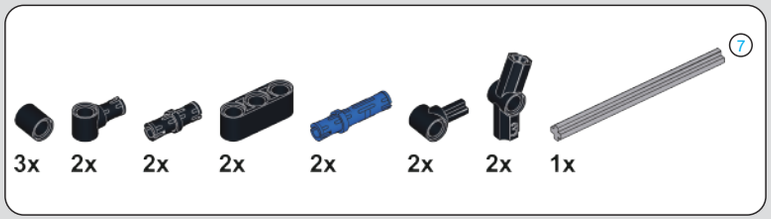

636

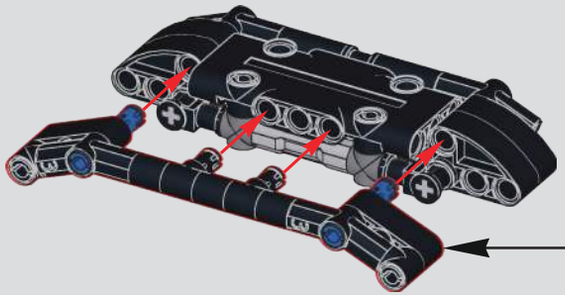

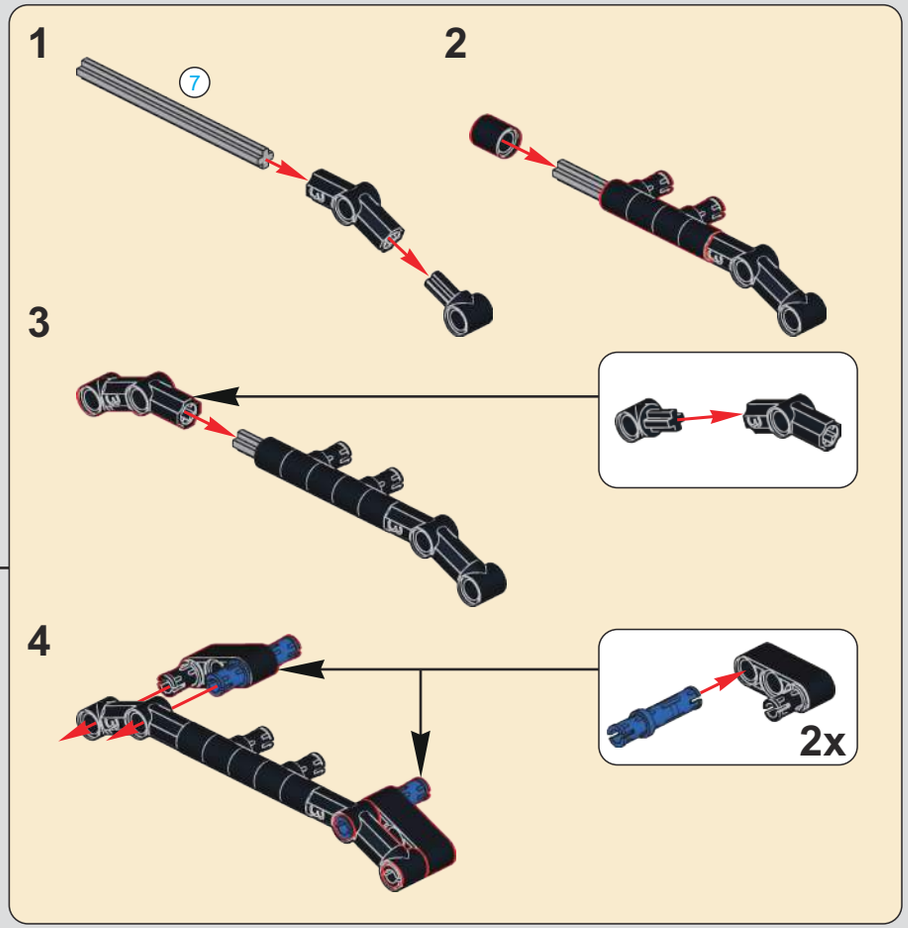

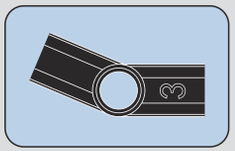

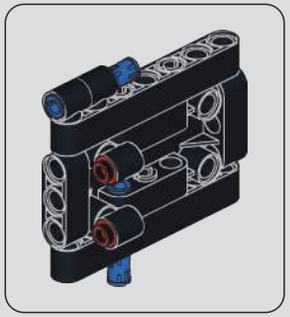

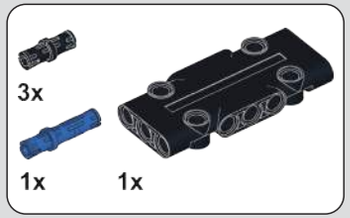

637

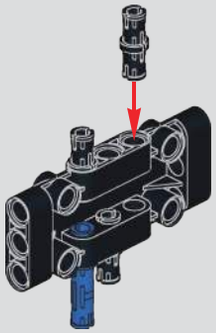

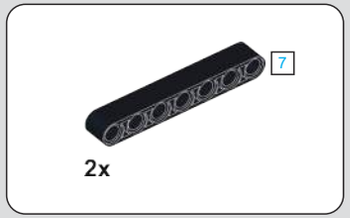

638

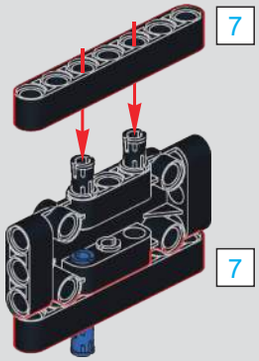

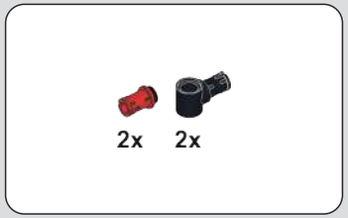

639

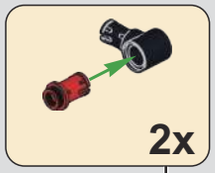

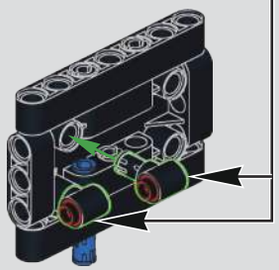

640

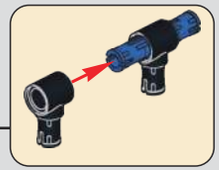

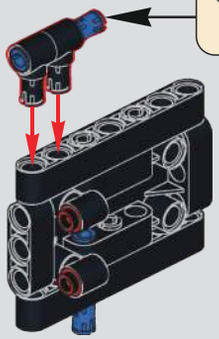

641

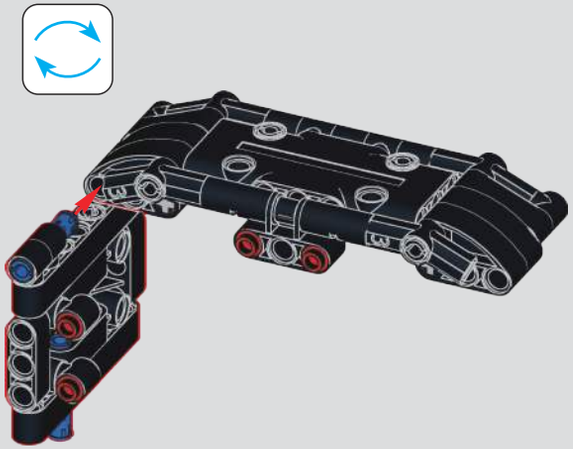

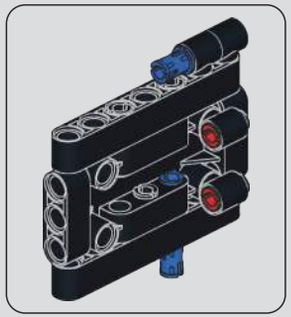

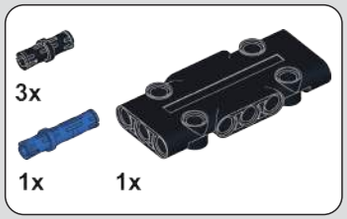

642

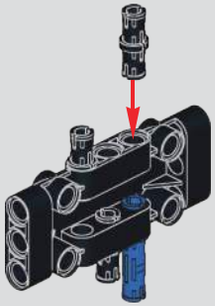

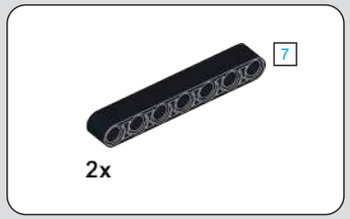

643

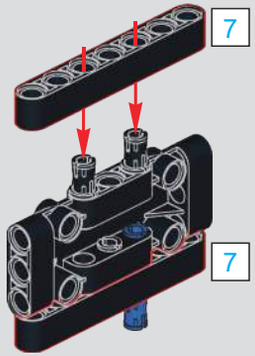

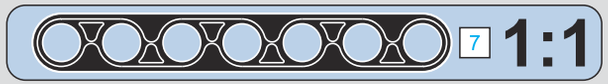

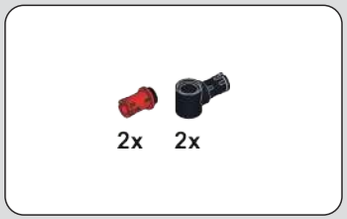

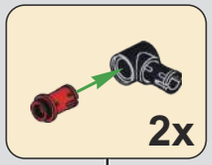

644

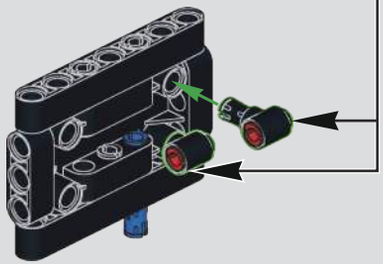

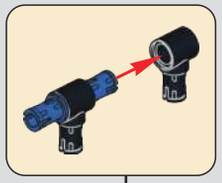

645

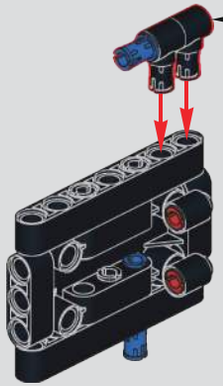

646

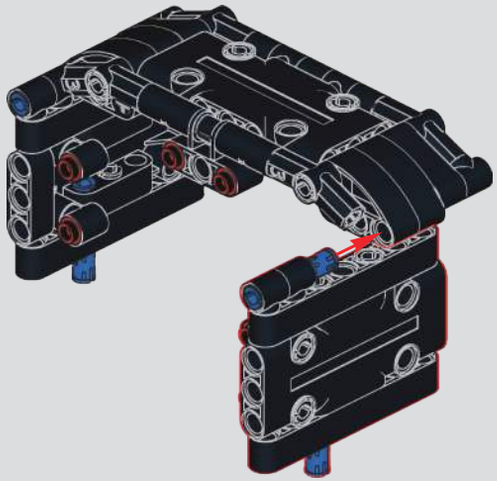

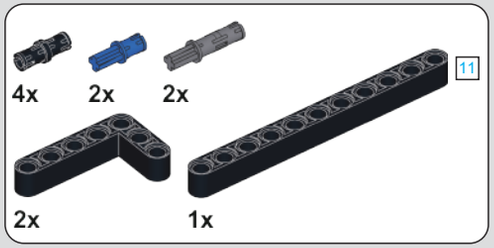

647

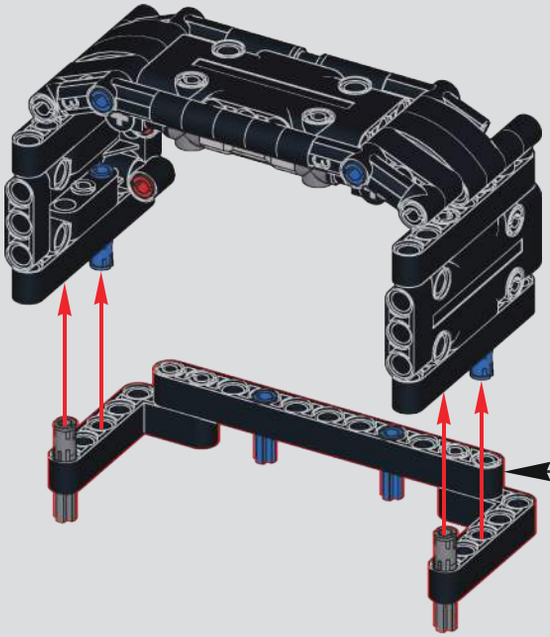

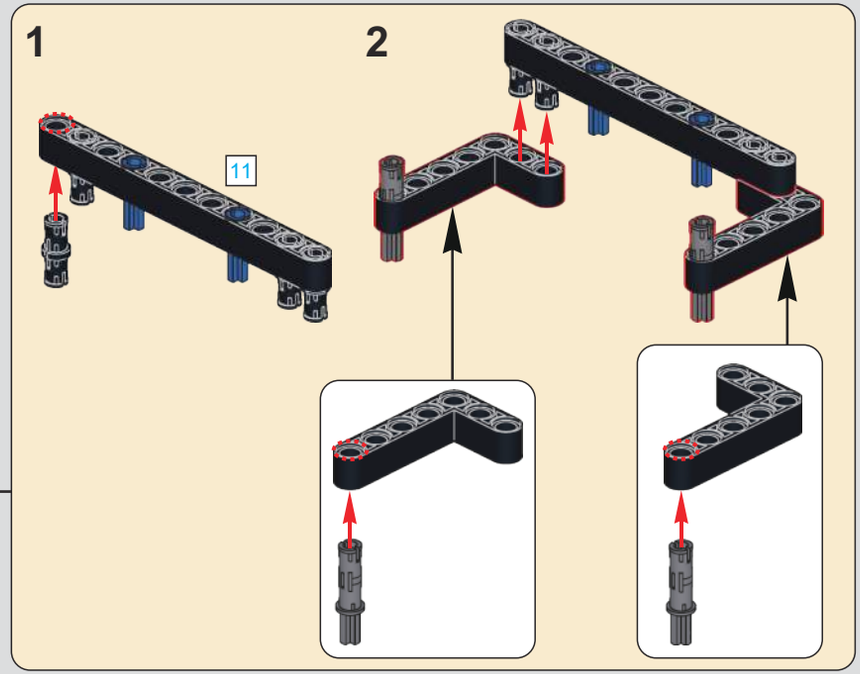

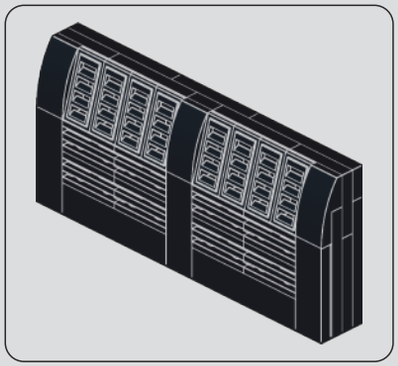

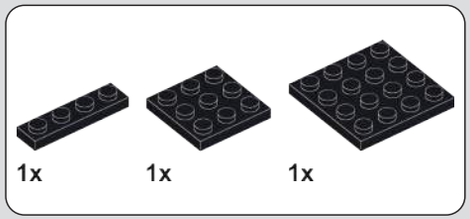

648

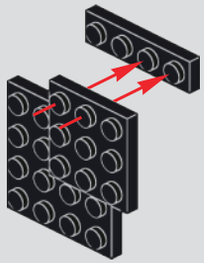

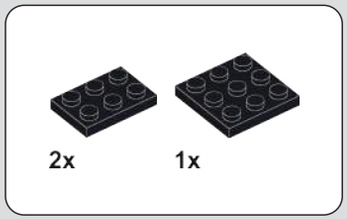

649

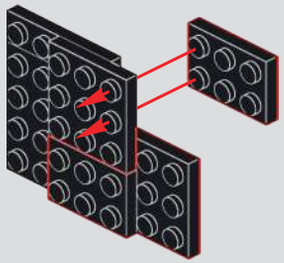

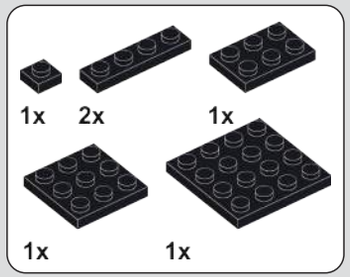

650

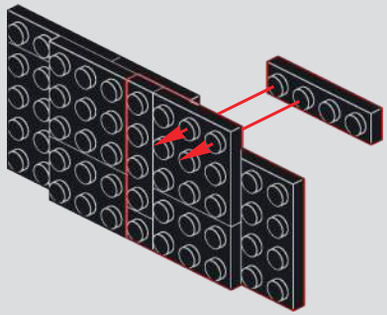

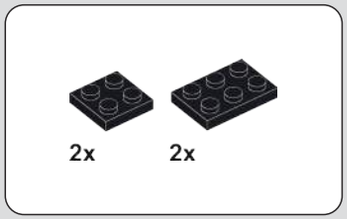

651

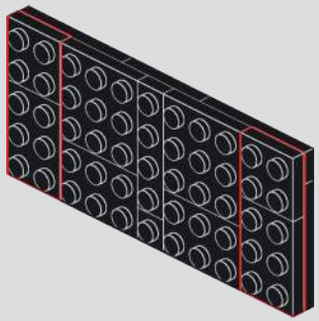

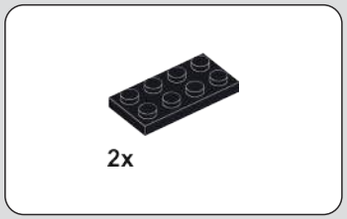

652

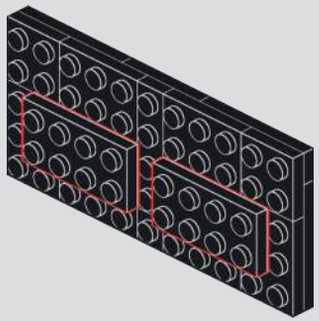

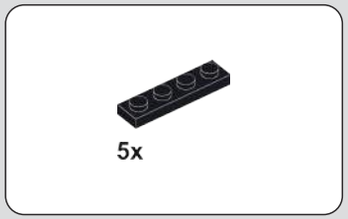

653

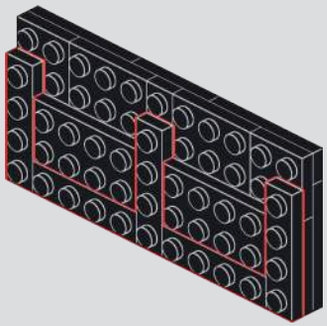

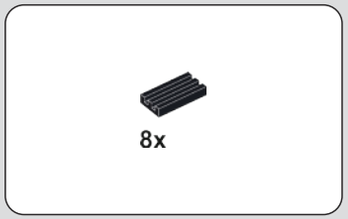

654

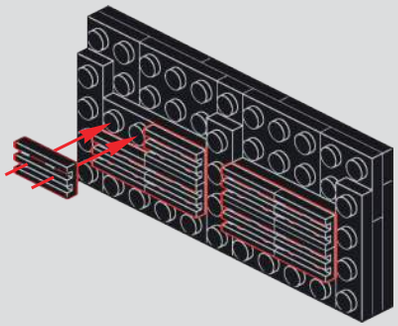

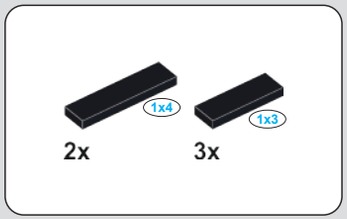

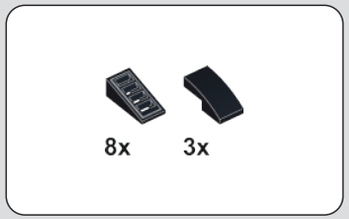

655

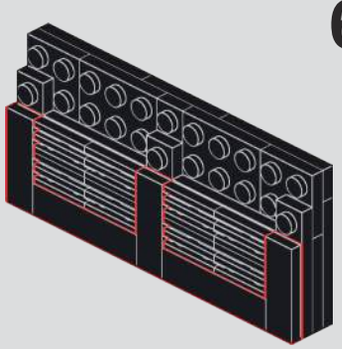

656

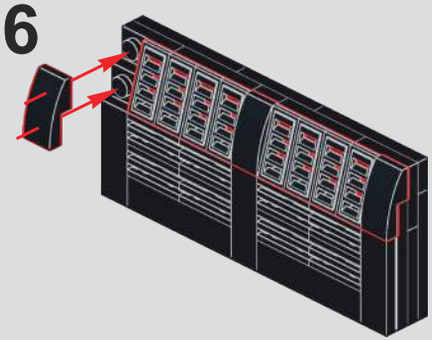

657

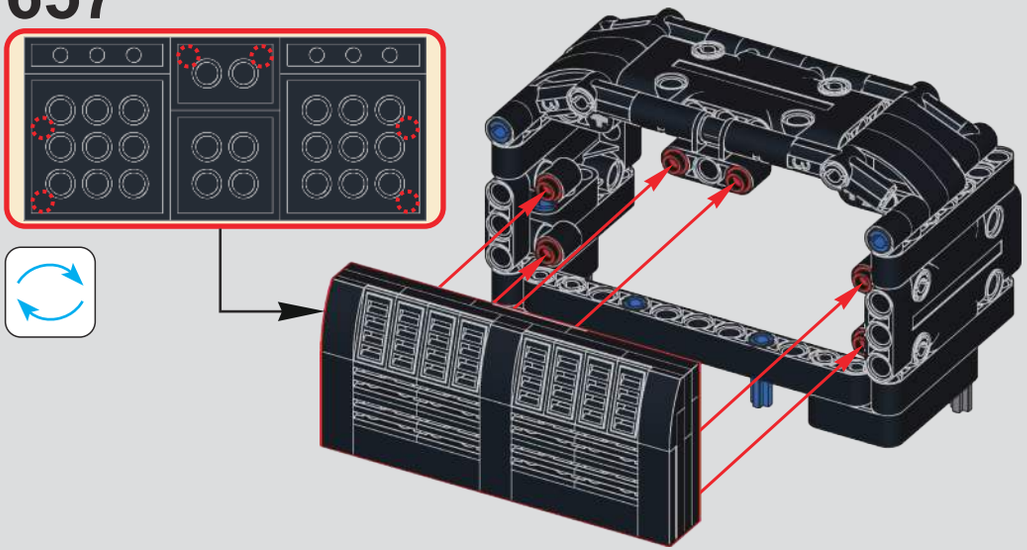

658

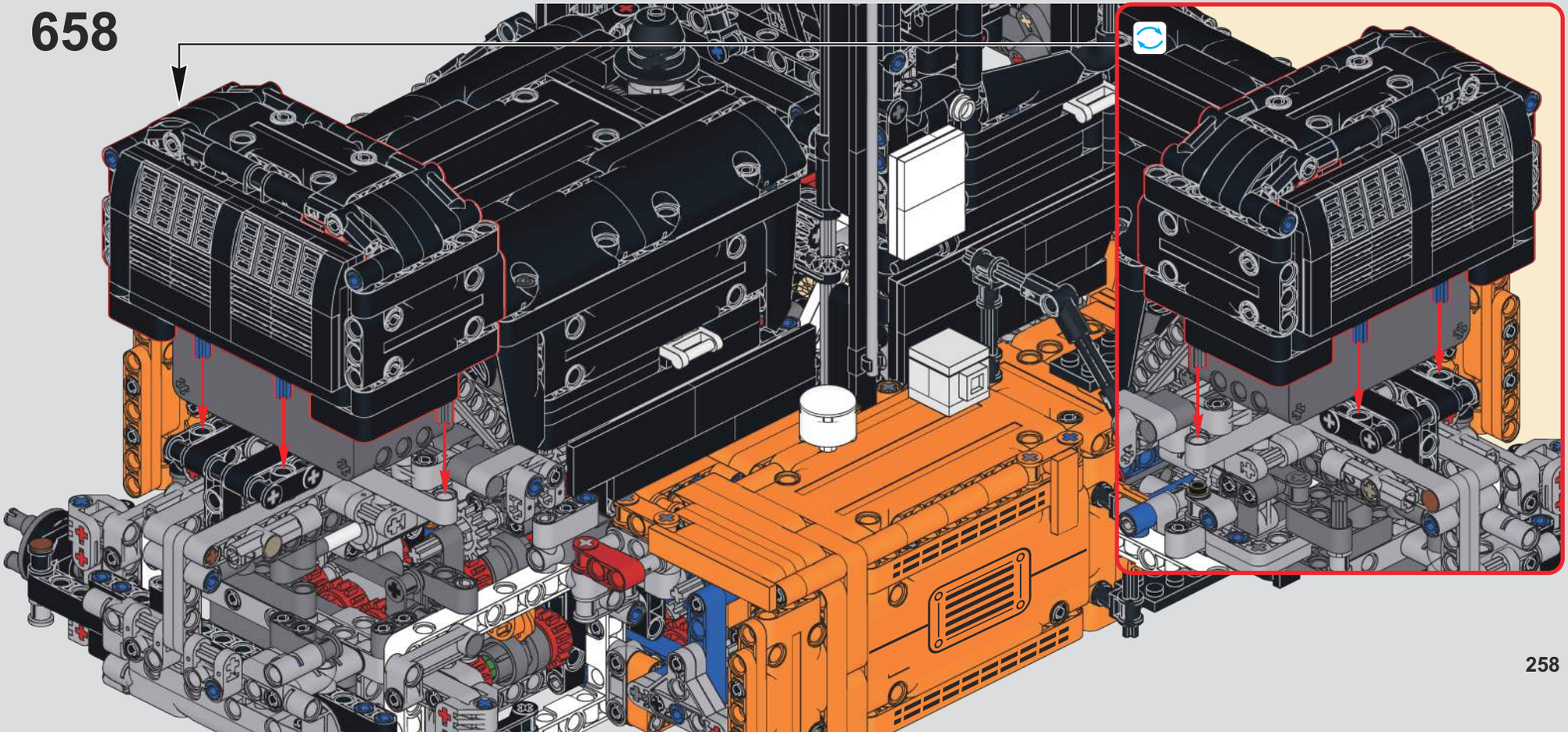

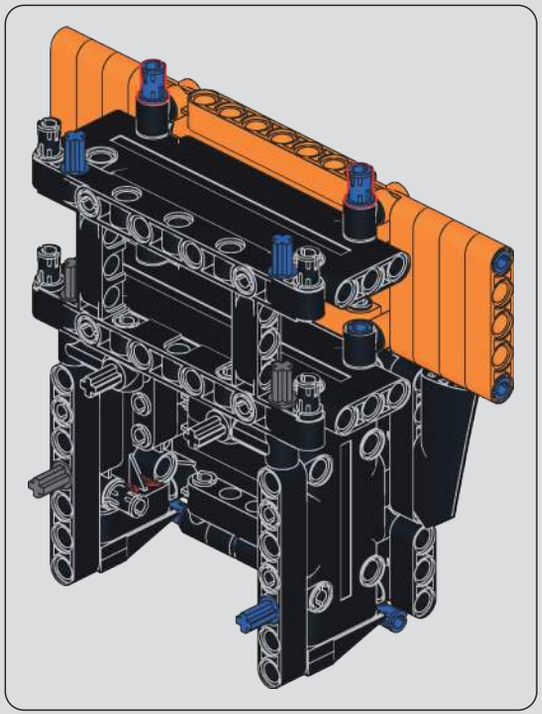

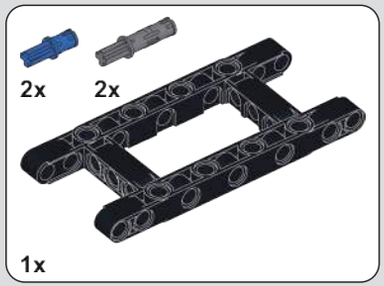

659

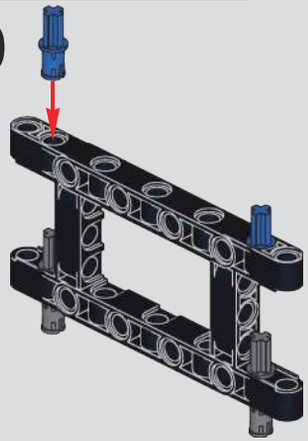

660

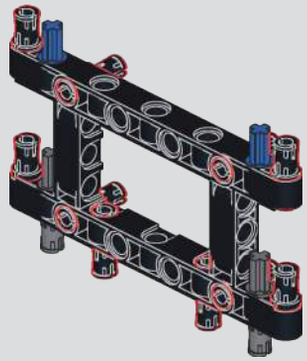

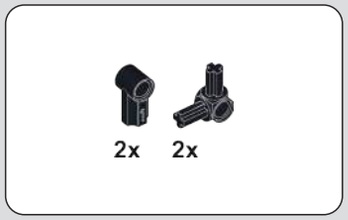

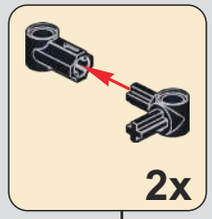

661

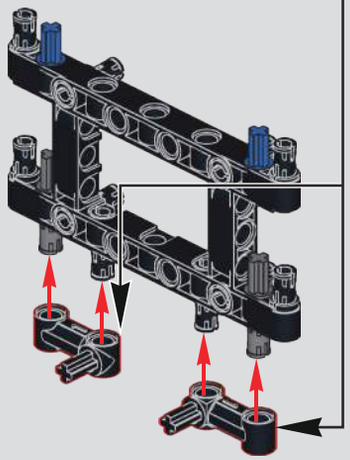

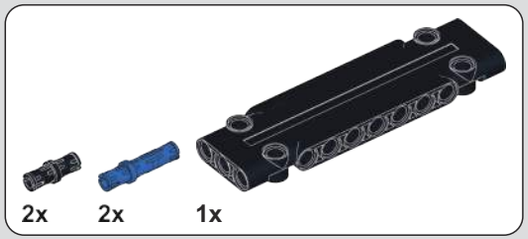

662

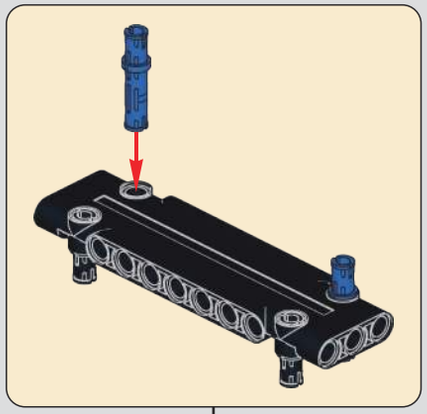

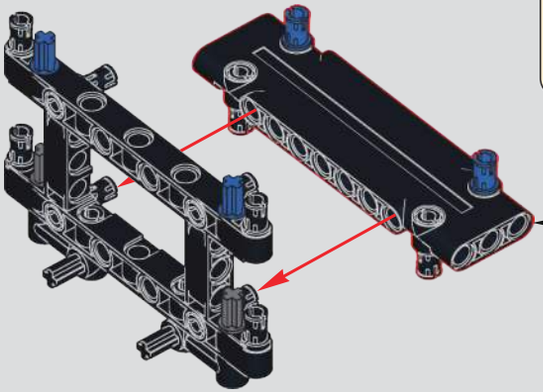

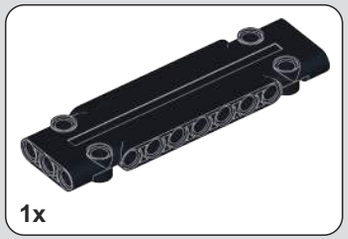

663

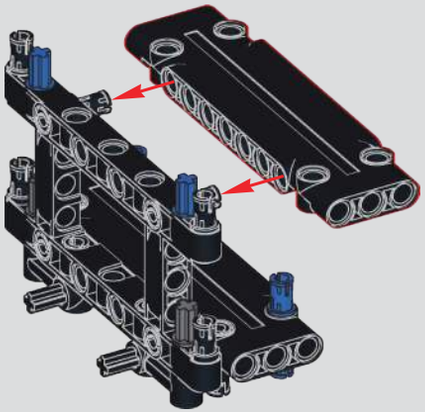

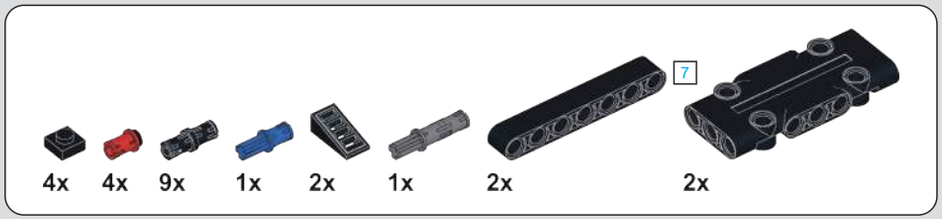

664

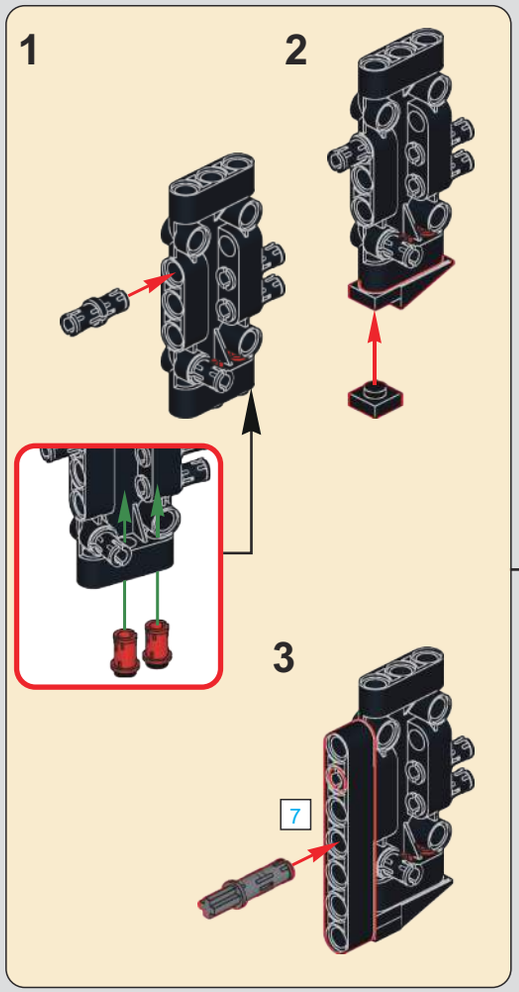

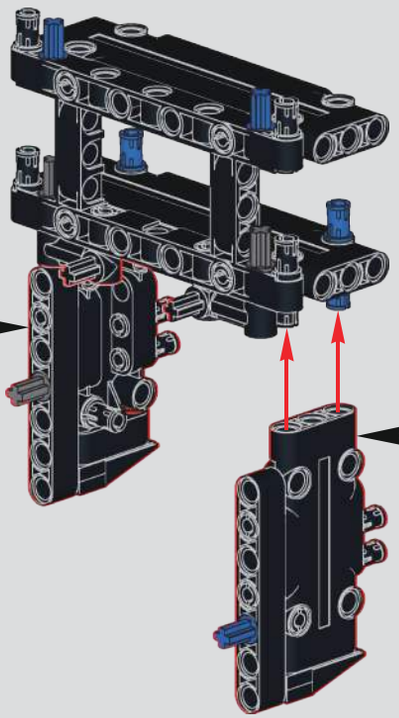

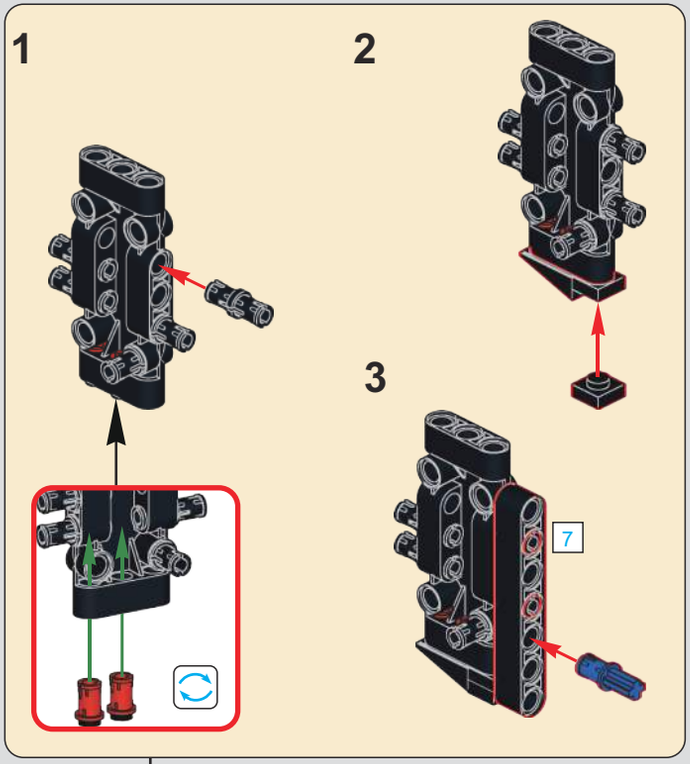

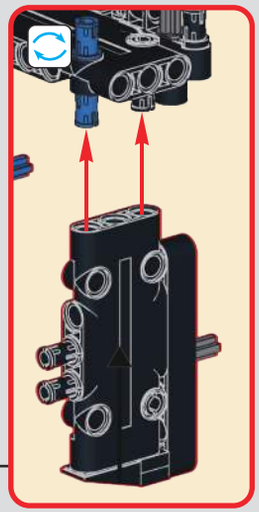

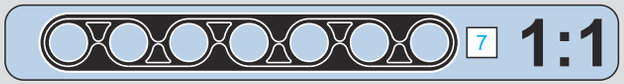

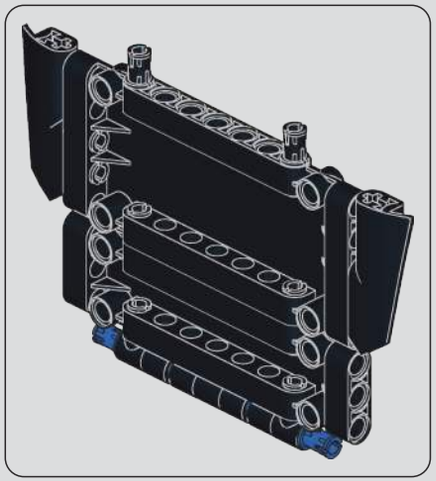

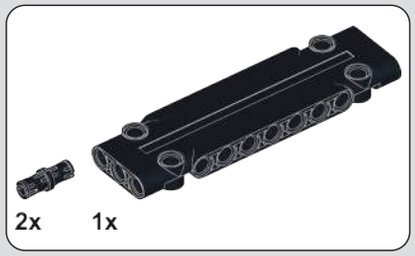

665

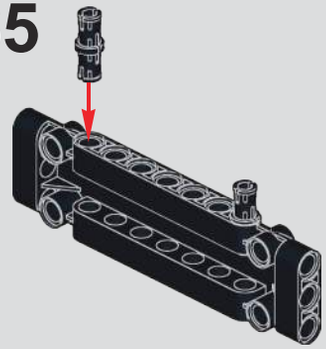

666

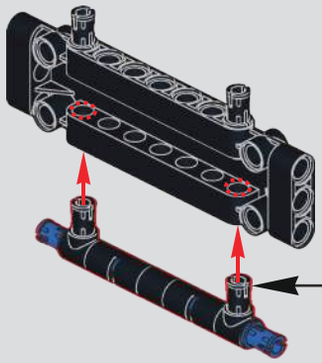

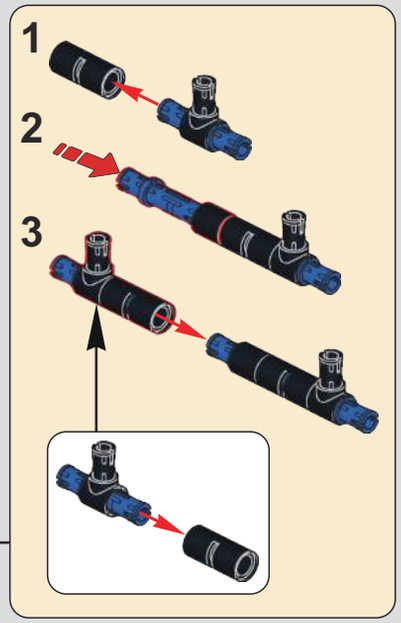

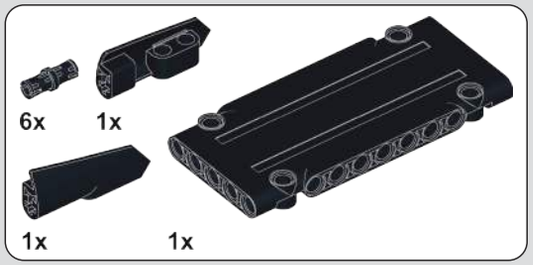

667

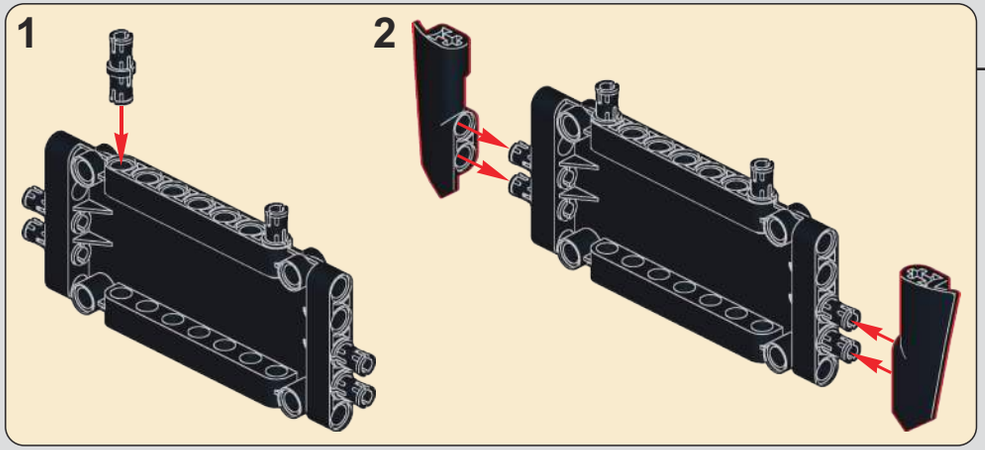

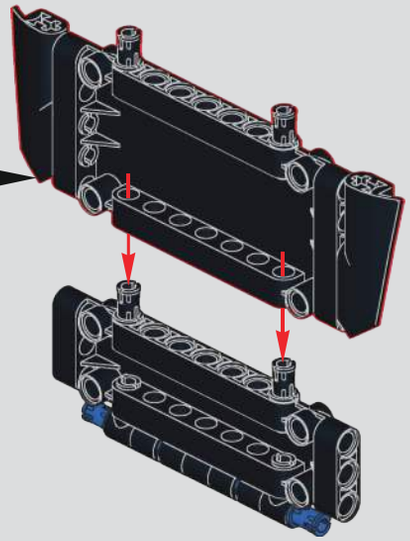

668

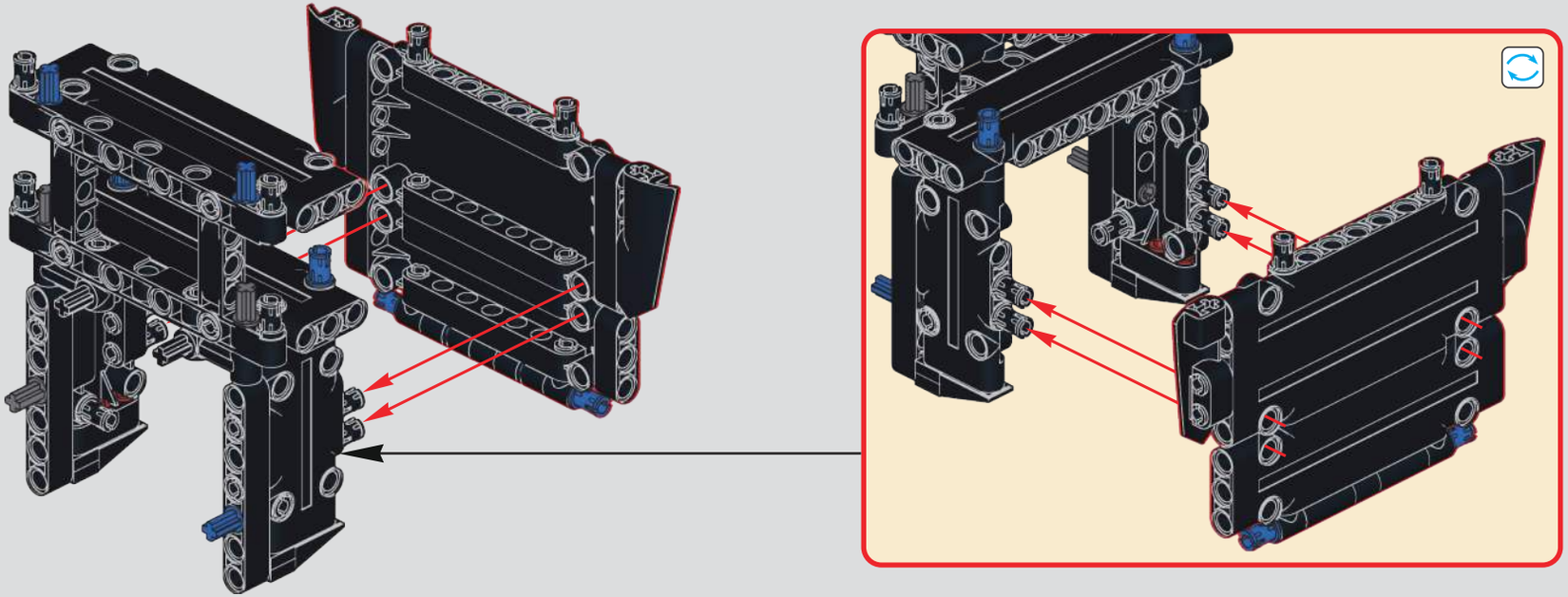

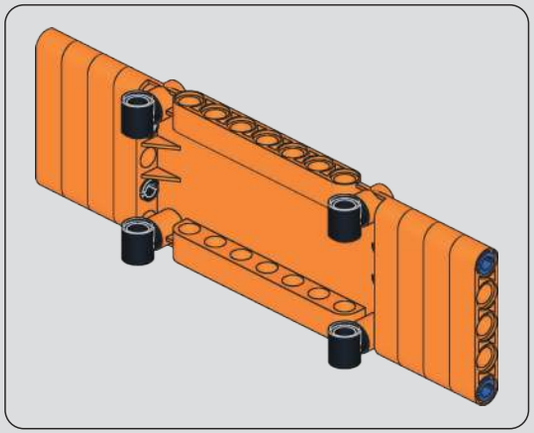

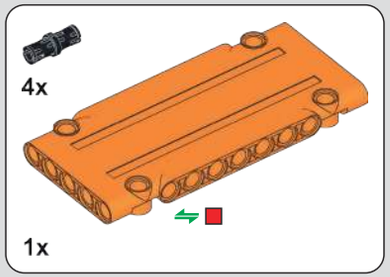

669

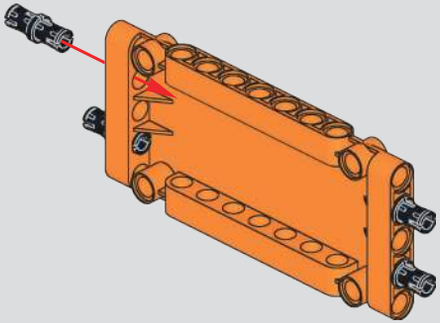

670

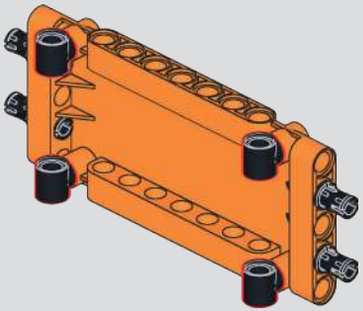

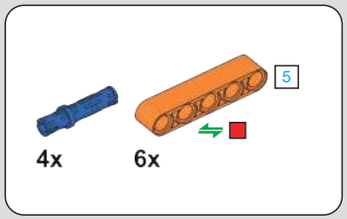

671

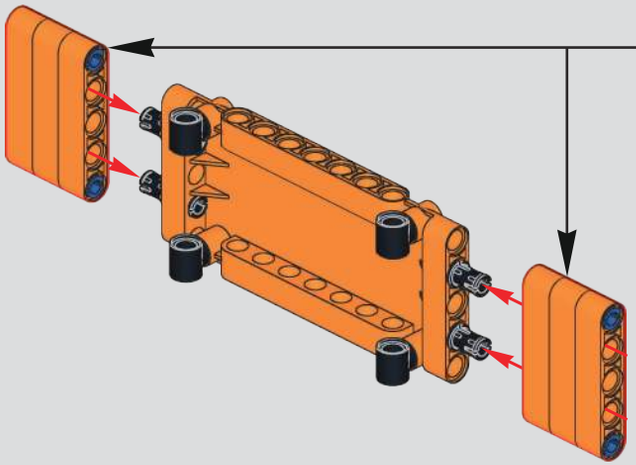

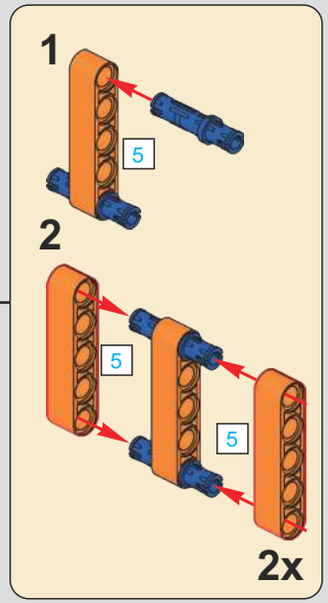

672

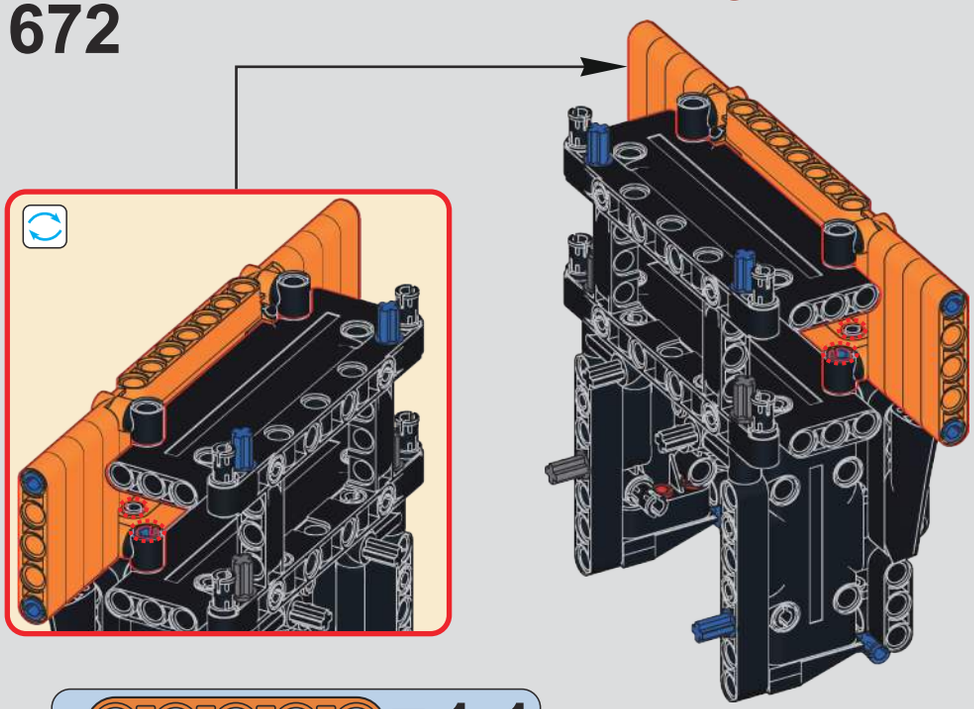

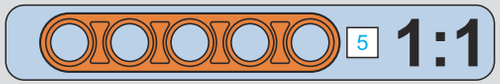

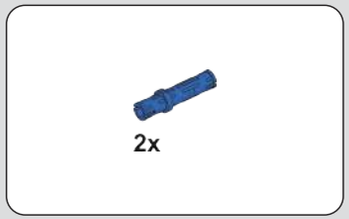

673

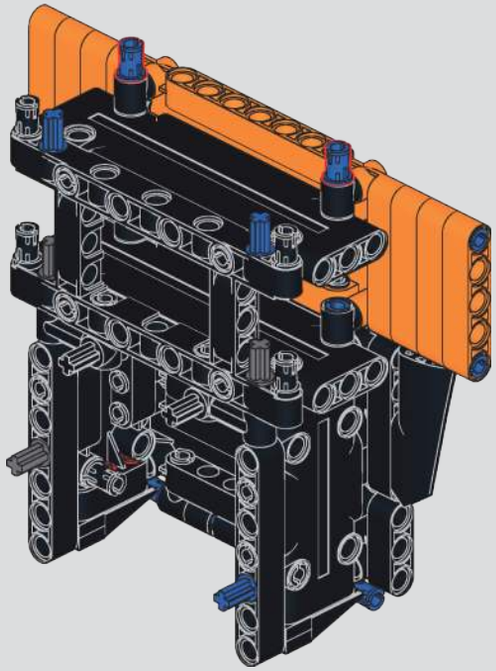

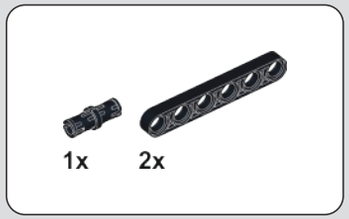

674

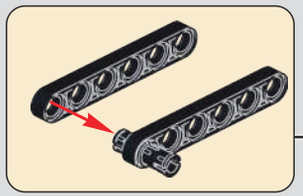

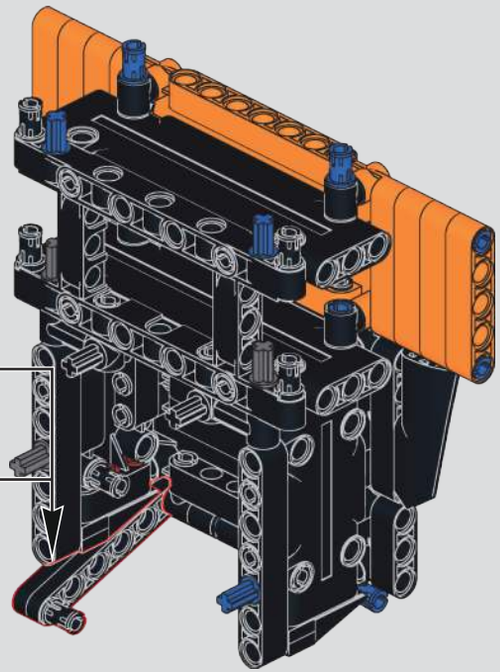

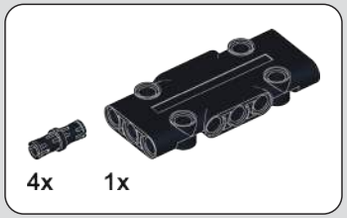

675

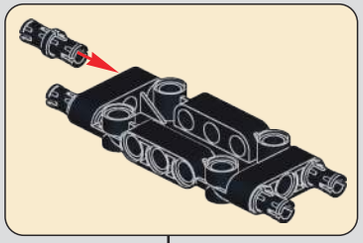

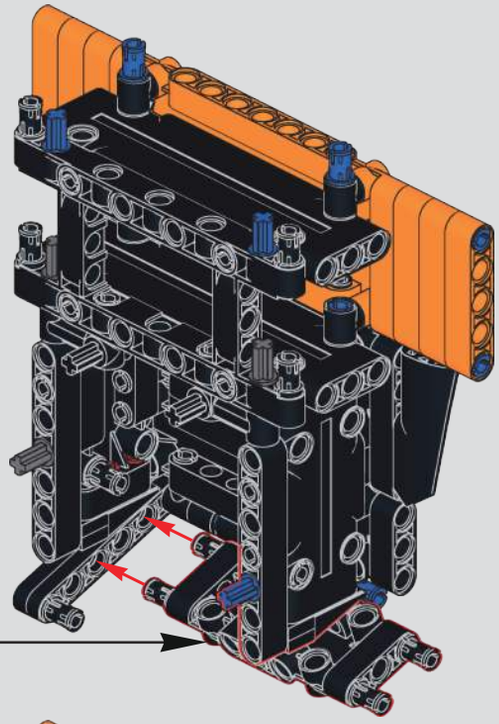

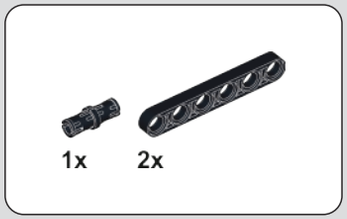

676

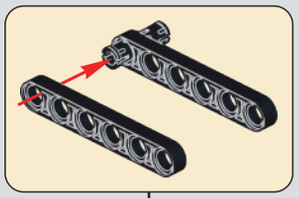

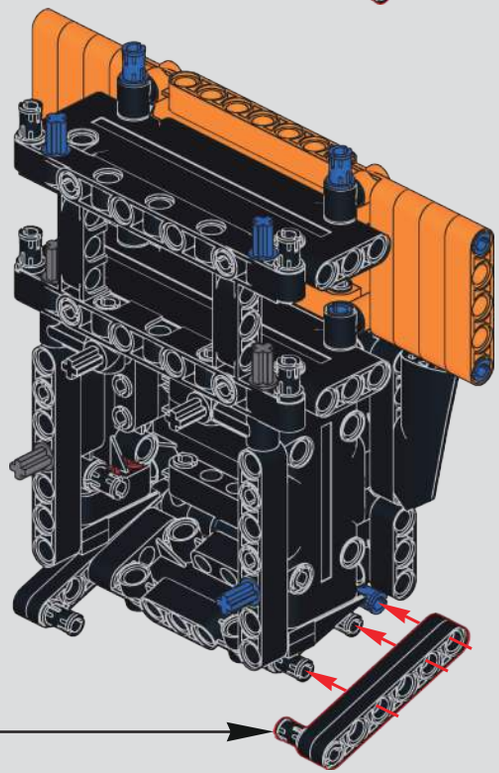

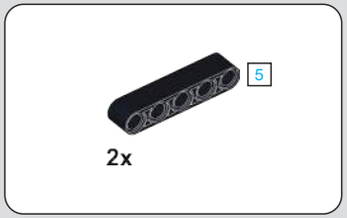

677

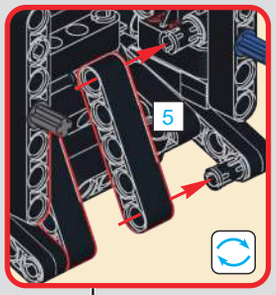

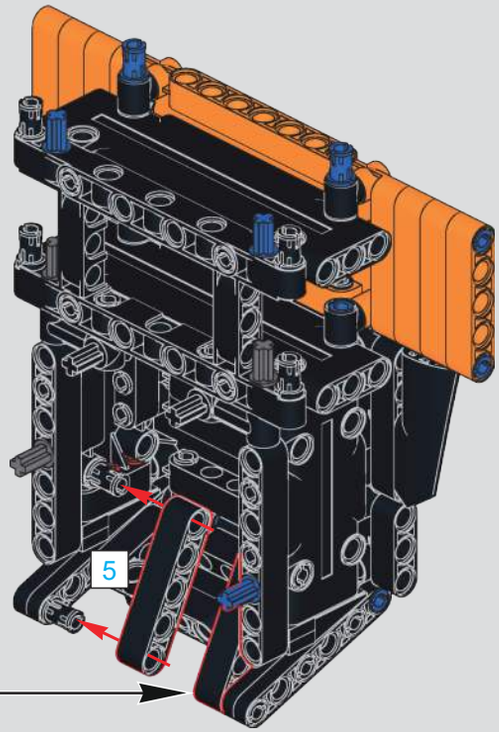

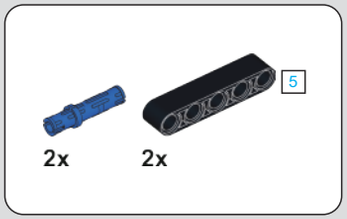

678

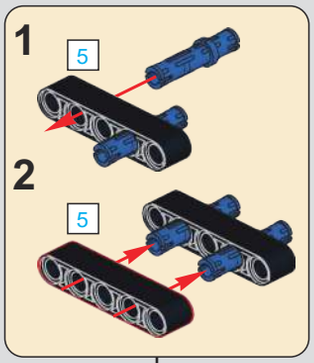

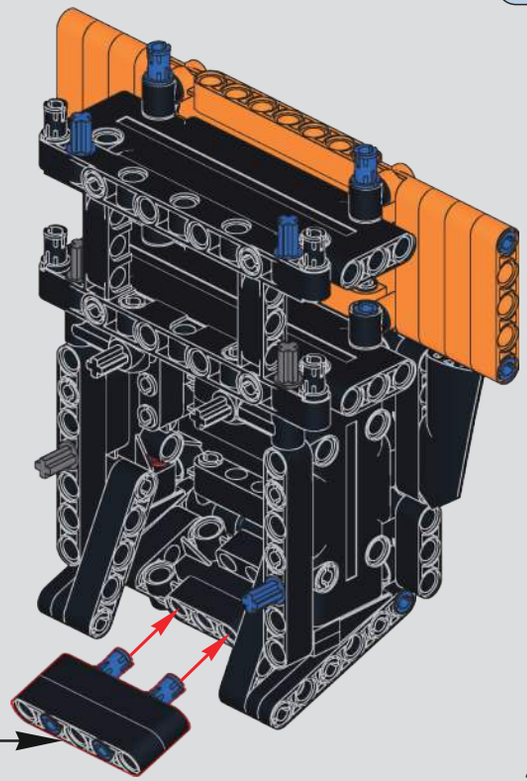

1:1 5

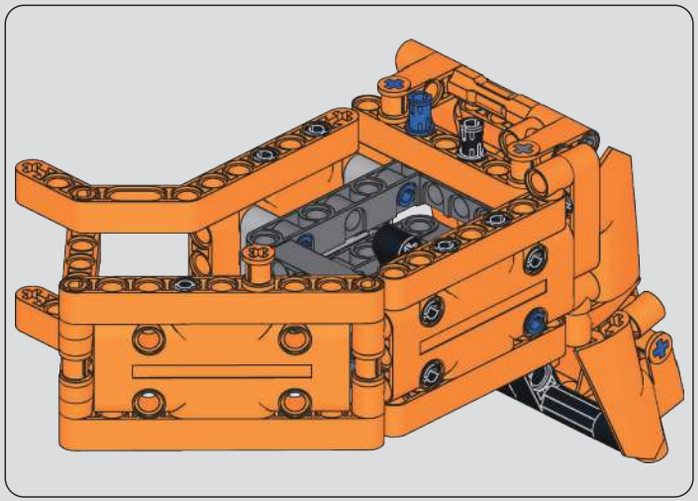

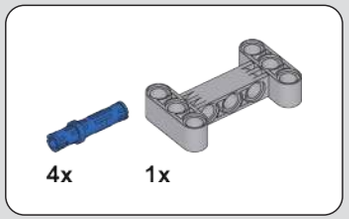

679

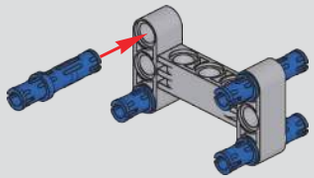

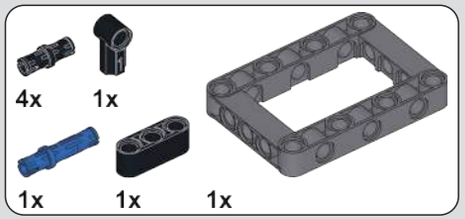

680

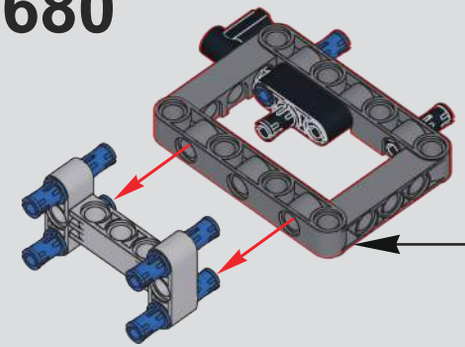

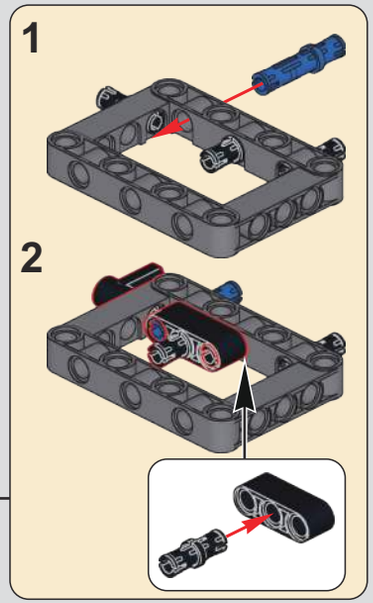

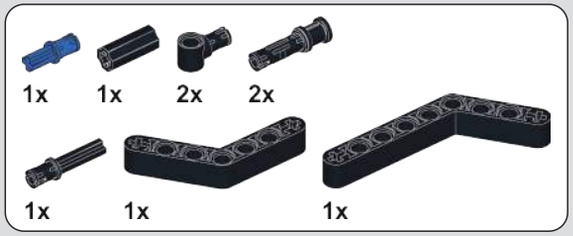

681

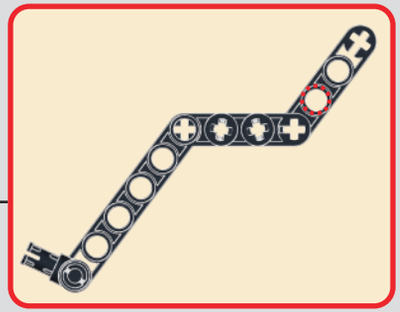

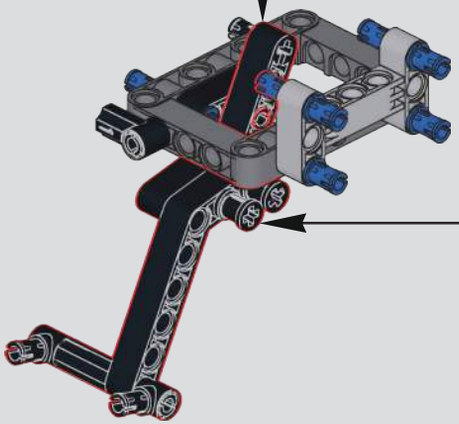

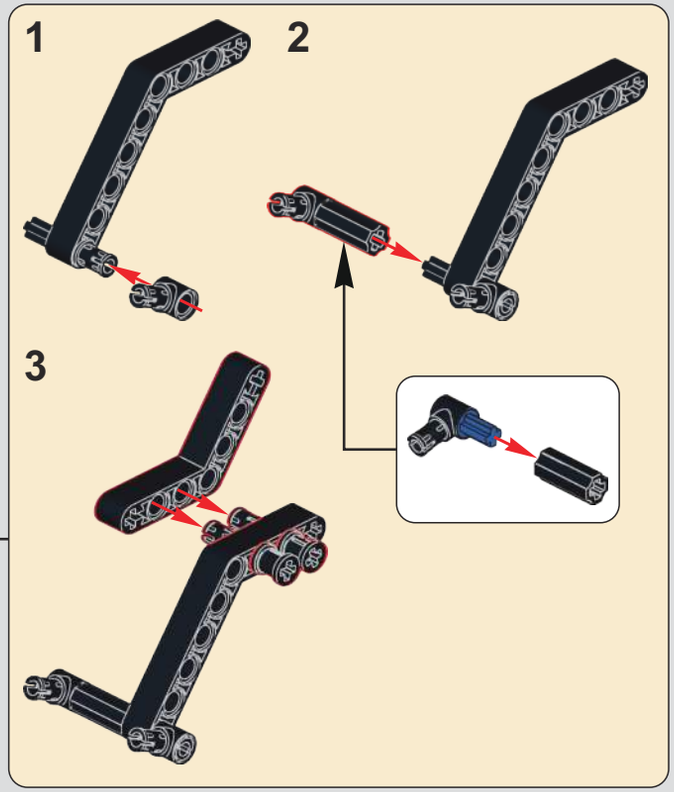

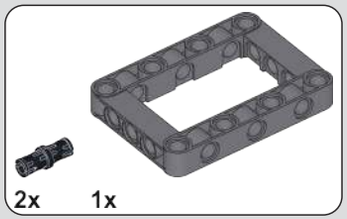

682

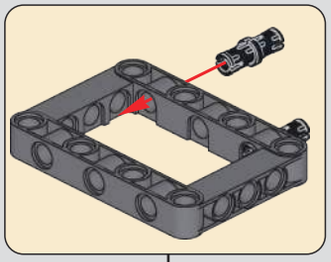

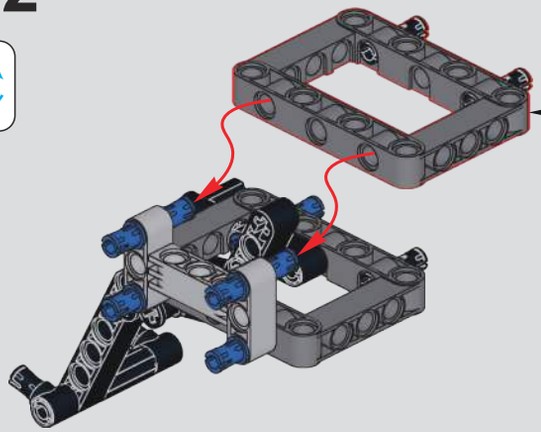

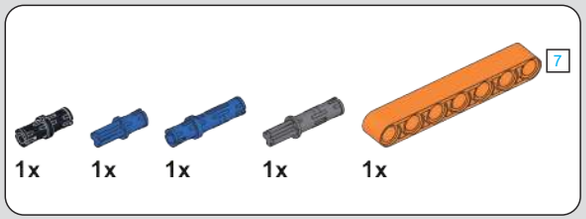

683

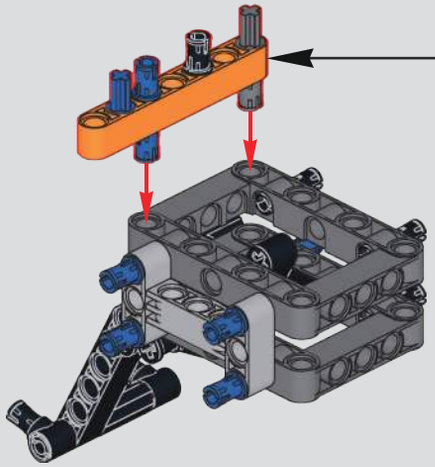

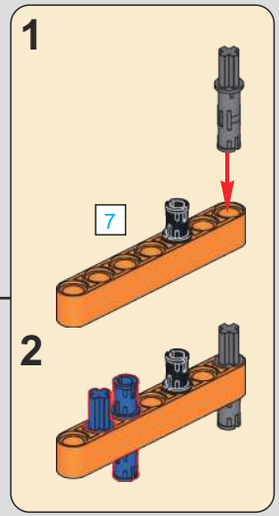

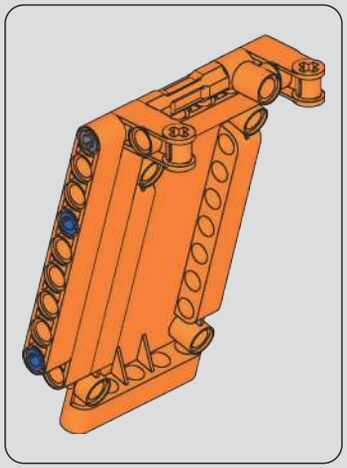

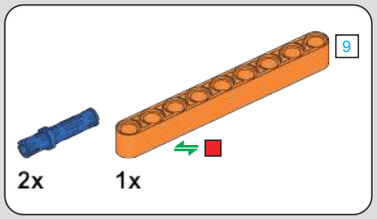

684

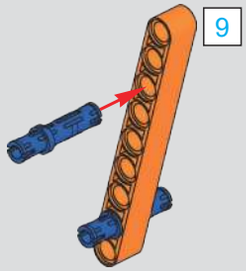

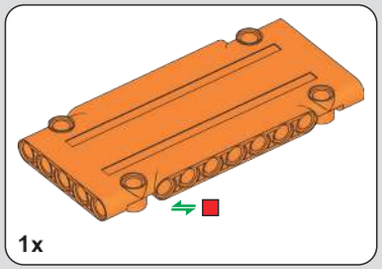

685

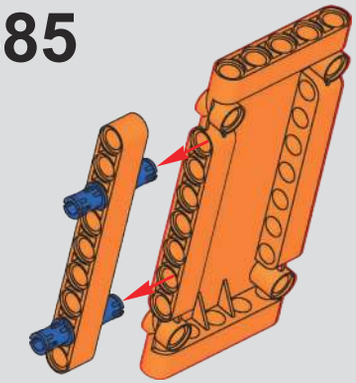

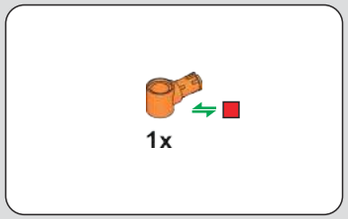

686

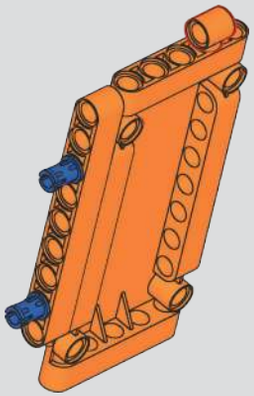

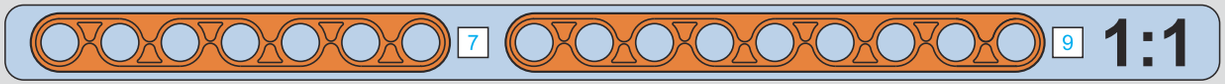

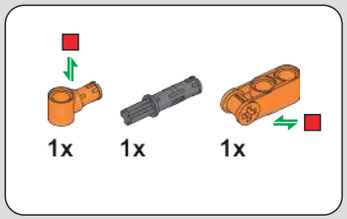

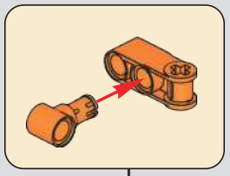

687

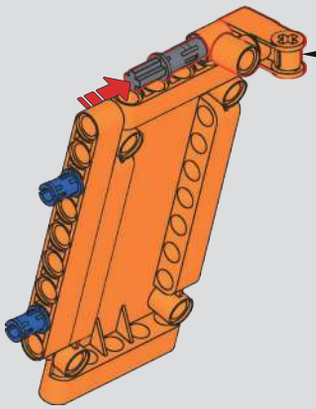

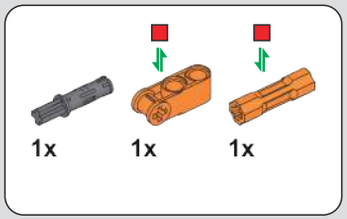

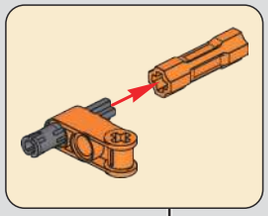

688

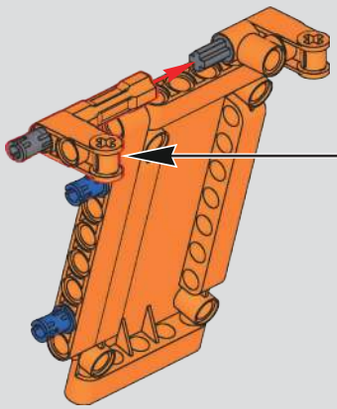

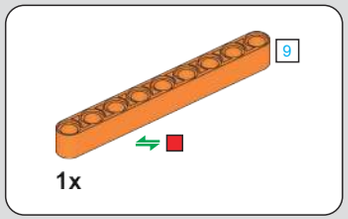

689

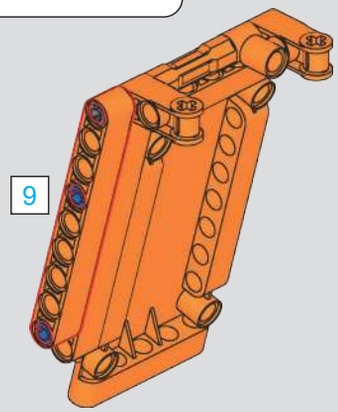

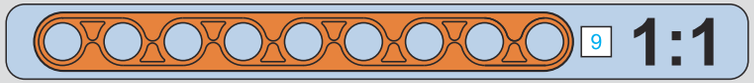

690

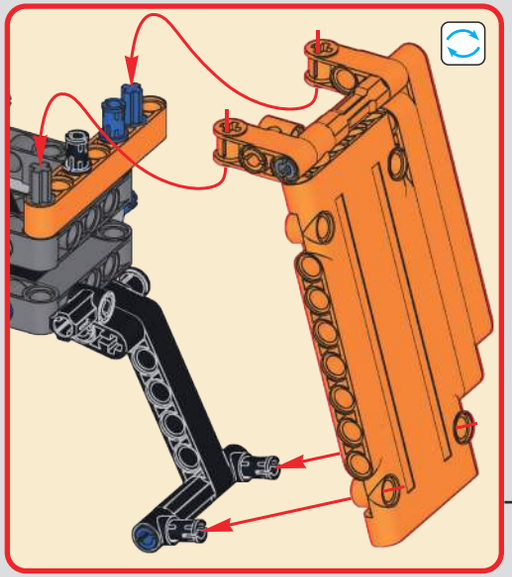

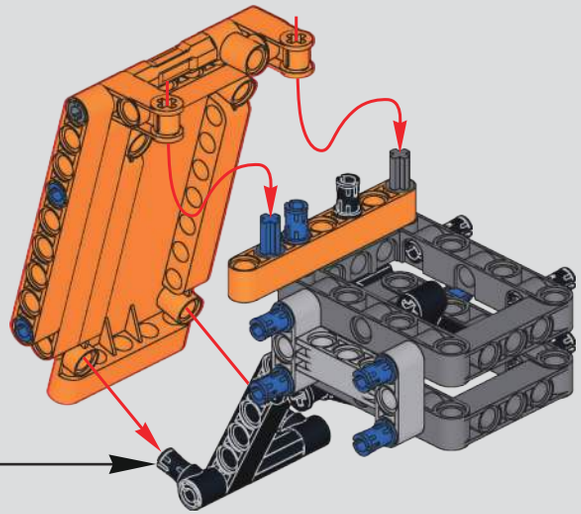

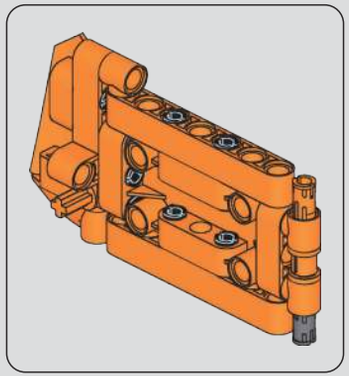

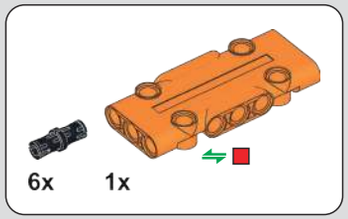

691

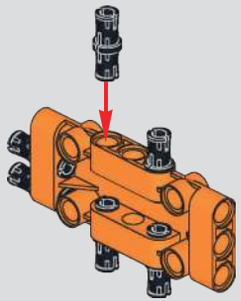

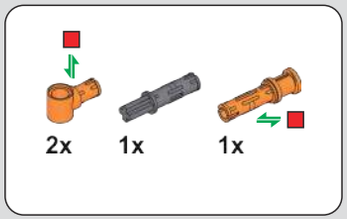

692

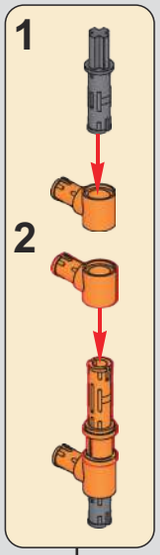

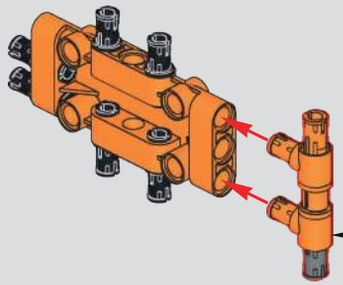

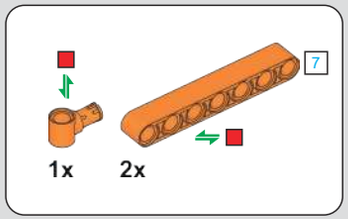

693

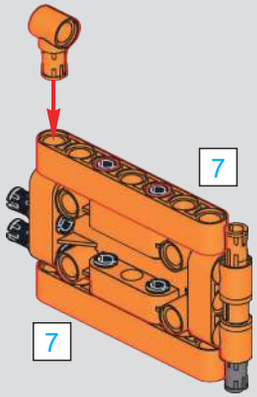

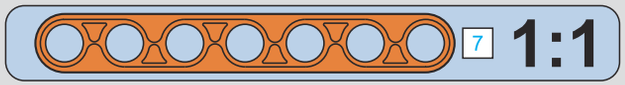

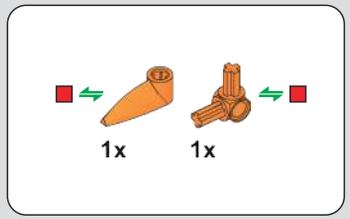

694

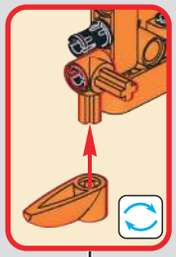

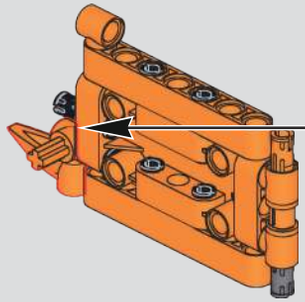

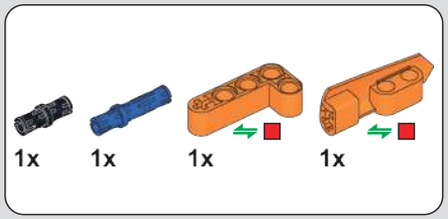

695

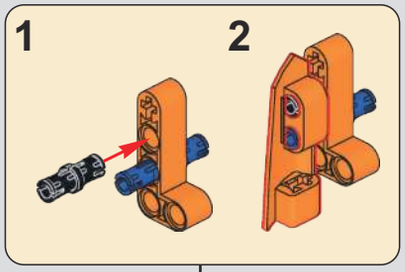

696

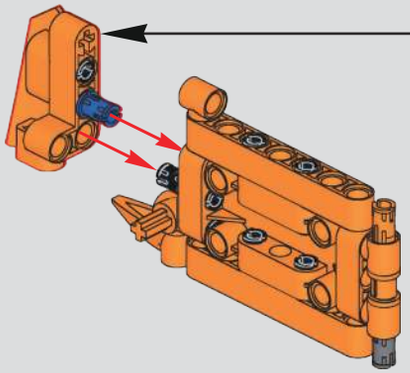

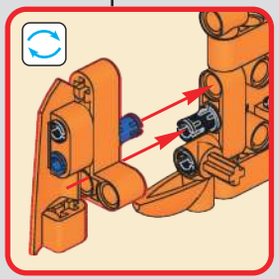

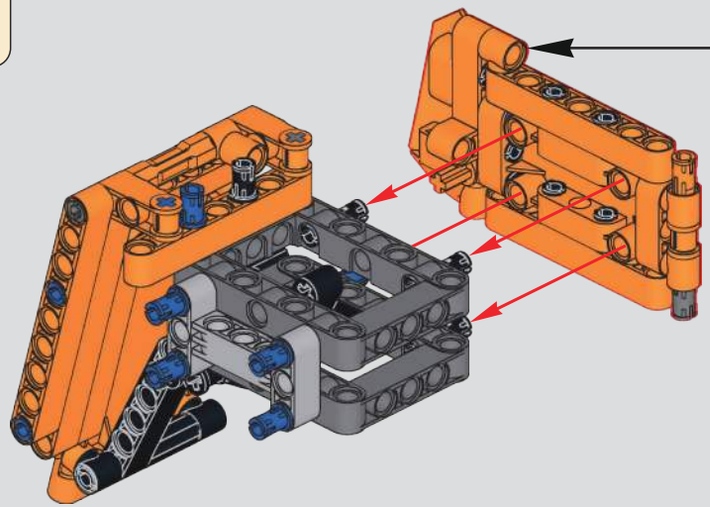

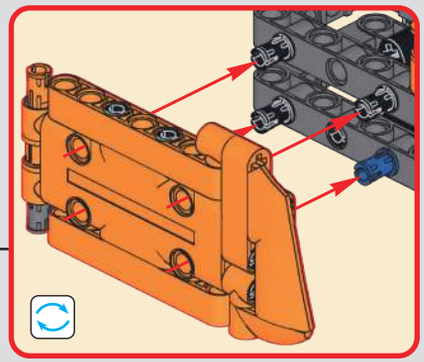

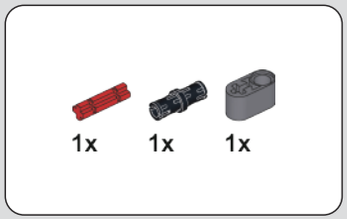

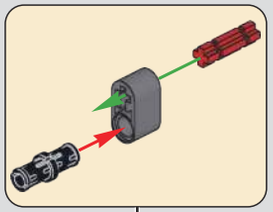

697

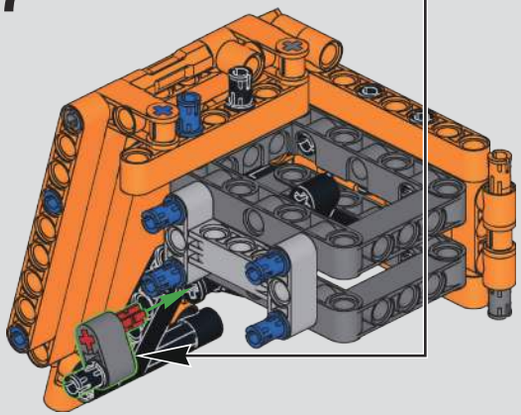

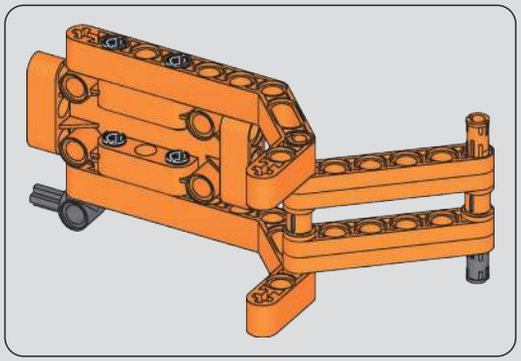

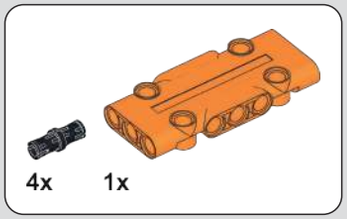

698

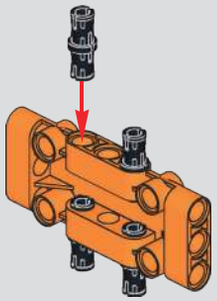

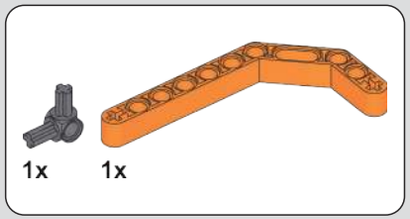

699

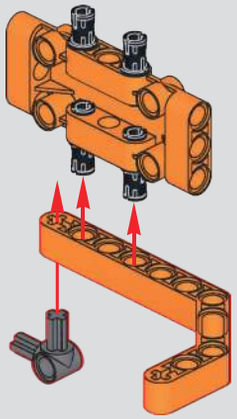

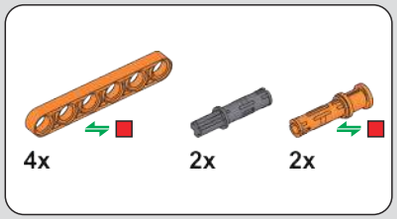

700

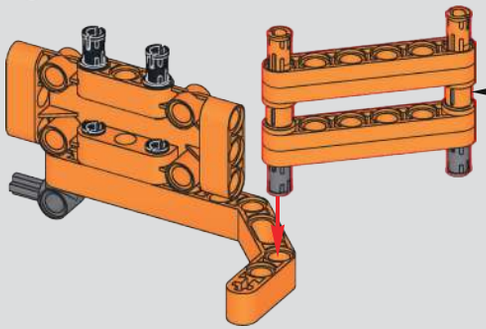

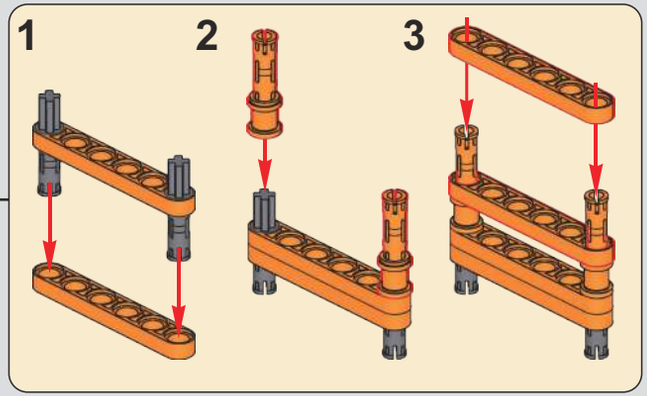

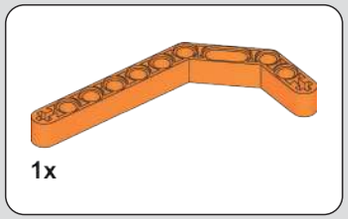

701

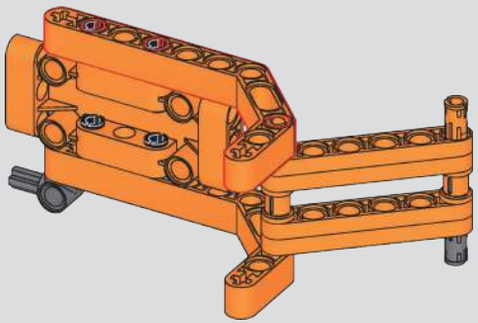

702

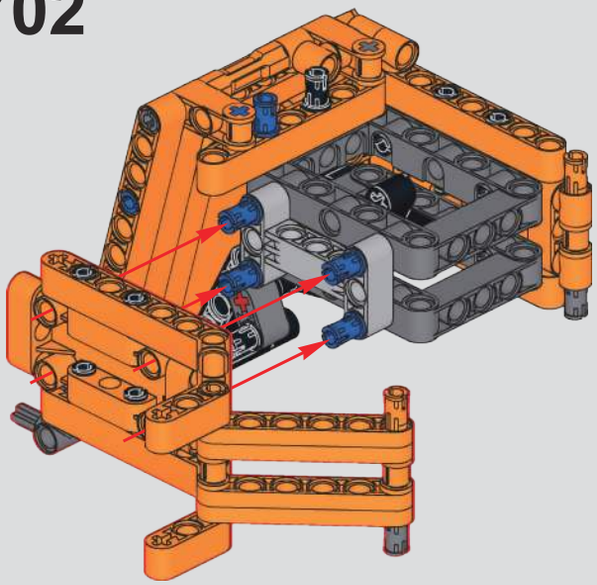

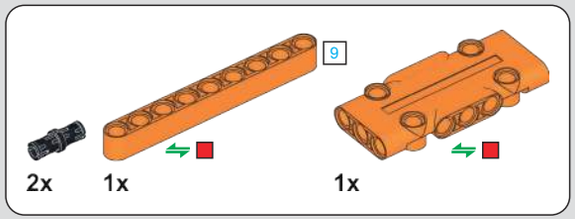

703

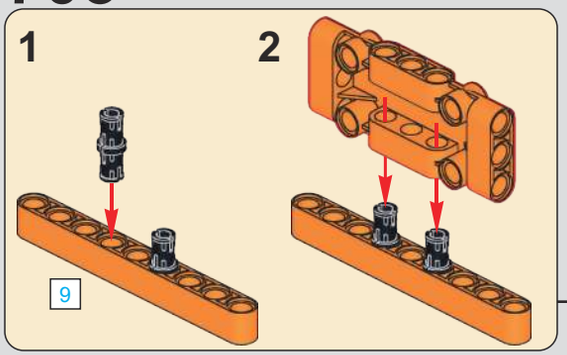

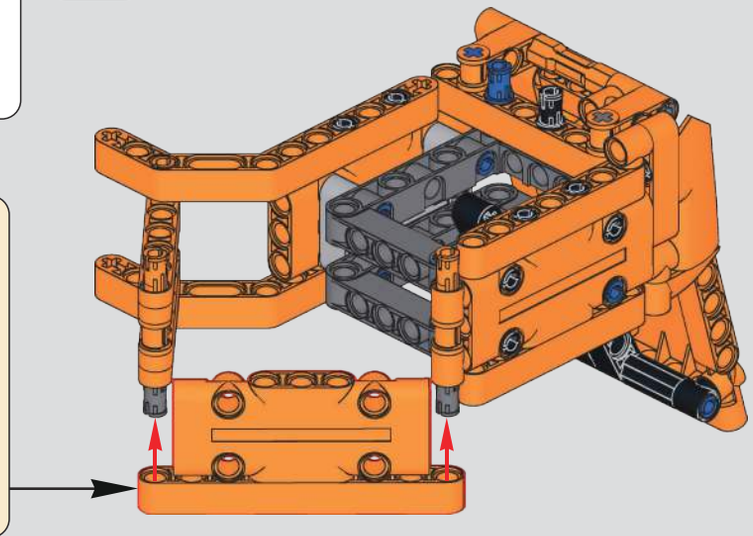

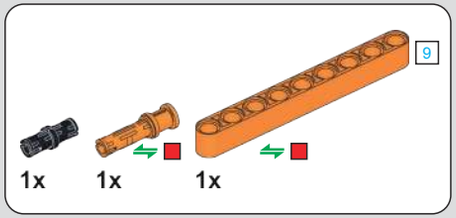

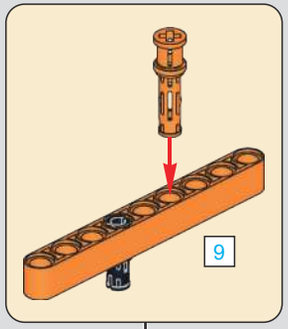

704

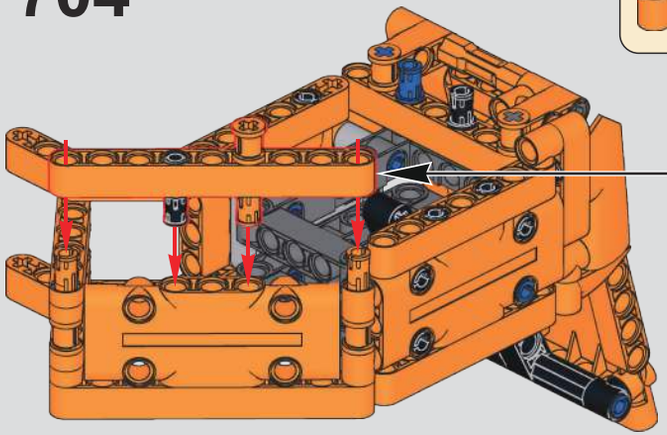

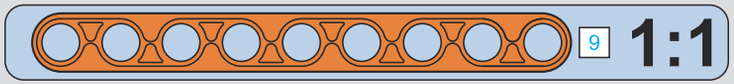

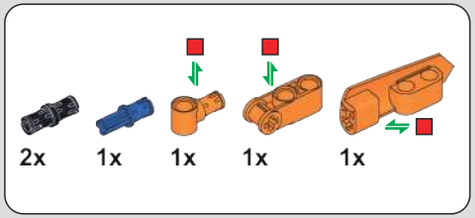

705

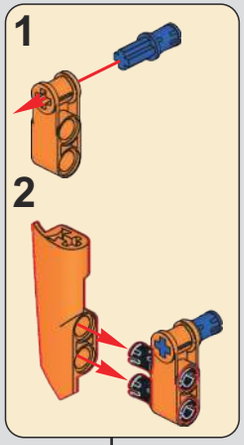

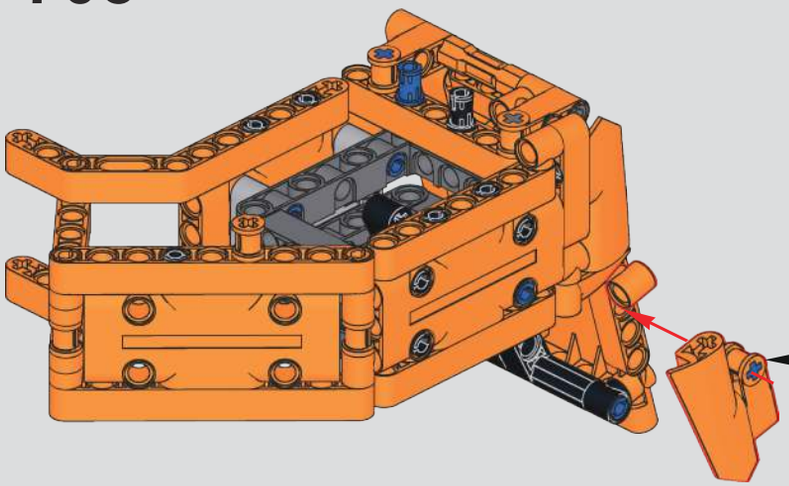

706

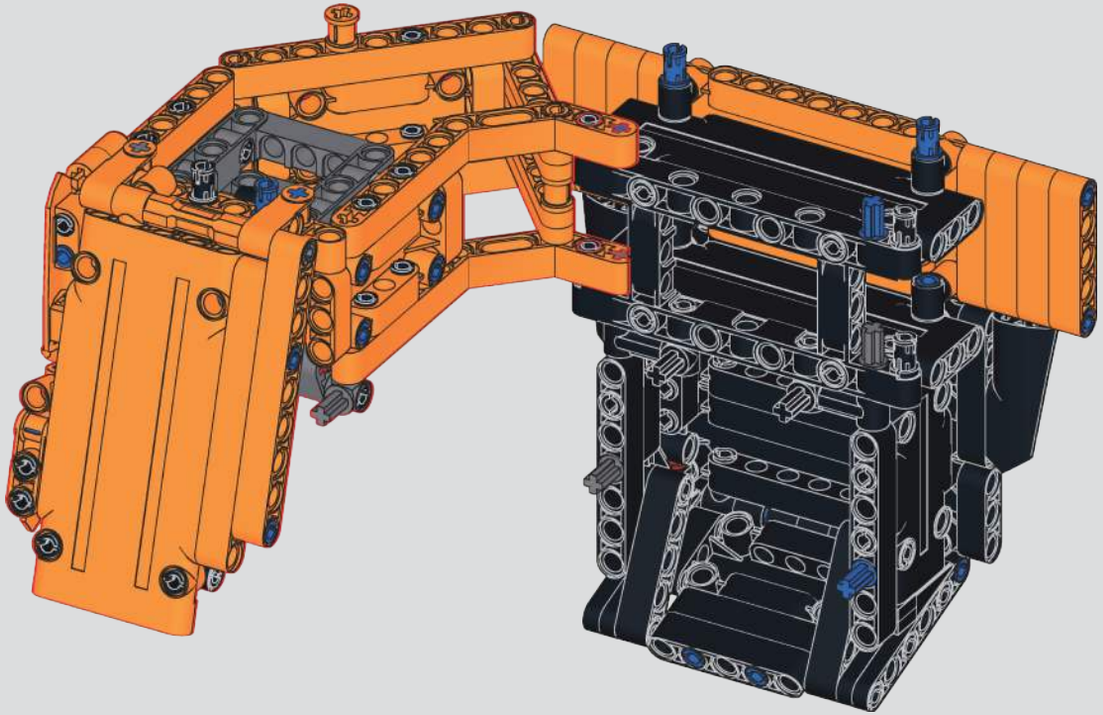

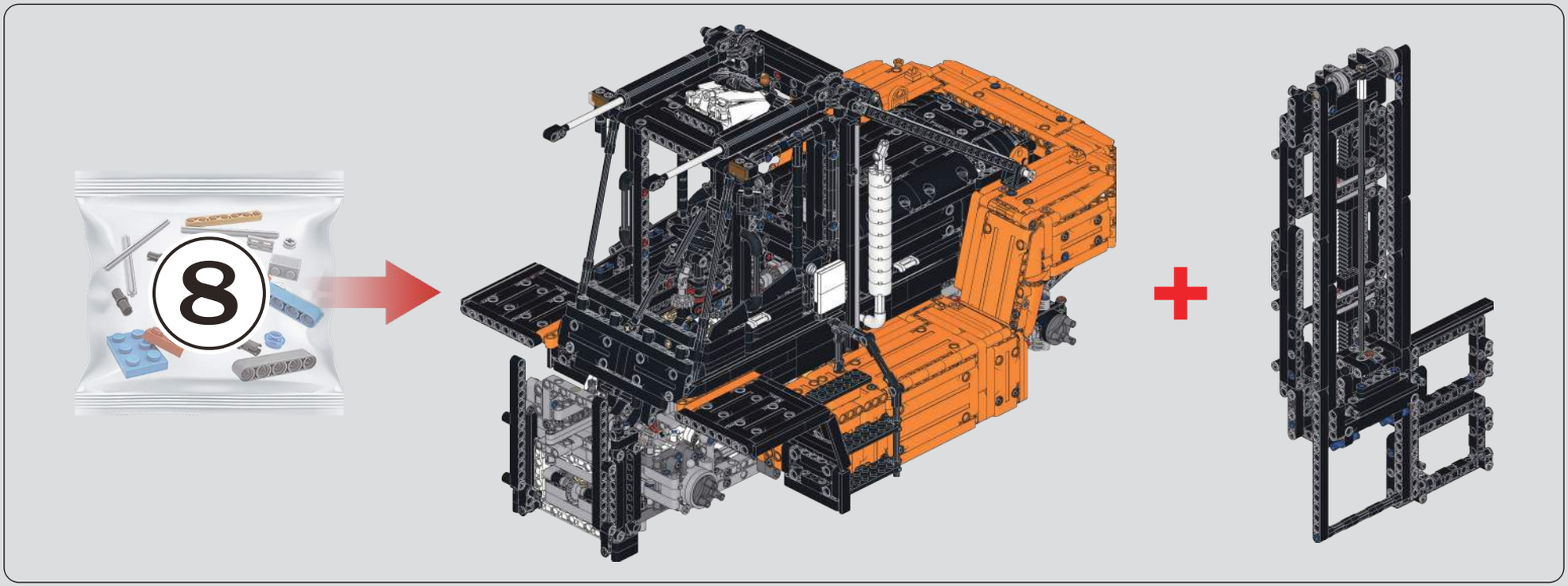

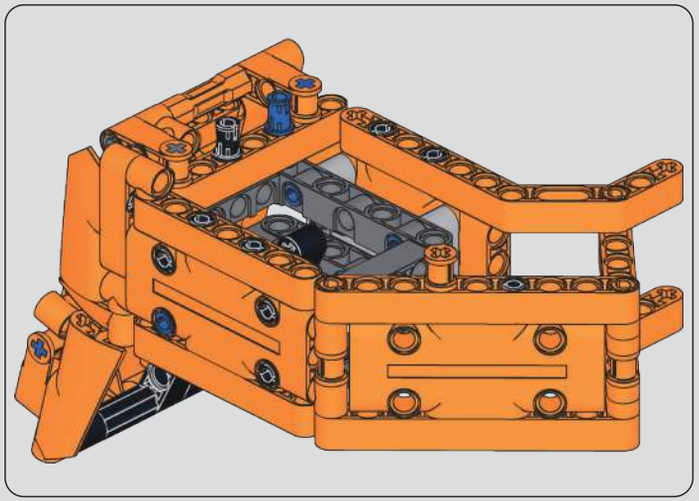

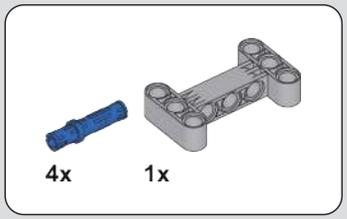

707

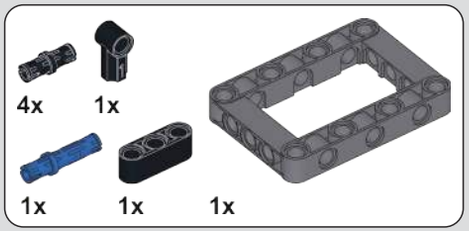

708

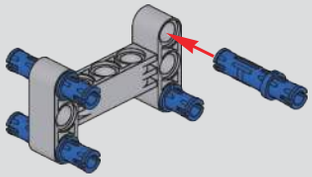

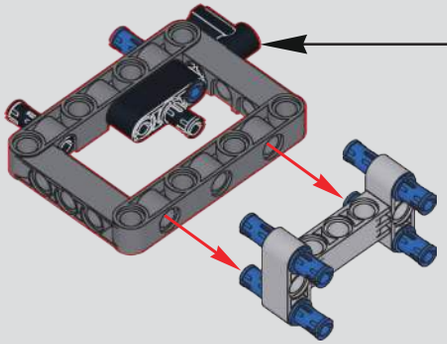

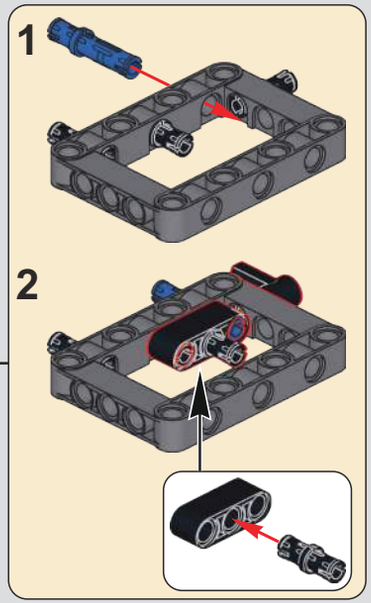

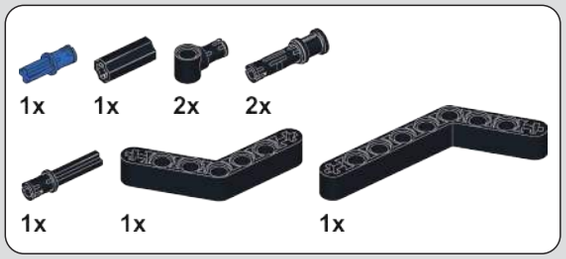

709

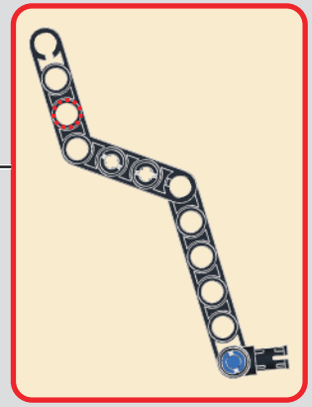

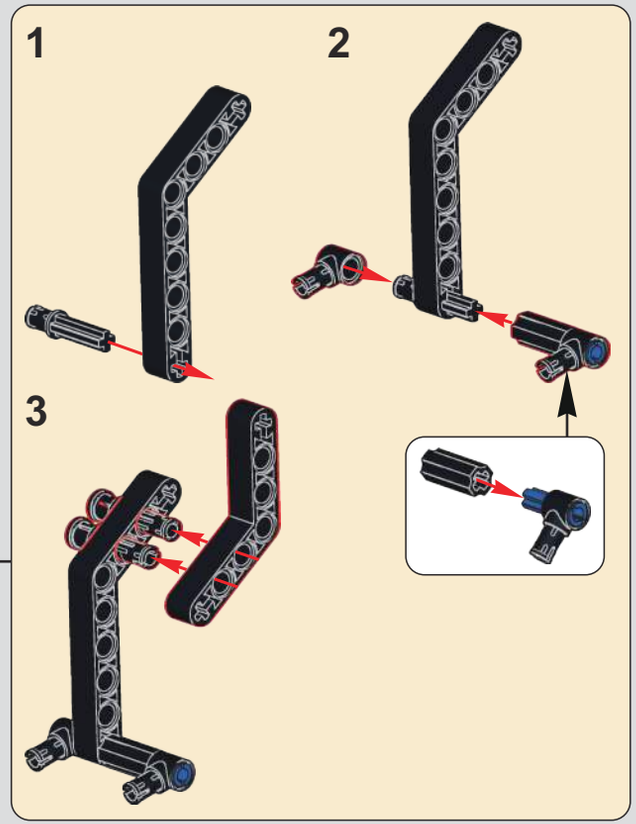

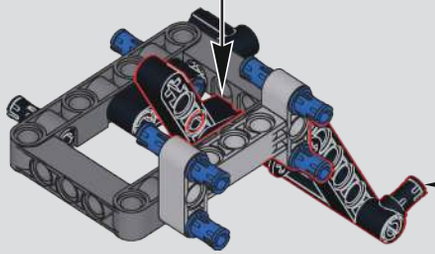

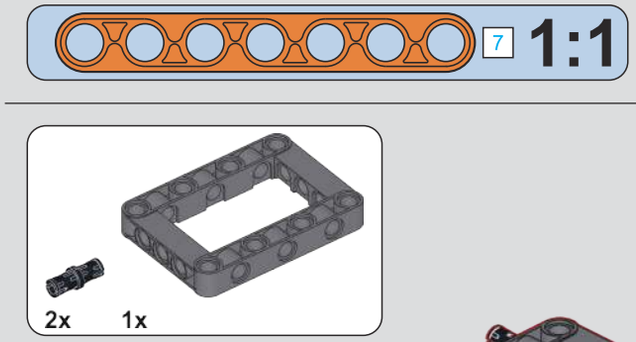

710

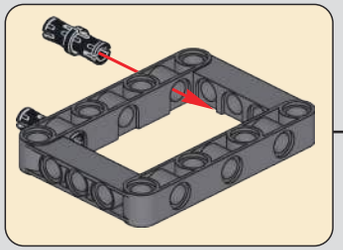

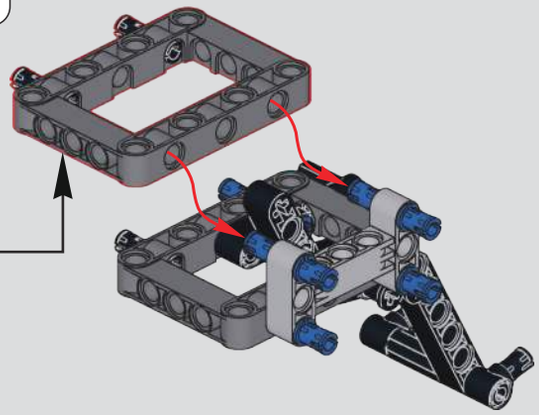

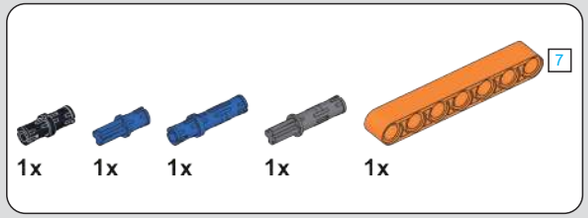

711

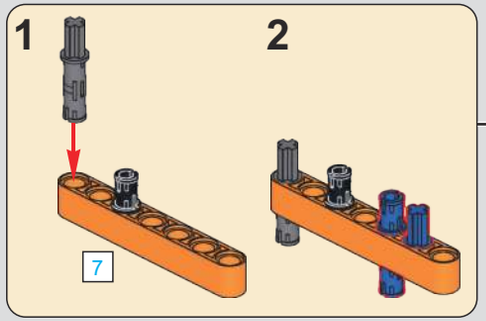

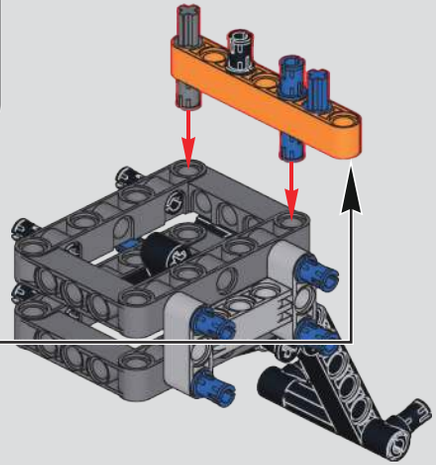

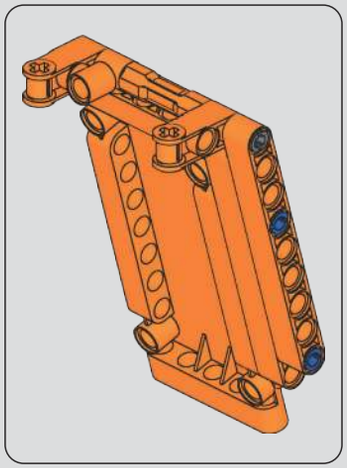

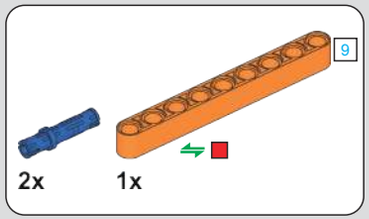

712

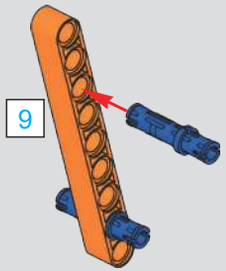

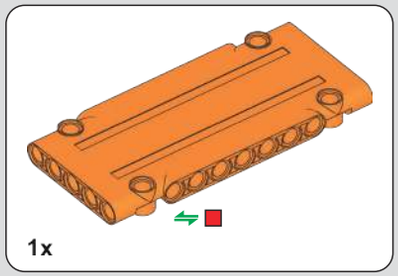

713

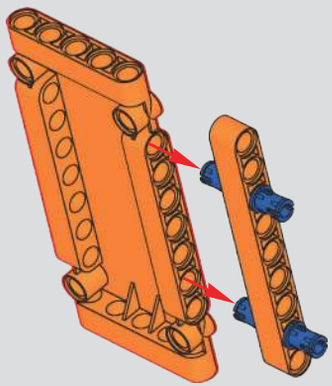

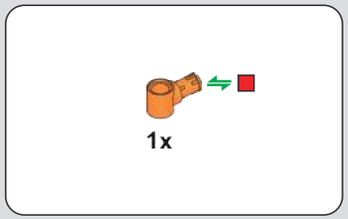

714

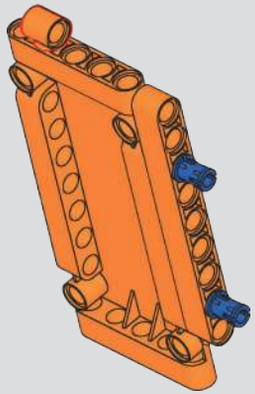

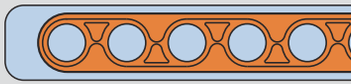

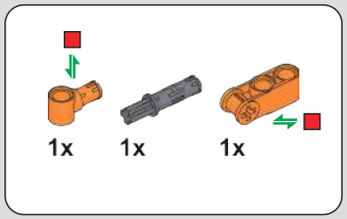

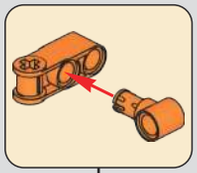

715

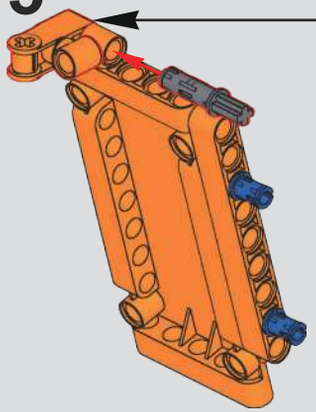

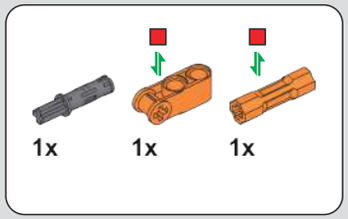

716

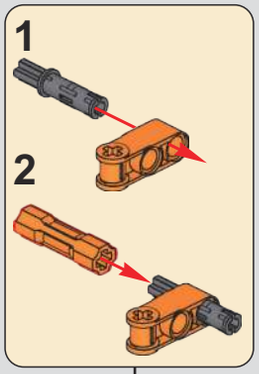

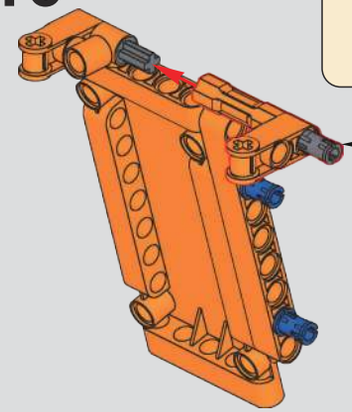

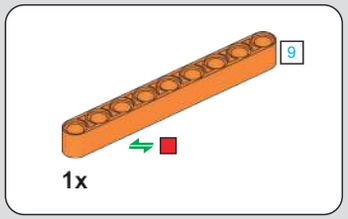

717

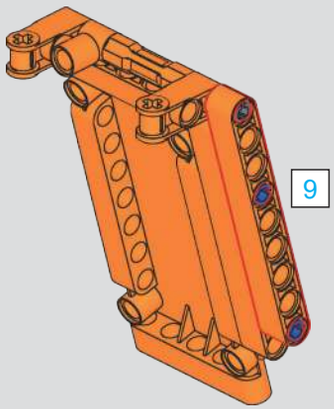

718

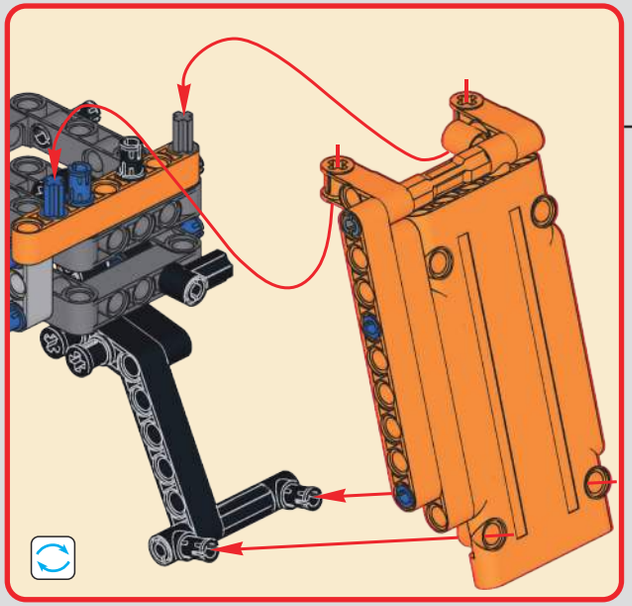

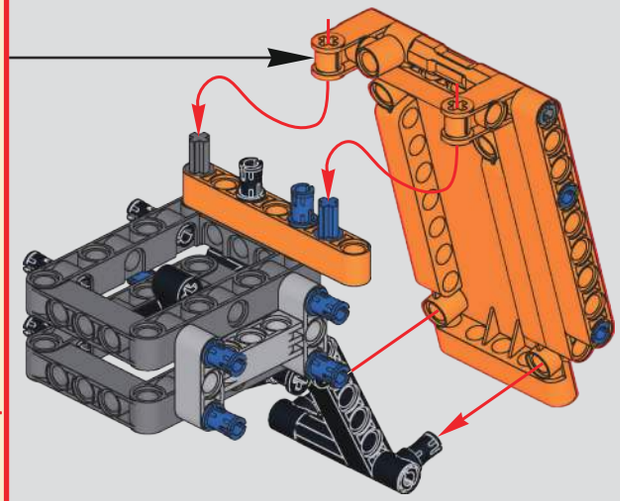

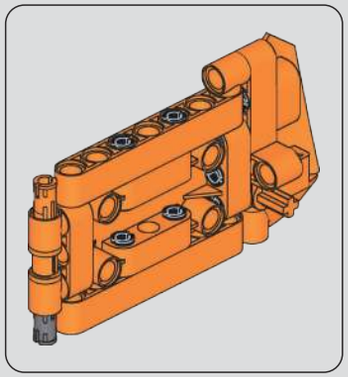

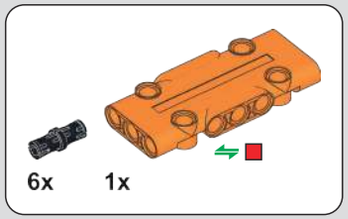

719

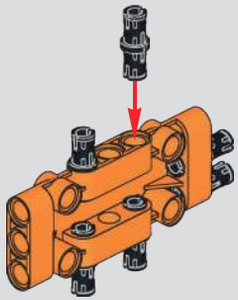

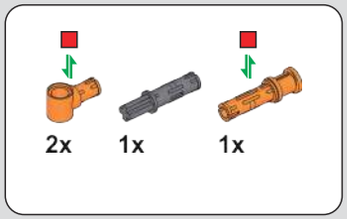

720

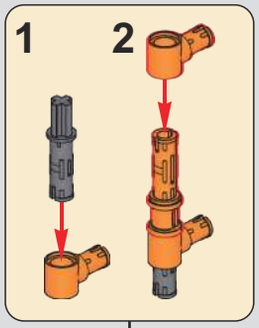

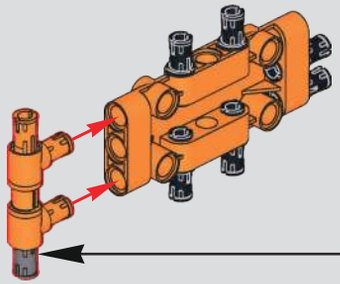

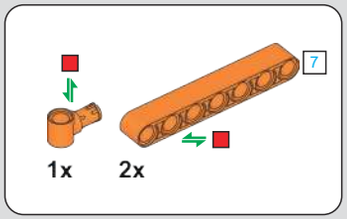

721

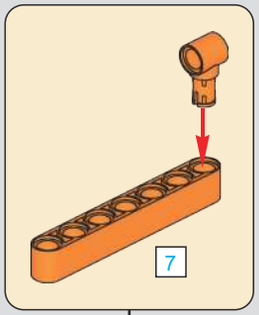

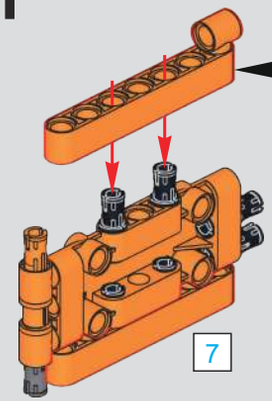

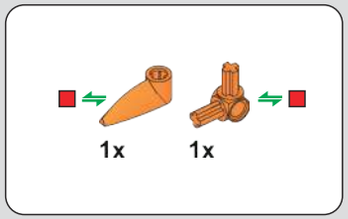

722

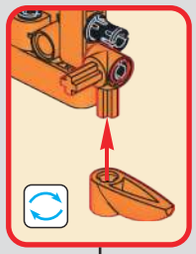

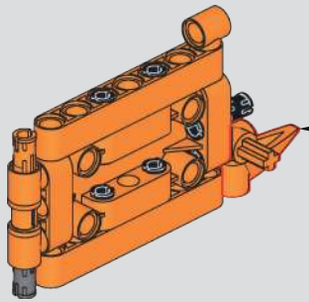

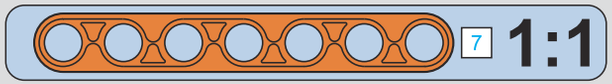

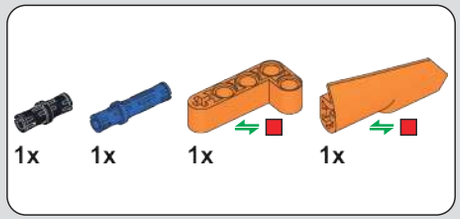

723

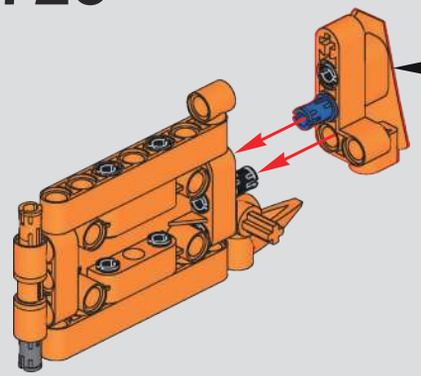

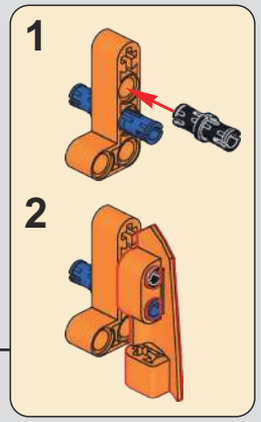

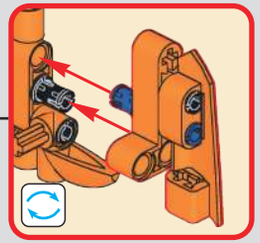

724

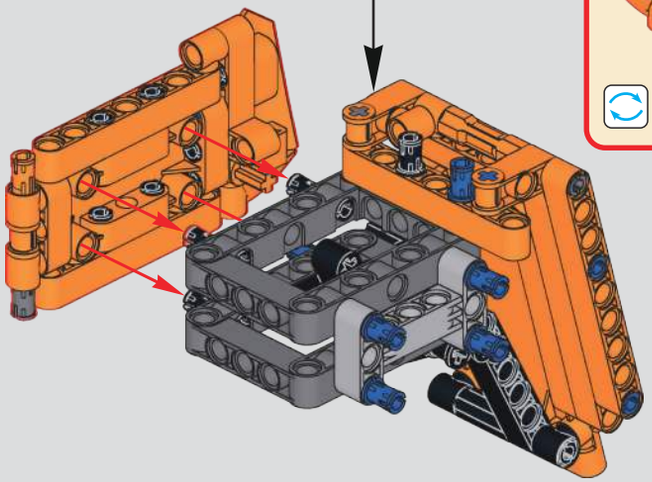

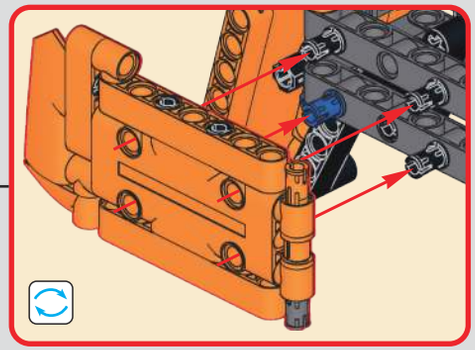

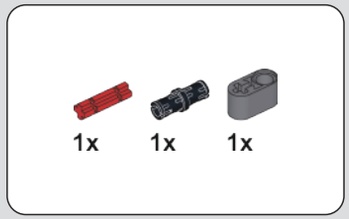

725

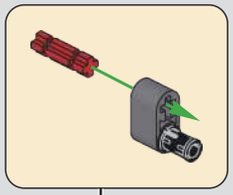

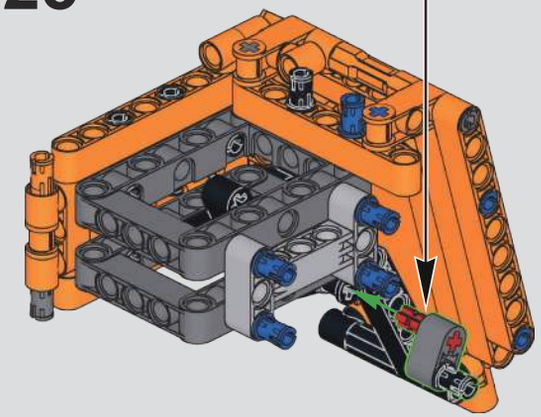

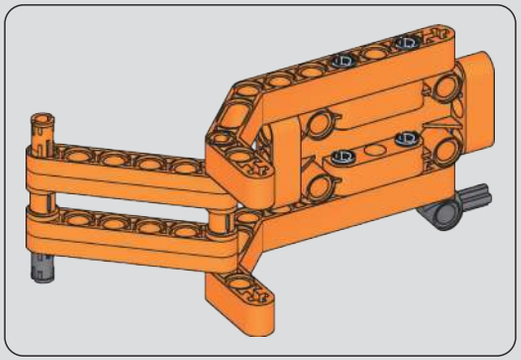

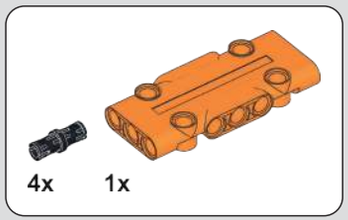

726

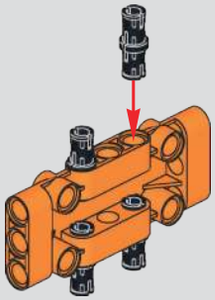

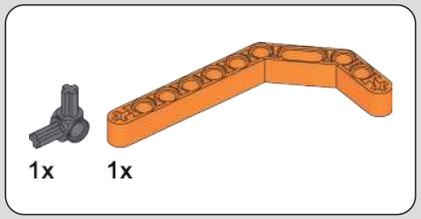

727

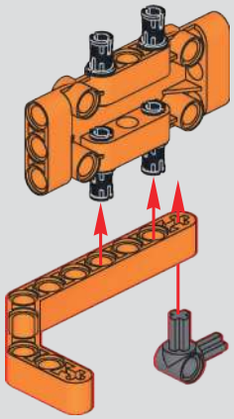

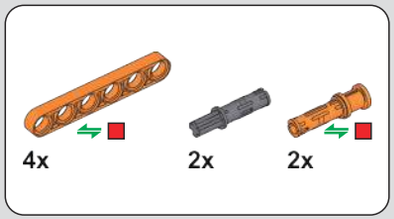

728

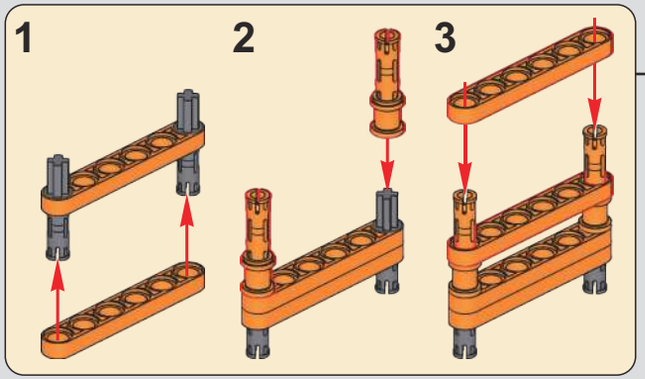

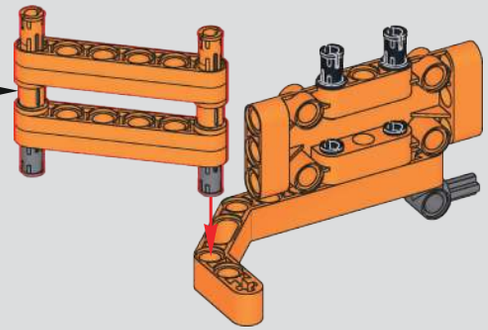

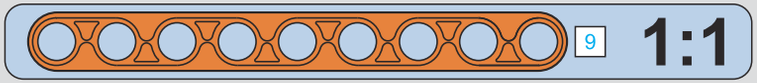

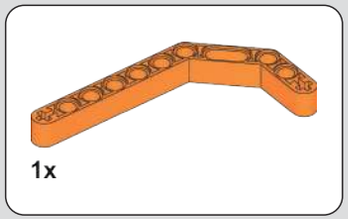

729

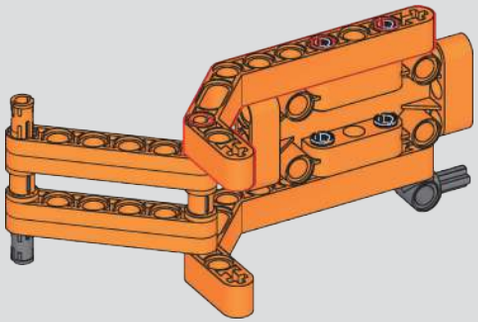

730

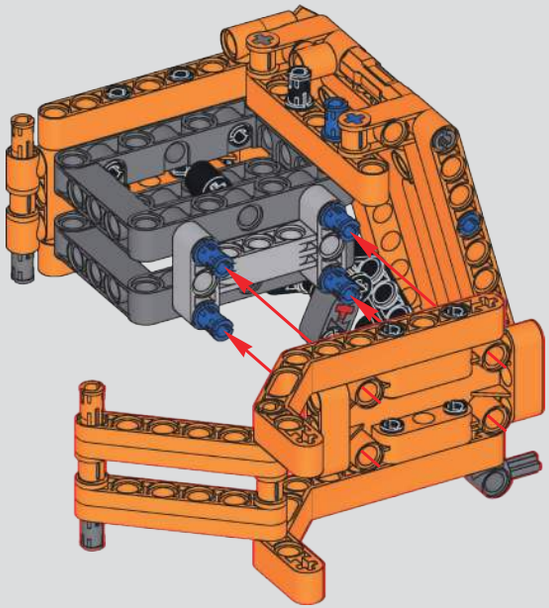

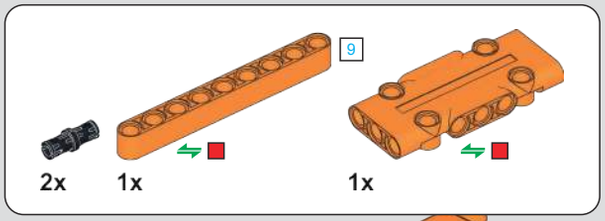

731

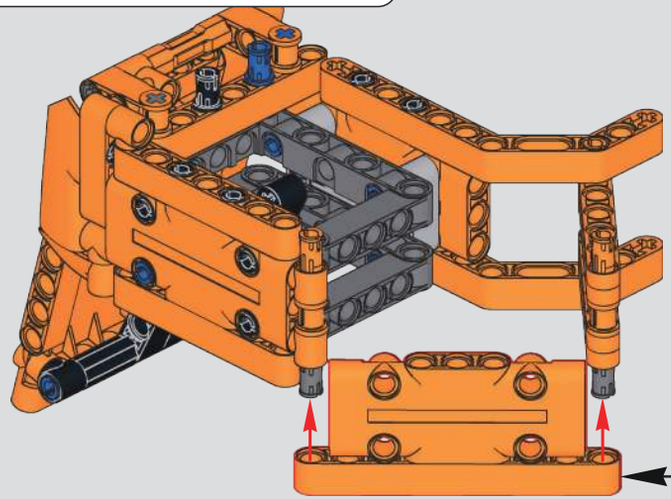

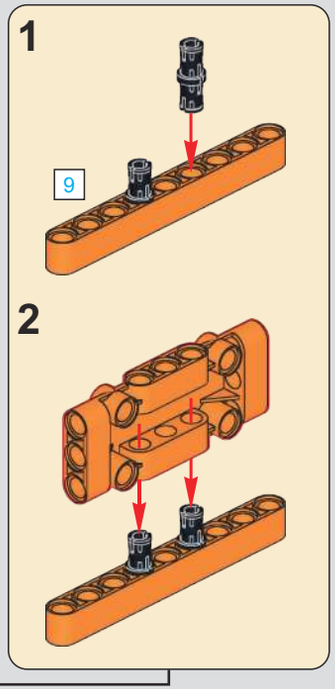

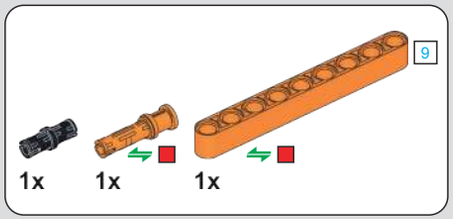

732

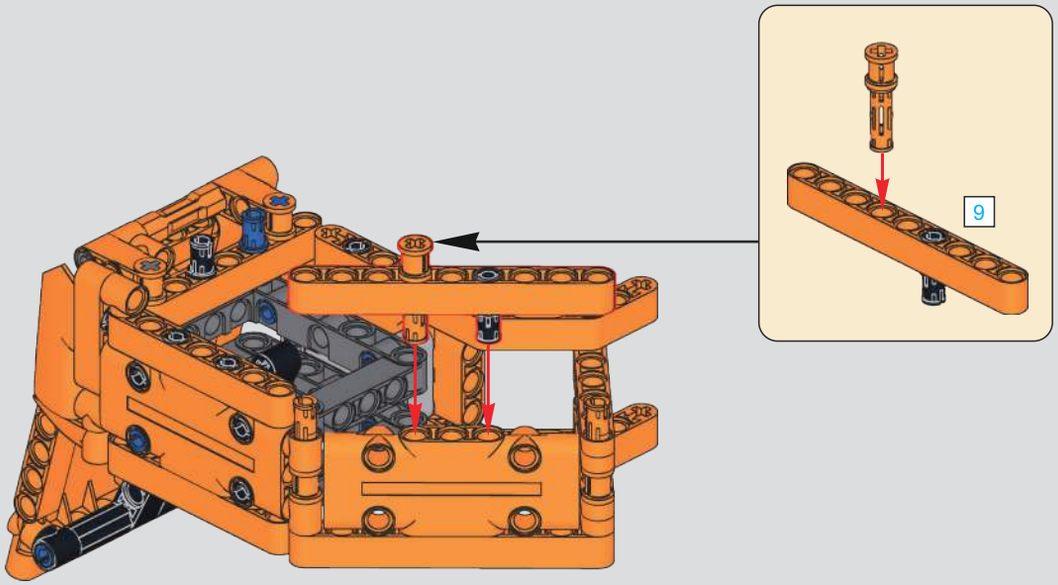

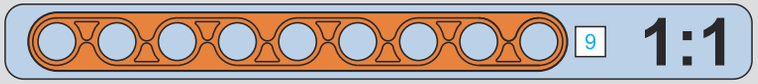

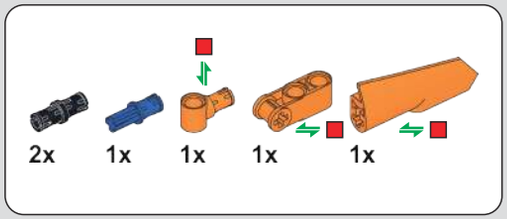

733

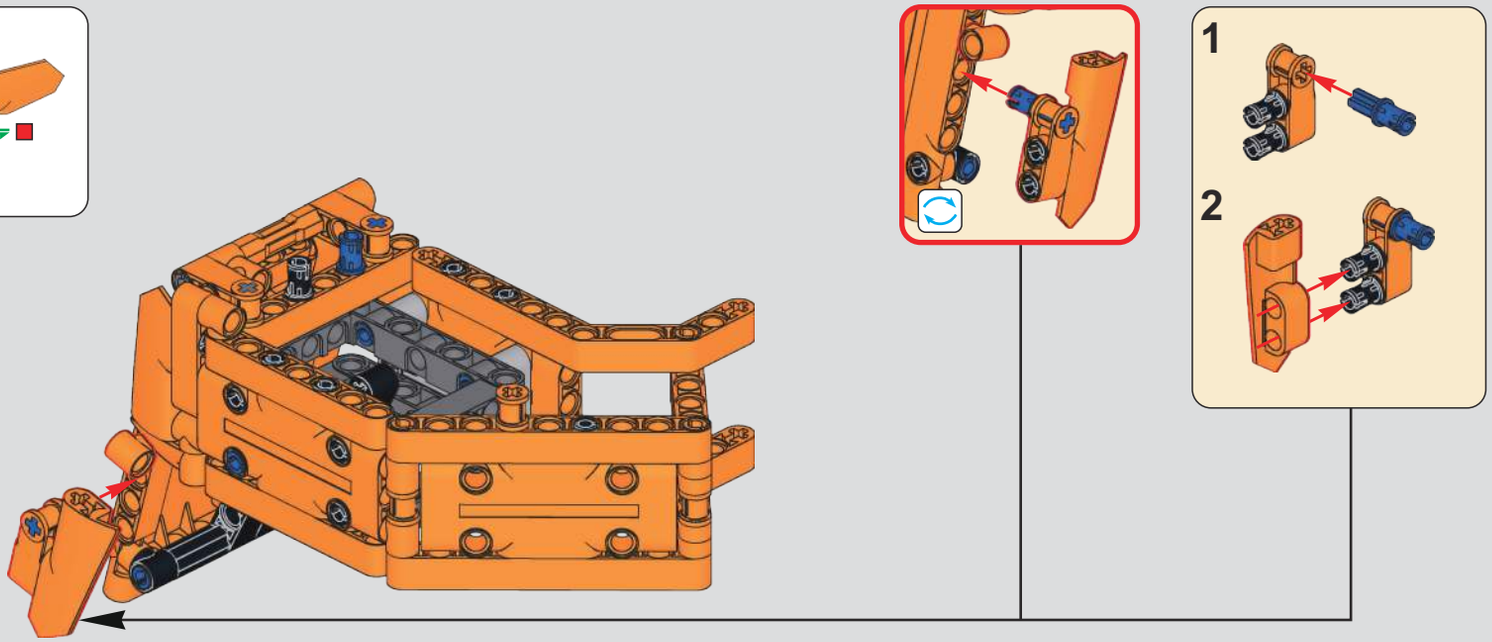

734

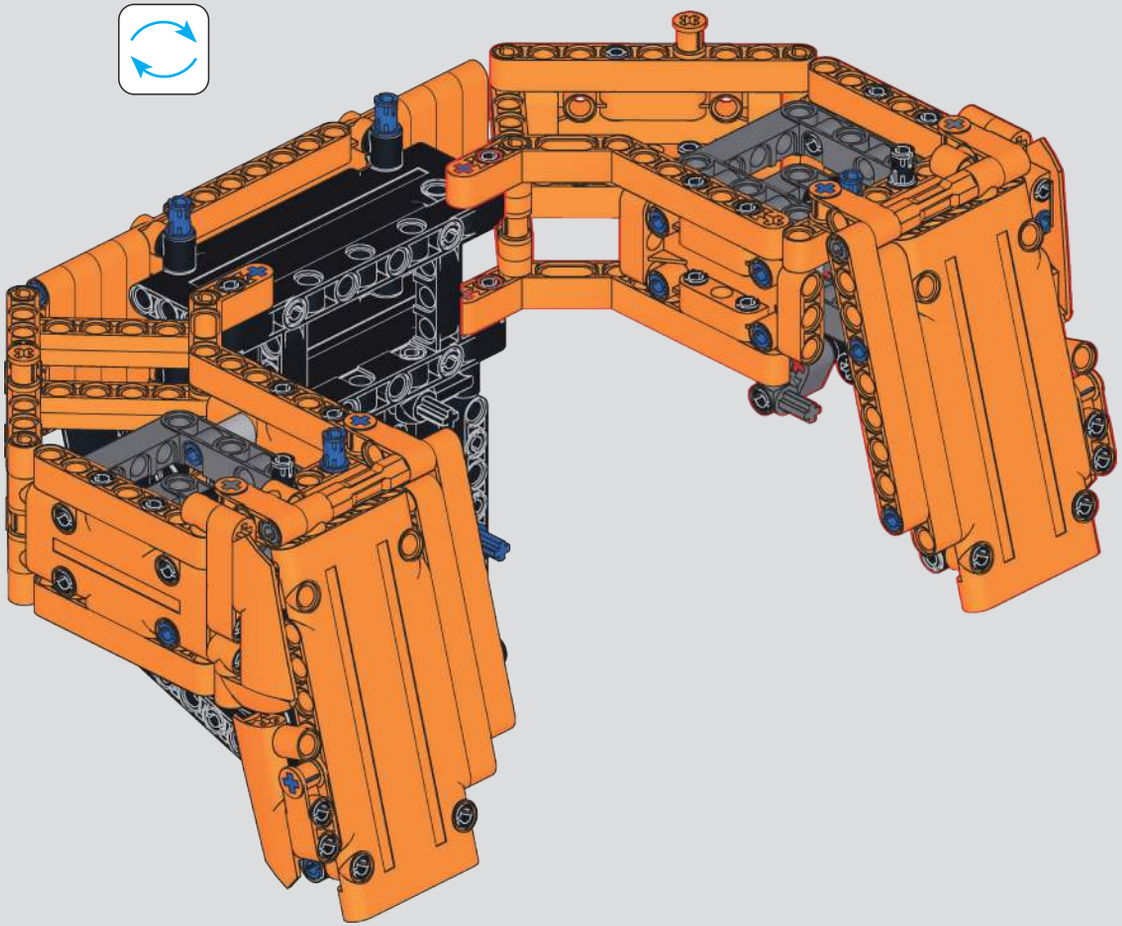

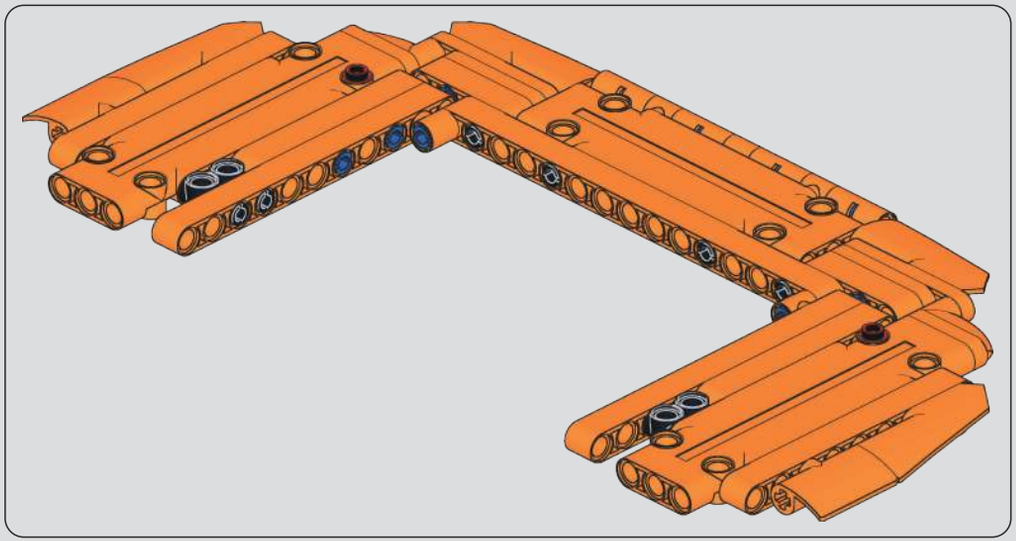

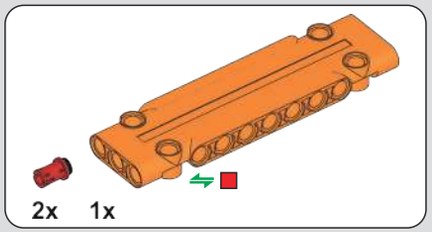

735

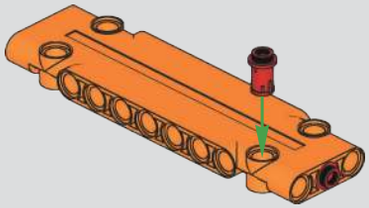

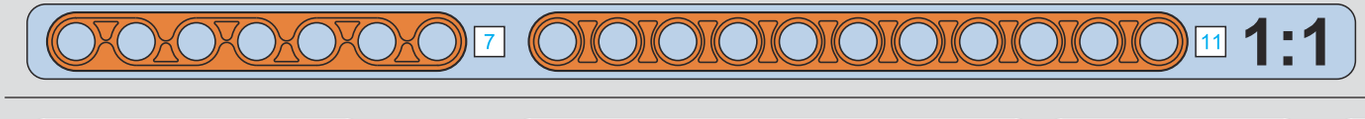

736

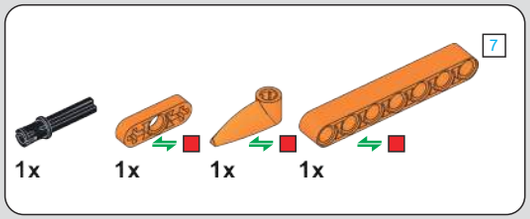

737

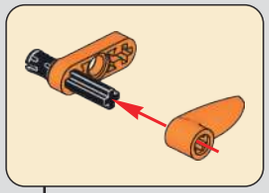

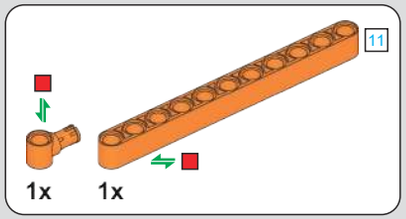

738

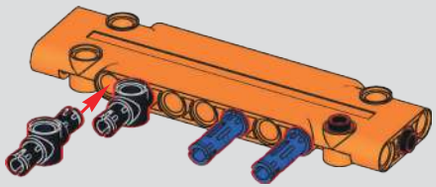

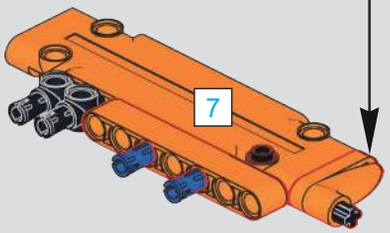

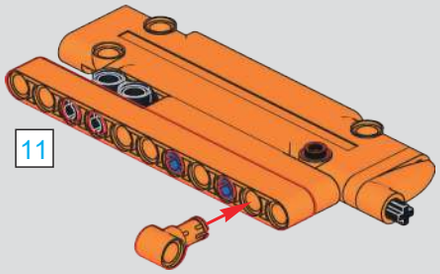

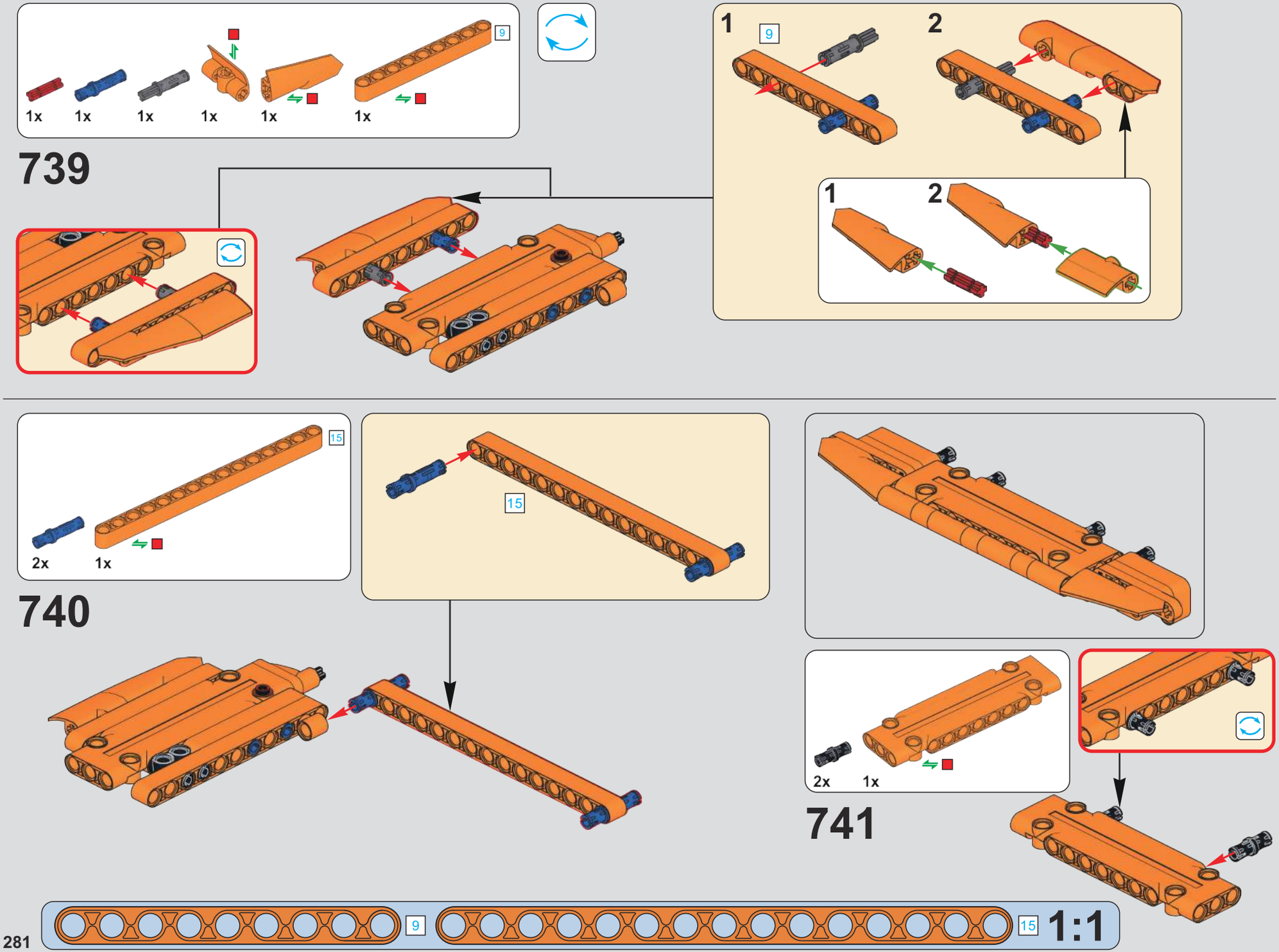
1x
1x
1x
1x
1x
1x
9
739
1
2
740
2x
1x
15
741
2x
1x
1:1

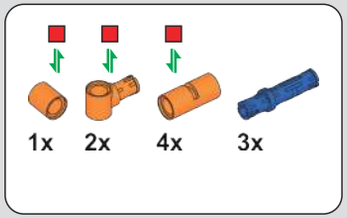

742

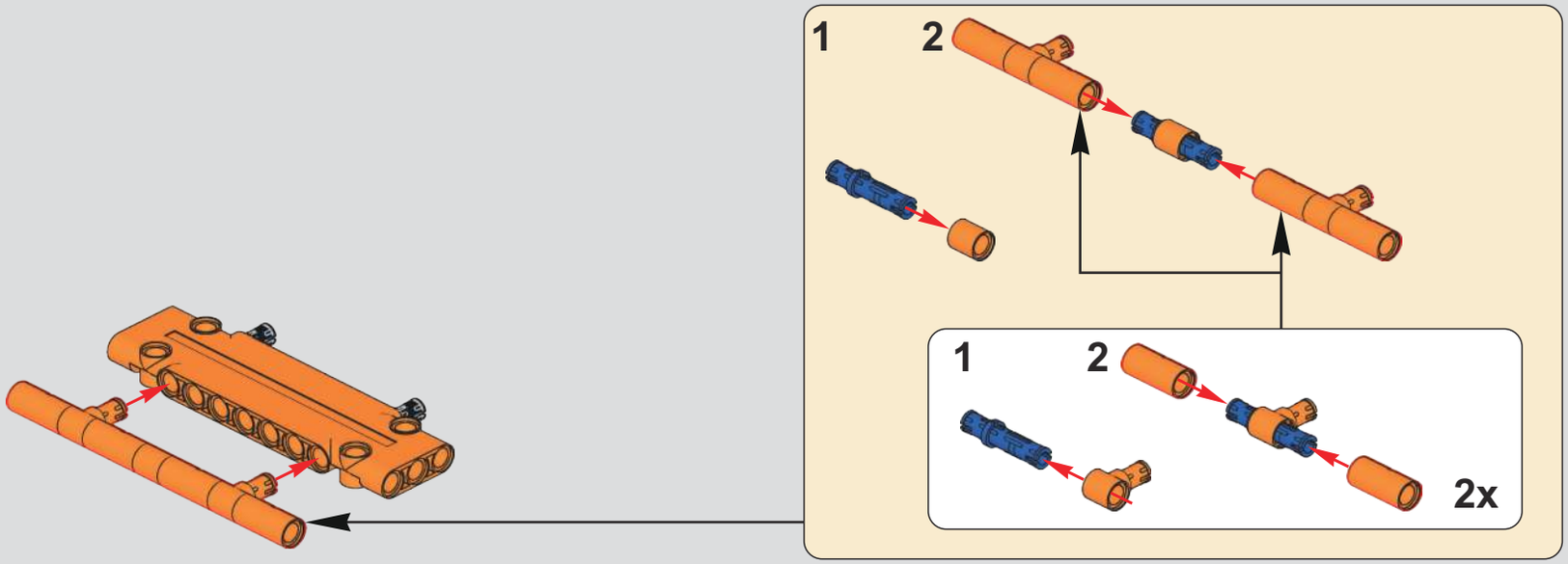

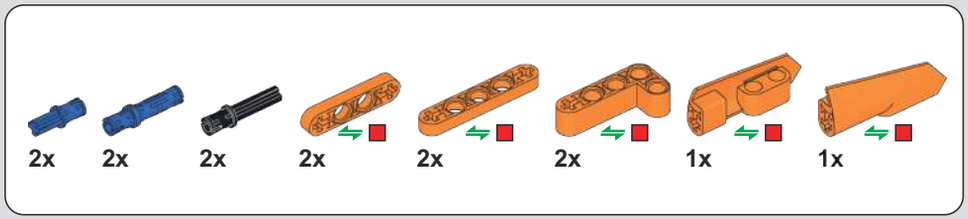

743

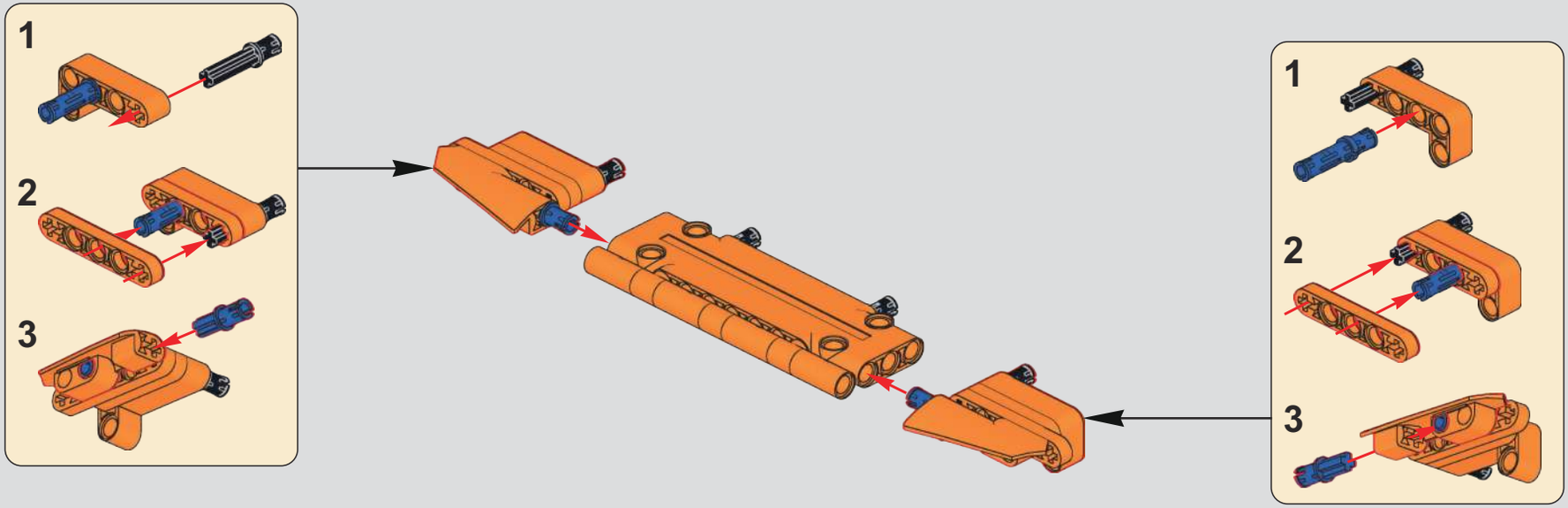

744

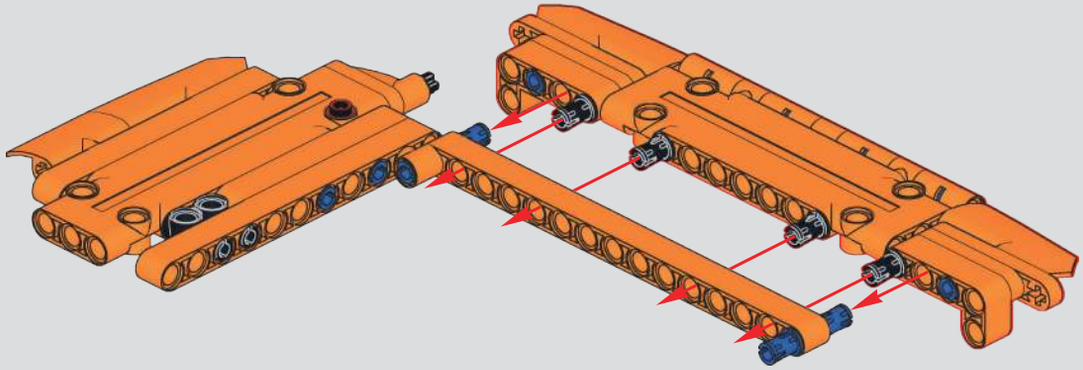

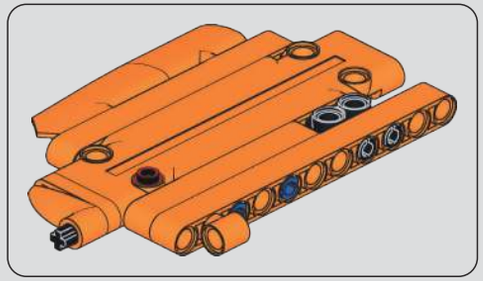

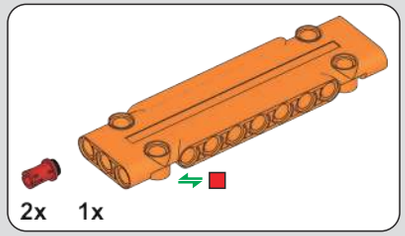

745

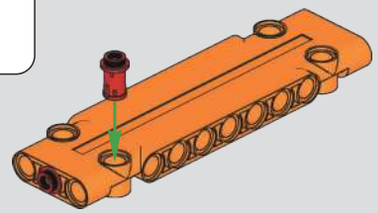

746

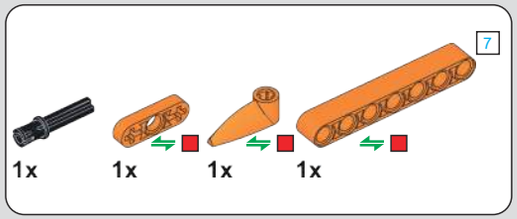

747

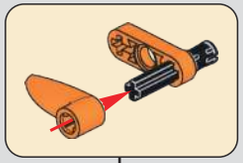

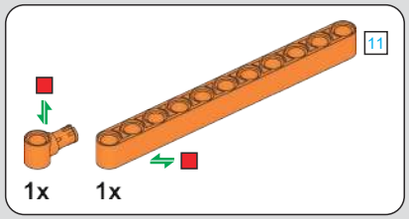

748

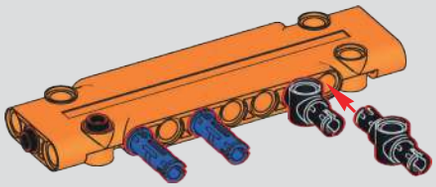

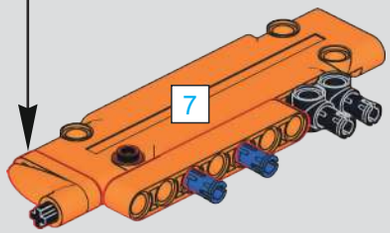

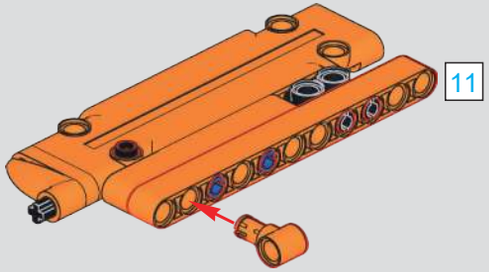

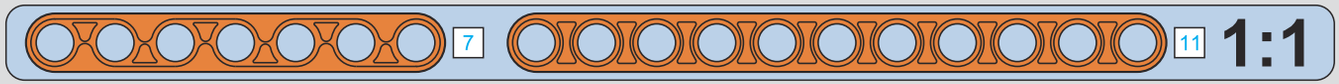

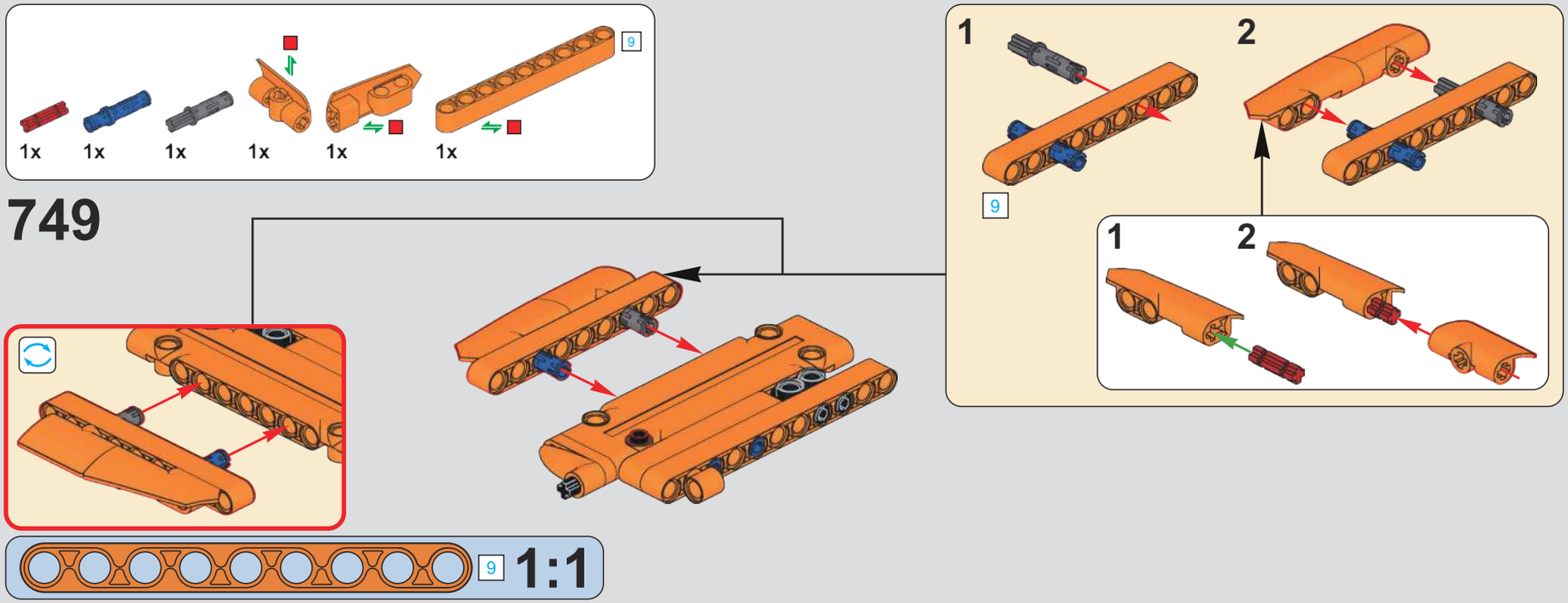

749

750

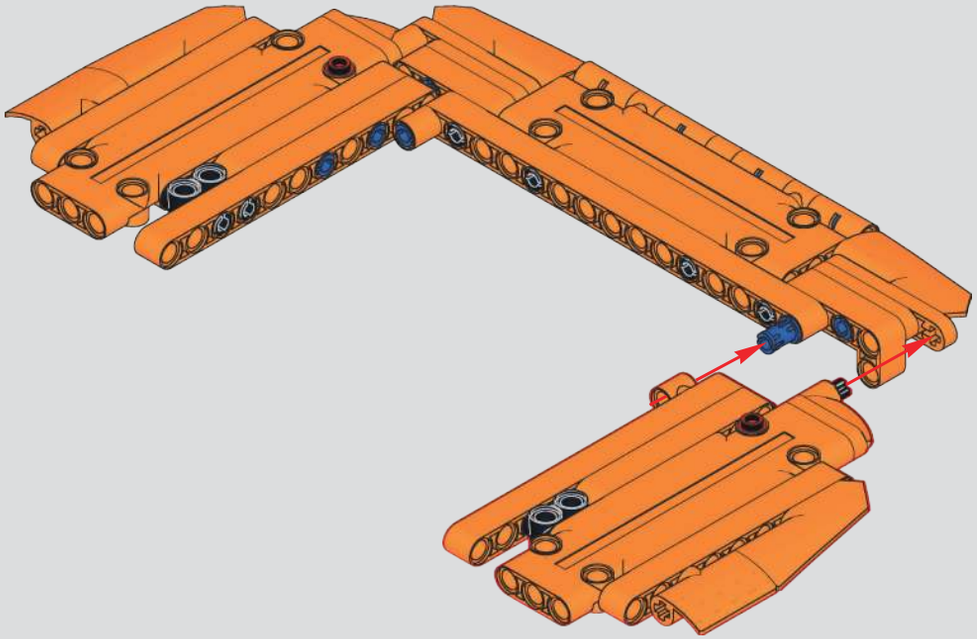

751

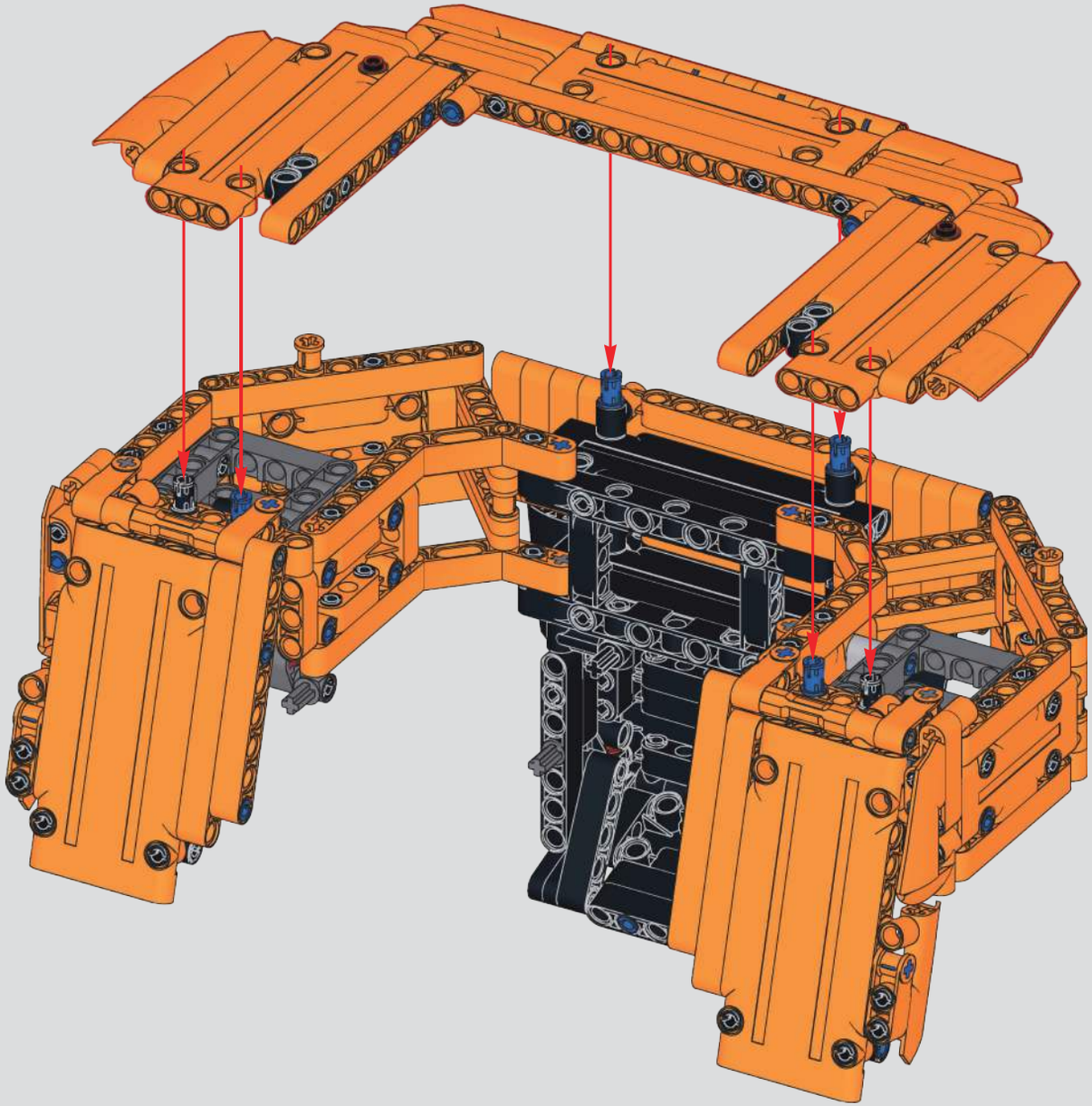

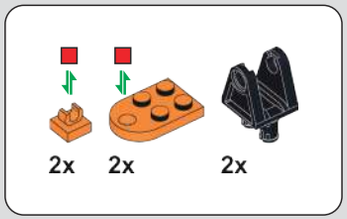

752

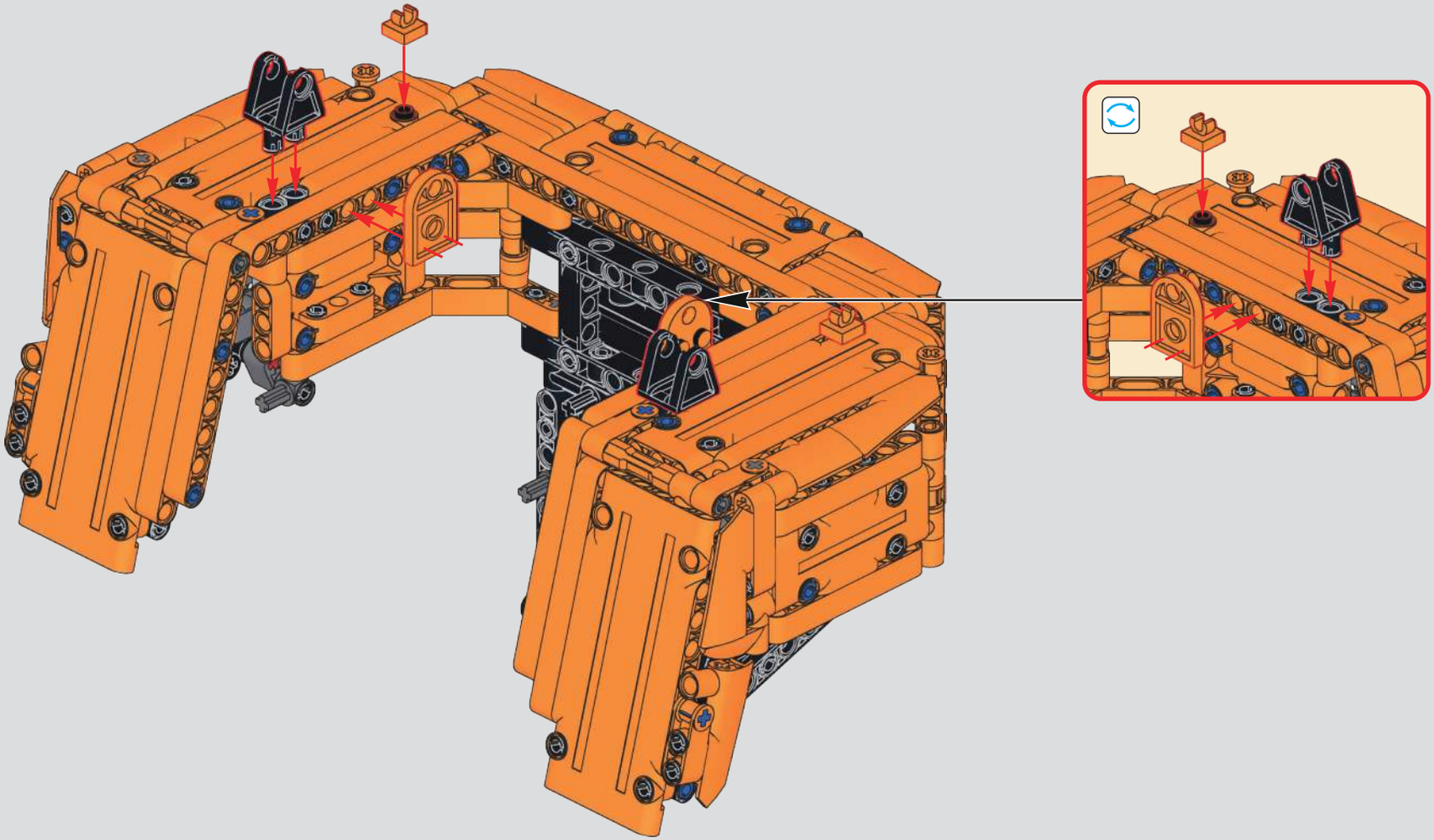

753

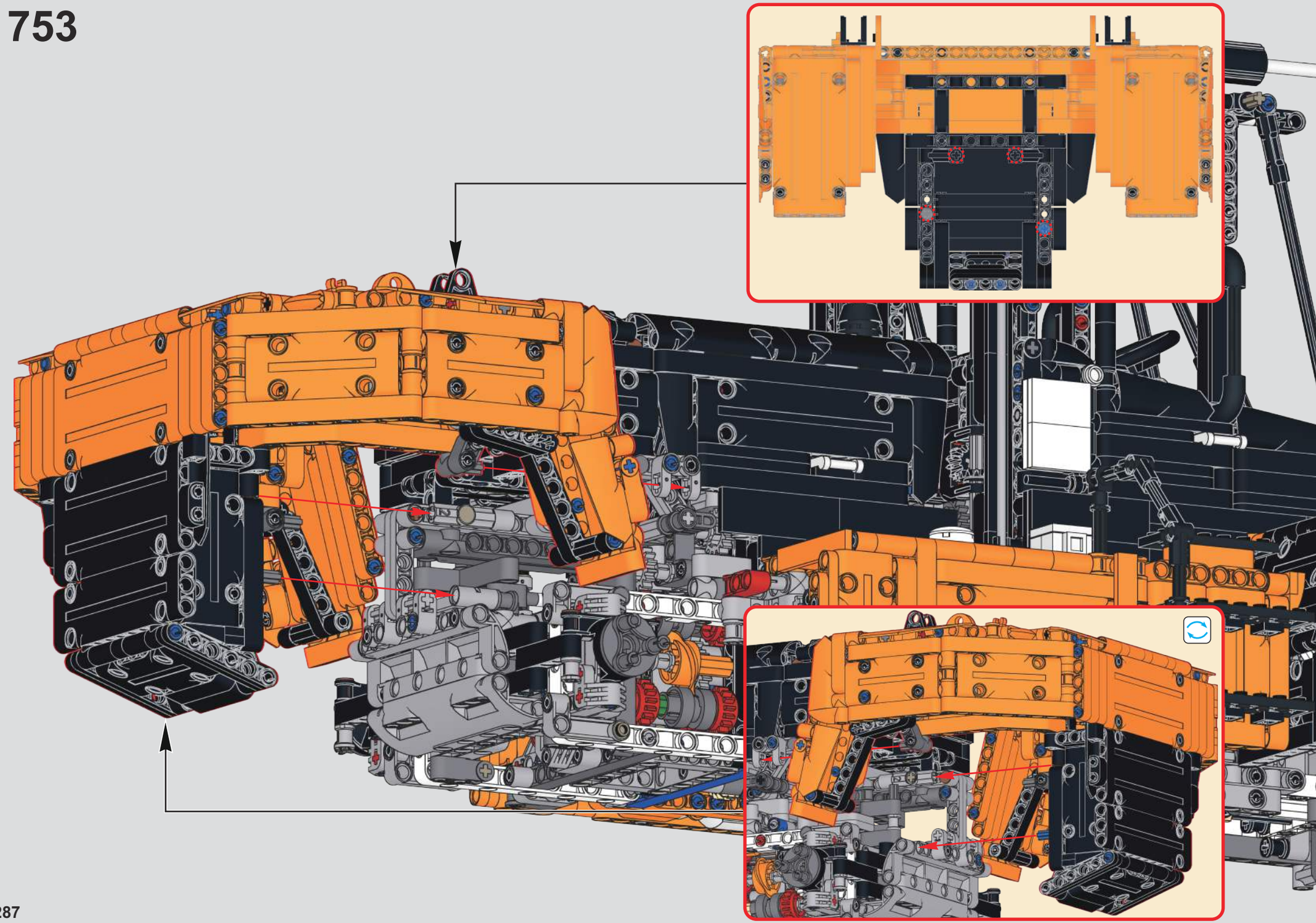

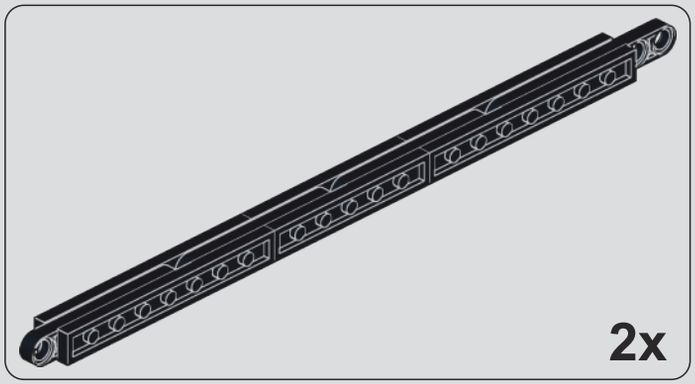

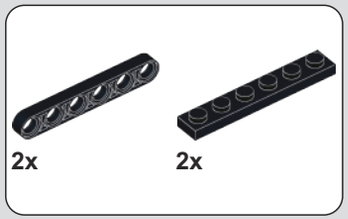

755

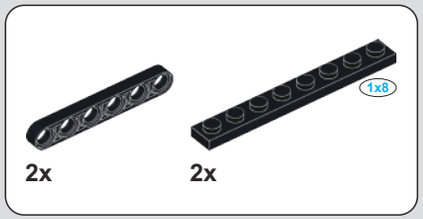

756

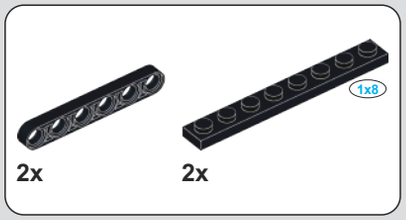

754

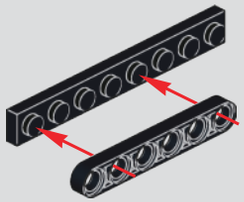

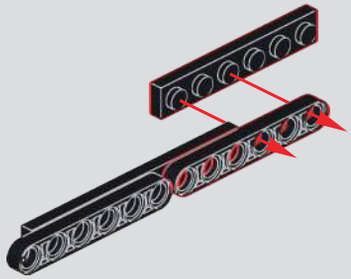

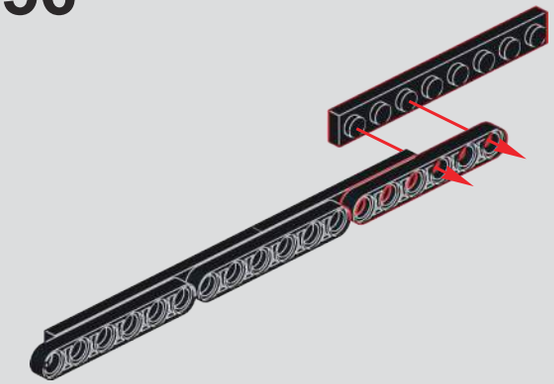

757

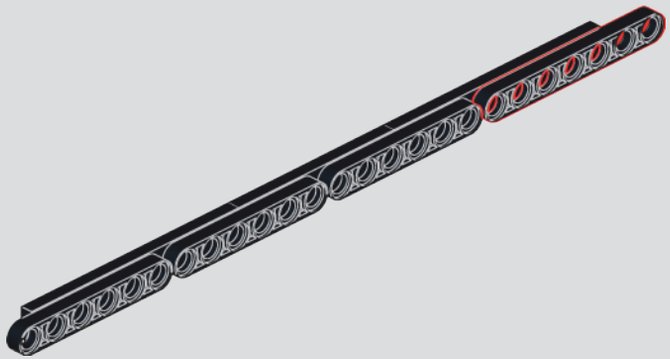

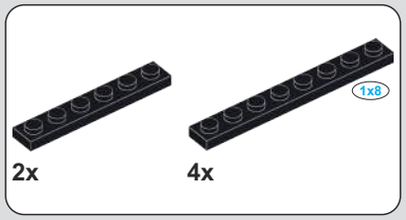

758

2x

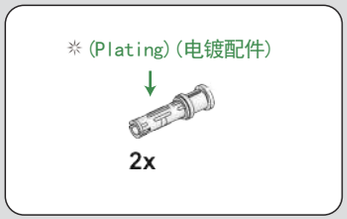

759

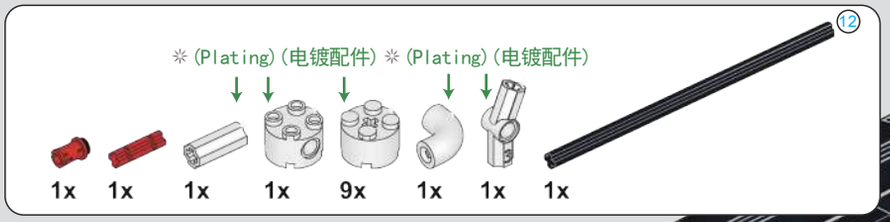
※ (Plating) (电镀配件) ※ (Plating) (电镀配件)
1x 1x 1x 1x 9x 1x 1x 1x
12

760

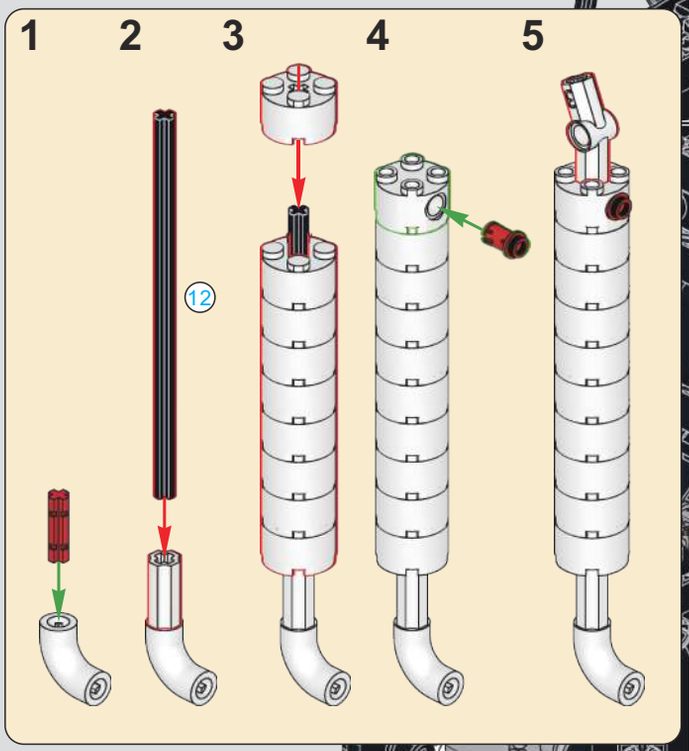
1
2
3
4
5
12

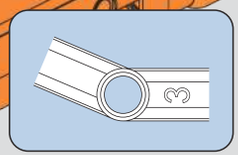

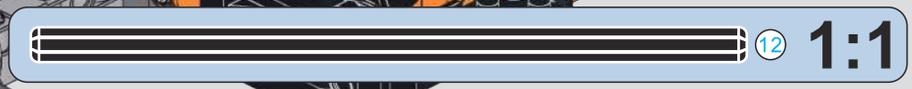
12
1:1

761

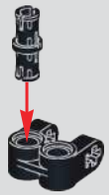

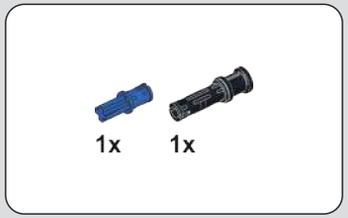

762

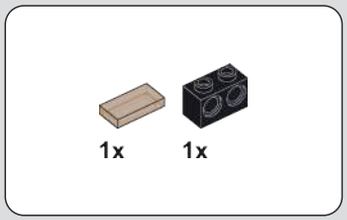

763

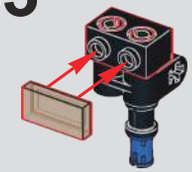

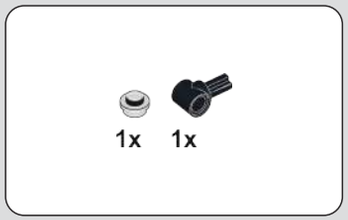

764

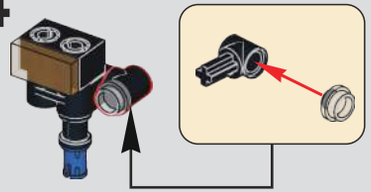

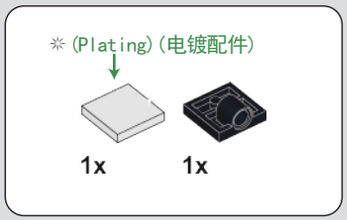

765

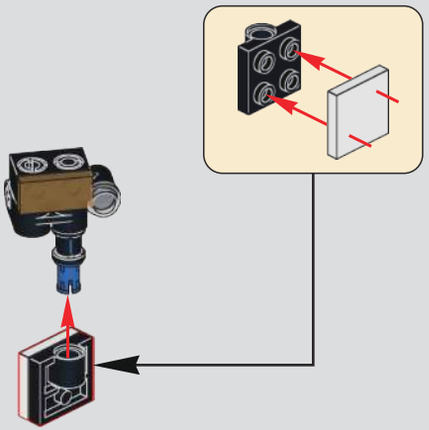

766

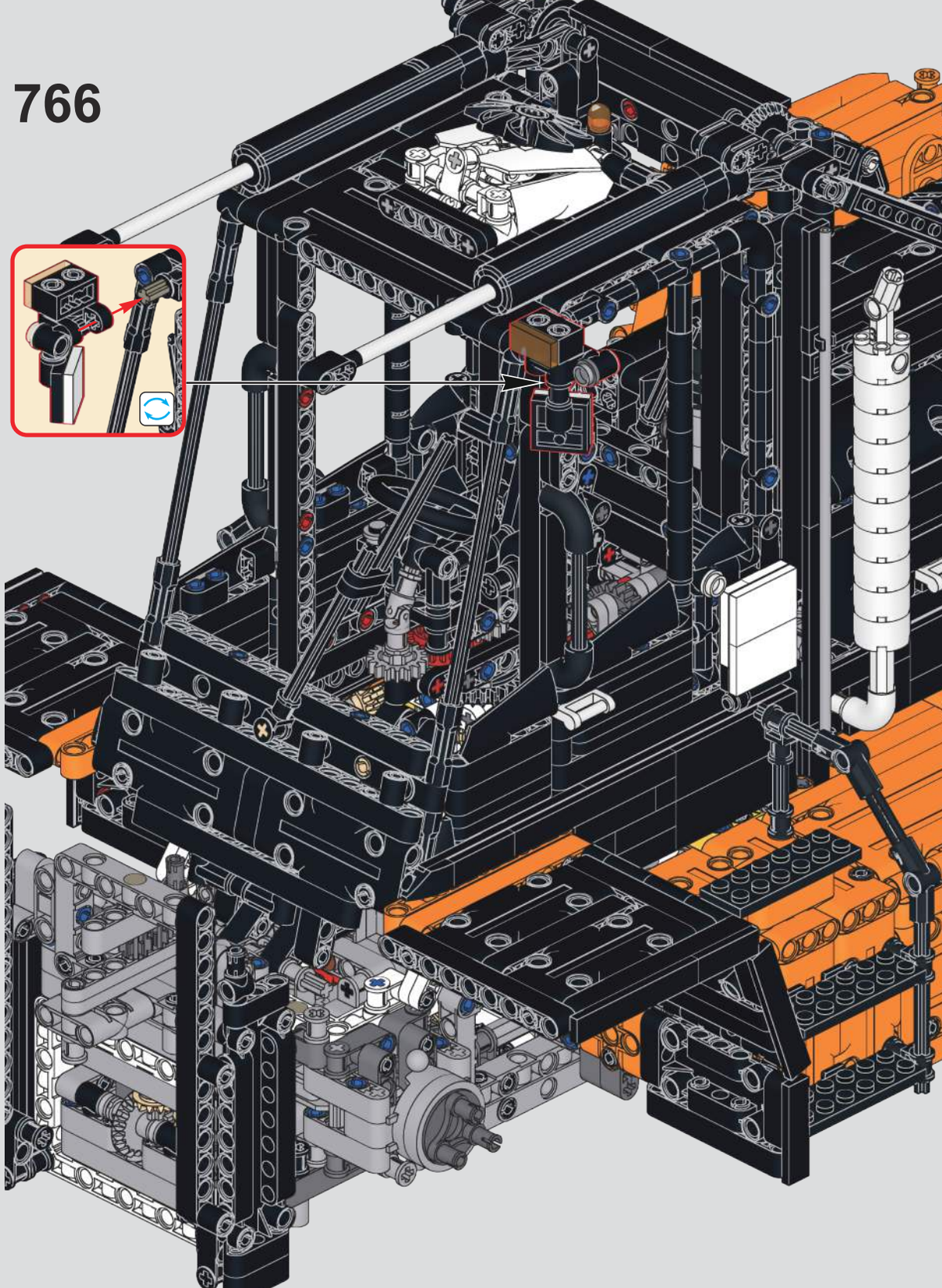

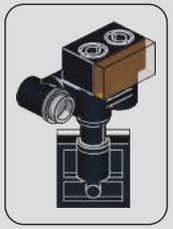

767

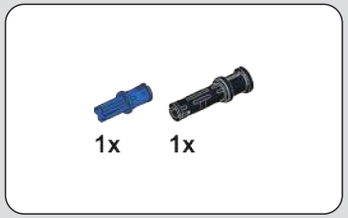

768

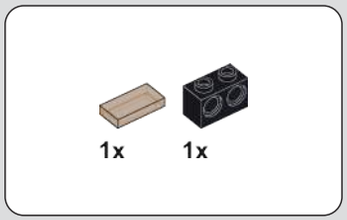

769

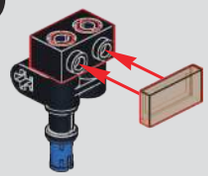

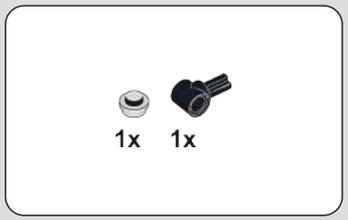

770

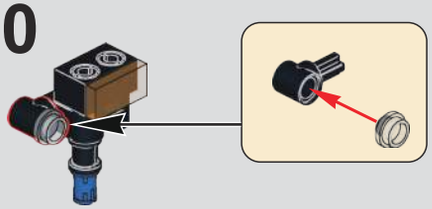

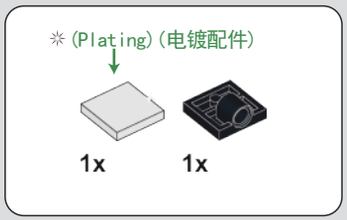

771

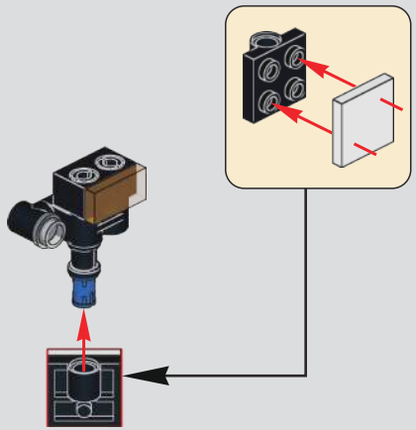

772

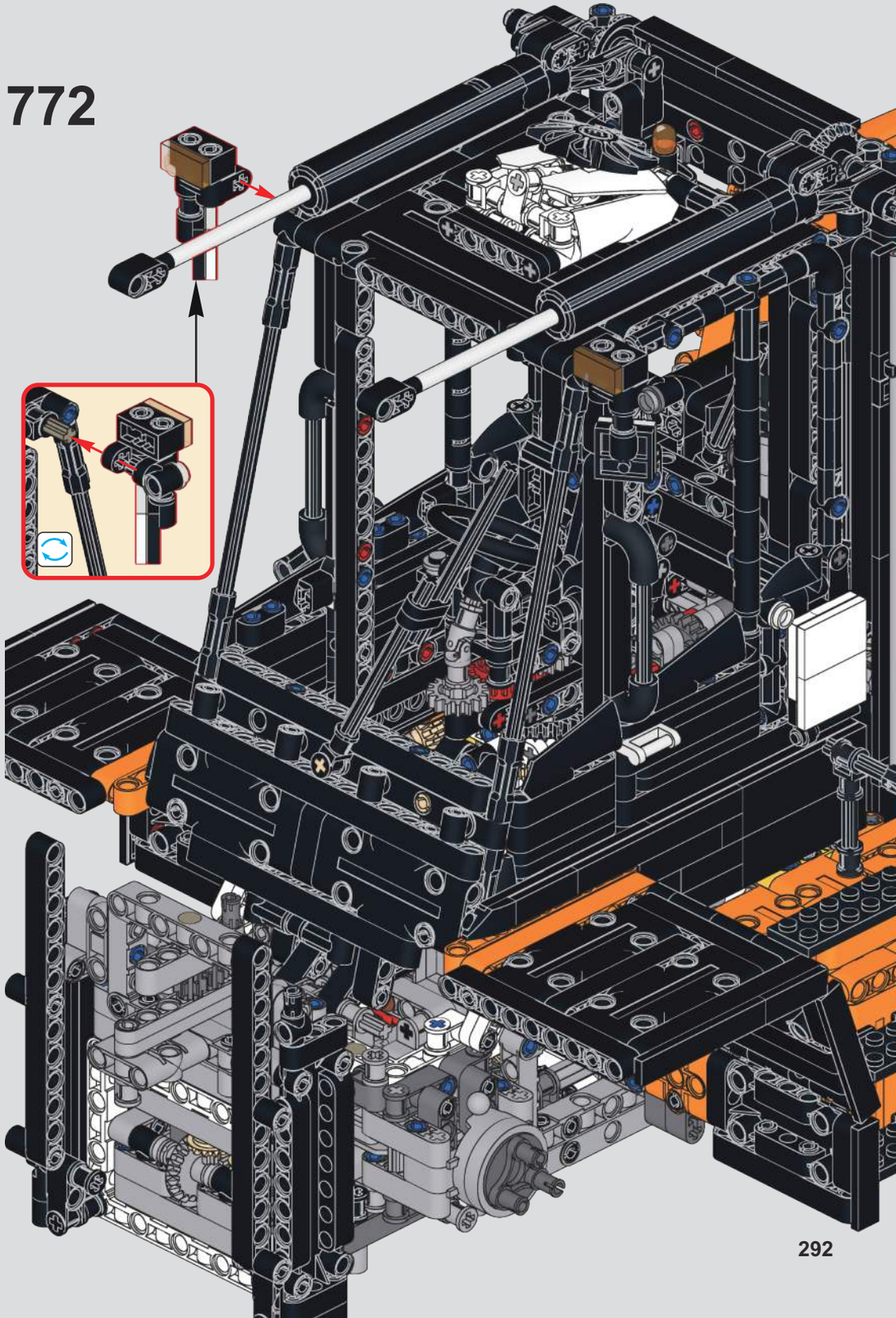

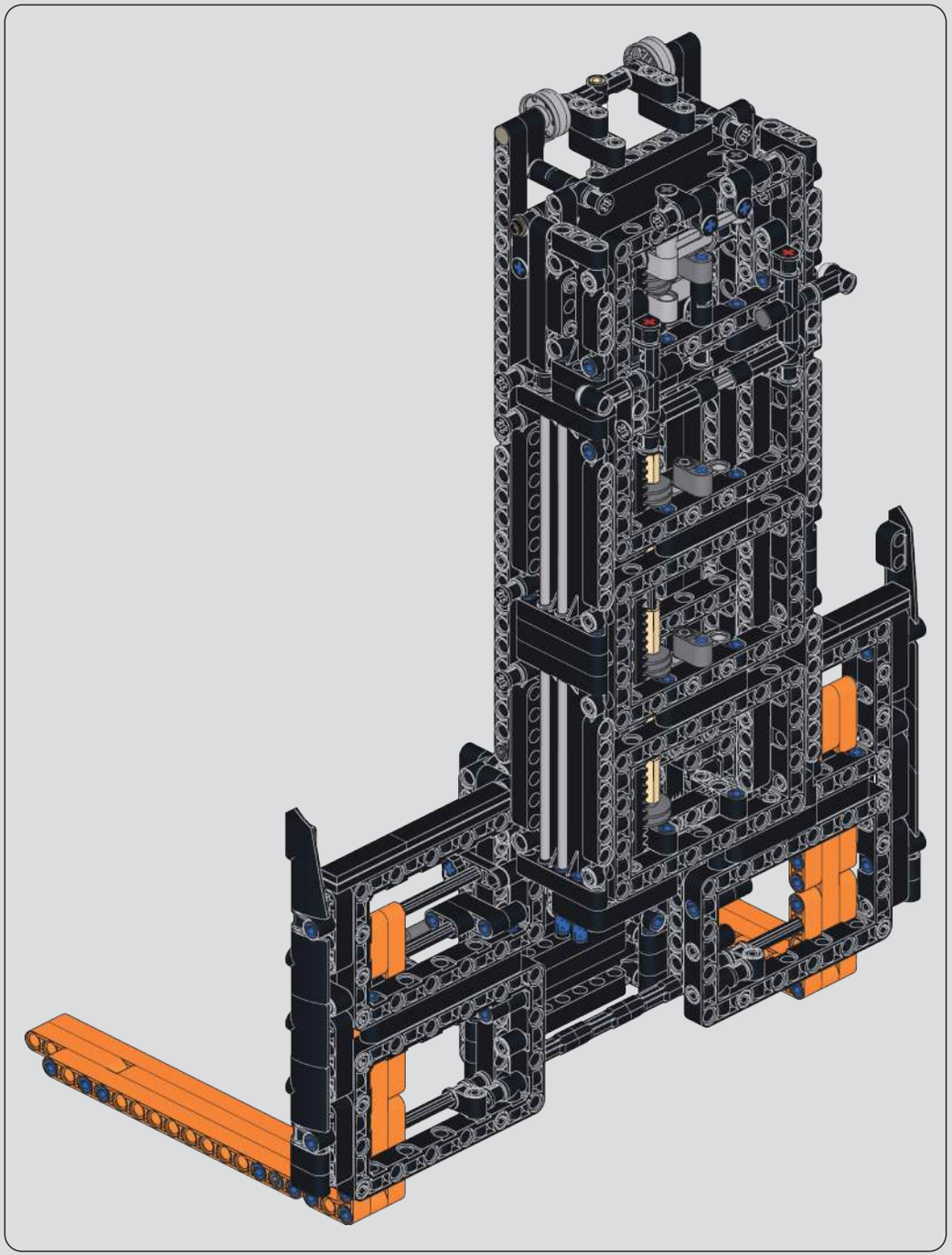

773

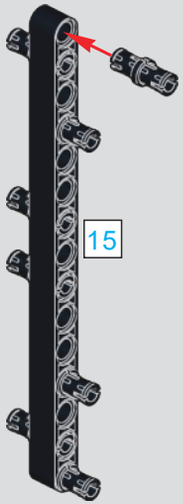

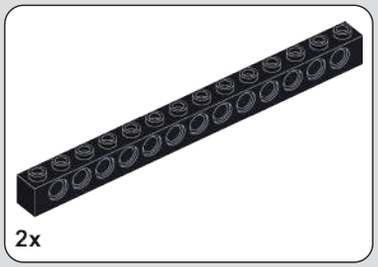

774

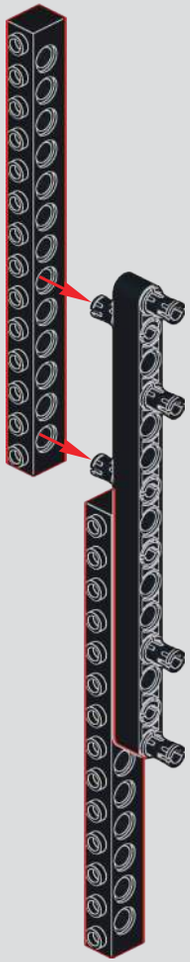

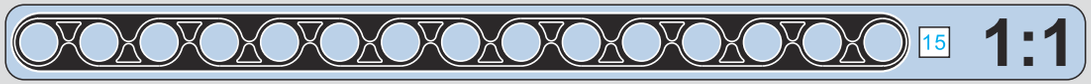

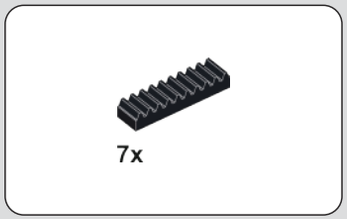

775

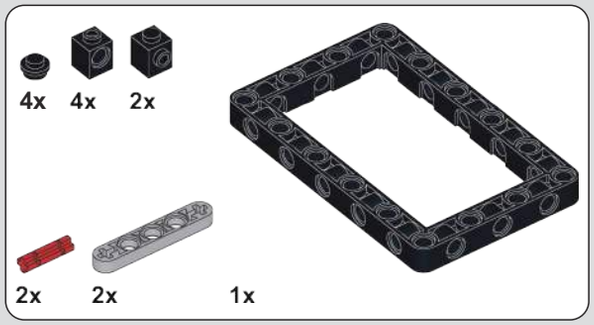

776

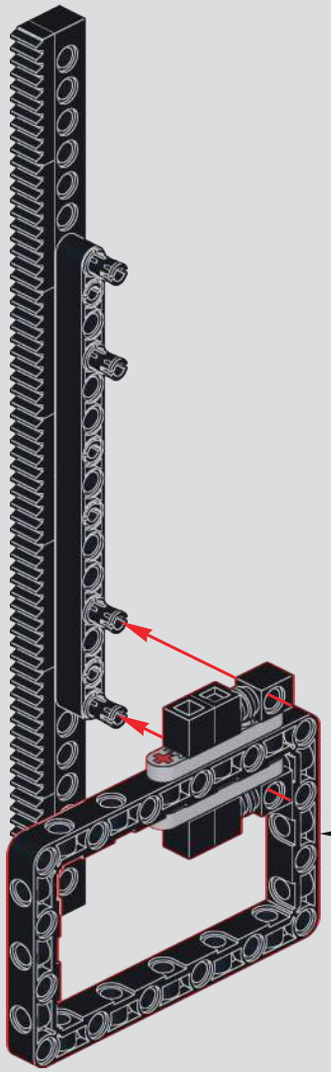

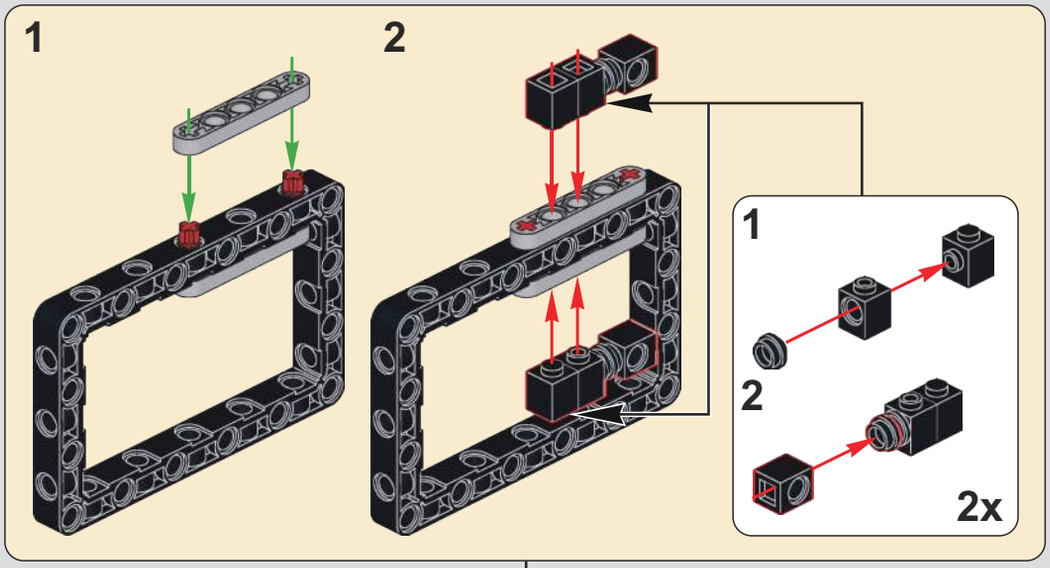

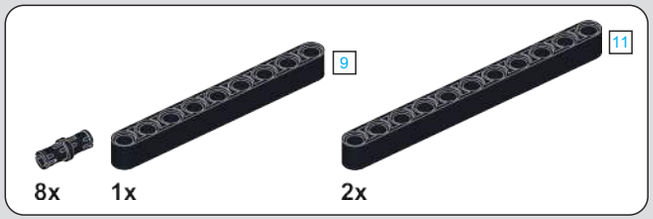

777

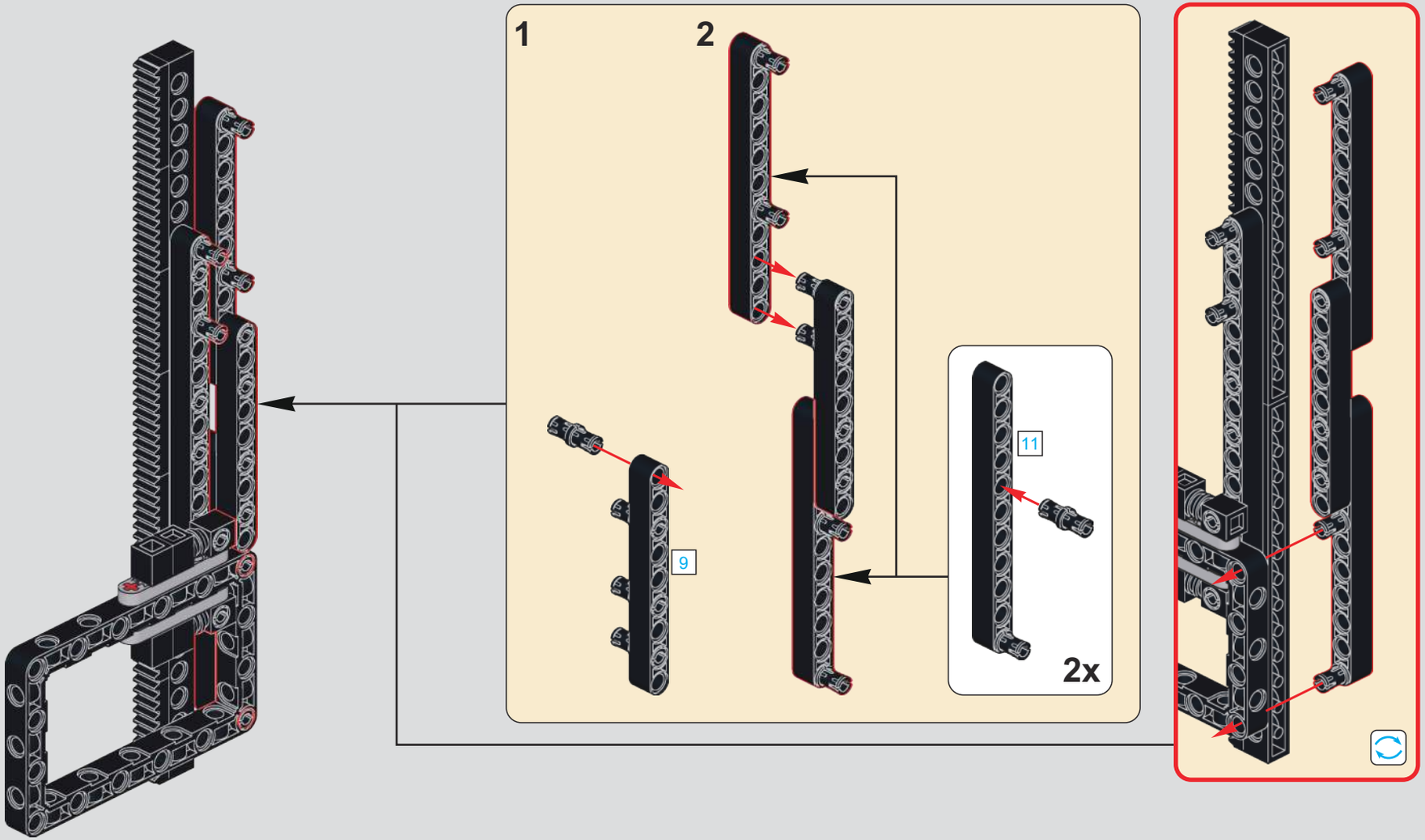

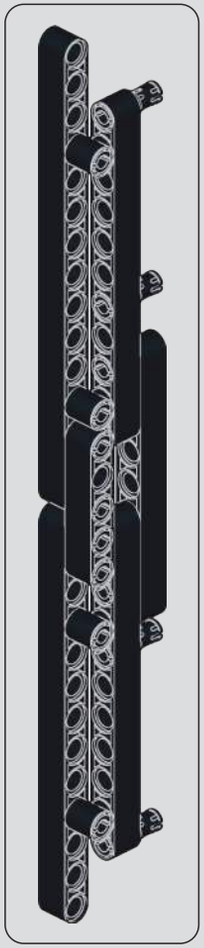

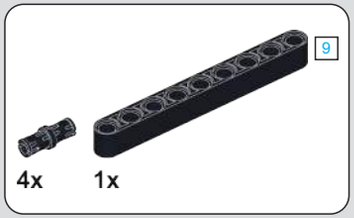

778

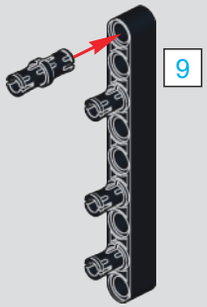

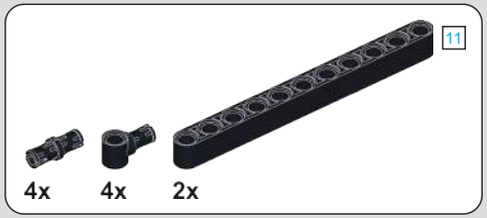

779

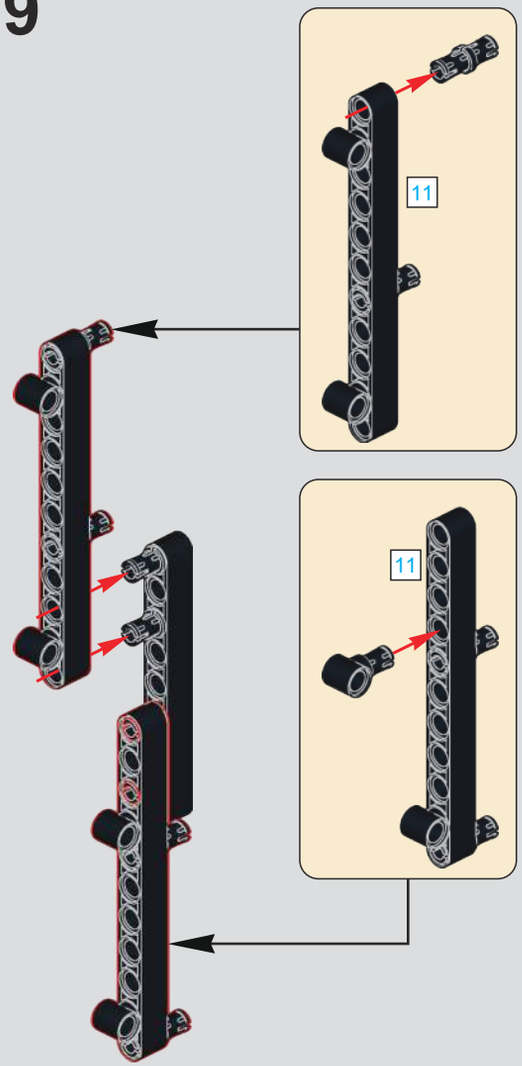

780

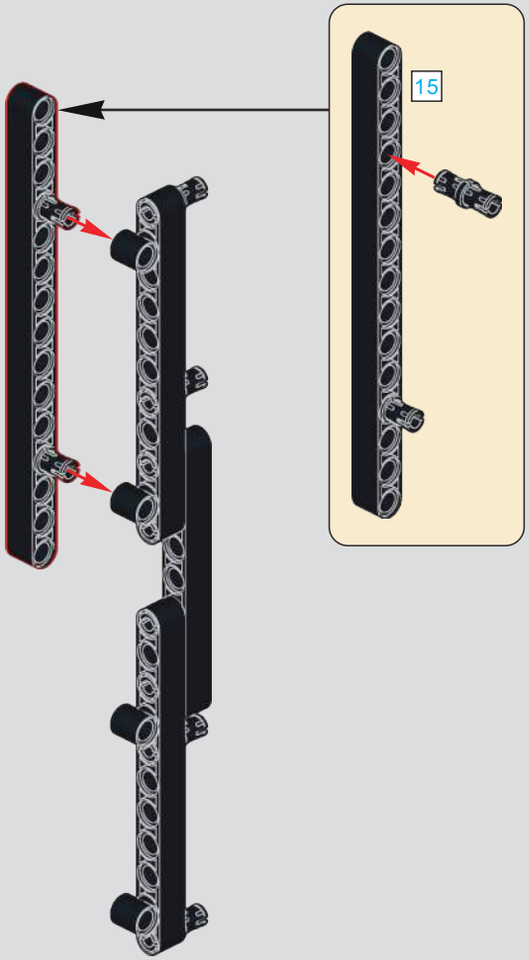

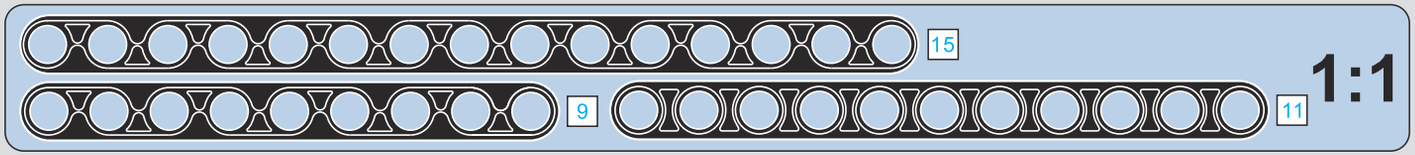

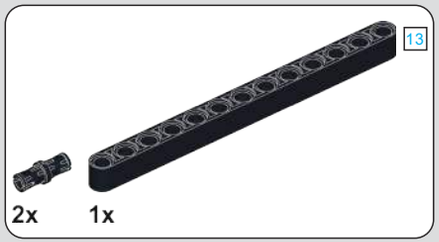

781

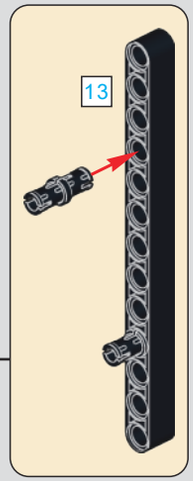

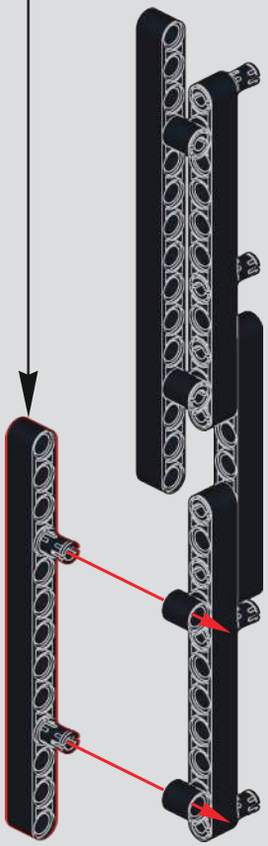

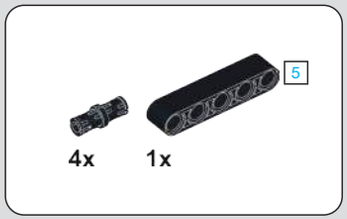

782

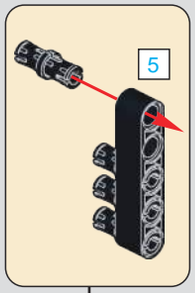

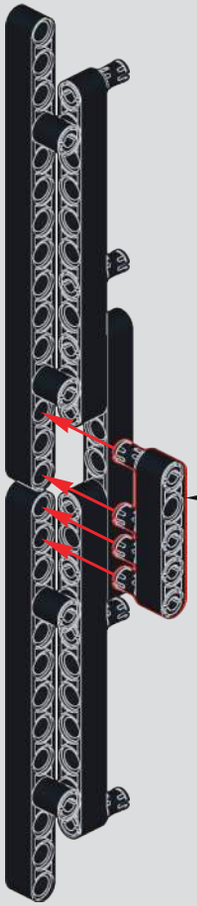

783

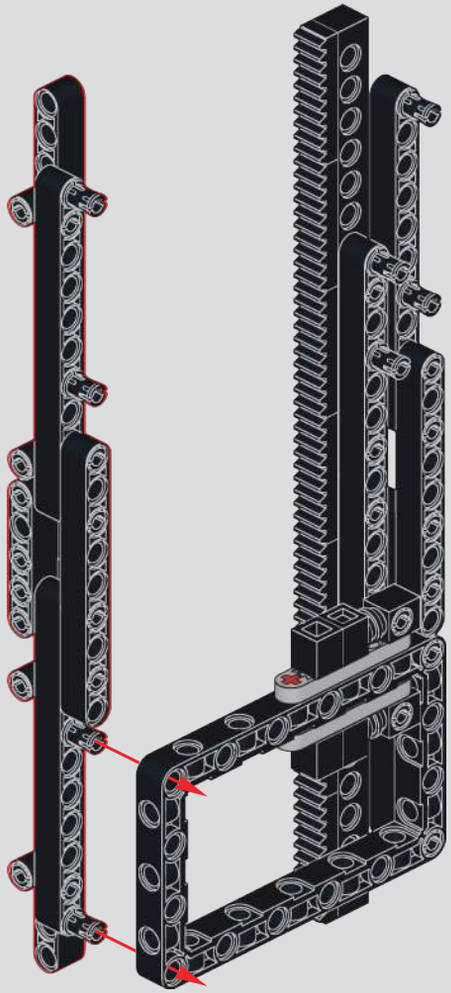

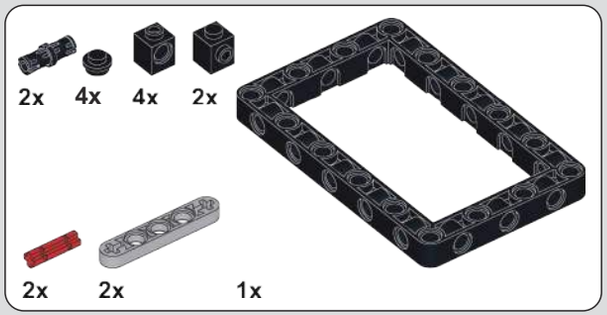

784

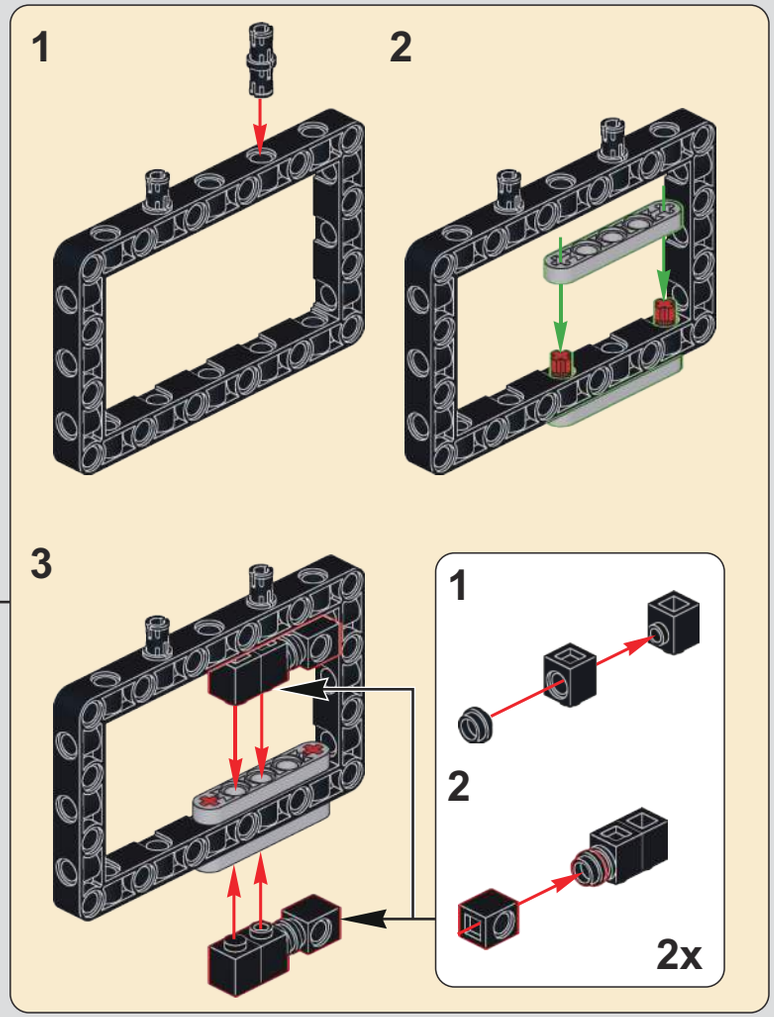

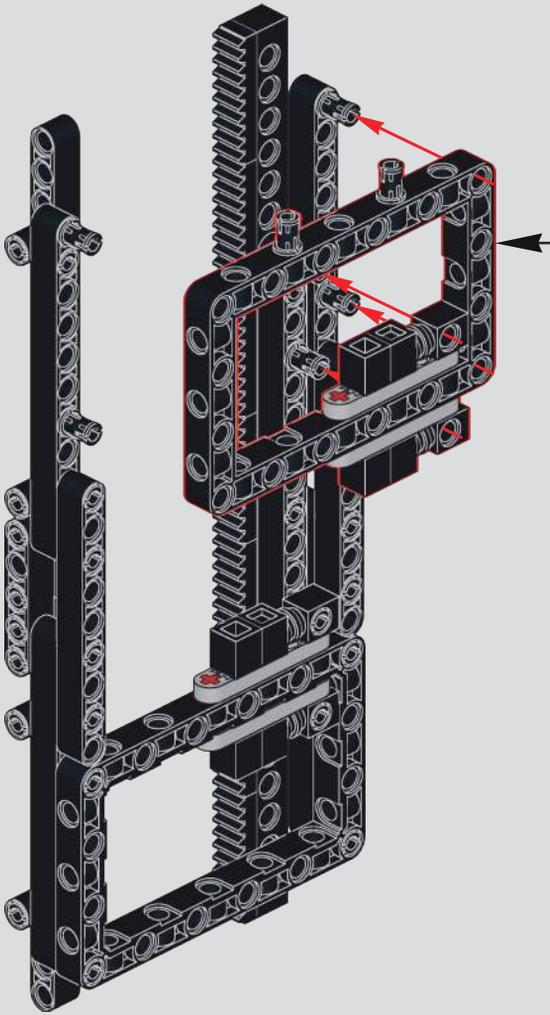

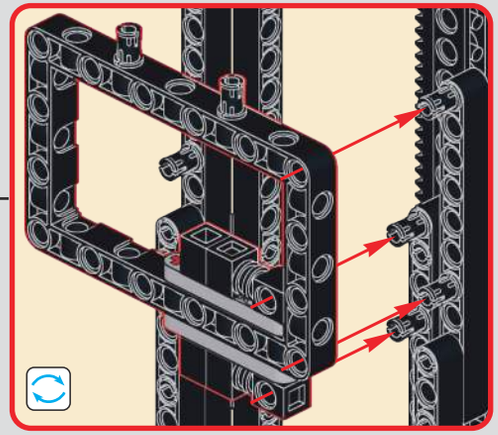

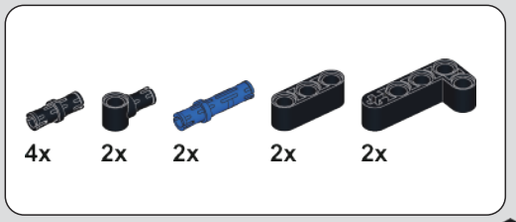

785

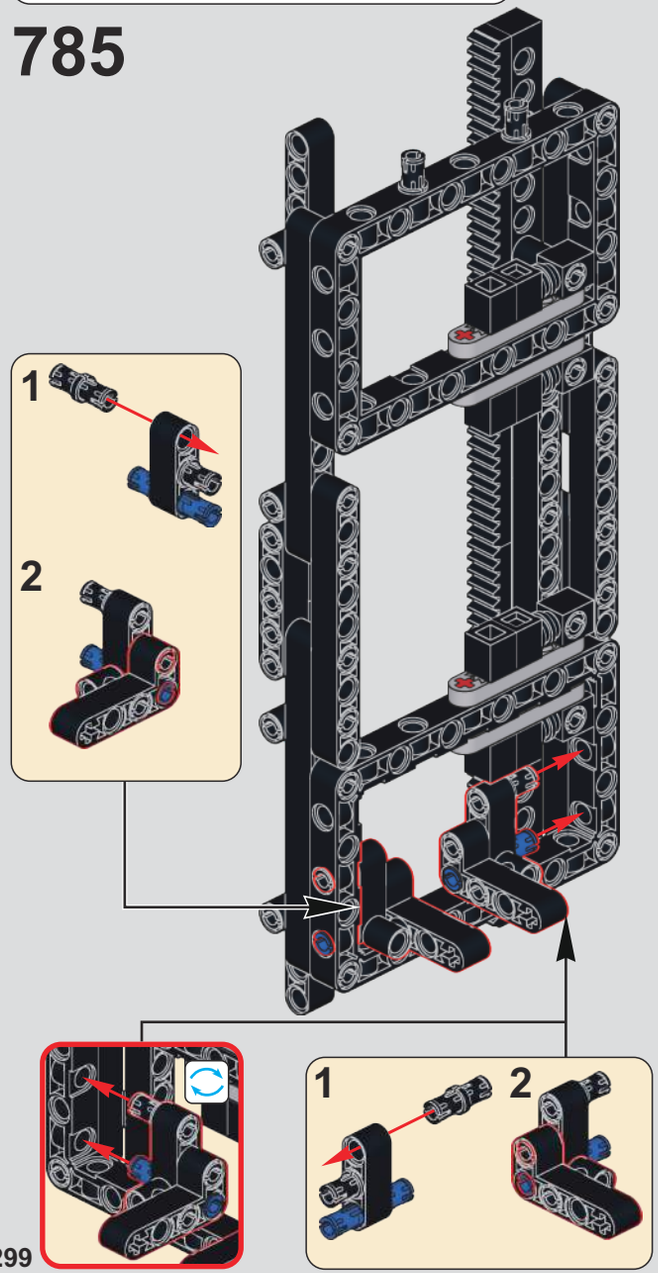

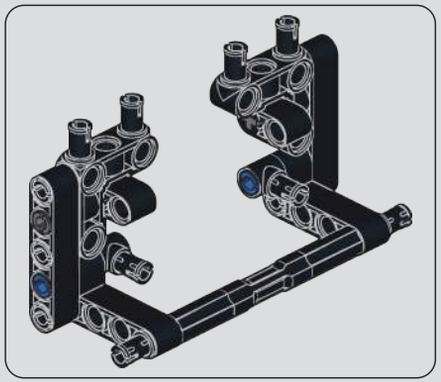

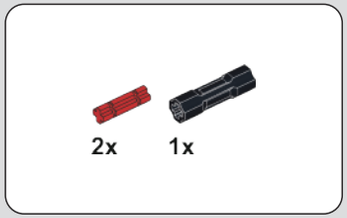

786

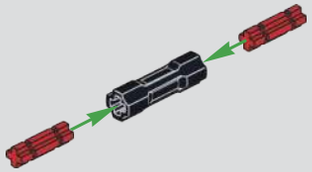

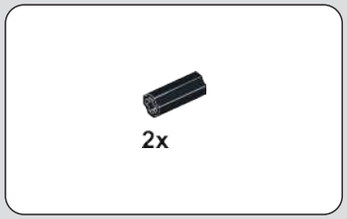

787

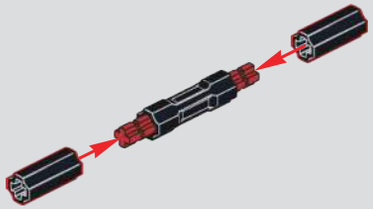

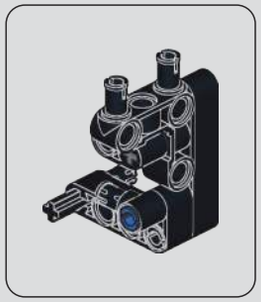

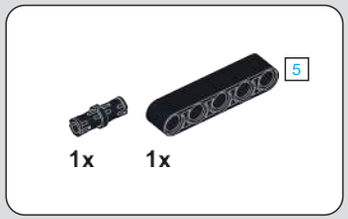

788

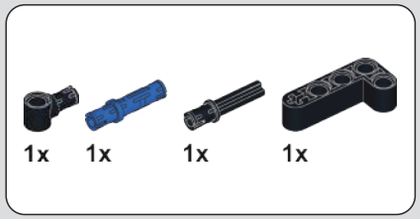

789

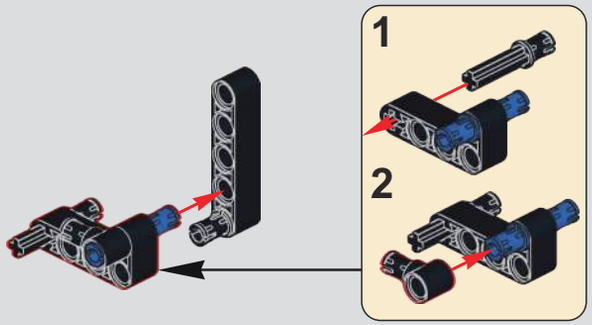

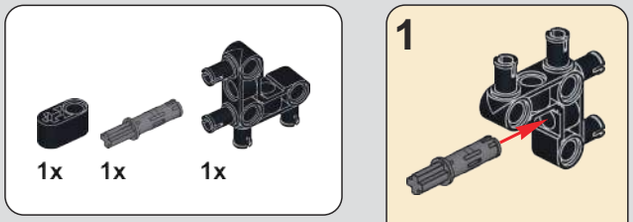

790

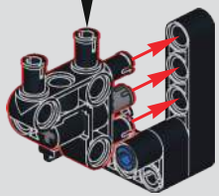

791

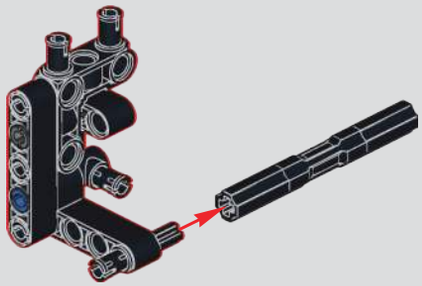

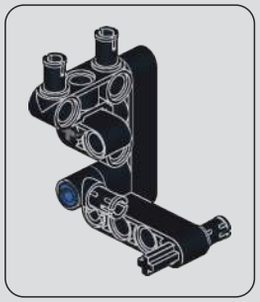

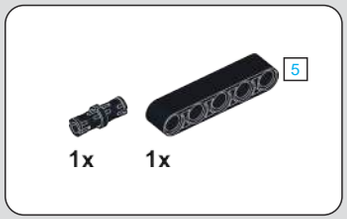

792

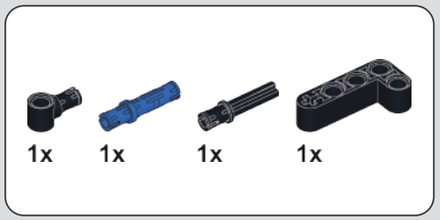

793

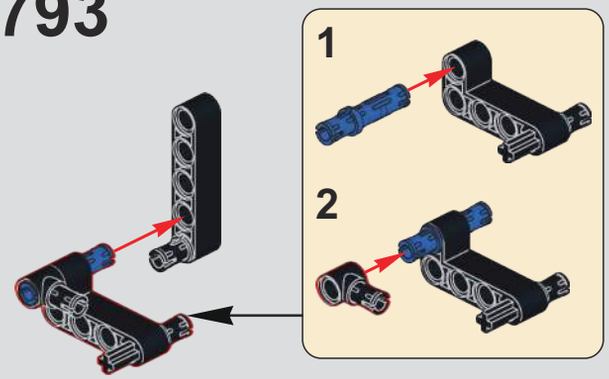

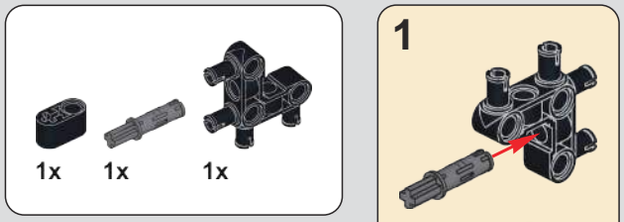

794

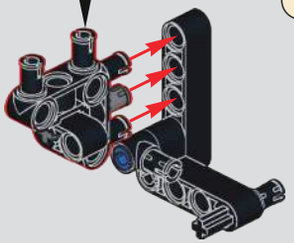

795

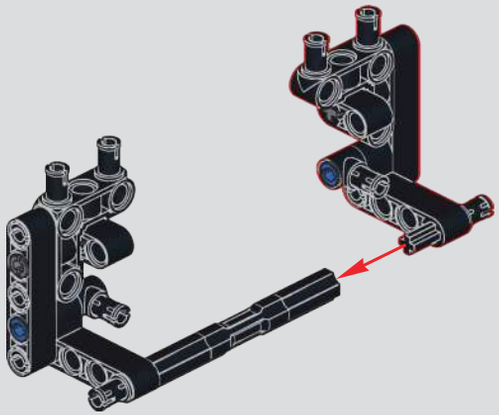

796

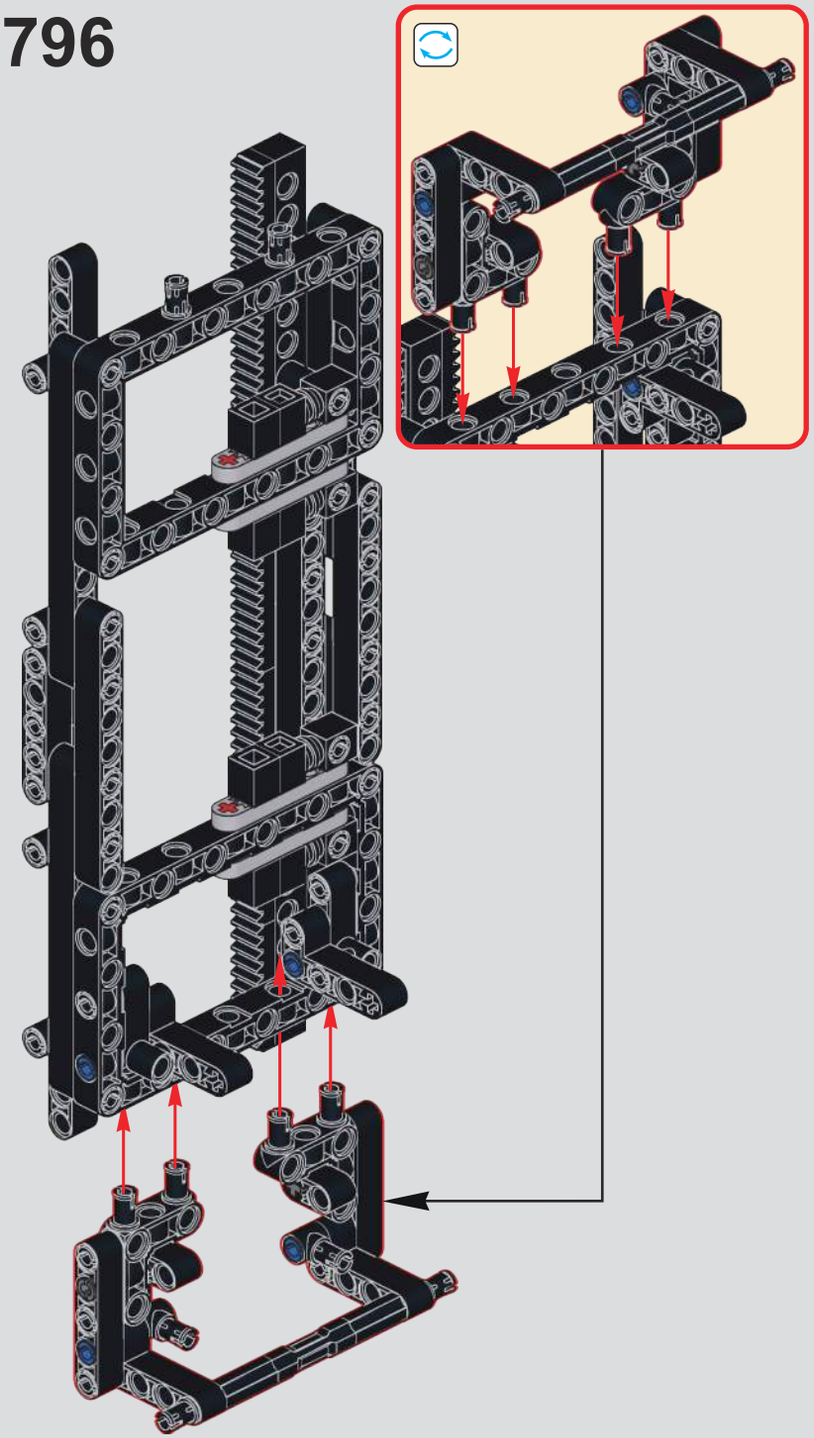

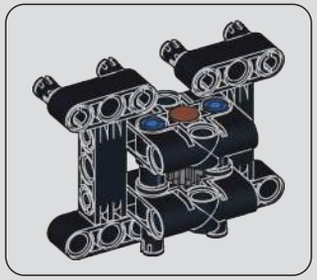

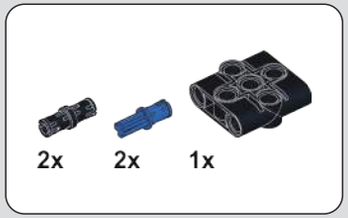

797

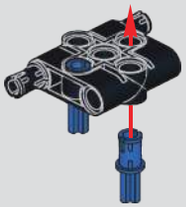

798

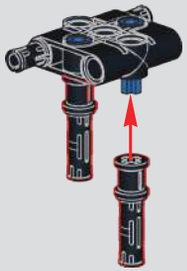

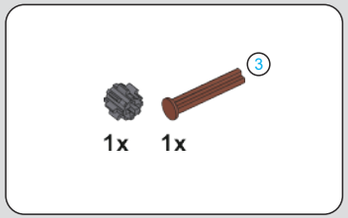

799

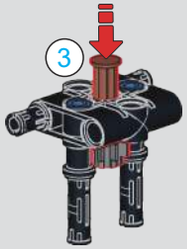

1:1

3 1:1

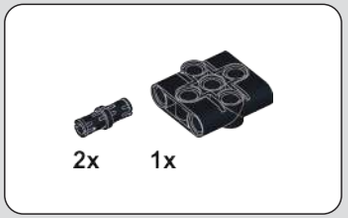

800

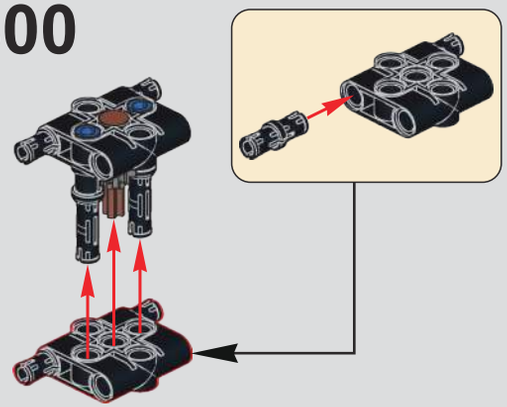

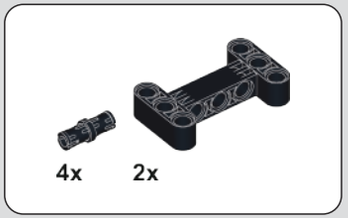

801

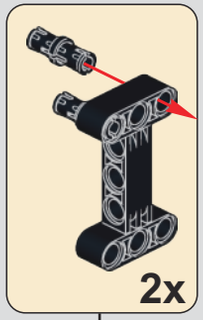

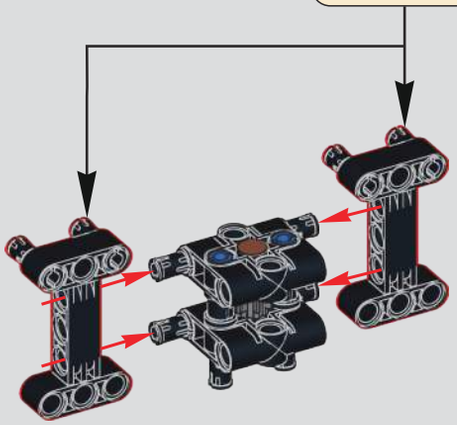

802

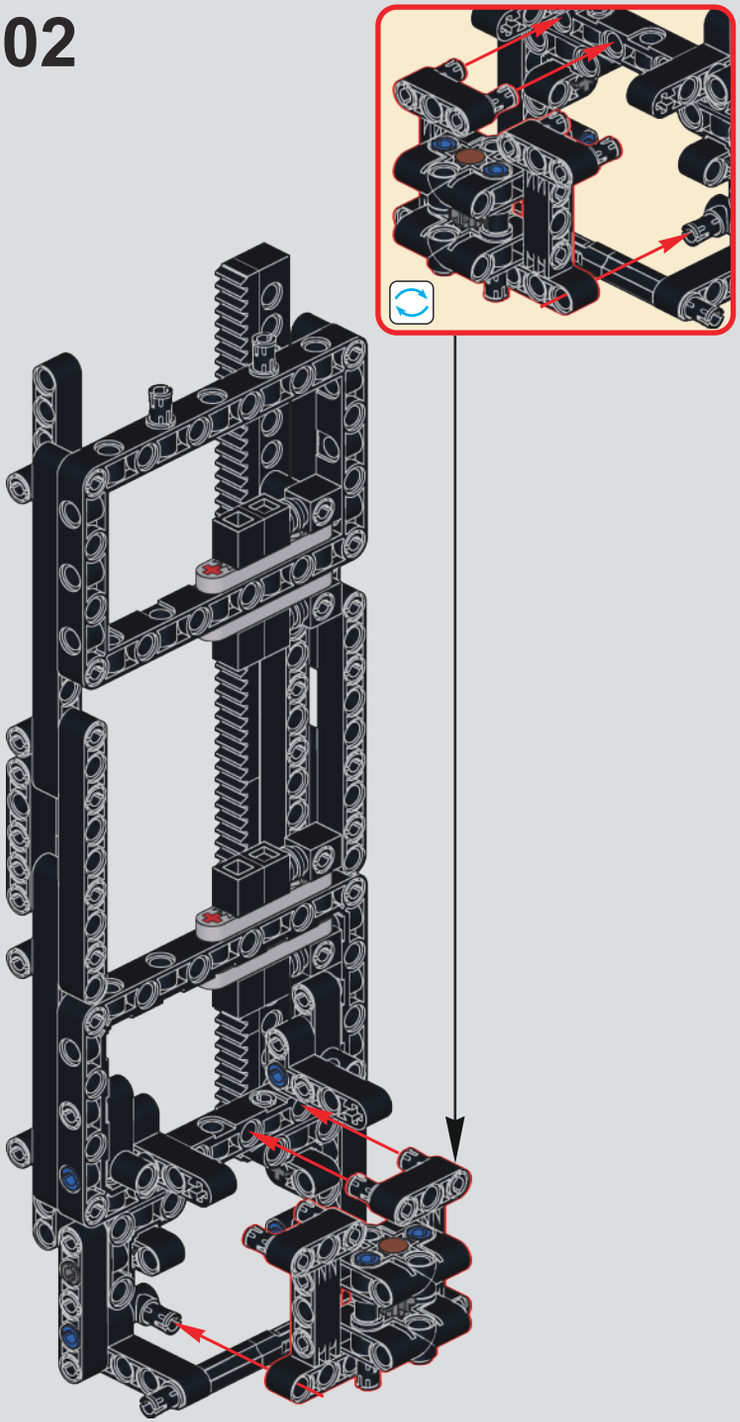

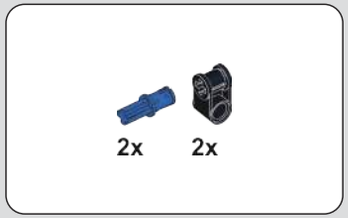

803

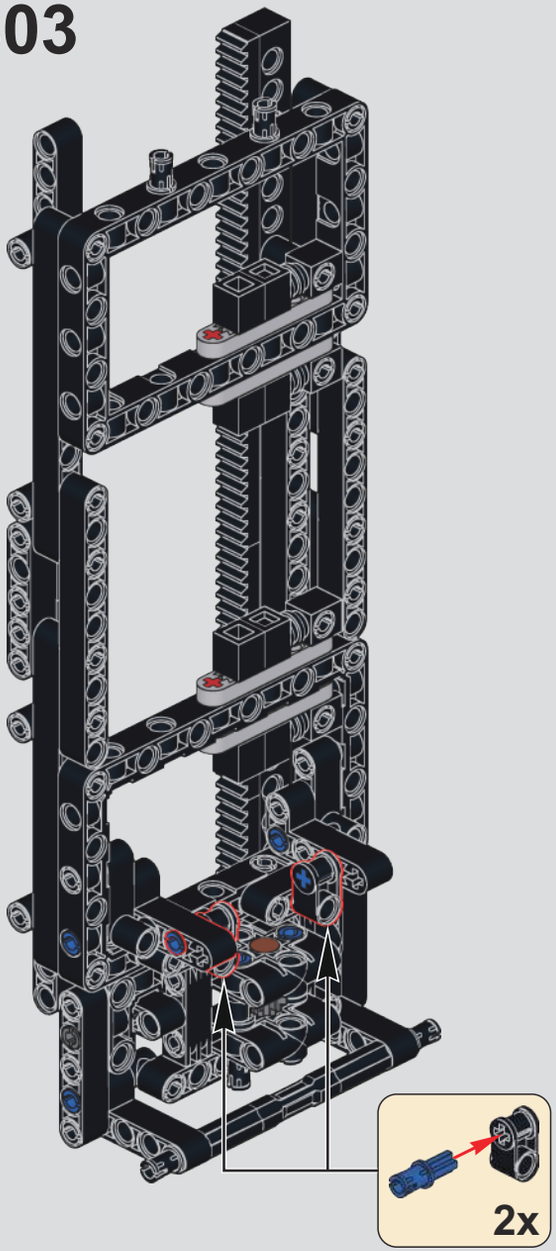

804

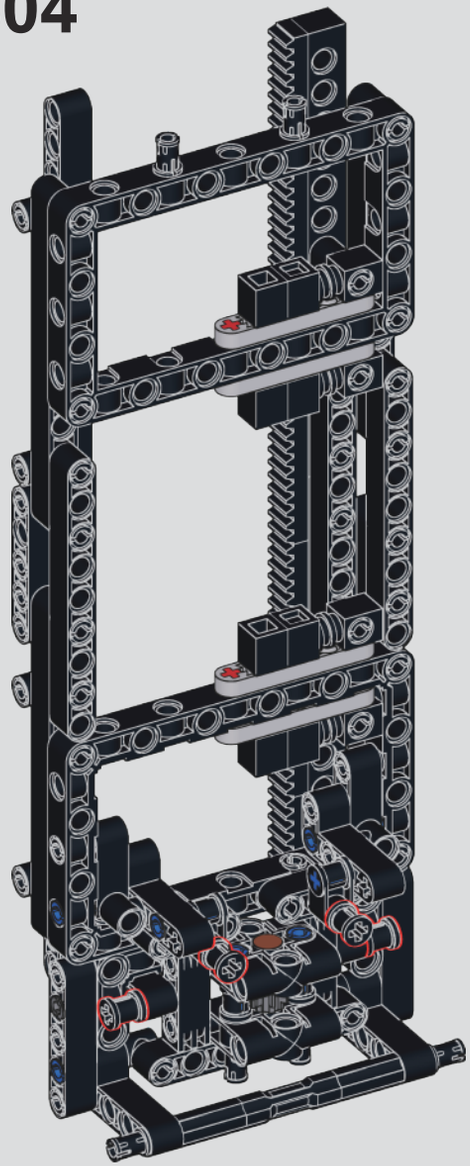

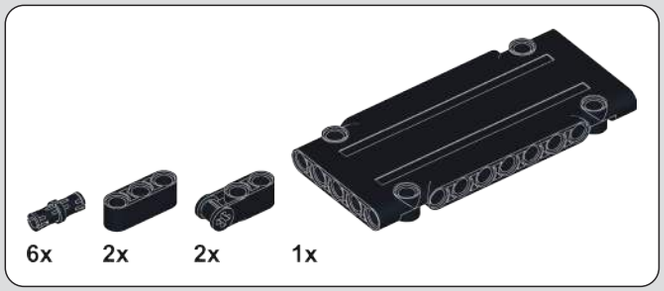

805

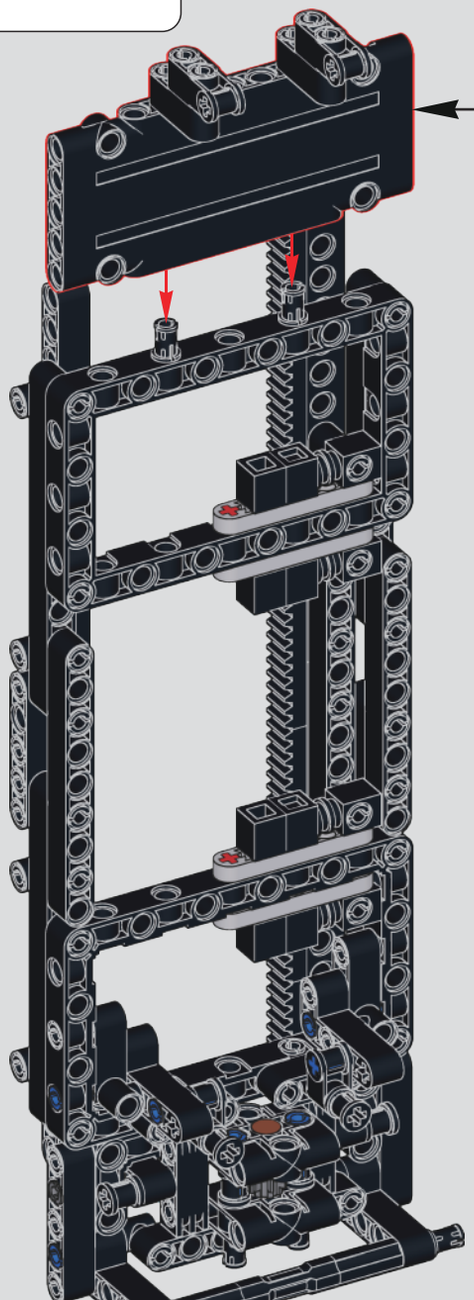

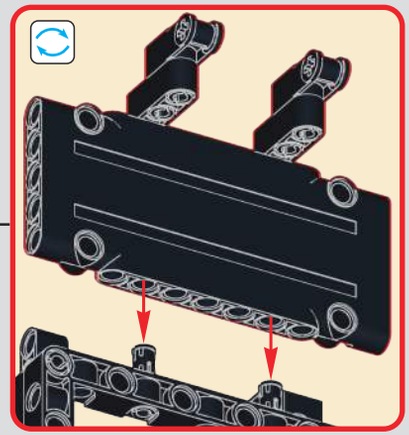

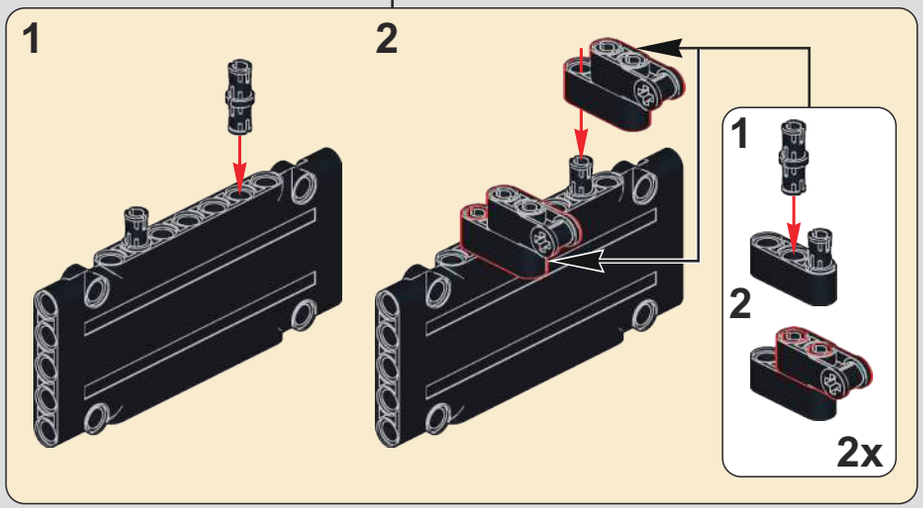

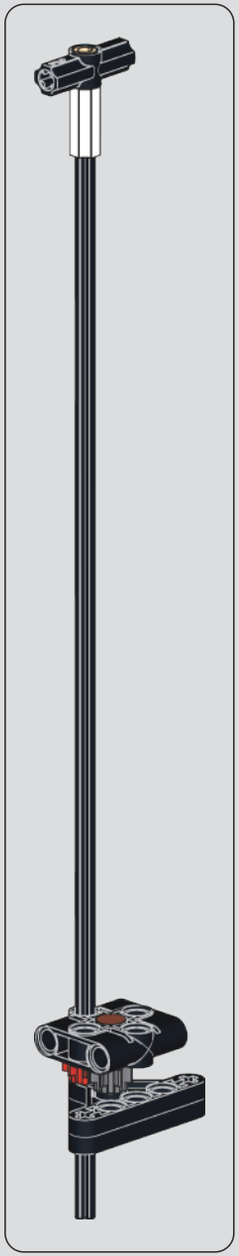

1:1

3 1:1

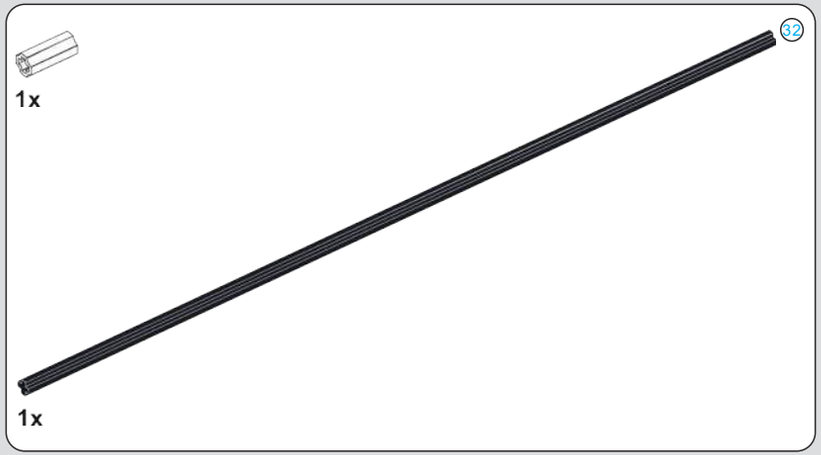

806

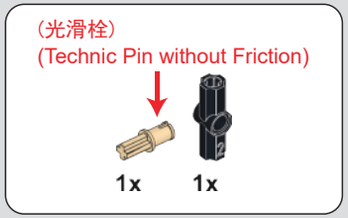

807

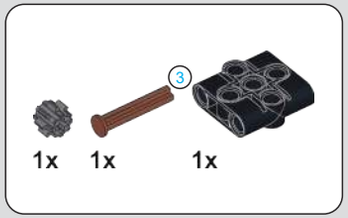

808

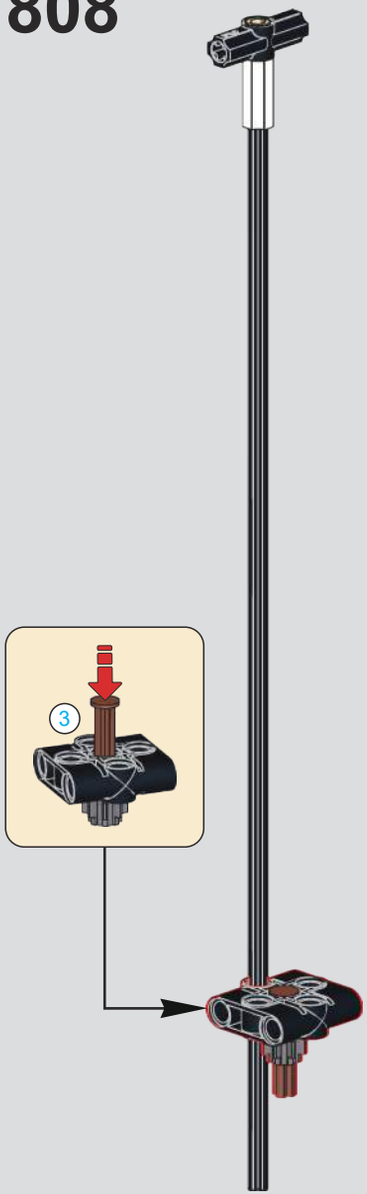

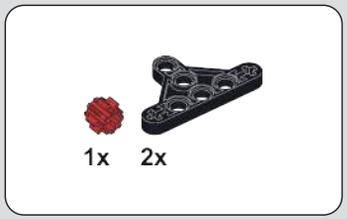

809

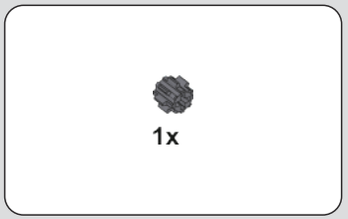

810

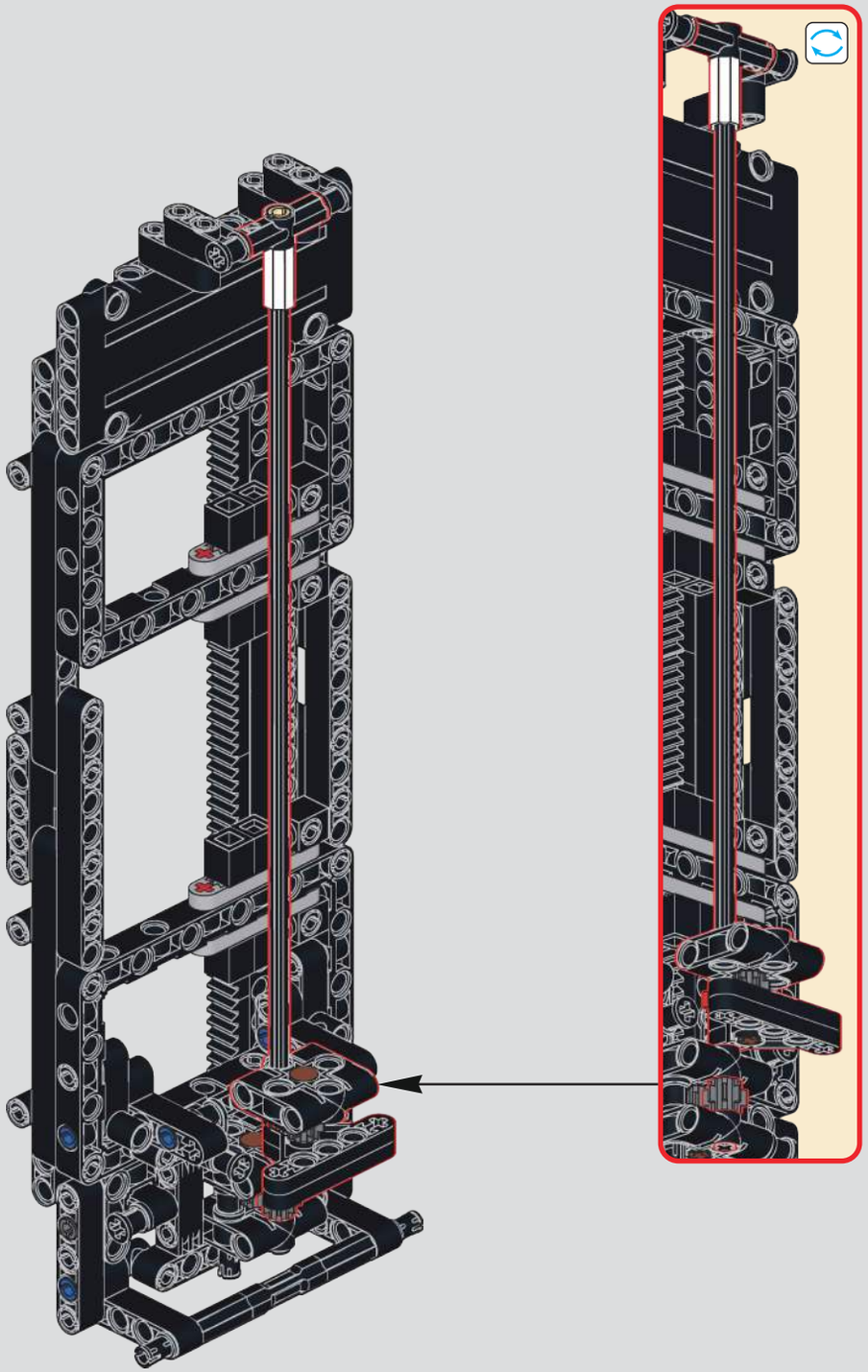

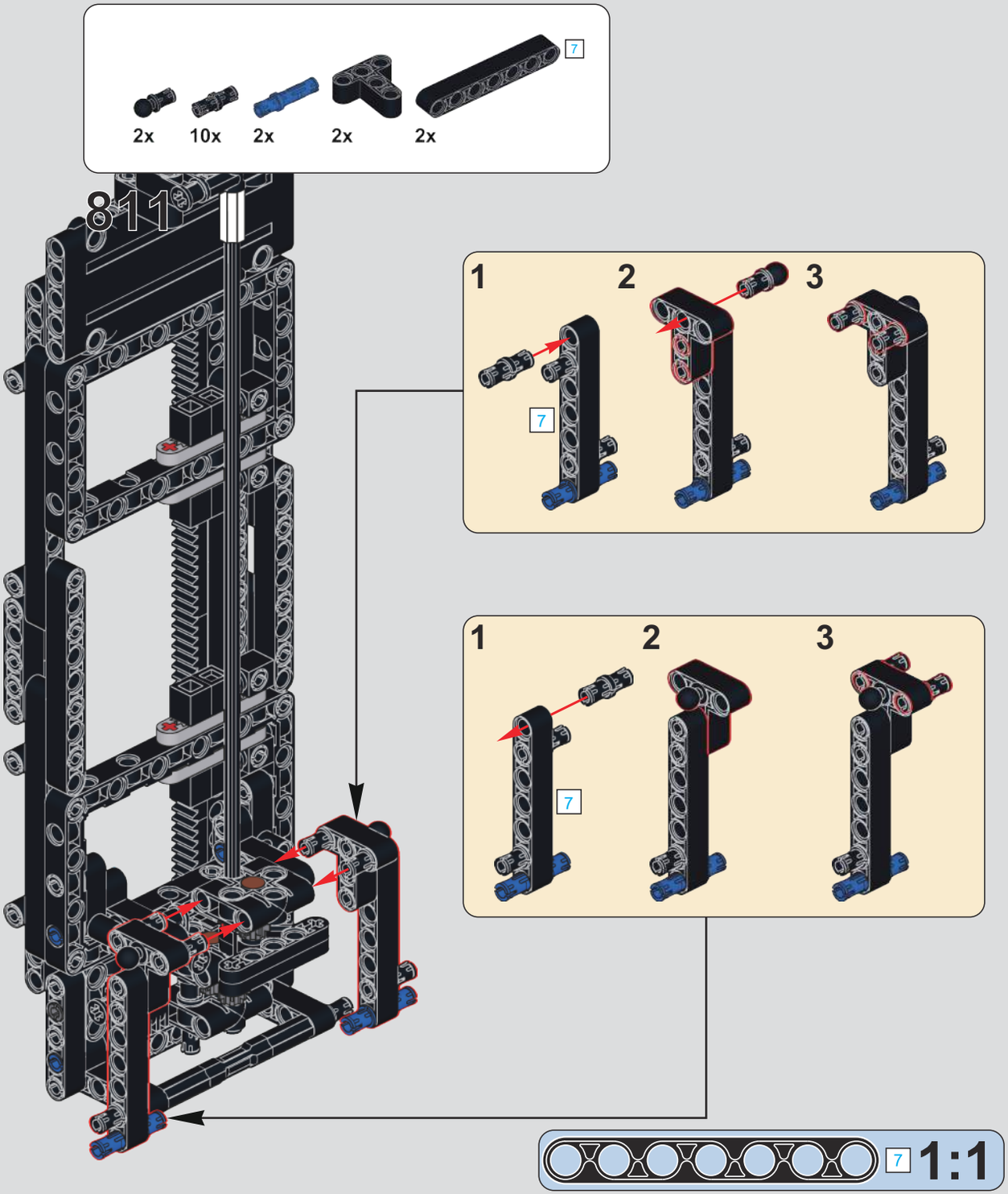
811
2x
10x
2x
2x
2x
7
1
2
3
7
1
2
3
7
7
1:1

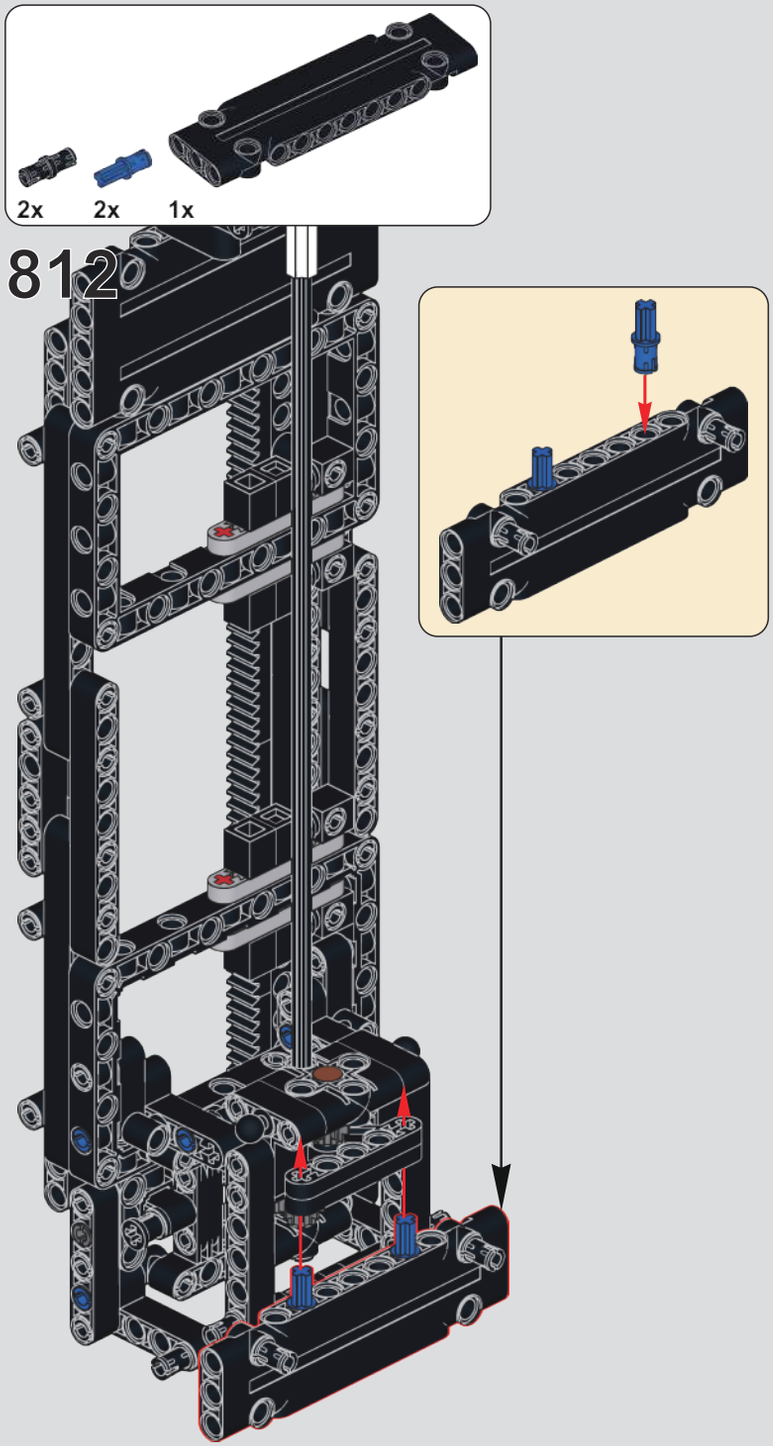
812
2x
2x
1x

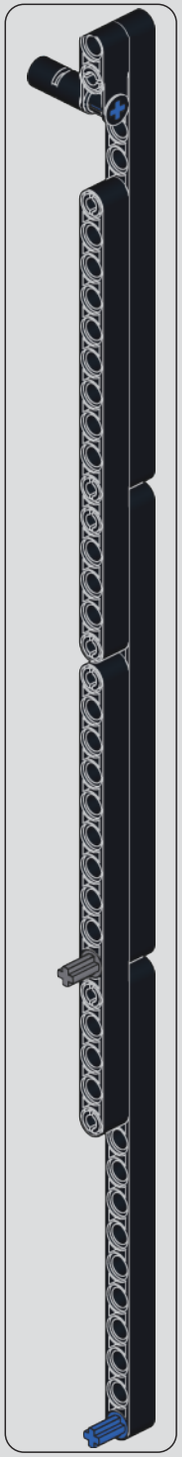

813

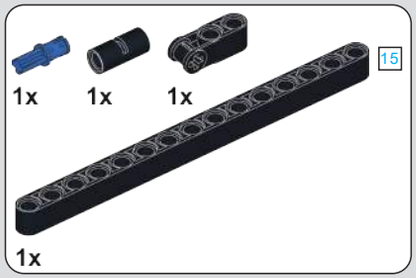

814

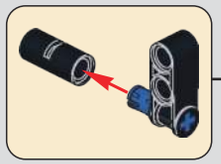

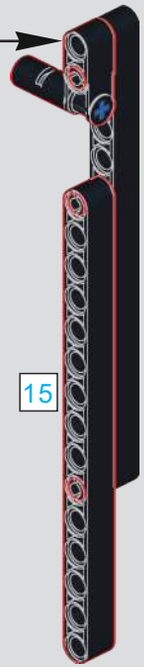

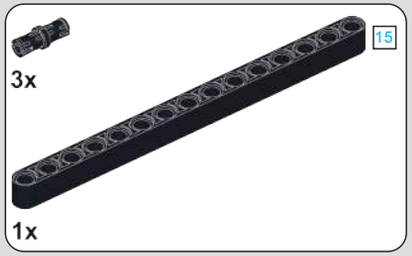

815

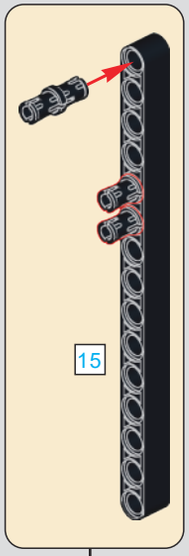

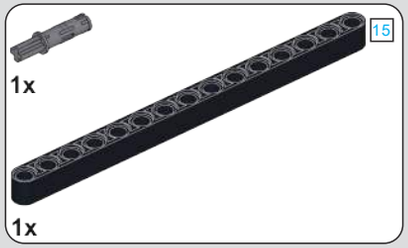

816

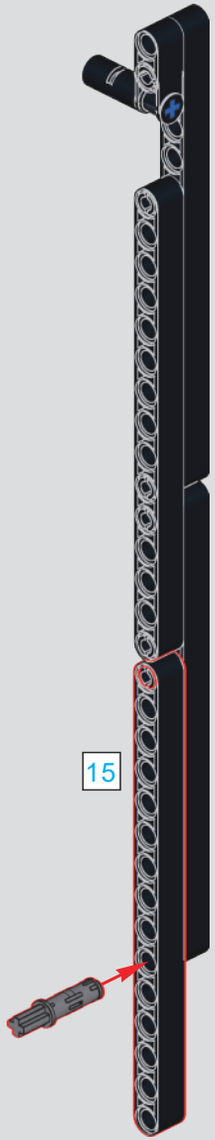

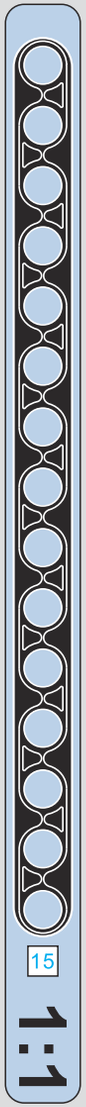

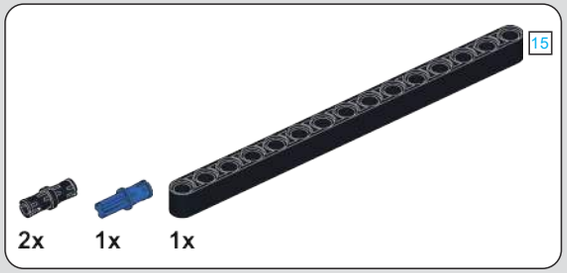

817

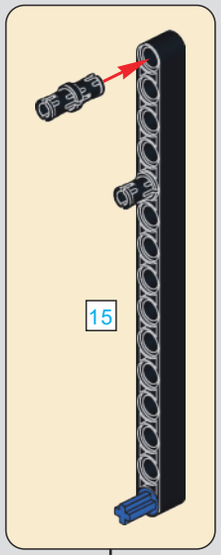

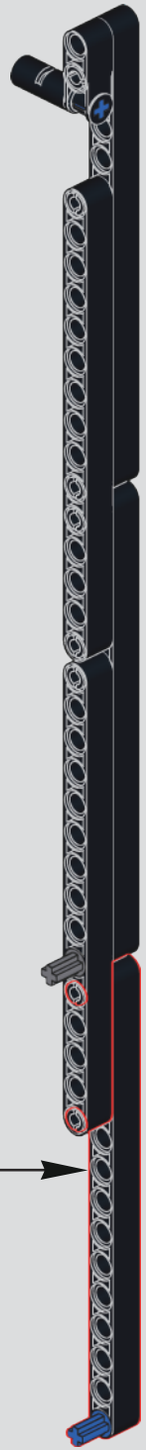

818

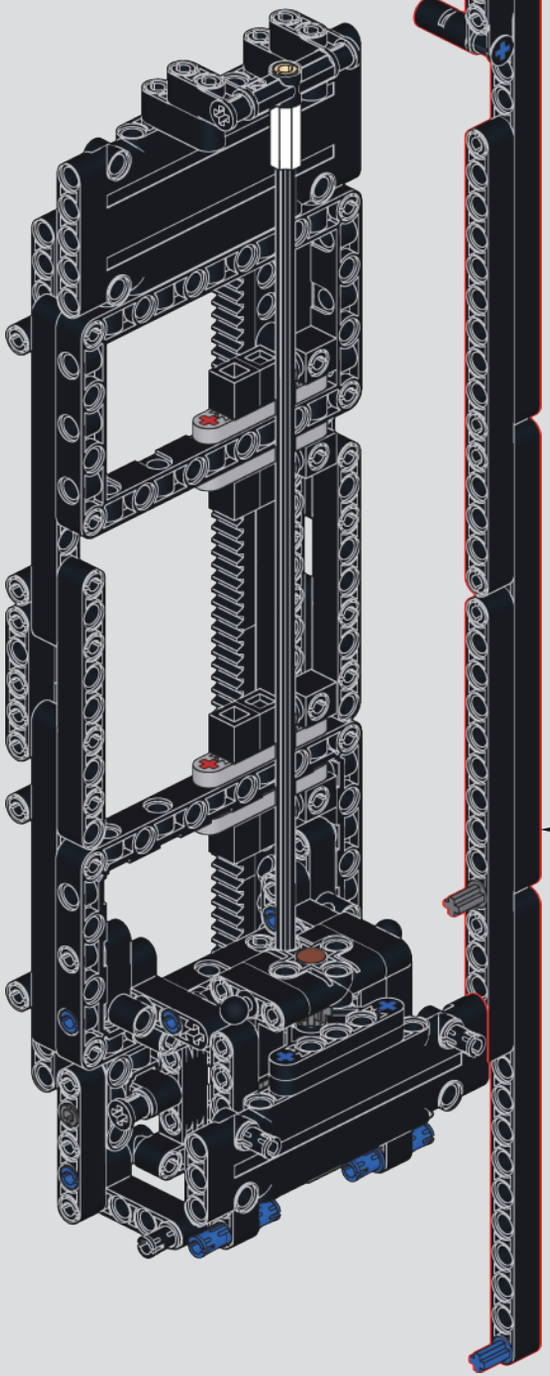

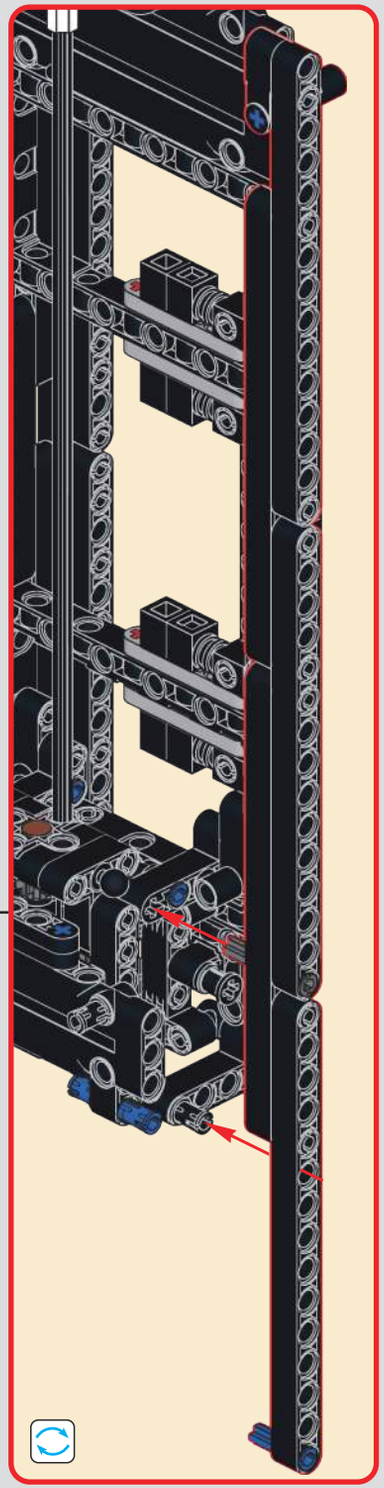

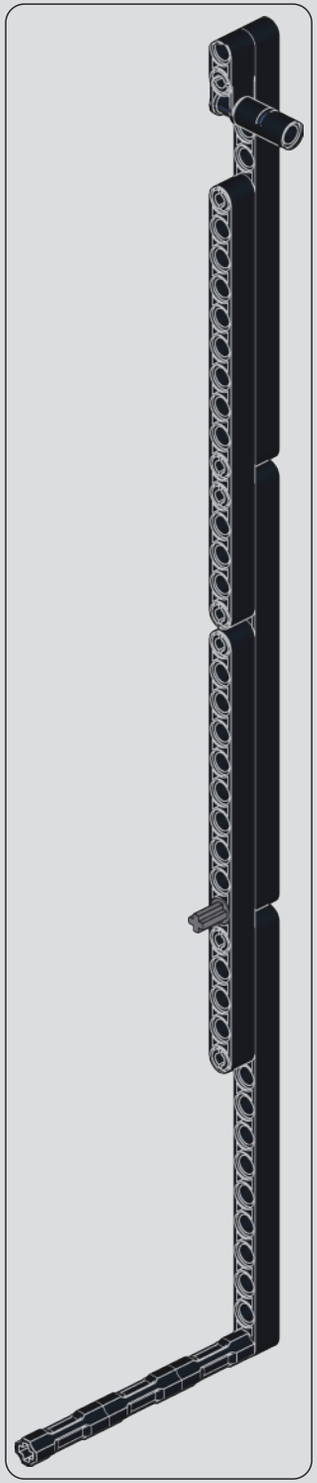

819

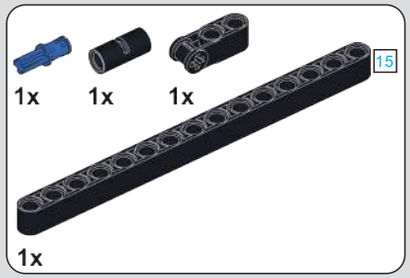

820

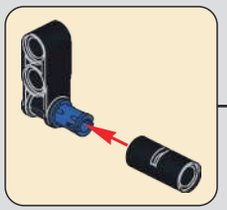

821

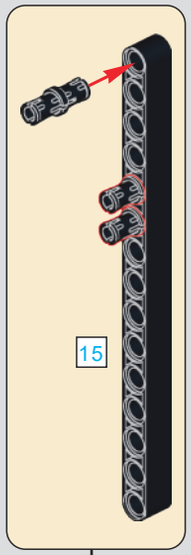

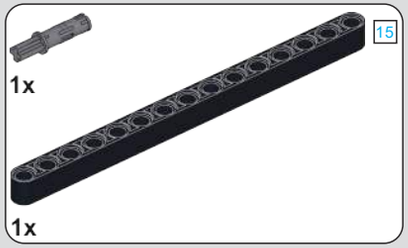

822

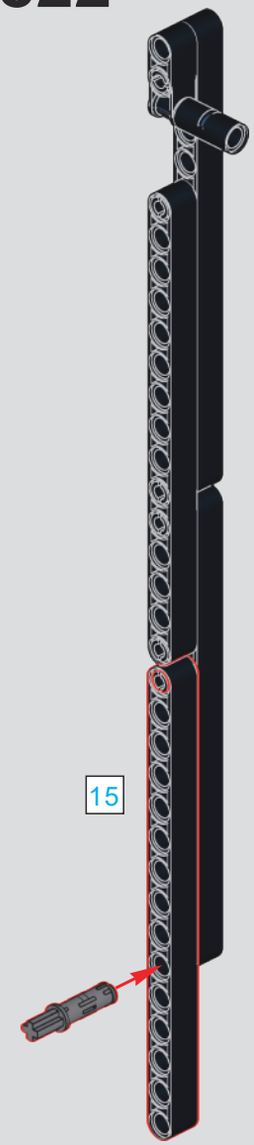

823

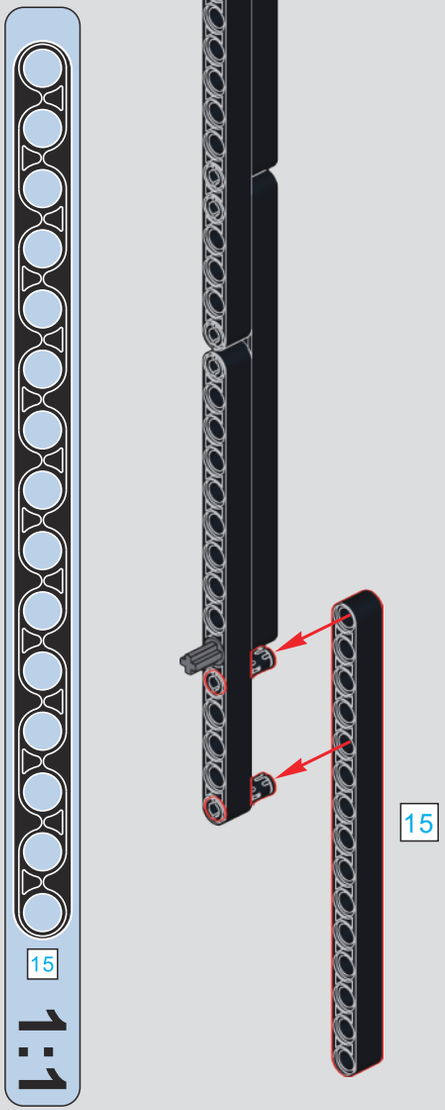

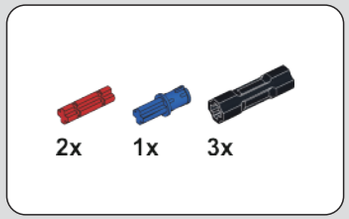

824

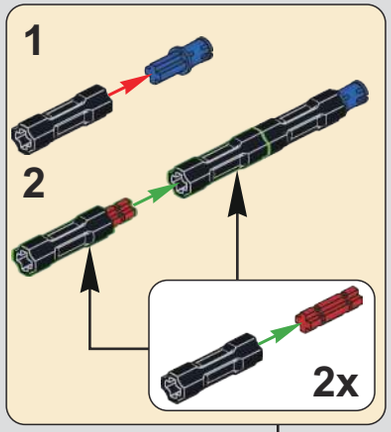

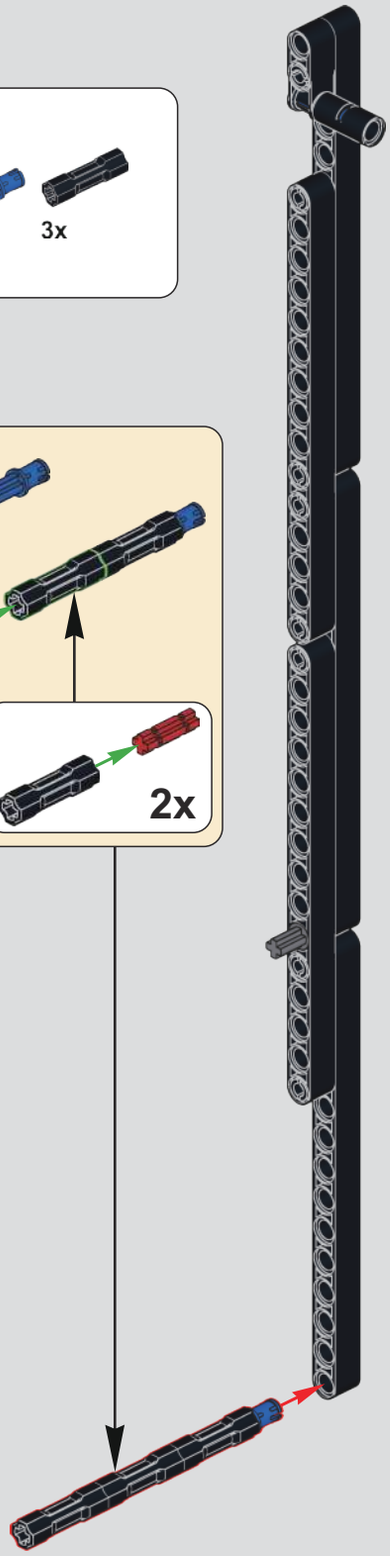

825

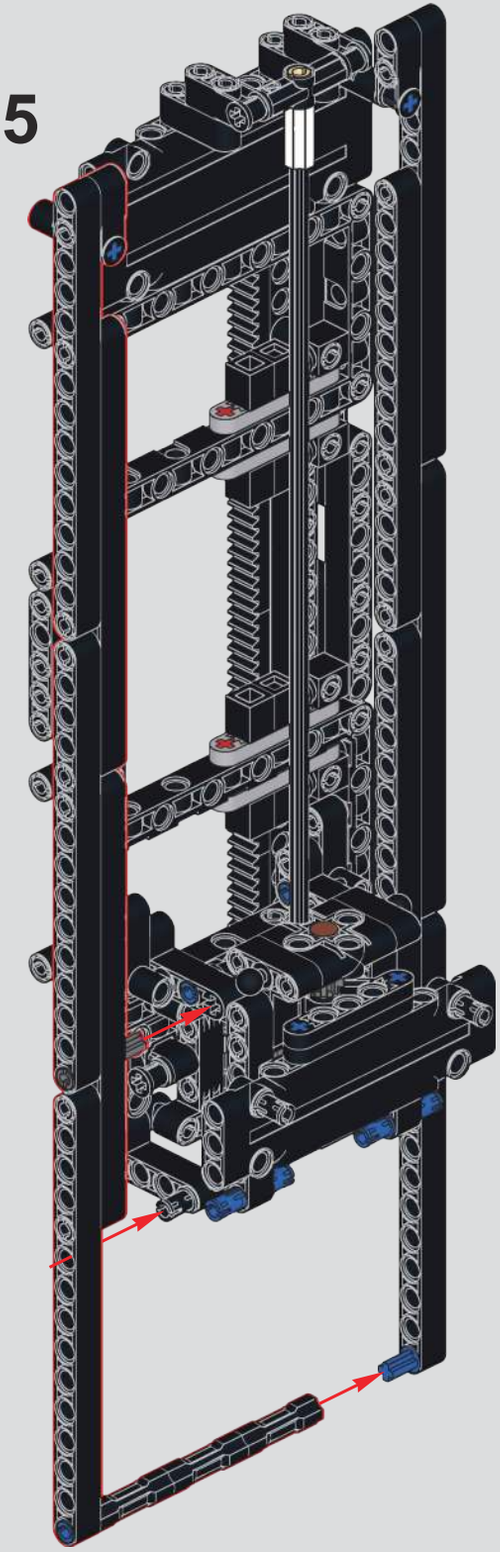

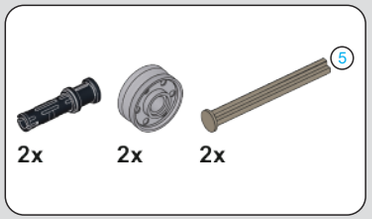

826

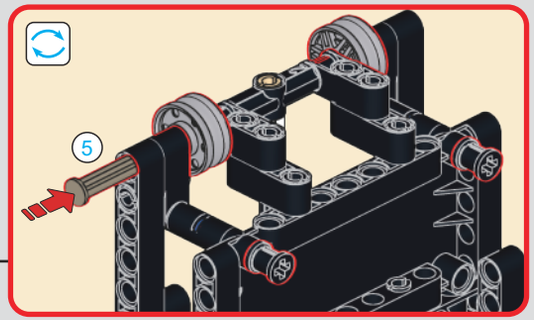

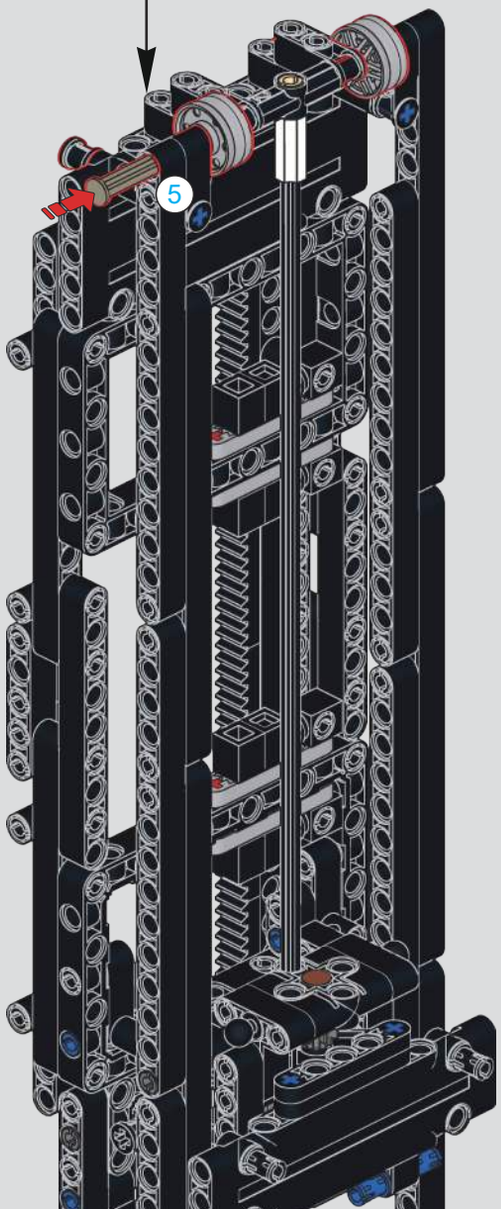

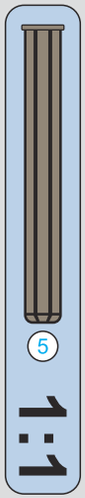

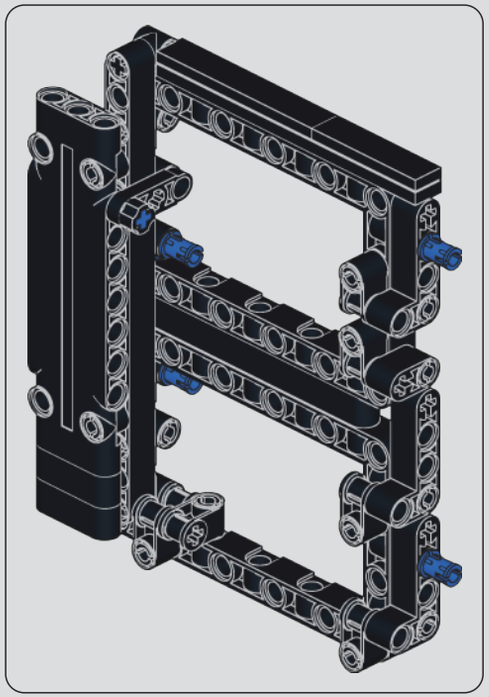

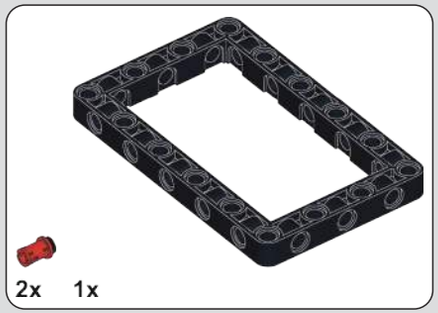

827

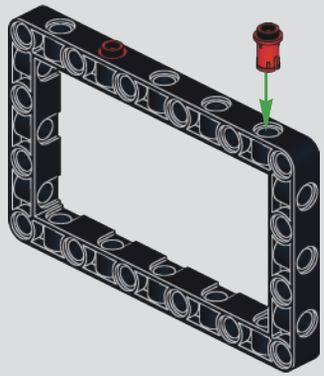

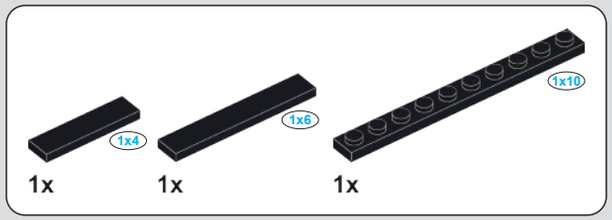

828

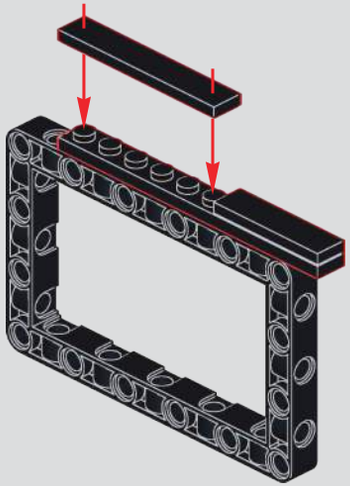

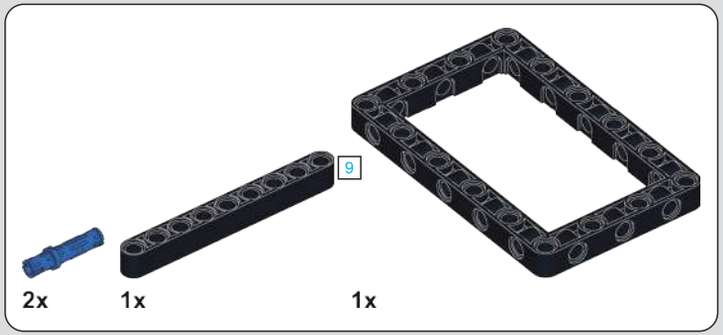

829

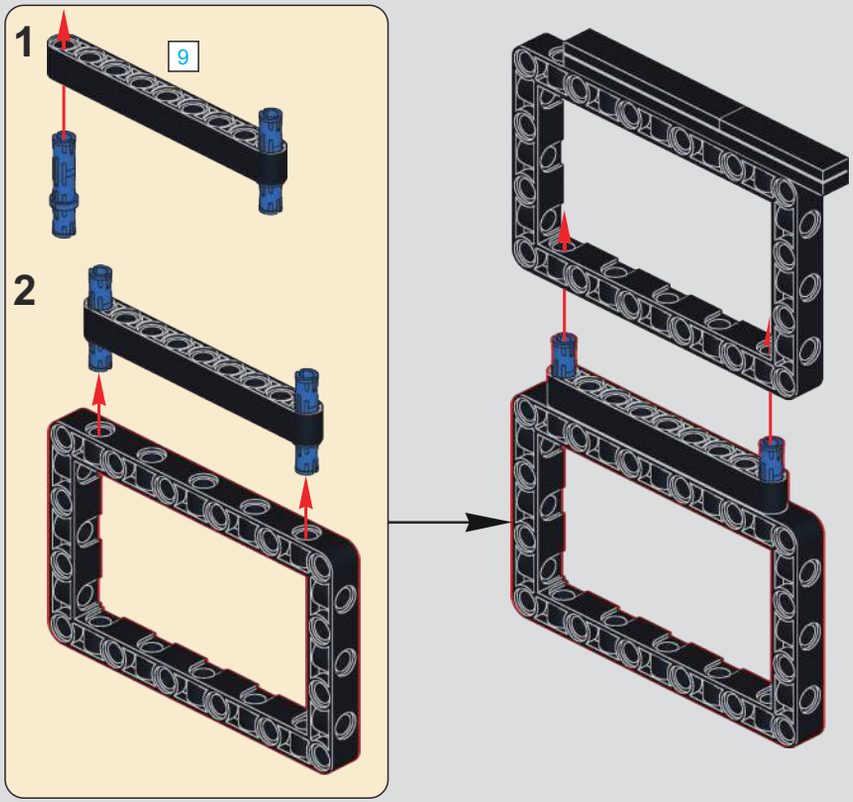

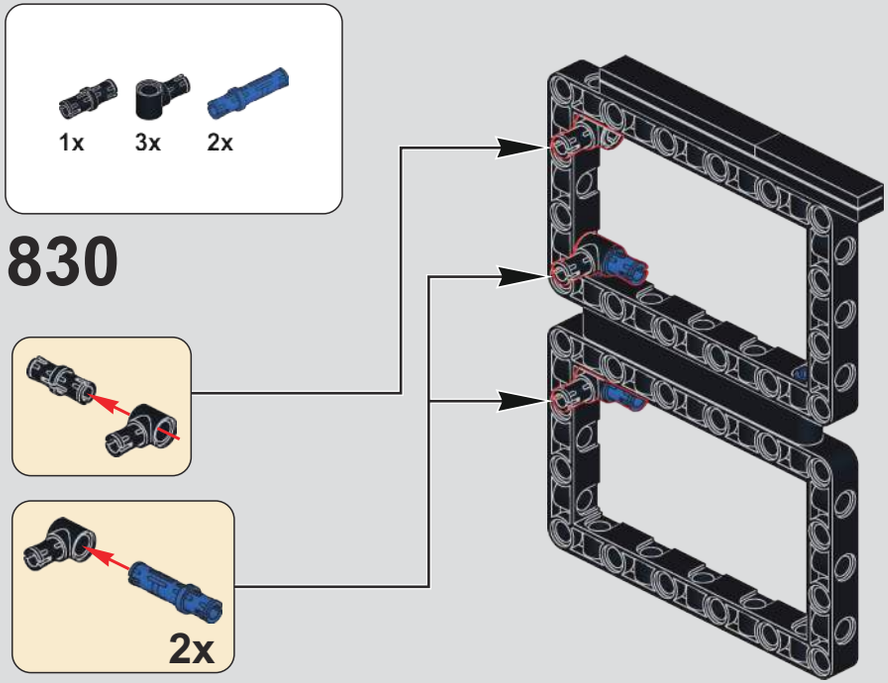

830

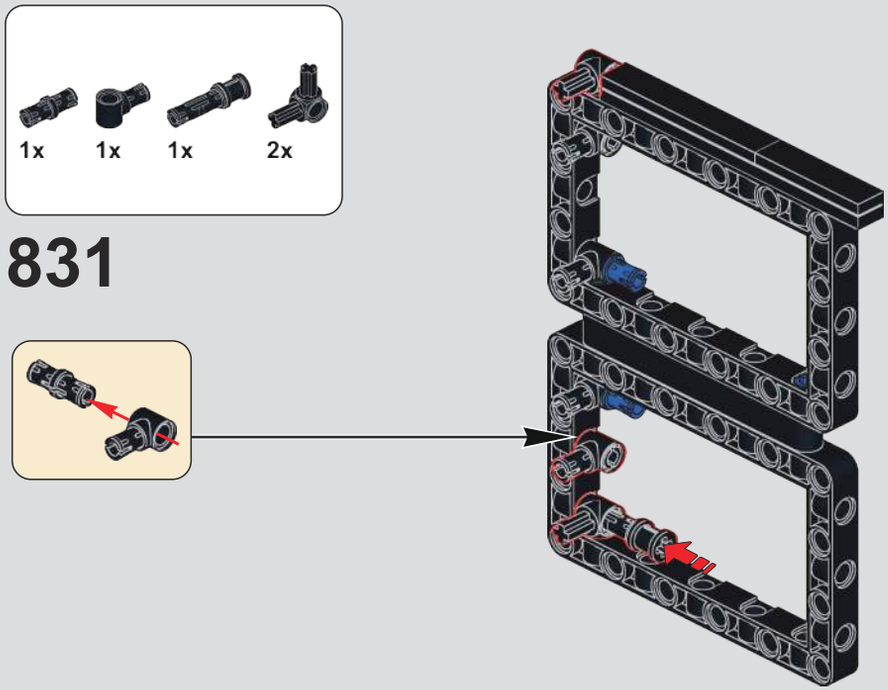

831

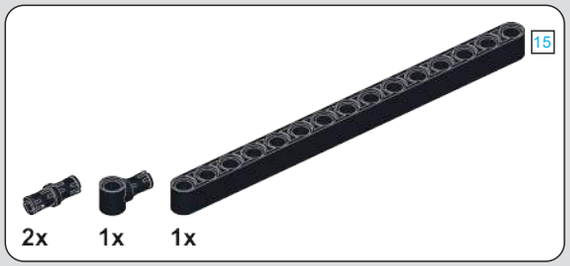

832

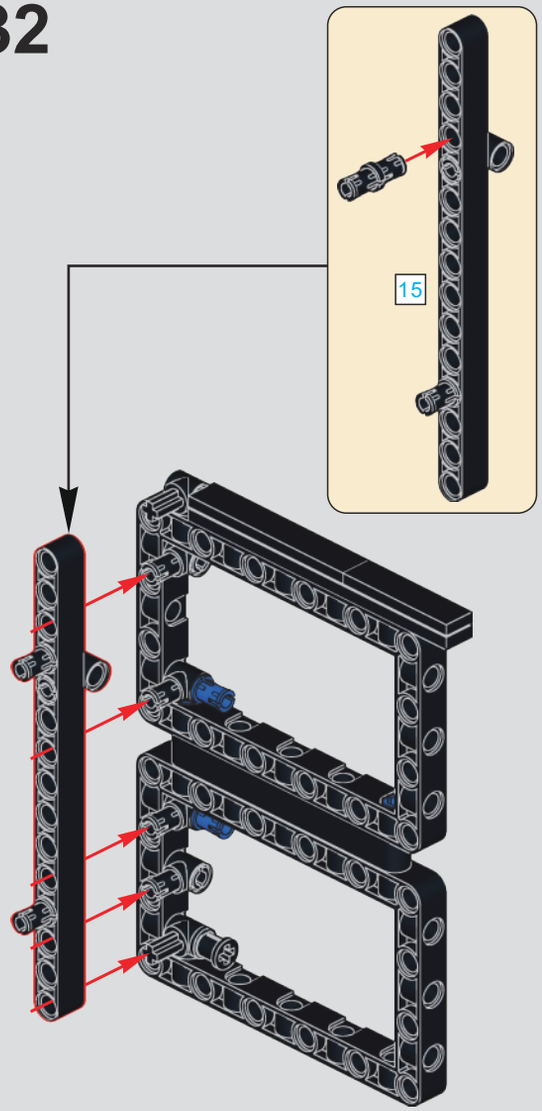

833

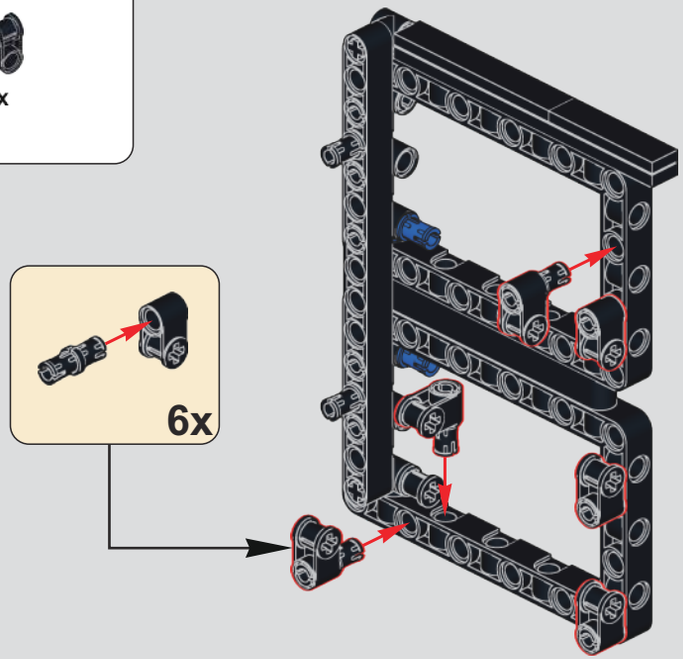

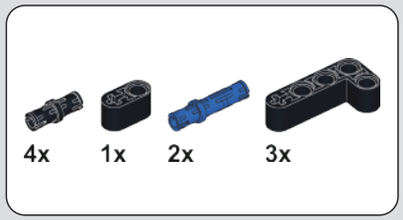

834

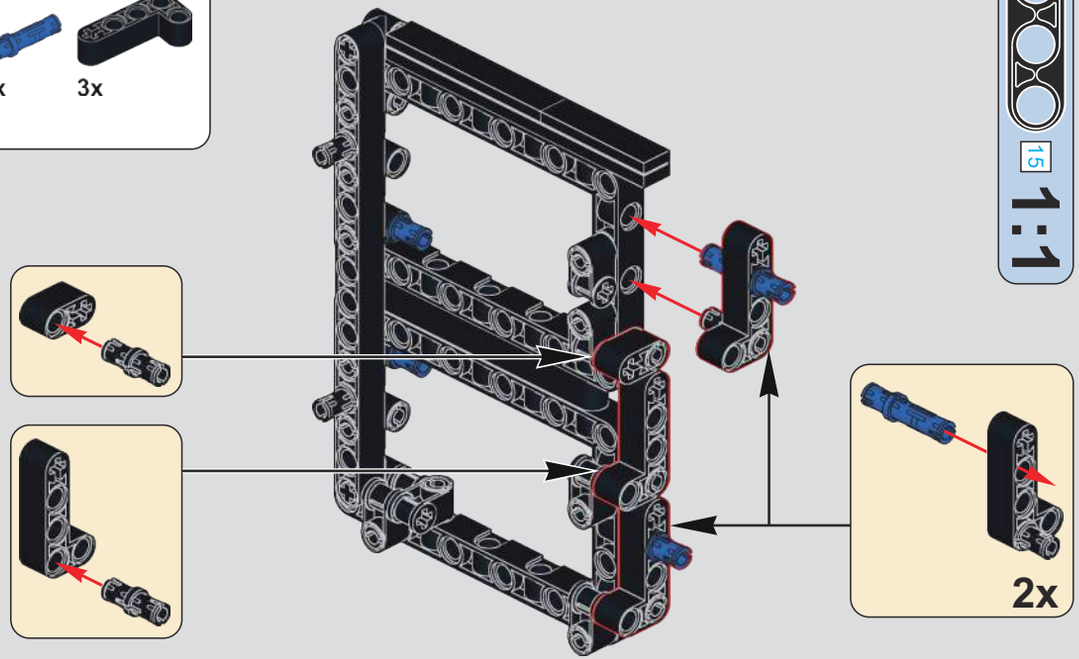

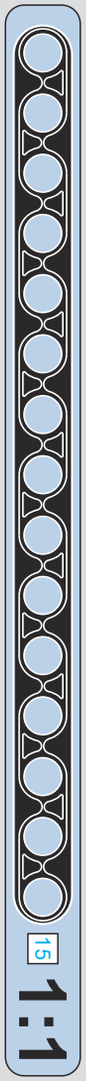

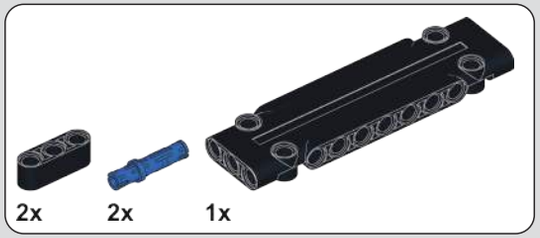

835

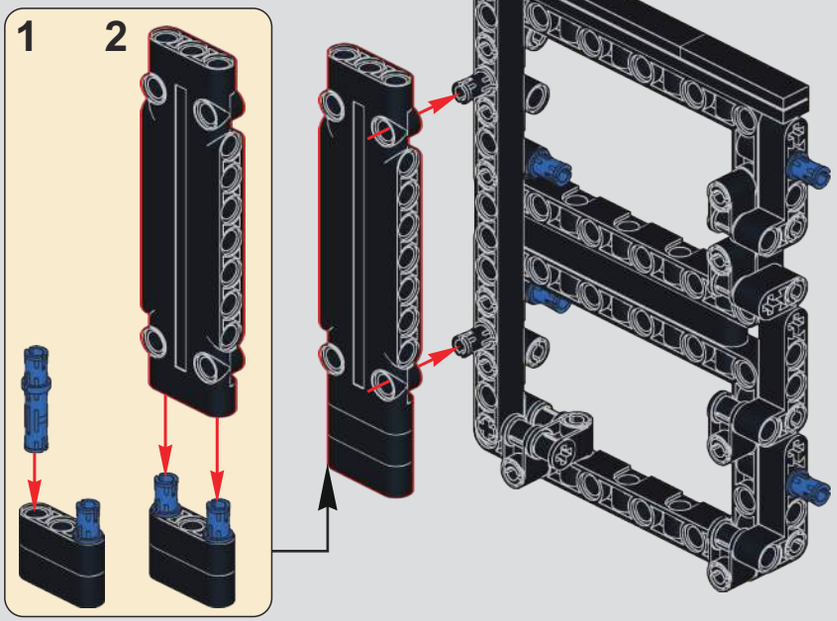

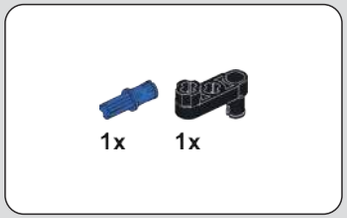

836

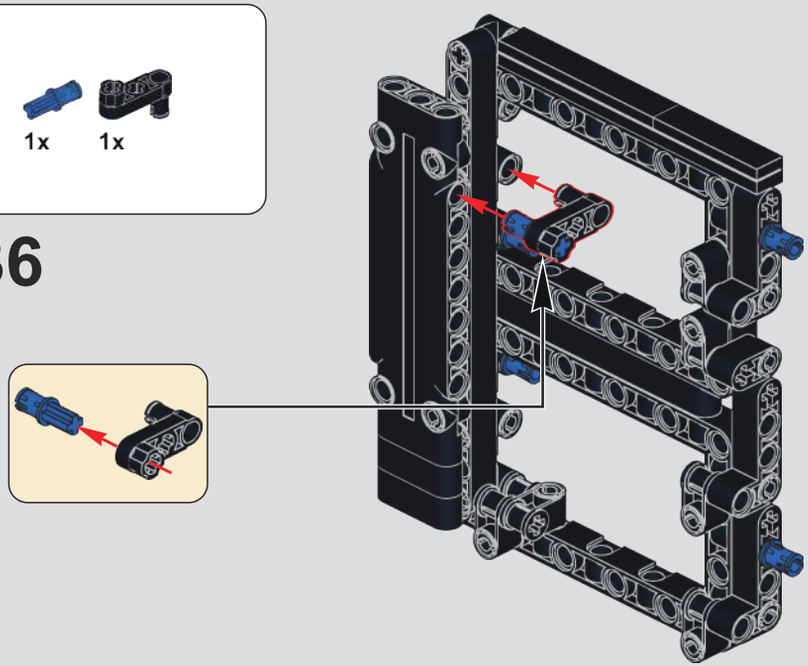

837

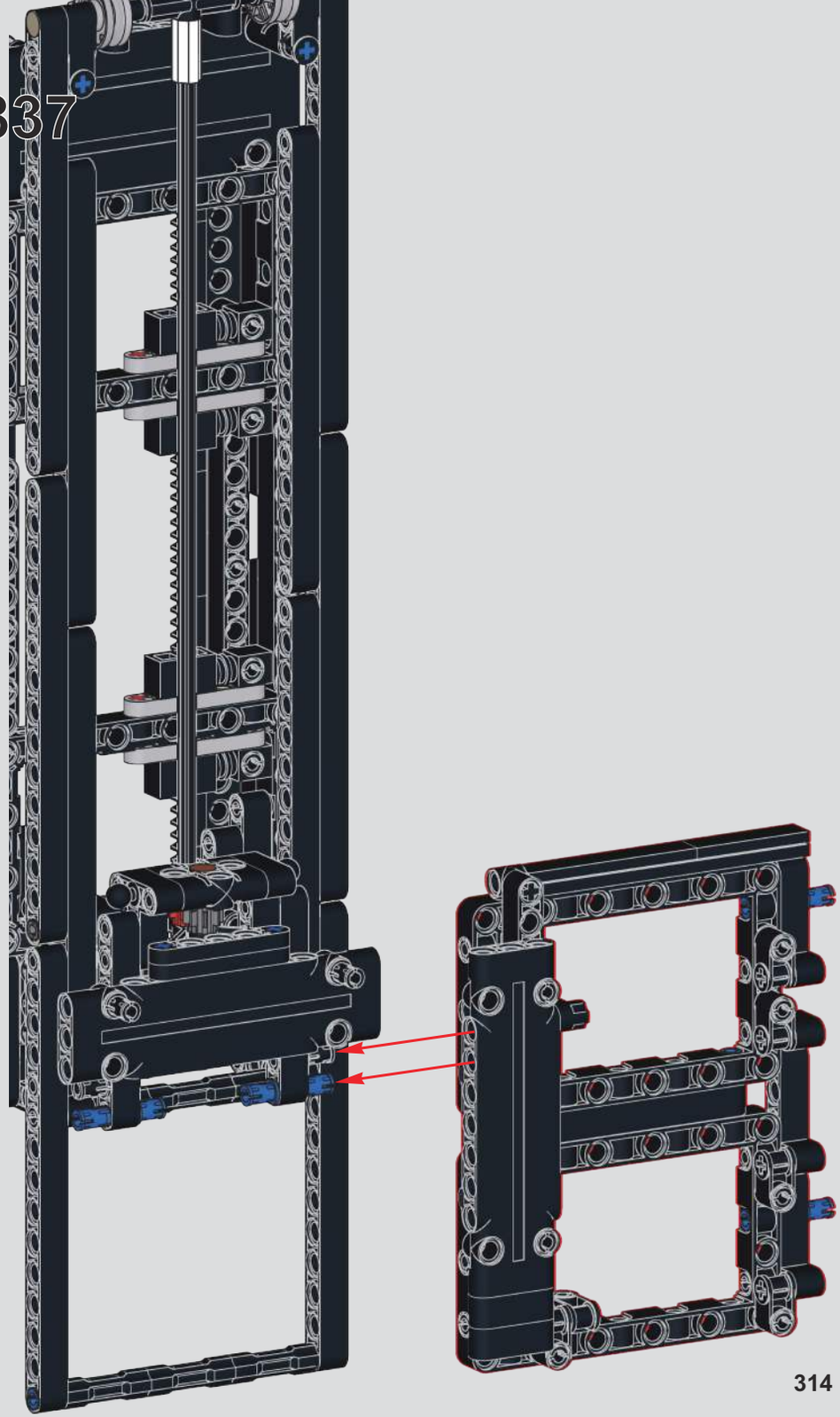

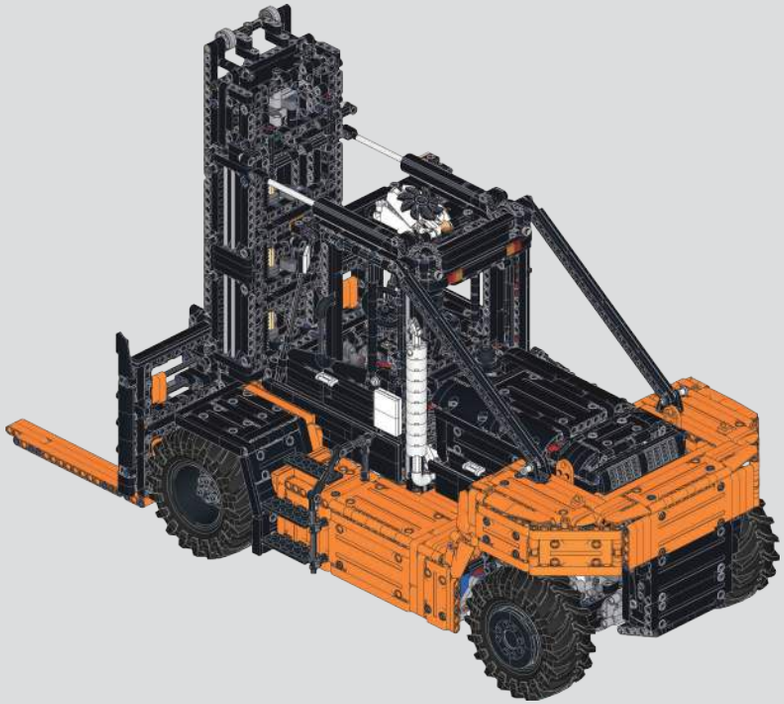

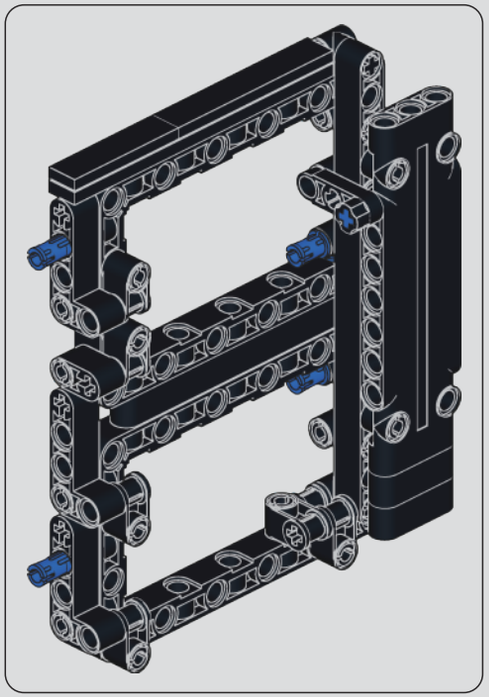

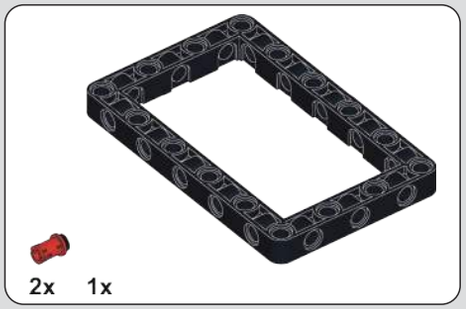

838

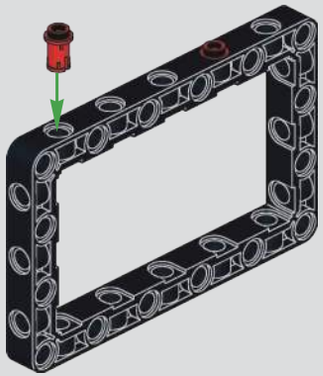

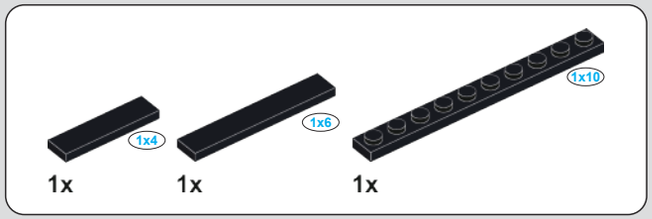

839

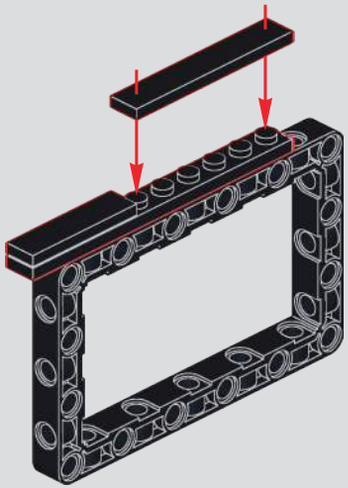

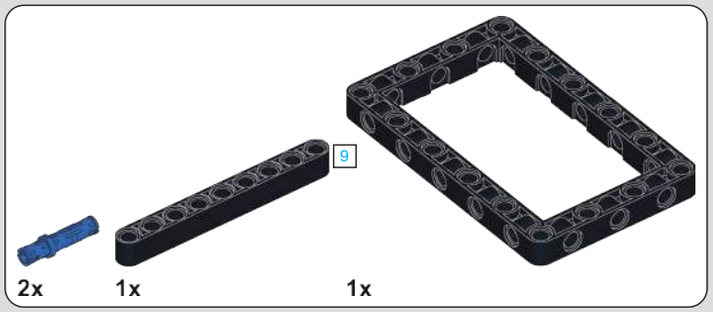

840

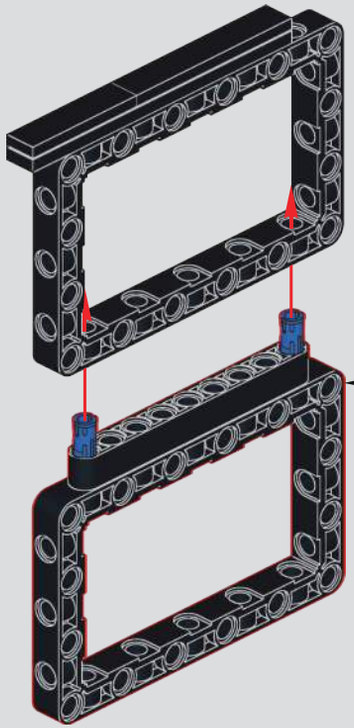

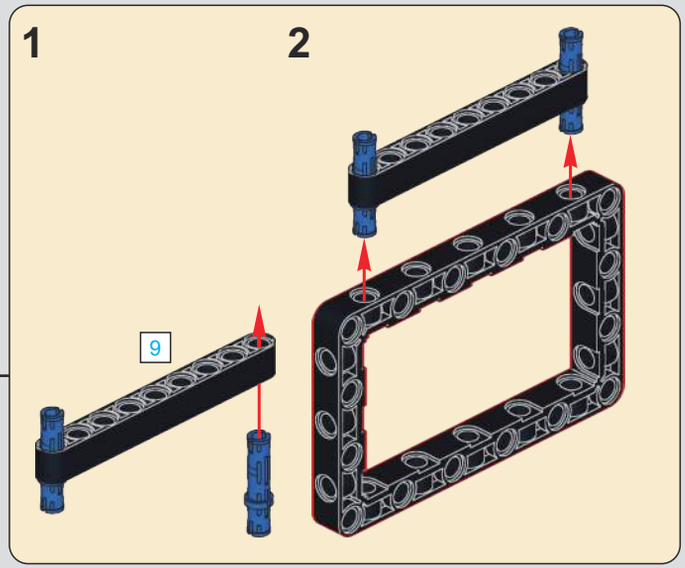

841

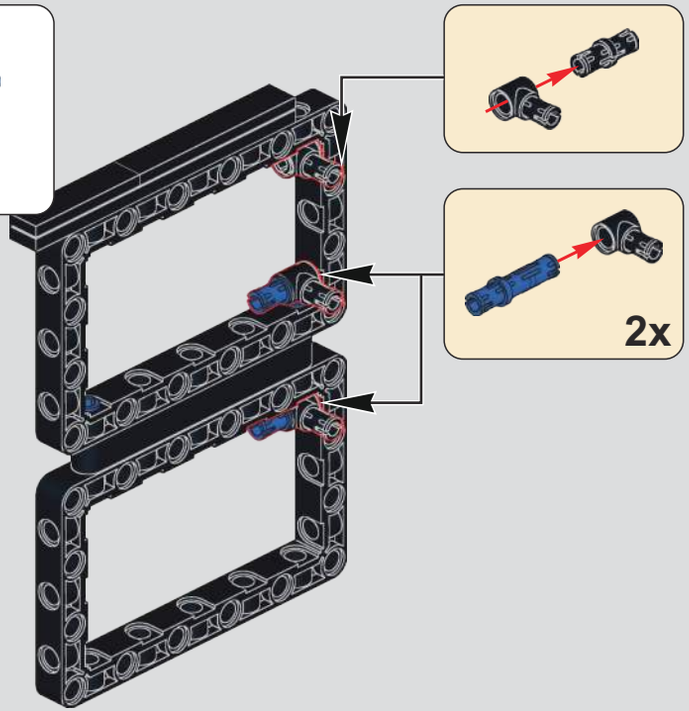

842

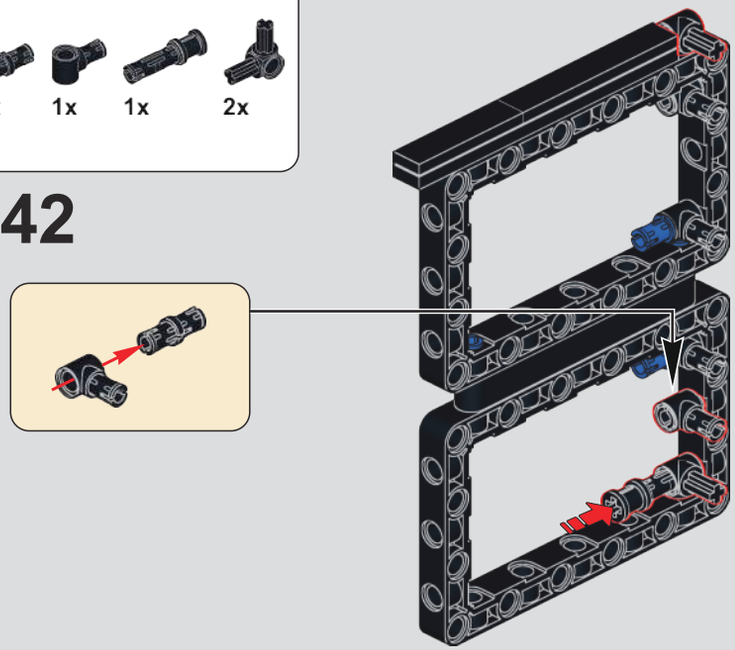

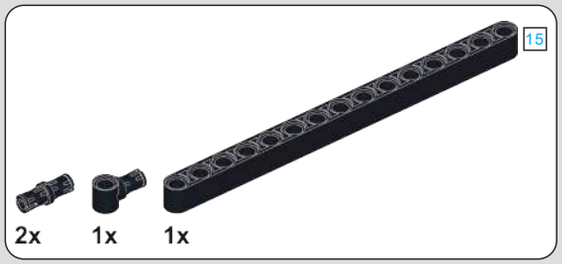

843

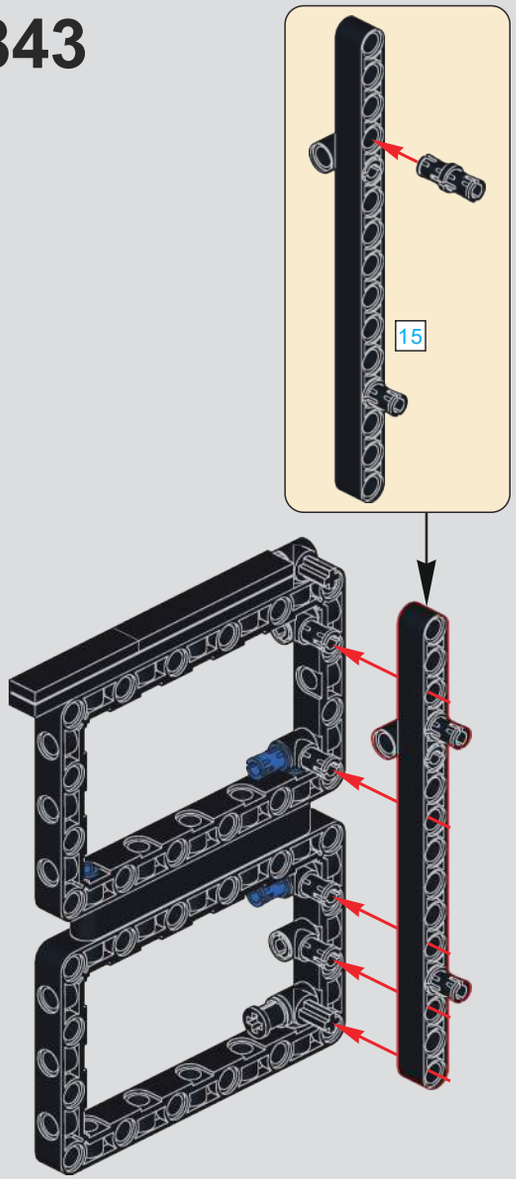

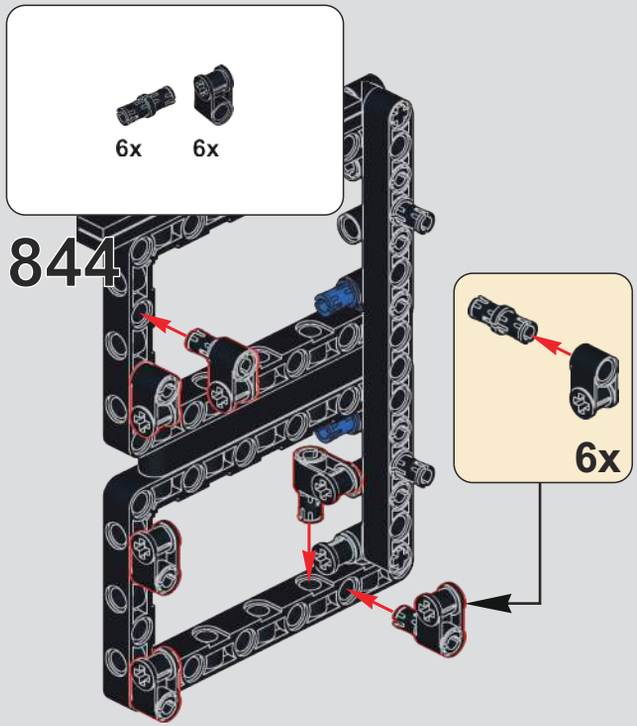

844

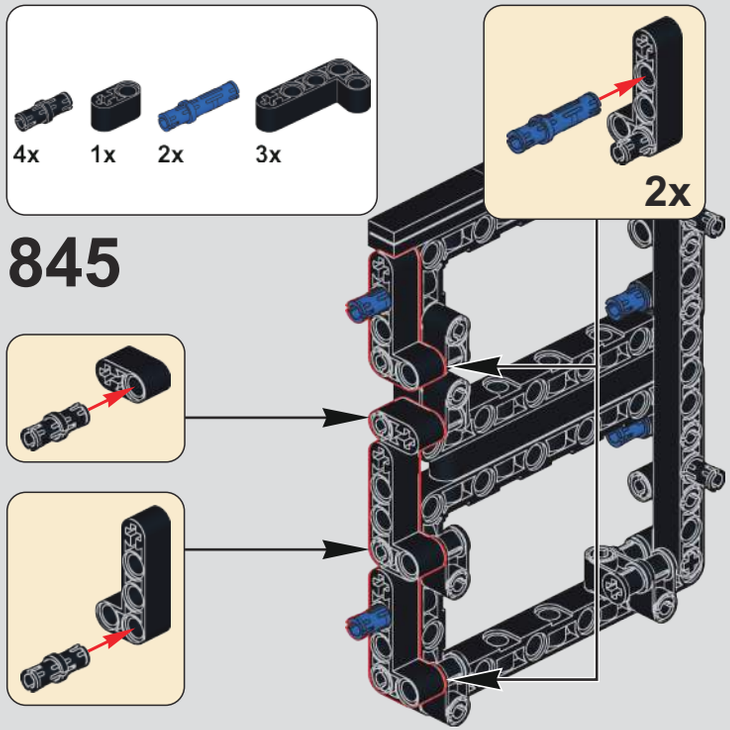

845

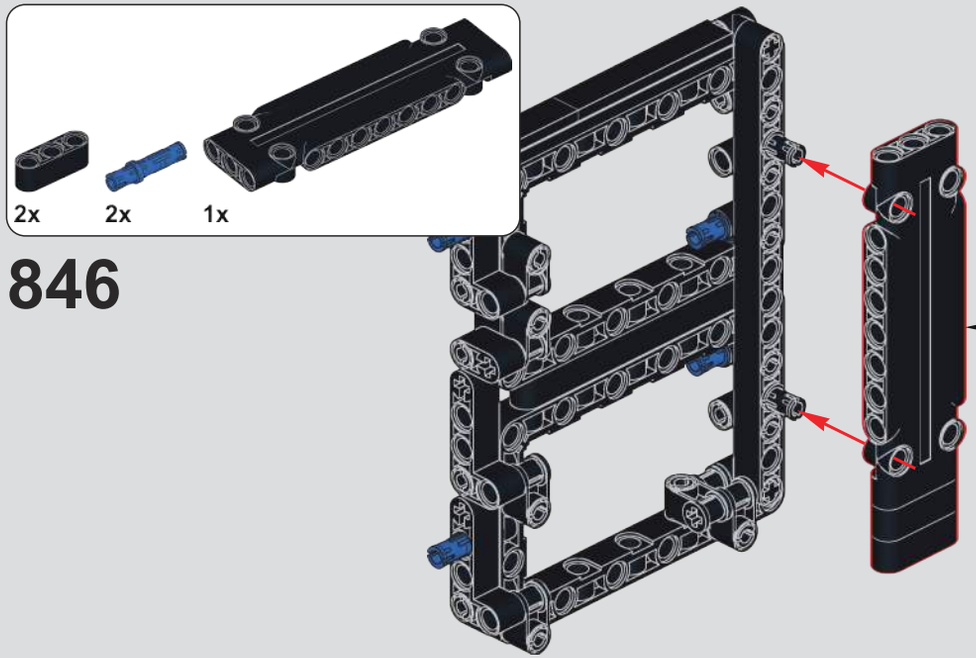

846

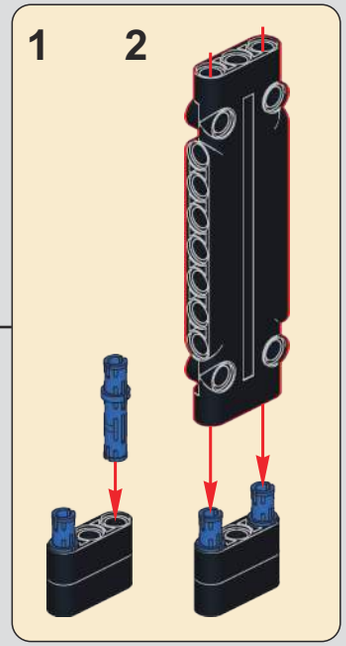

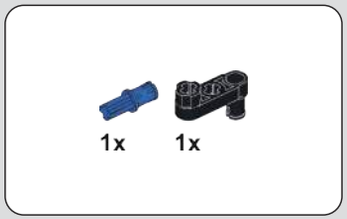

847

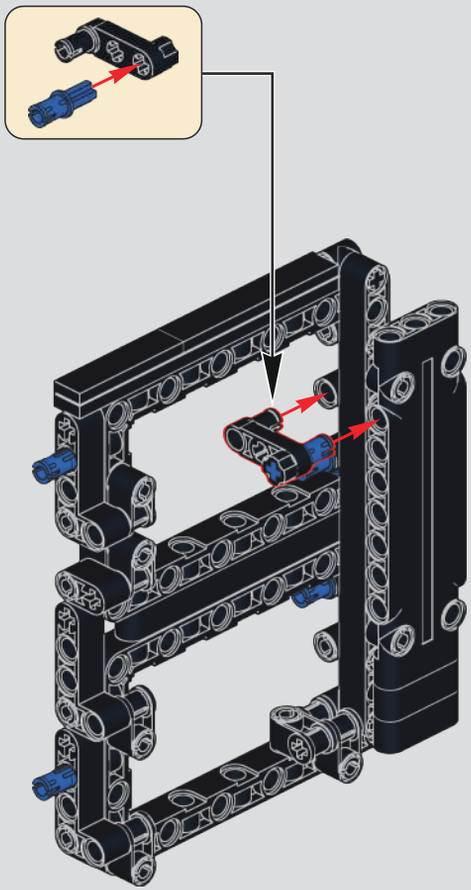

848

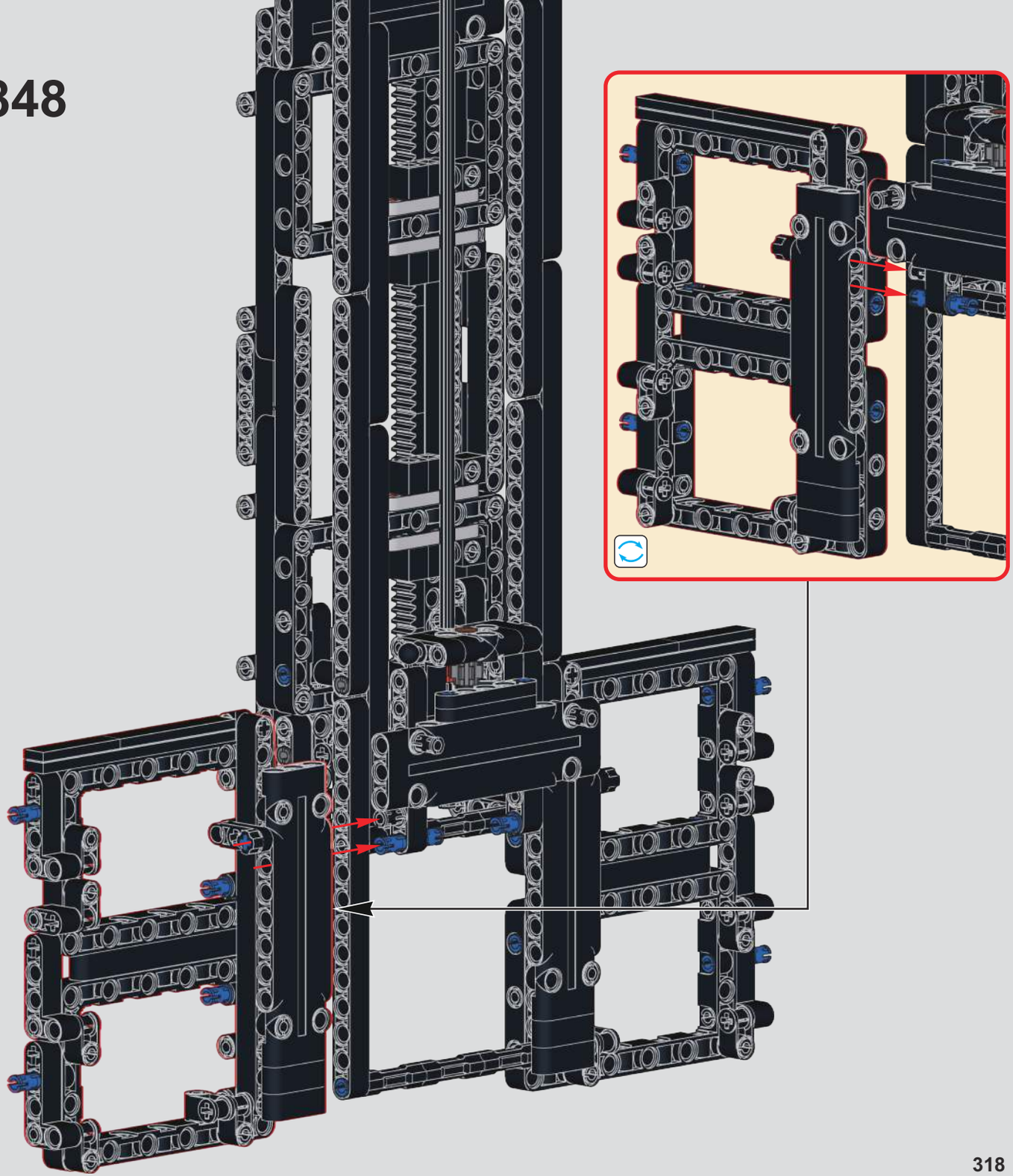

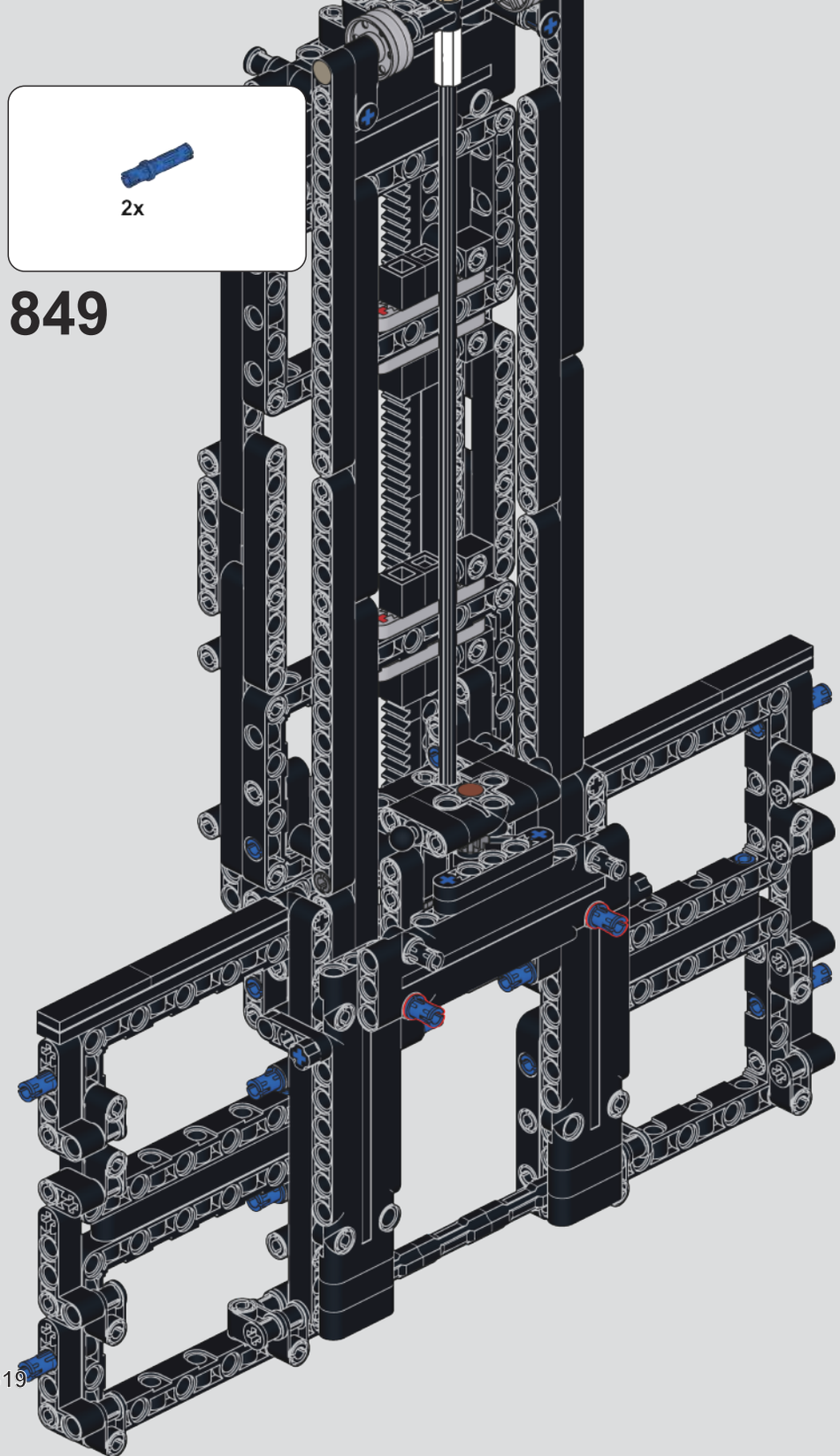
2x
849

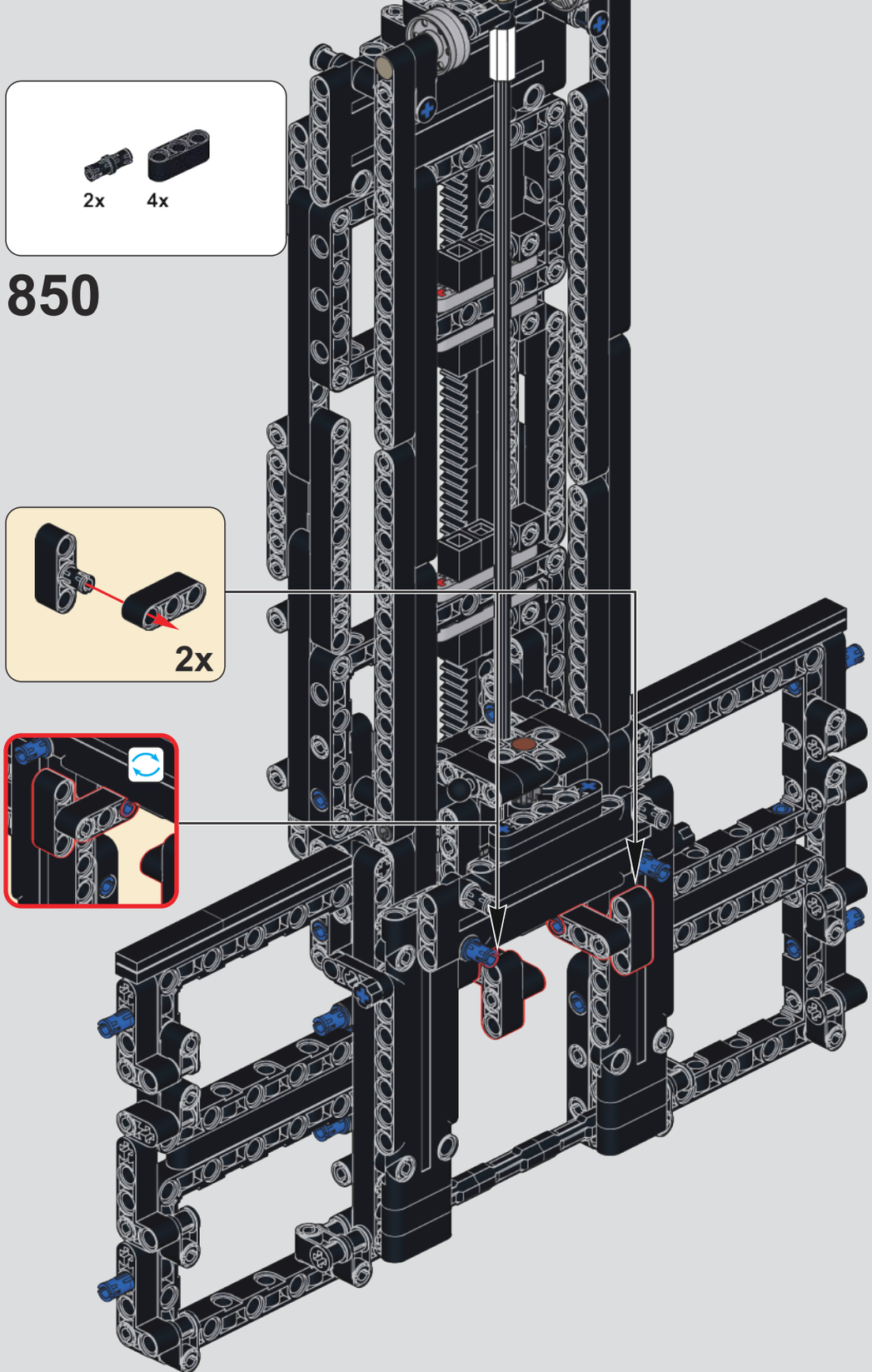
2x
4x
850
2x

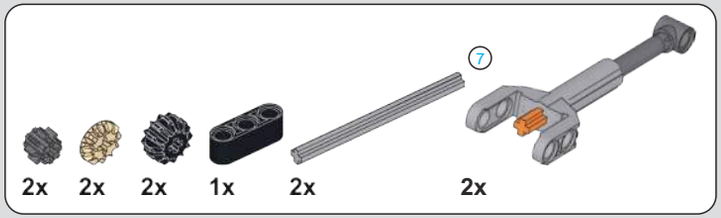

851

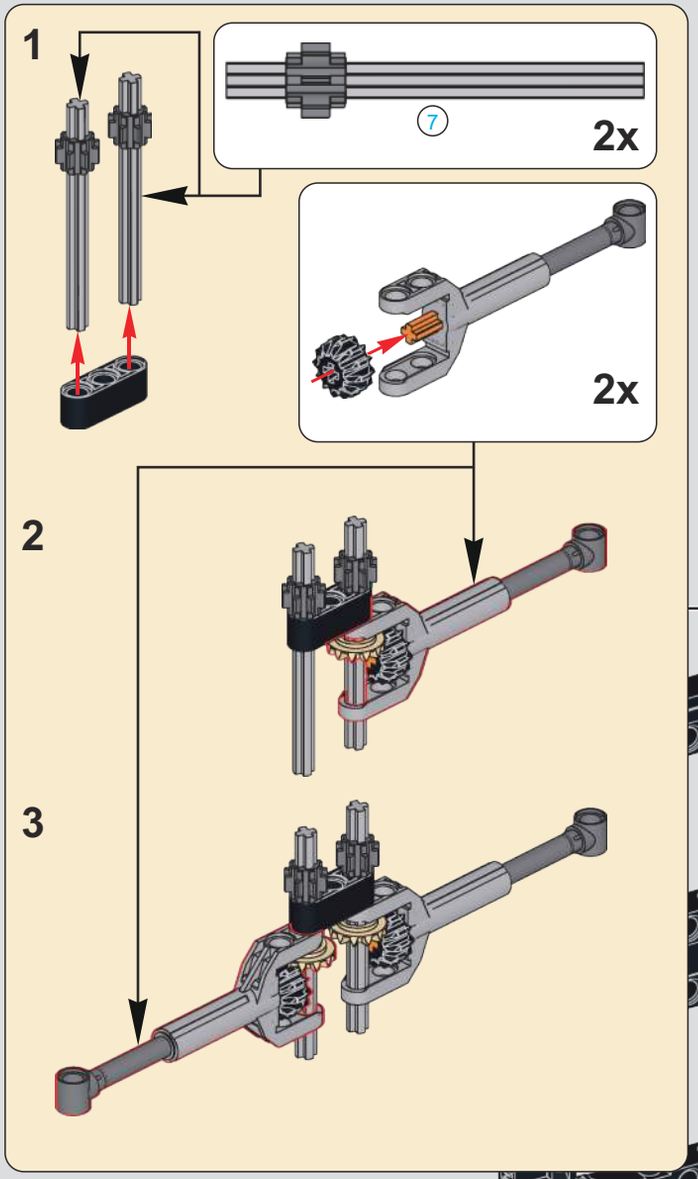

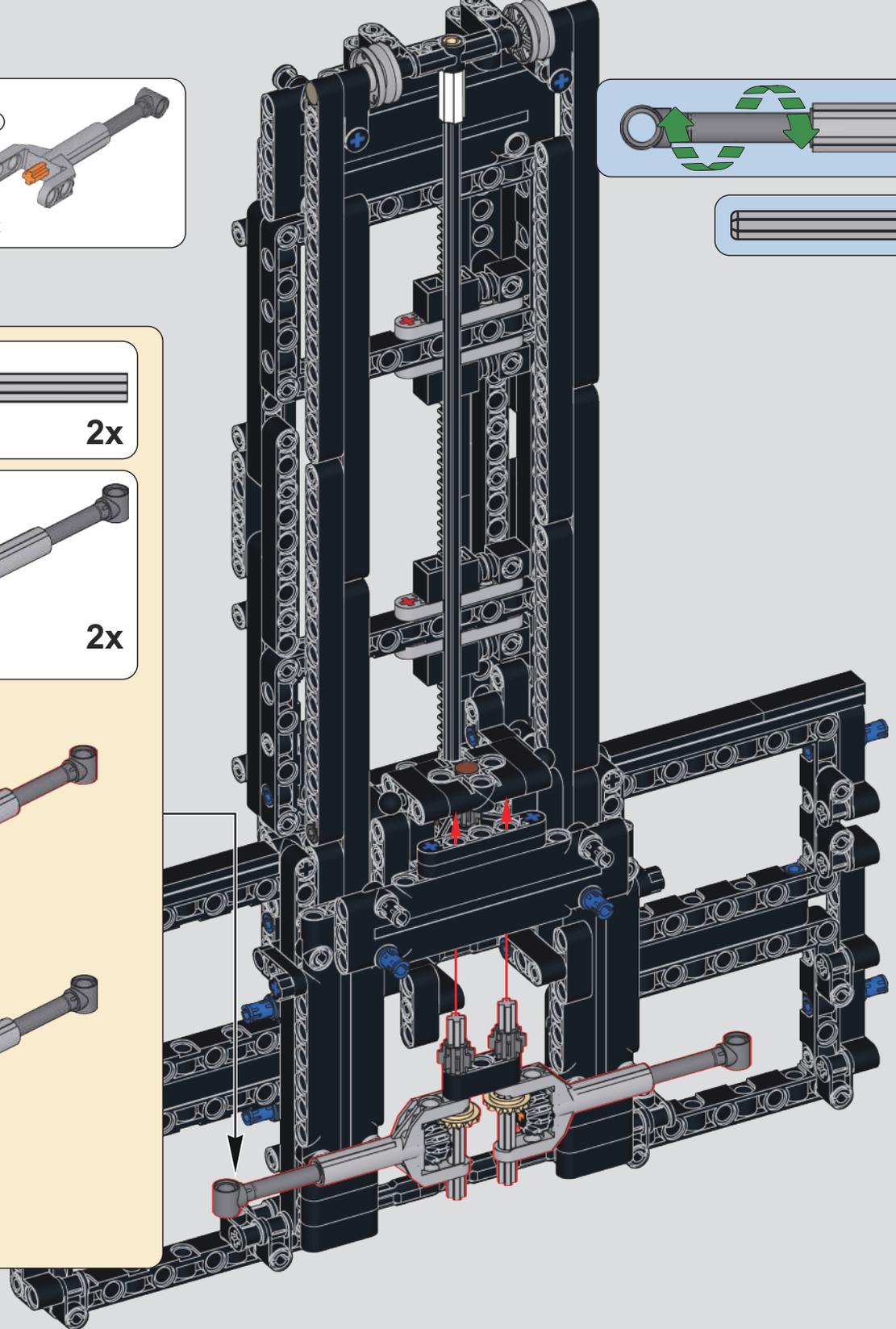

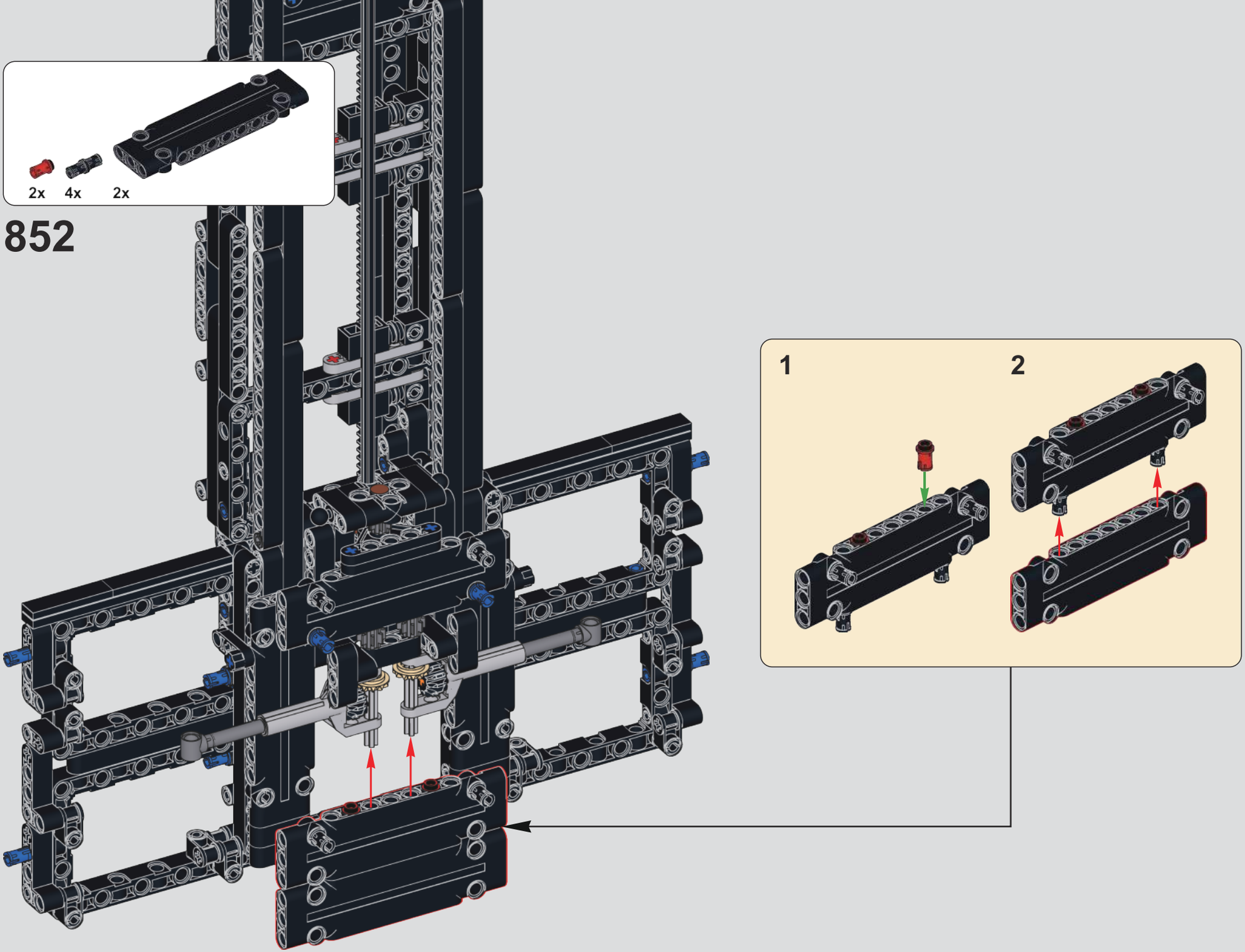
2x
4x
2x
852
1
2

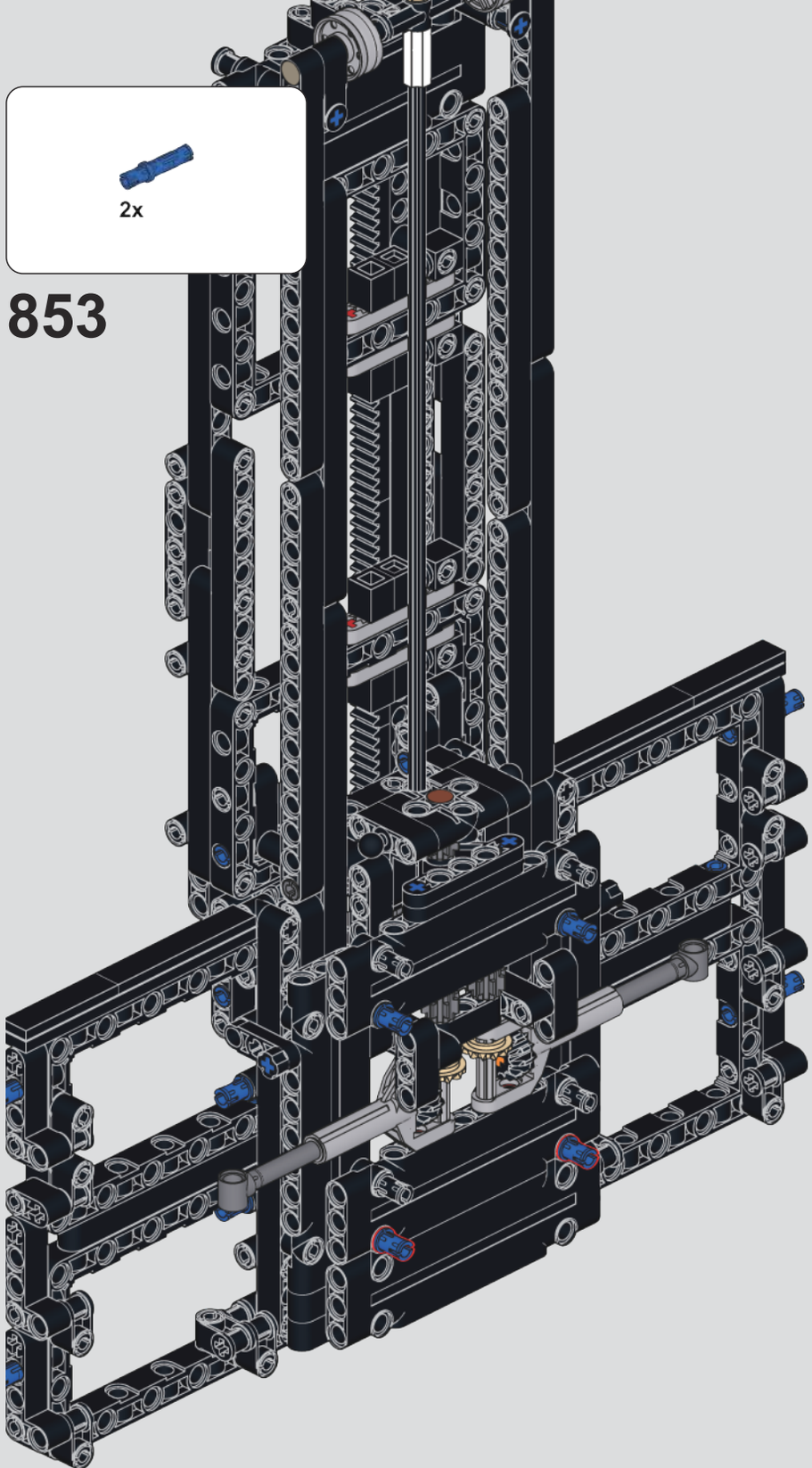
2x
853

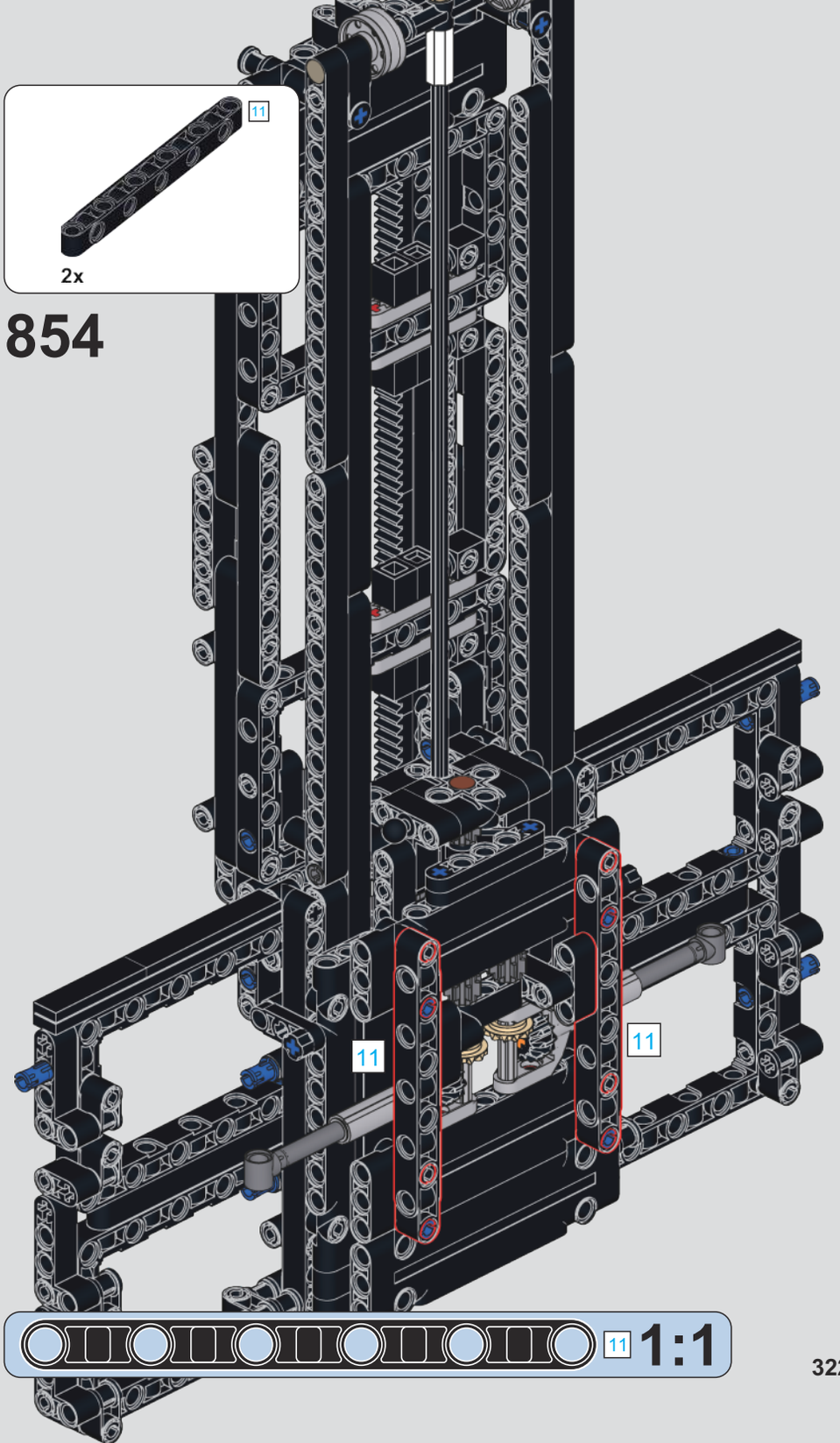
11
2x
854
11
11
11
1:1

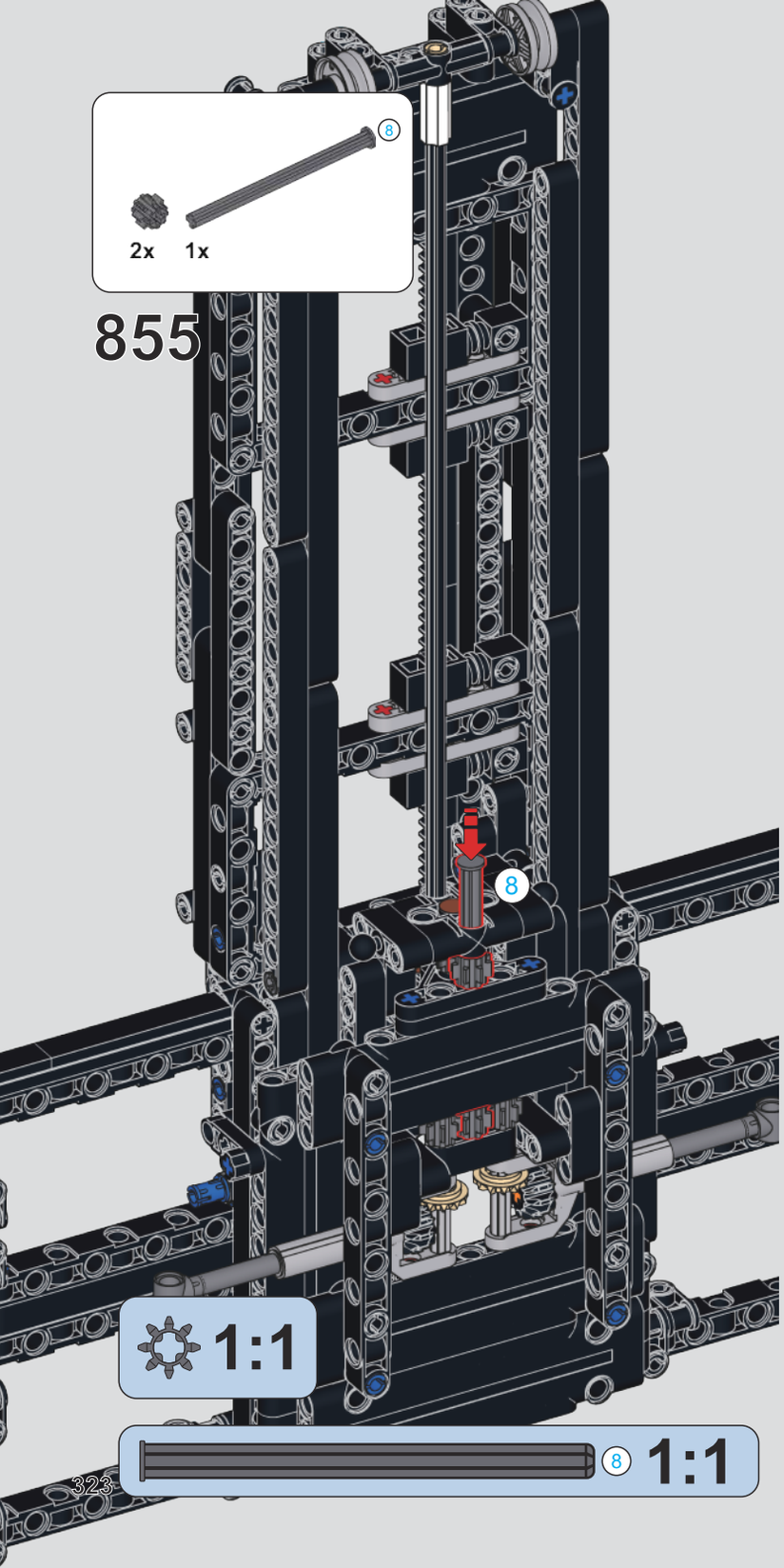
8
2x
1x
855
8
1:1
8
1:1

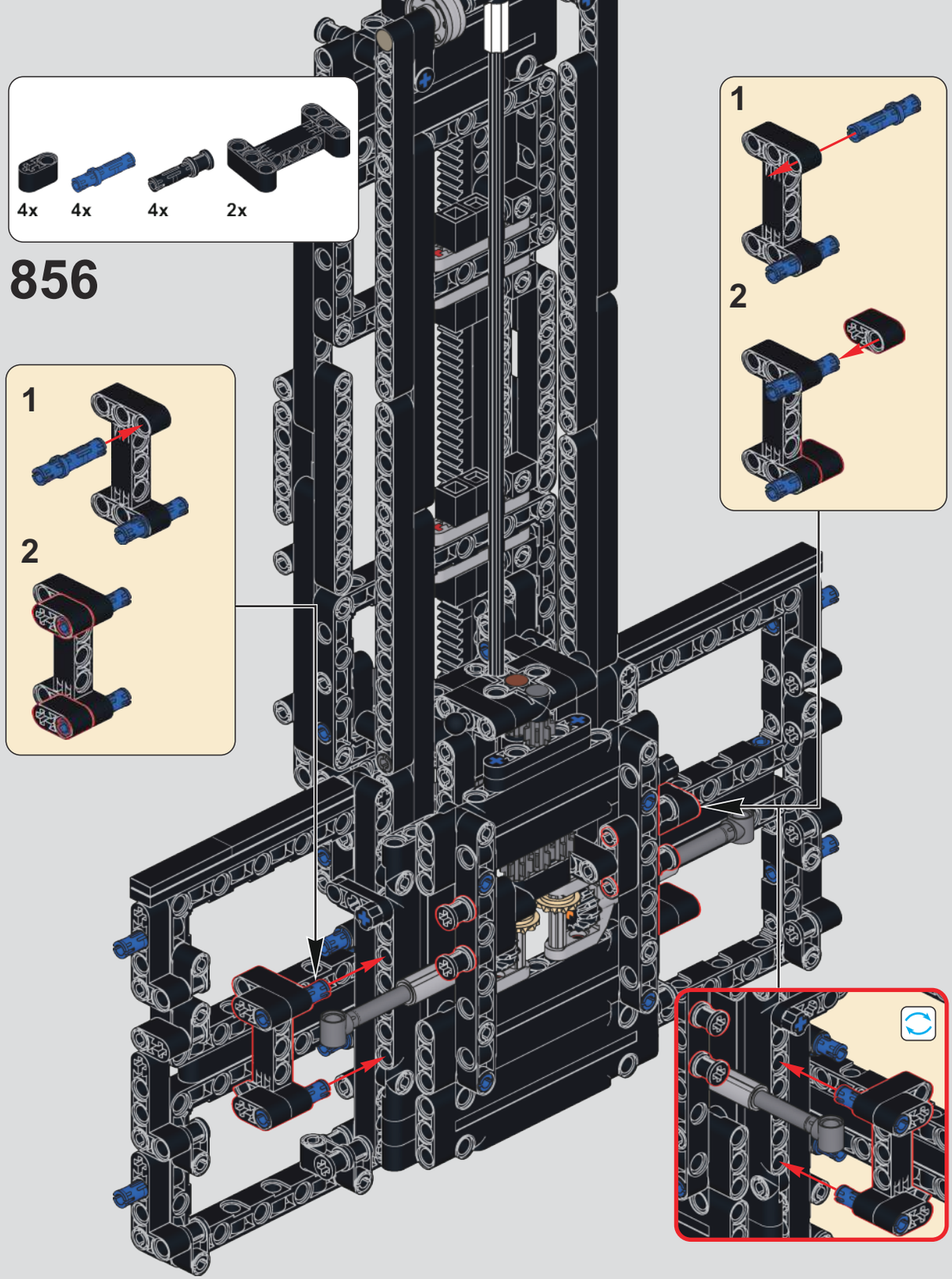
4x
4x
4x
2x
856
1
2
1
2

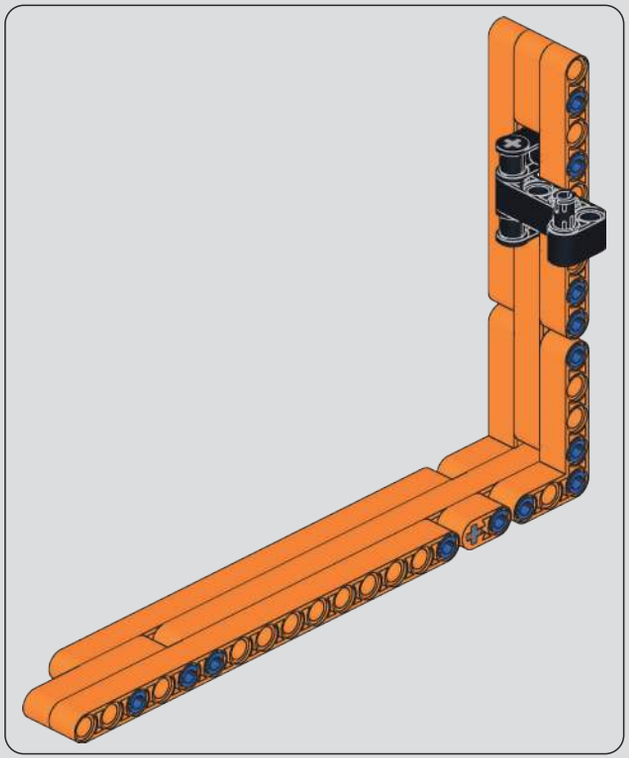

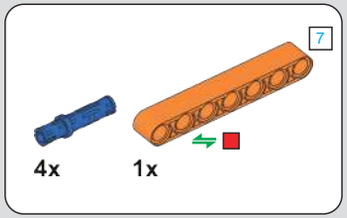

857

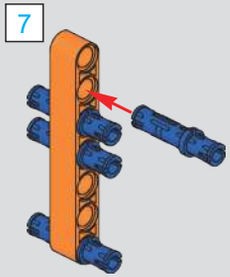

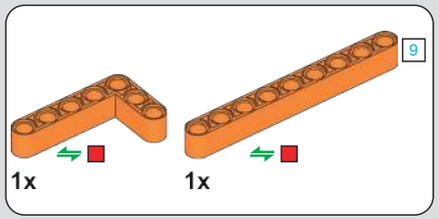

858

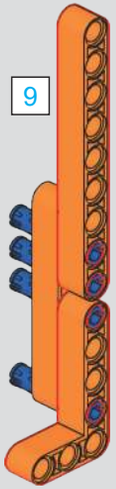

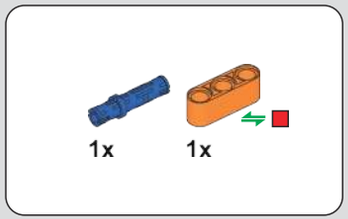

859

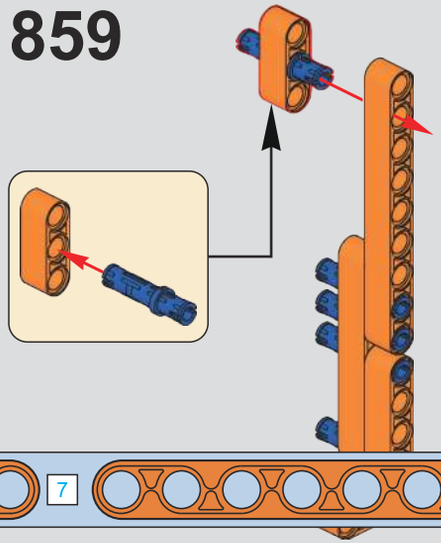

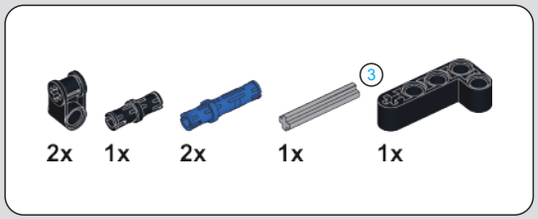

860

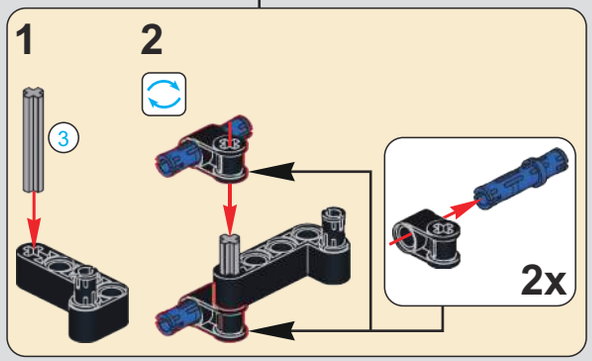

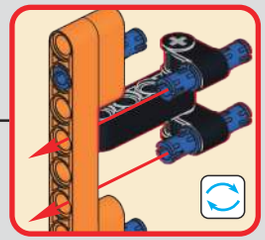

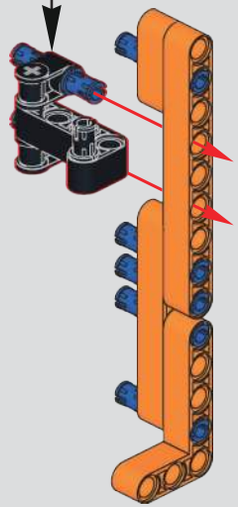

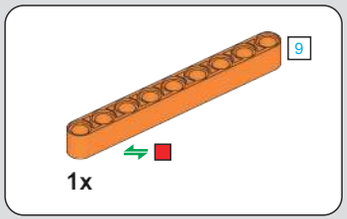

861

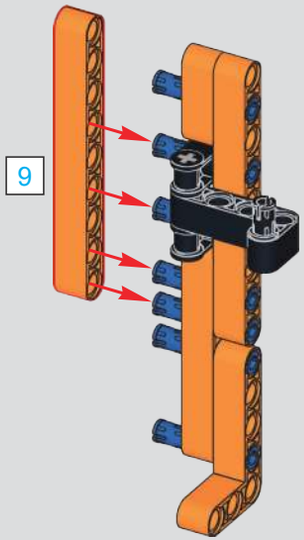

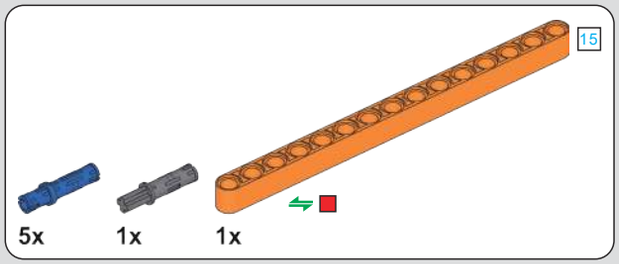

862

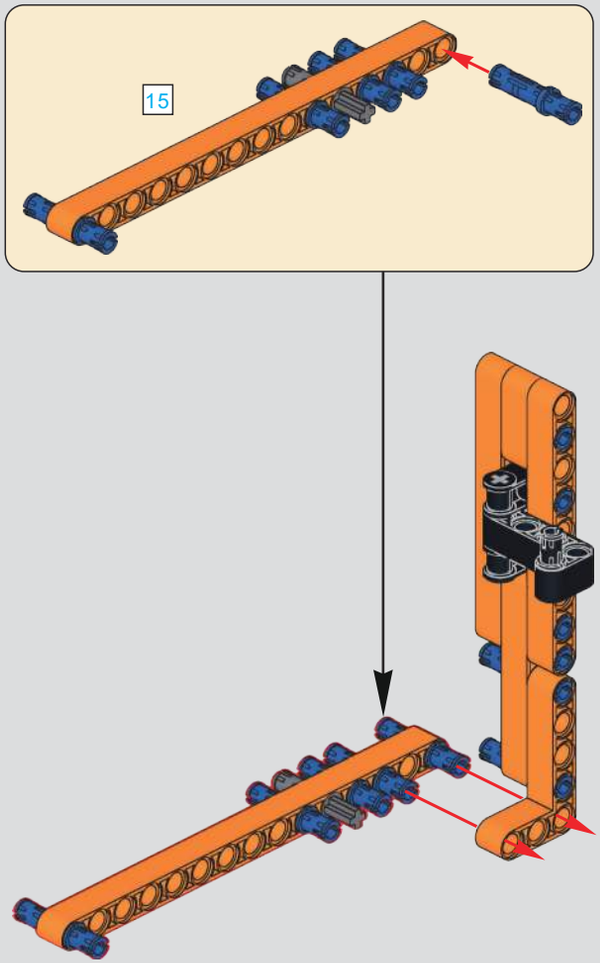

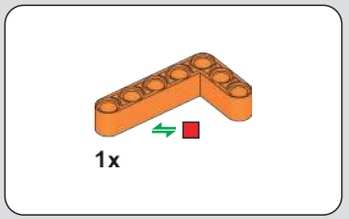

863

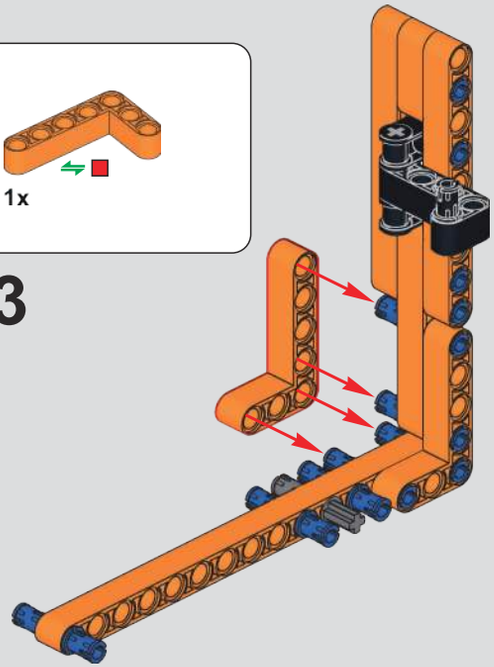

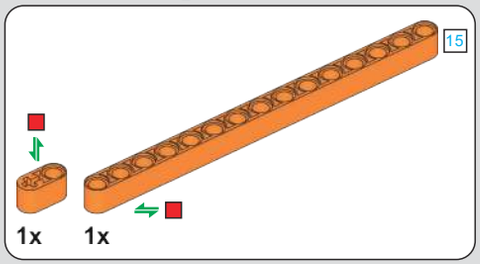

864

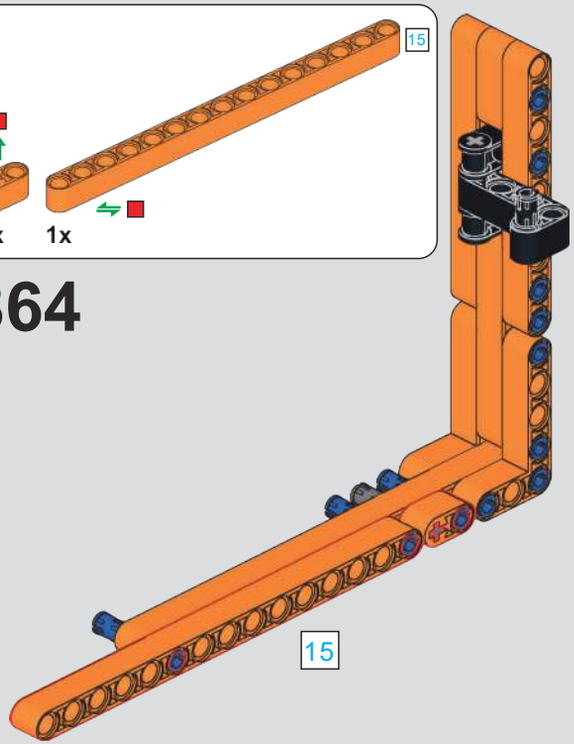

865

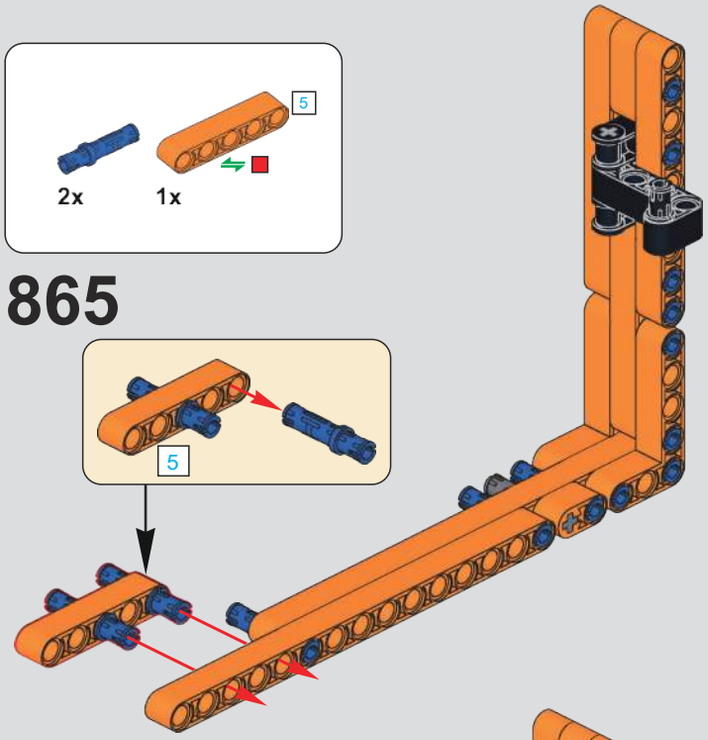

866

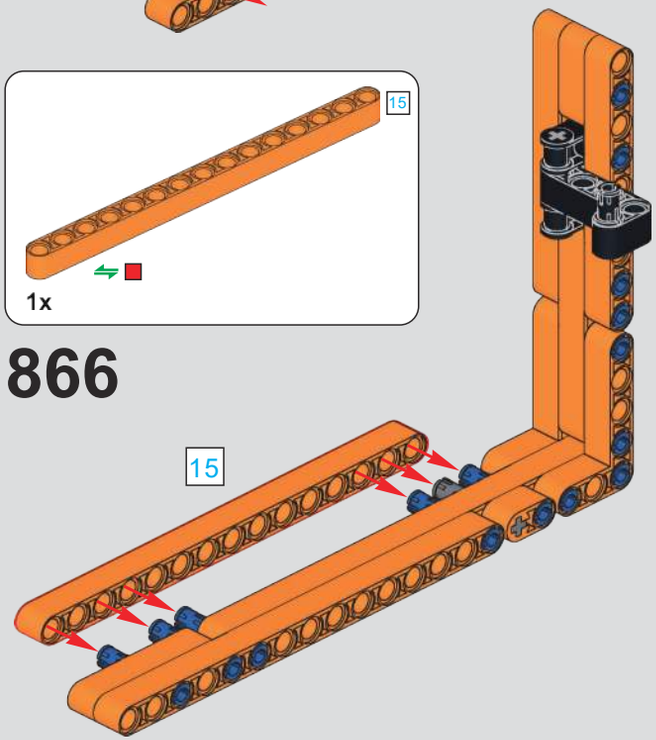

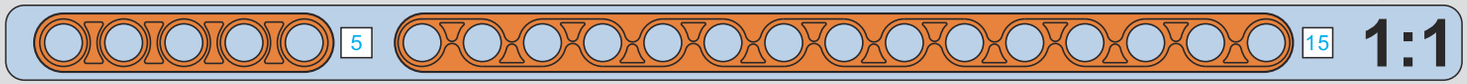

867

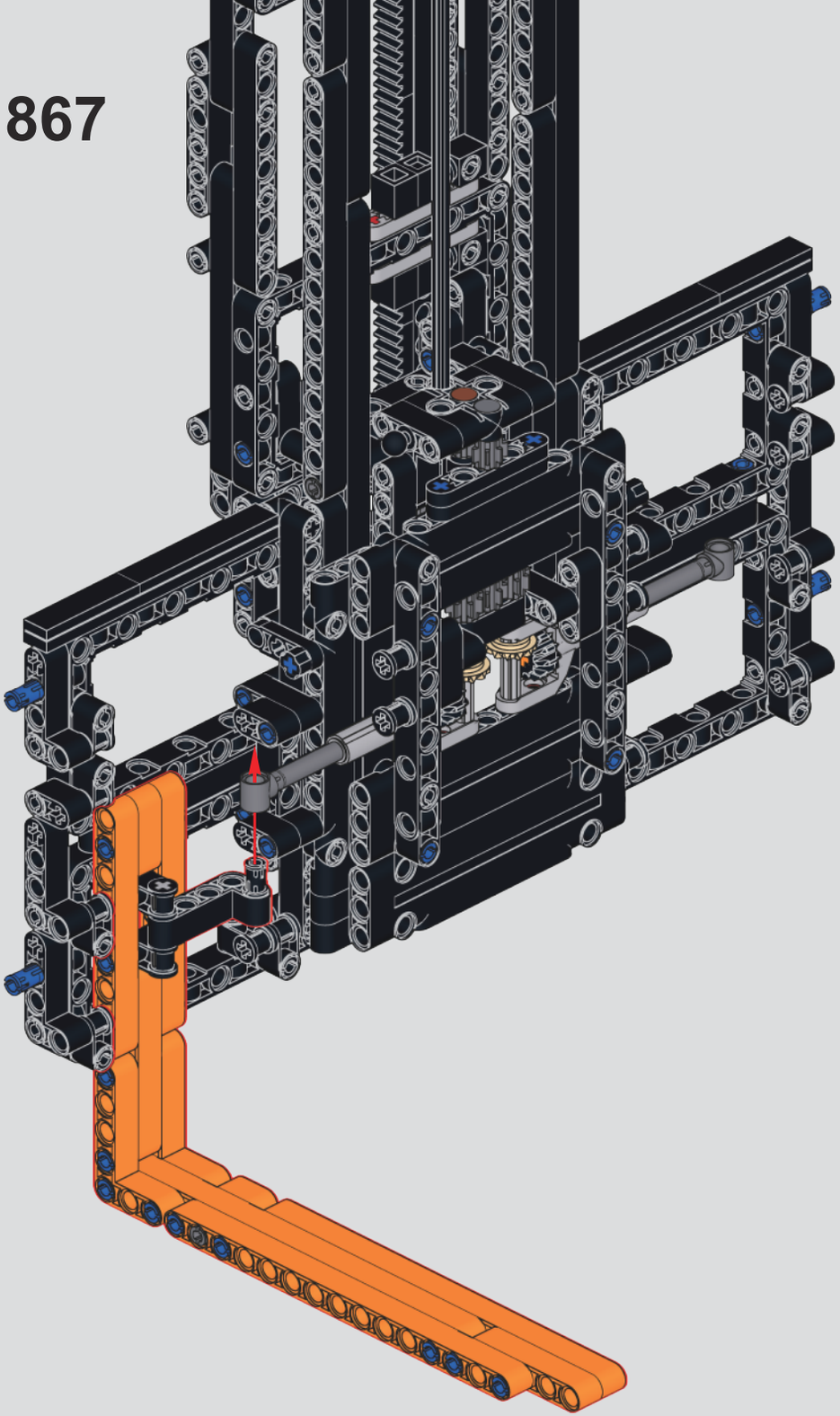

868

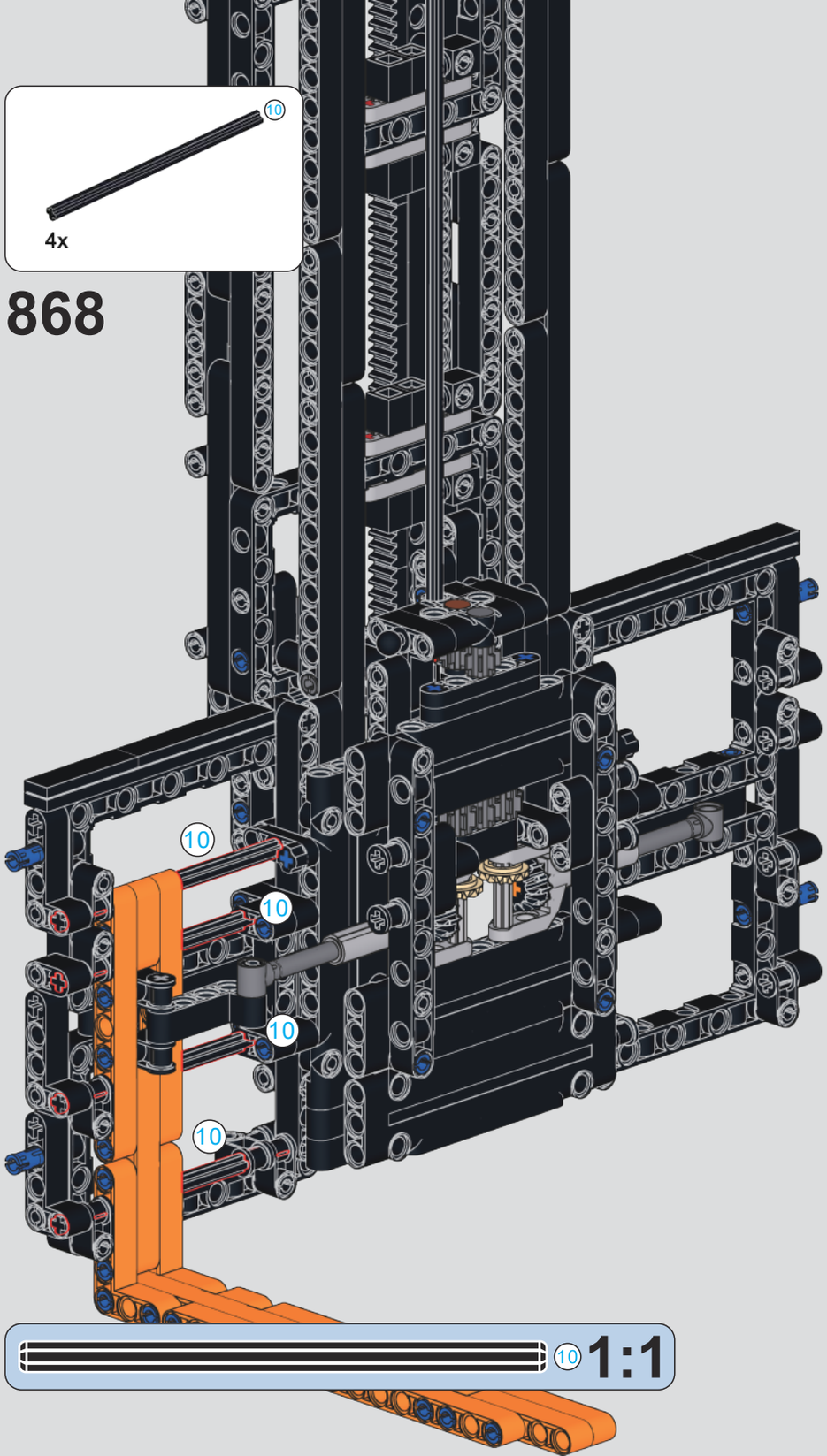

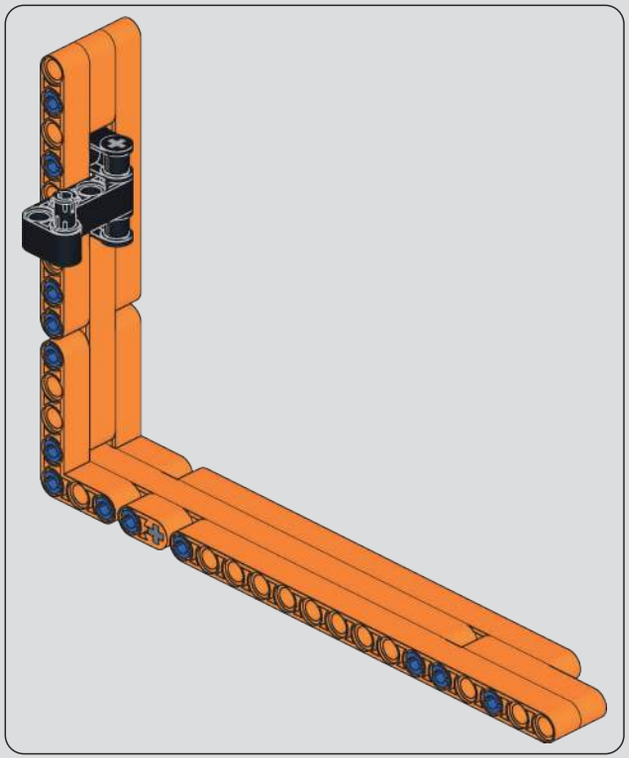

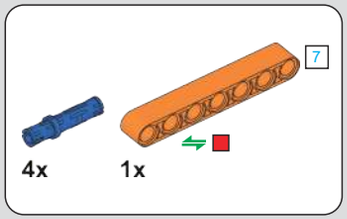

869

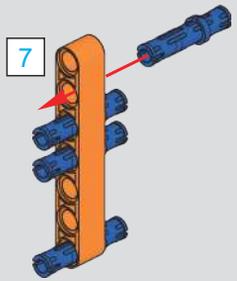

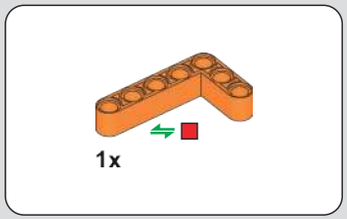

870

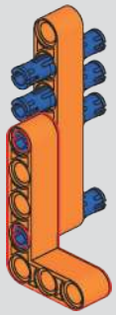

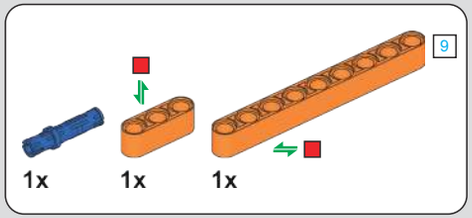

871

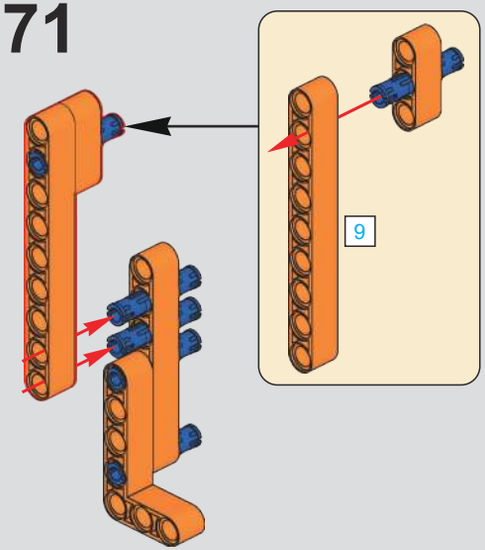

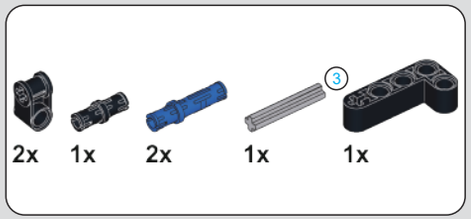

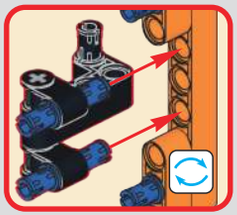

872

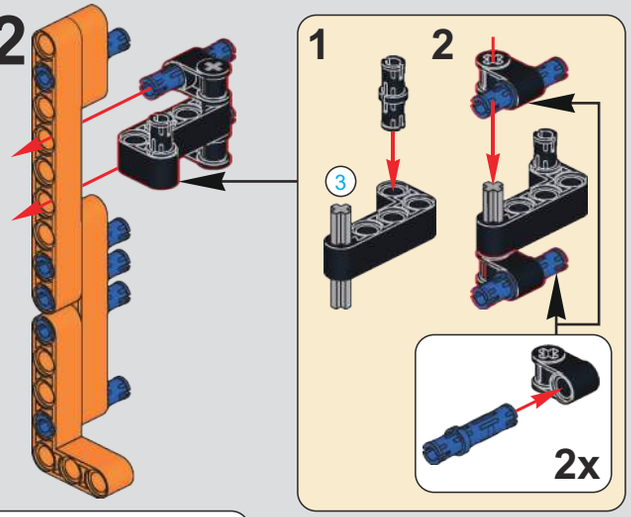

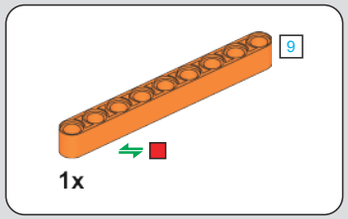

873

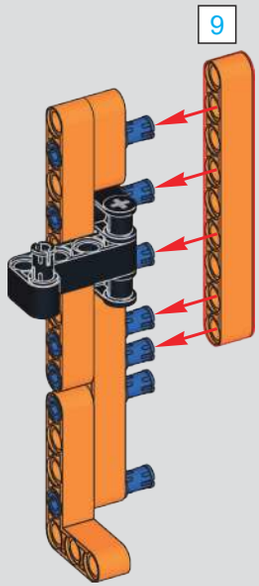

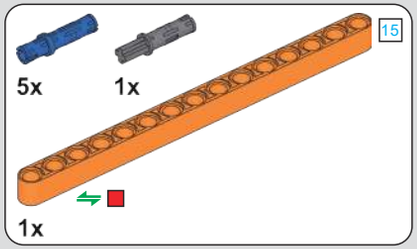

874

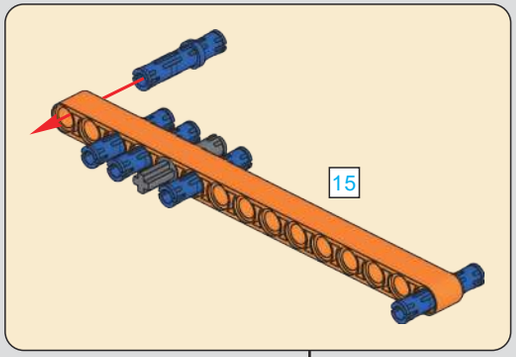

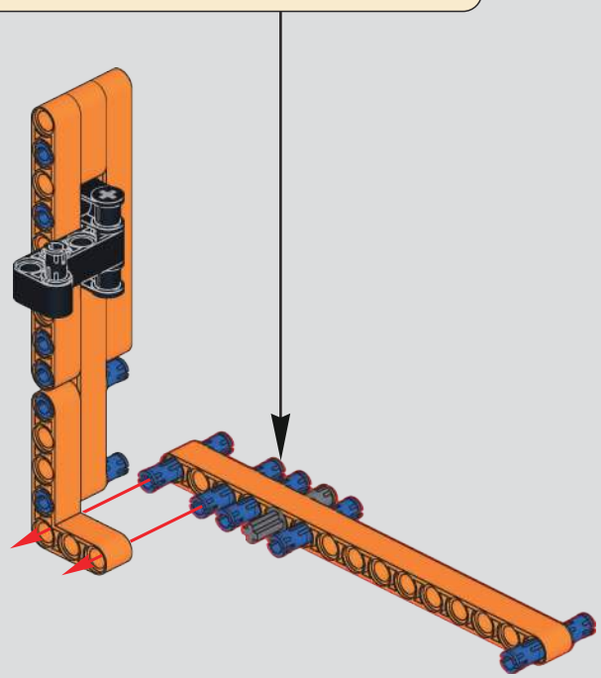

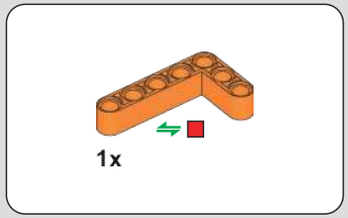

875

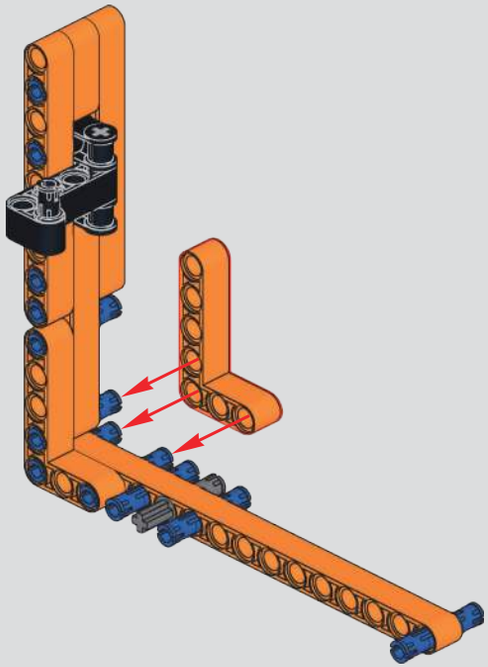

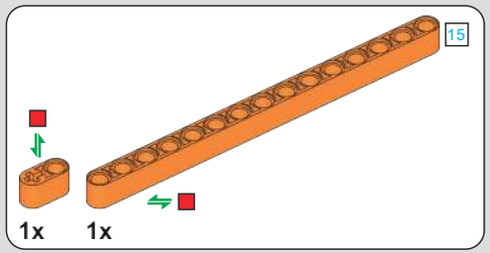

876

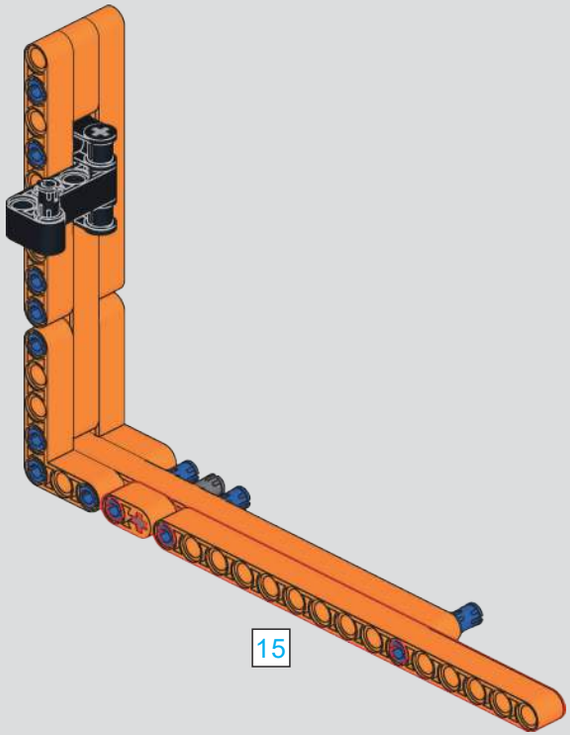

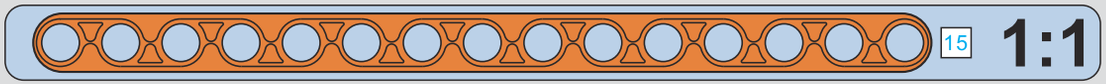

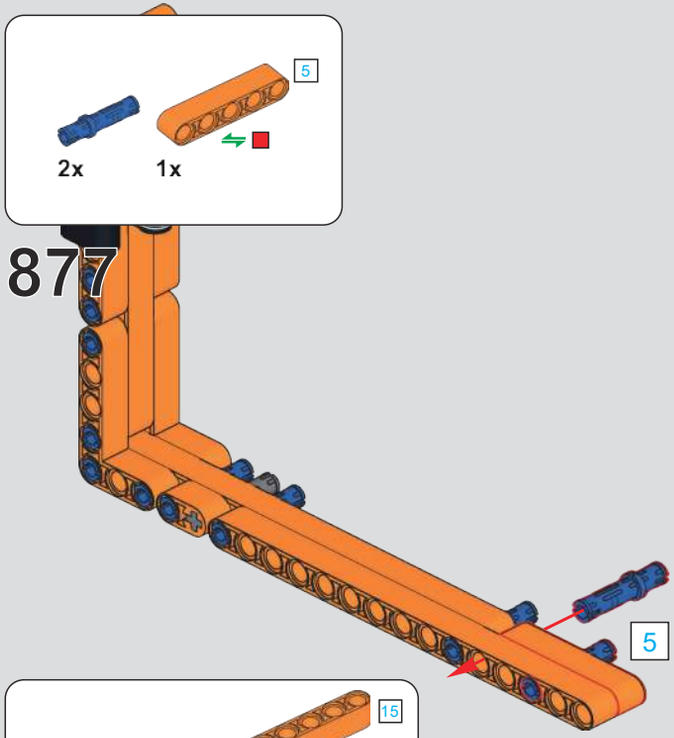

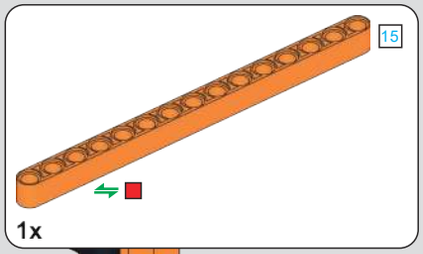

878

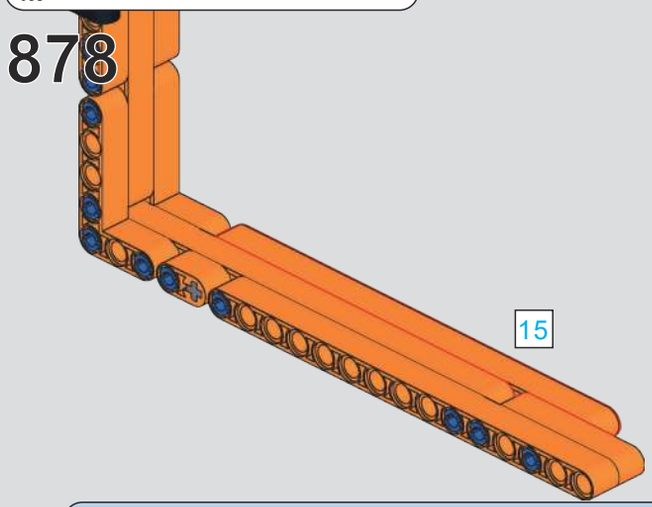

879

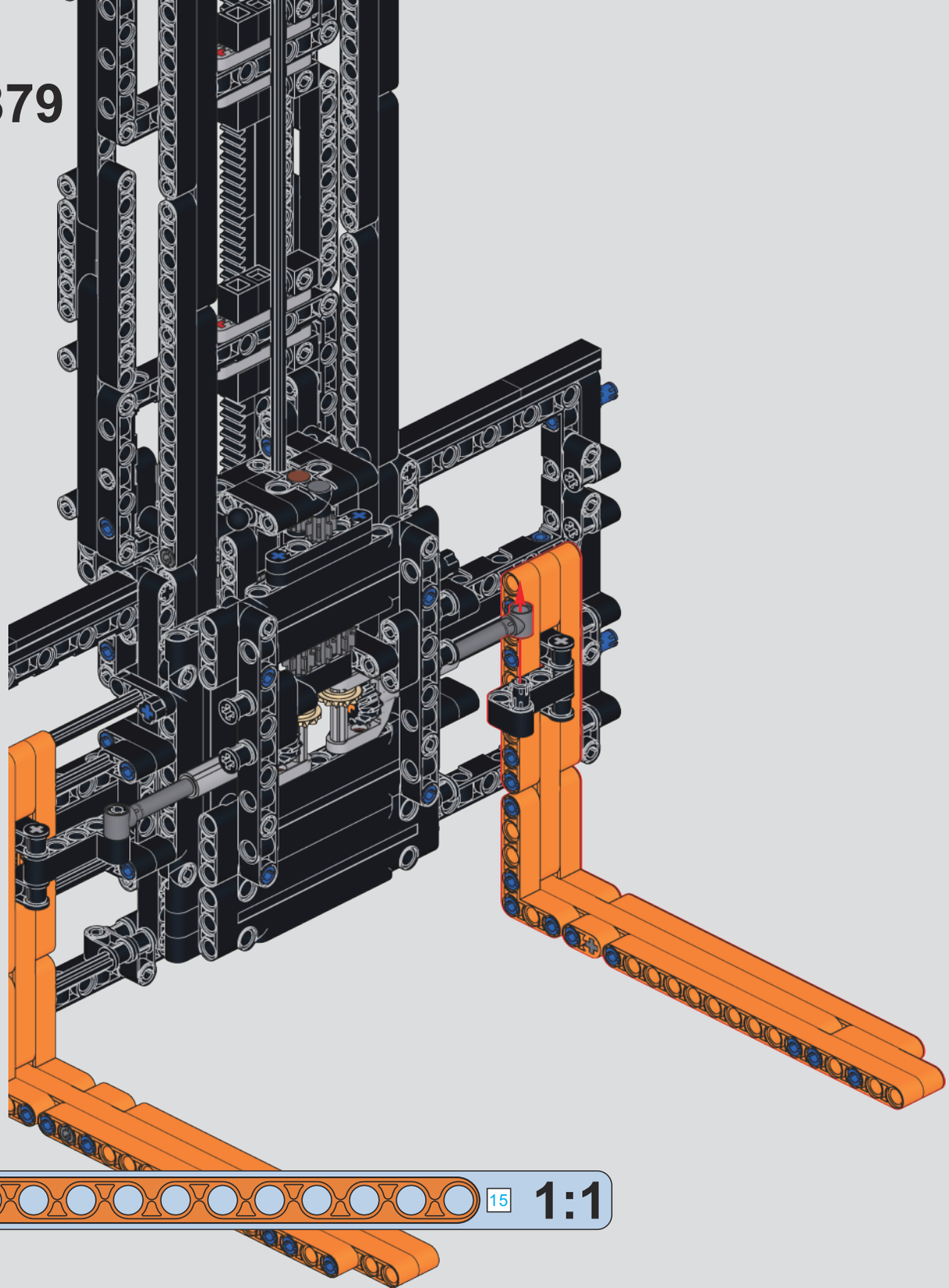

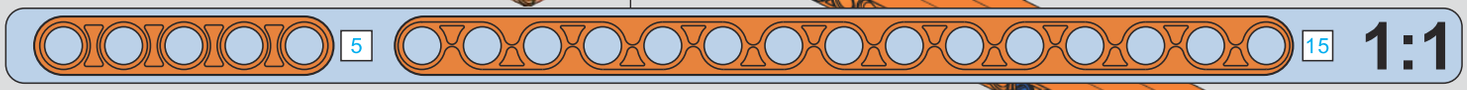

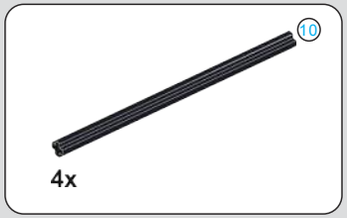

880

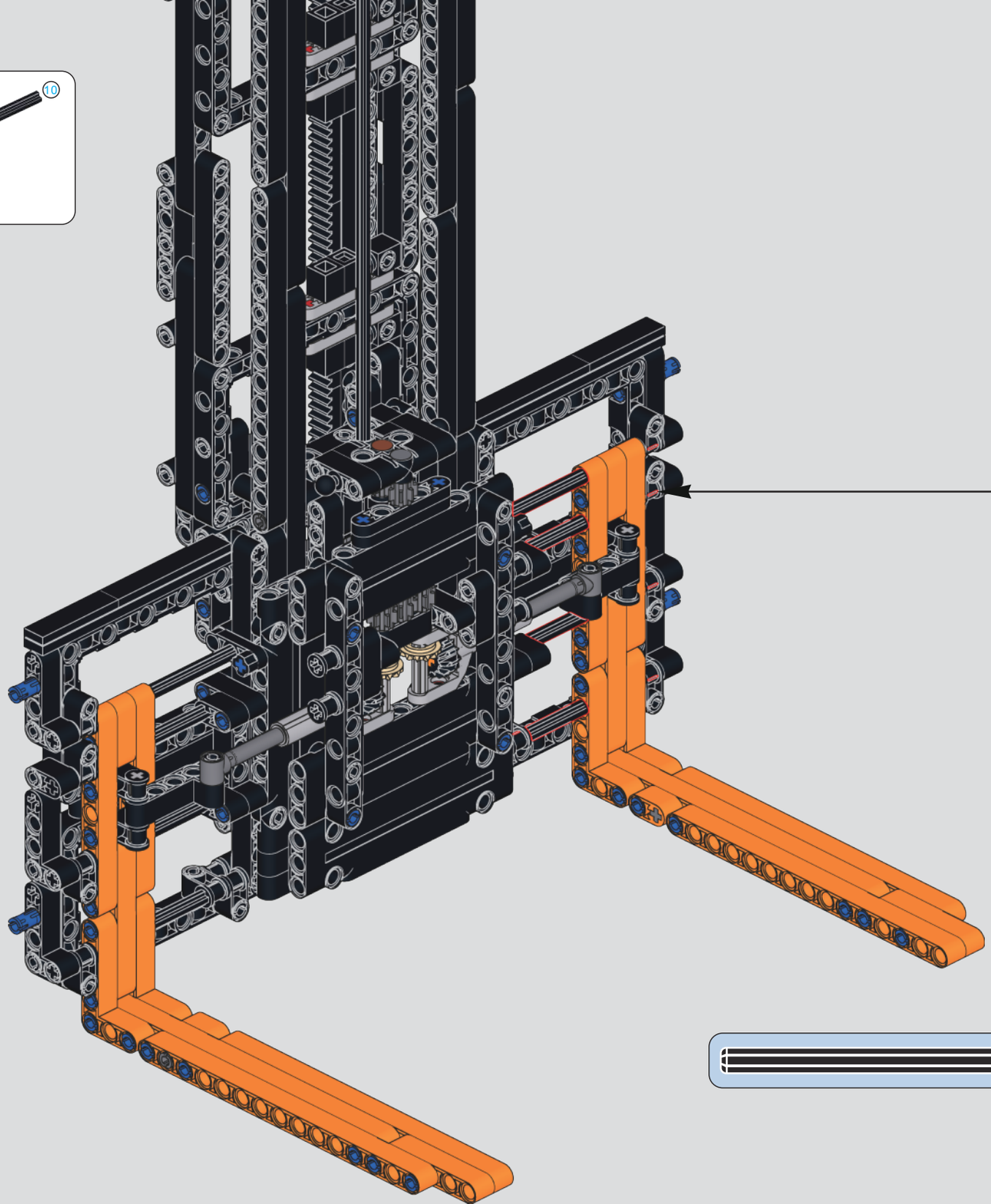

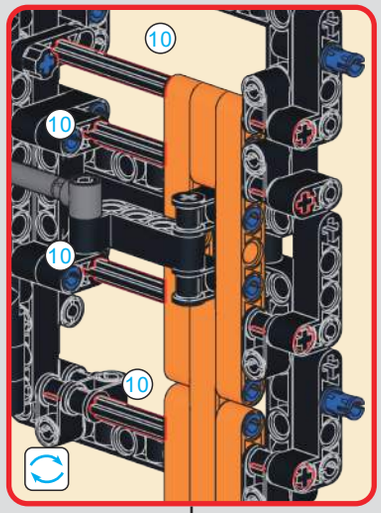

881

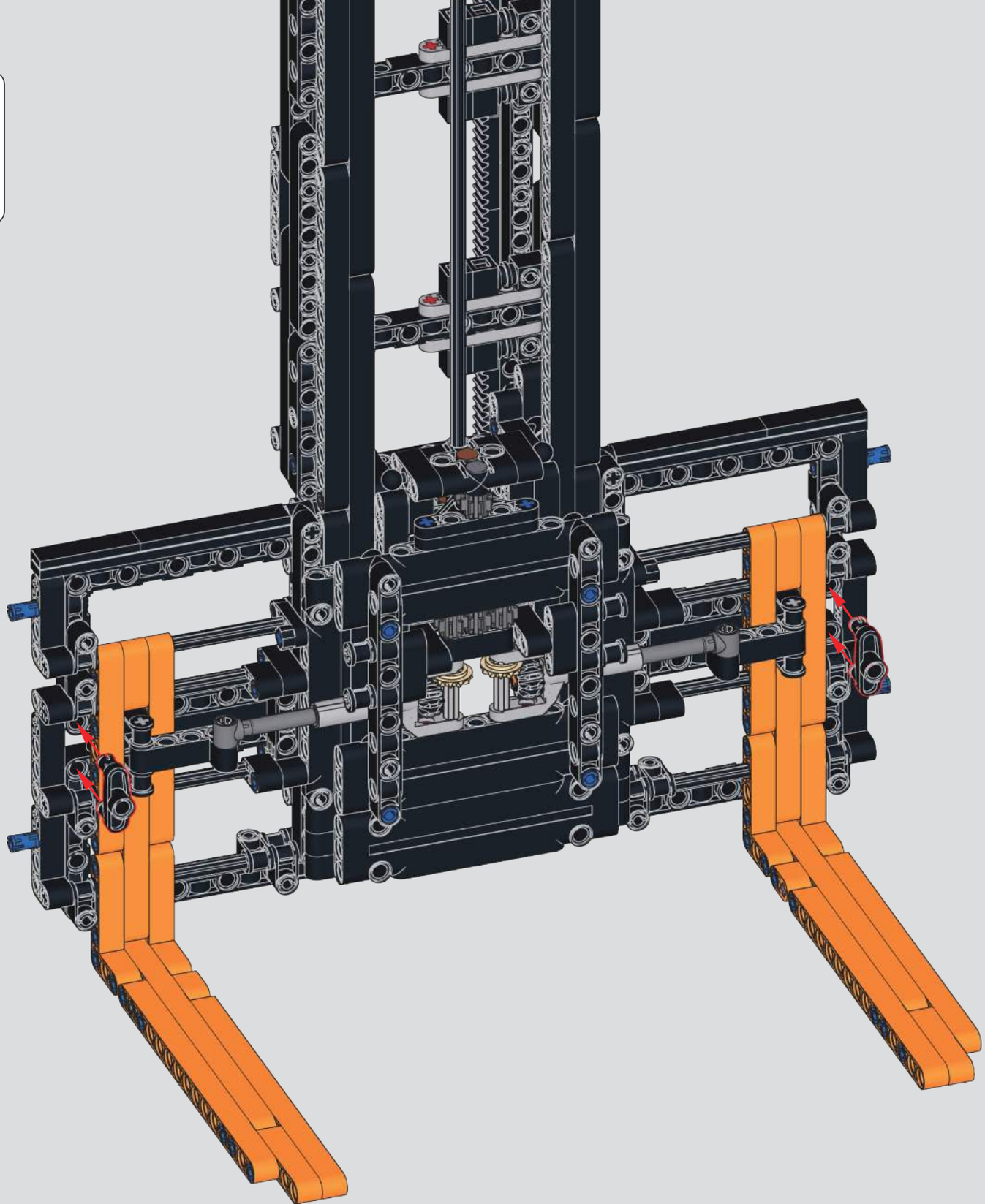

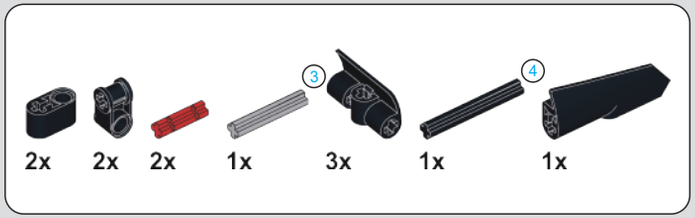

882

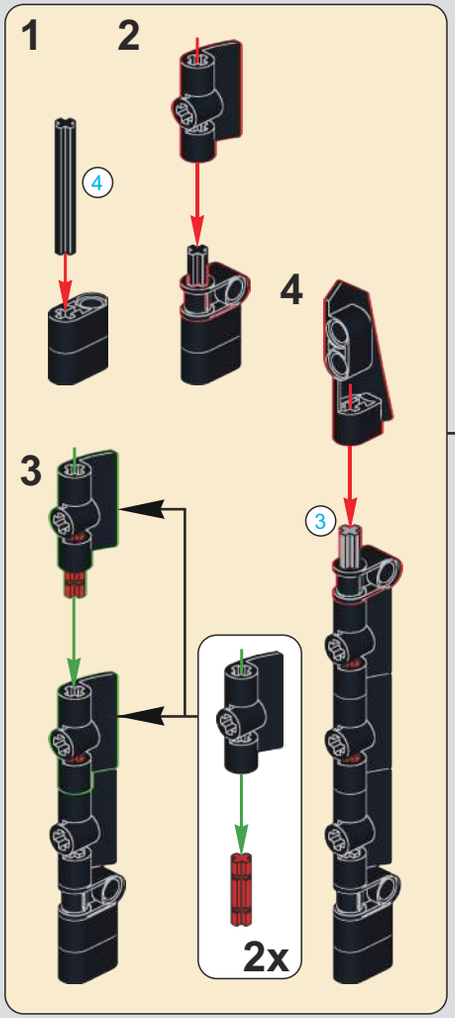

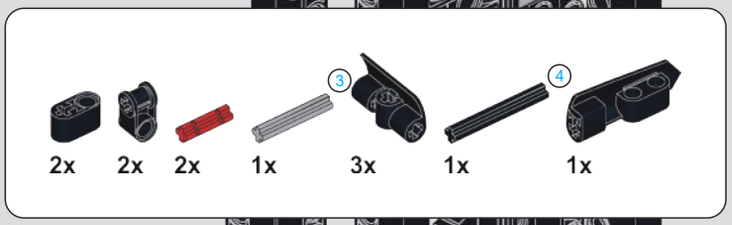

883

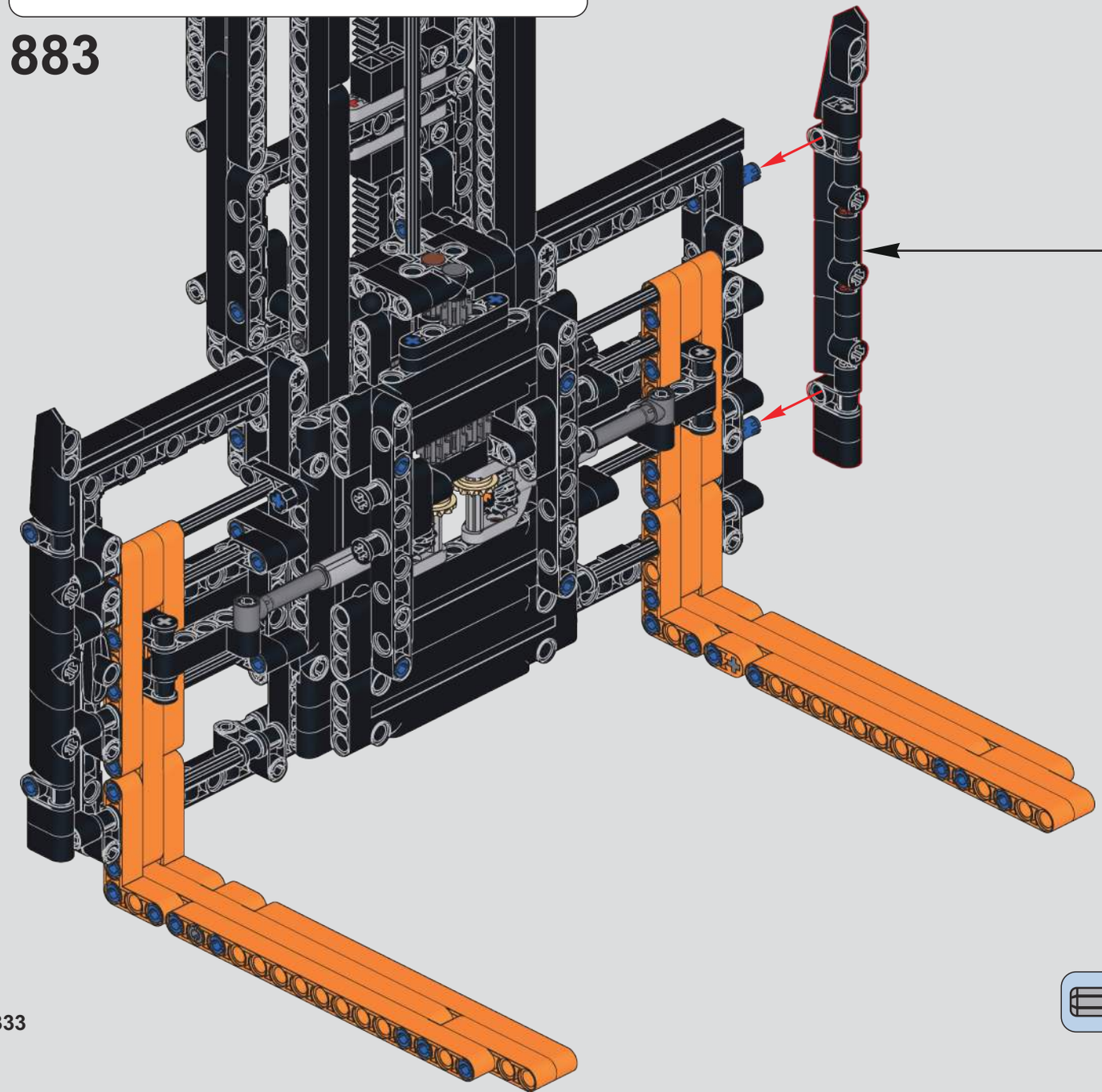

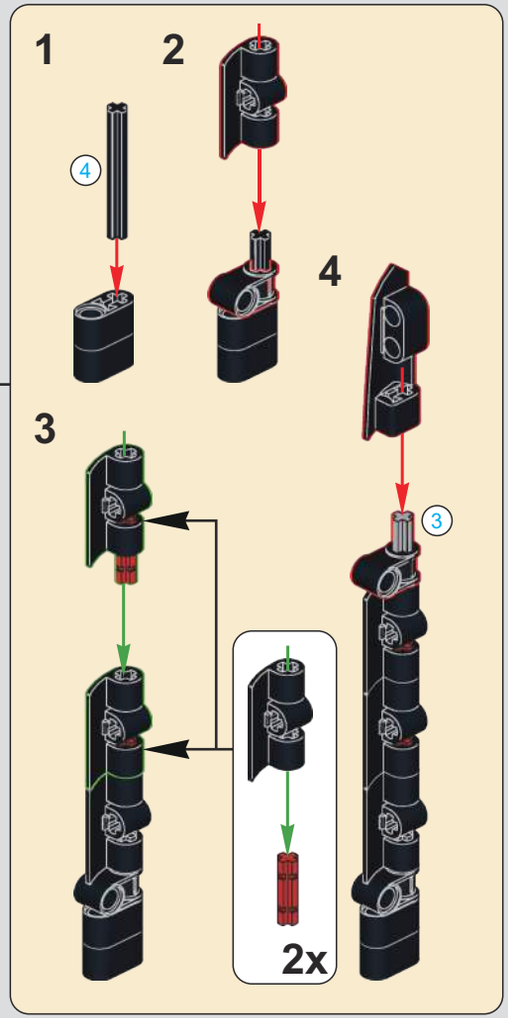

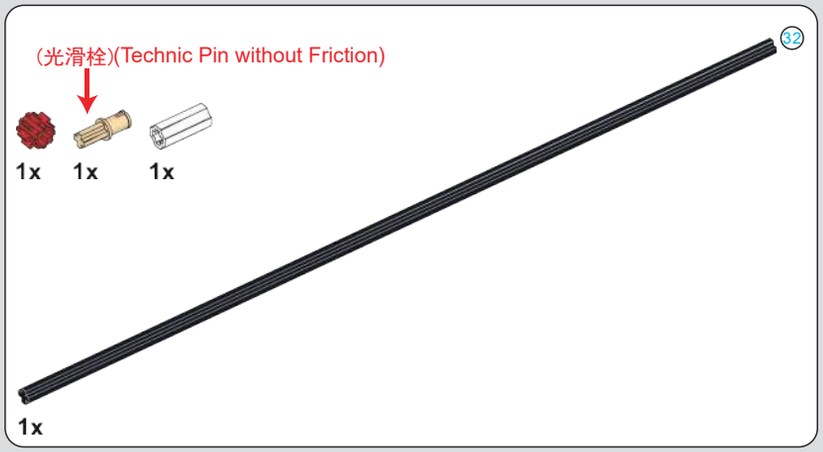

884

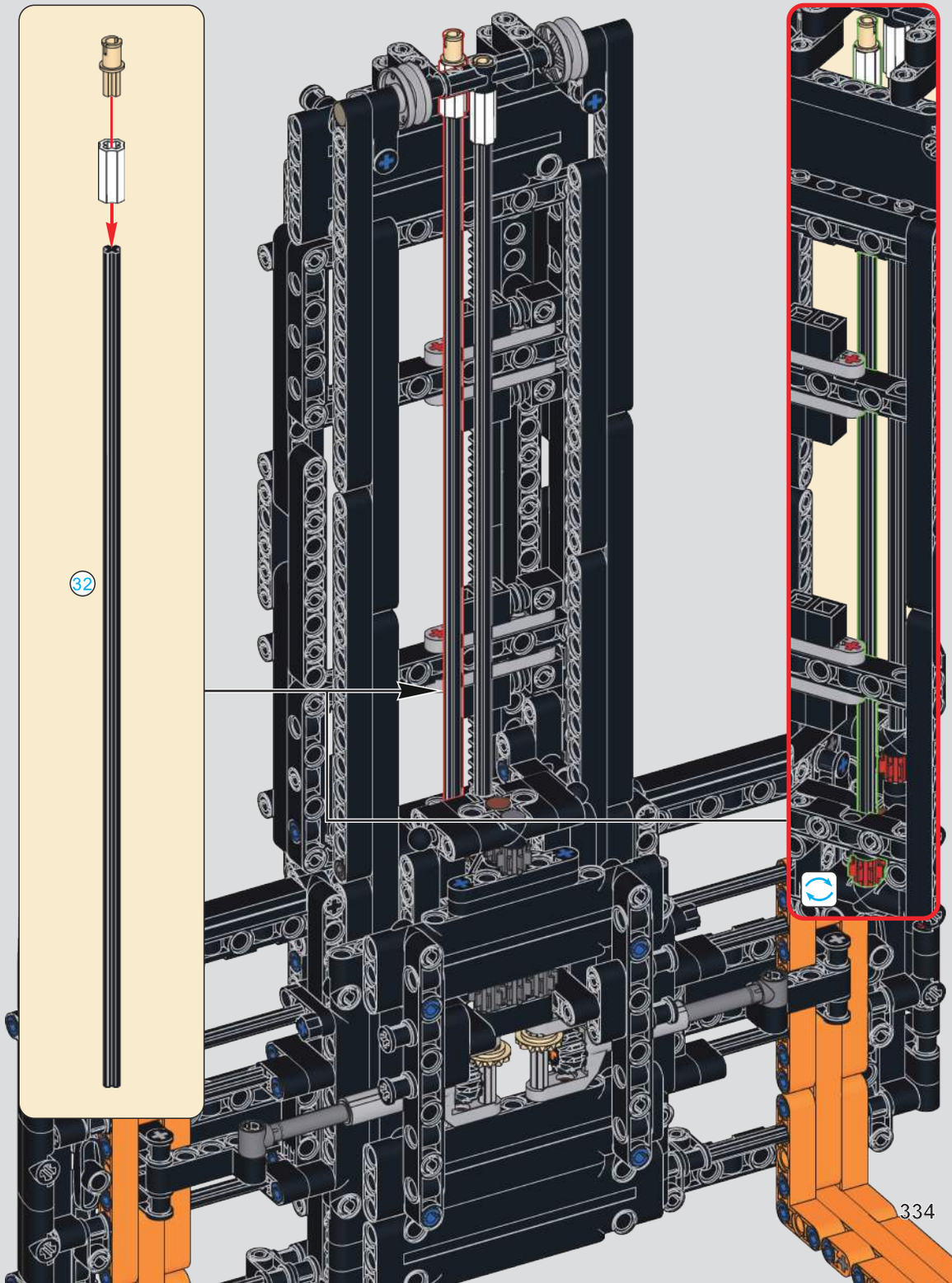

1:1

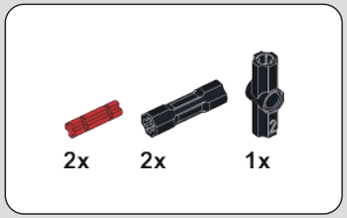

885

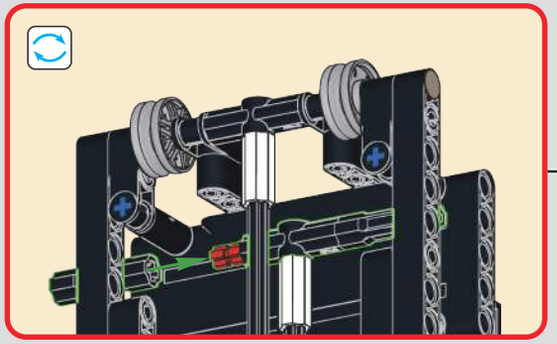

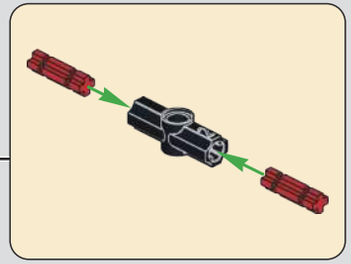

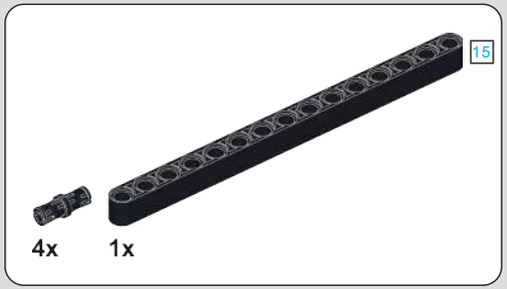

886

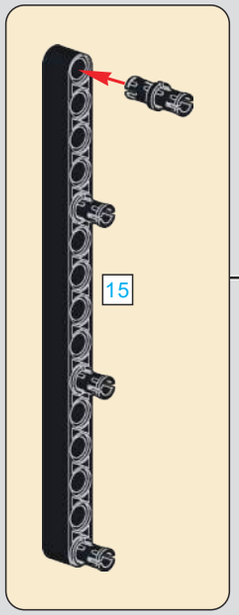

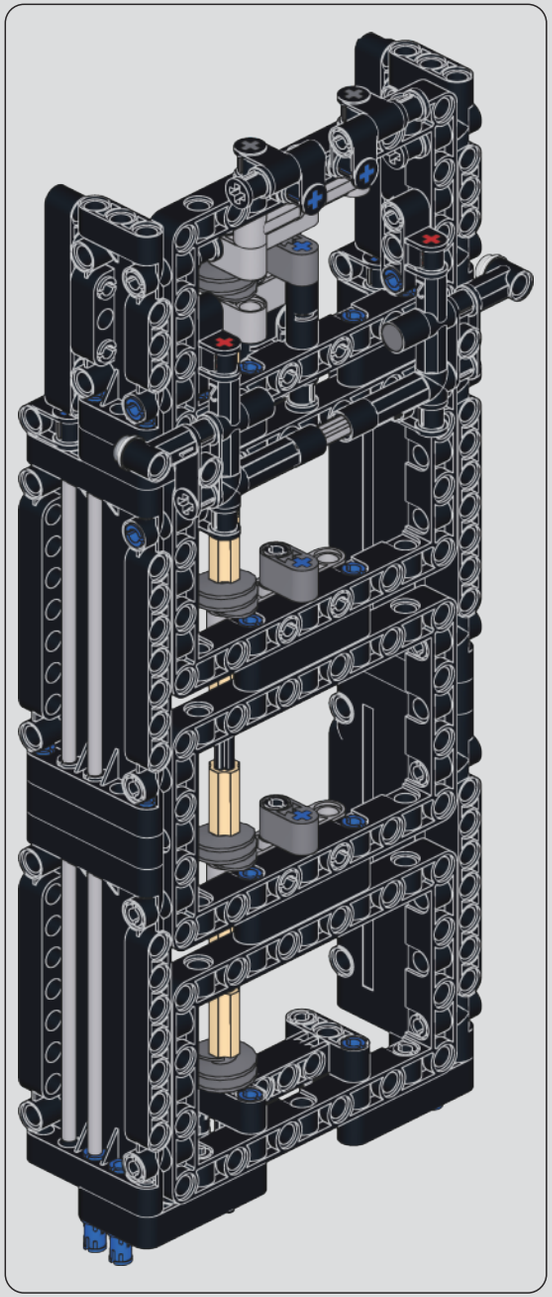

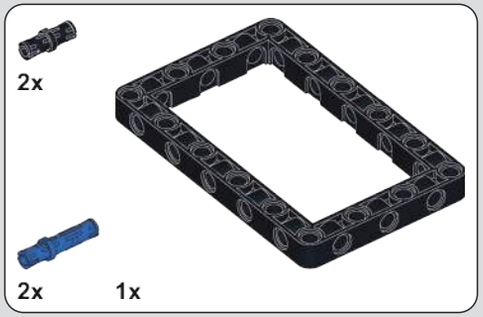

887

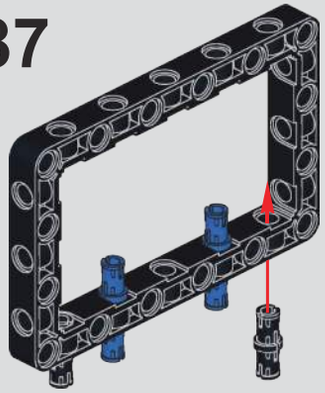

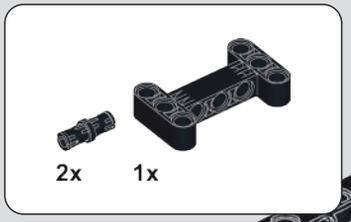

888

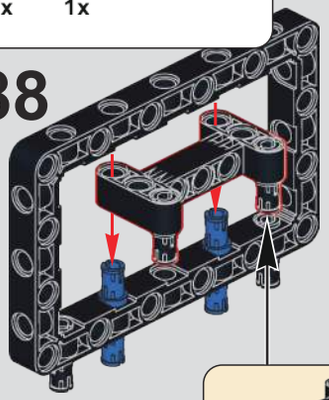

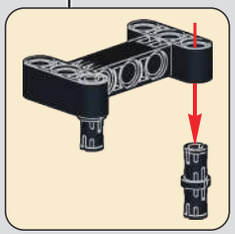

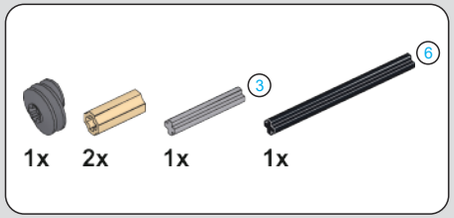

889

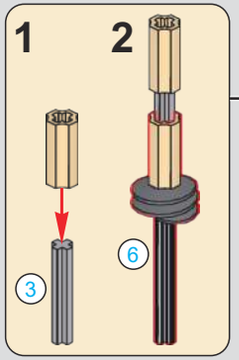

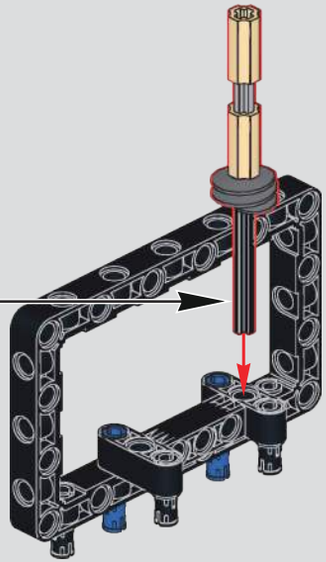

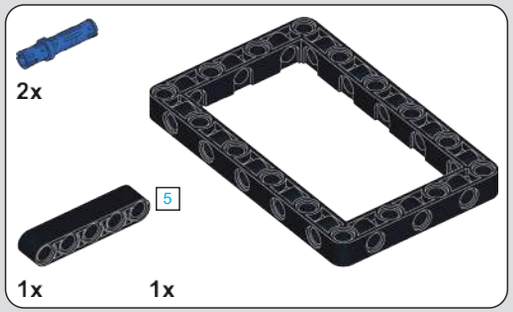

890

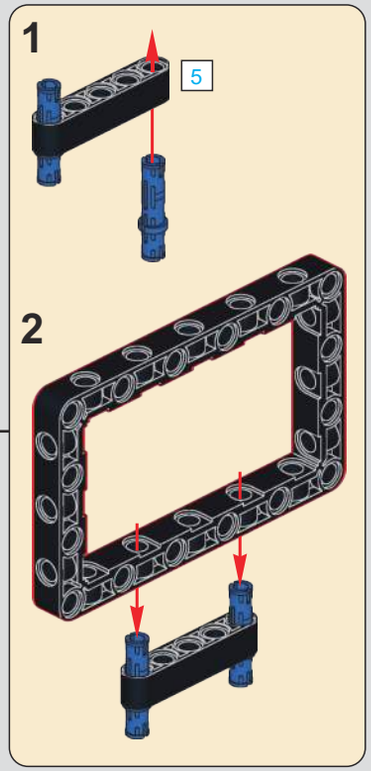

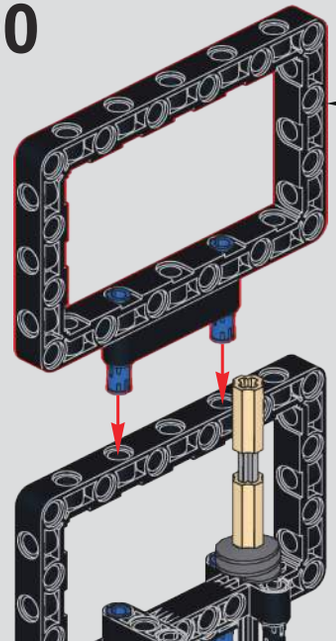

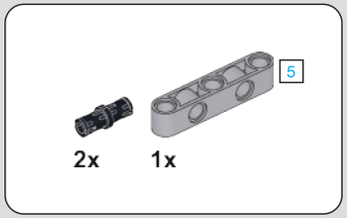

891

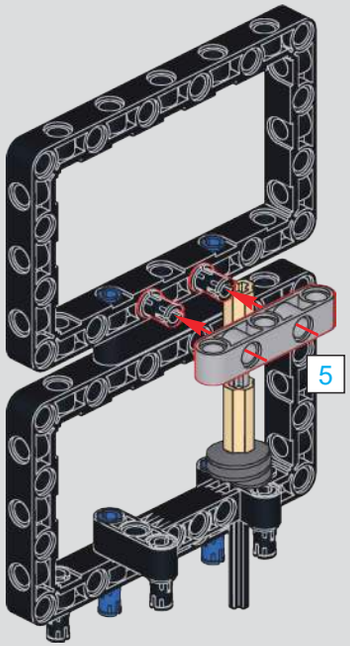

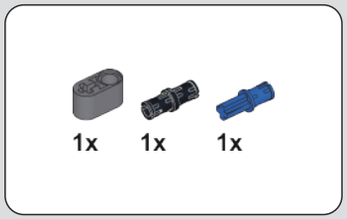

892

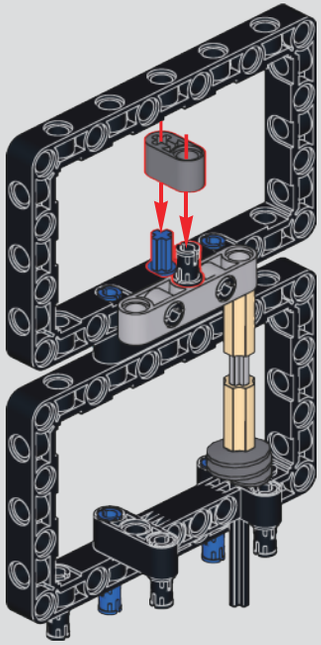

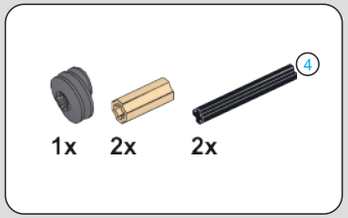

893

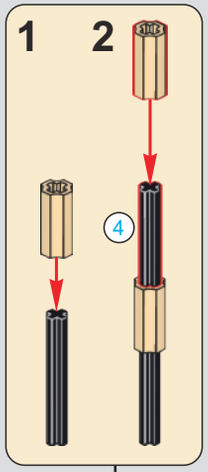

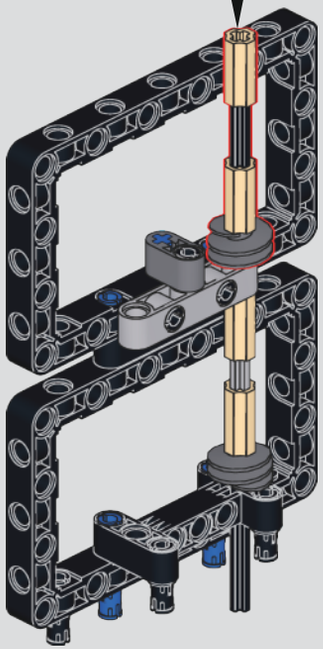

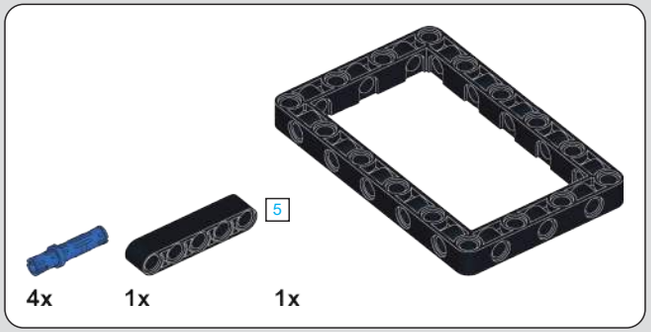

894

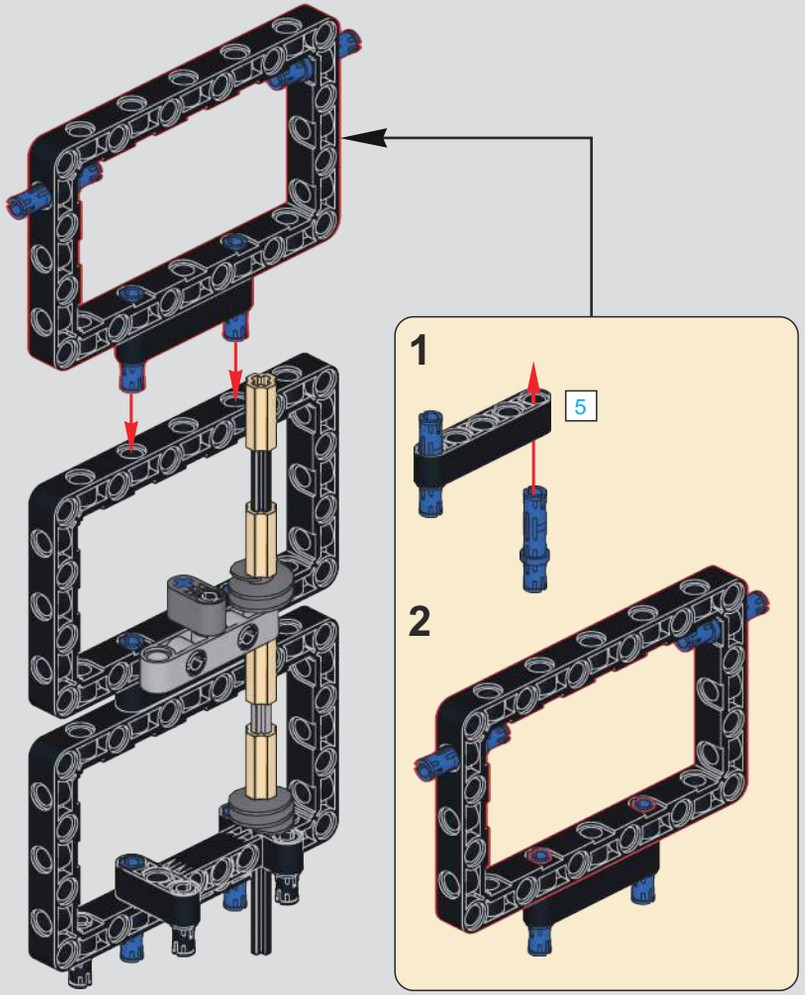

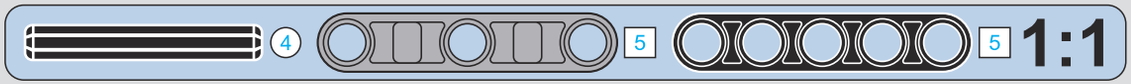

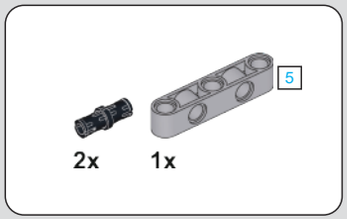

895

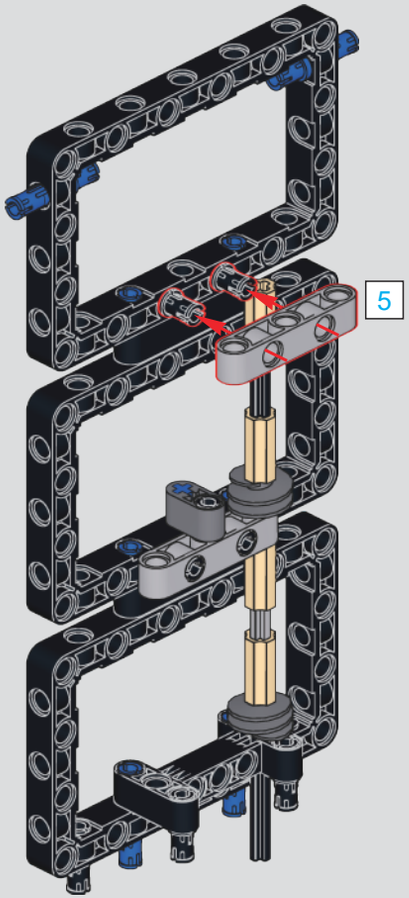

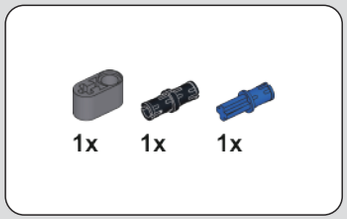

896

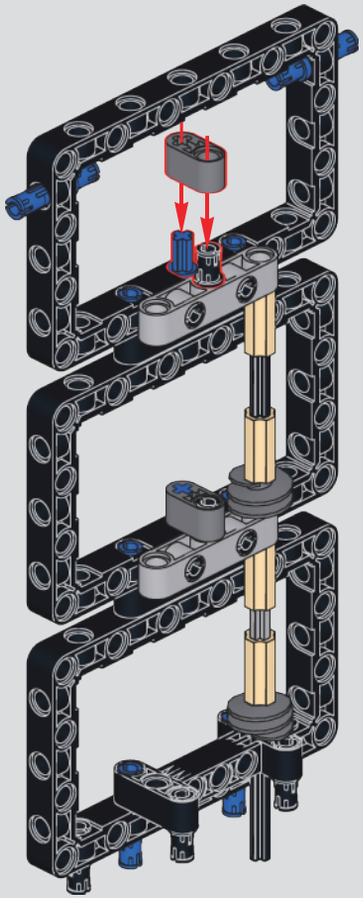

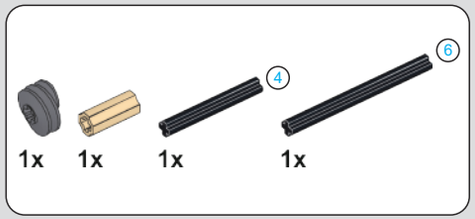

897

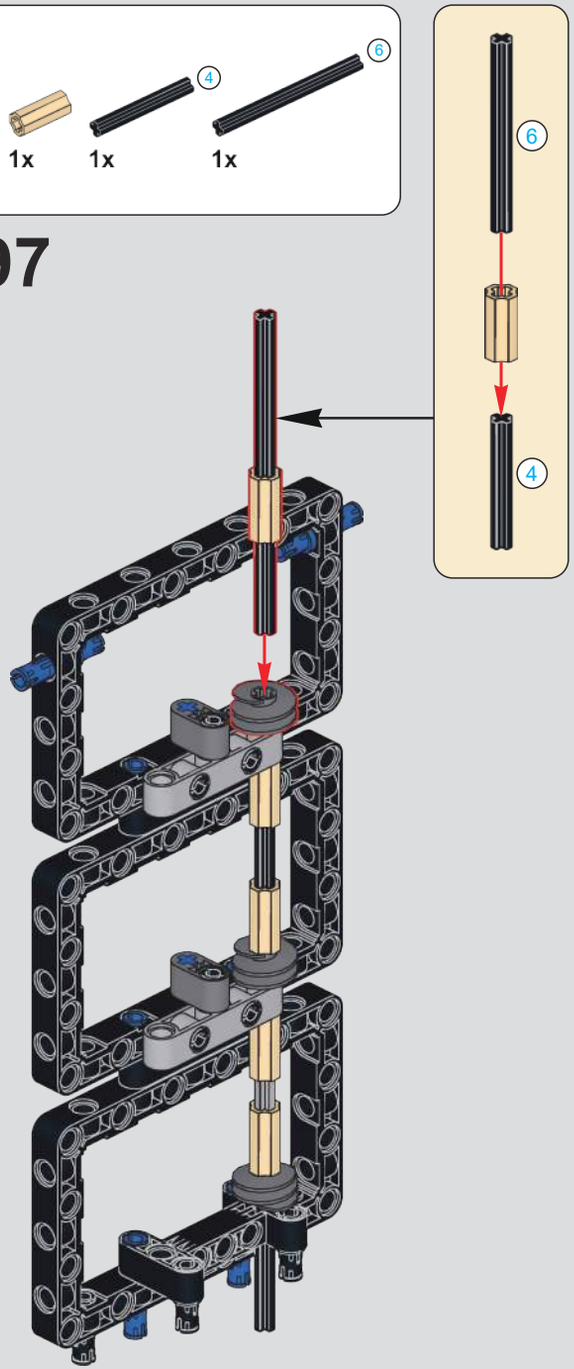

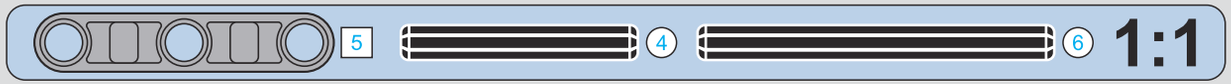

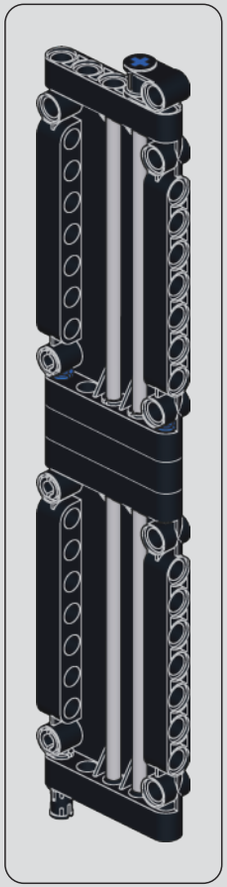

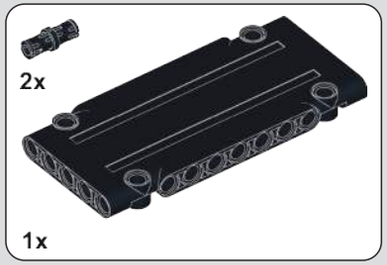

898

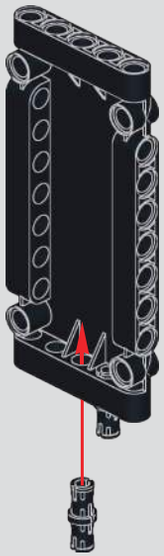

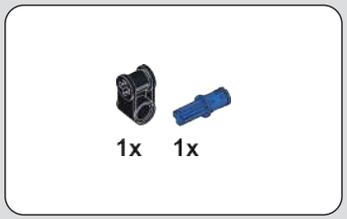

899

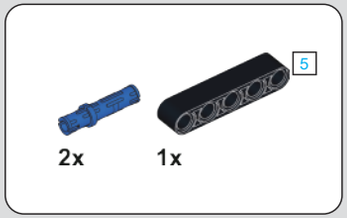

900

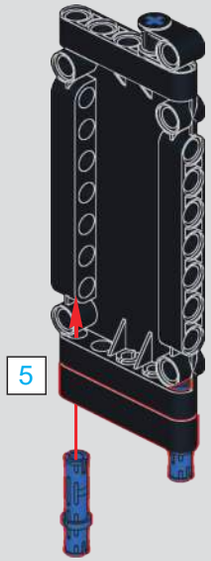

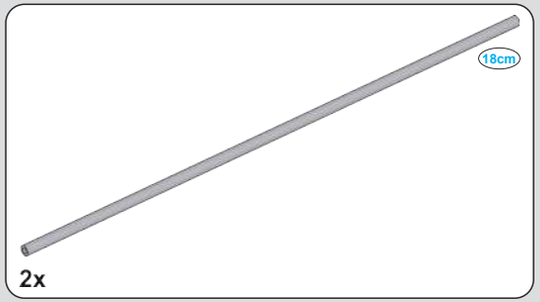

901

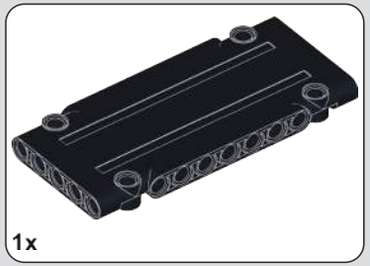

902

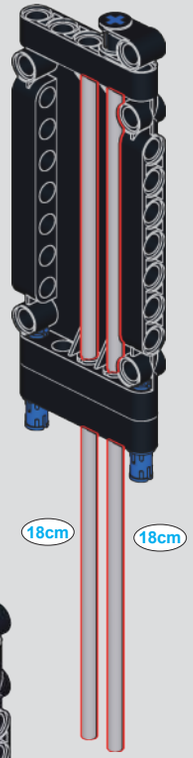

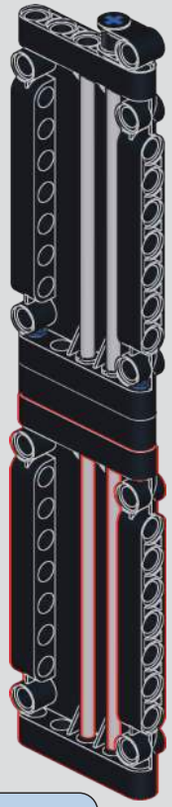

903

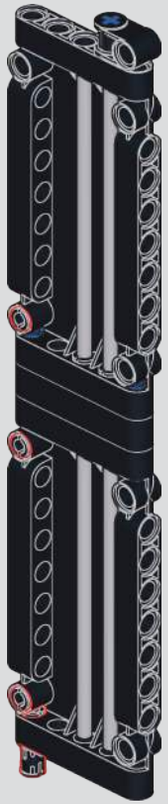

904

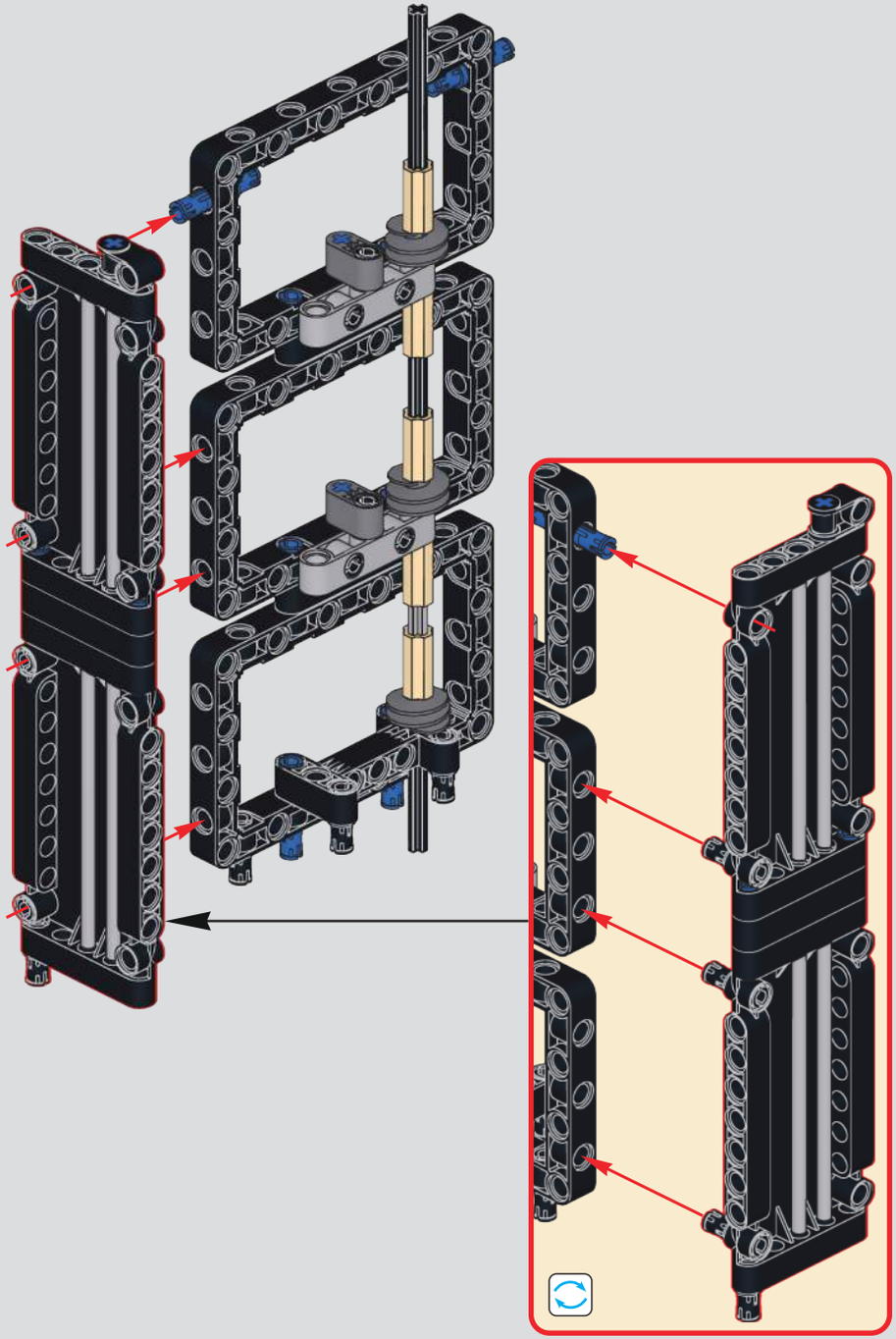

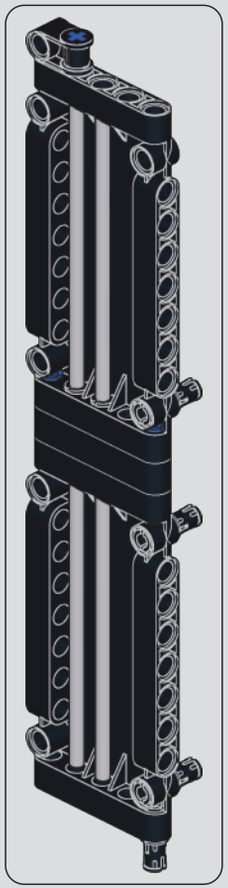

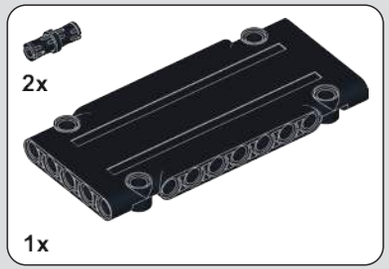

905

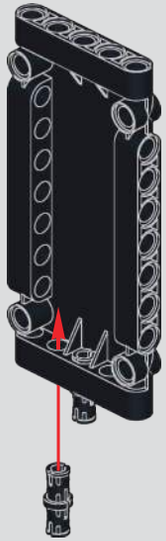

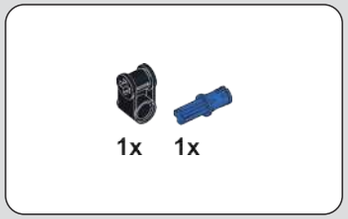

906

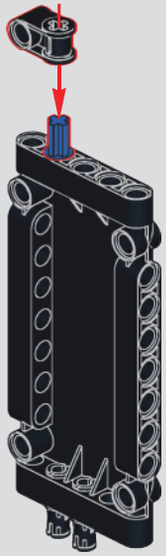

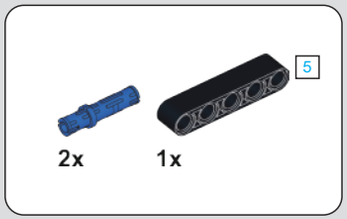

907

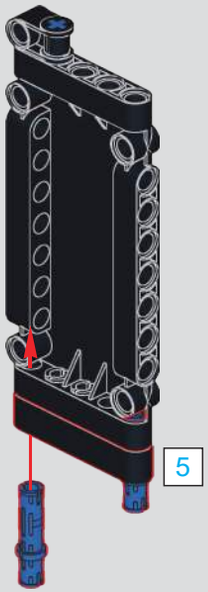

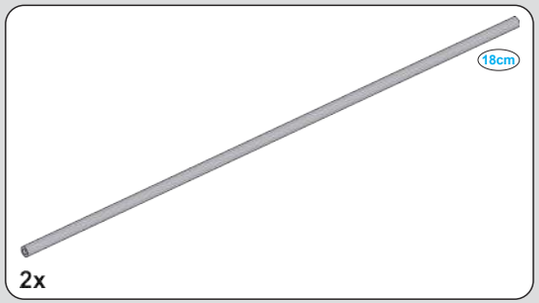

908

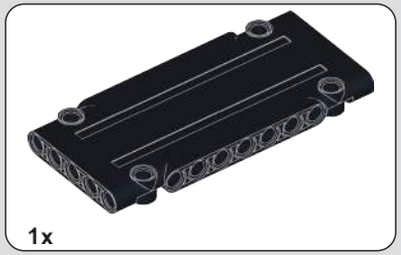

909

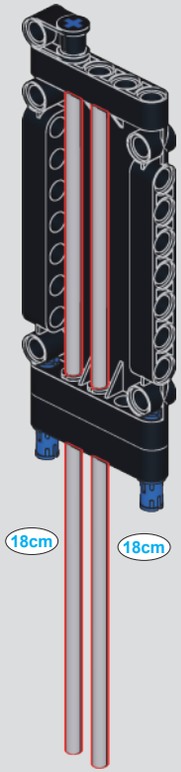

910

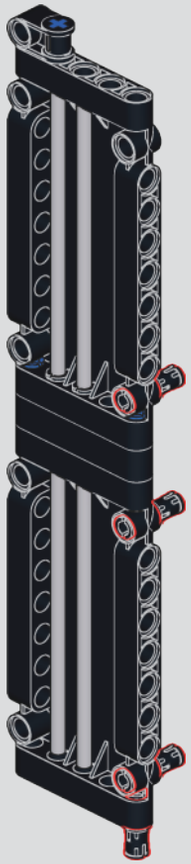

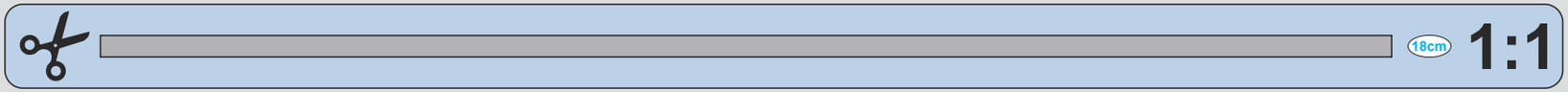

911

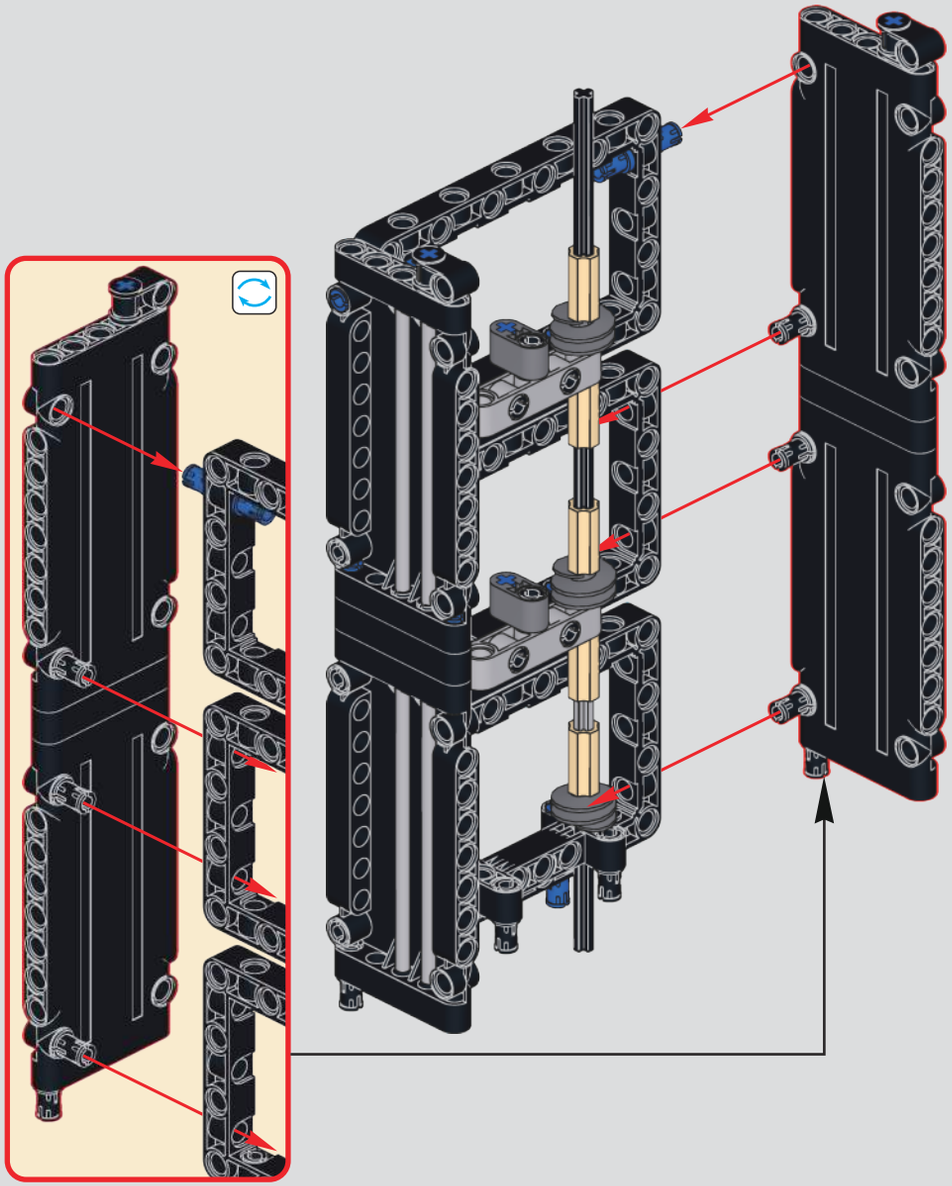

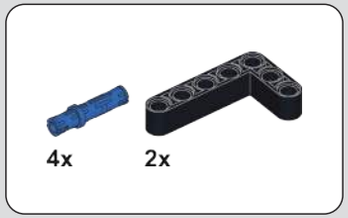

912

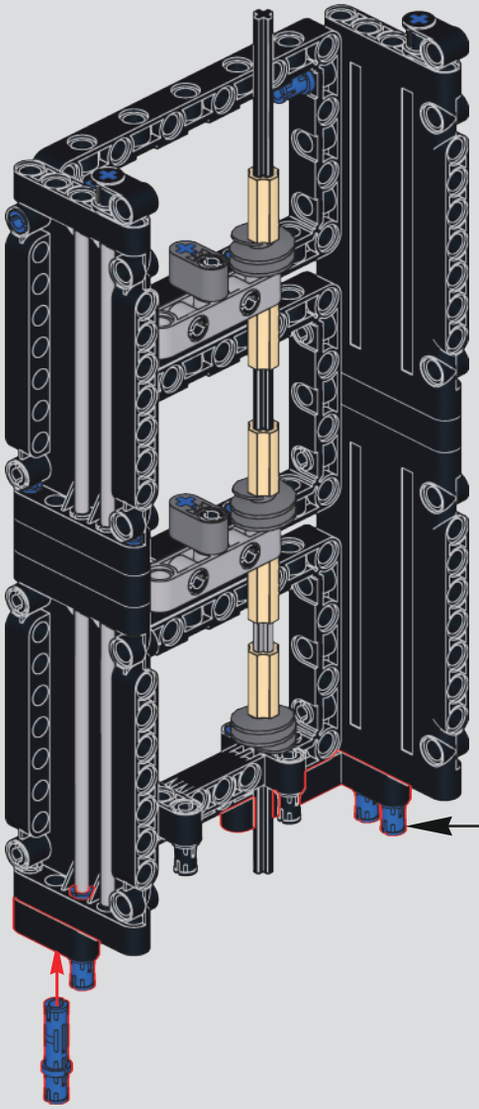

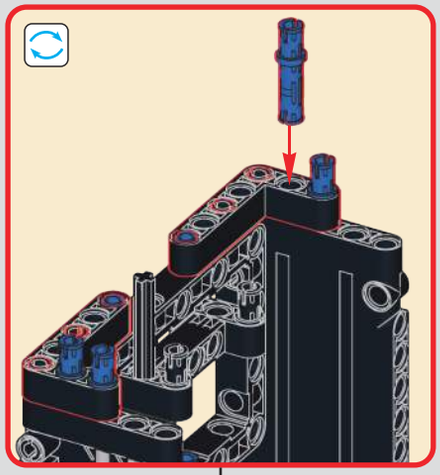

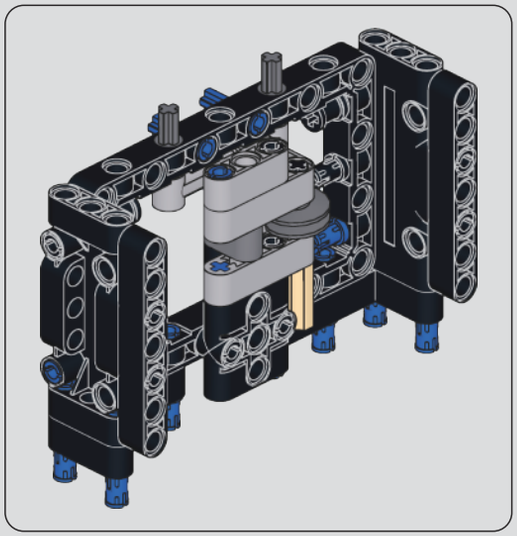

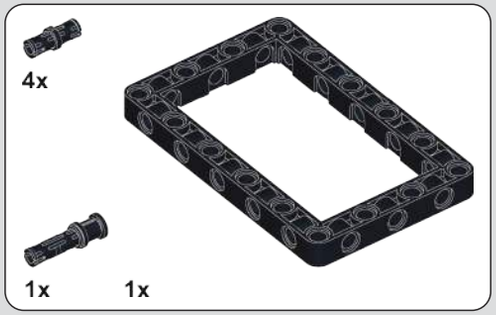

913

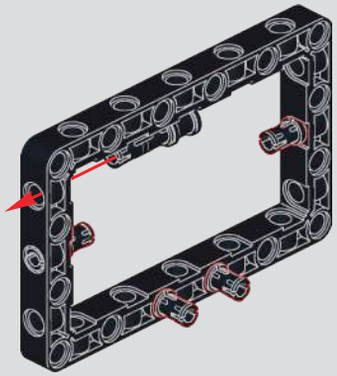

914

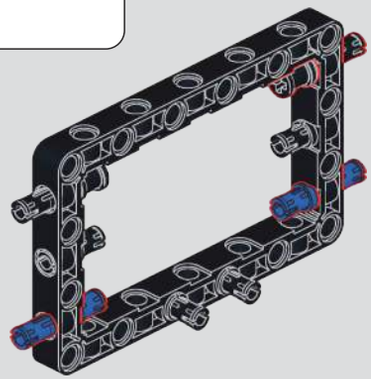

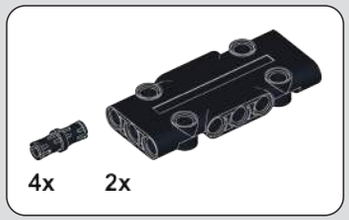

915

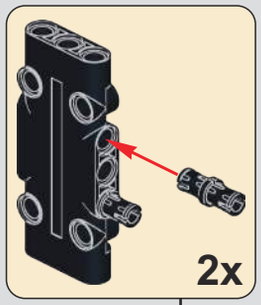

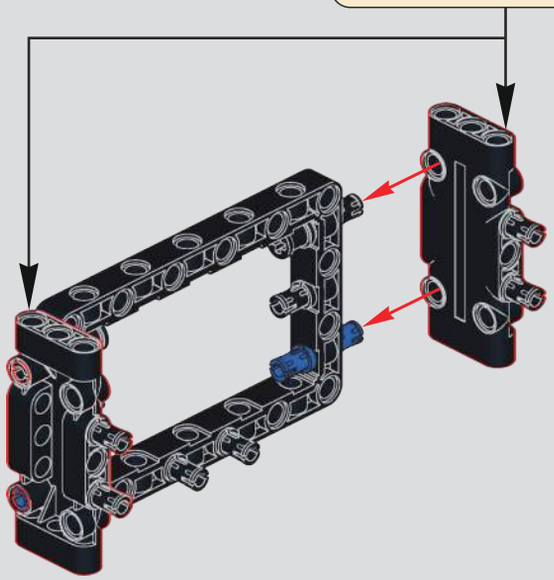

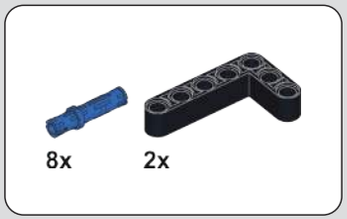

916

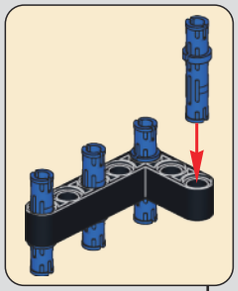

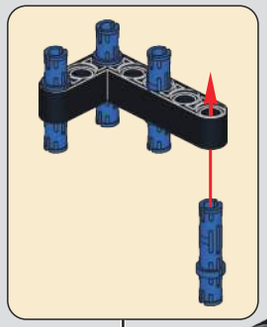

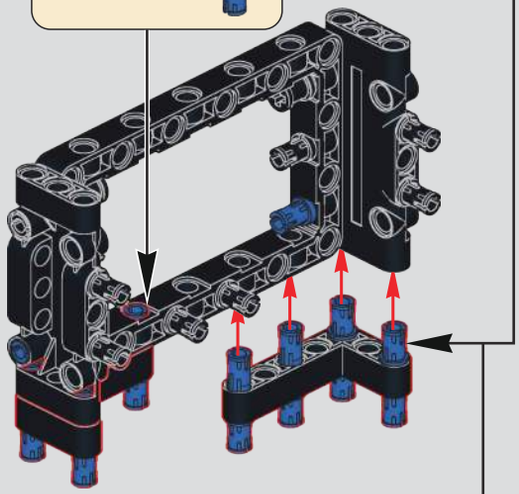

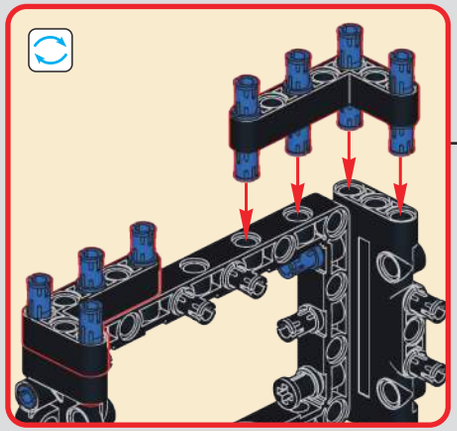

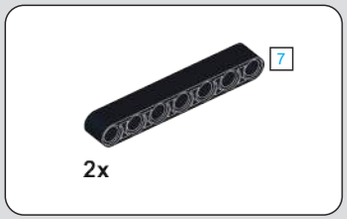

917

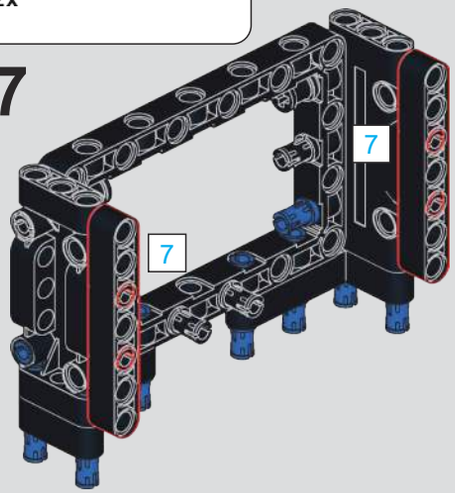

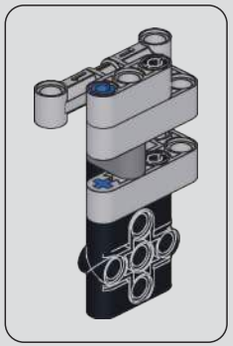

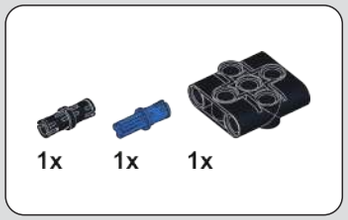

918

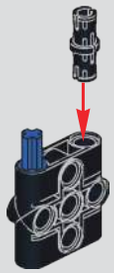

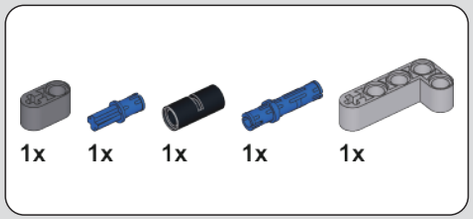

919

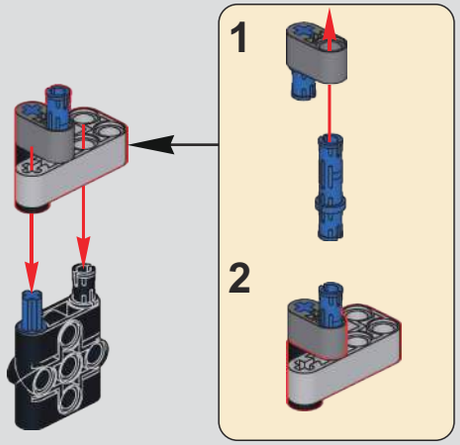

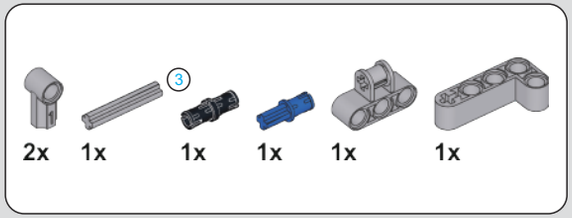

920

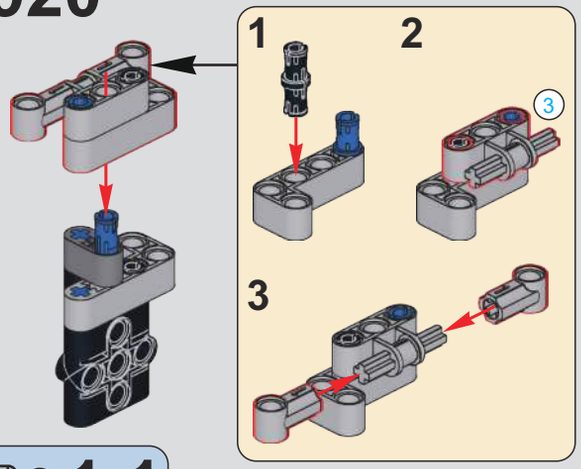

921

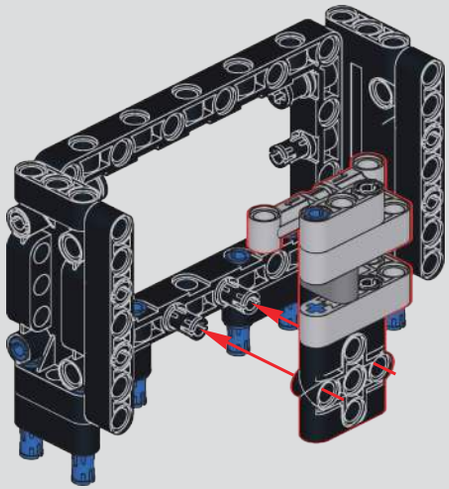

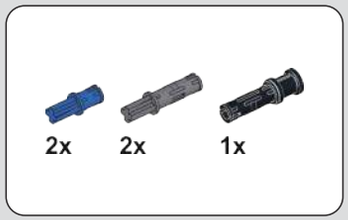

922

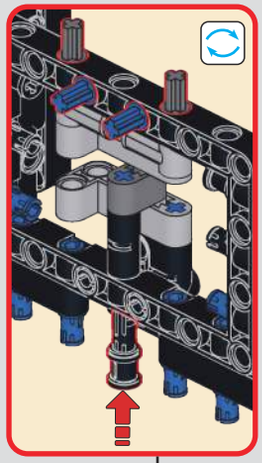

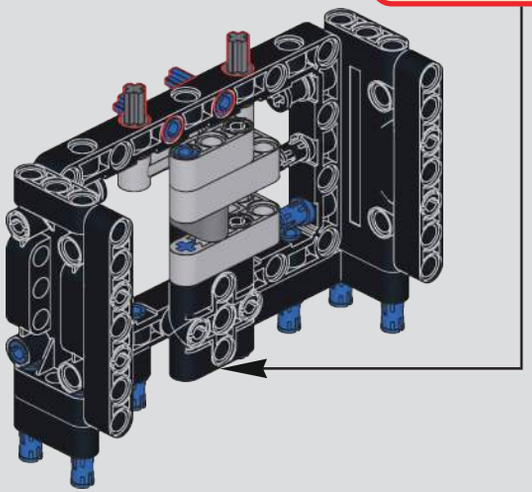

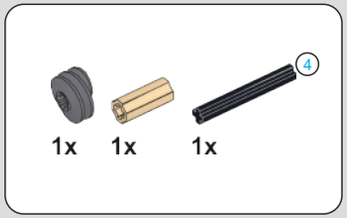

923

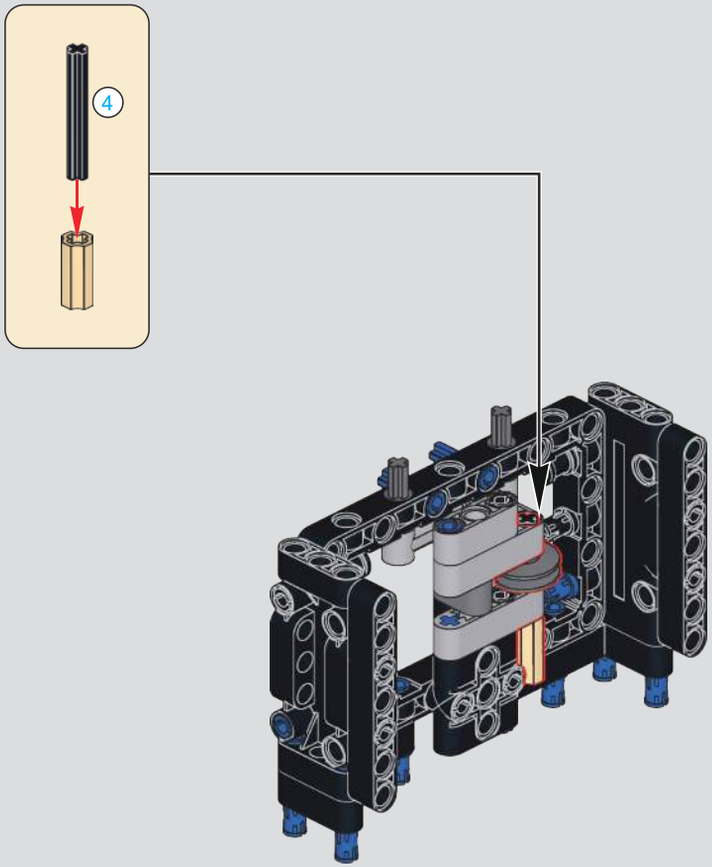

924

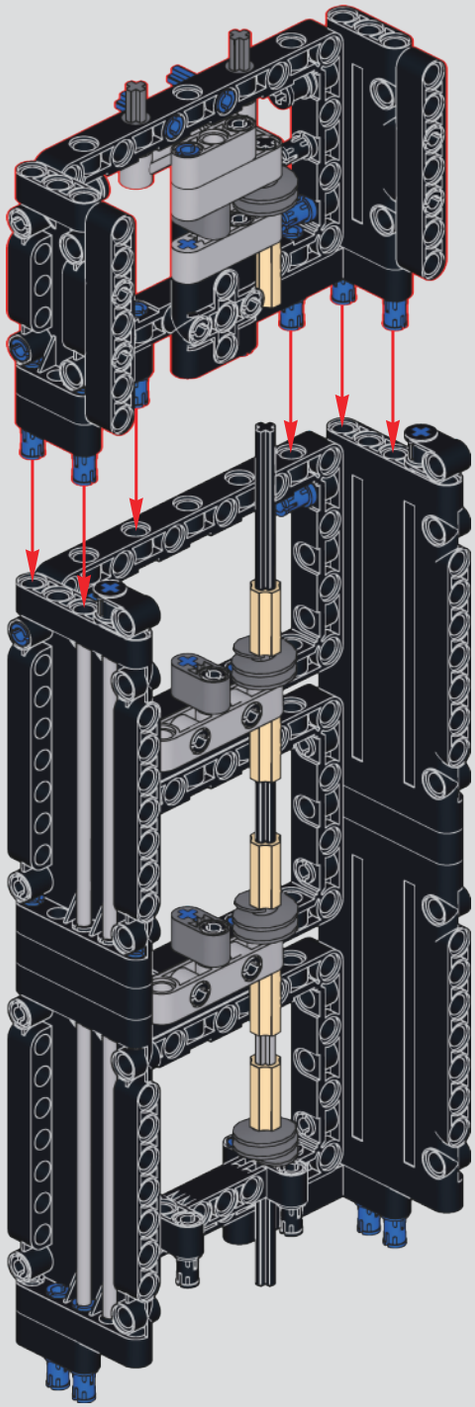

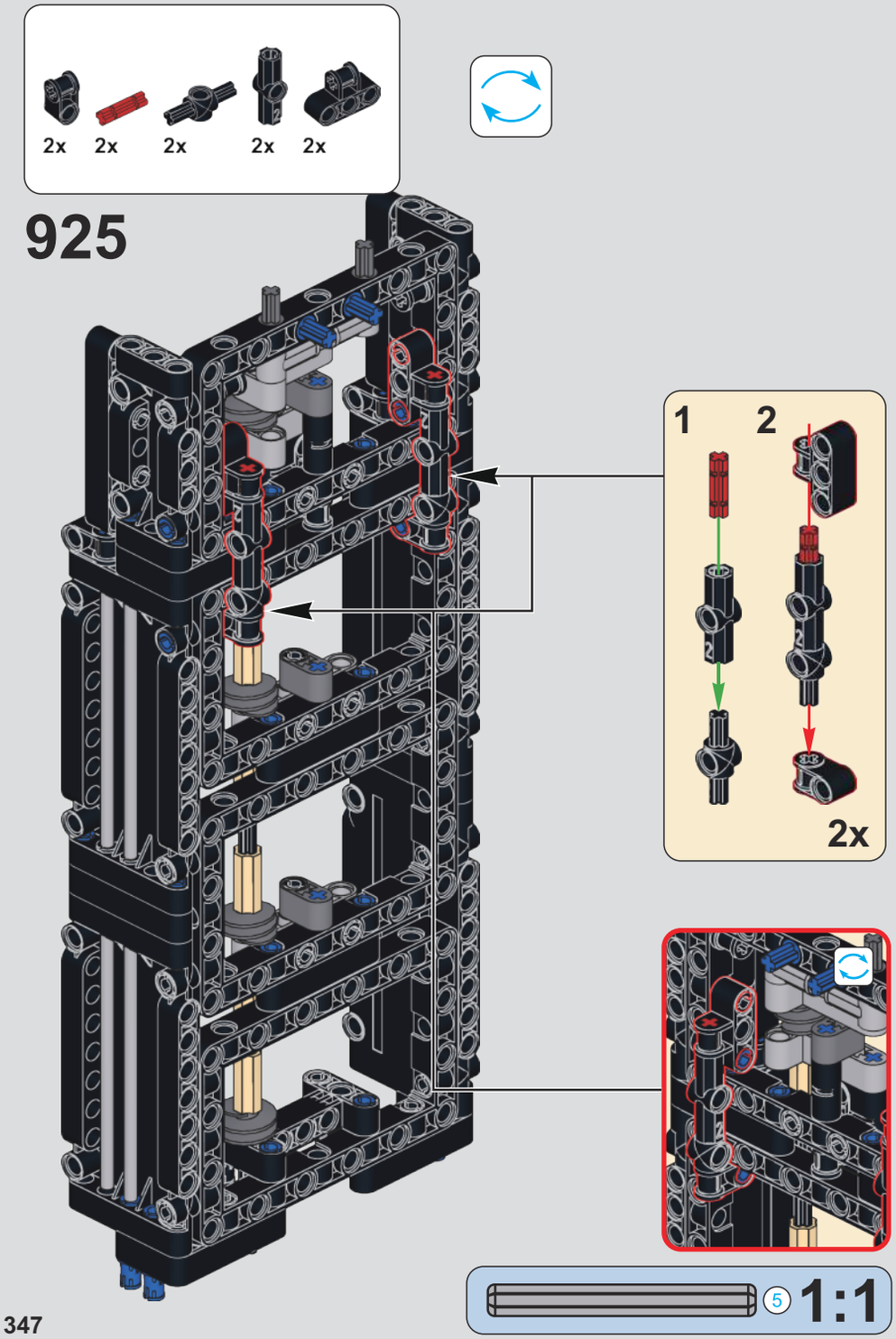
2x 2x 2x 2x 2x
925
1
2
2x
5
1:1

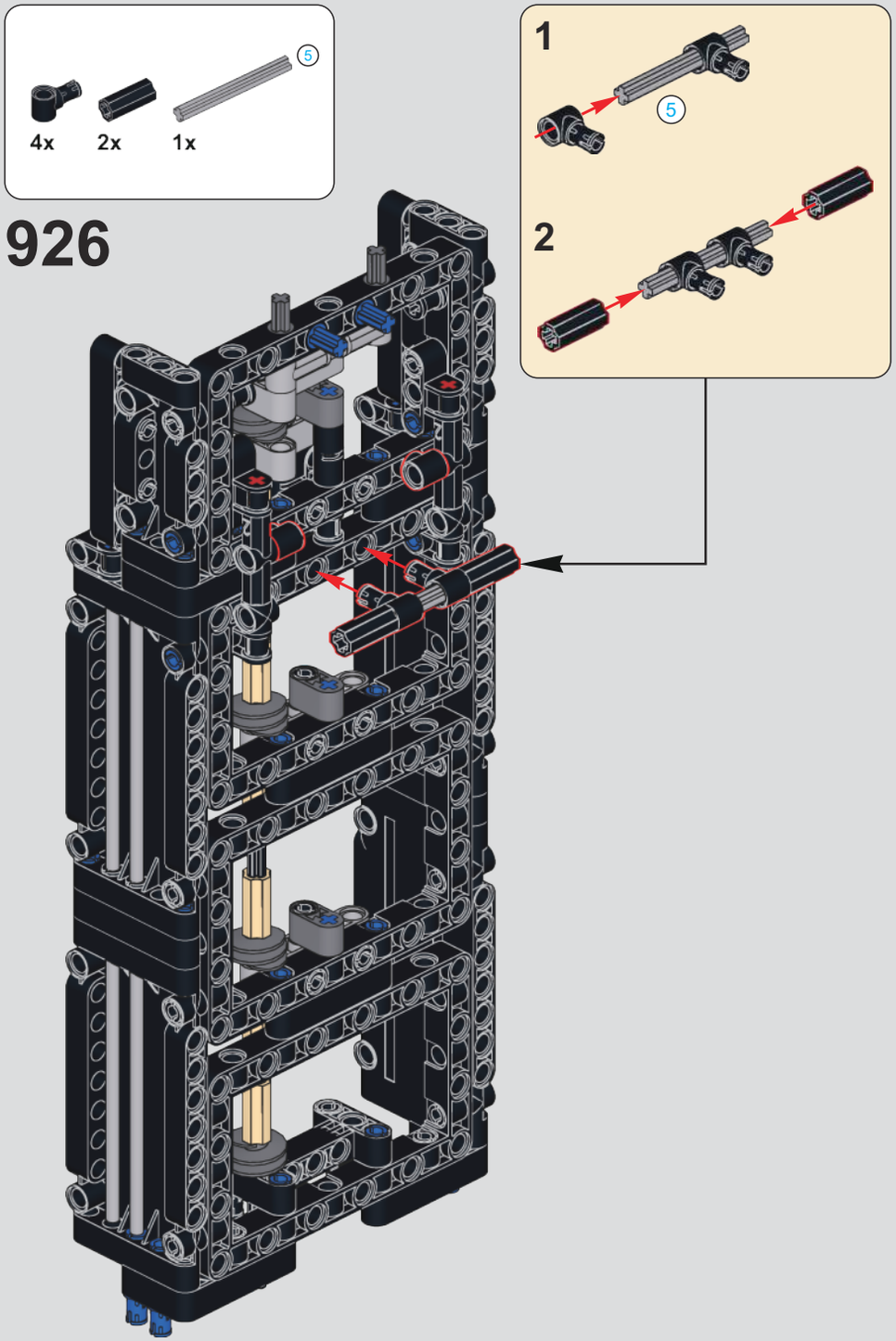
4x 2x 1x
5
926
1
5
2

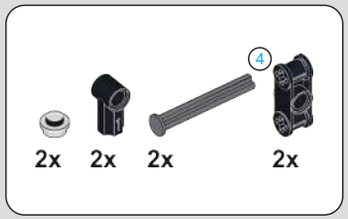

927

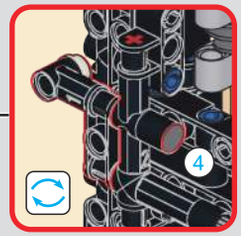

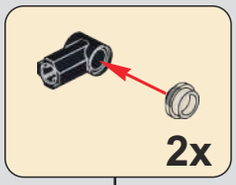

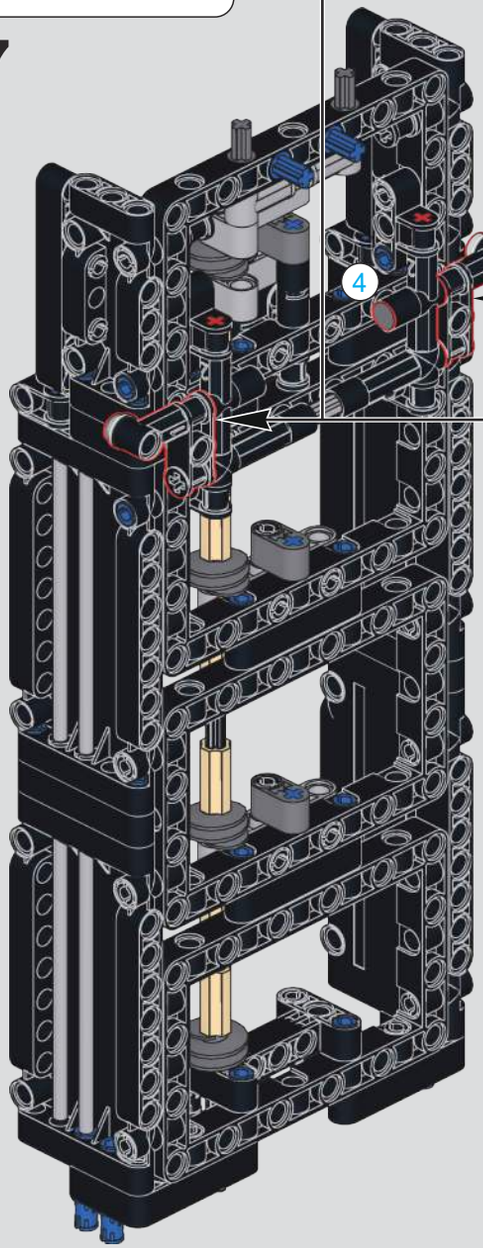

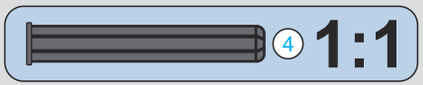

928

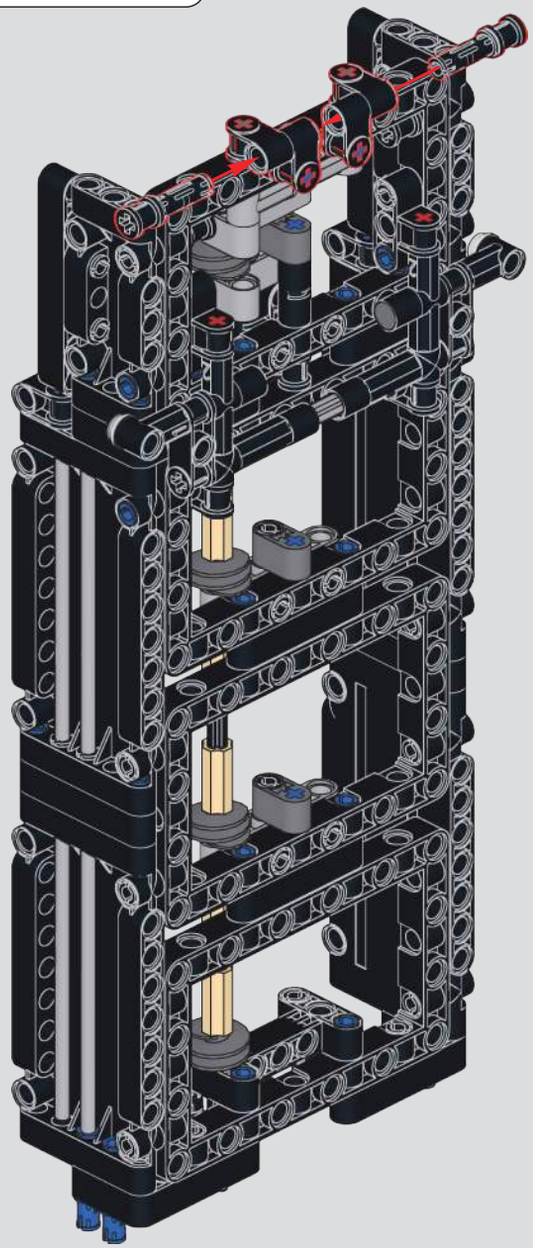

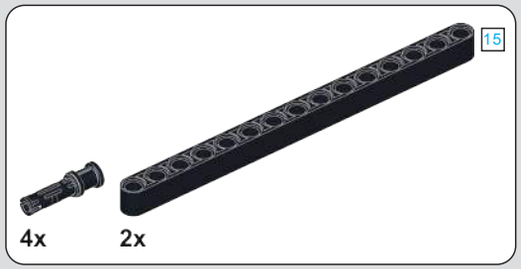

929

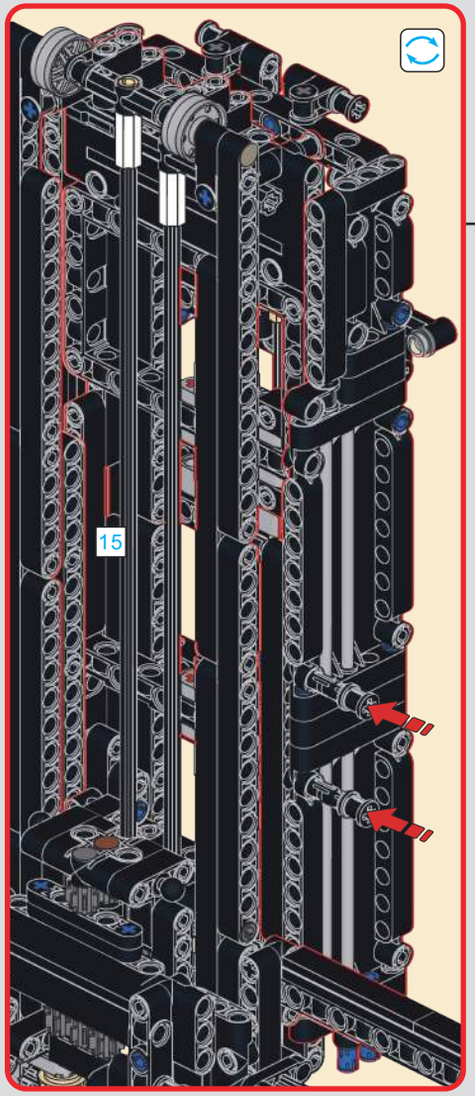

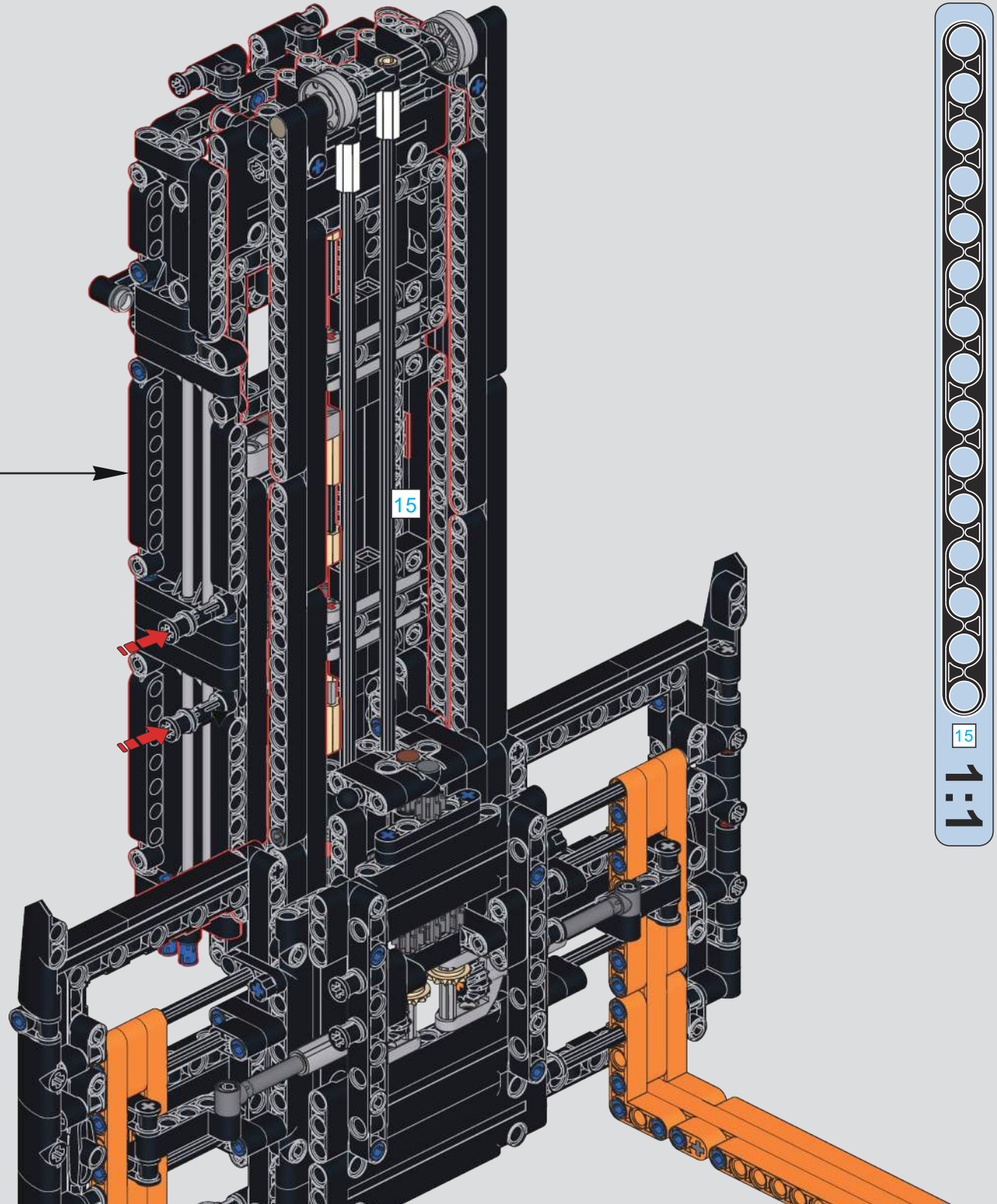

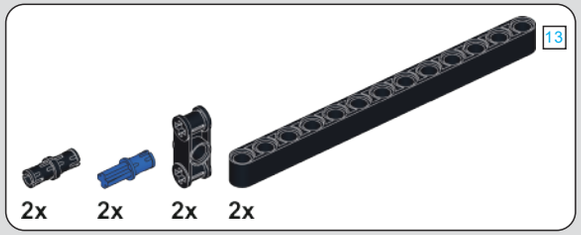

930

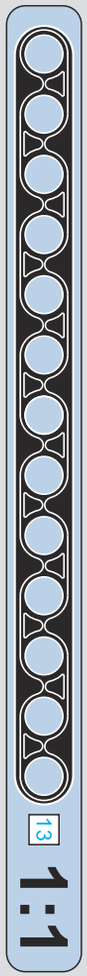

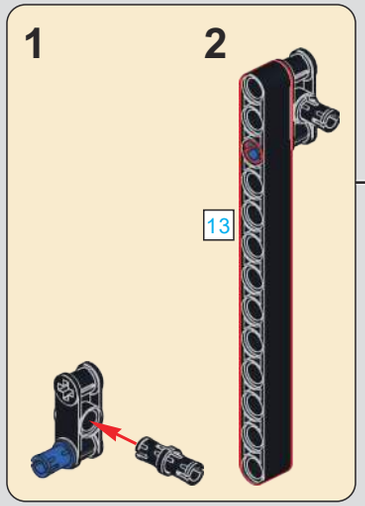

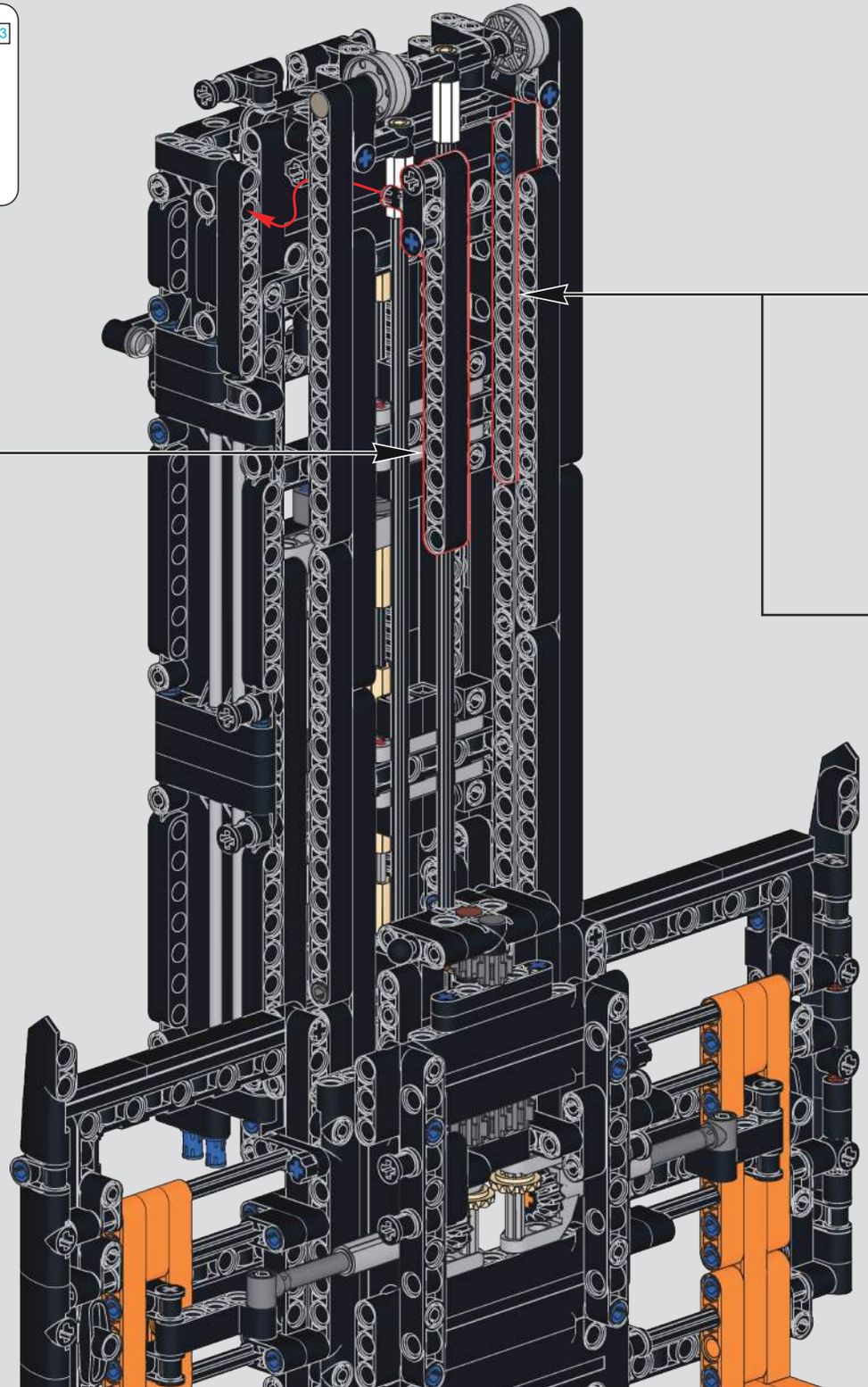

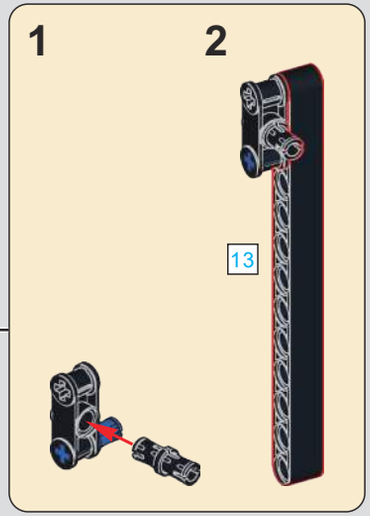

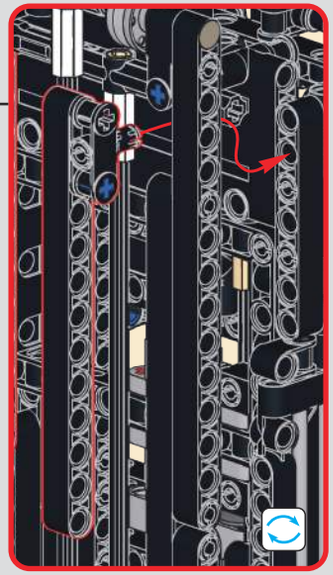

931

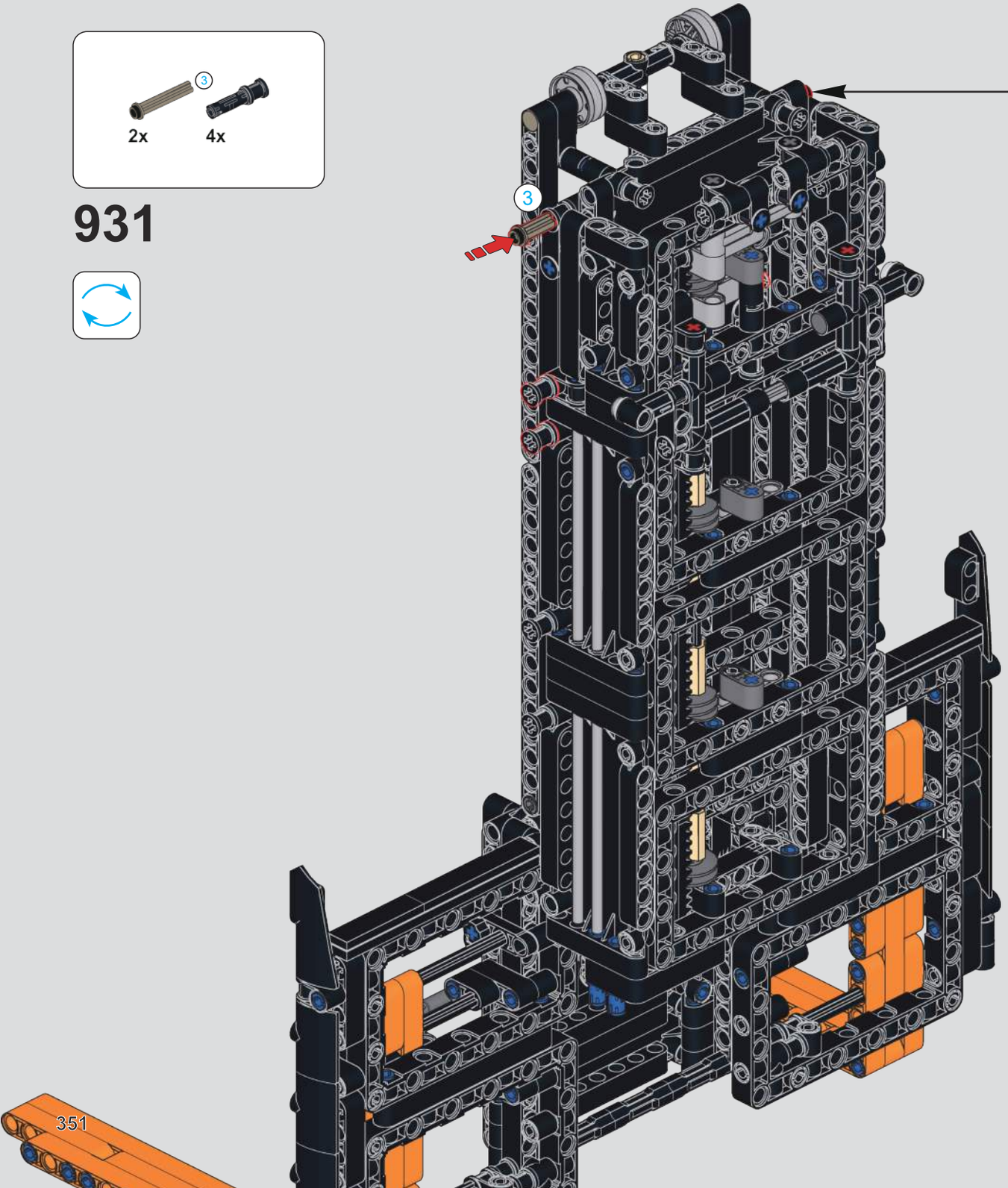

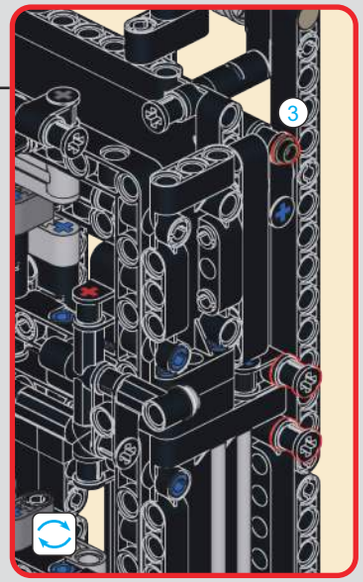

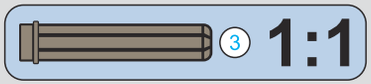

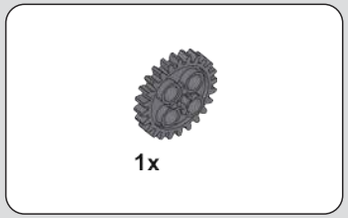

932

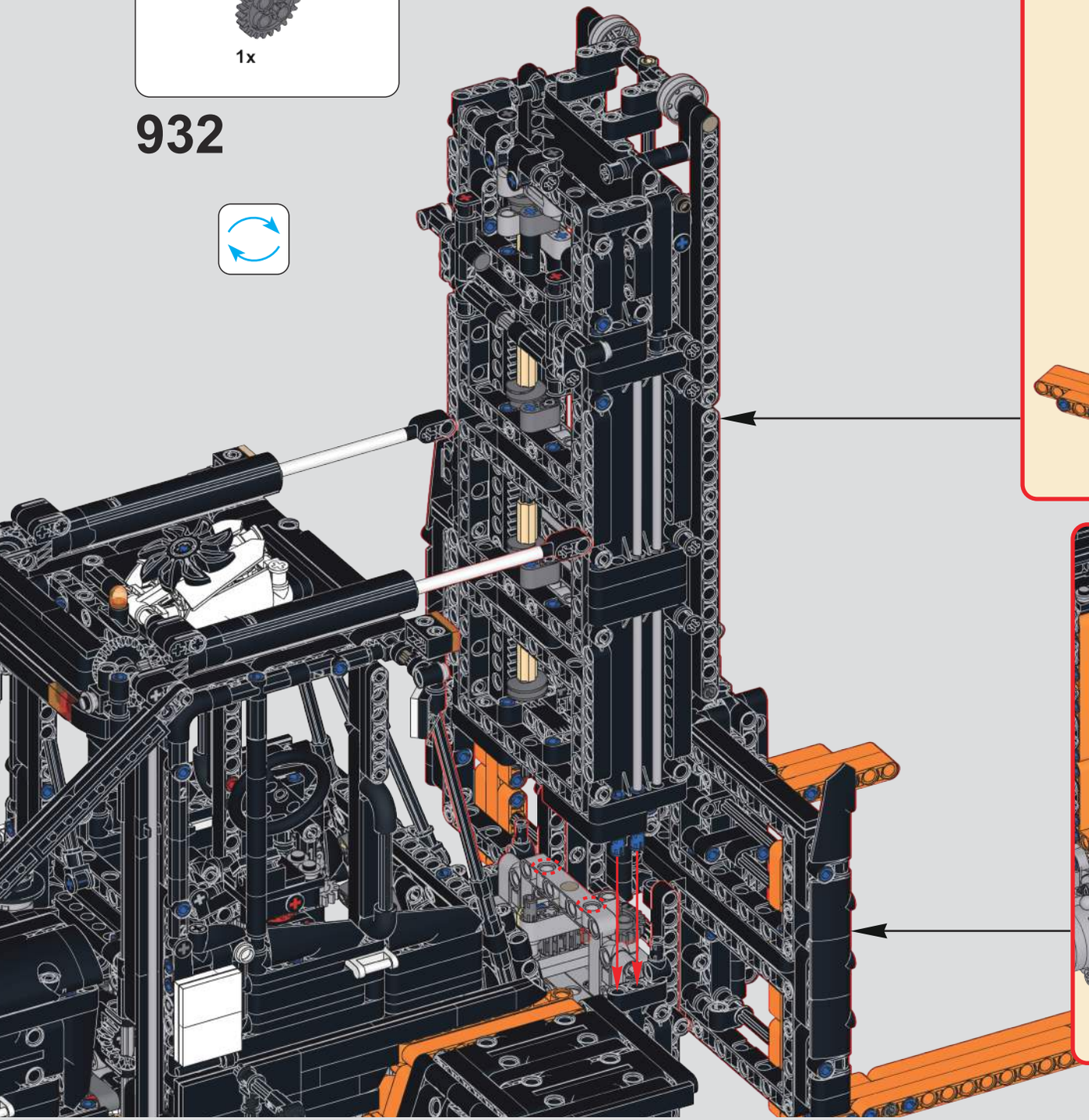

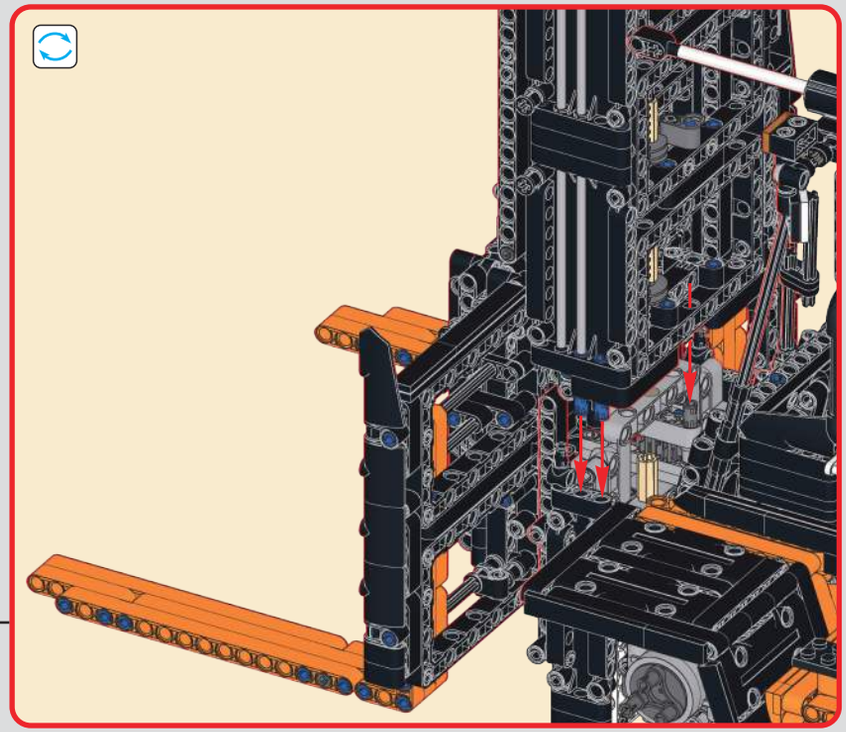

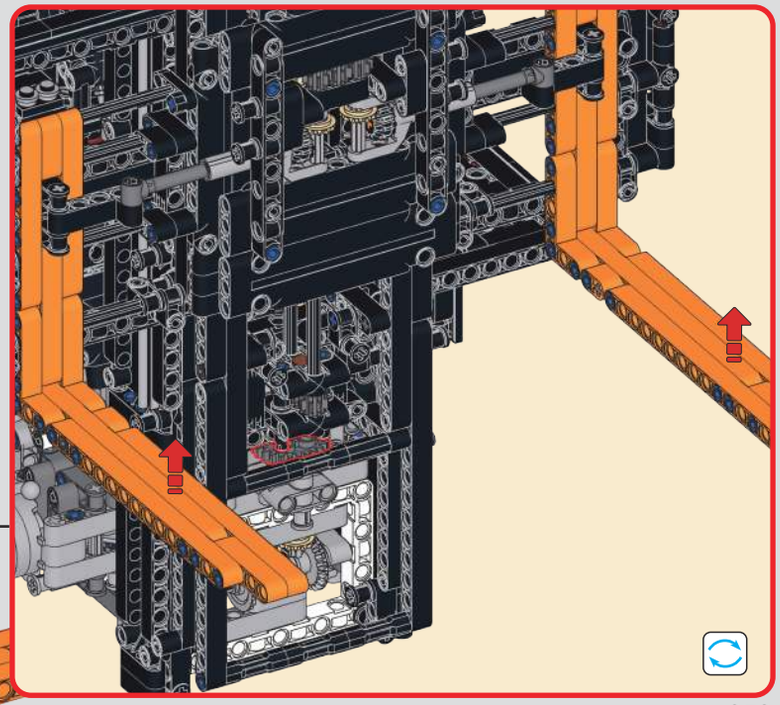

933

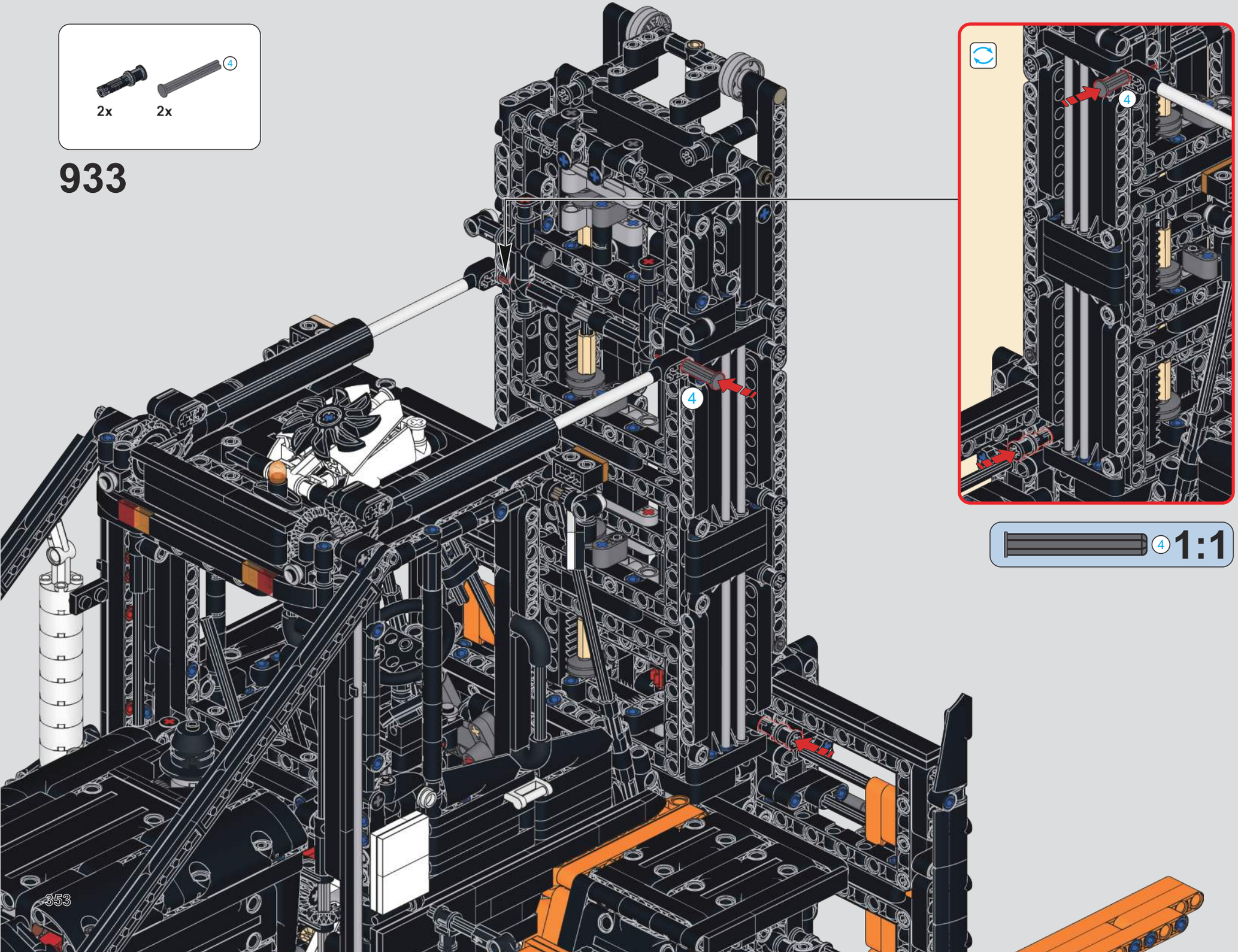

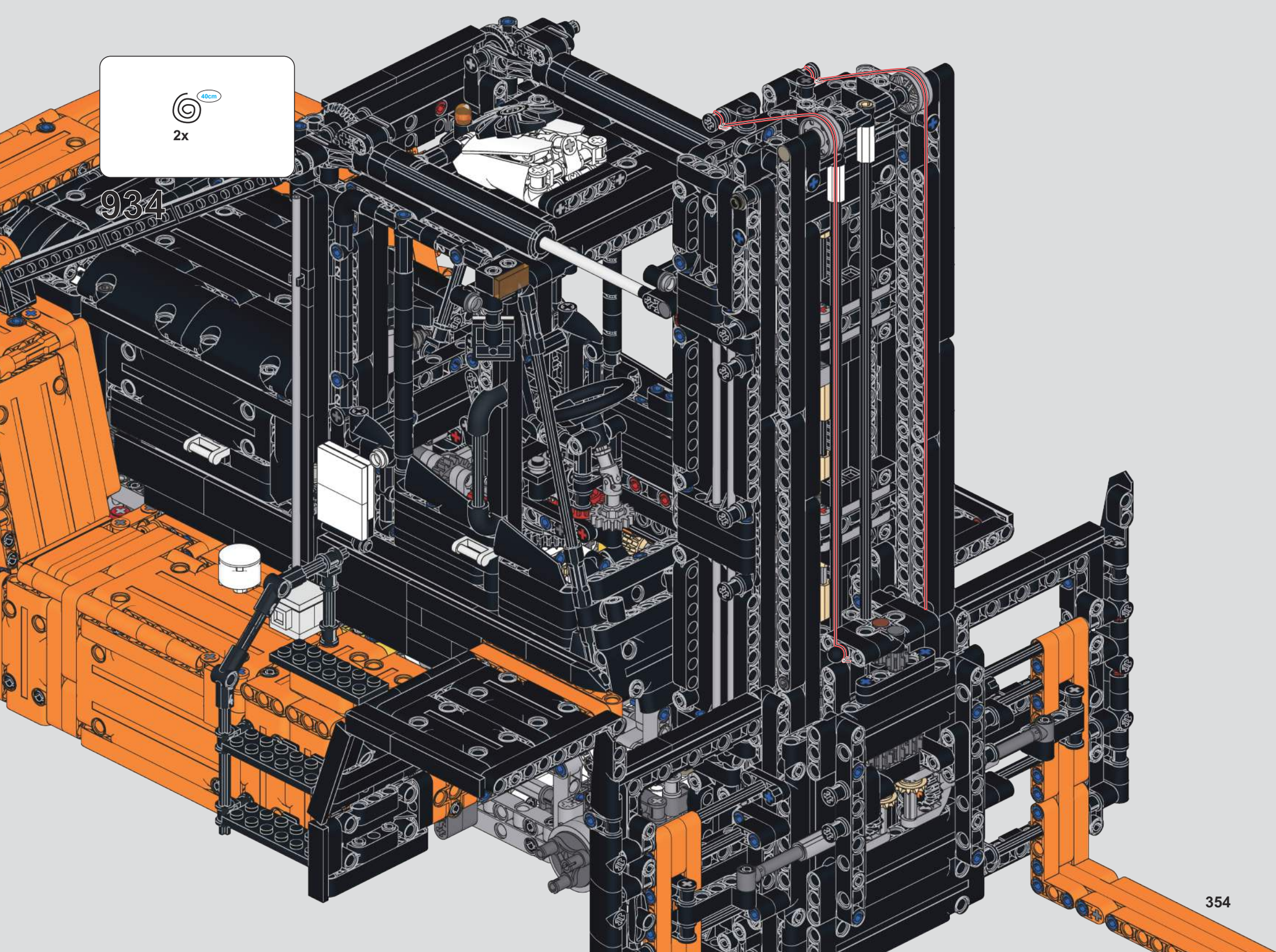
40cm
2x
934

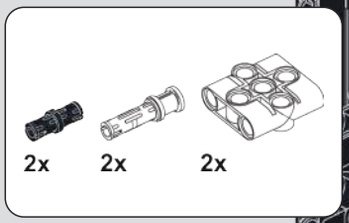

935

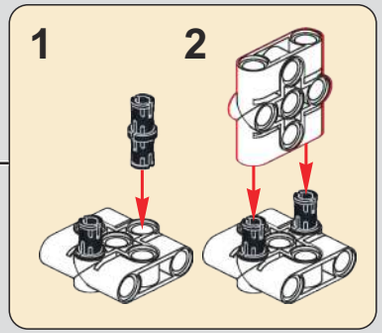

936

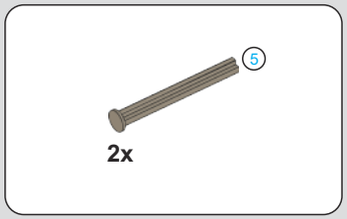

937

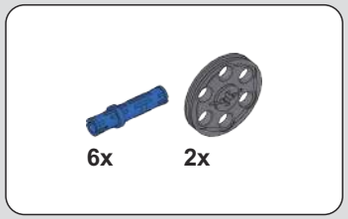

938

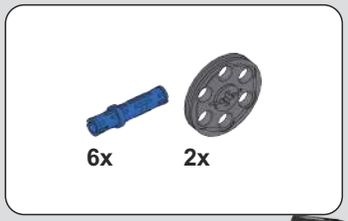

939

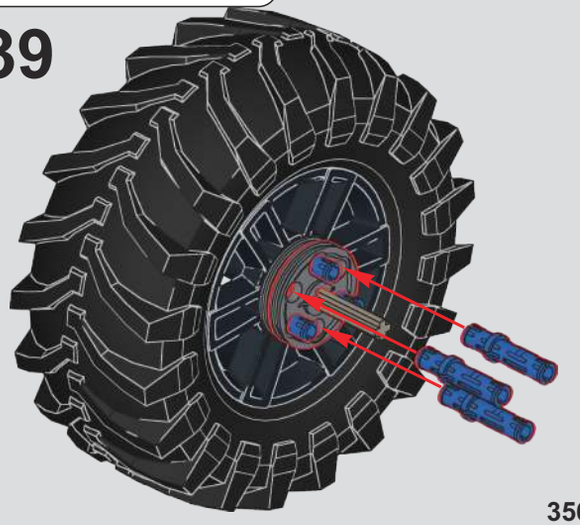

940

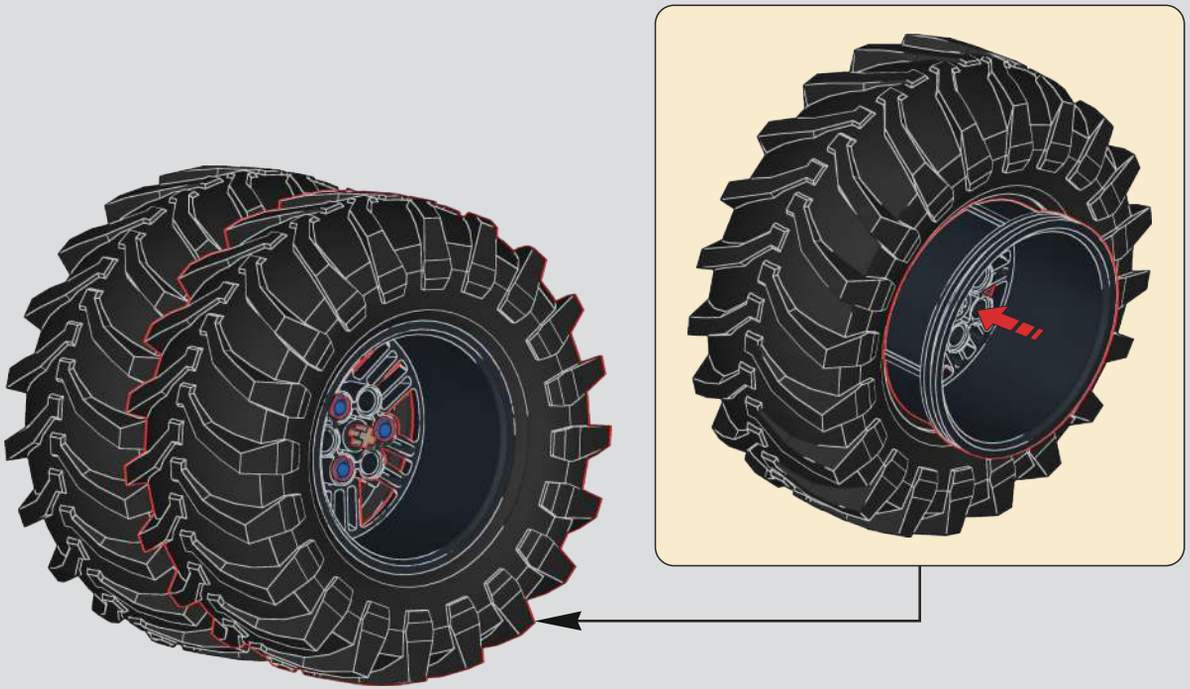

941

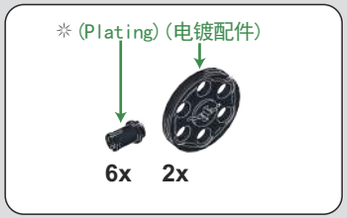

942

2x

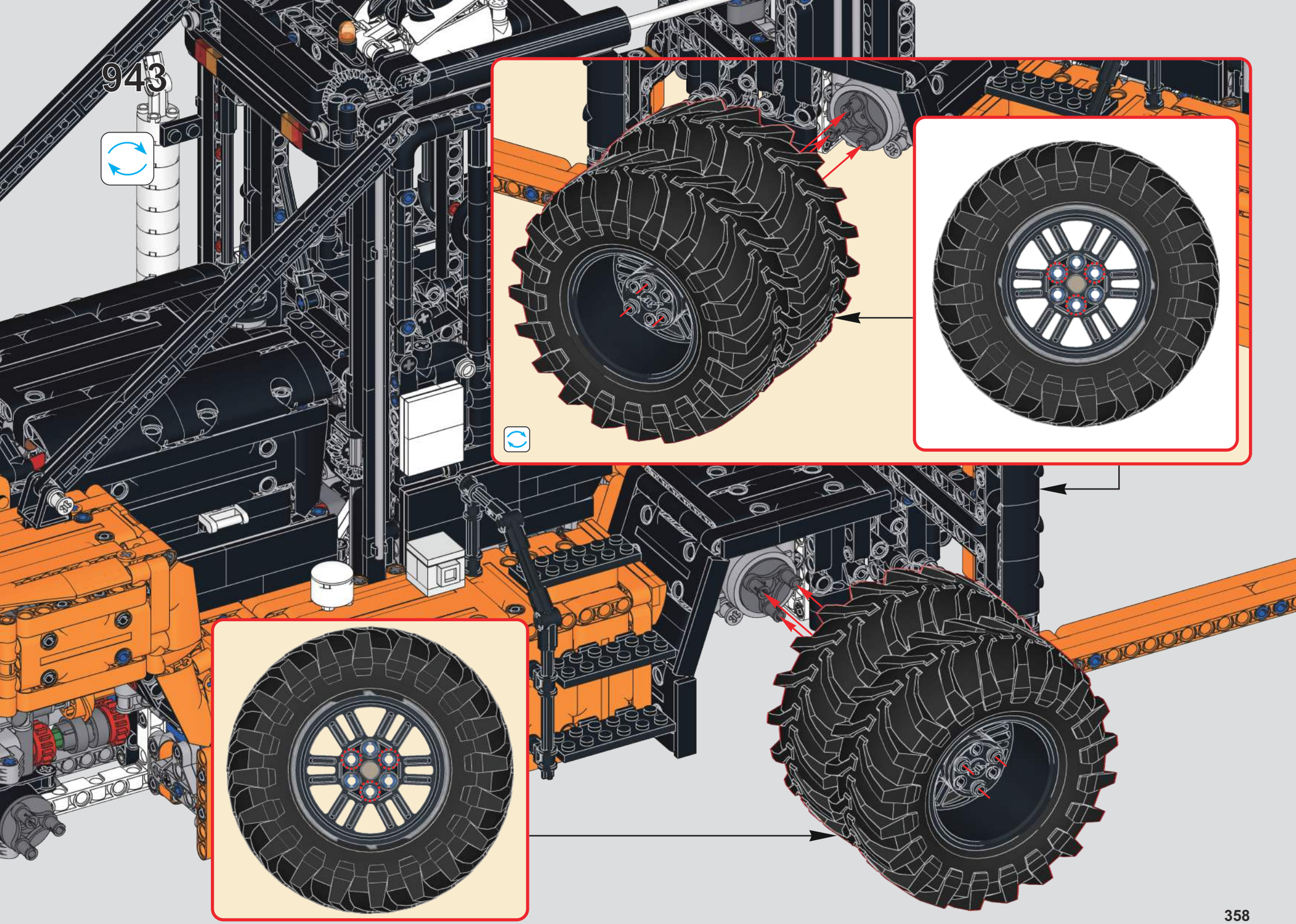
943

2x

※ (Plating) (电镀配件)
2x
2x

944

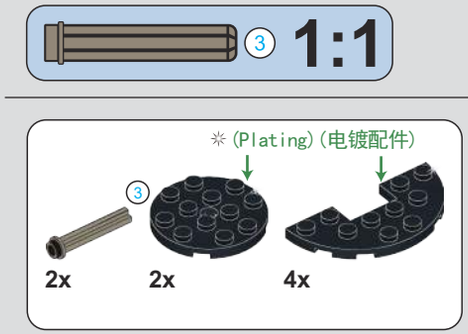
3
1:1

※ (Plating) (电镀配件)
3
2x
2x
4x

945

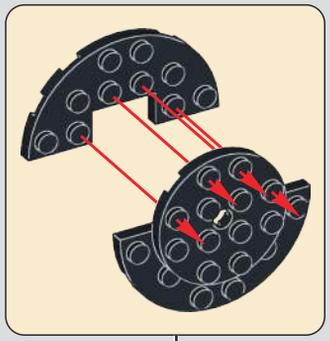

※ (Plating) (电镀配件)
2x

946

3

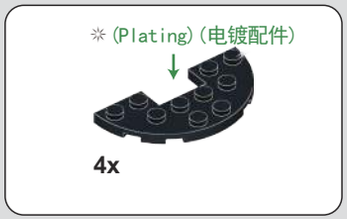

947

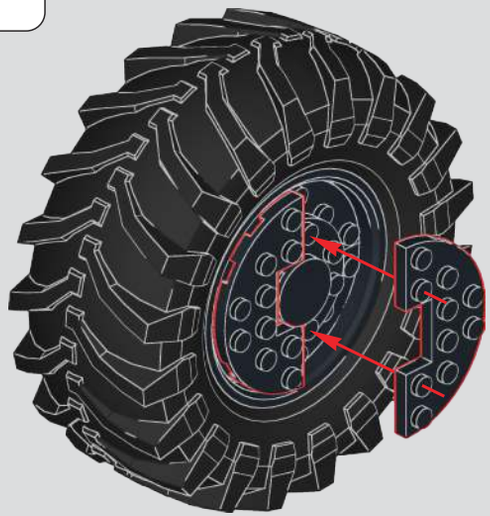

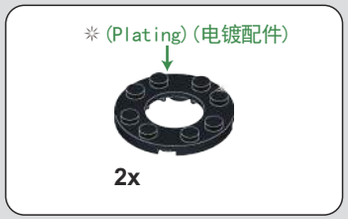

948

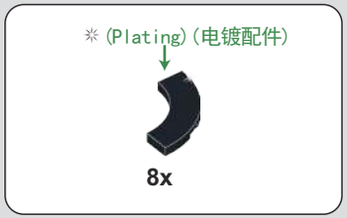

949

2x

950

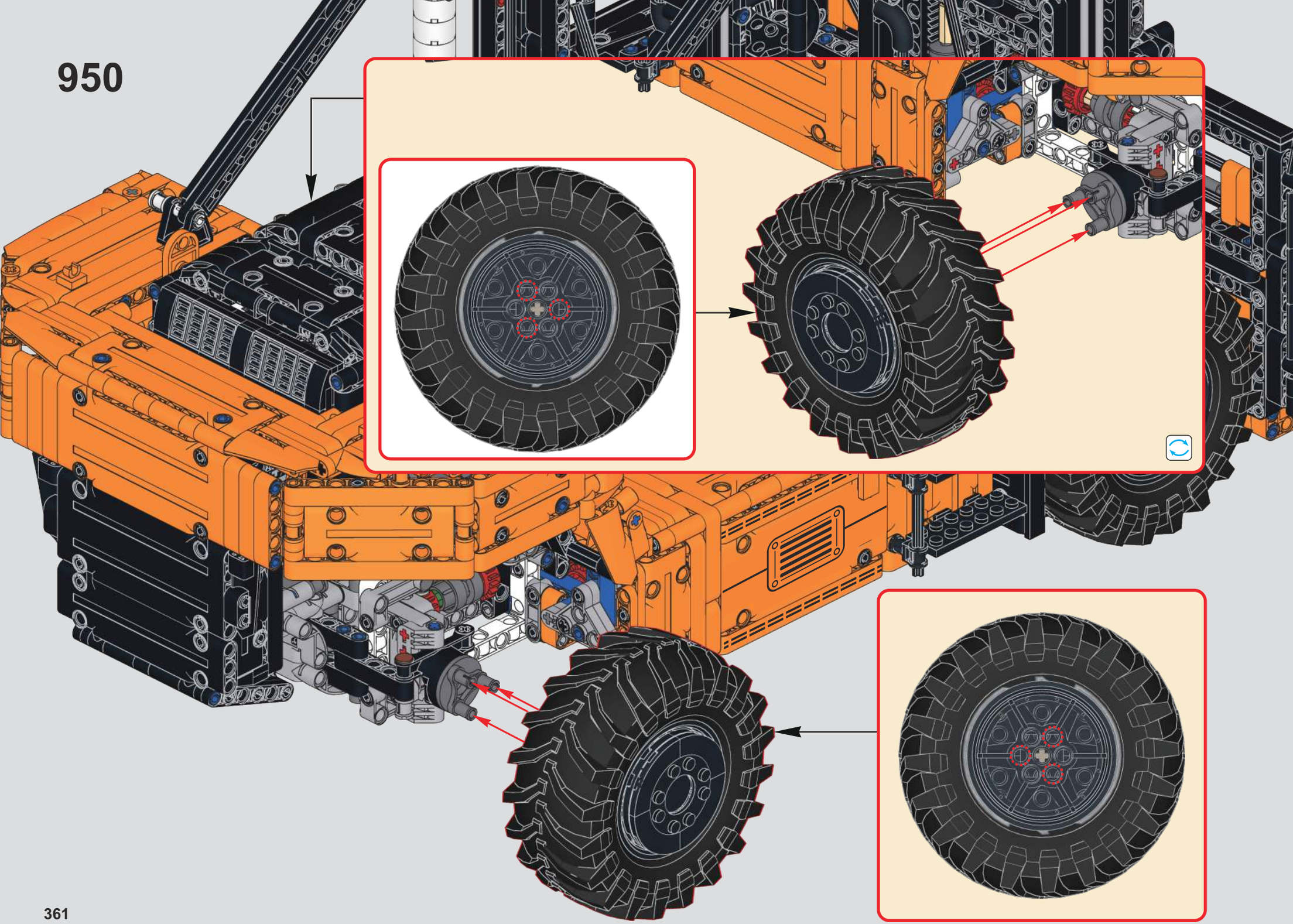

951

打开模块电源和手机蓝牙

Turn on the module power and the phone Bluetooth

请扫描此二维码，获取并仔细查看H6.0模块的操作说明书。

Please scan this QR code to obtain and carefully review the operation manual for the H6.0 module.

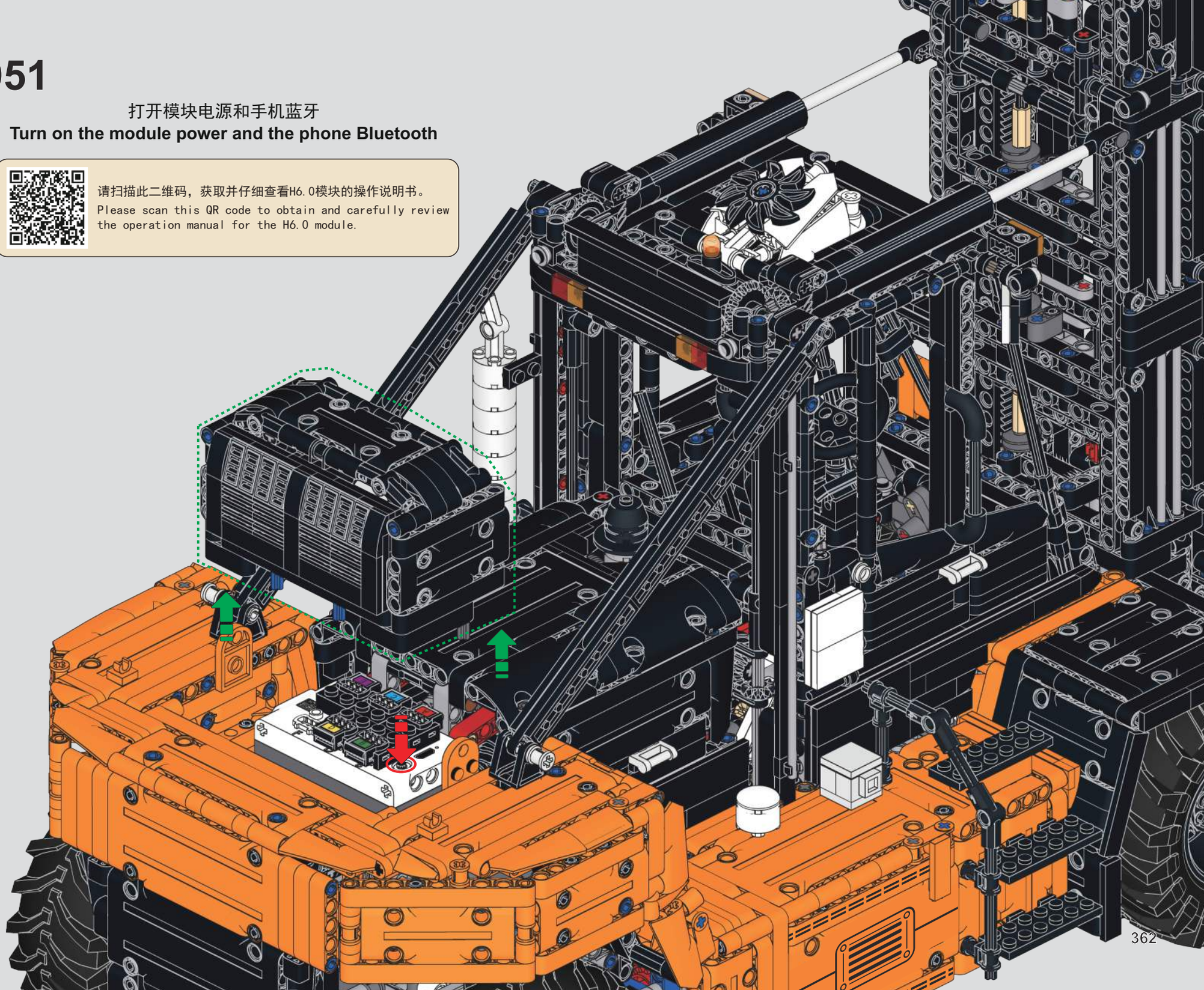

952

扫描二维码，下载APP

Scan QR code and download application

953

进入APP，点击手动选择设备

Enter the APP and click to select the device manually

954

选择重型堆高机

Select Heavy Duty Forkift

955

根据APP指示打开此模块电源，链接蓝牙

Turn on the module's power according to the APP instructions and connect via Bluetooth.

956

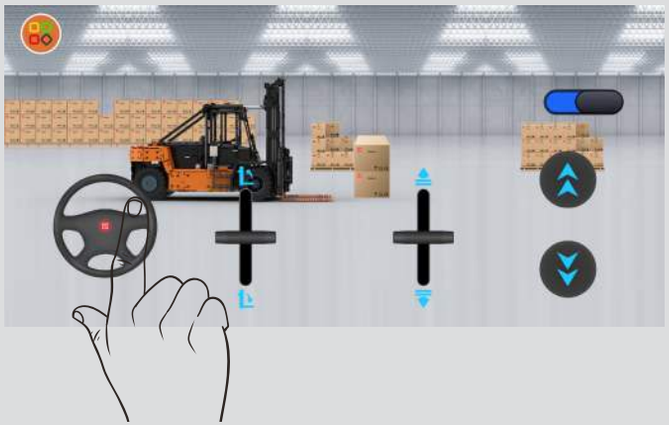

在该操作界面，滑动此方向盘，控制车辆后轮左右转向

On this operating interface, slide this steering wheel to control the left and right steering of the vehicle's rear wheels.

957

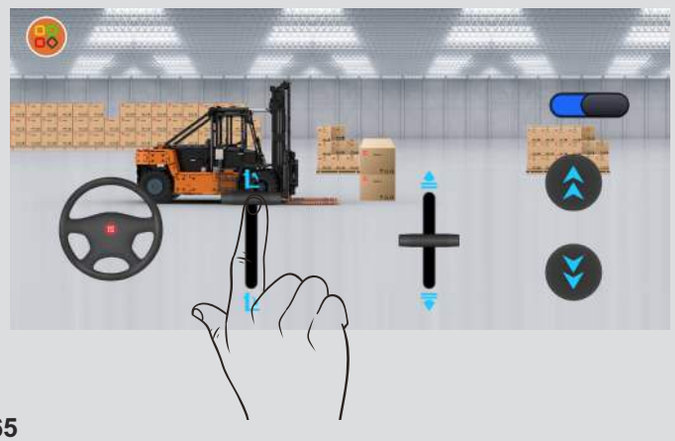

在该操作界面，↑↓移动此摇杆，控制桅杆总成前后倾斜

On this operating interface, move this joystick up and down to control the forward and backward tilting of the mast assembly.

958

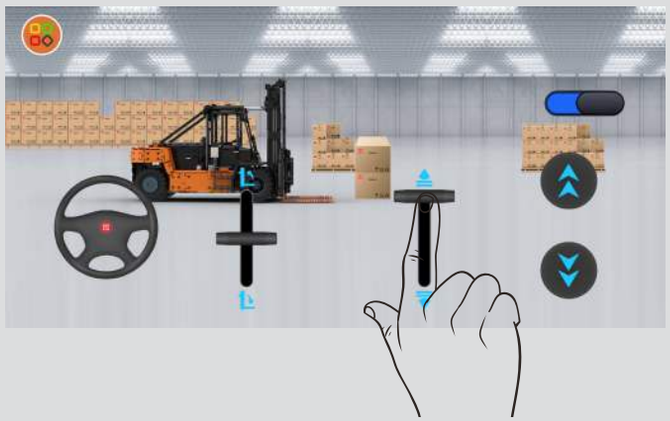

在该操作界面，↑↓移动此摇杆，控制叉齿升降

On this operating interface, move this joystick up and down to control the lifting of the fork teeth.

959

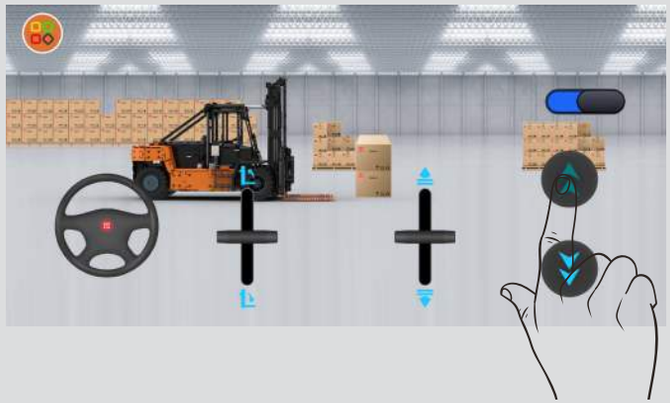

在该操作界面，按动上下这两个键，控制车辆前进后退

On this operating interface, press these two up and down buttons to control the vehicle's forward and backward movement.

960

点击更换场景

Click to change the scene

按此处切换操作界面，↑↓移动此摇杆，调节叉齿宽度

Press here to switch the operating interface, move this joystick up and down to adjust the width of the fork teeth.

961

在该操作界面，←→移动此摇杆，控制雨刷器左右摆动

On this operating interface, move this joystick left and right to control the left and right swinging of the windshield wiper.

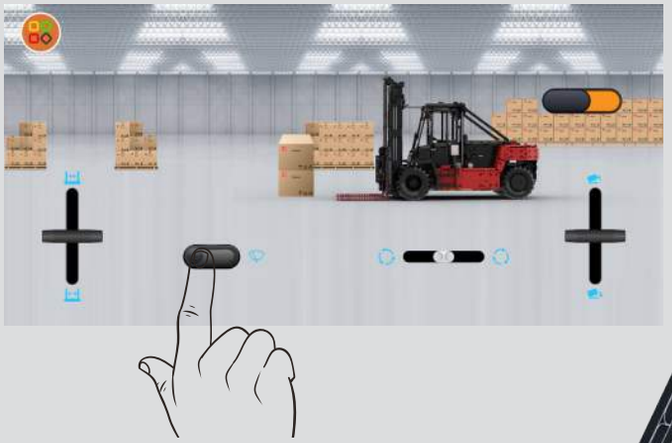

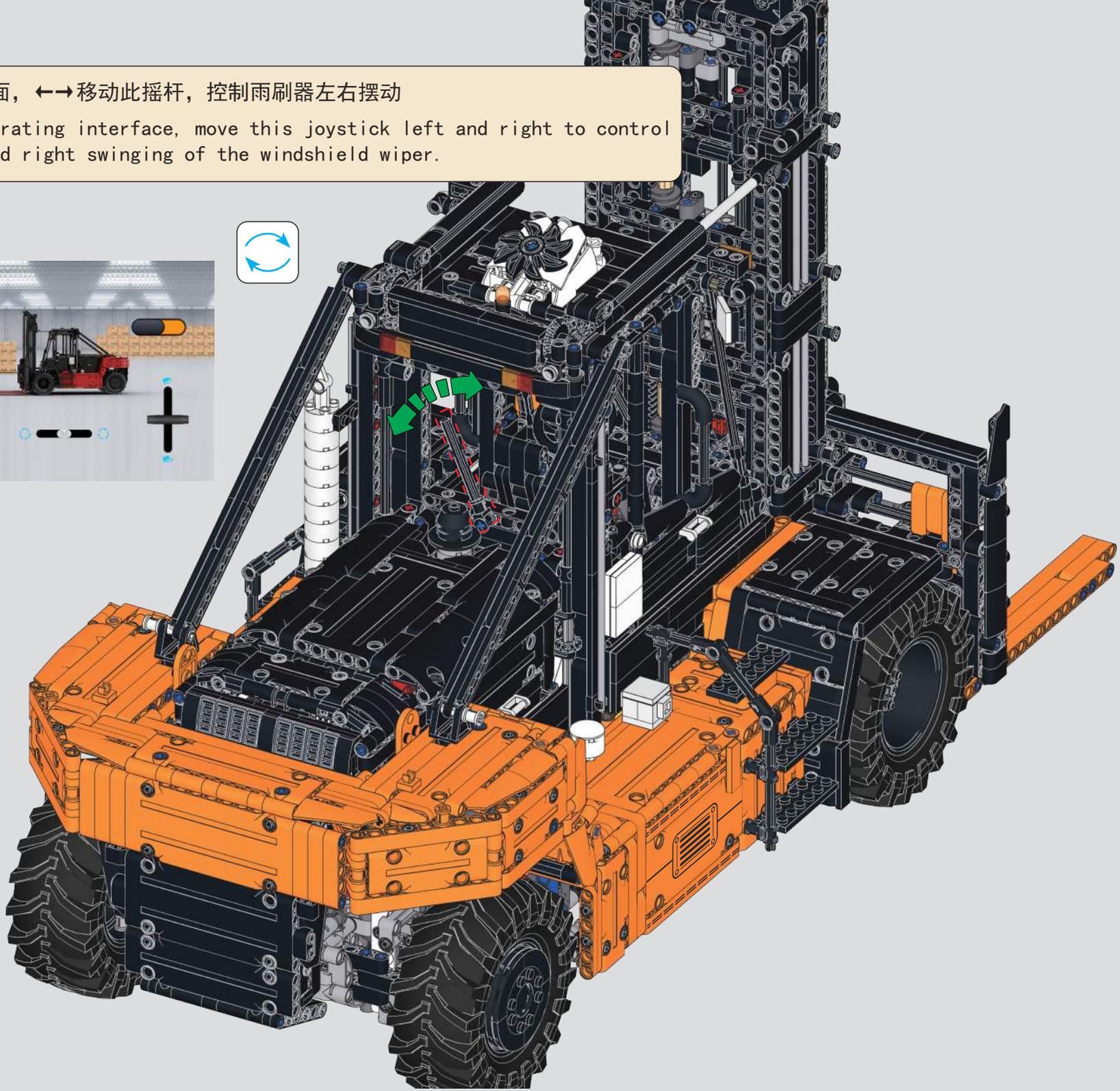

962

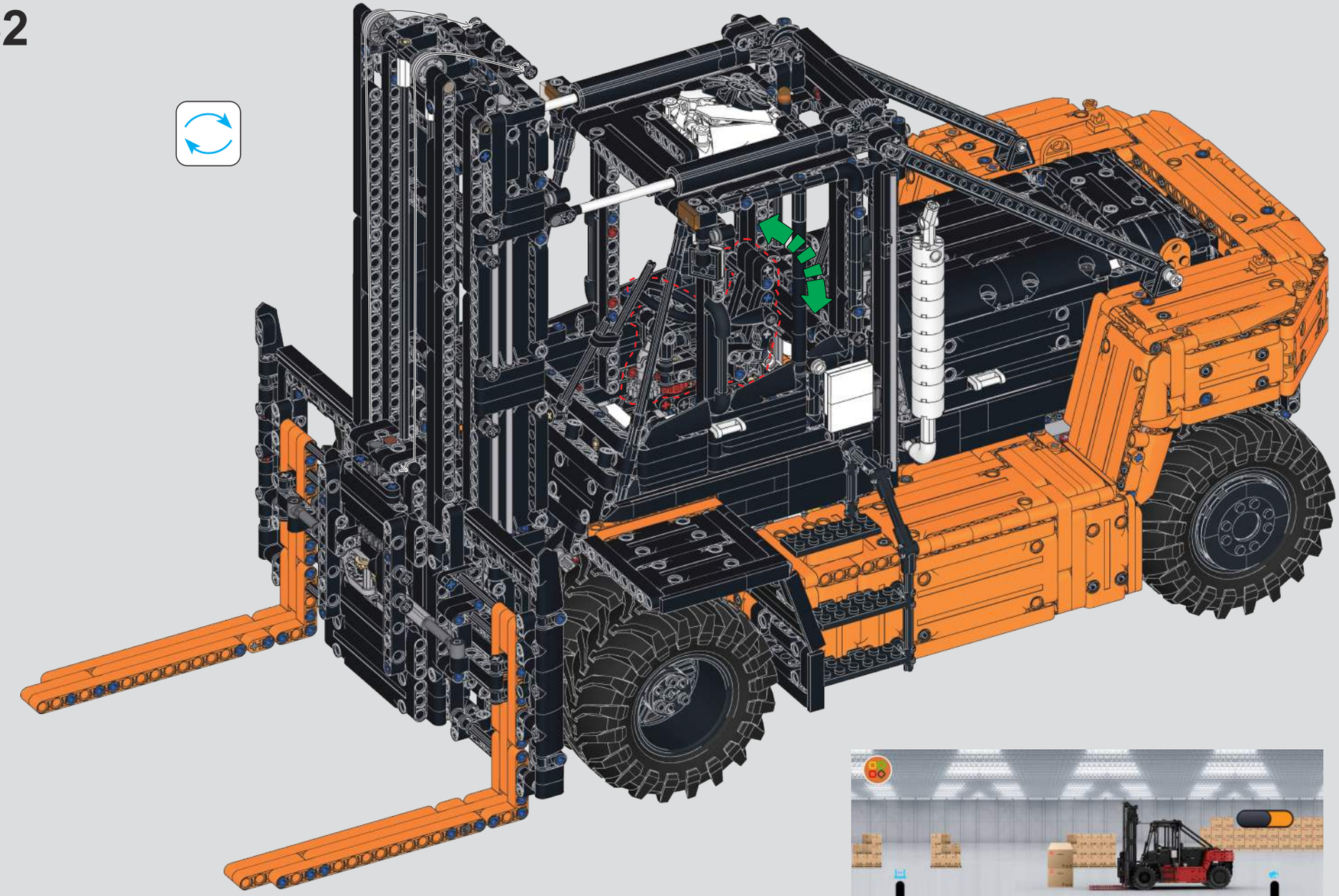

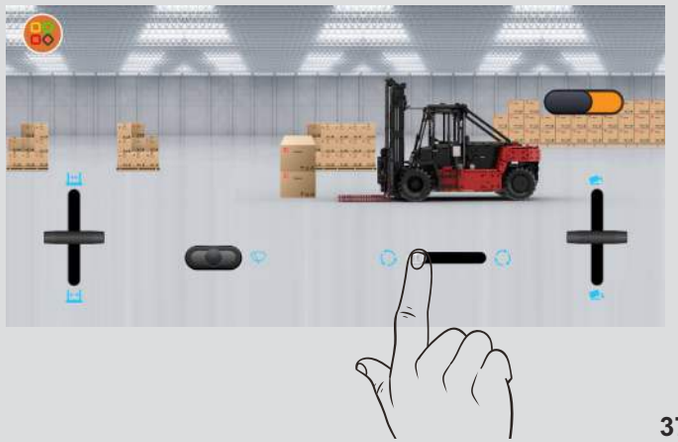

在该操作界面，←→移动此摇杆，控制座椅左右旋转

On this operating interface, move this joystick left and right to control the left and right rotation of the seat.

963

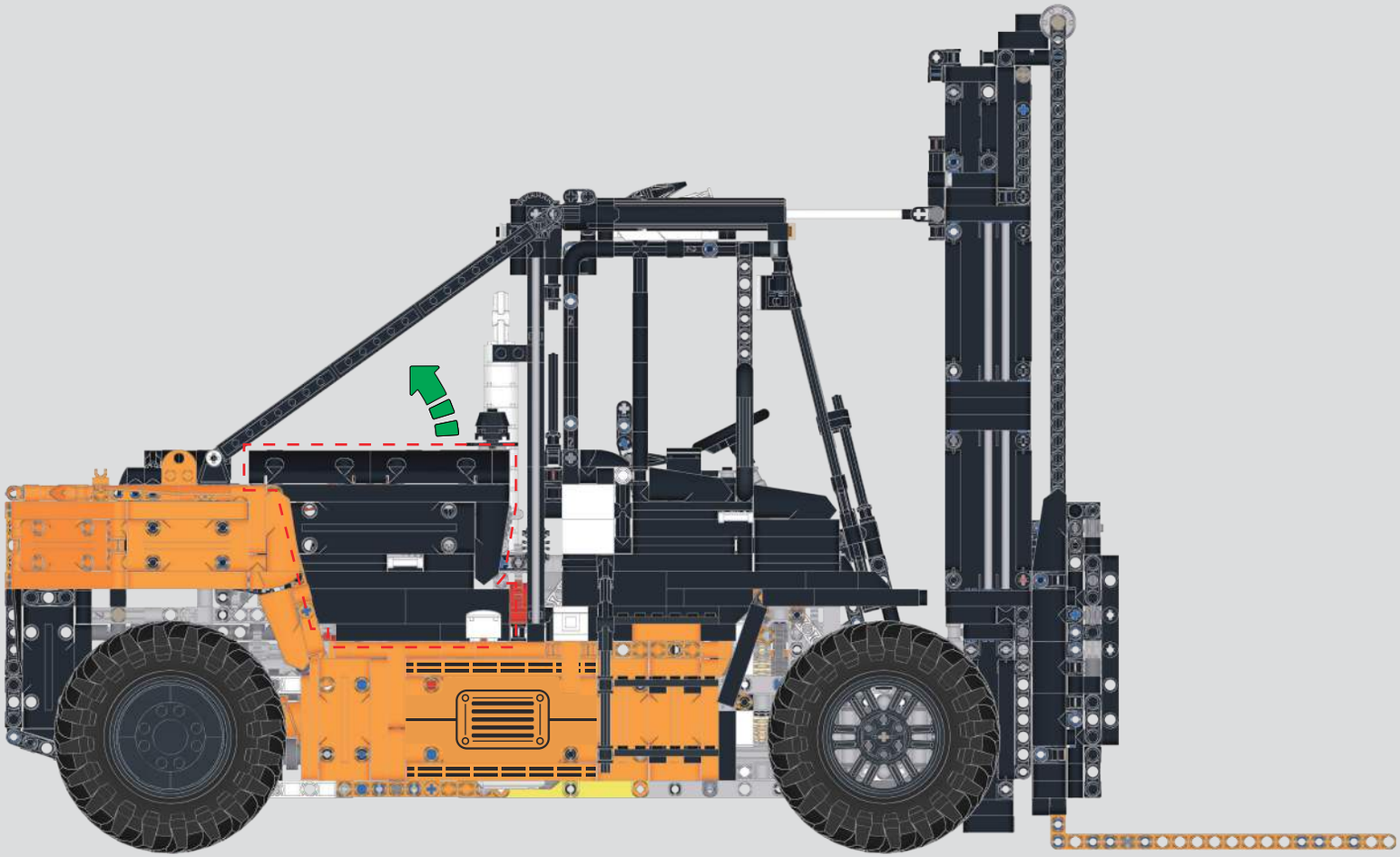

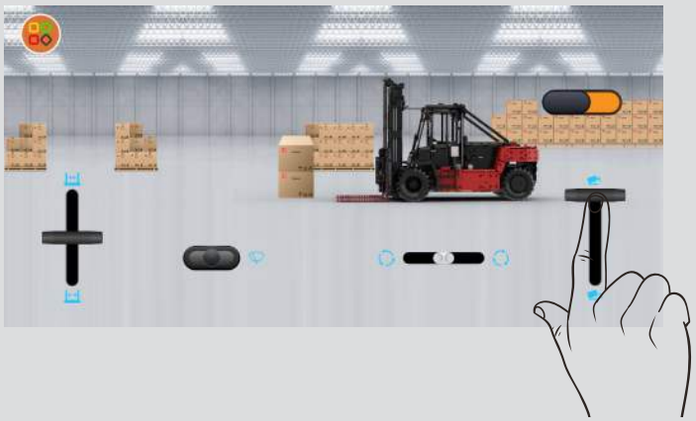

在该操作界面，↑↓移动此摇杆，控制引擎盖打开关闭

On this operating interface, move this joystick up and down to control the opening and closing of the engine hood.

964

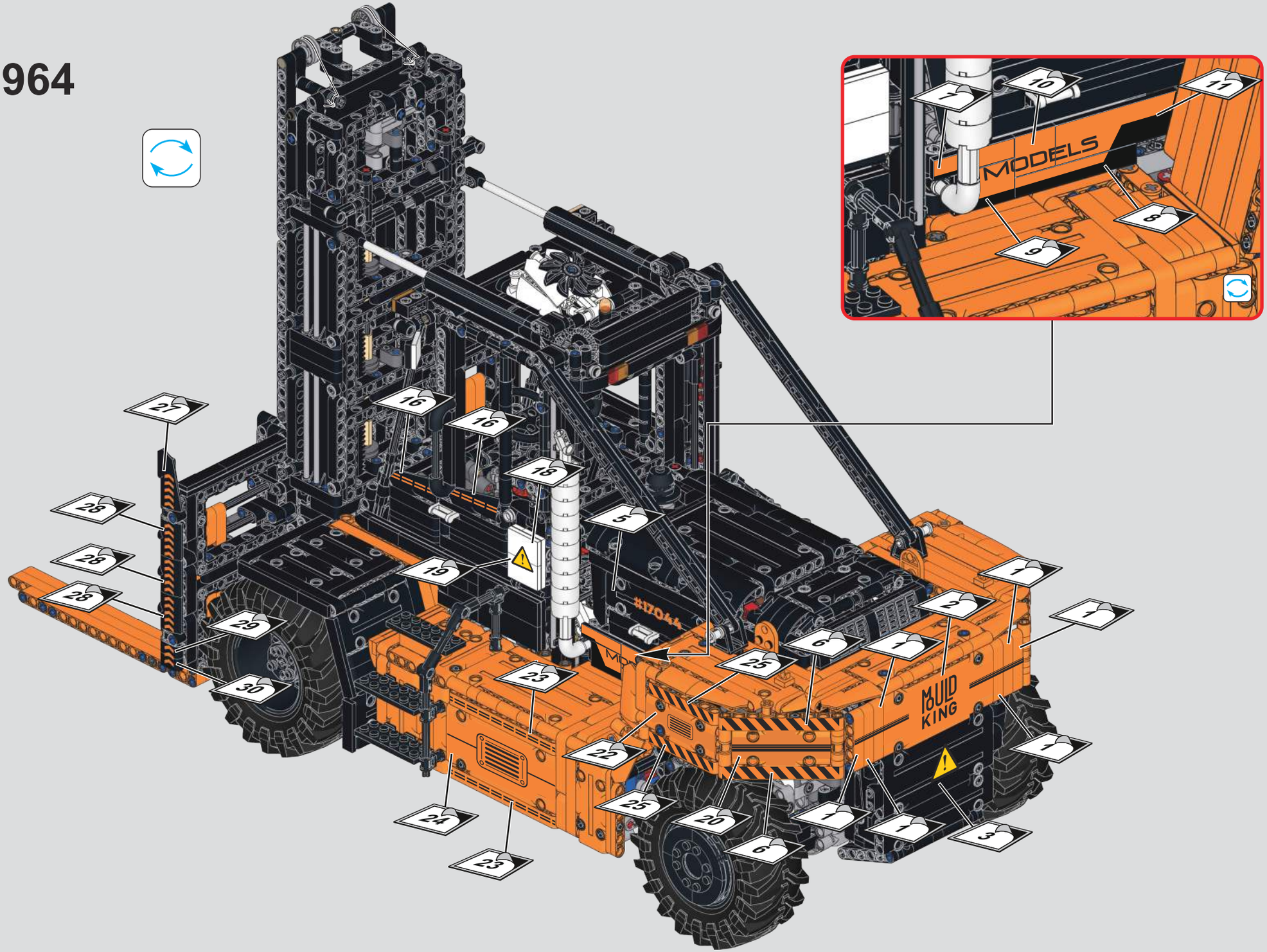

965

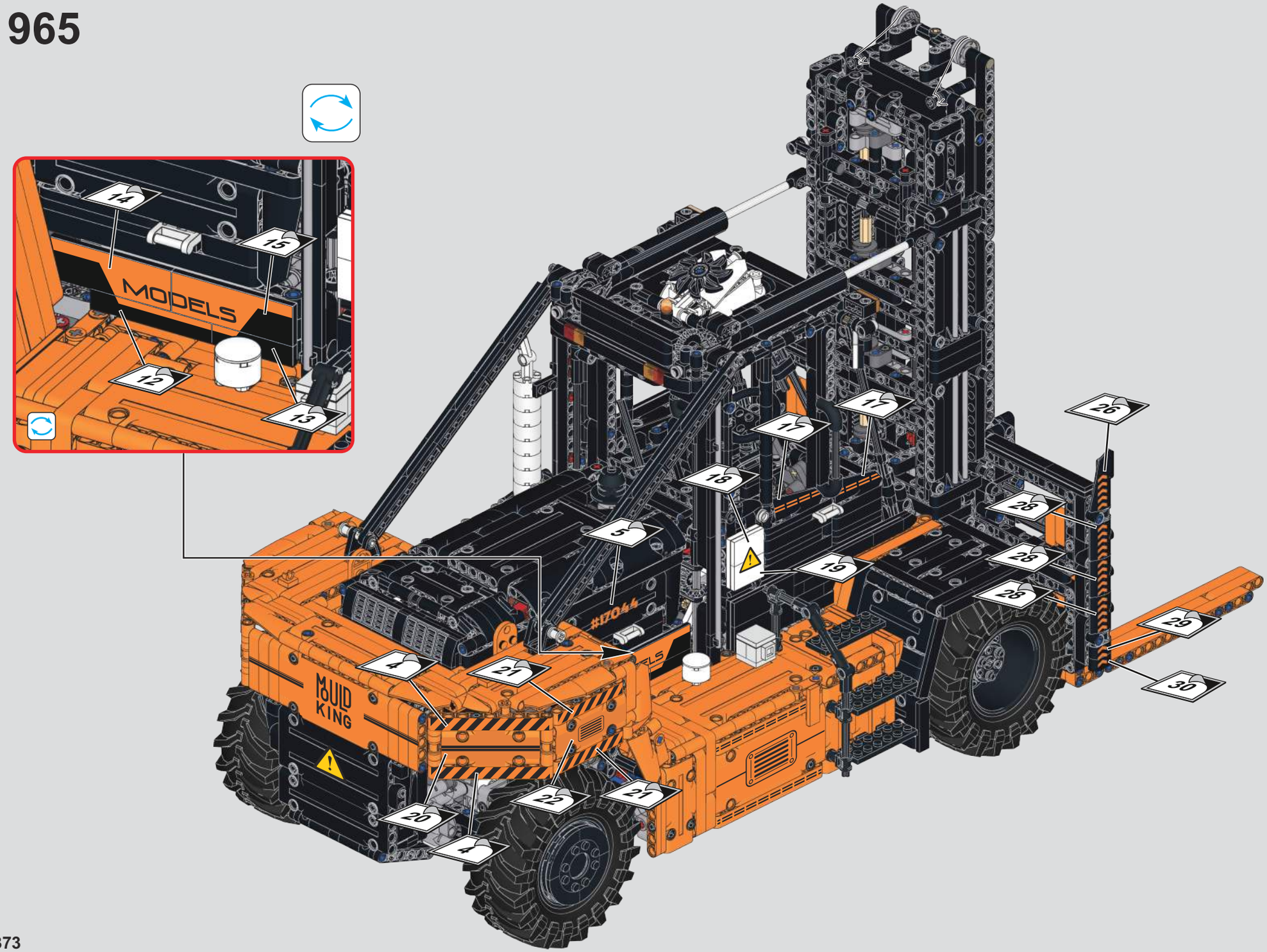
14
15
MODELS
12
13
17
17
26
18
28
5
19
28
29
29
#17044
4
21
MOULD KING
30
20
22
21
4

966

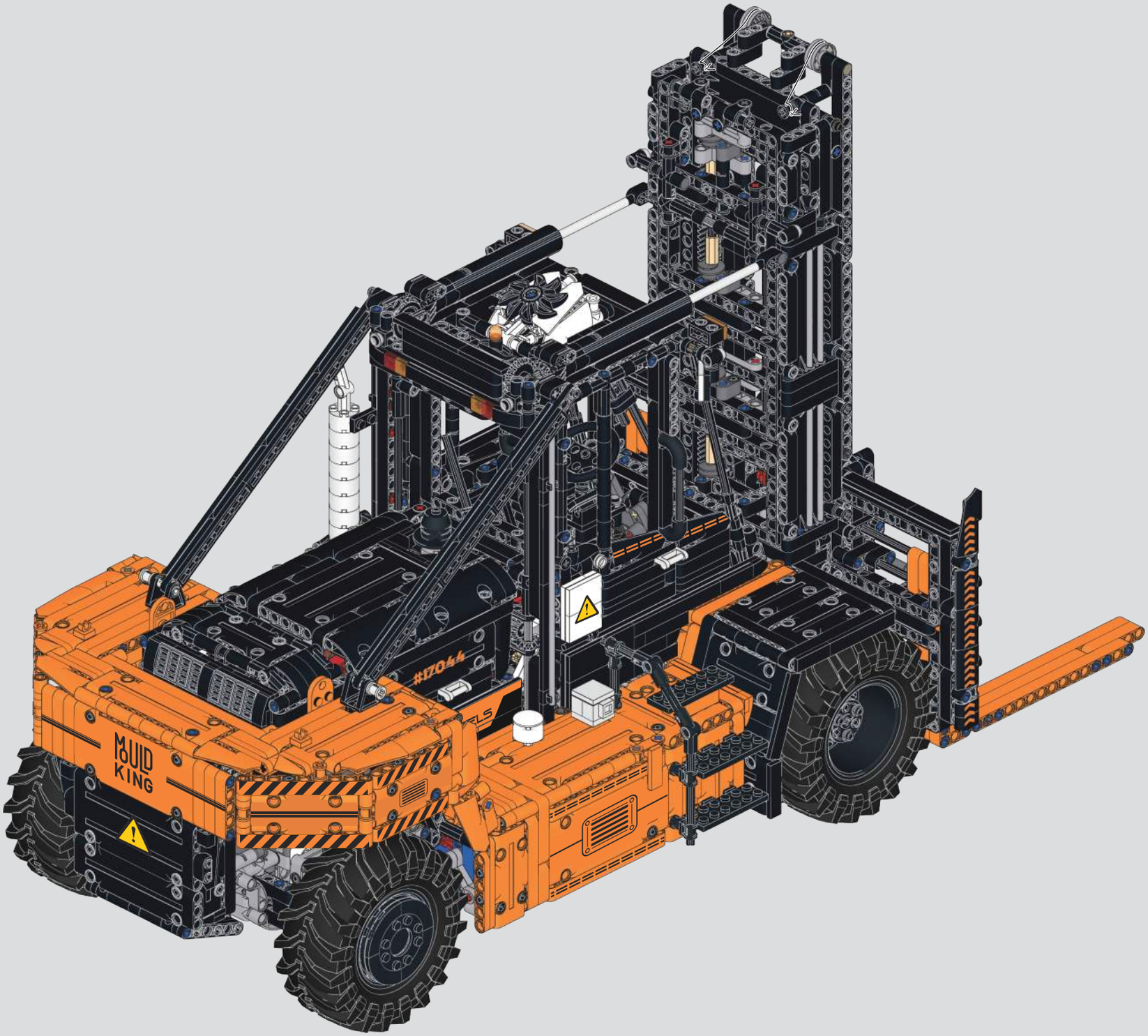

967

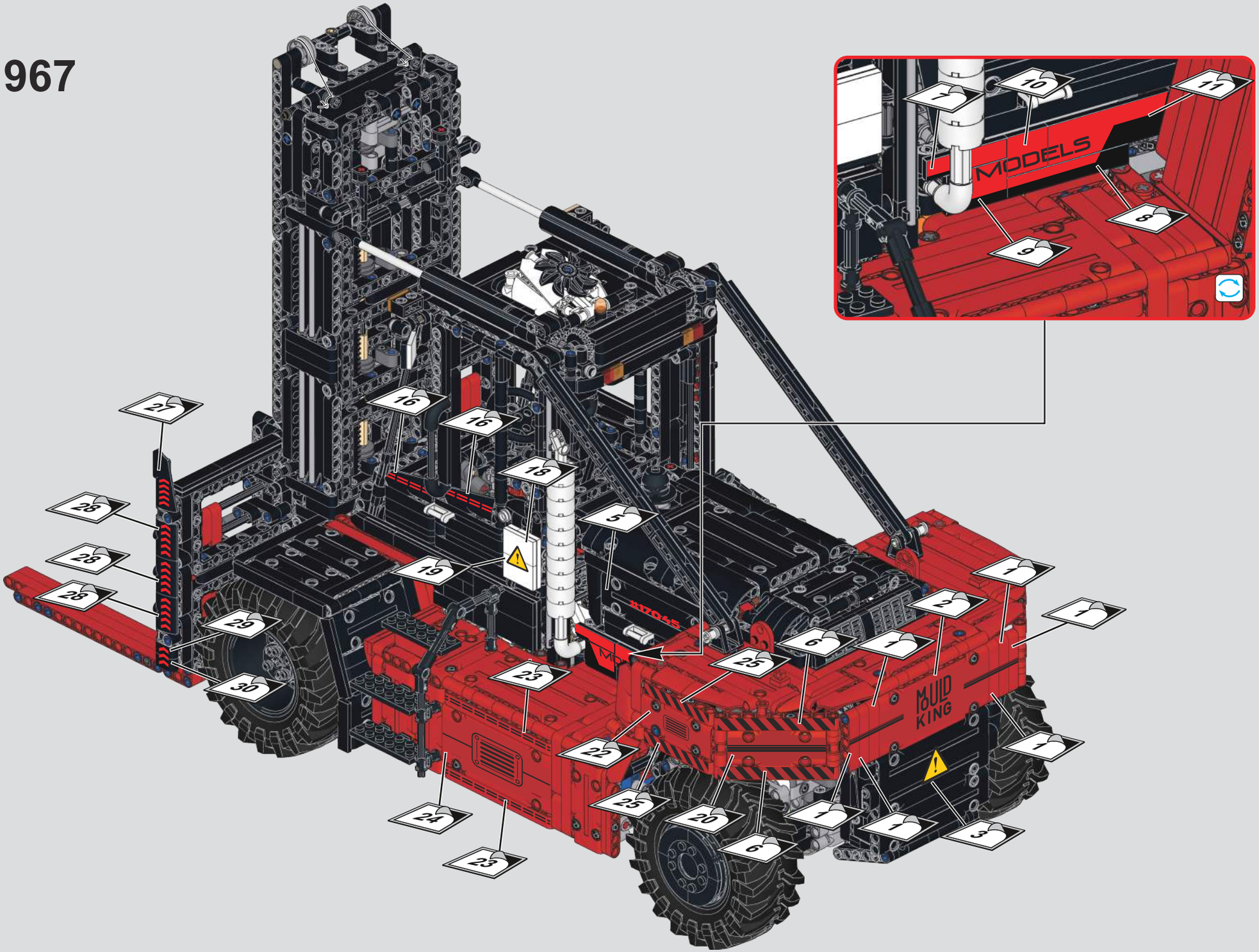

968

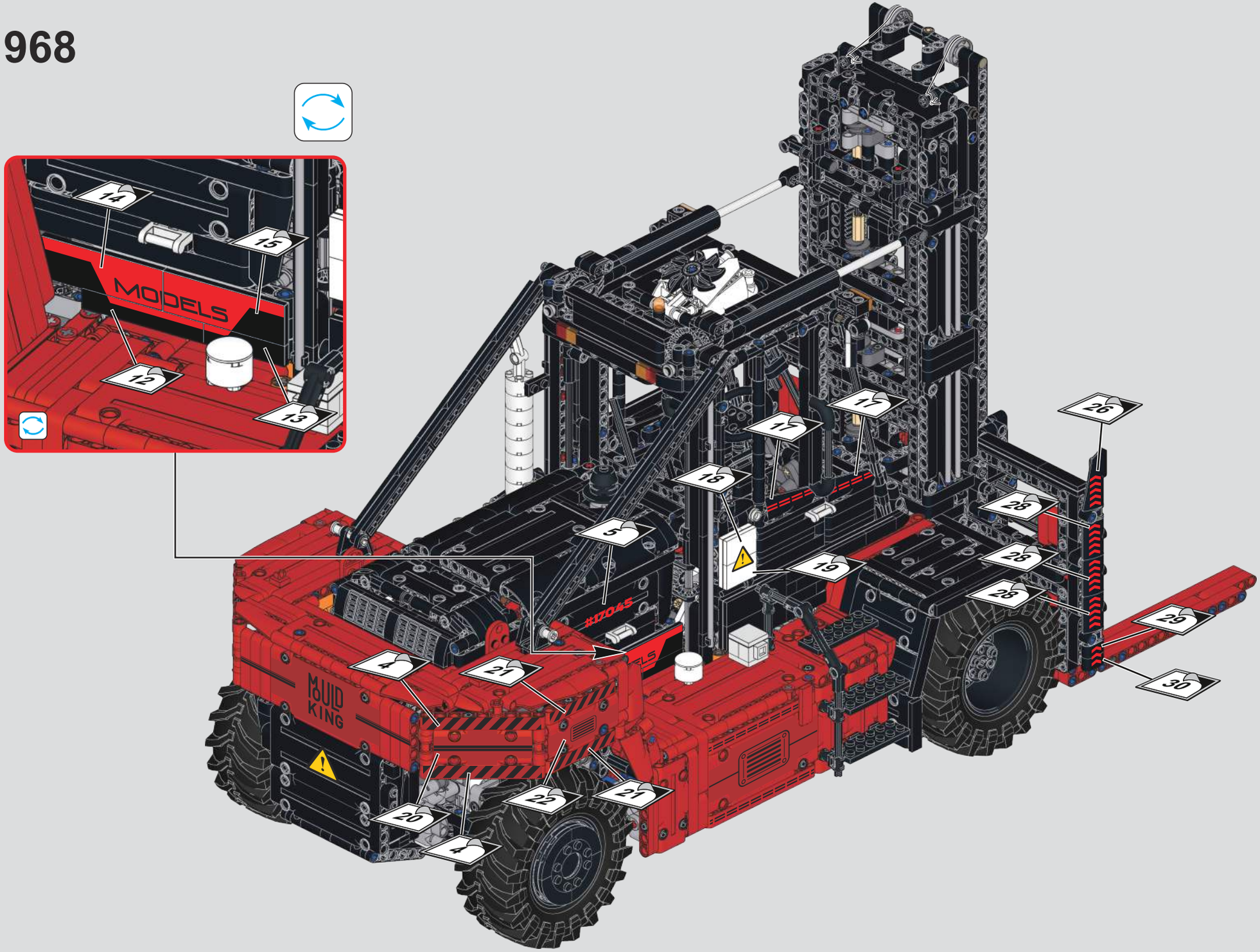
14
15
MODELS
12
13
17
17
26
18
25
5
19
28
28
#17045
29
4
21
MOULD KING
30
20
22
27
4

969

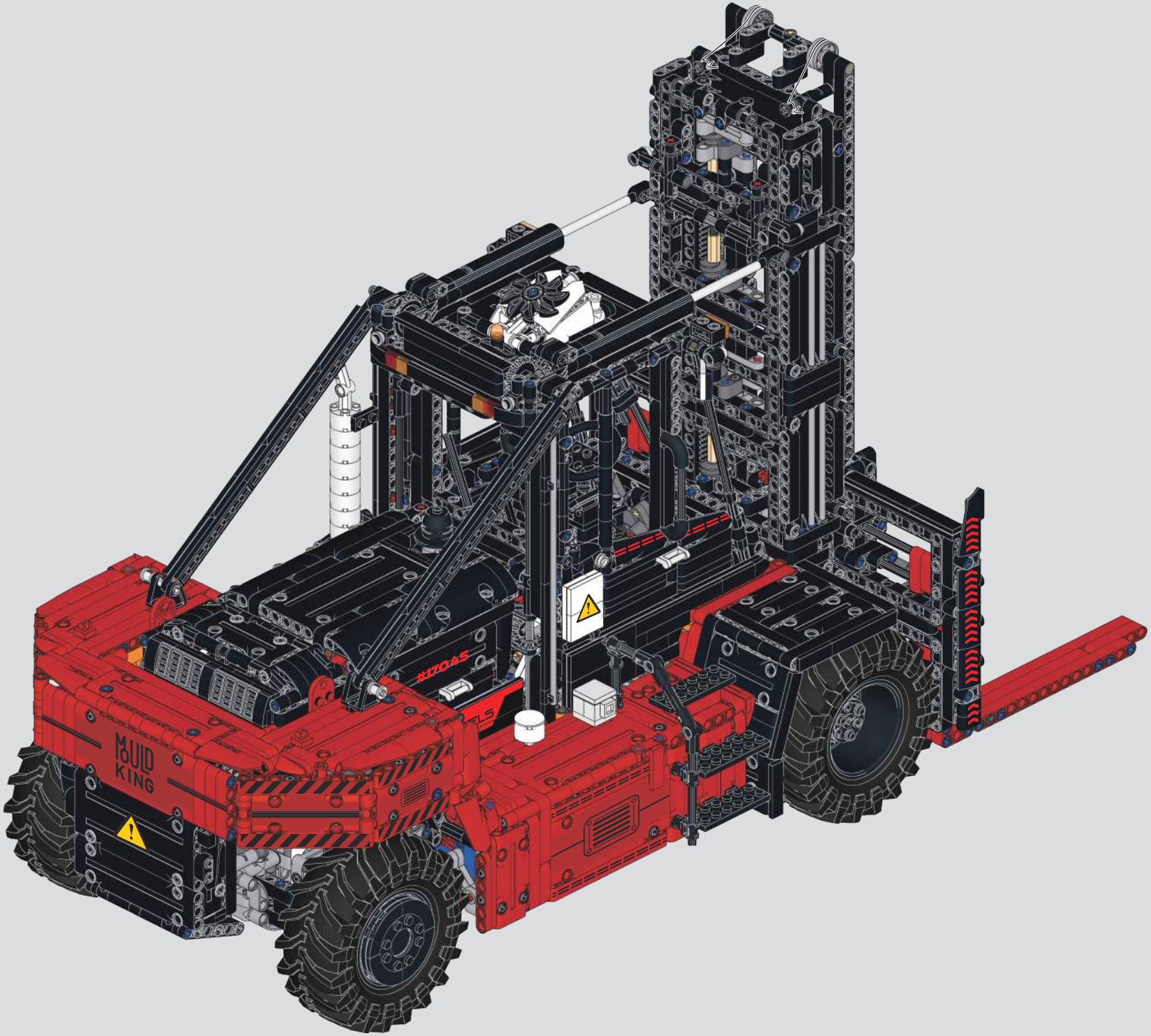

970

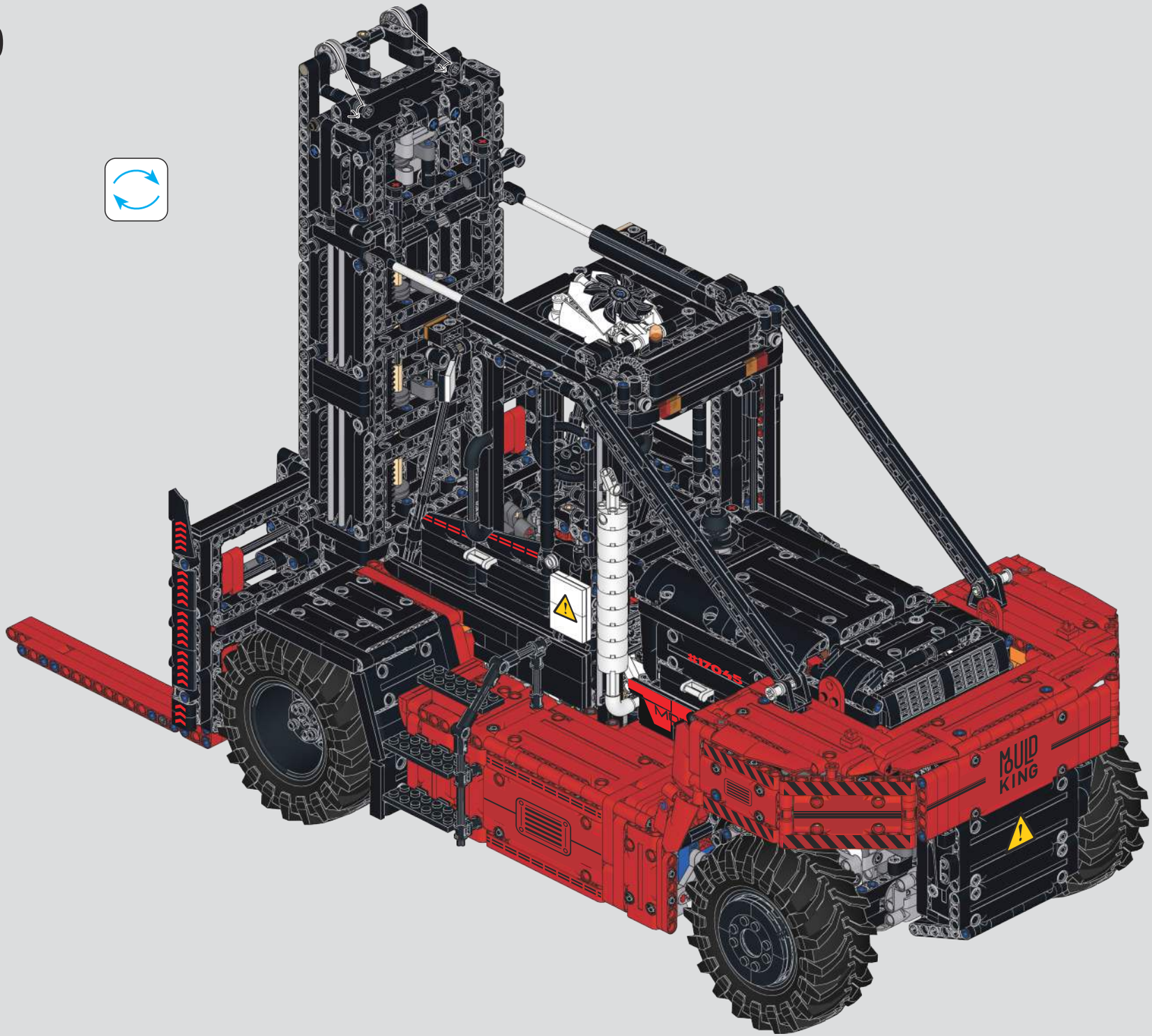

MOULD KING®

宇 星 模 王