MOULD KING®

宇星模王

宇星工程系列

MODELS 清障车

NO.TOW TRUCK

A

19008

10966+ Pcs/Pza

Qr code APP (APP二维码)

Need the apple version 9.0 and above,the android version 5.0 and above.

* This APP supports most of the mainstream Android models on the market, but due to the large number of Android models, different models of systems and hardware reasons, there may be some models do not support, specificaccording to the actual test!

广东宇星科技
Mould King

产品资讯
Product Information

积木补件
Brick Replacement Service

售后服务
After-sales Service

Customer Service 客户服务 www.yx-mk.com

酷砖家
BriXpert

"酷砖家"是宇星模王设立的特殊标识，代表着产品的独特性和原创性。每一款带有"酷砖家"标志的积木套装，都由宇星的原创团队或者与宇星有密切合作的全球顶尖设计师亲自设计或授权。这个标识是我们对消费者的承诺，确保他们可以享受到独一无二且高品质的积木拼搭体验。

“Bri X pert”is a special mark established by MOULD KING, representing the uniqueness and originality of the product. Every building set with the "Bri X pert" logo is personally designed or authorized by MOULD KING's innovative team or world-class designers who work closely with MOULD KING. This logo is our commitment to consumers, ensuring that they can enjoy a unique and high-quality building experience.

OPEN

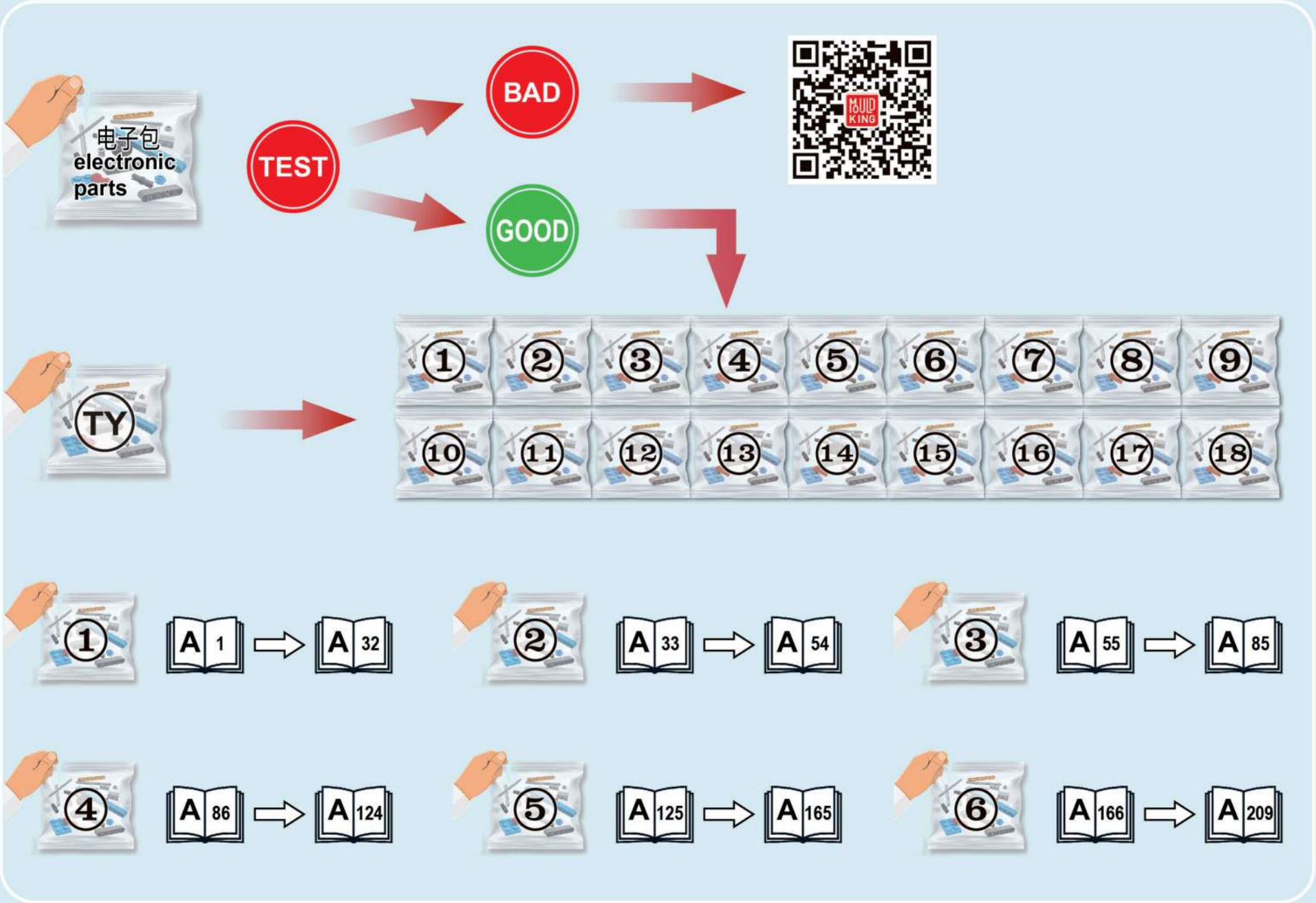
电子包
electronic
parts
TEST
BAD
GOOD
TY
1
2
3
4
5
6
7
8
9
10
11
12
13
14
15
16
17
18
A 1
A 32
A 33
A 54
A 55
A 85
A 86
A 124
A 125
A 165
A 166
A 209

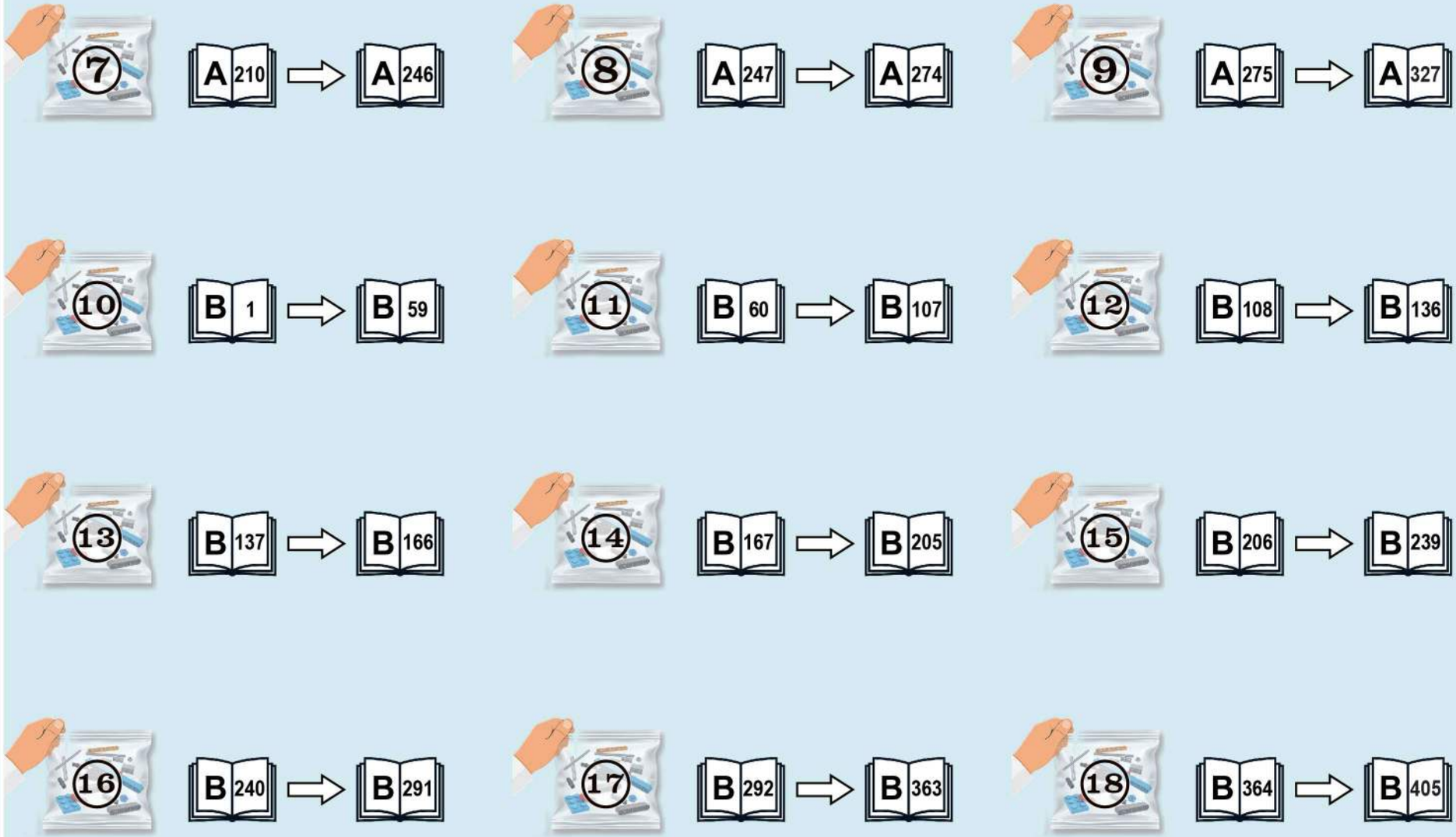
7
A 210
A 246
8
A 247
A 274
9
A 275
A 327
10
B 1
B 59
11
B 60
B 107
12
B 108
B 136
13
B 137
B 166
14
B 167
B 205
15
B 206
B 239
16
B 240
B 291
17
B 292
B 363
18
B 364
B 405

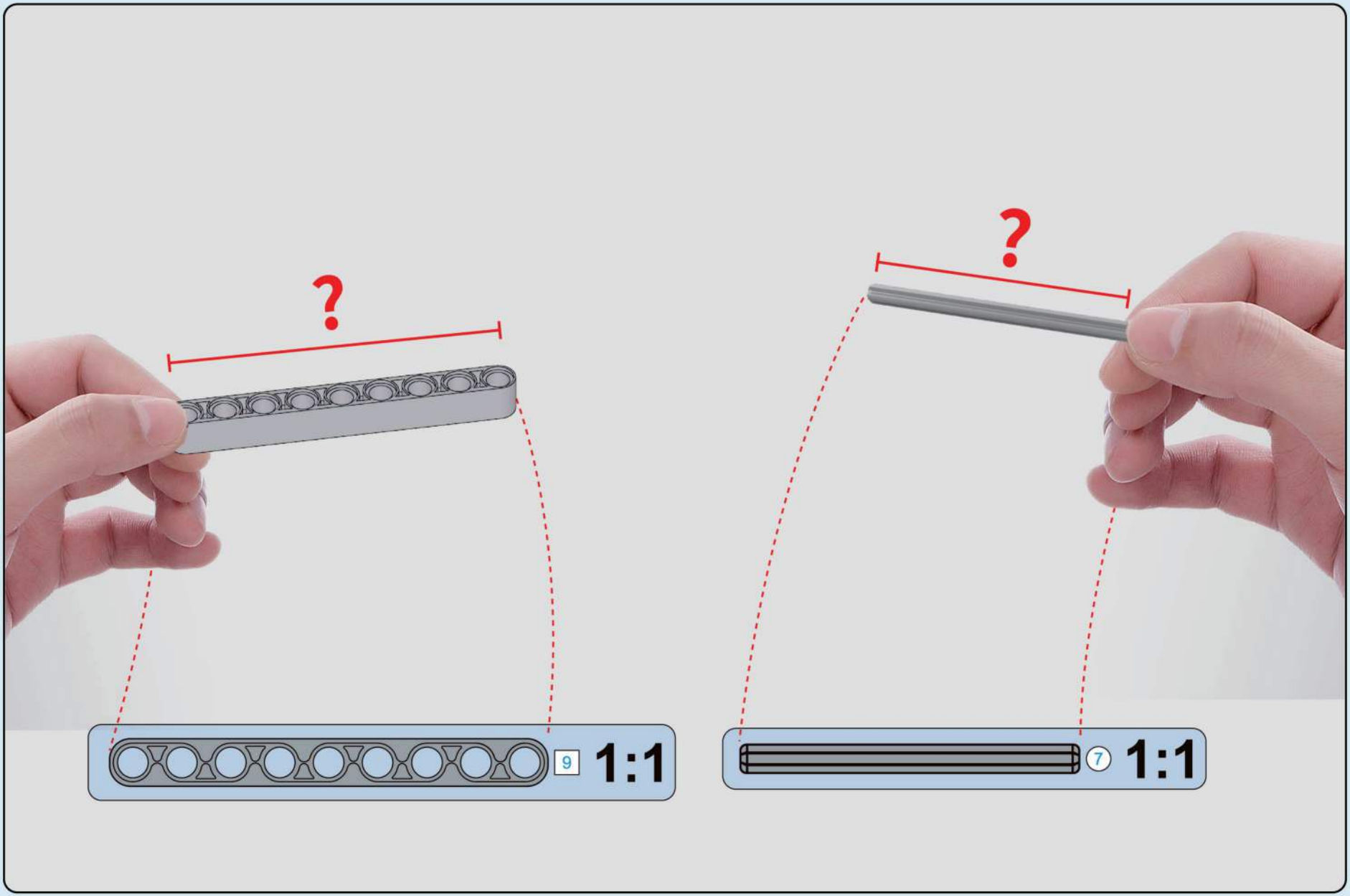
?
9
1:1
?
7
1:1

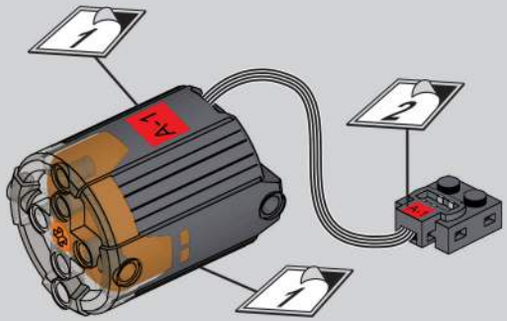

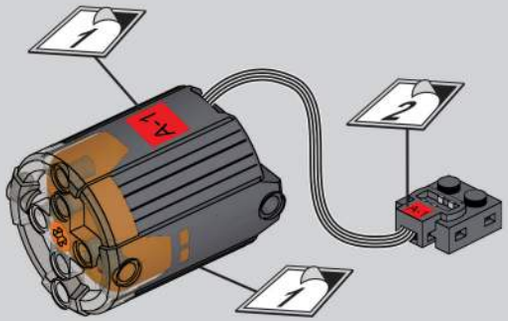

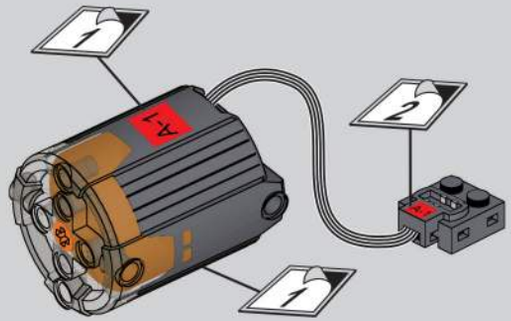

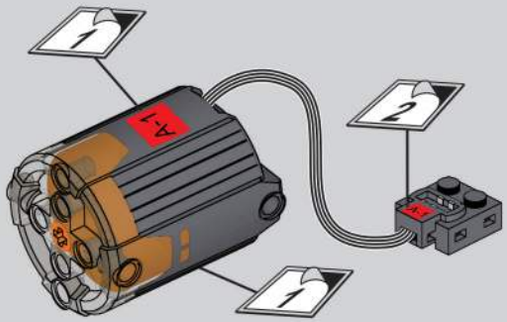

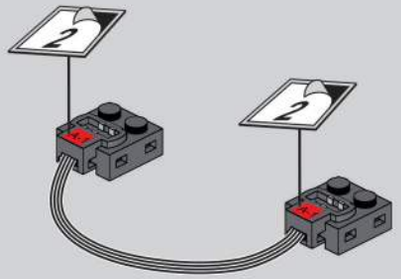

30cm

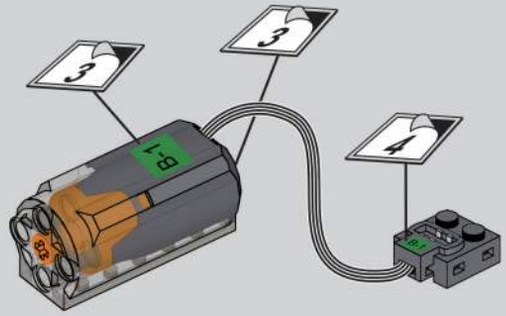

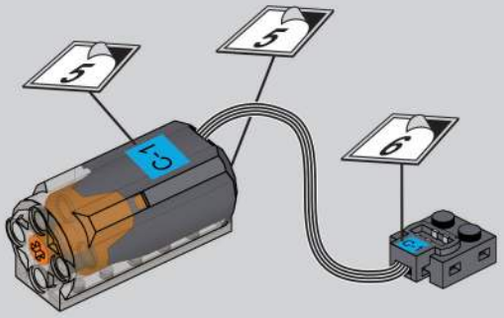

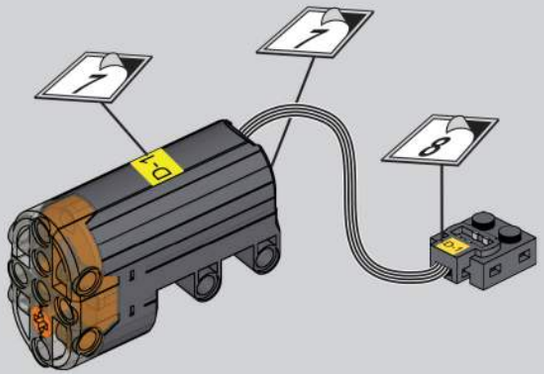

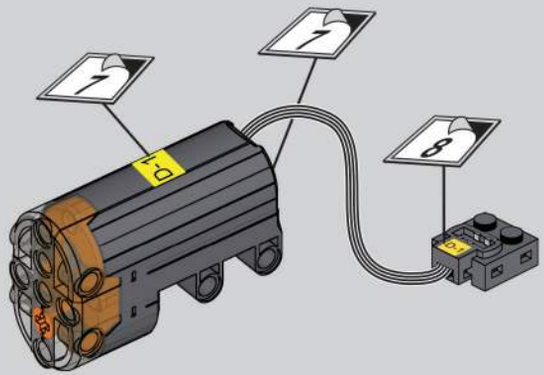

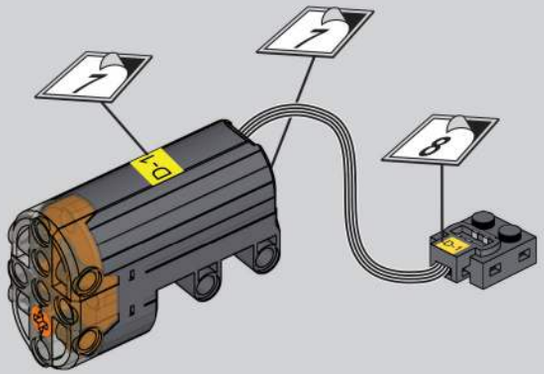
7
7
8
D-1

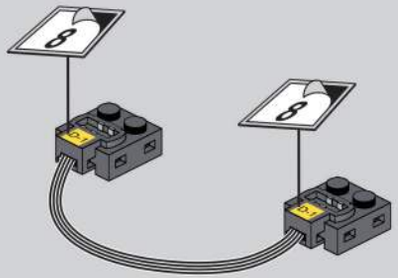
8
8

30cm

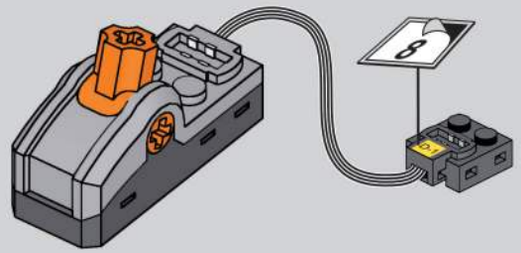
8

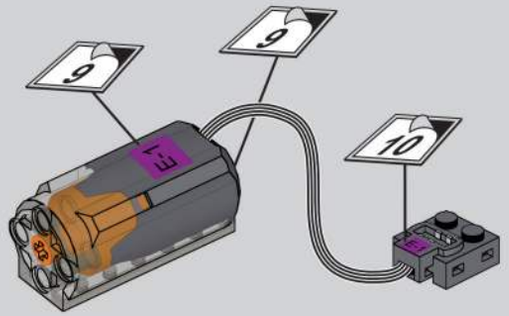
9
9
10
E-1

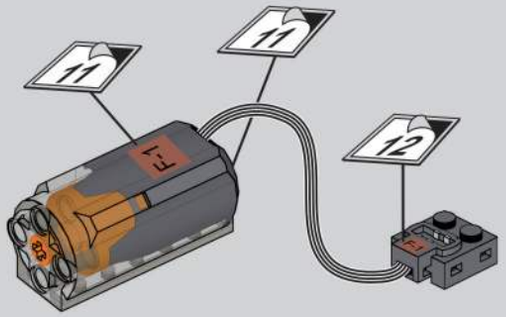
11
11
12
F-1

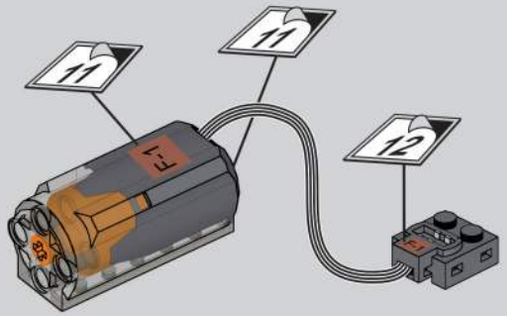
11
11
12
F-1

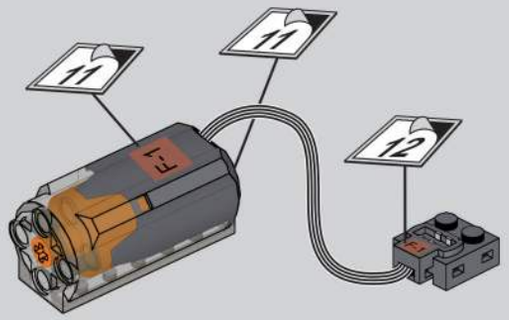
11
11
12
F-1

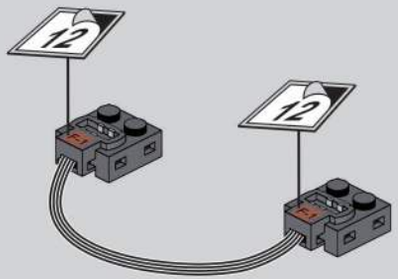
12
12

30cm

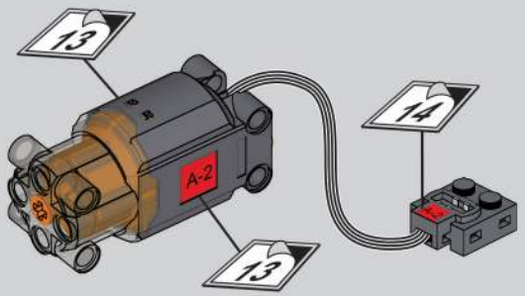
13
14
A-2
13

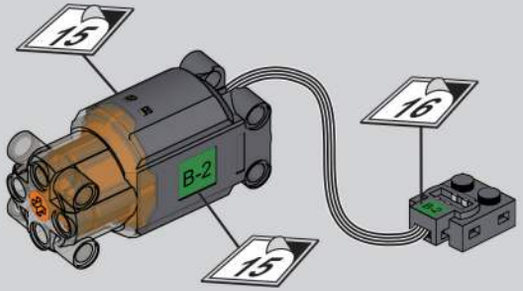
15
16
B-2
15

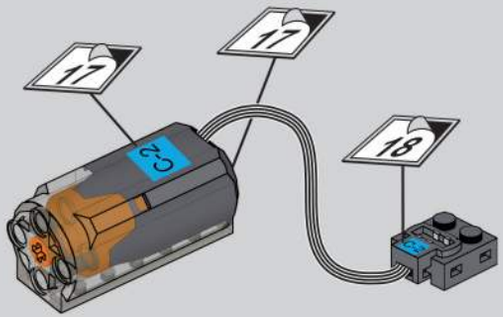
17
17
C-2
18

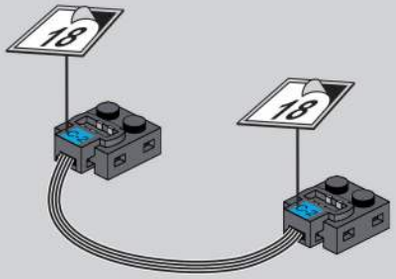
18
18

50cm

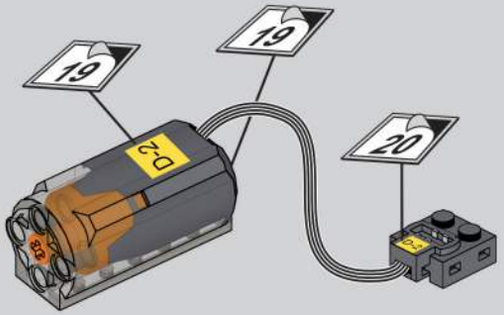
19
19
D-2
20

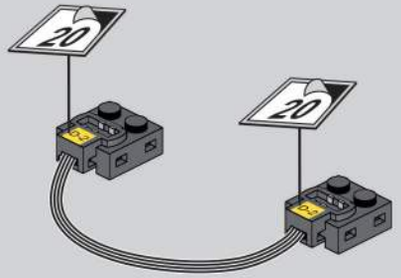
20
20

50cm

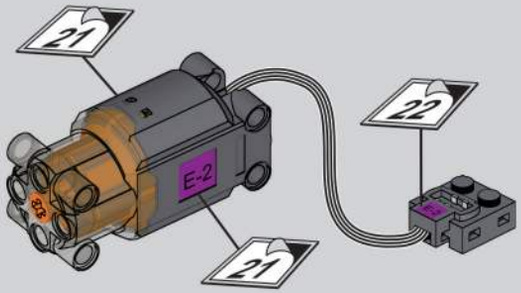
21
22
E-2
21

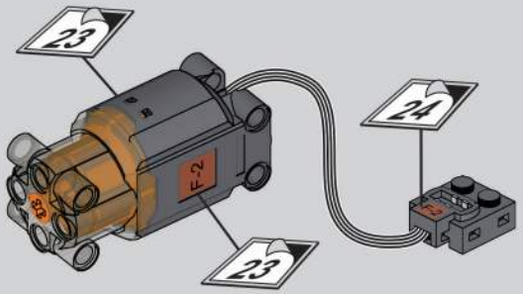
23
24
F-2
23

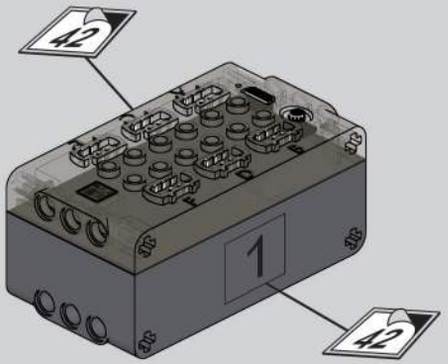
42
1
42

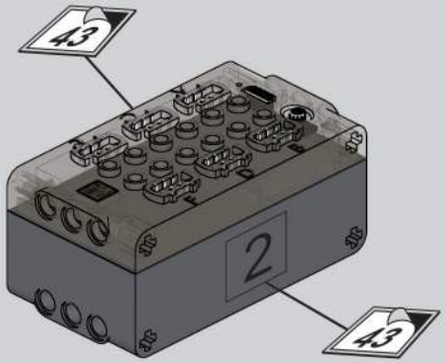
43
2
43

拼装前需测试所有电子件功能是否正常

Test all electronic components for functionality before assembly.

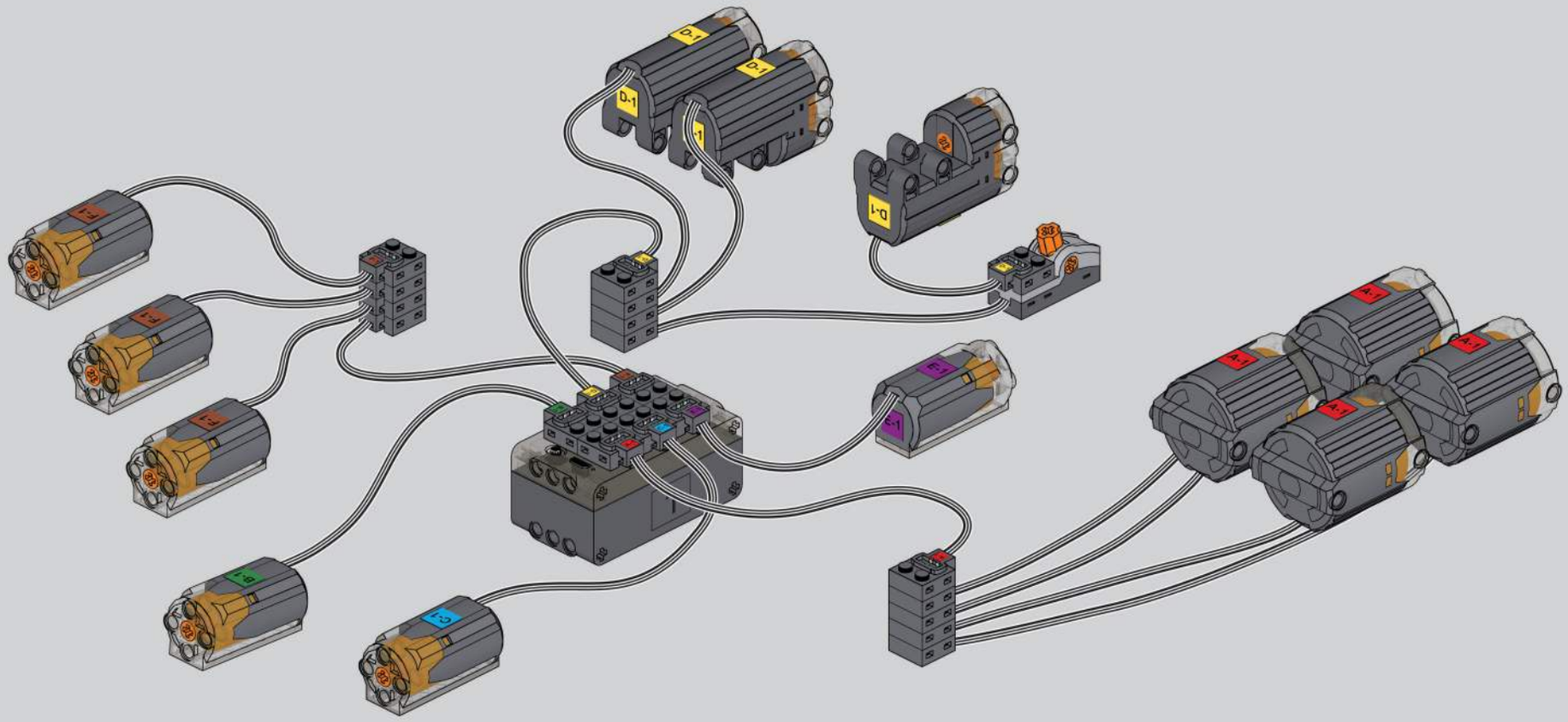

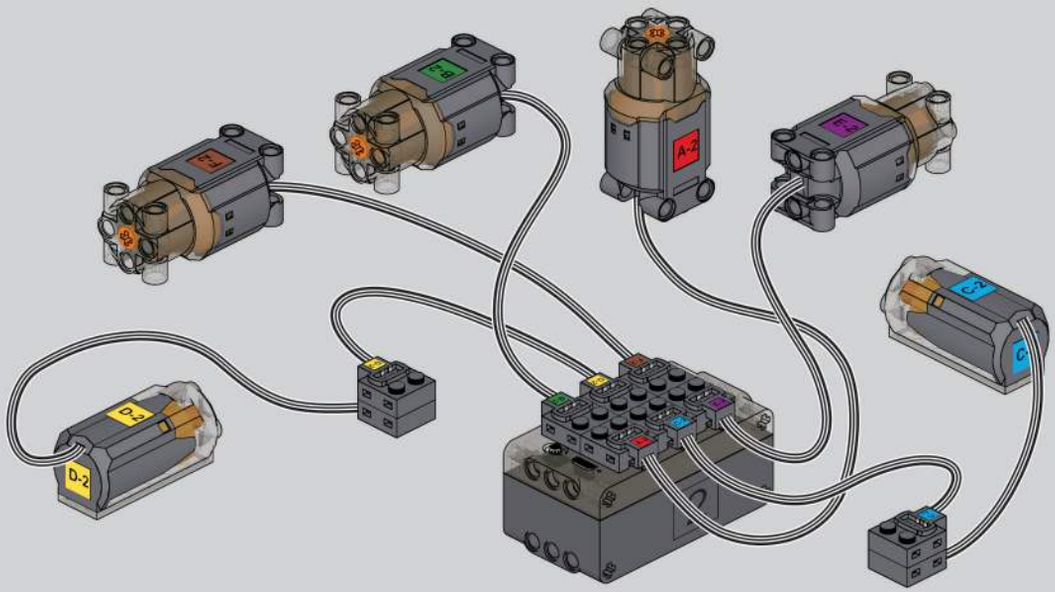

请扫描此二维码，获取并仔细查看6.0模块的操作说明书。

Please scan this QR code to obtain and carefully review the operation manual for the 6.0 module.

Main control module | 6.0模块

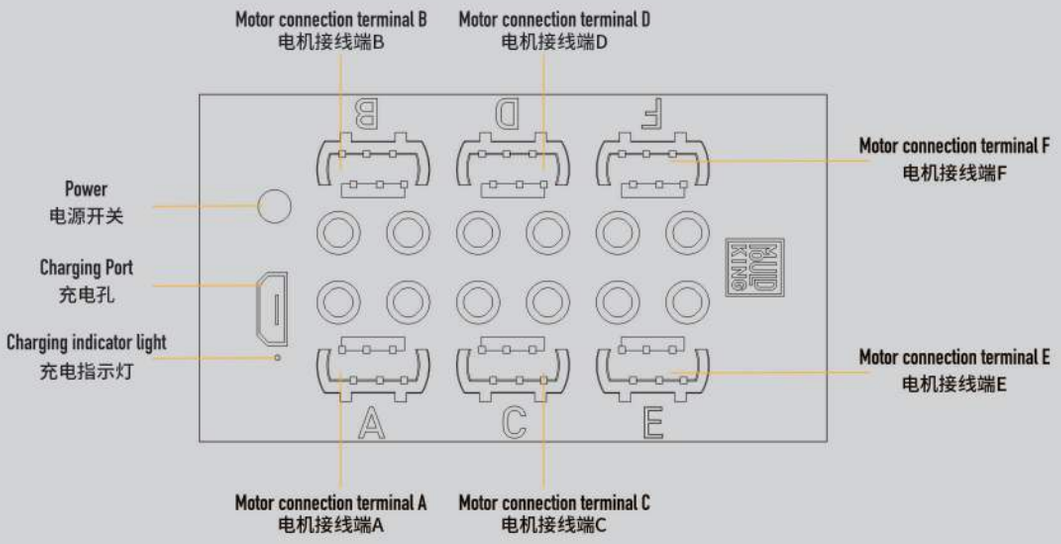

① 电机接线端：可连接各种电机、接收器、换向开关、灯、雾化器、声音模块等
② 电源指示灯：通过指示灯的颜色和闪烁状态区分电池模式
③ 电源开关：打开或关闭锂电；切换模块
④ 充电孔：micro-b USB接口连接充电线（USB变压器输出电压不得超过5V，电流不得超过1A）
⑤ 充电指示灯：充电时红灯闪烁，充满时红灯常亮；充电时间2.5—3小时

① Motor terminal: can connect various motors, receivers, directional switches, lights, atomizers, sound modules, etc
② Power indicator light: Distinguish battery mode by the color and flashing status of the indicator light
③ Power switch: Turn on or off the lithium battery; Switching module
④ Charging port: micro-b USB interface connected to charging cable (USB transformer output voltage should not exceed 5V, current should not exceed 1A)
⑤ Charging indicator light: The red light flashes during charging and remains on when fully charged; Charging time 2.5-3 hours

Remote Control | 遥控器

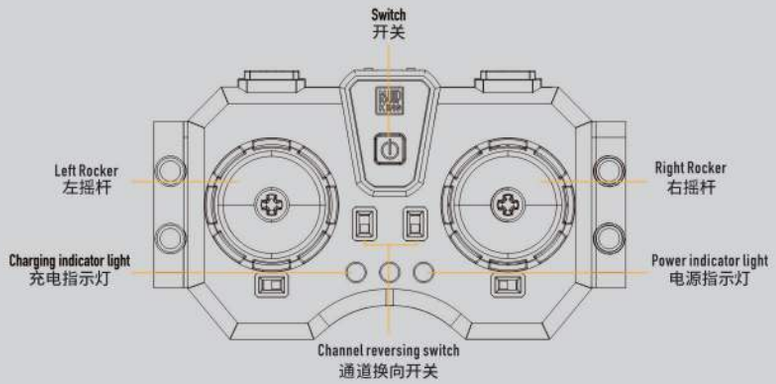

Front View
正面

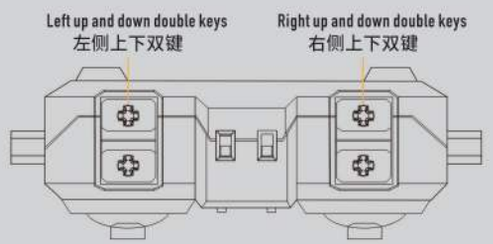

Top
顶部

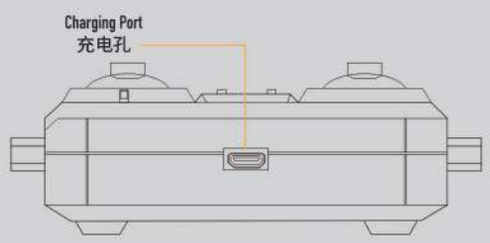

Bottom
底部

① 开关：打开、关闭遥控器
② 电源指示灯：通过蓝色指示灯的状态区分是否成功连接锂电
③ 充电指示灯：充电时红灯常亮，充满时红灯熄灭；充电时间1.5—2小时
④ 左摇杆↕移动：A通道电机正、反转
左摇杆↔移动：B通道电机正、反转
⑤ 右摇杆↕移动：C通道电机正、反转
右摇杆↔移动：D通道电机正、反转
⑥ 左侧上下双键：E通道电机正、反转
⑦ 右侧上下双键：F通道电机正、反转
⑧ 通道换向开关：改变该通道电机旋转方向
⑨ 充电孔：micro-b USB接口连接充电线
（USB变压器输出电压不得超过5V，电流不得超过1A）

① Switch: Turn the remote control on and off
② Power indicator light: Distinguish whether the lithium battery has been successfully connected through the status of the blue indicator light
③ Charging indicator light: The red light is always on during charging, and goes out when fully charged; Charging time 1.5-2 hours
④ Left Rocker ↕ Movement: A-channel motor forward and reverse
left joystick ↔ Movement: B-channel motor forward and reverse
⑤ Right Rocker ↕ Movement: C-channel motor forward and reverse
right joystick ↔ Movement: D-channel motor forward and reverse
⑥ Left up and down double keys: E-channel motor forward and reverse
⑦ Right up and down double keys: F channel motor forward and reverse
⑧ Channel reversing switch: Change the direction of rotation of the motor in that channel
⑨ Charging port: micro-b USB interface connected to charging cable (USB transformer output voltage should not exceed 5V, current should not exceed 1A)

1

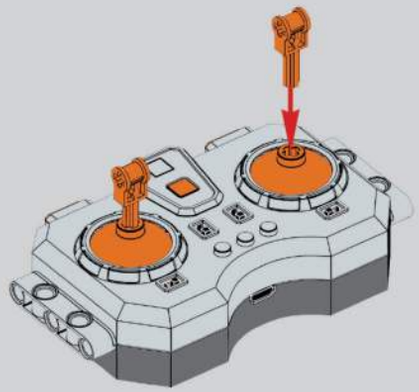

打开遥控器电源，打开模块电源，使其配对成功

Turn on the remote control power, turn on the module power, and make it pair successfully

2

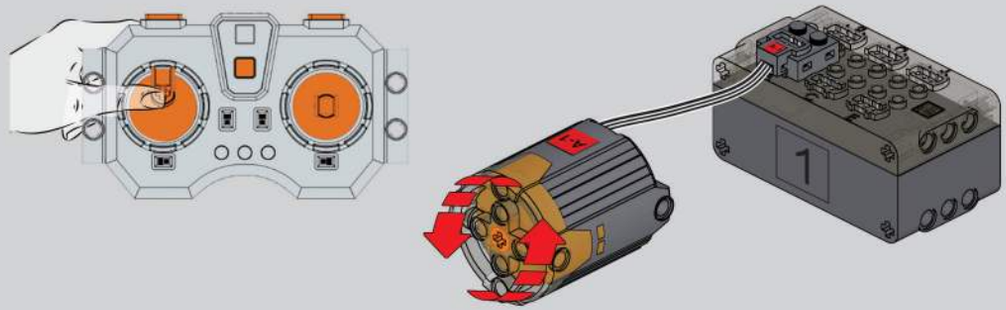

取出一个A电机，连接模块A接口，遥控器左摇杆向上移动，电机动力孔向左旋转

Take out an A motor and connect it to the module A interface. The left joystick of the remote control moves upwards, and the motor power hole rotates to the left

3

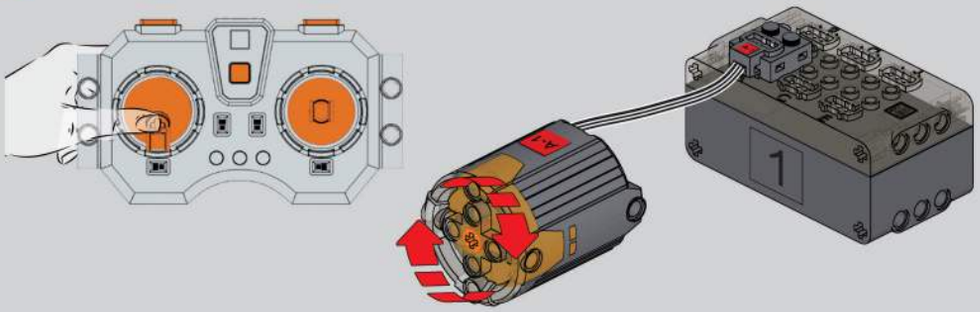

遥控器左摇杆向下移动，电机动力孔向右旋转

The left joystick of the remote control moves downwards, and the motor power hole rotates to the right

4

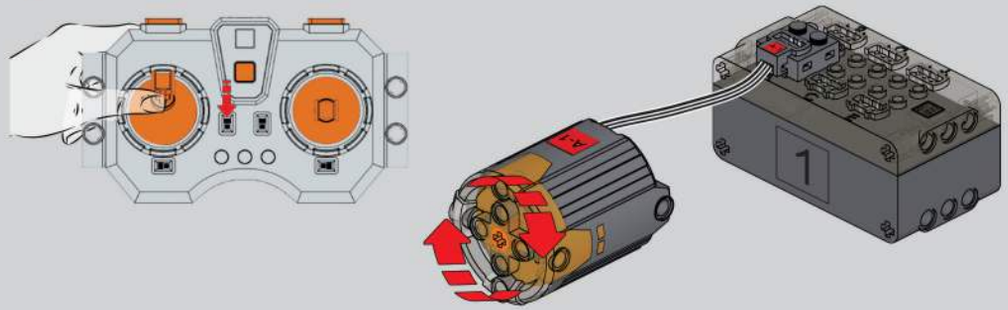

拨动通道换向开关，遥控器向上移动，电机动力孔向右旋转

Turn the channel directional switch.The remote control moves up and the motor power hole rotates to the right

5

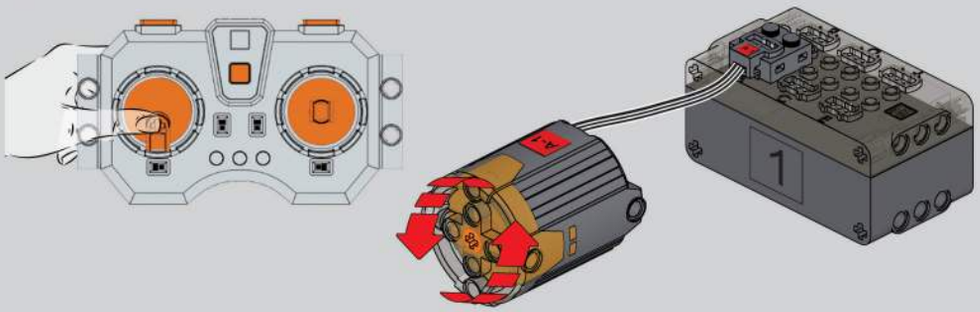

遥控器左摇杆向下移动，电机动力孔向左旋转

The left joystick of the remote control moves downwards, and the motor power hole rotates to the left

6

注意:

请将所有电机按以上方式测试，测试完成请将电机拆下，方便后续拼装。
测试时请将电机对应通道测试，A电机对应A通道，B电机对应B通道，以此类推。

Attention:

Please test all motors according to the above method. After the test is completed, please remove the motors for easy assembly in the future.
When testing, please test the corresponding channel of the motor. A motor corresponds to channel A, B motor corresponds to channel B, and so on.

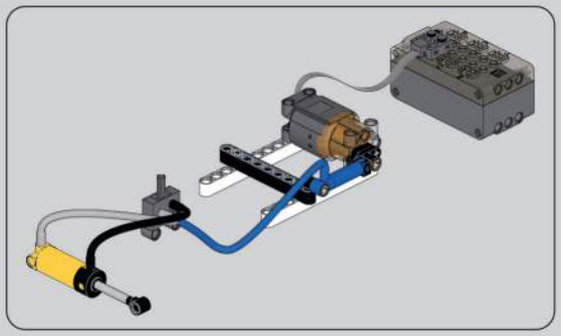

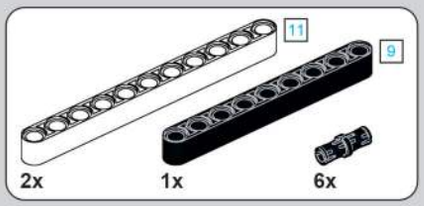
11
9
2x
1x
6x

0-1

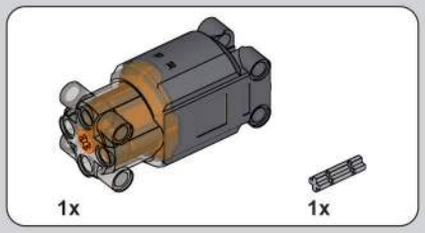
1x
1x

0-2

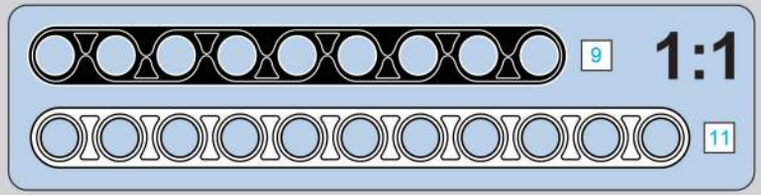
9
1:1
11

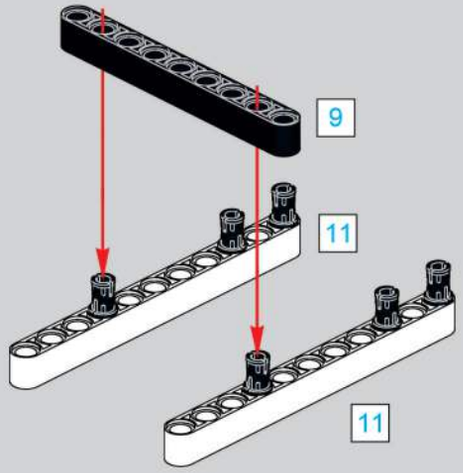
9
11
11

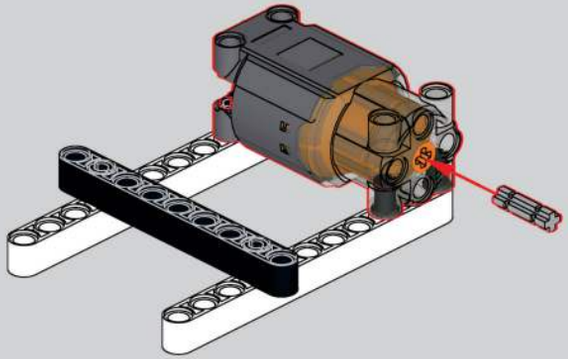

1x
2x

0-3

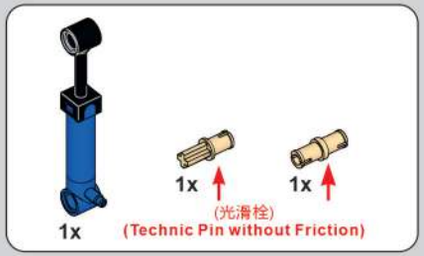
1x
1x
1x
(光滑栓)
(Technic Pin without Friction)

0-4

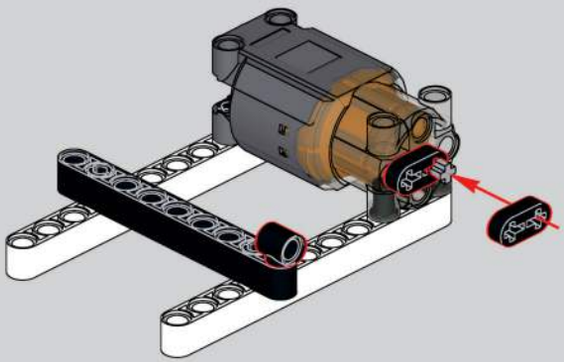

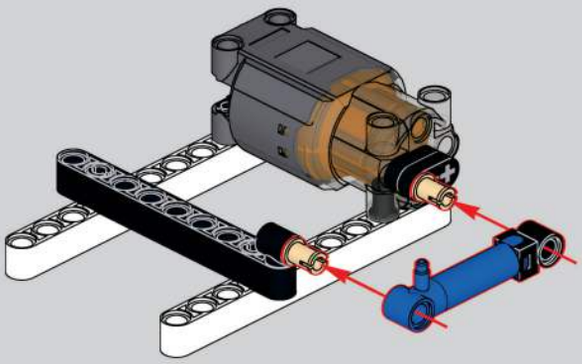

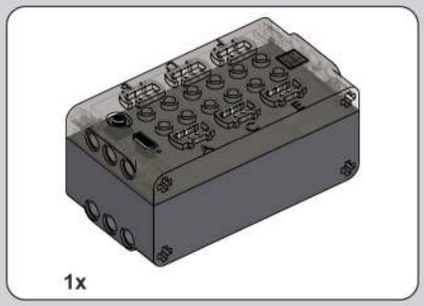

0-5

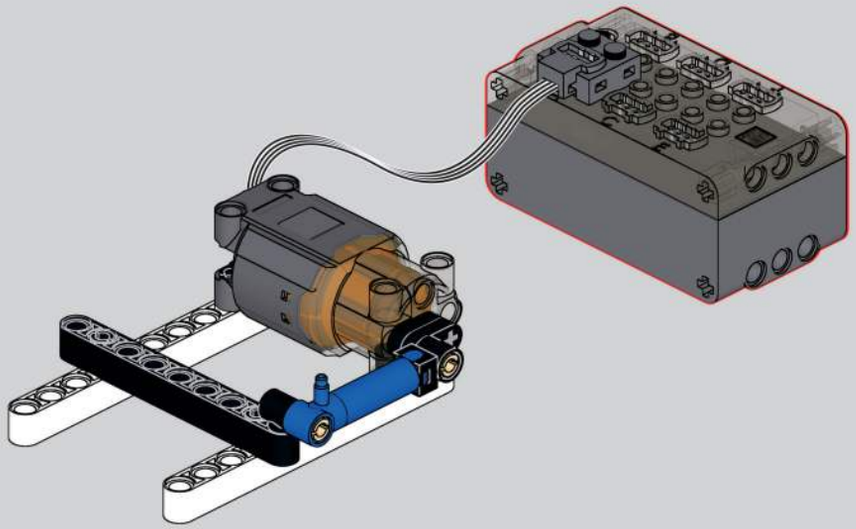

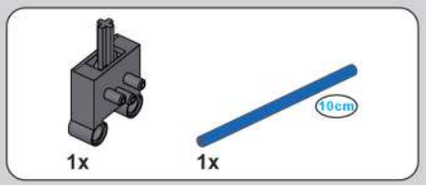

0-6

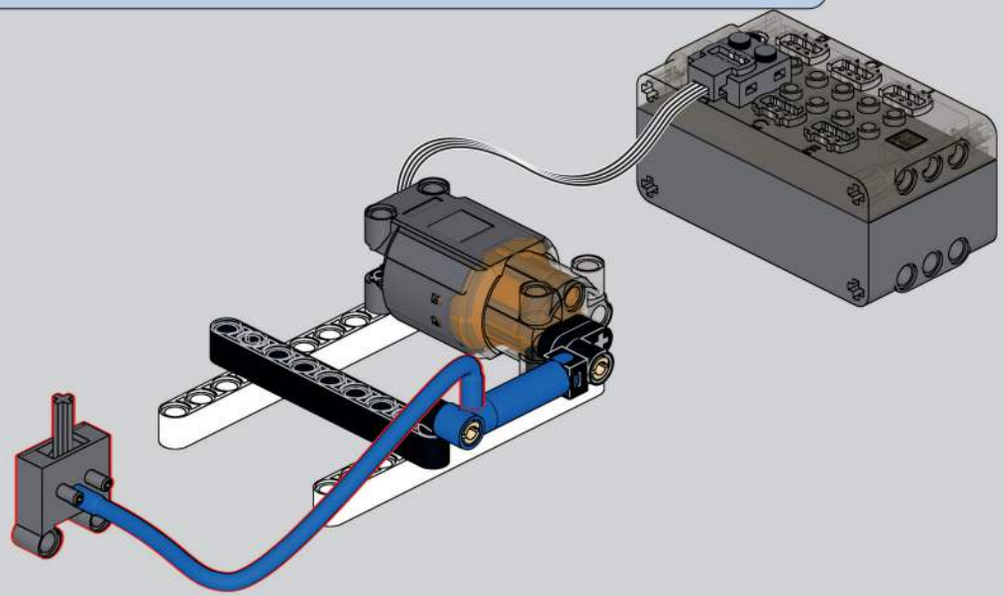

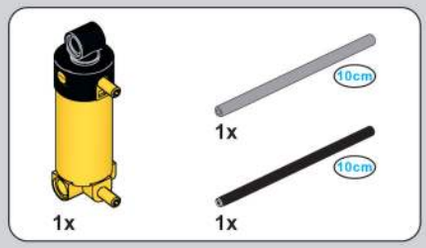

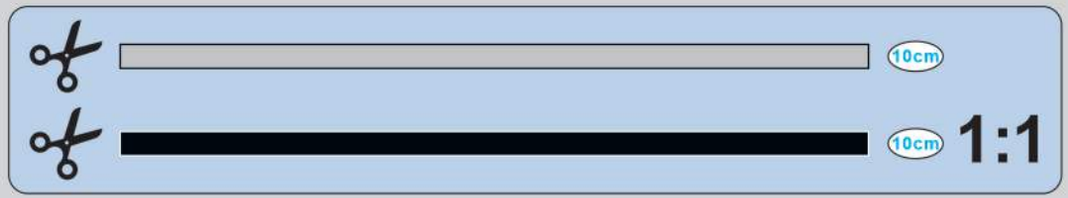

0-7

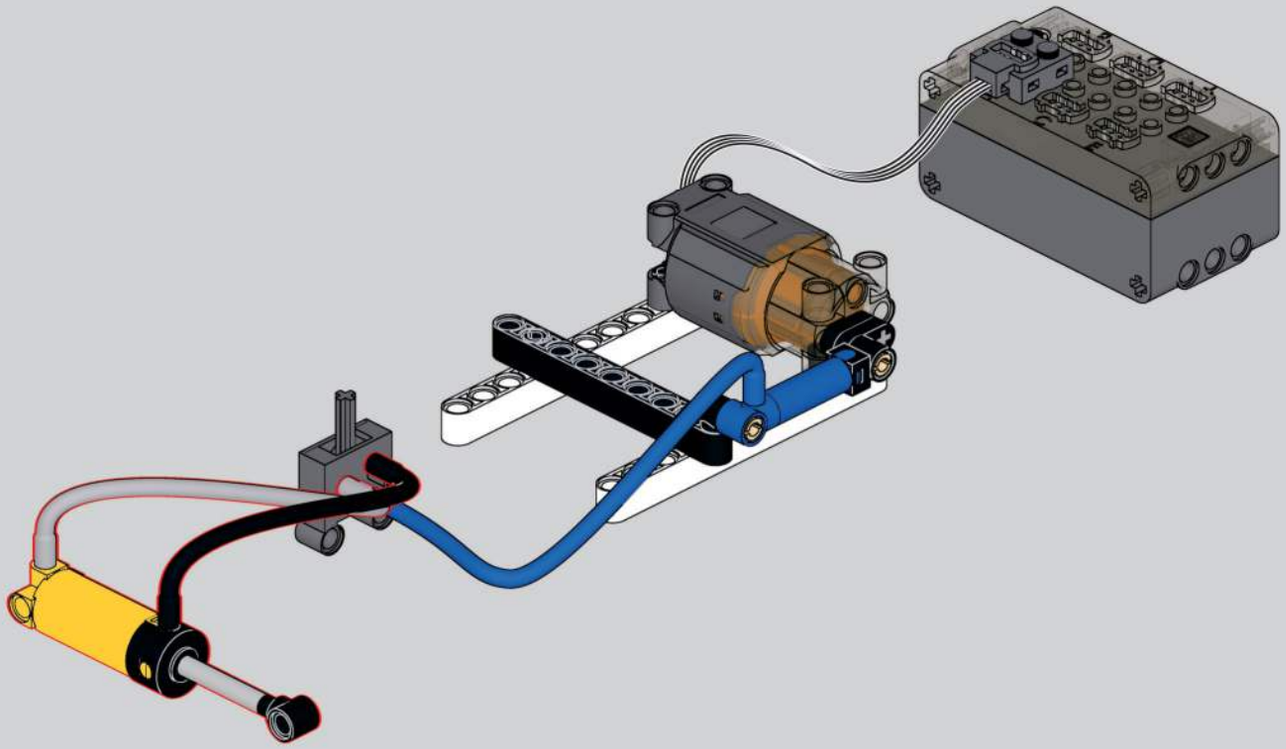

拼装前必须检测确认气泵，气挺杆，控制开关正常工作。测试完请将零件拆开，拼装需要用到。
Before assembly, the air pump, air lifter, and control switch must be checked and confirmed to work normally. Please disassemble the parts after testing.

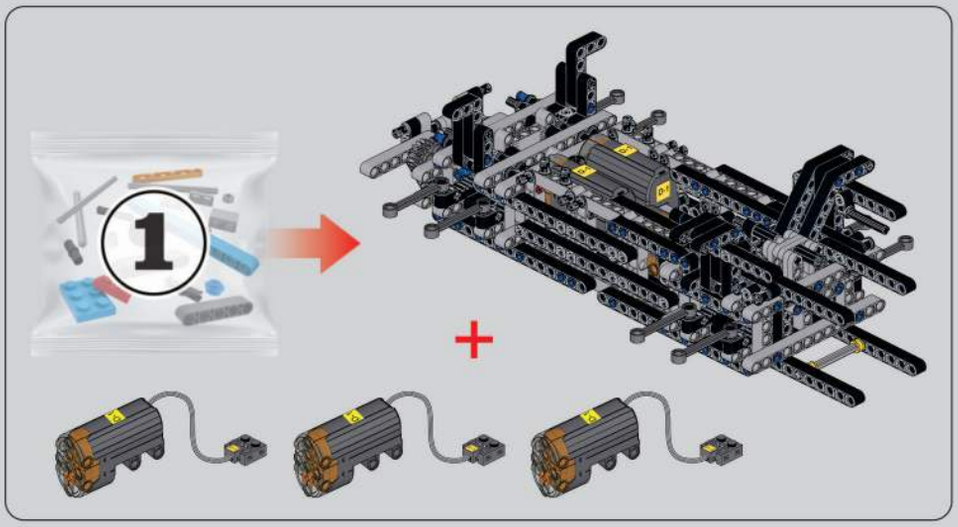

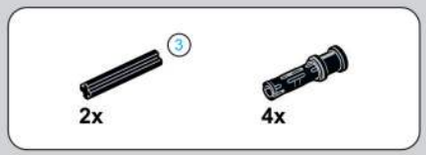

1

2

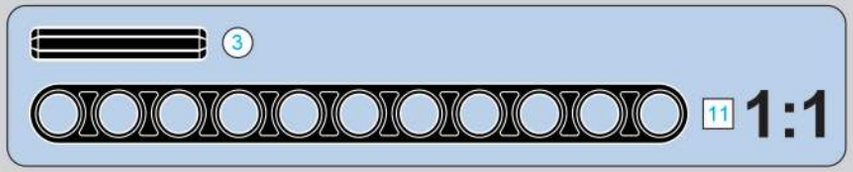

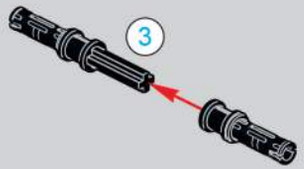

2x

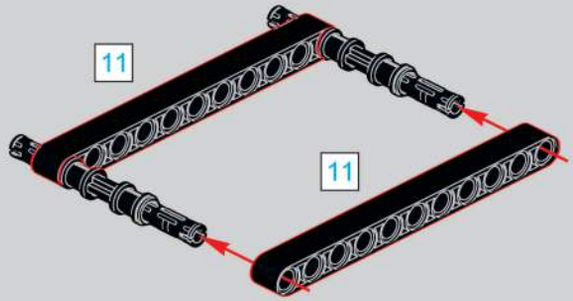

3

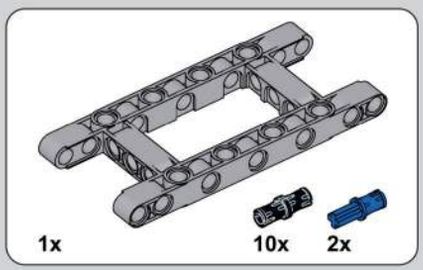

4

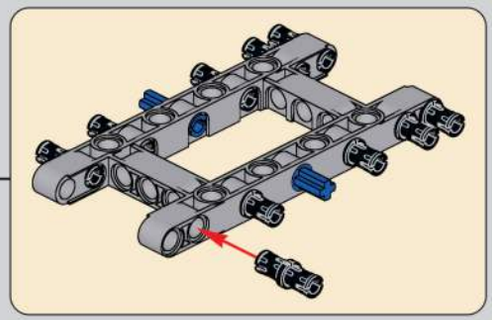

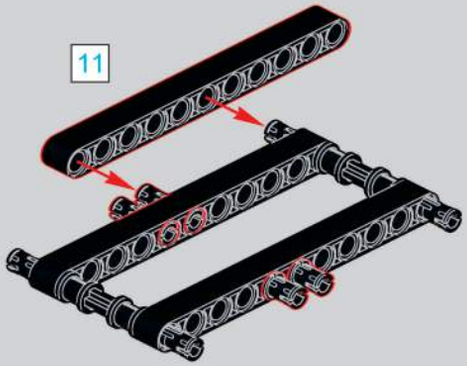

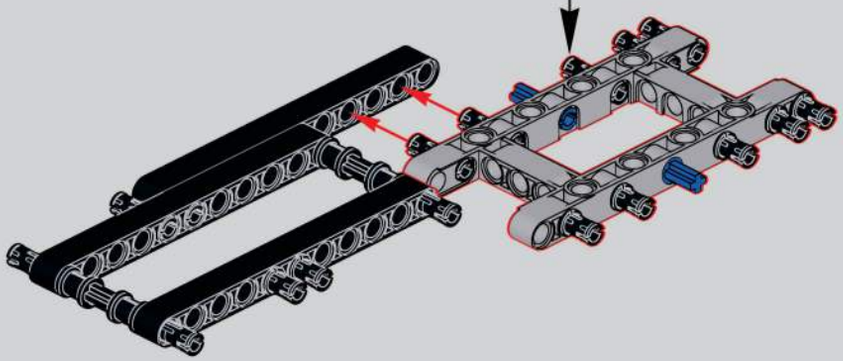

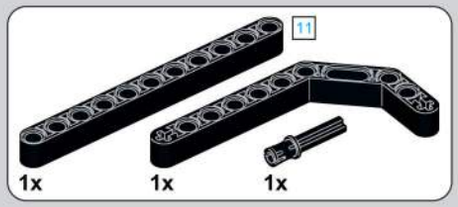

5

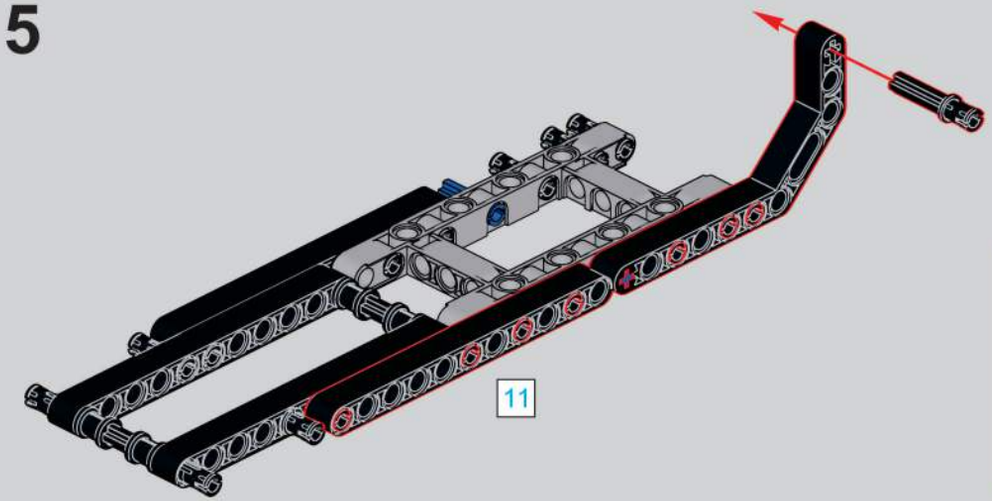

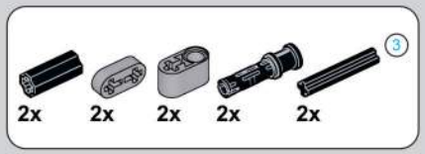

6

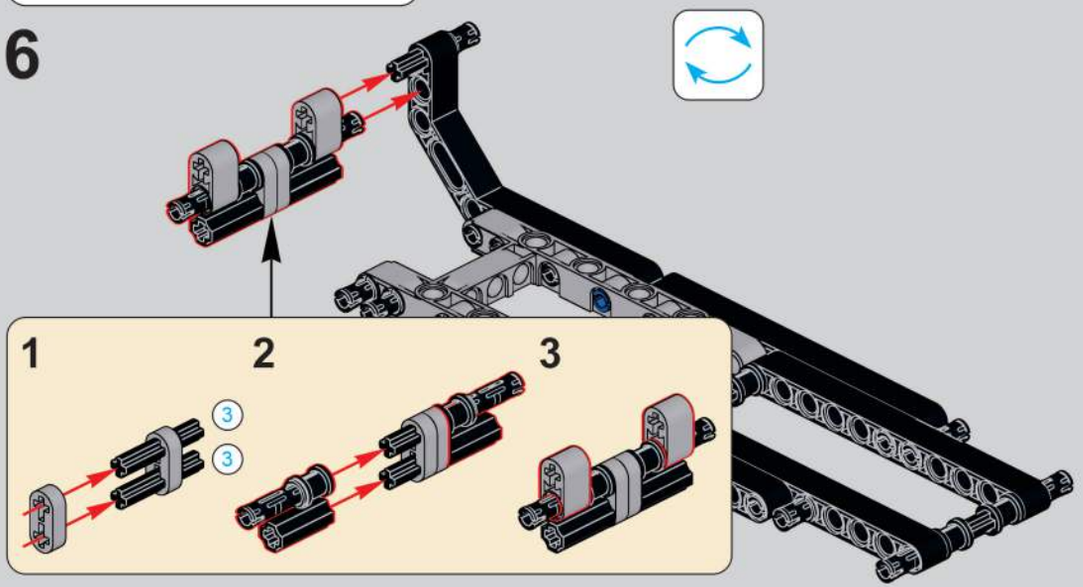

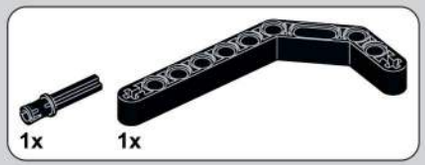

7

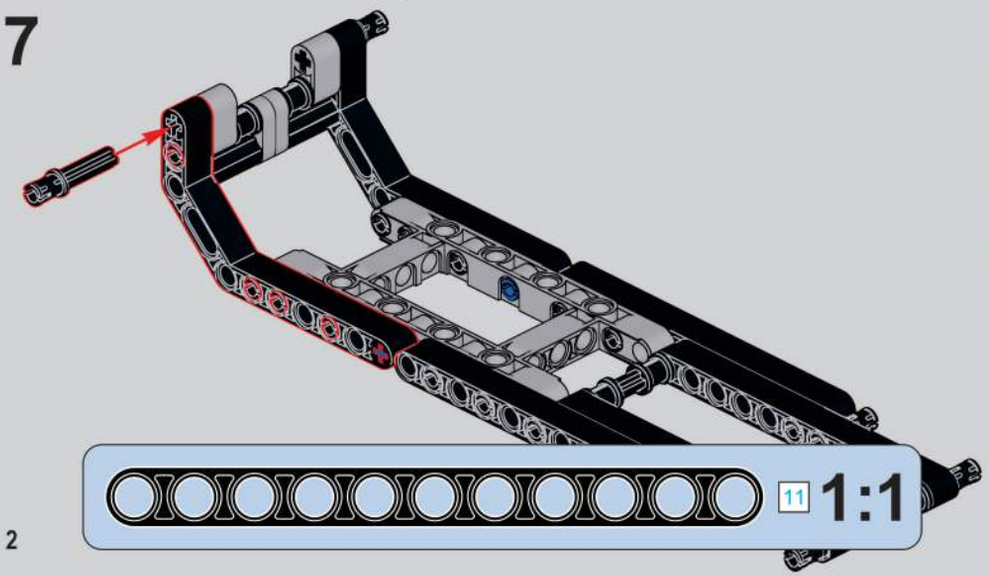

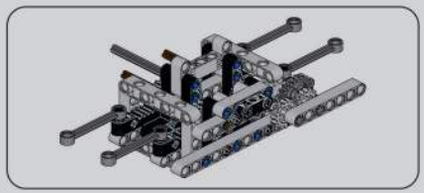

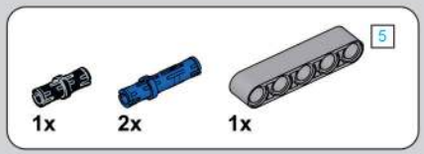

8

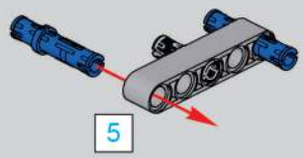

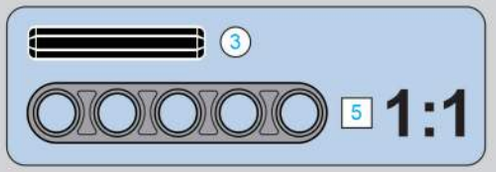

9

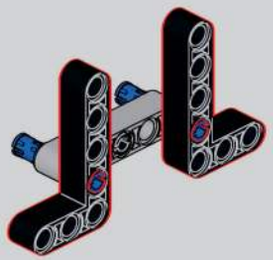

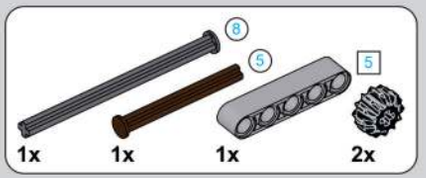
8
5
5
1x
1x
1x
2x

1:1

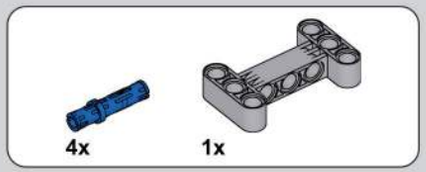
4x
1x

4x
4x

10

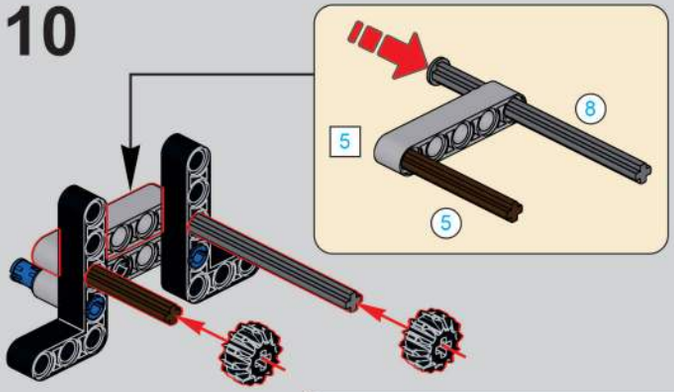
5
8
5

11

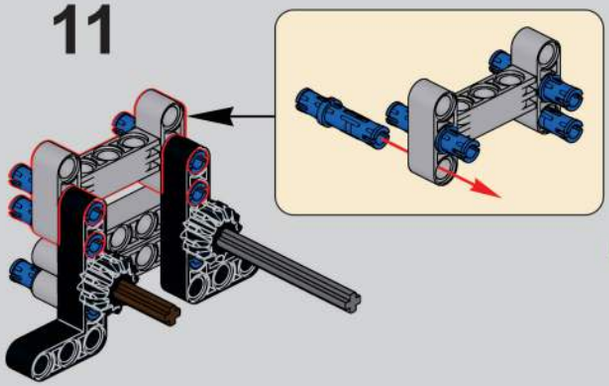

12

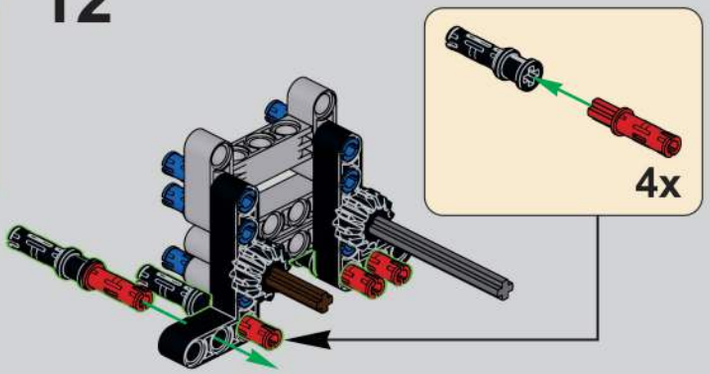
4x

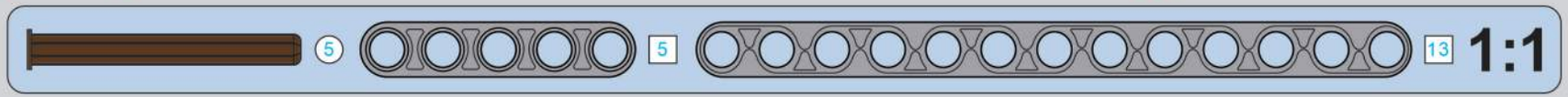
5
5
13
1:1

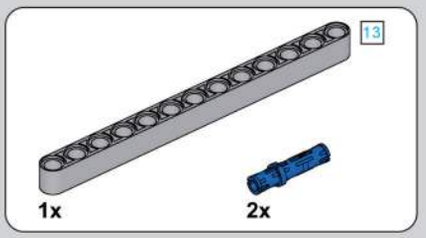
13
1x
2x

1x
2x
2x

13

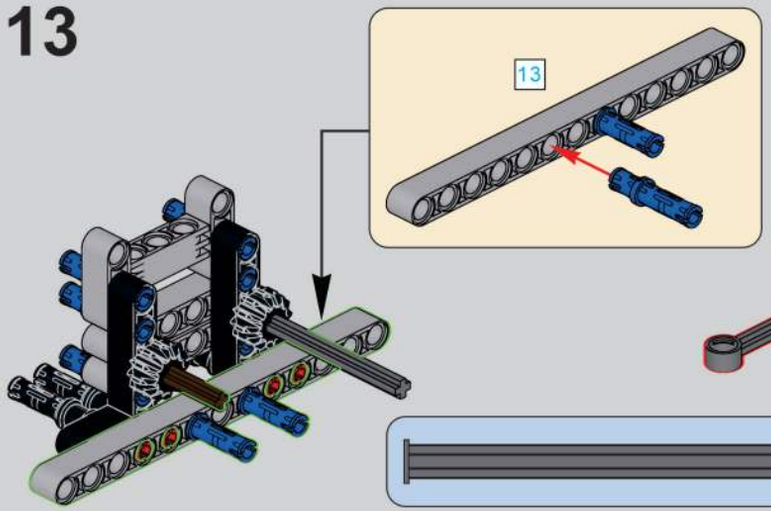
13

14

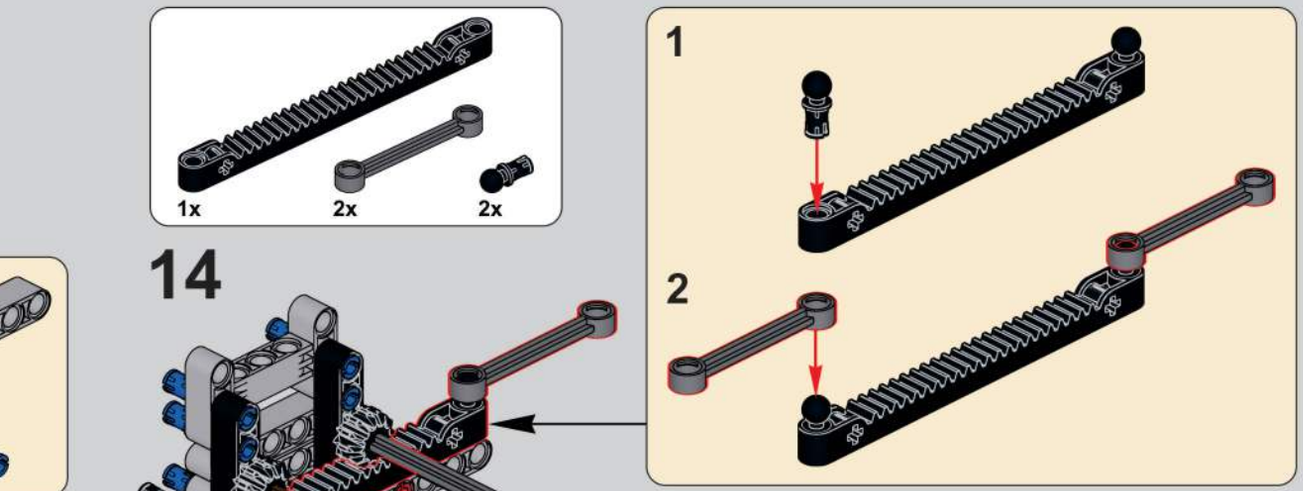
1
2

8
1:1

齿轮校正图
Gear Correction Diagram

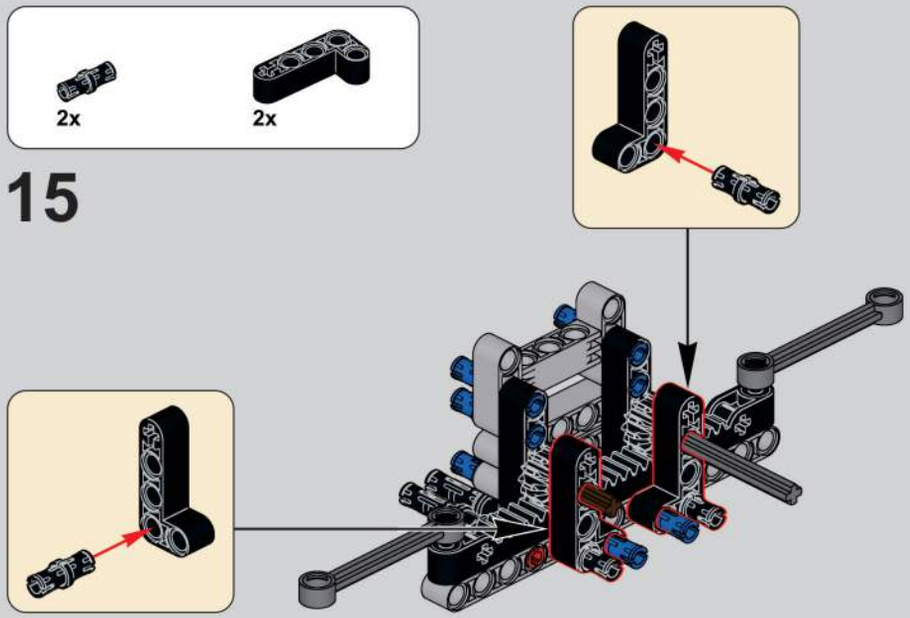
2x
2x
15

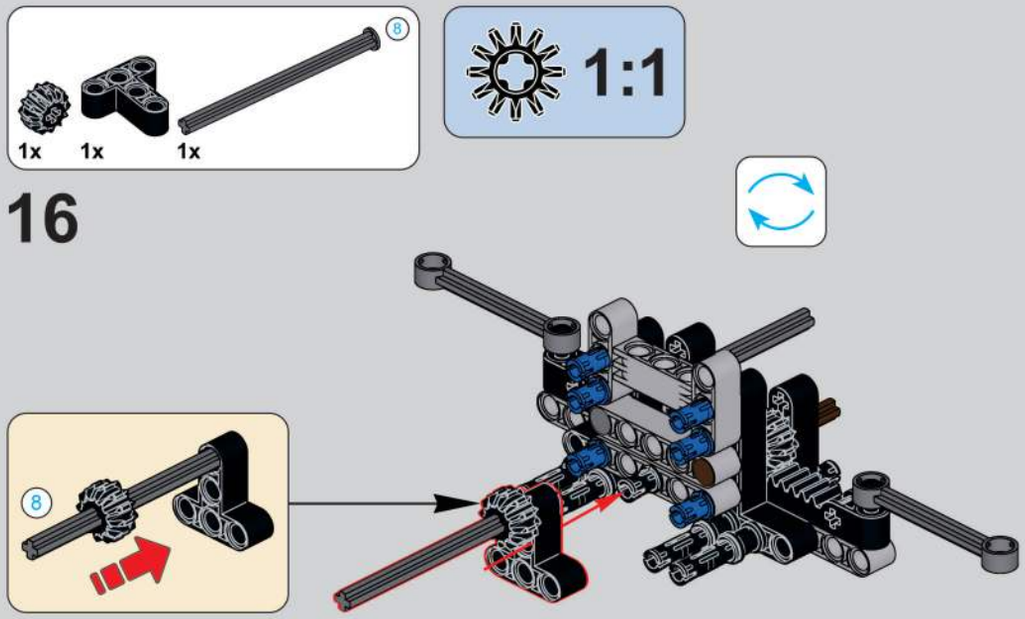
8
1x
1x
1x
1:1
16
8

5
8
13
1:1

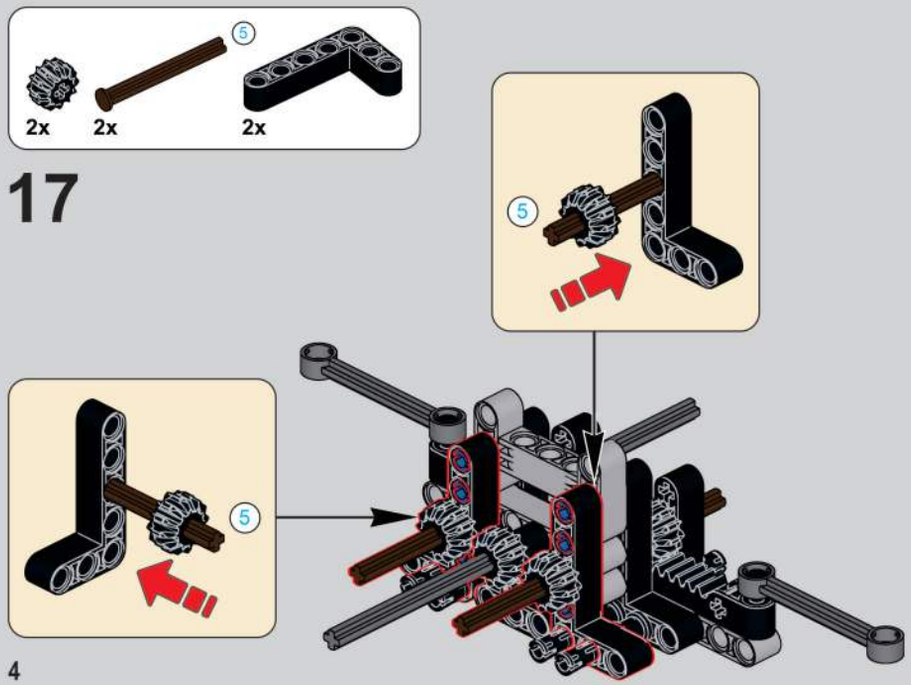
5
2x
2x
2x
17
5
5

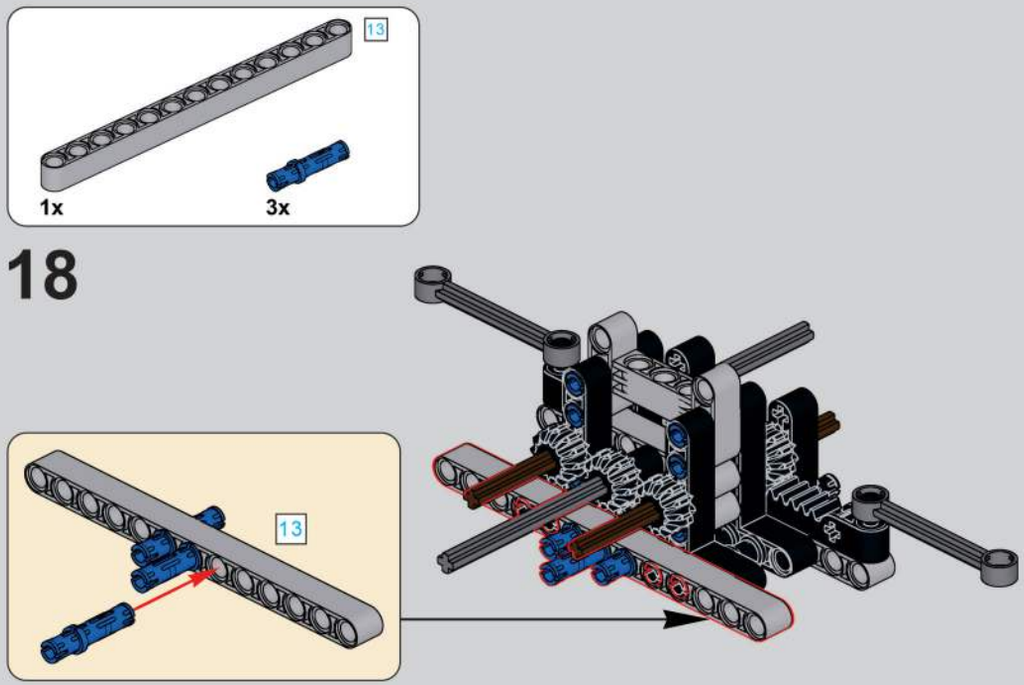
13
1x
3x
18
13

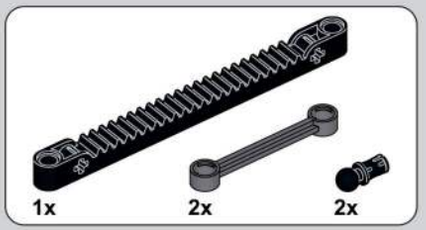
1x
2x
2x

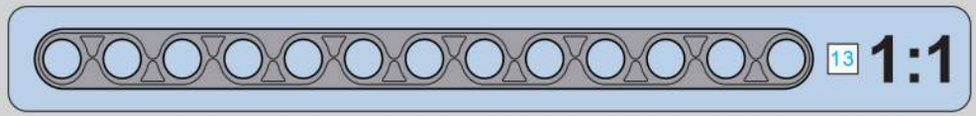
13
1:1

19

齿轮校正图
Gear Correction Diagram

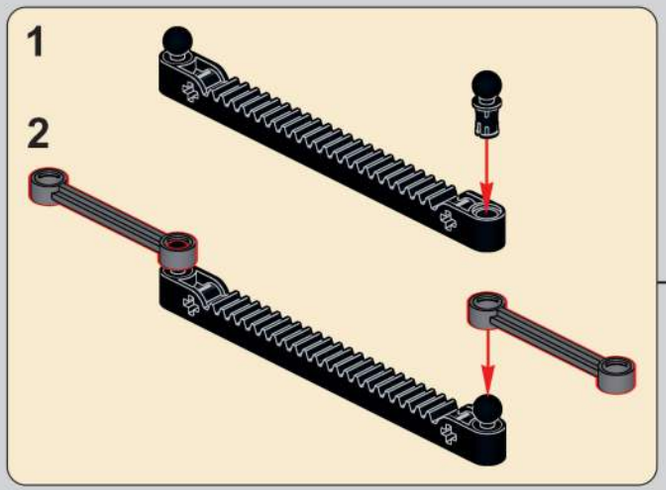
1
2

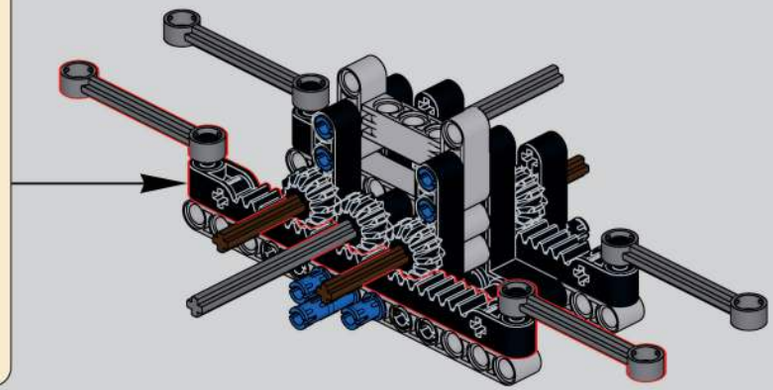

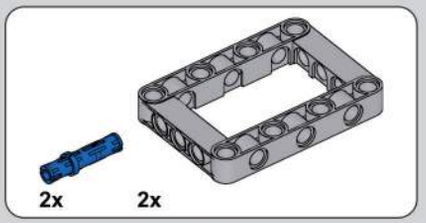
2x
2x

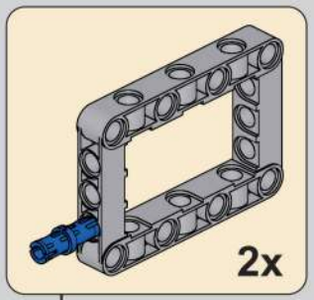
2x

20

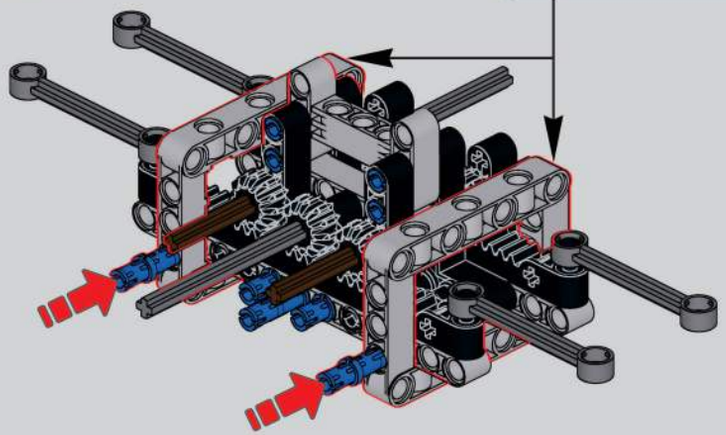

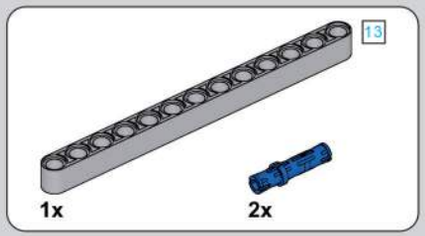
13
1x
2x

21

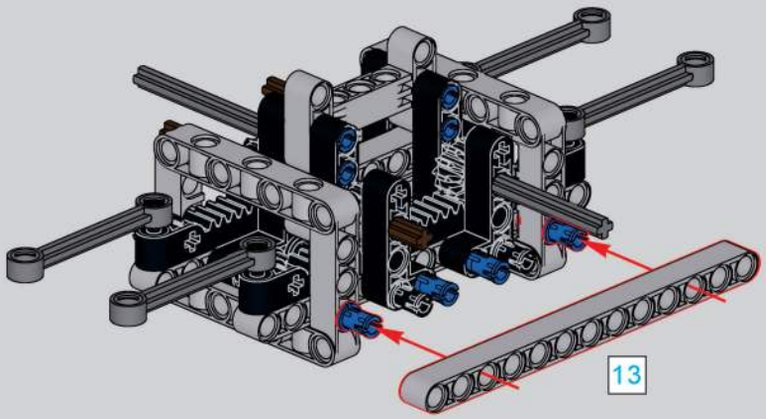
13

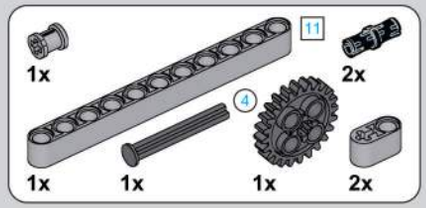

22

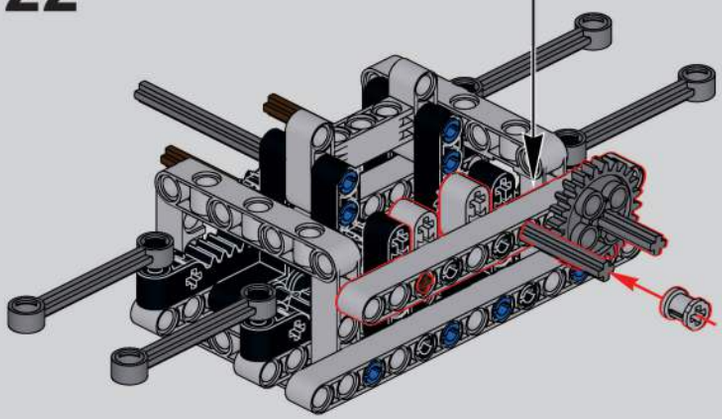

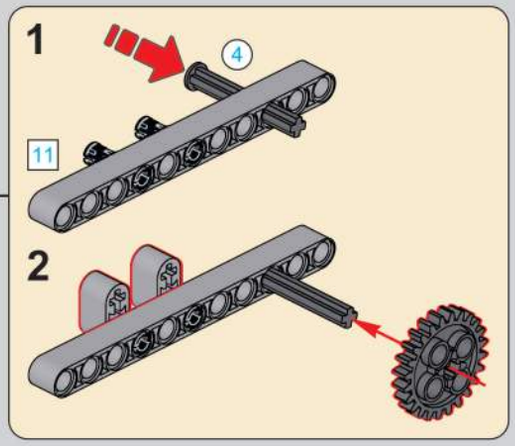

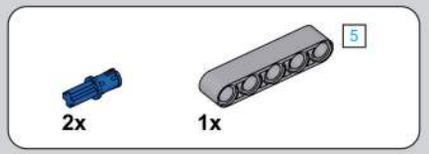

23

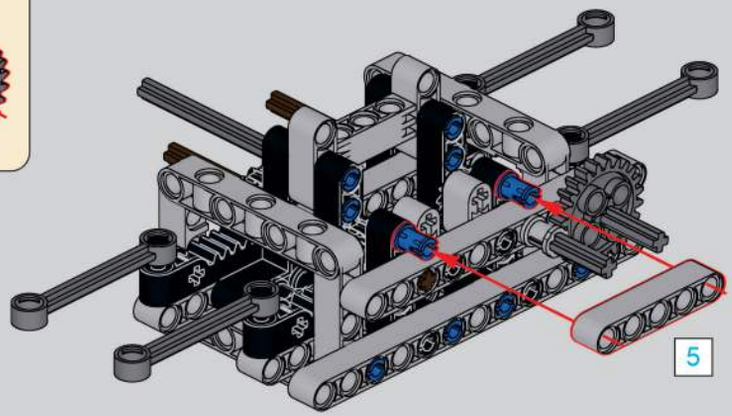

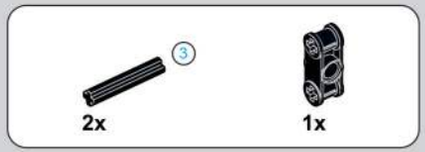

24

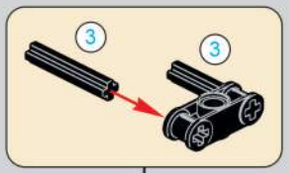

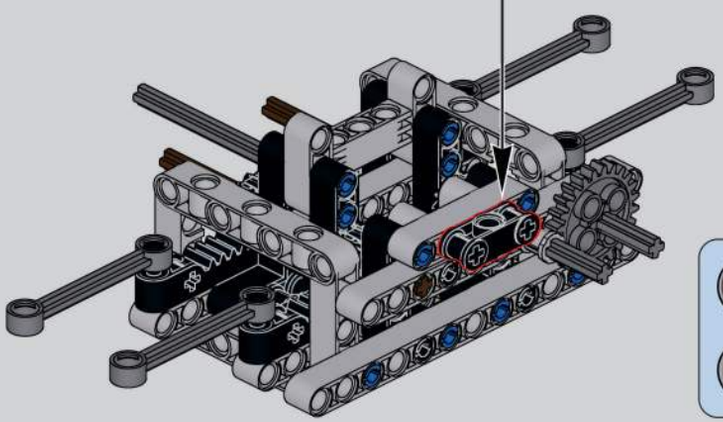

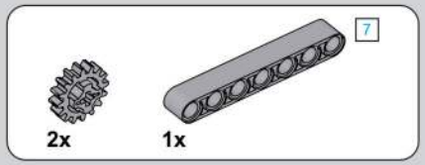

25

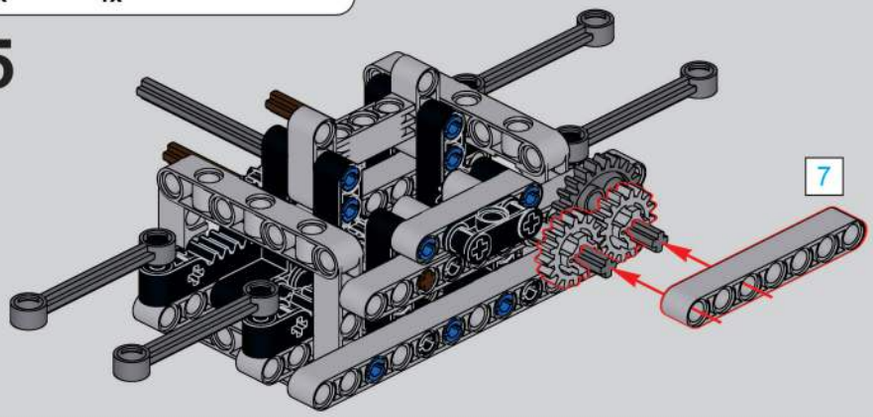

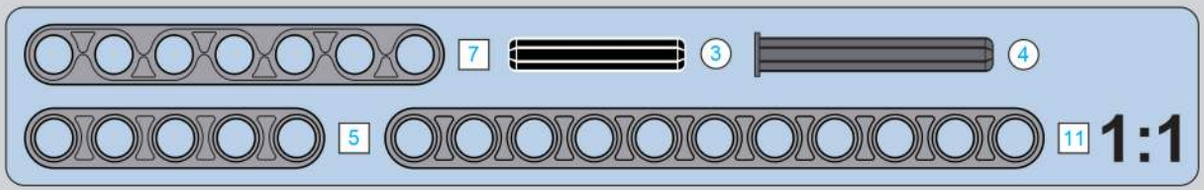

26

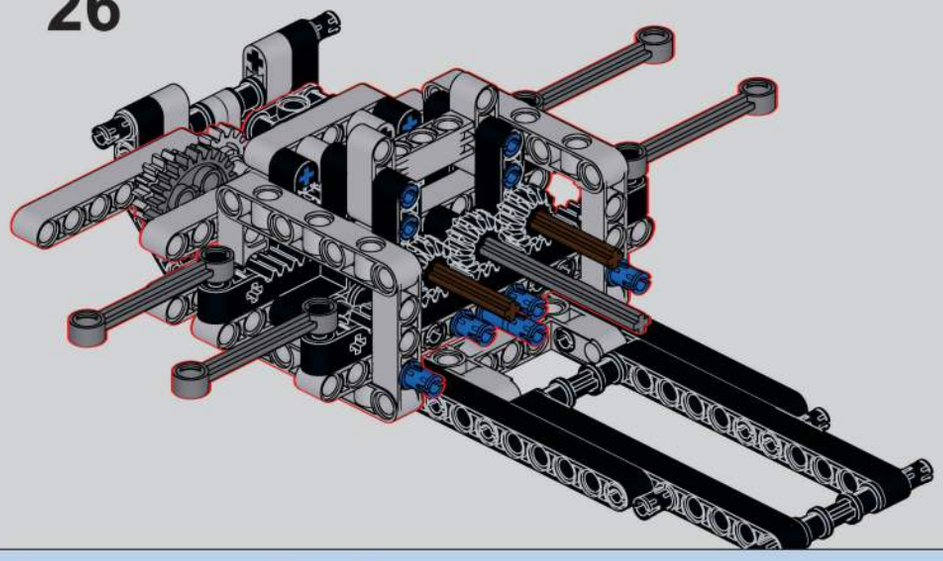

27

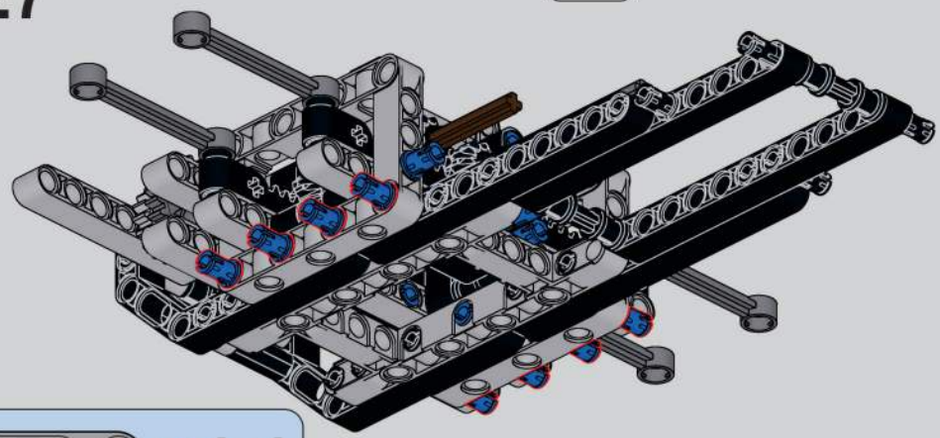

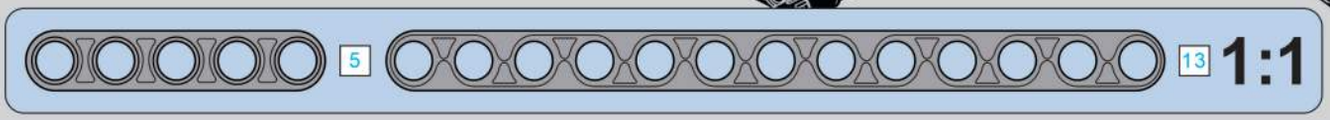

28

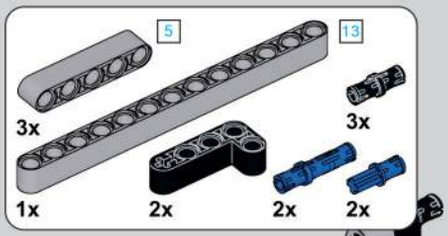

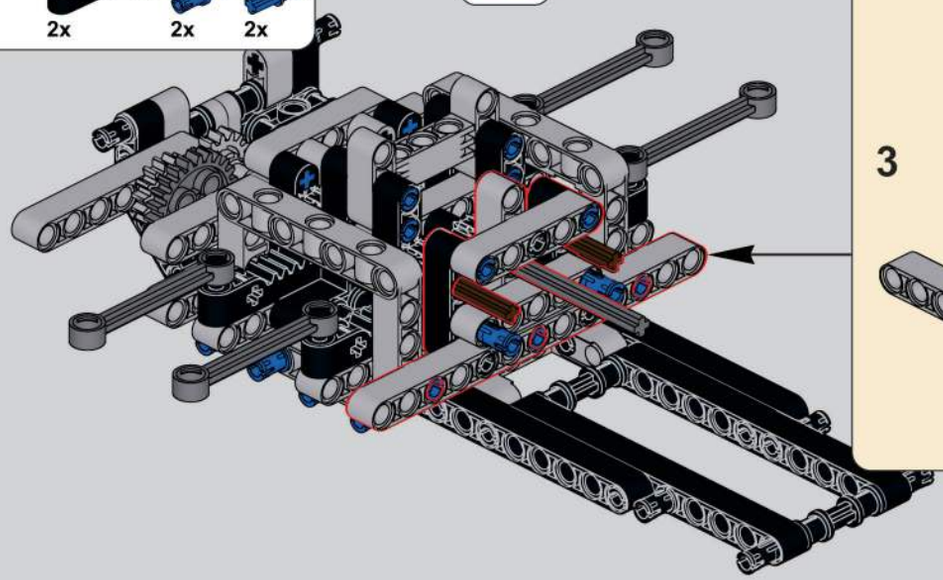

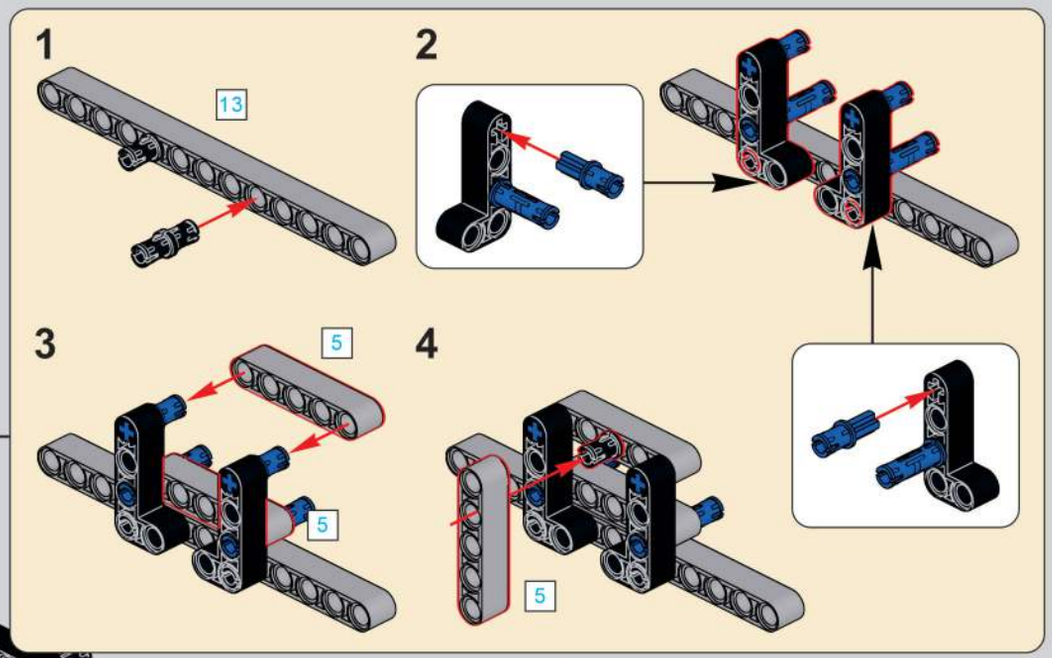

29

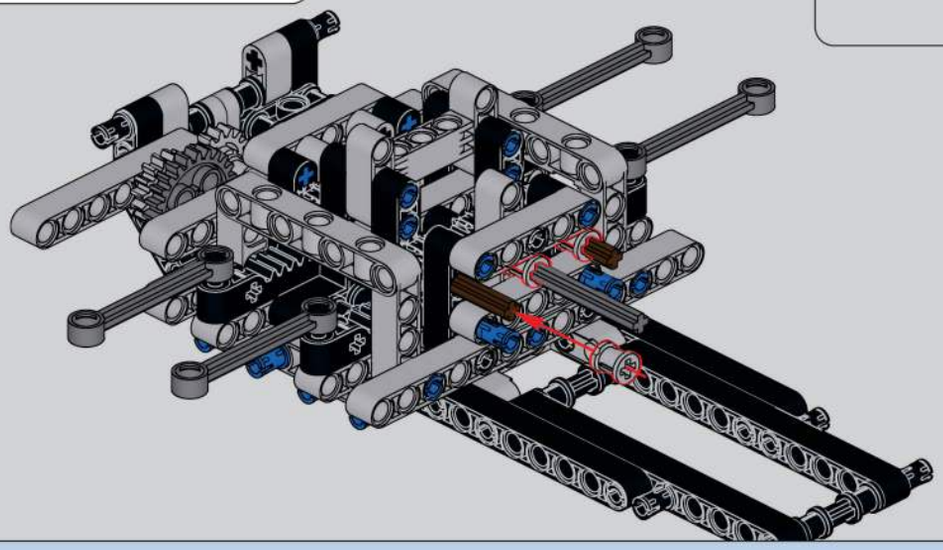

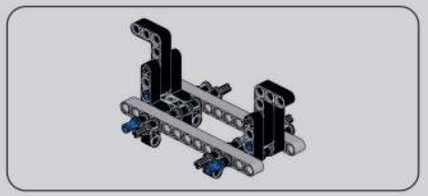

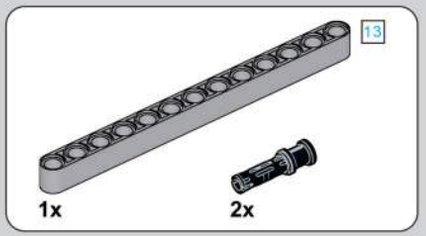

30

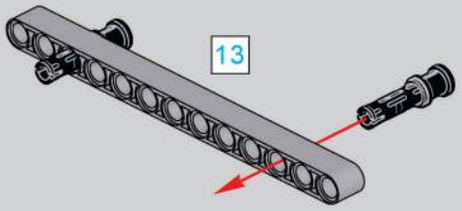

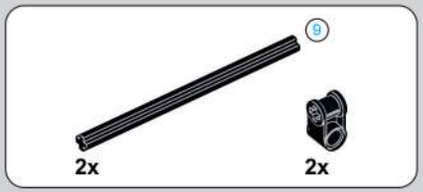

31

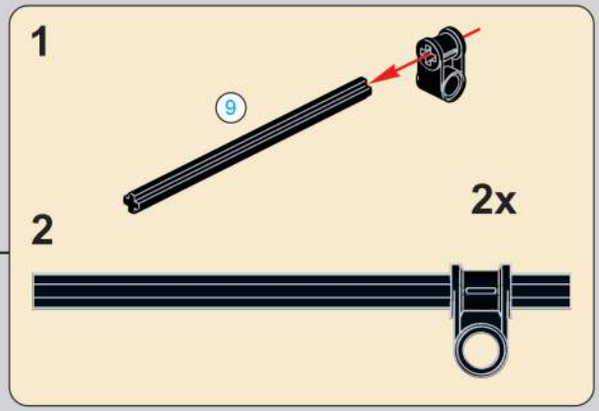

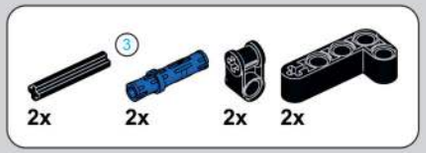

32

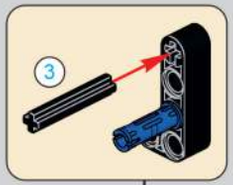

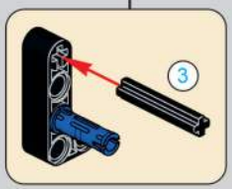

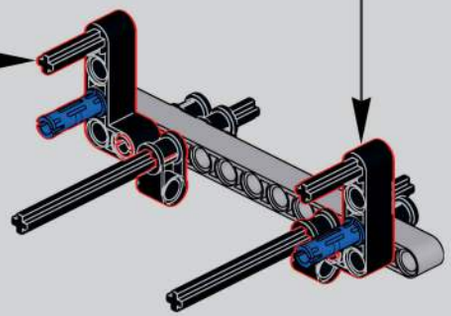

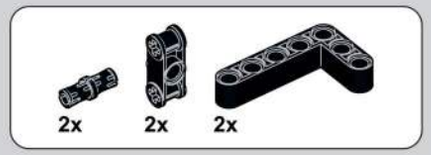

33

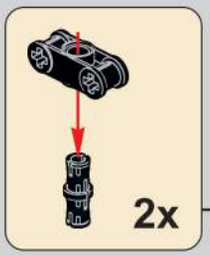

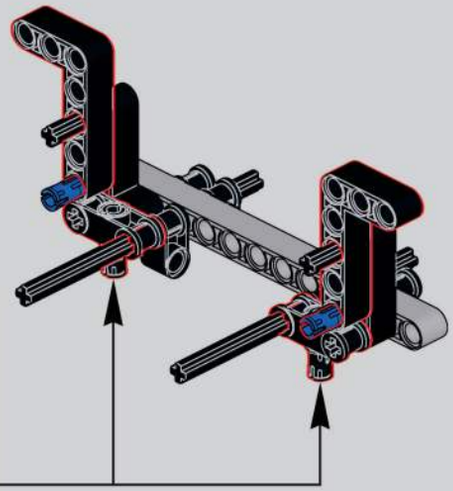

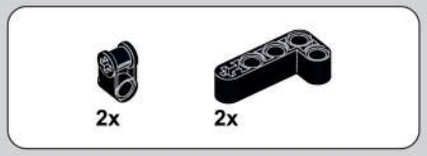

34

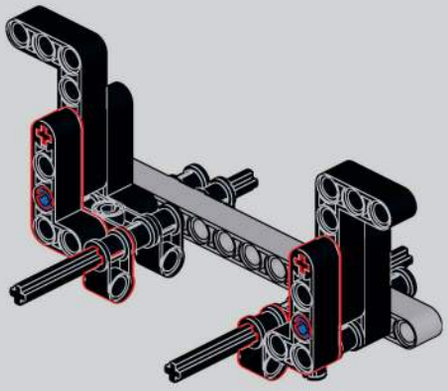

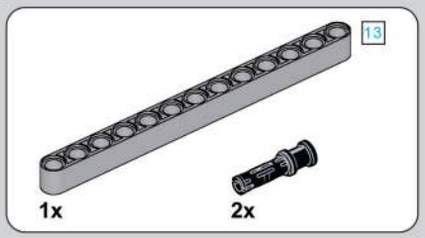

35

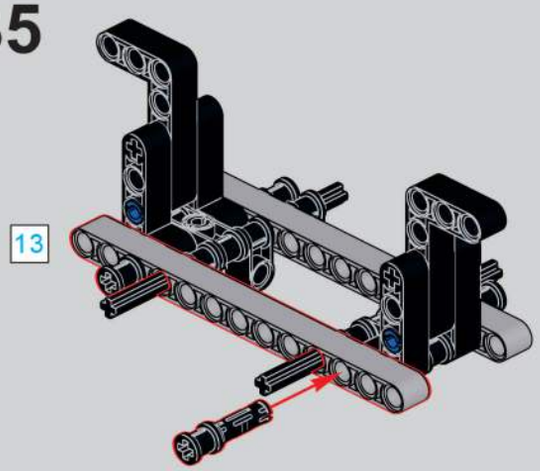

36

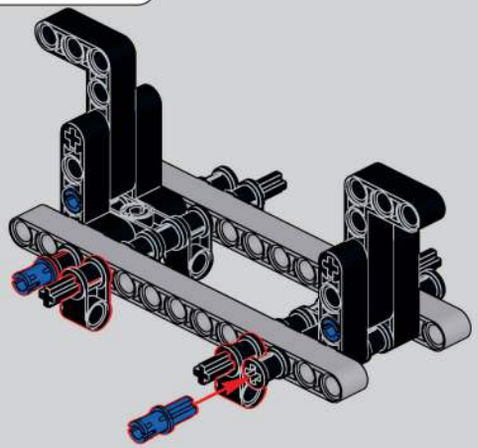

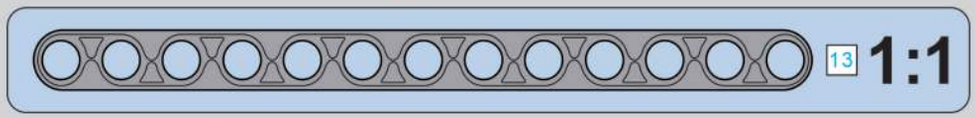

37

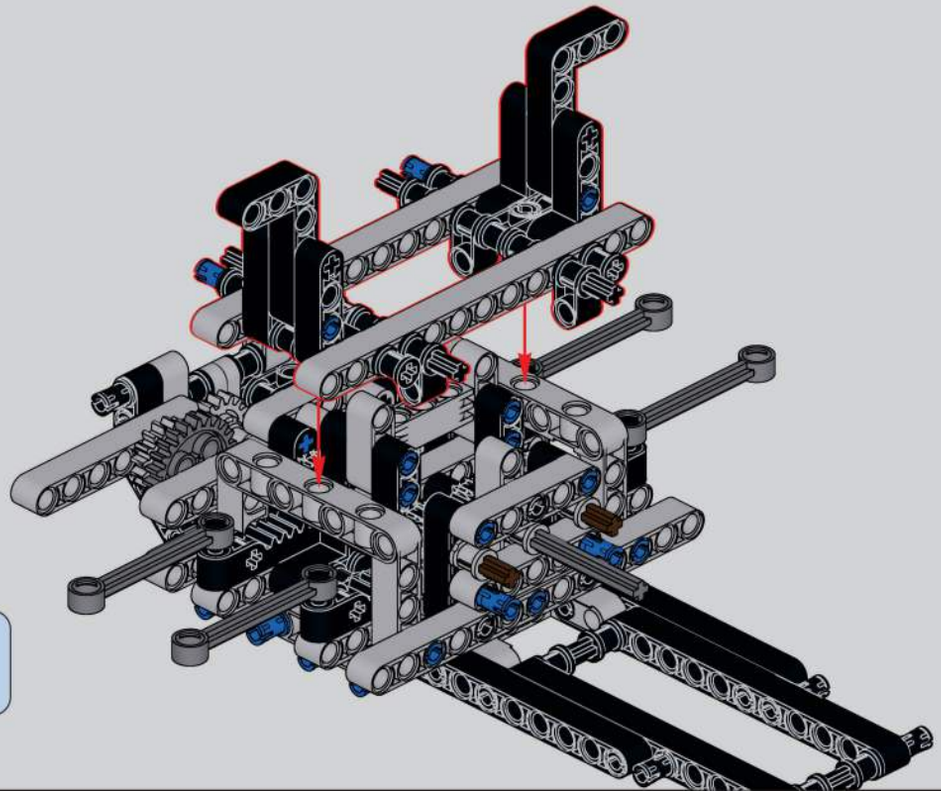

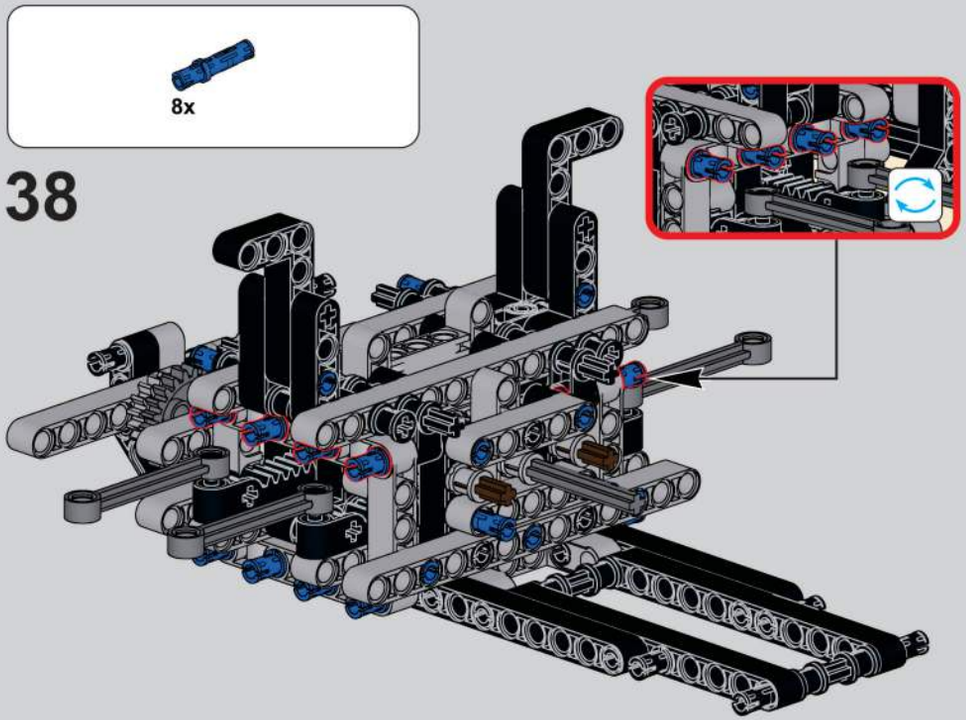

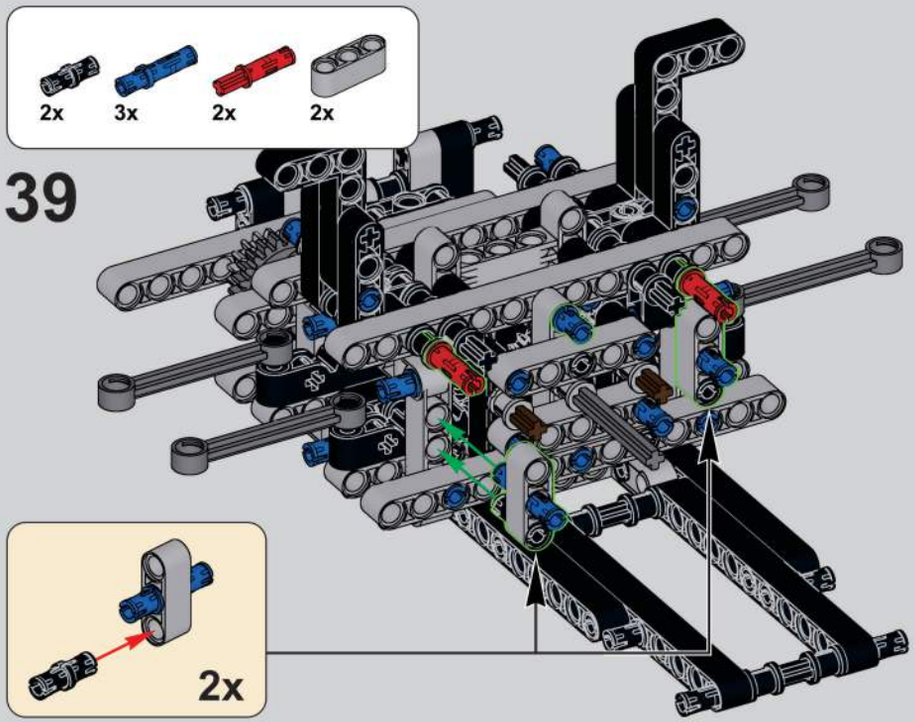

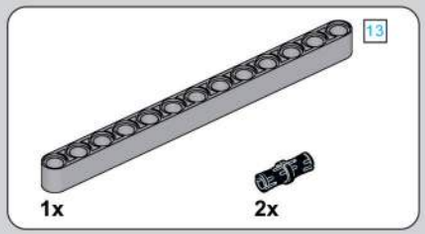

40

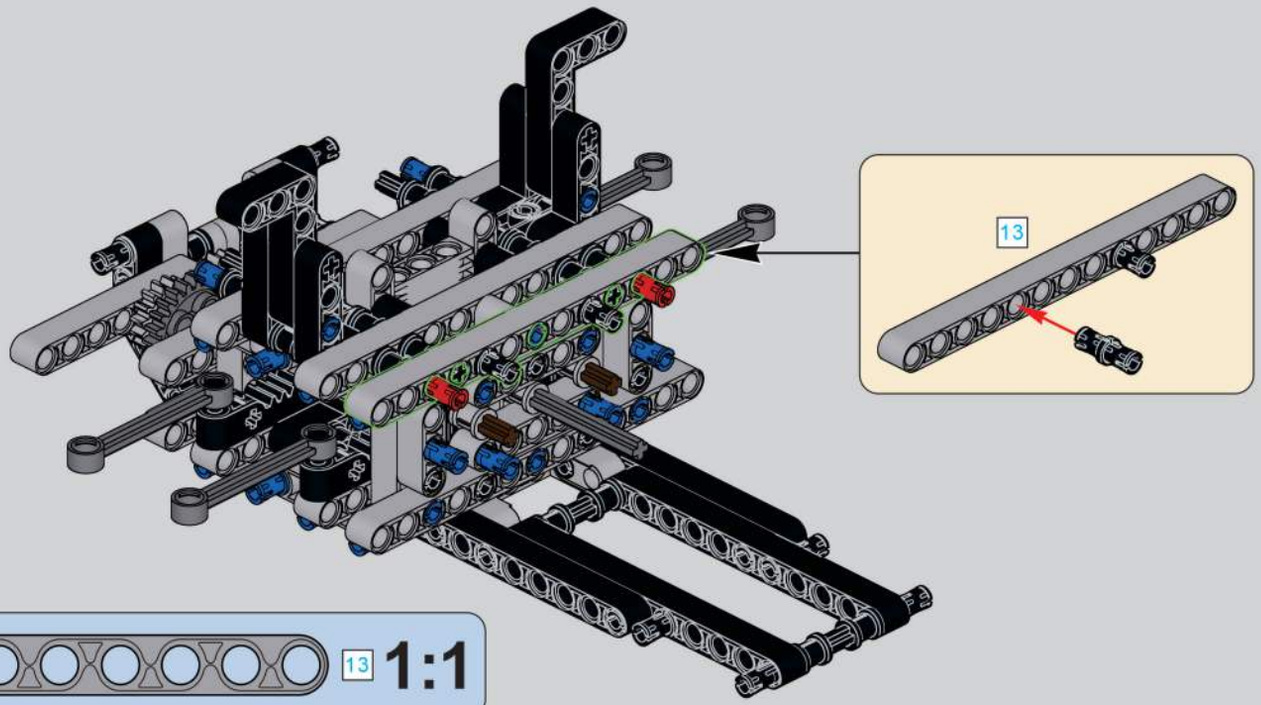

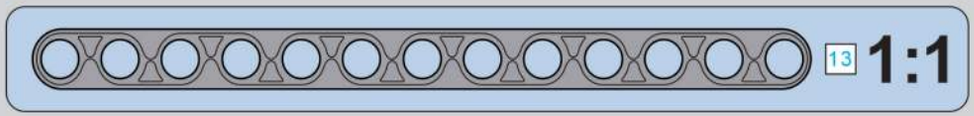

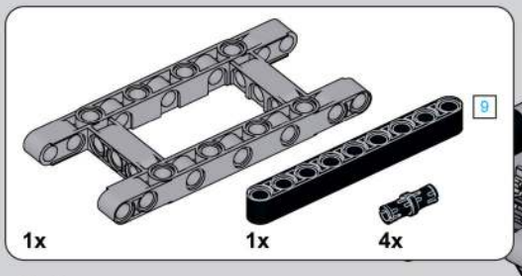

41

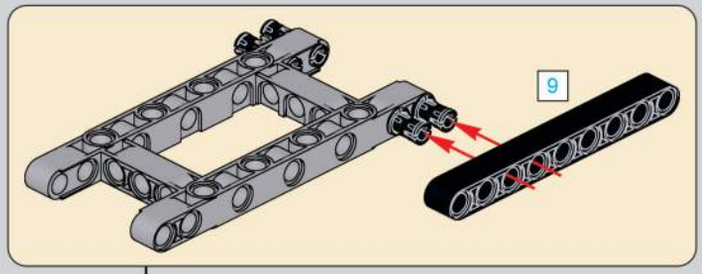

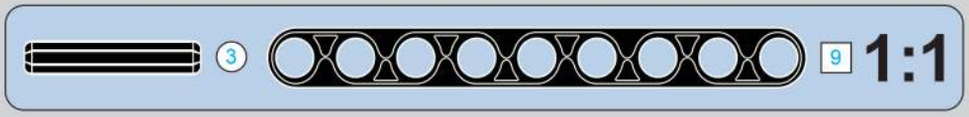

42

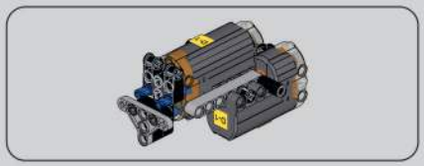

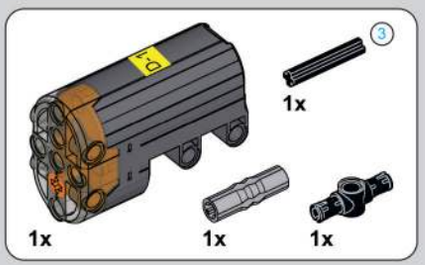

43

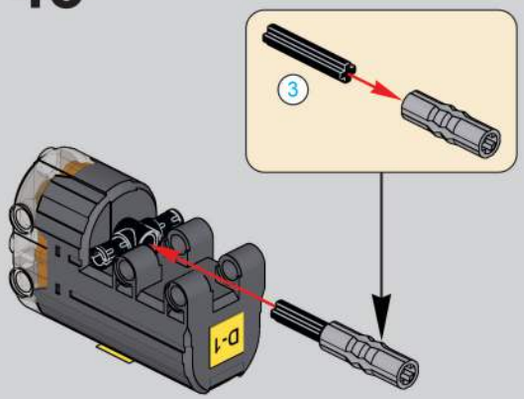

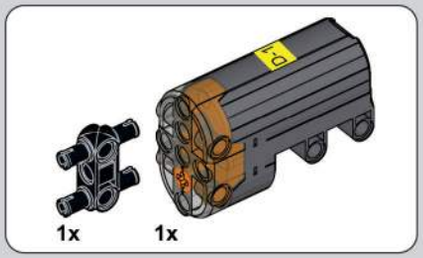

44

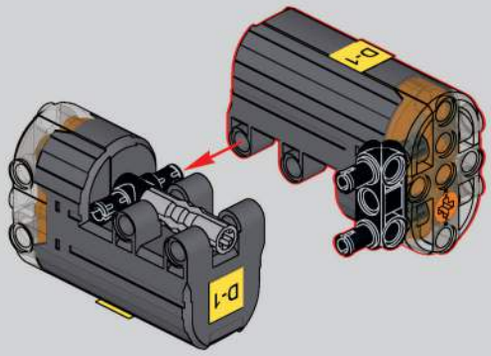

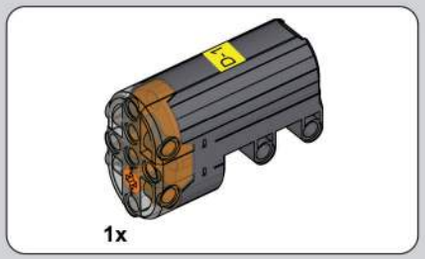

45

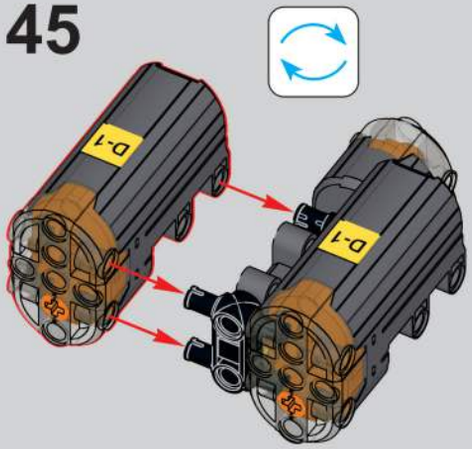

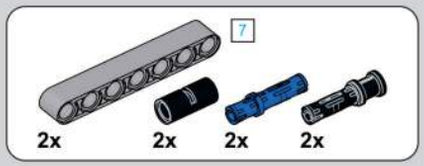

46

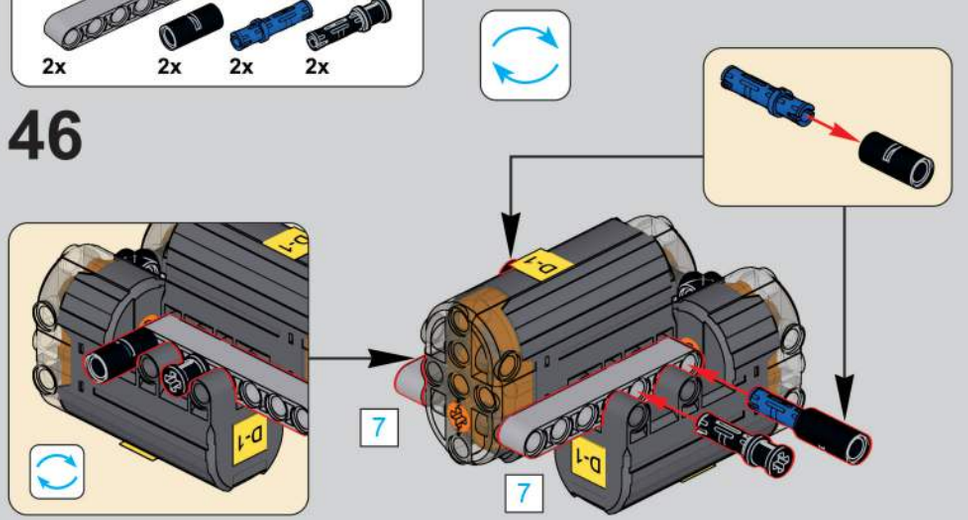

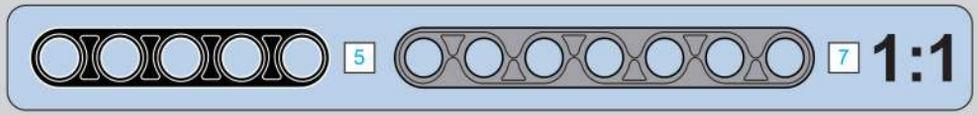

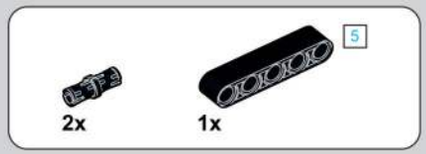

47

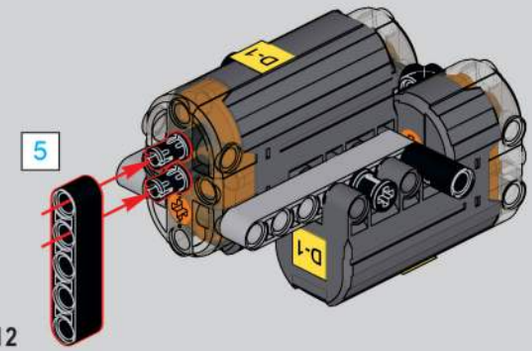

48

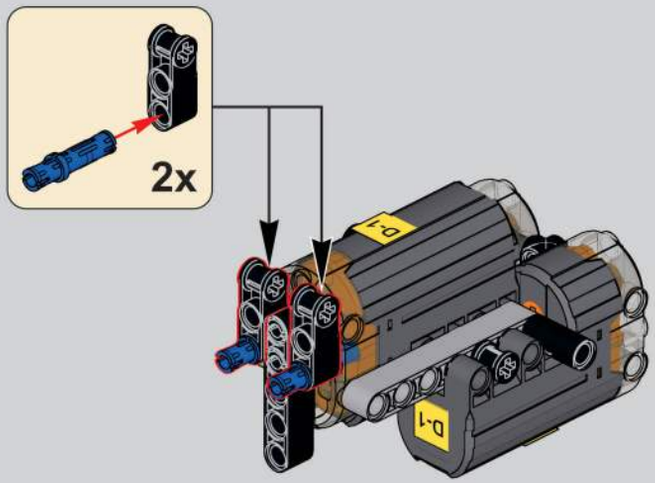

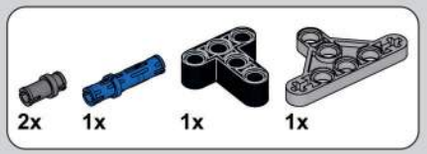

49

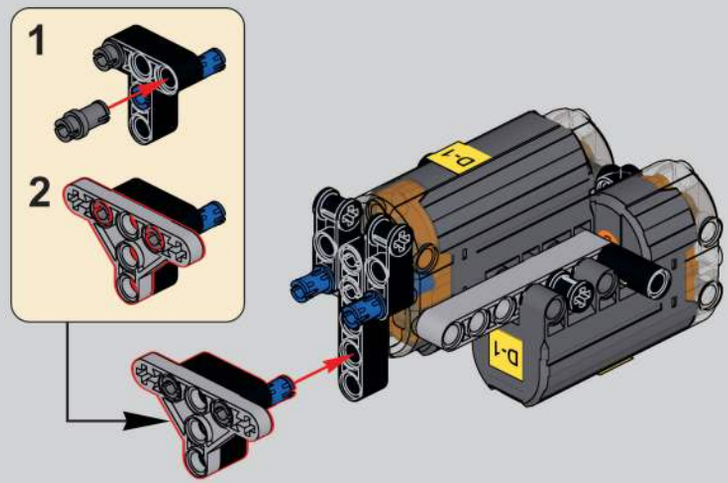

50

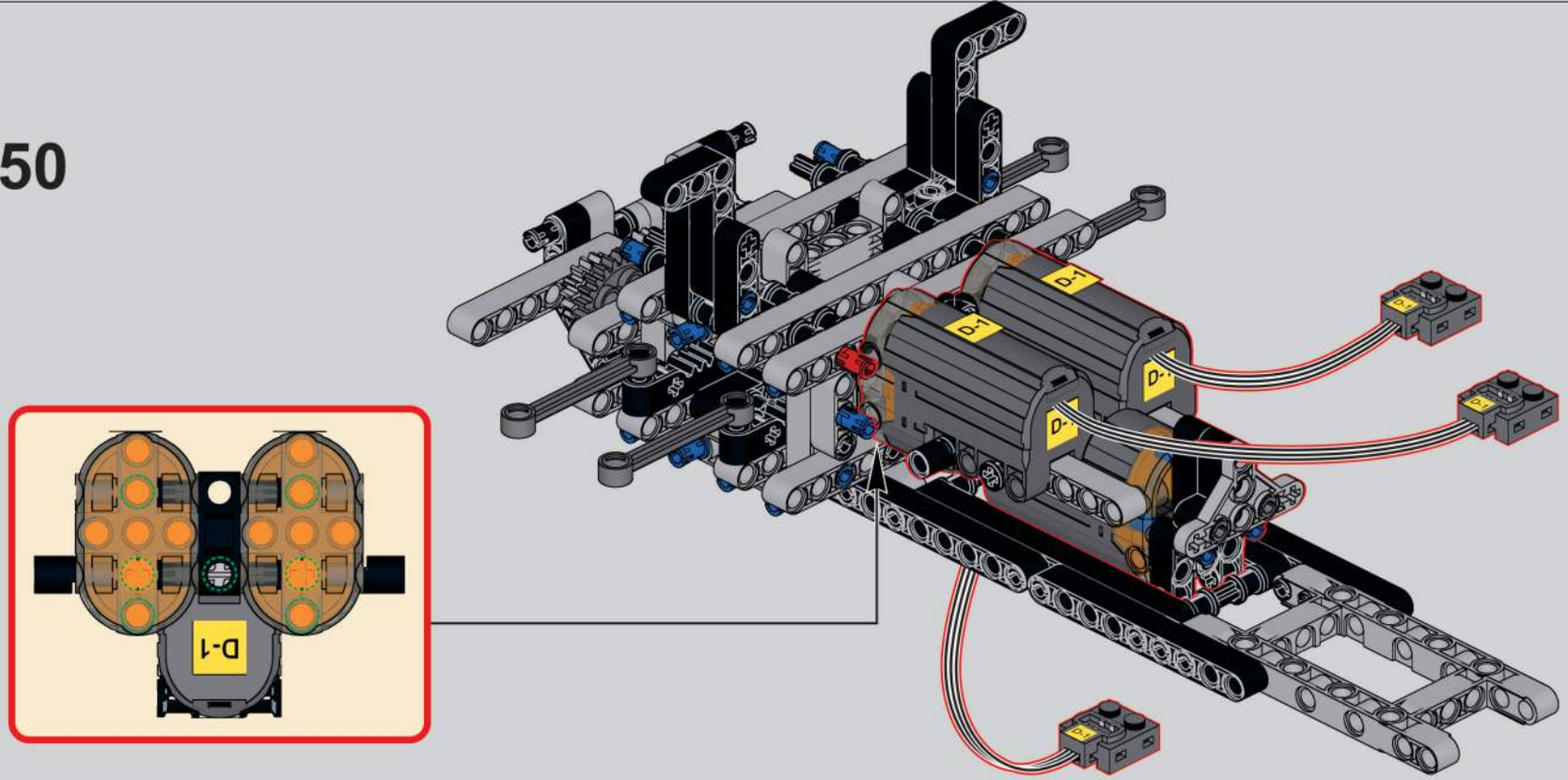

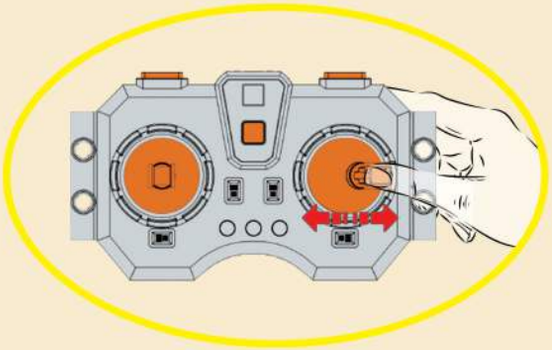

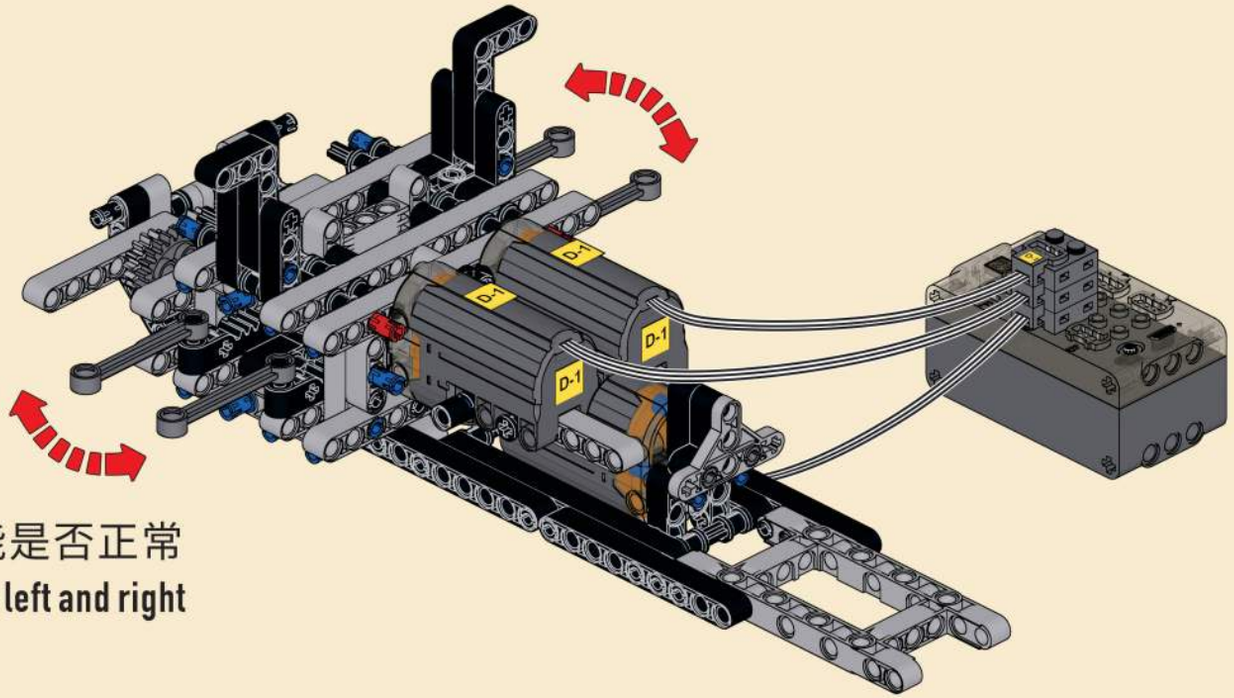

请连接模块，检测左右转向功能是否正常

Please connect the module to check if the left and right steering function is normal

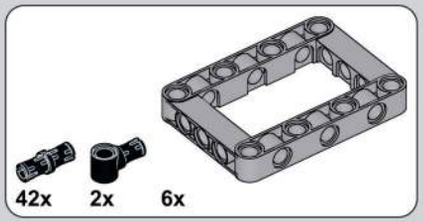

51

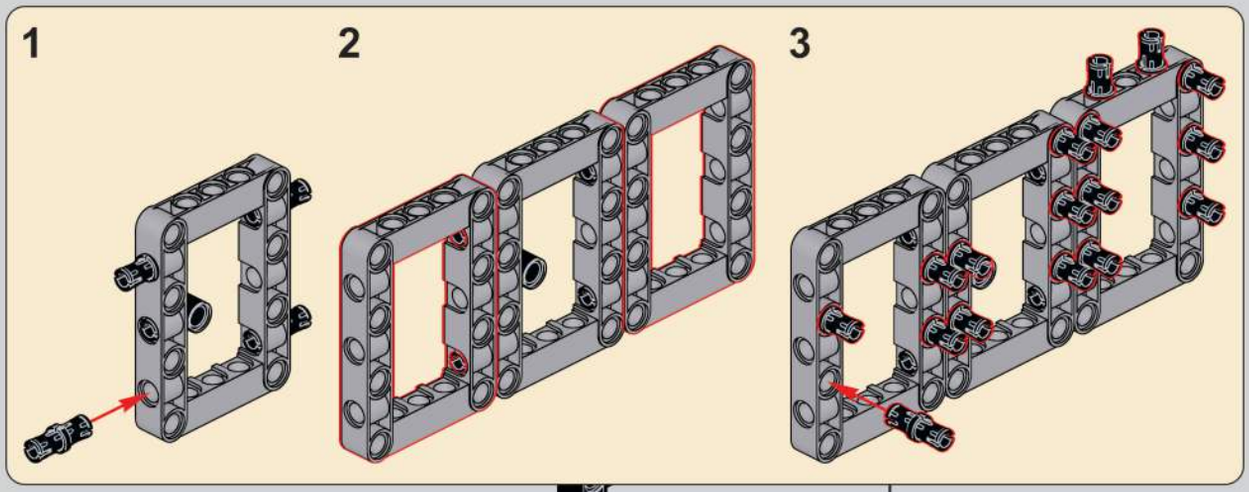

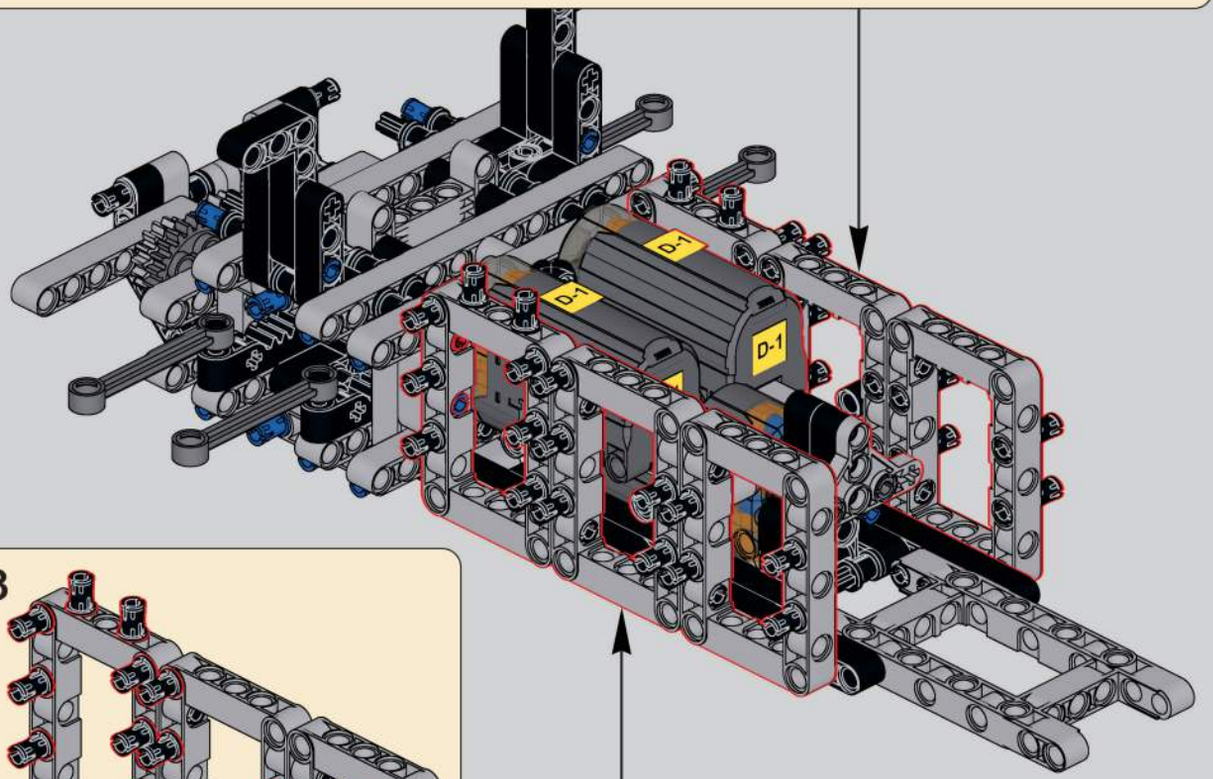

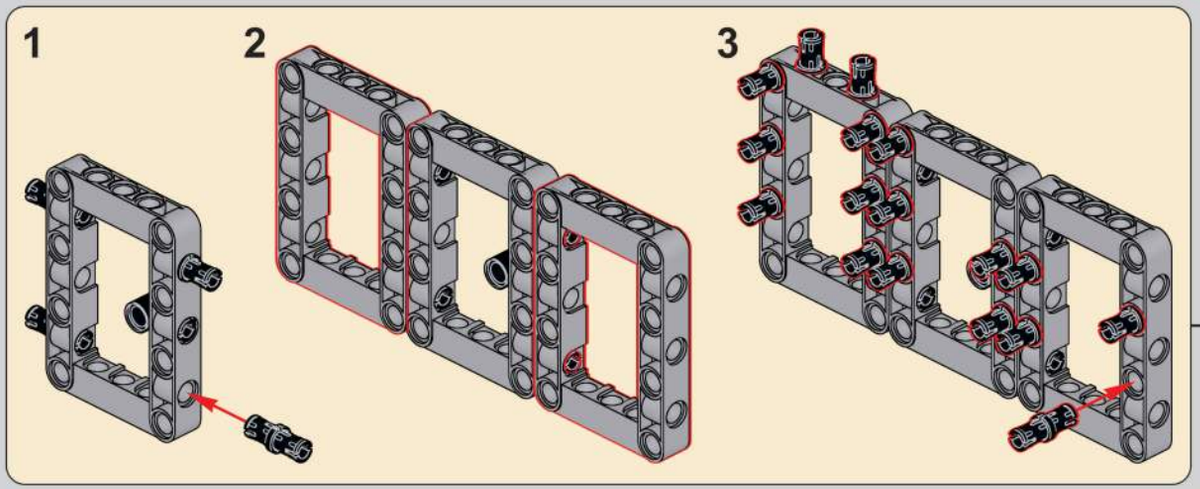

10x
4x

52

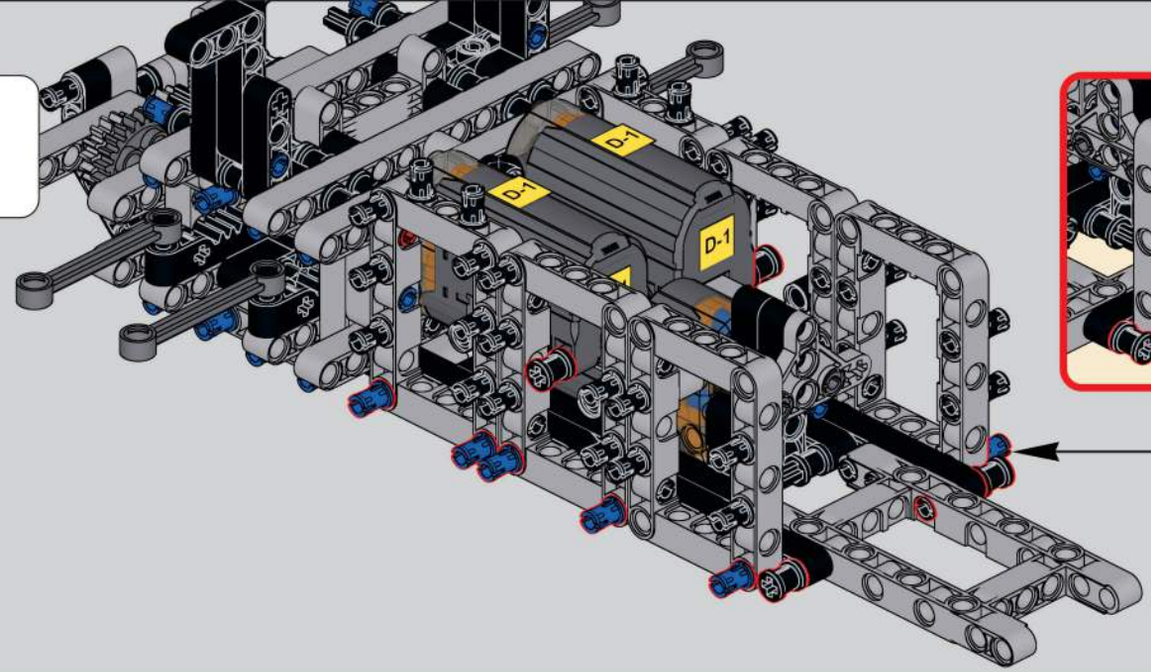
D-1
D-1
D-1

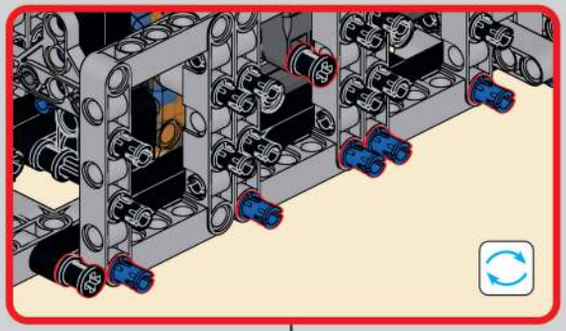

4
7
15
1:1

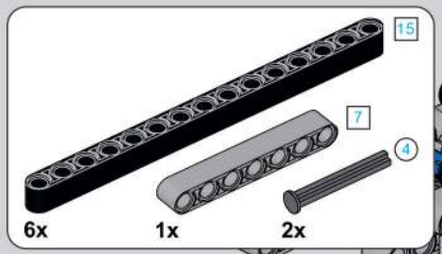
15
7
4
6x
1x
2x

53

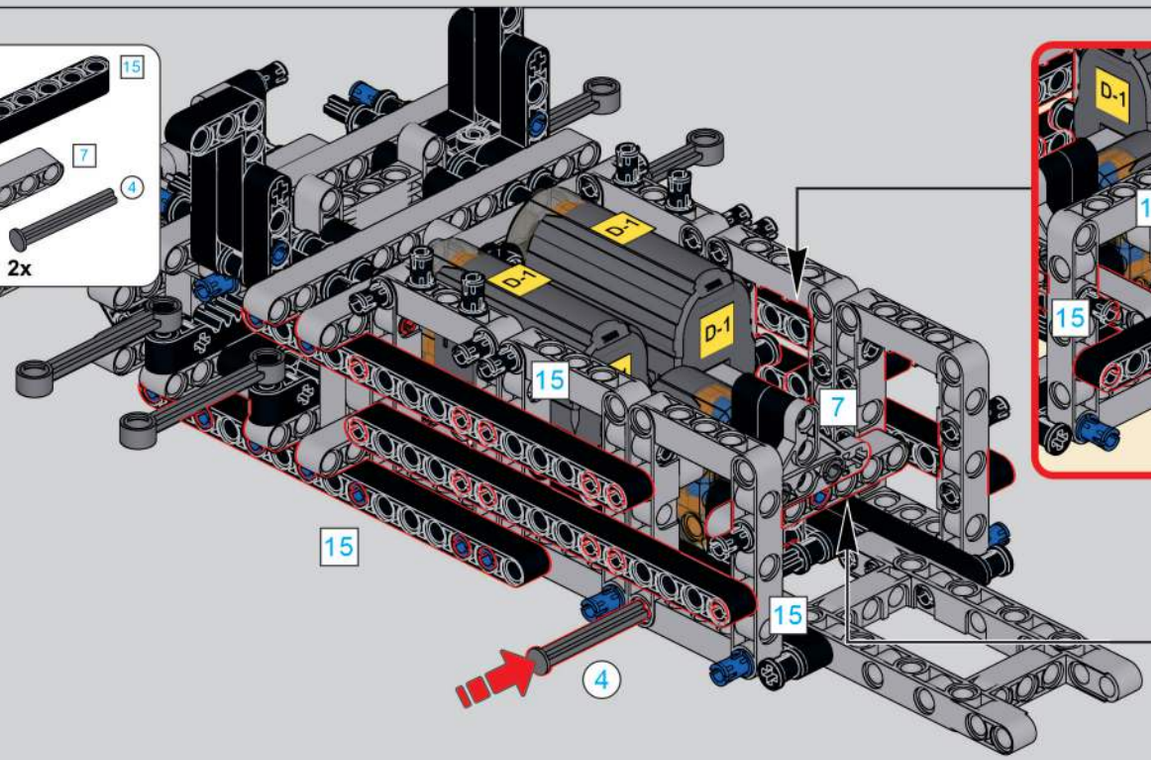
D-1
D-1
D-1
15
7
15
15
4

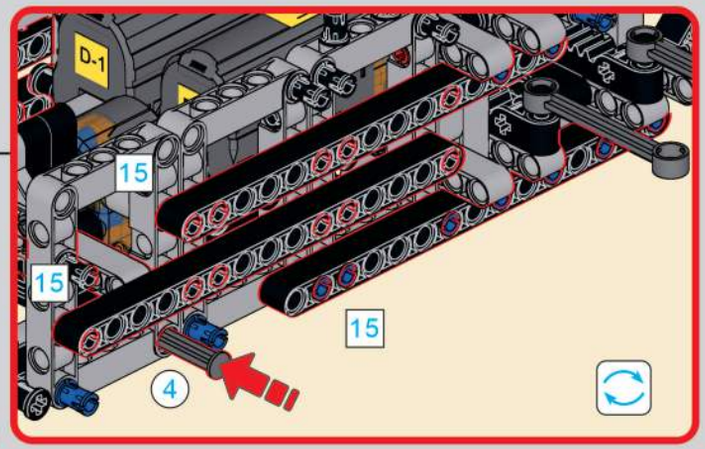
D-1
15
15
15
4

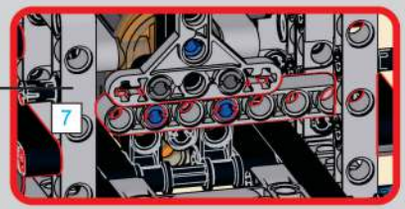
7

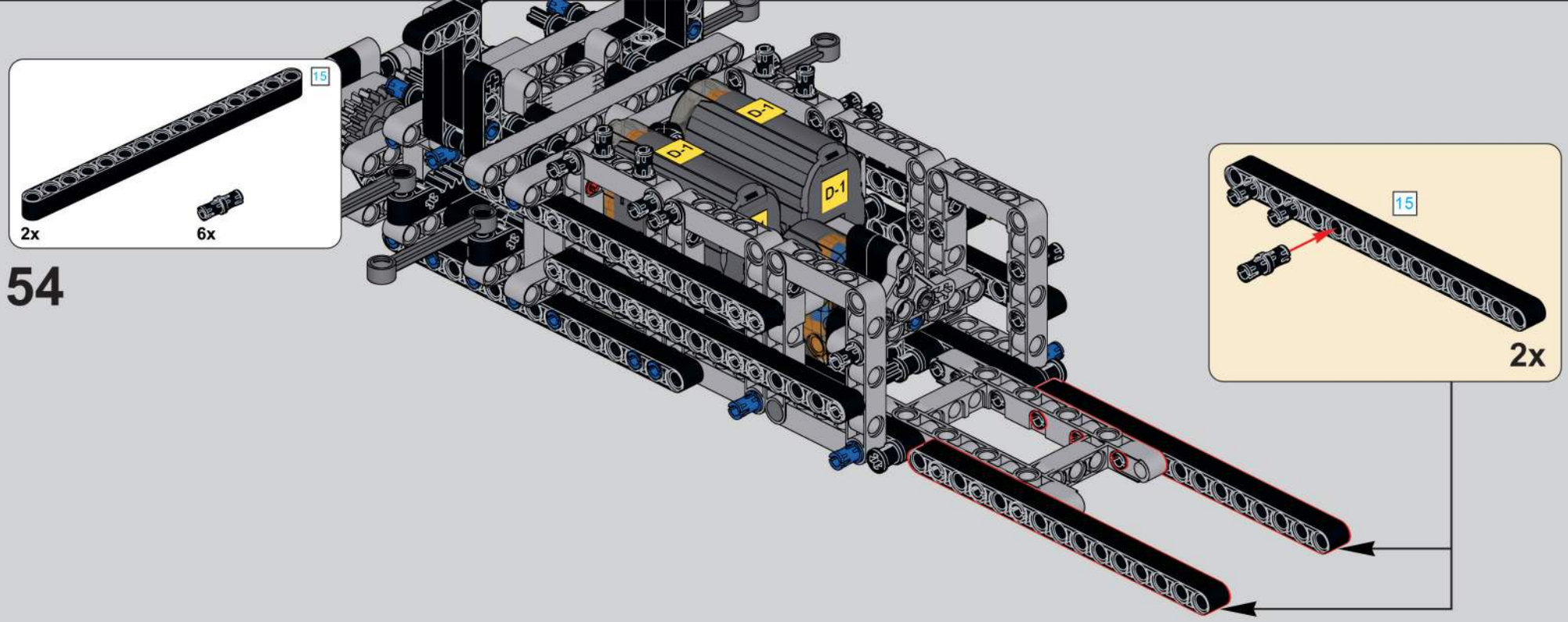
15
2x
6x
54
D-1
D-1
D-1
15
2x

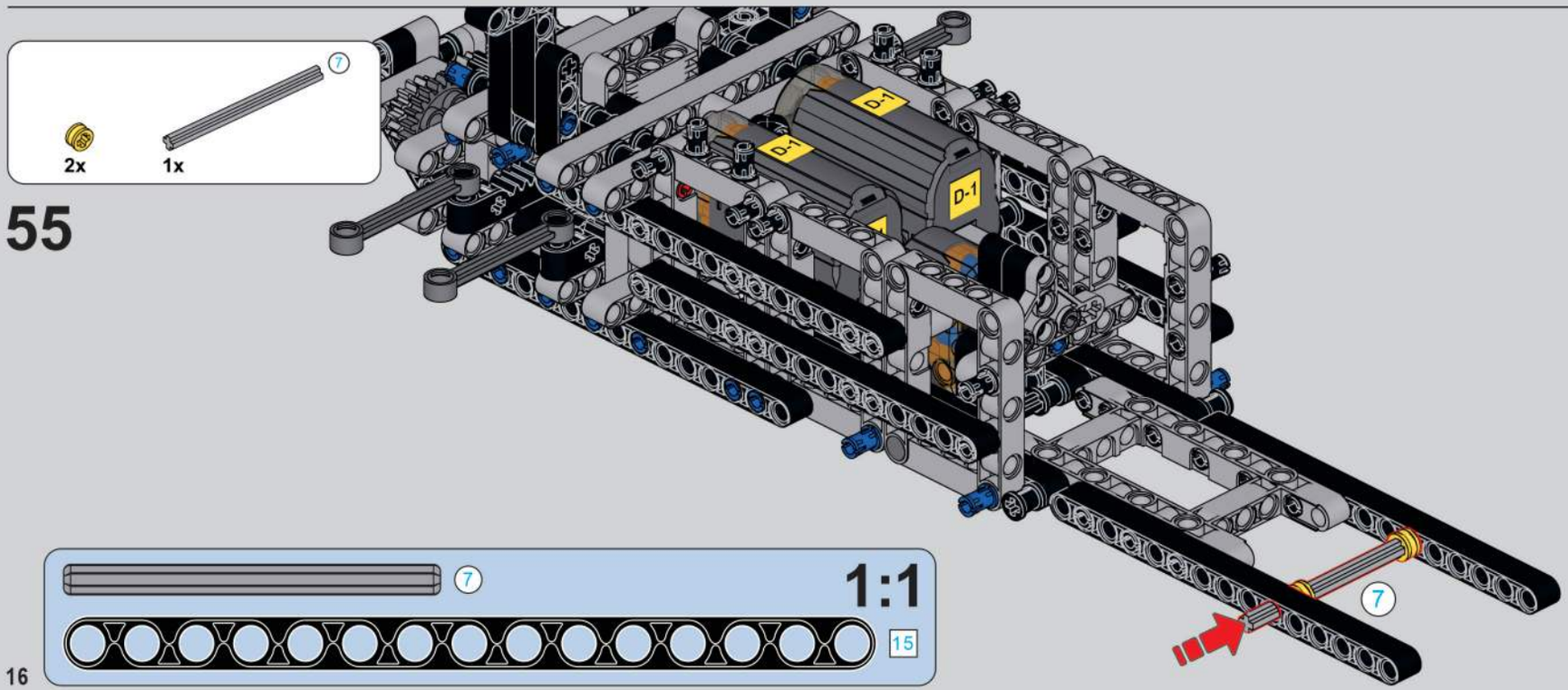
7
2x
1x
55
D-1
D-1
D-1
7
7
1:1
15

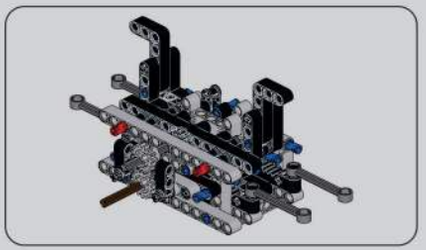

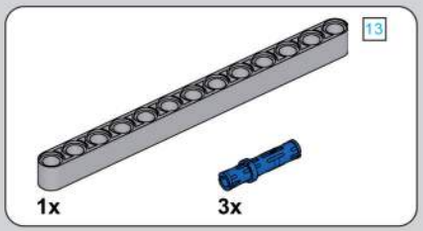

56

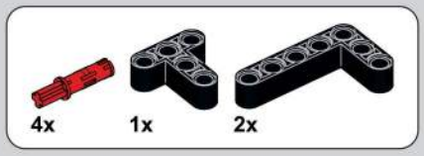

57

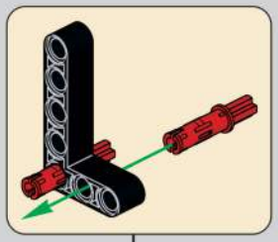

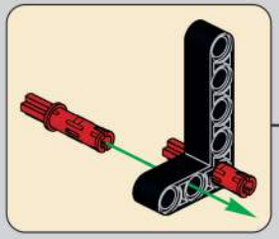

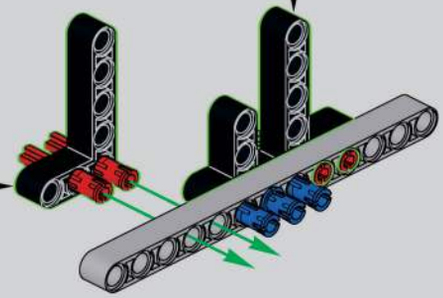

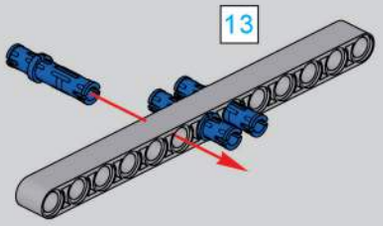

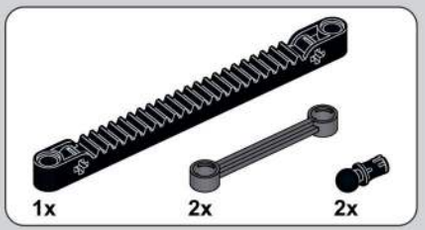

58

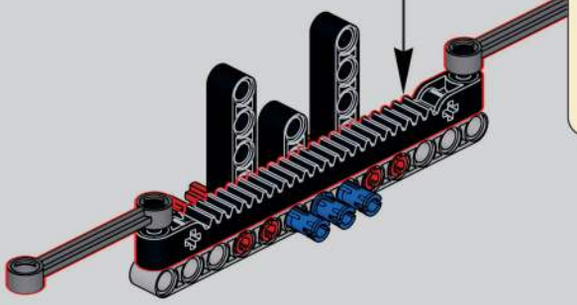

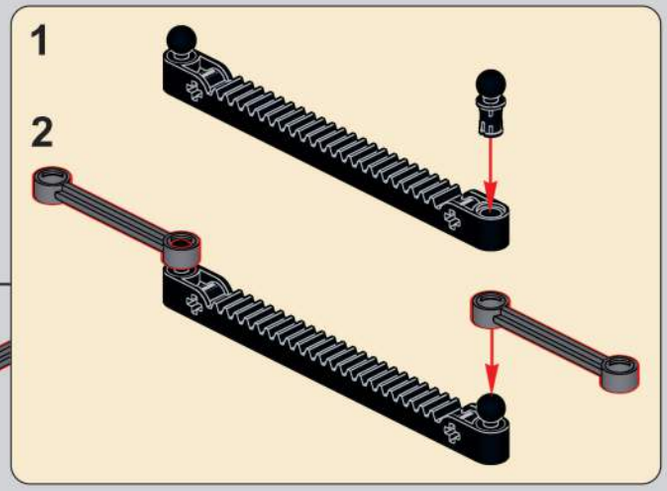

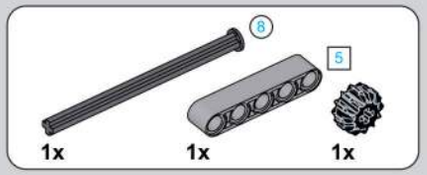

59

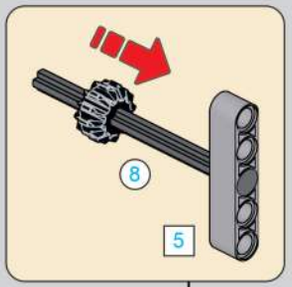

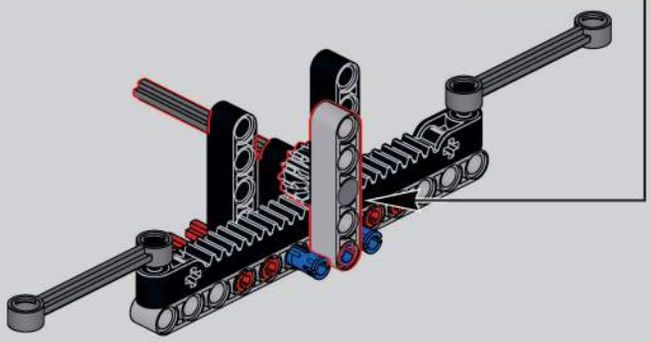

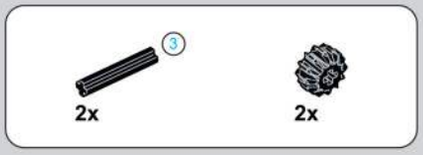

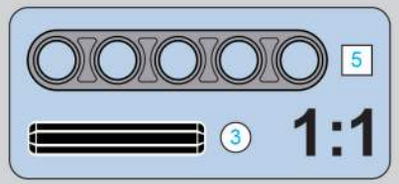

60

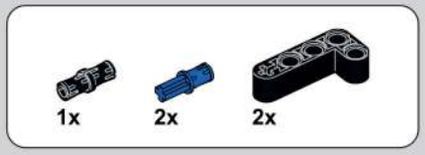

61

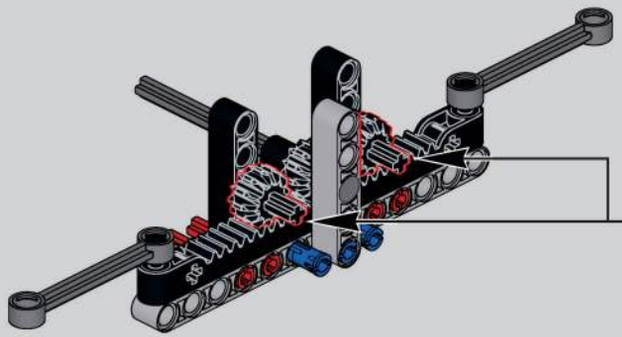

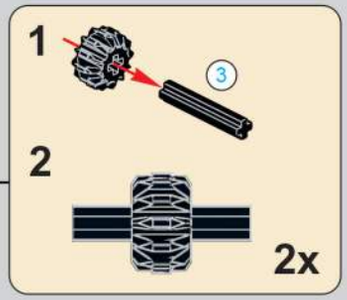

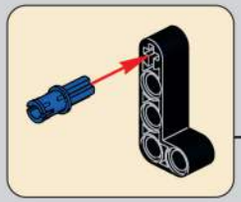

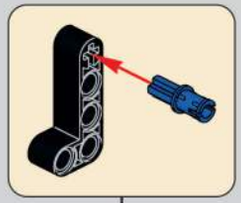

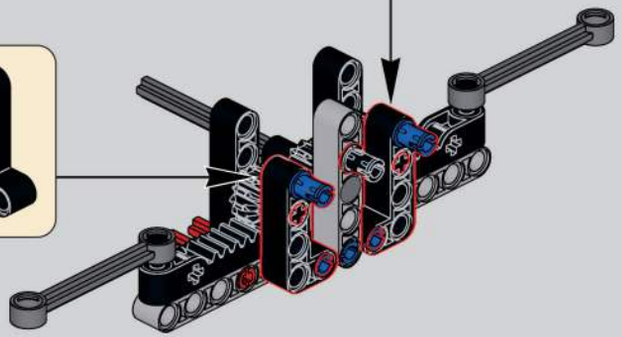

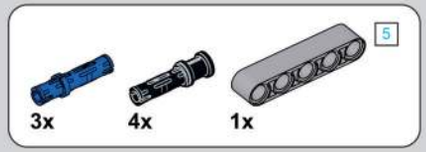

62

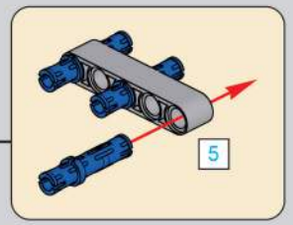

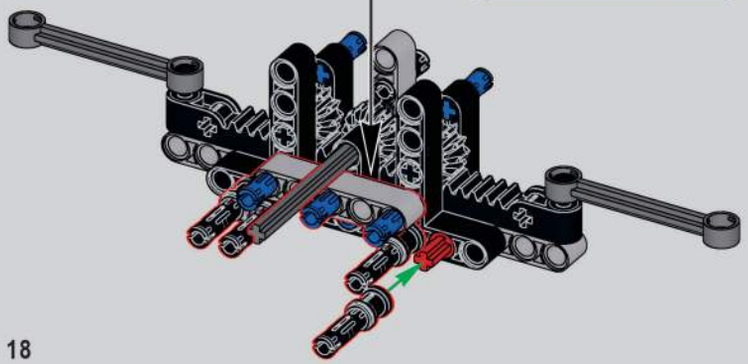

63

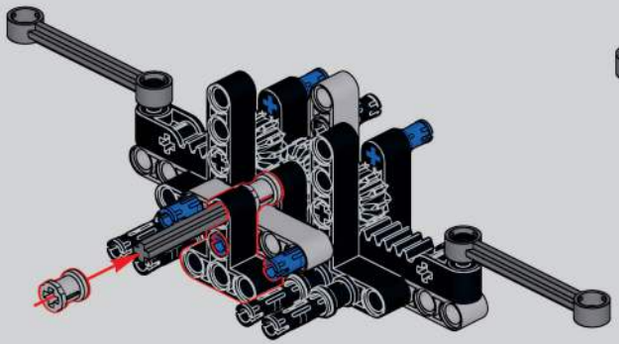

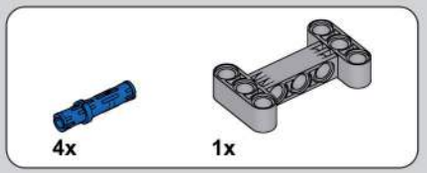

64

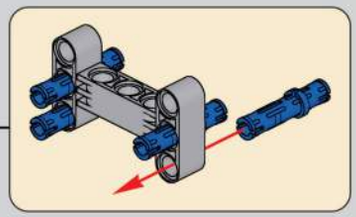

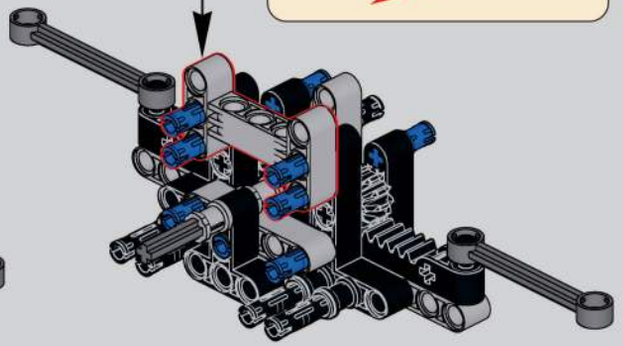

65

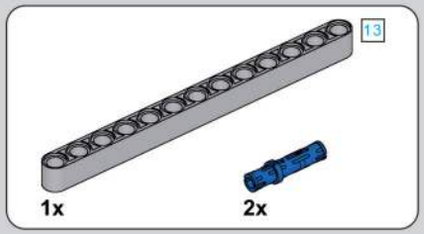

66

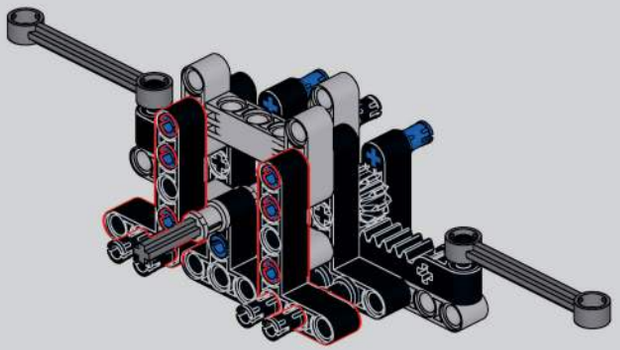

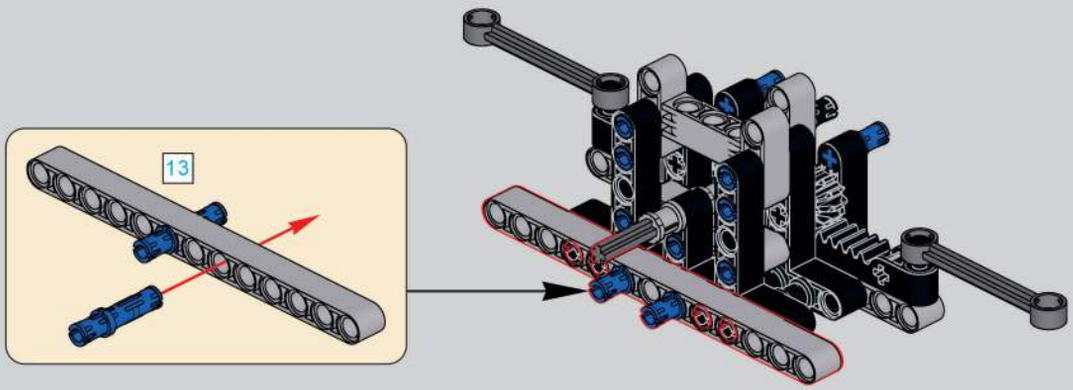

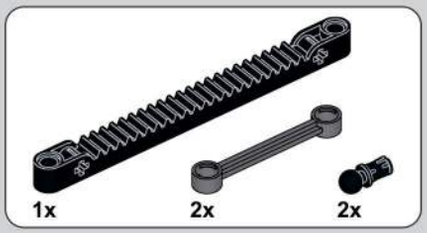

67

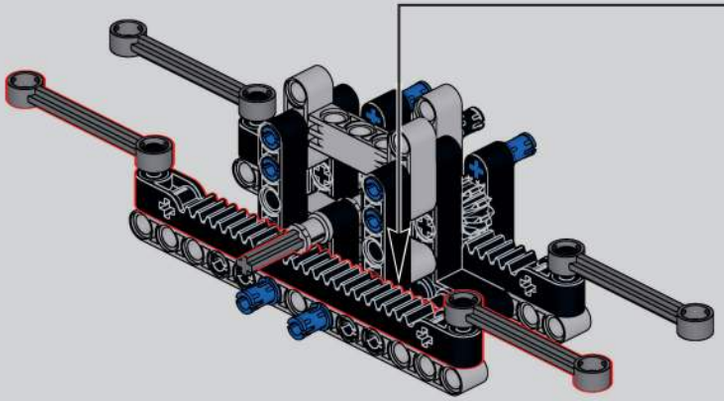

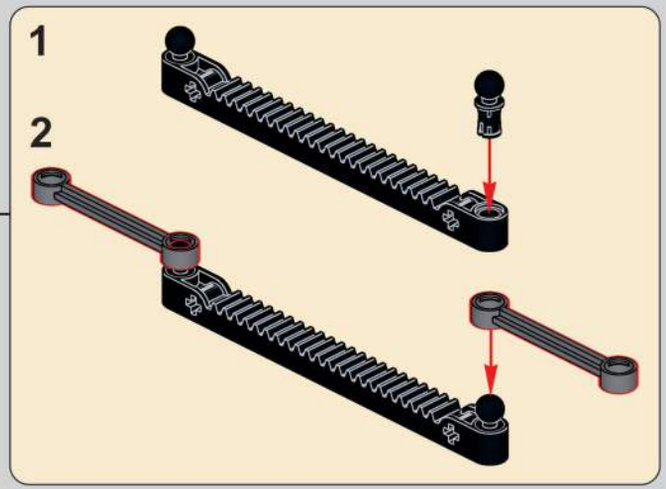

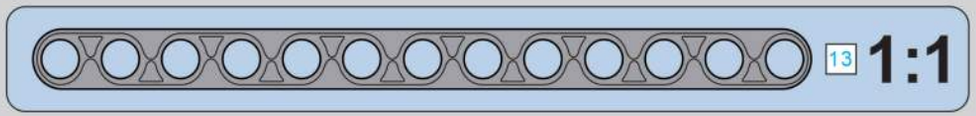

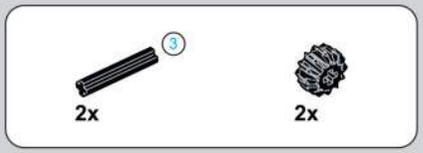

68

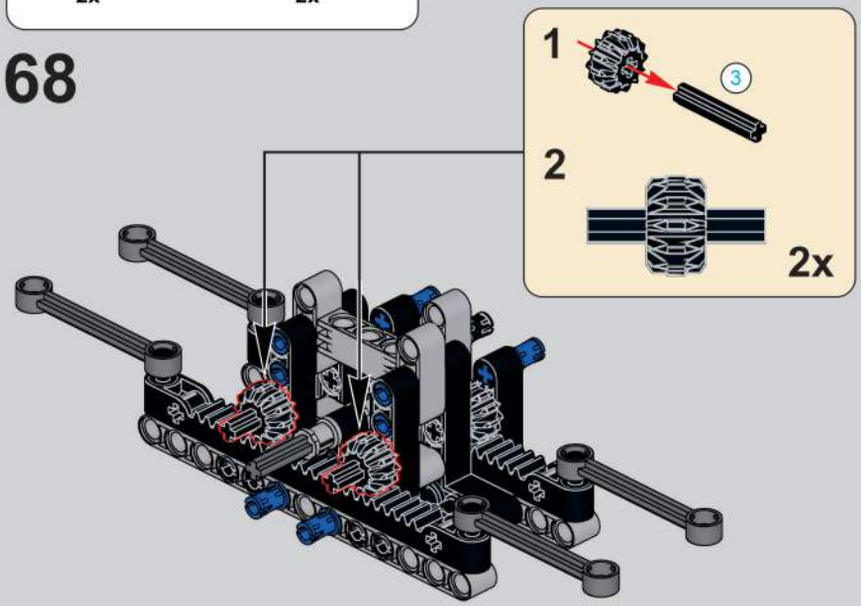

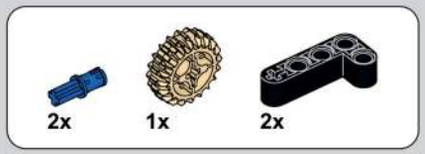

69

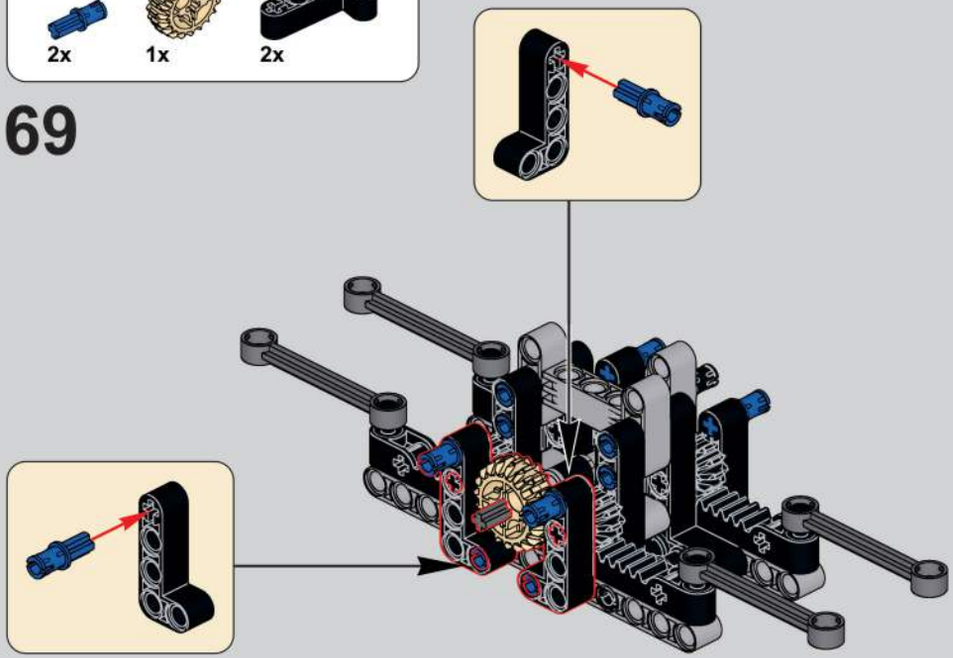

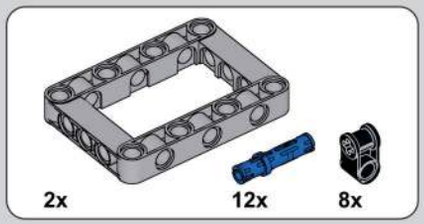

70

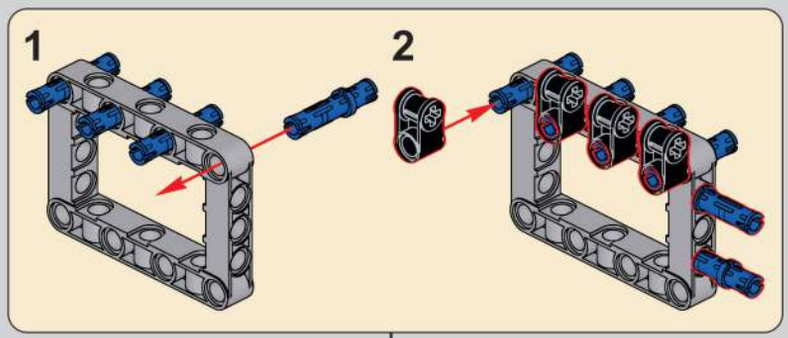

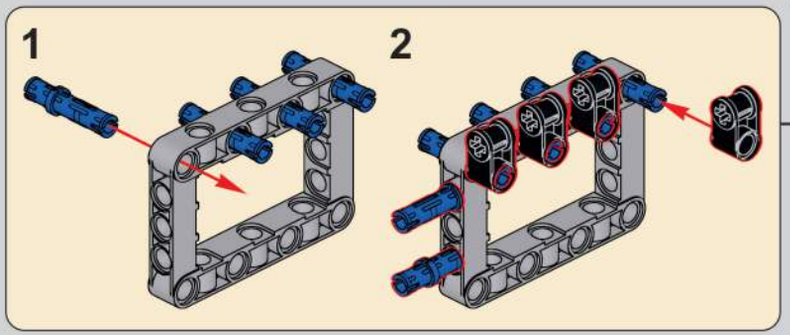

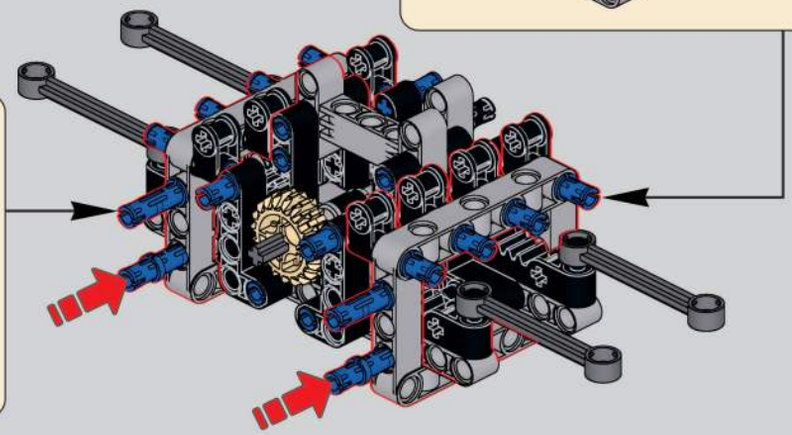

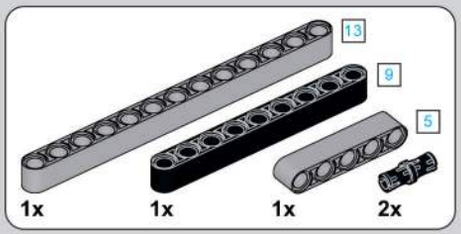
13
9
5
1x
1x
1x
2x

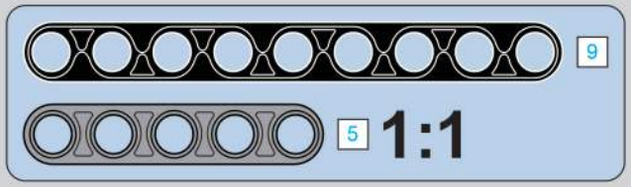
9
5
1:1

2x
2x

71

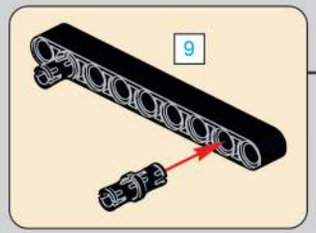
9

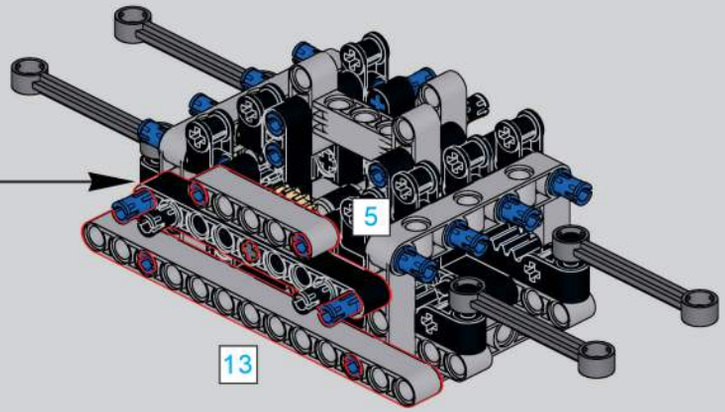
5
13

72

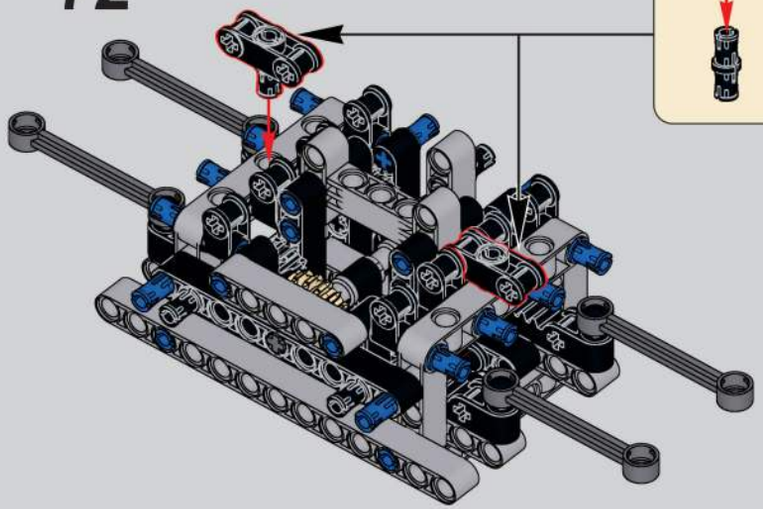

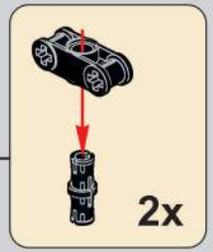
2x

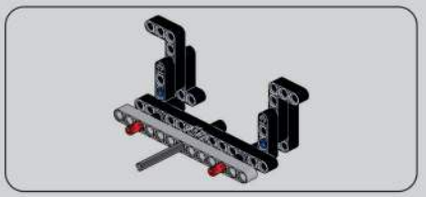

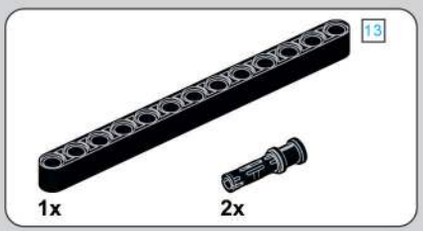
13
1x
2x

73

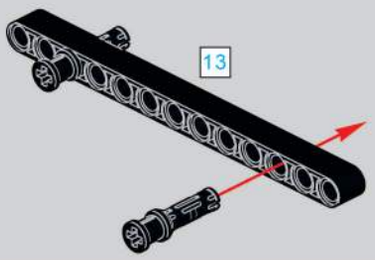
13

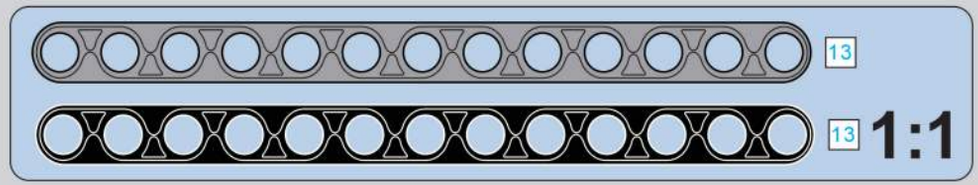
13
13
1:1

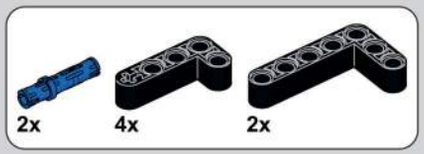
2x
4x
2x

74

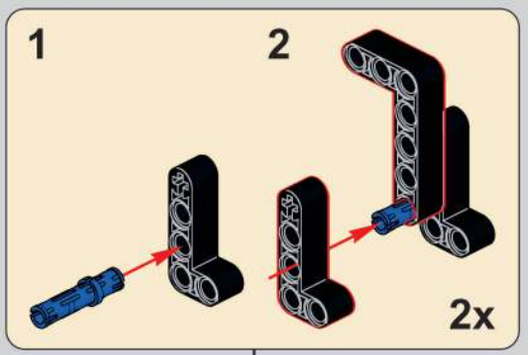
1
2
2x

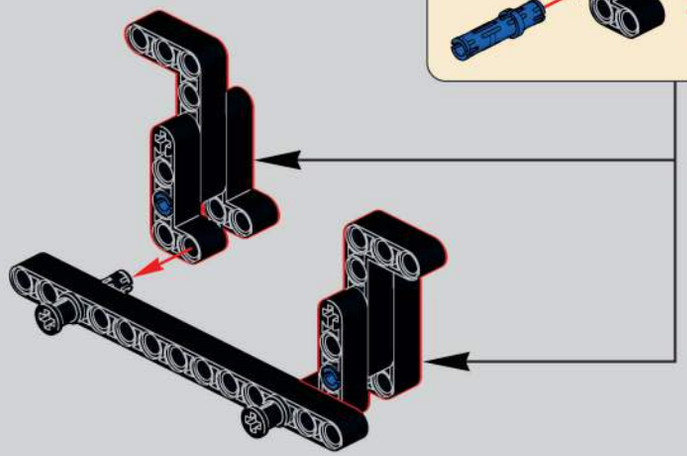

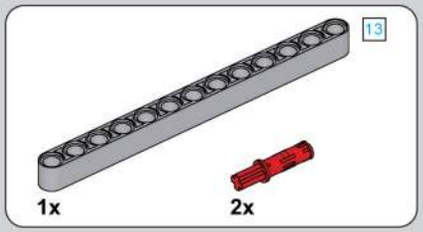

75

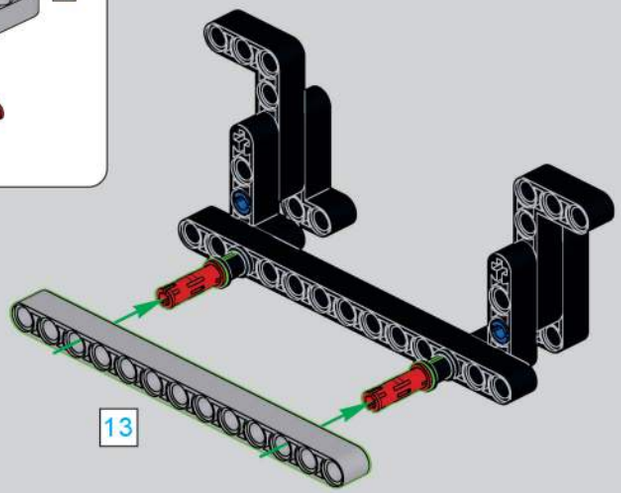

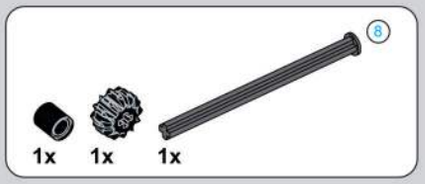

76

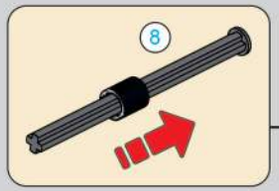

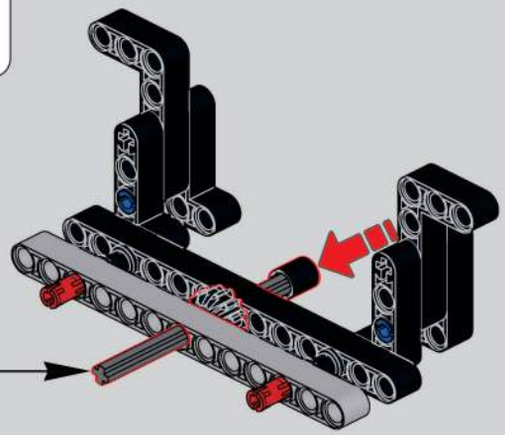

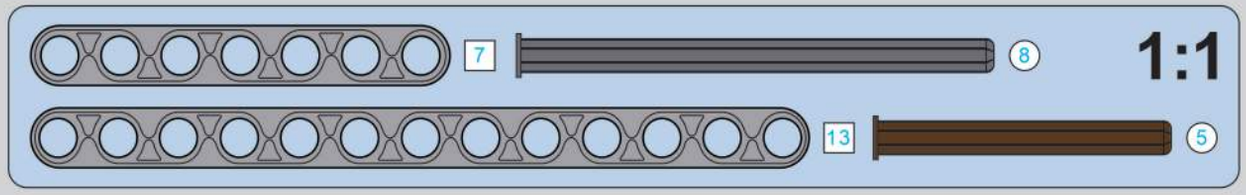

77

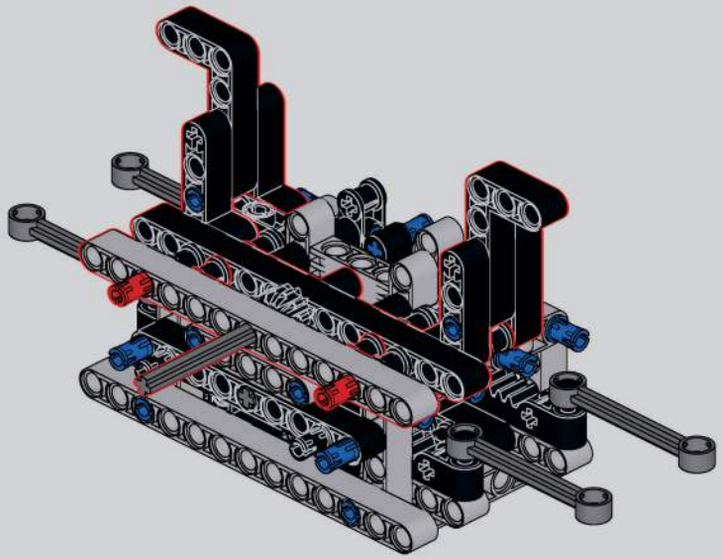

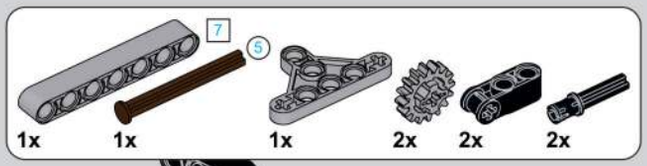

78

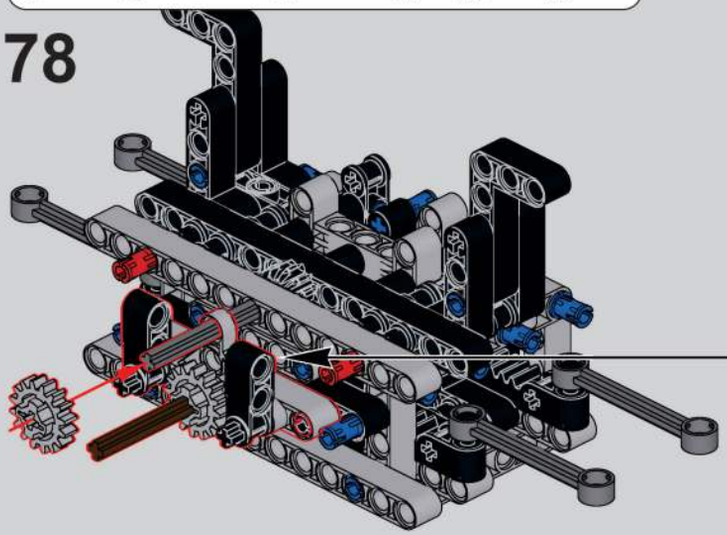

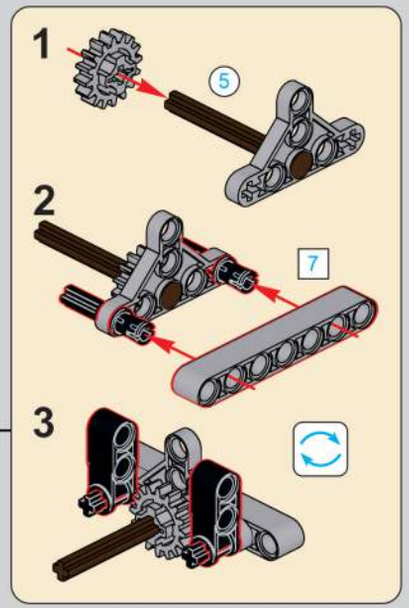

79

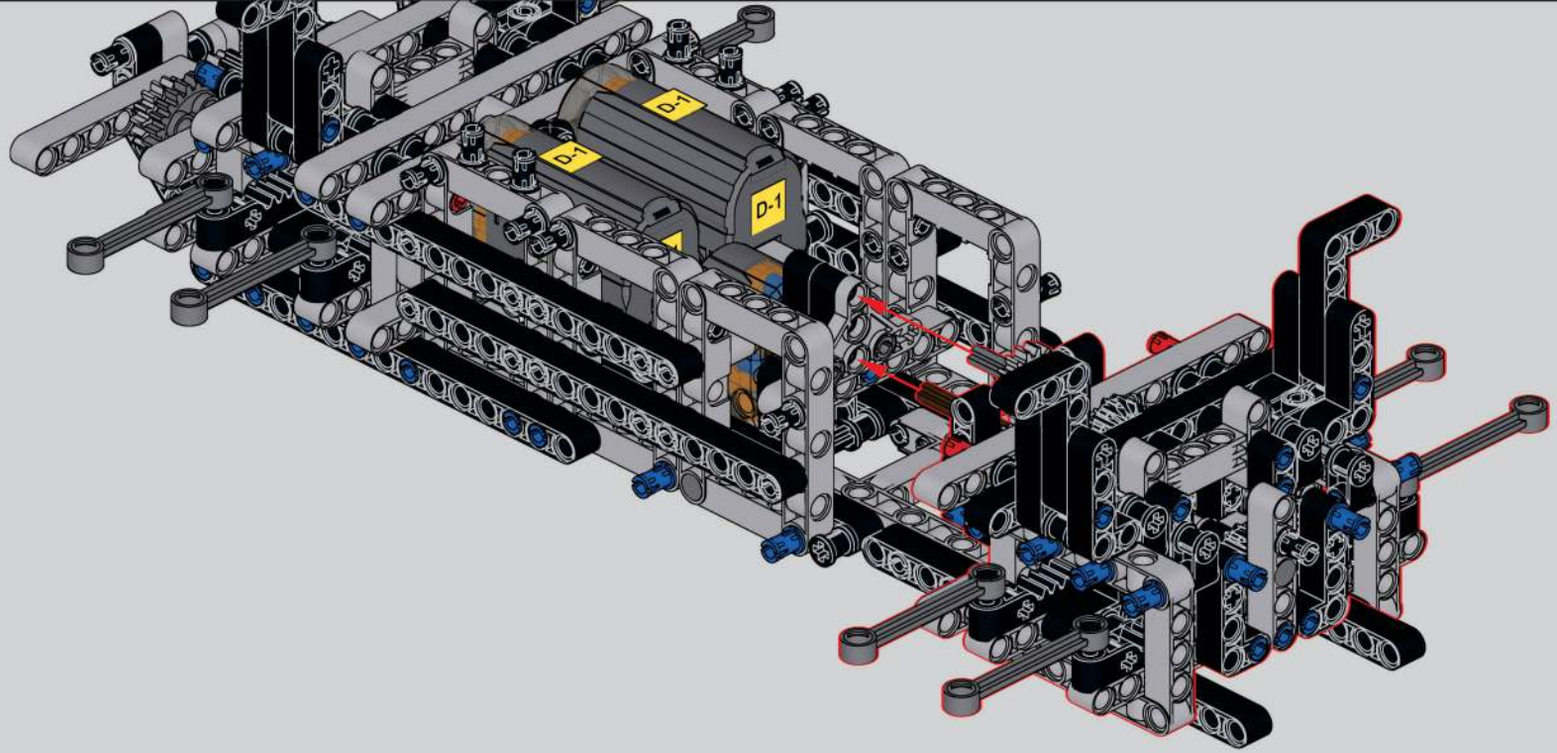

80

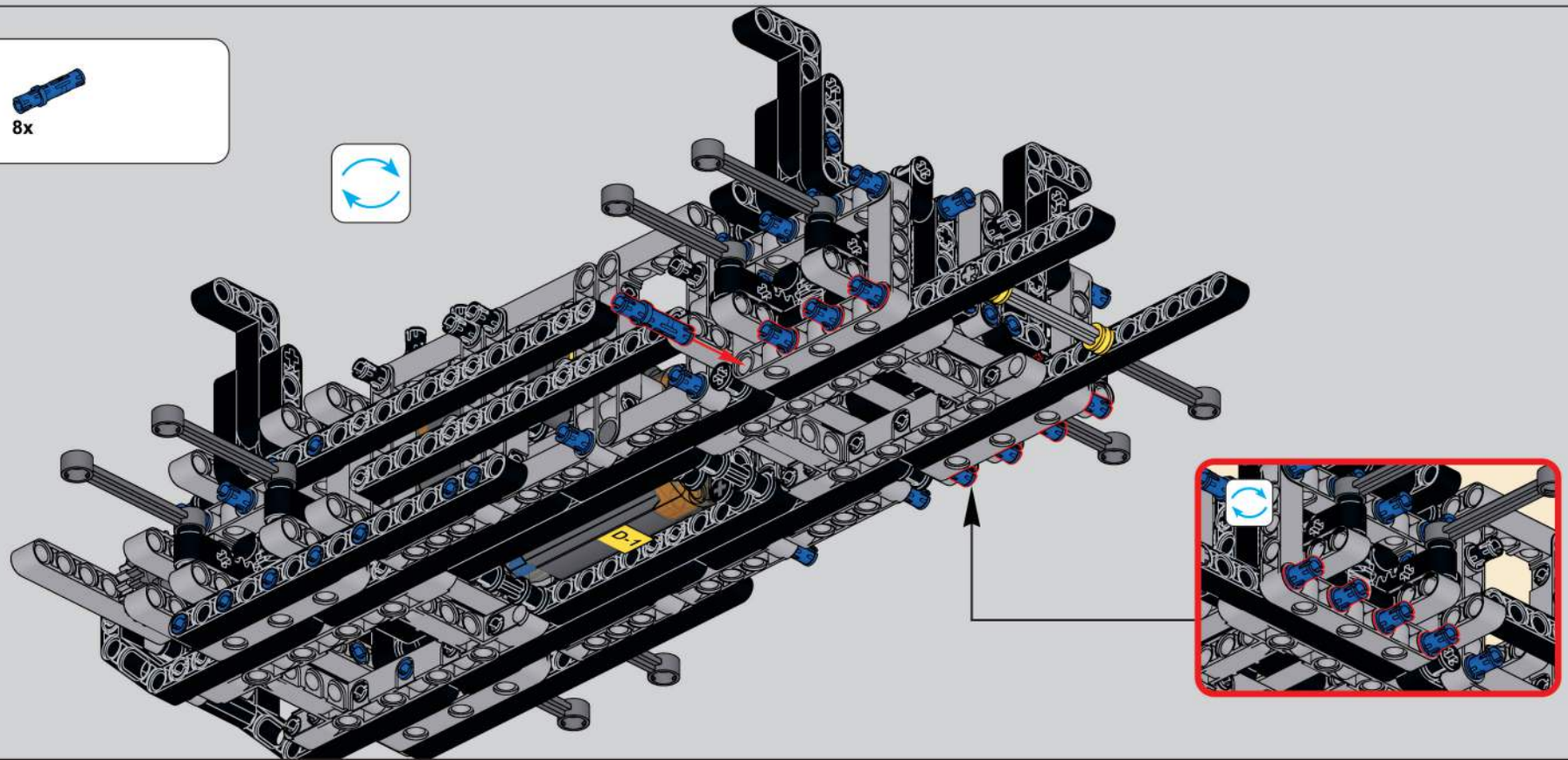

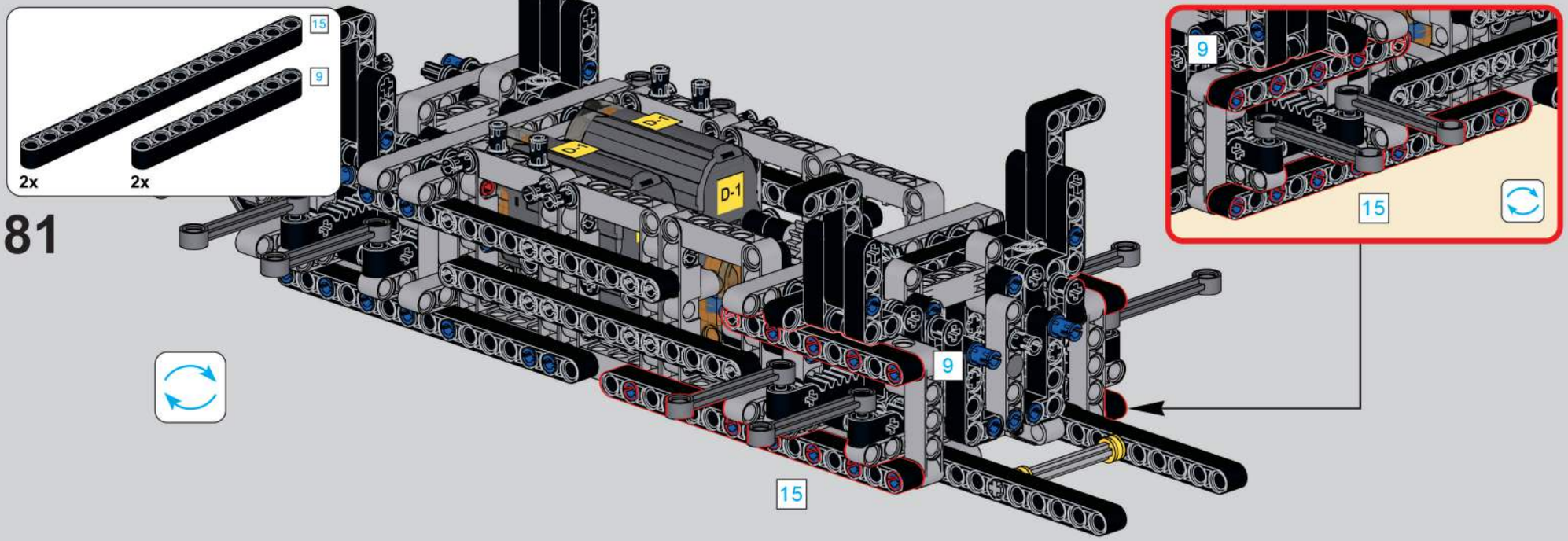
15
9
2x
2x
81
D-1
D-1
D-1
9
15
9
15

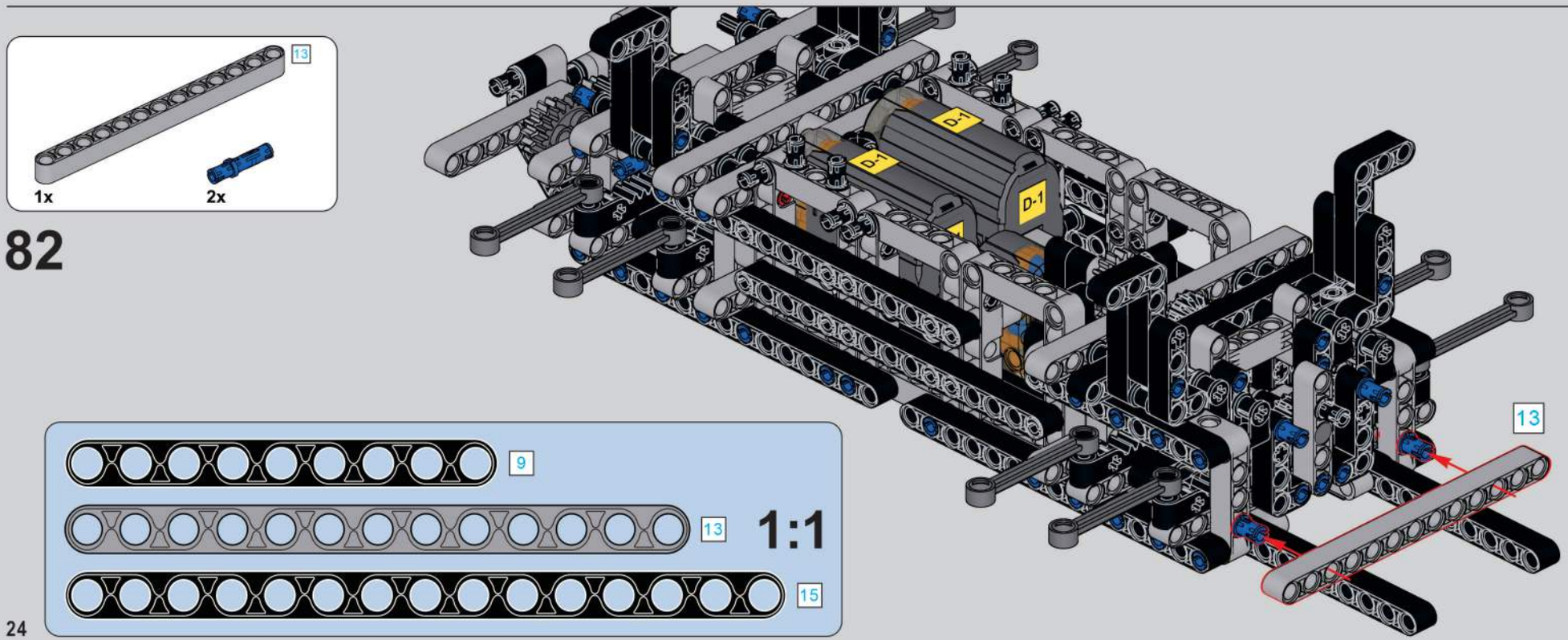
13
1x
2x
82
D-1
D-1
D-1
13
9
13
1:1
15

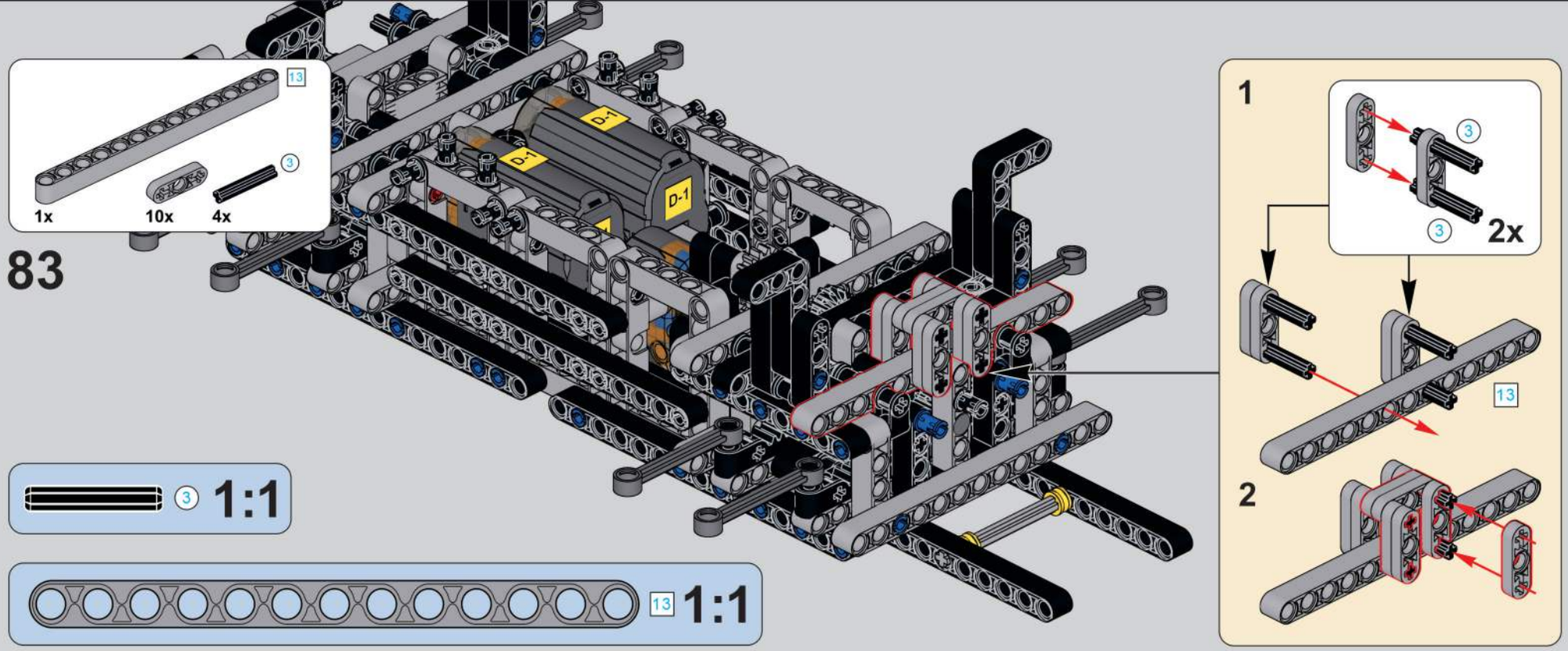
13
1x
10x
3
4x
83
D-1
D-1
D-1
3
1:1
13
1:1
1
3
3
2x
13
2

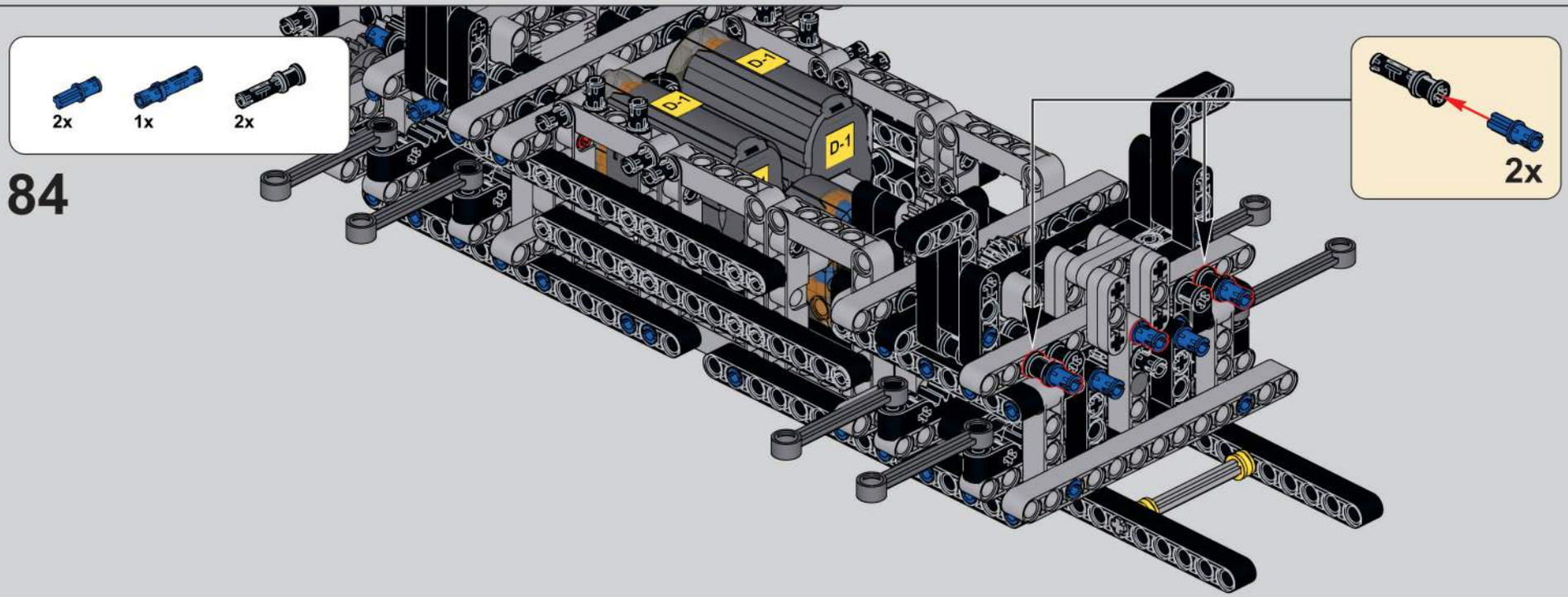
2x
1x
2x
84
D-1
D-1
D-1
2x

85

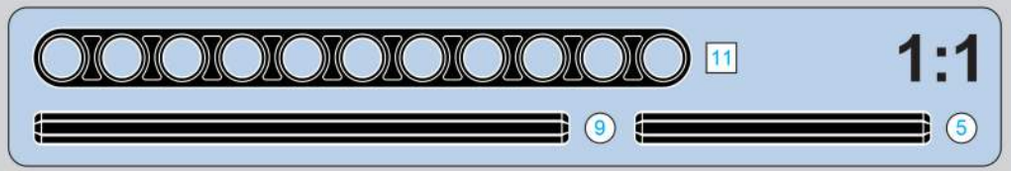

86

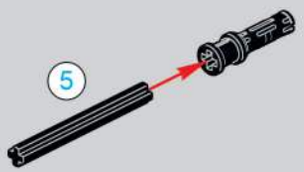

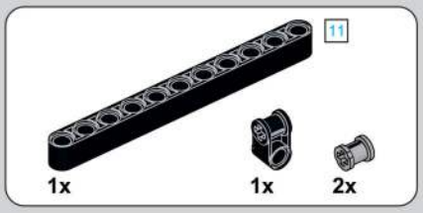

87

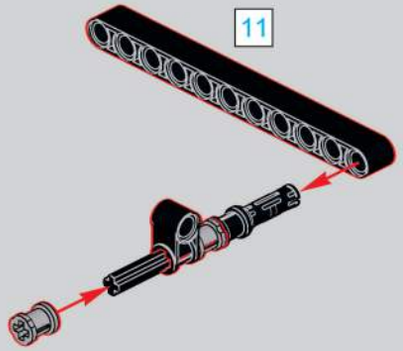

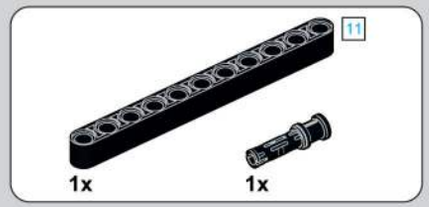

88

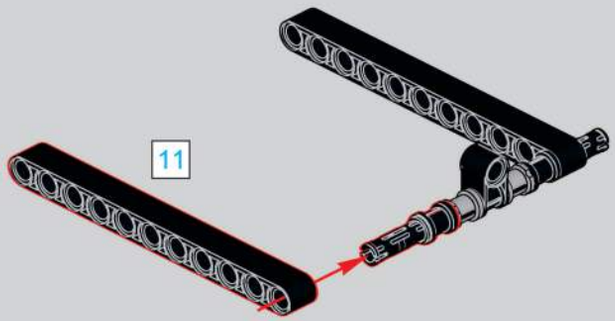

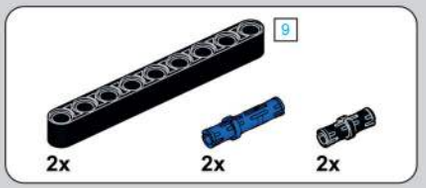

89

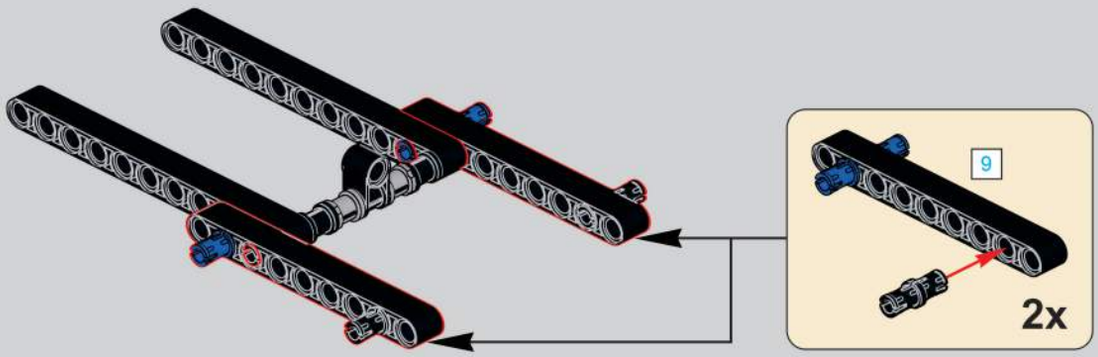

90

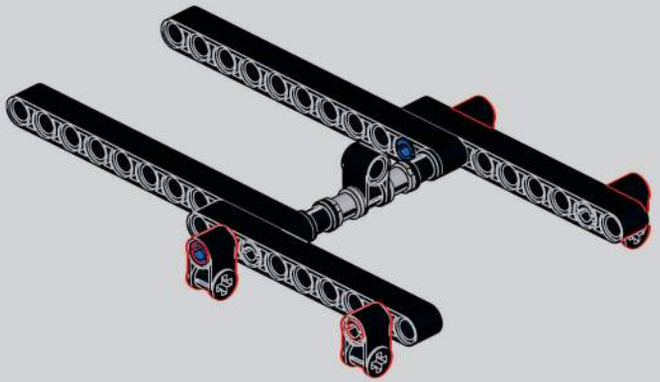

91

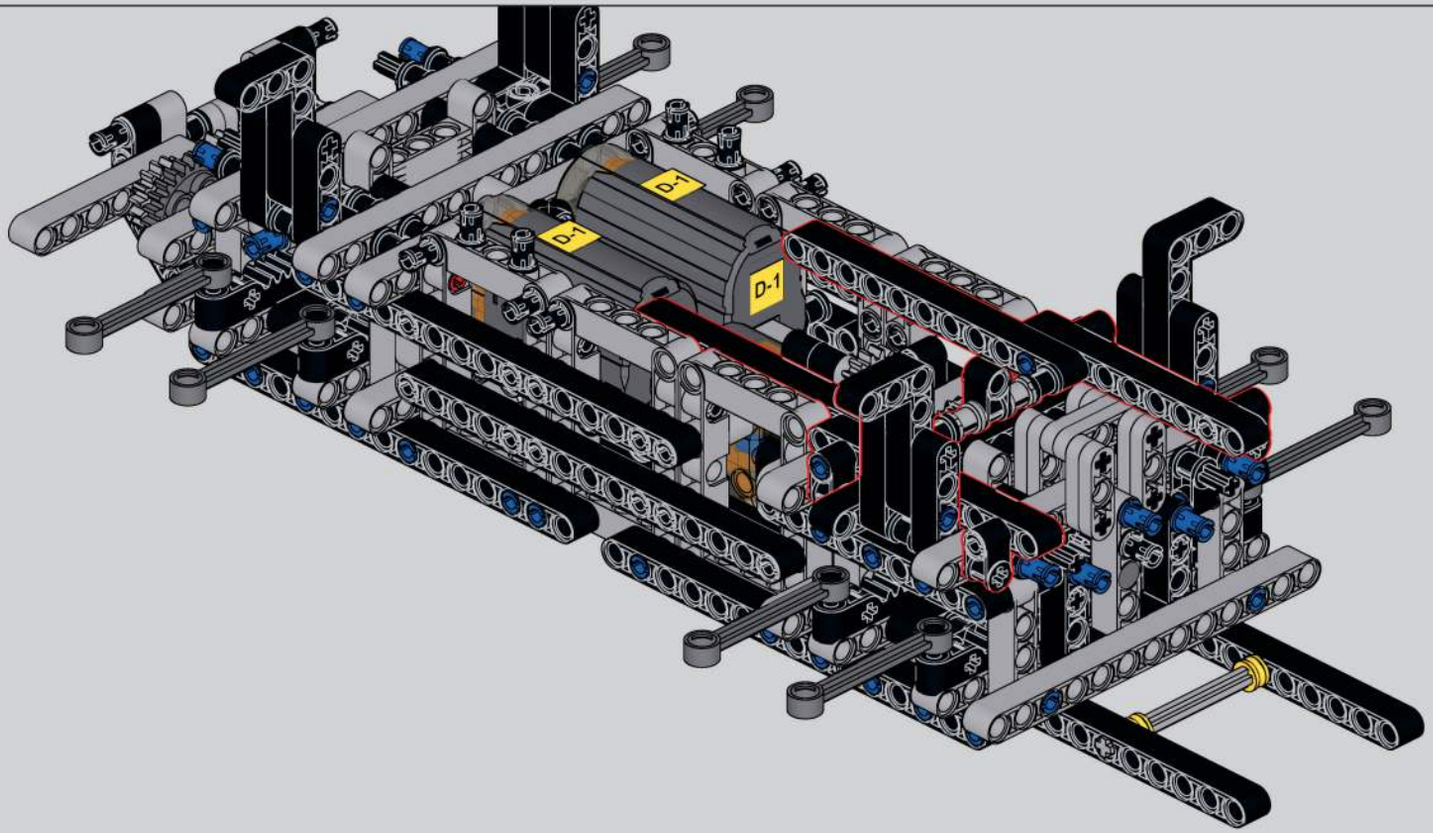

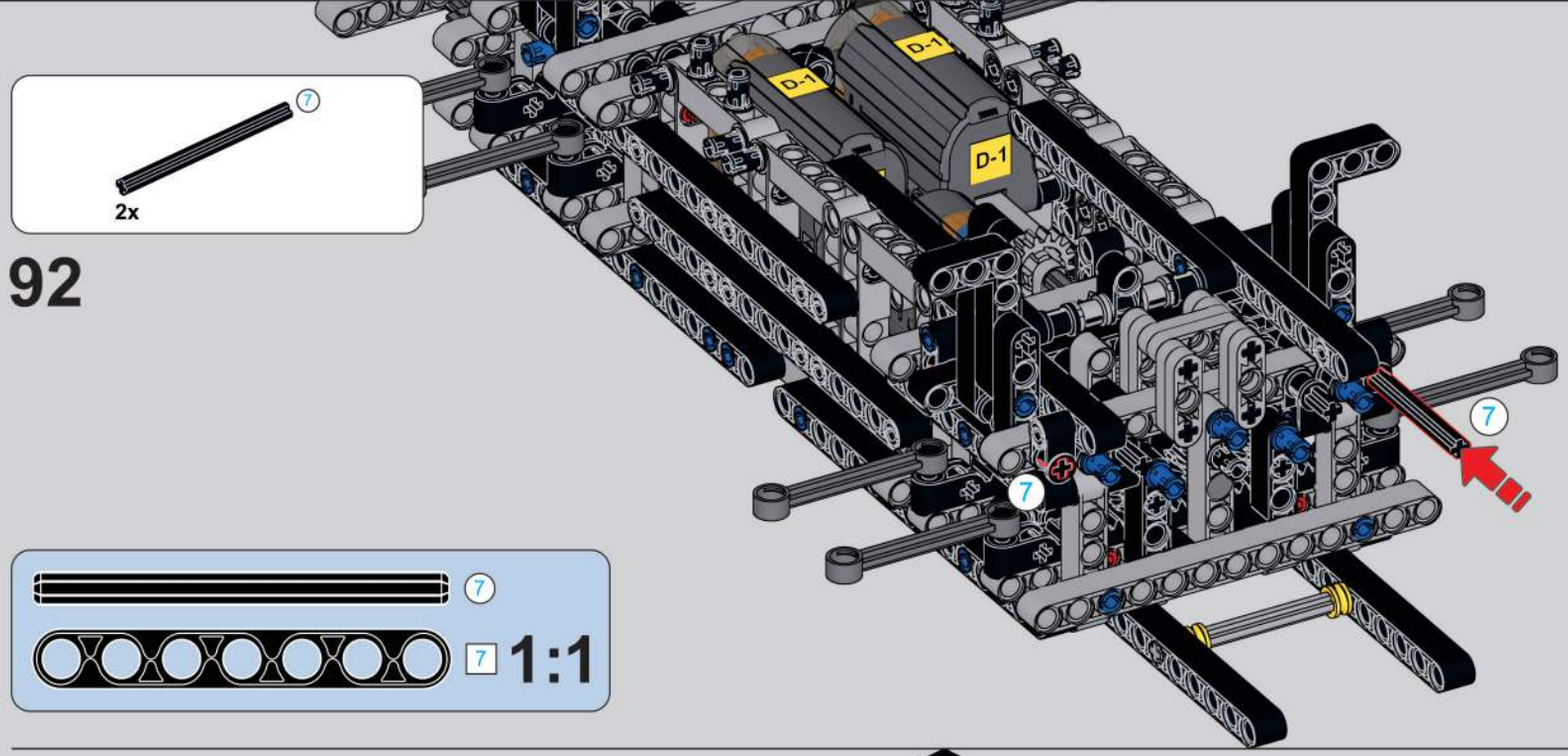

92

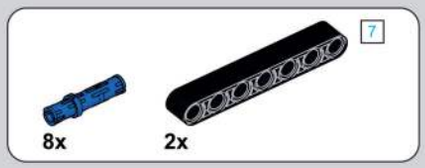

93

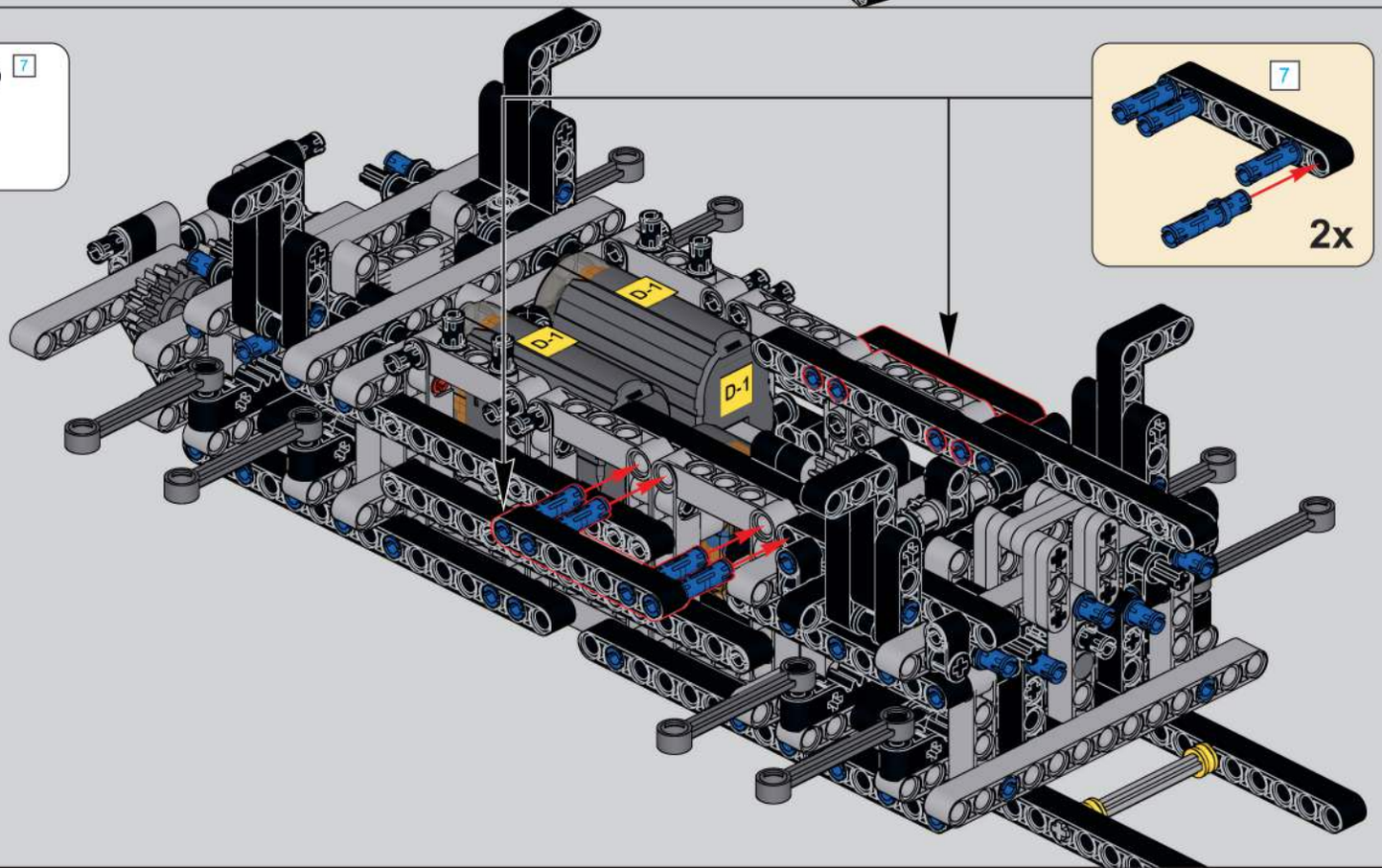

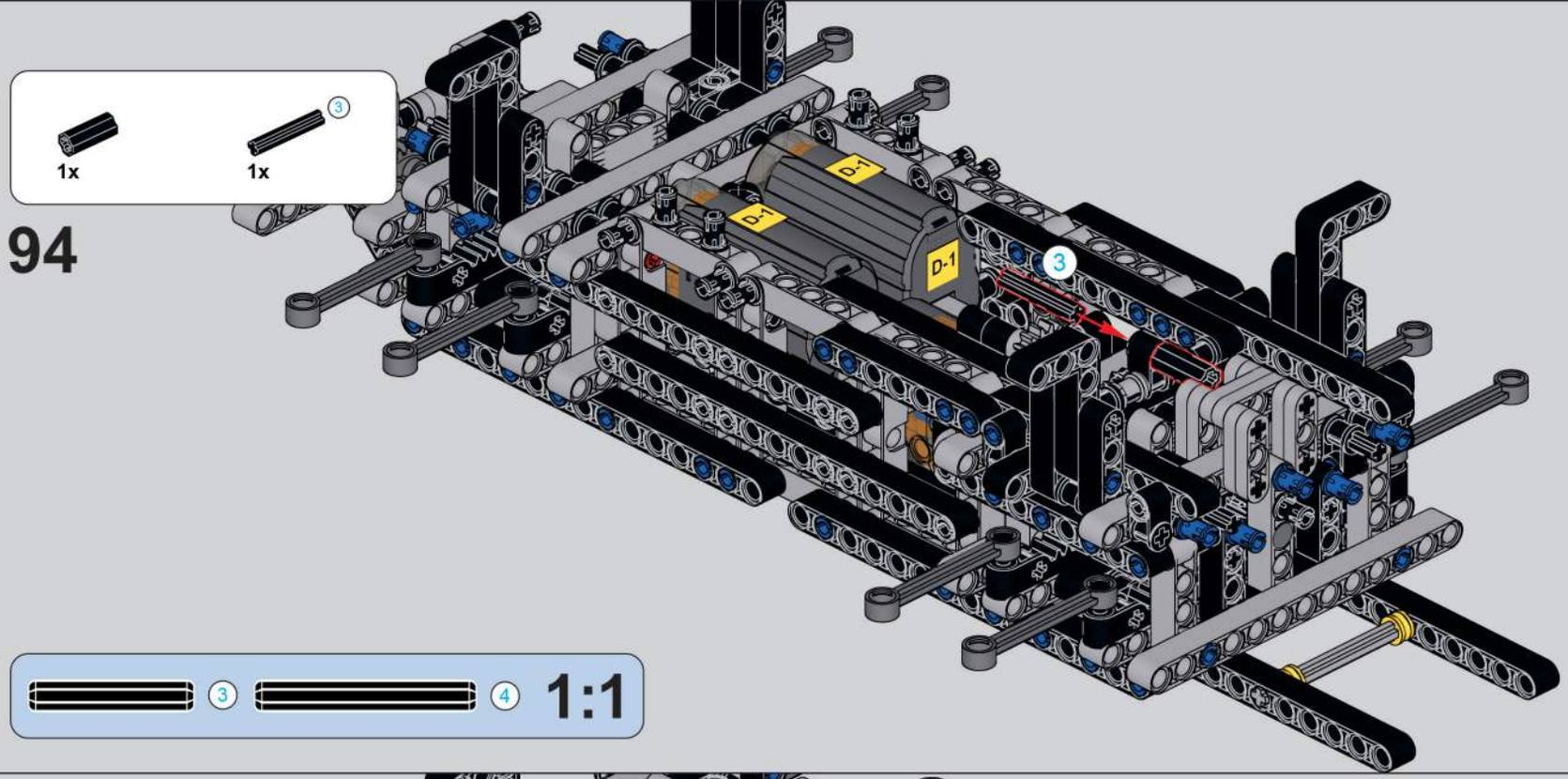
1x
3
1x
94
D-1
D-1
D-1
3
3
4
1:1

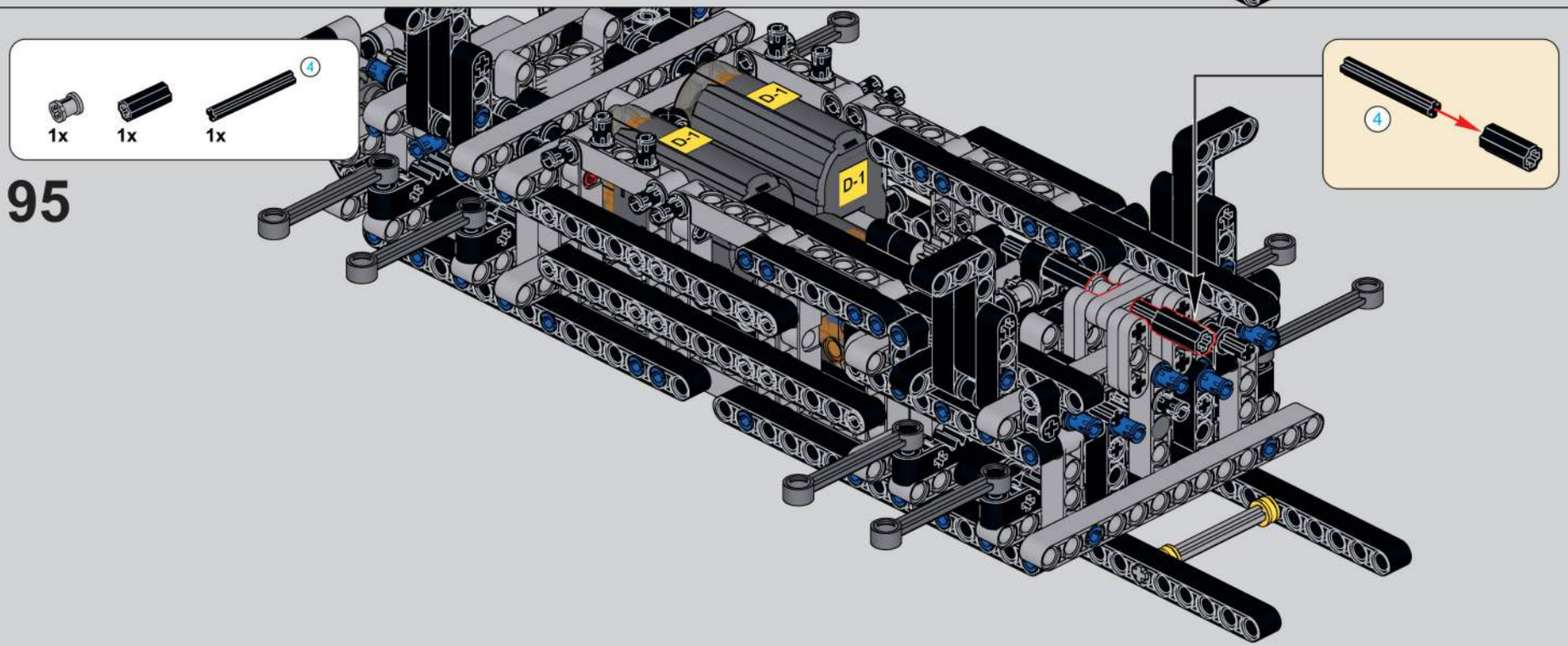
4
1x
1x
1x
95
D-1
D-1
D-1
4

96

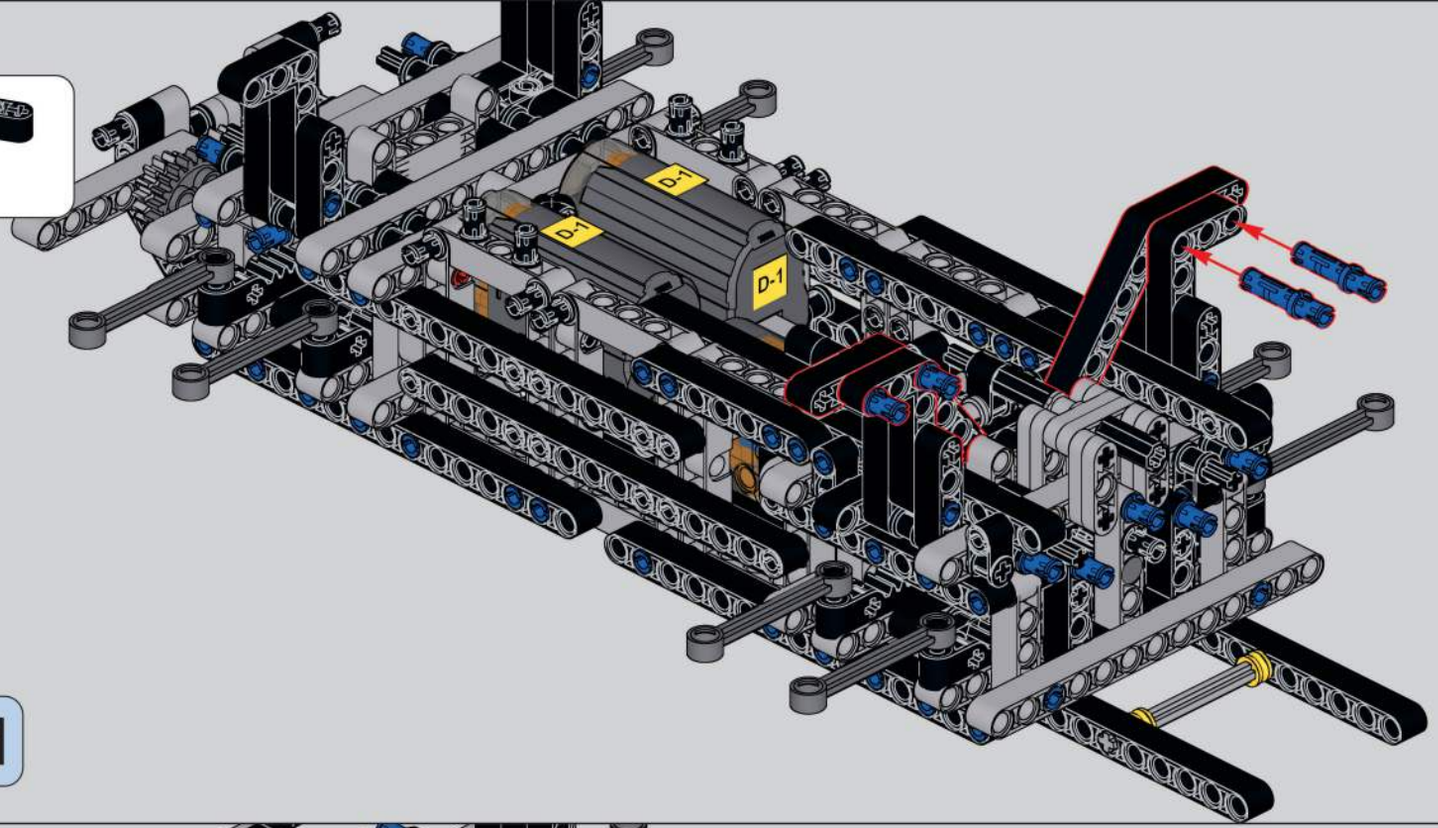

97

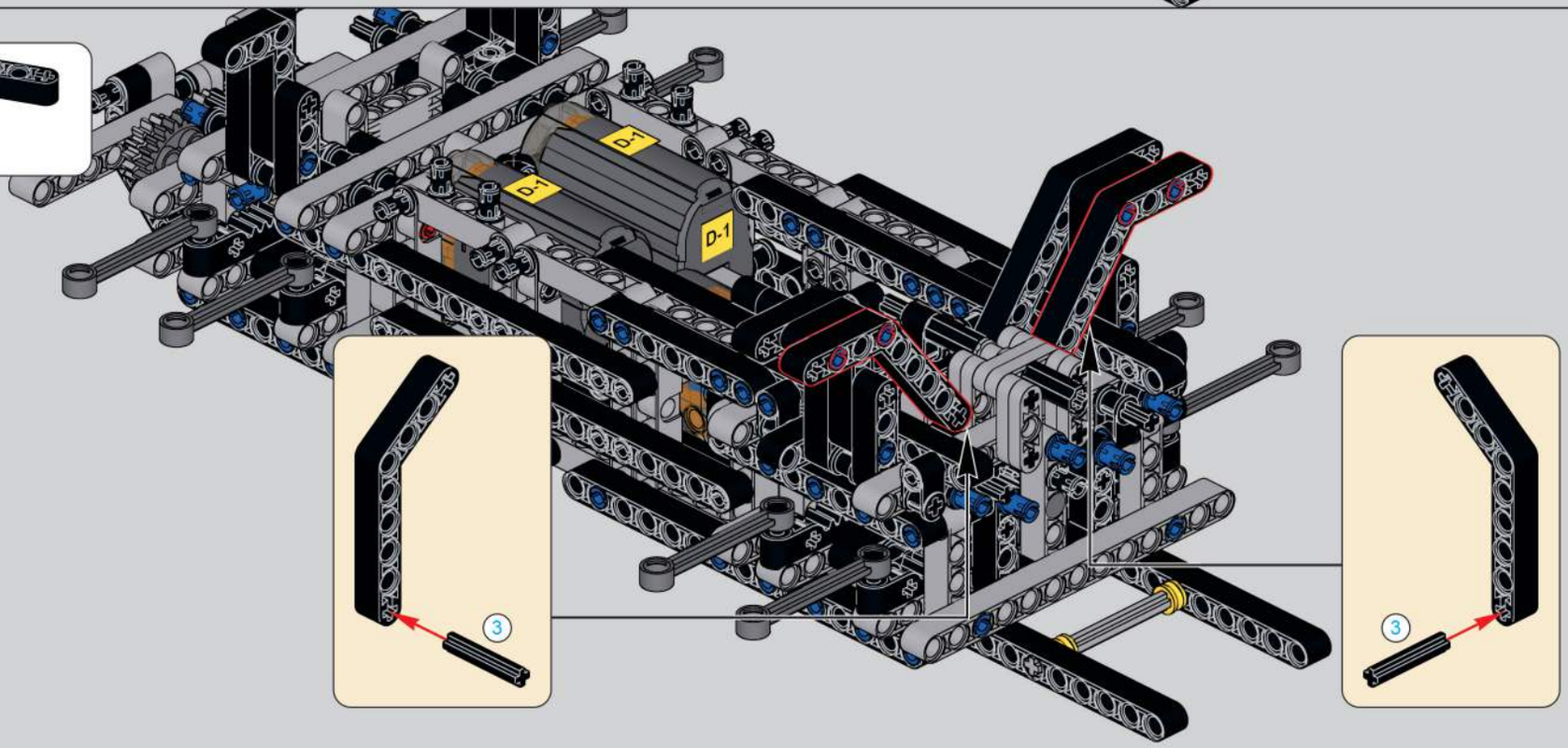

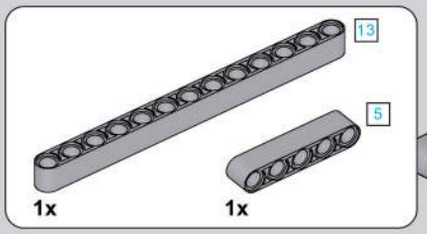

98

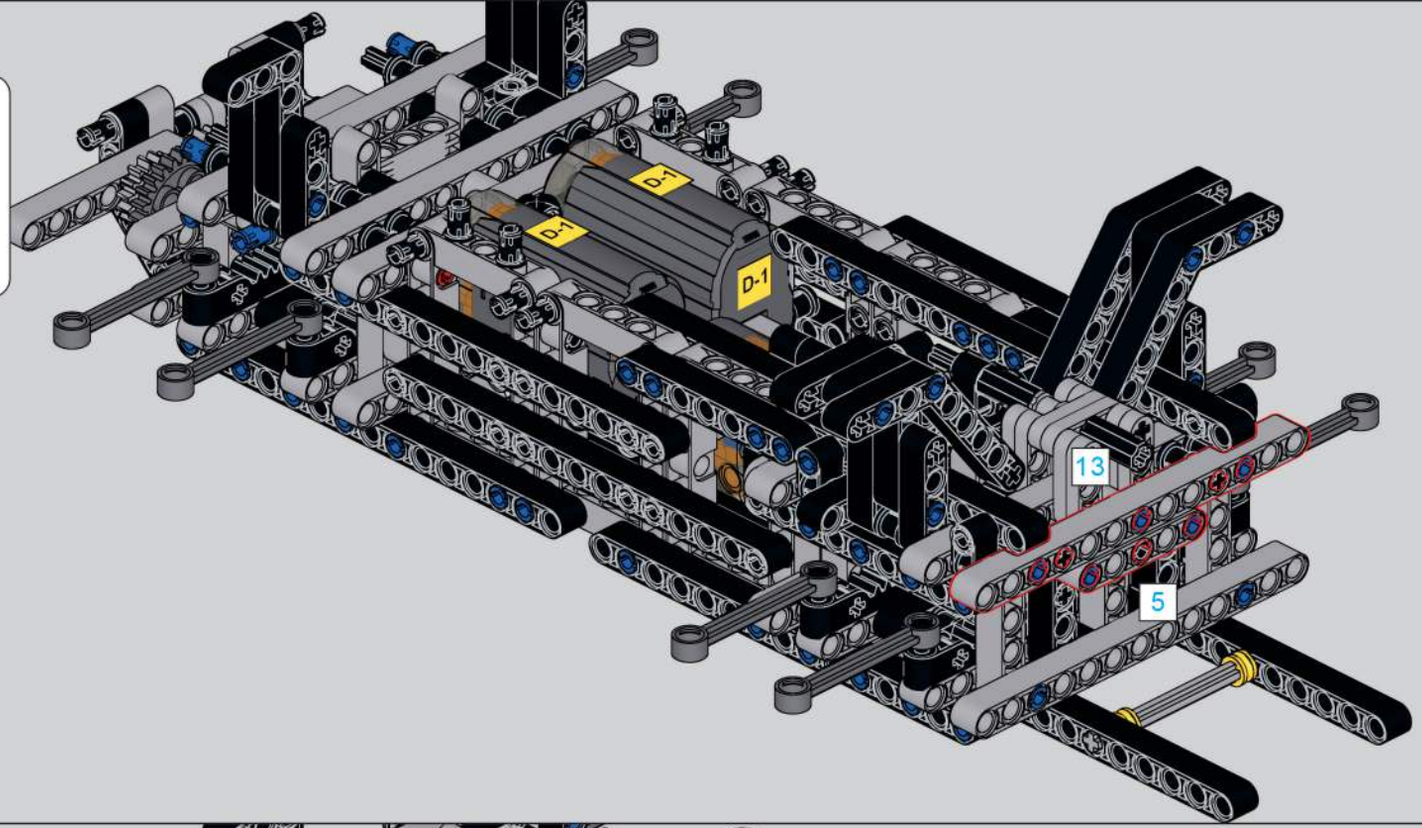

99

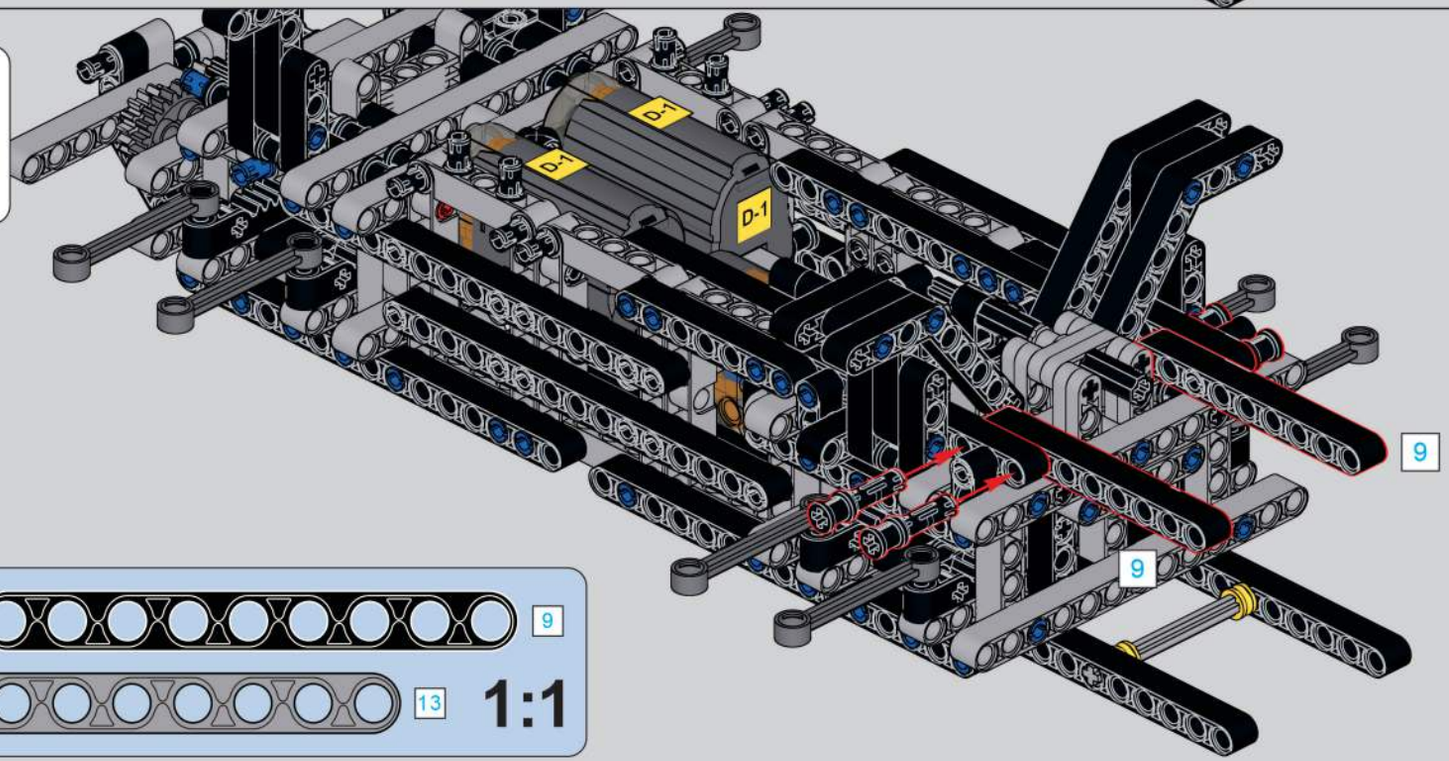

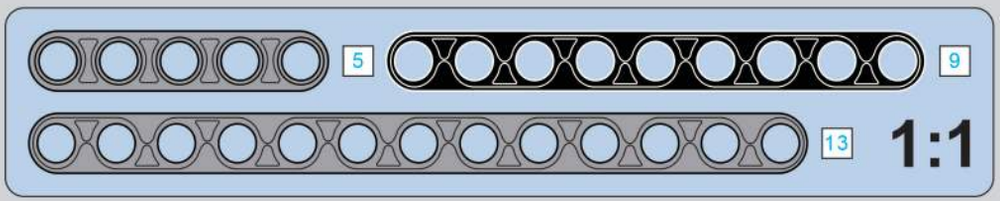

100

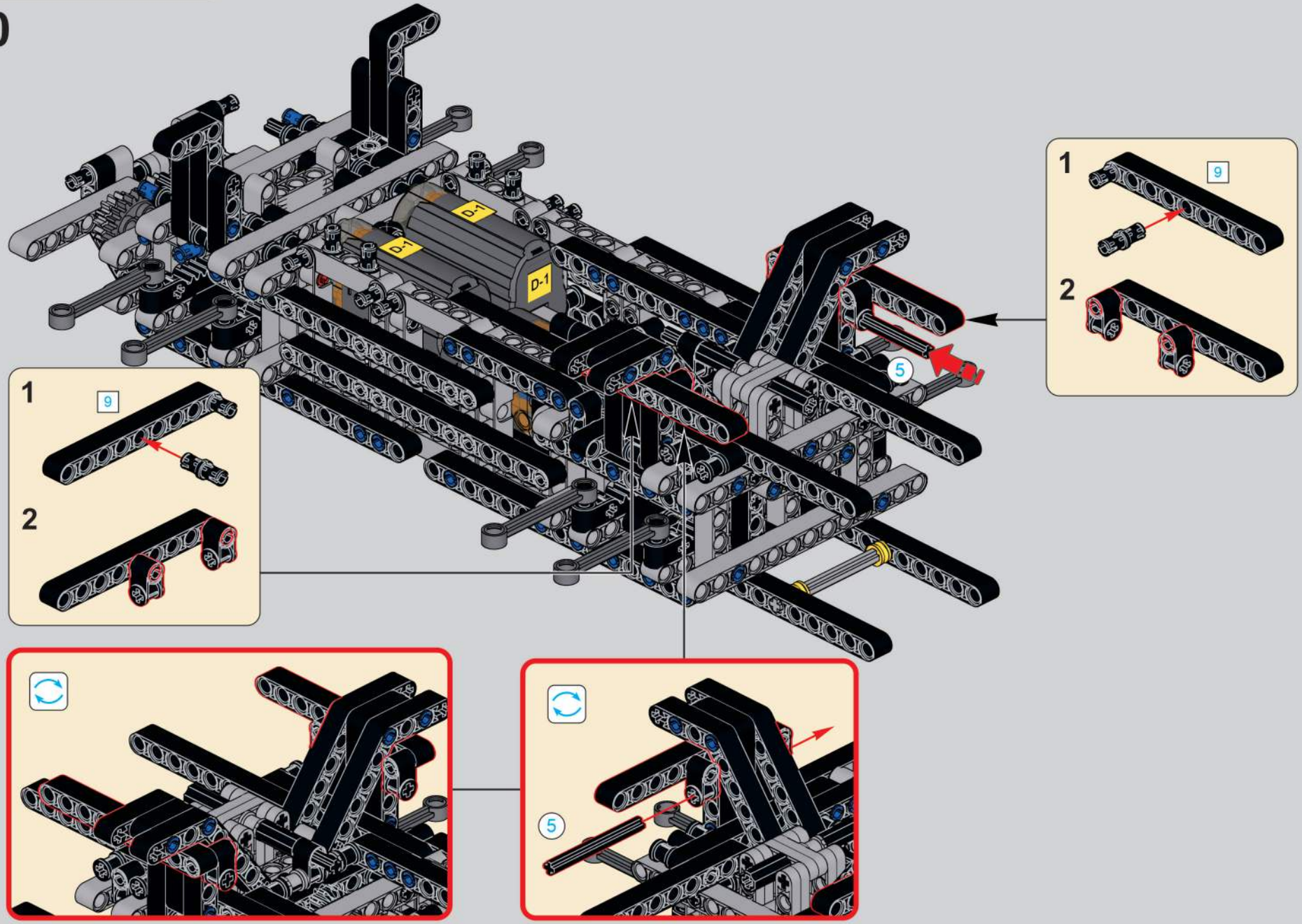

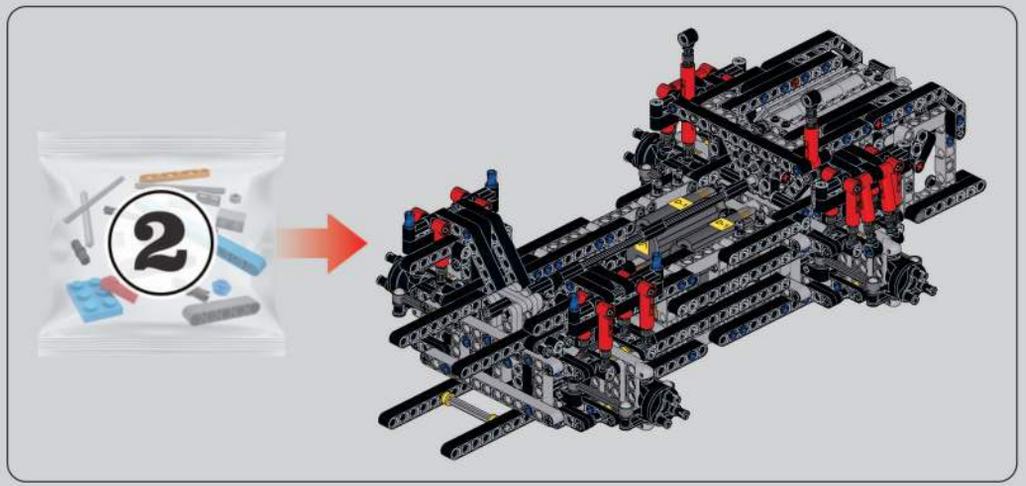

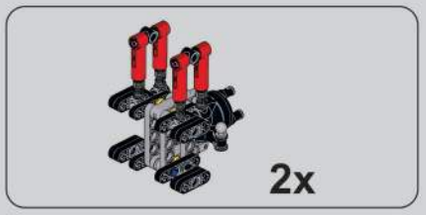

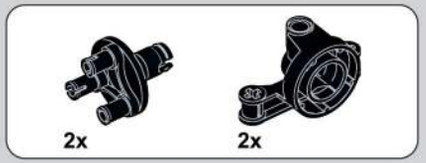

101

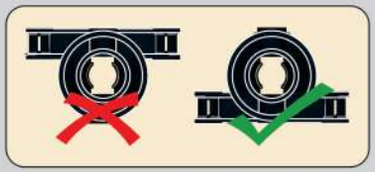

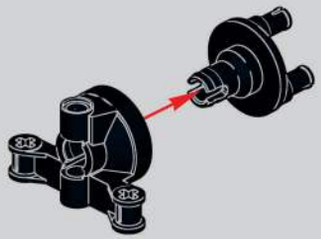

102

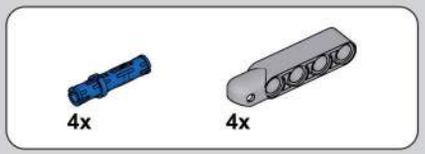

103

104

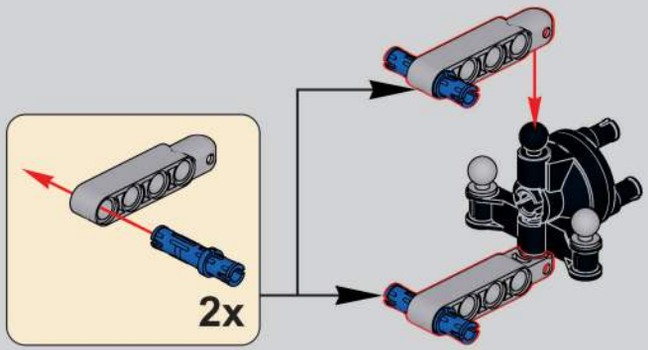

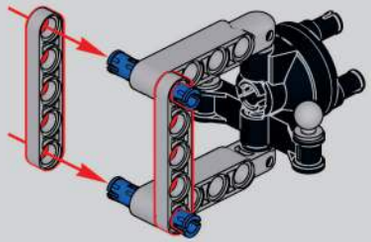

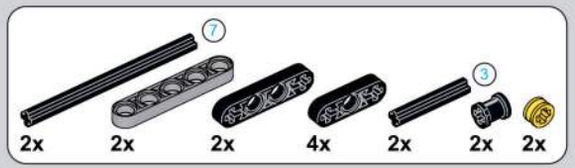

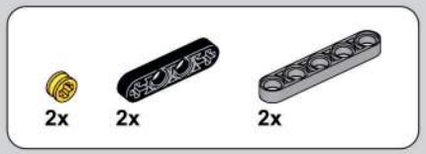

105

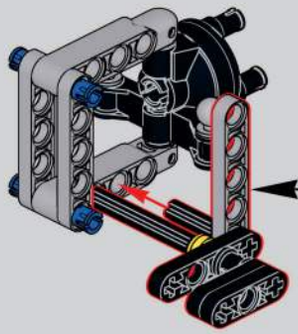

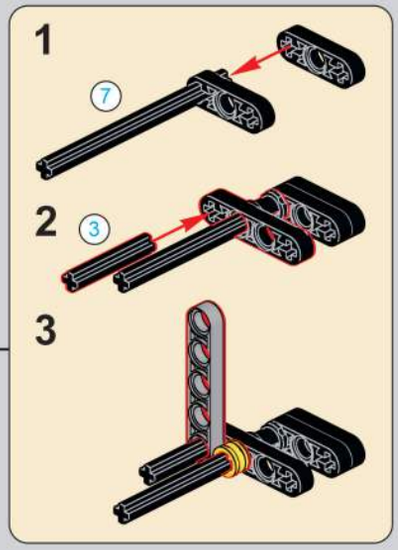

106

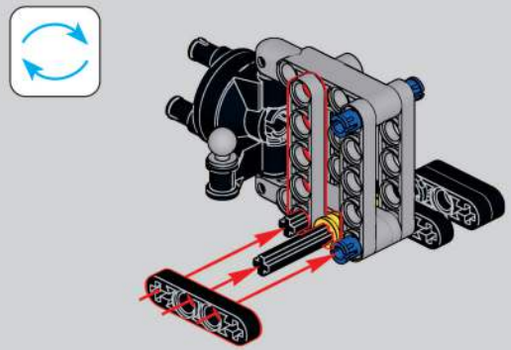

107

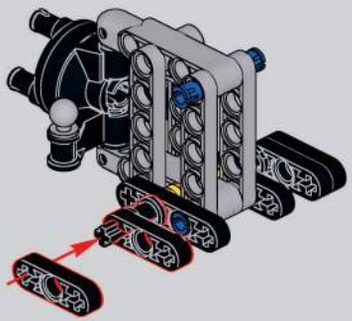

108

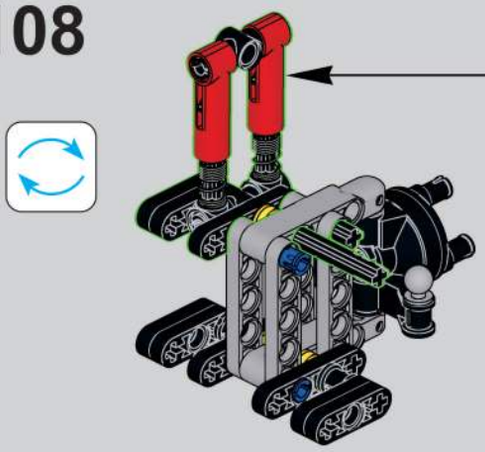

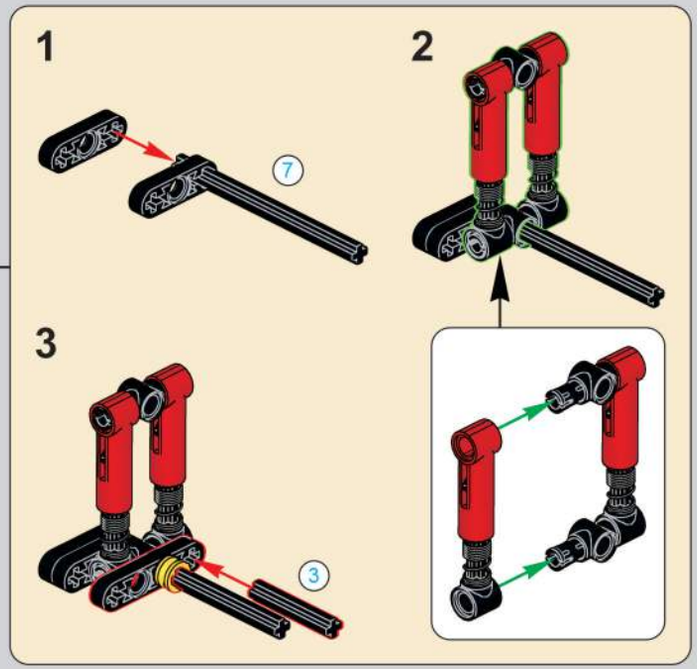

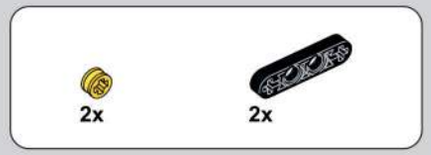

109

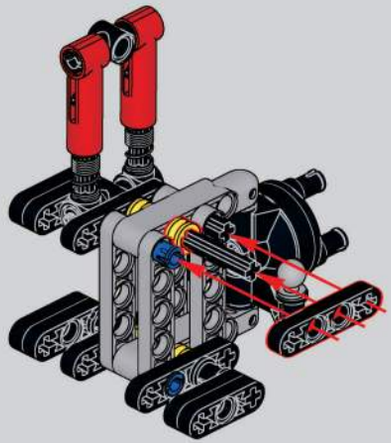

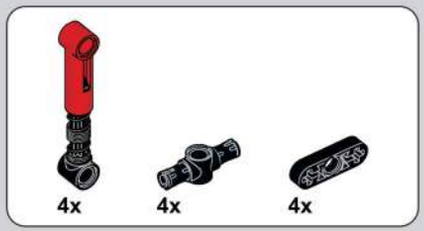

110

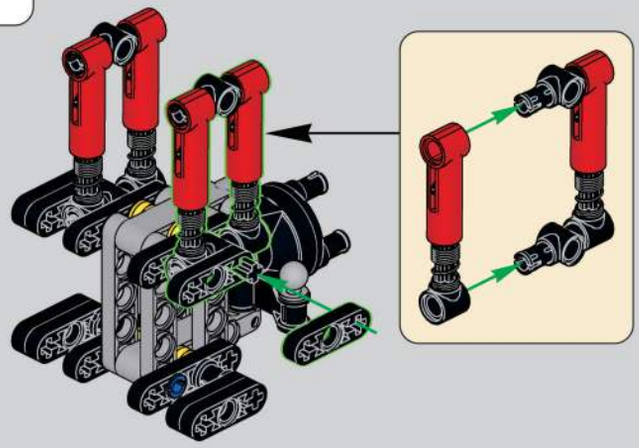

2x

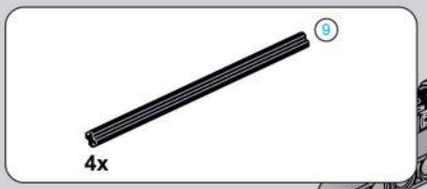

111

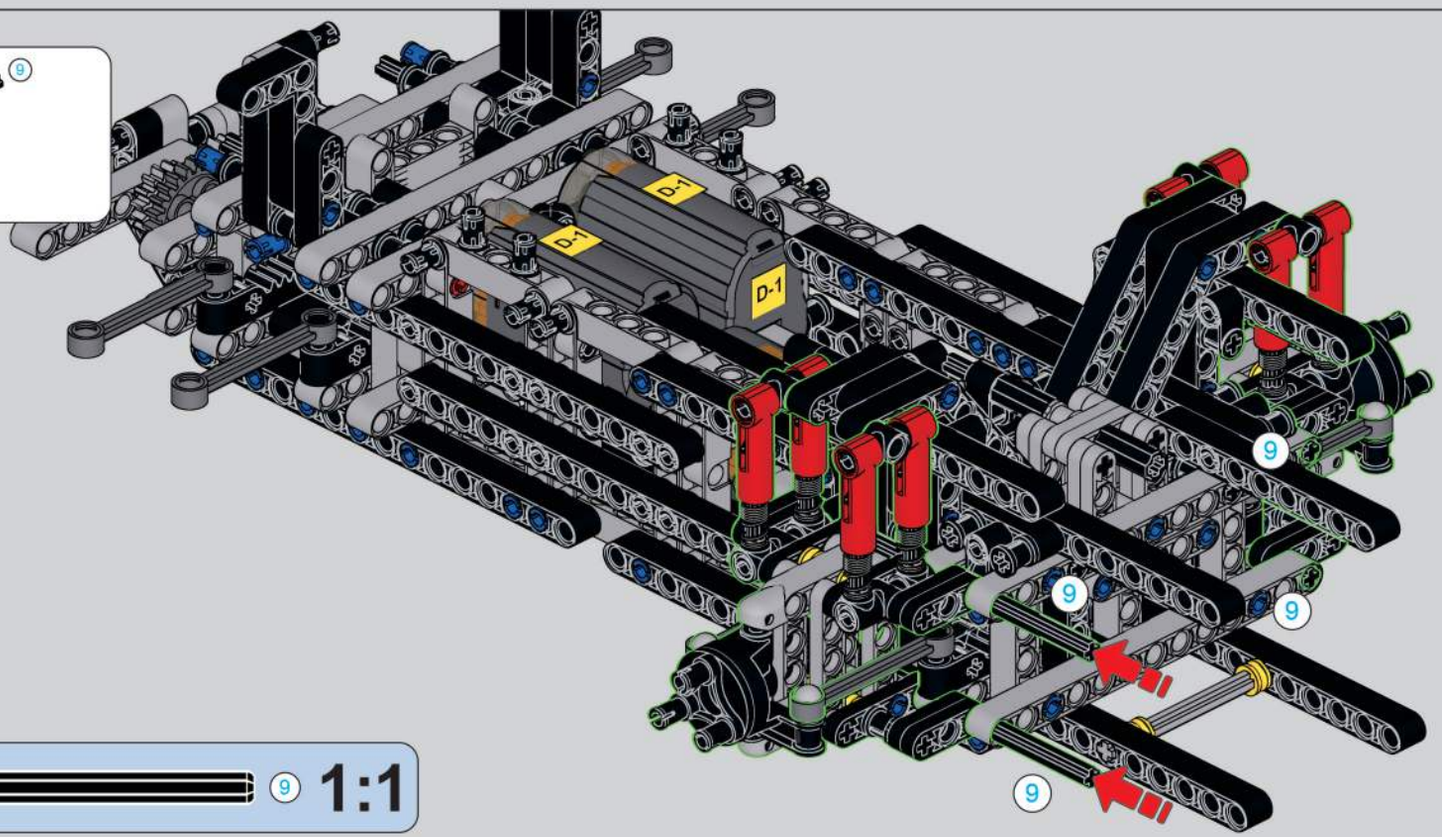

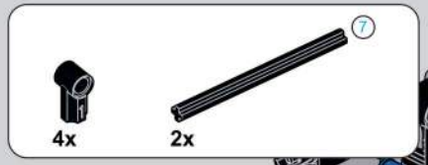

112

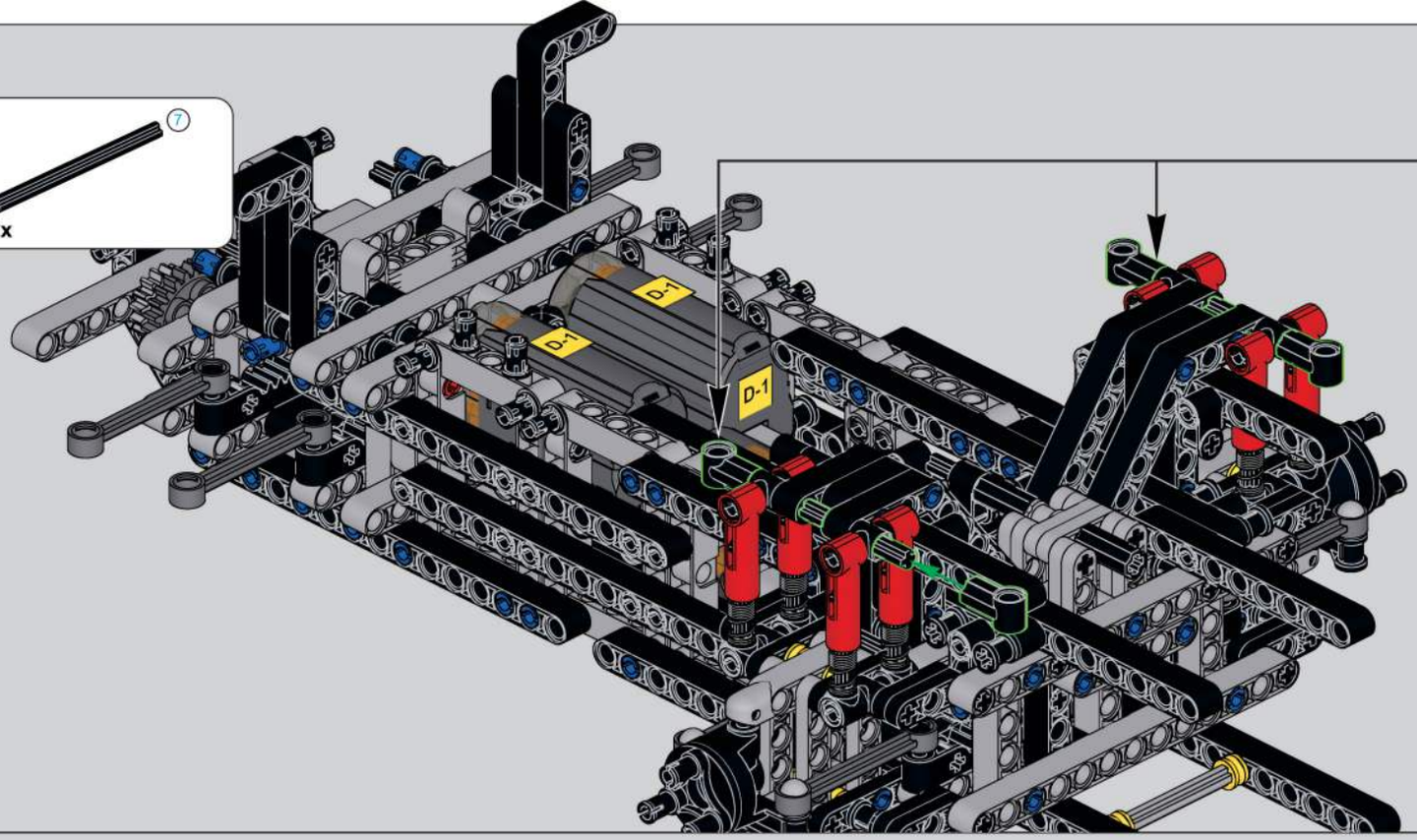

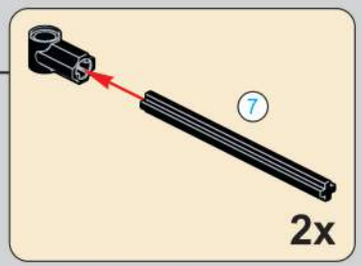

113

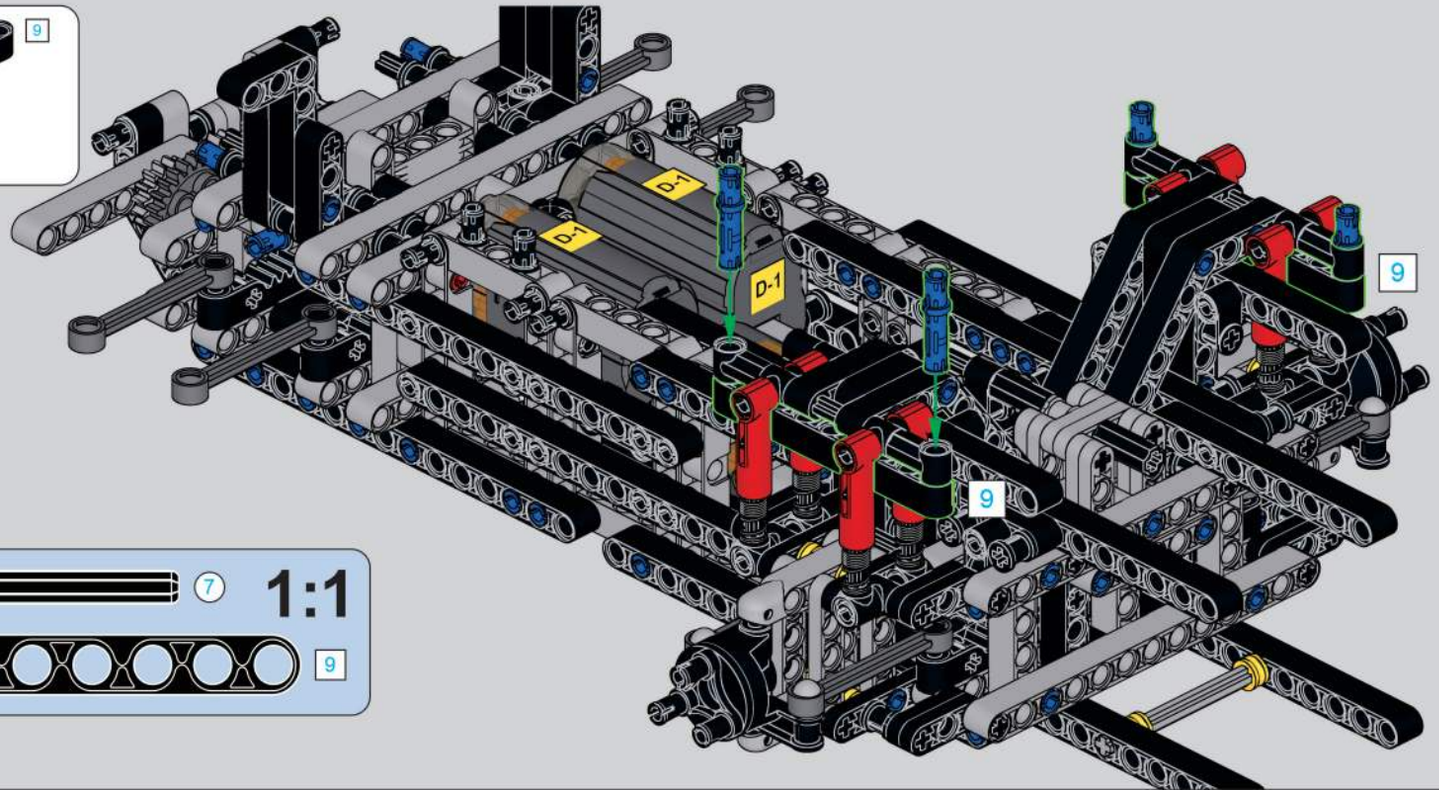

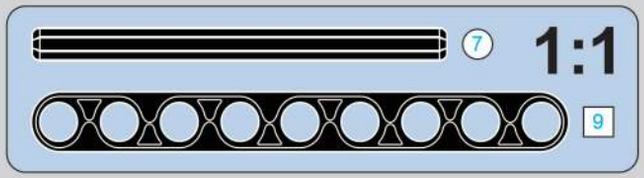

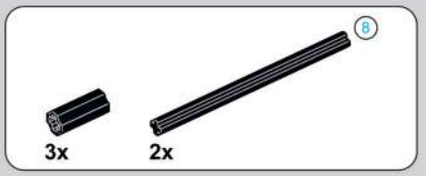

114

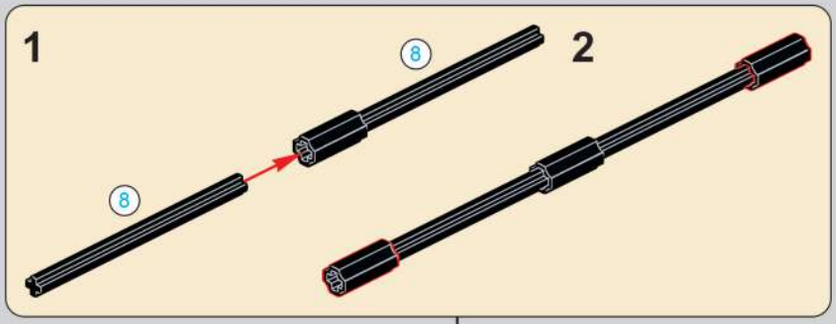

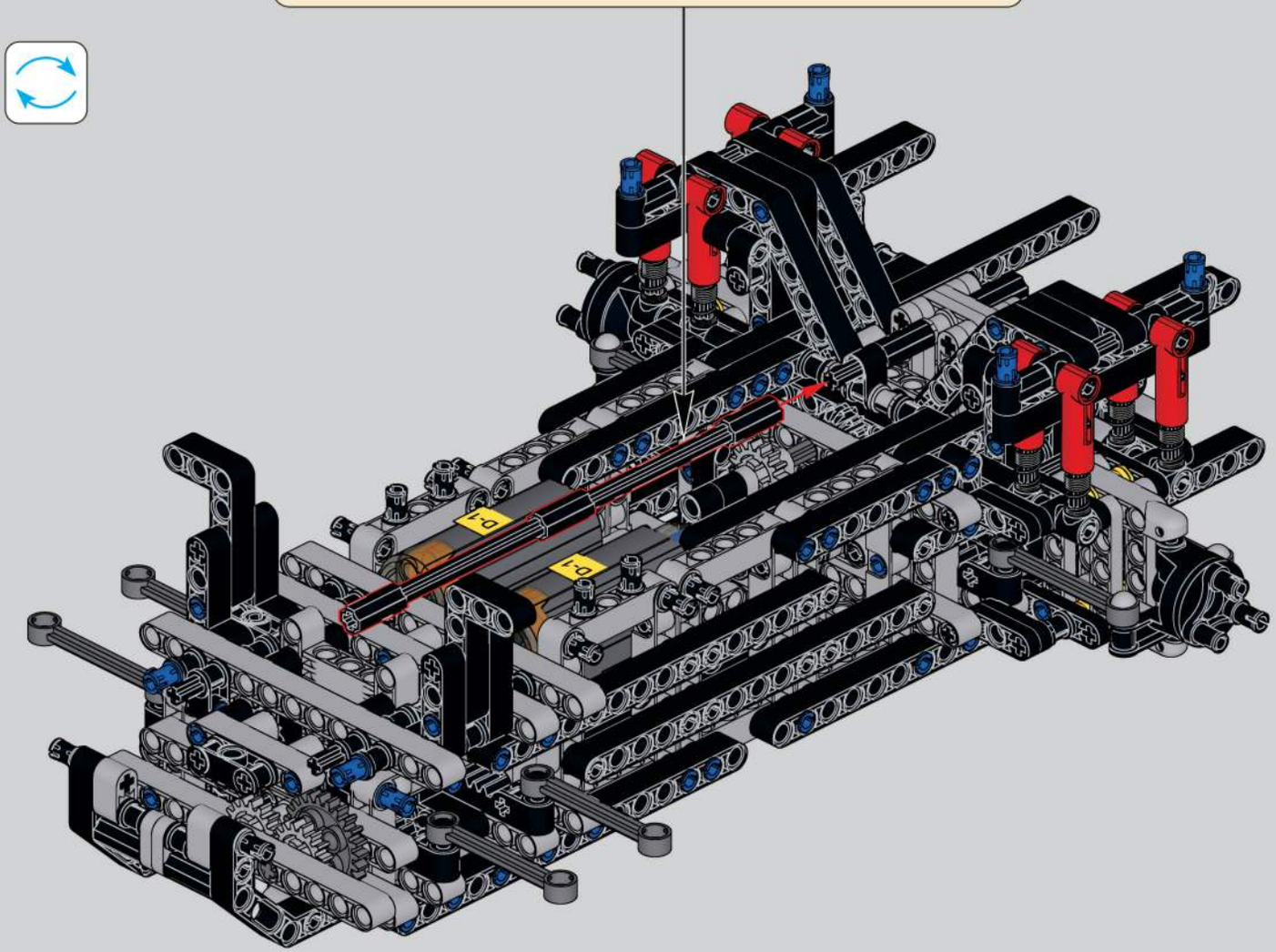

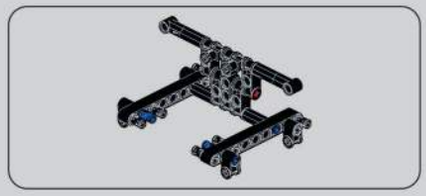

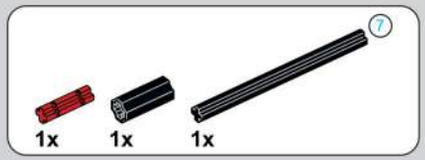

115

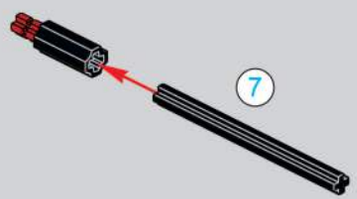

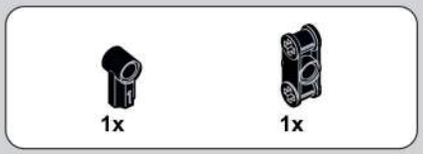

116

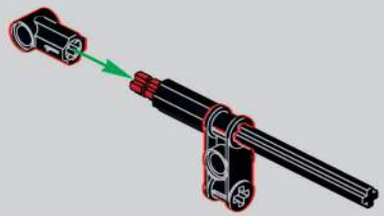

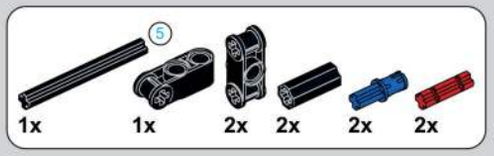

117

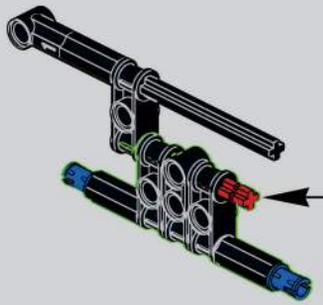

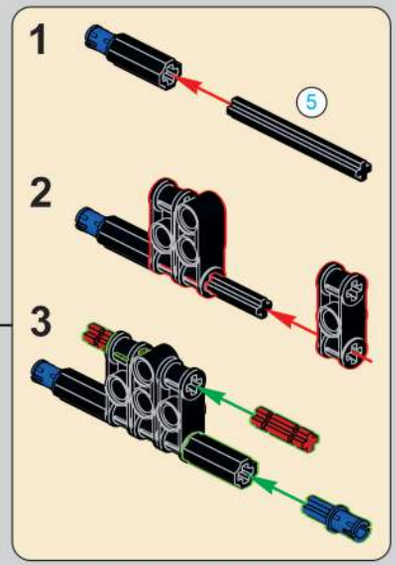

118

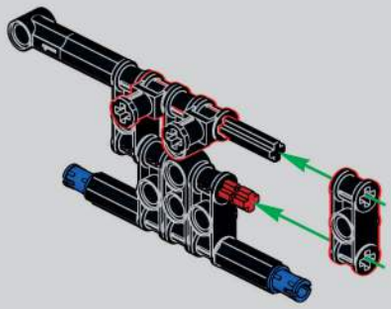

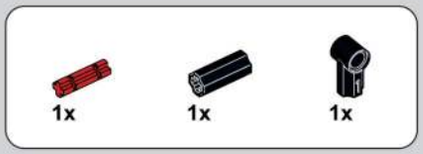

119

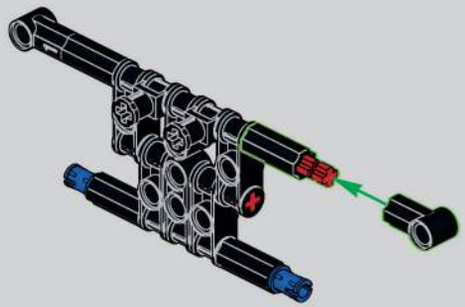

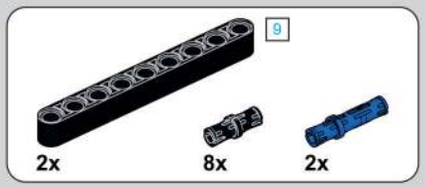

120

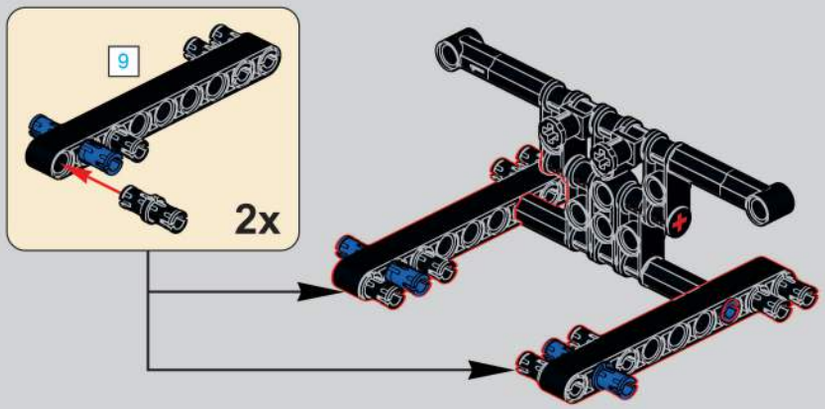

121

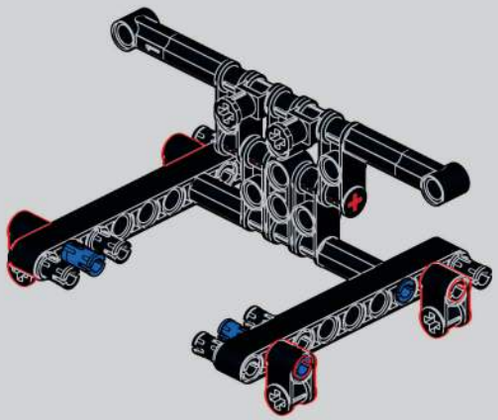

122

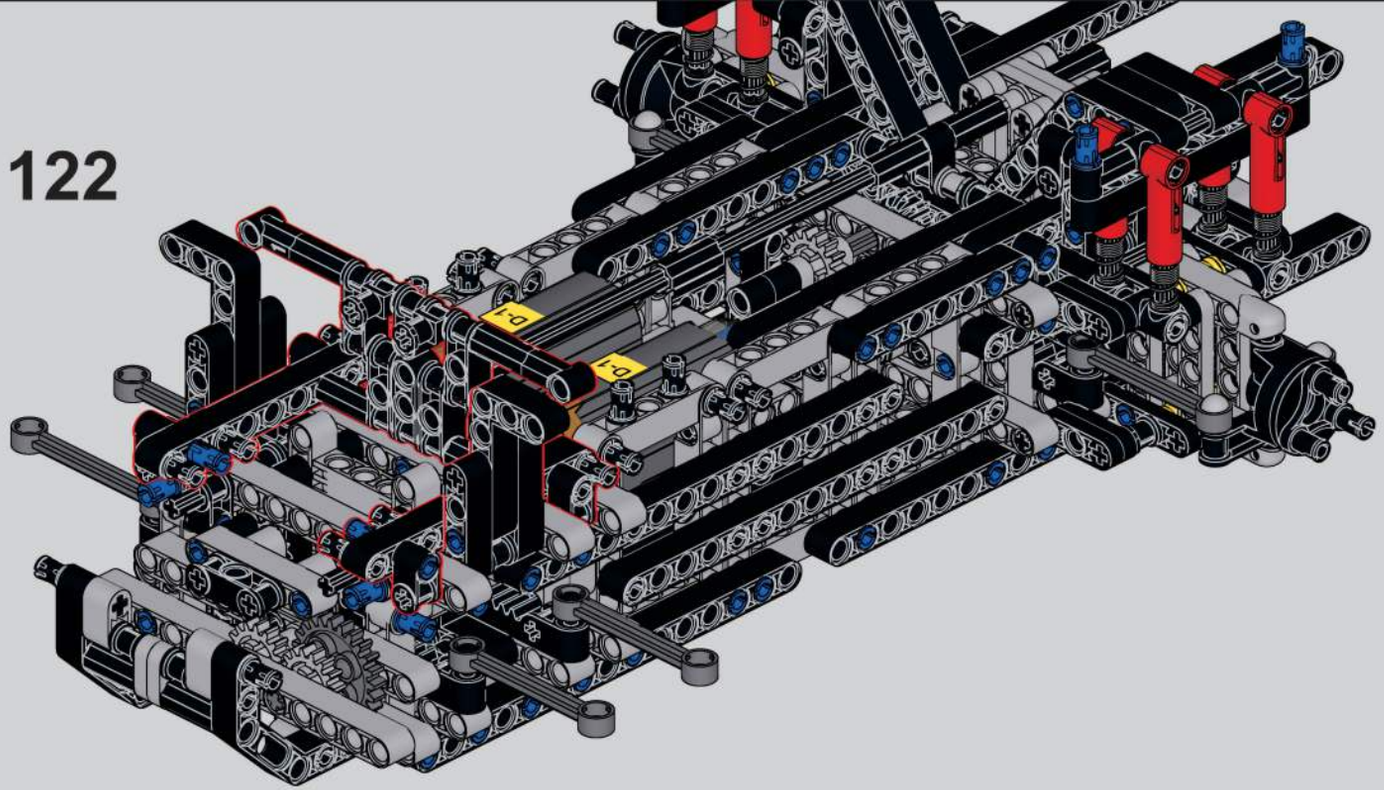

123

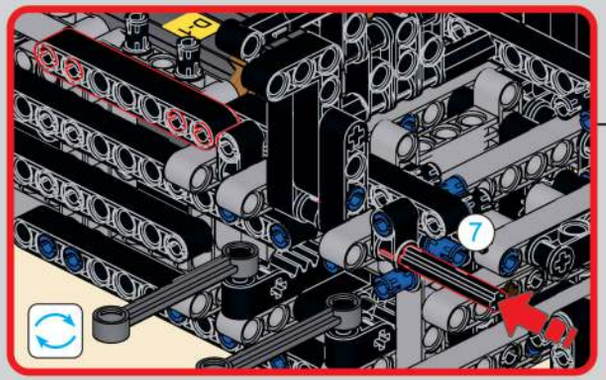

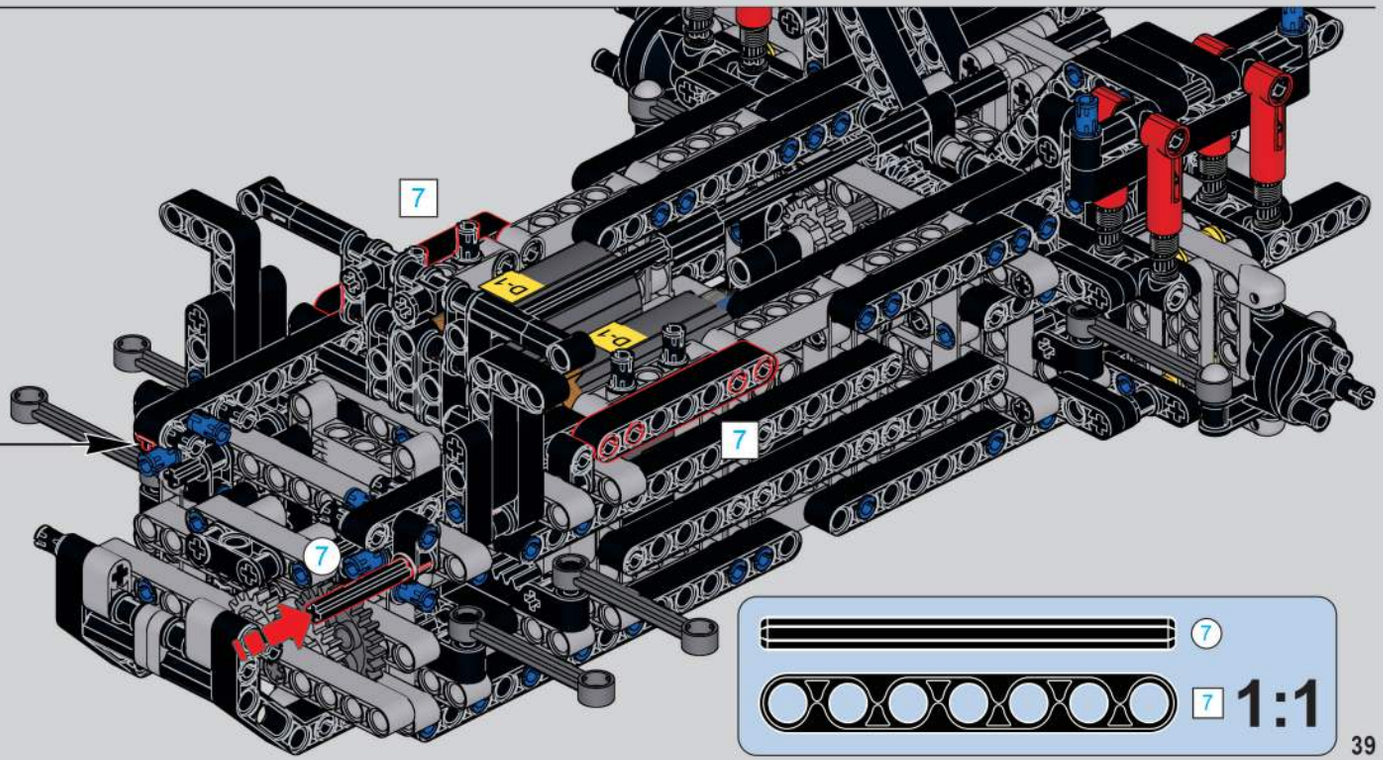

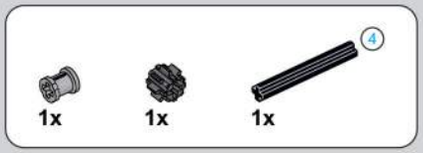

1:1

124

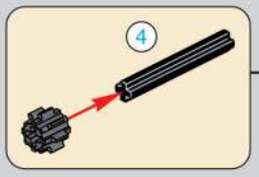

1:1

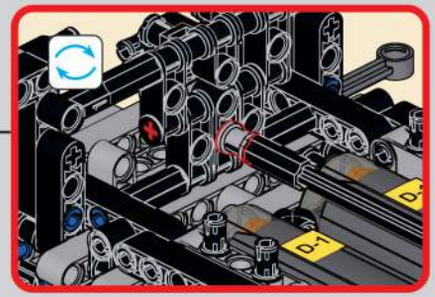

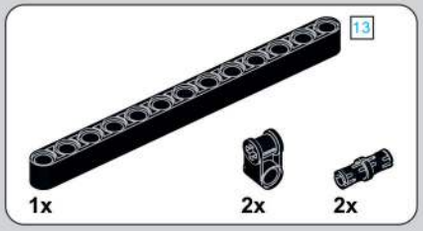

125

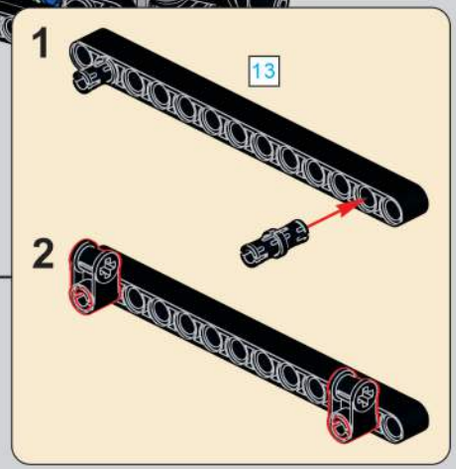

126

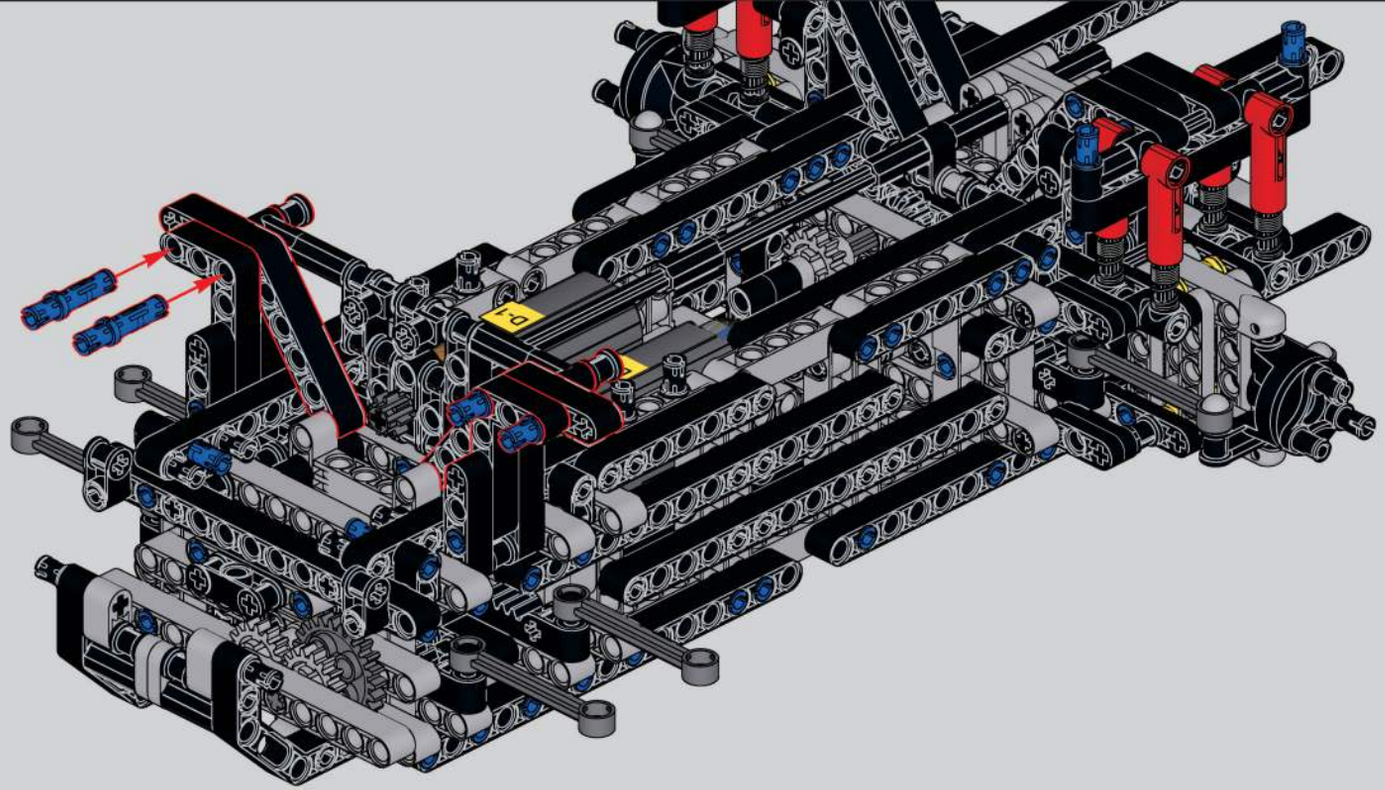

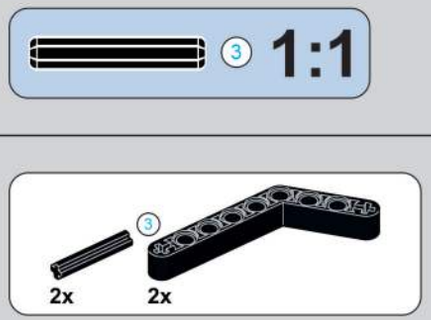

127

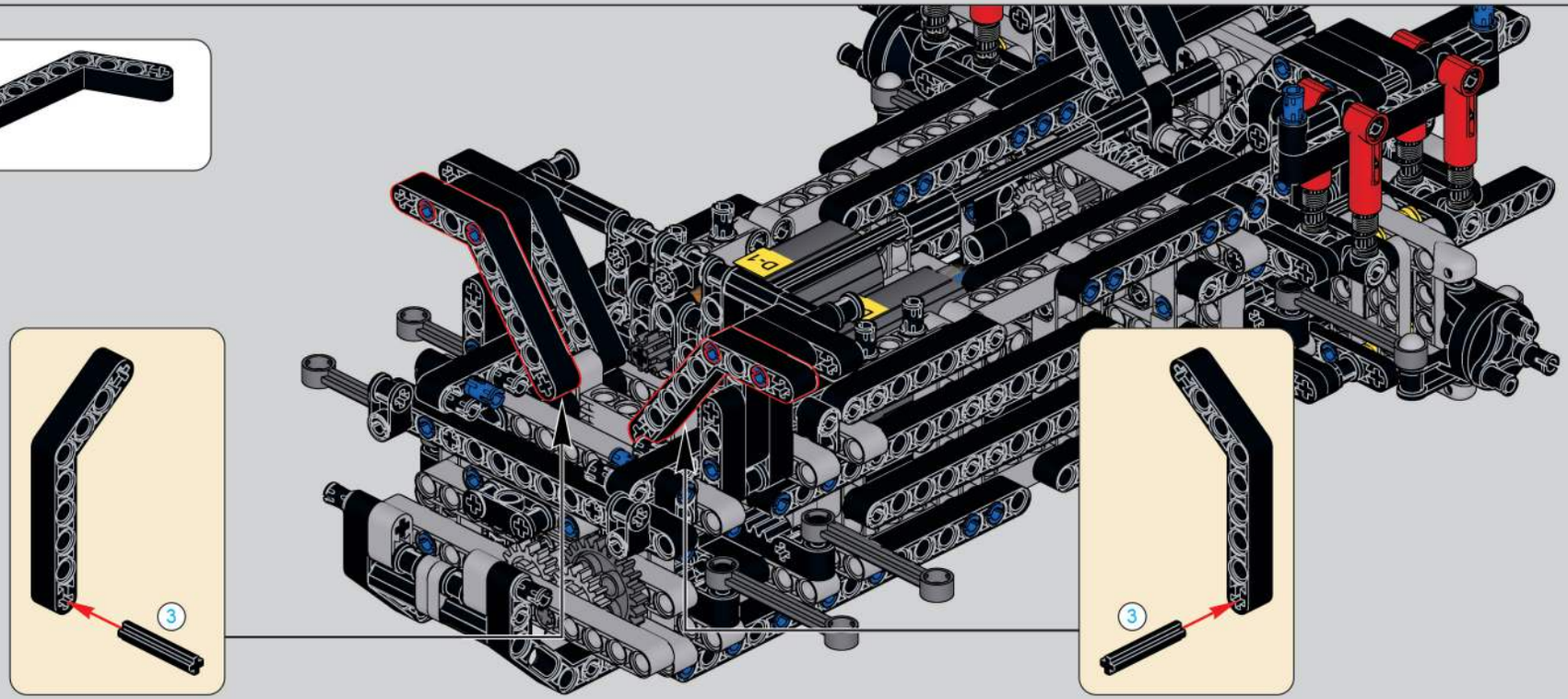

129

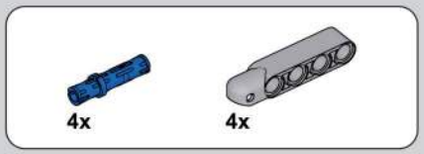

130

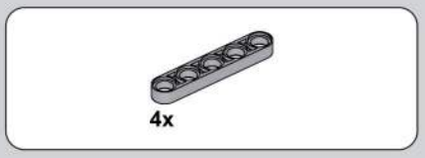

131

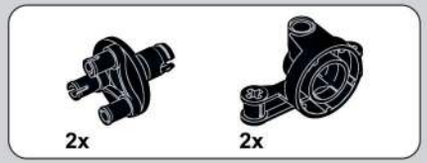

128

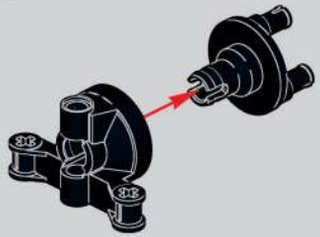

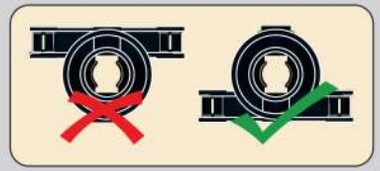

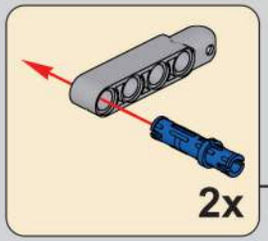

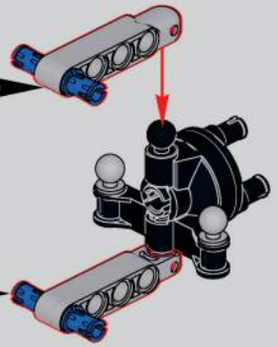

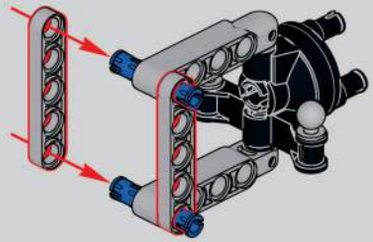

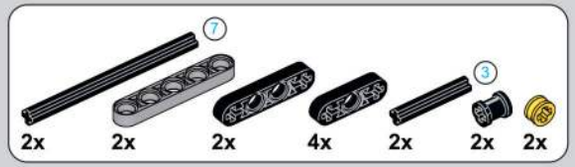

132

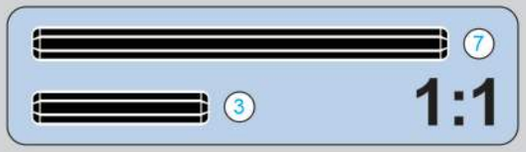

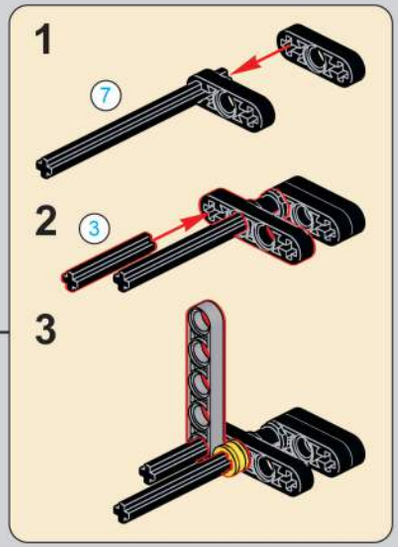

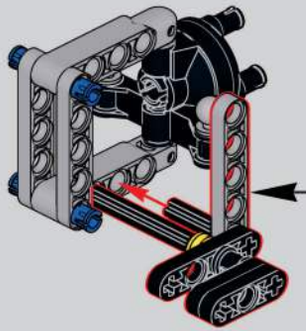

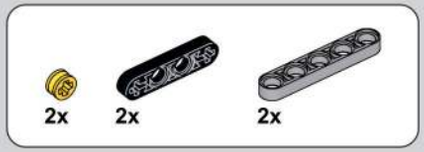

133

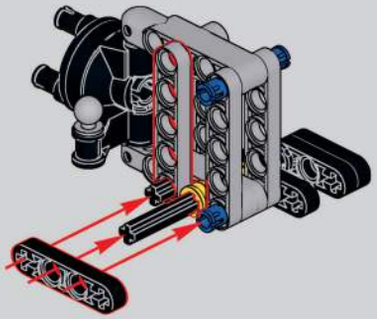

134

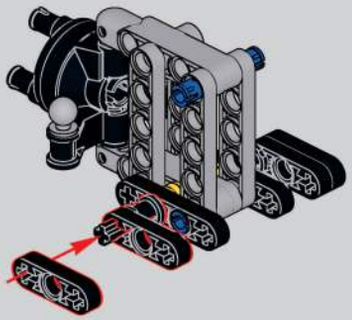

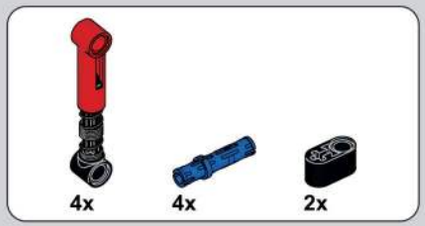

135

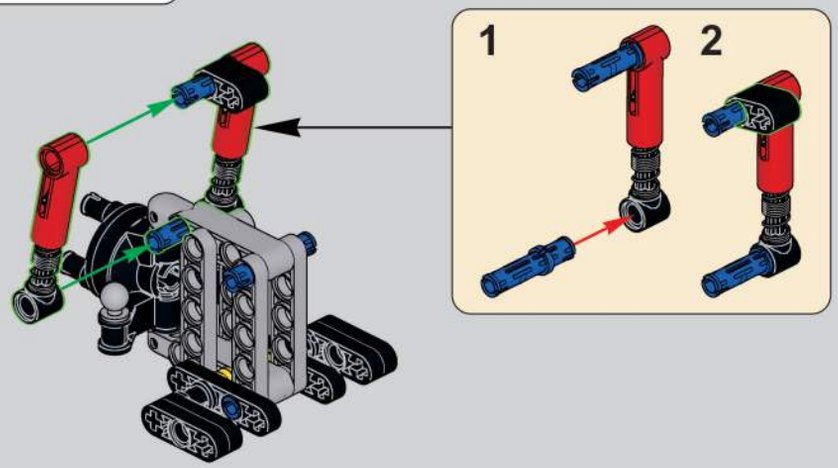

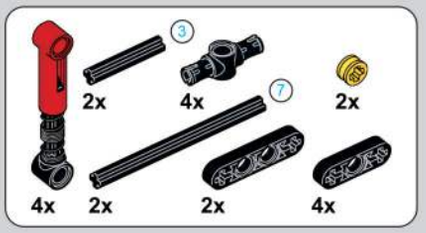

136

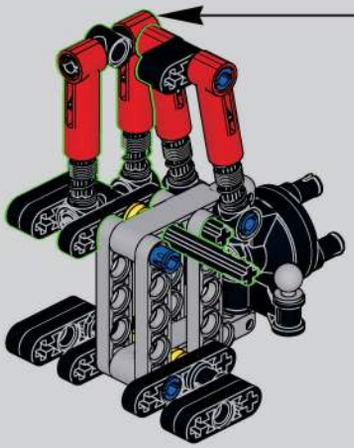

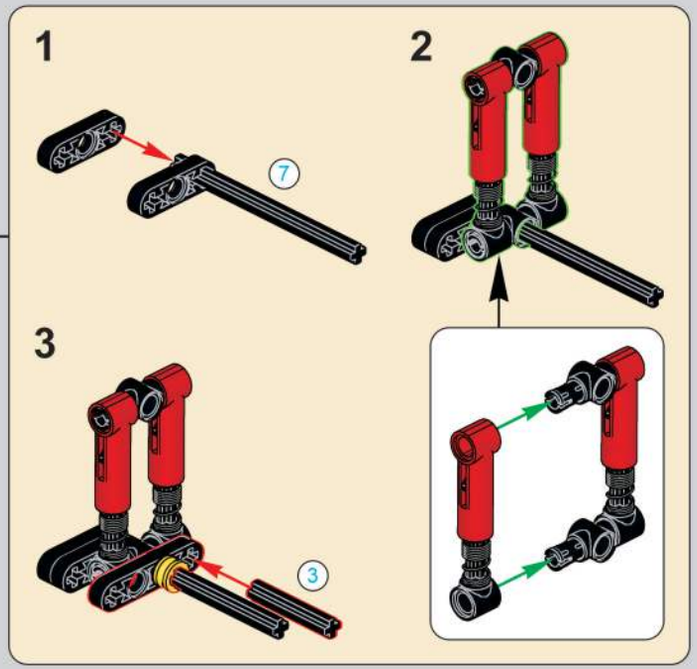

137

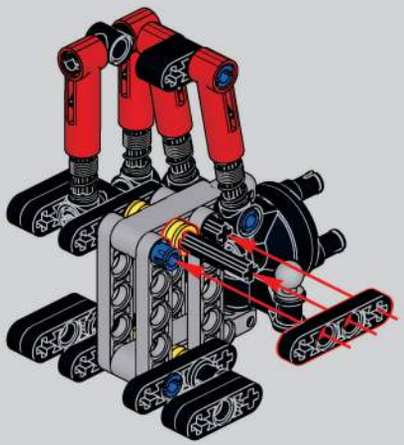

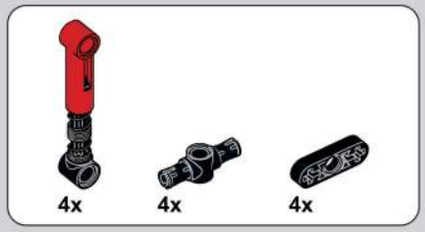

138

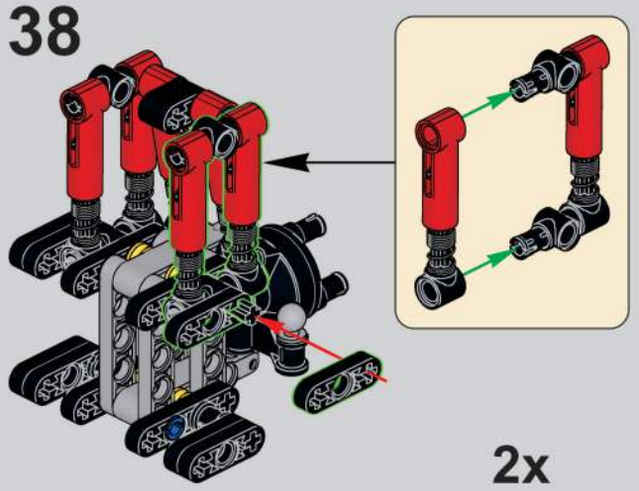

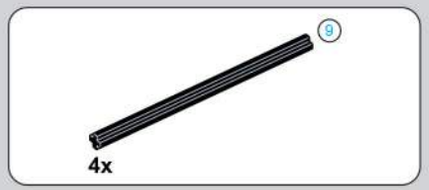

139

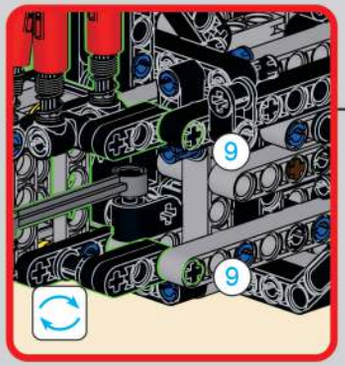

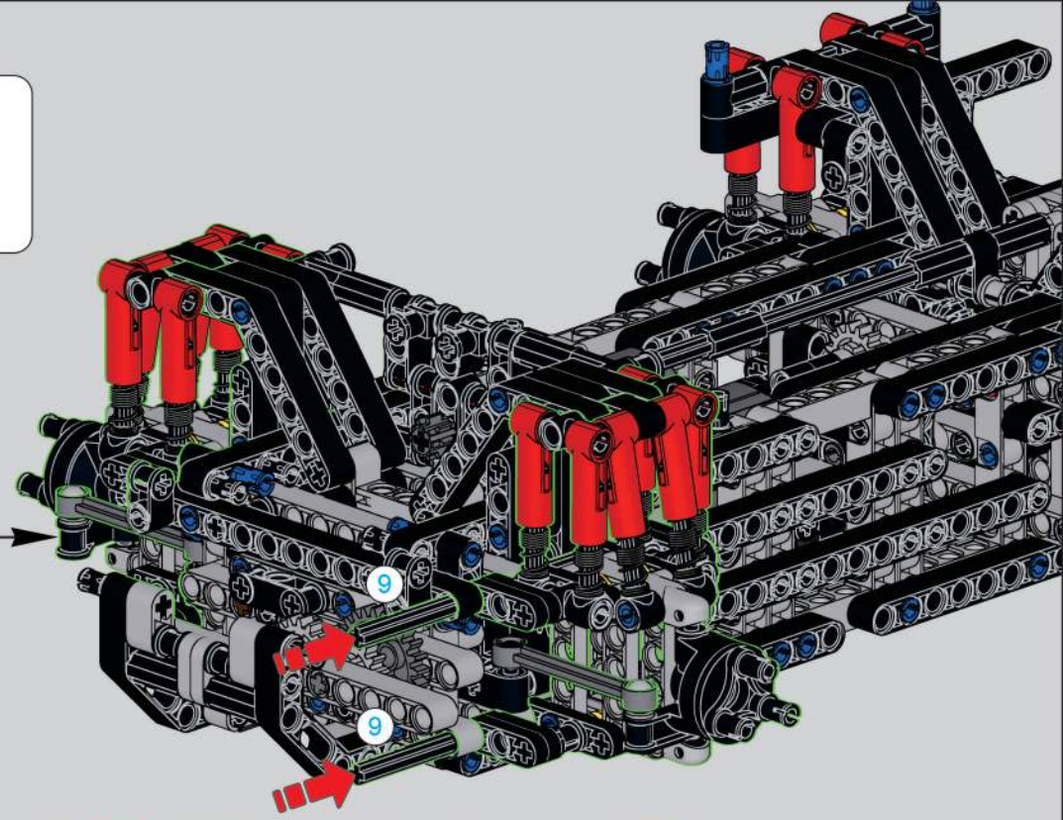

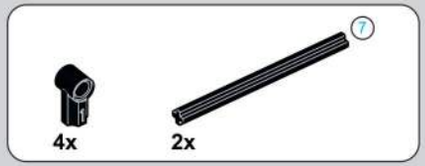

140

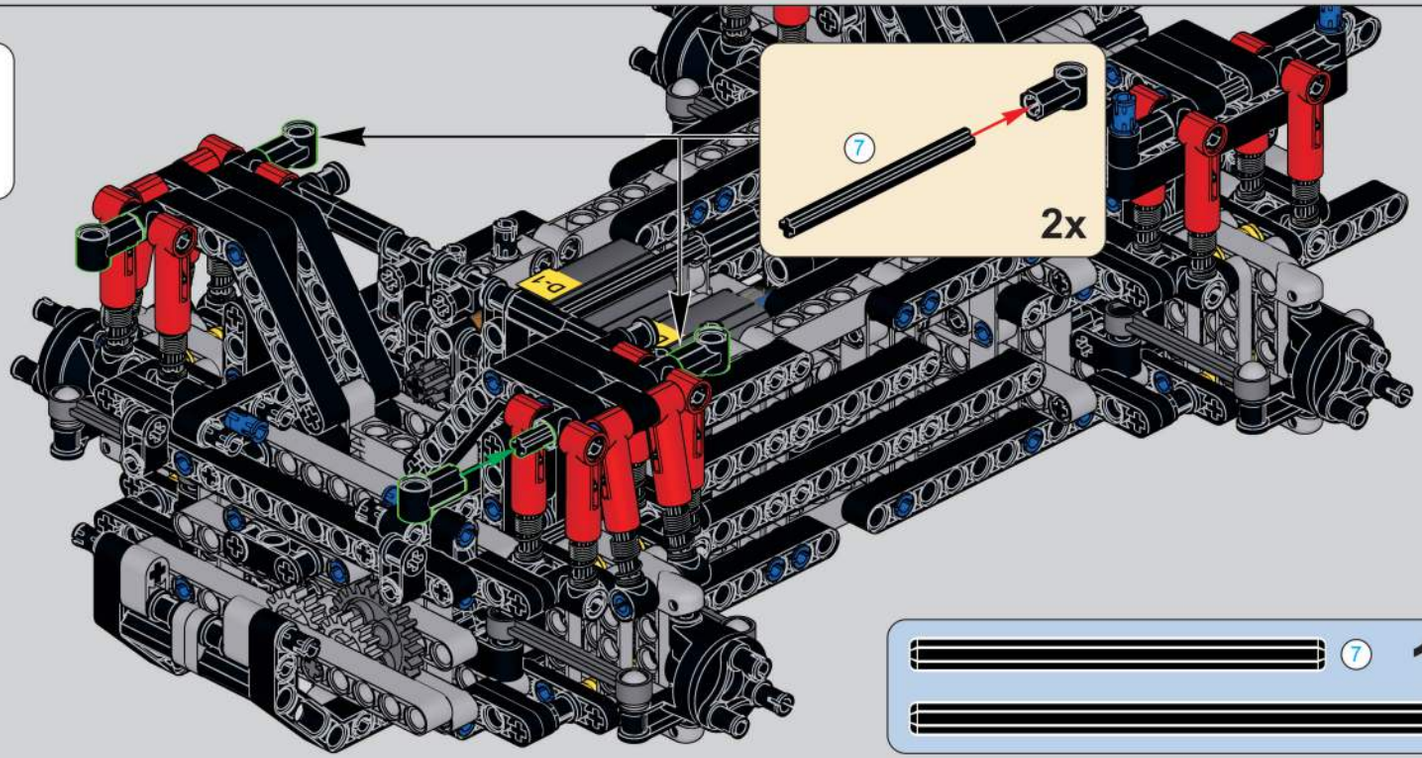

141

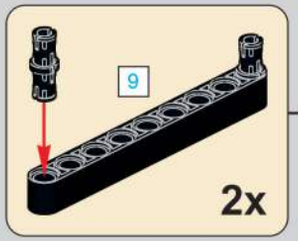

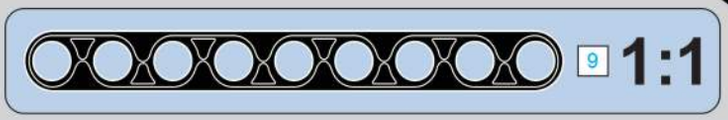

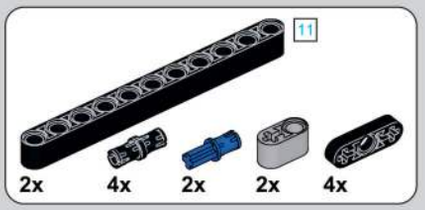

142

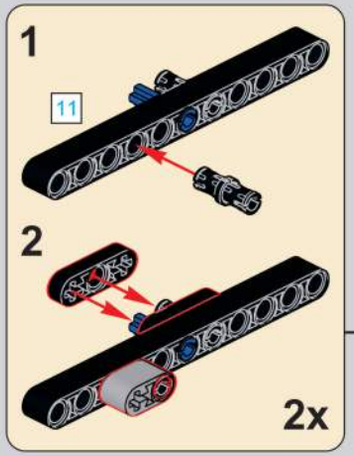

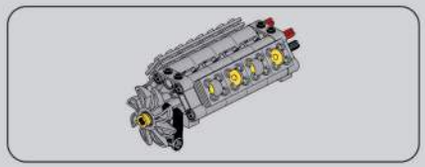

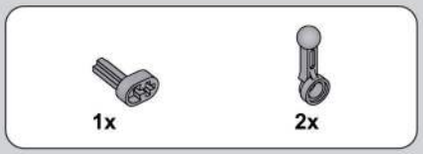

143

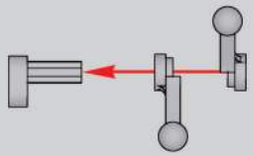

144

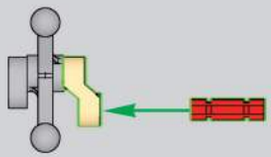

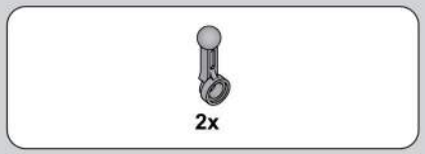

145

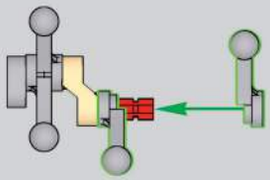

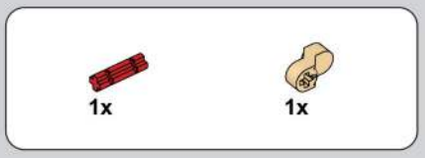

146

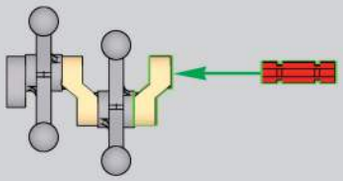

147

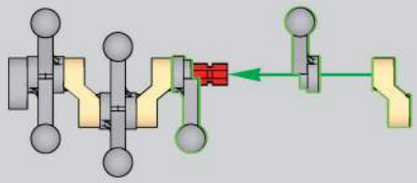

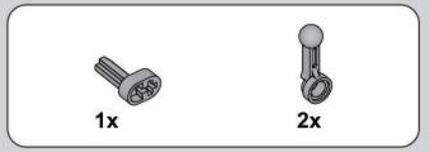

148

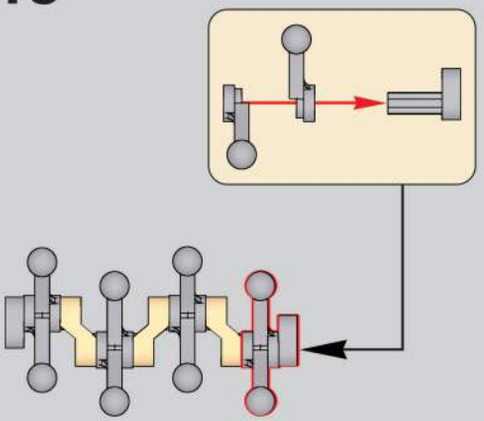

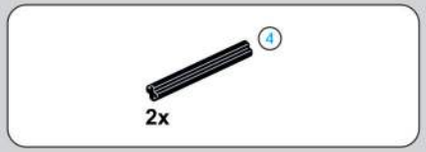

149

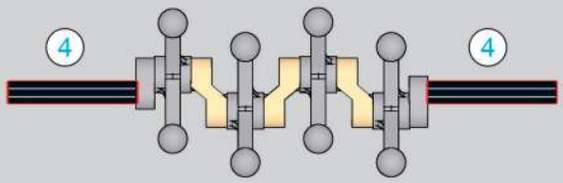

150

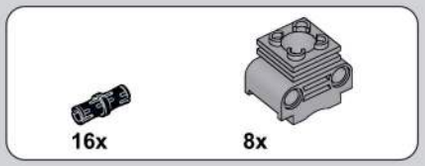

151

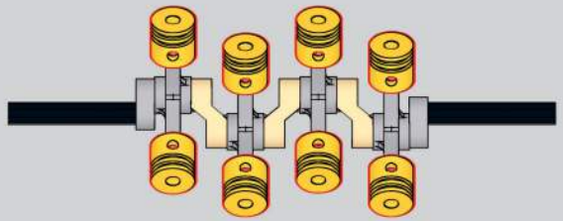

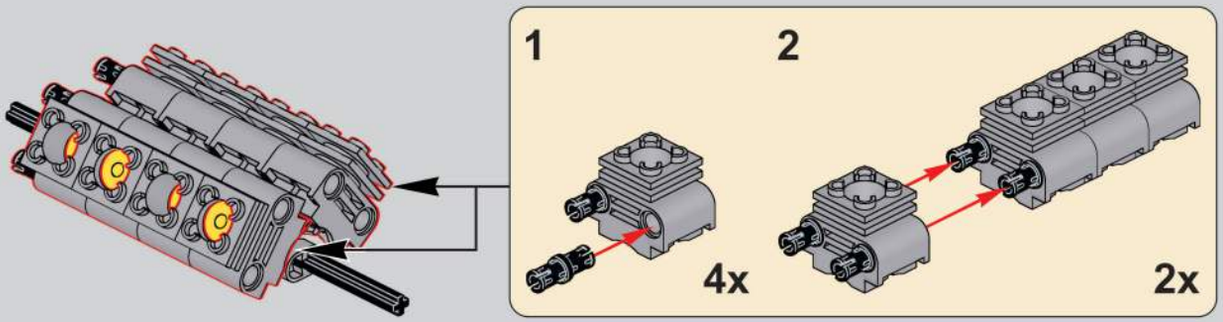

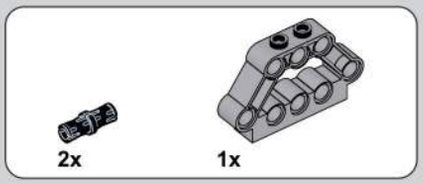

152

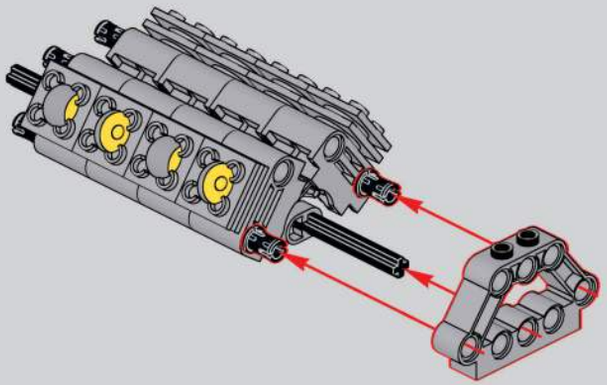

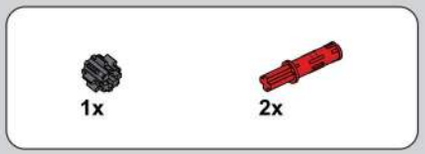

153

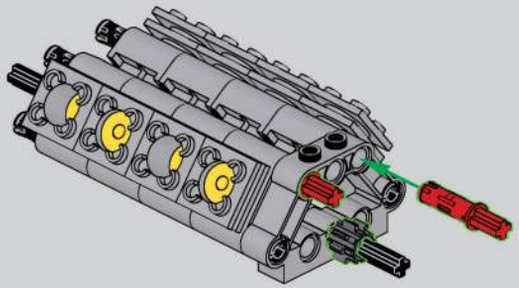

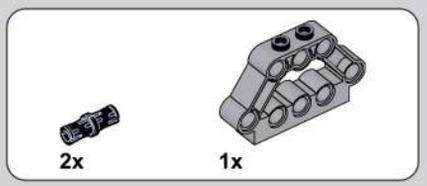

154

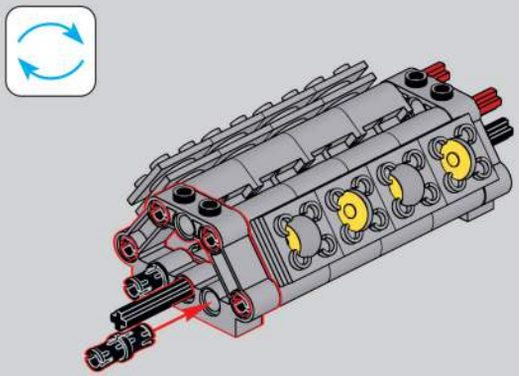

155

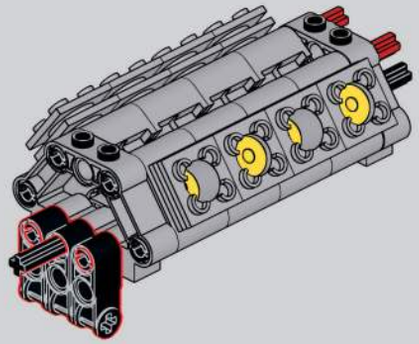

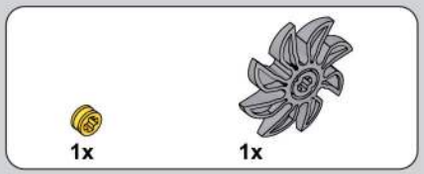

156

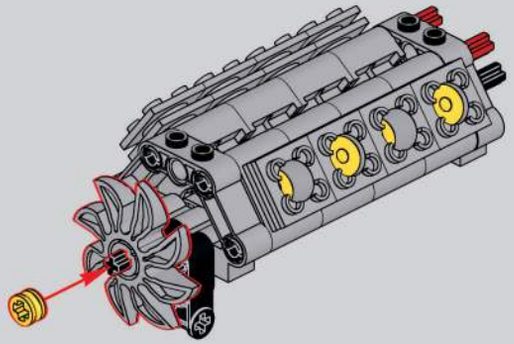

157

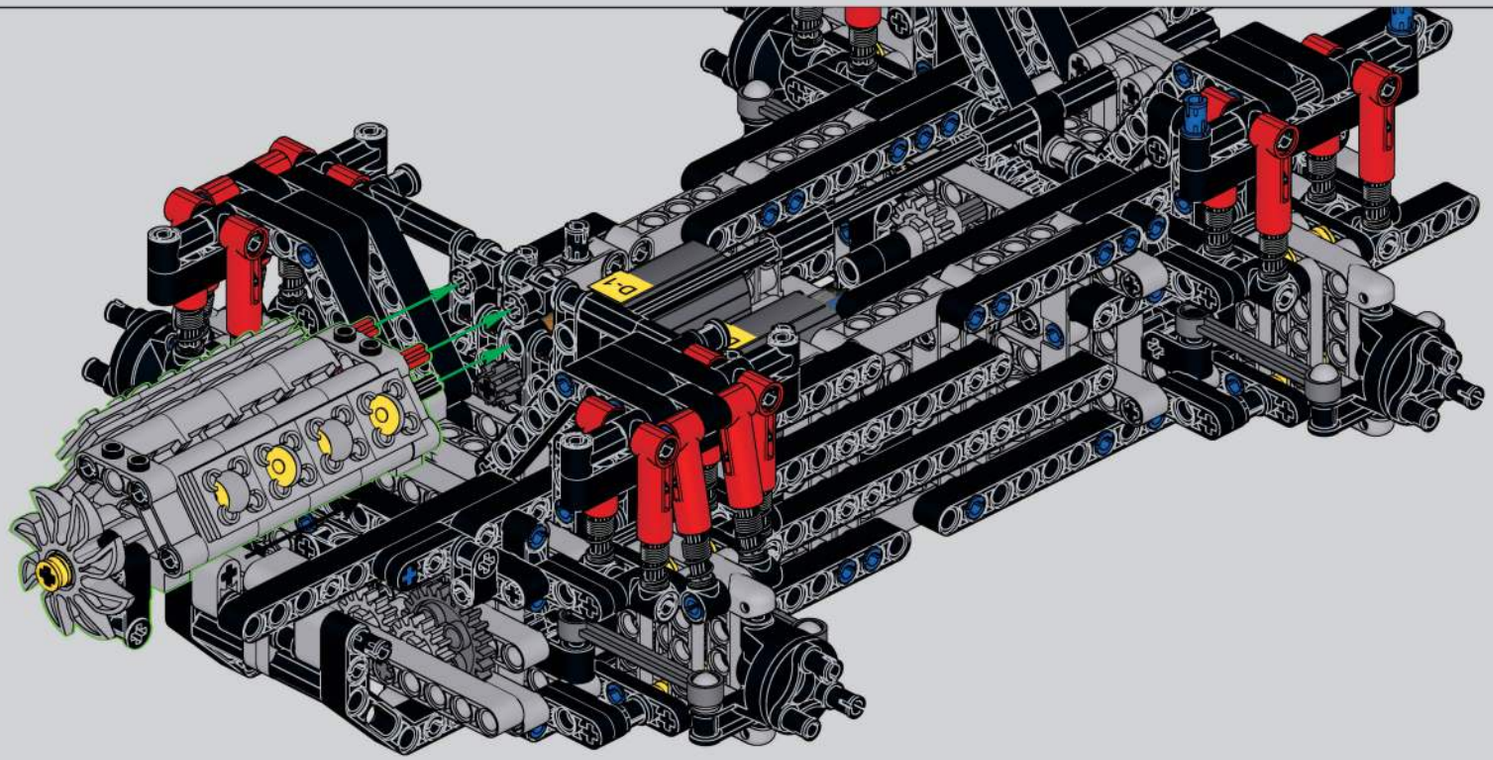

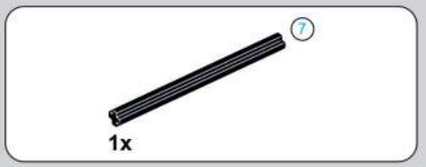

158

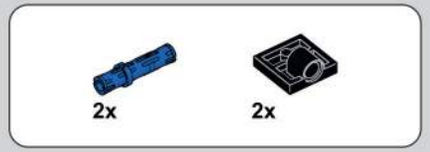

159

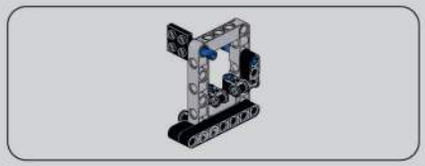

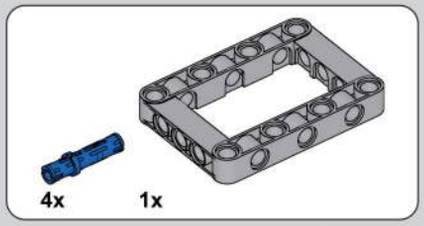

160

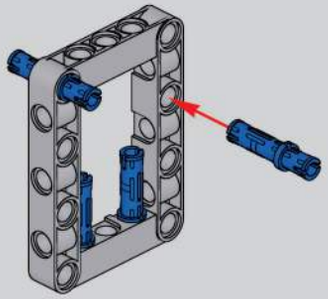

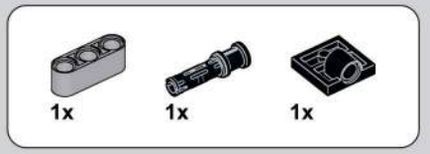

161

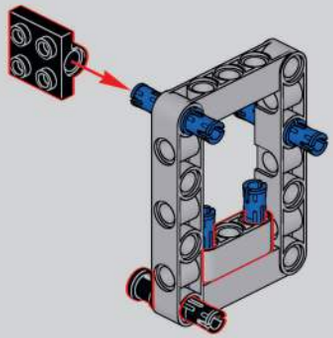

162

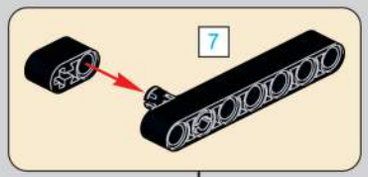

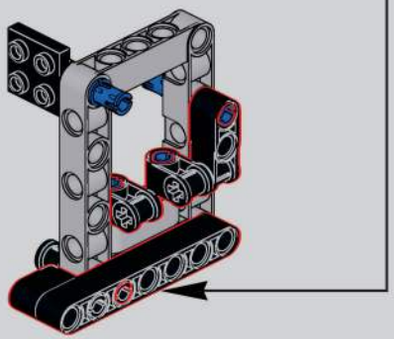

163

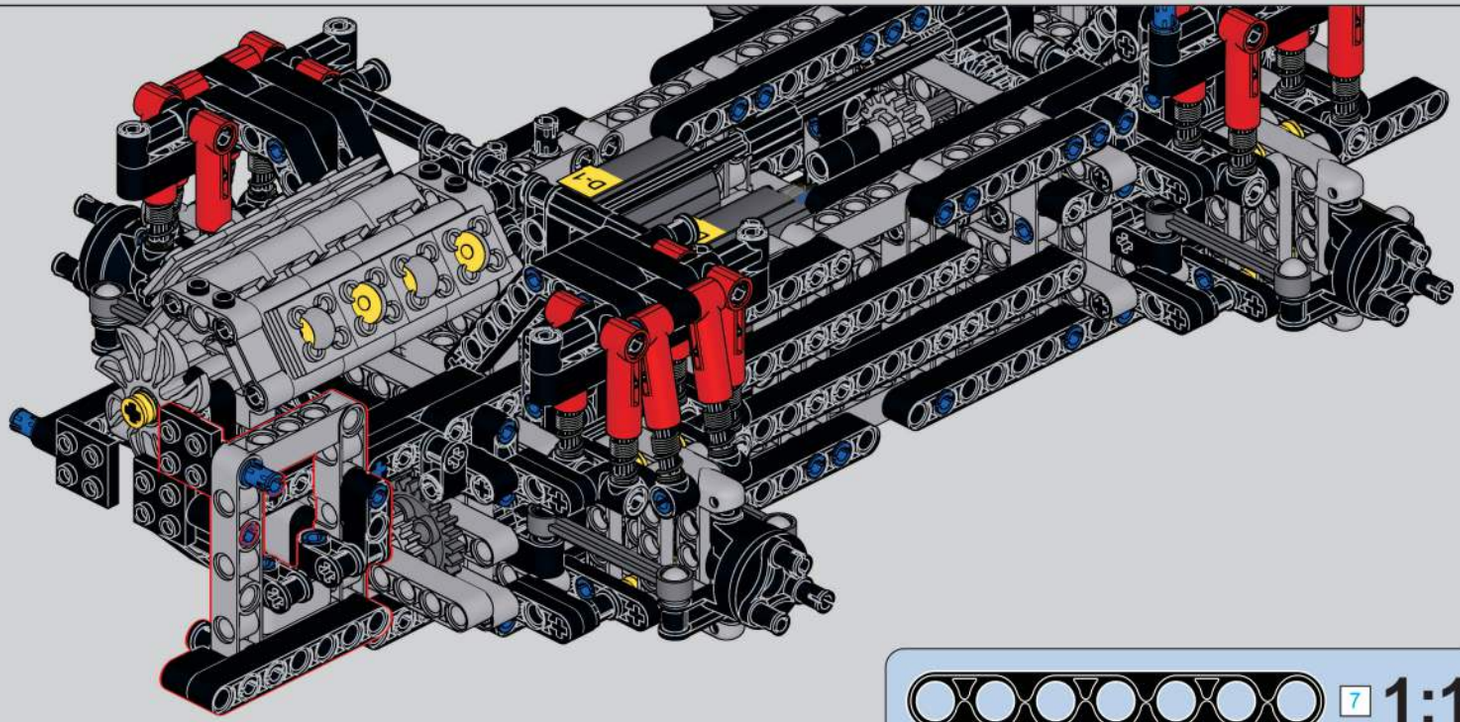

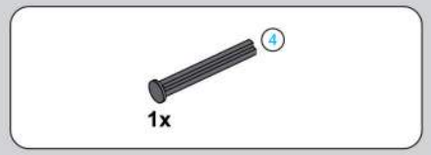

164

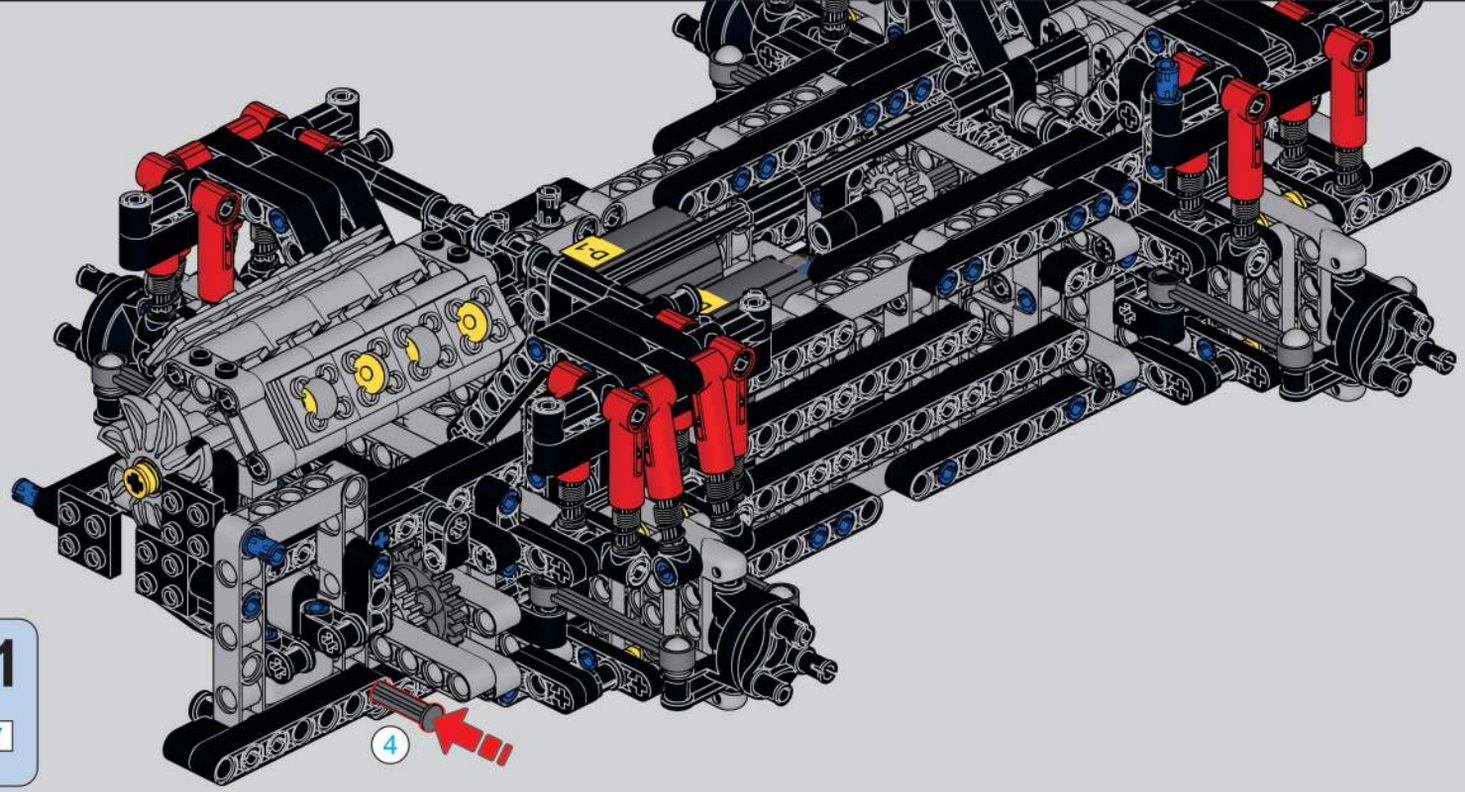

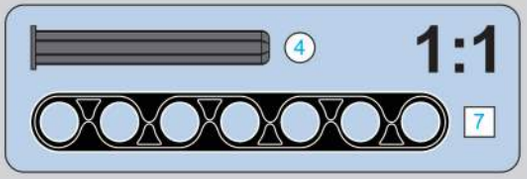

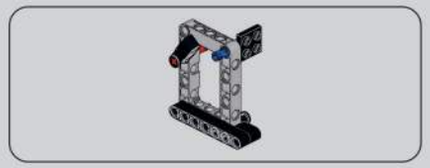

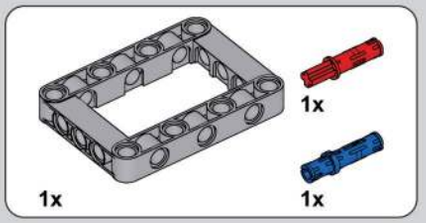

165

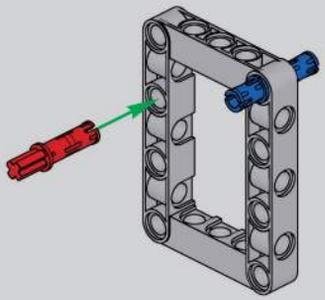

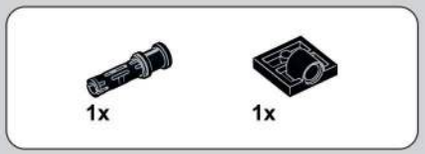

166

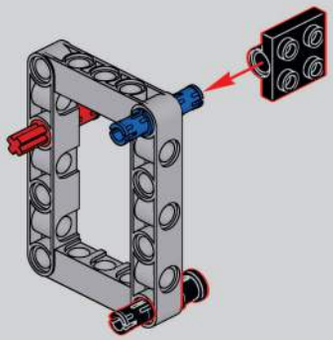

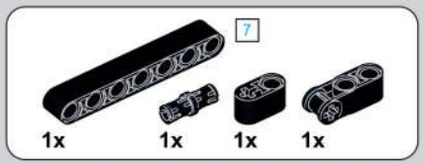

167

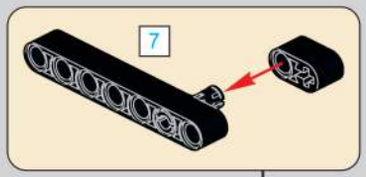

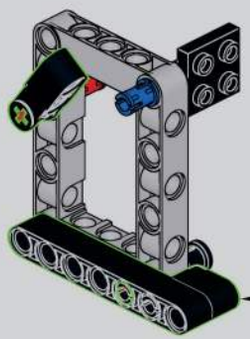

168

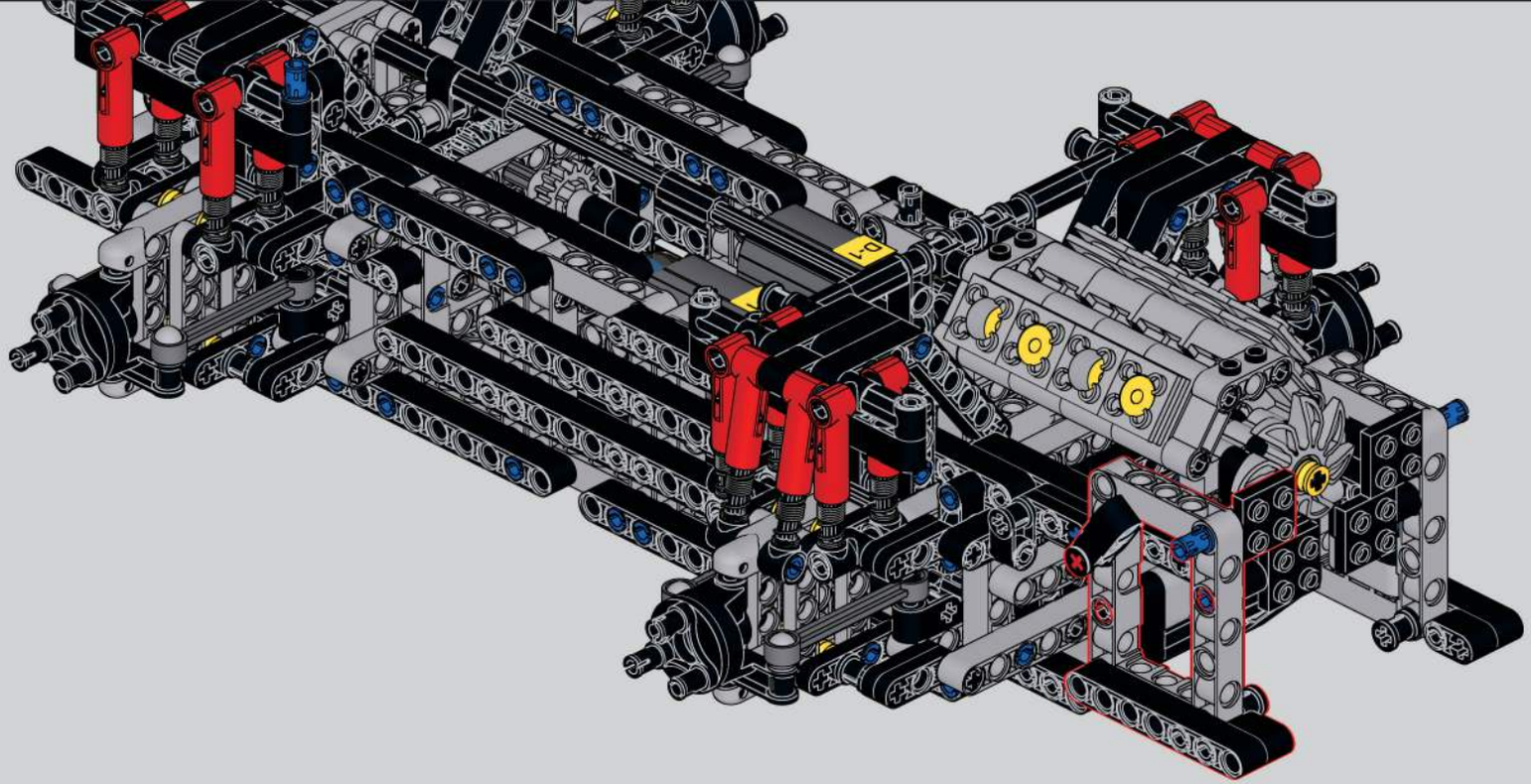

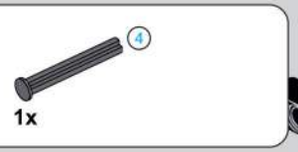

169

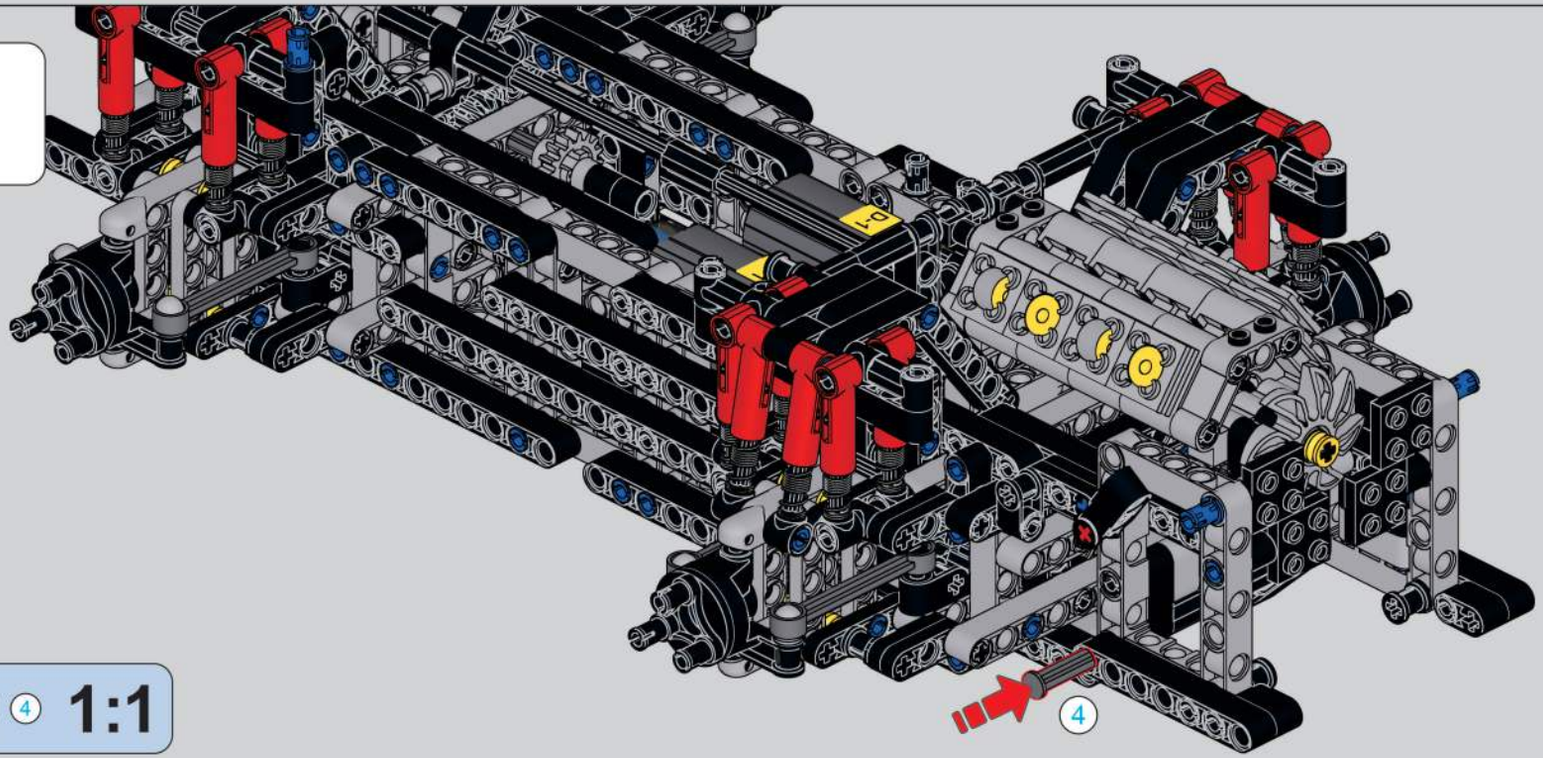

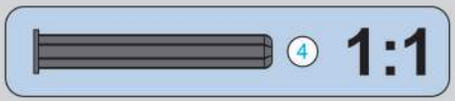

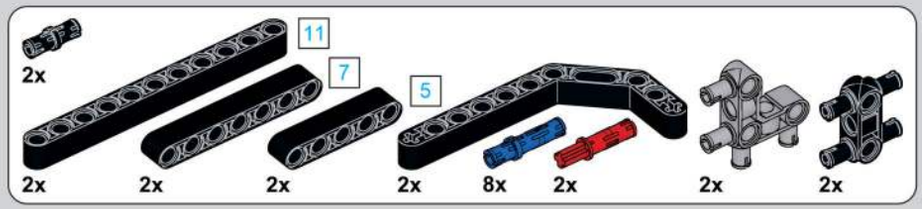

170

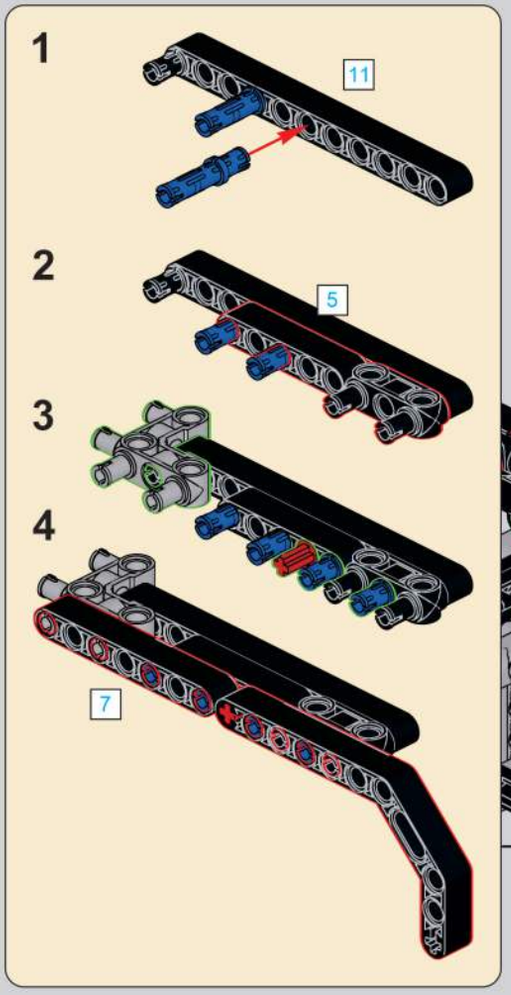

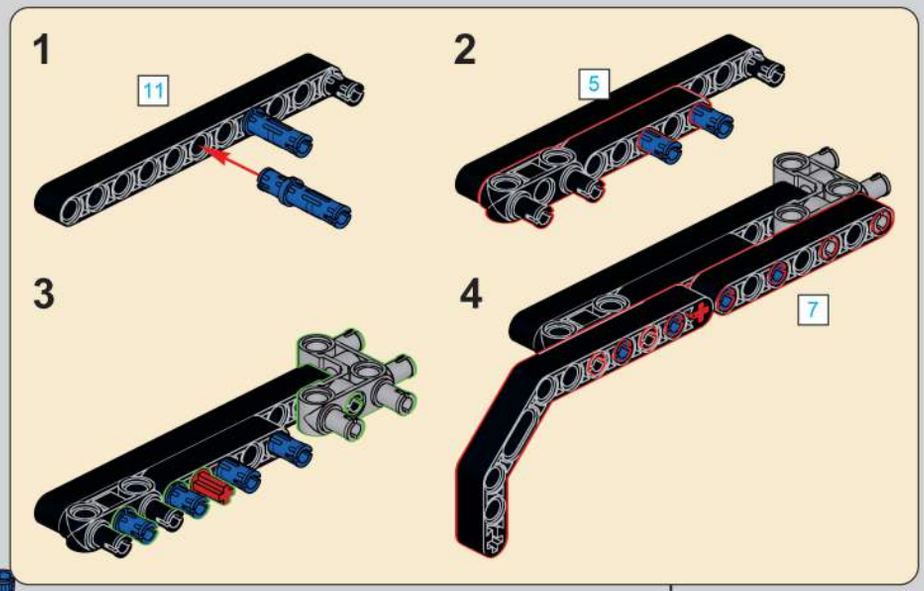

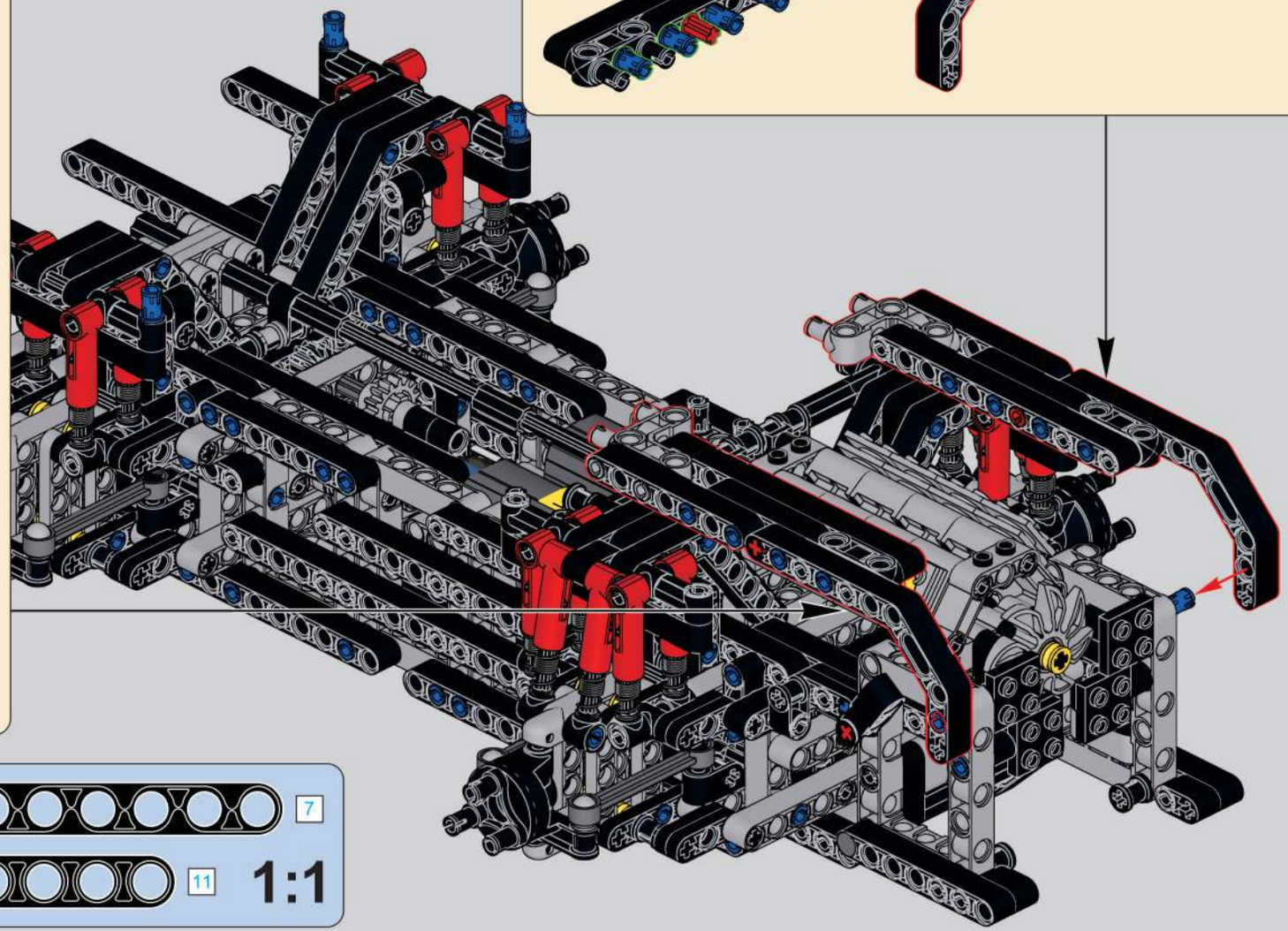

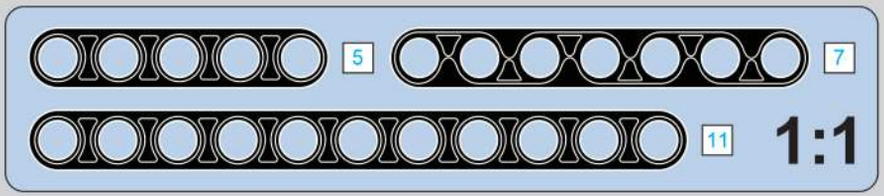

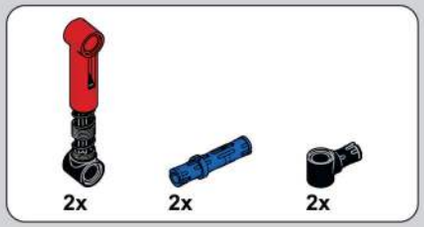

171

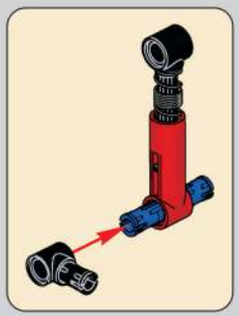

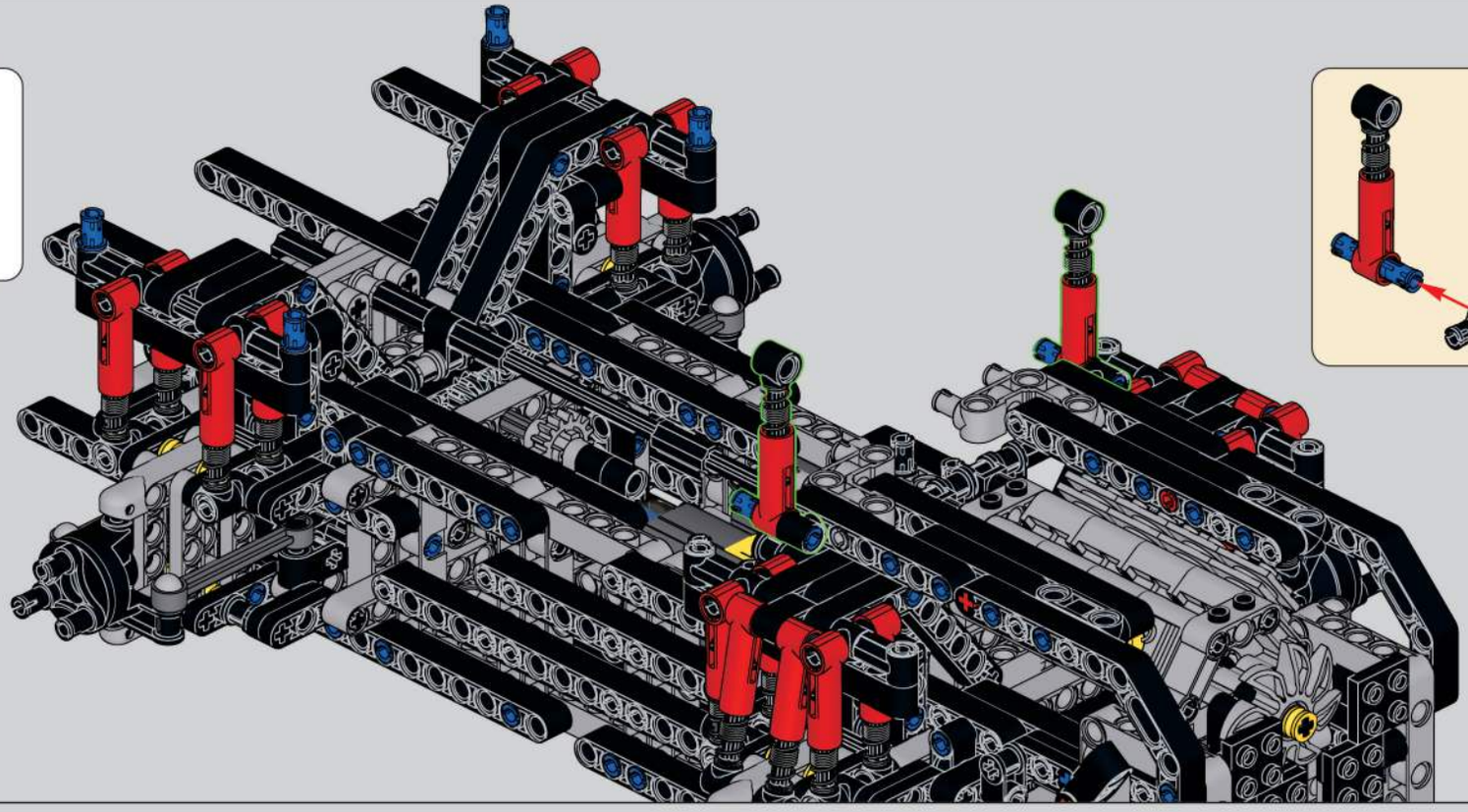

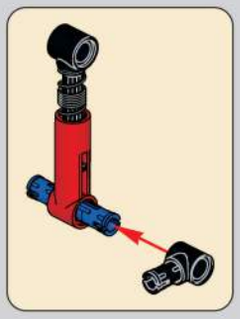

172

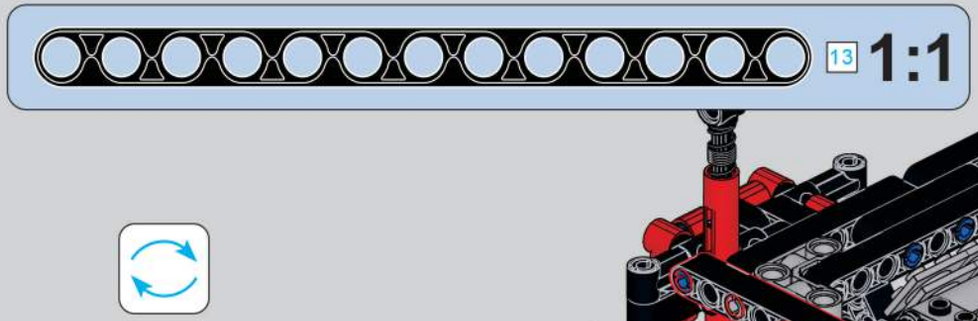

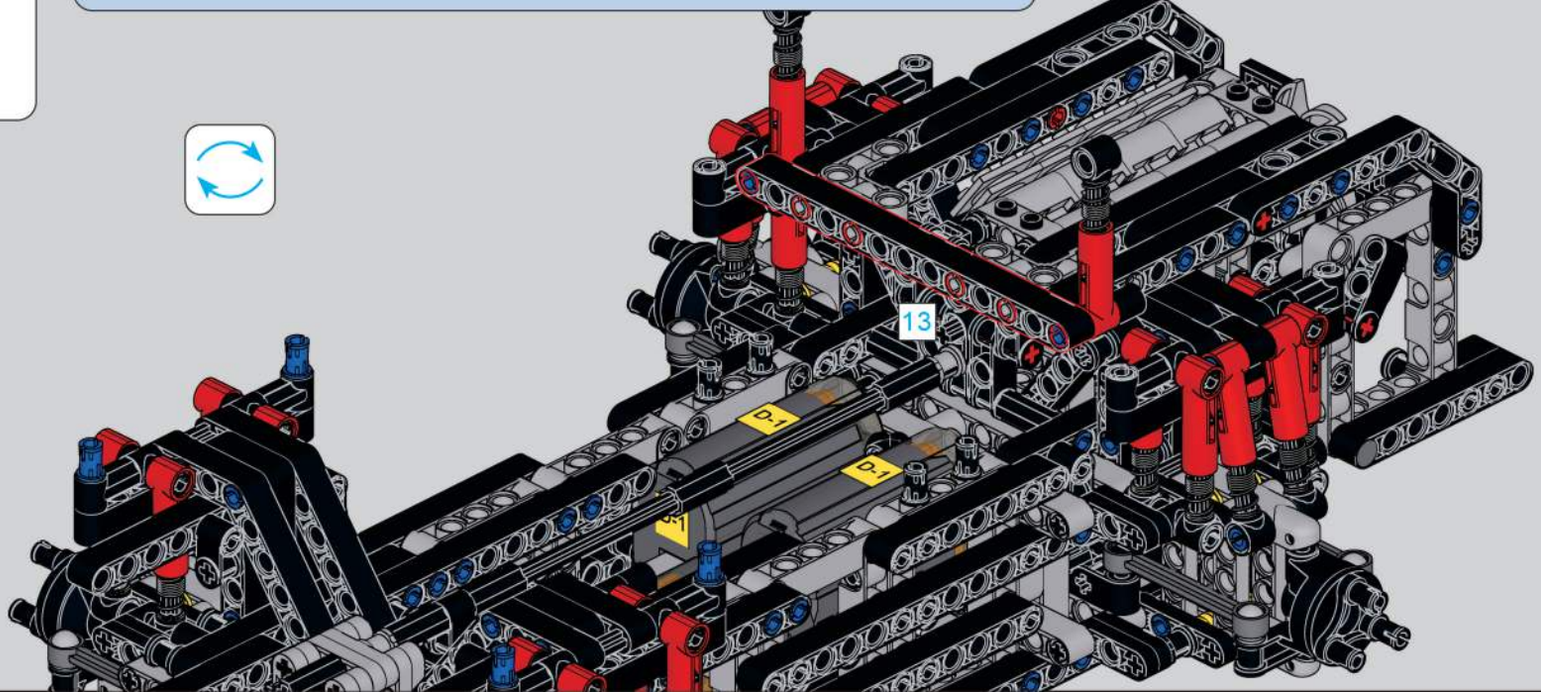

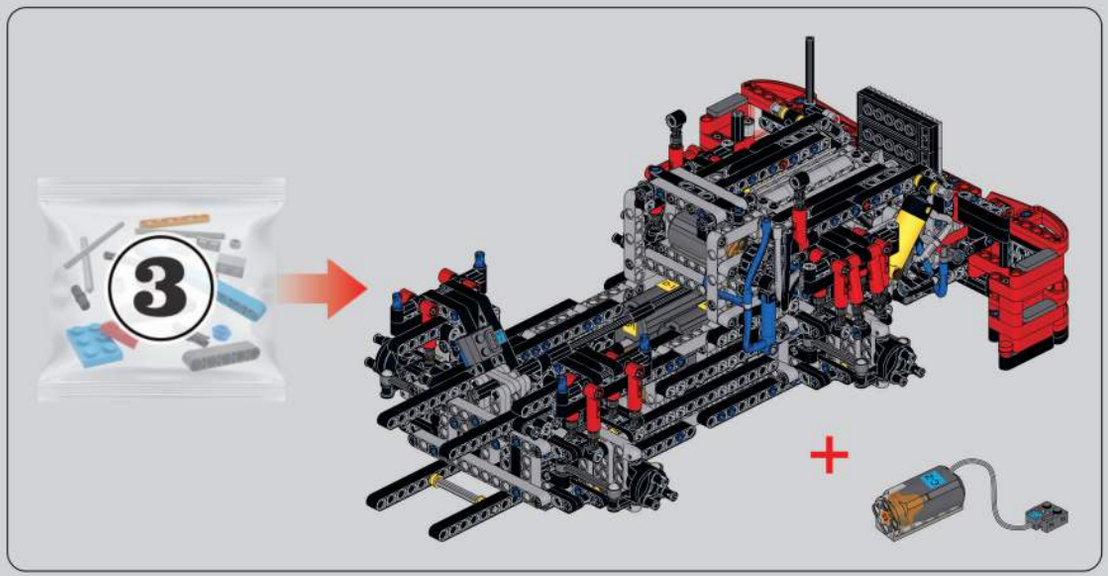

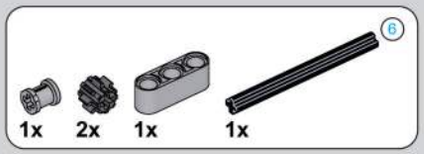

173

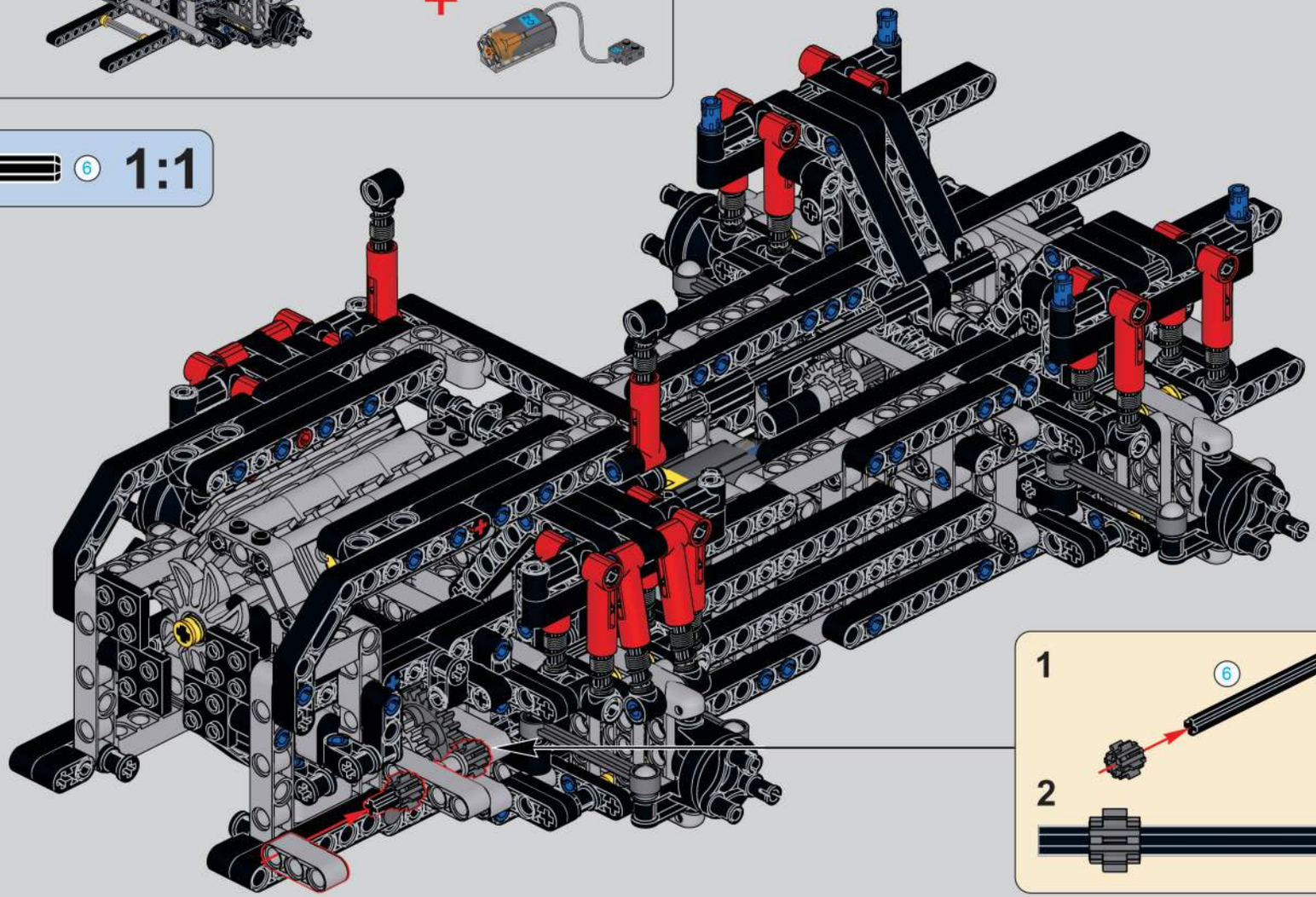

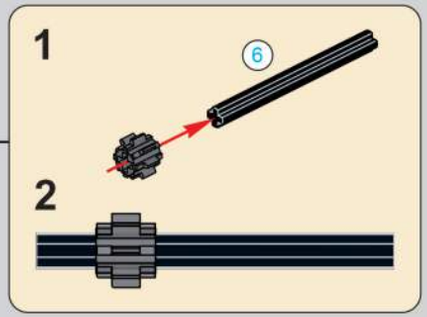

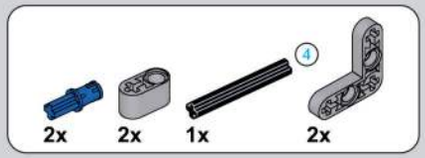

174

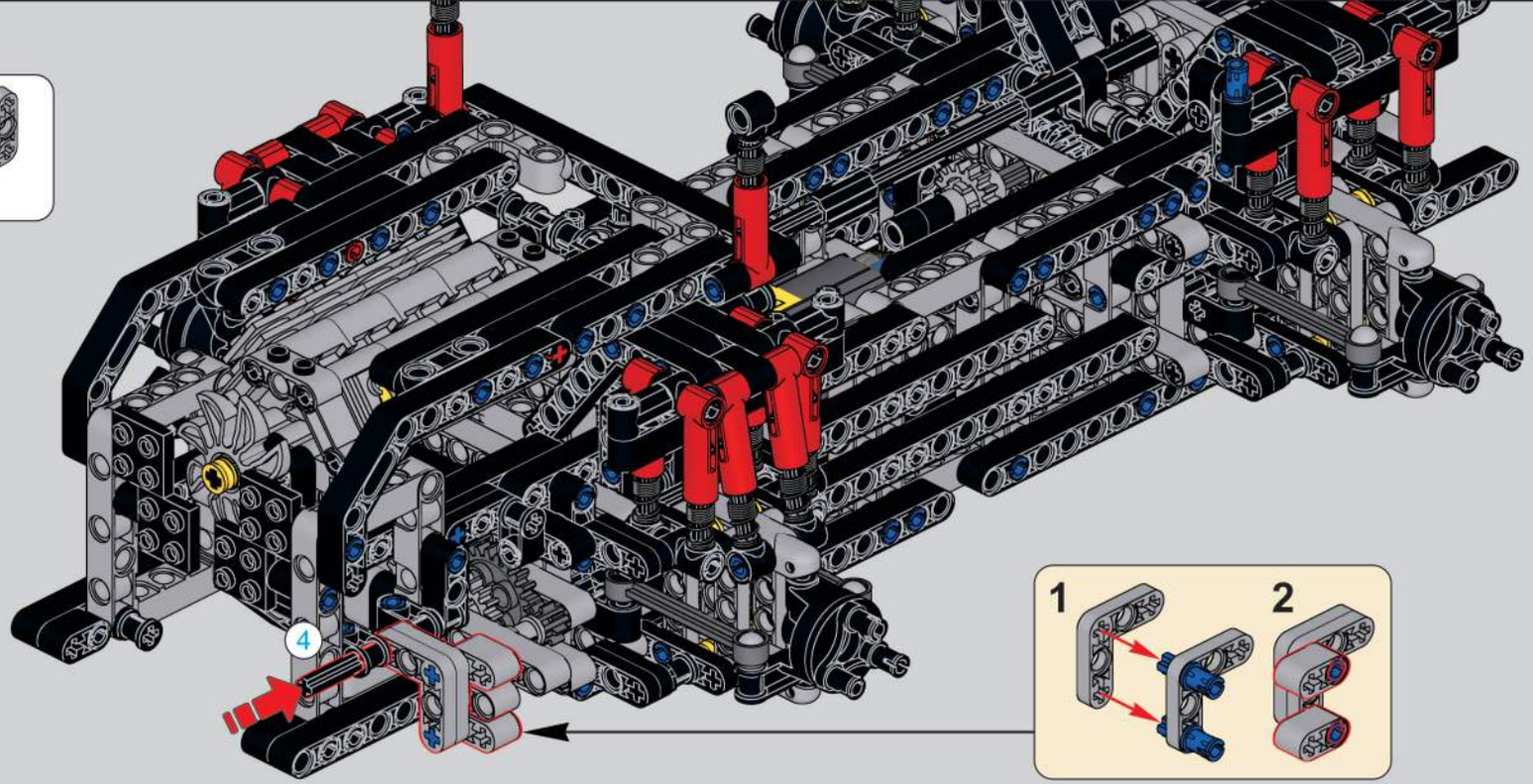

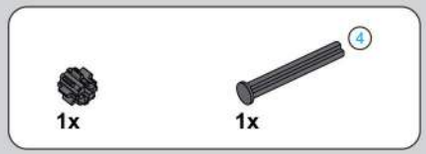

175

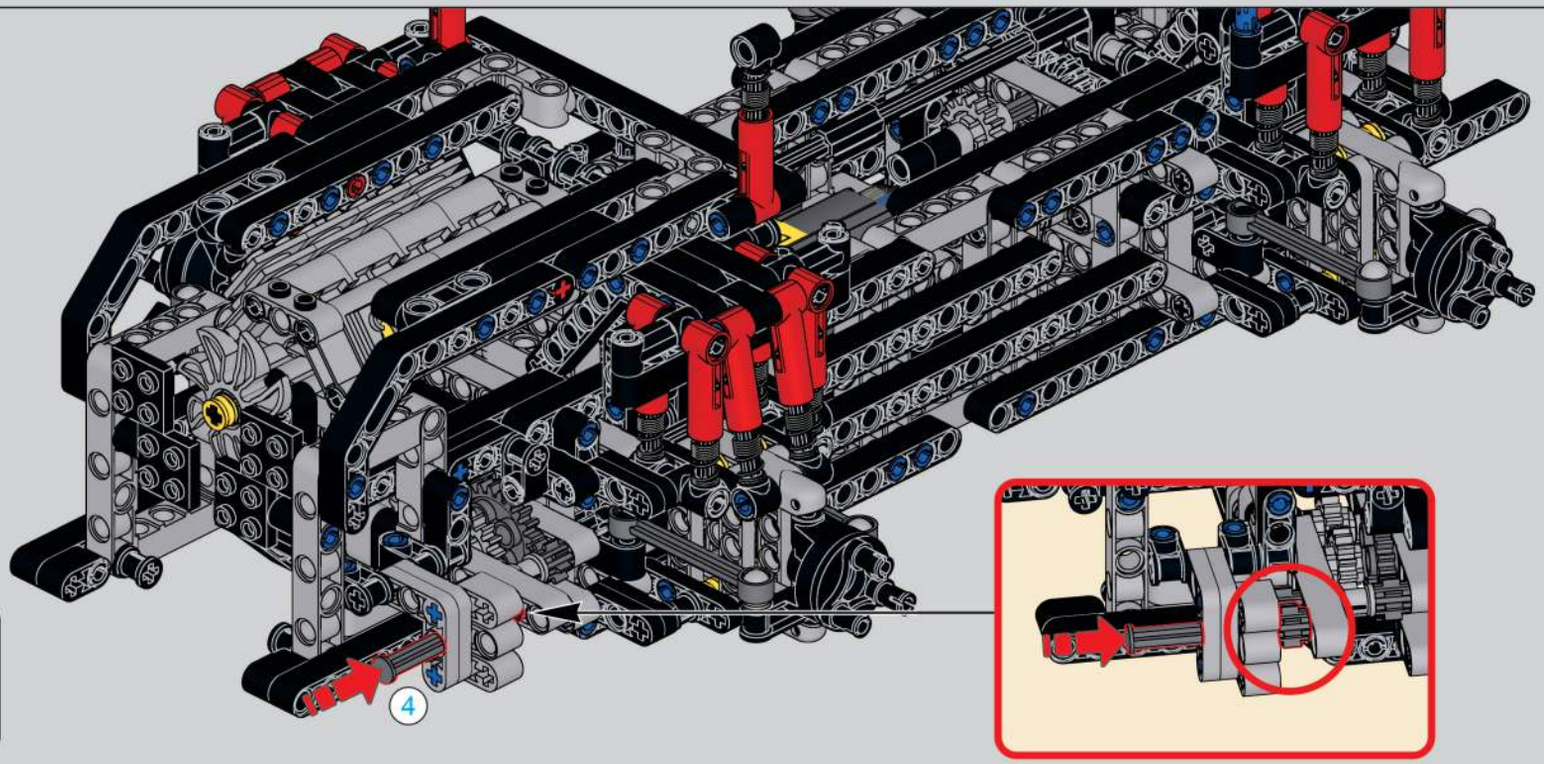

176

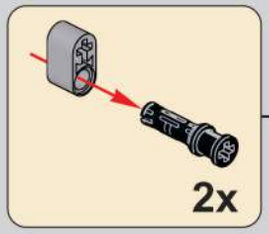

177

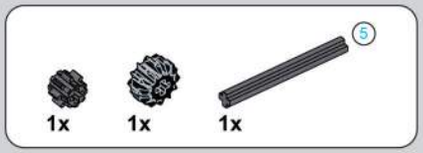

178

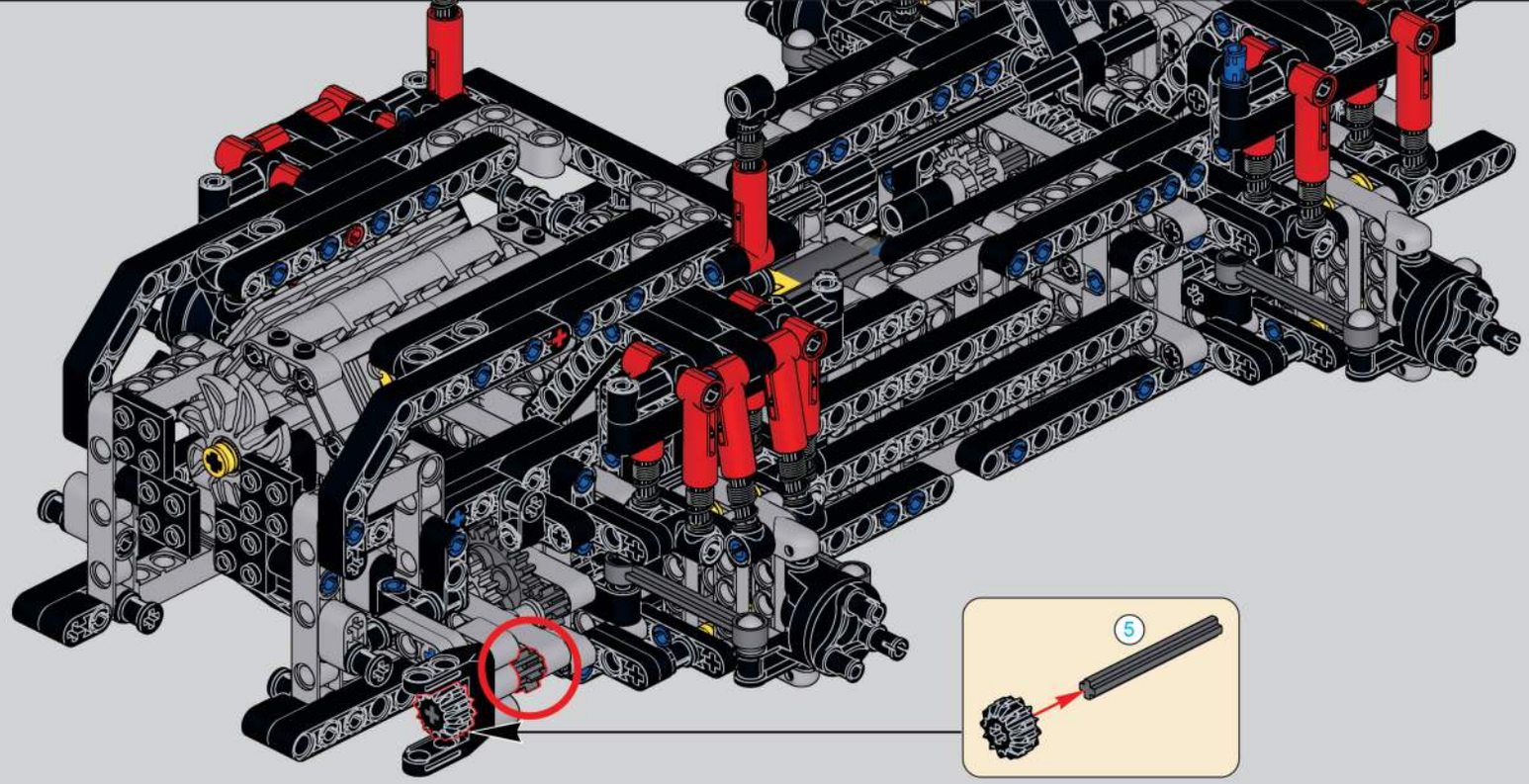

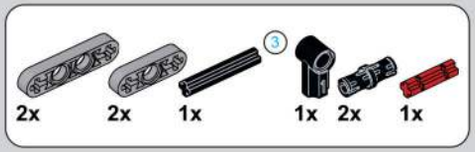

179

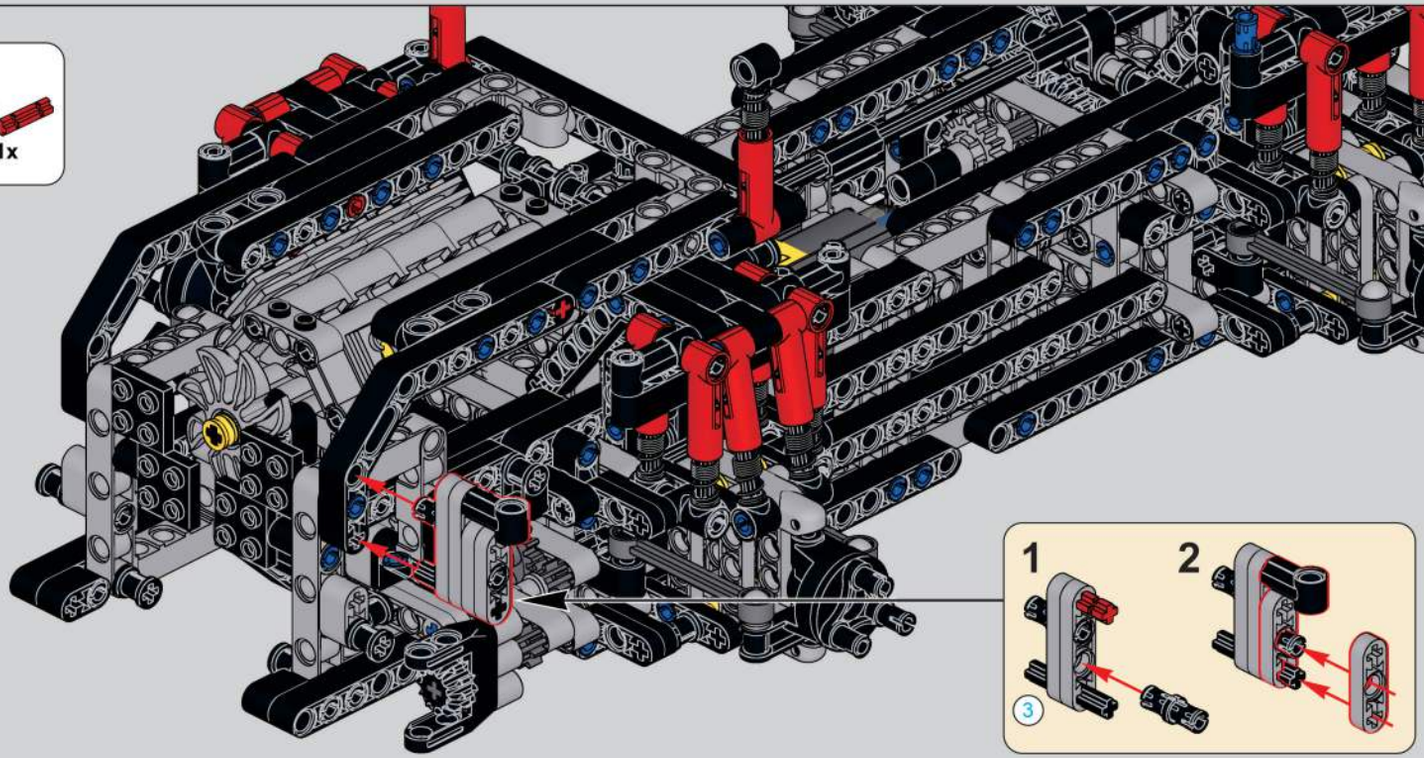

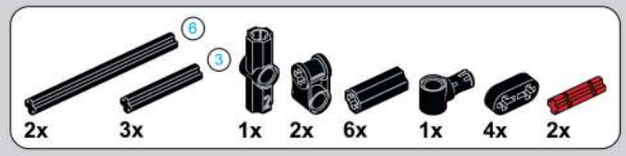

180

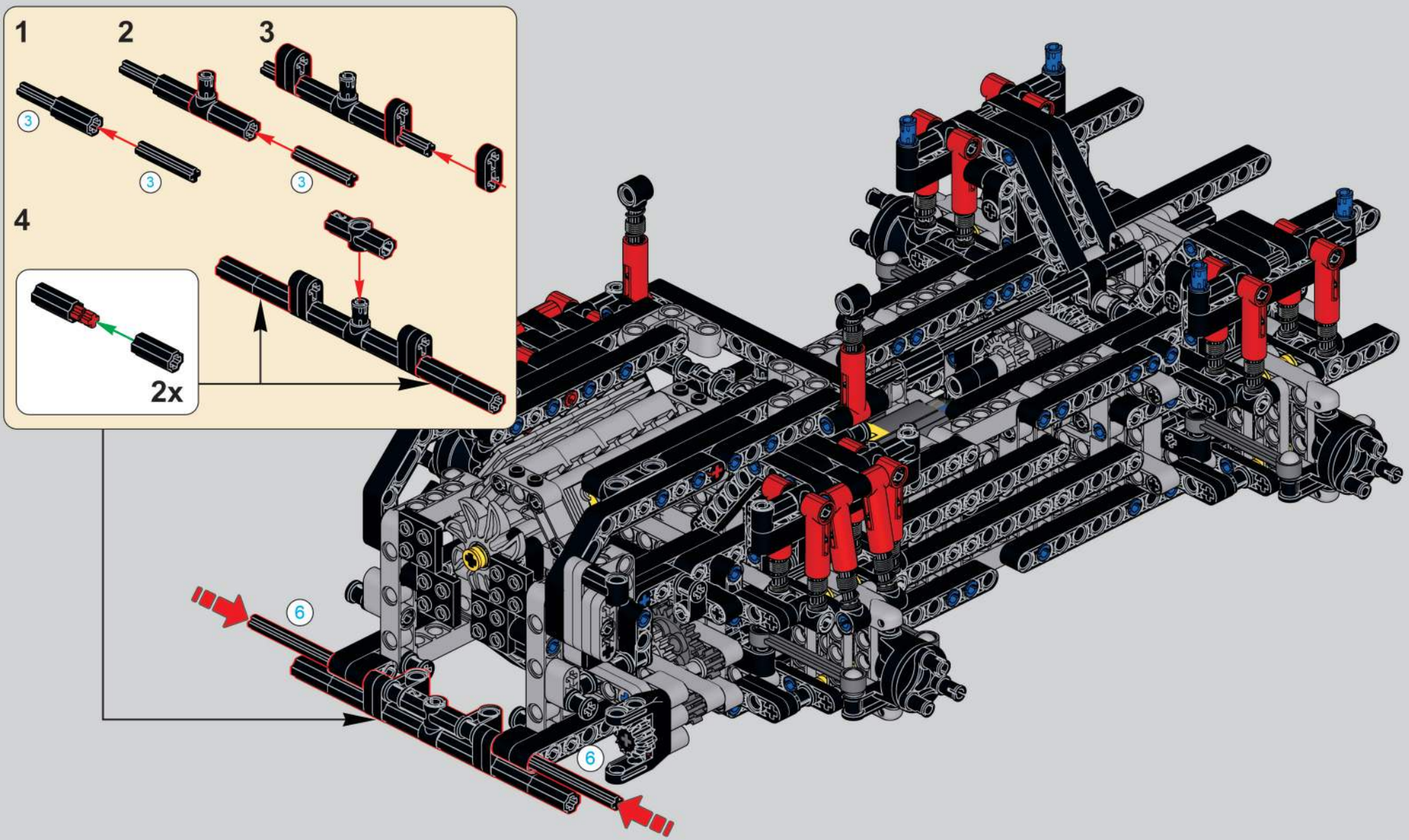

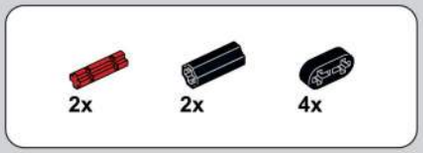

181

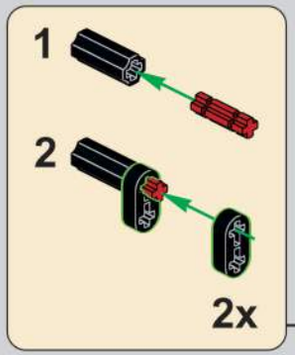

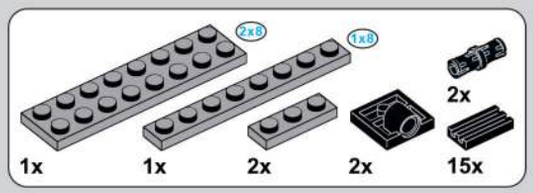

182

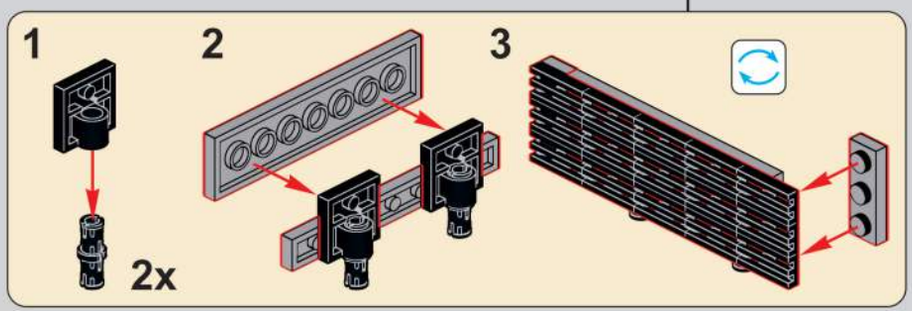

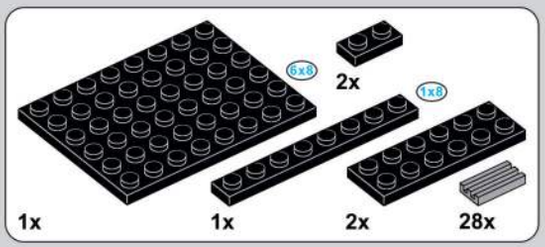

183

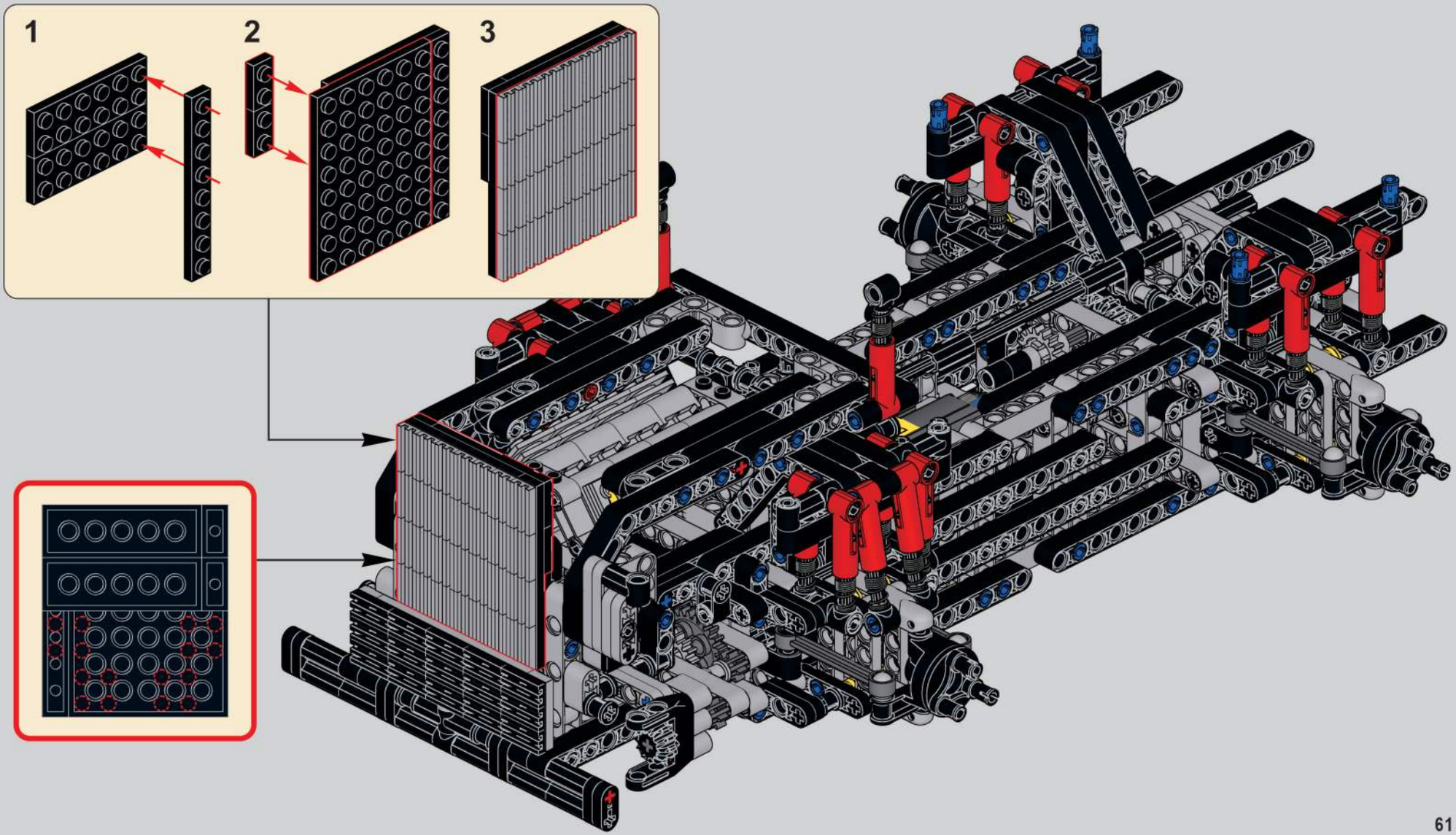

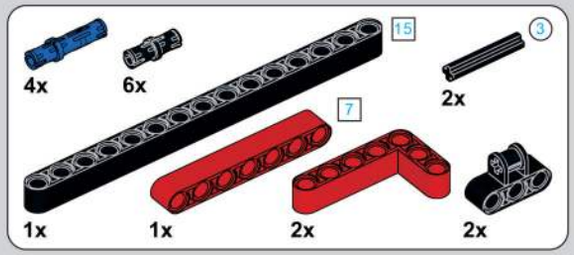

184

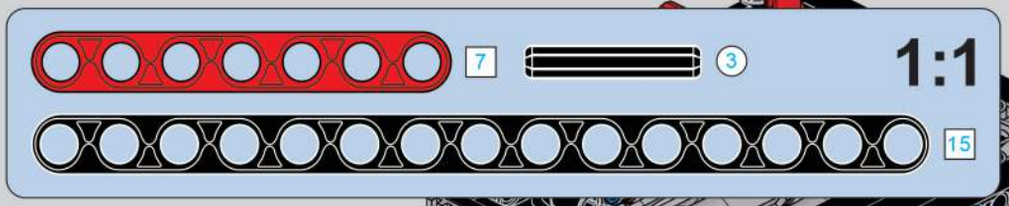

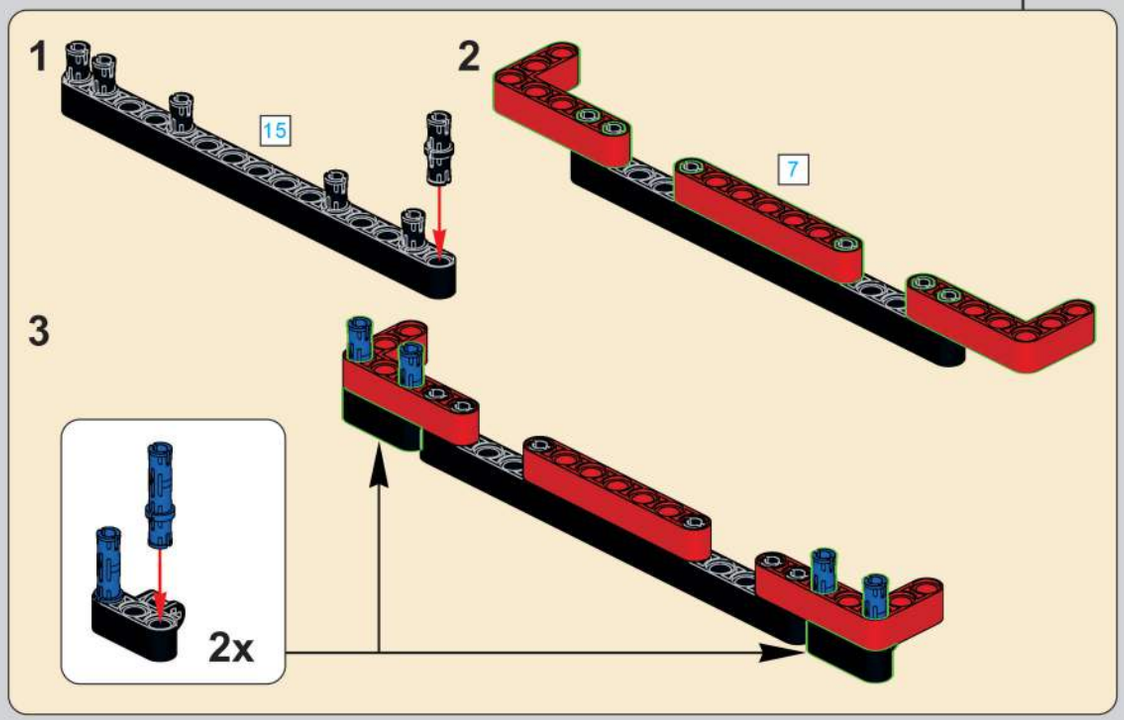

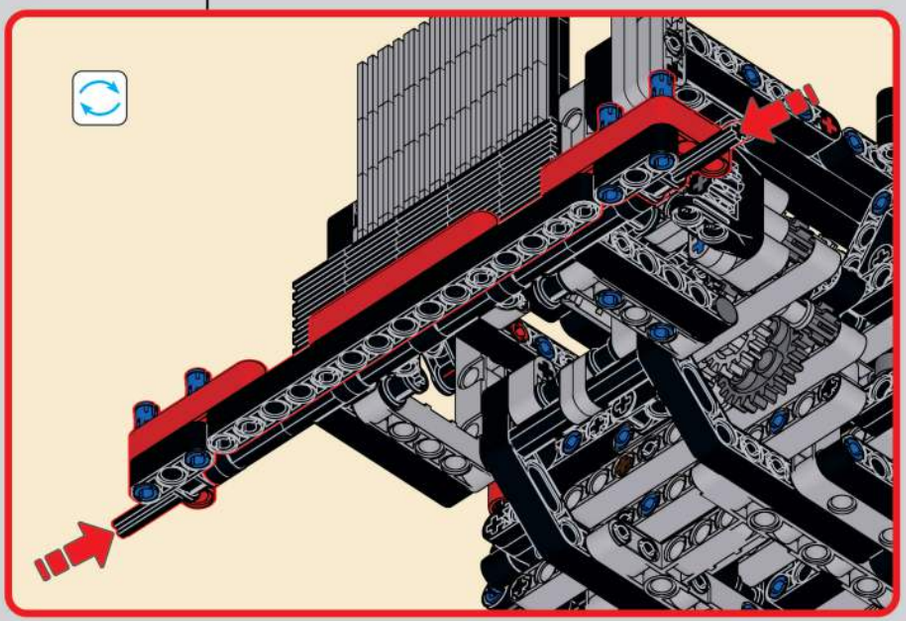

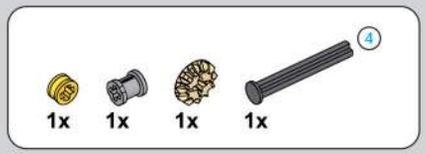

185

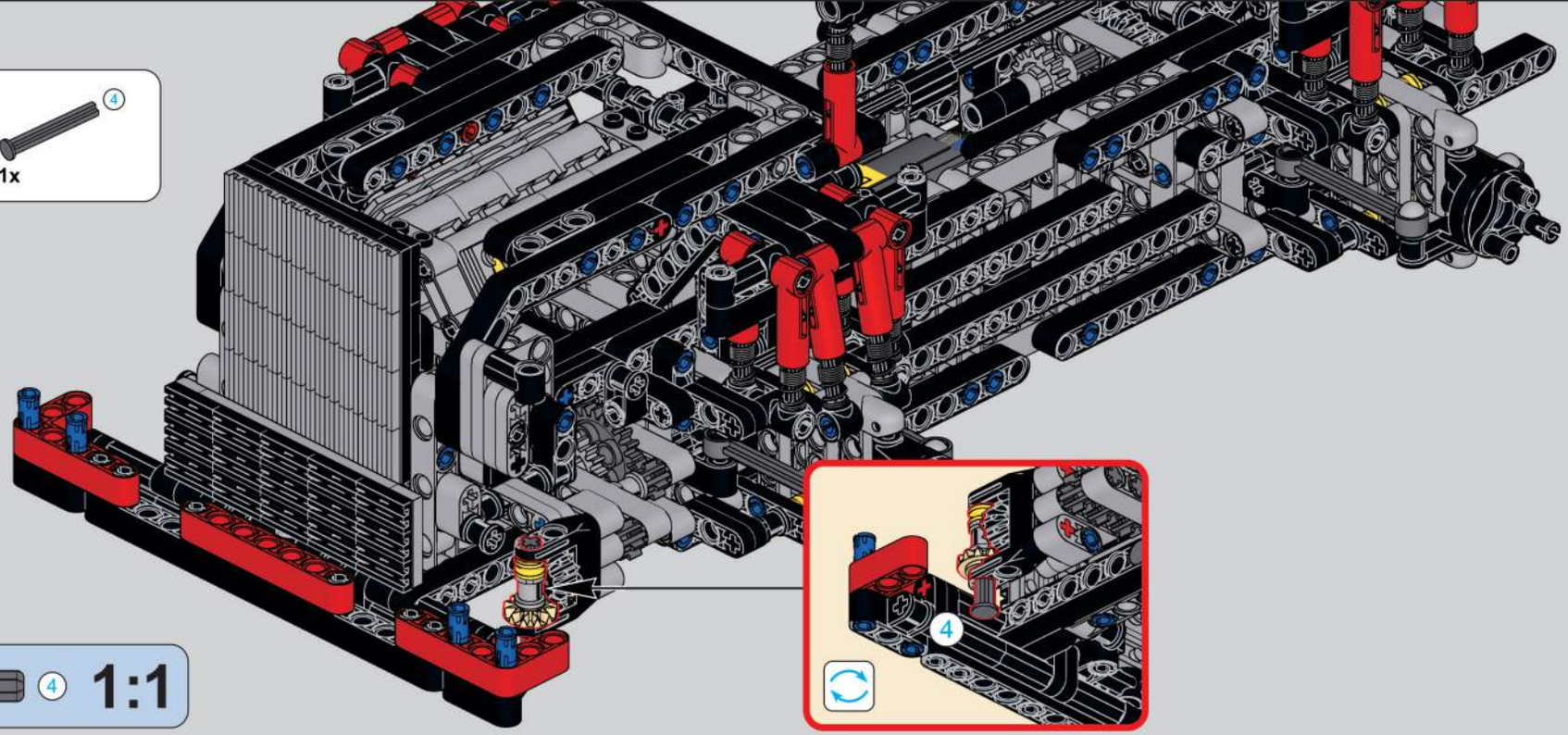

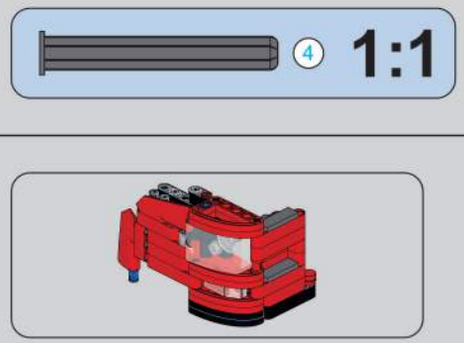

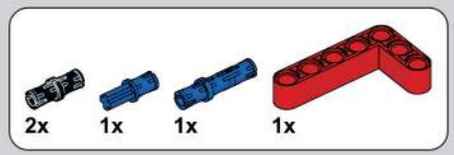

186

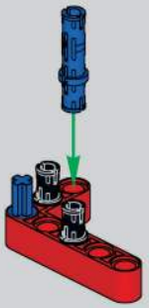

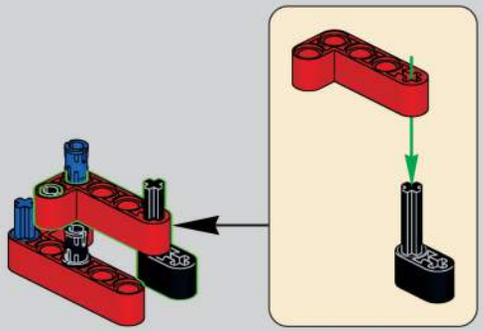

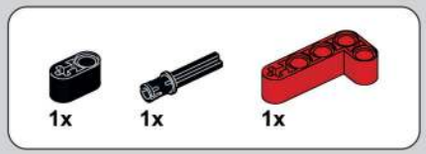

187

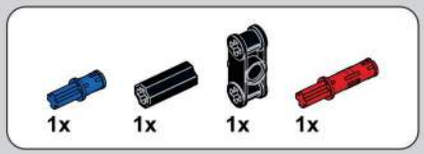

188

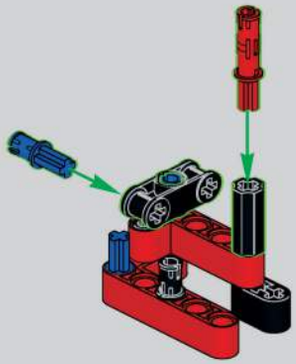

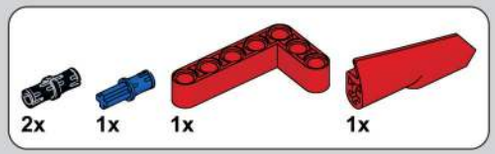

189

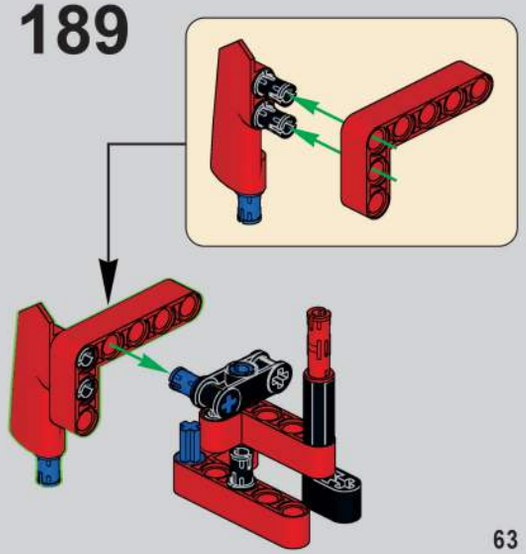

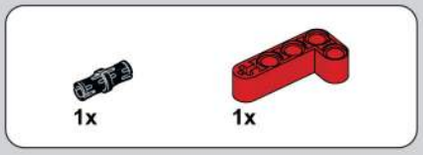

190

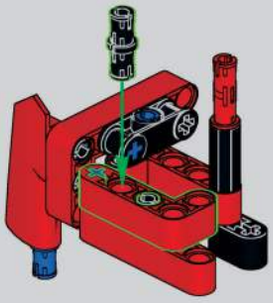

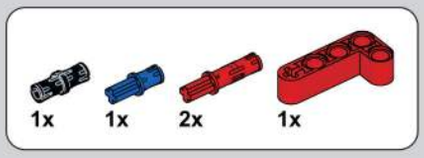

191

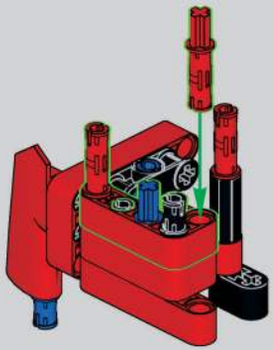

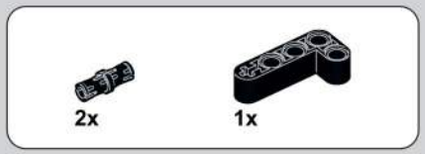

192

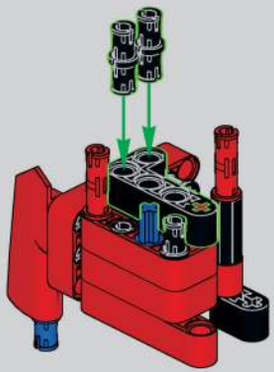

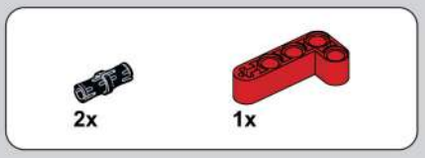

193

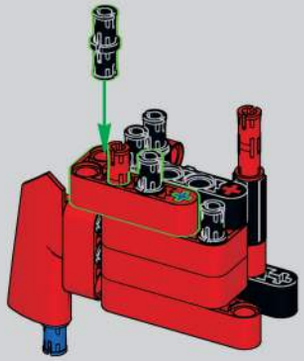

194

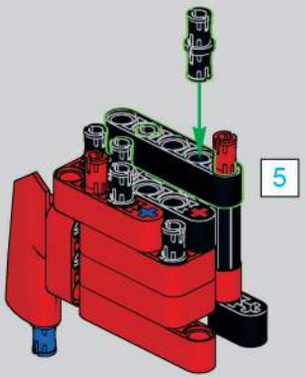

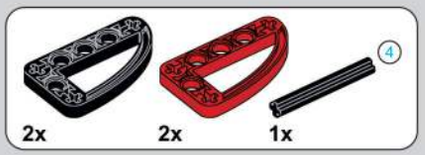

195

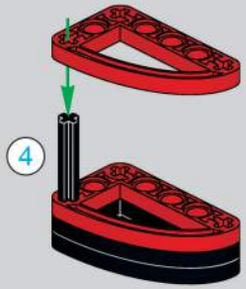

196

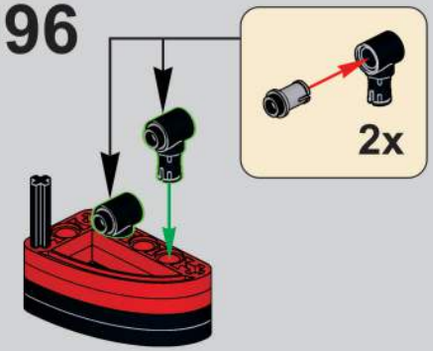

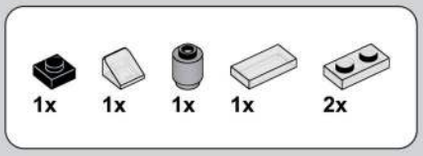

197

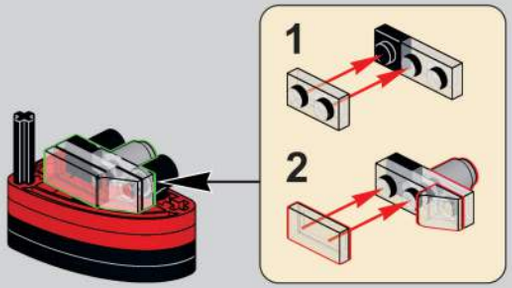

198

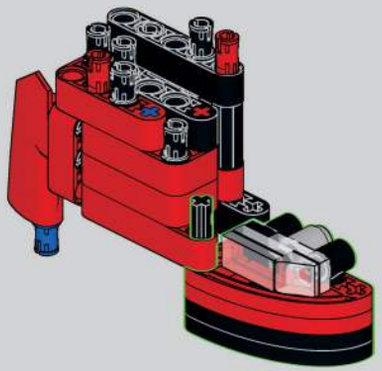

199

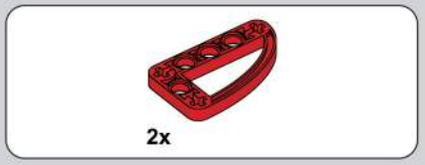

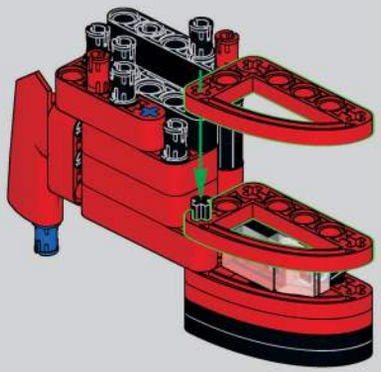

200

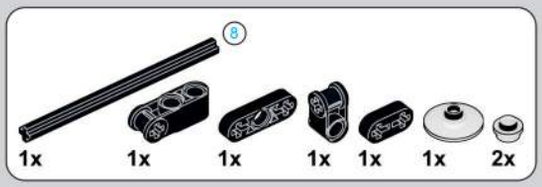

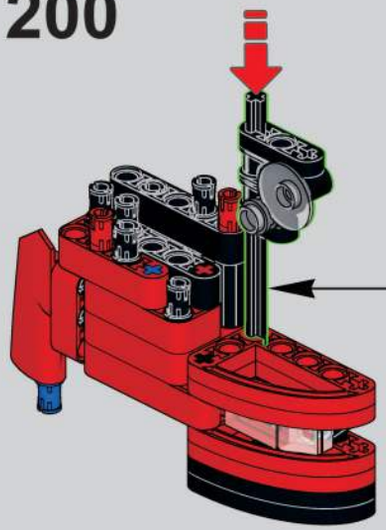

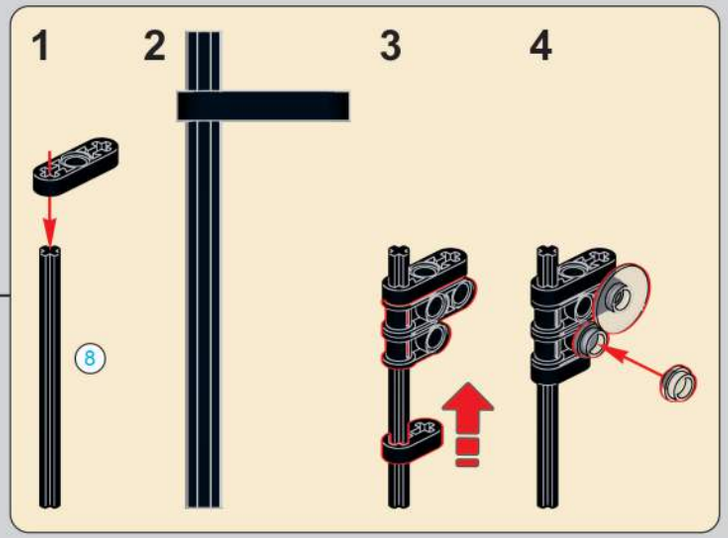

201

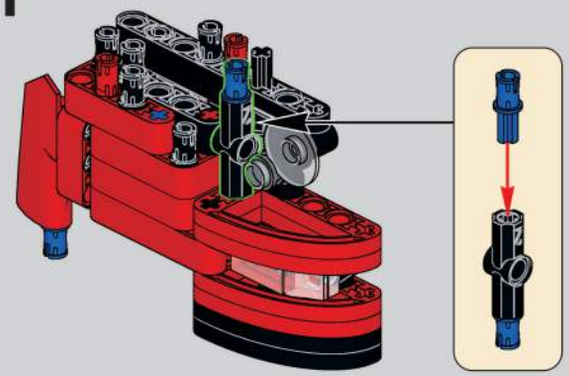

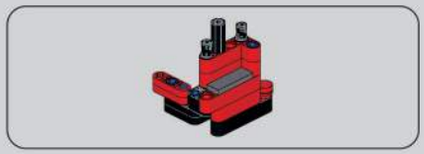

202

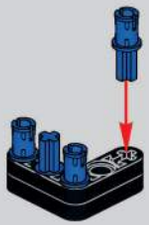

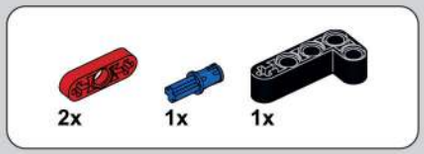

203

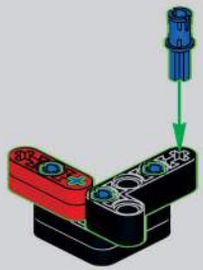

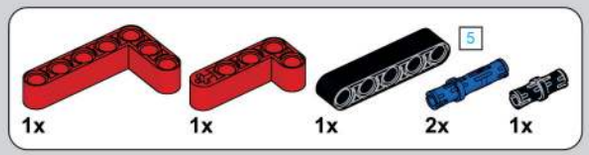

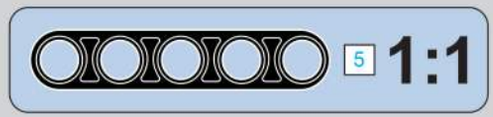

204

205

206

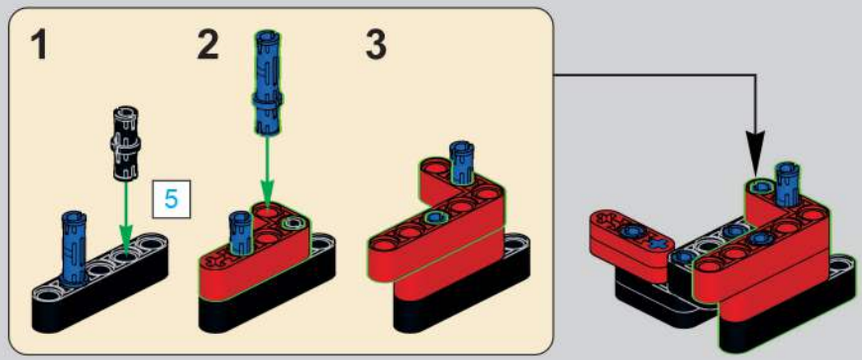

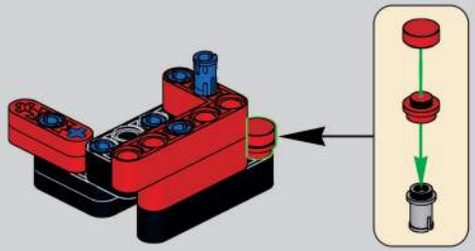

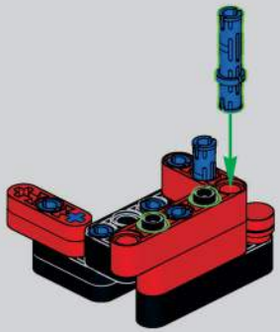

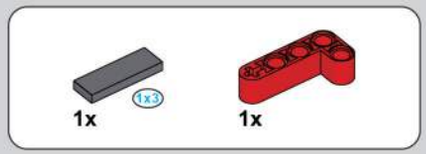

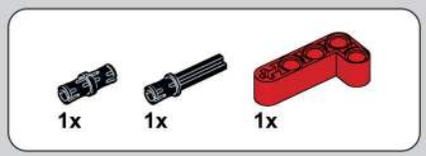

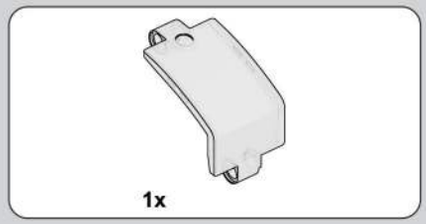

207

208

209

210

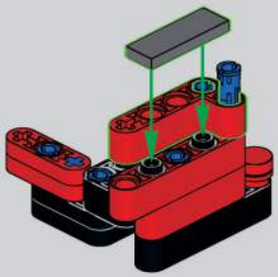

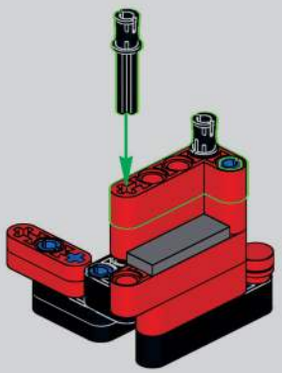

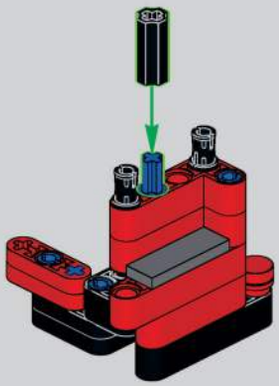

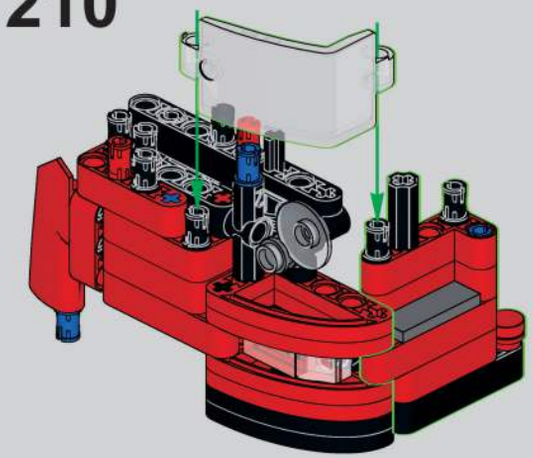

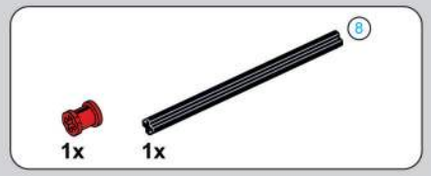

211

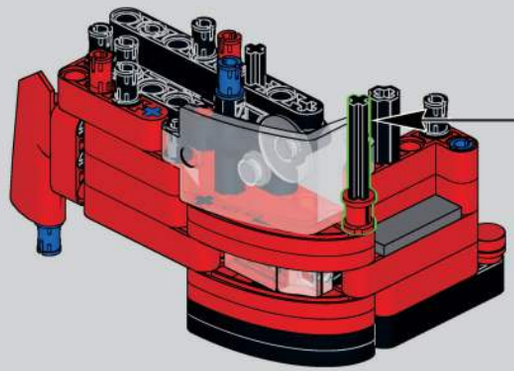

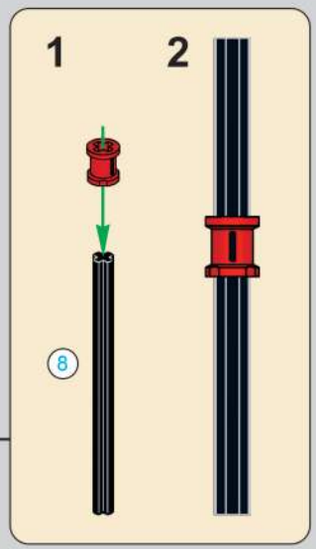

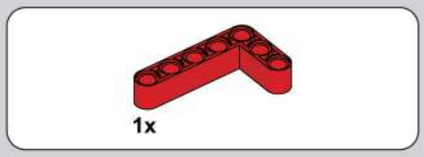

212

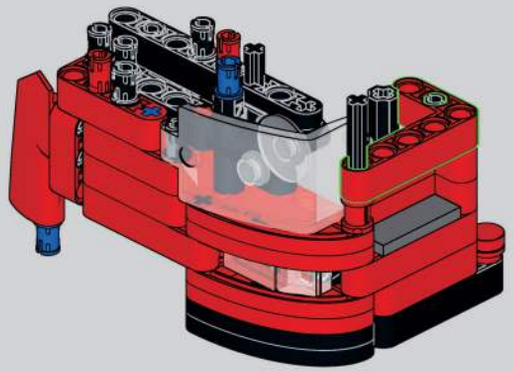

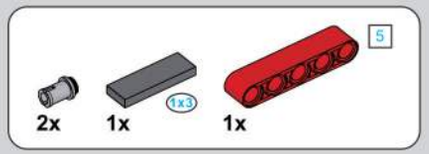

213

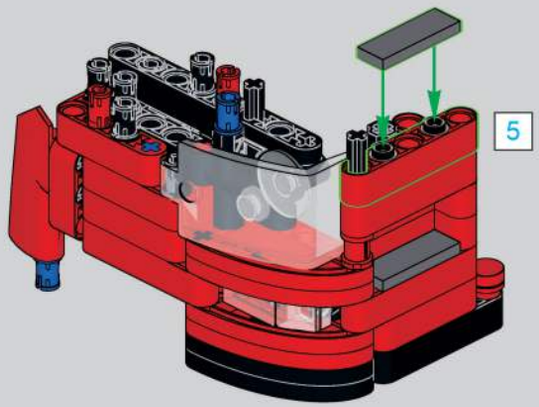

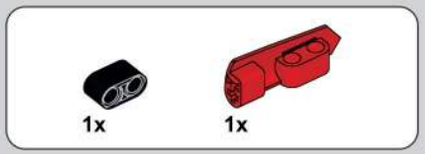

214

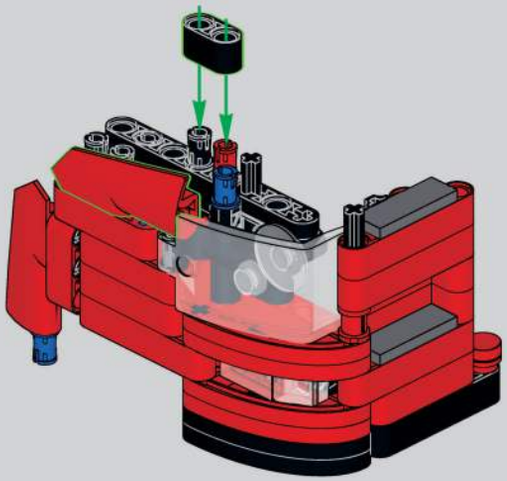

215

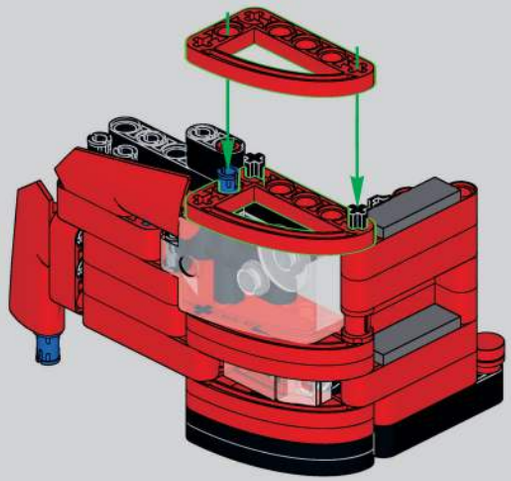

216

217

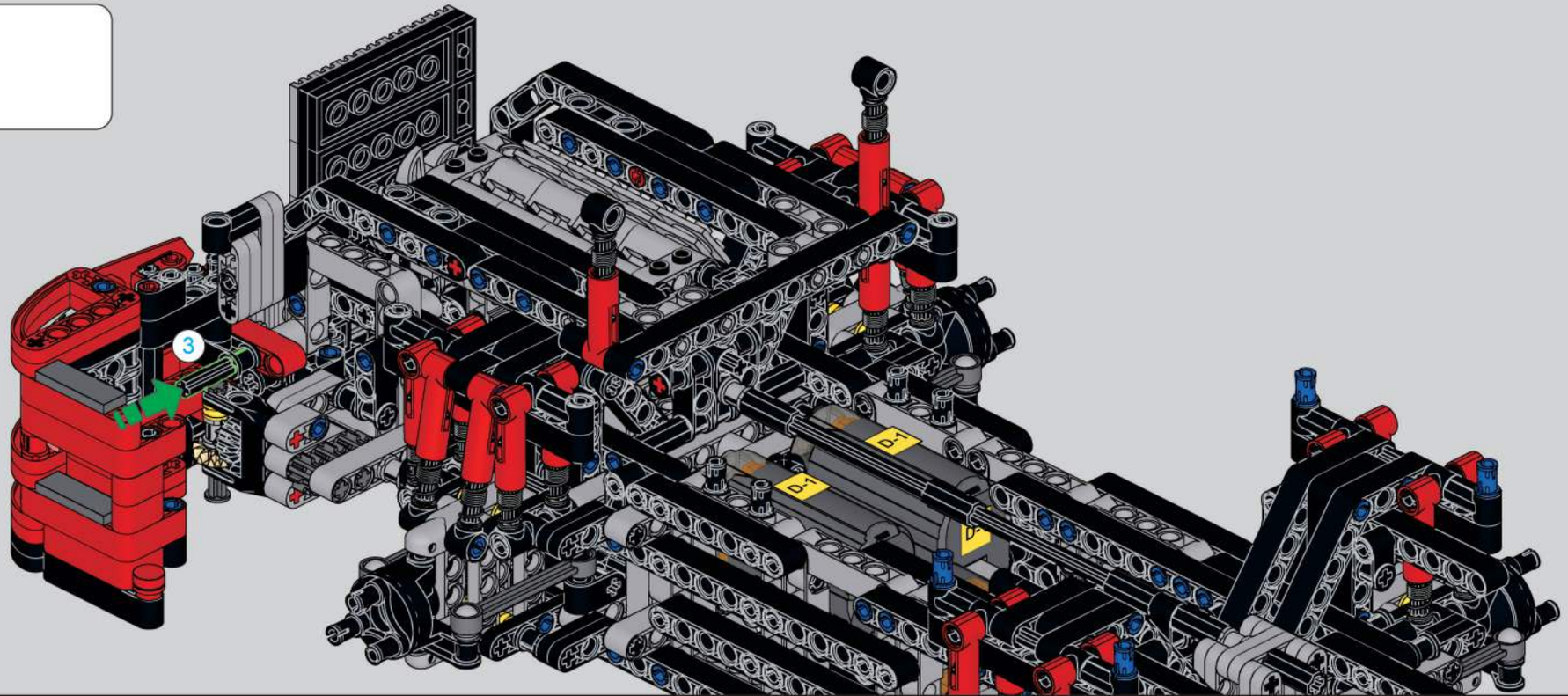

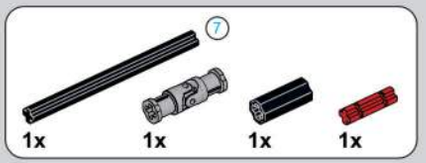

218

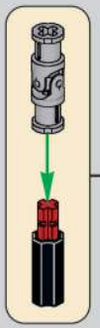

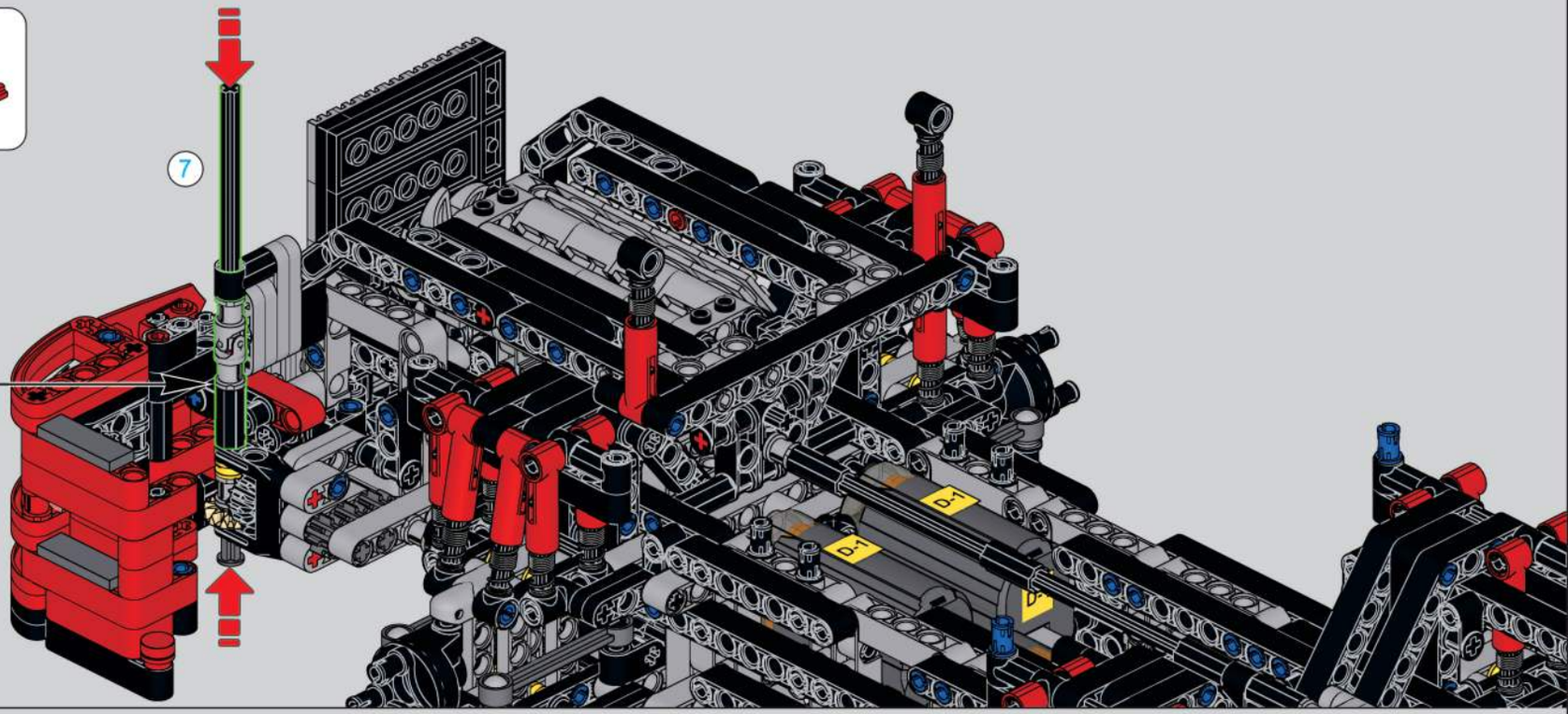

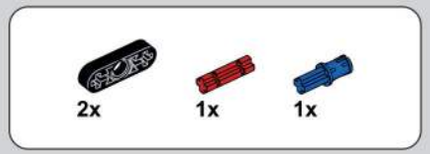

219

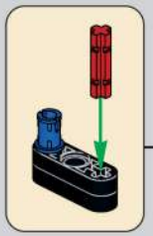

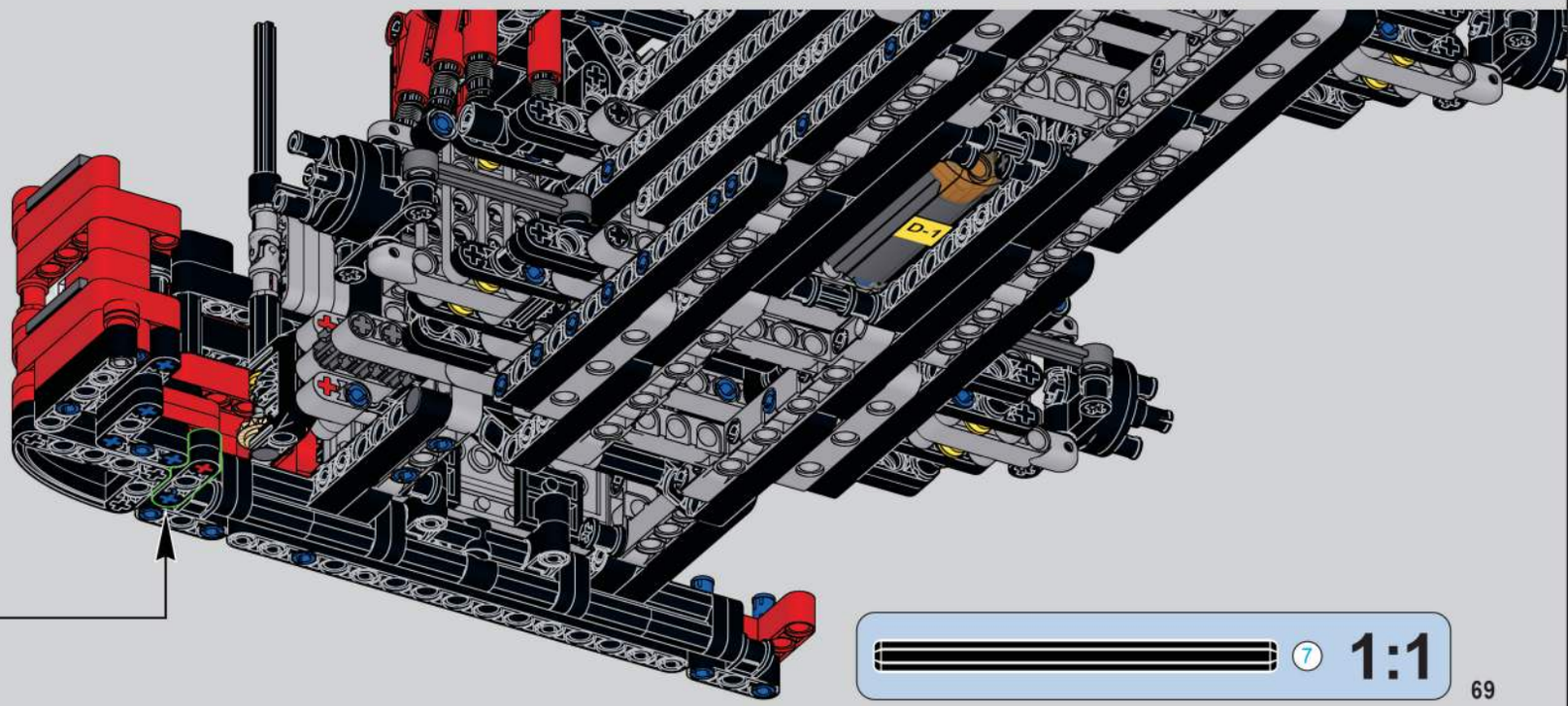

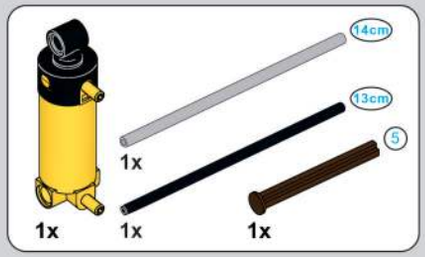

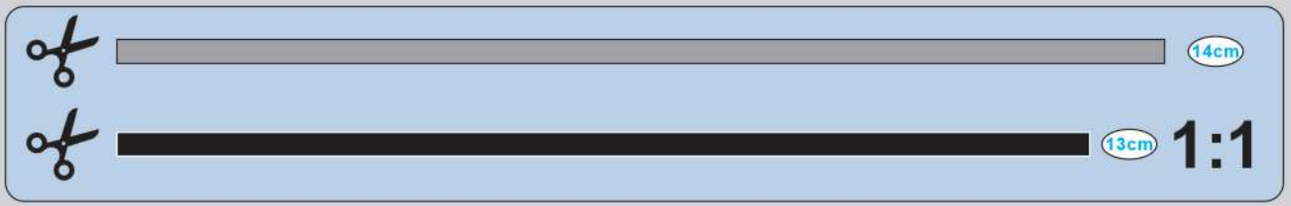

220

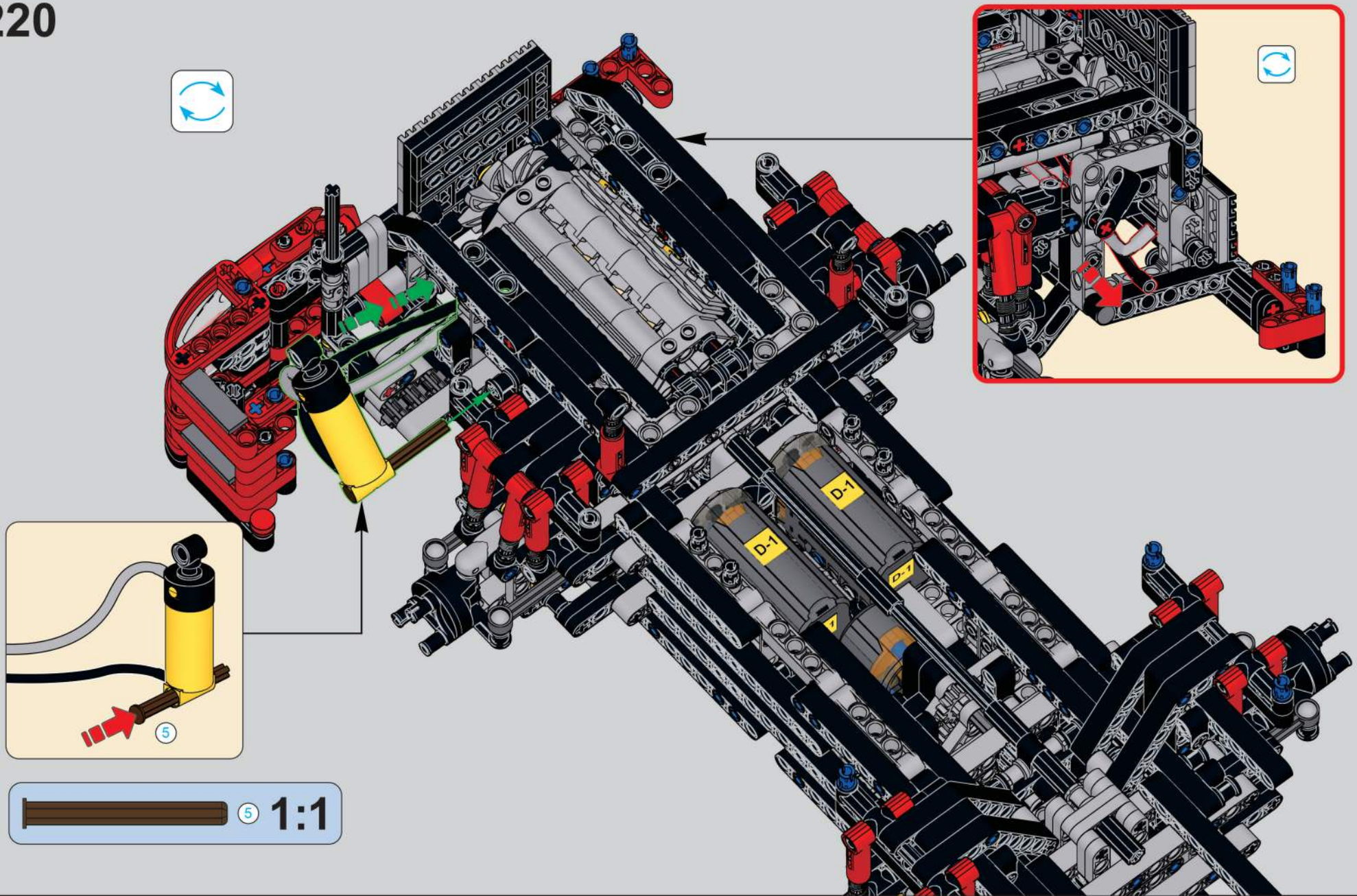

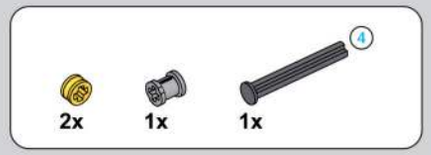

221

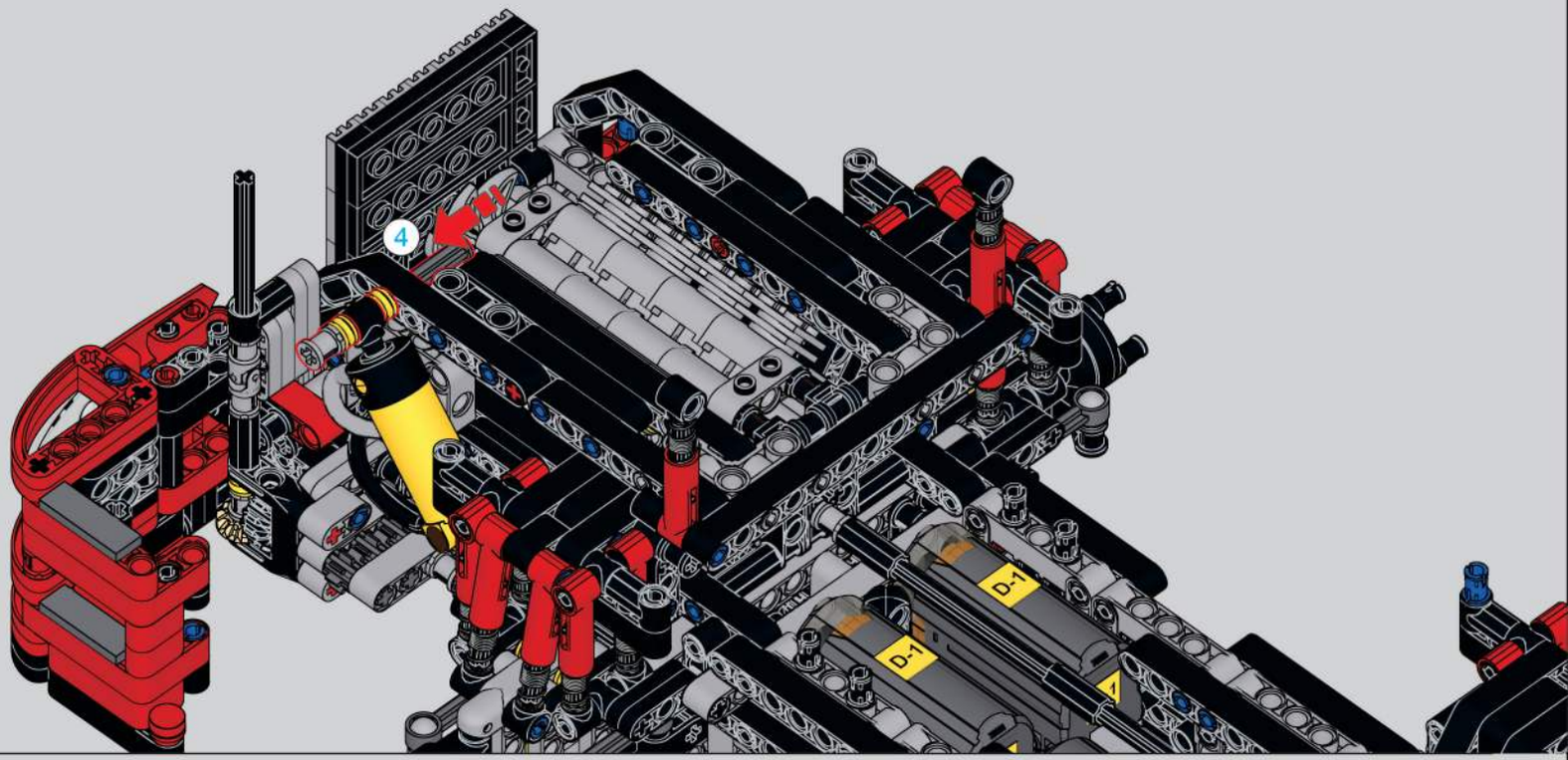

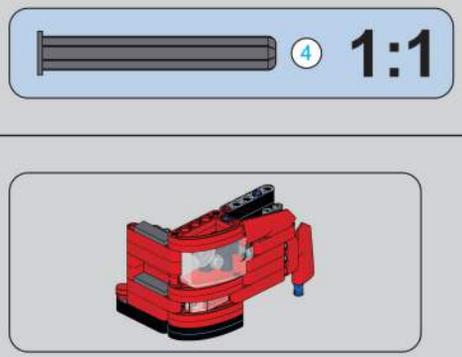

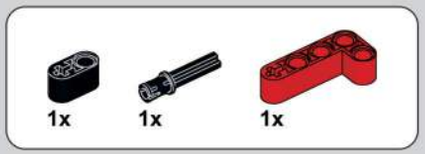

223

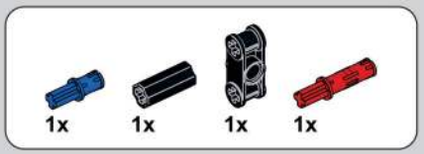

224

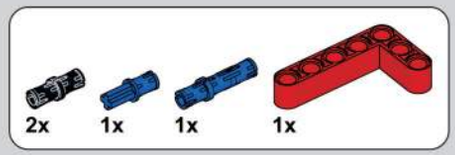

222

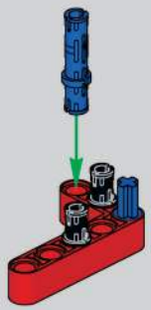

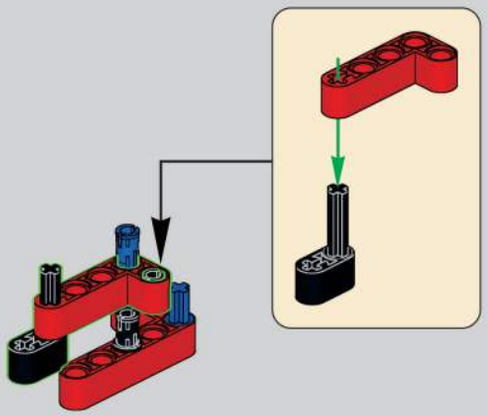

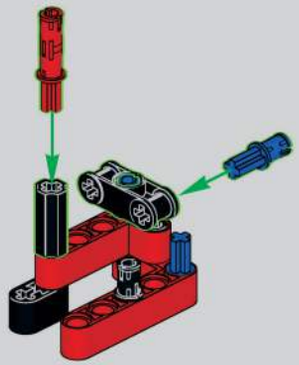

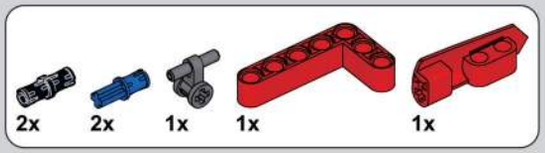

225

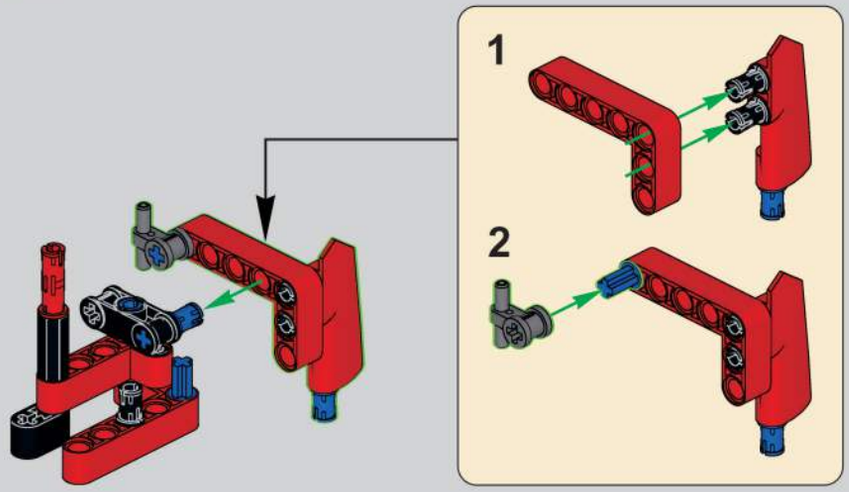

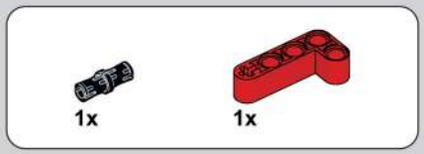

226

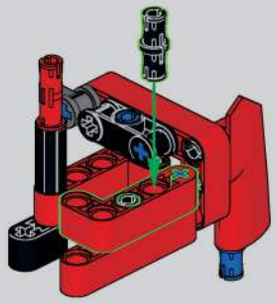

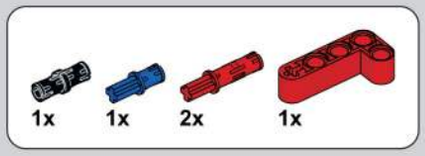

227

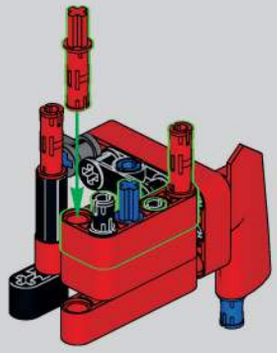

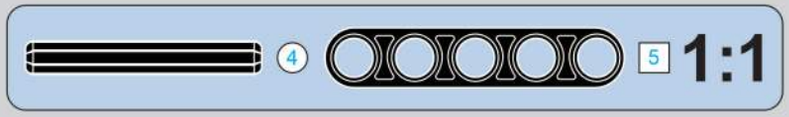

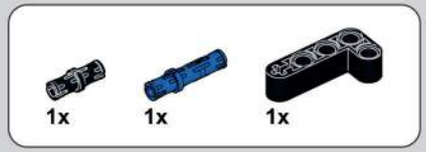

228

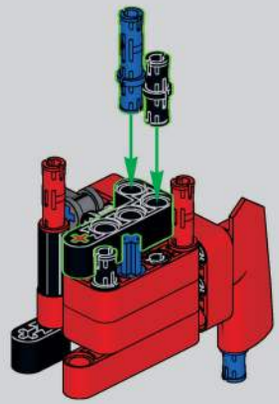

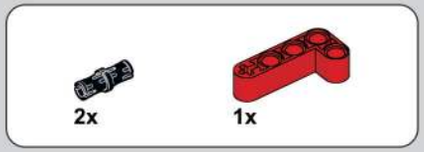

229

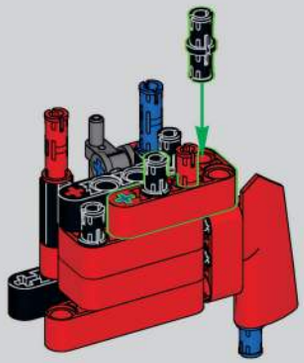

230

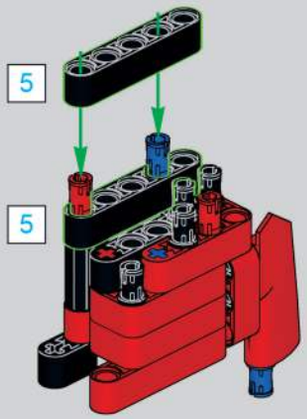

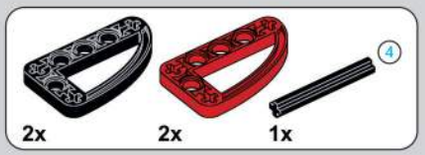

231

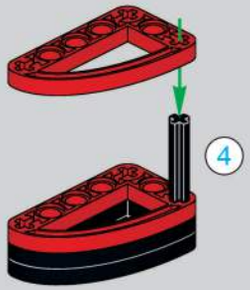

232

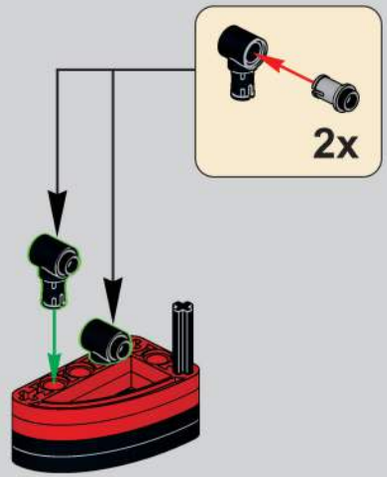

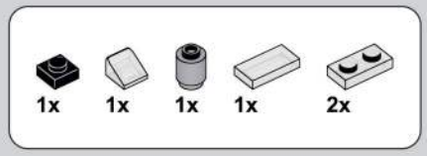

233

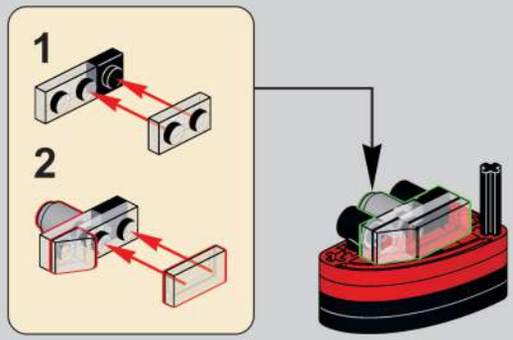

234

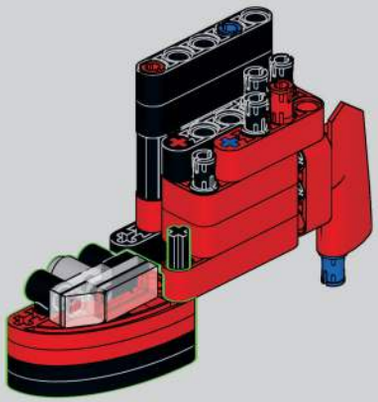

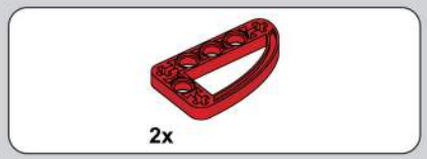

235

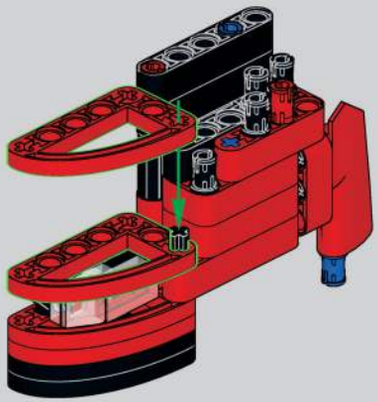

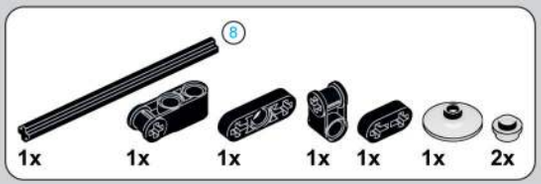

236

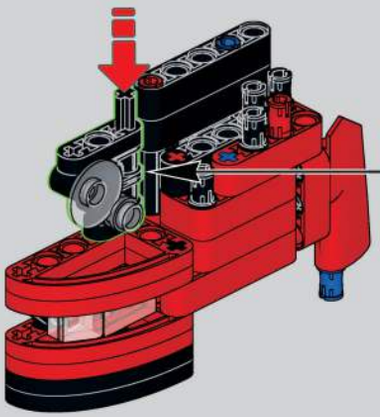

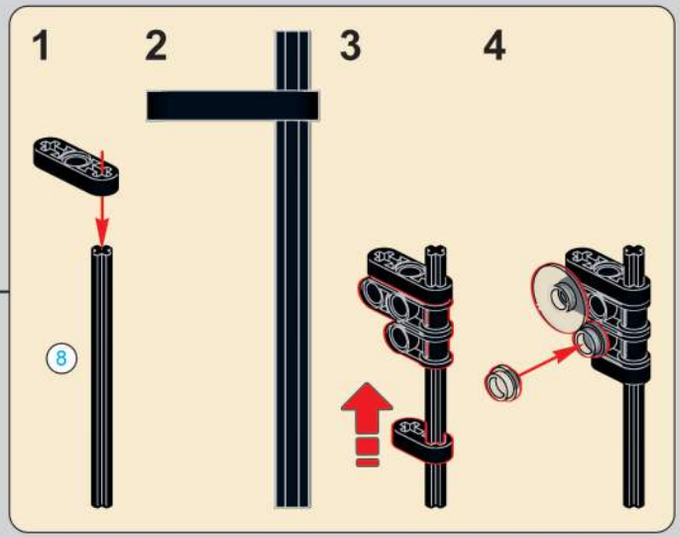

237

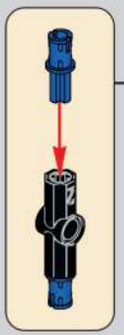

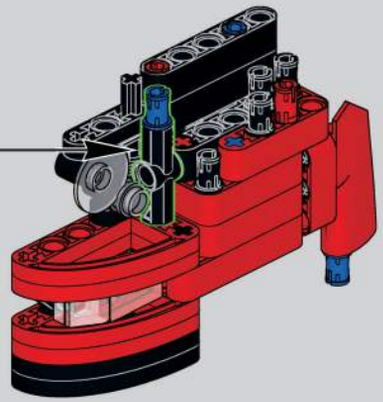

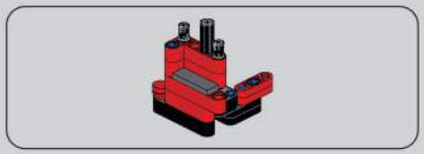

238

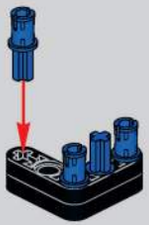

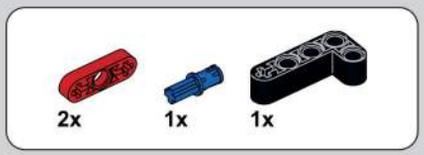

239

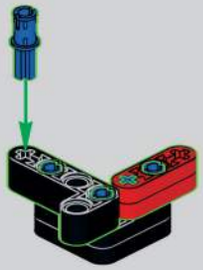

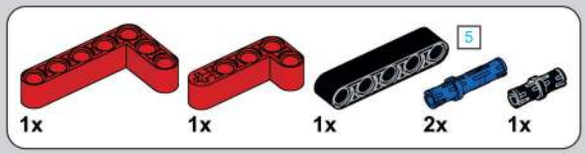

240

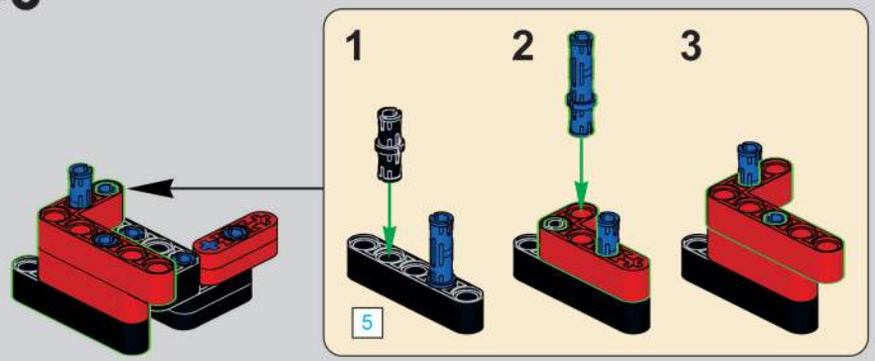

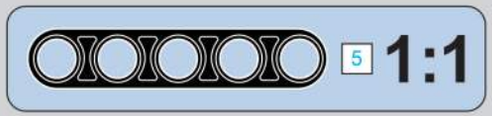

241

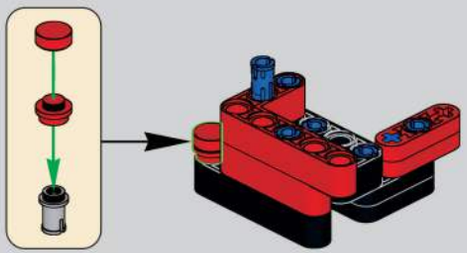

242

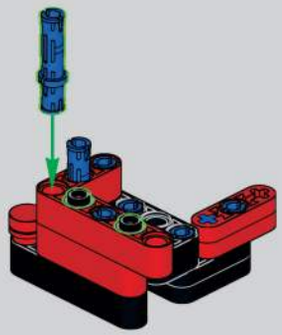

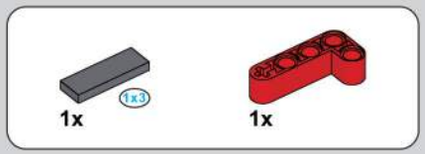

243

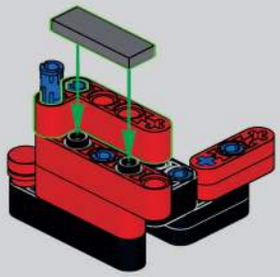

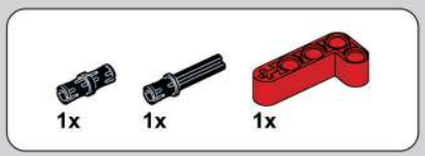

244

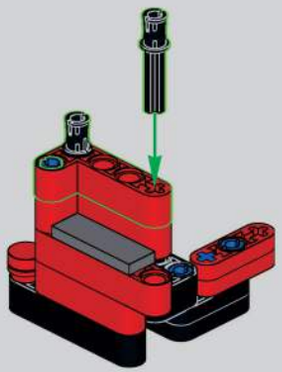

245

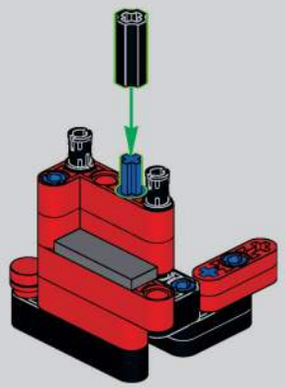

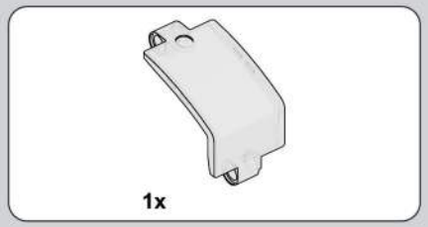

246

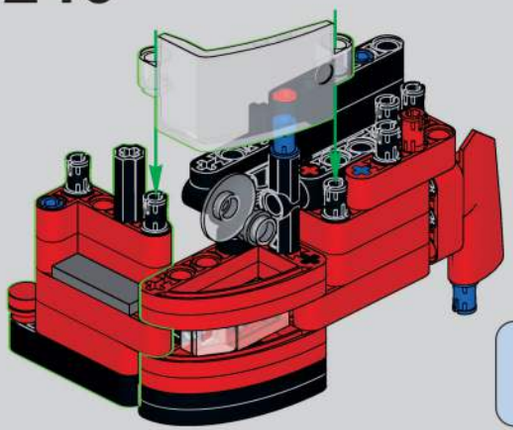

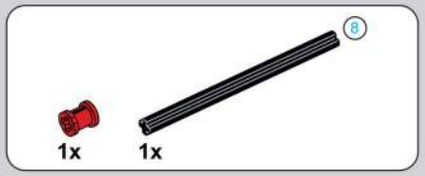

247

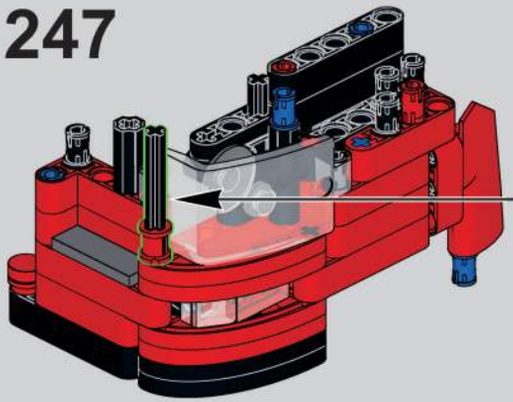

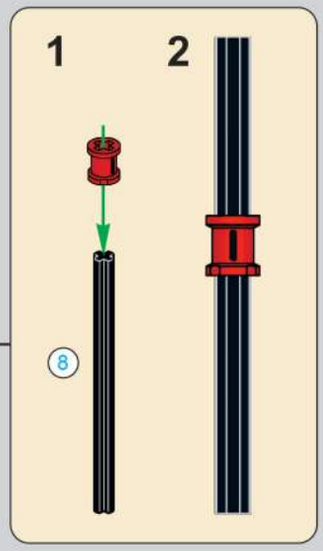

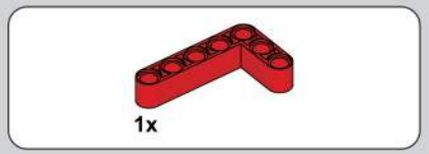

248

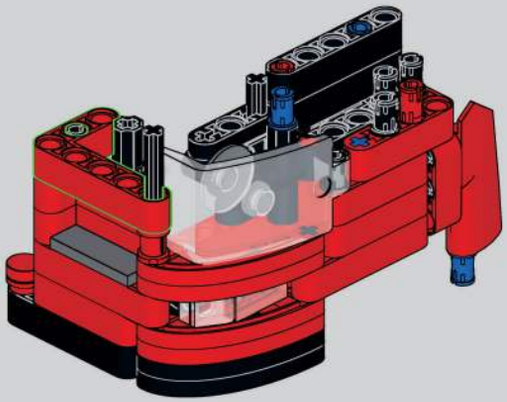

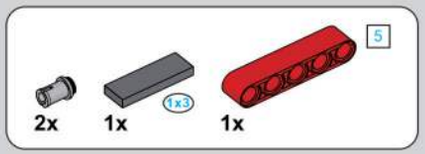

249

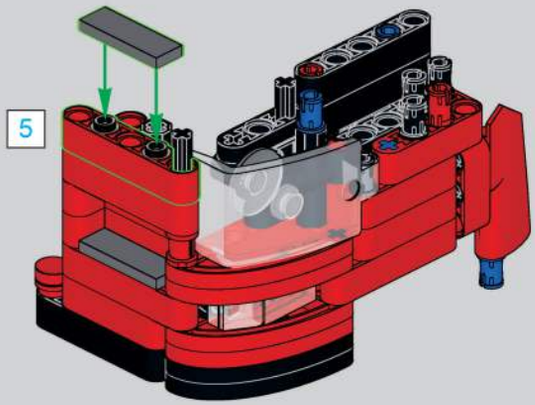

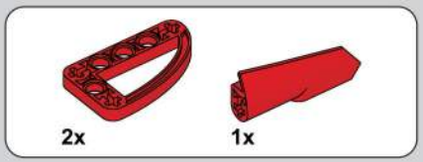

250

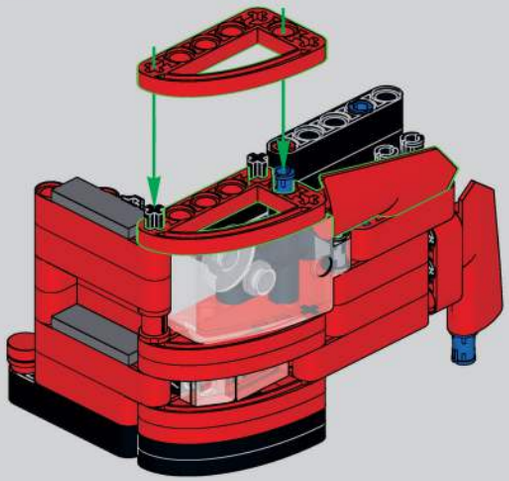

251

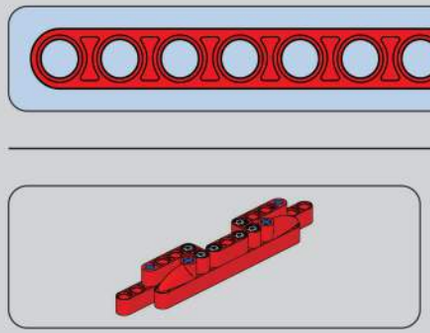

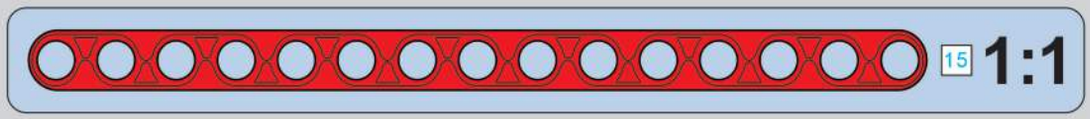

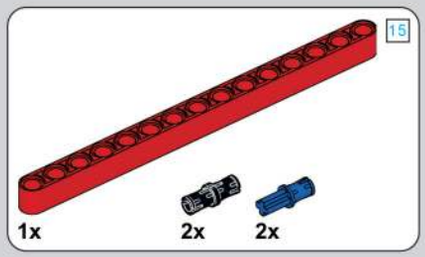

252

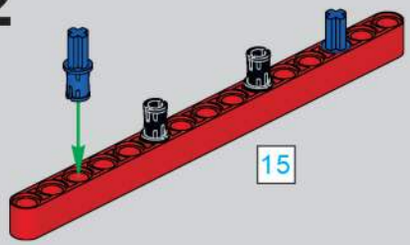

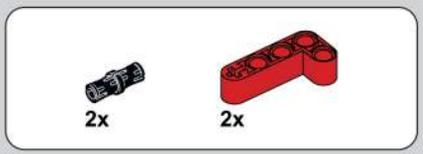

253

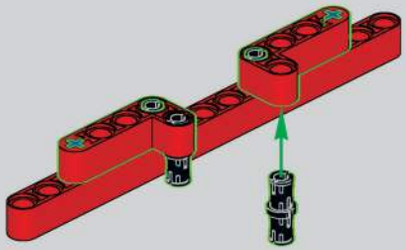

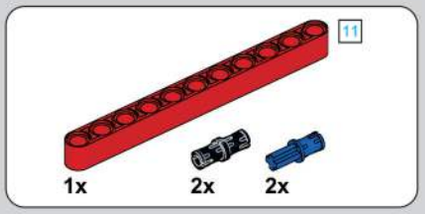

254

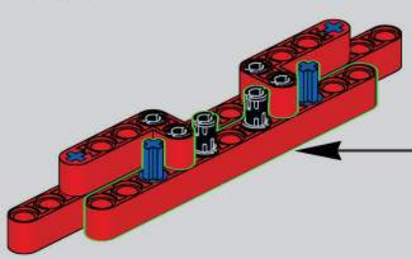

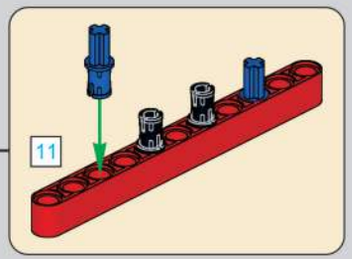

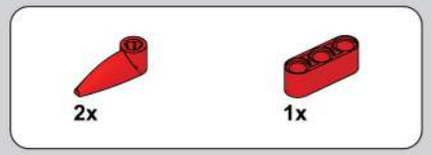

255

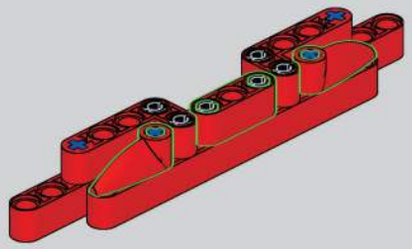

256

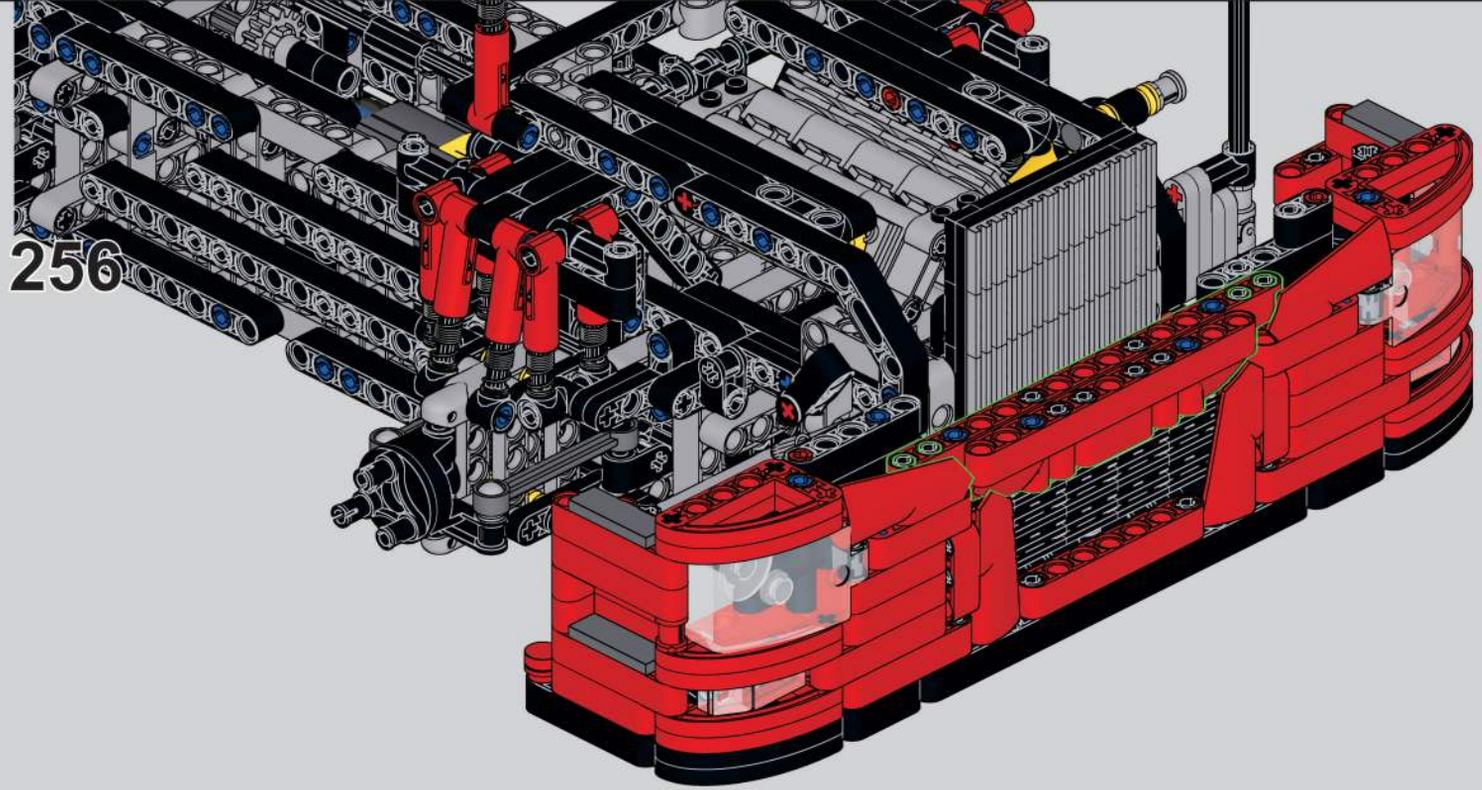

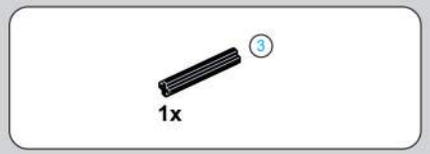

257

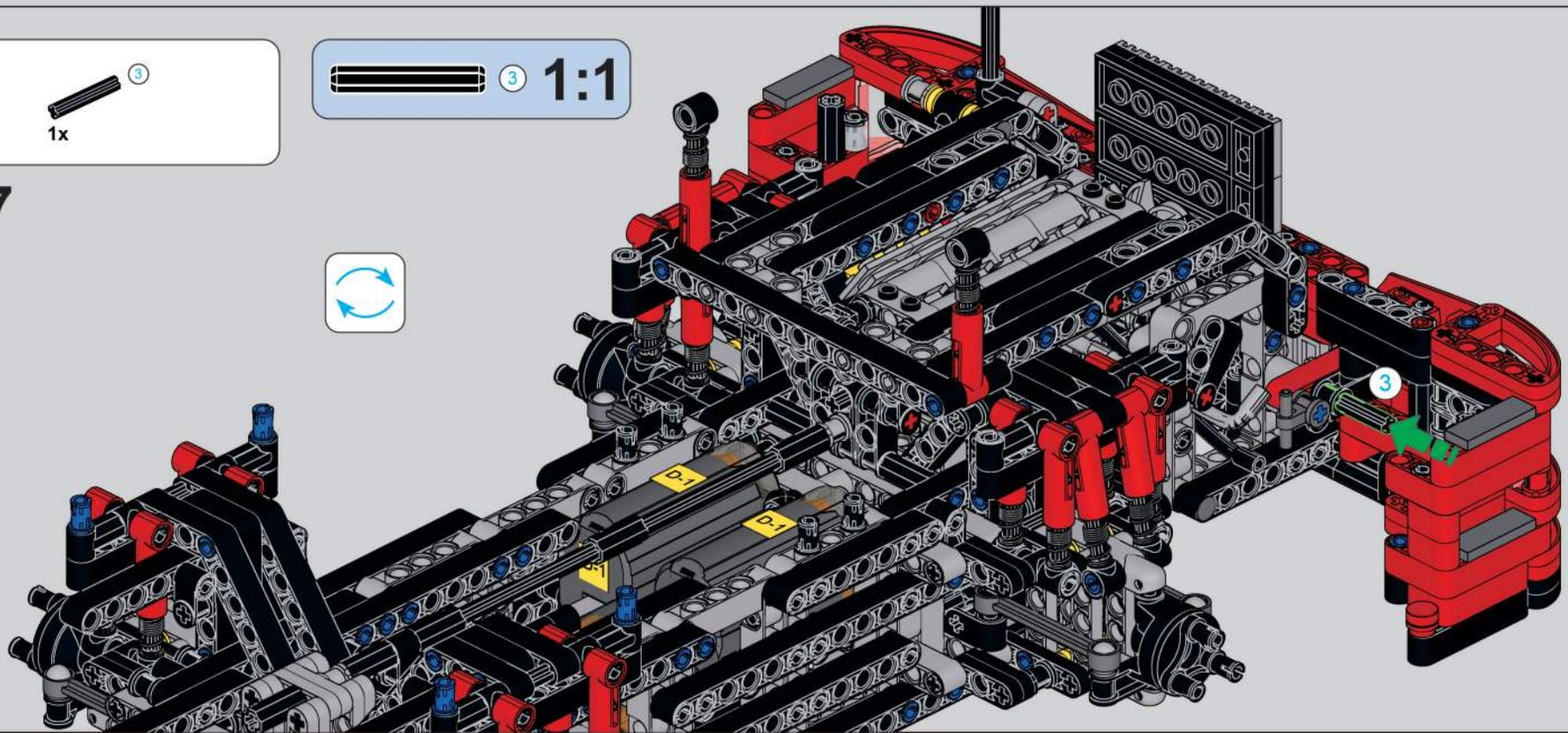

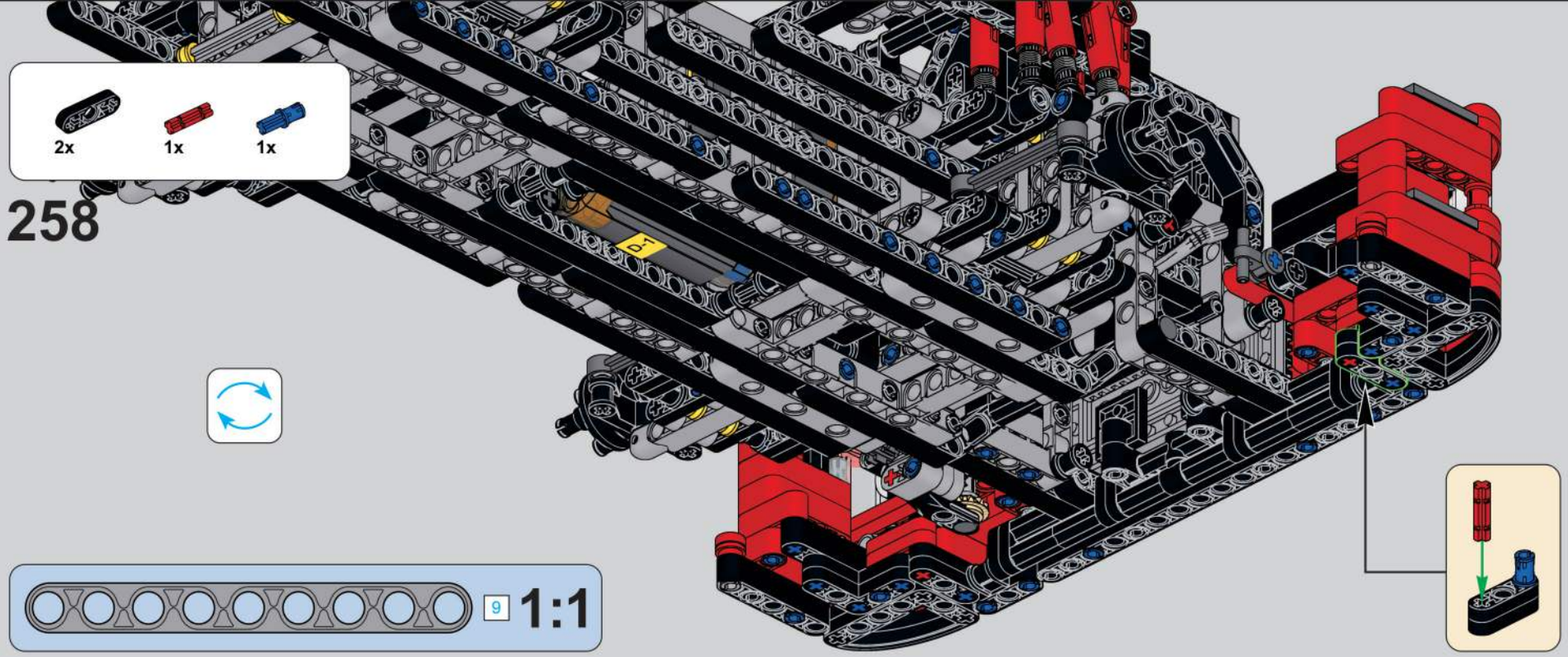

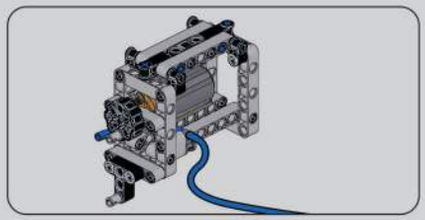

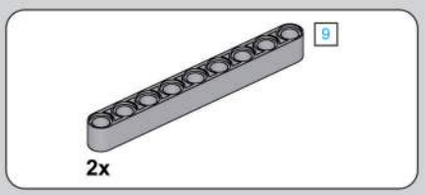

260

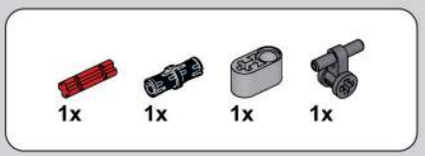

261

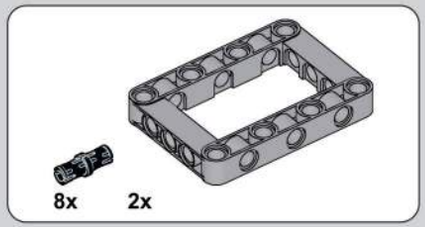

259

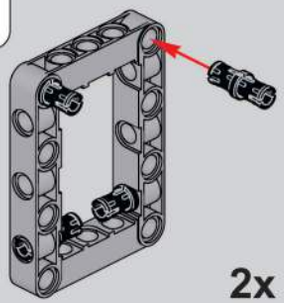

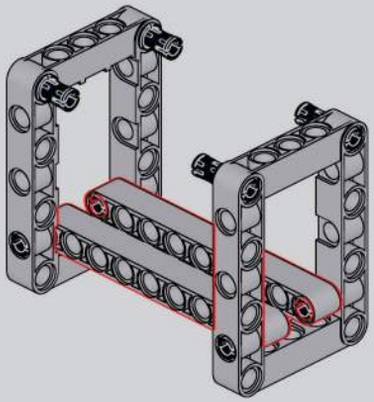

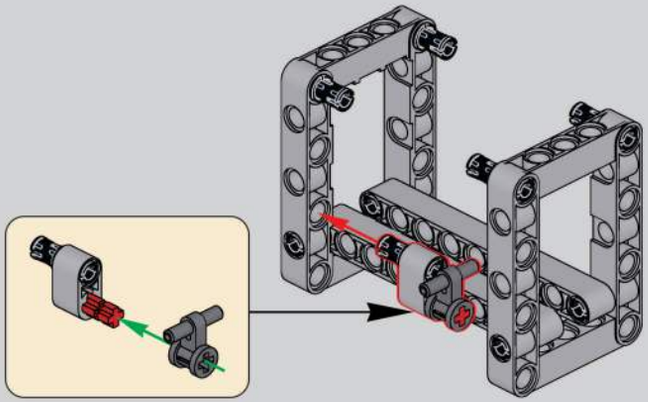

262

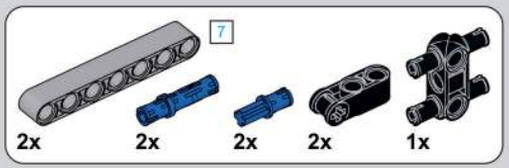

263

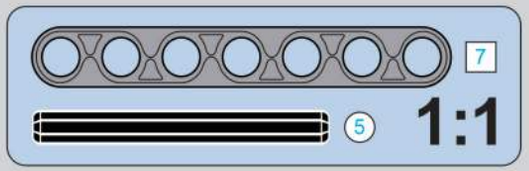

264

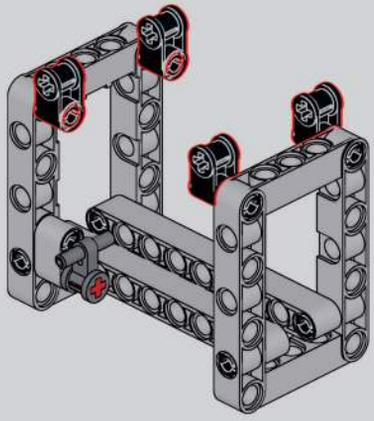

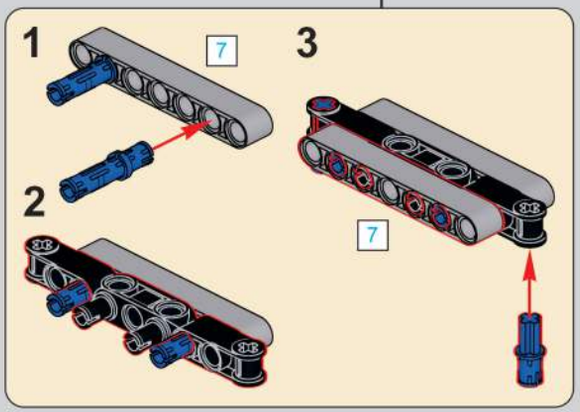

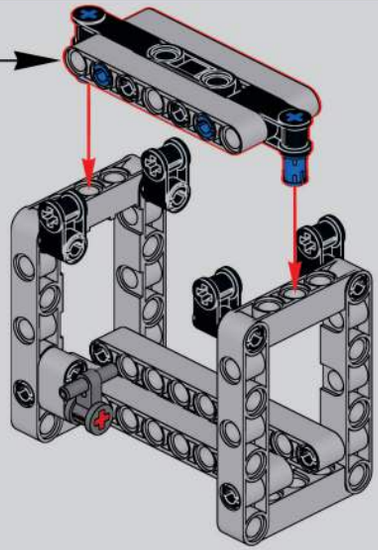

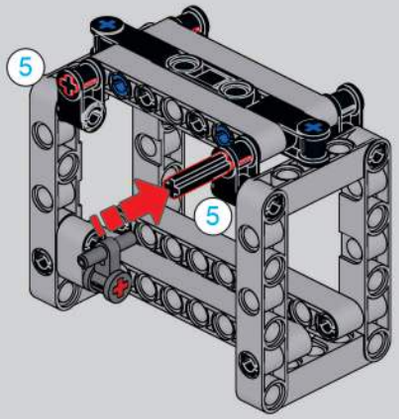

265

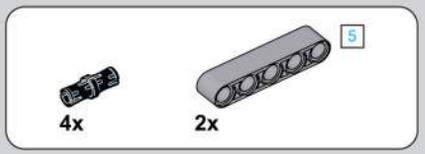

266

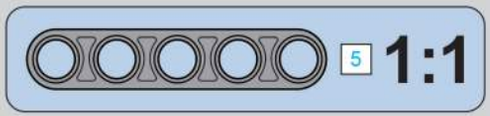

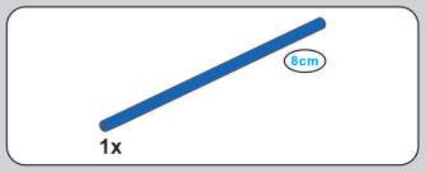

267

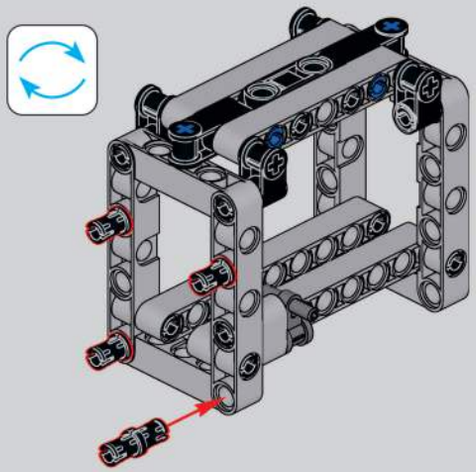

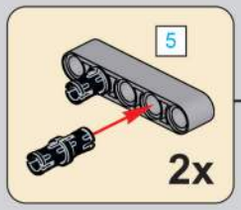

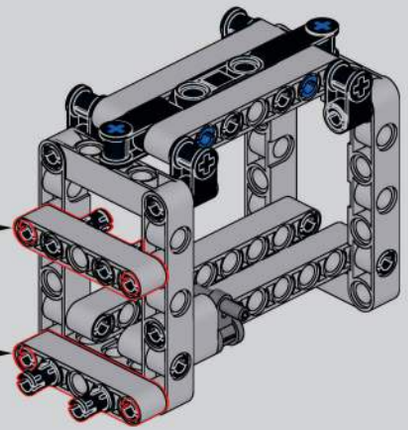

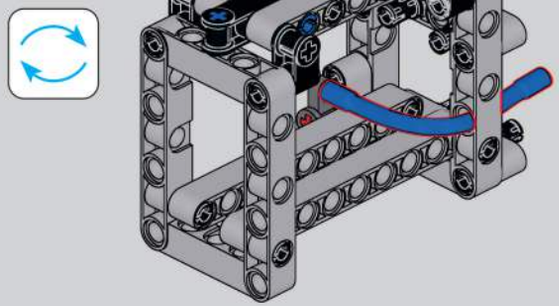

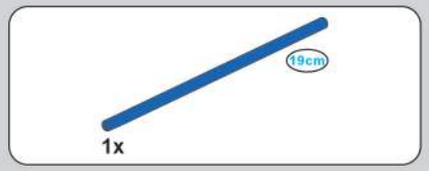

268

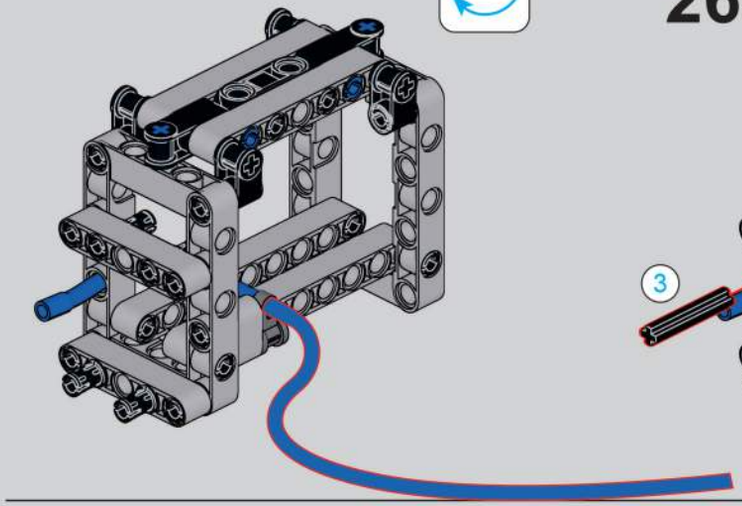

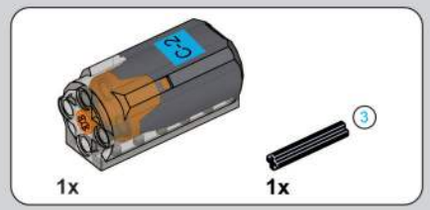

269

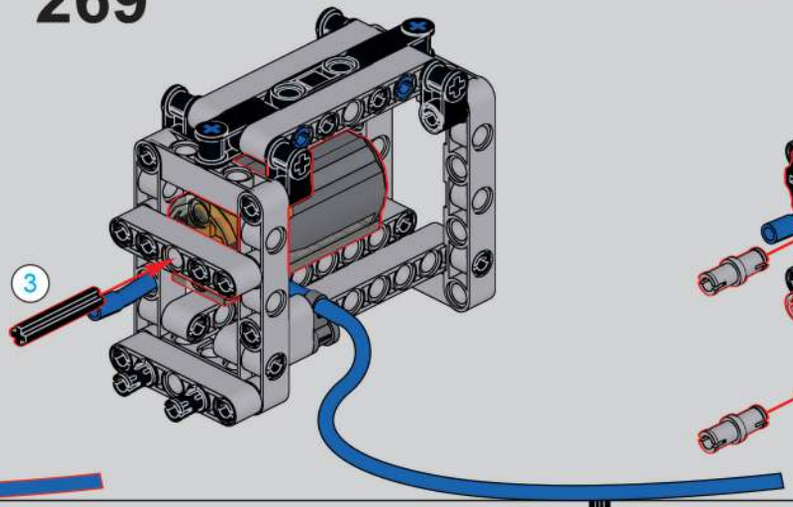

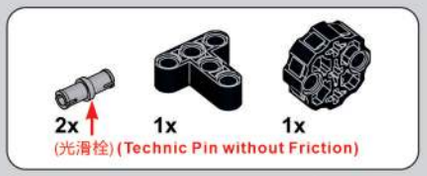

270

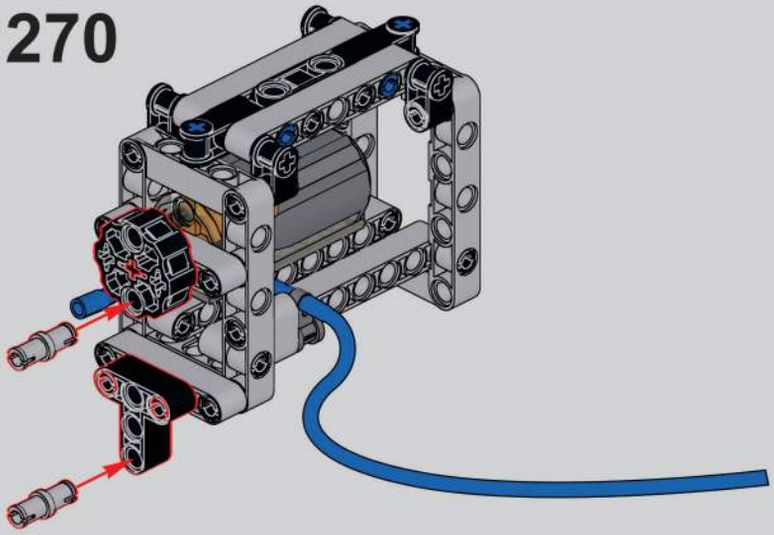

271

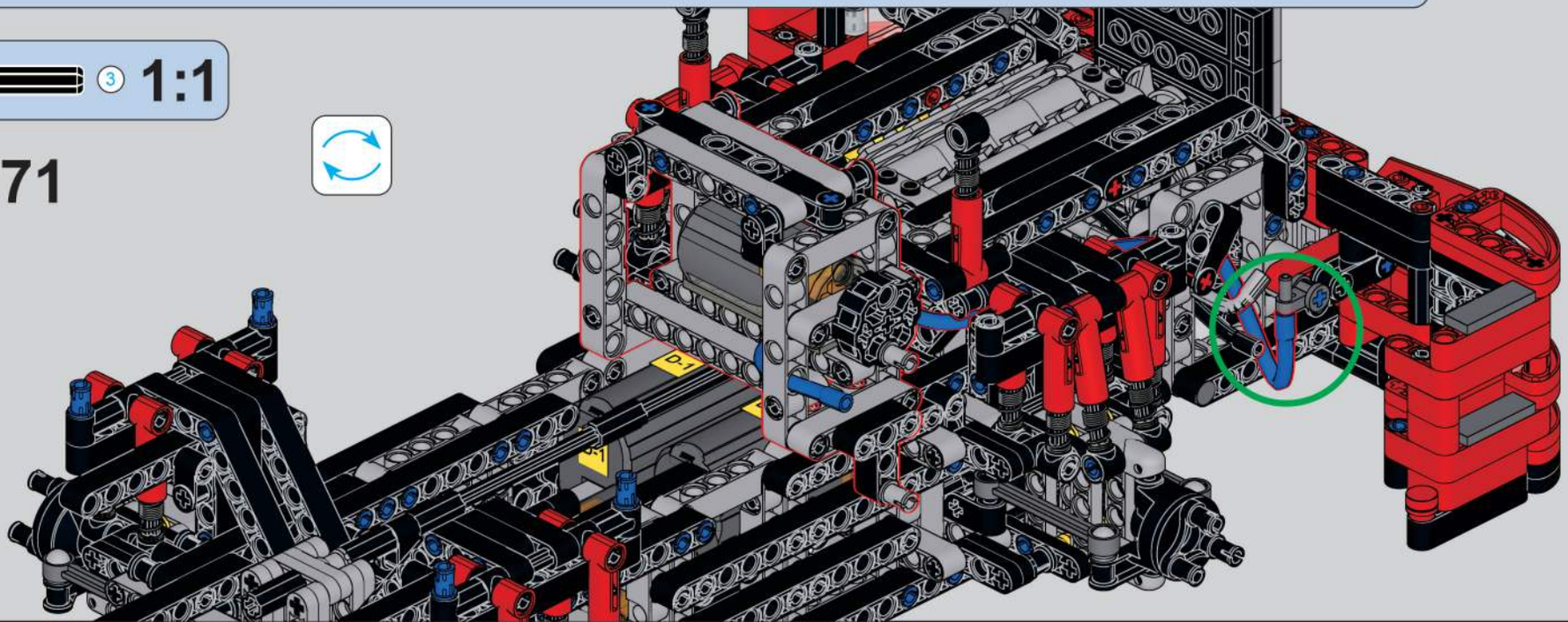

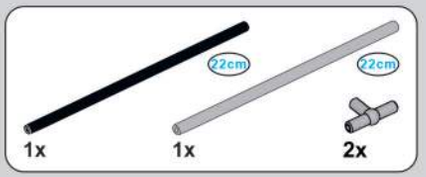

272

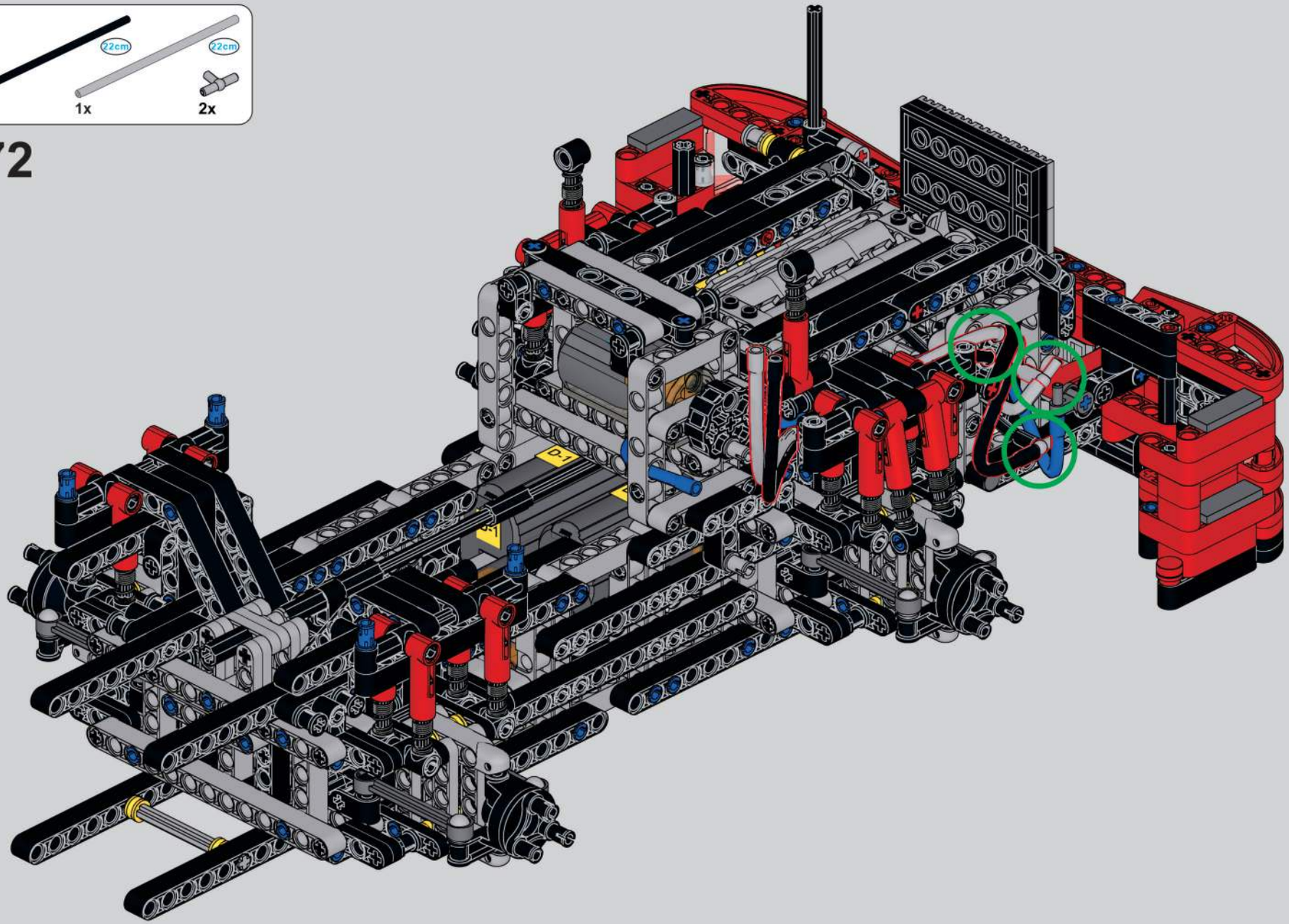

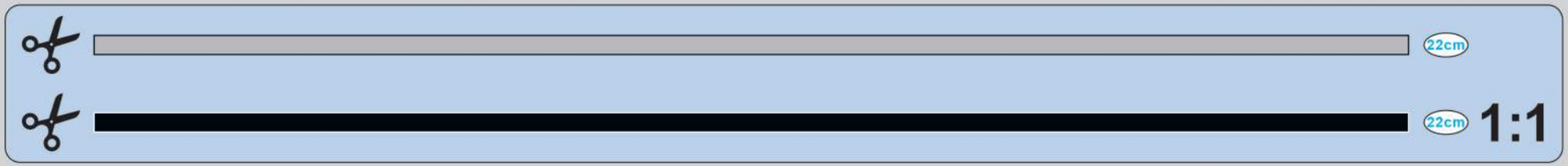

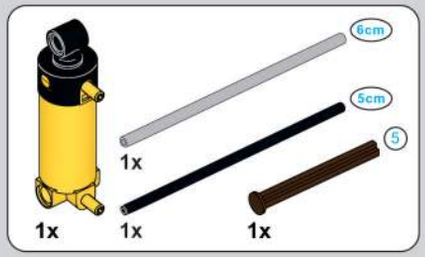

273

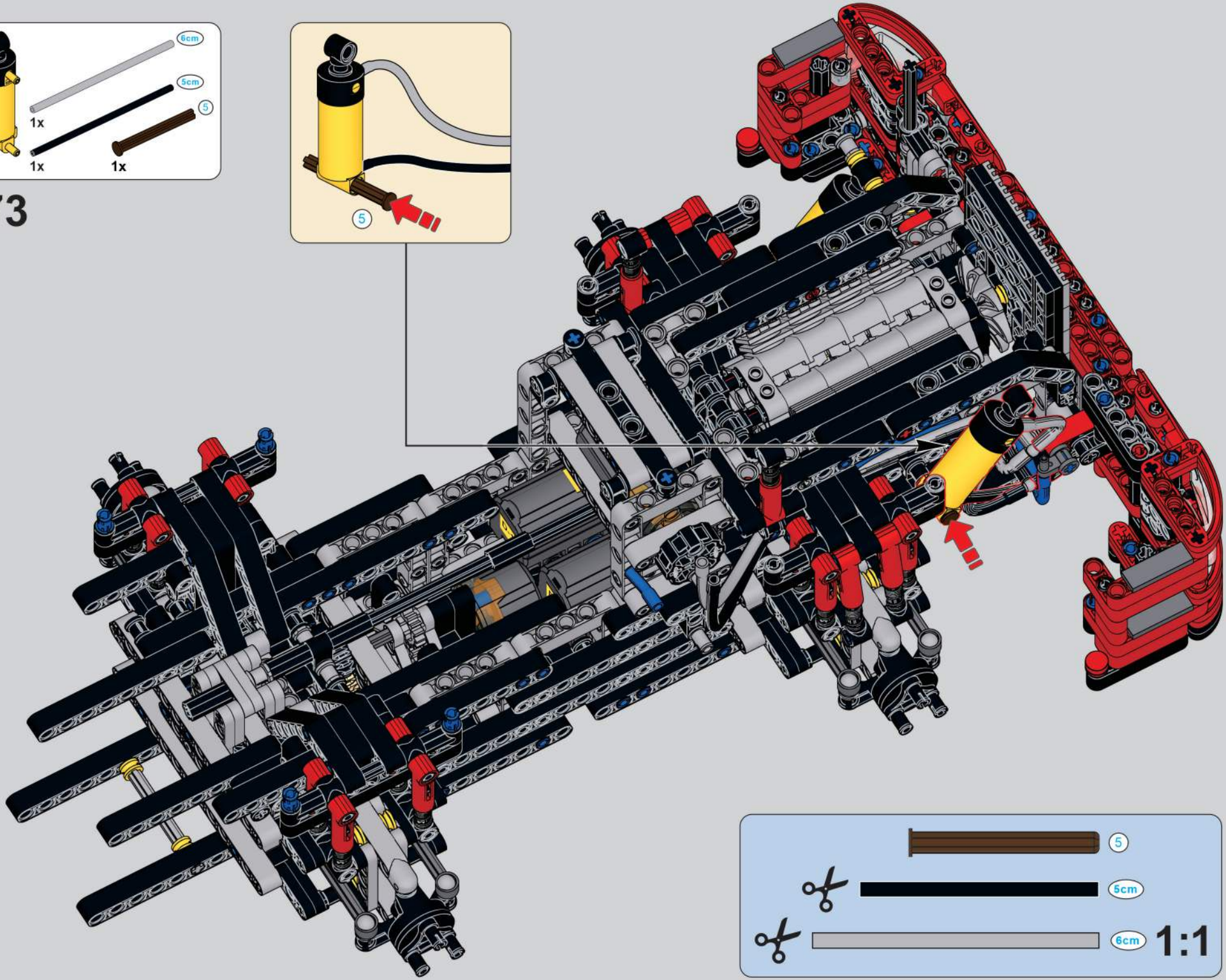

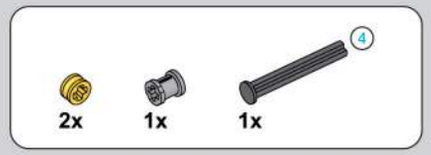

274

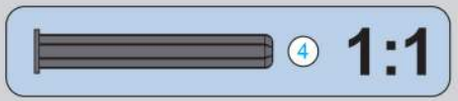

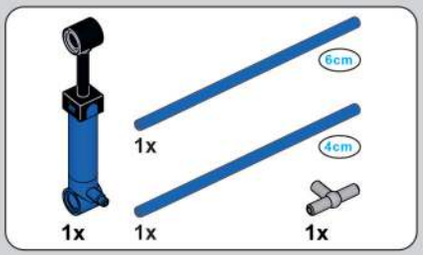

275

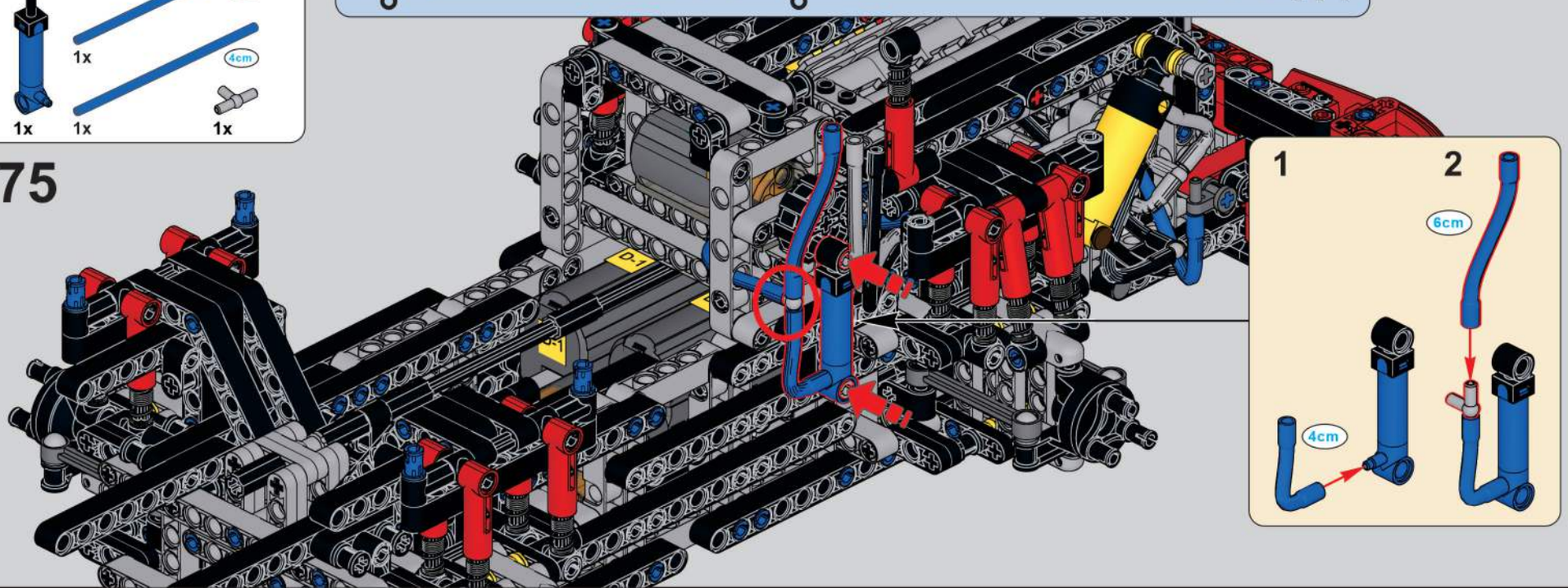

276

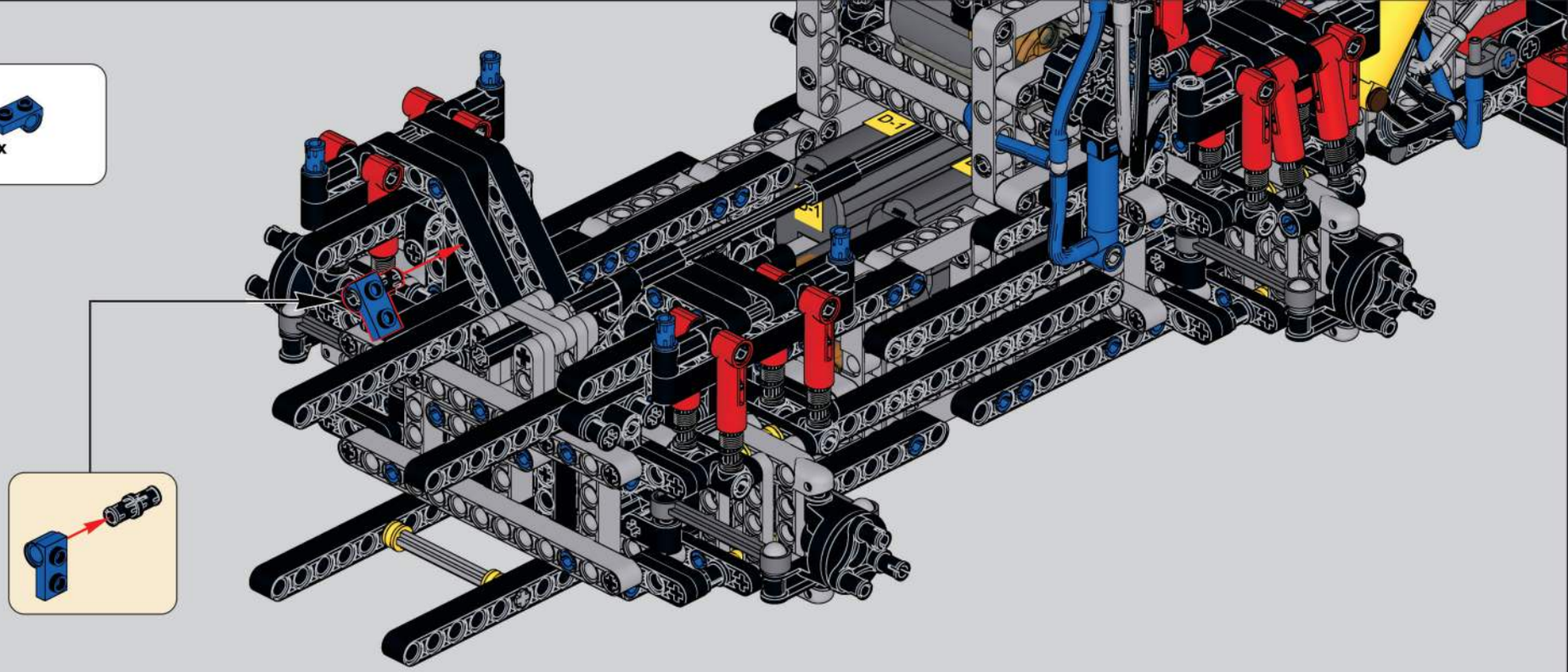

277

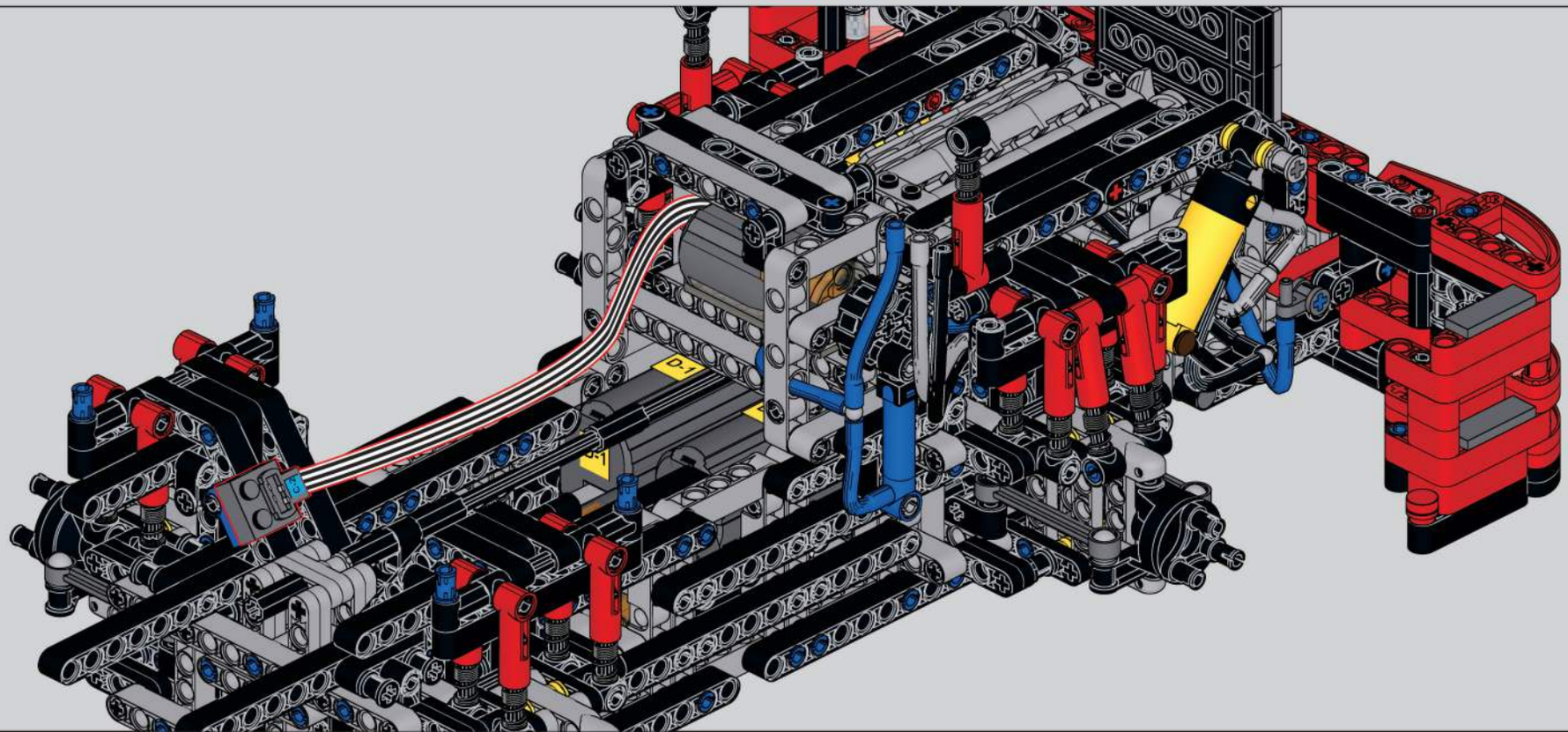

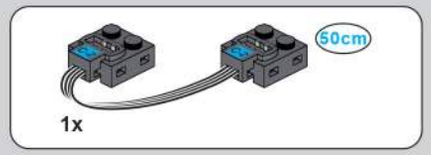

278

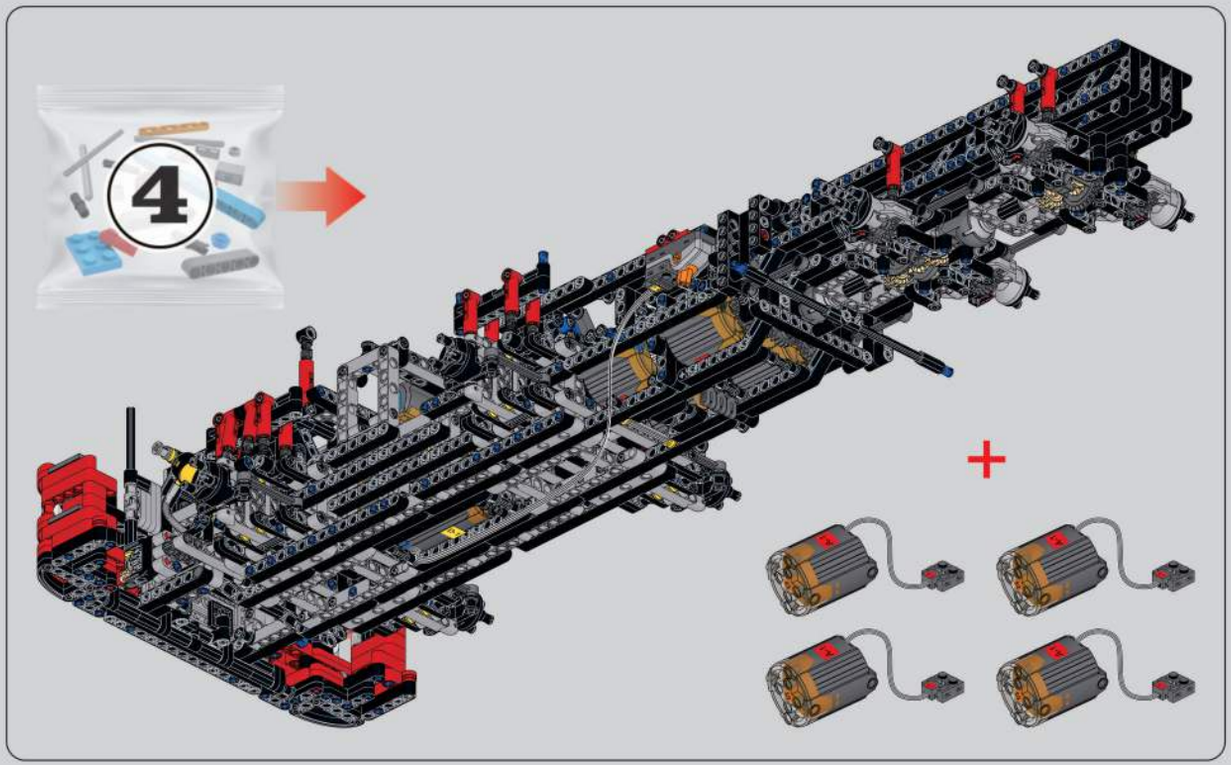

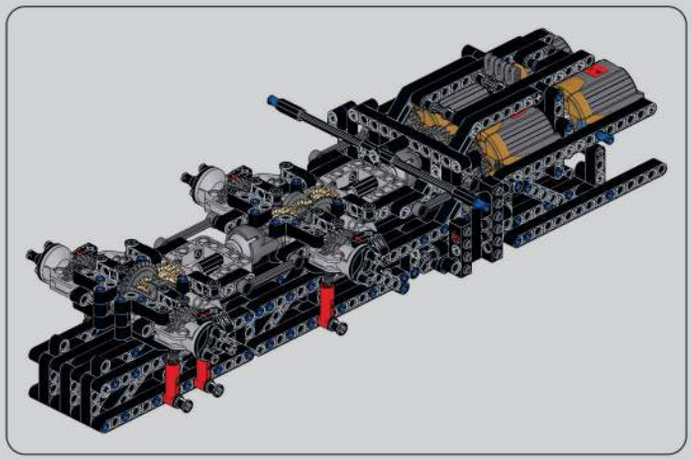

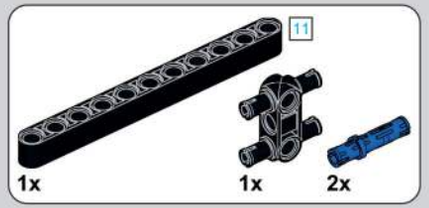

279

280

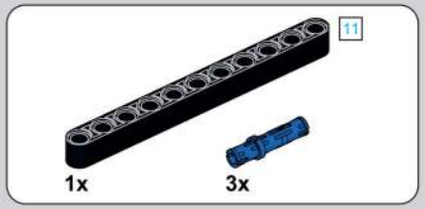

281

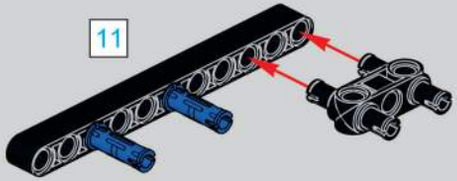

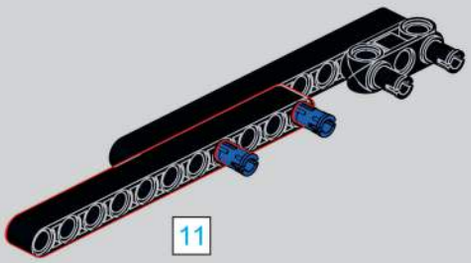

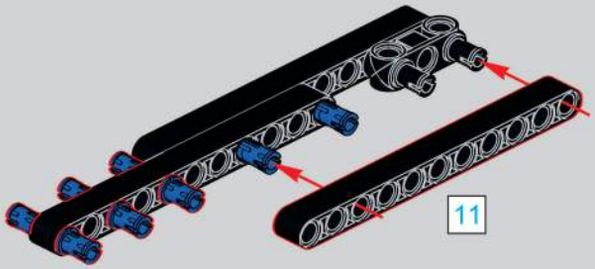

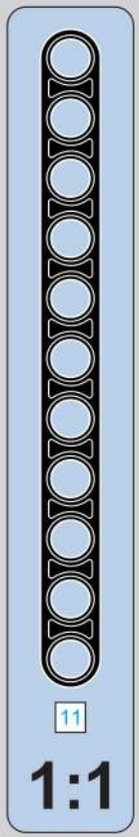

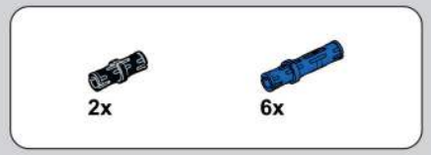

282

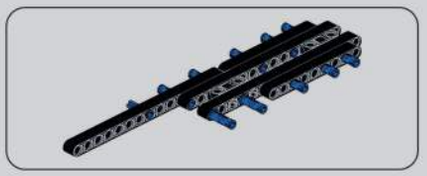

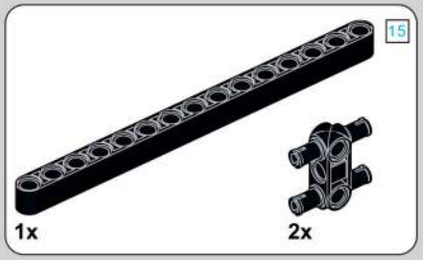

283

284

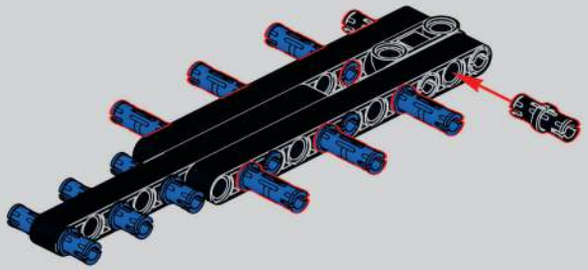

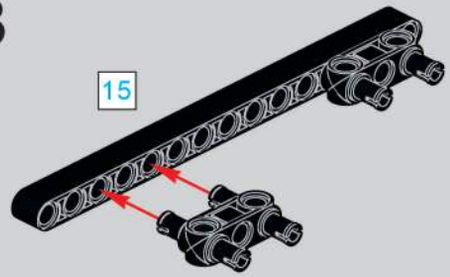

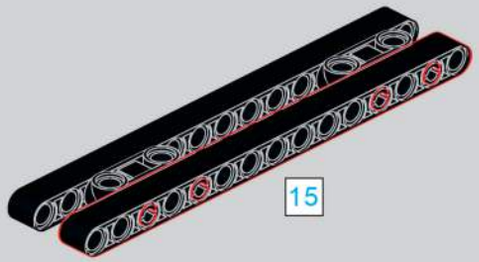

285

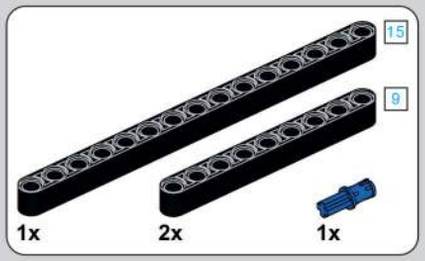

286

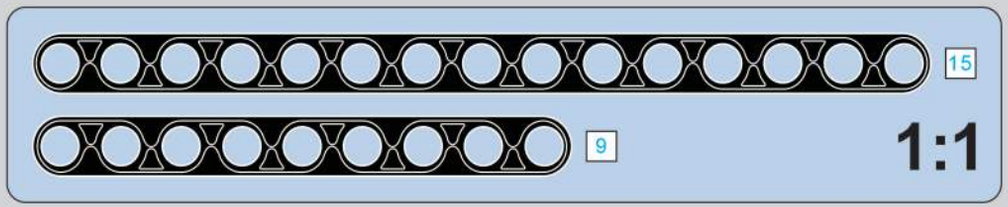

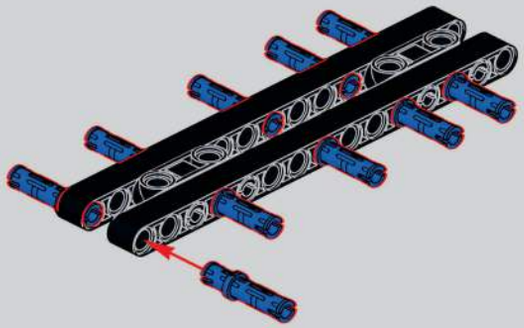

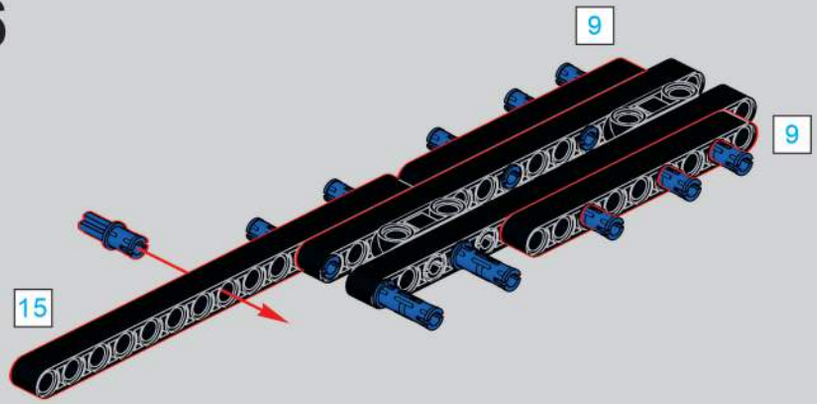

287

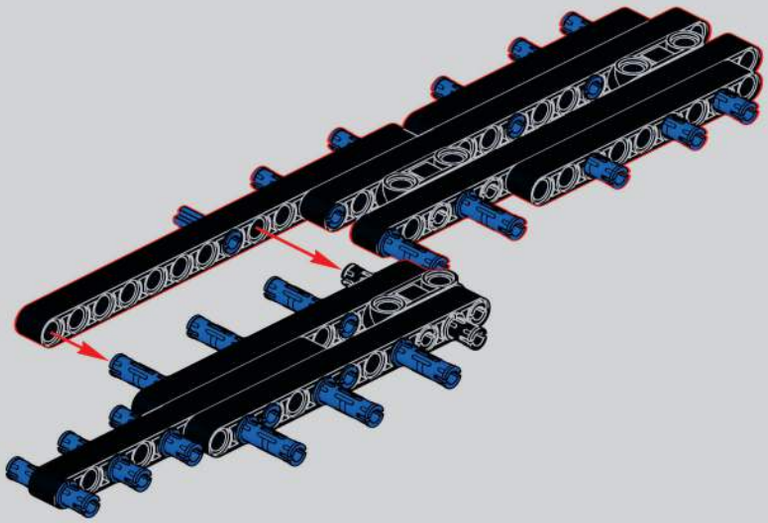

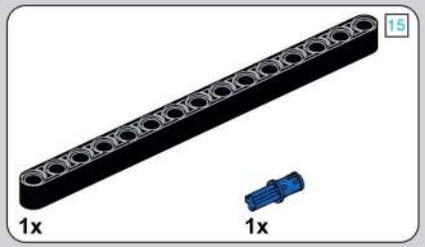

288

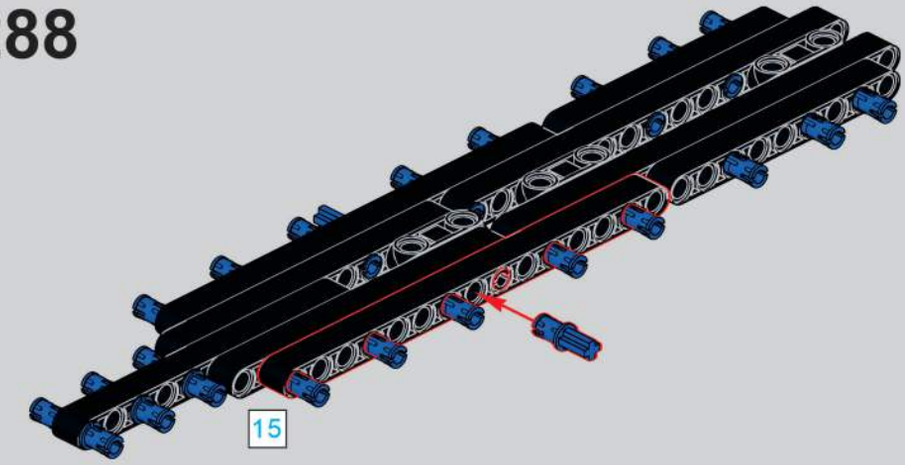

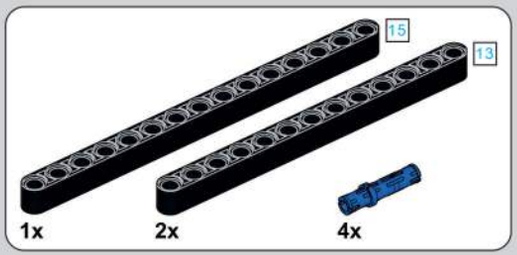

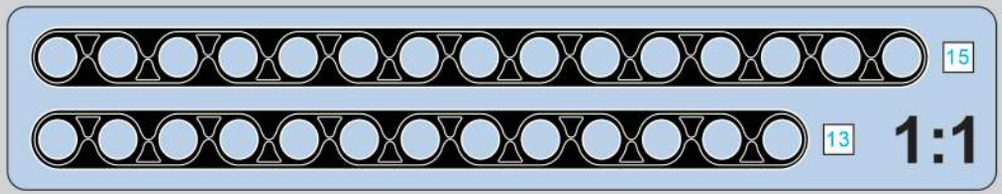

289

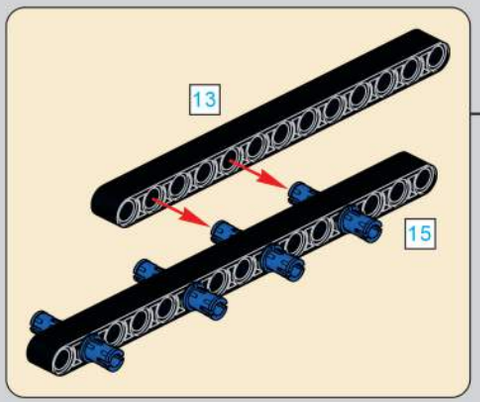

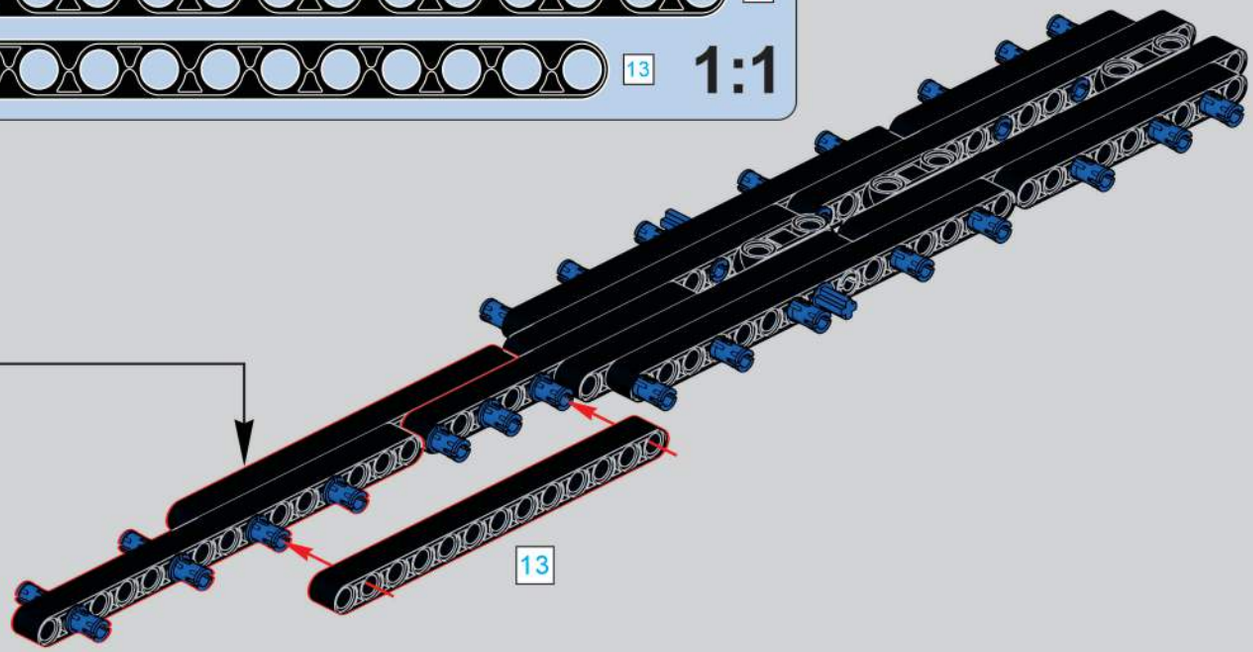

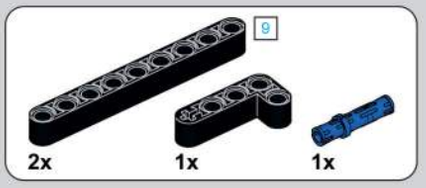

290

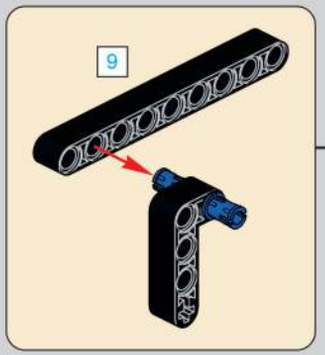

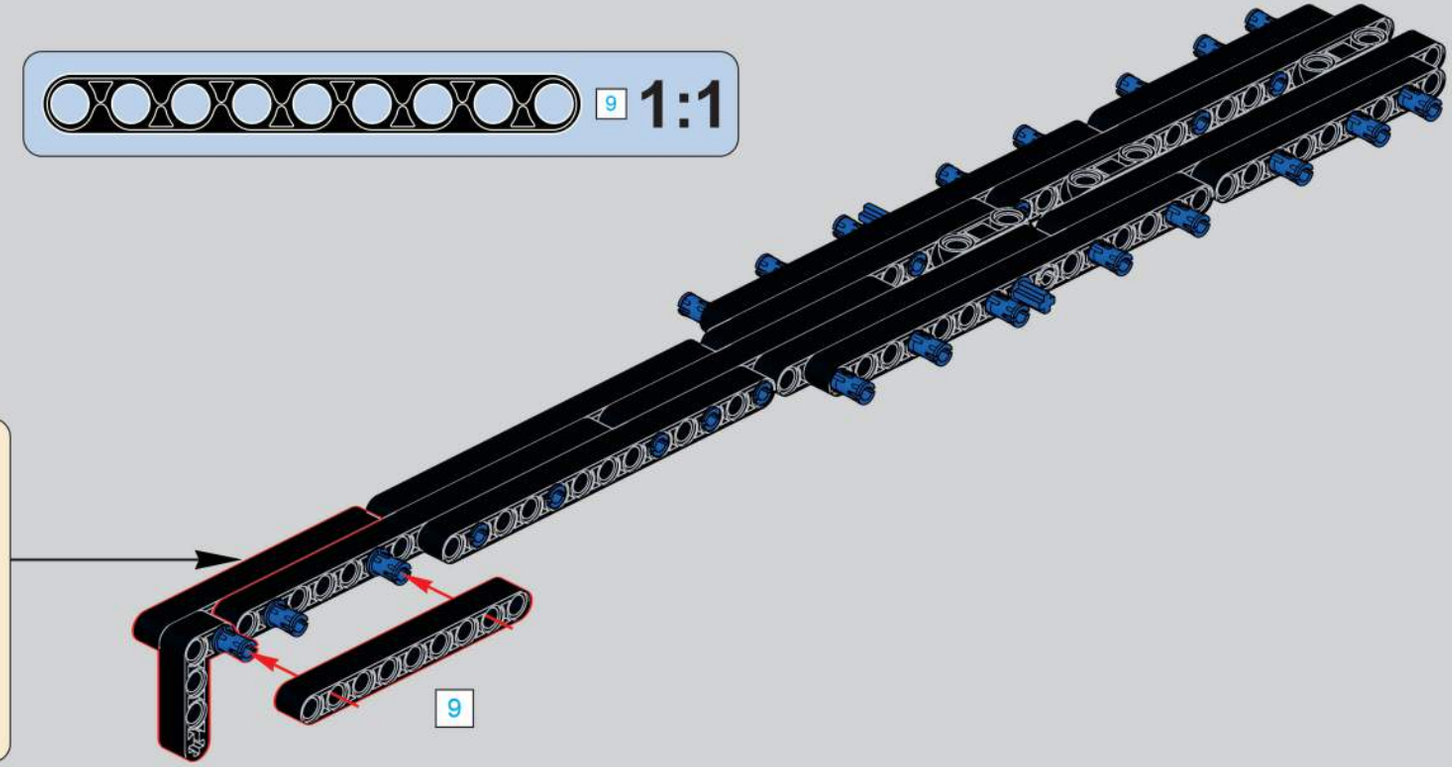

291

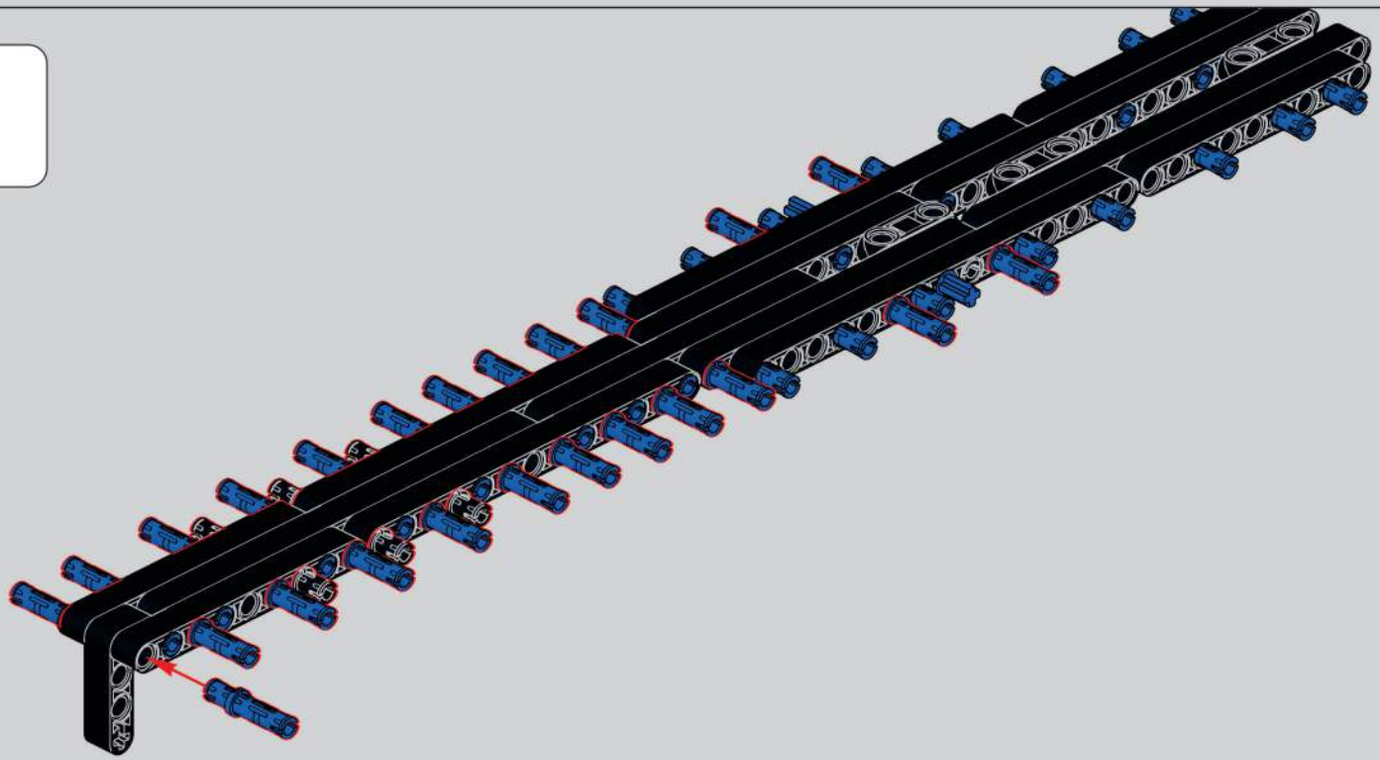

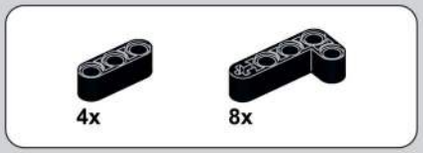

292

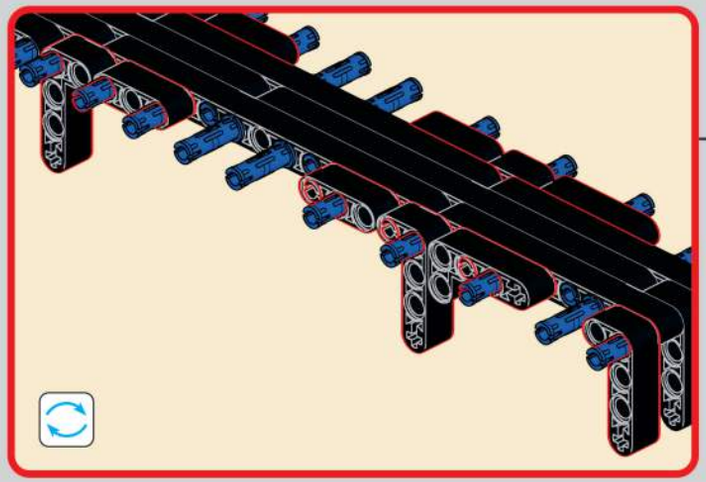

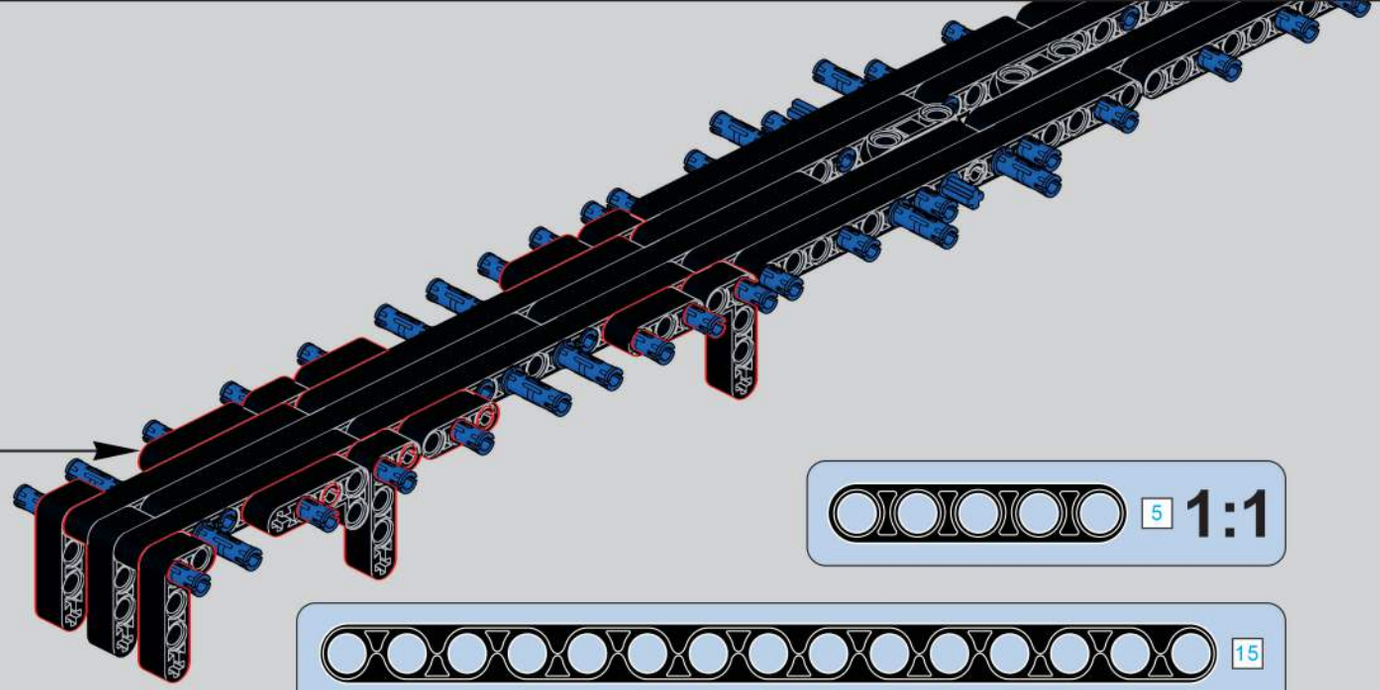

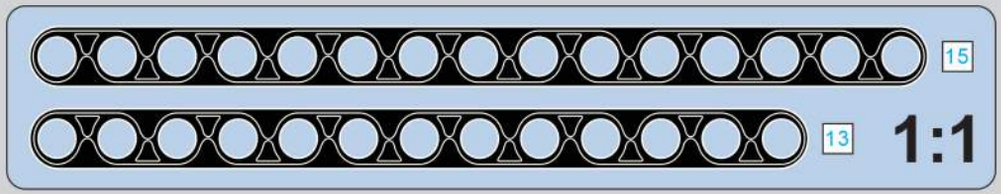

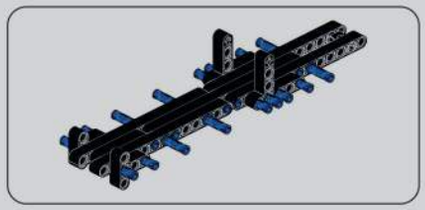

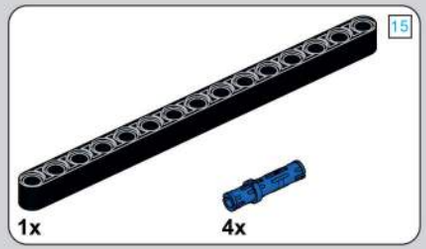

293

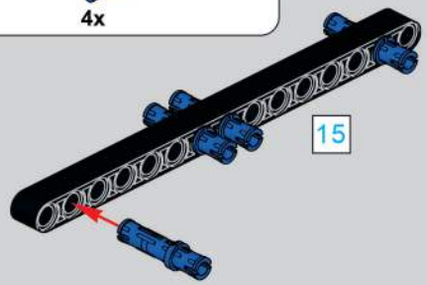

294

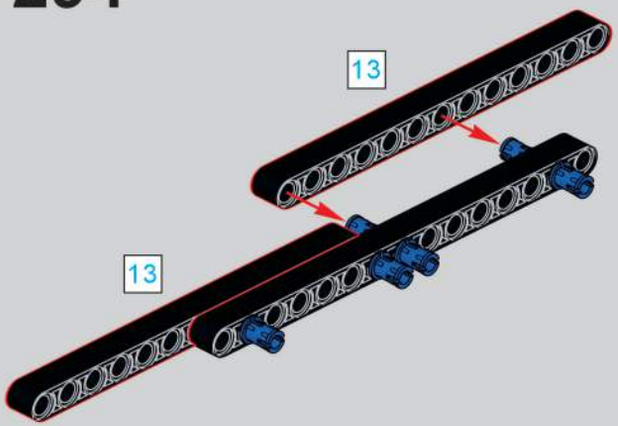

295

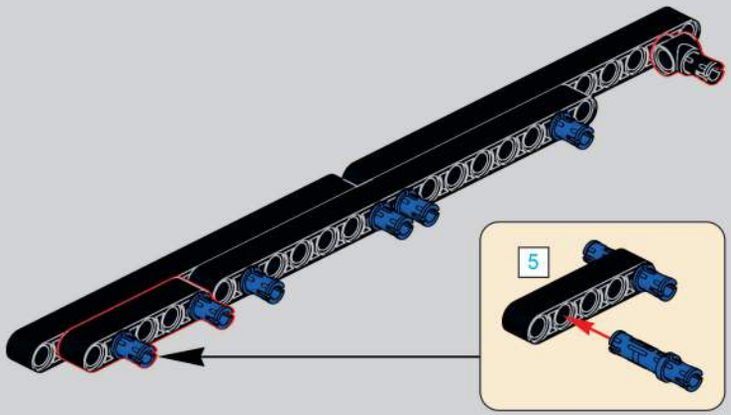

296

297

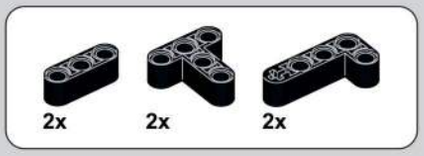

298

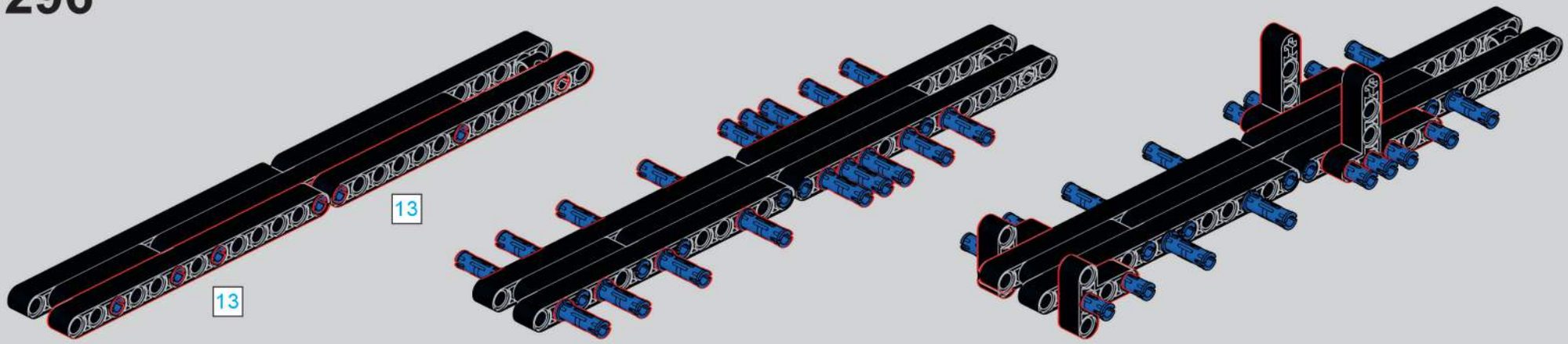

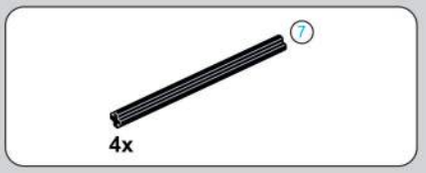

299

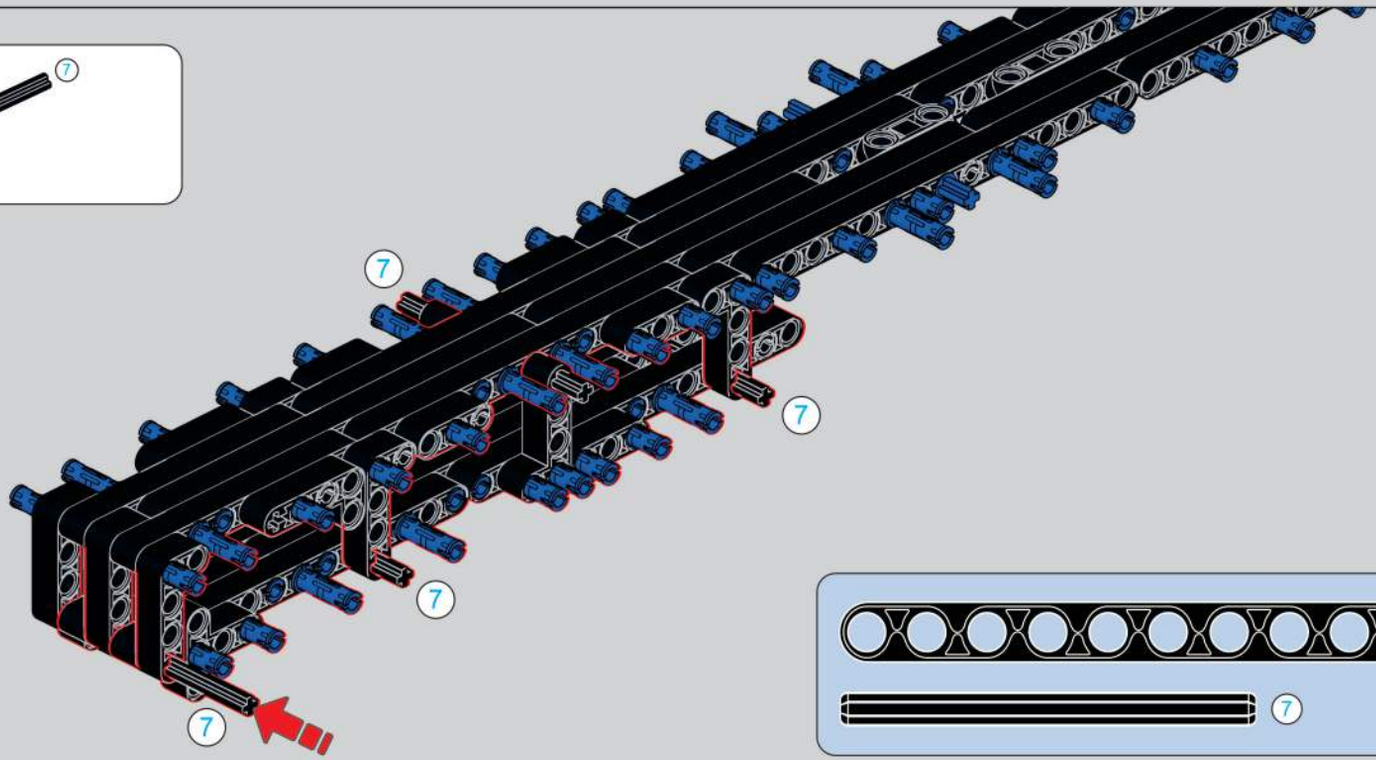

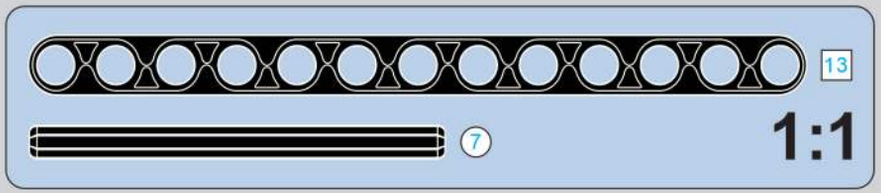

300

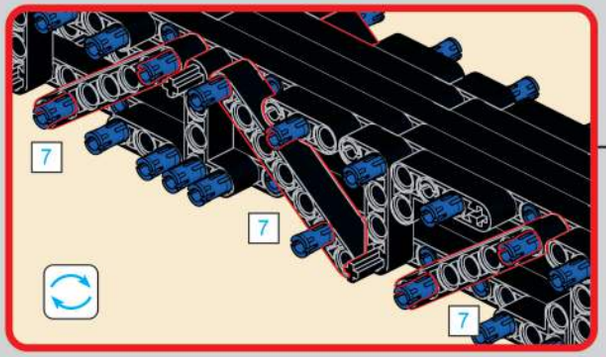

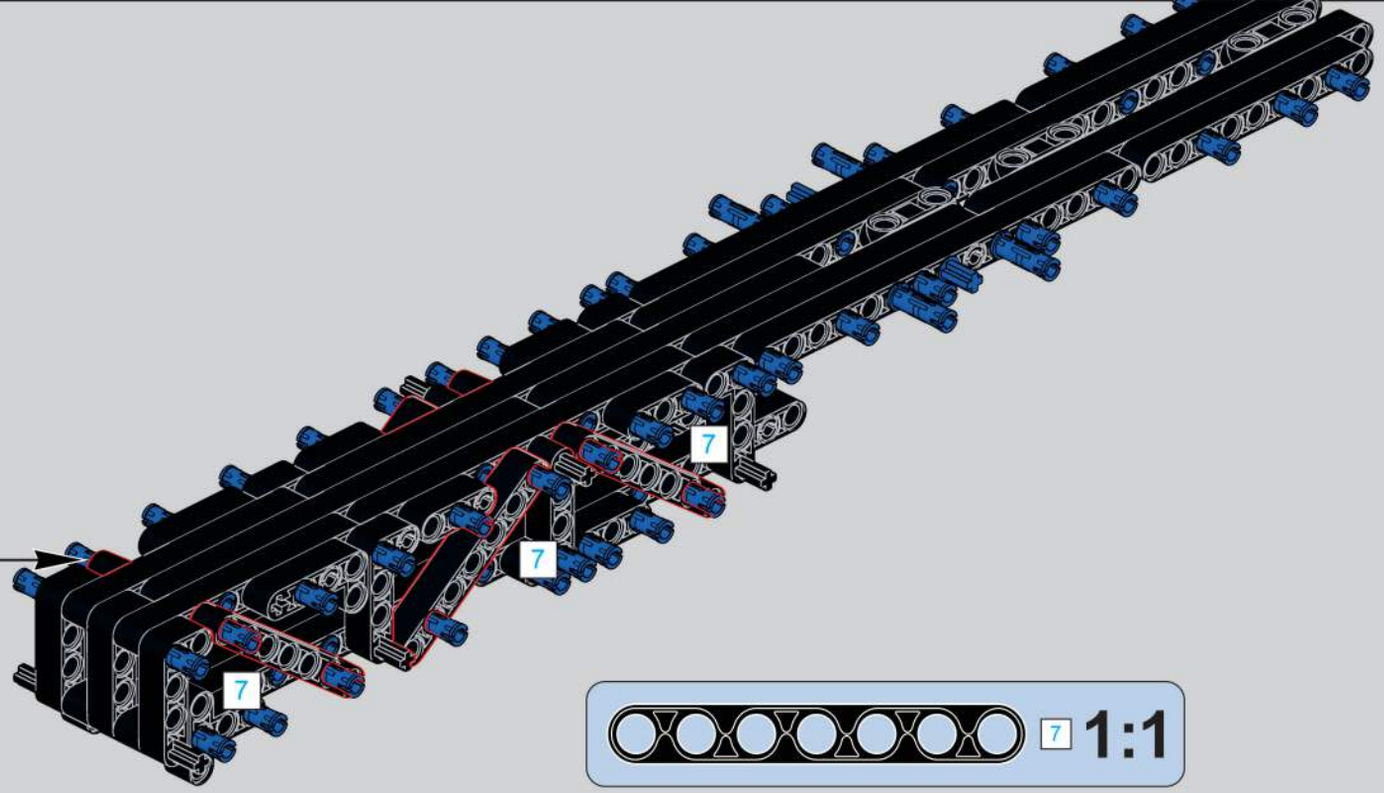

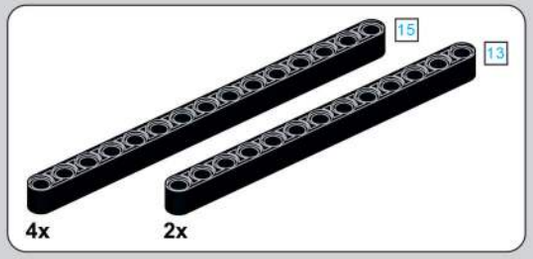

301

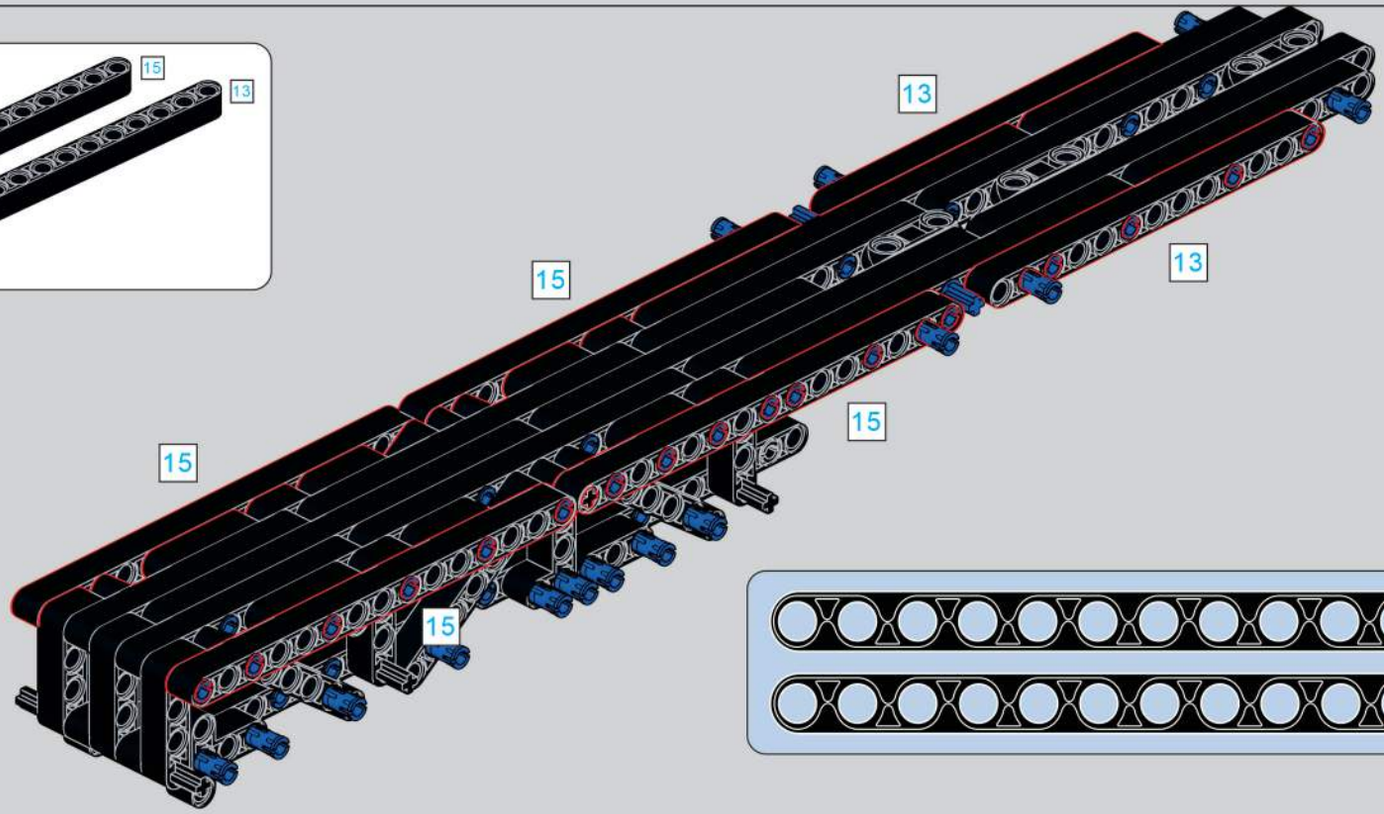

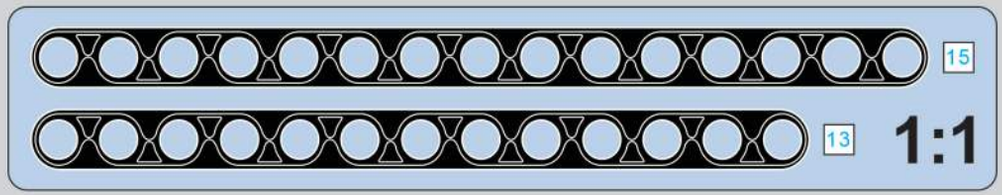

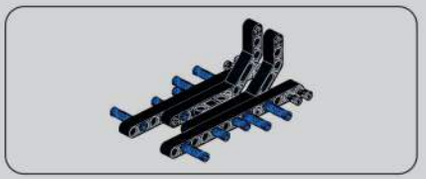

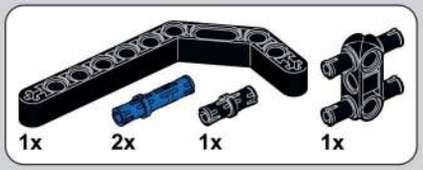

302

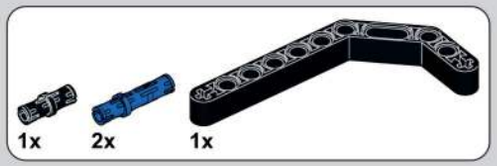

303

304

305

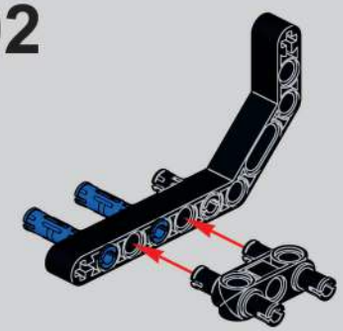

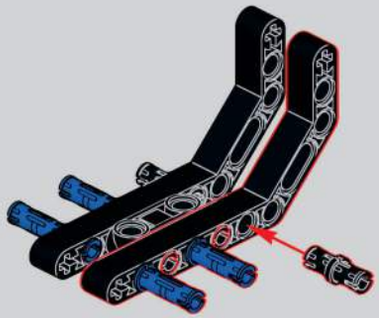

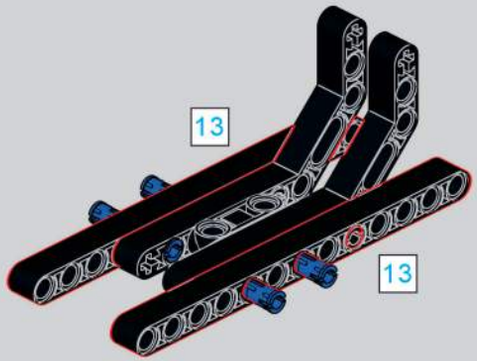

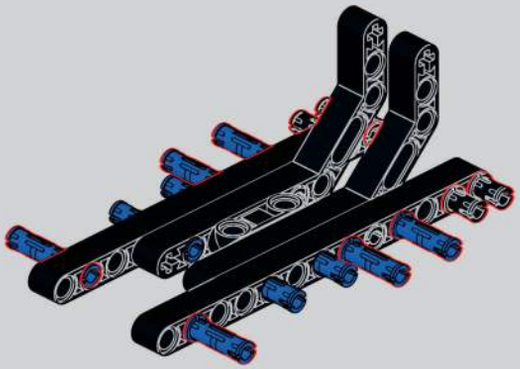

306

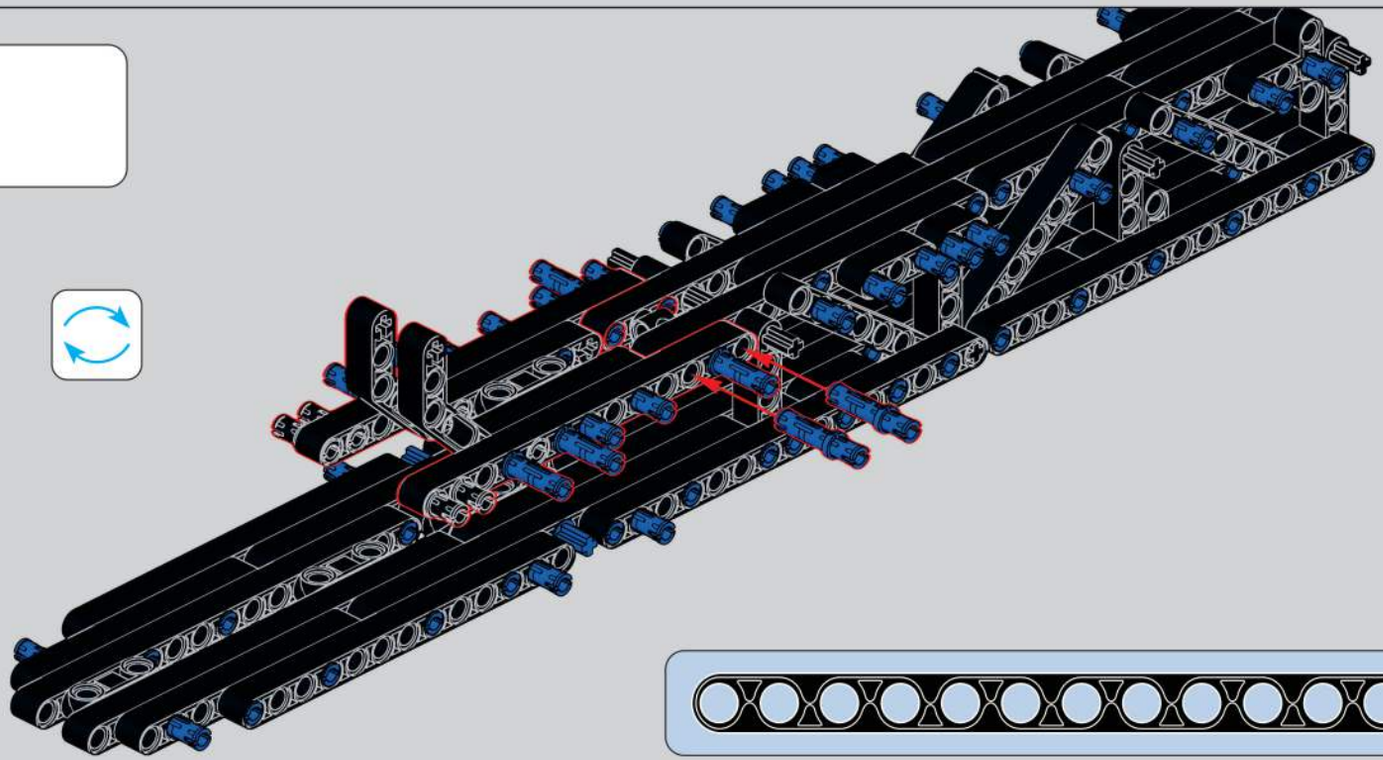

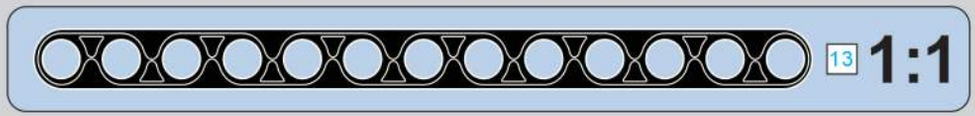

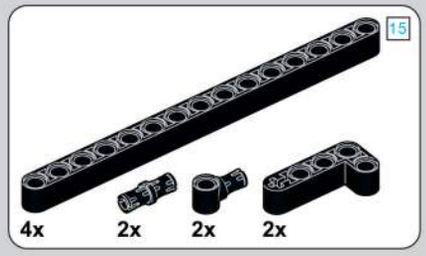

307

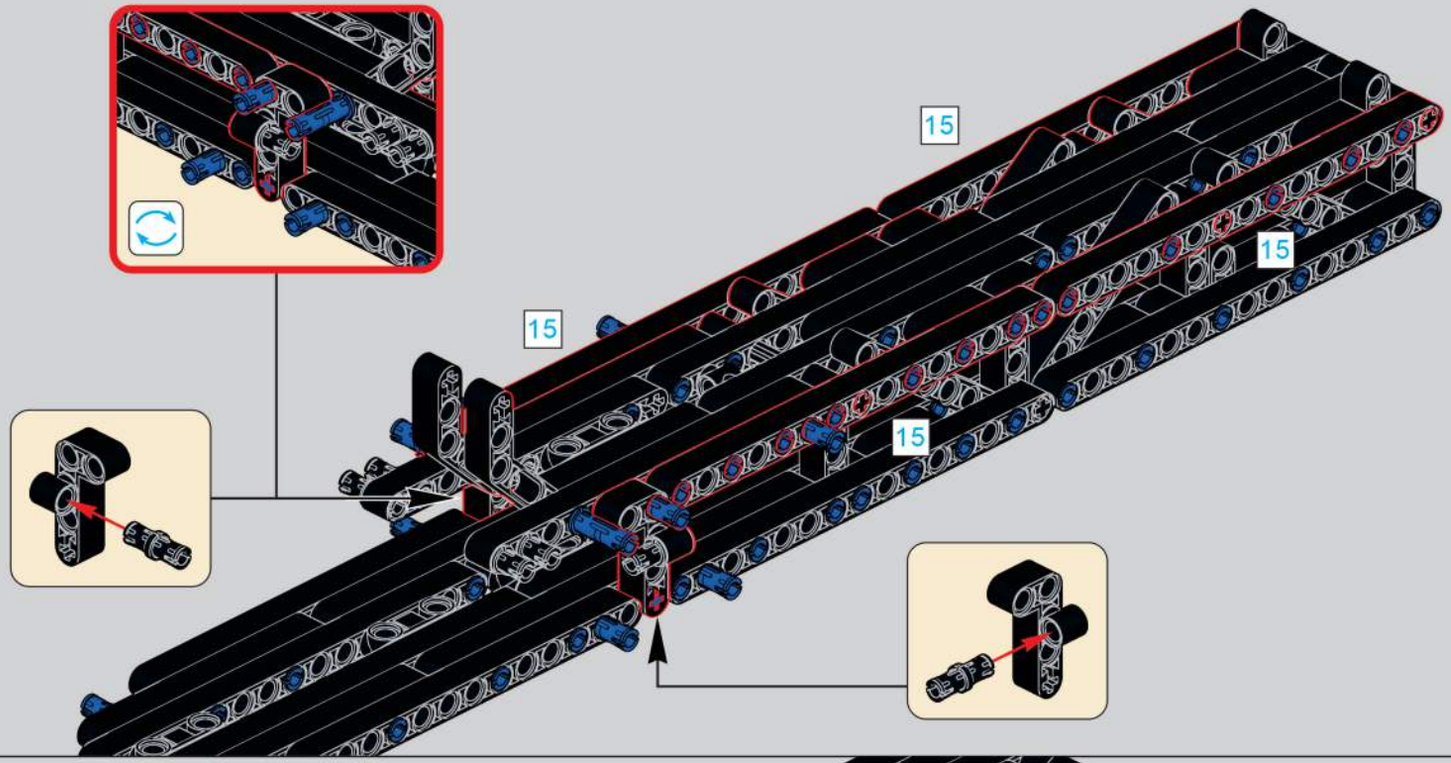

308

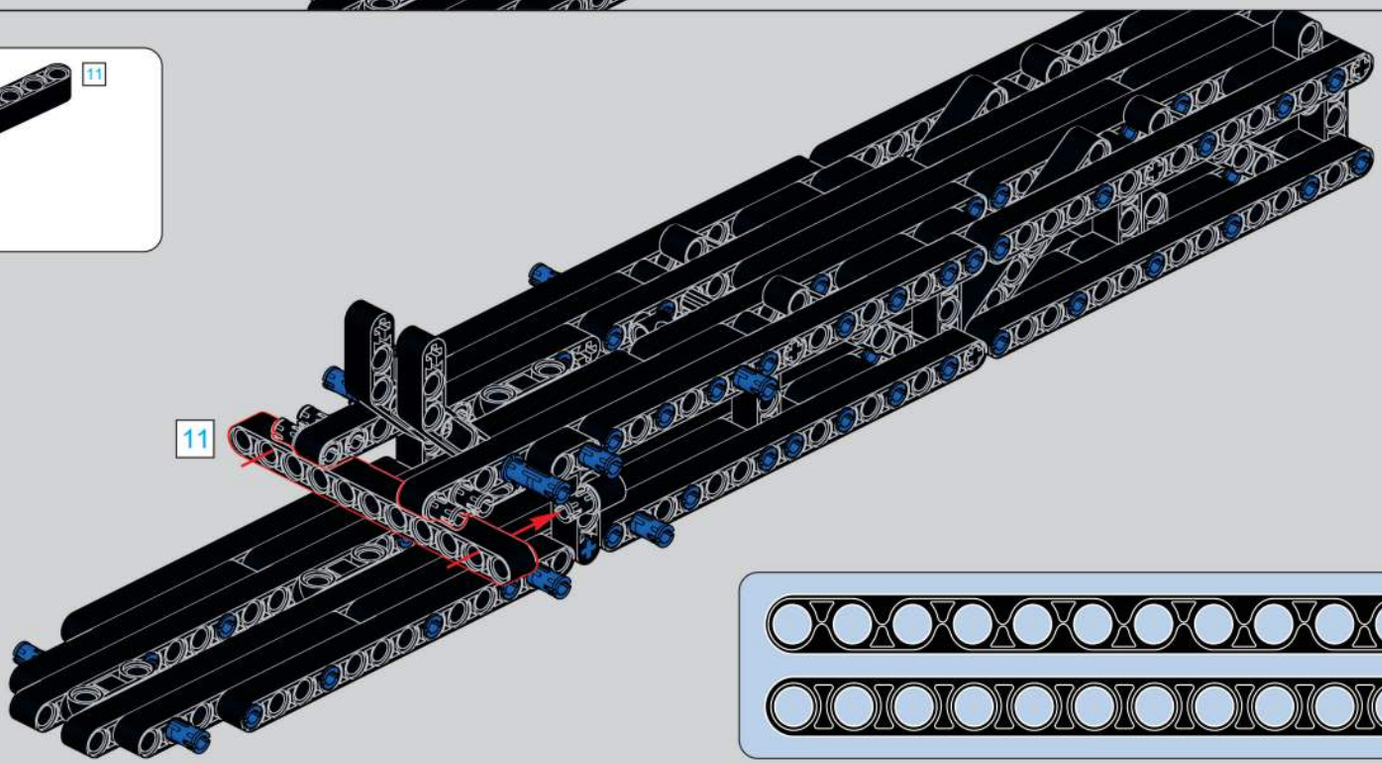

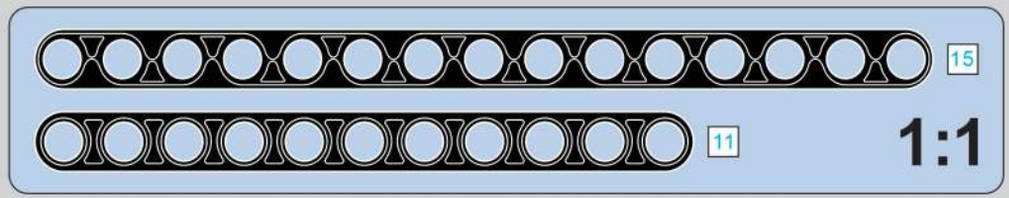

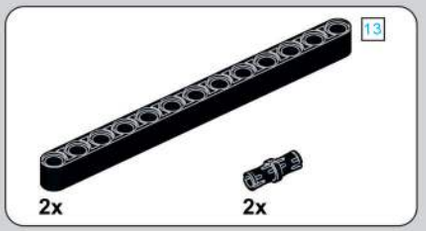

309

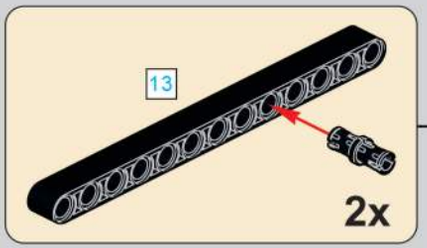

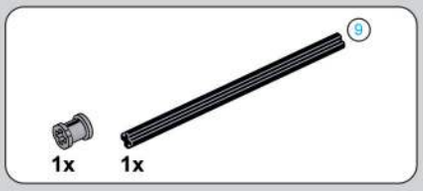

310

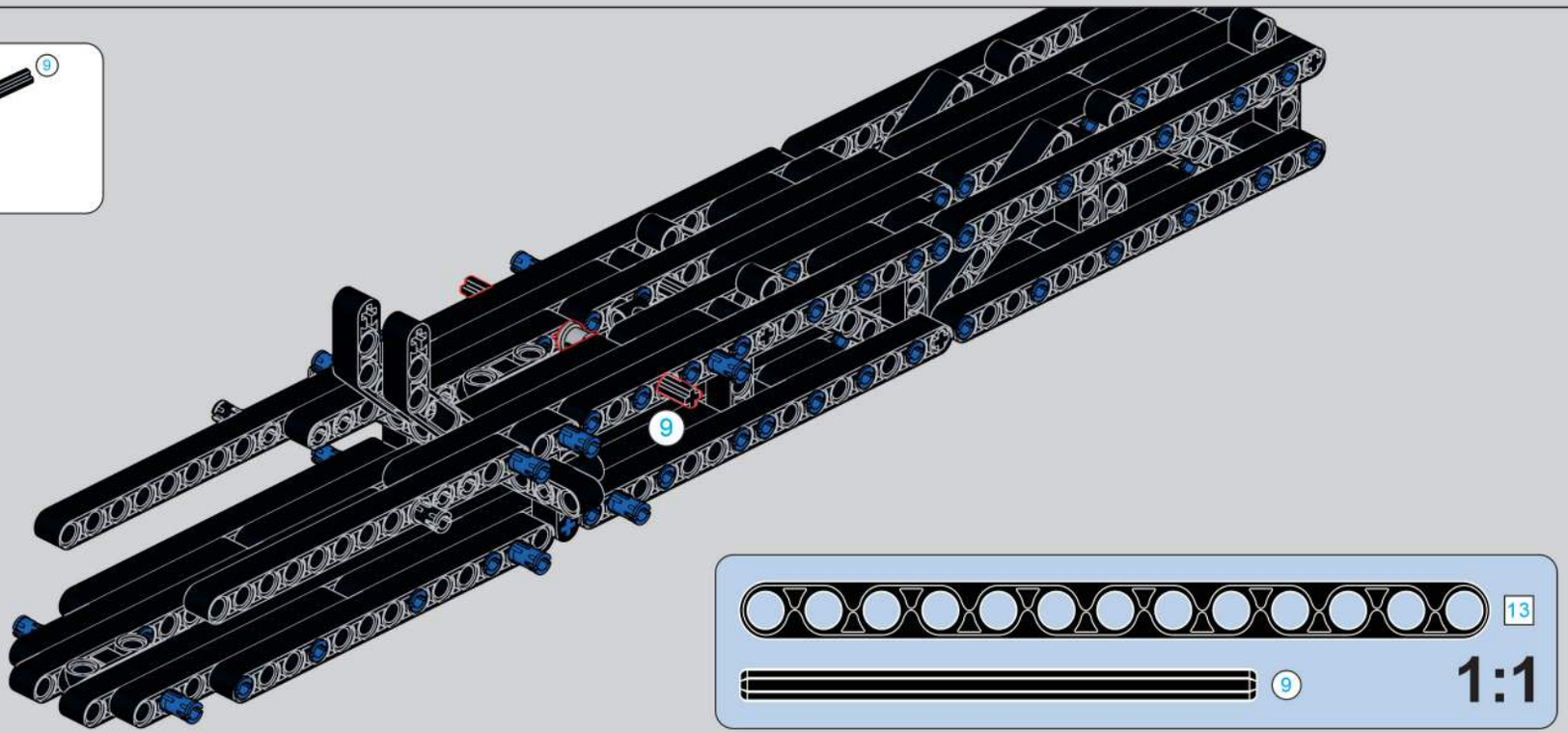

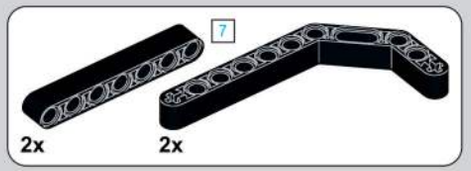

311

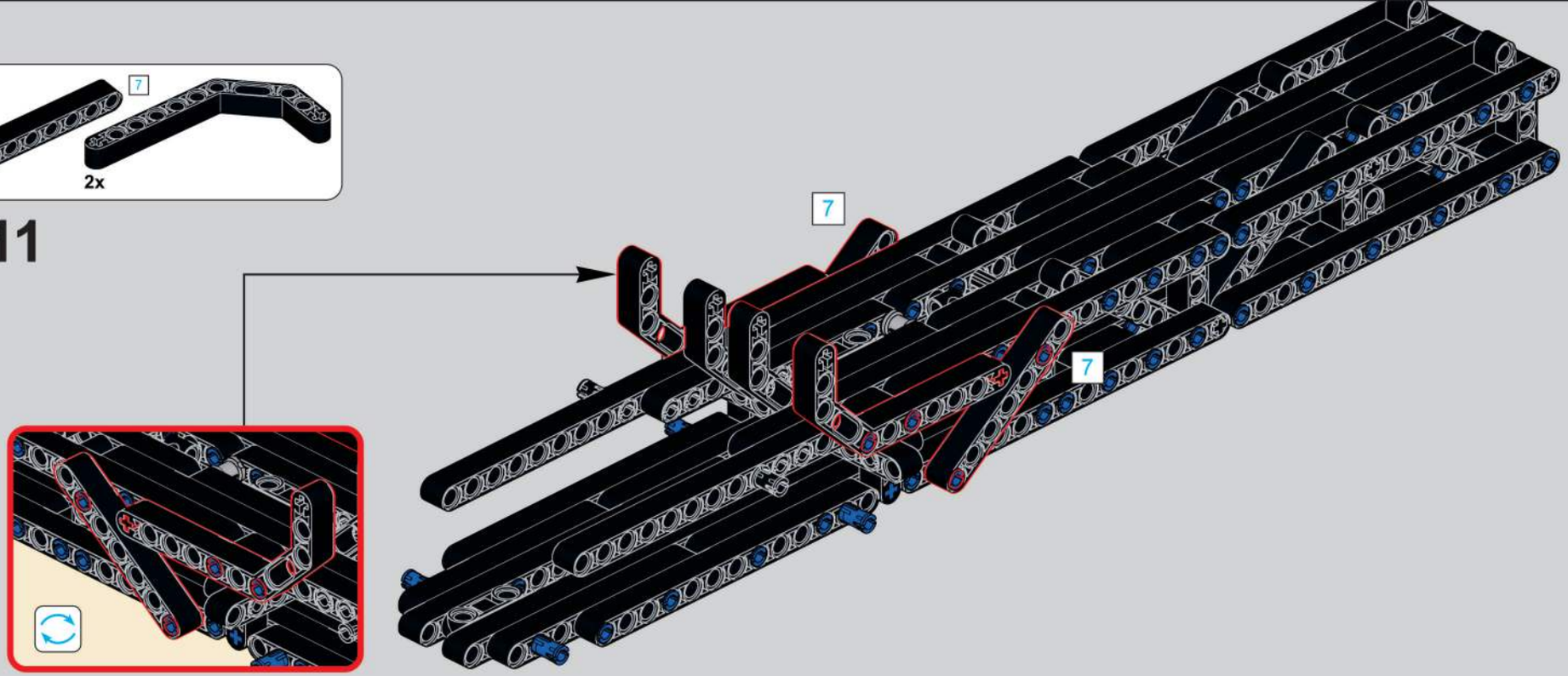

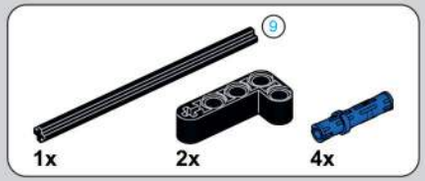

312

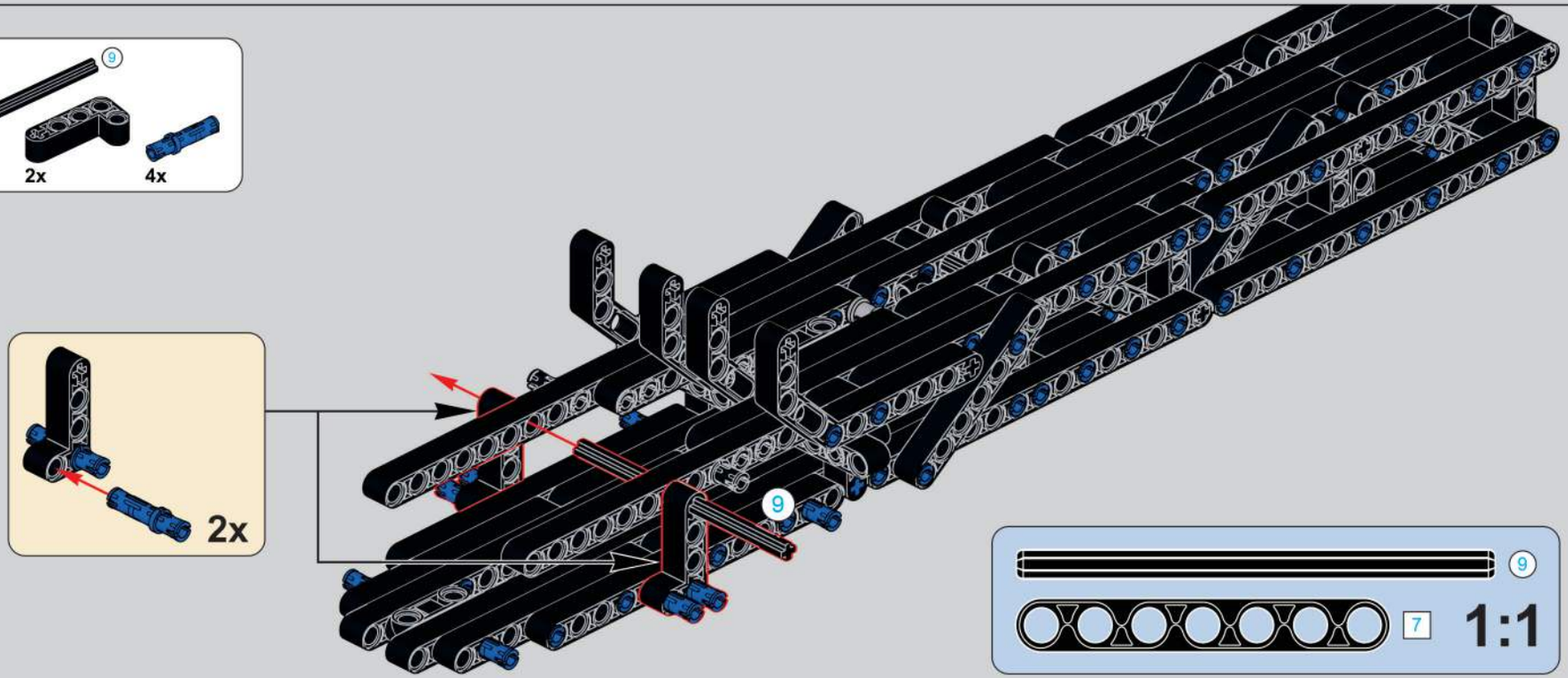

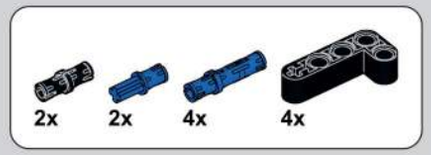

313

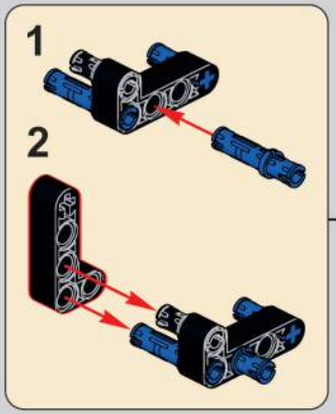

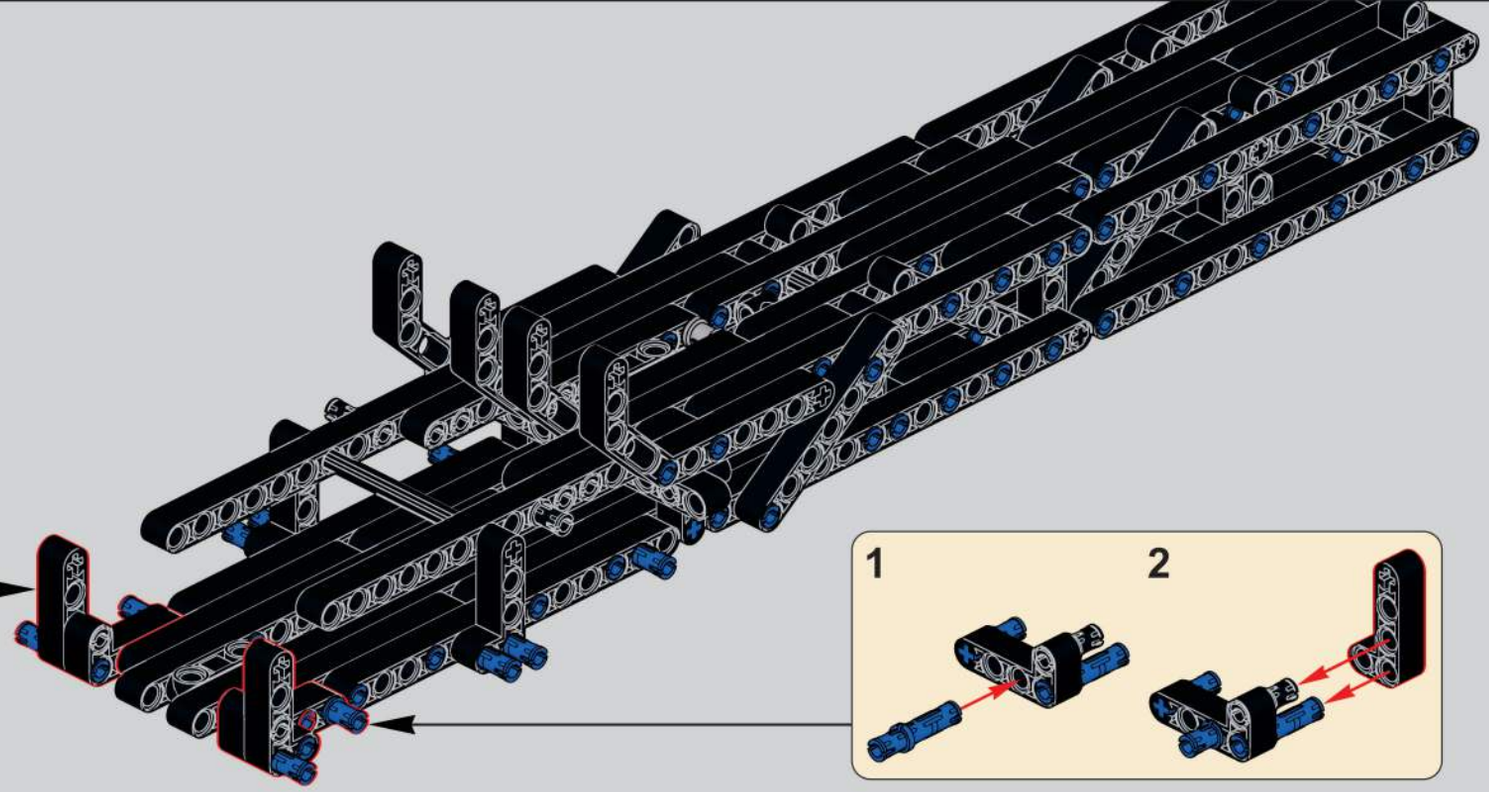

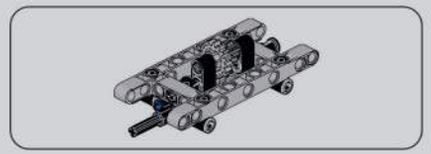

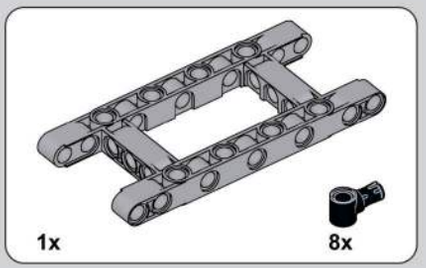

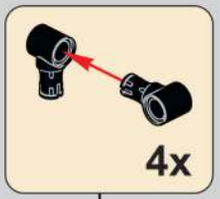

314

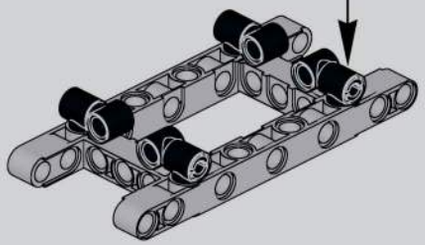

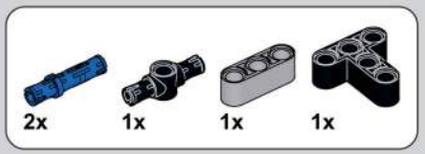

315

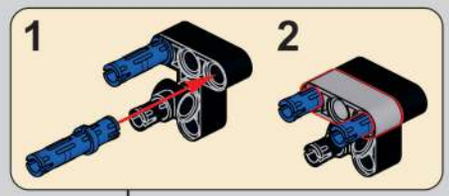

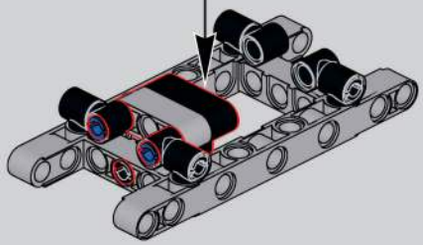

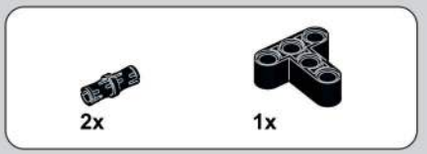

316

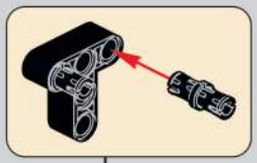

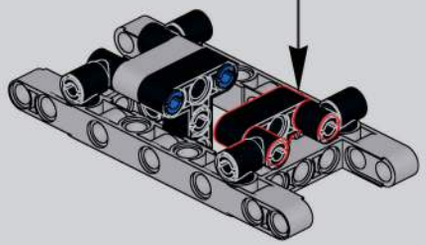

317

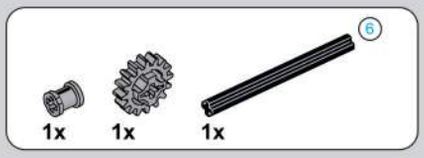

318

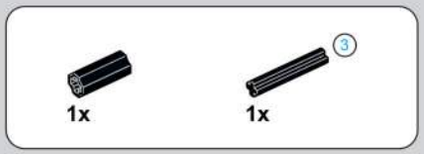

319

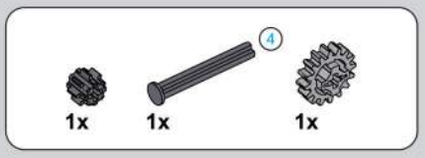

320

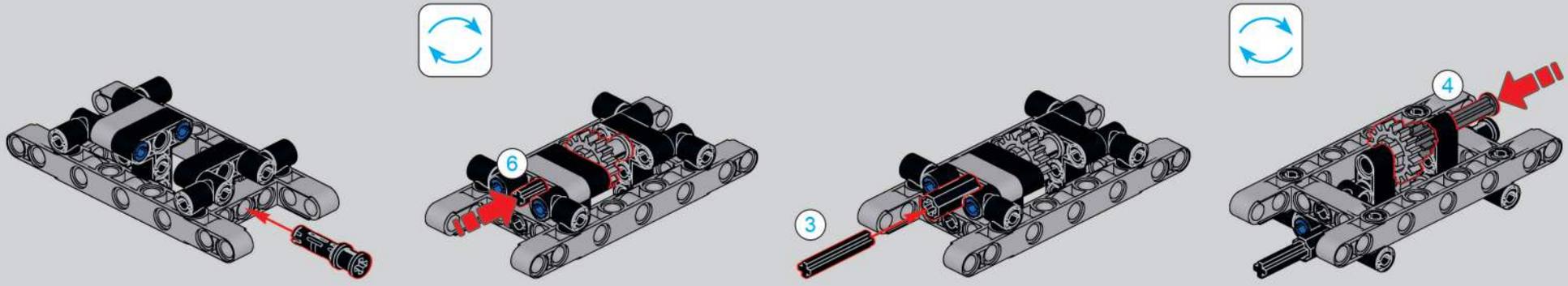

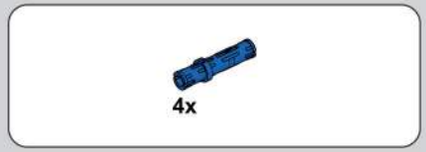

321

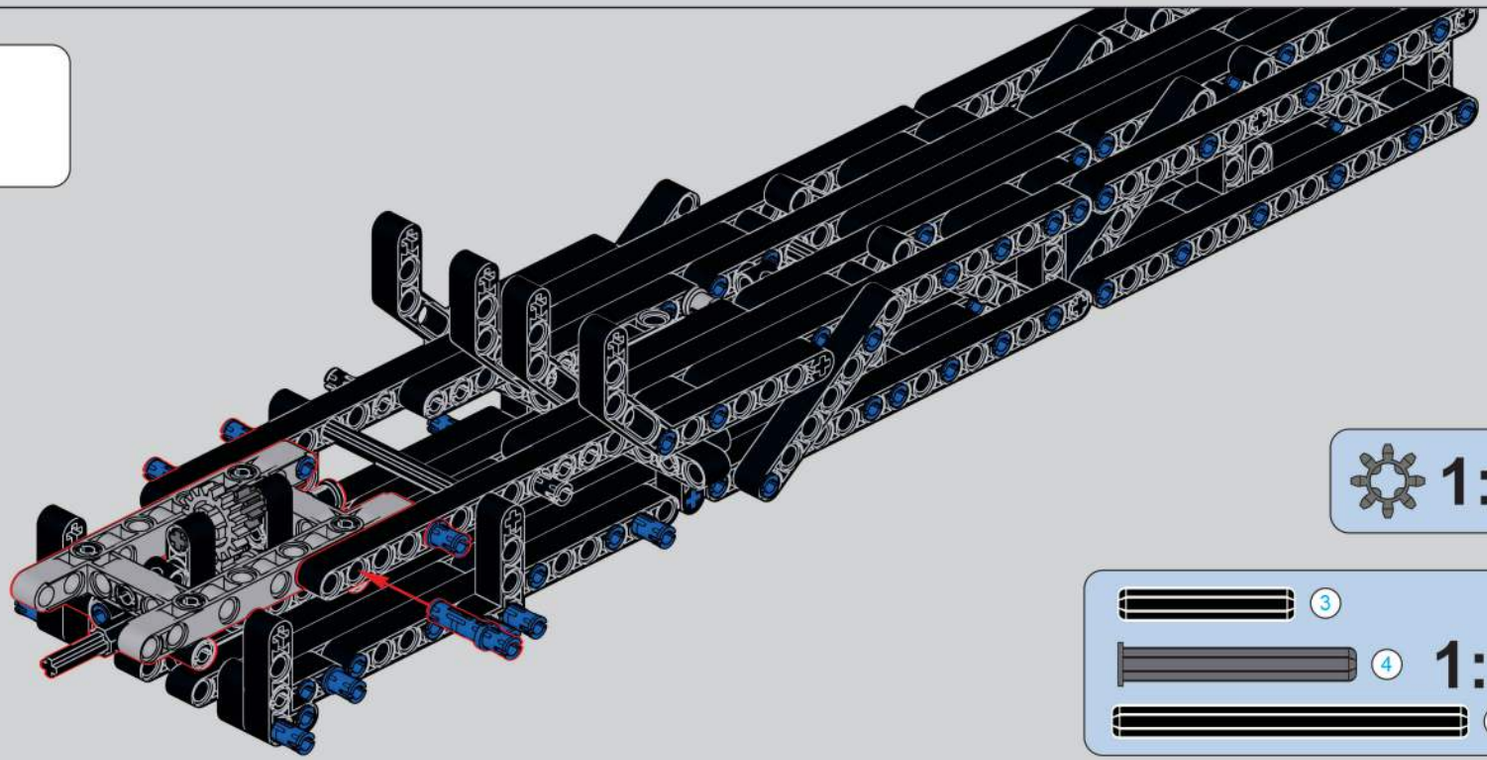

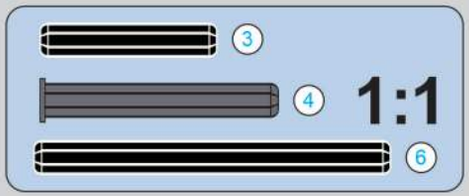

322

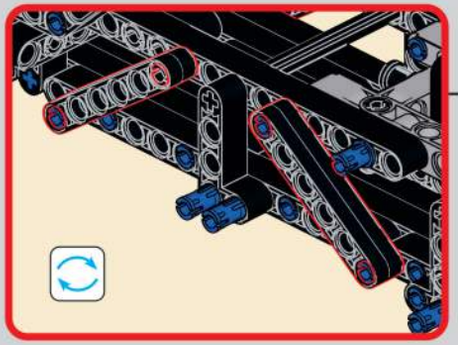

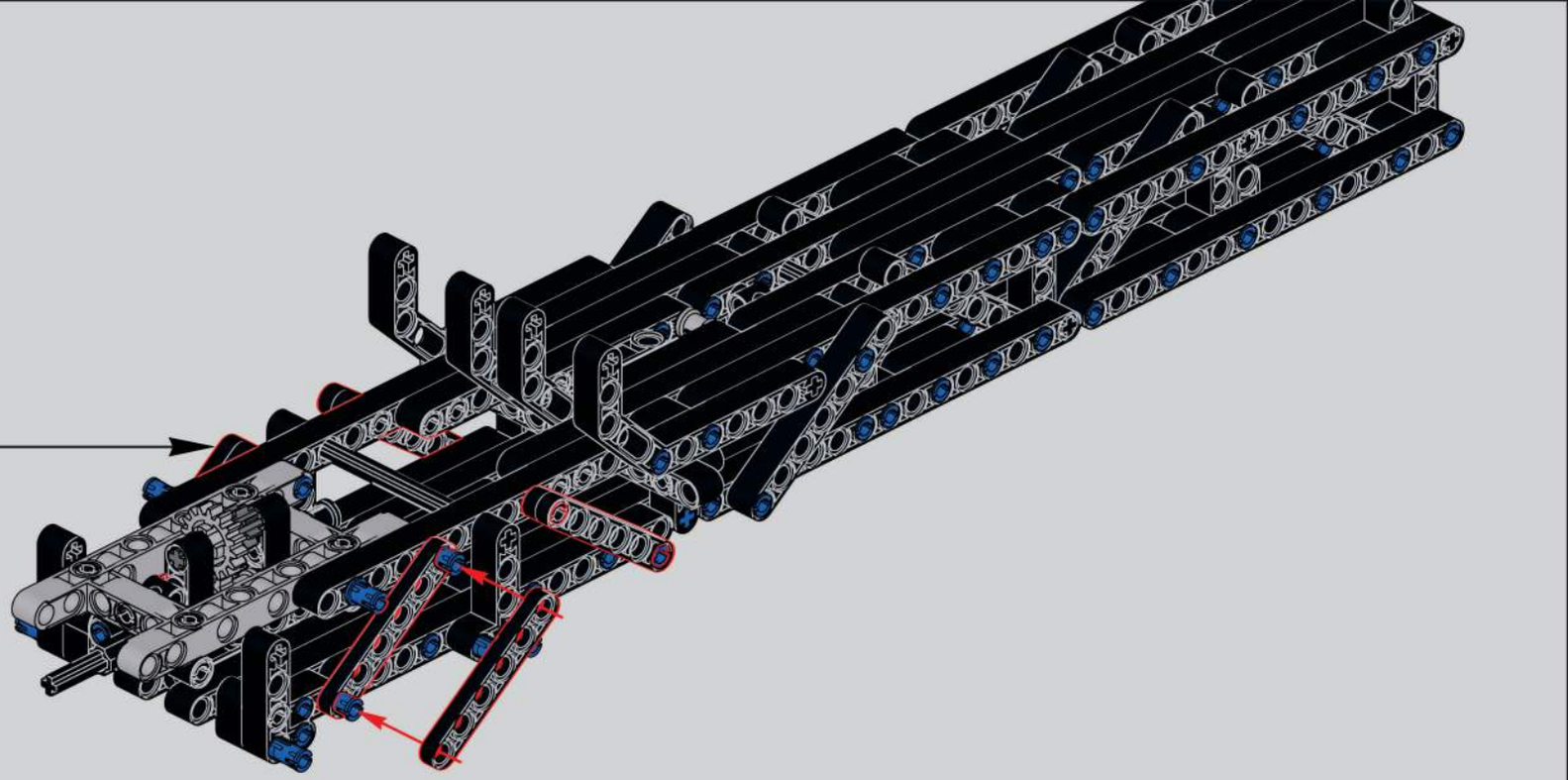

323

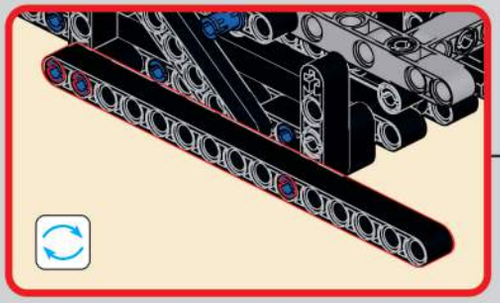

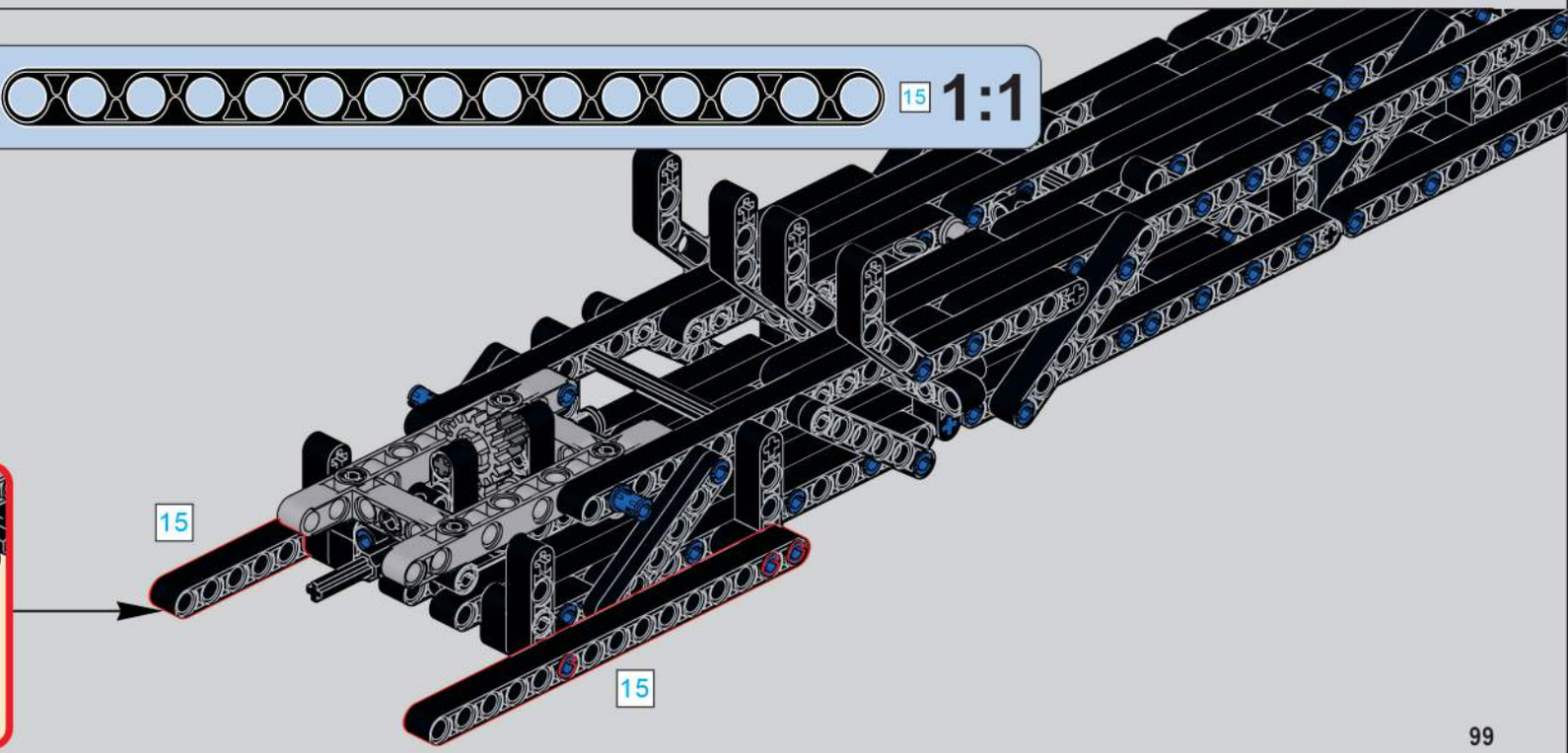

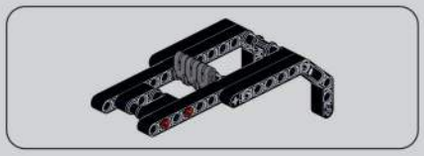

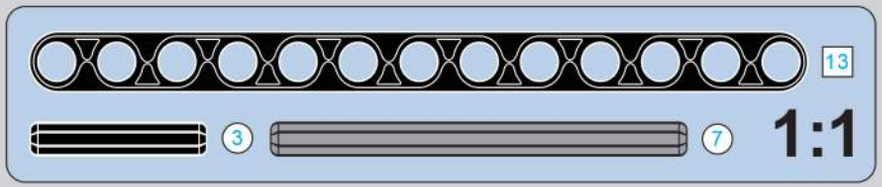

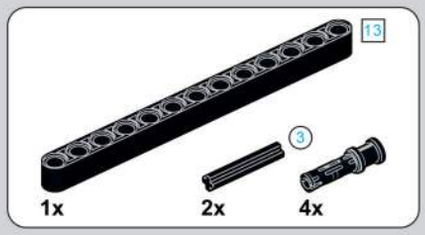

324

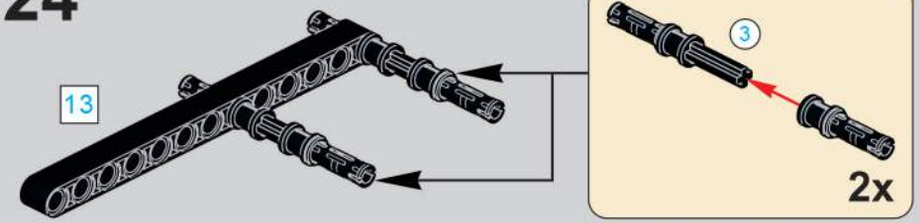

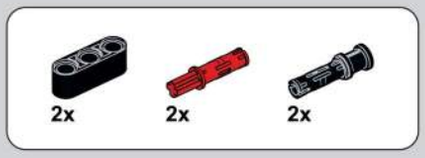

325

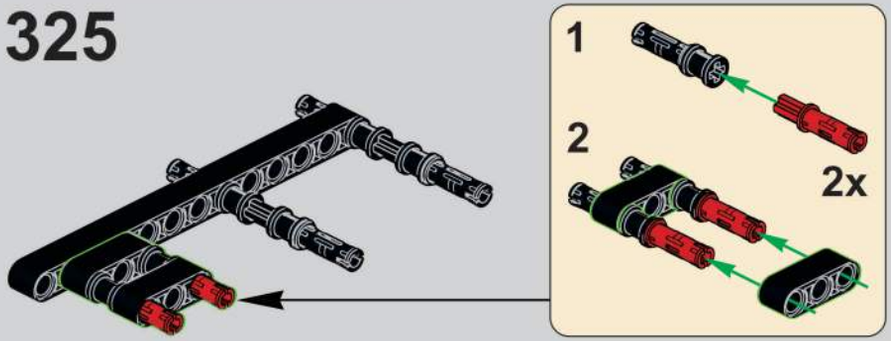

326

327

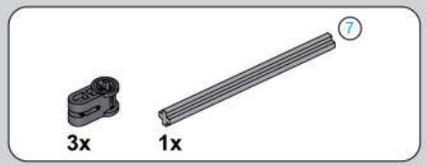

328

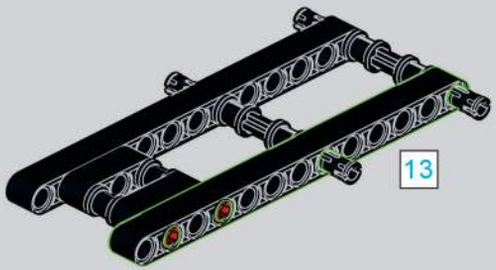

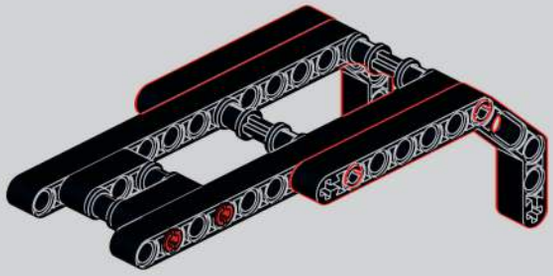

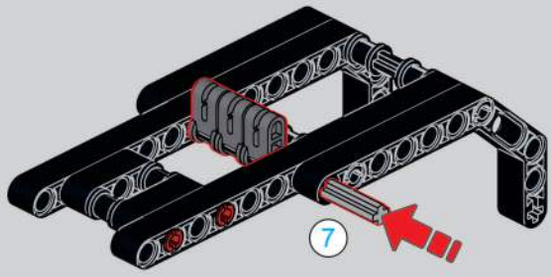

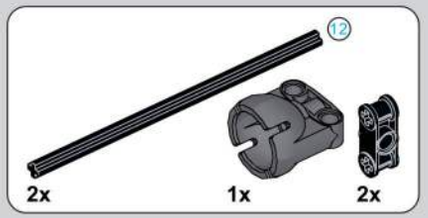

329

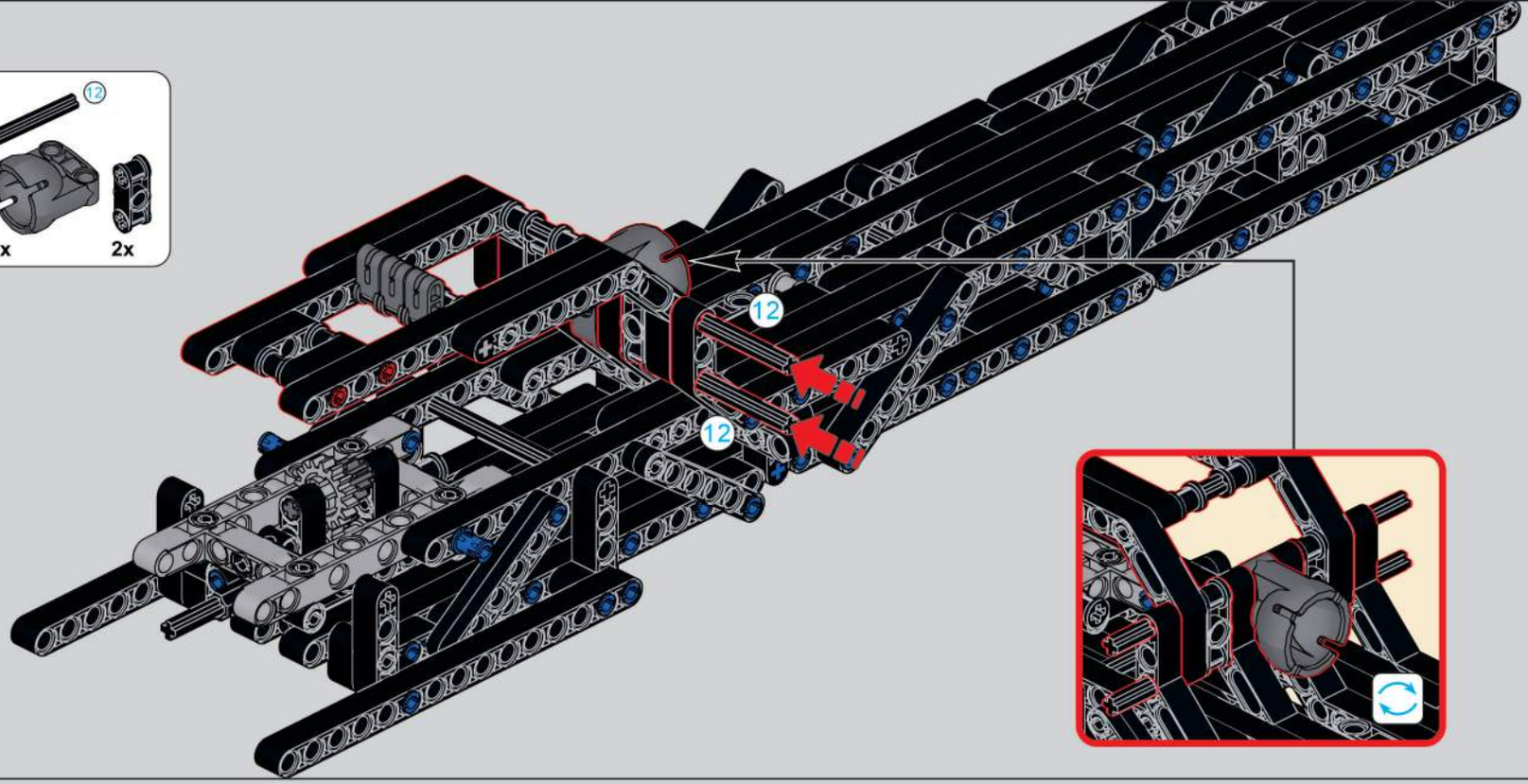

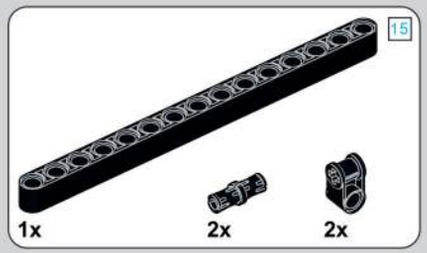

330

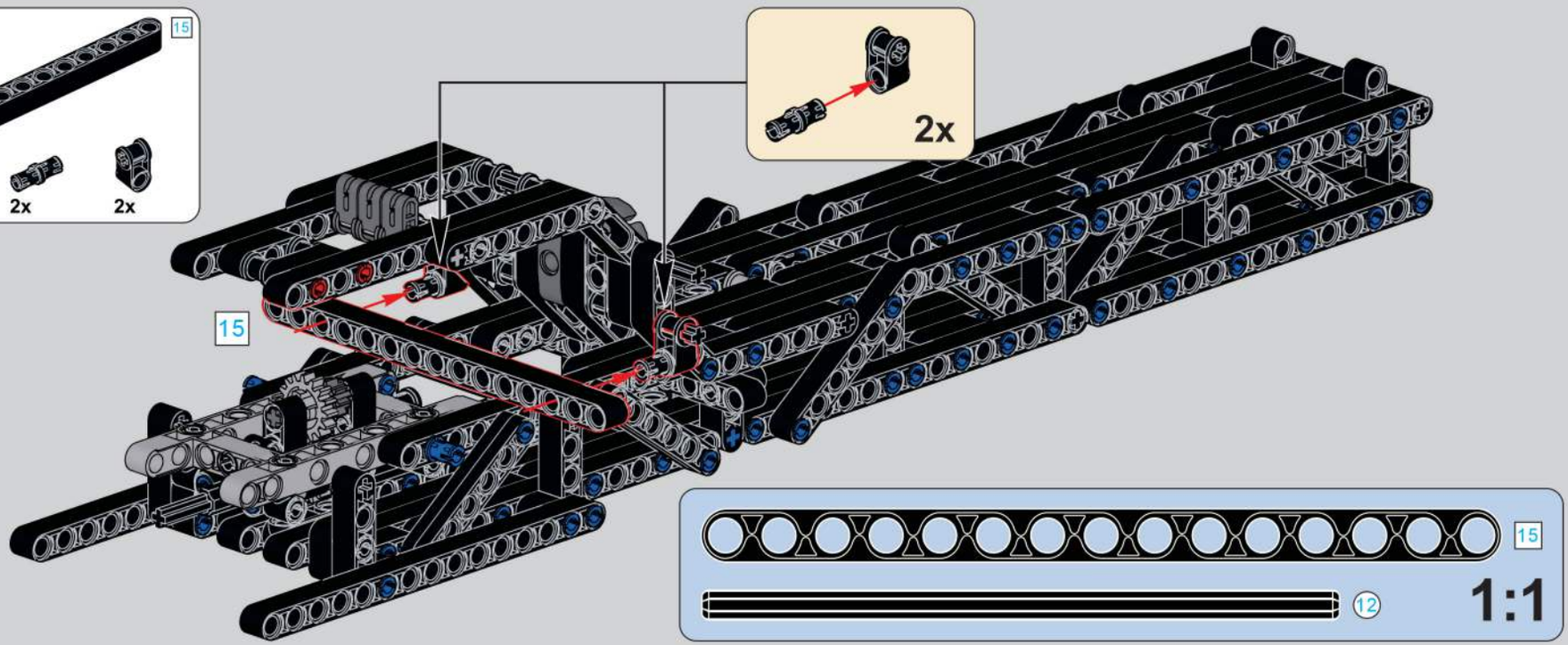

331

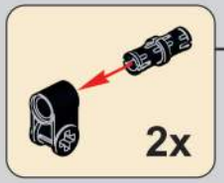

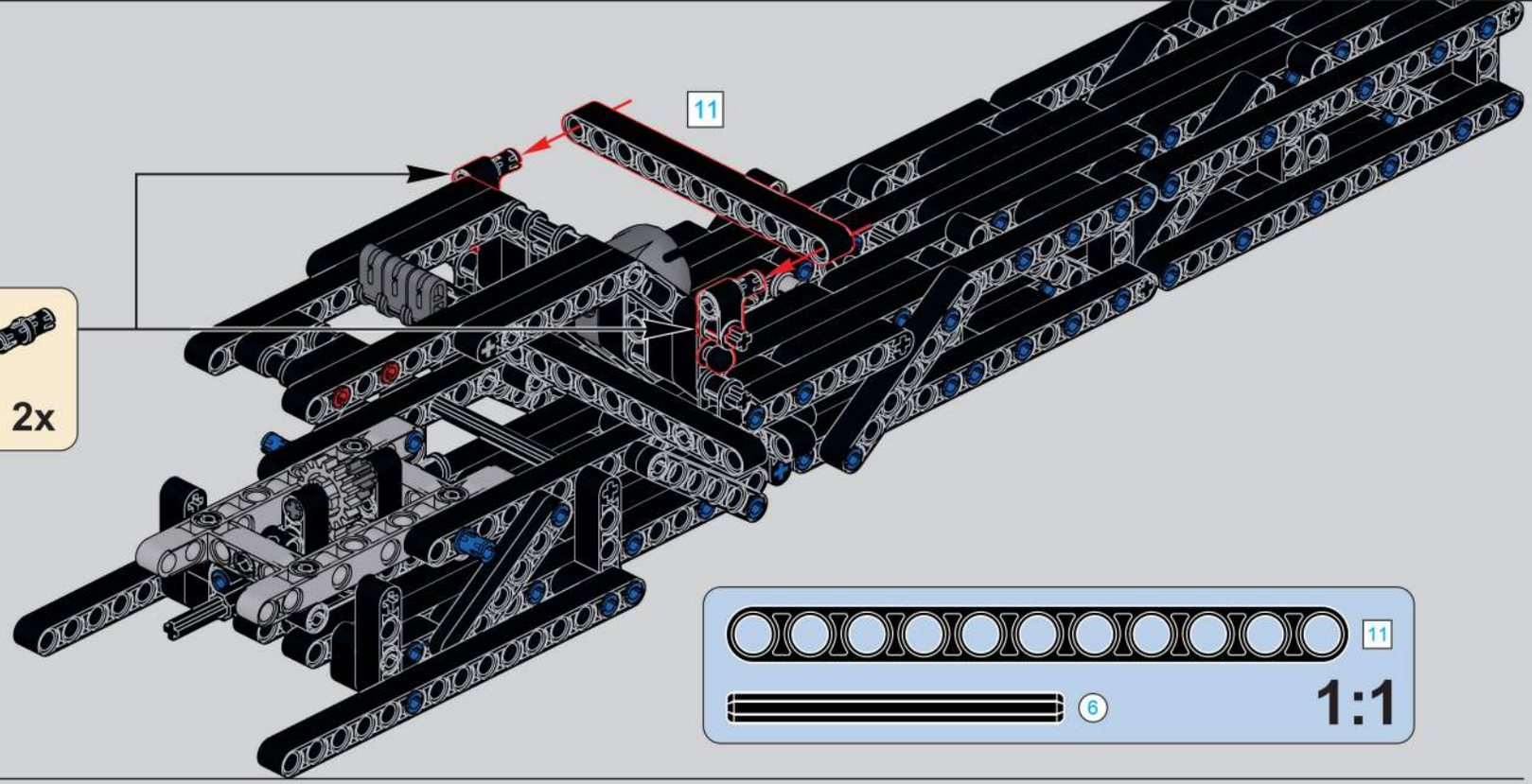

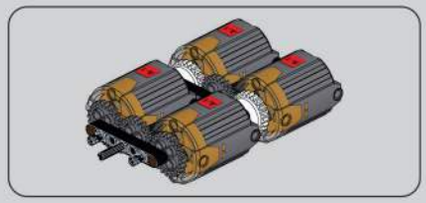

333

334

335

332

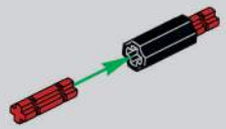

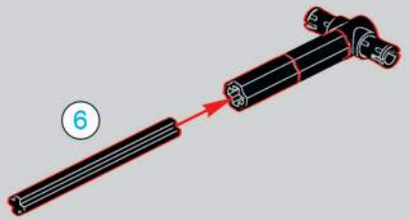

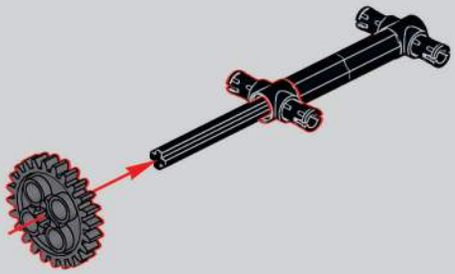

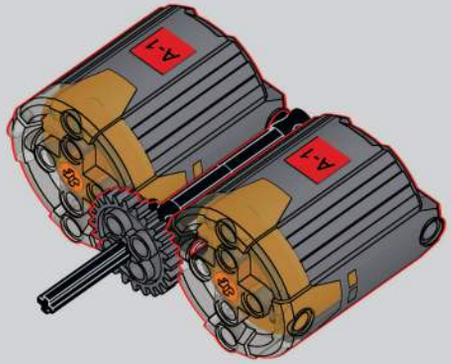

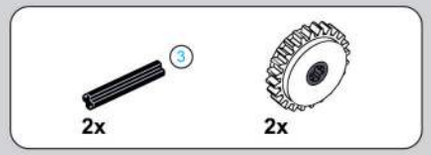

336

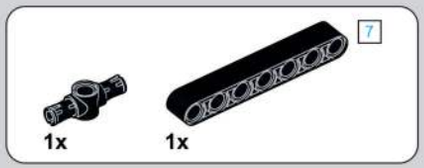

337

338

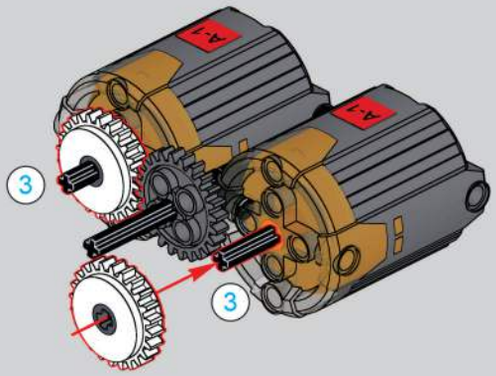

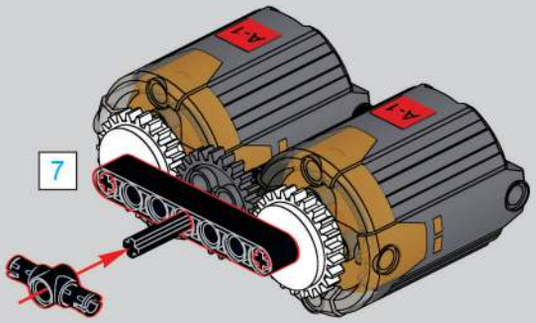

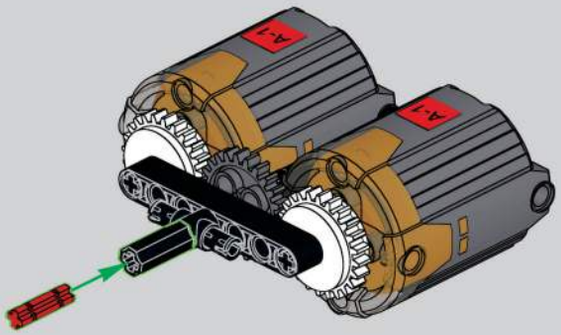

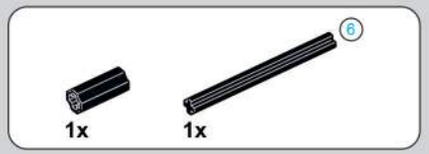

339

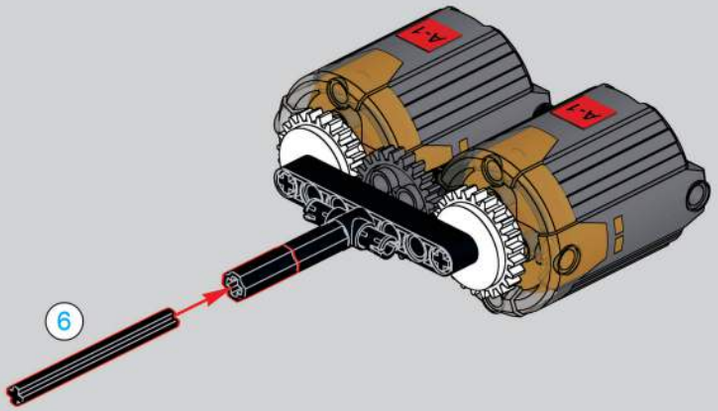

340

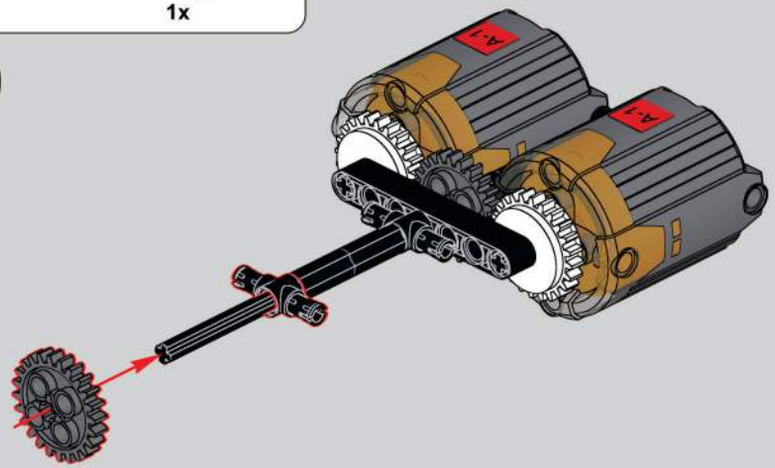

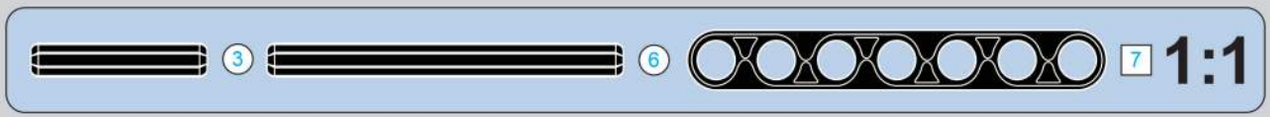

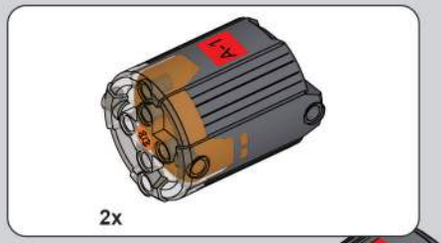

341

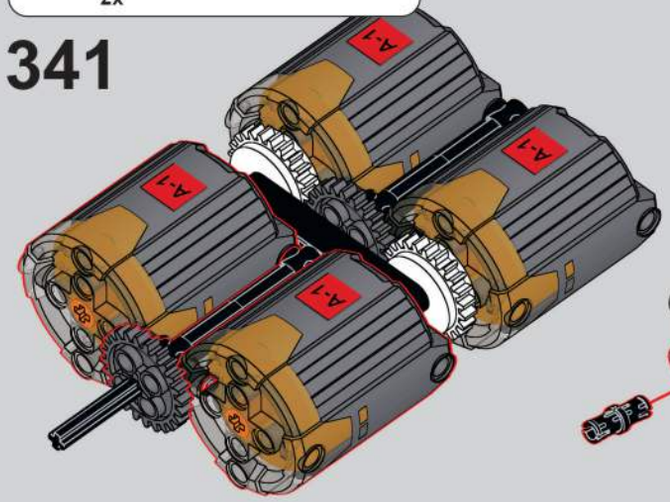

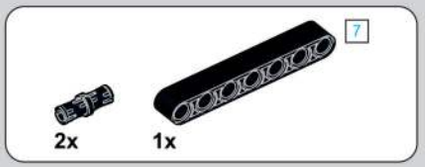

342

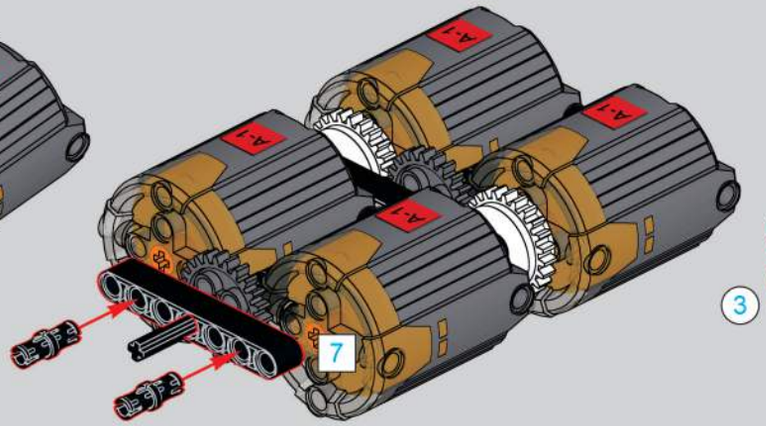

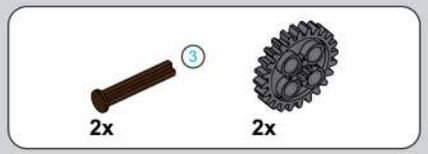

343

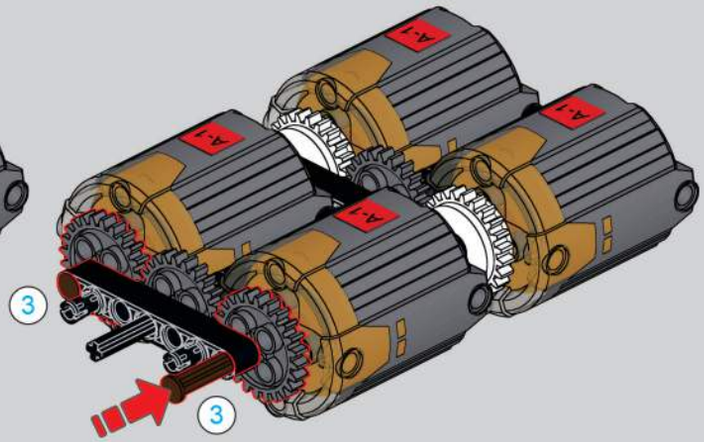

344

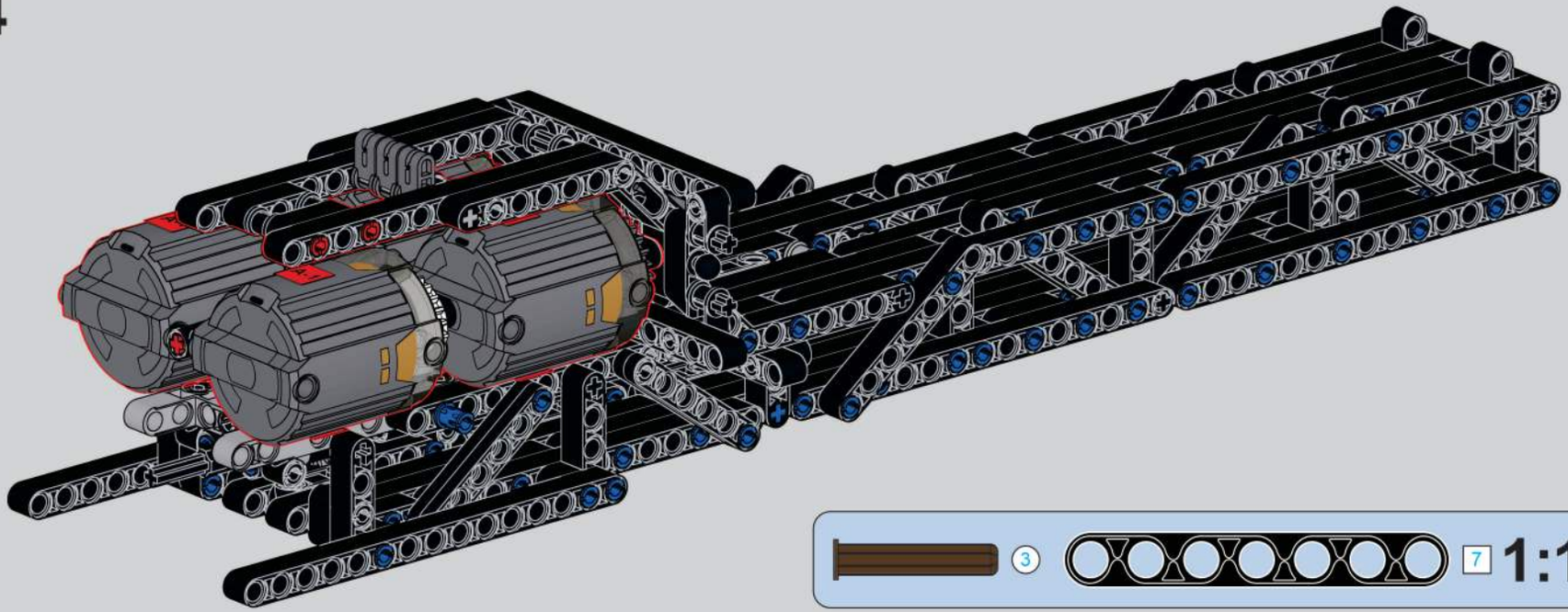

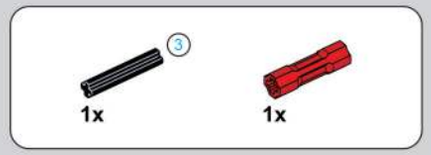

345

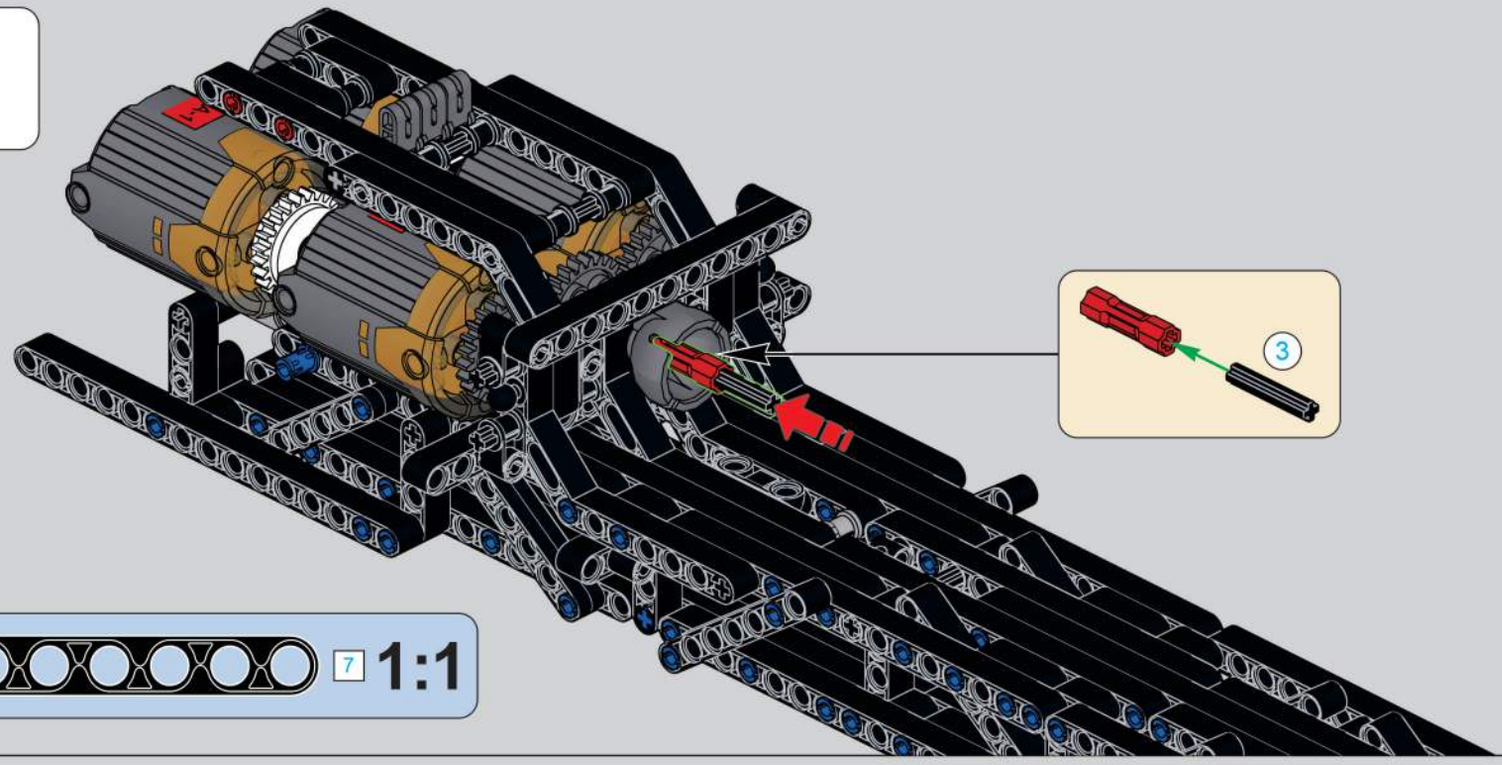

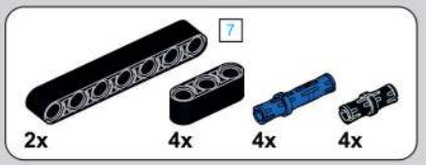

346

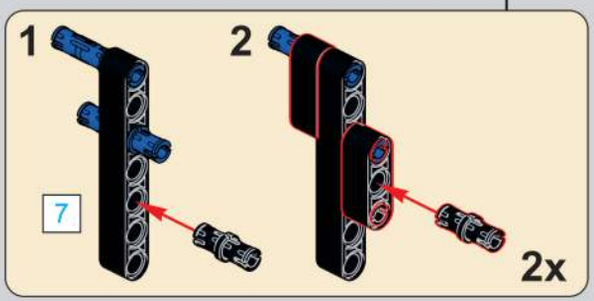

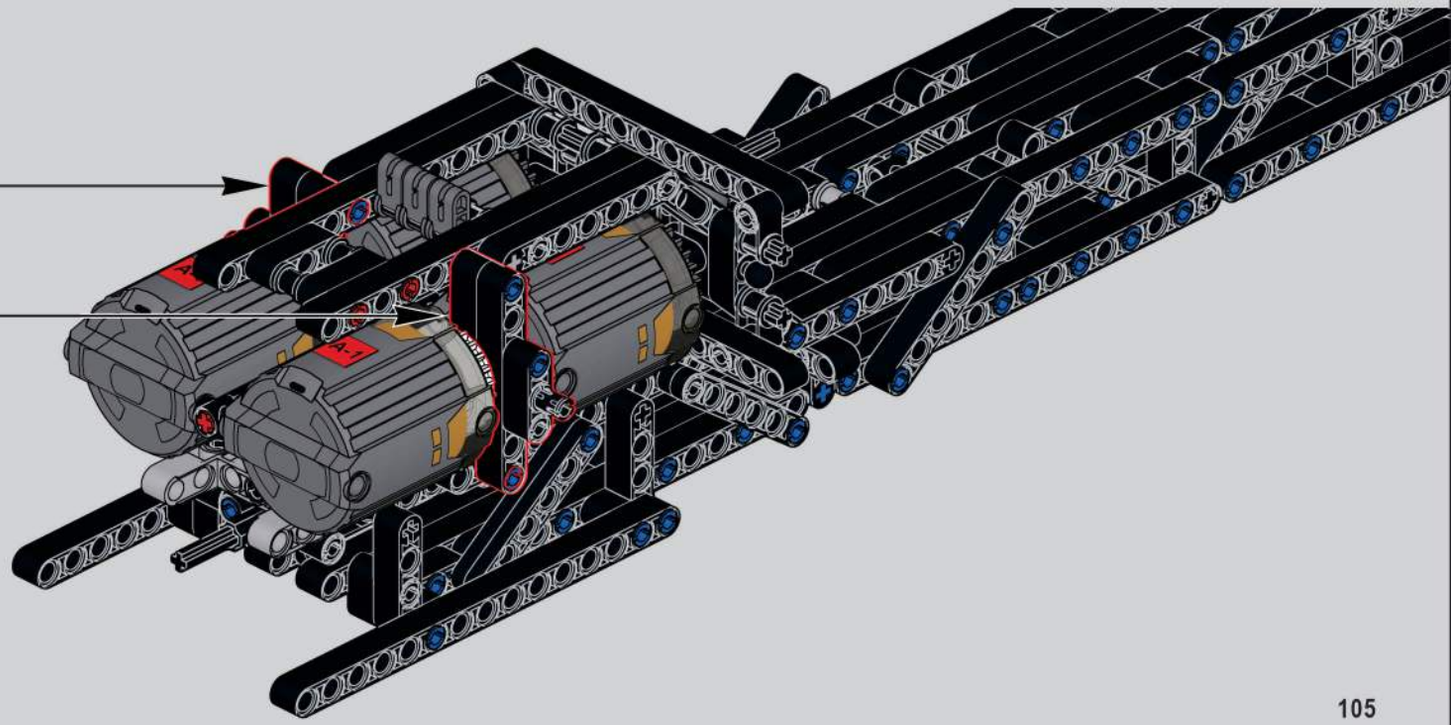

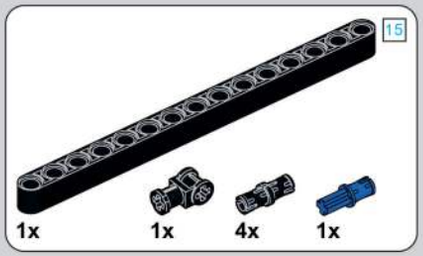

347

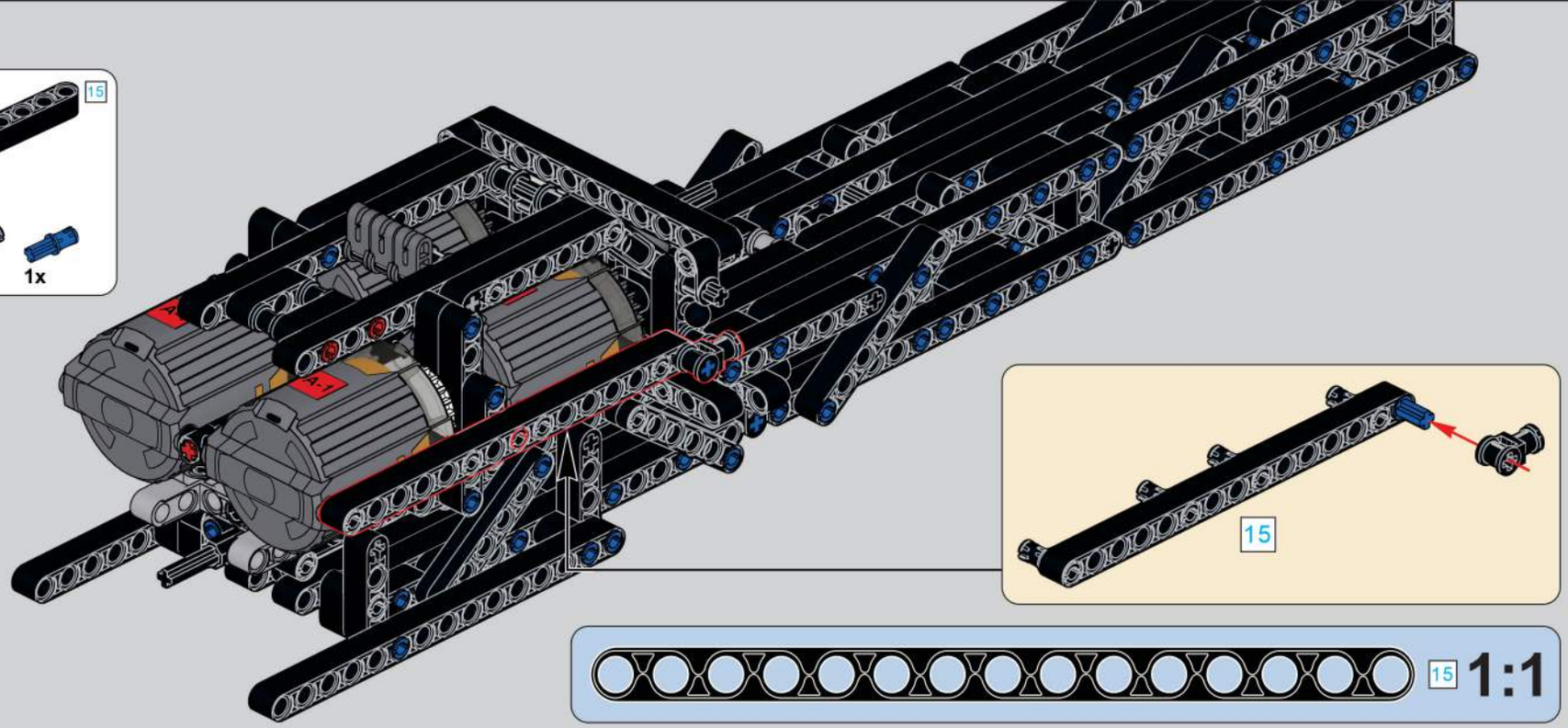

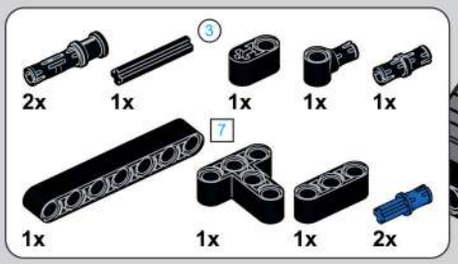

348

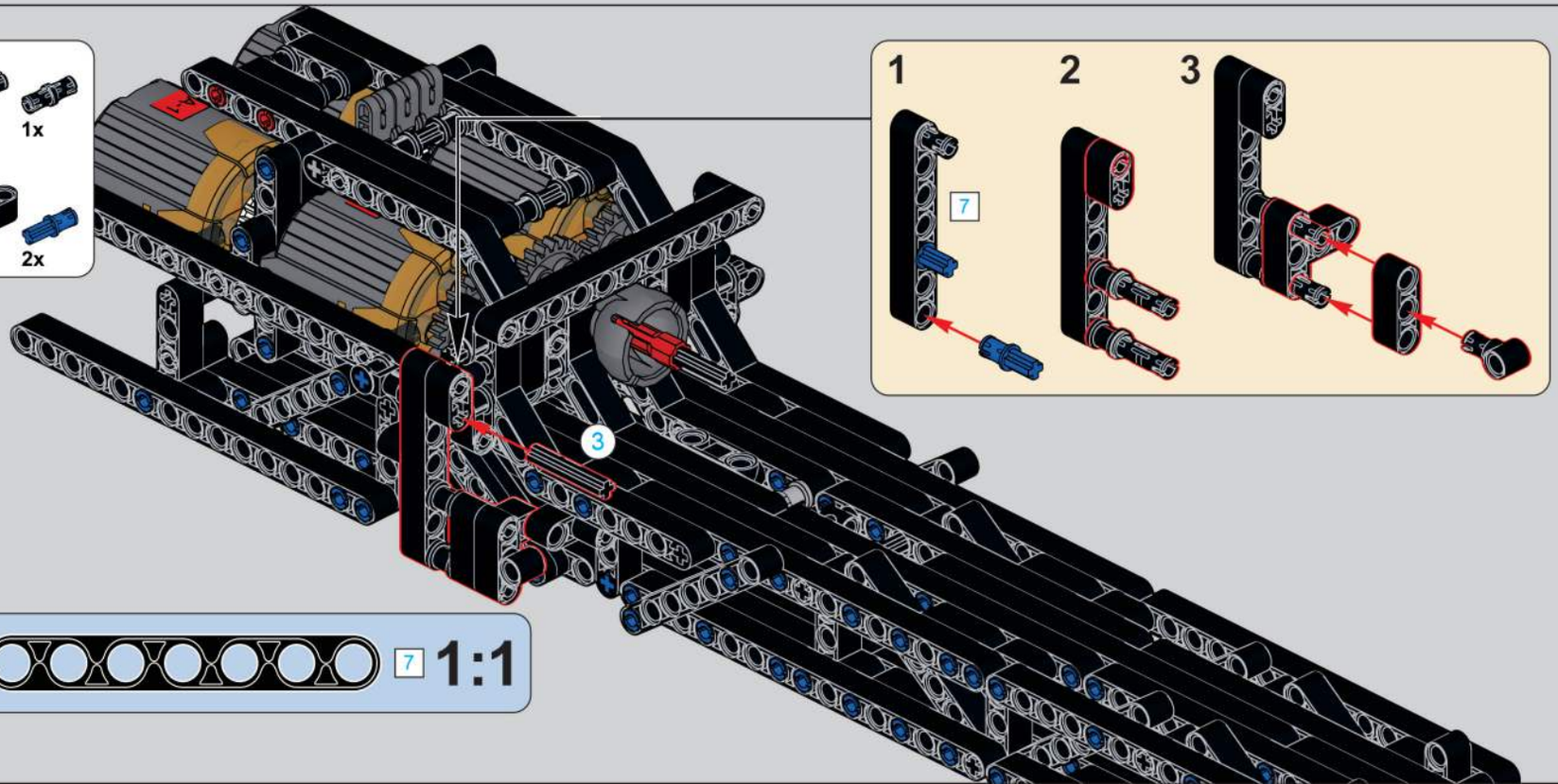

349

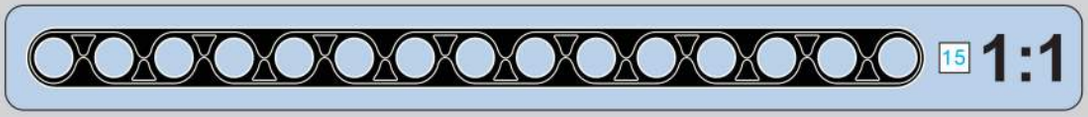

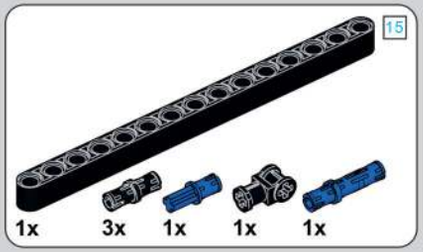

350

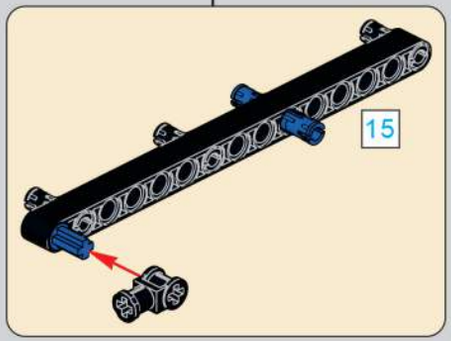

351

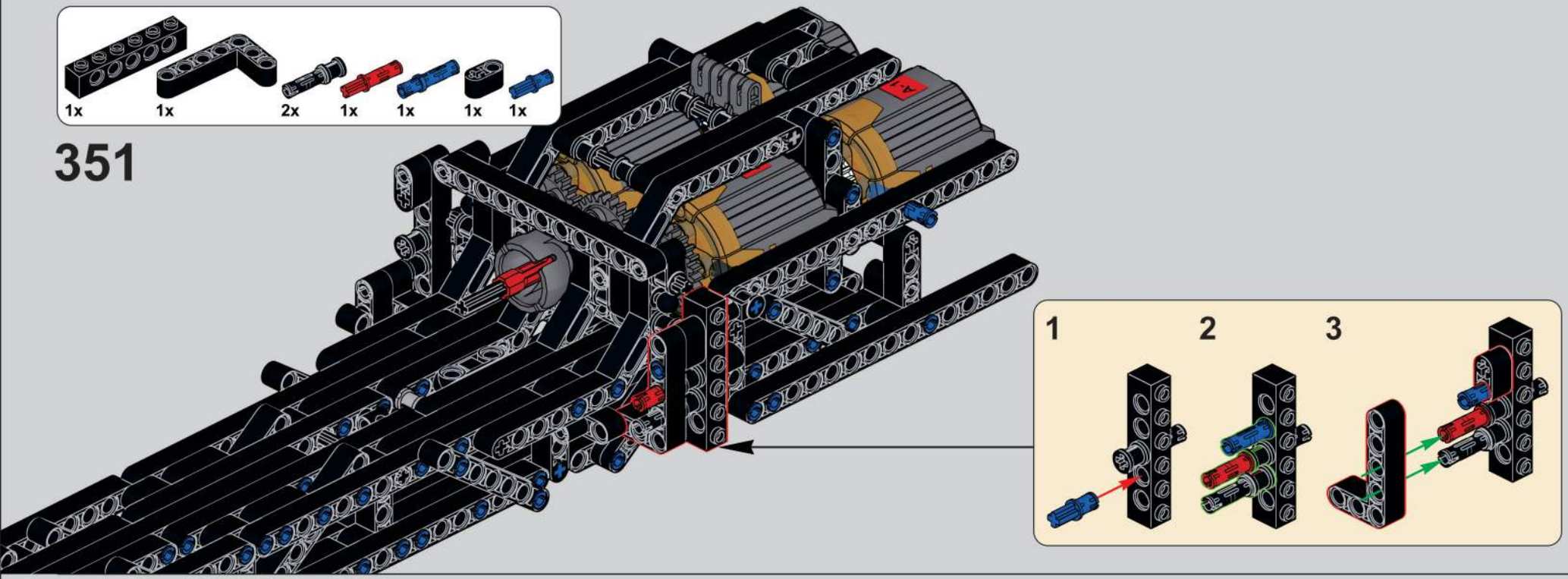

352

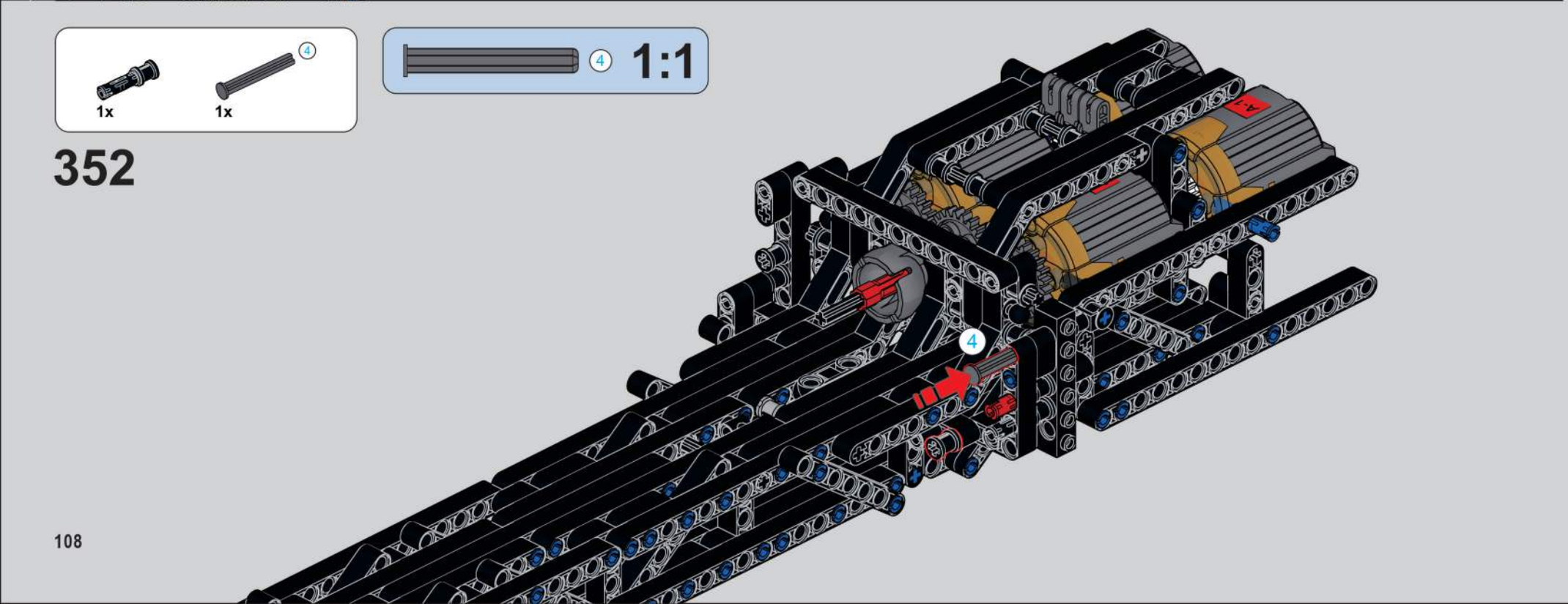

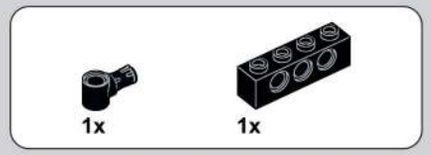

353

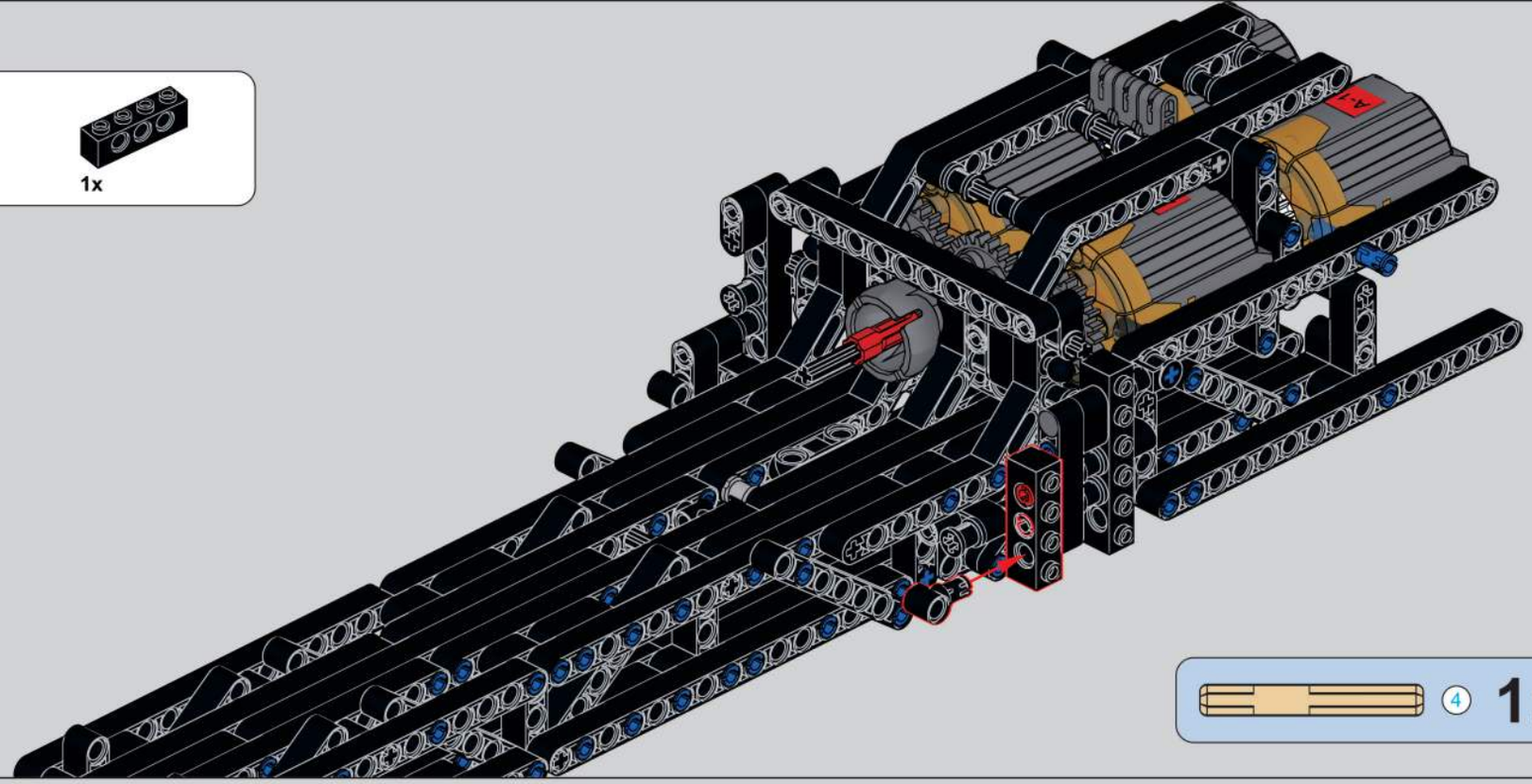

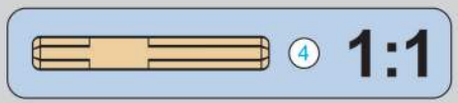

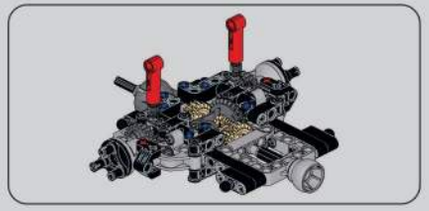

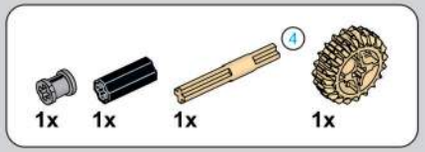

355

356

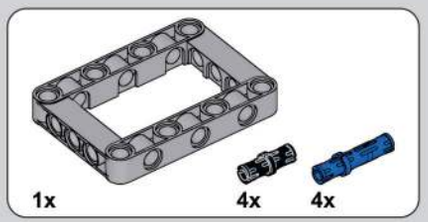

354

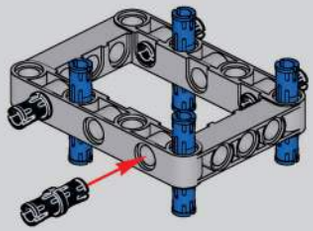

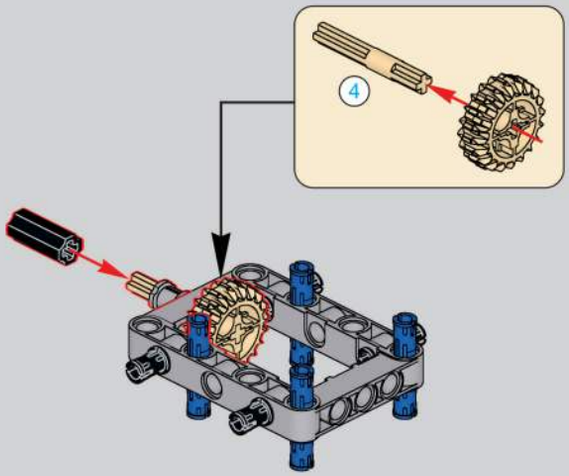

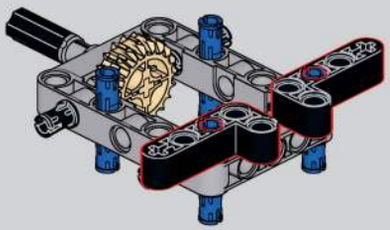

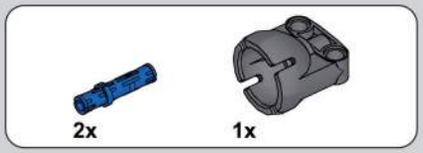

357

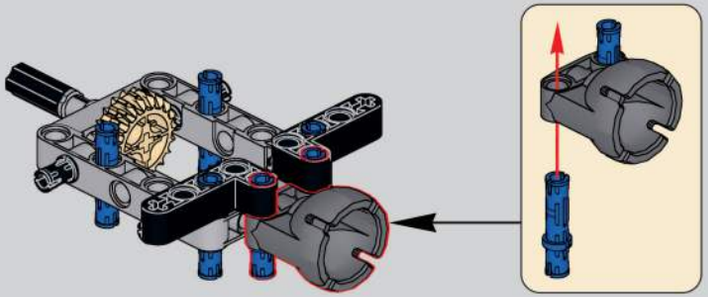

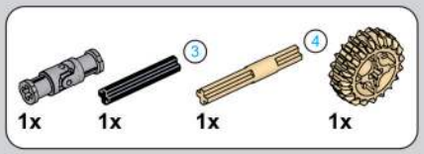

358

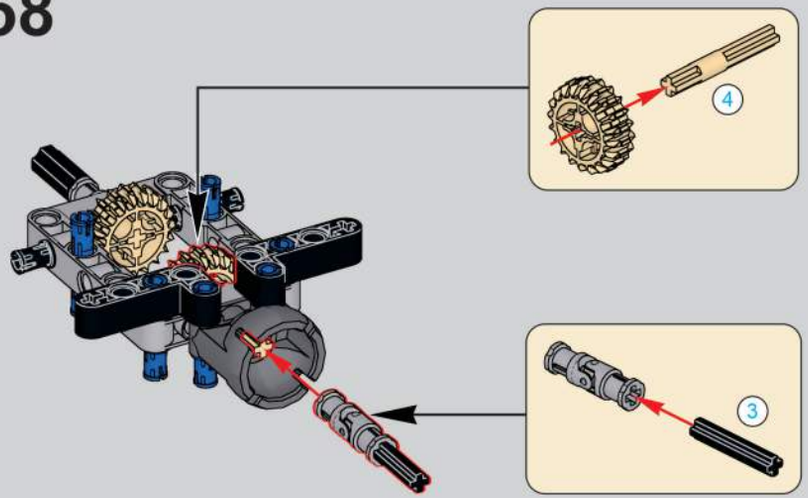

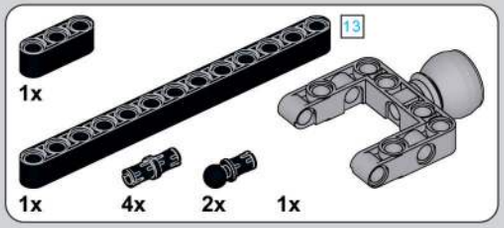

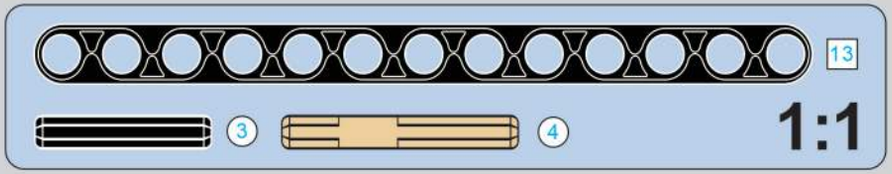

359

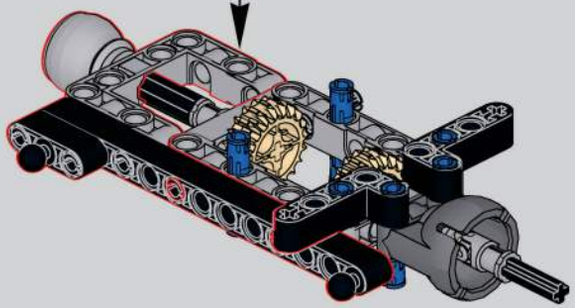

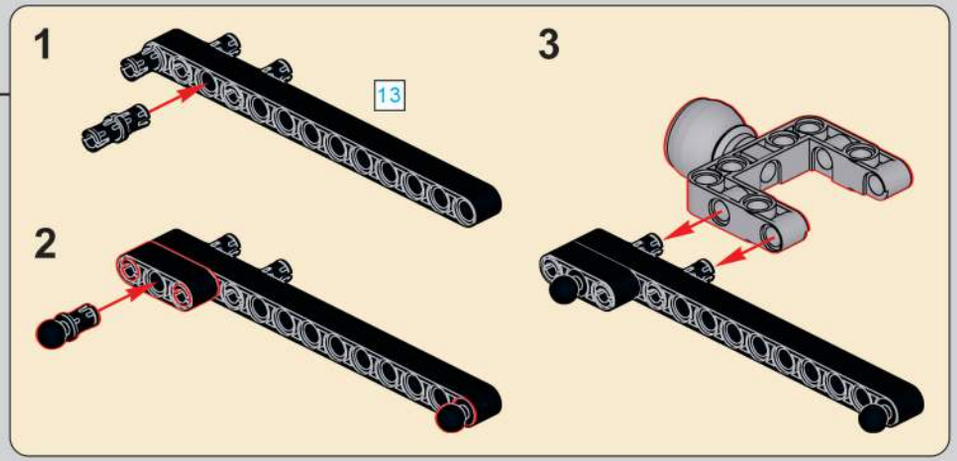

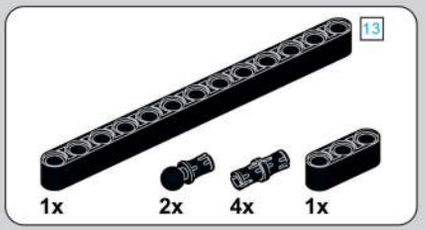

360

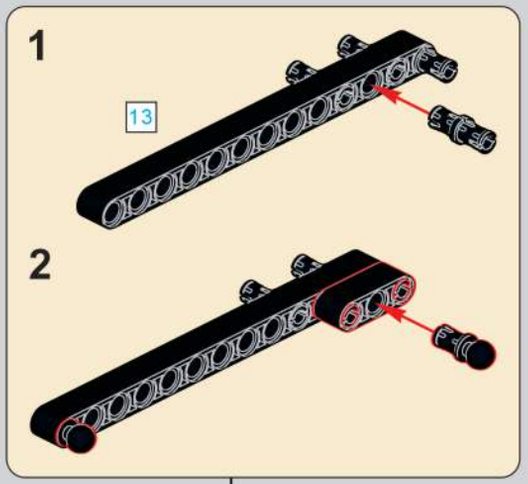

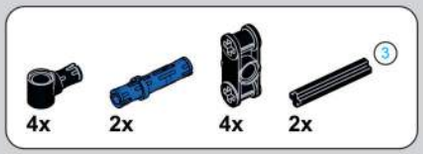

361

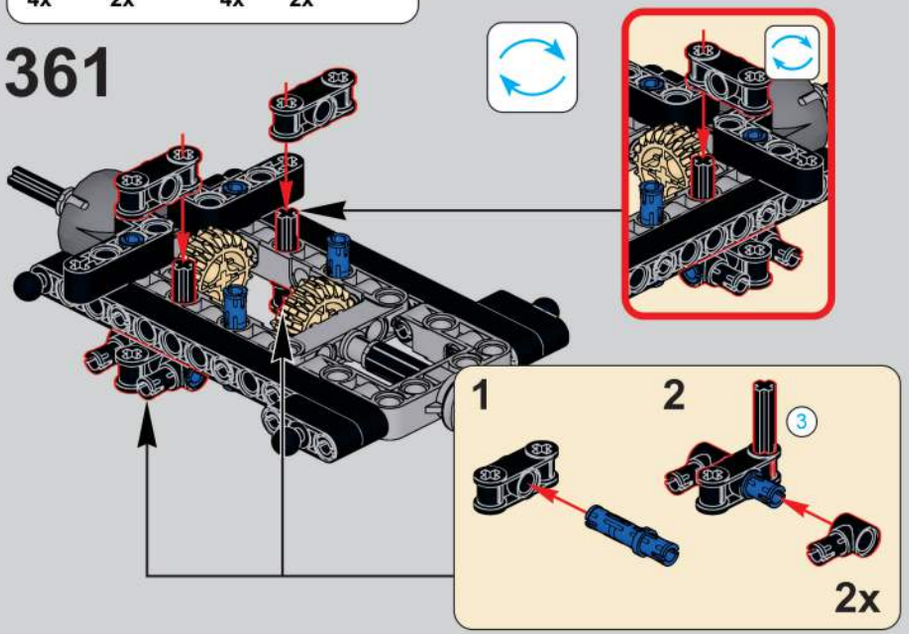

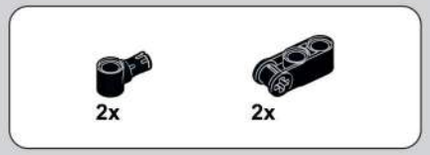

362

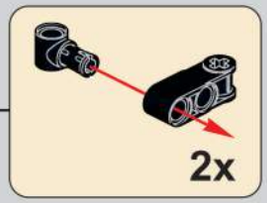

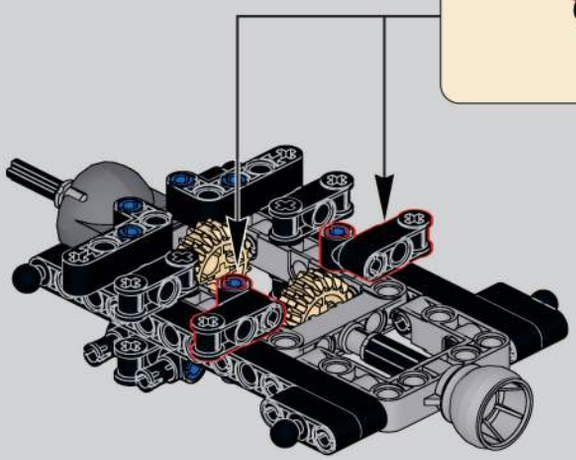

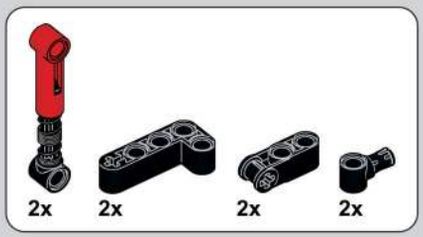

363

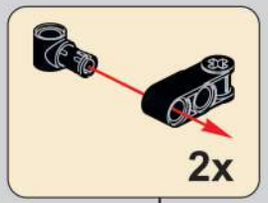

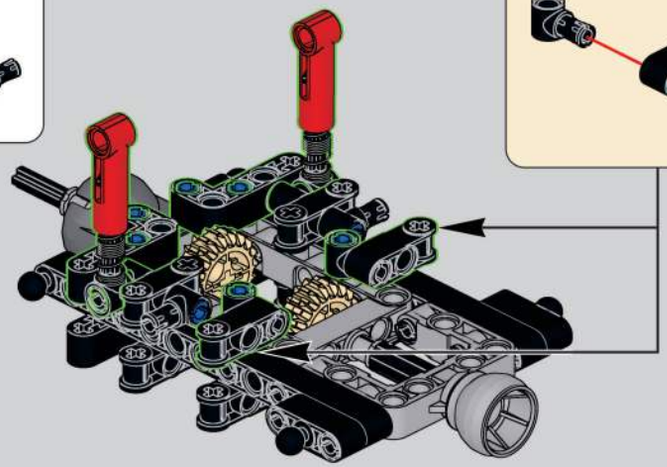

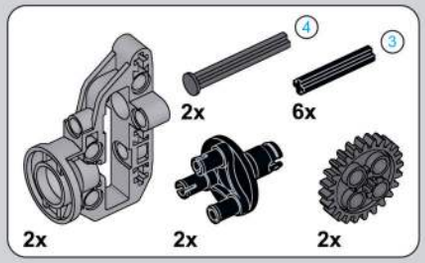

364

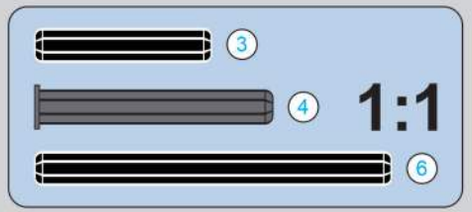

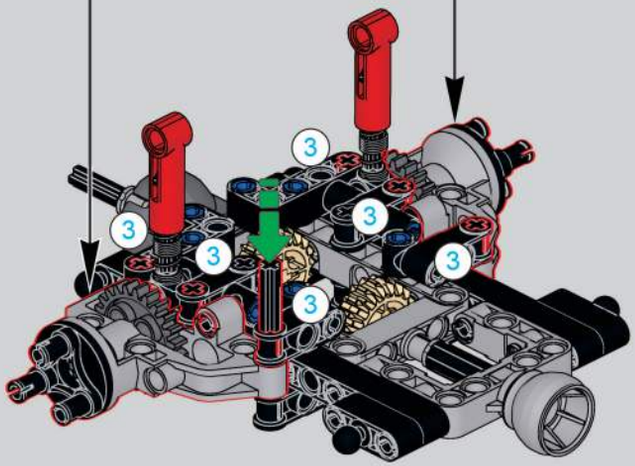

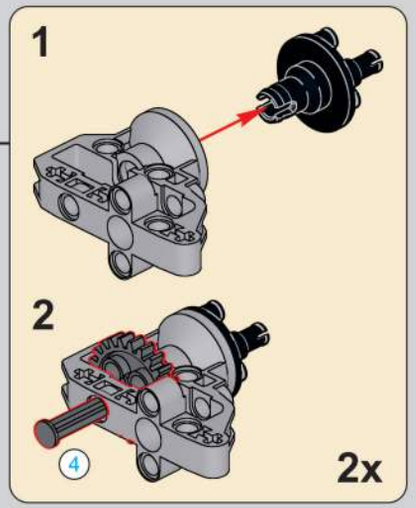

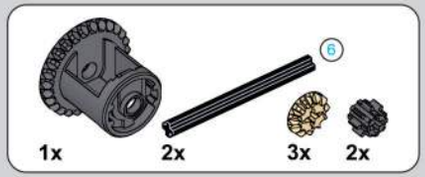

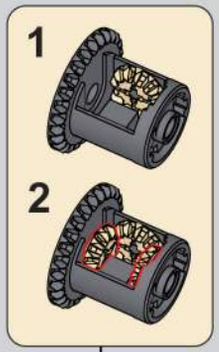

365

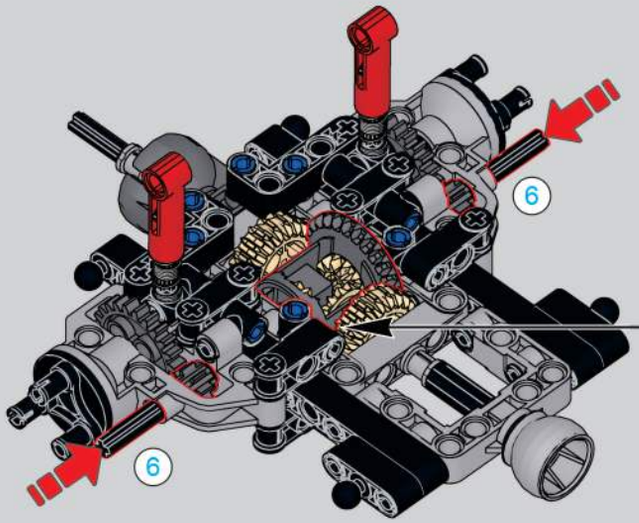

366

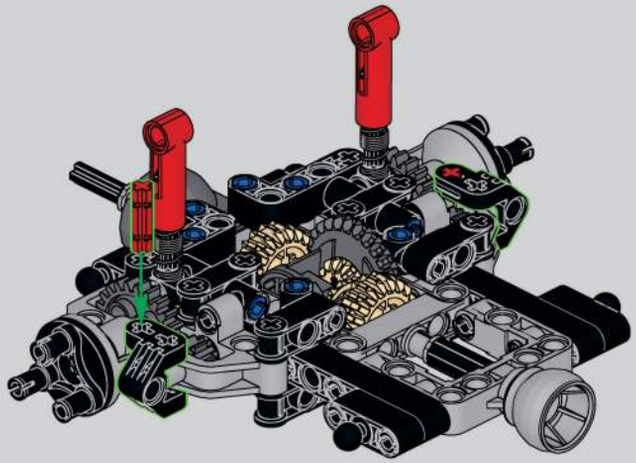

367

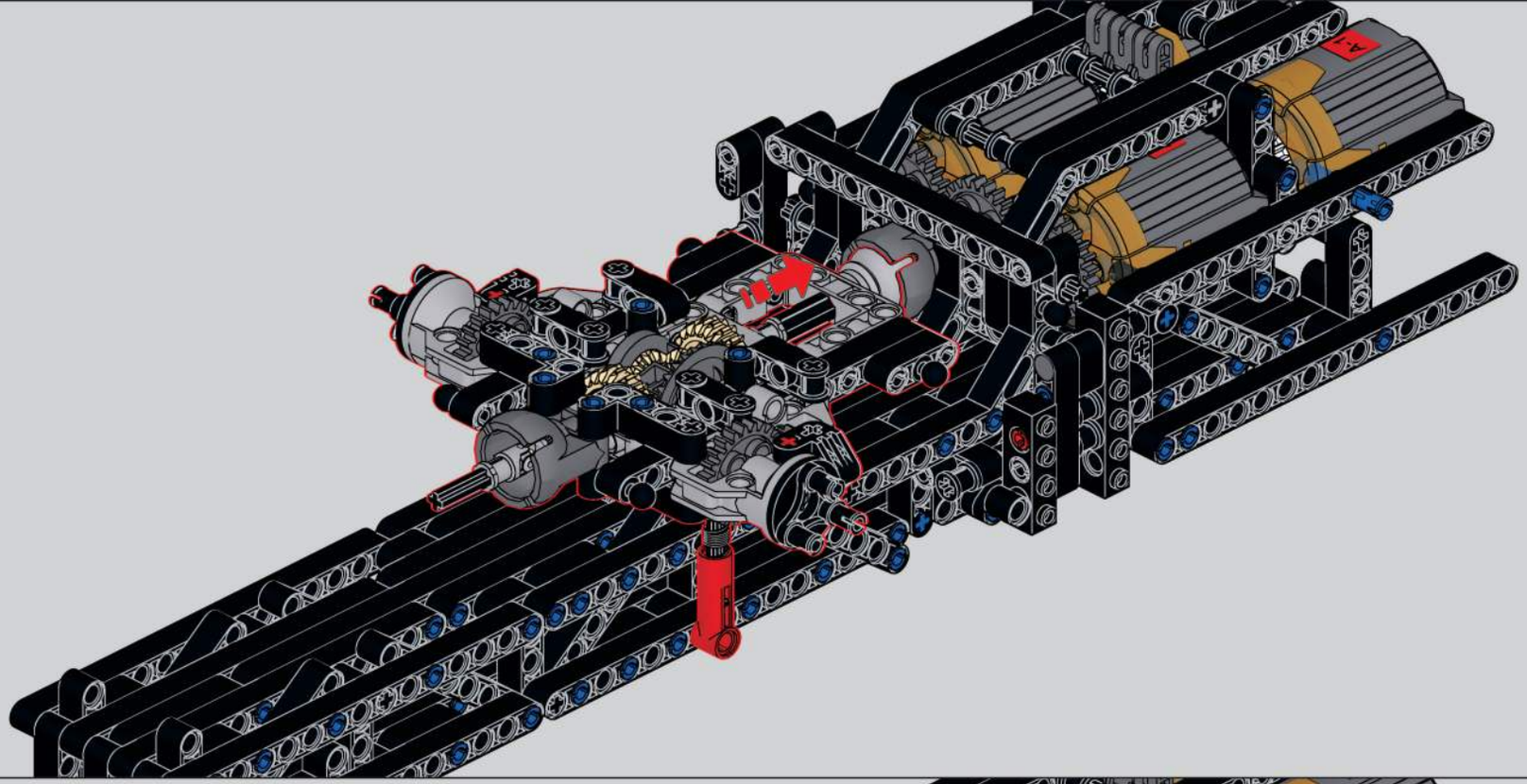

368

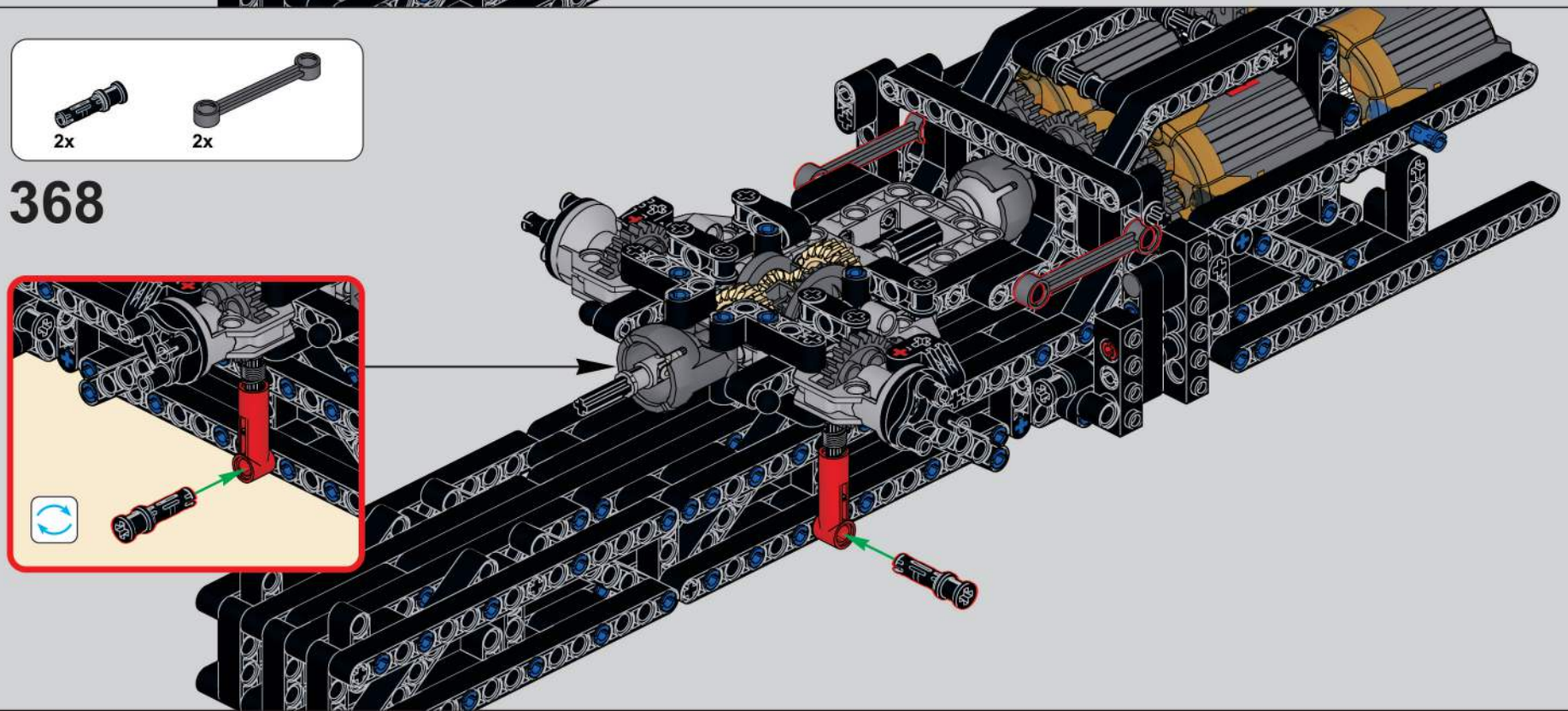

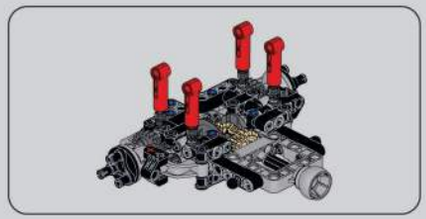

370

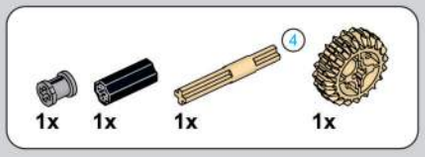

371

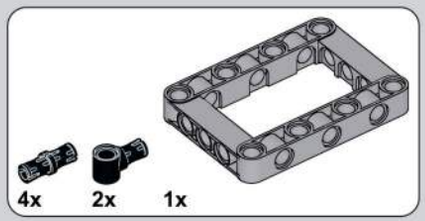

369

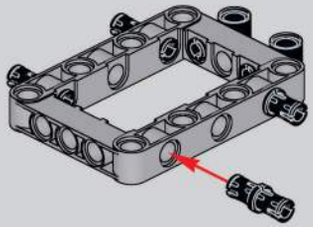

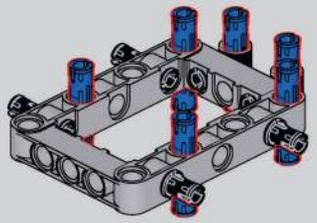

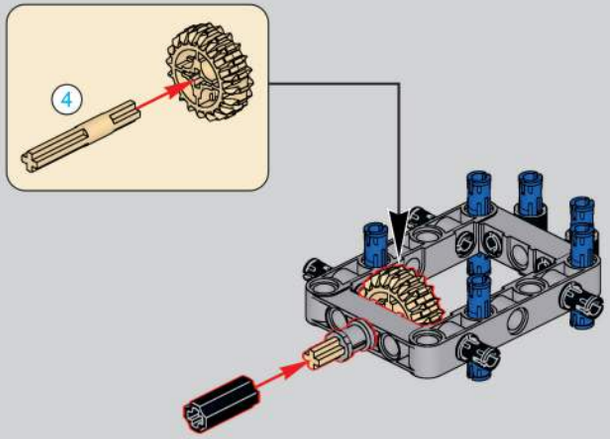

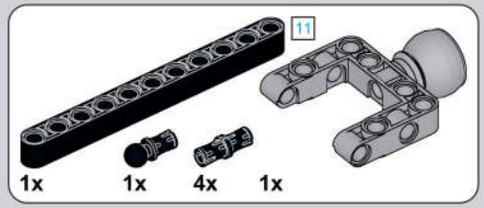

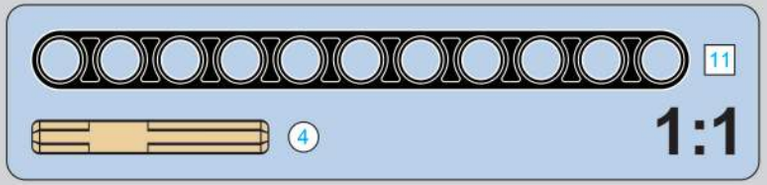

372

373

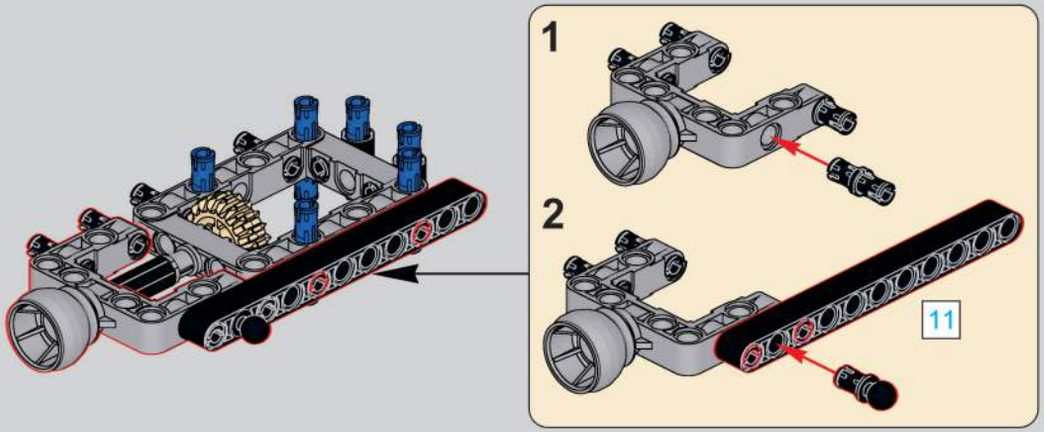

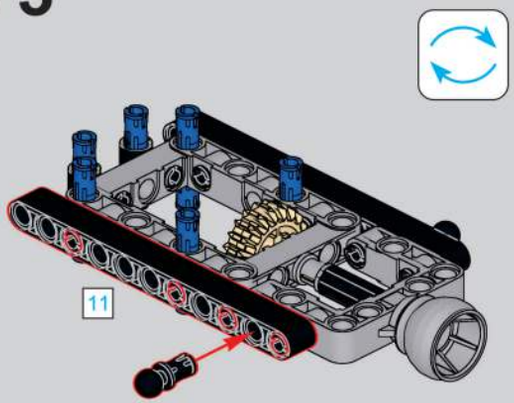

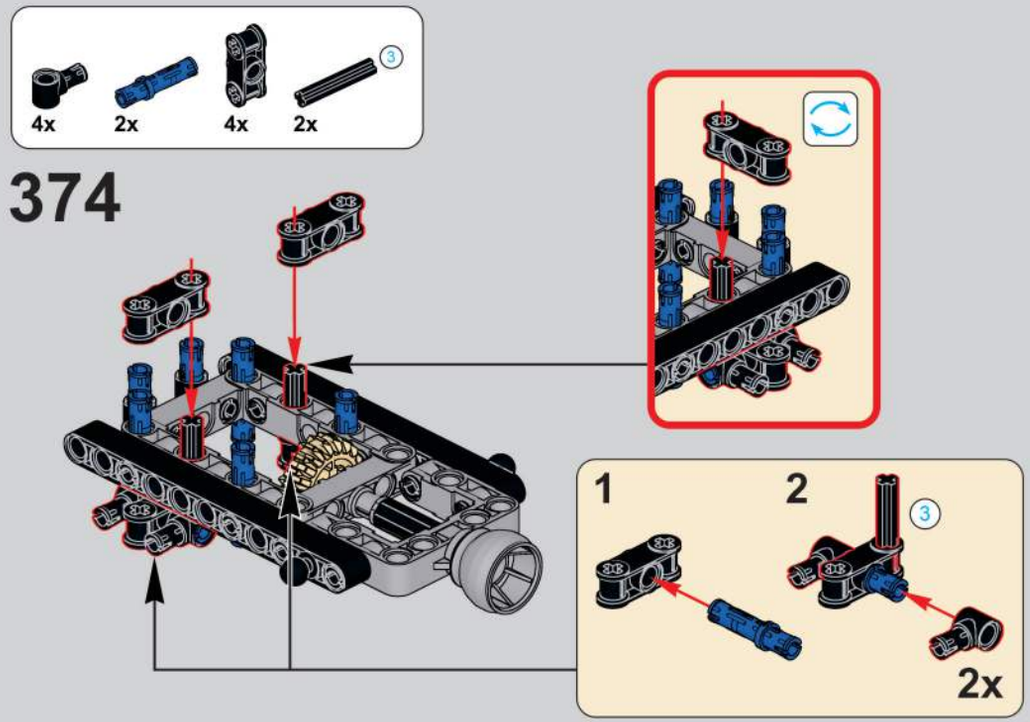
4x
2x
4x
2x
3
374
1
2
3
2x

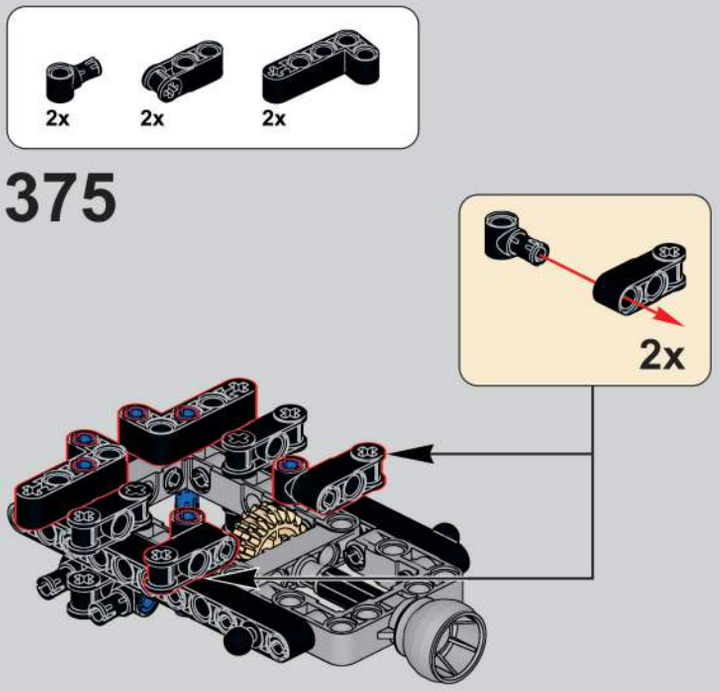
2x
2x
2x
375
2x

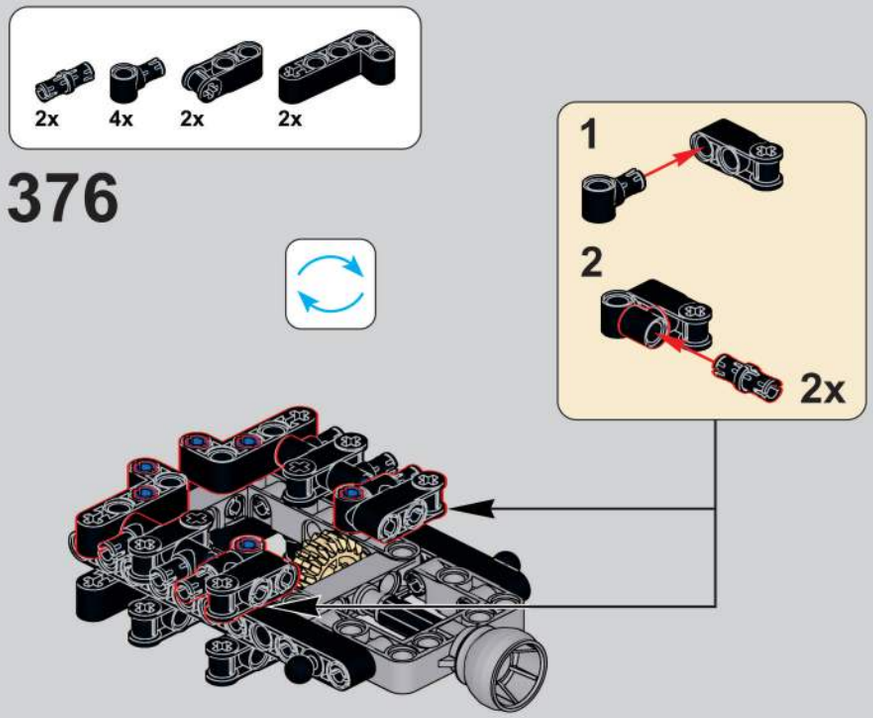
2x
4x
2x
2x
376
1
2
2x

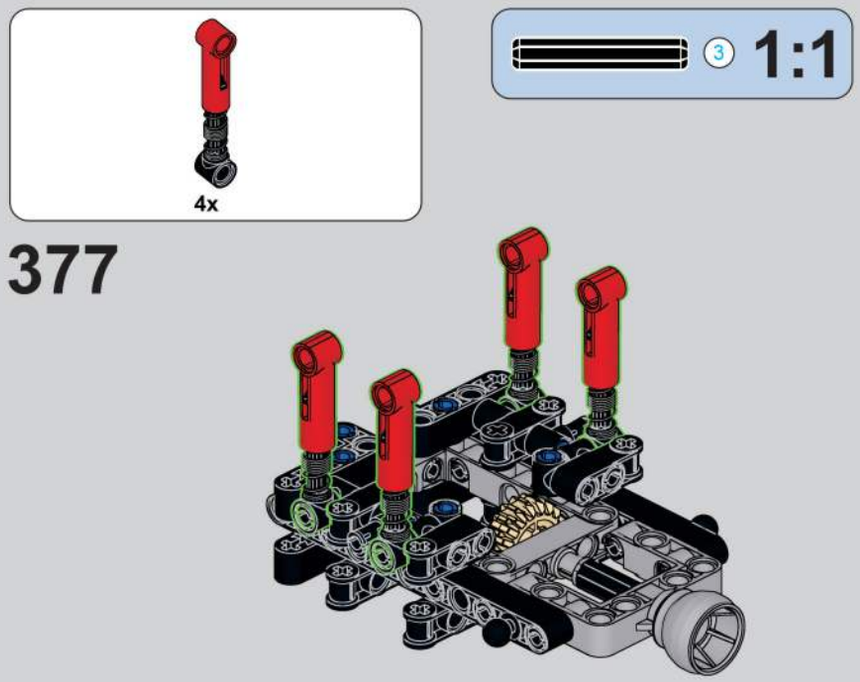
4x
377
3
1:1

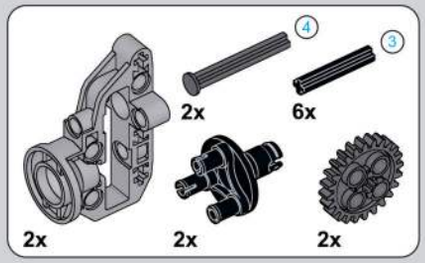

378

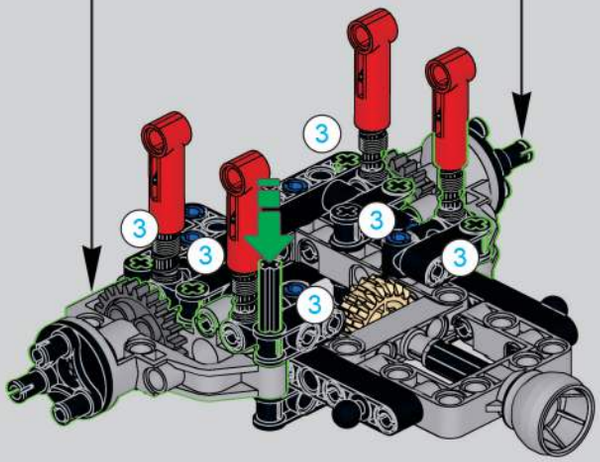

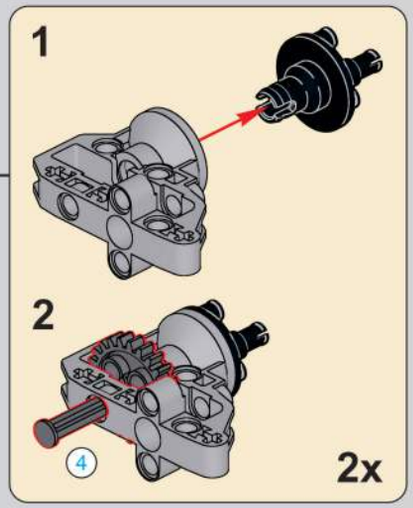

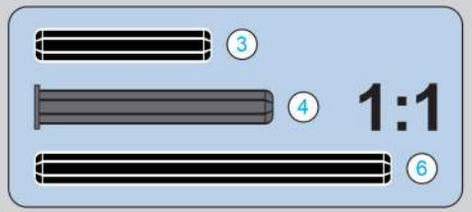

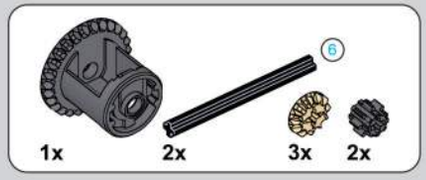

379

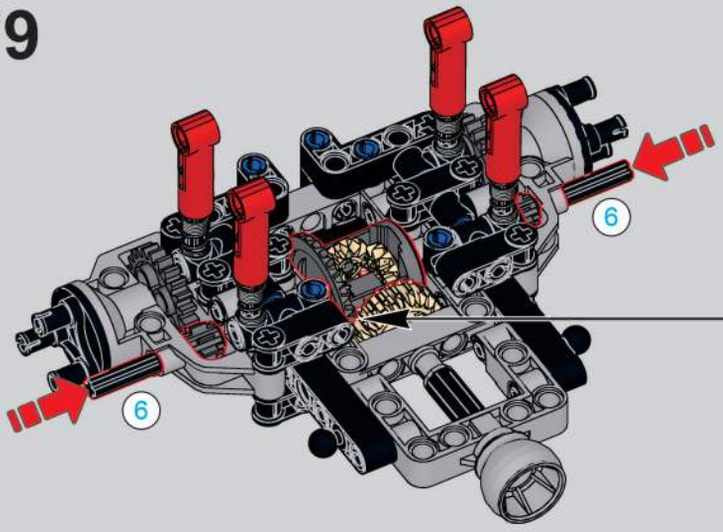

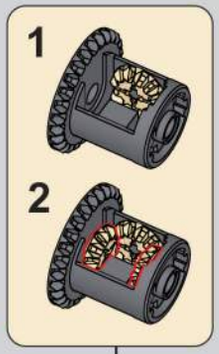

380

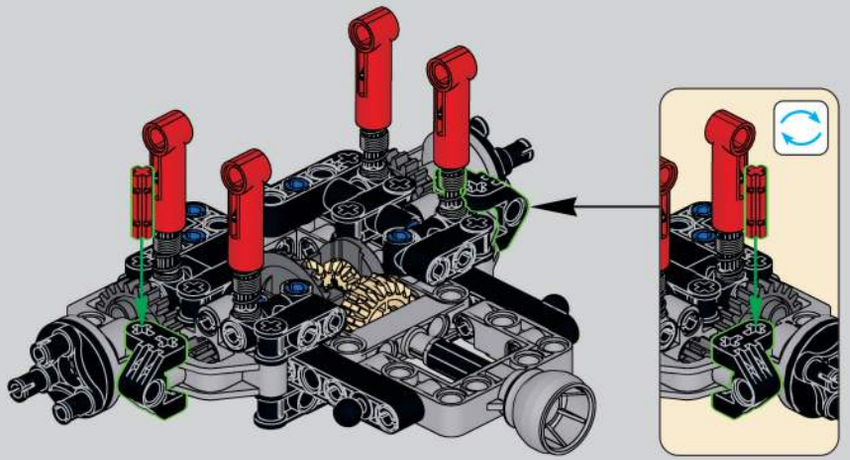

381

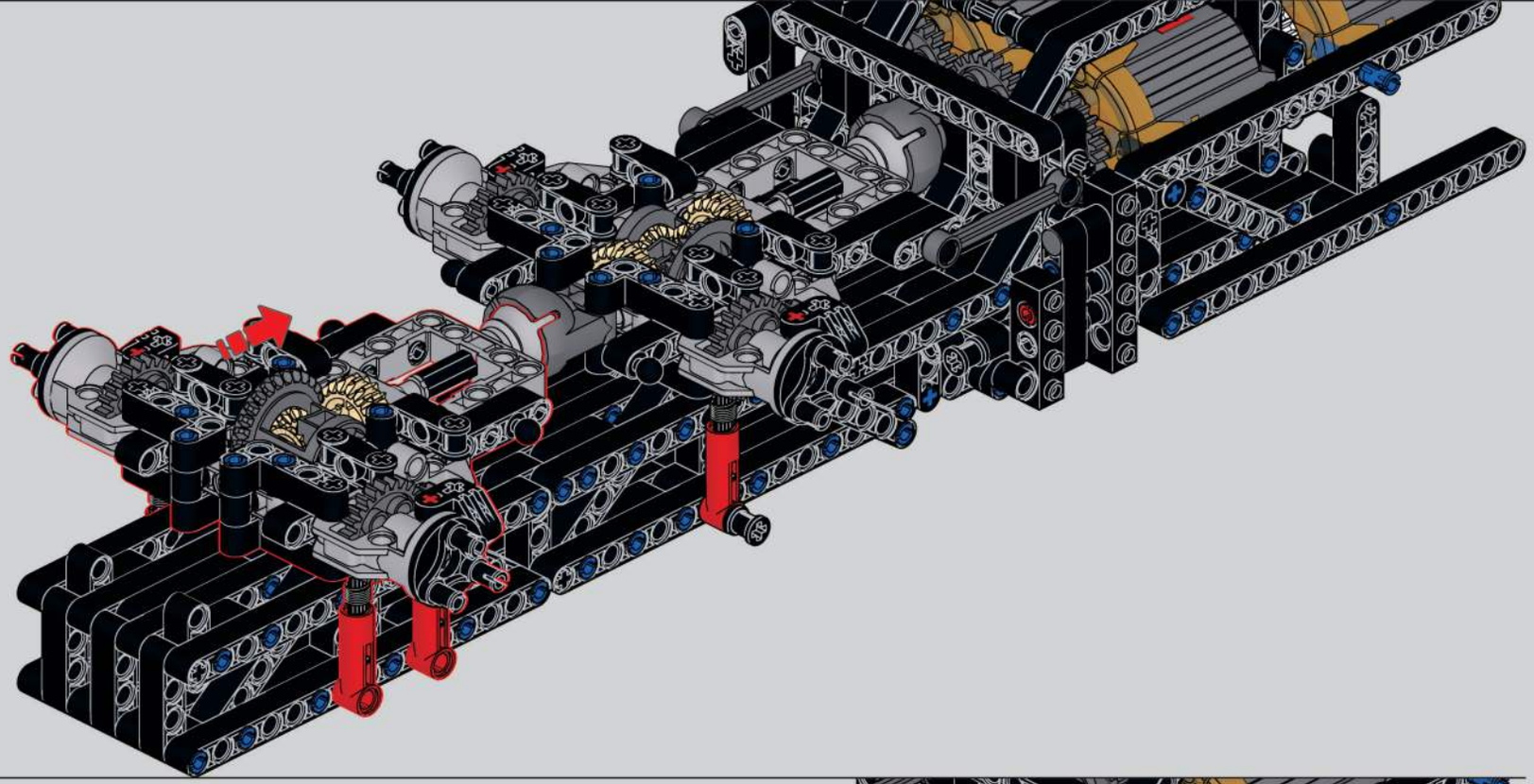

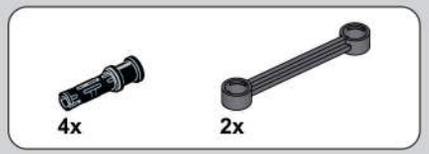

382

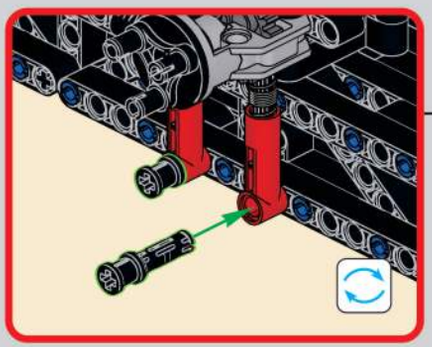

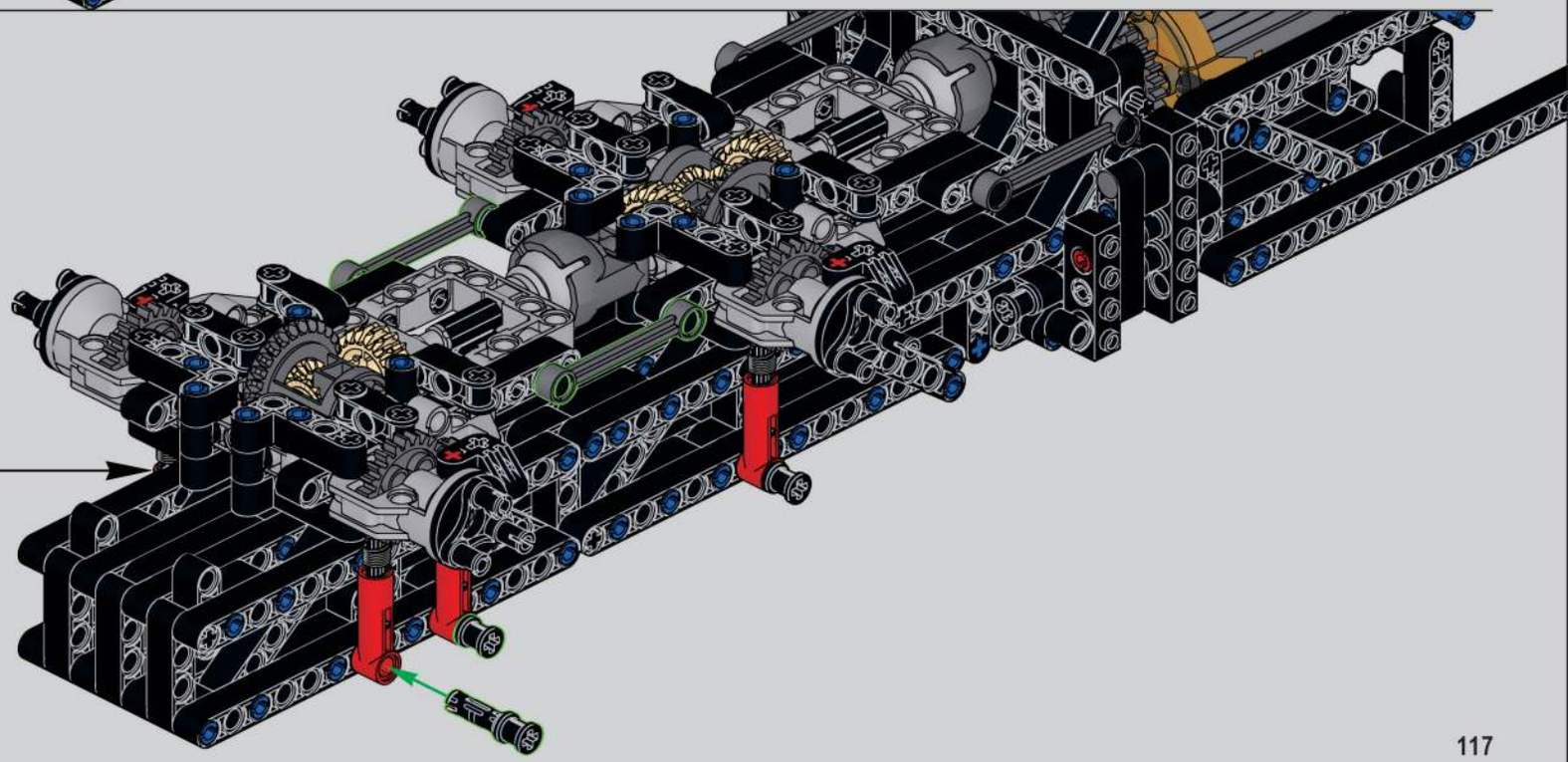

383

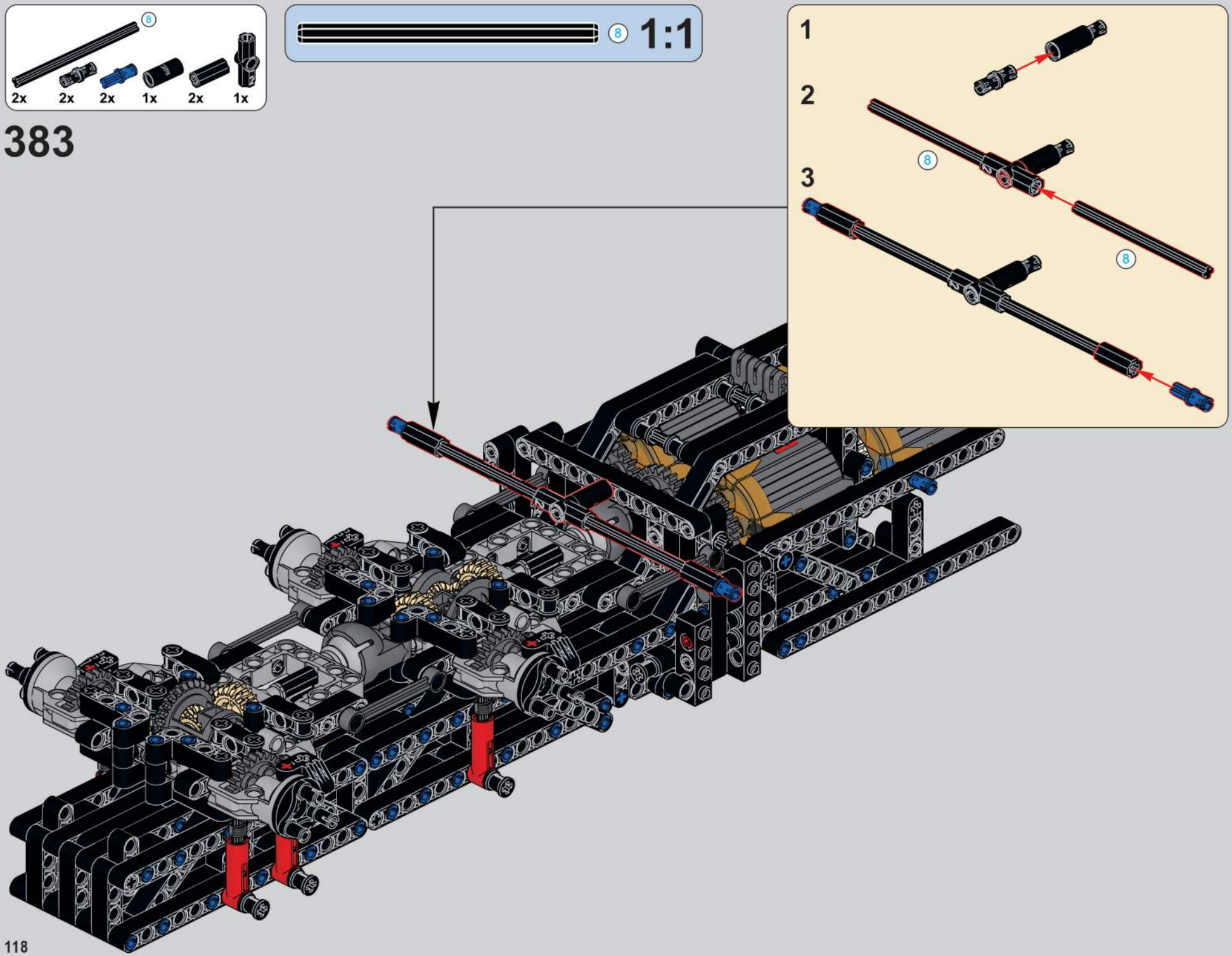

384

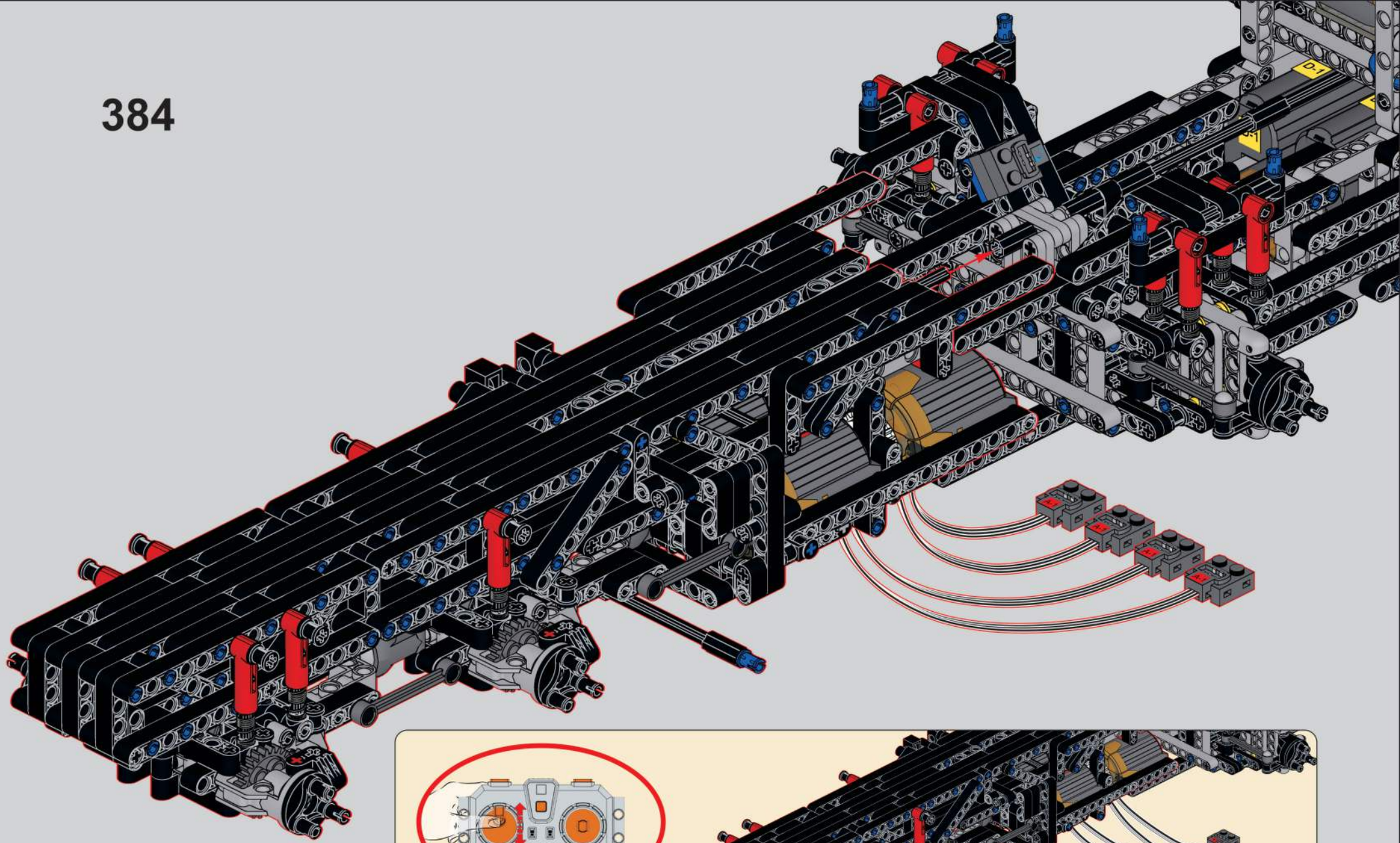

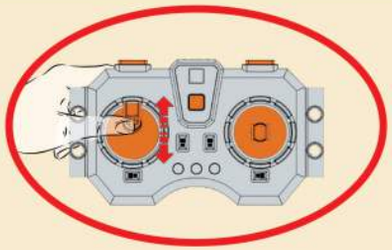

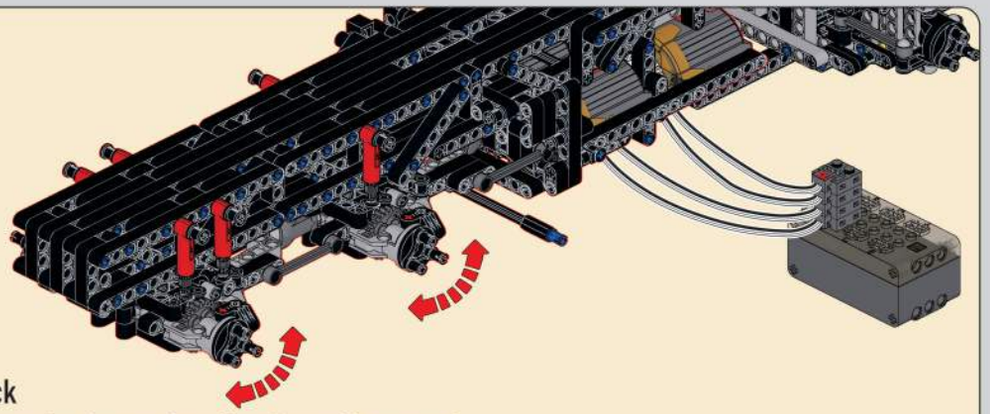

请连接模块，检测轮子
前进后退功能是否正常

Please connect the module to check whether the function of the wheel moving forward and backward is normal

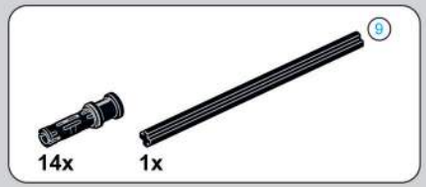

385

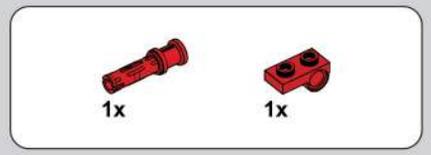

386

387

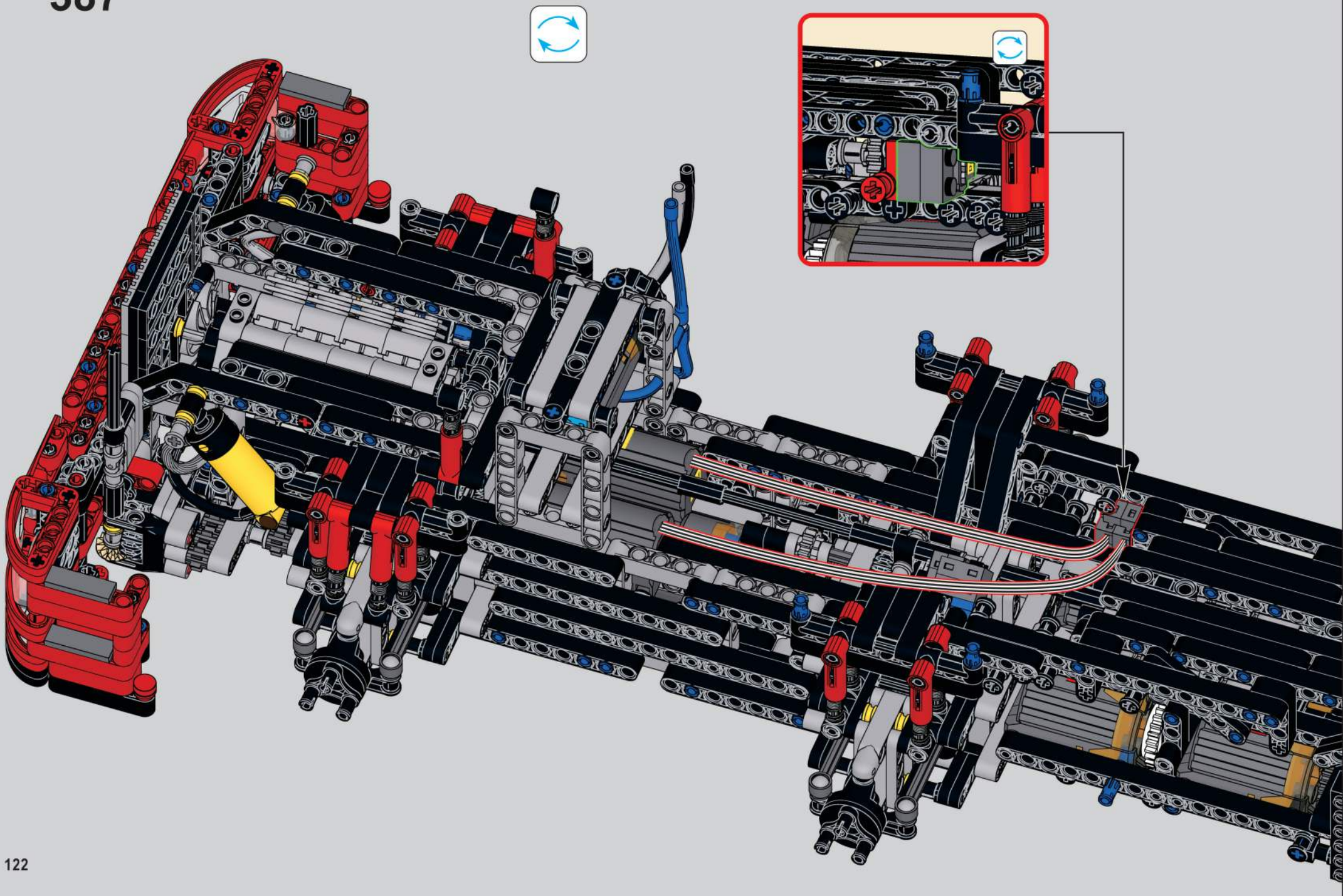

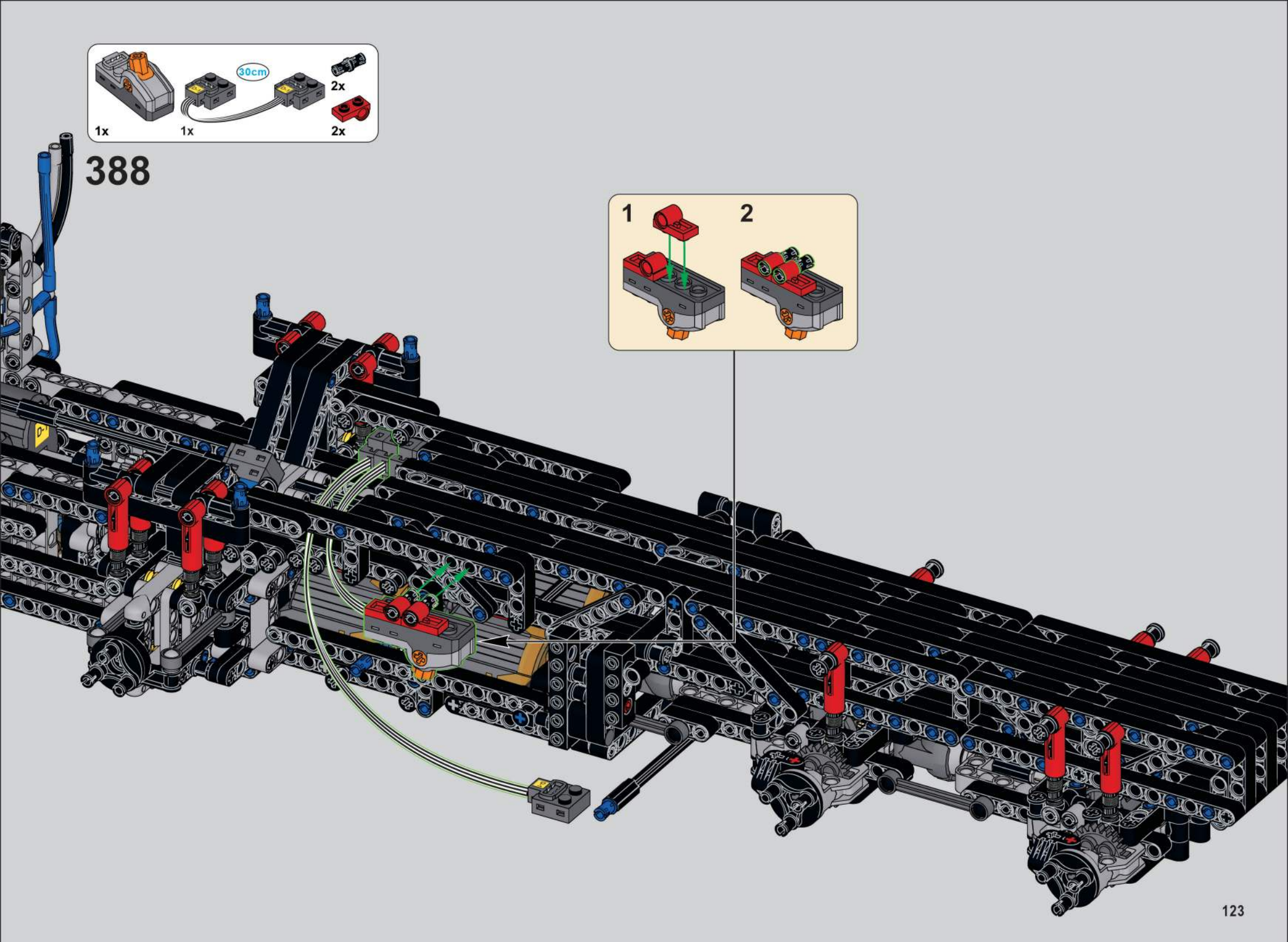
1x
1x
30cm
2x
2x
388
1
2

389

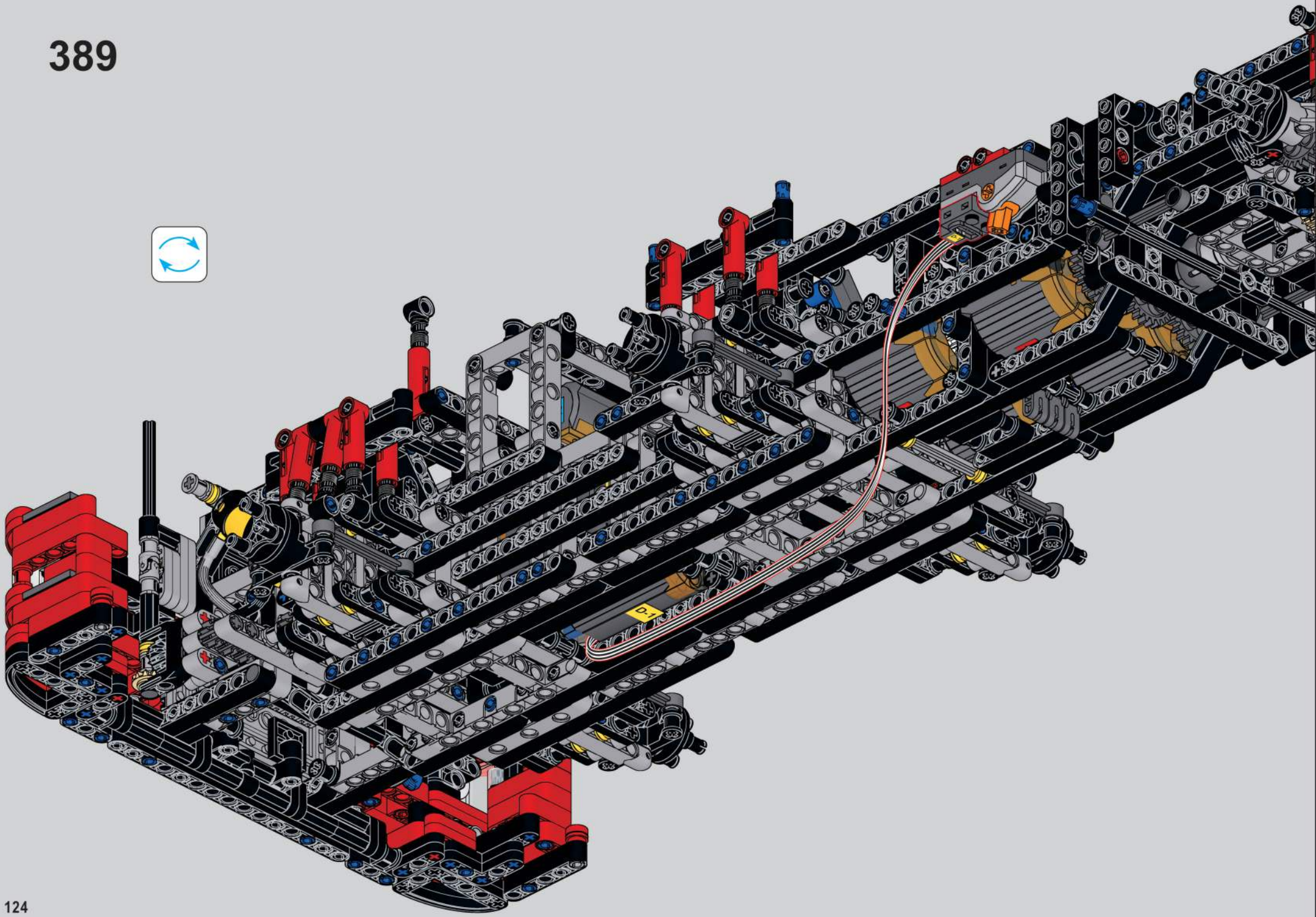

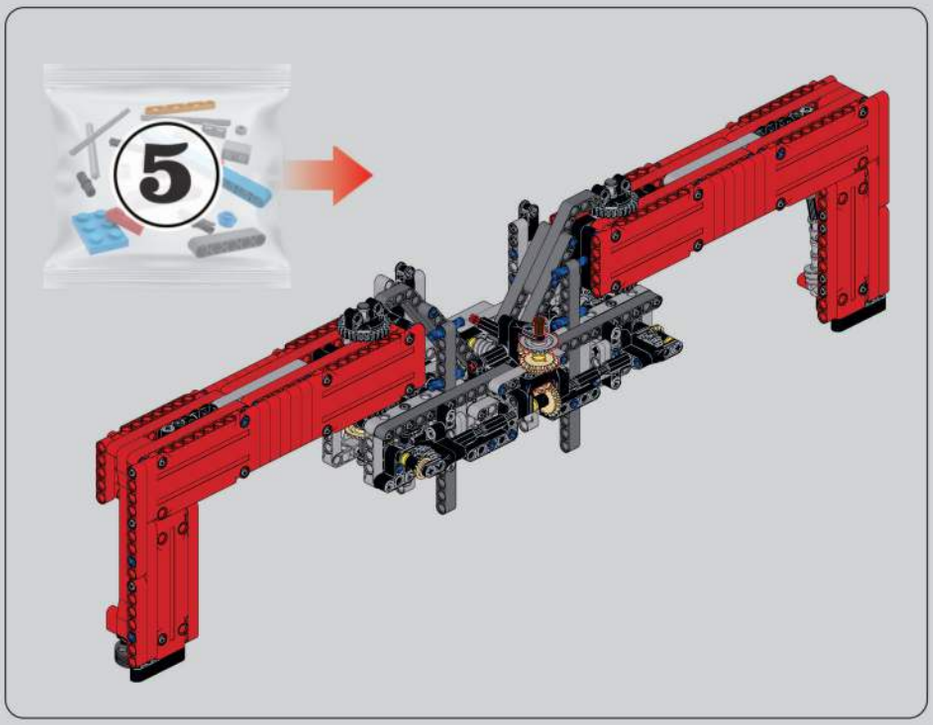

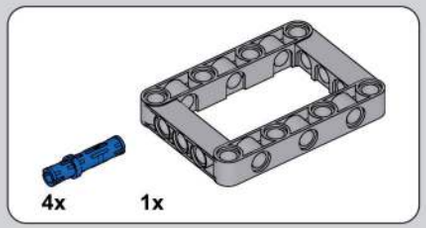

390

391

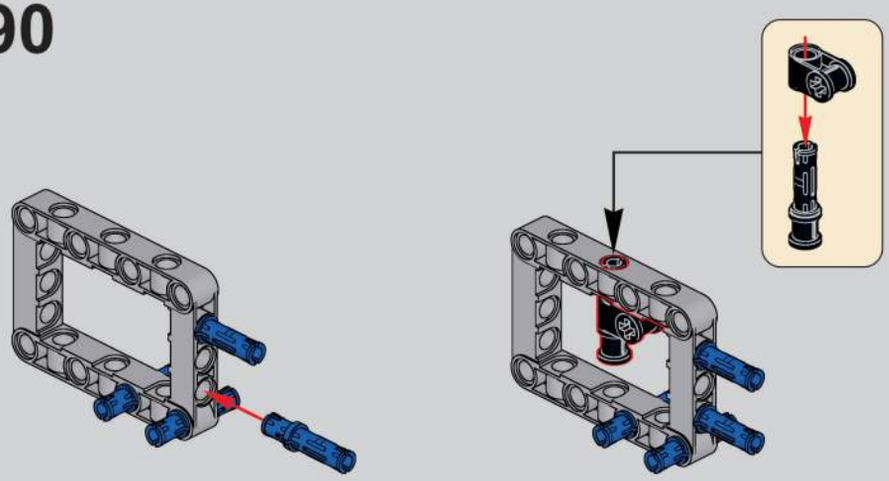

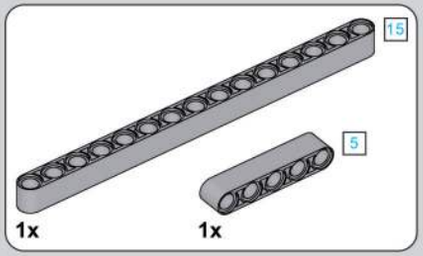

392

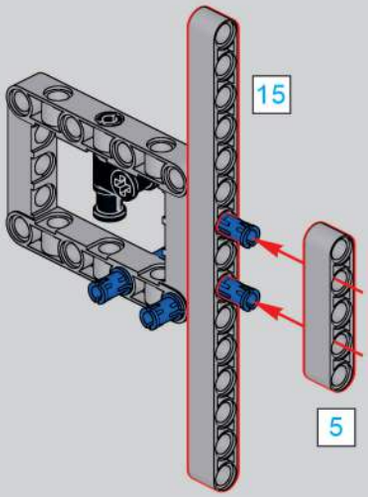

393

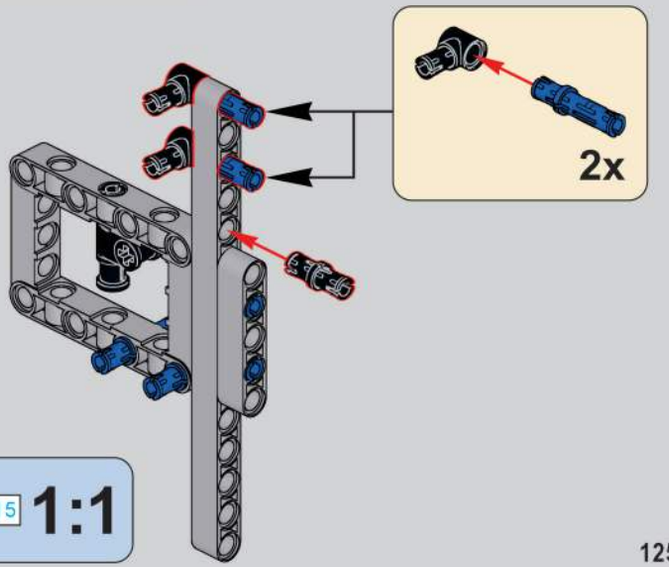

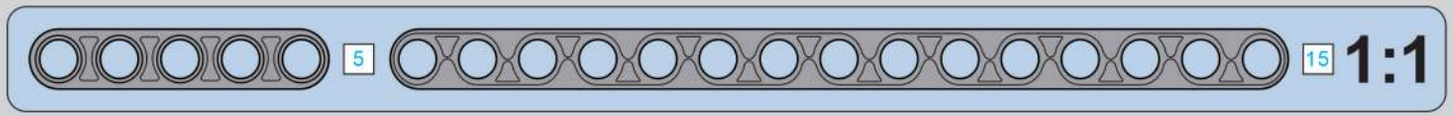

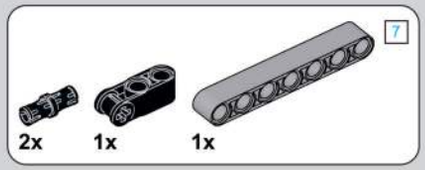

394

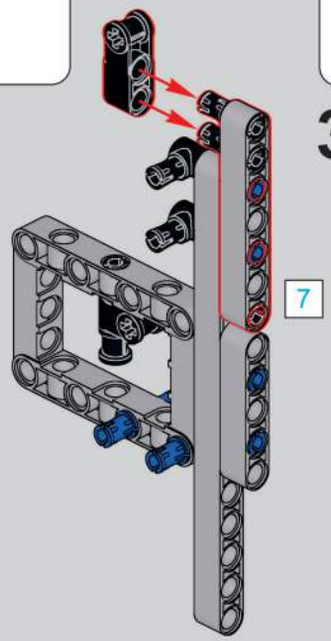

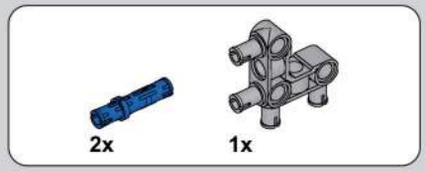

395

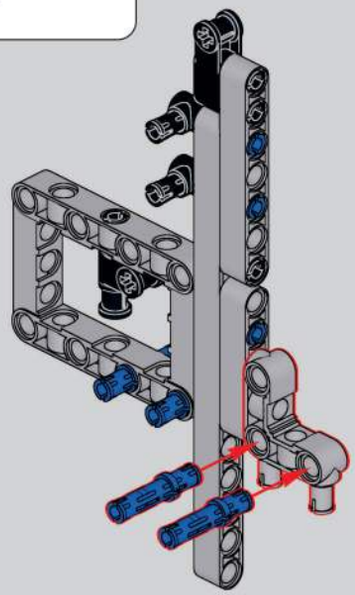

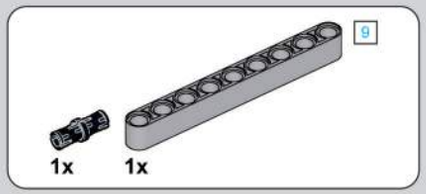

396

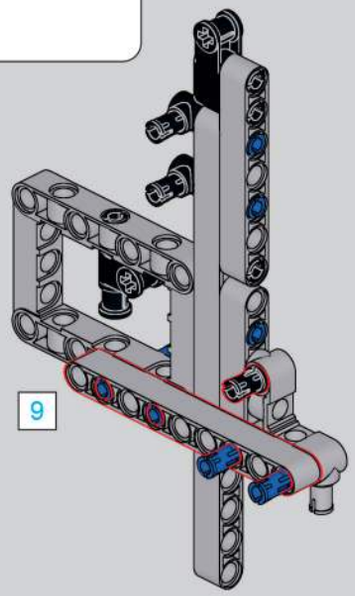

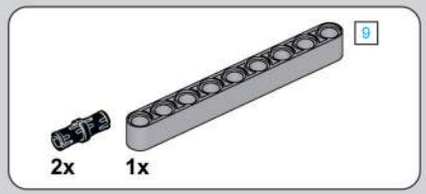

397

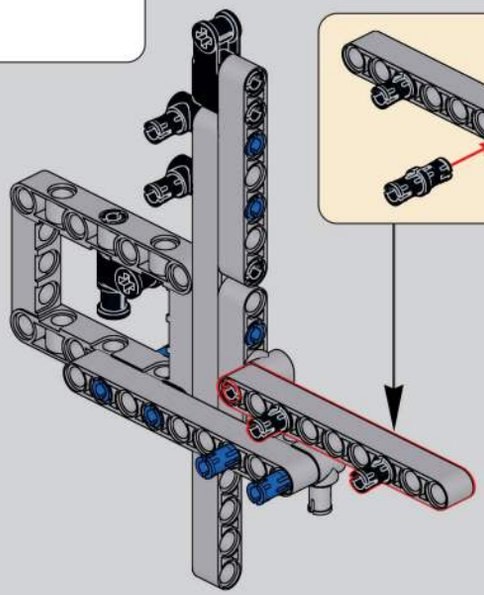

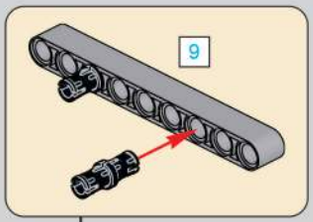

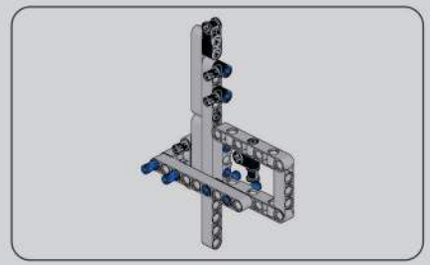

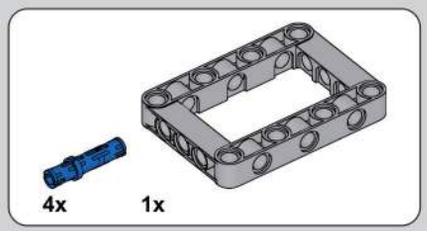

398

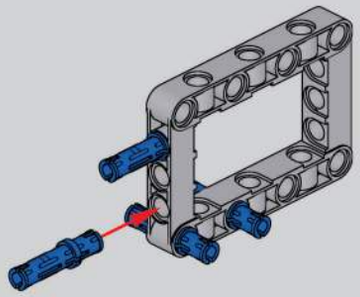

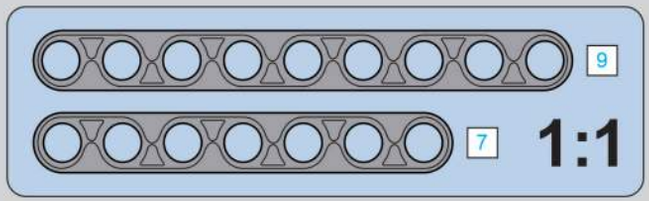

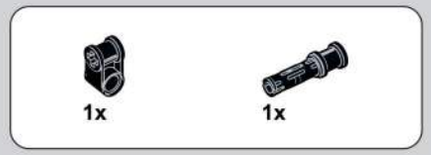

399

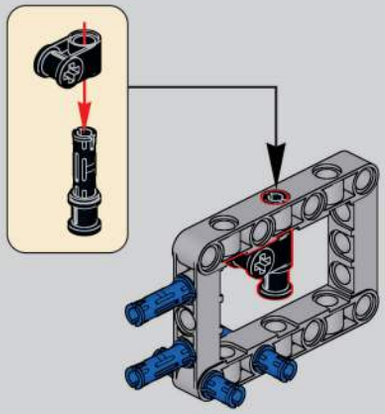

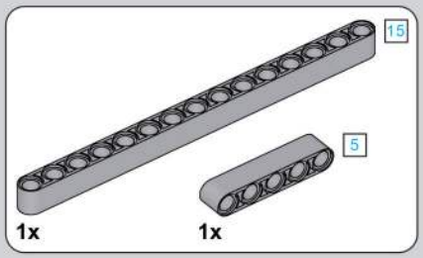

400

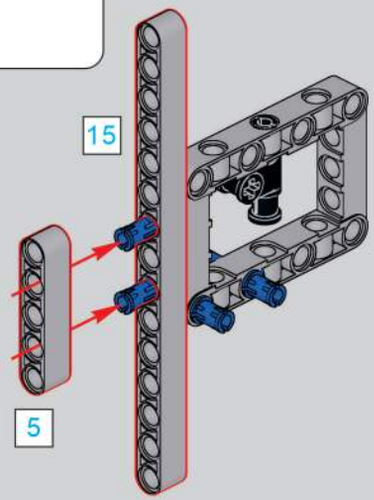

401

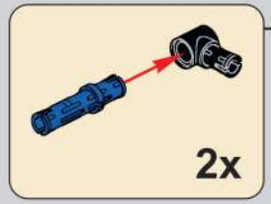

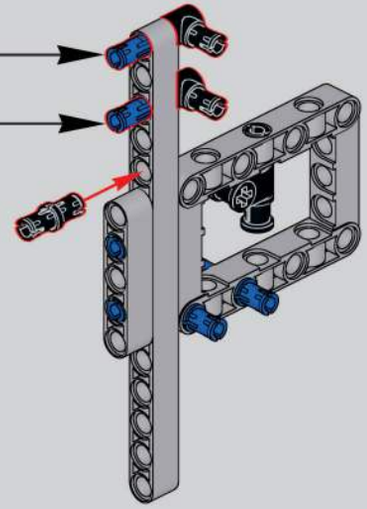

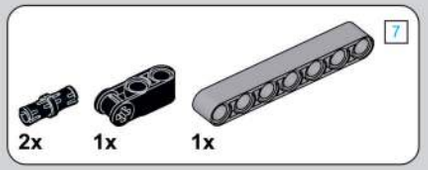

402

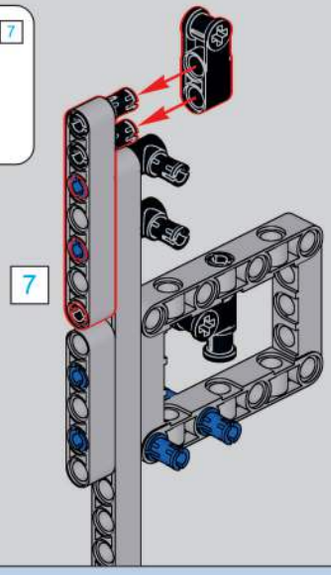

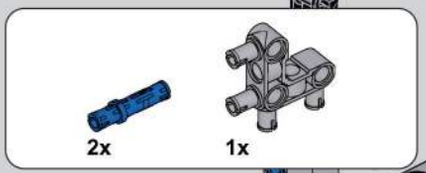

403

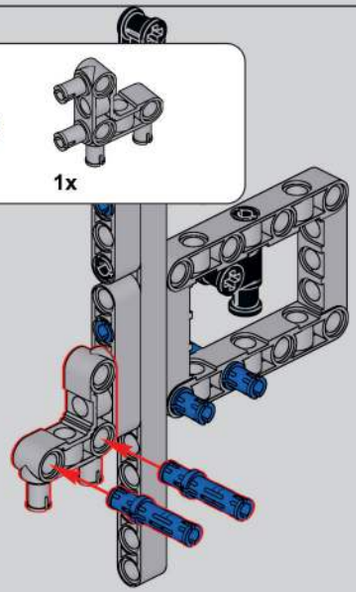

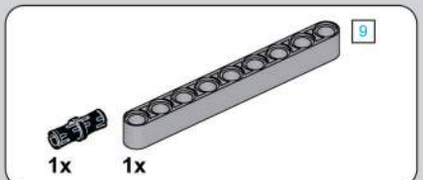

404

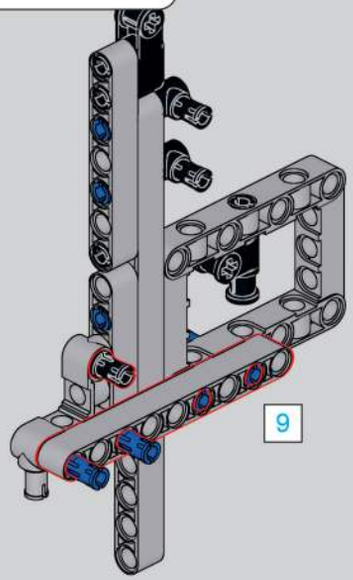

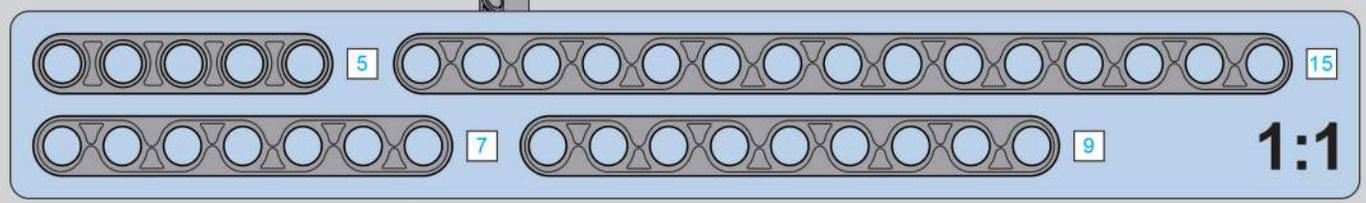

405

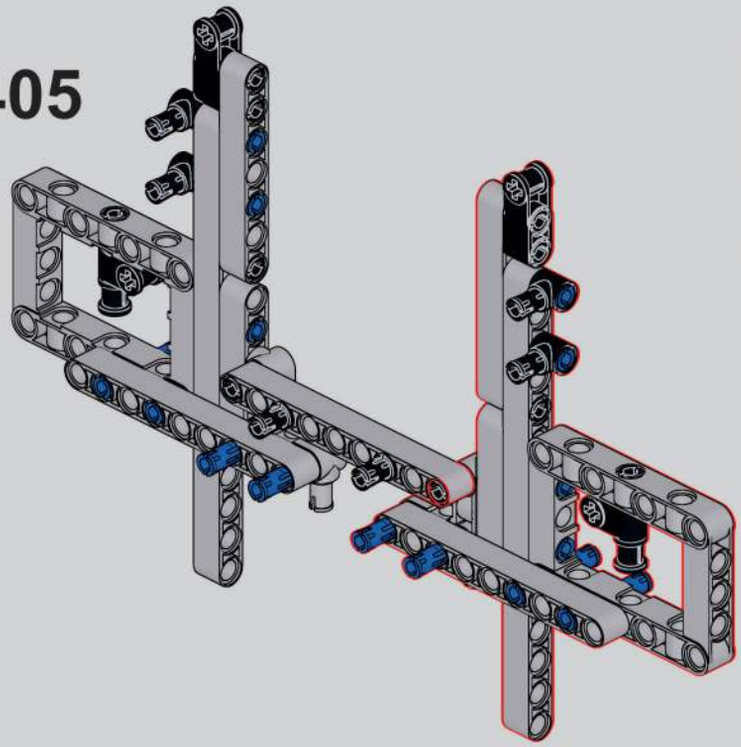

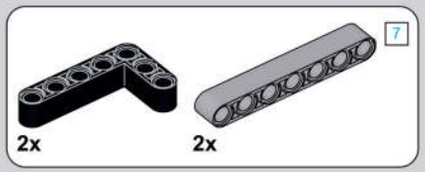

406

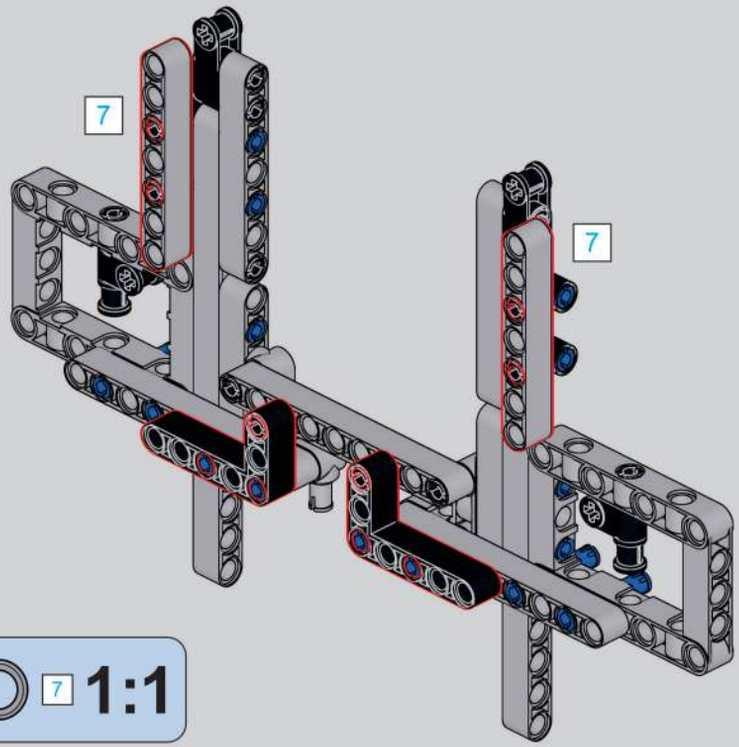

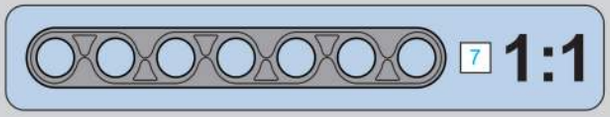

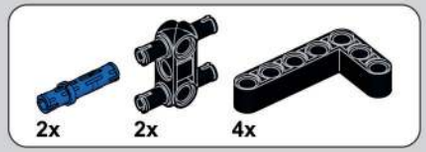

407

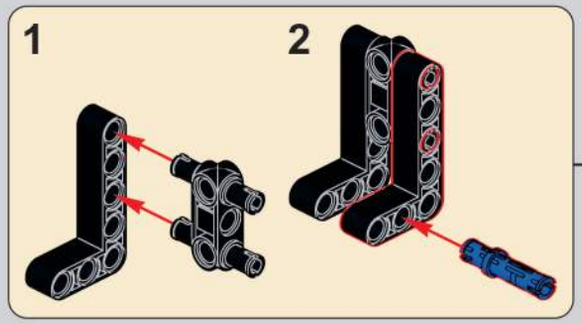

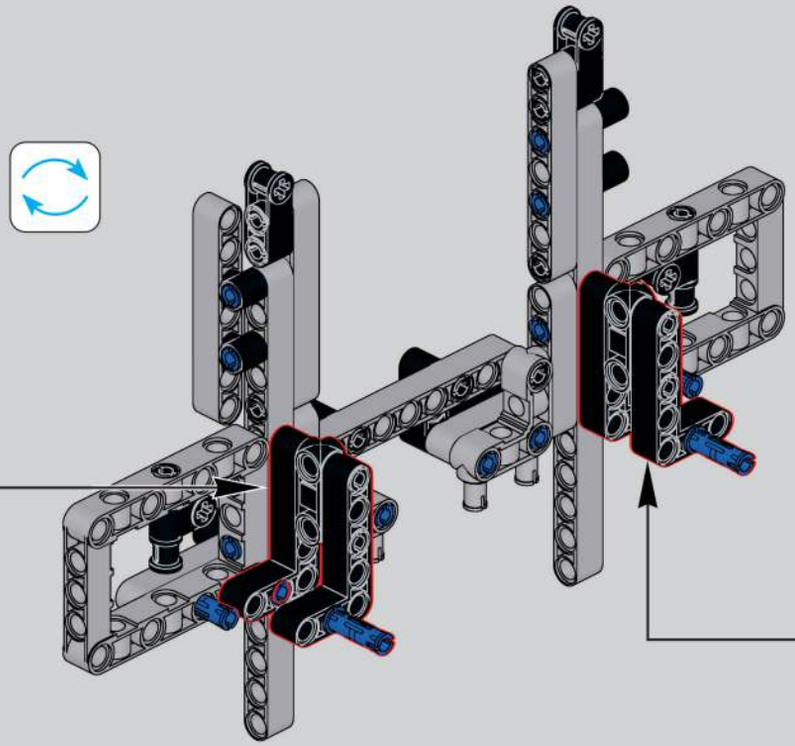

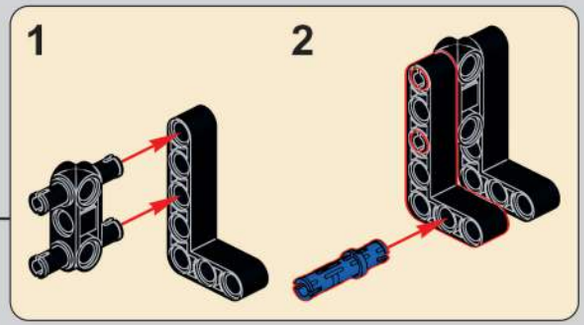

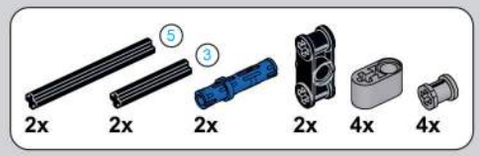

408

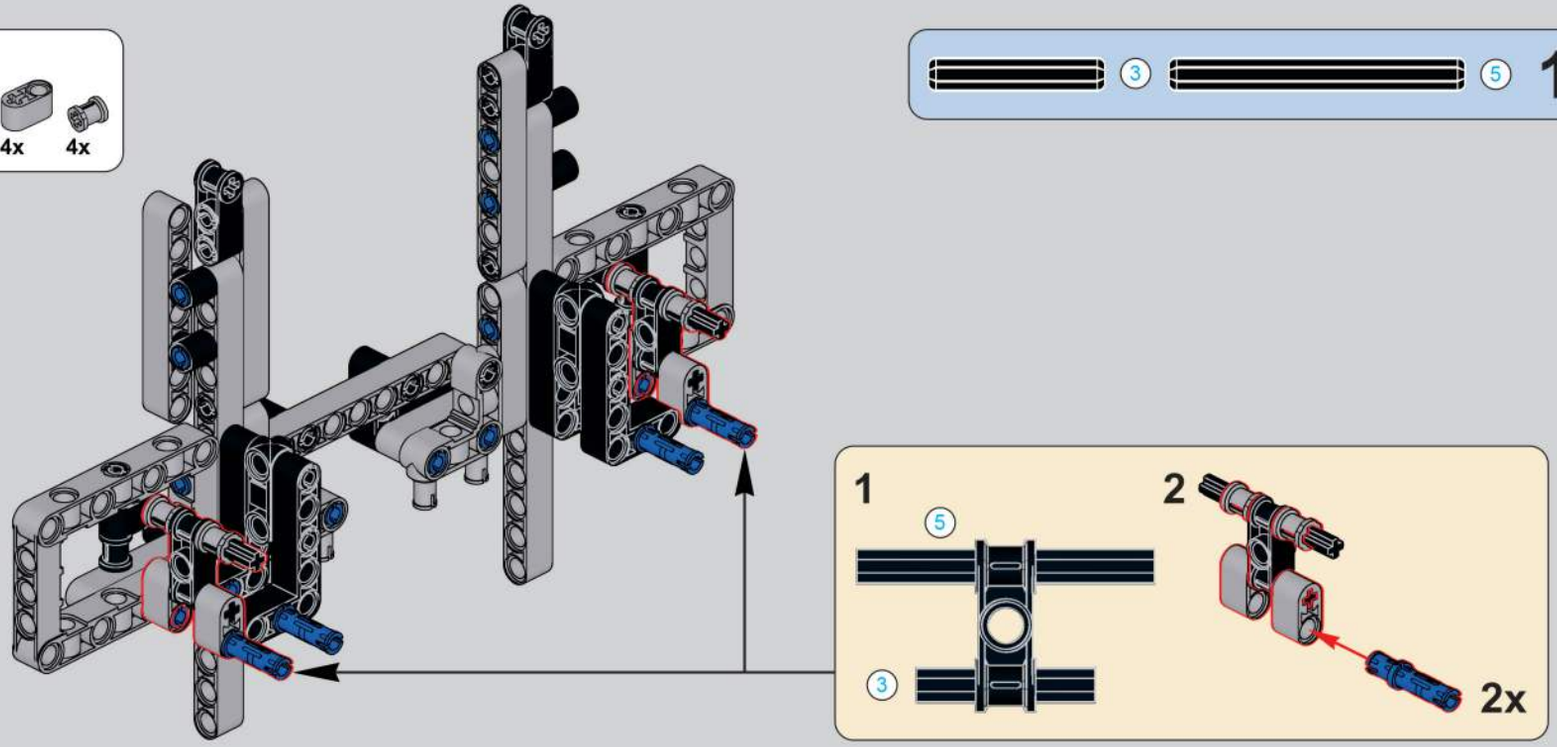

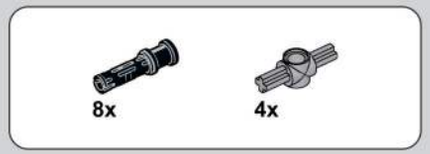

409

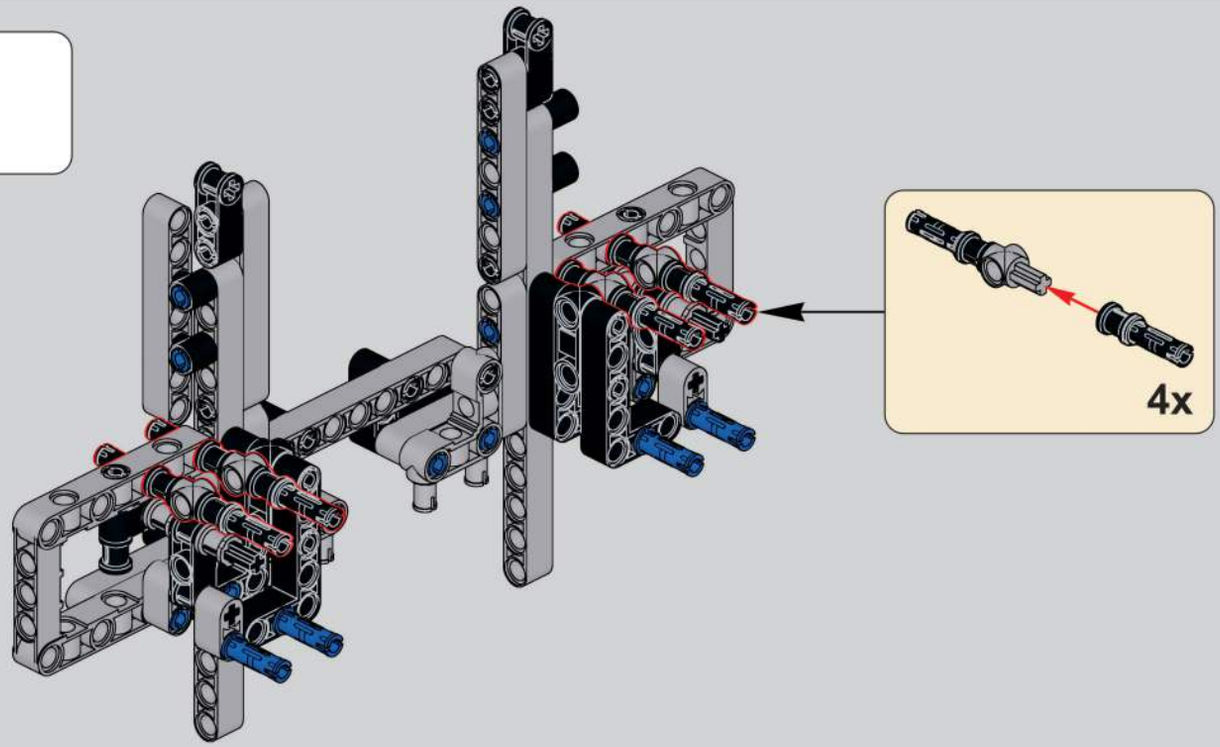

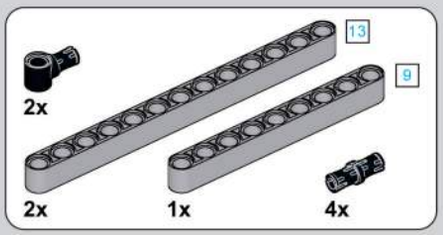

410

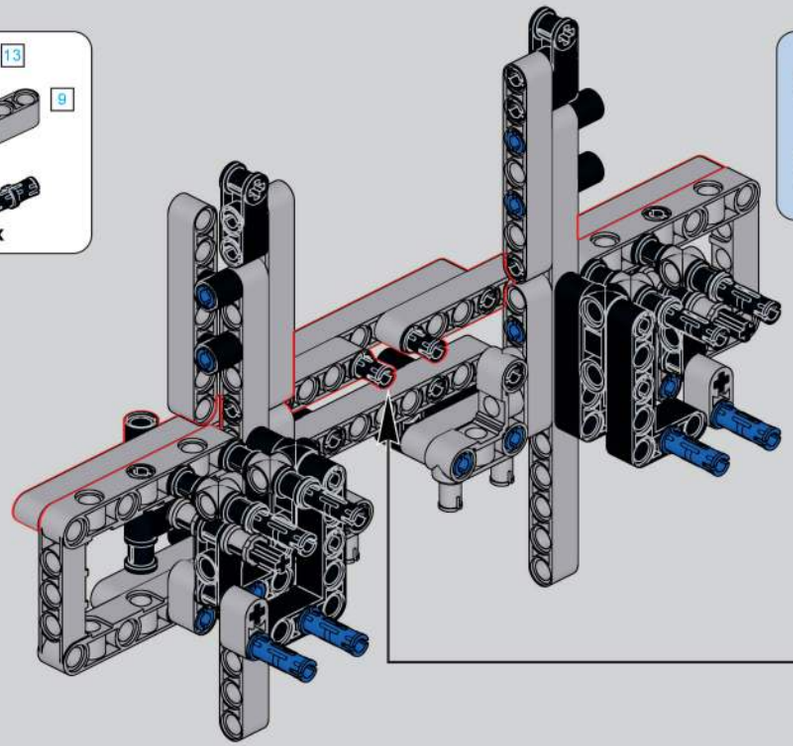

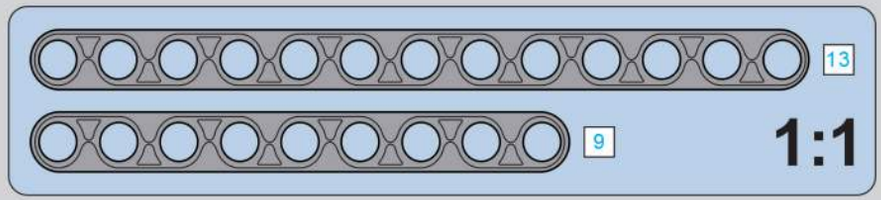

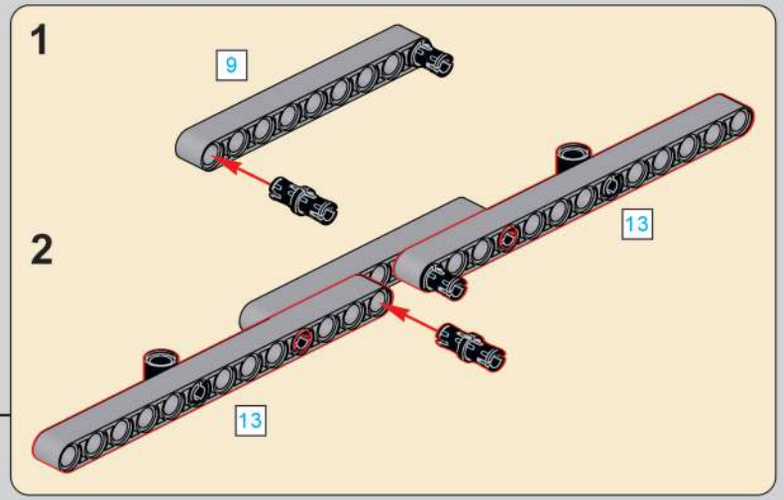

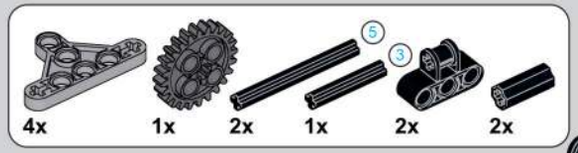

411

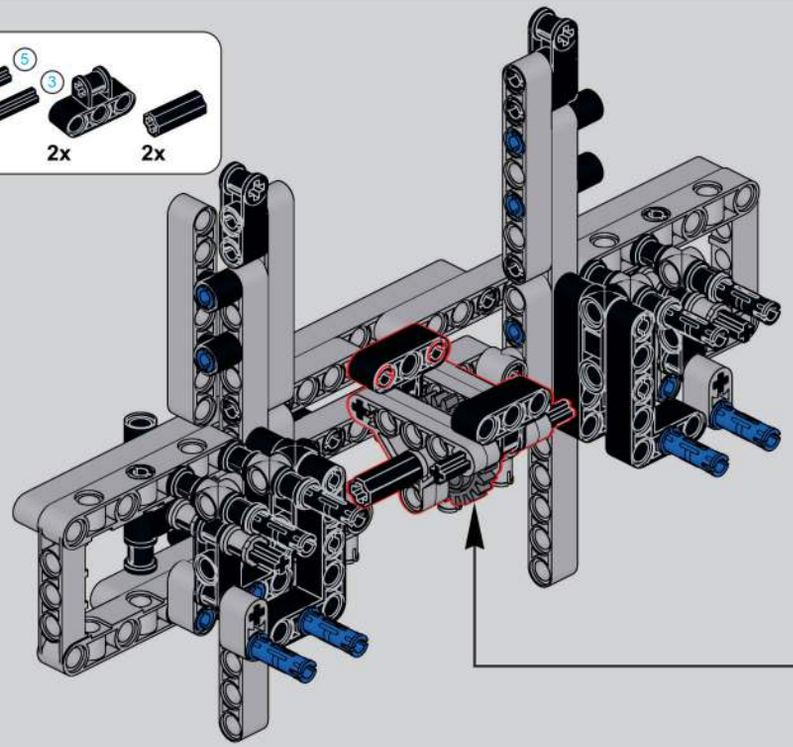

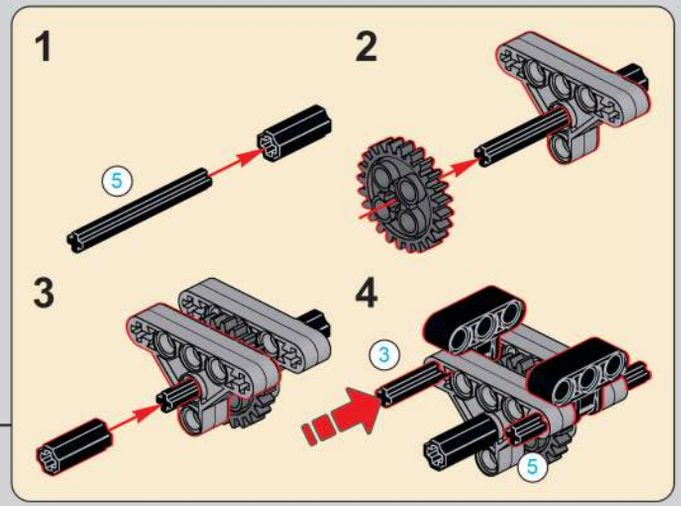

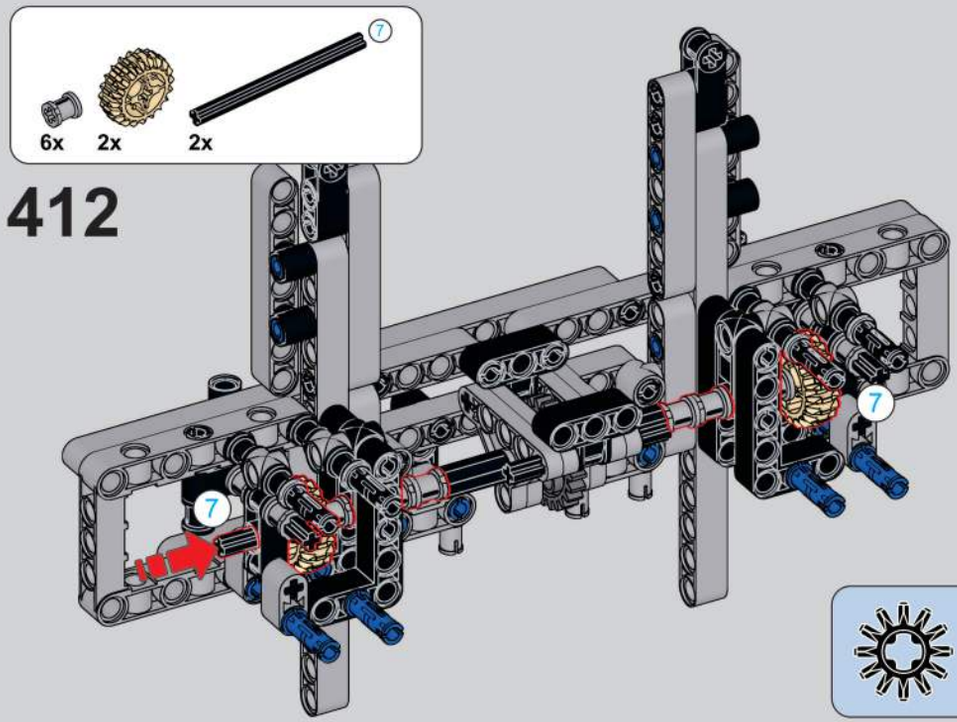
7
6x
2x
2x
412
7
7

1:1

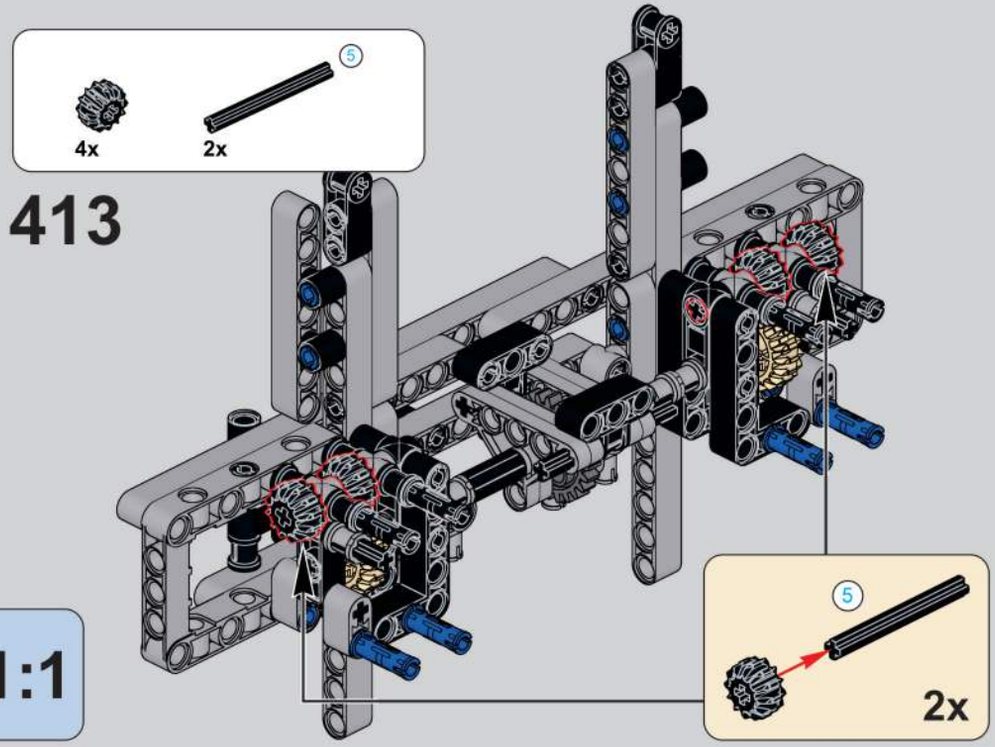
5
4x
2x
413
5
2x

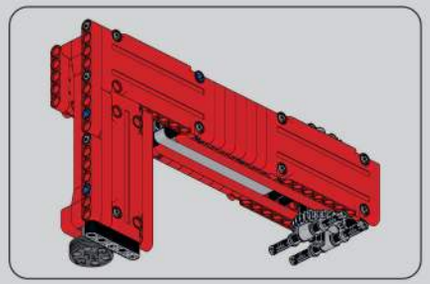

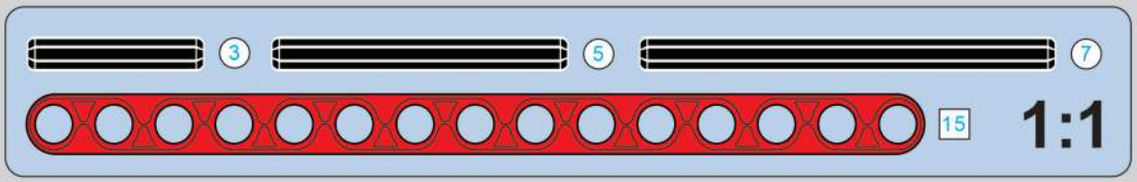
3
5
7
15
1:1

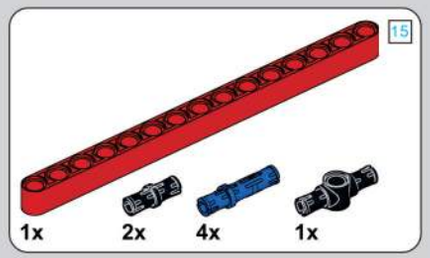
15
1x
2x
4x
1x
414

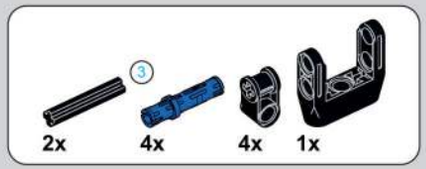
3
2x
4x
4x
1x
415

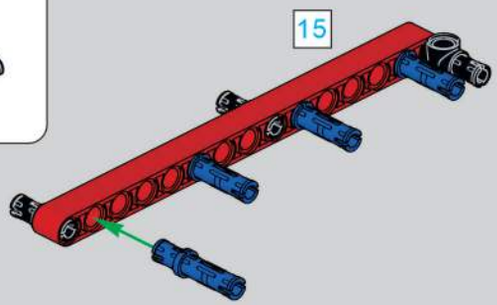
15

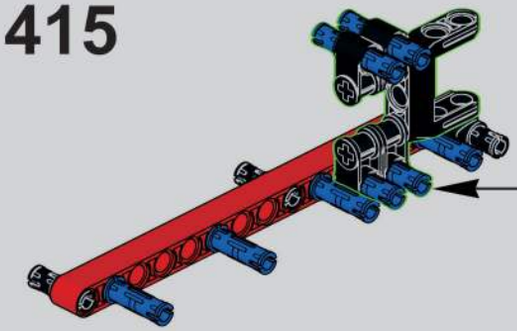

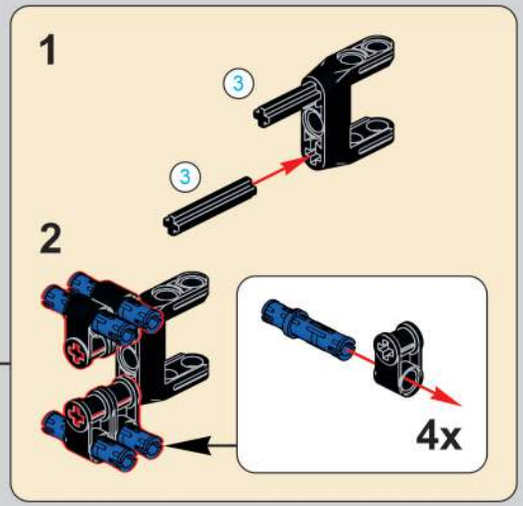
1
3
3
2
4x

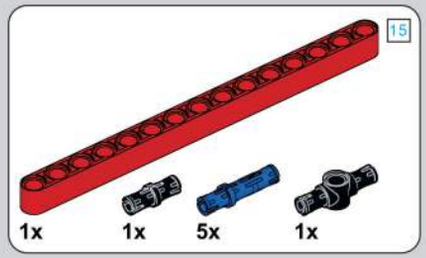

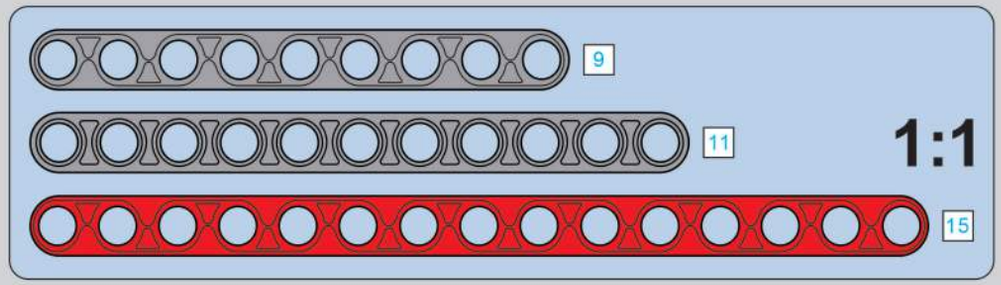

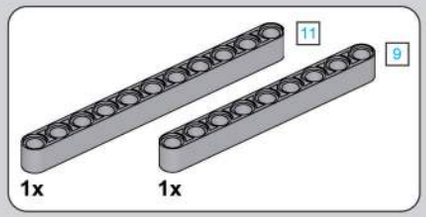

416

417

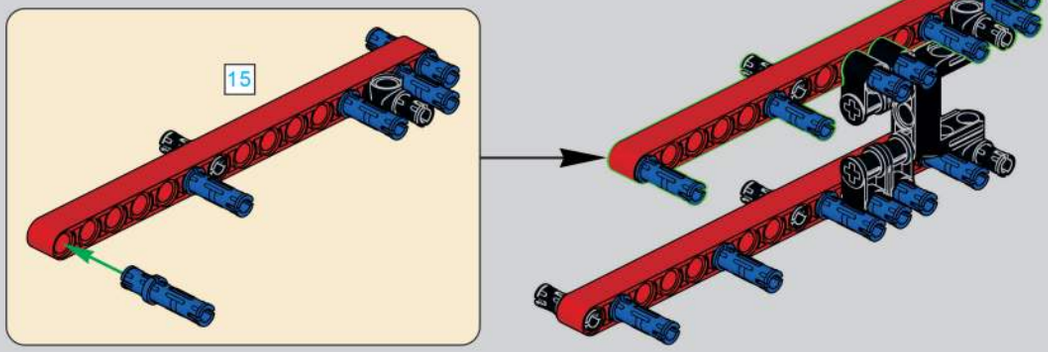

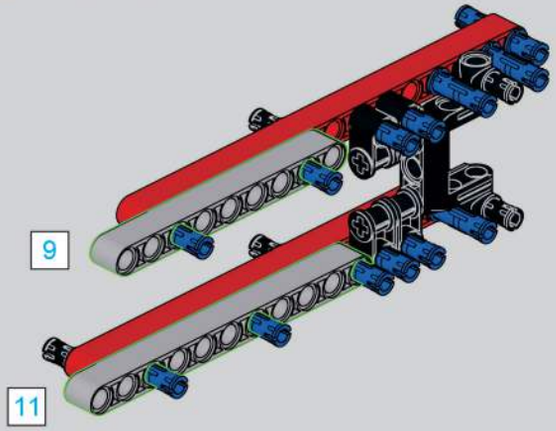

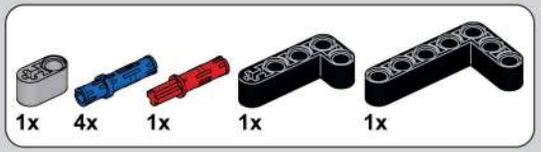

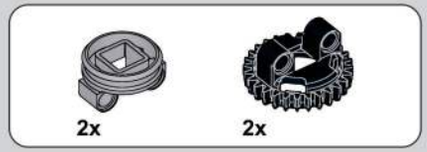

418

419

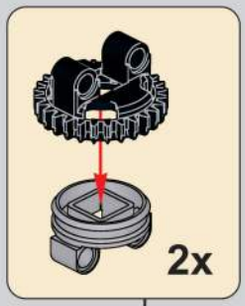

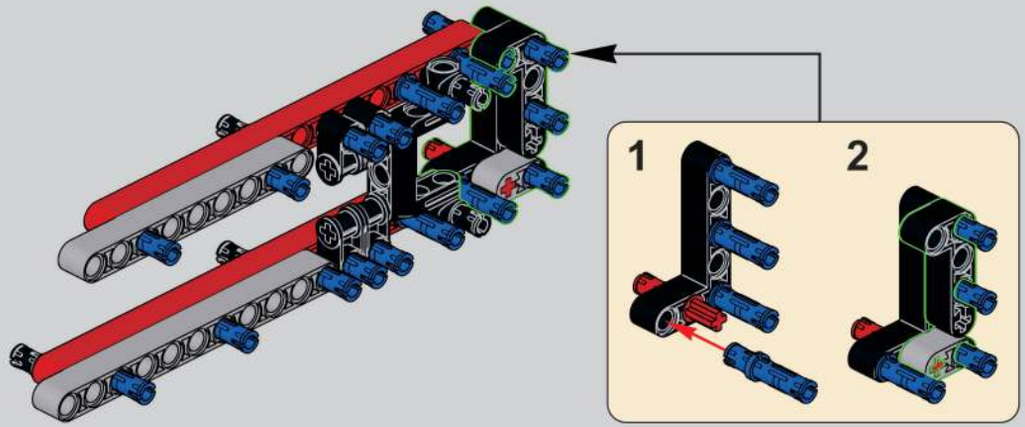

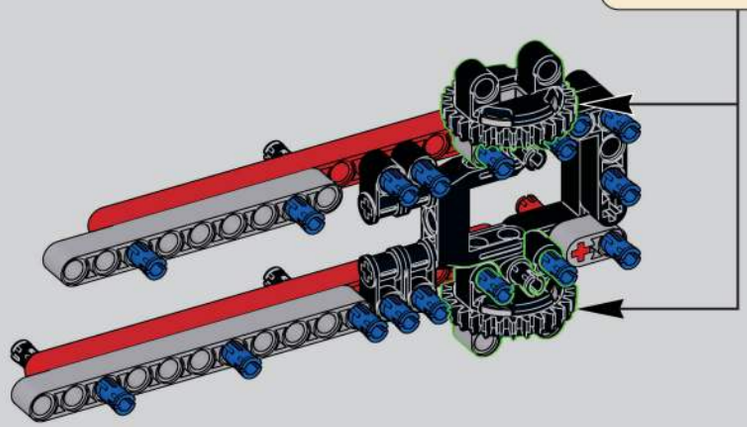

420

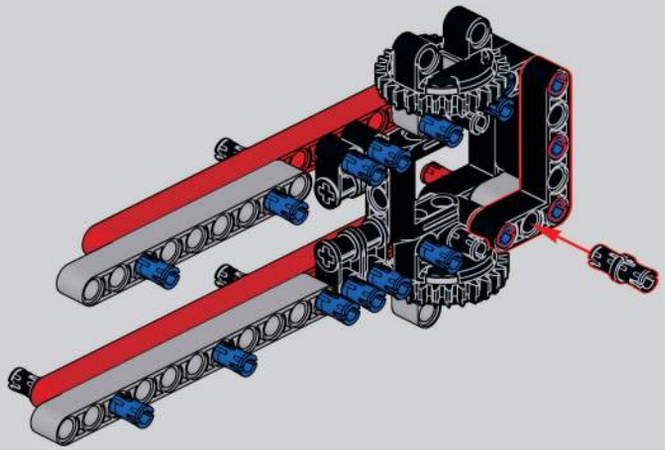

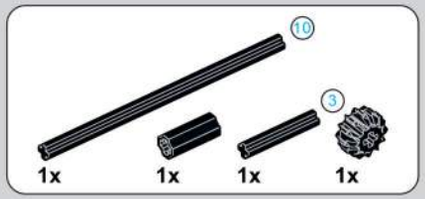

421

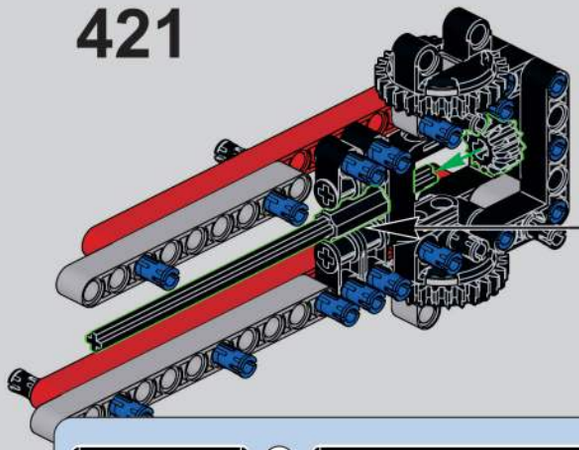

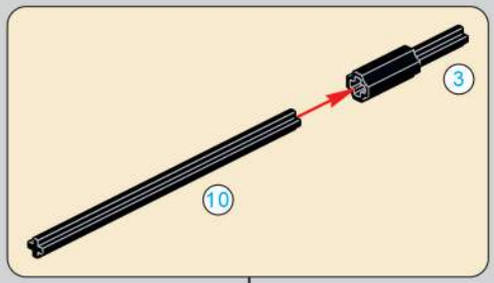

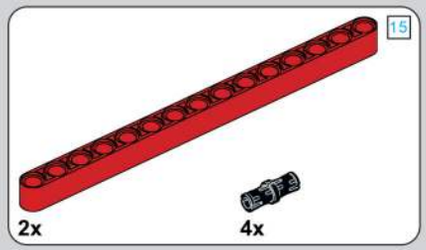

422

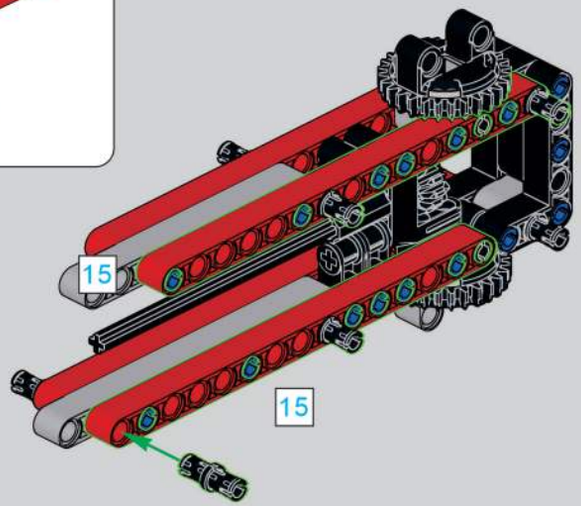

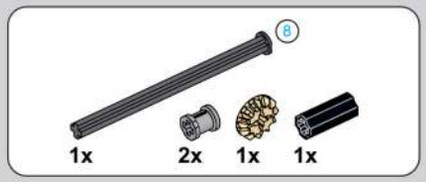

423

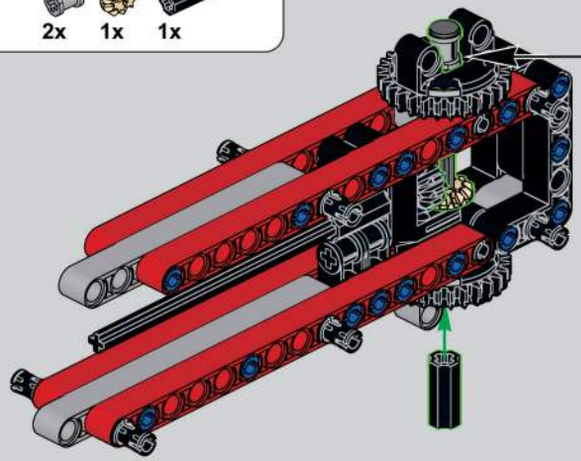

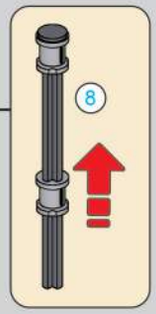

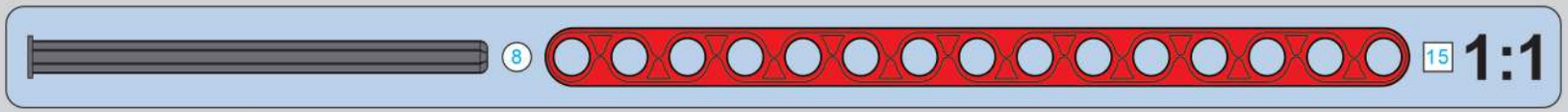

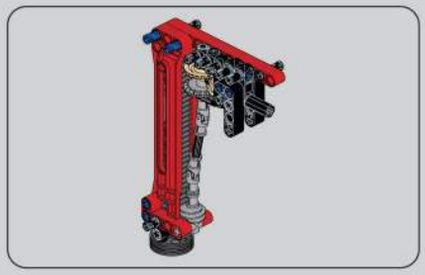

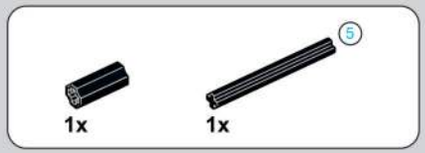

424

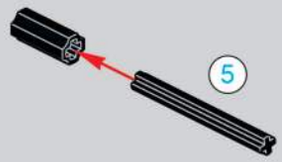

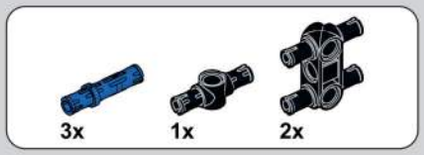

425

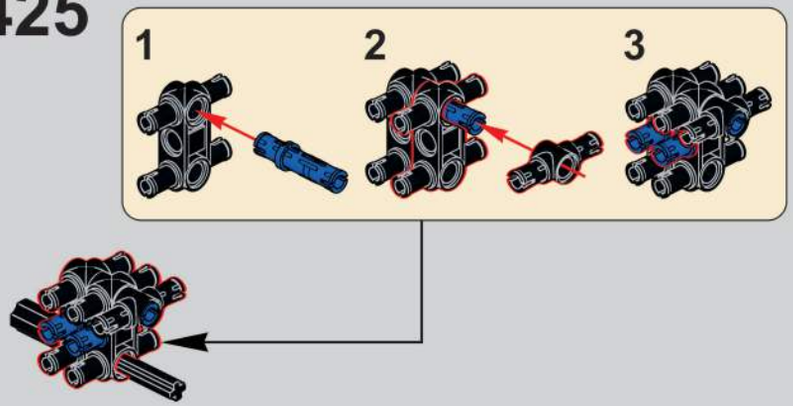

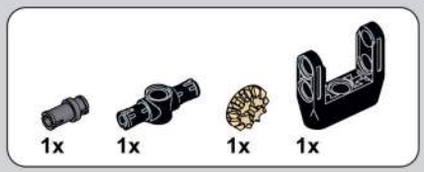

426

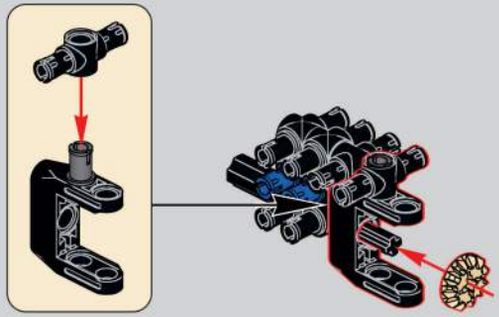

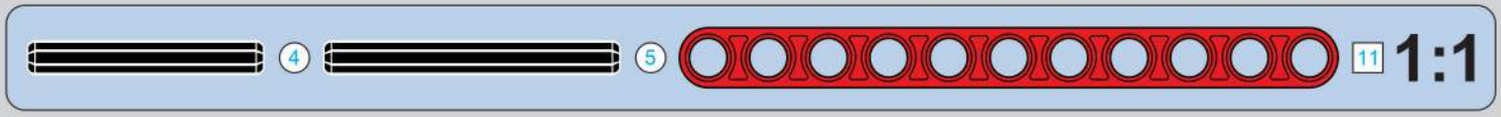

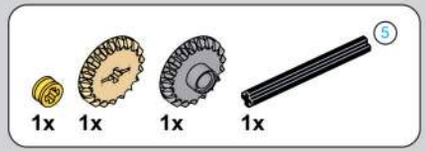

427

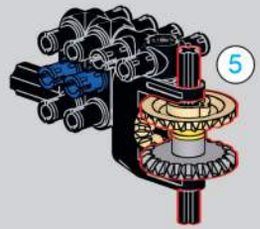

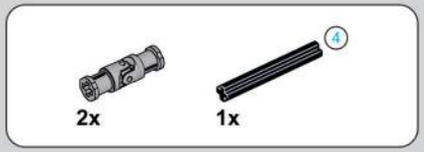

428

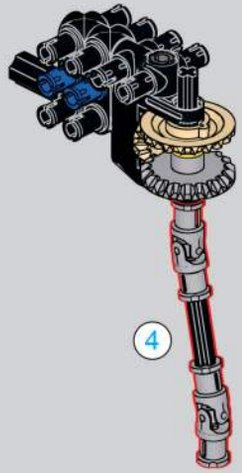

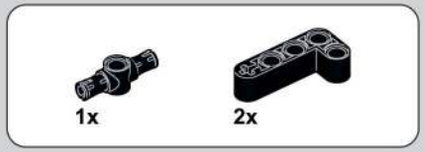

429

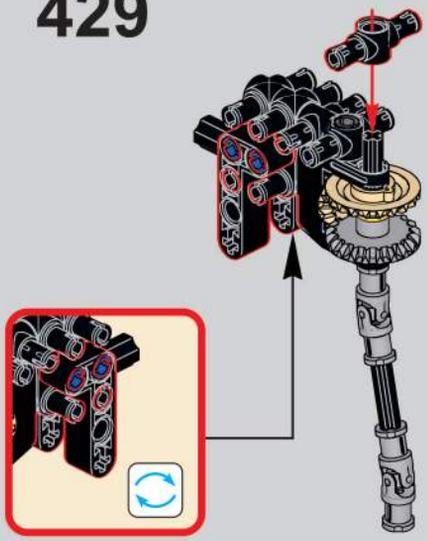

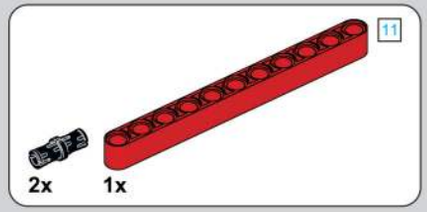

430

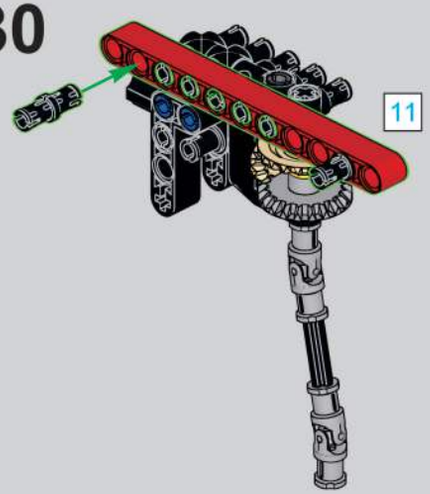

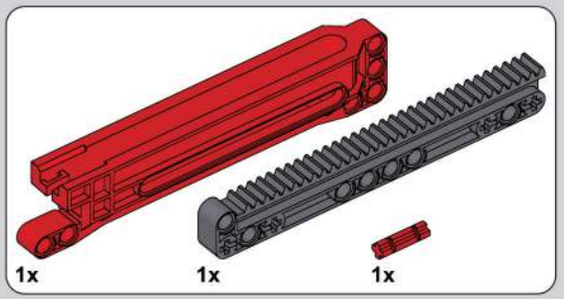

431

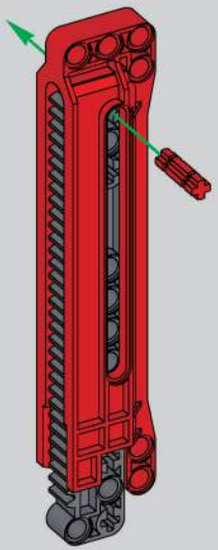

432

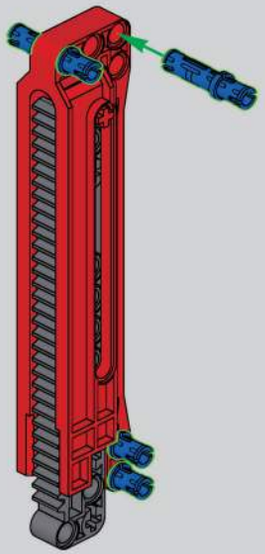

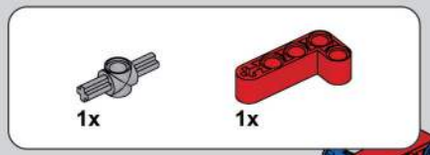

433

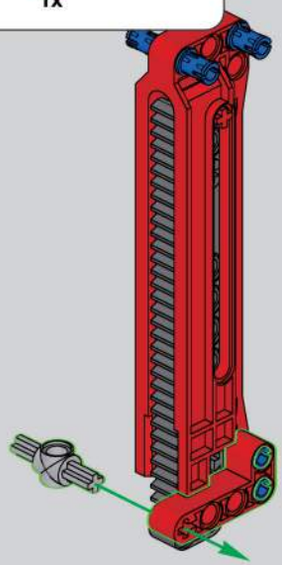

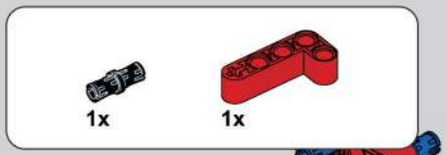

434

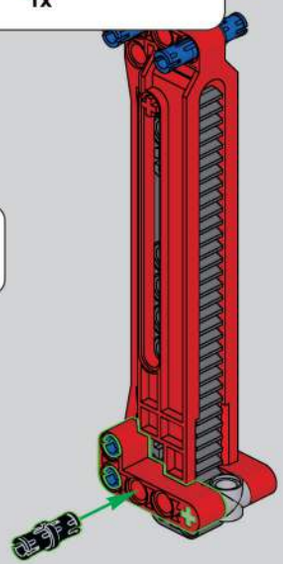

435

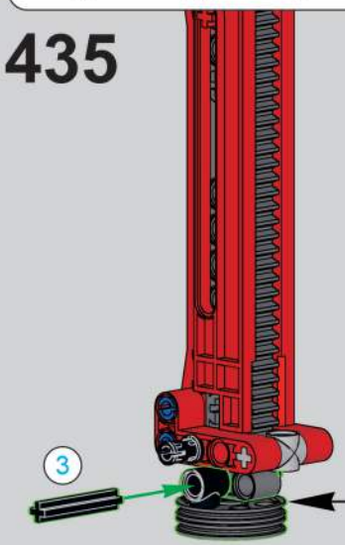

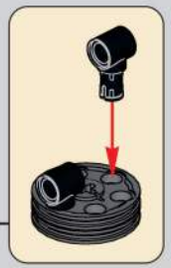

436

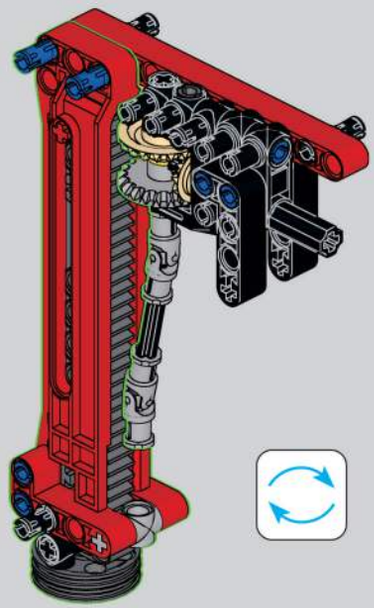

437

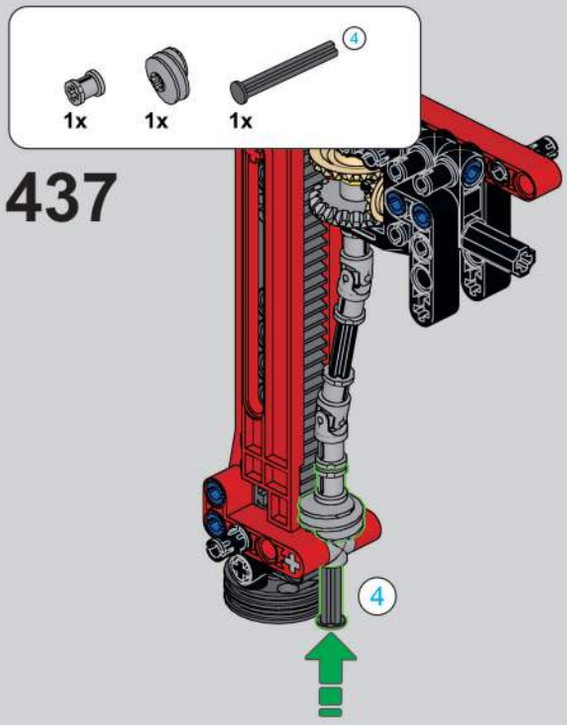

438

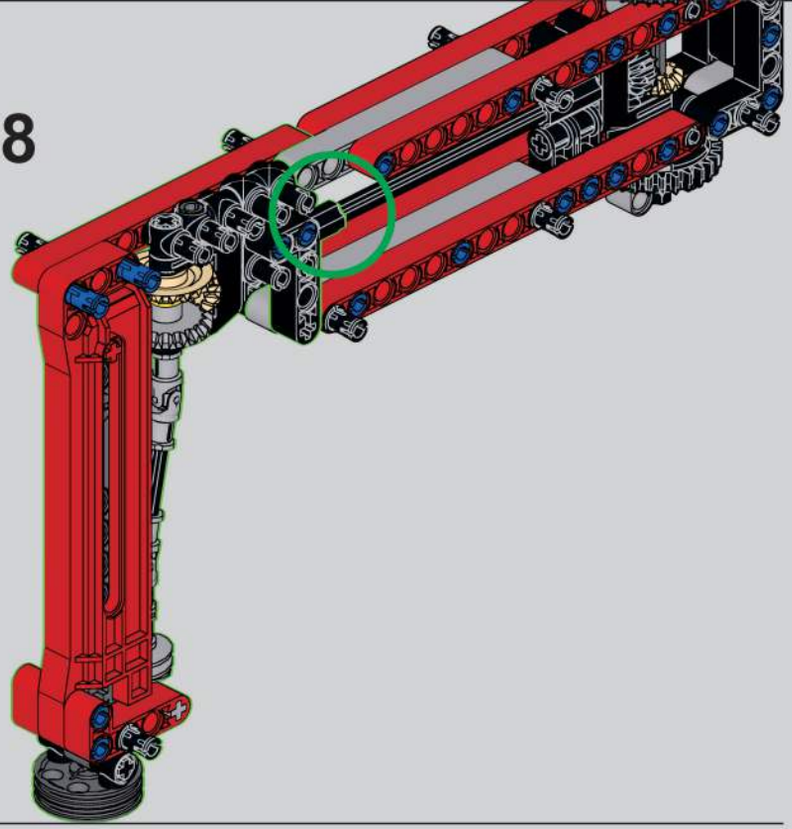

439

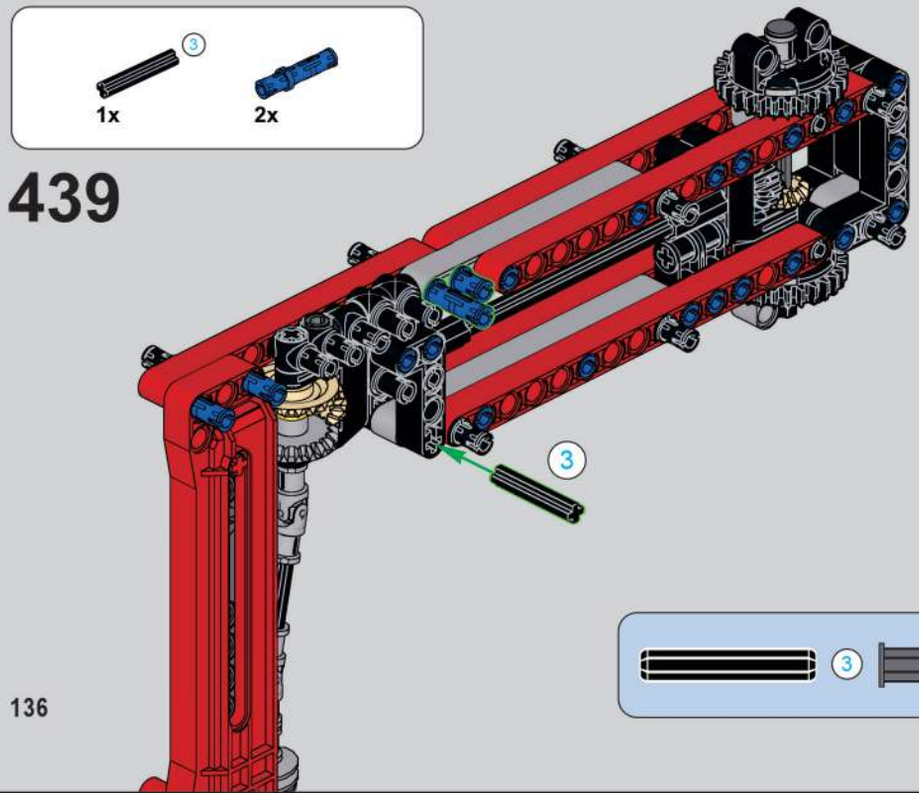

440

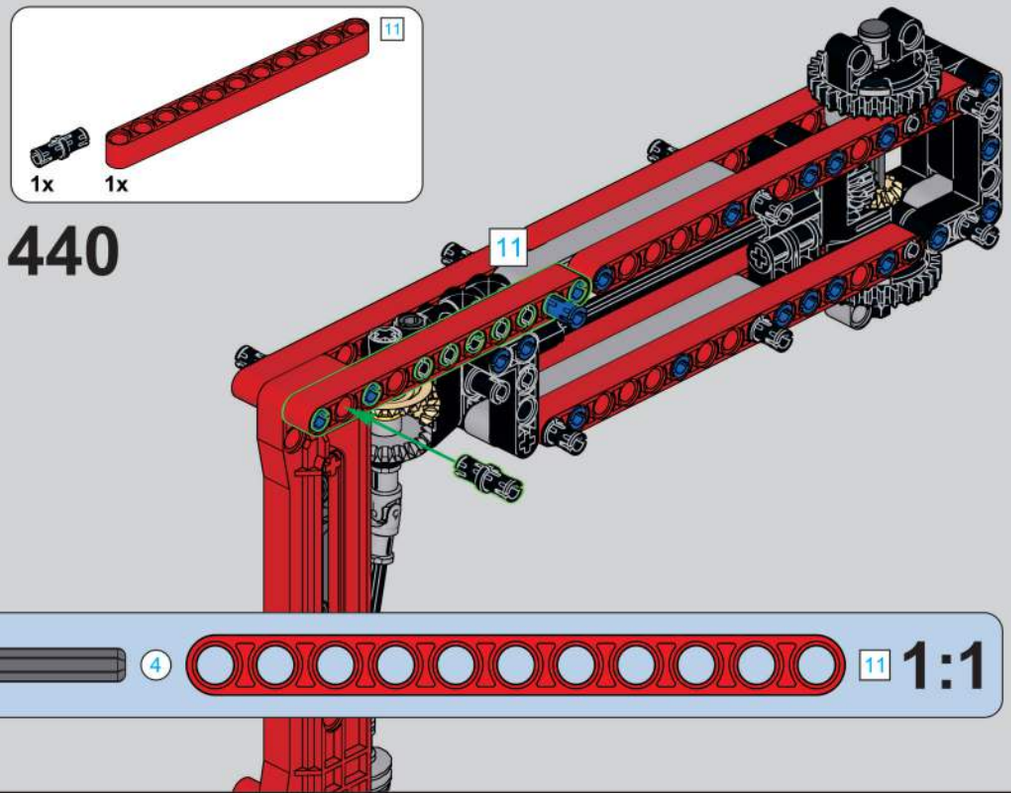

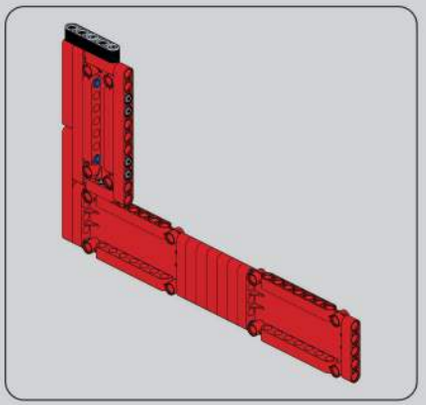

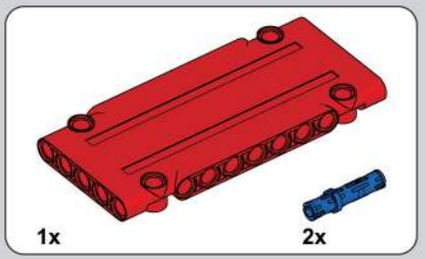

441

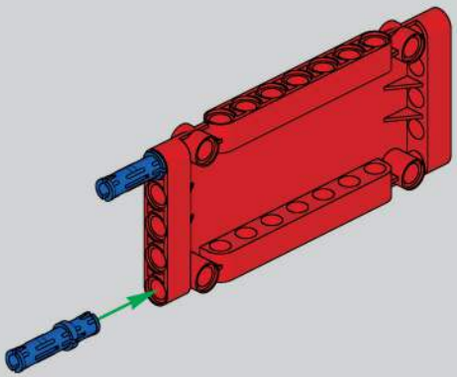

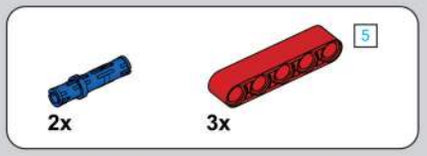

442

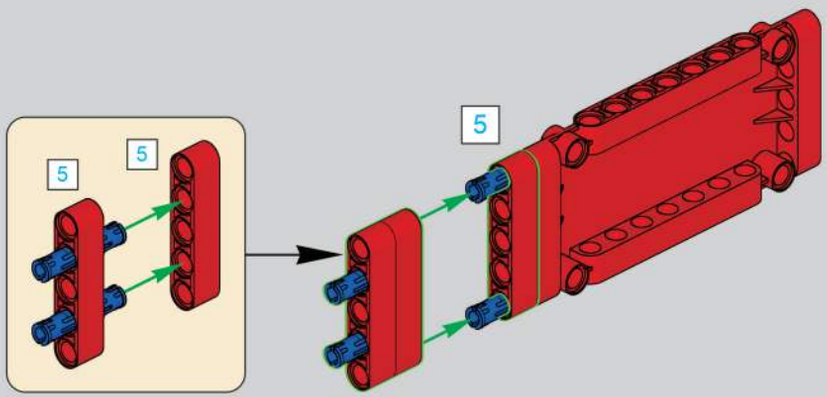

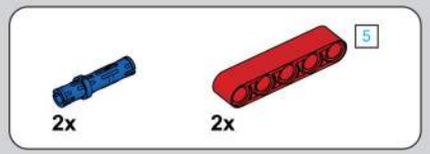

443

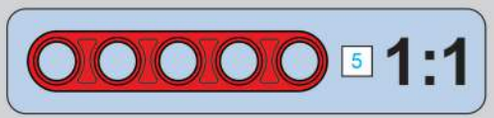

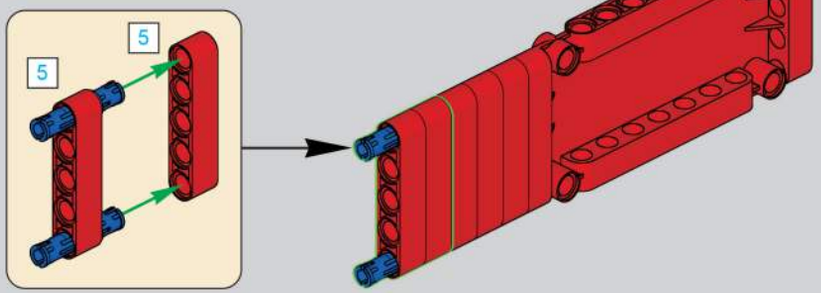

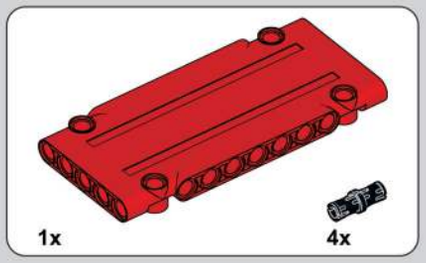

444

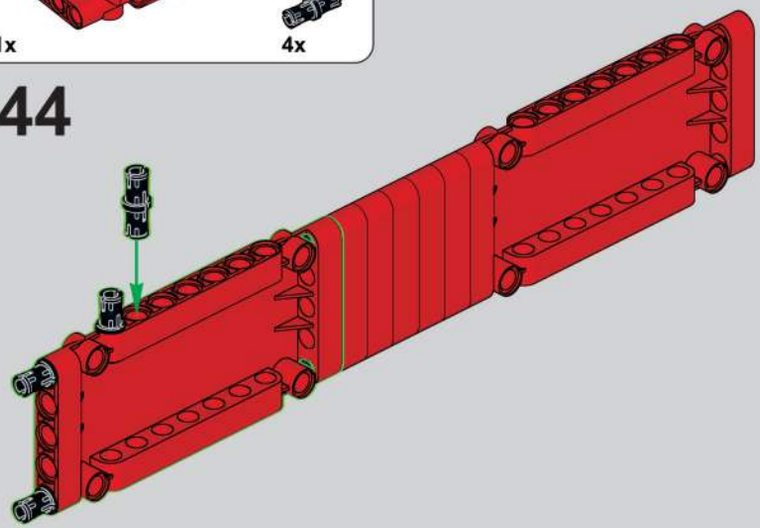

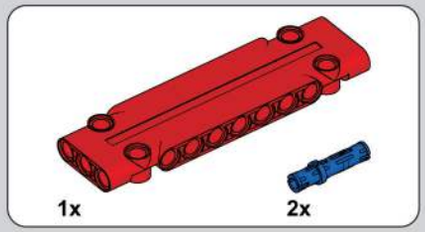

445

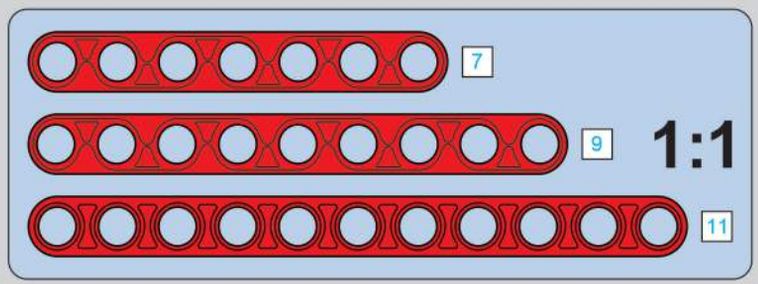

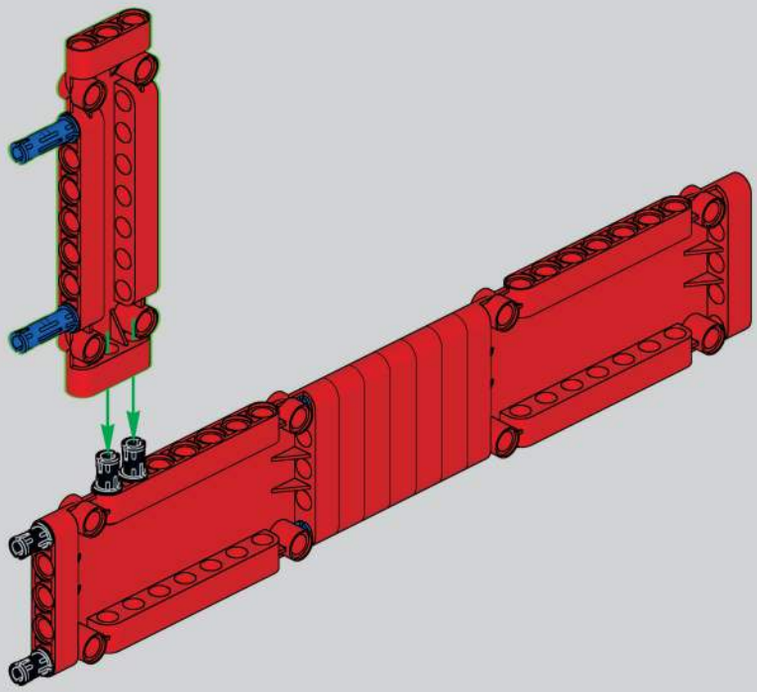

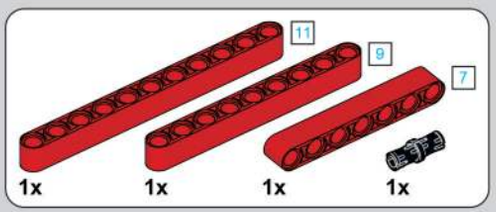

446

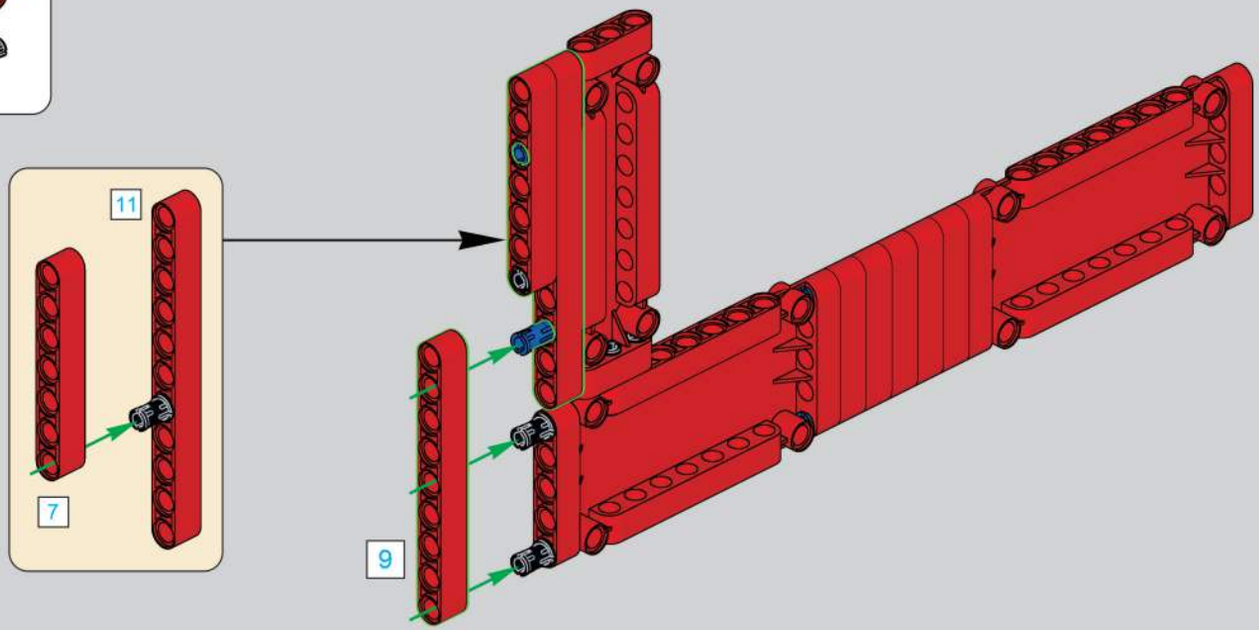

447

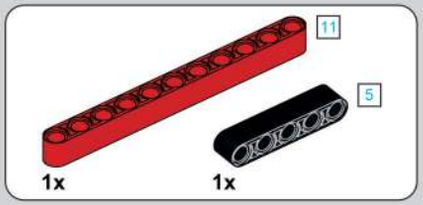

448

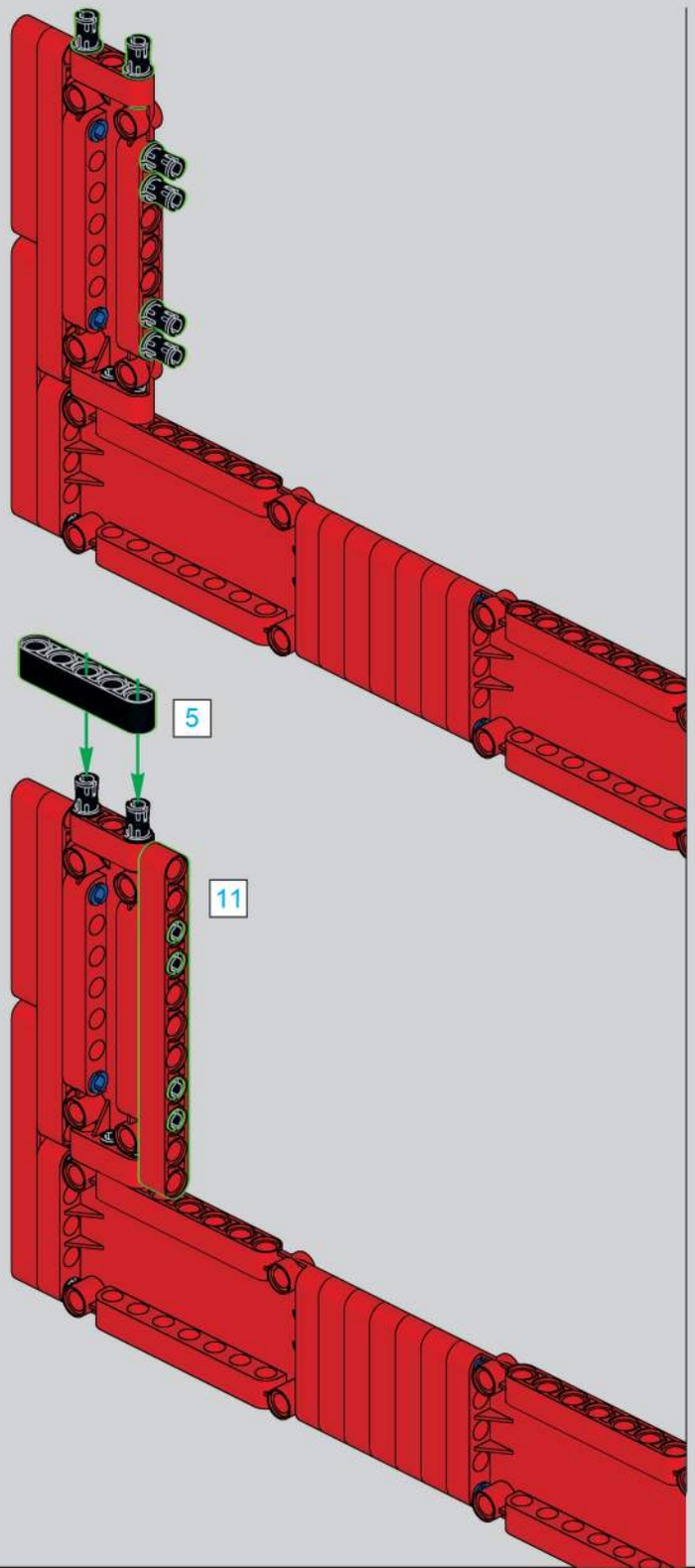

449

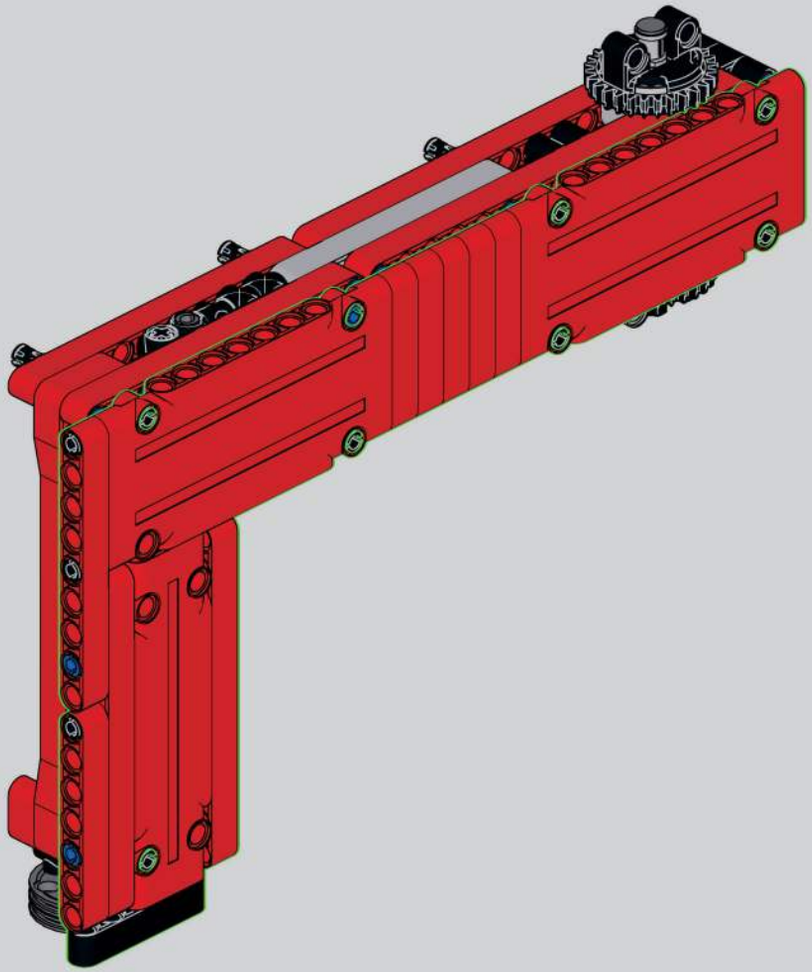

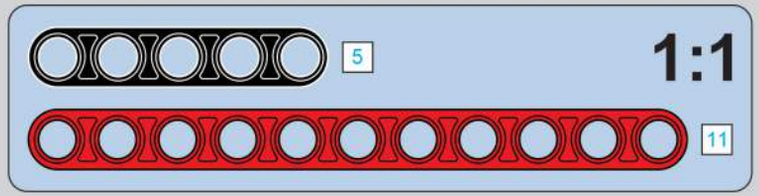

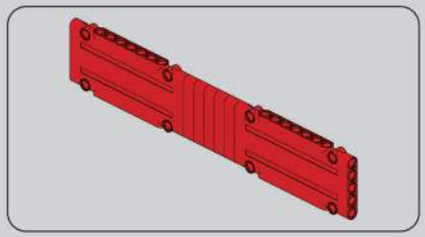

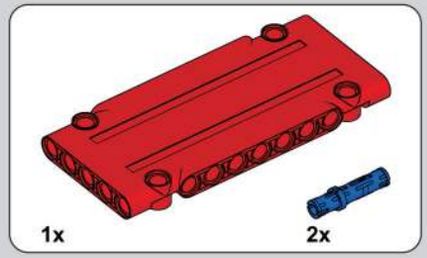

450

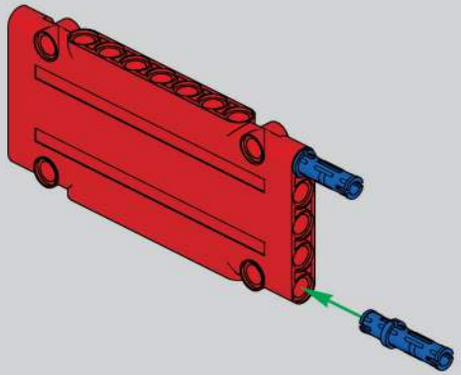

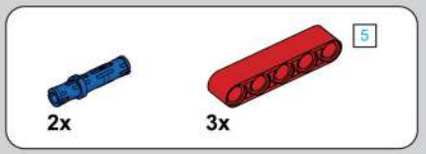

451

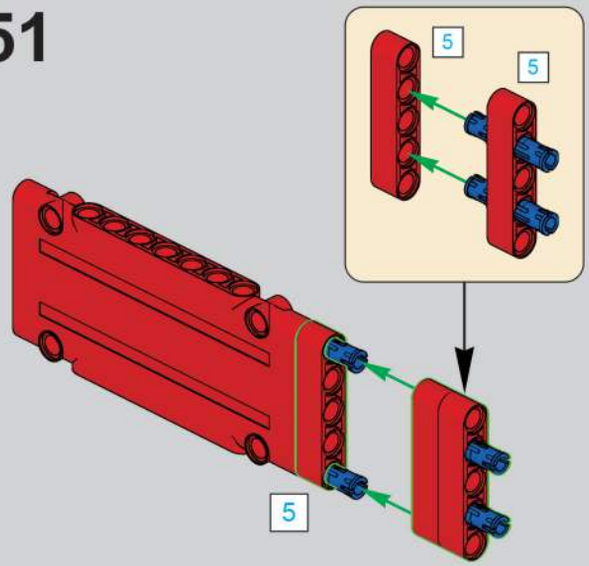

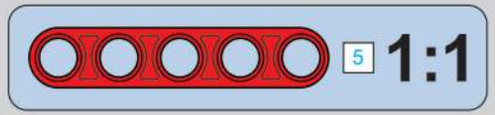

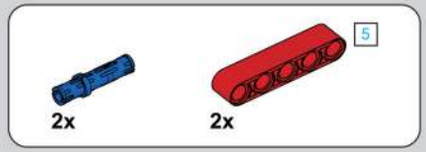

452

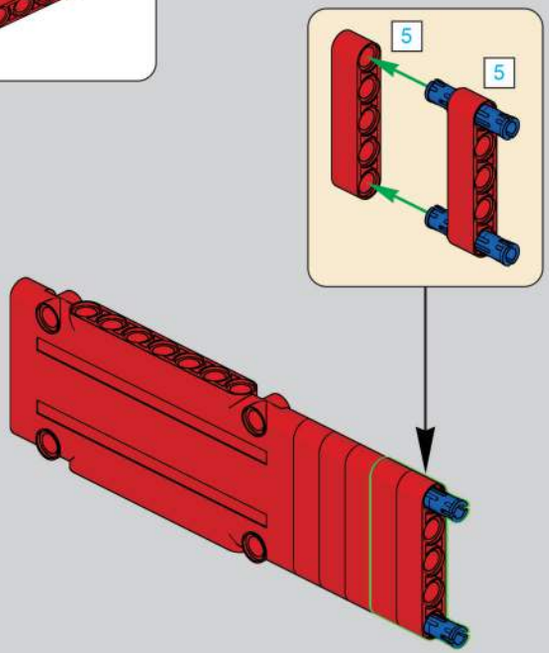

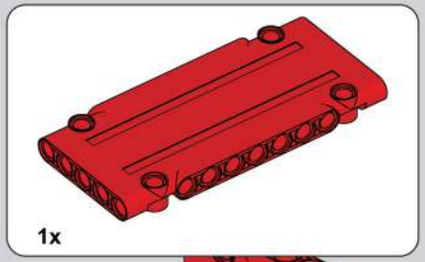

453

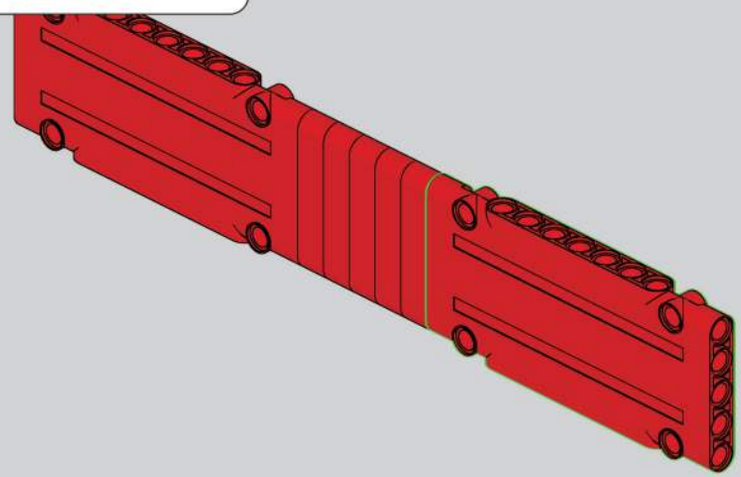

454

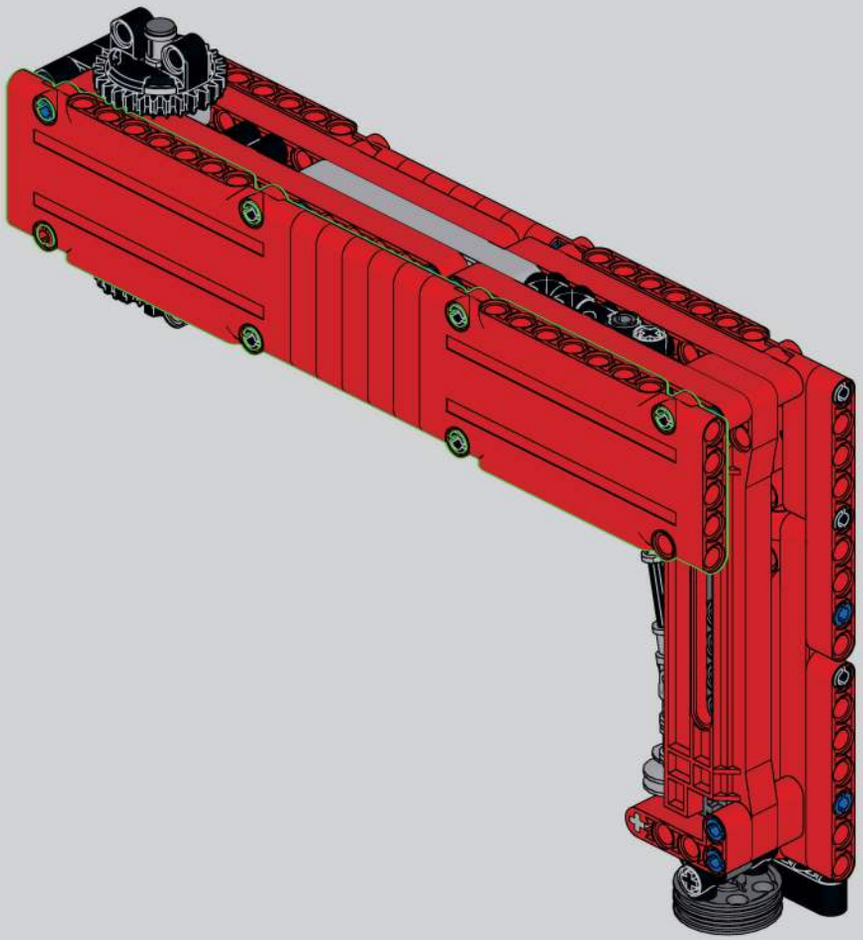

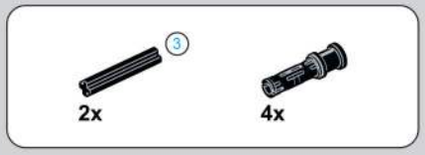

455

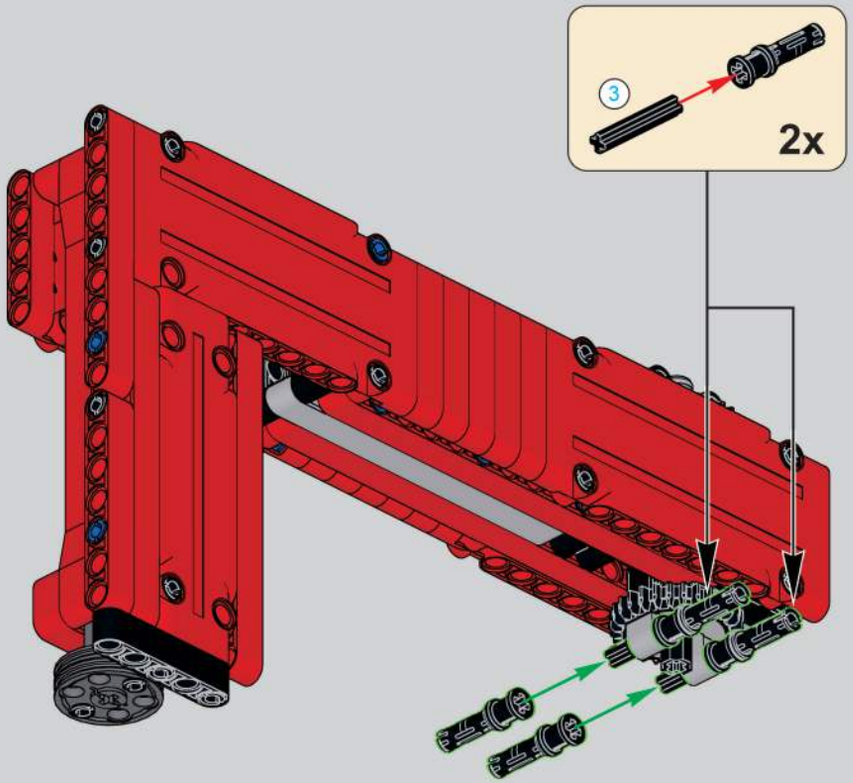

456

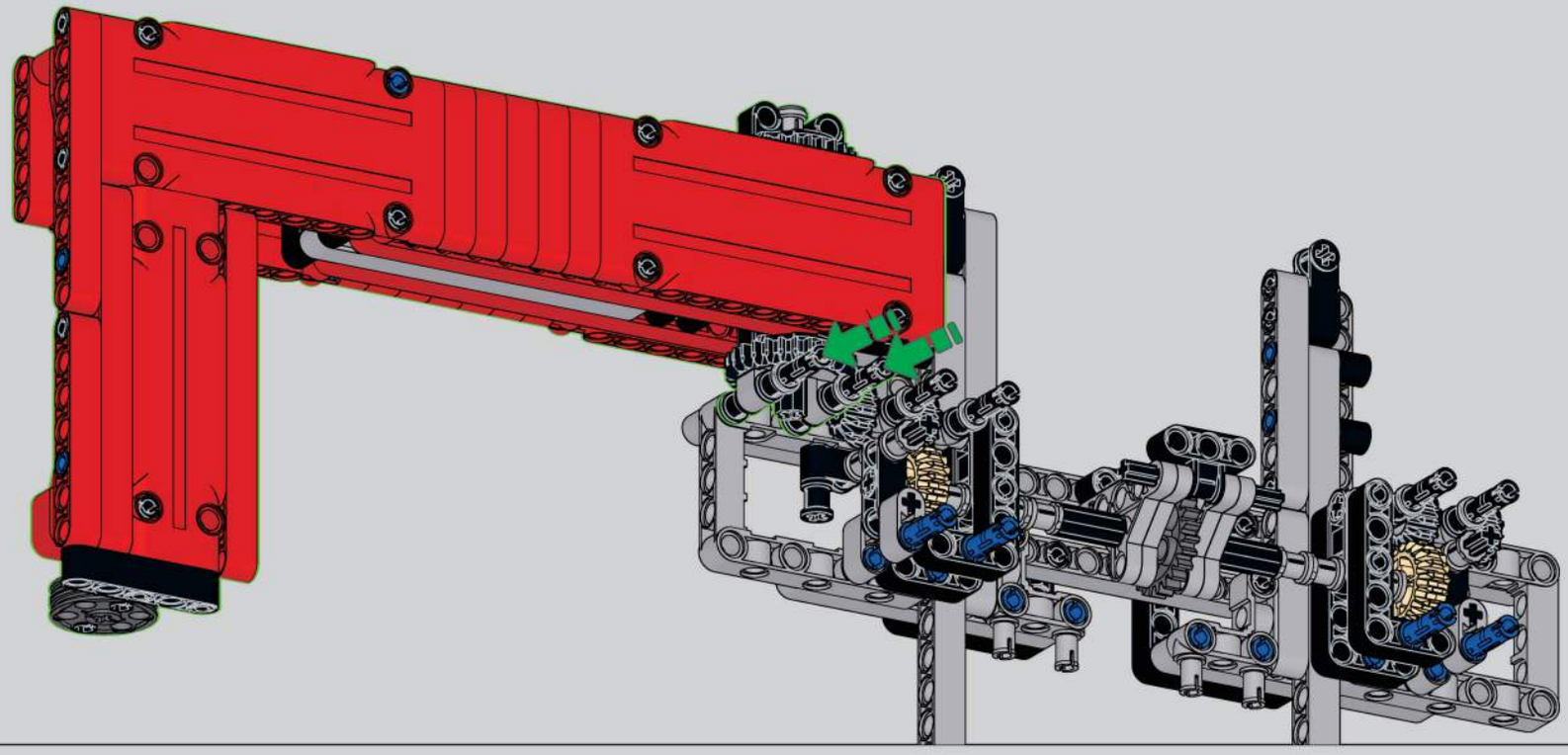

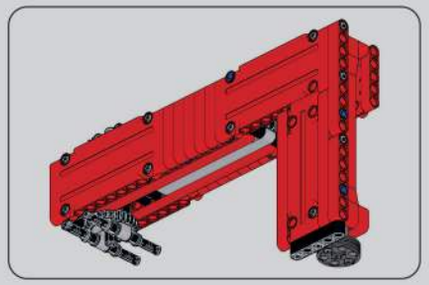

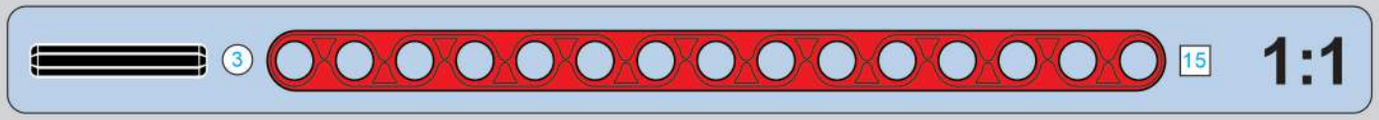

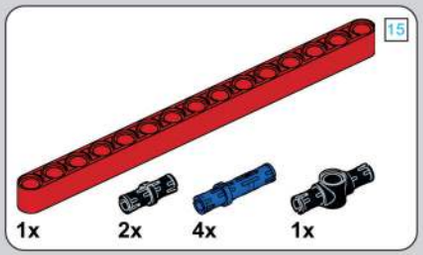

457

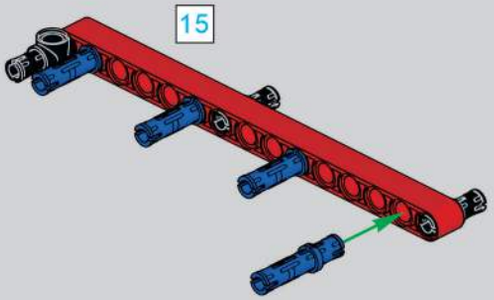

458

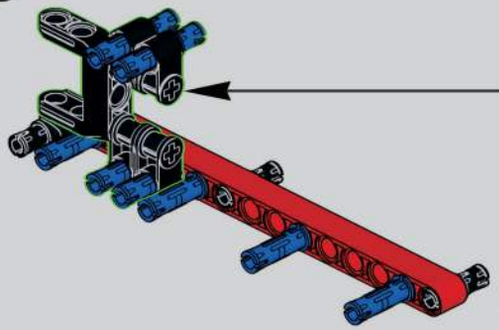

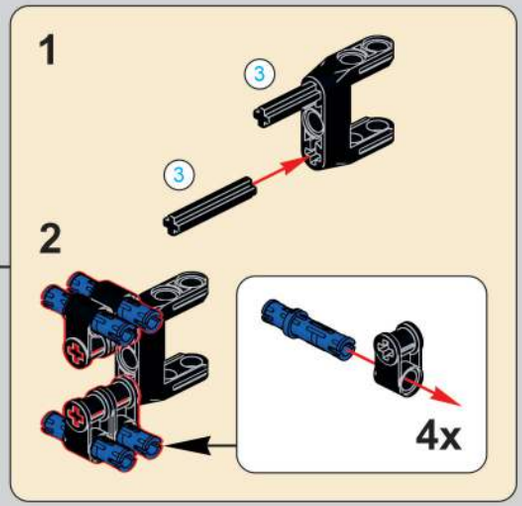

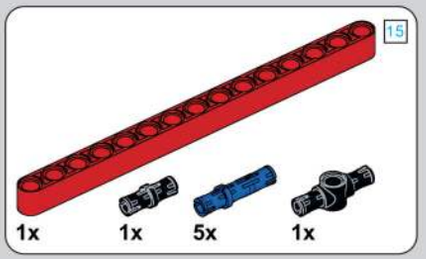

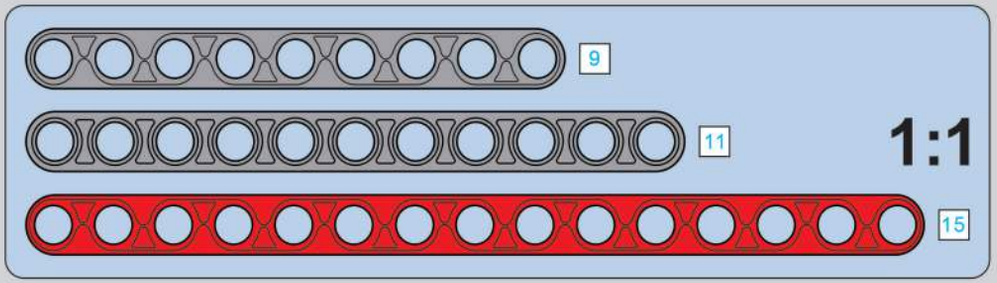

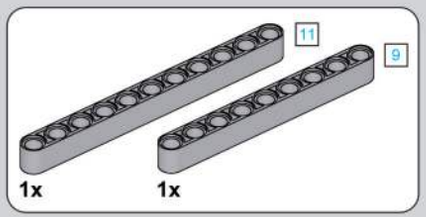

459

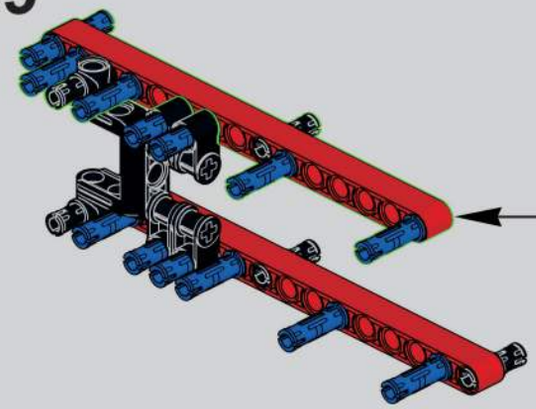

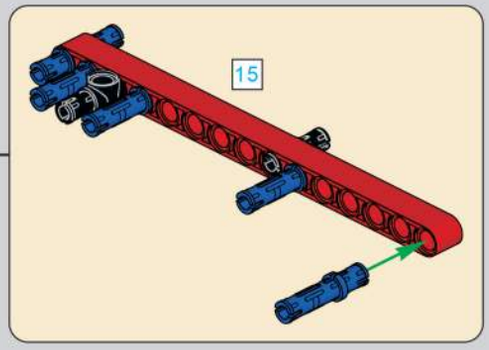

460

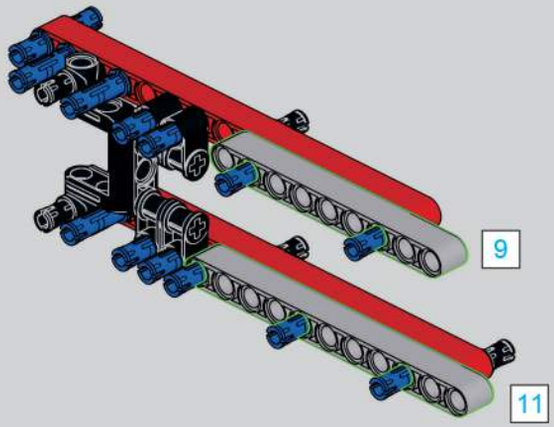

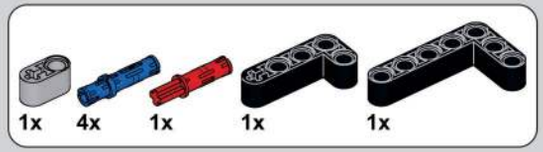

461

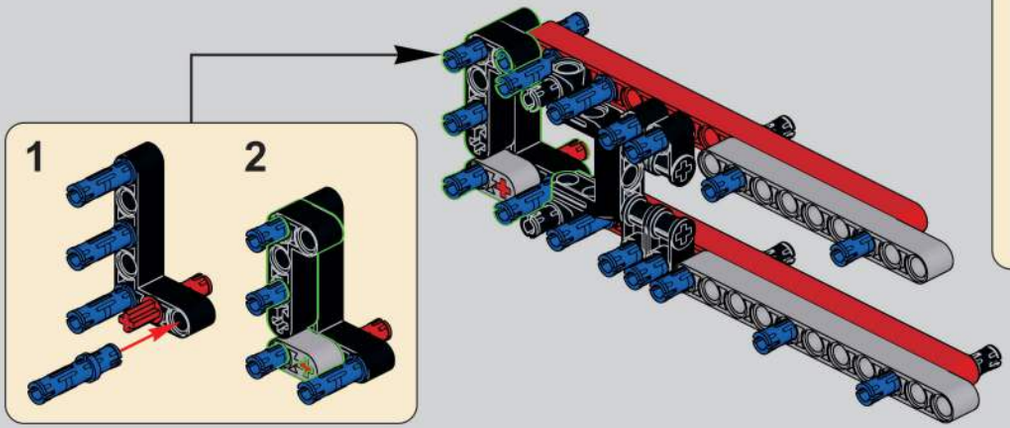

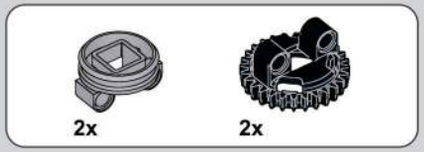

462

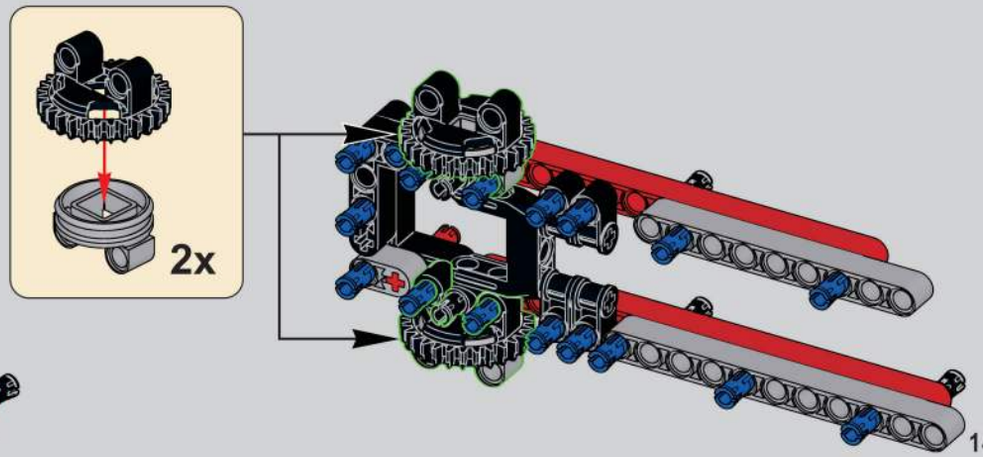

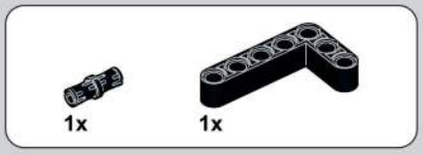

463

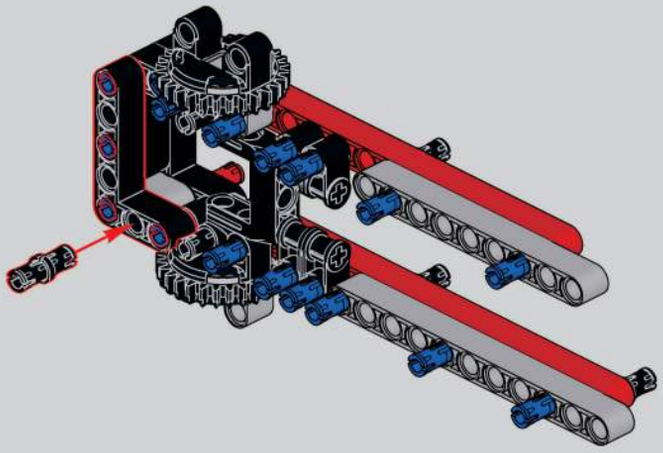

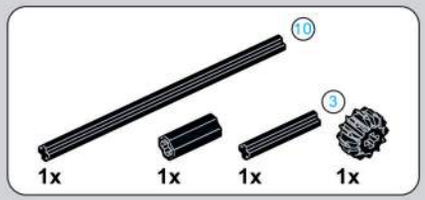

464

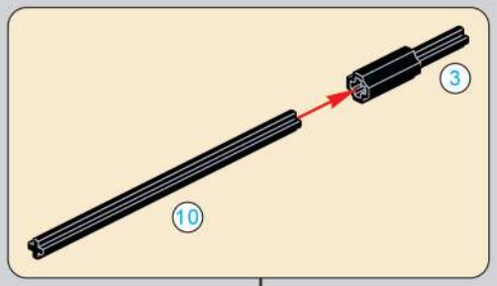

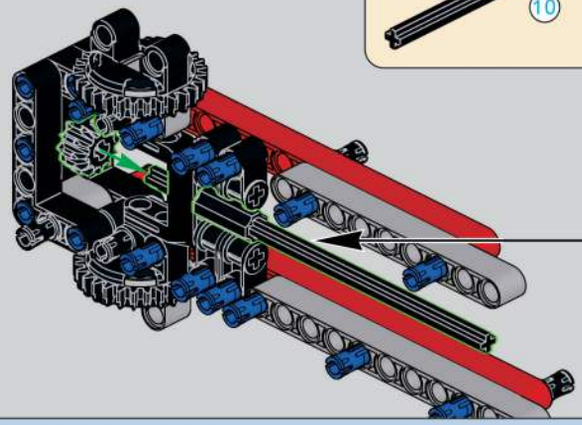

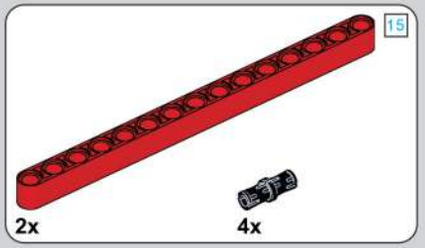

465

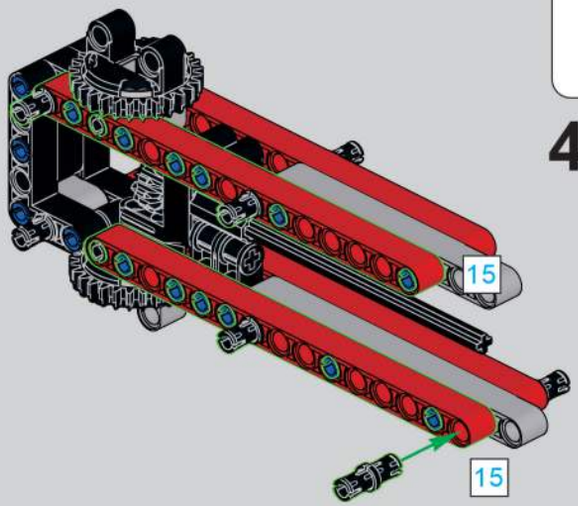

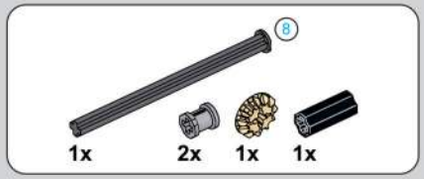

466

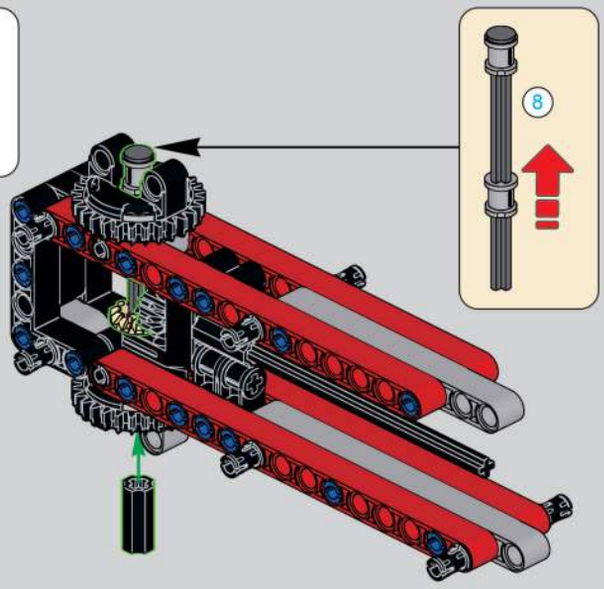

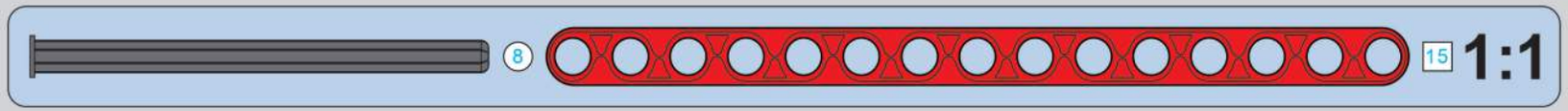

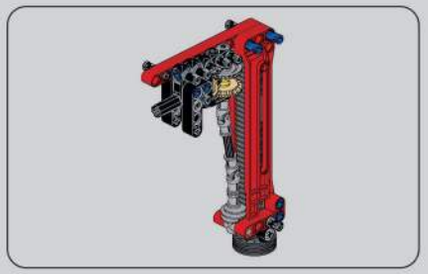

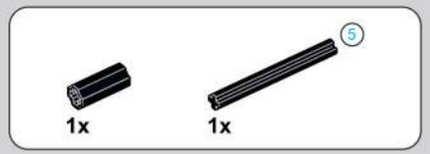

467

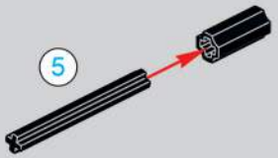

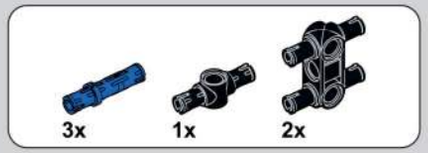

468

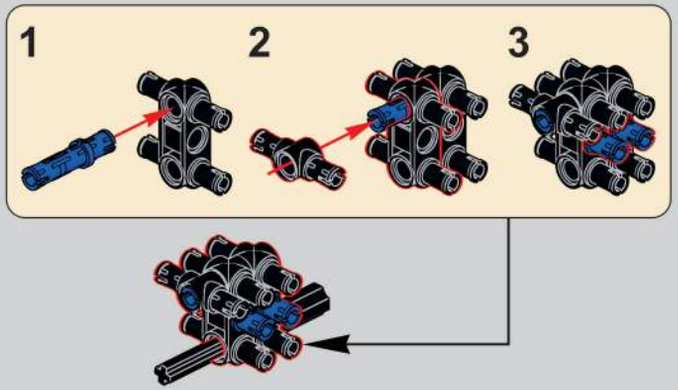

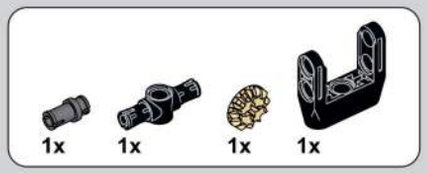

469

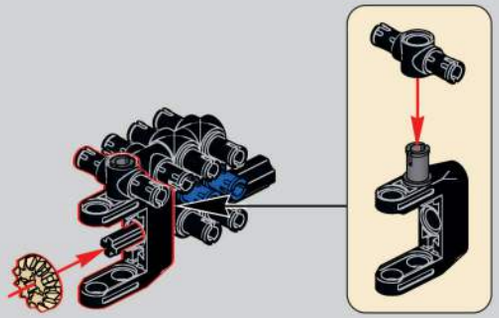

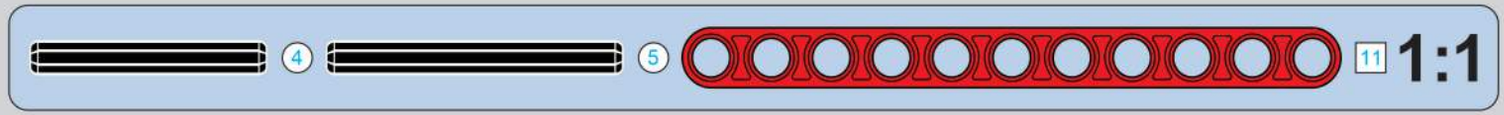

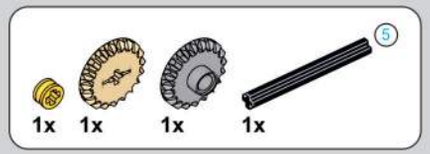

470

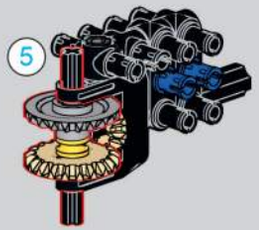

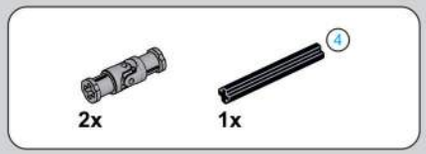

471

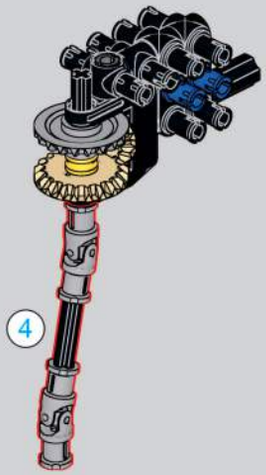

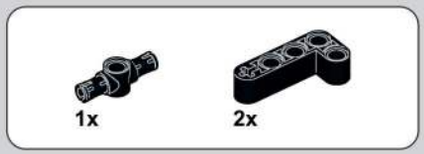

472

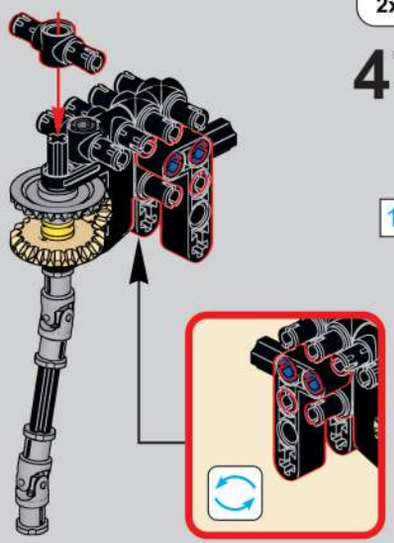

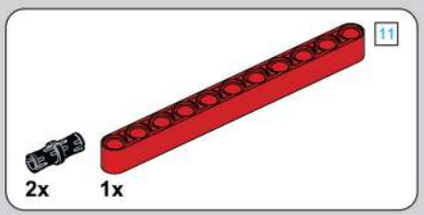

473

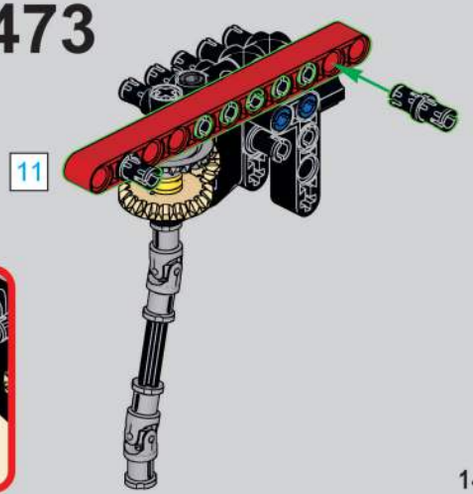

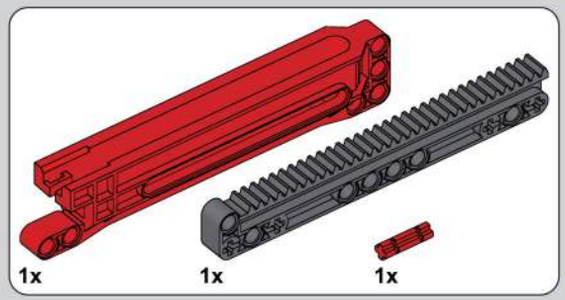

474

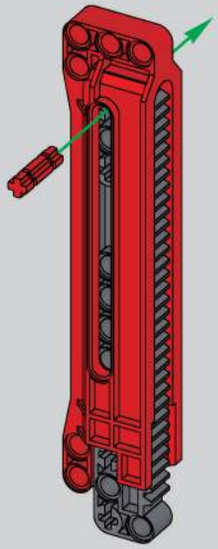

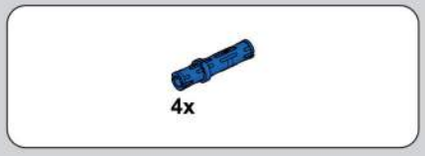

475

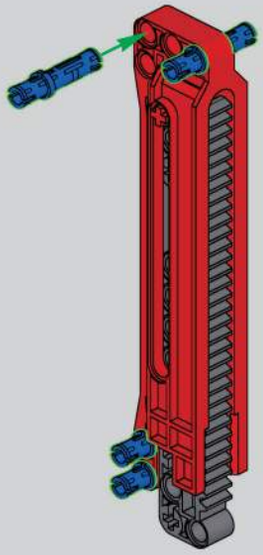

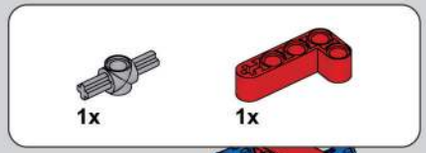

476

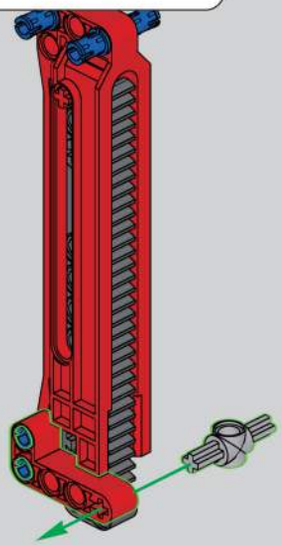

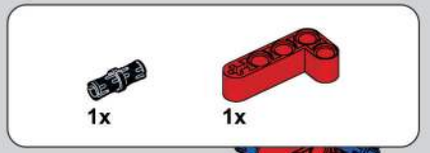

477

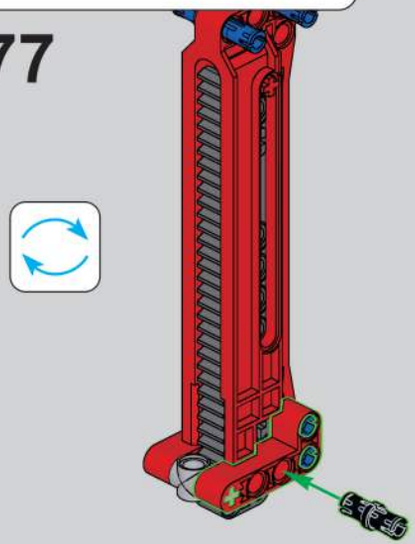

478

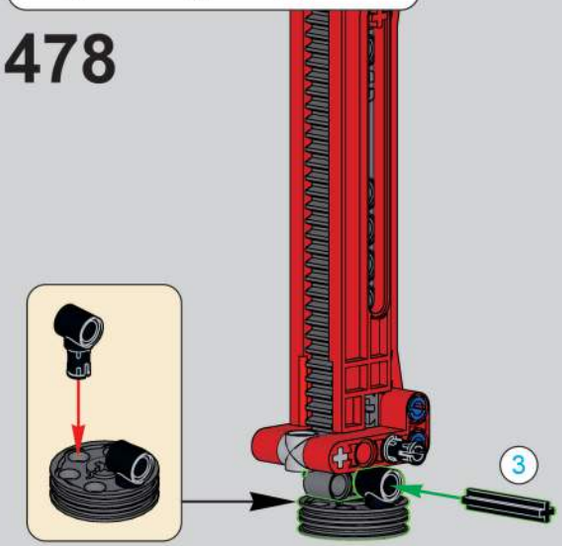

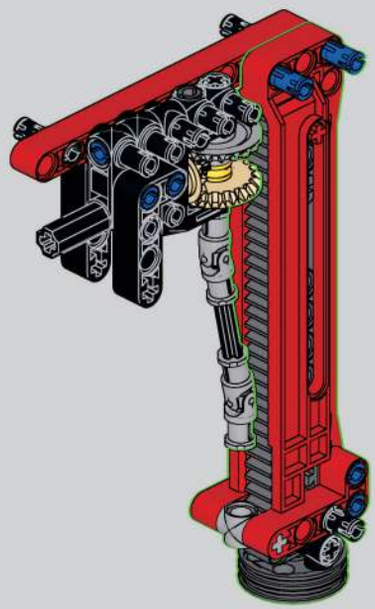
479

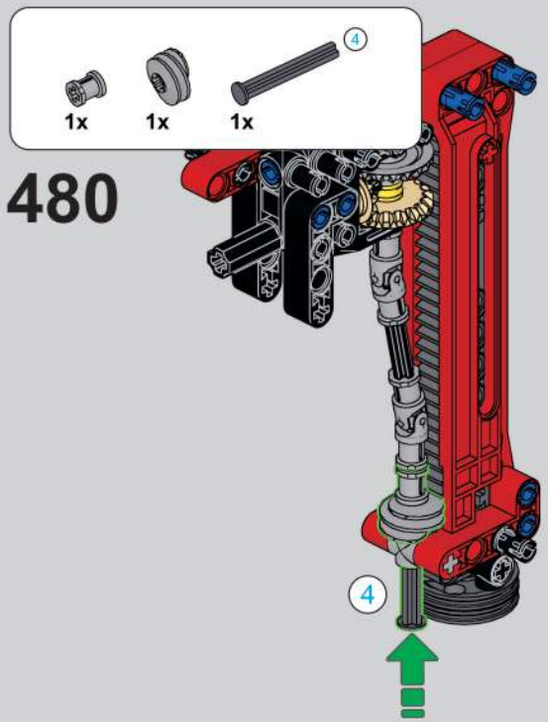
4
1x
1x
1x
480
4

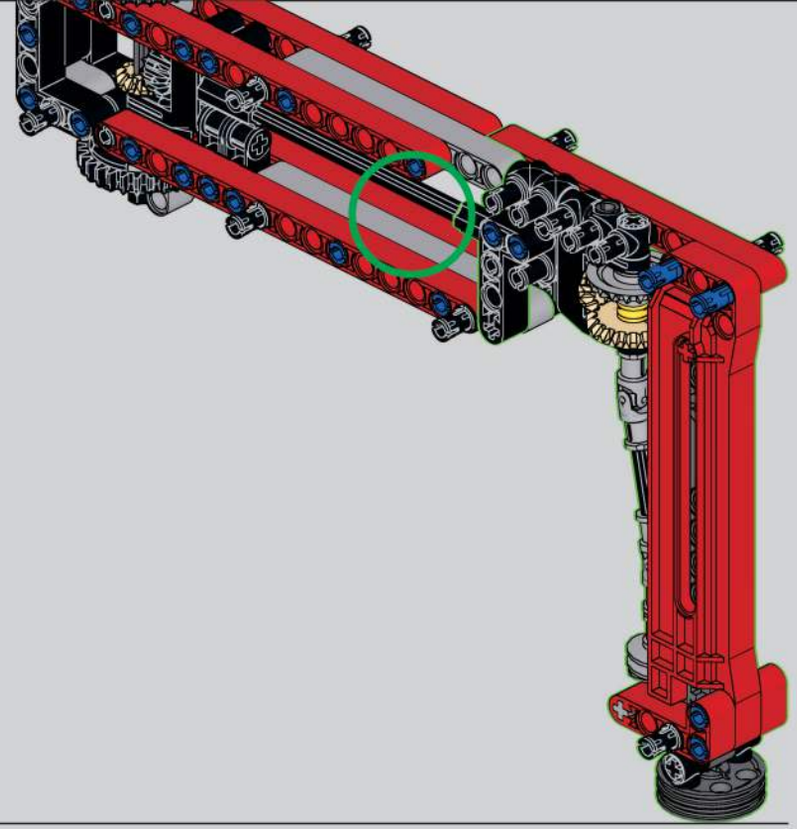
481

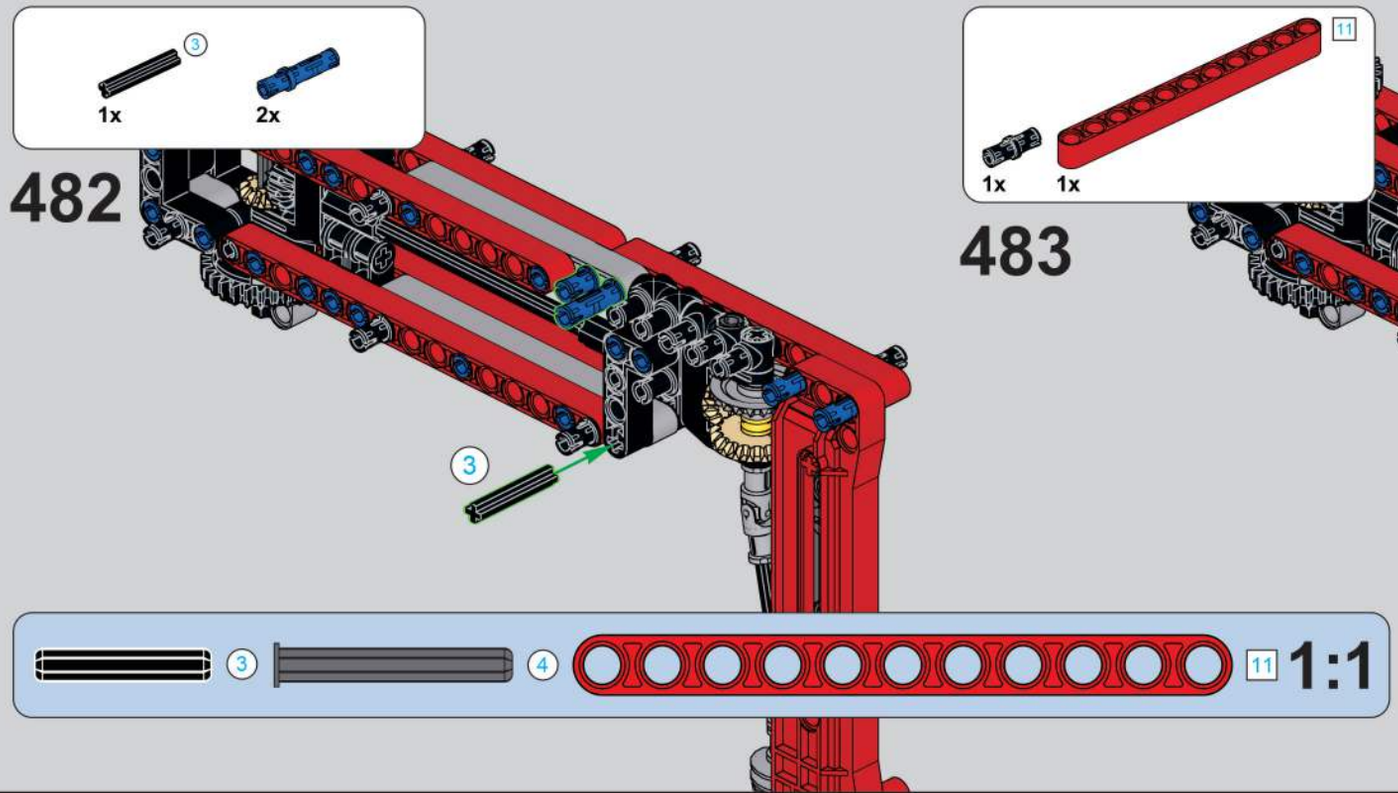
3
1x
2x
482
3
3
4
11
1:1

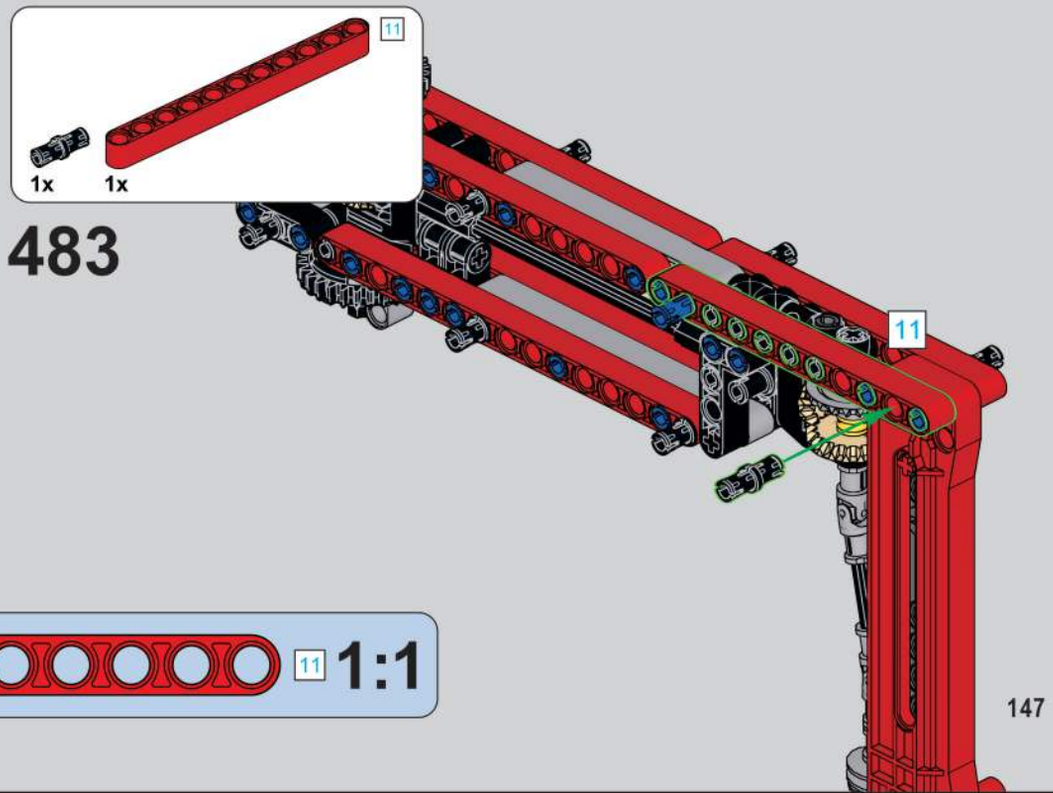
11
1x
1x
483
11

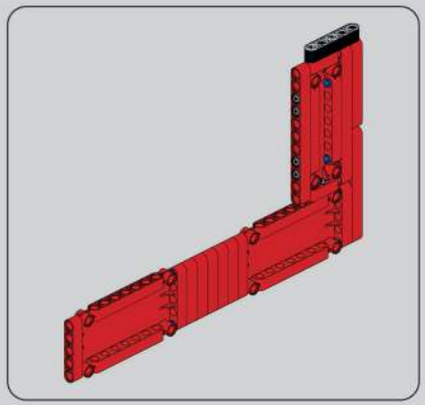

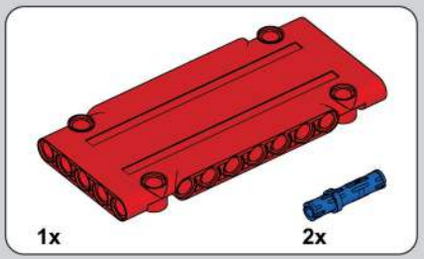

484

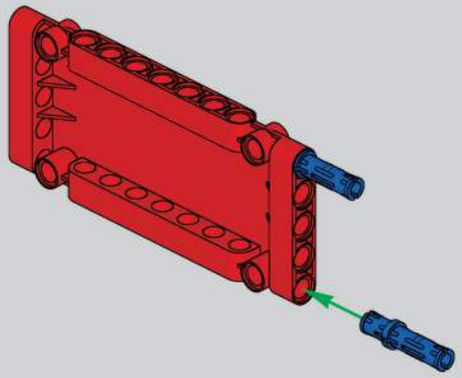

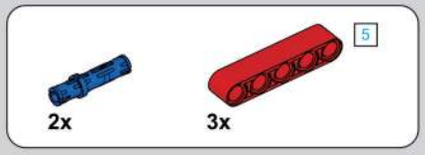

485

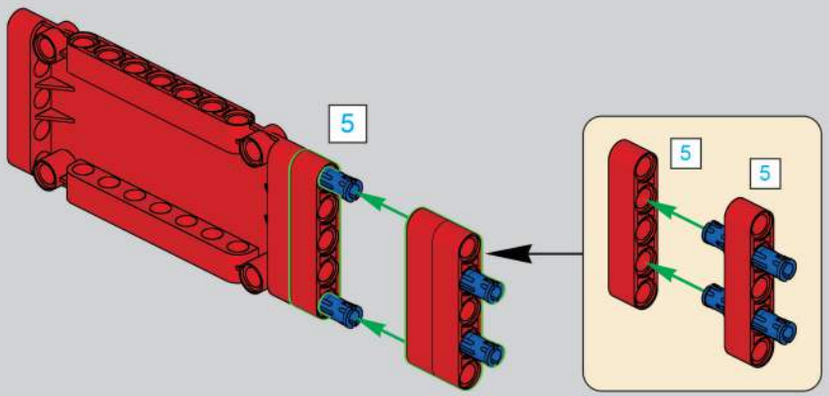

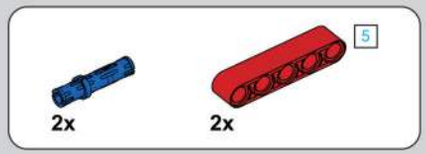

486

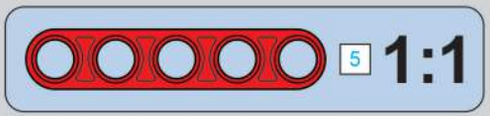

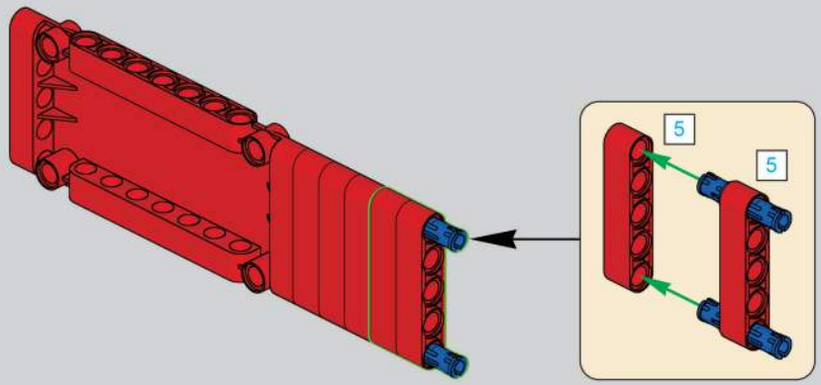

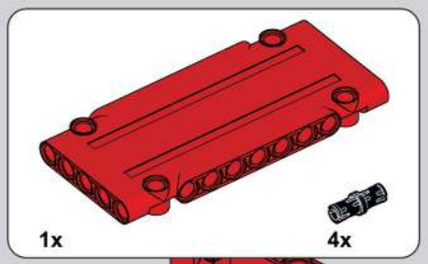

487

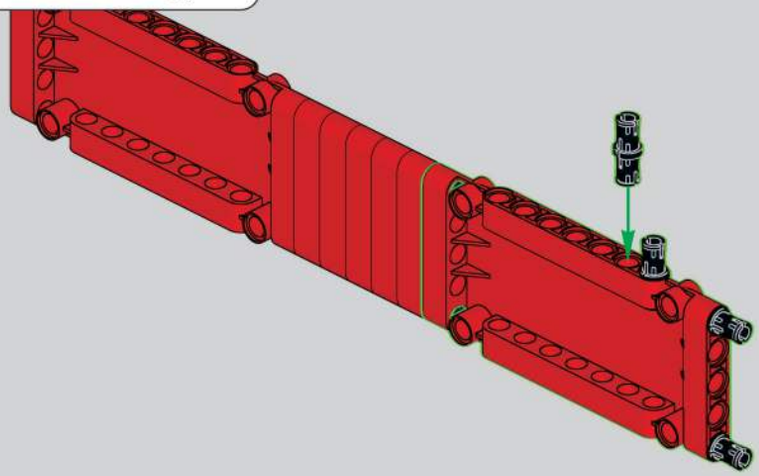

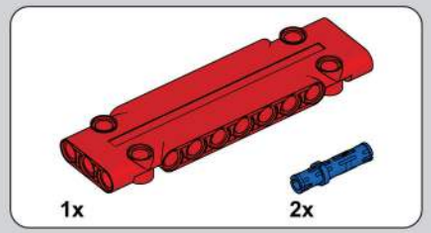

488

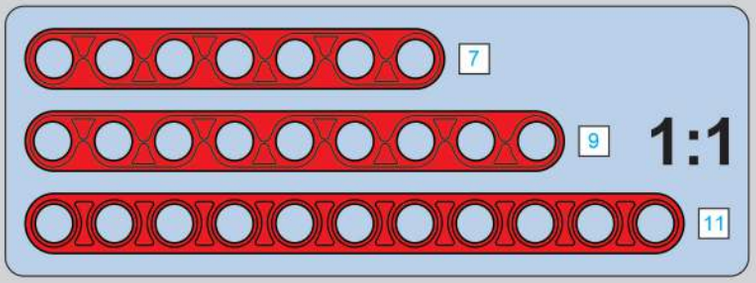

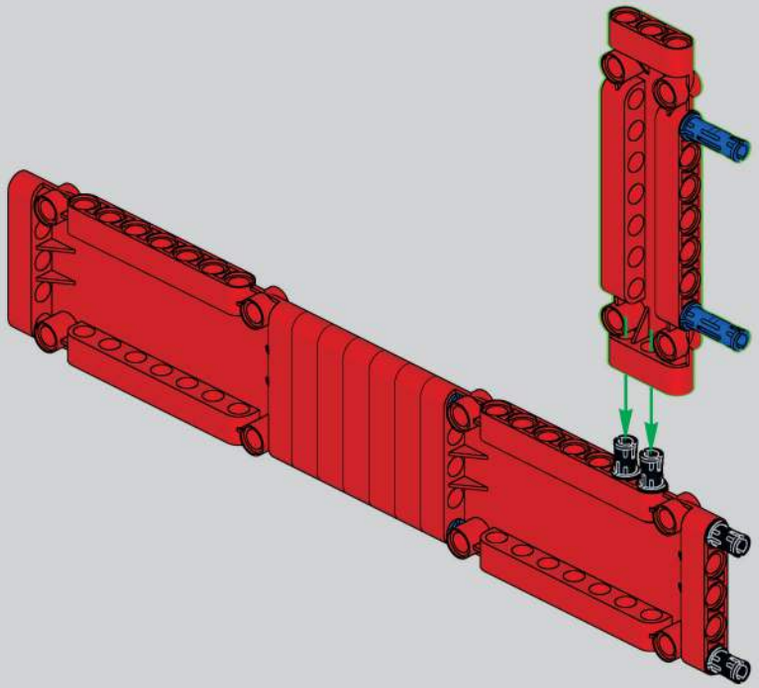

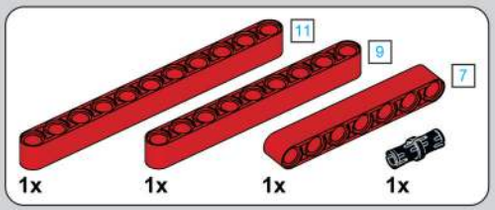

489

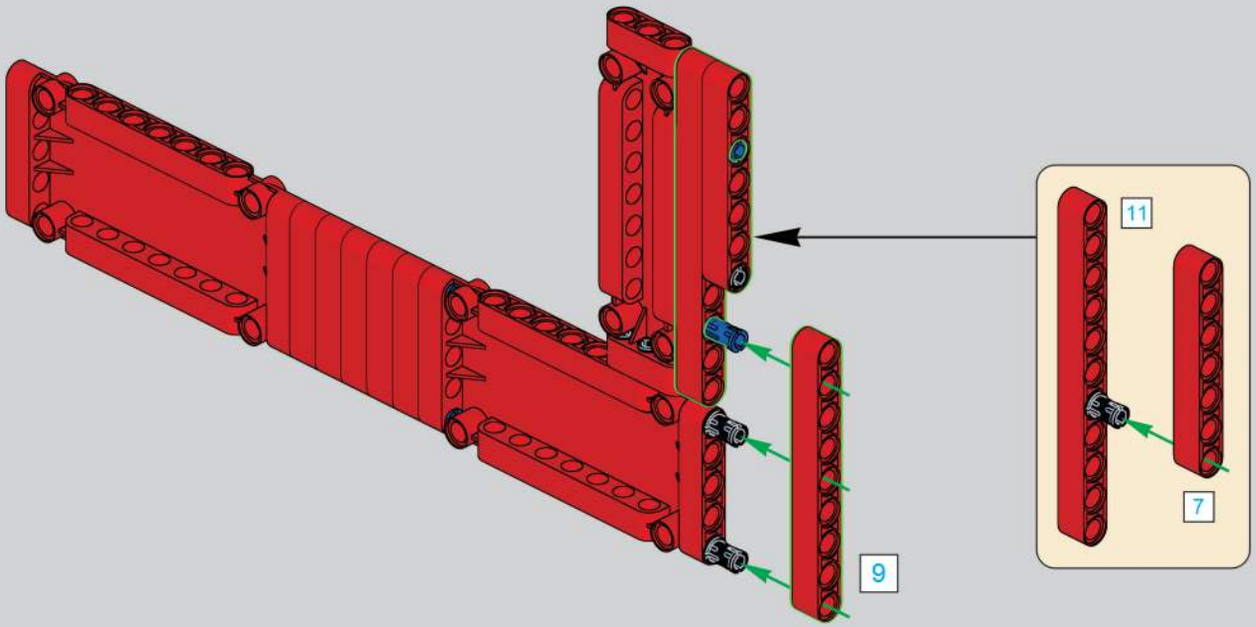

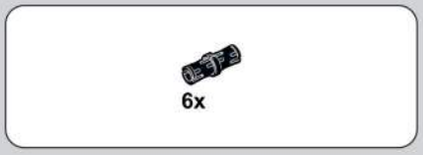

490

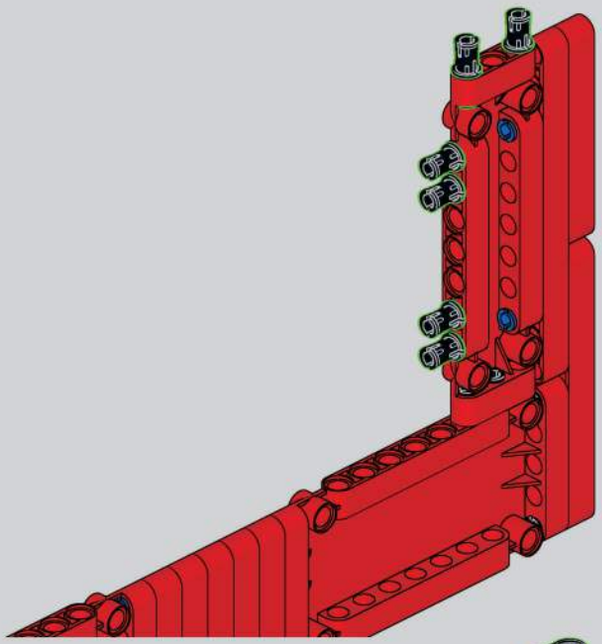

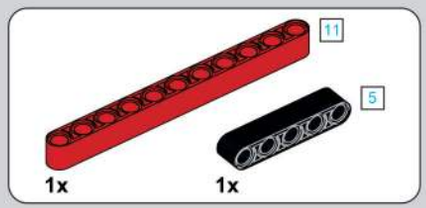

491

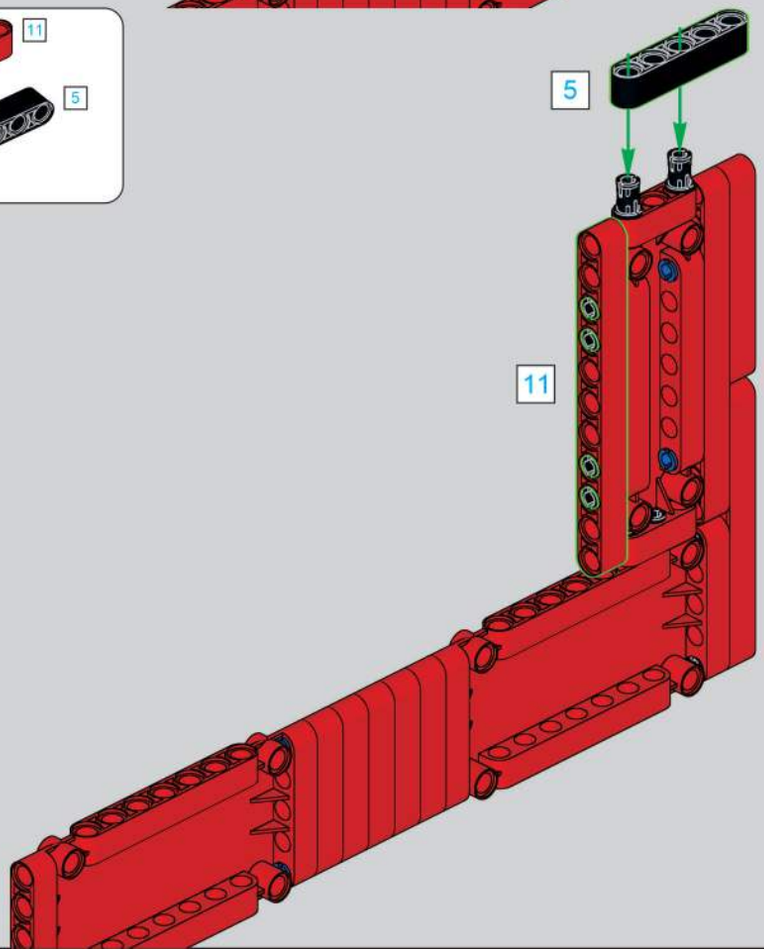

492

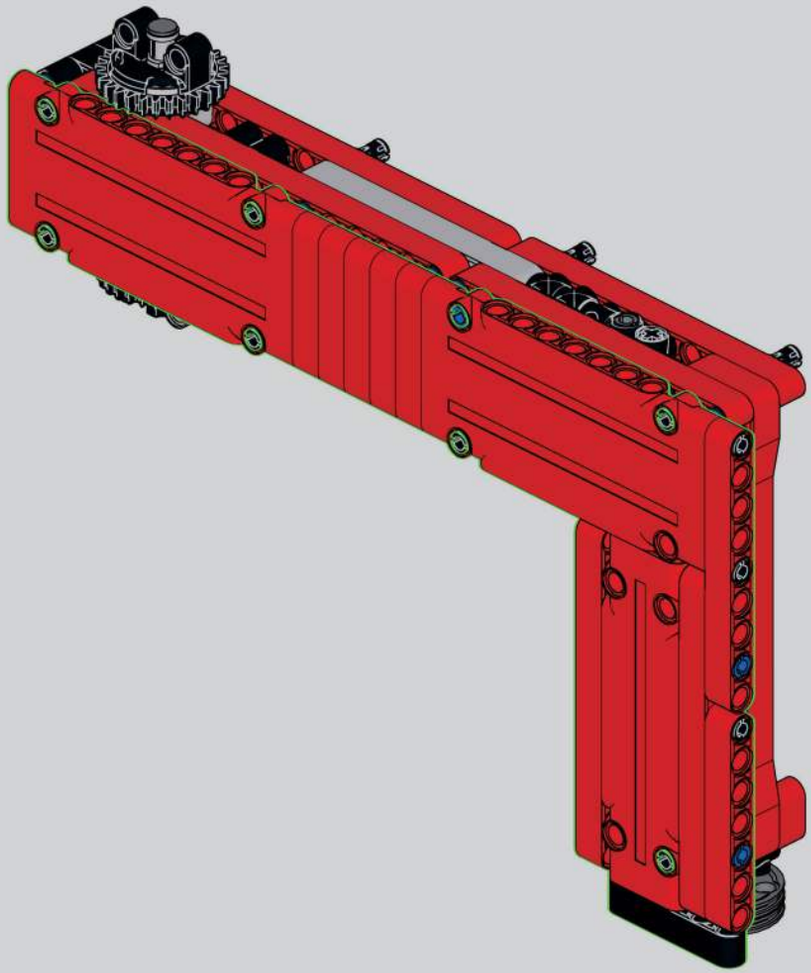

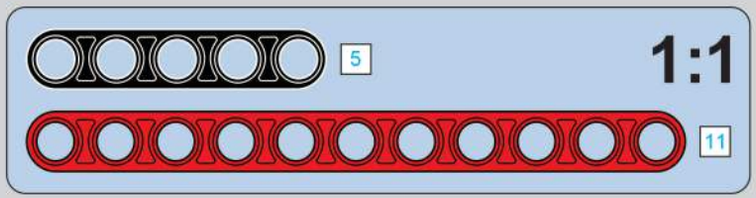

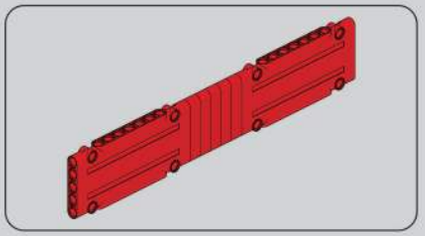

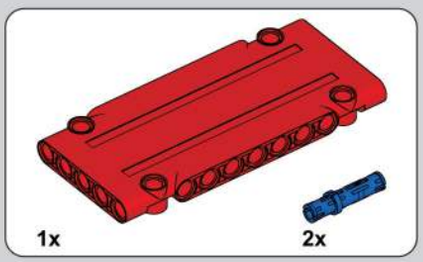

493

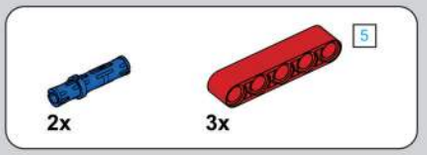

494

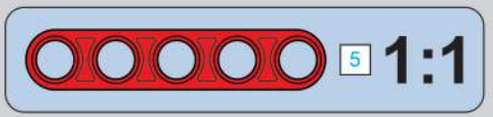

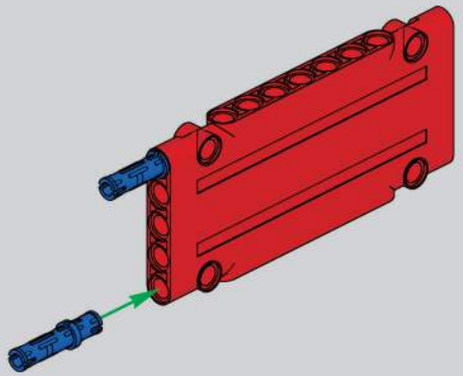

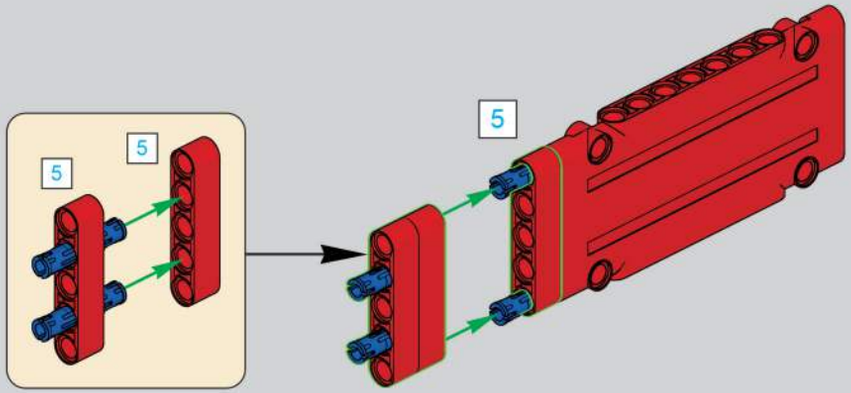

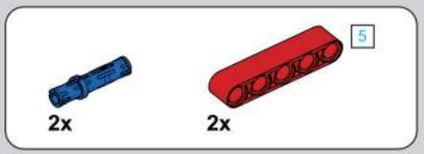

495

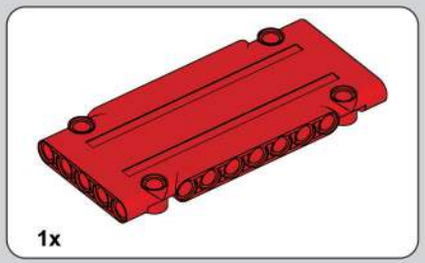

496

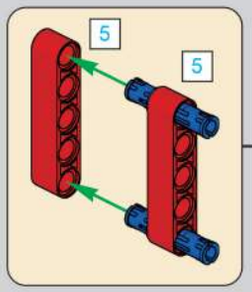

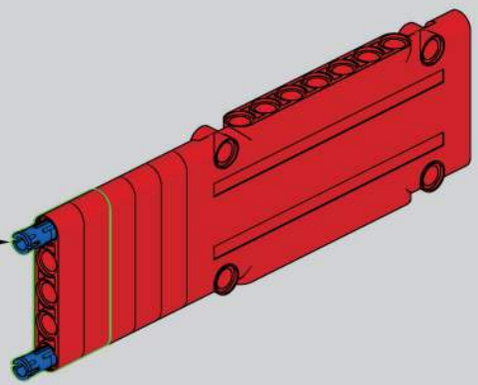

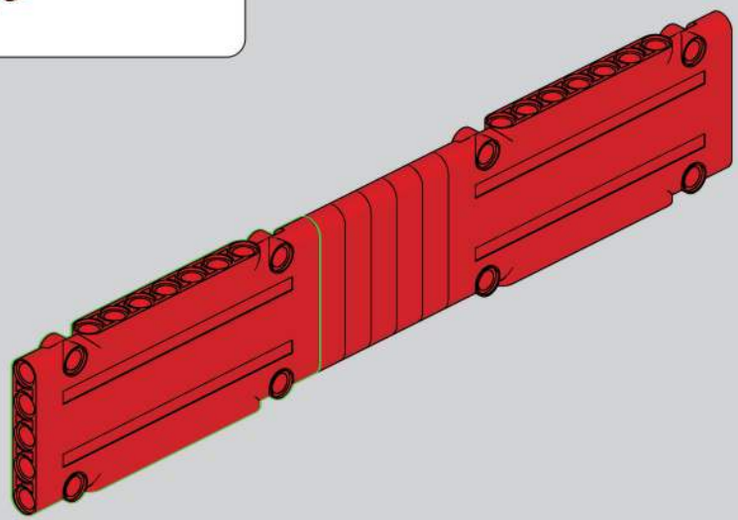

497

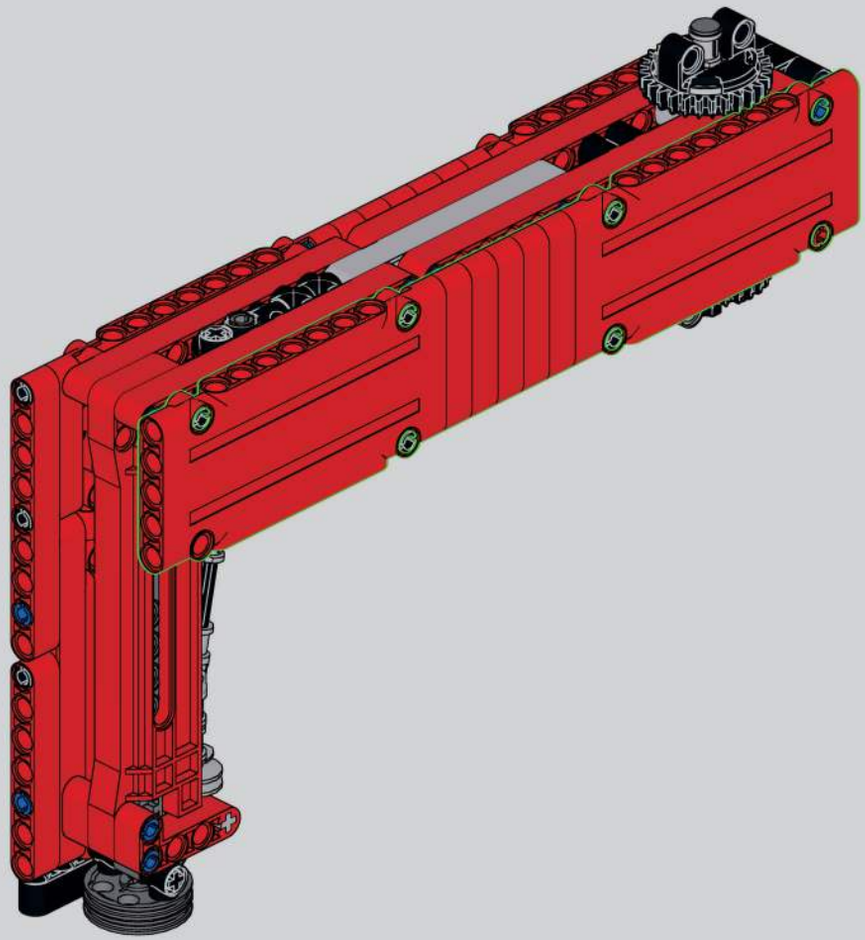

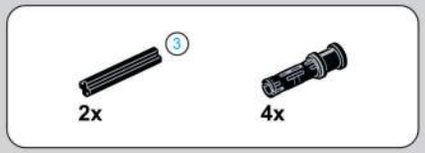

498

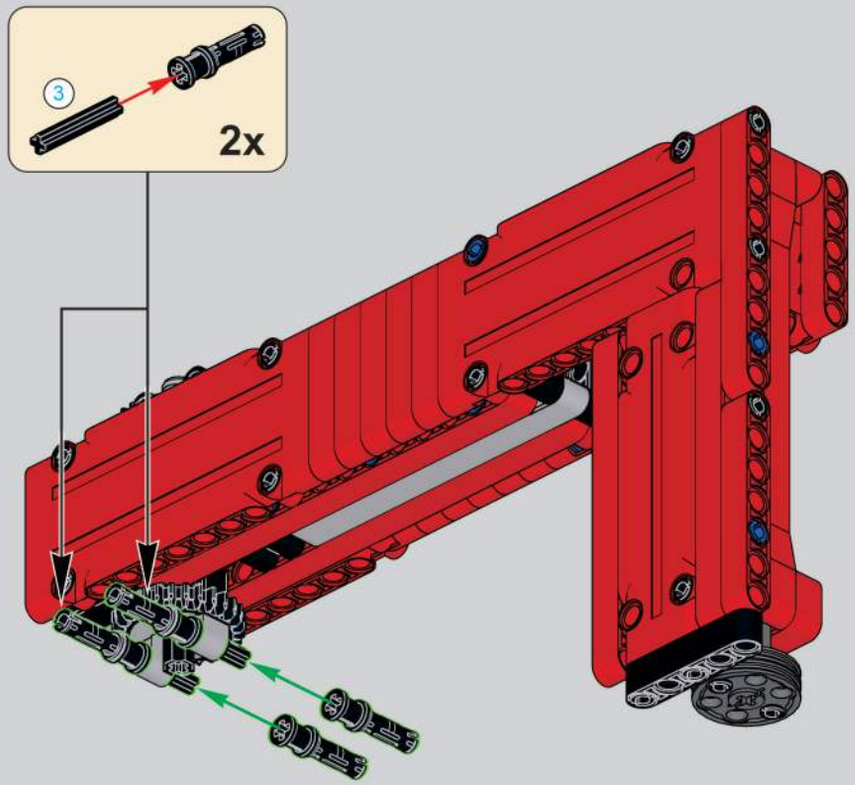

499

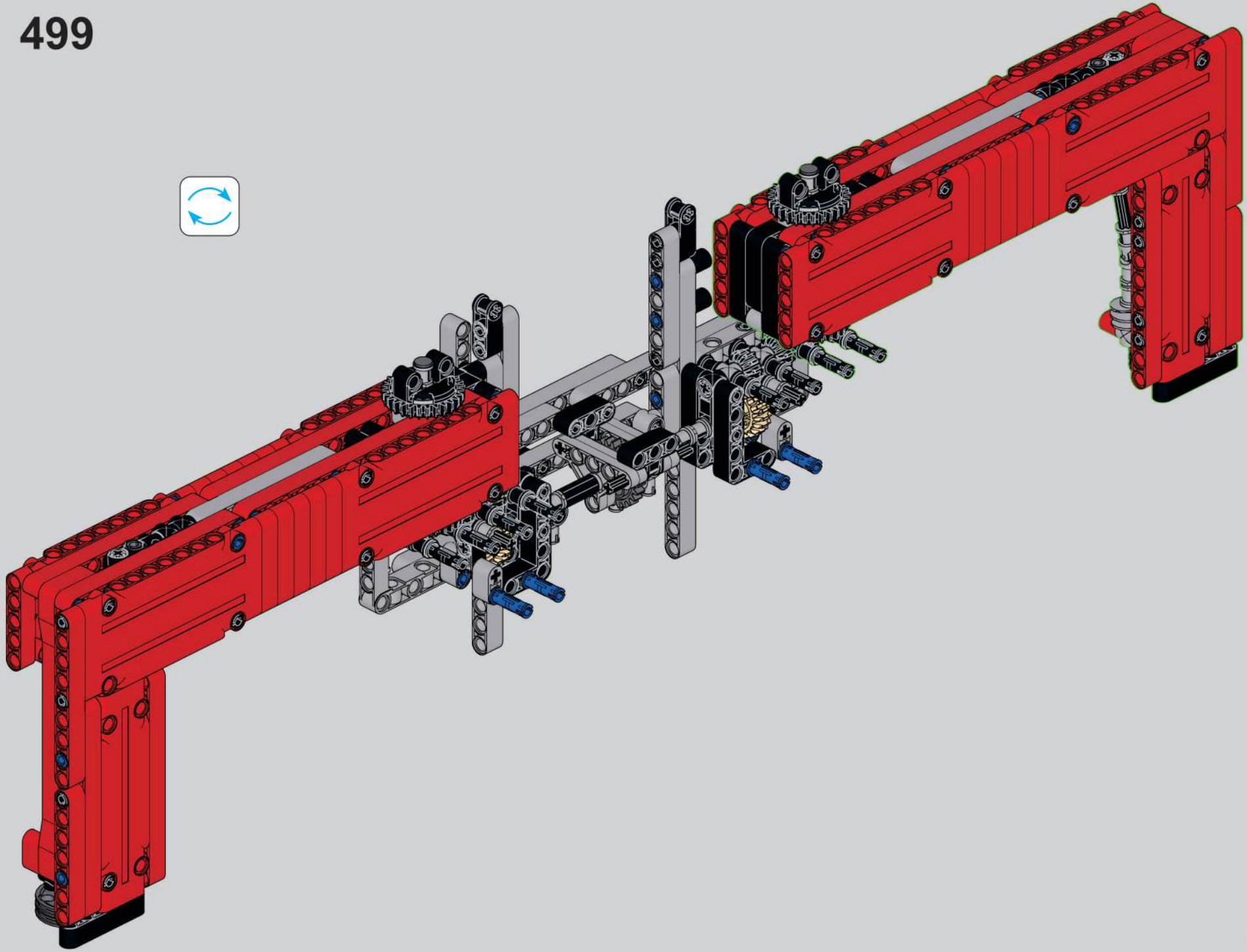

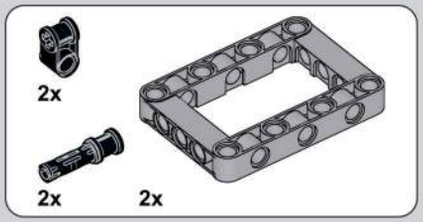

500

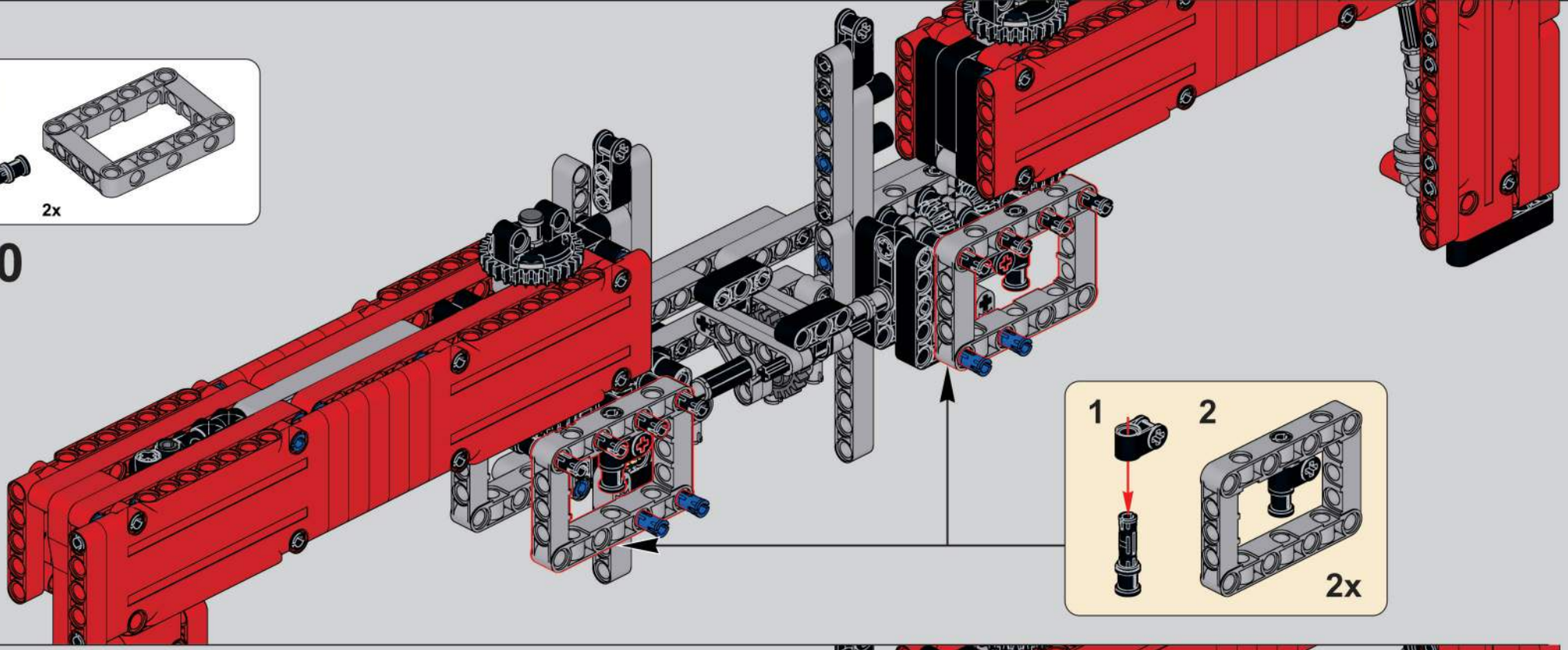

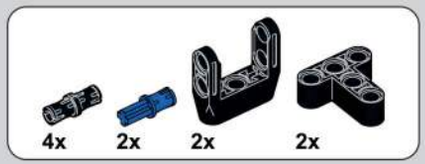

501

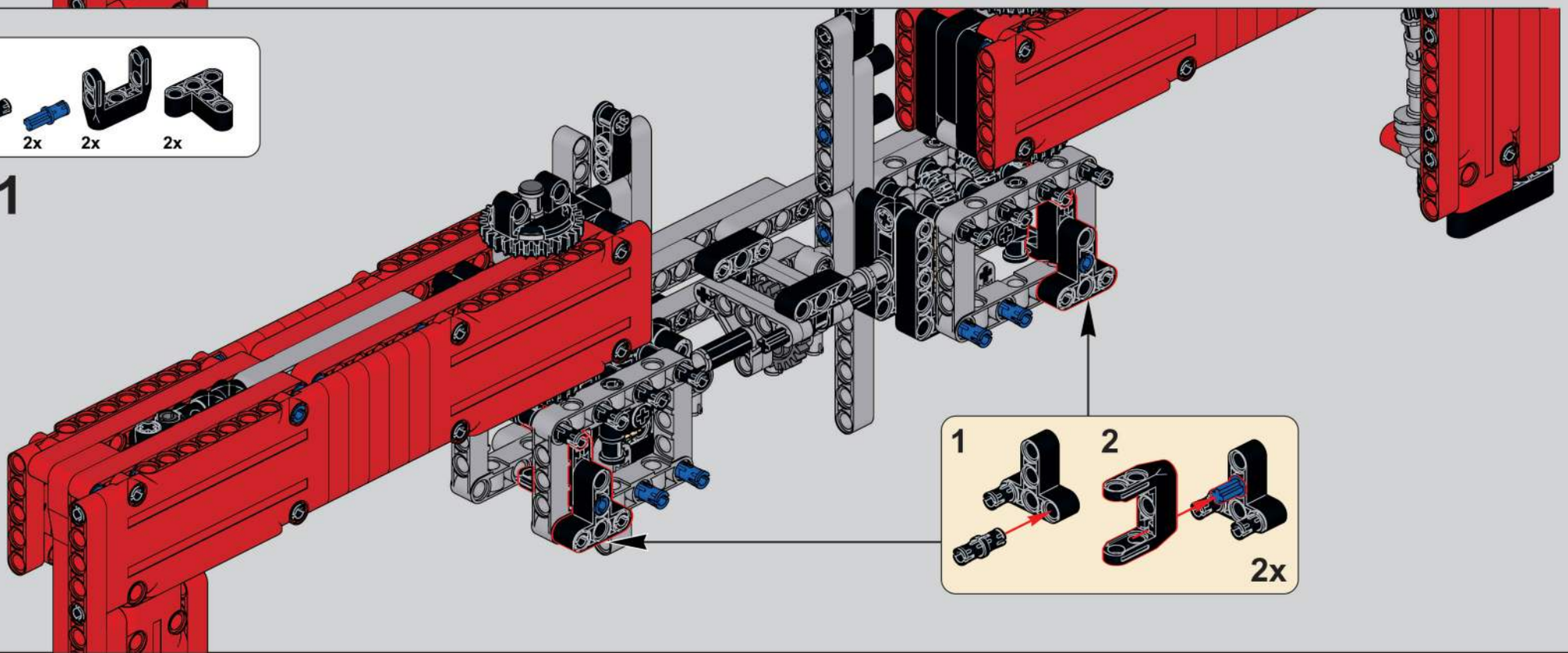

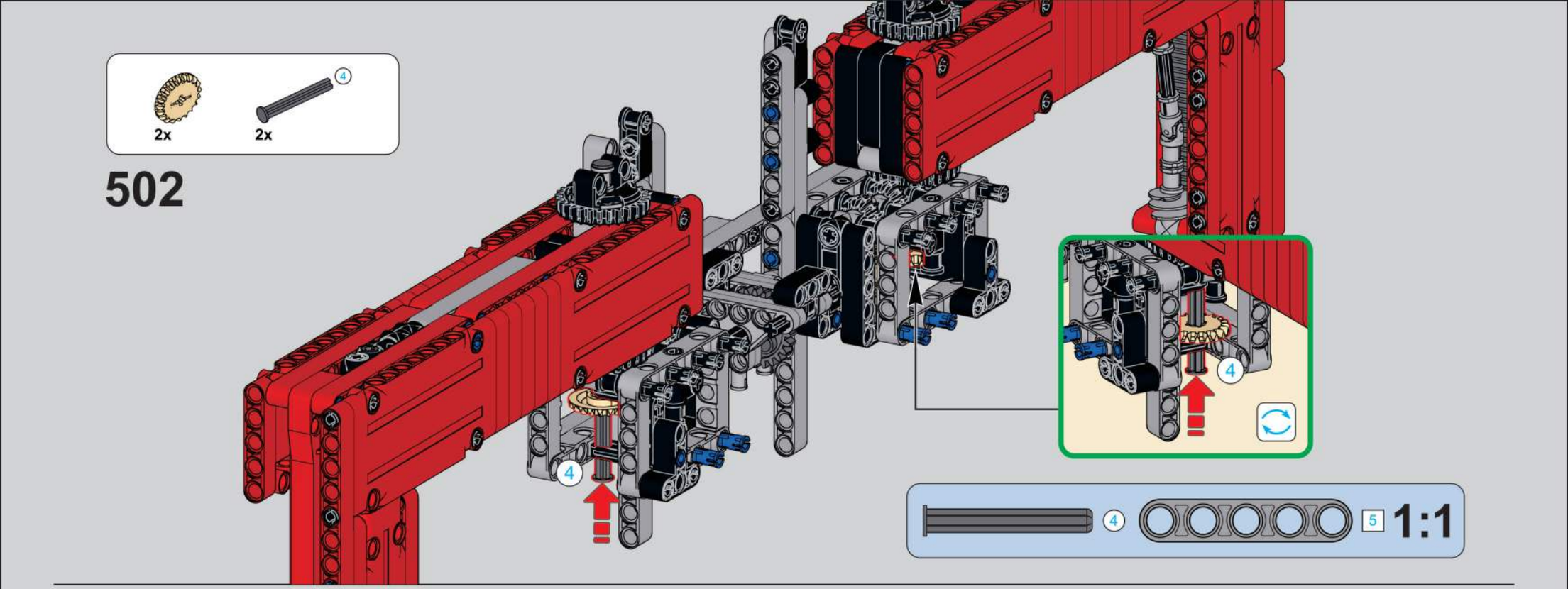
2x
4
2x
502
4
4
4
5
1:1

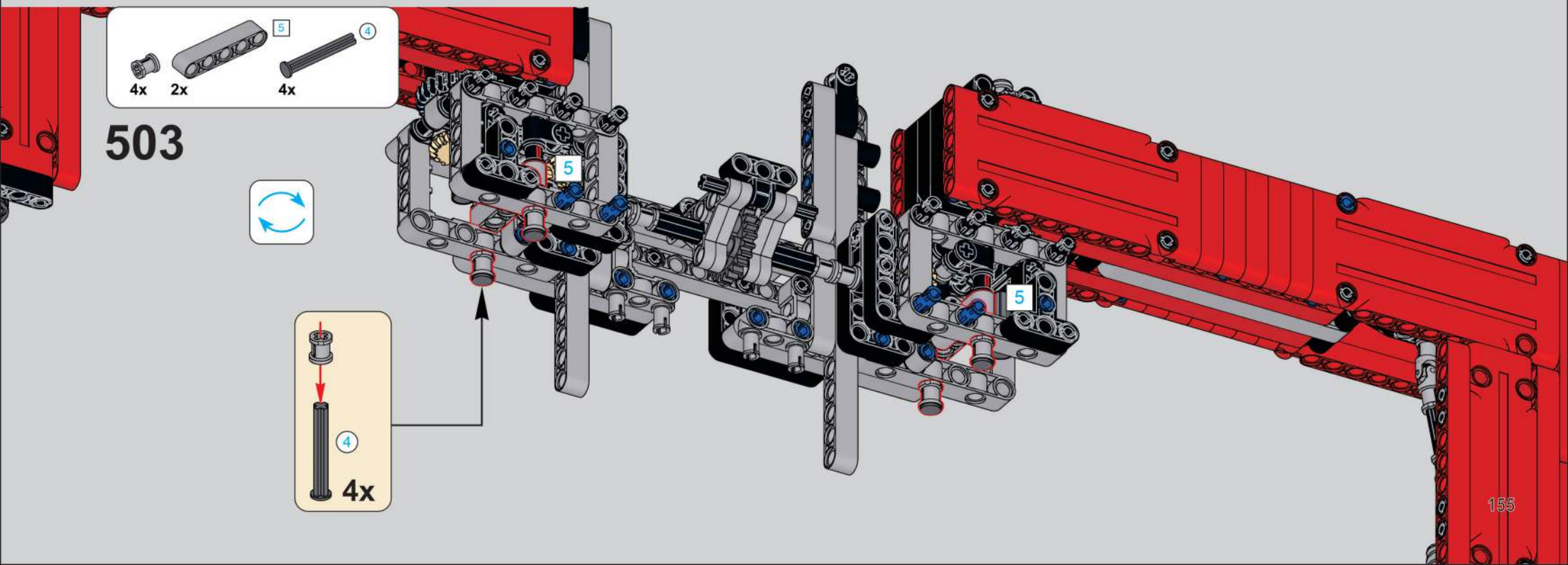
5
4
4x
2x
4x
503
5
5
4
4x

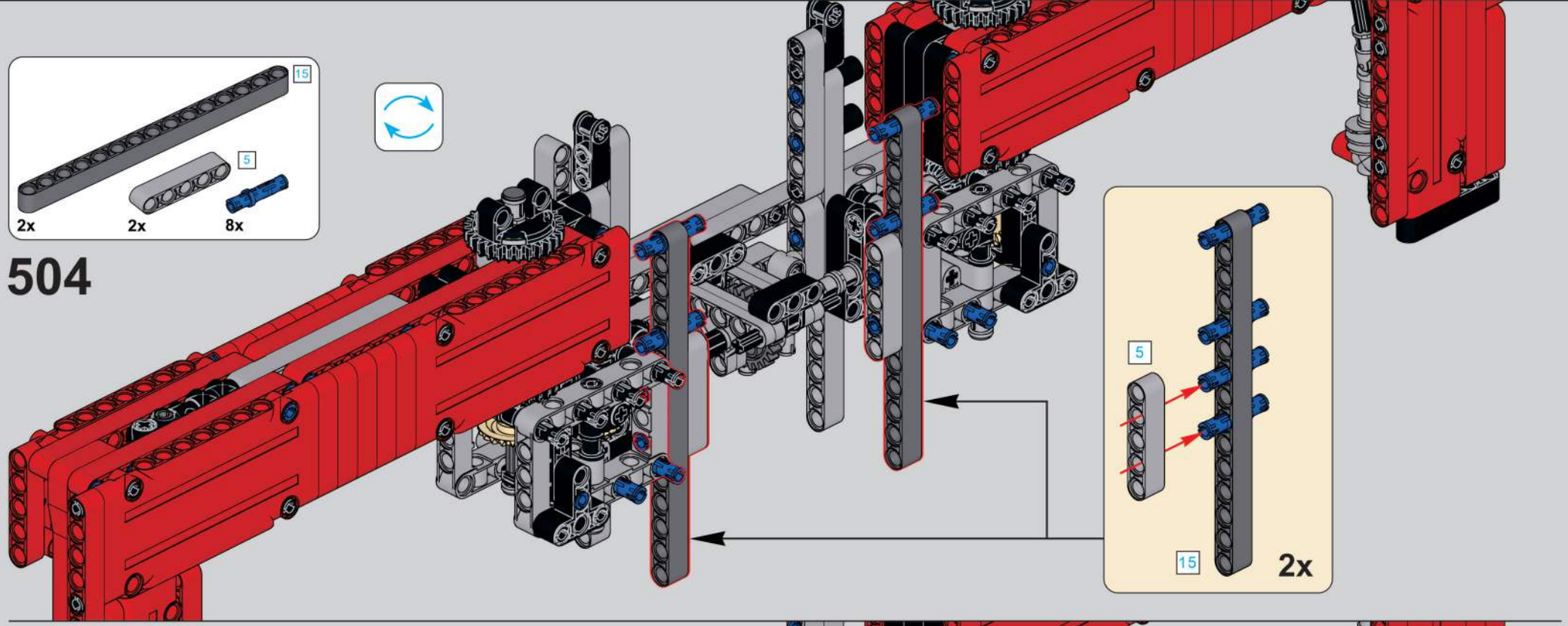
15
5
2x
2x
8x
504
5
15
2x

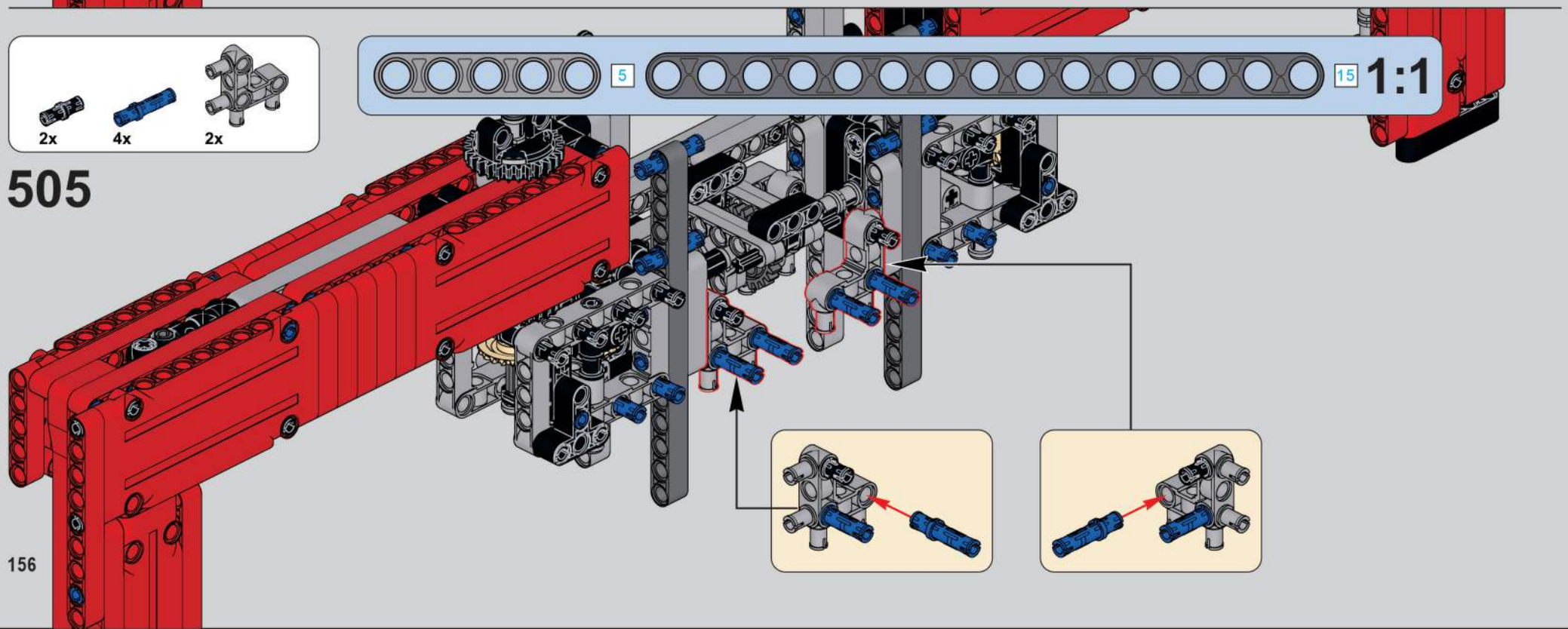
2x
4x
2x
505
5
15
1:1

506

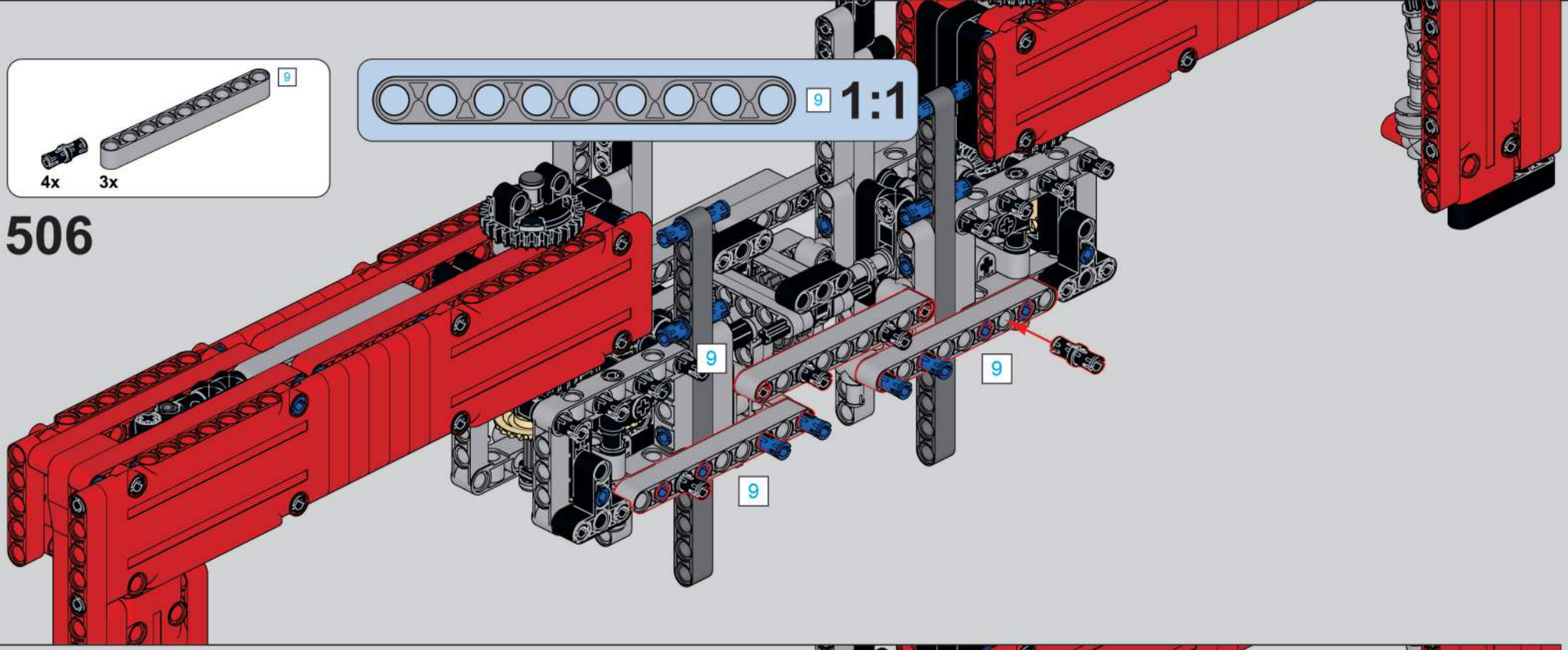

507

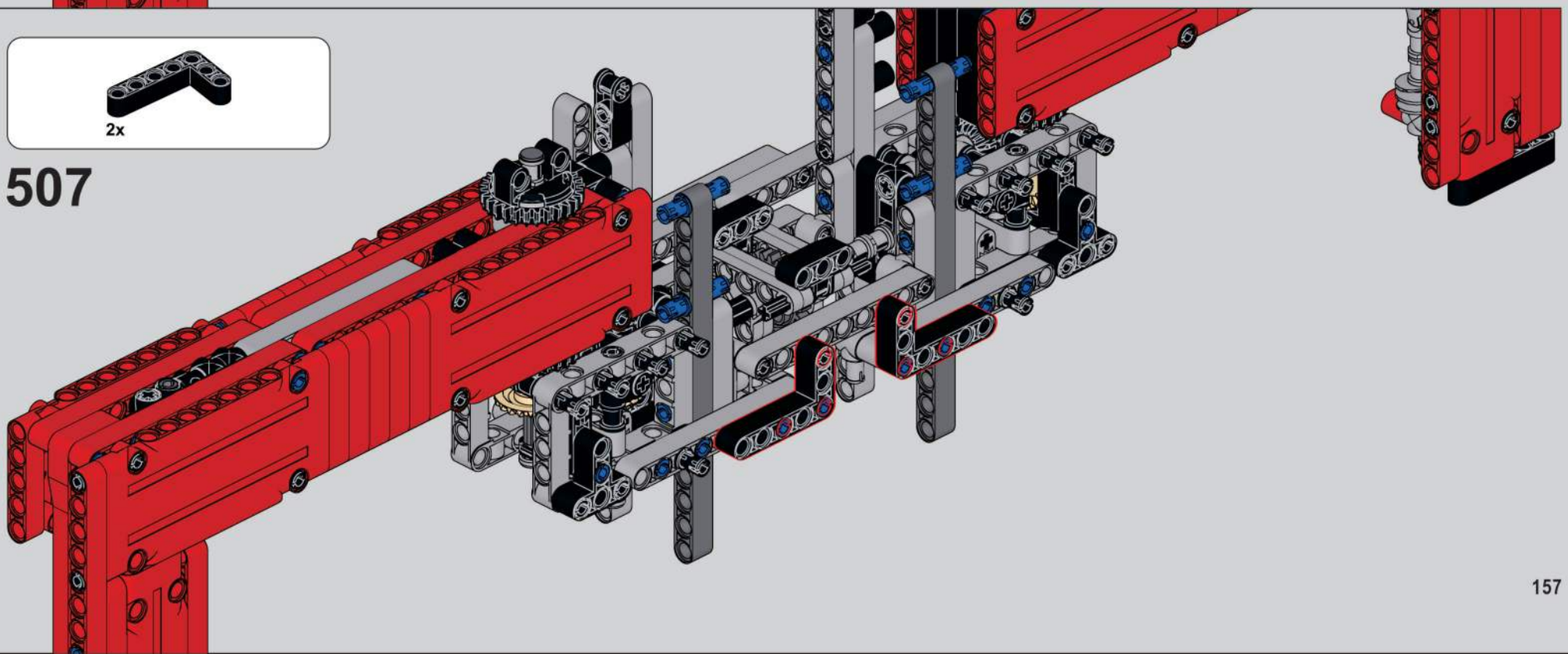

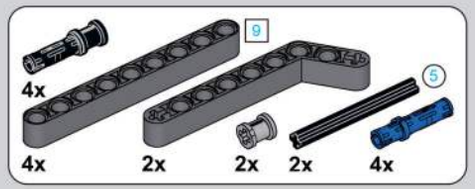

508

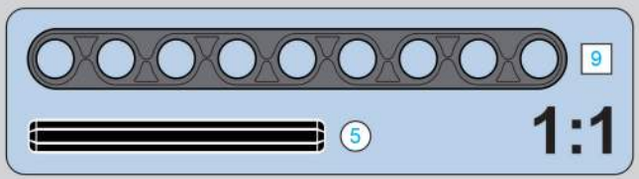

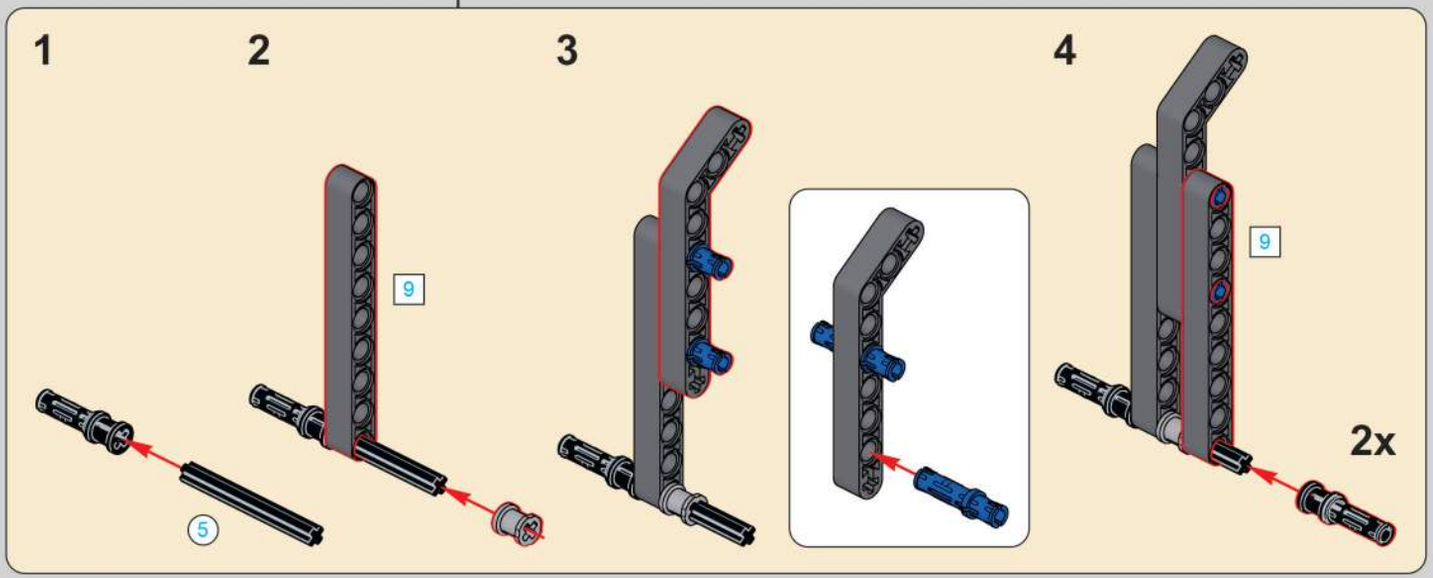

509

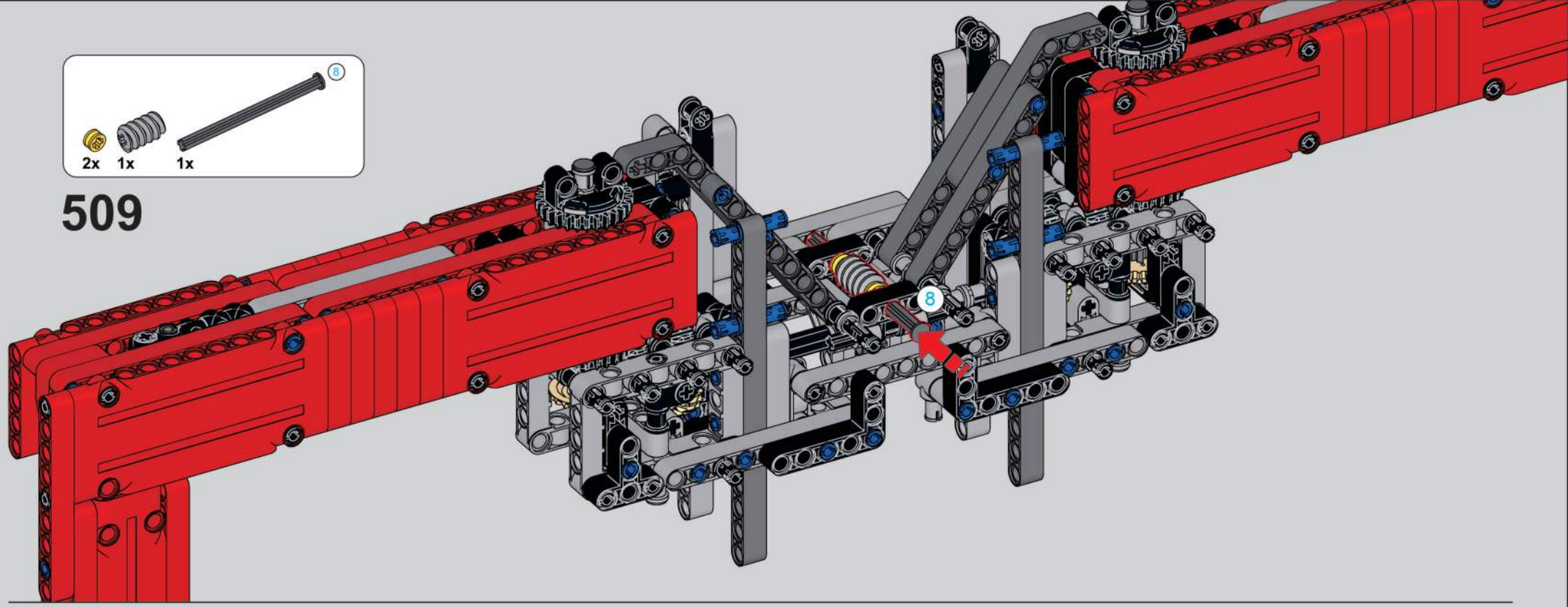

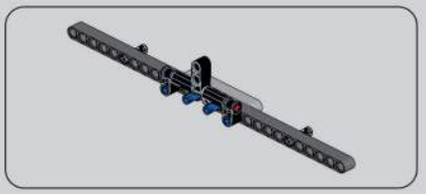

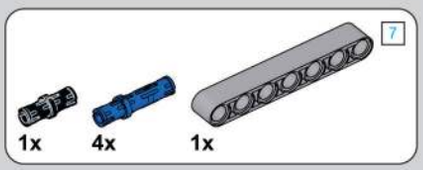

510

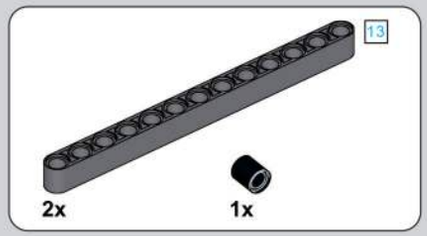

511

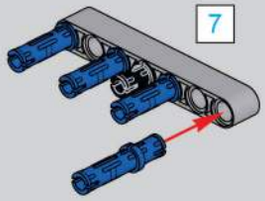

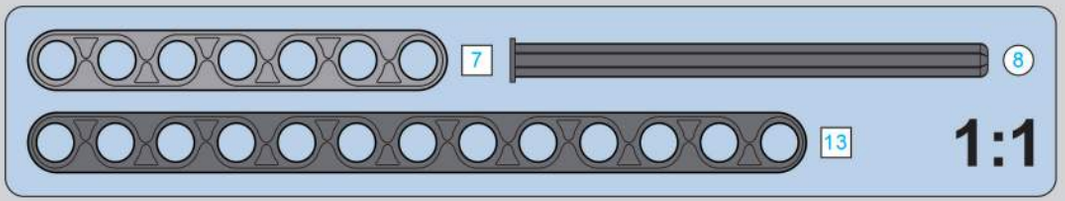

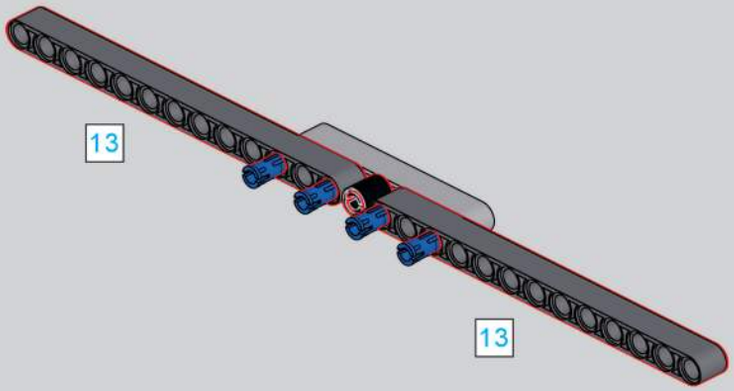

512

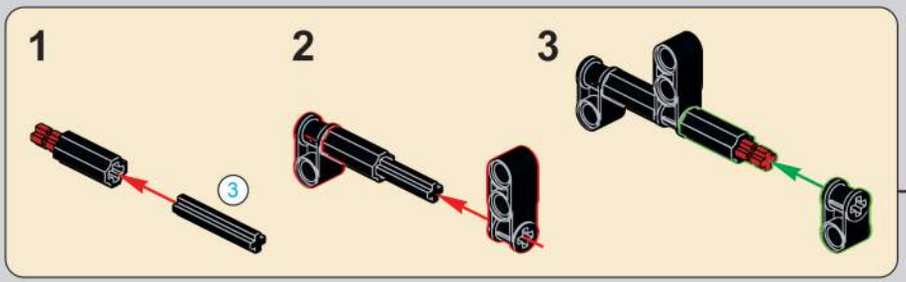

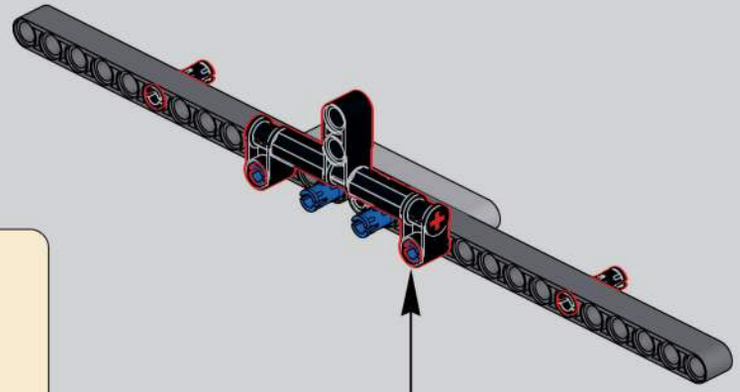

513

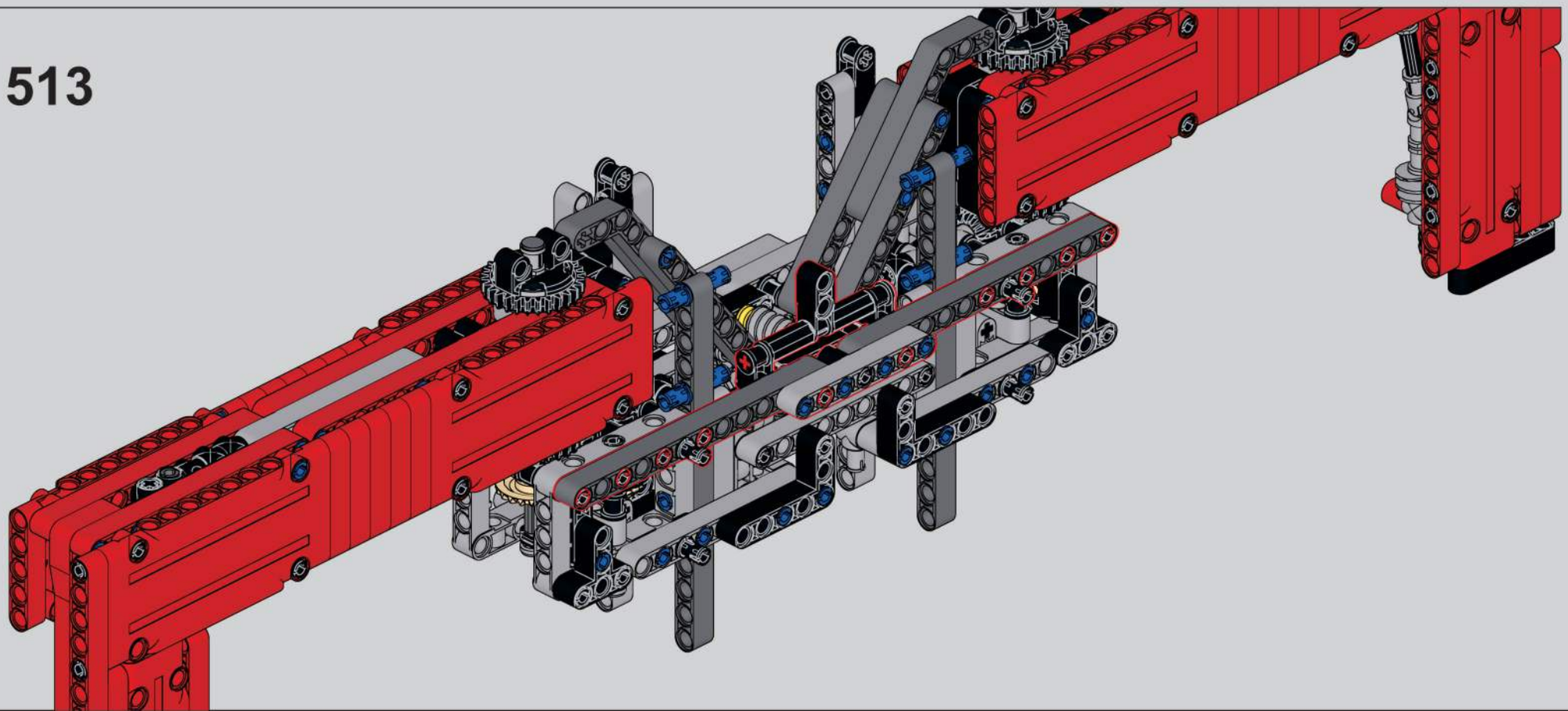

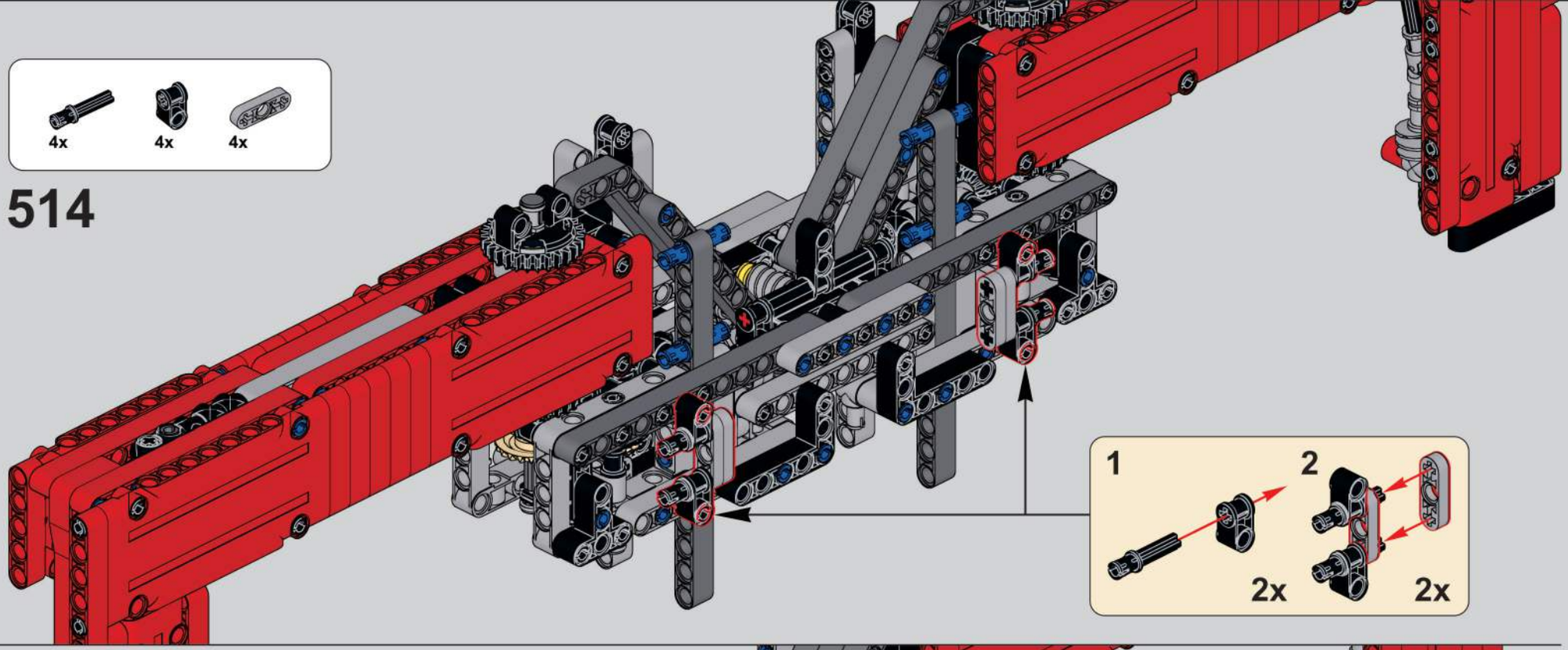
4x
4x
4x
514
1
2
2x
2x

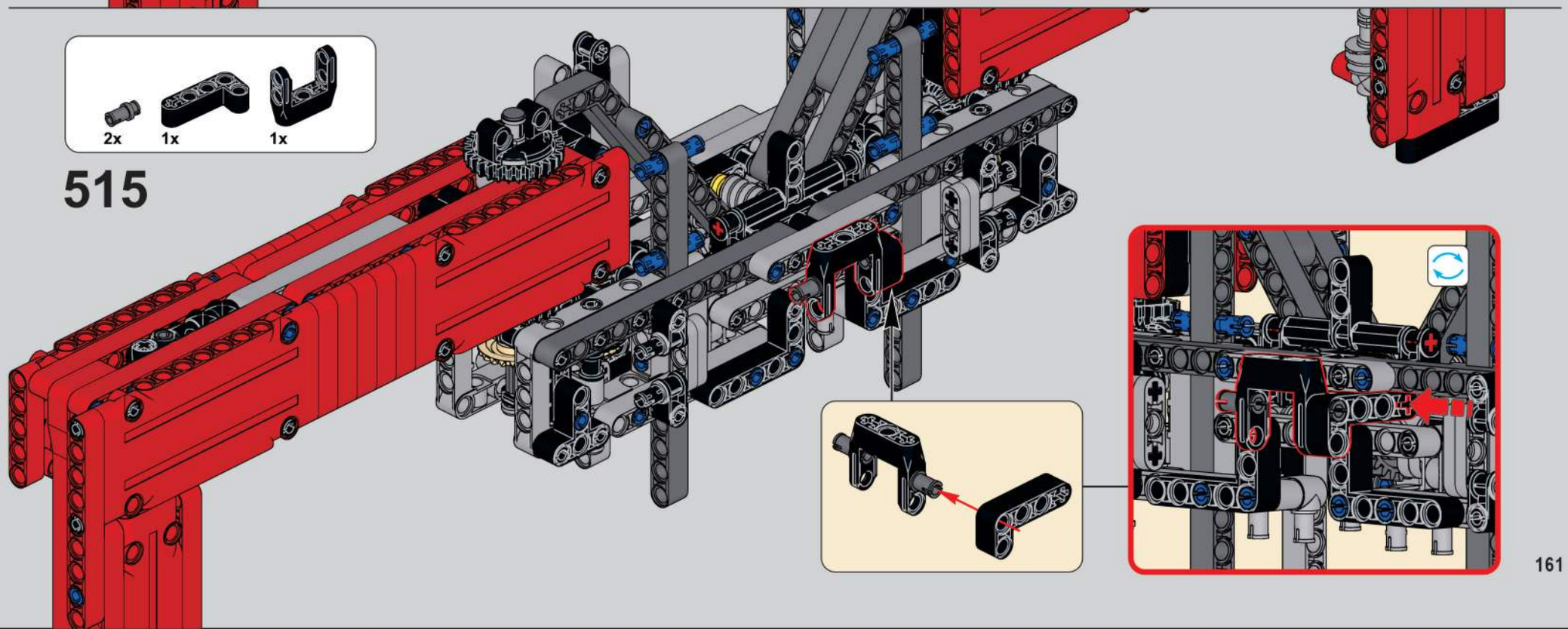
2x
1x
1x
515

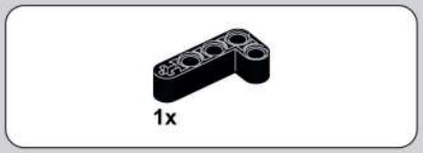

516

517

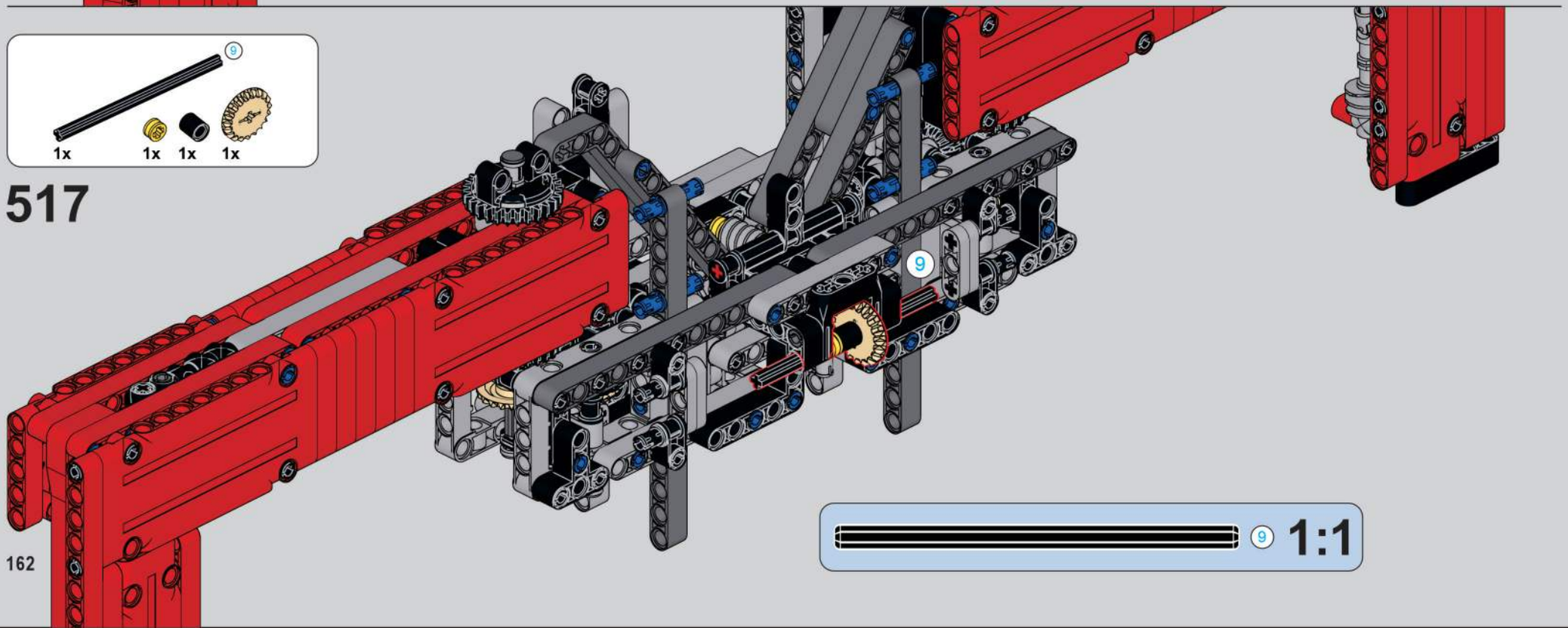

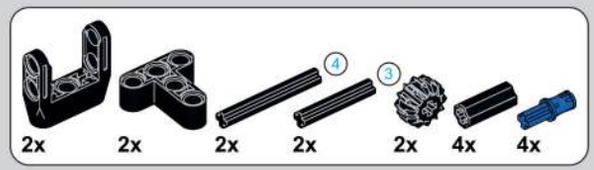

518

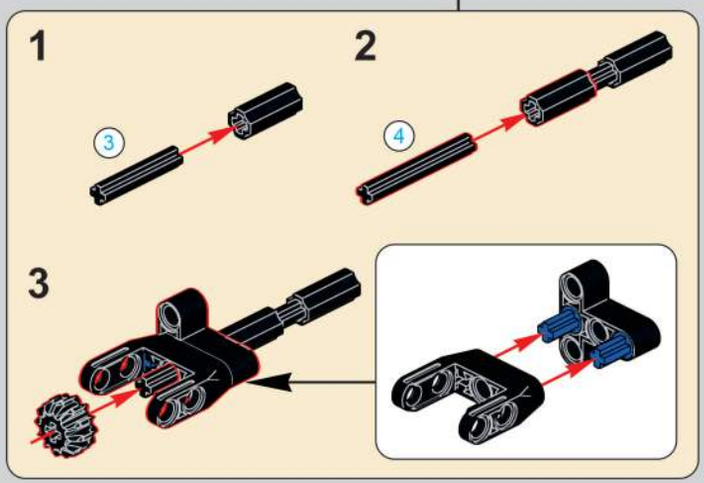

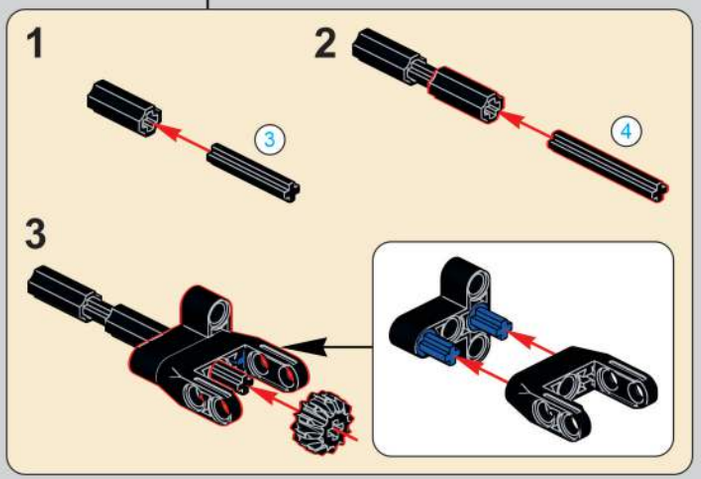

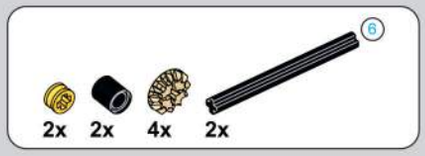

519

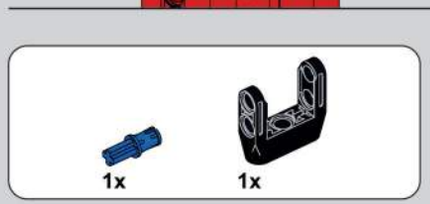

520

521

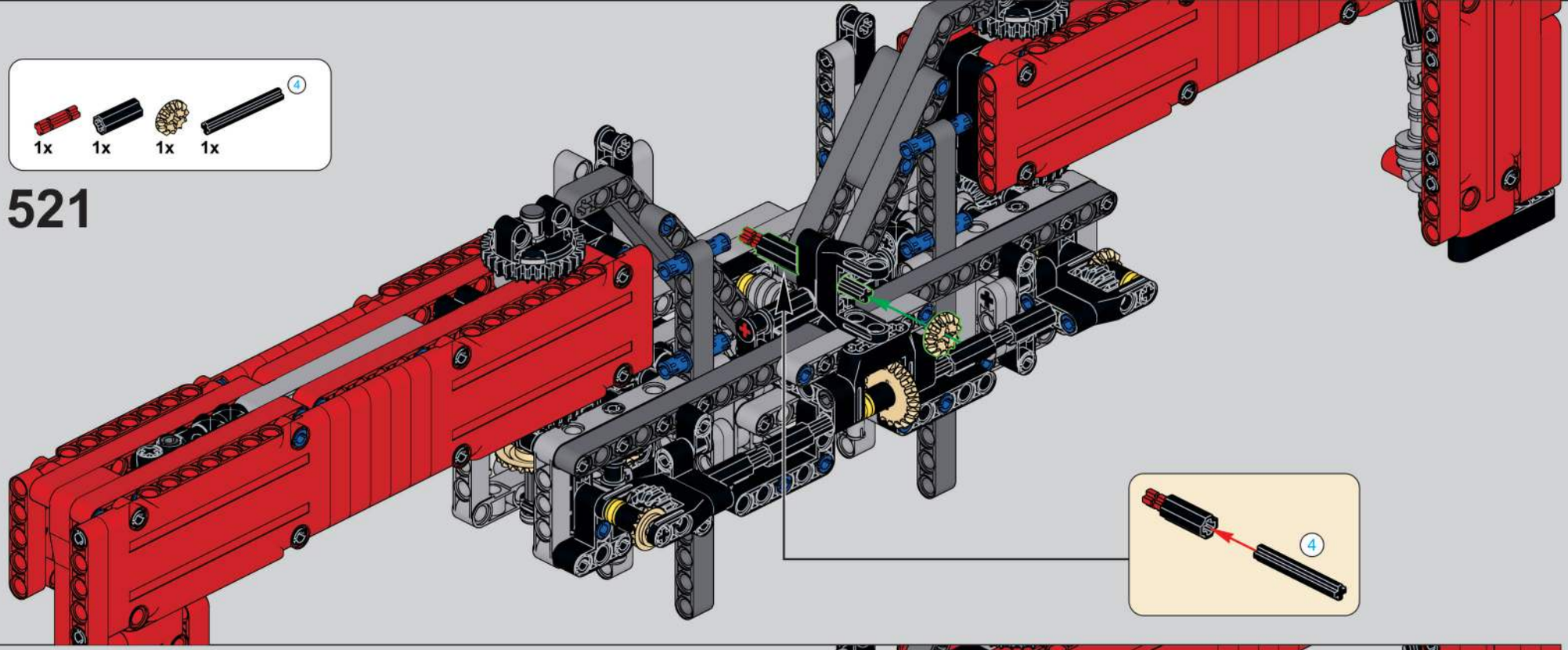

522

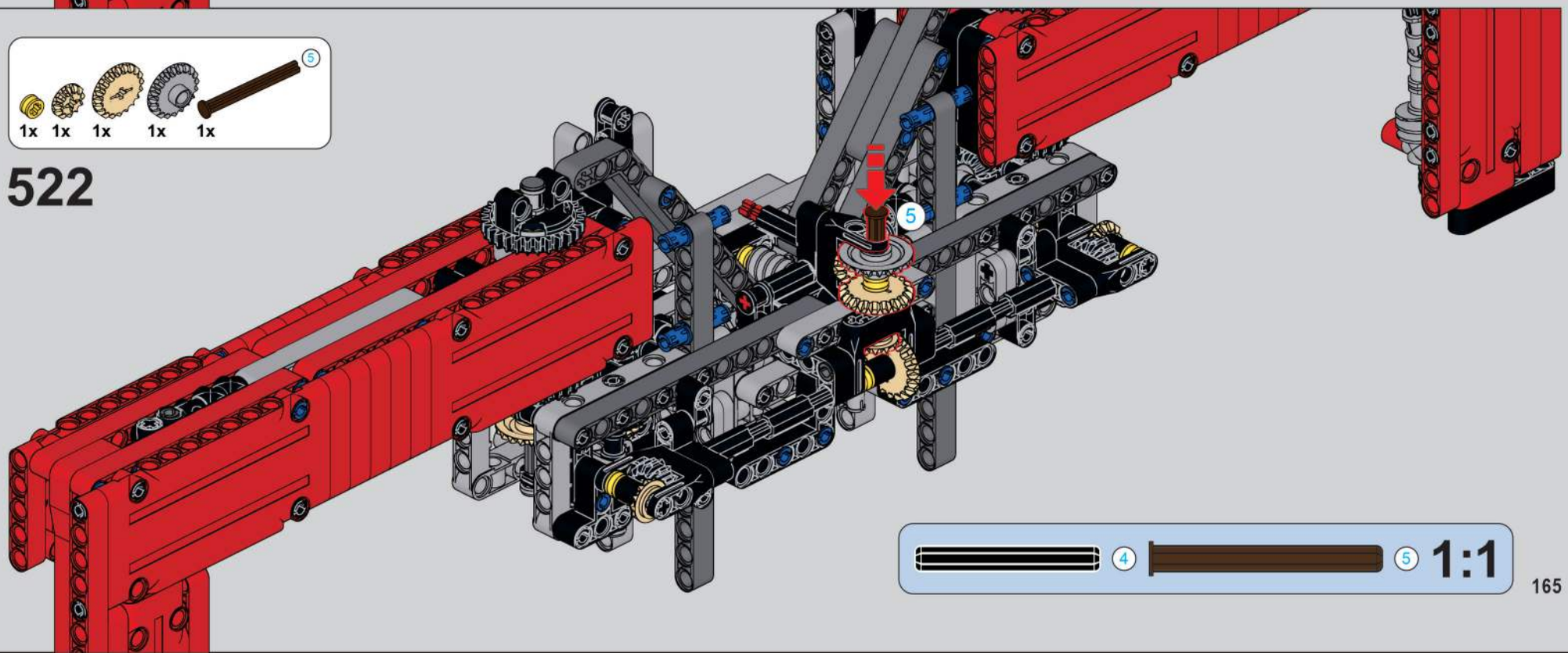

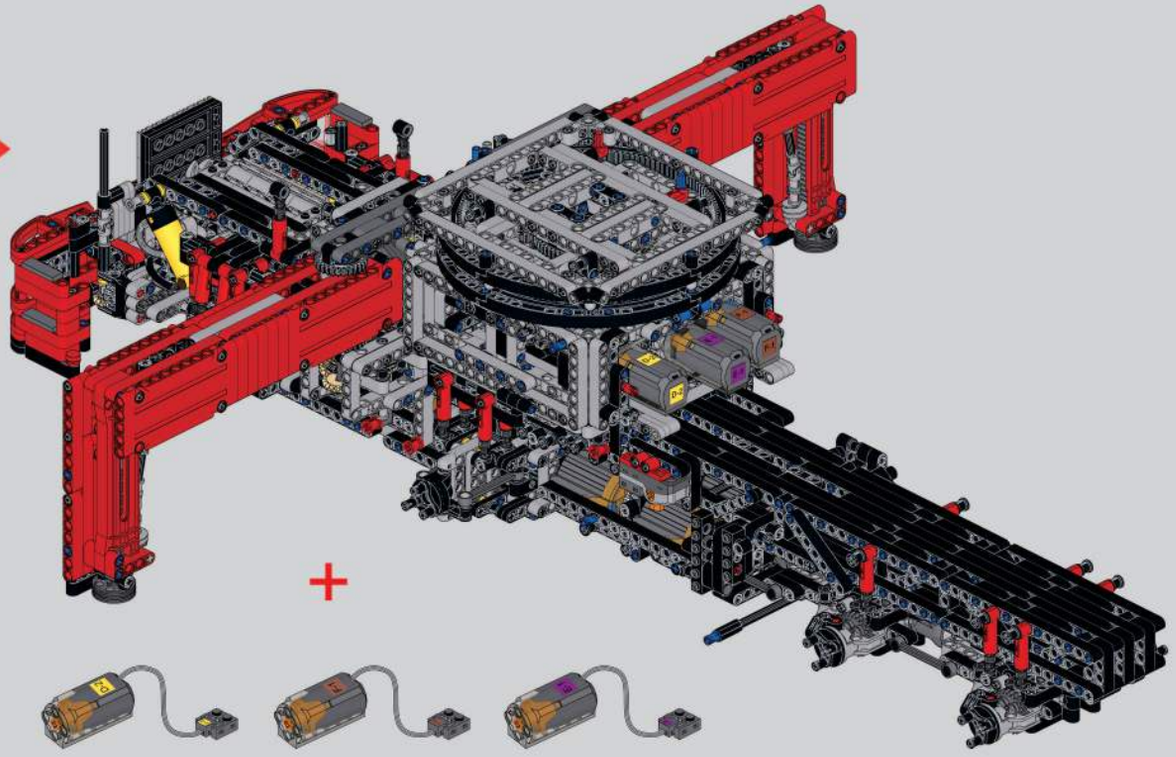

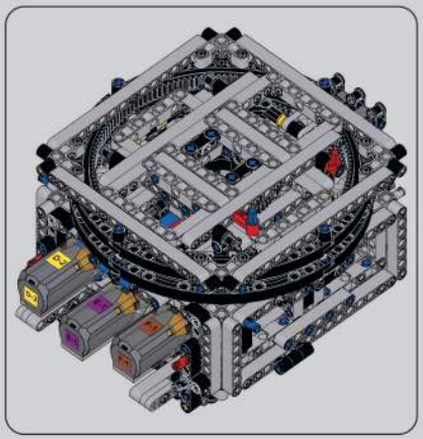

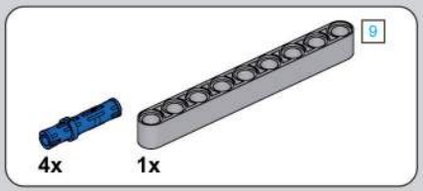

523

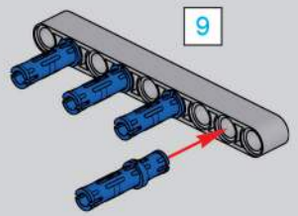

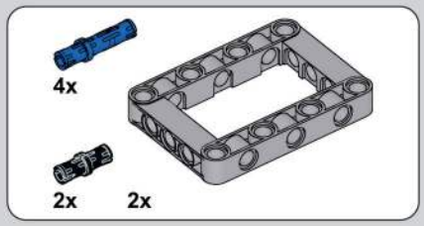

524

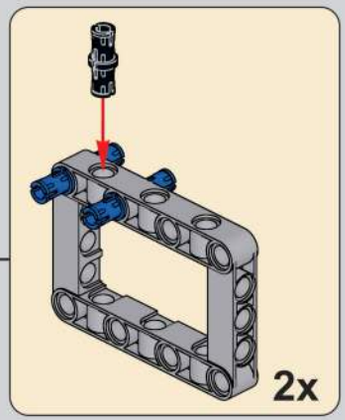

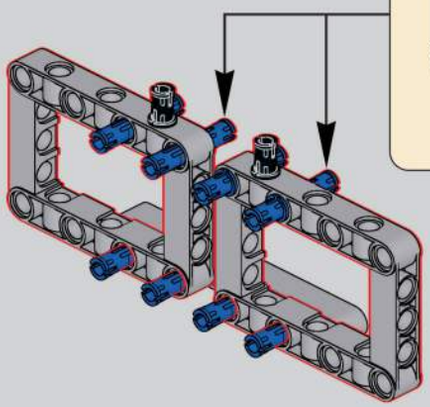

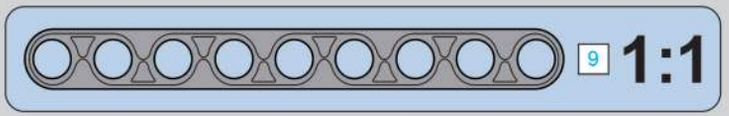

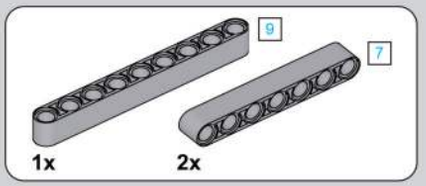

525

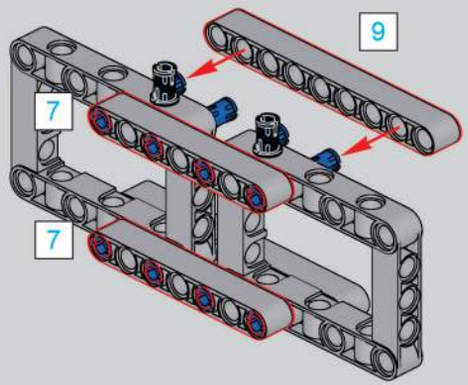

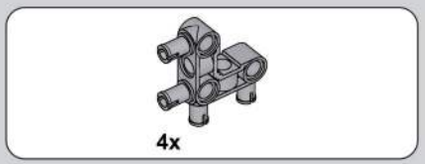

526

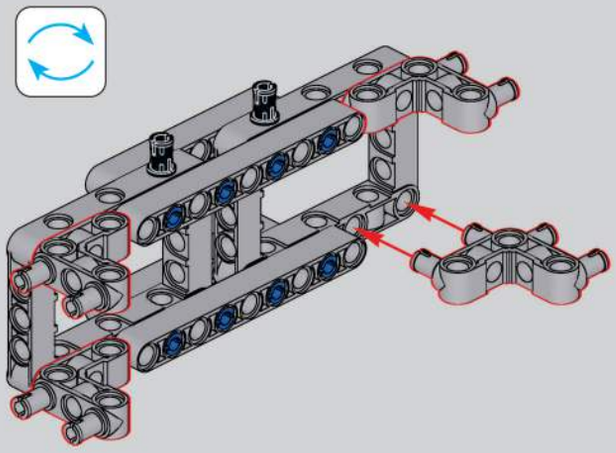

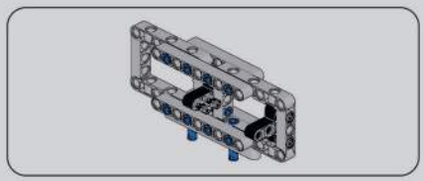

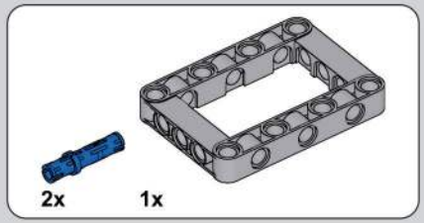

527

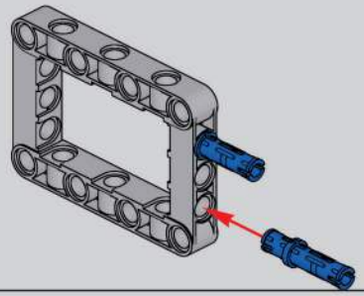

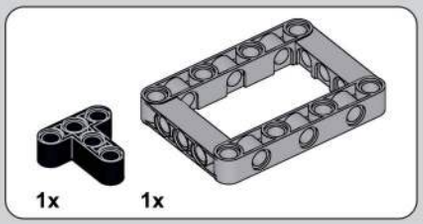

528

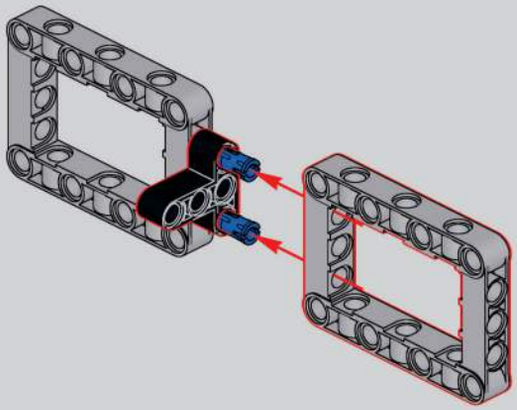

529

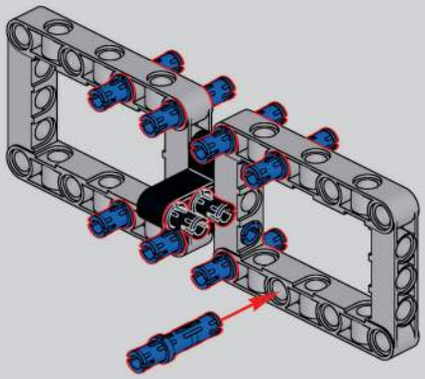

530

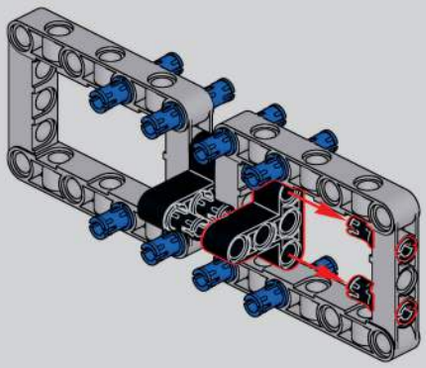

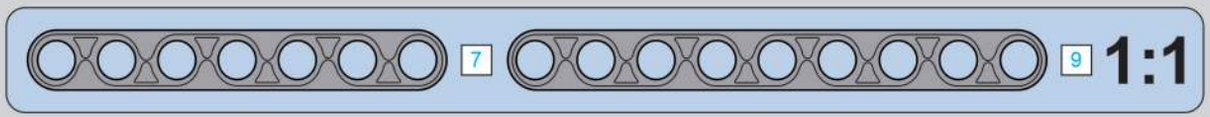

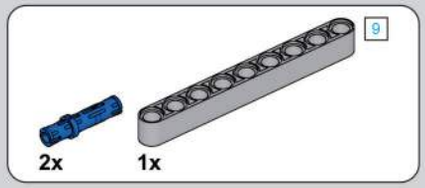

531

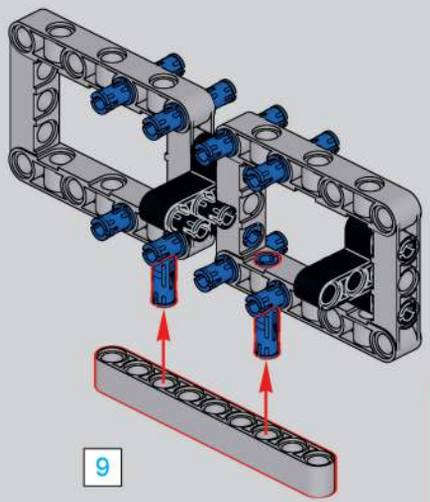

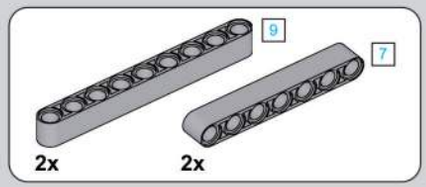

532

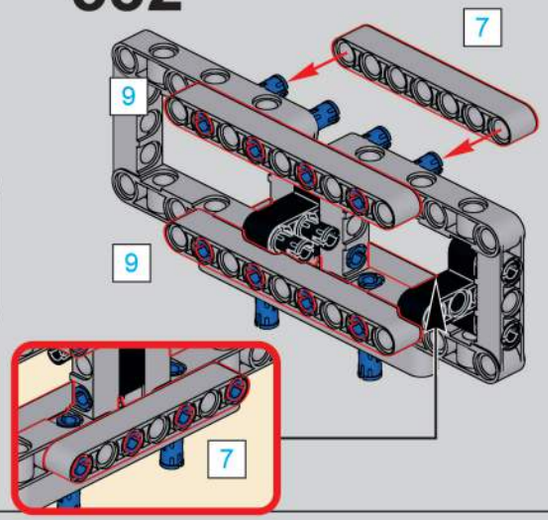

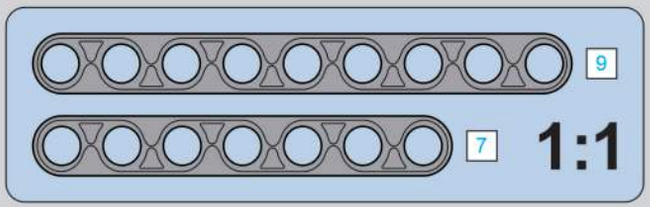

533

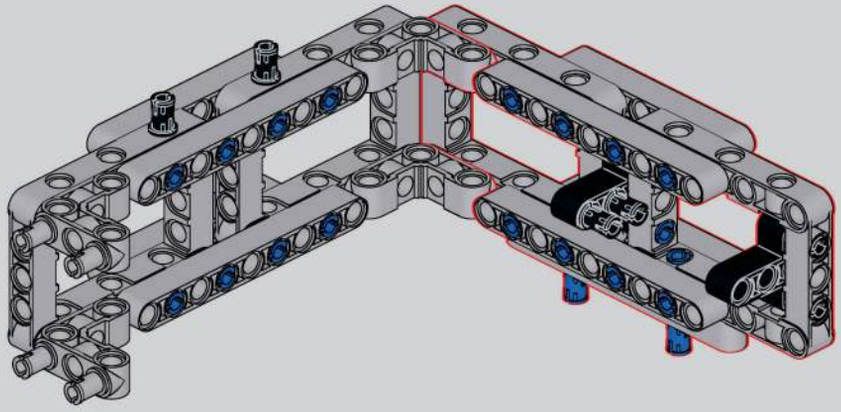

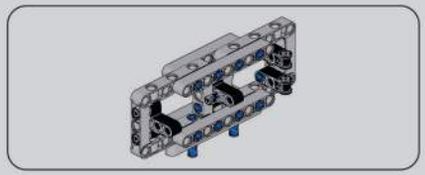

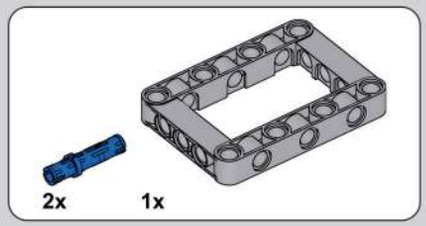

534

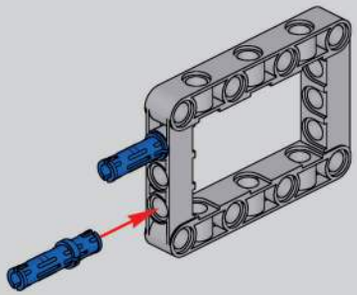

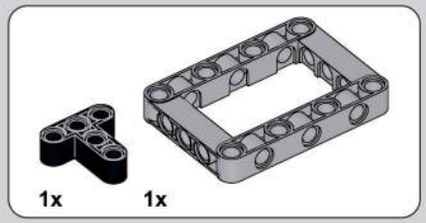

535

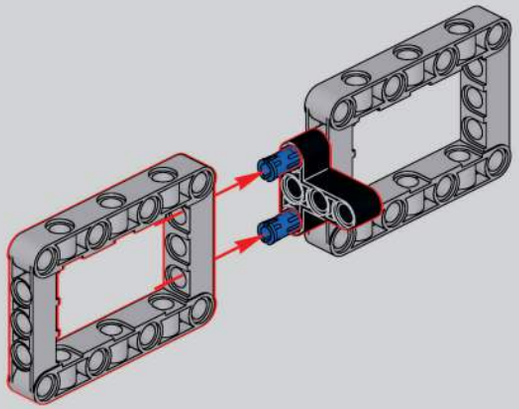

536

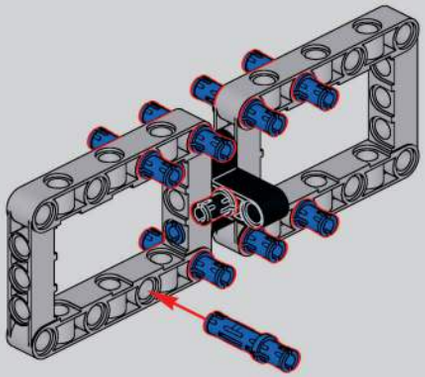

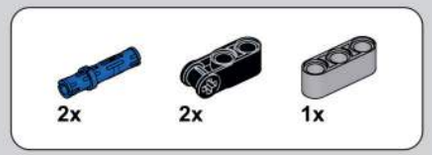

537

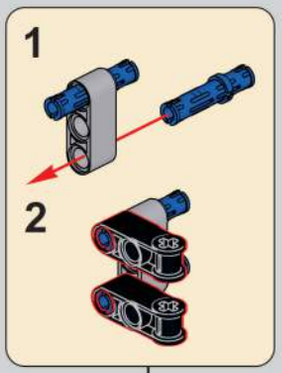

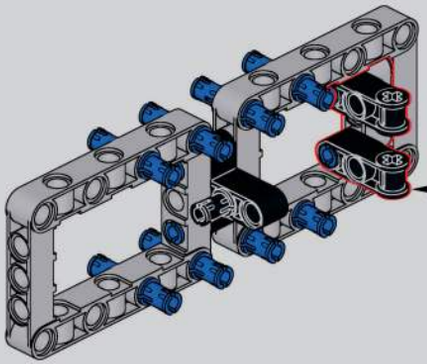

538

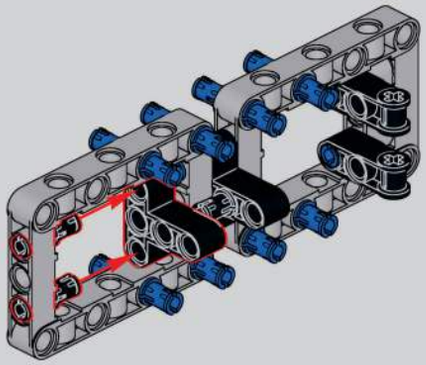

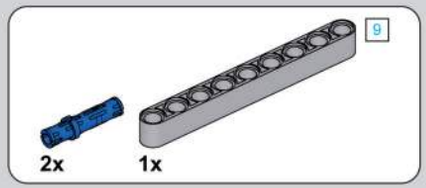

539

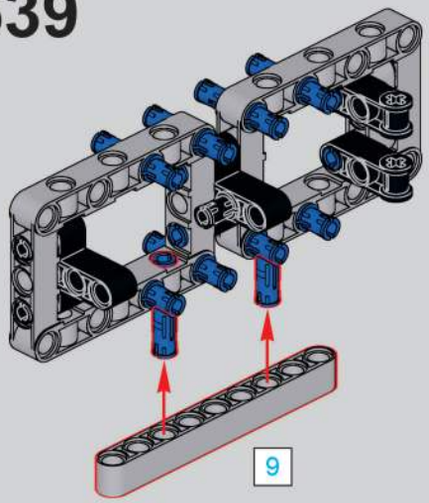

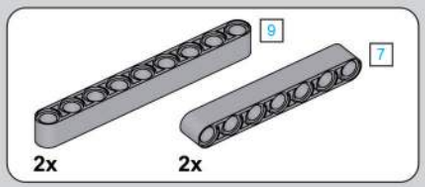

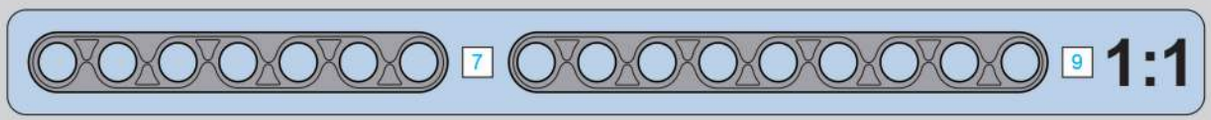

540

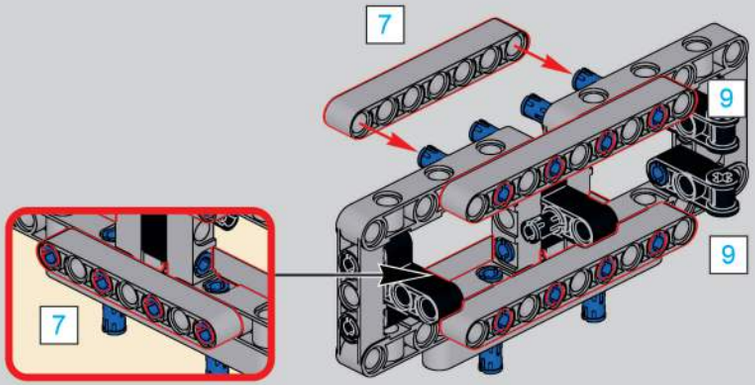

541

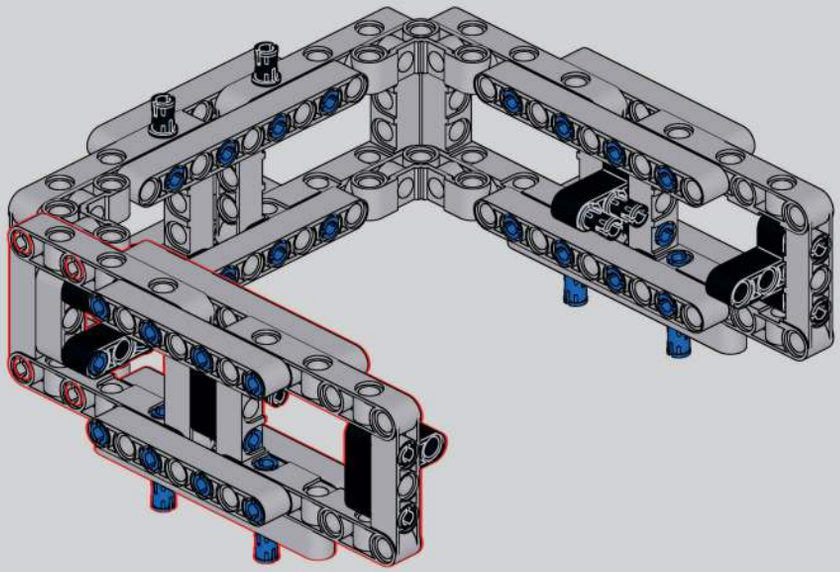

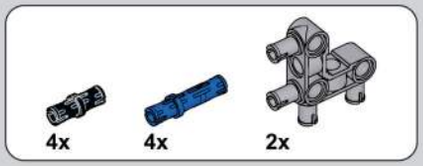

542

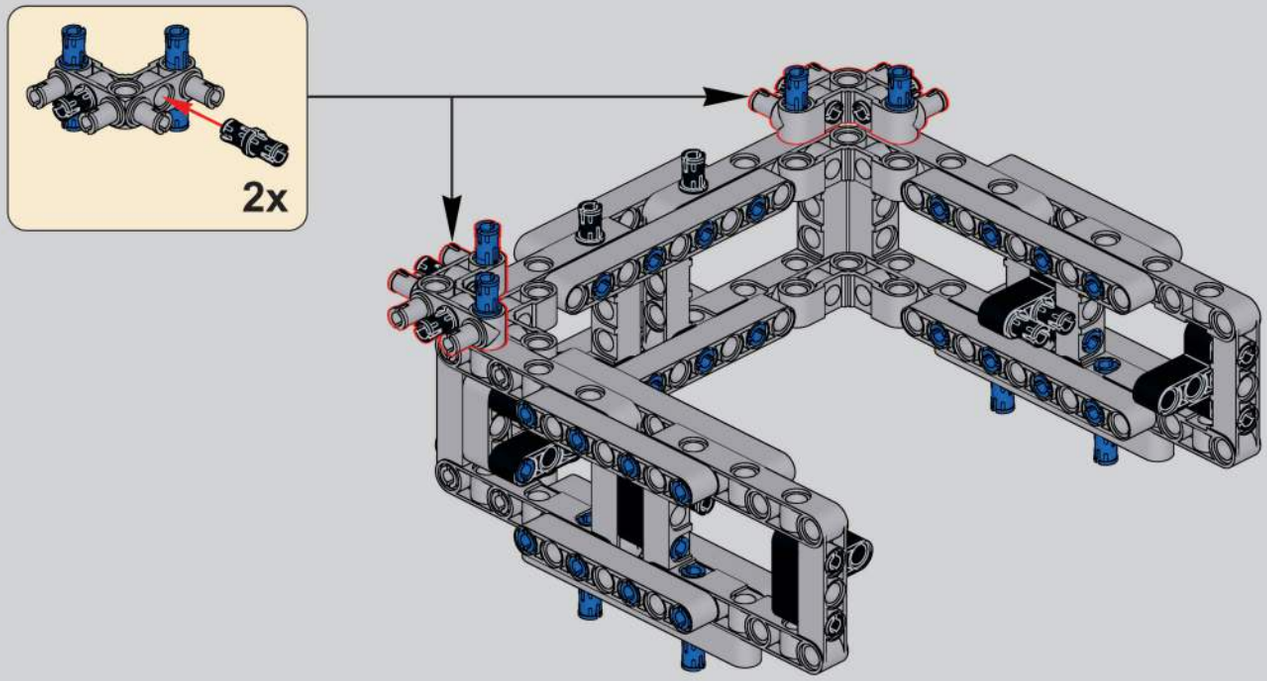

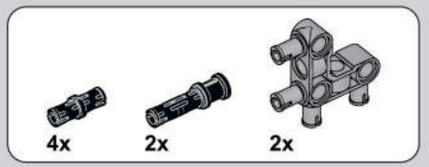

543

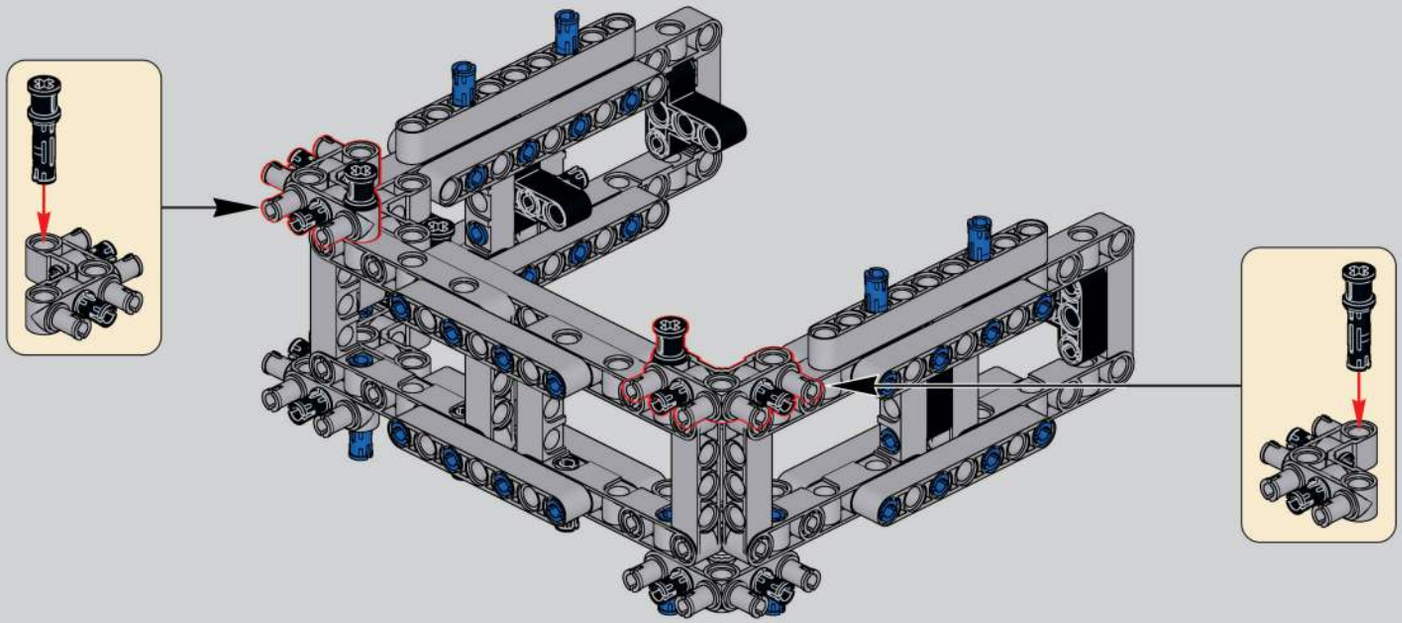

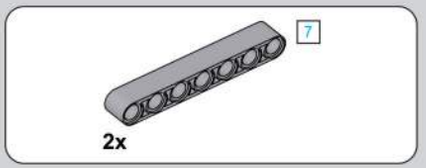

544

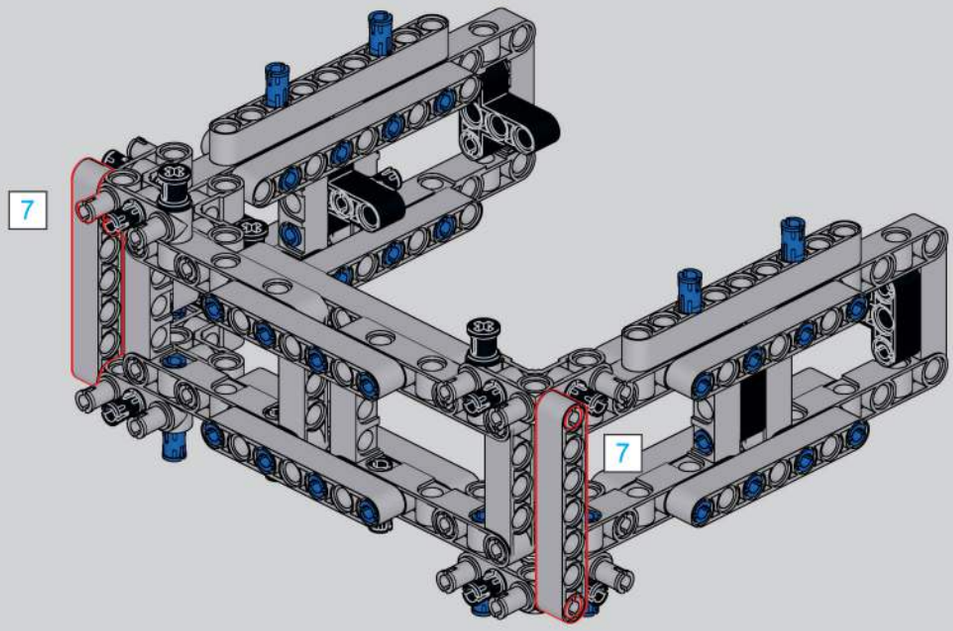

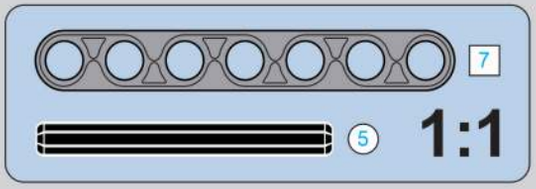

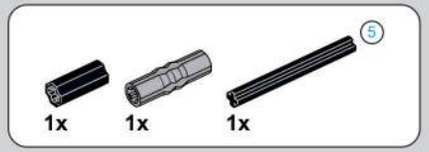

545

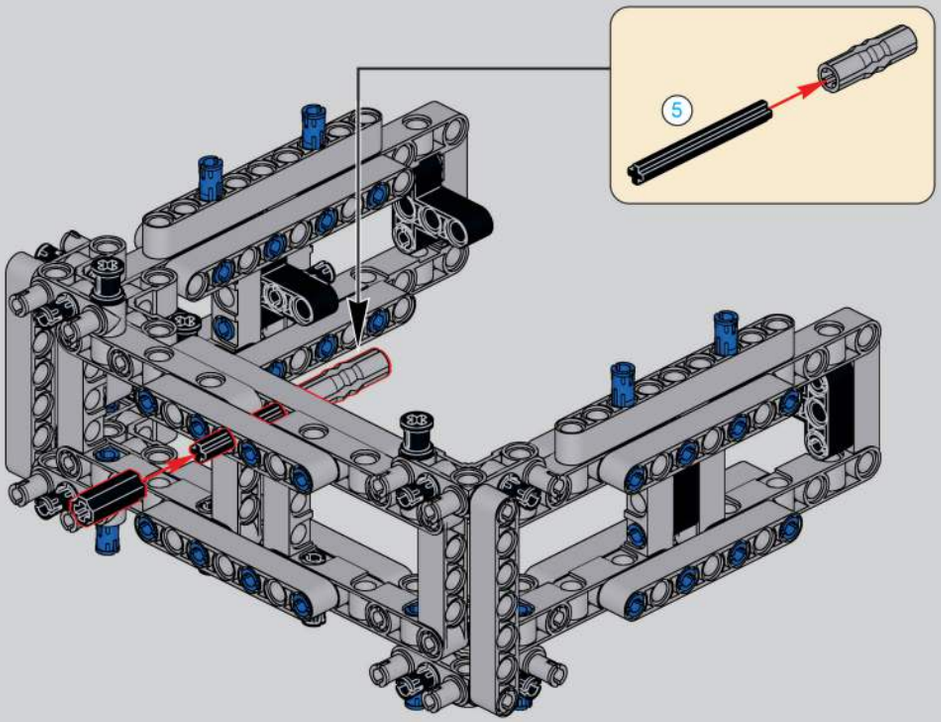

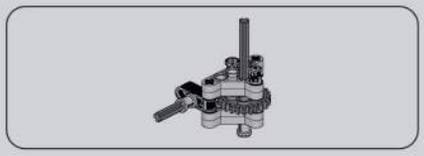

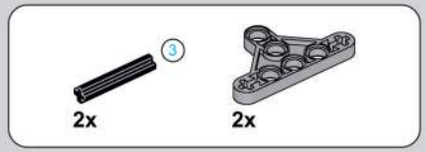

546

547

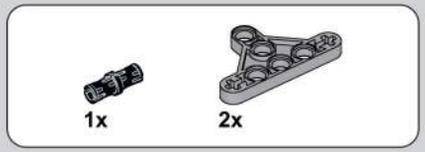

548

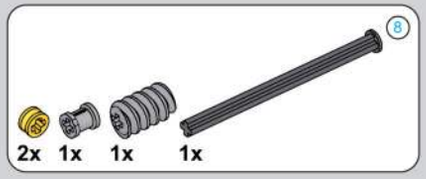

549

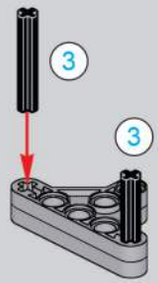

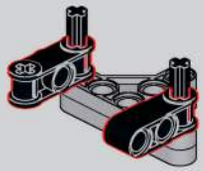

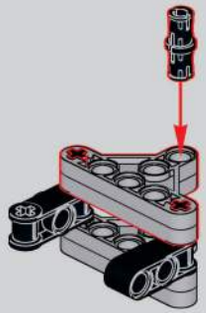

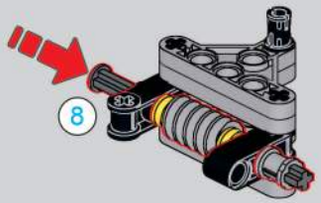

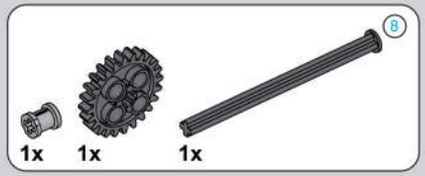

550

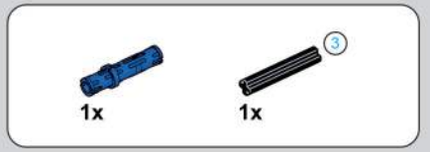

551

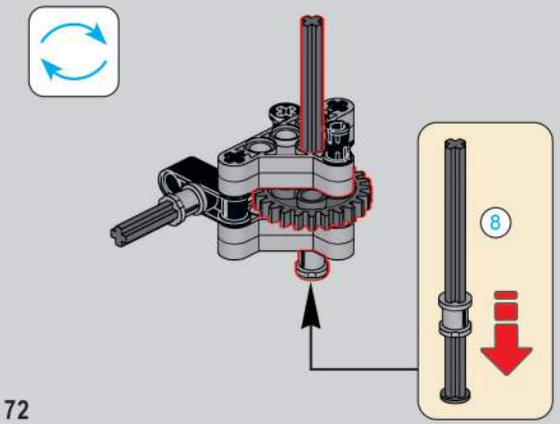

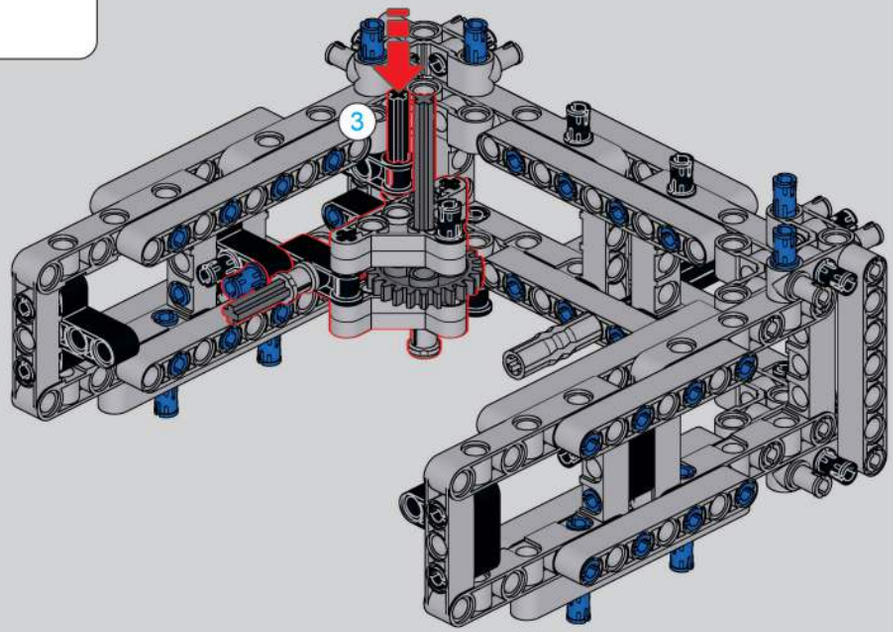

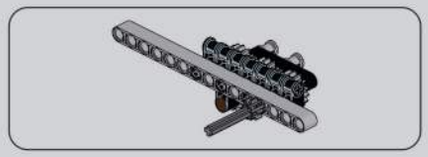

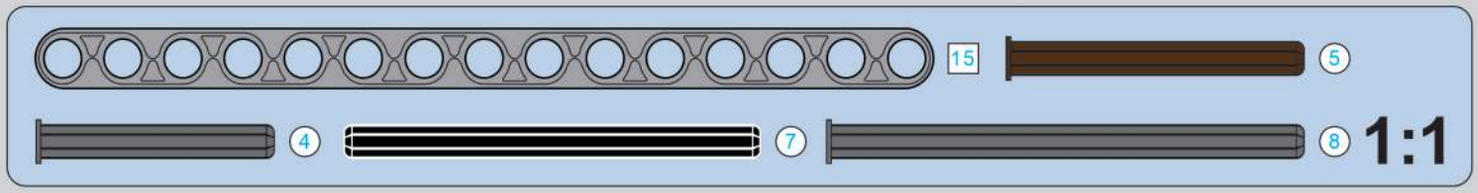

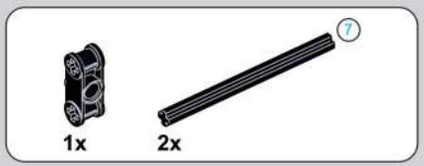

552

553

554

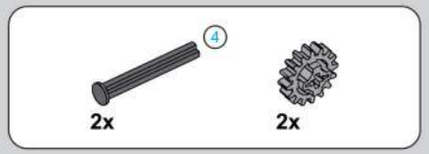

555

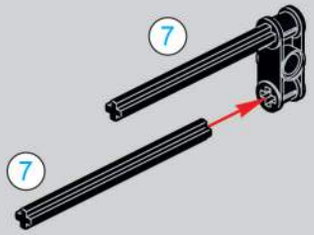

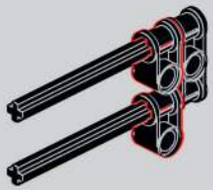

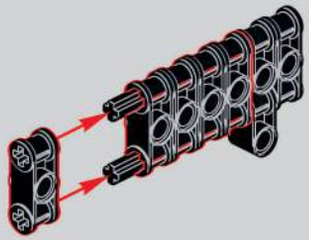

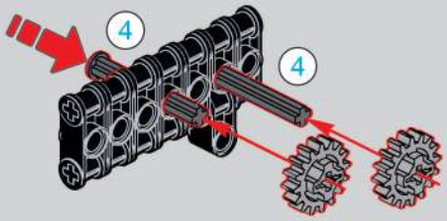

556

557

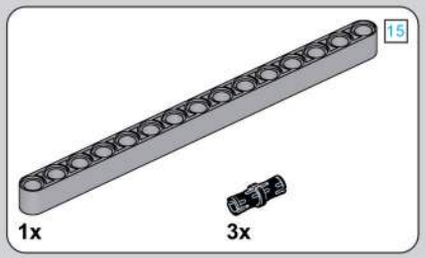

558

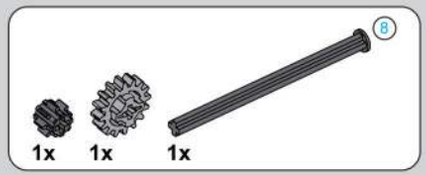

559

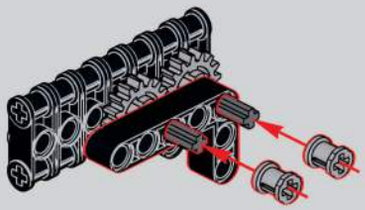

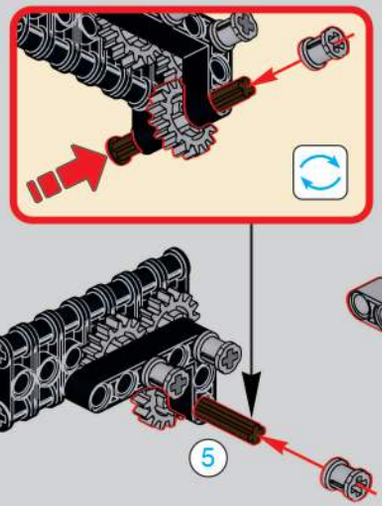

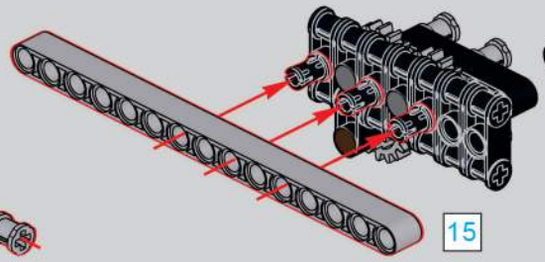

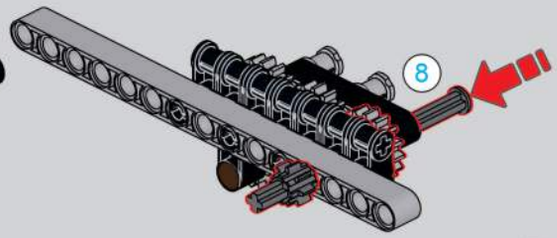

560

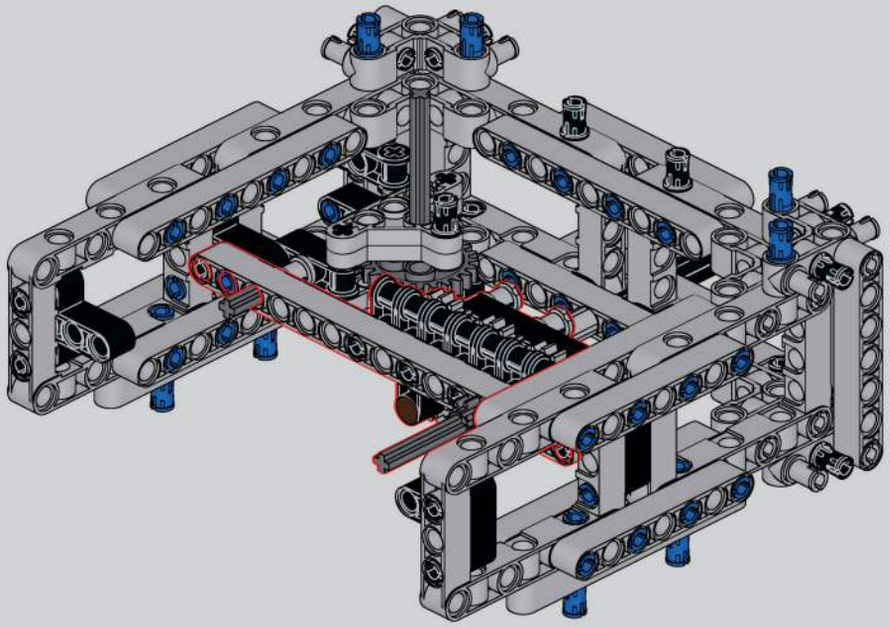

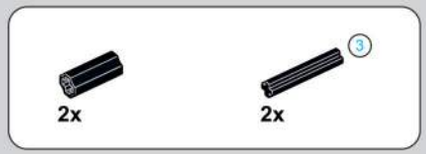

561

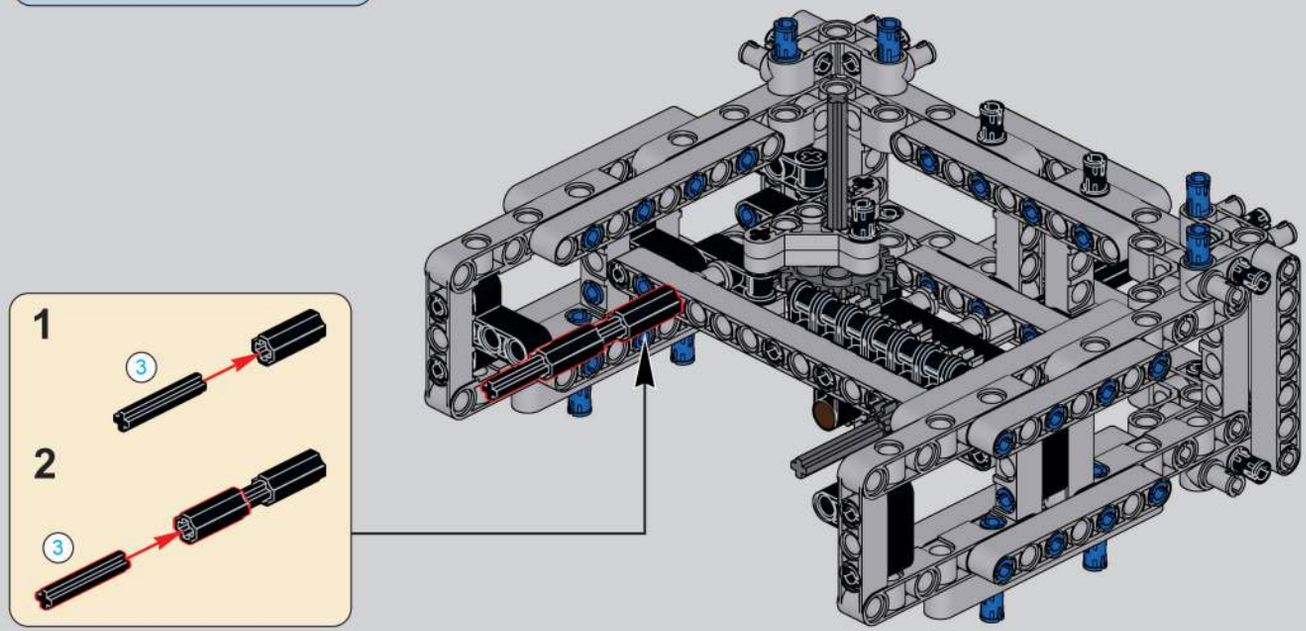

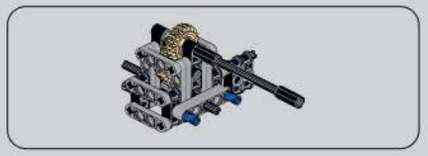

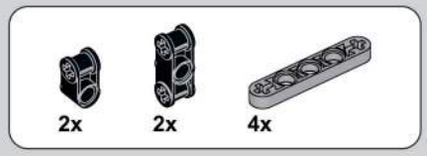

563

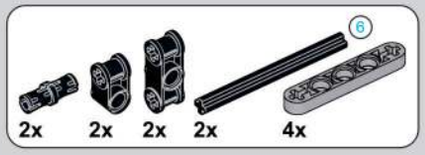

564

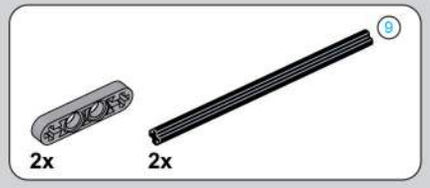

562

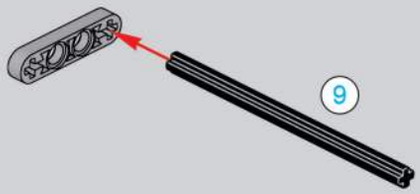

2x

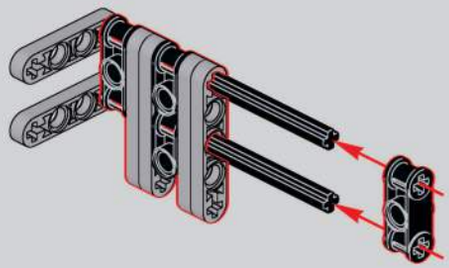

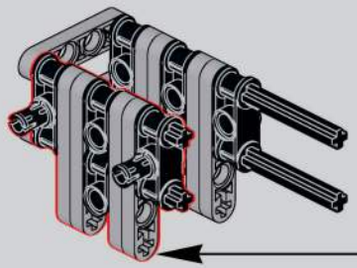

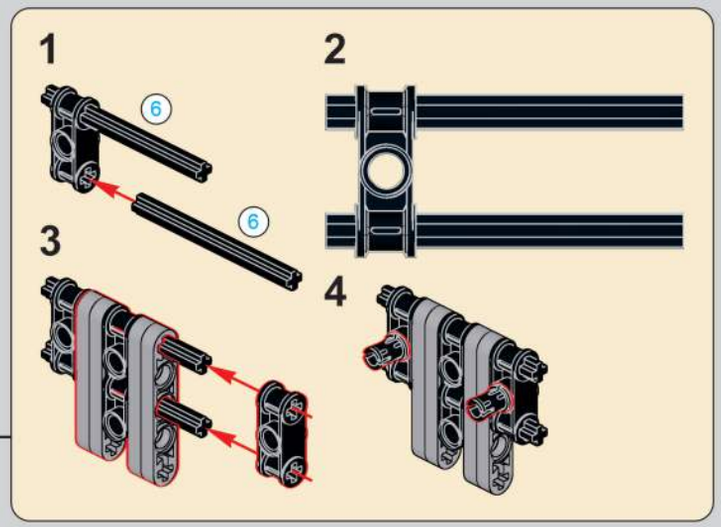

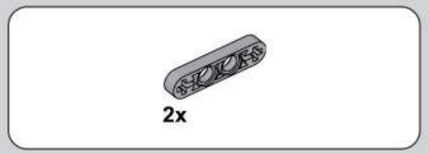

565

566

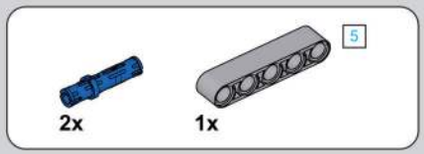

567

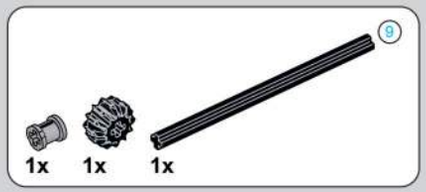

568

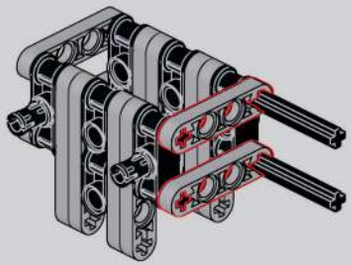

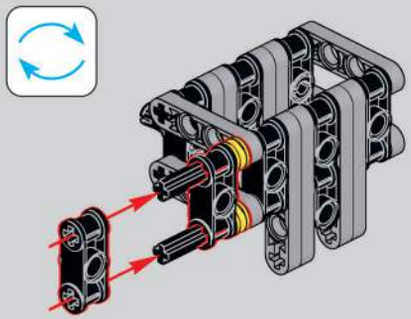

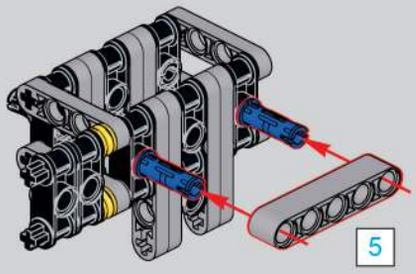

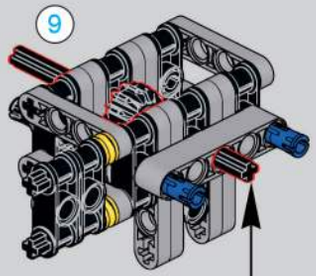

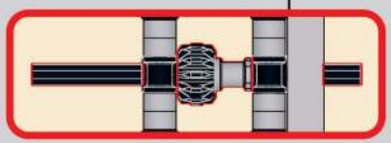

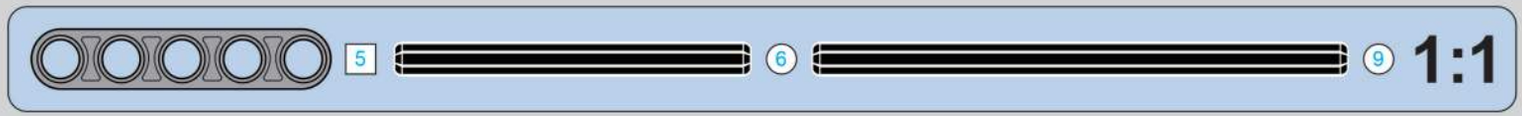

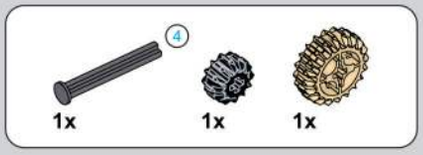

569

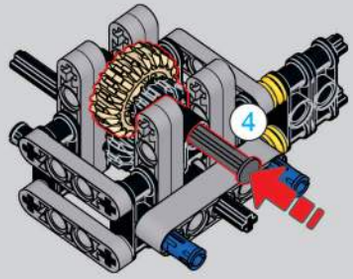

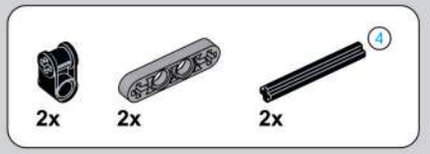

570

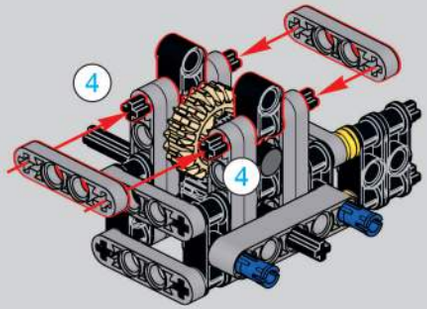

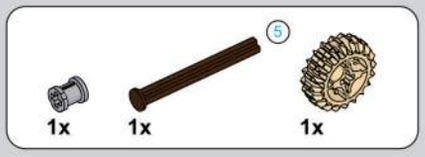

571

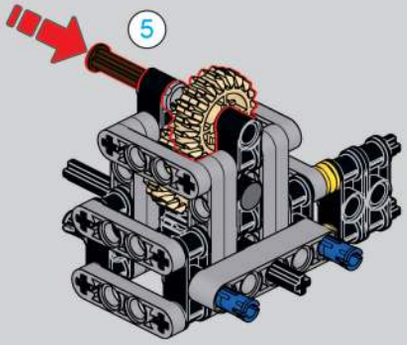

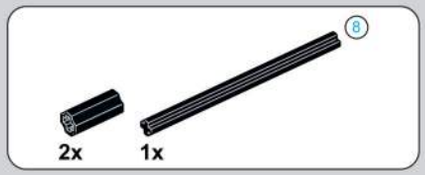

572

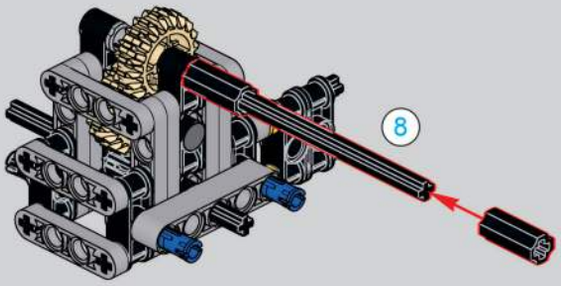

573

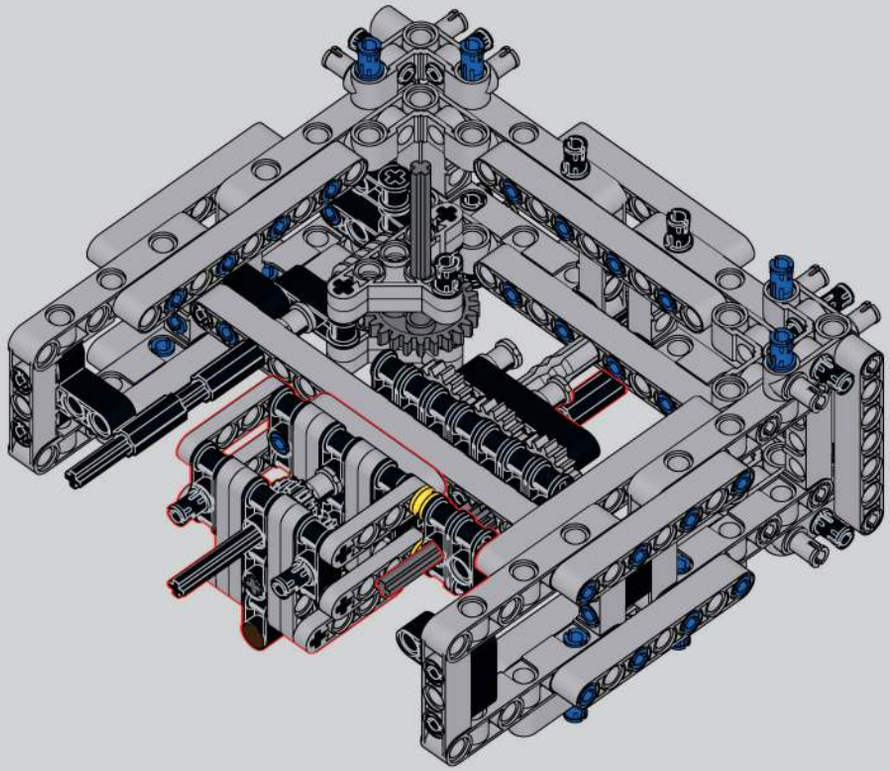

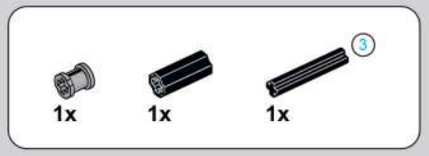

574

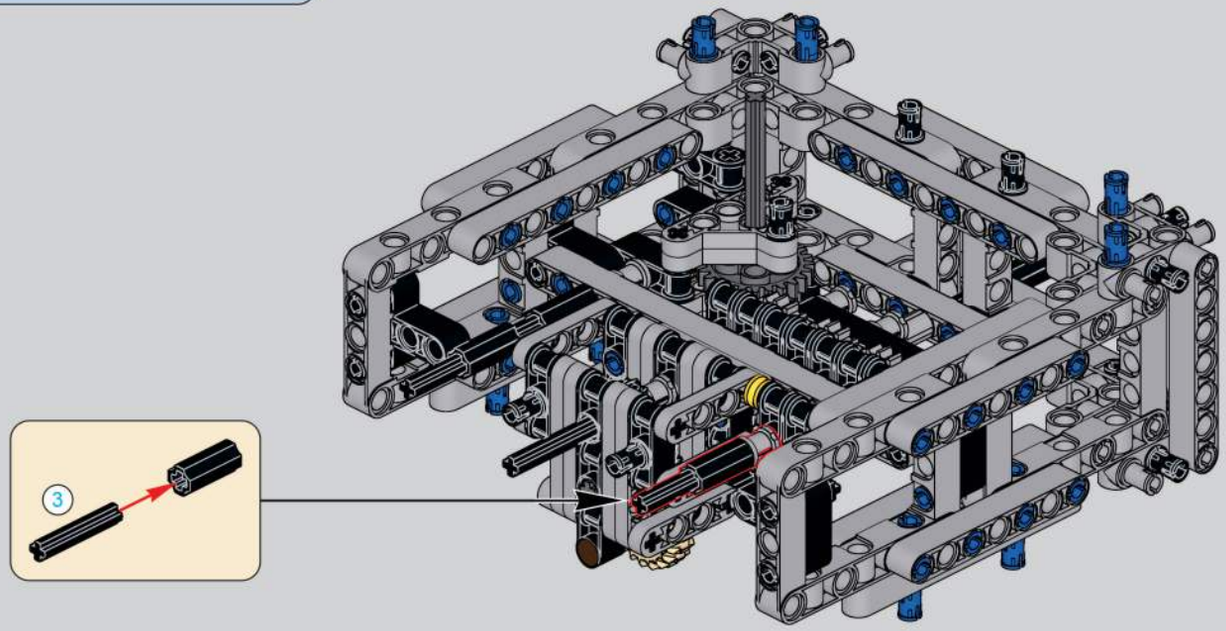

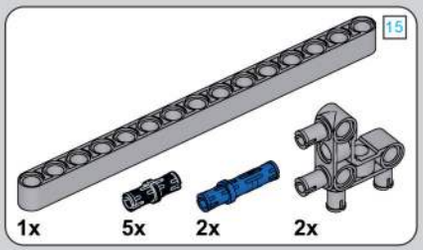

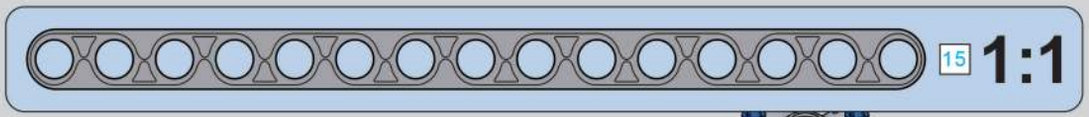

575

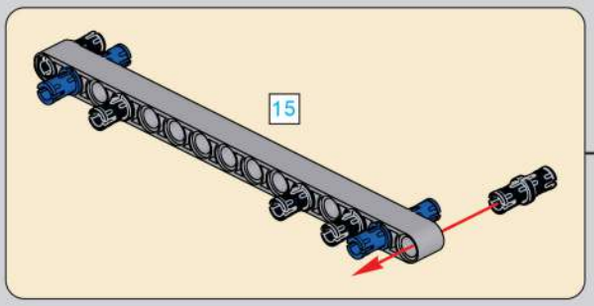

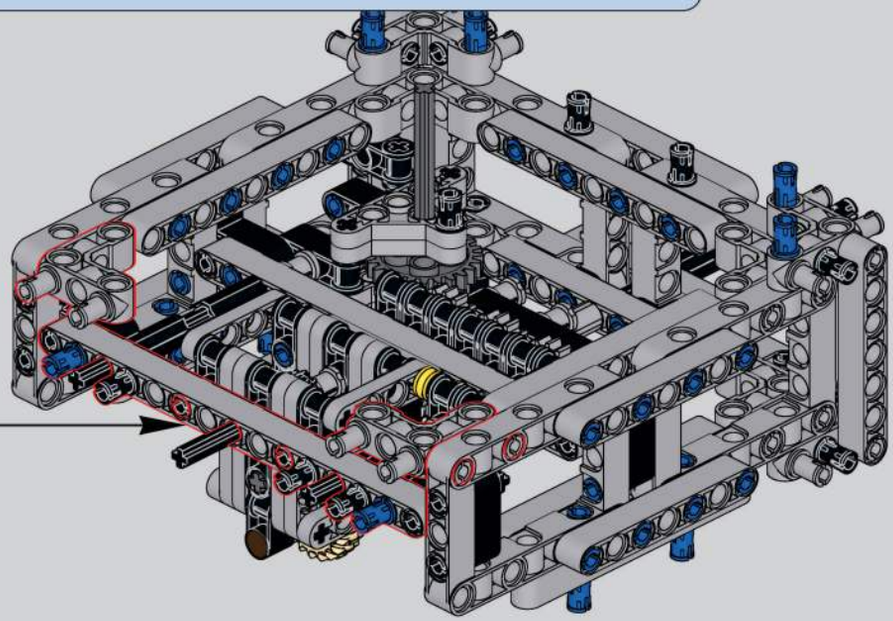

576

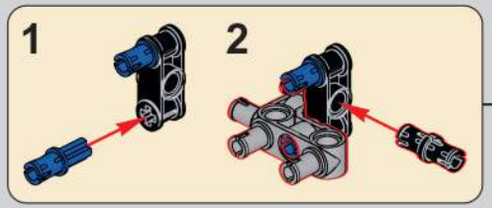

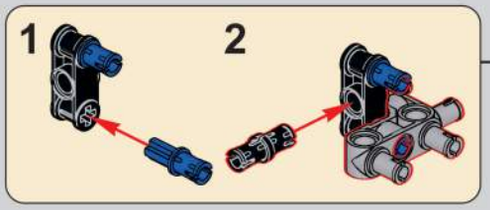

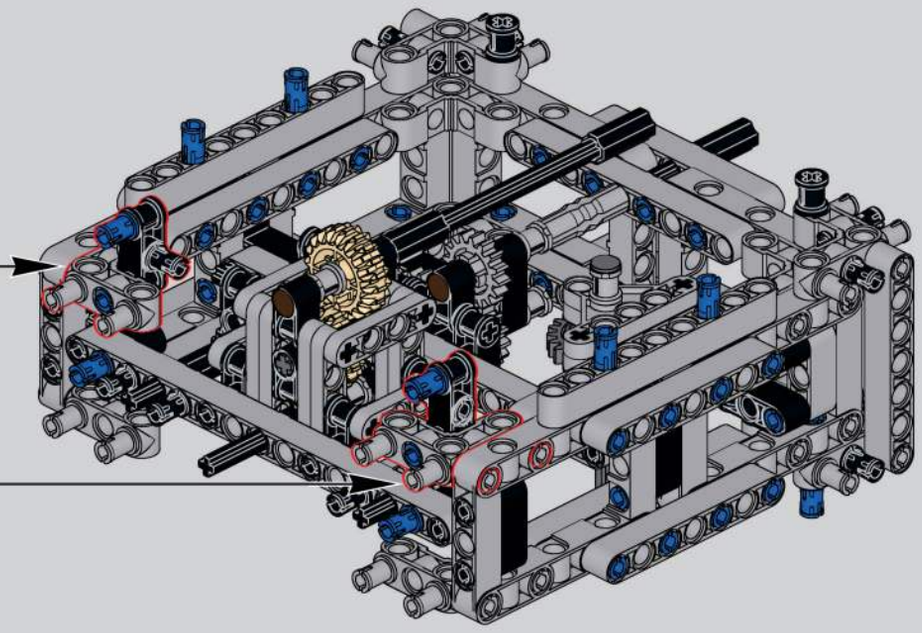

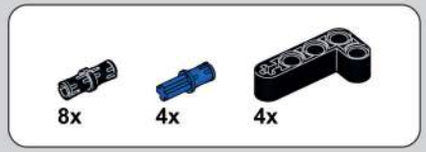

577

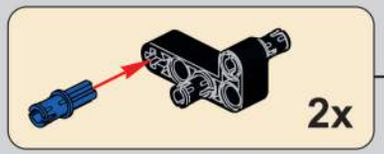

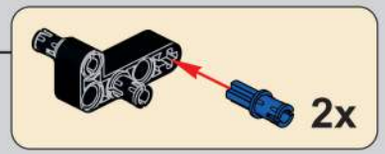

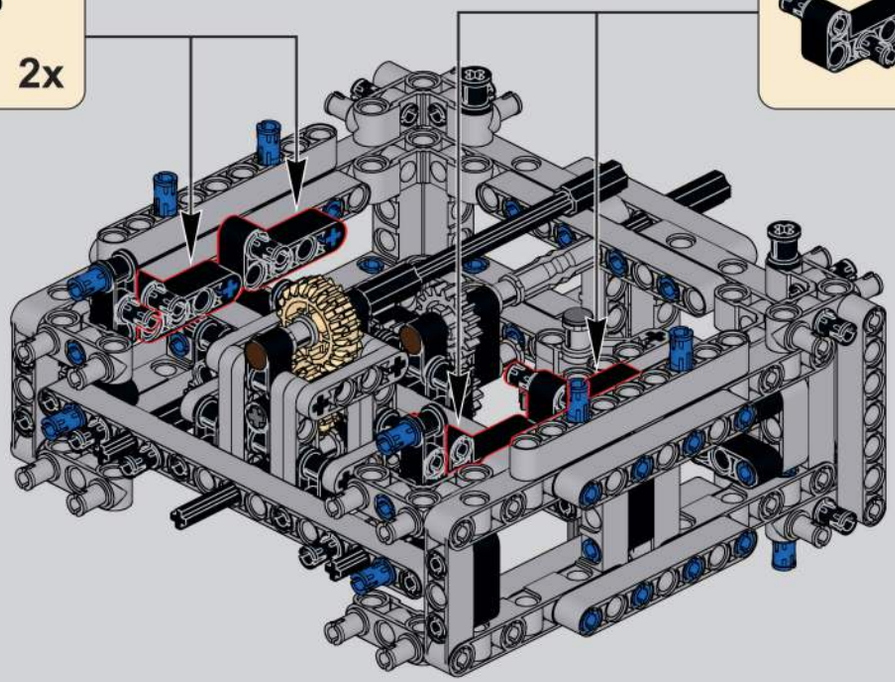

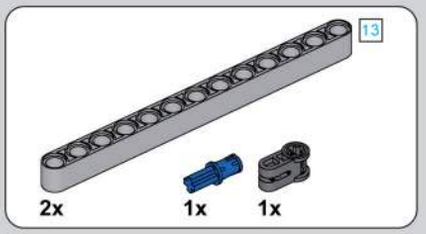

578

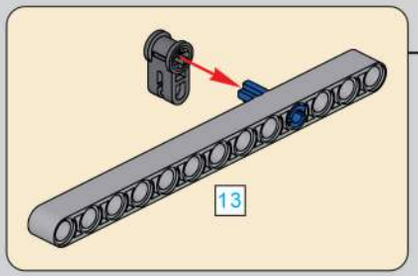

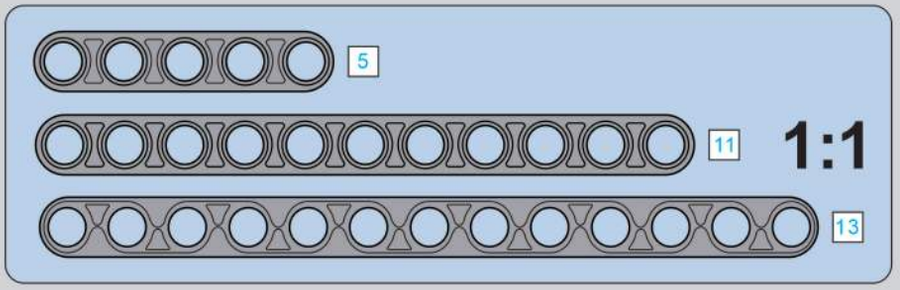

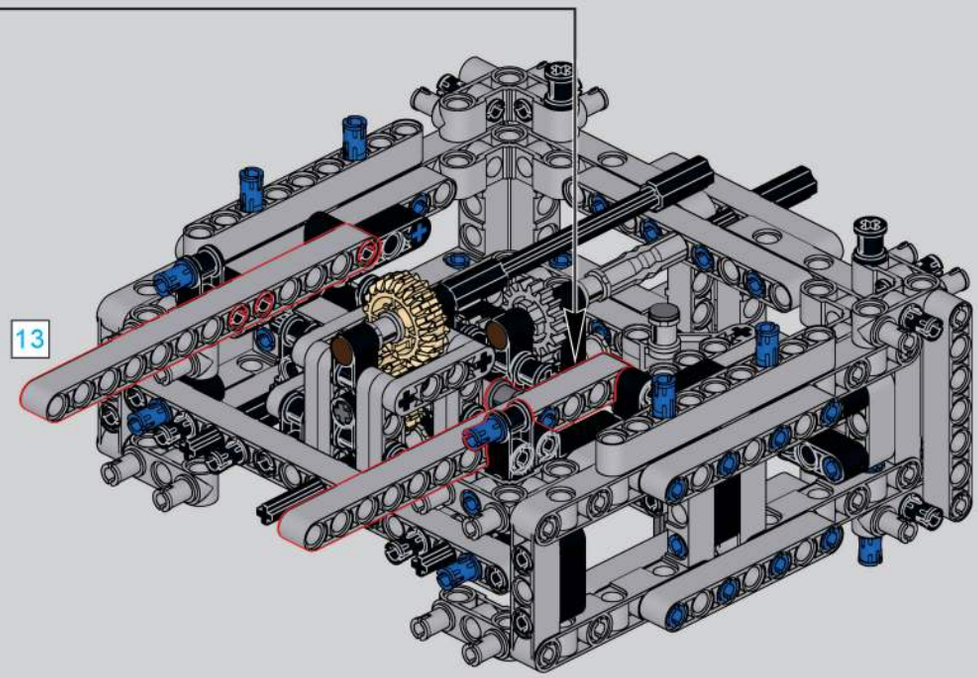

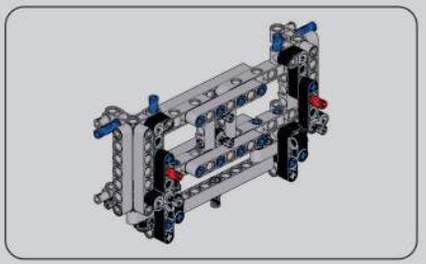

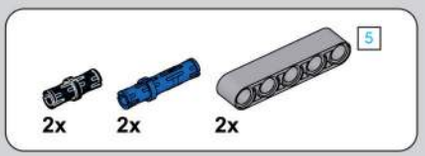

580

581

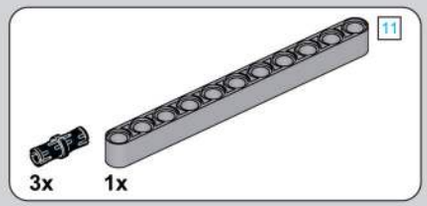

579

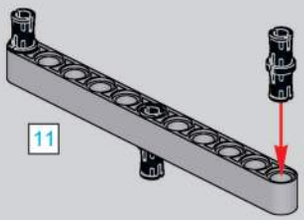

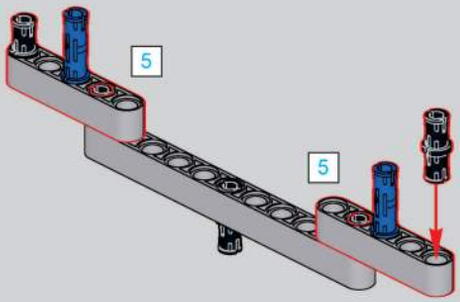

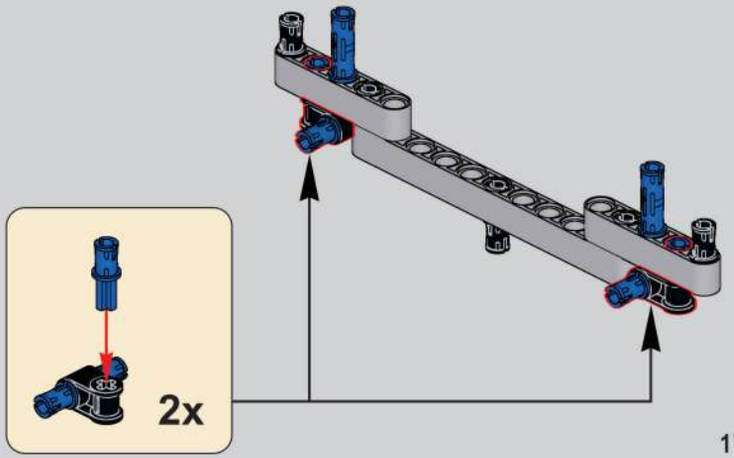

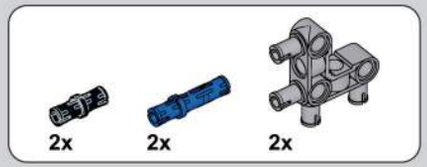

582

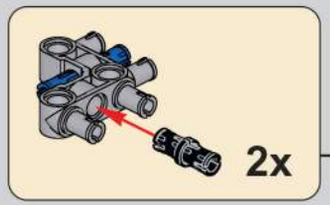

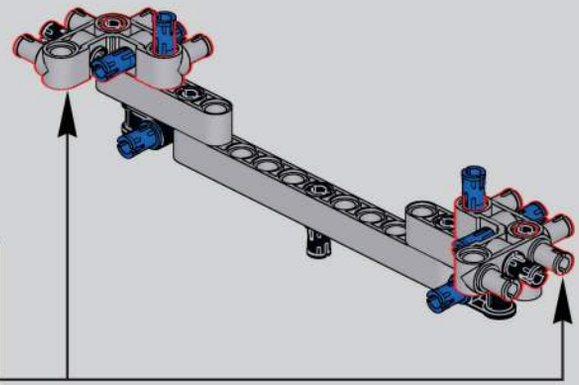

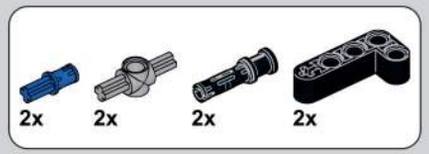

583

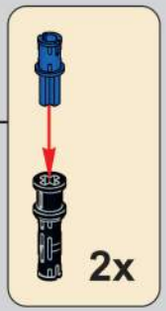

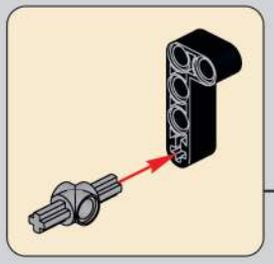

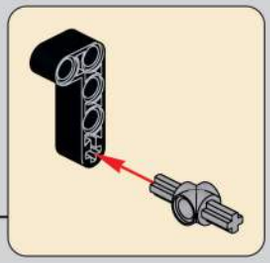

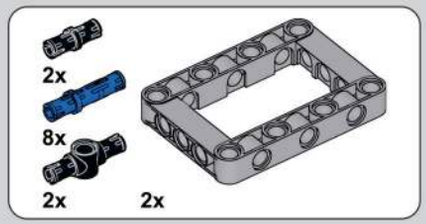

584

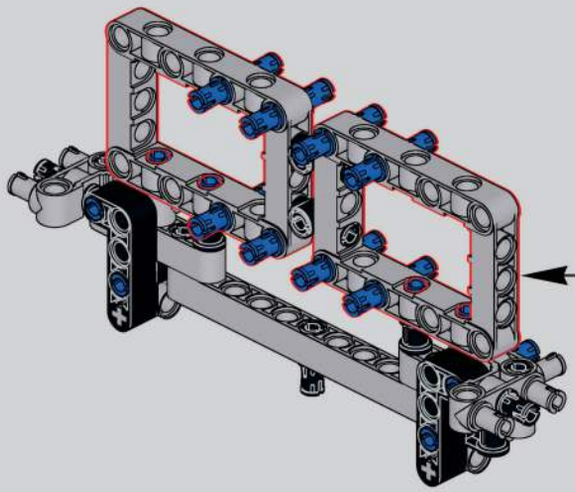

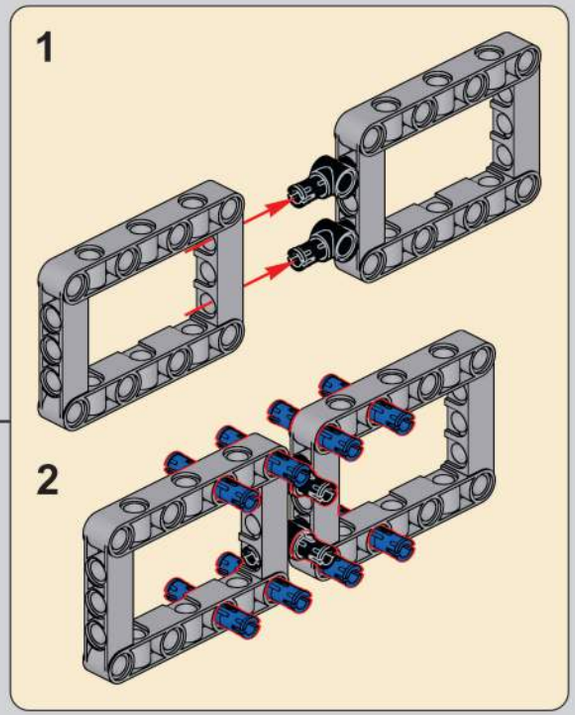

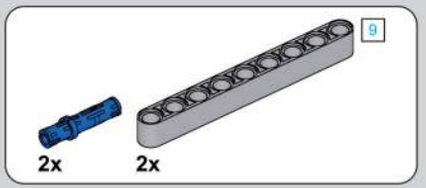

585

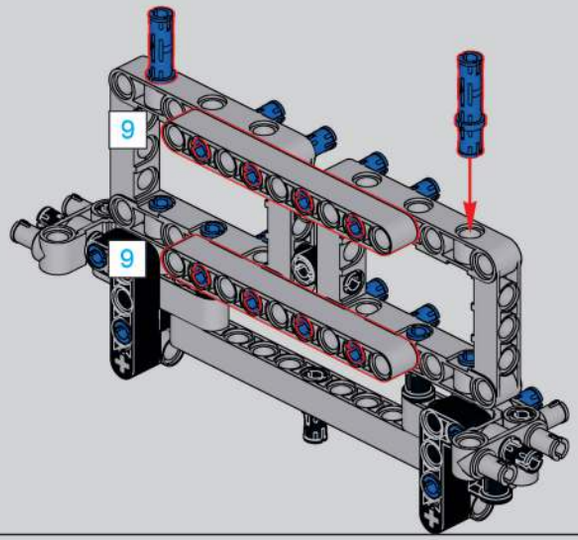

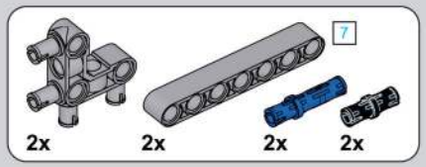

586

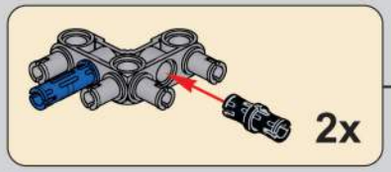

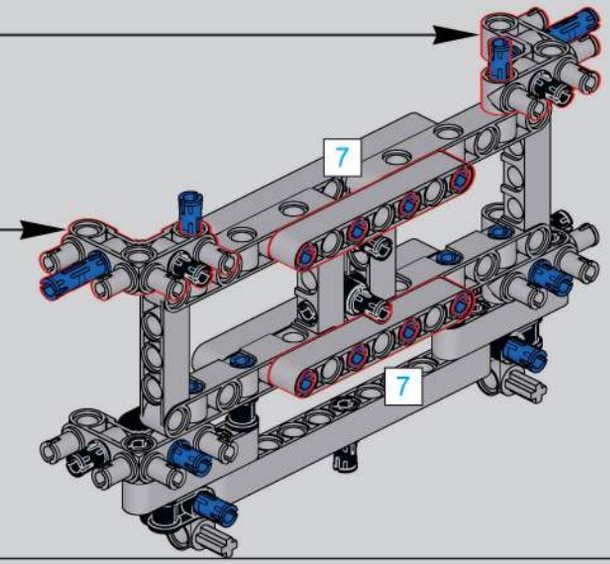

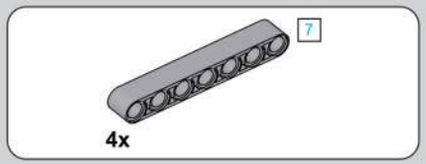

587

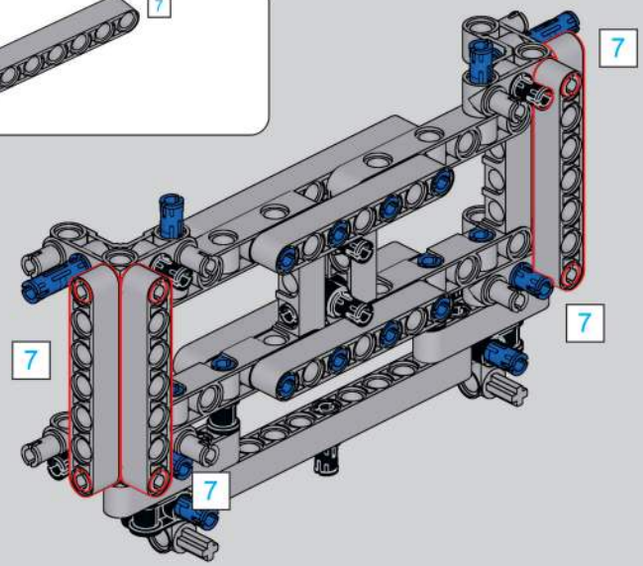

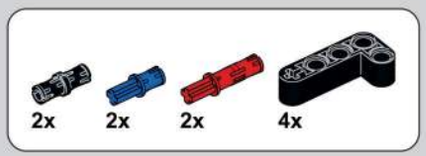

588

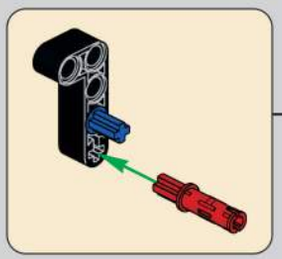

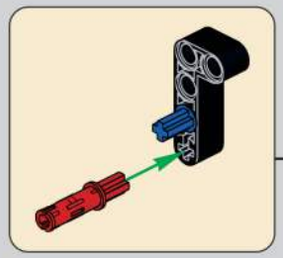

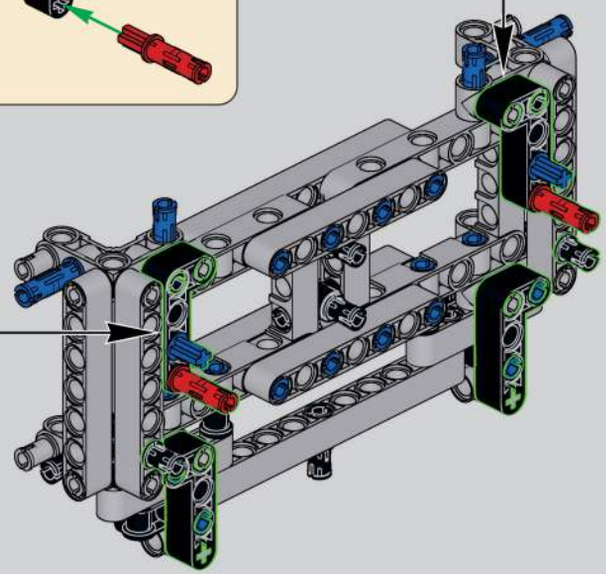

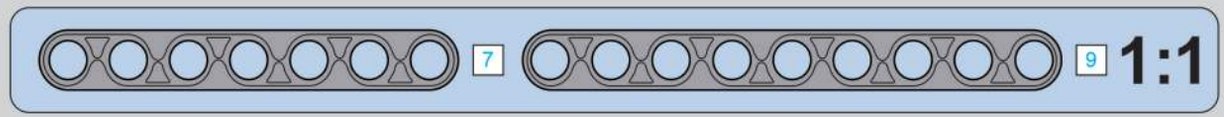

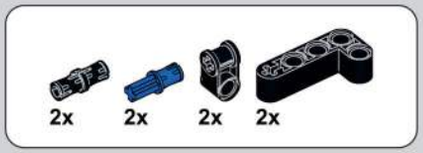

589

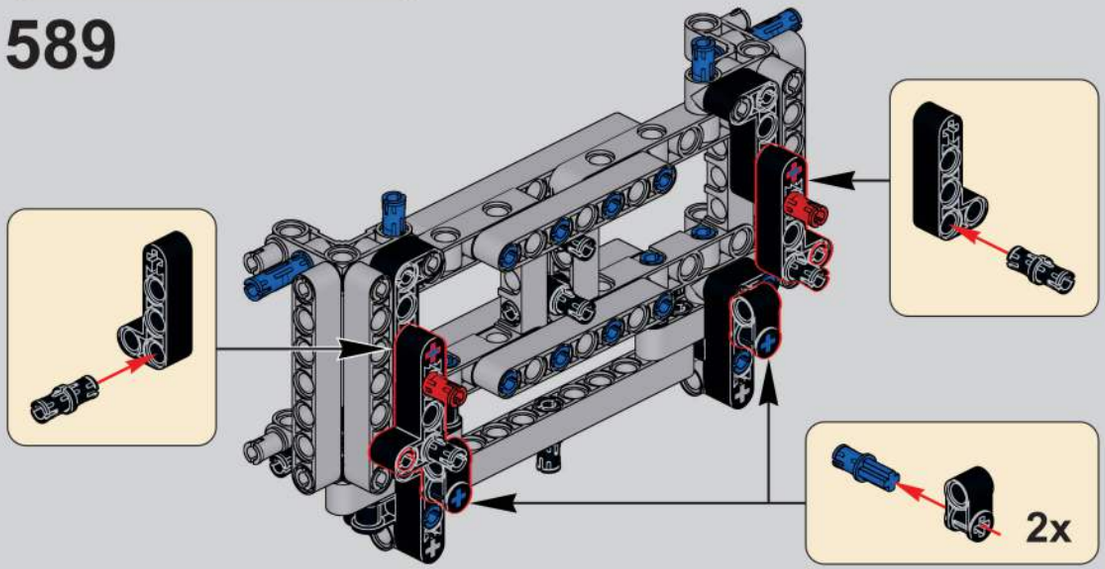

590

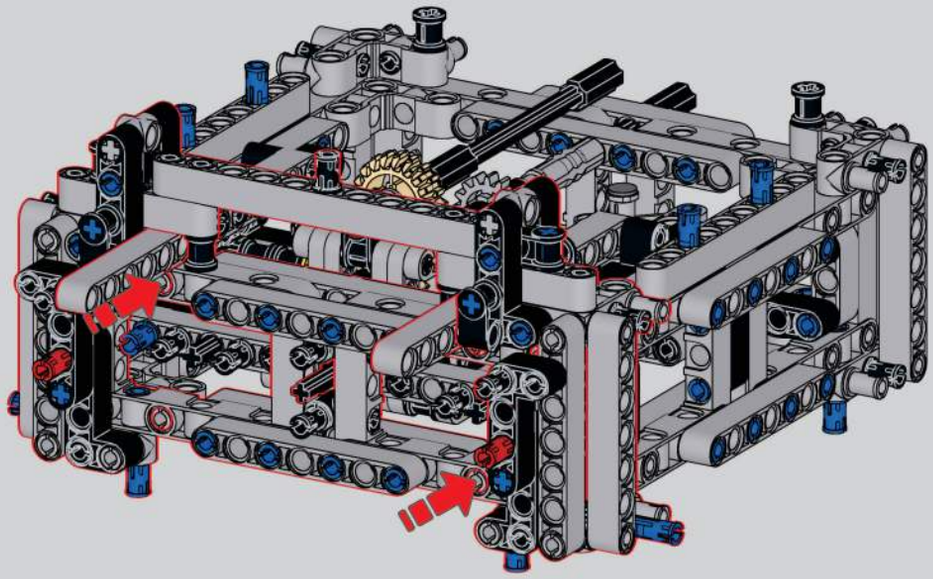

591

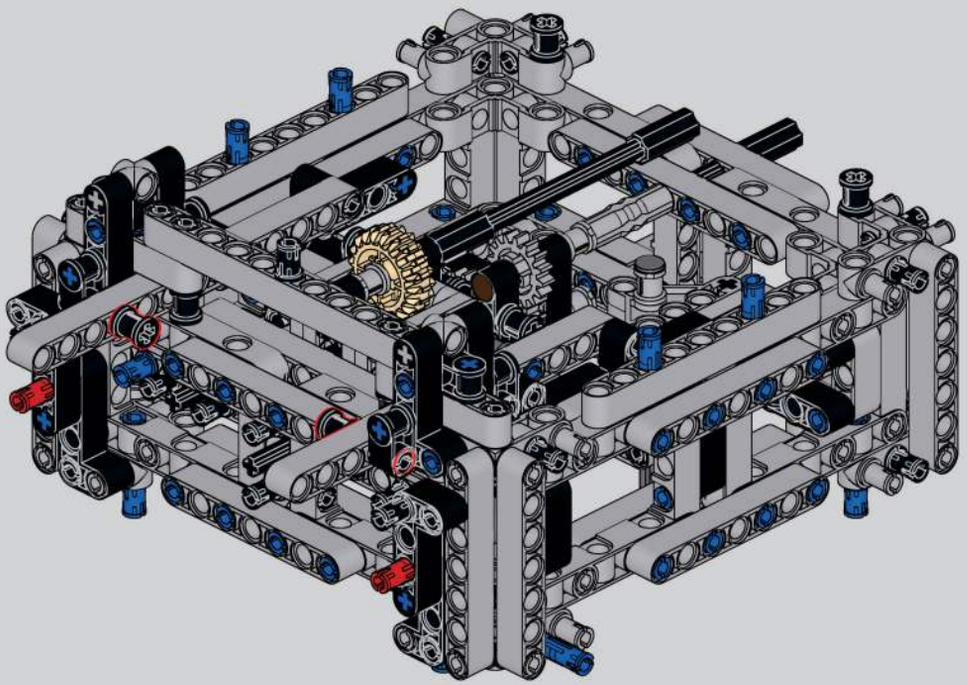

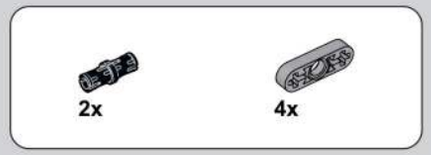

592

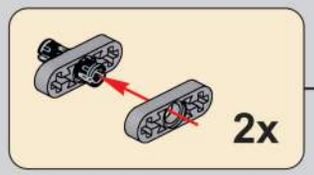

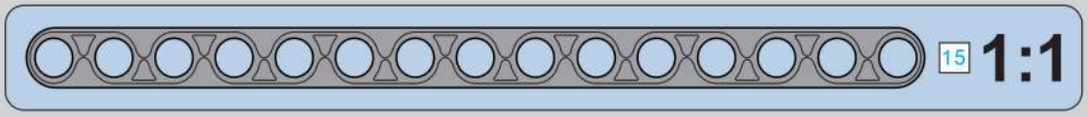

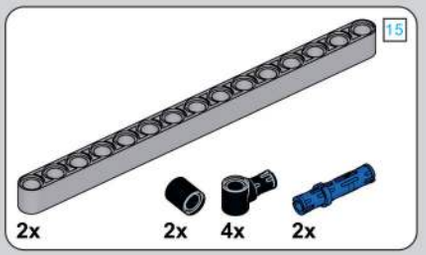

593

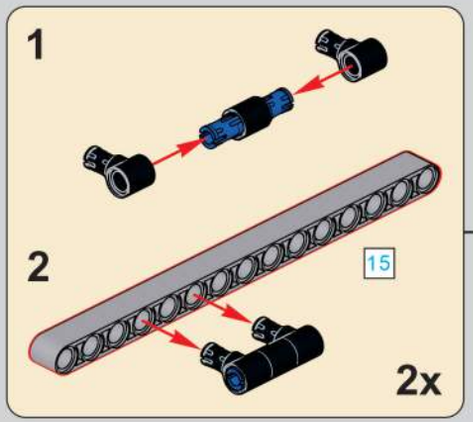

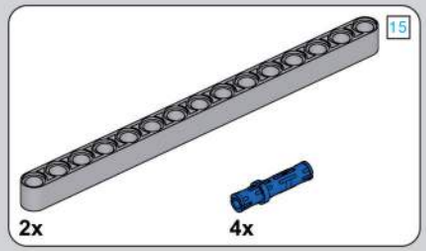

594

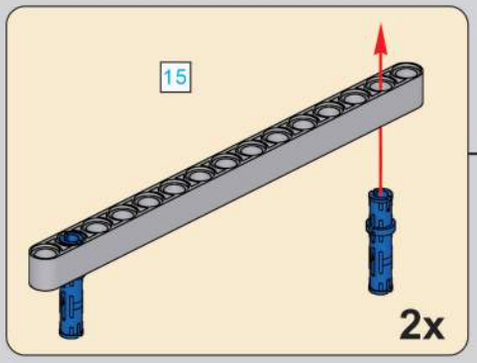

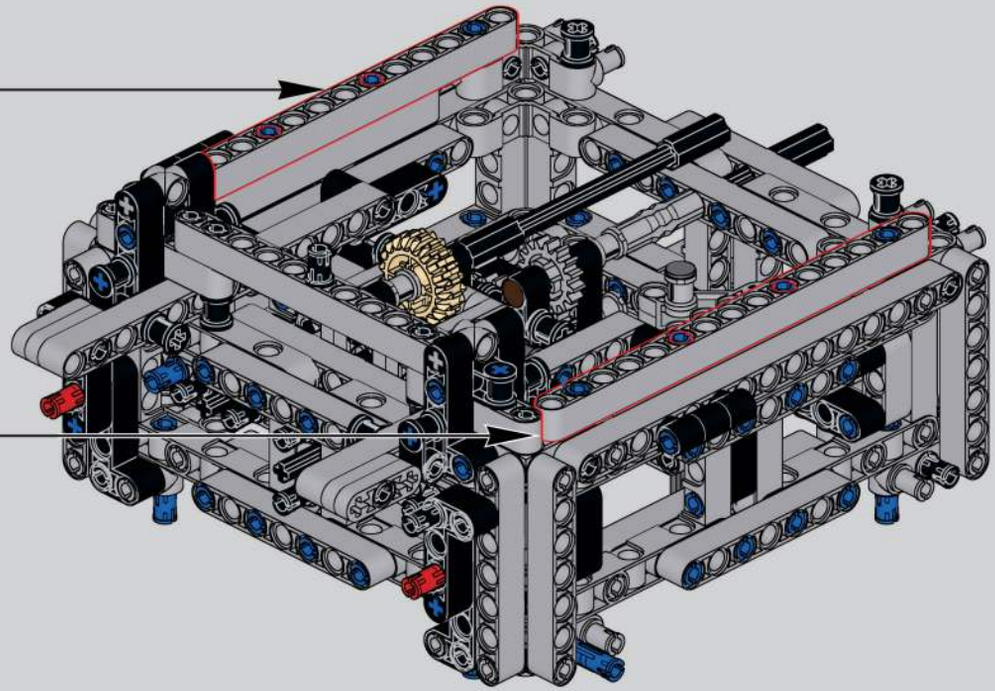

595

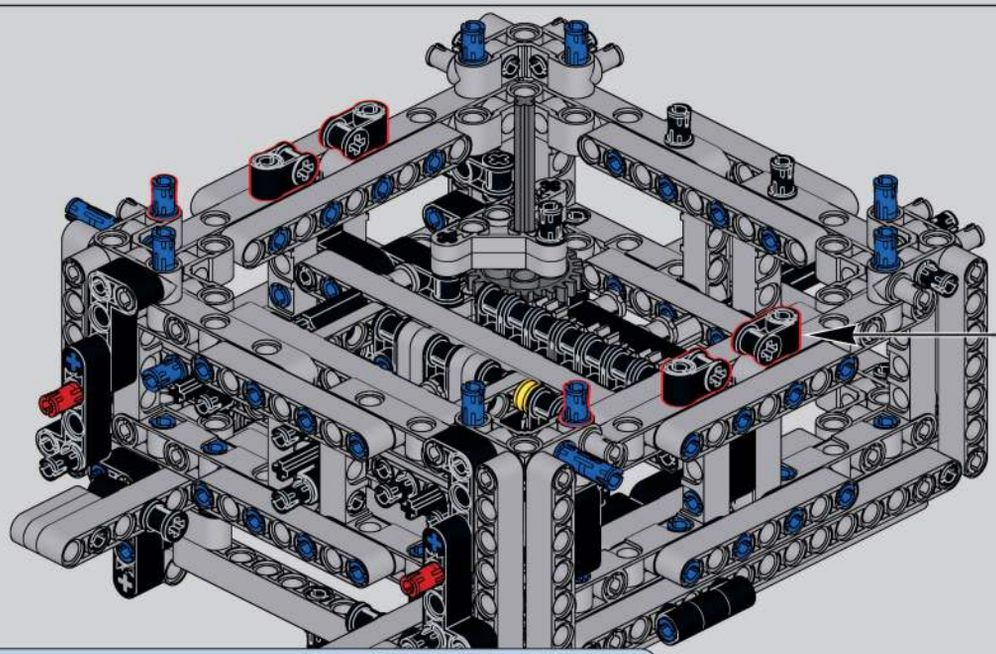

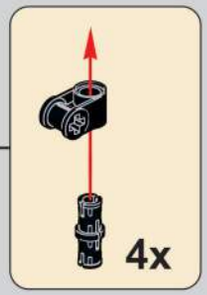

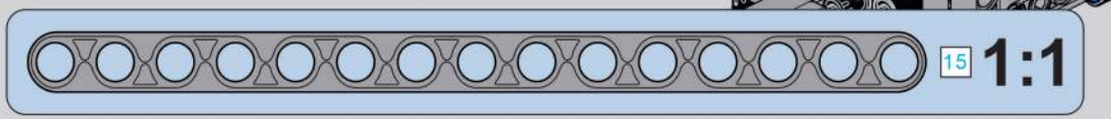

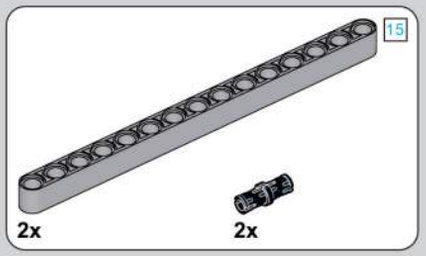

596

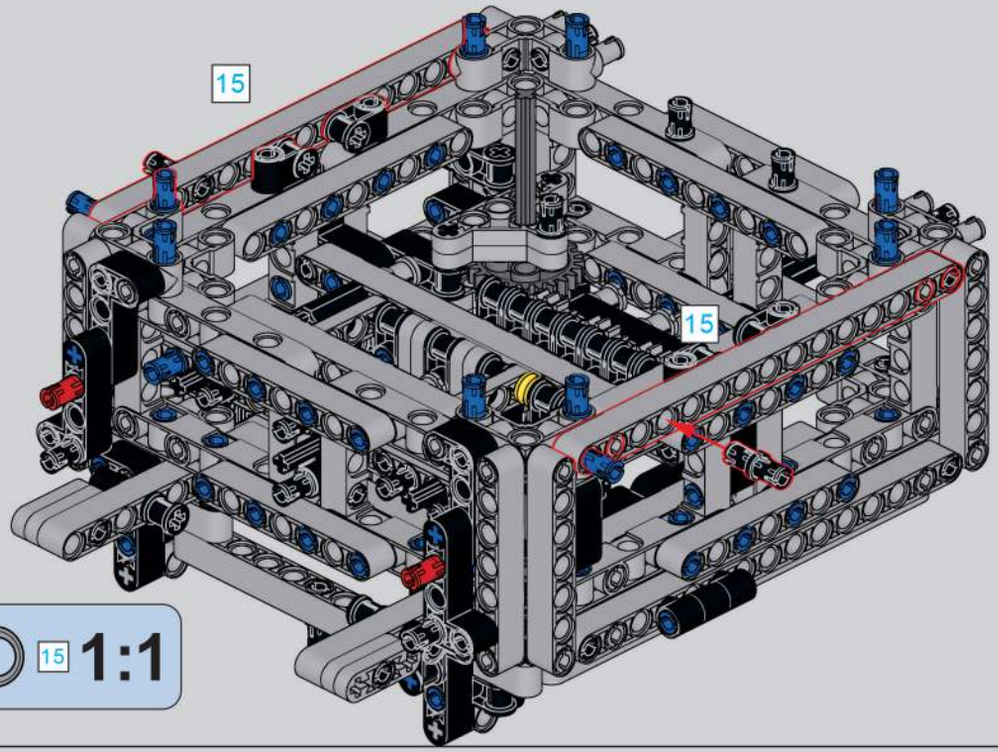

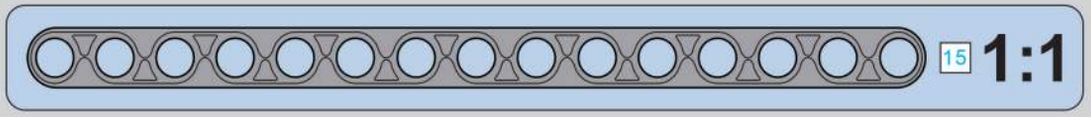

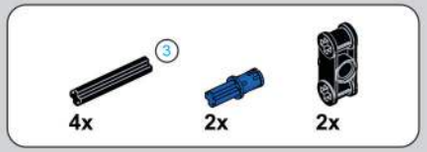

597

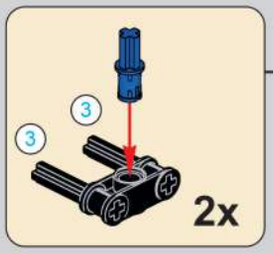

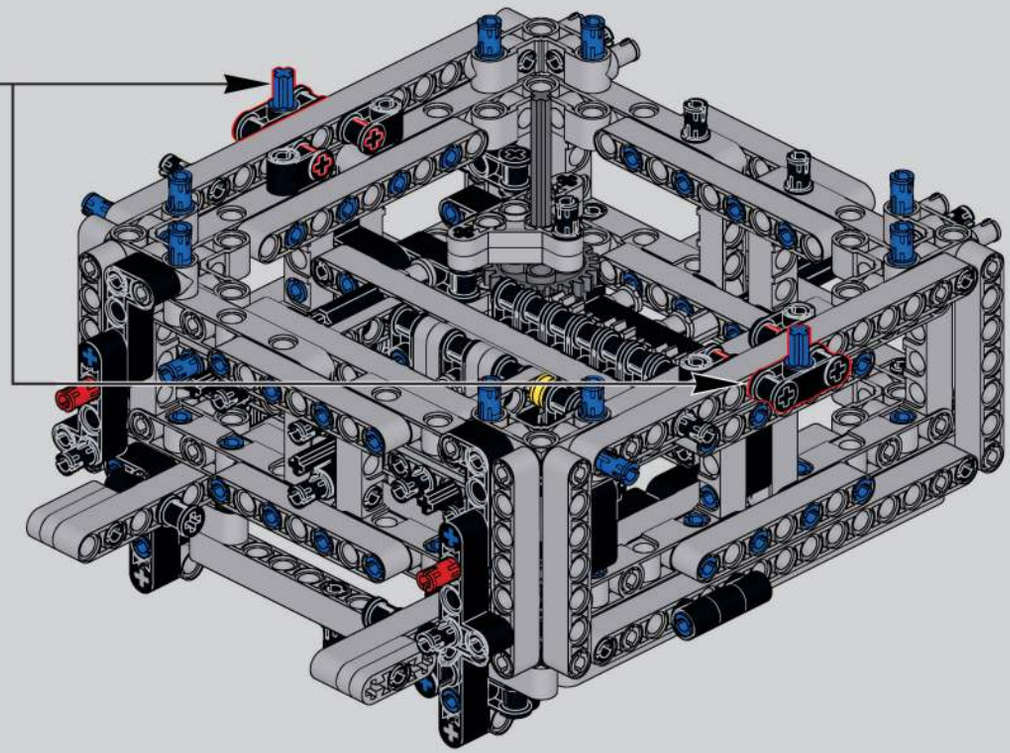

598

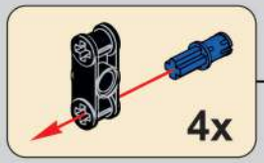

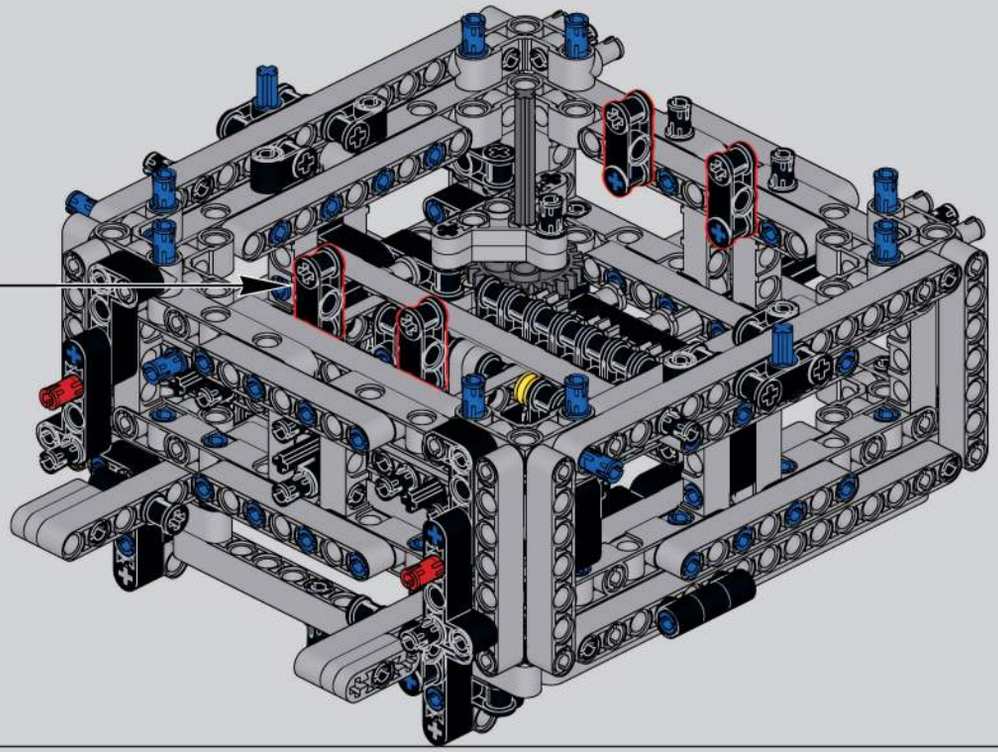

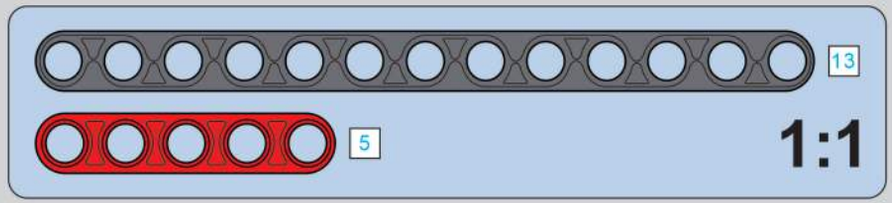

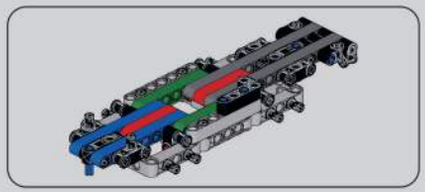

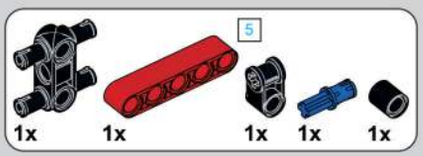

600

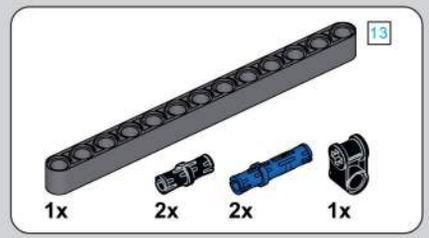

601

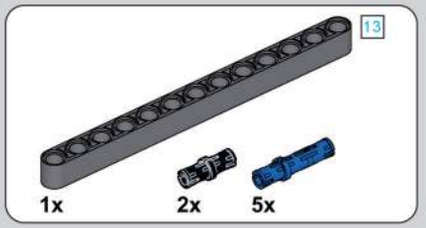

599

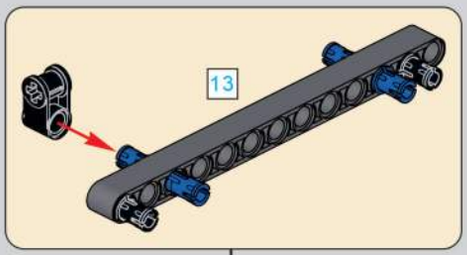

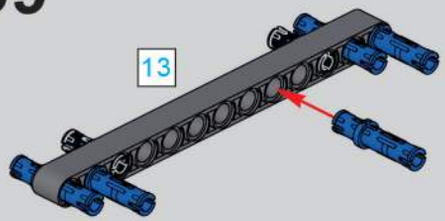

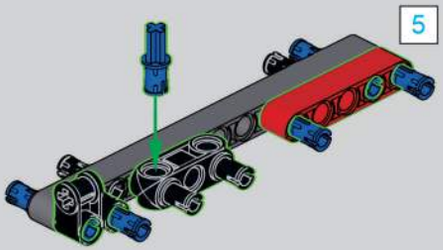

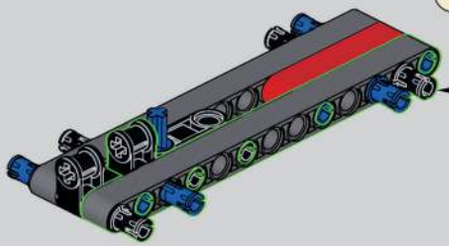

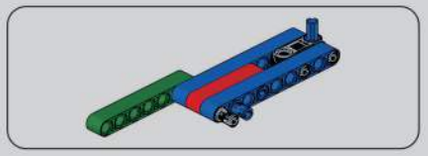

602

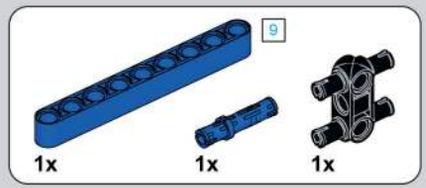

603

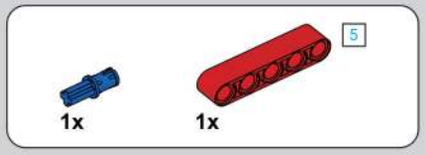

604

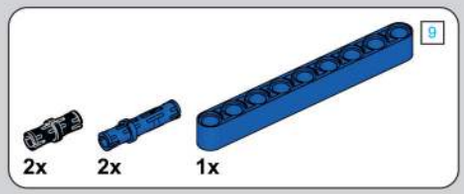

605

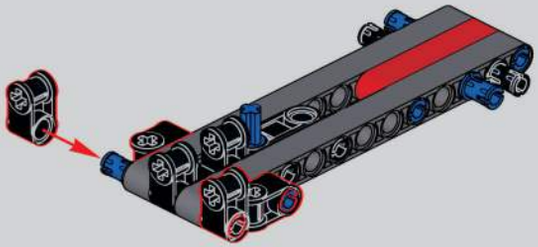

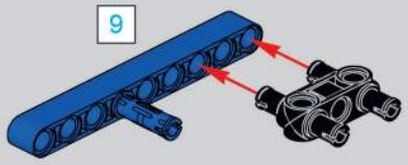

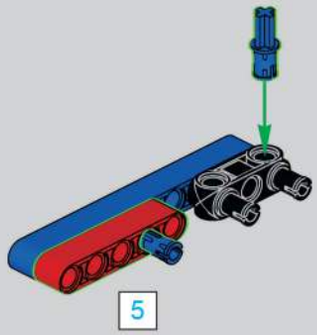

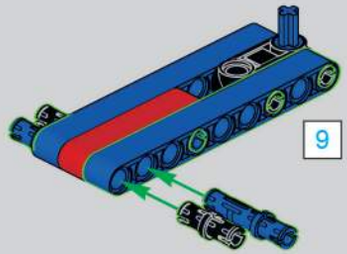

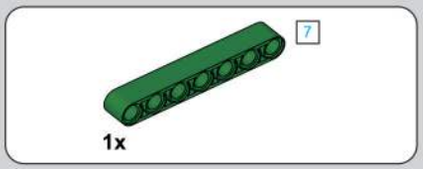

606

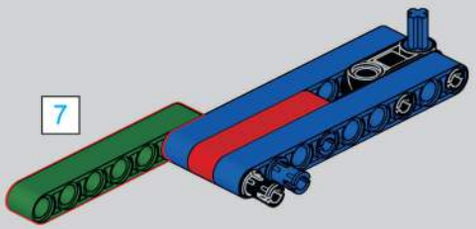

607

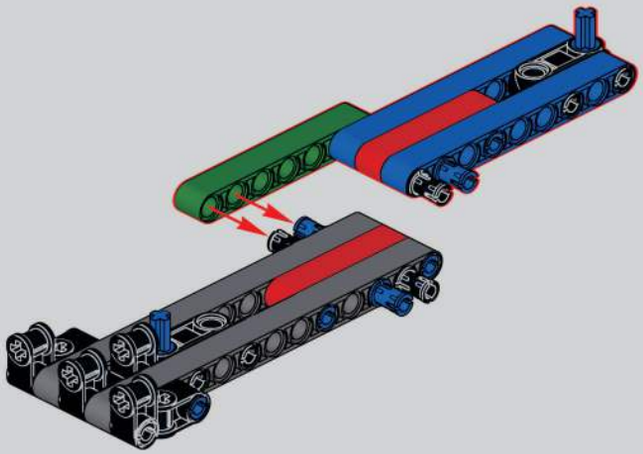

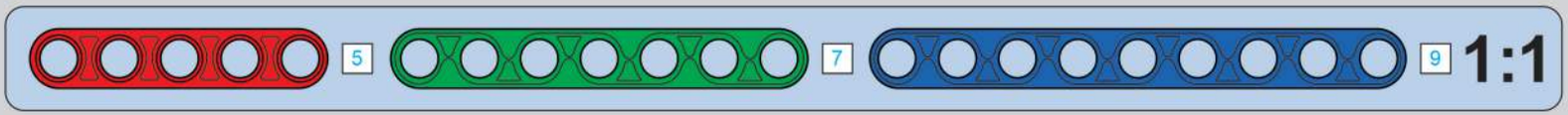

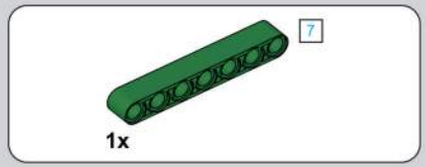

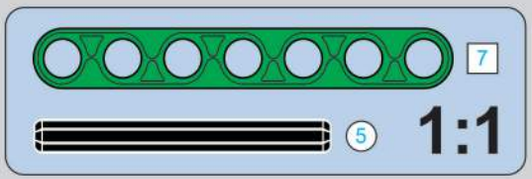

608

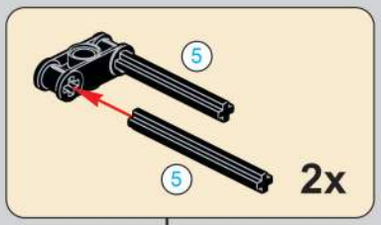

609

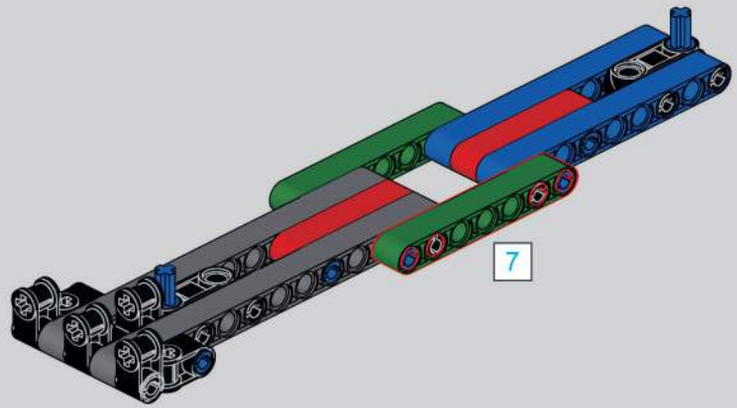

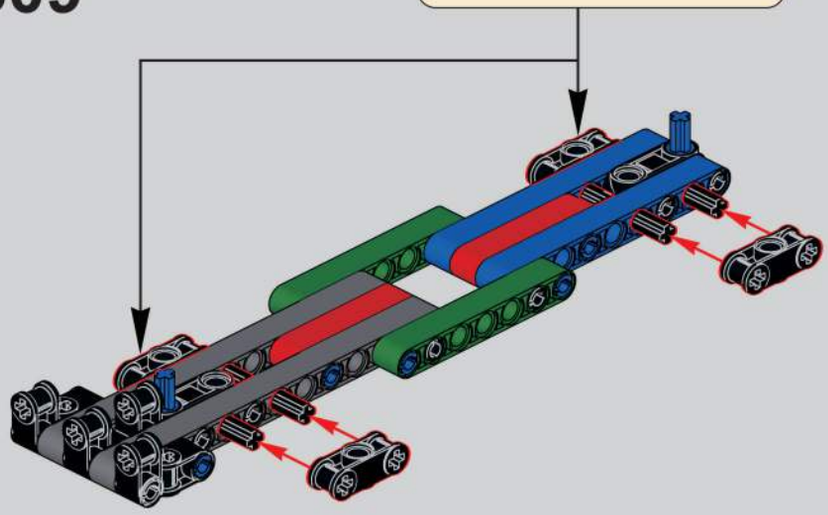

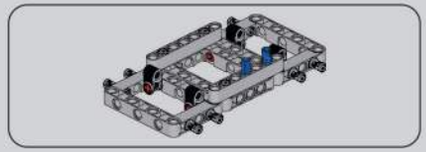

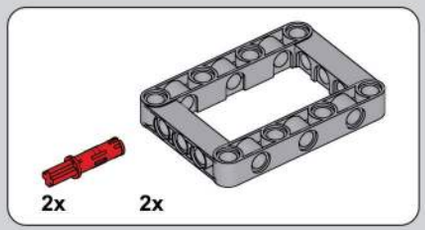

610

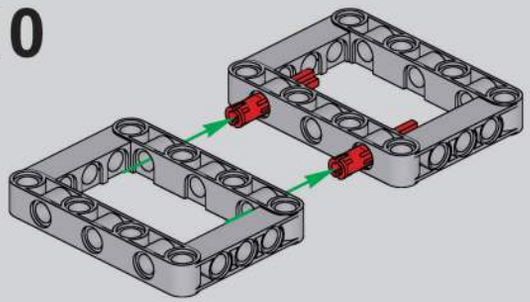

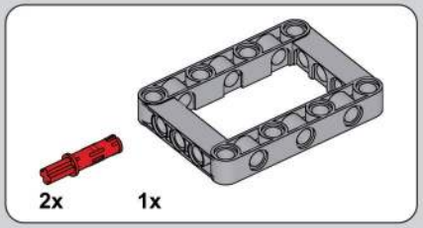

611

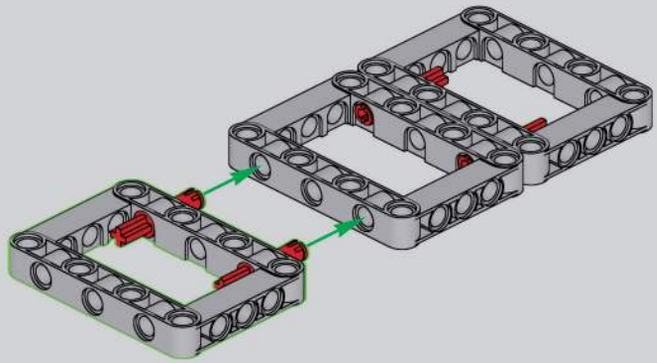

612

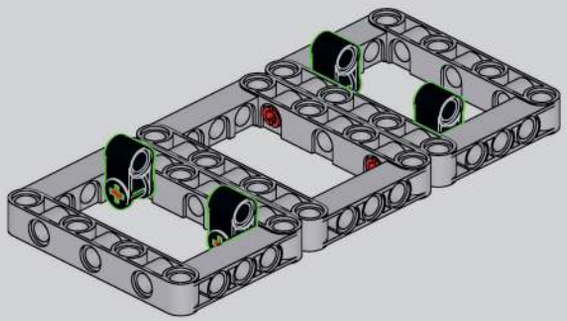

613

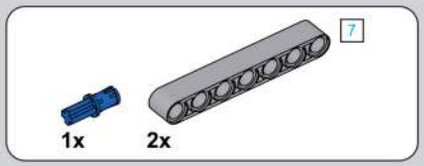

614

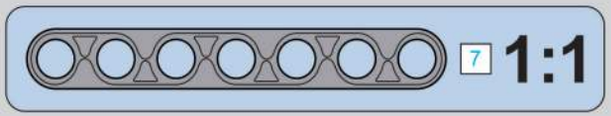

615

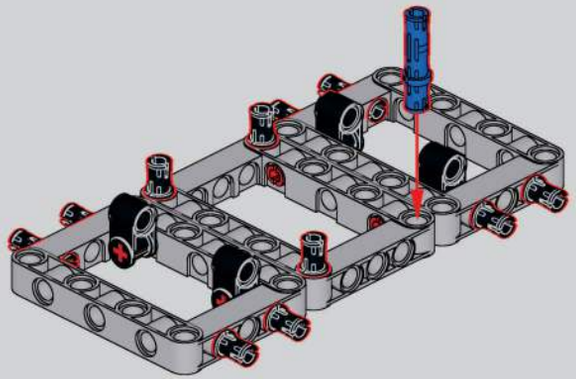

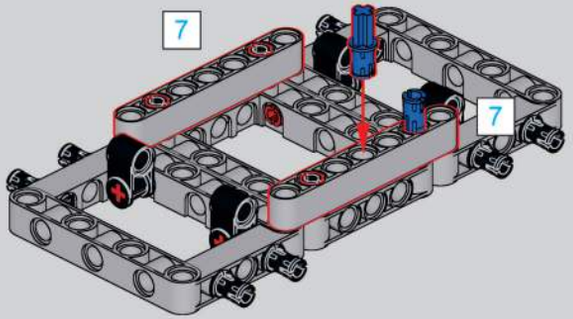

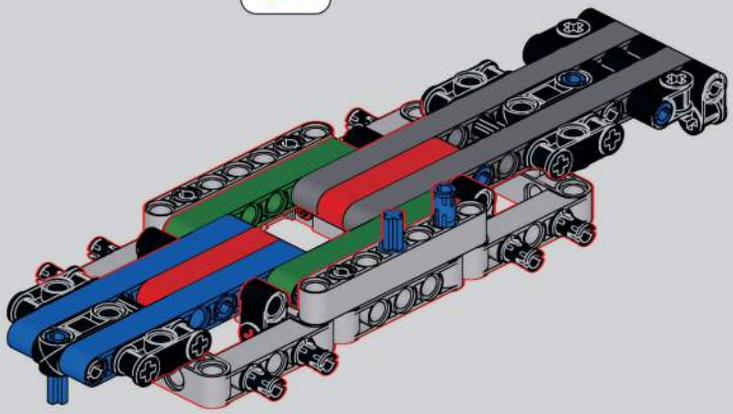

616

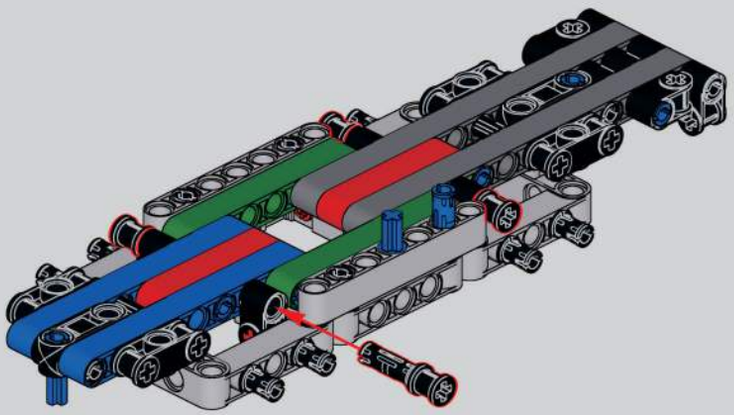

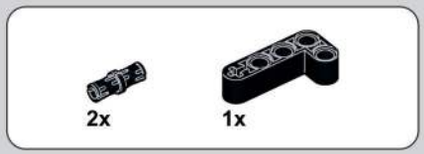

617

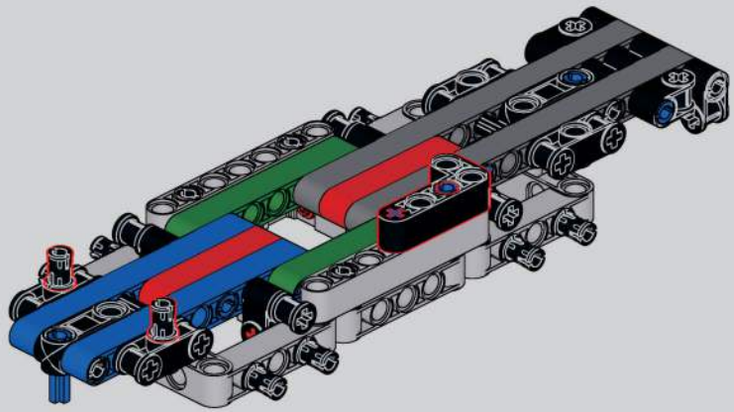

618

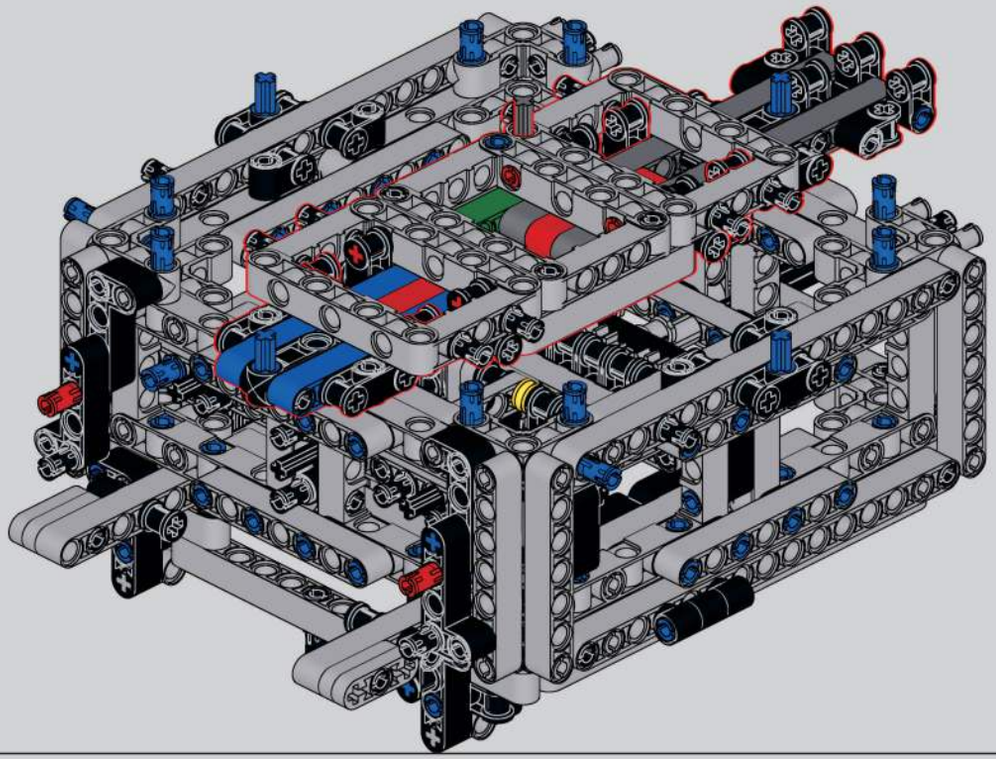

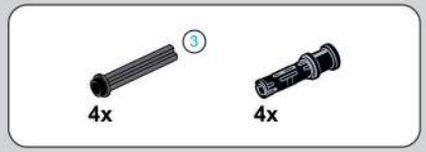

619

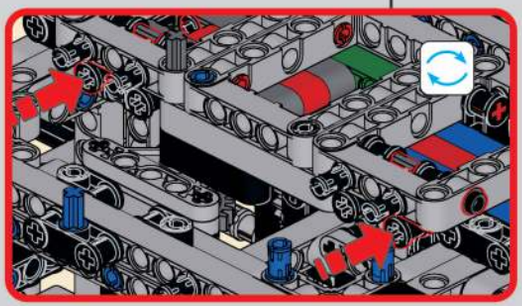

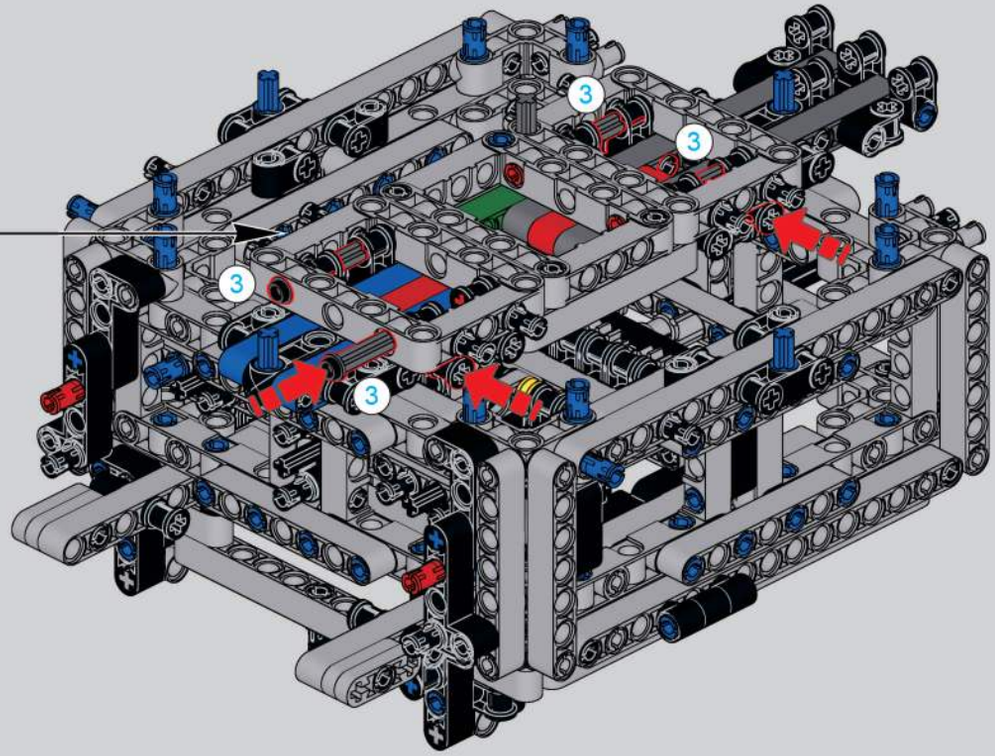

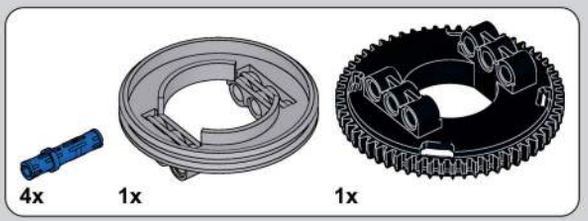

620

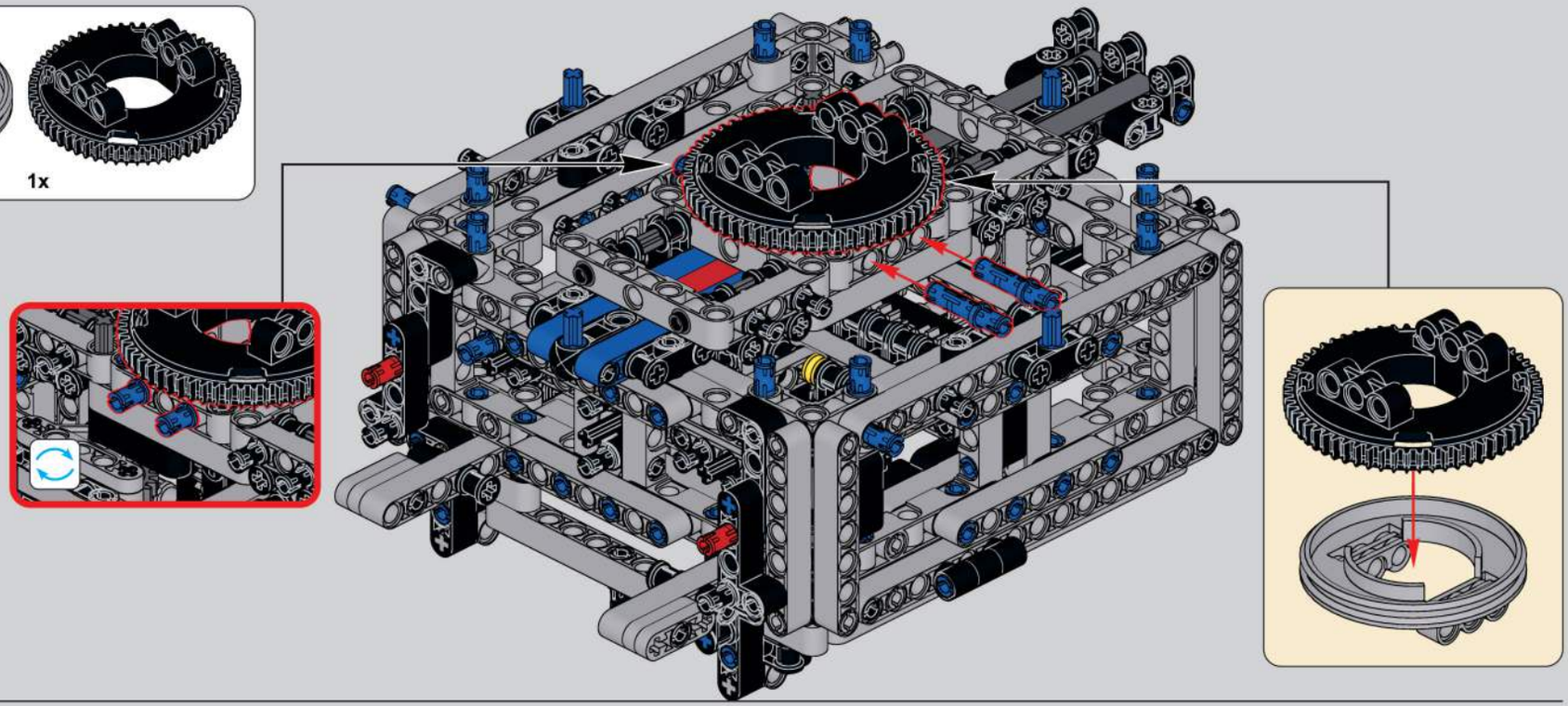

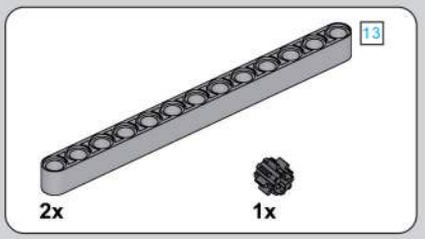

621

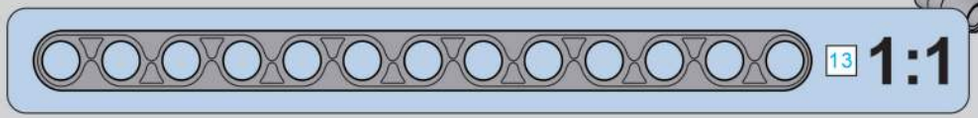

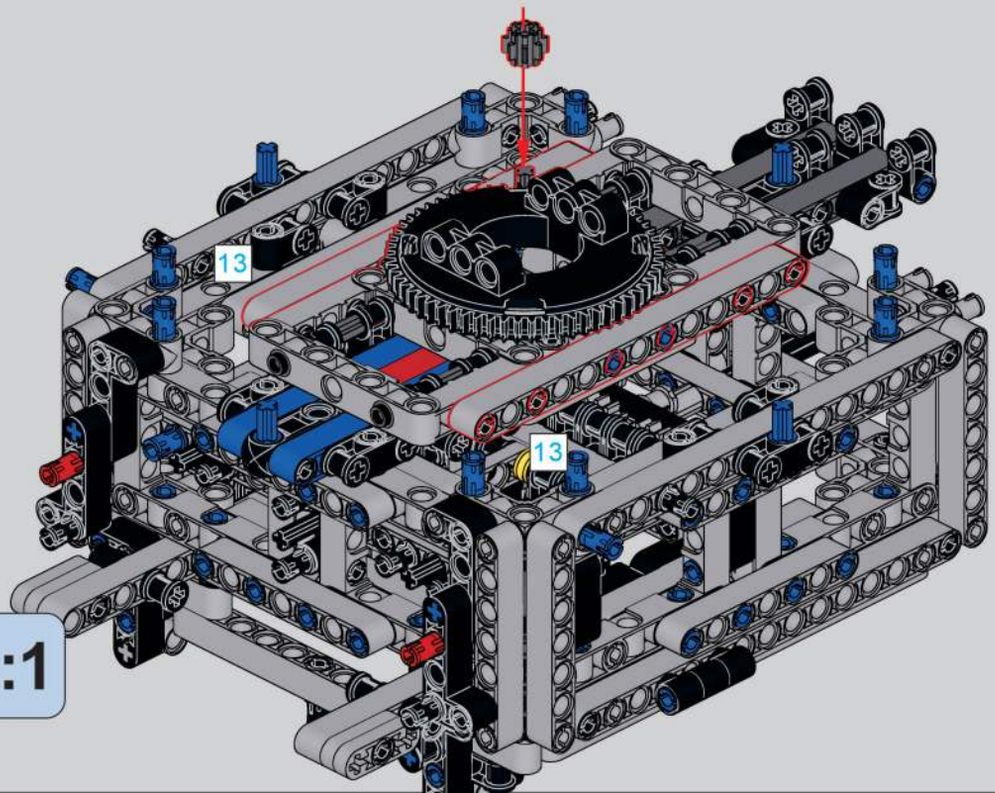

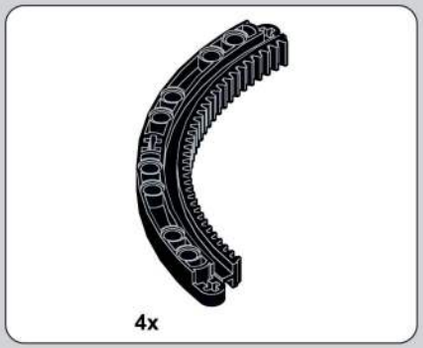

622

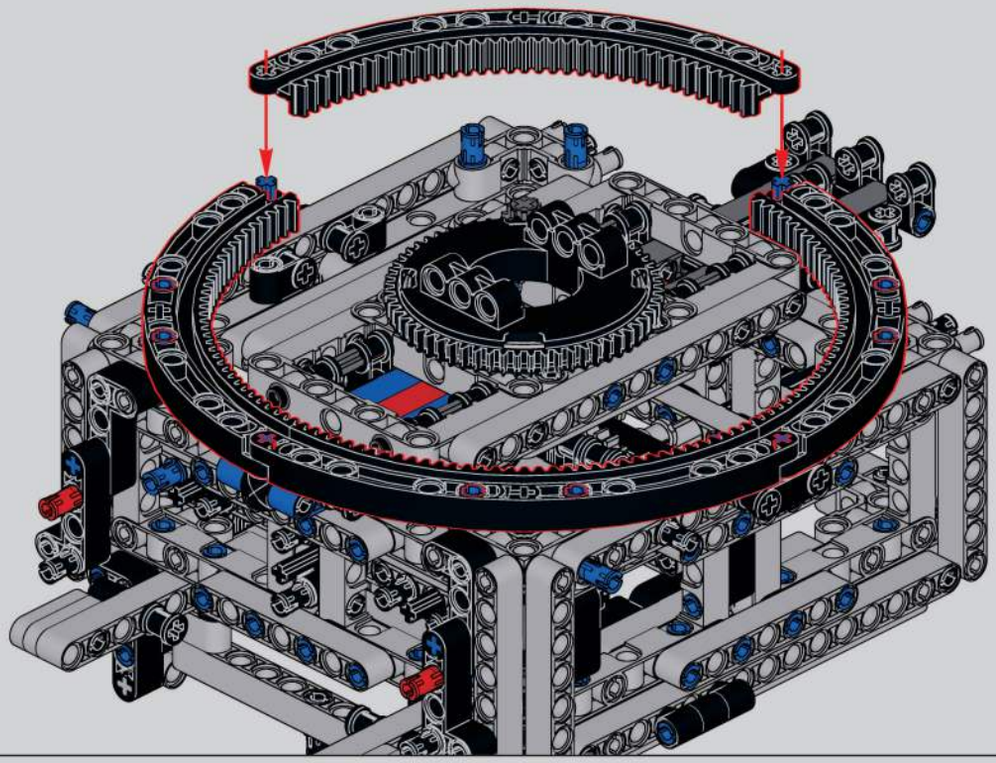

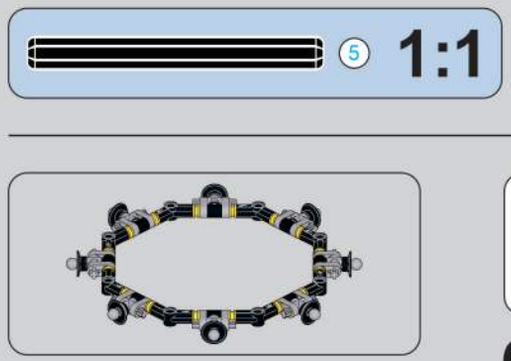

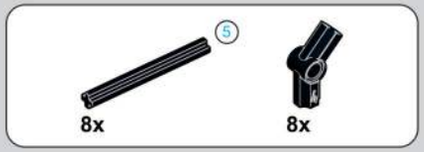

623

624

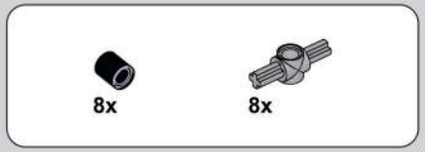

625

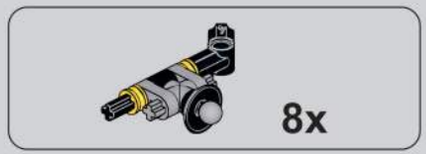

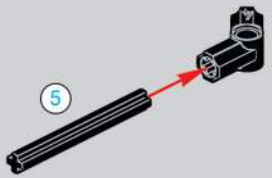

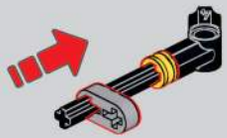

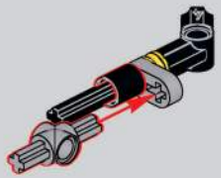

626

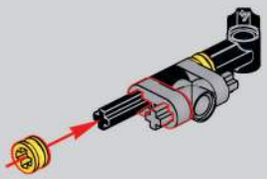

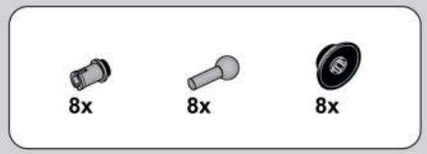

627

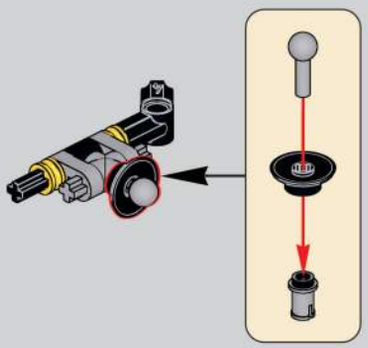

8x

628

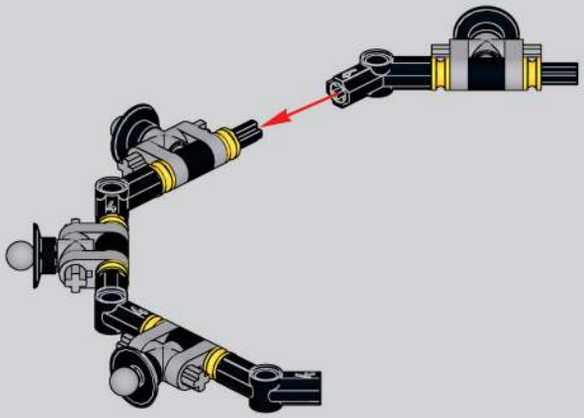

2x

629

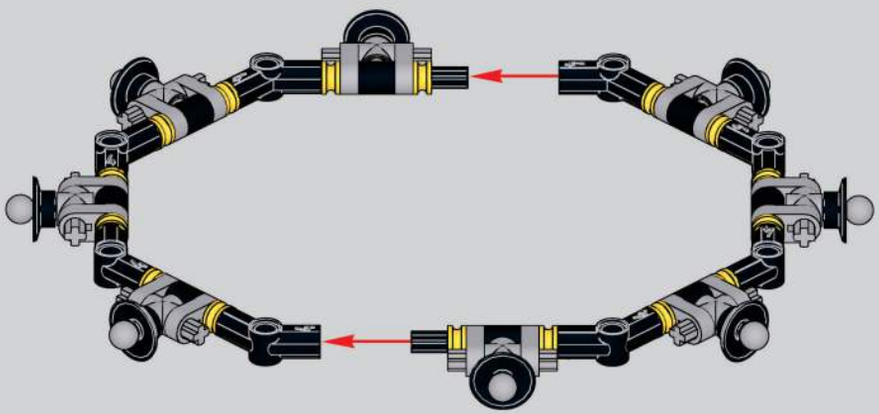

630

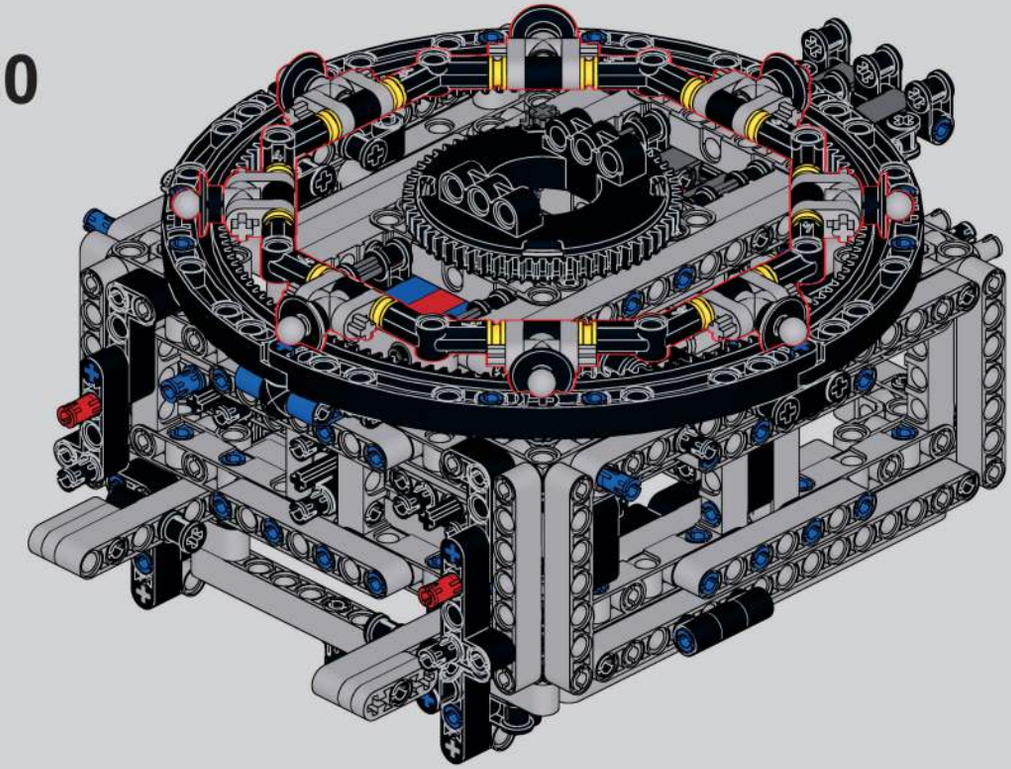

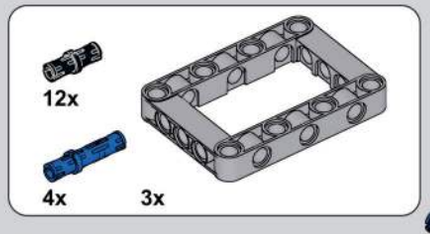

631

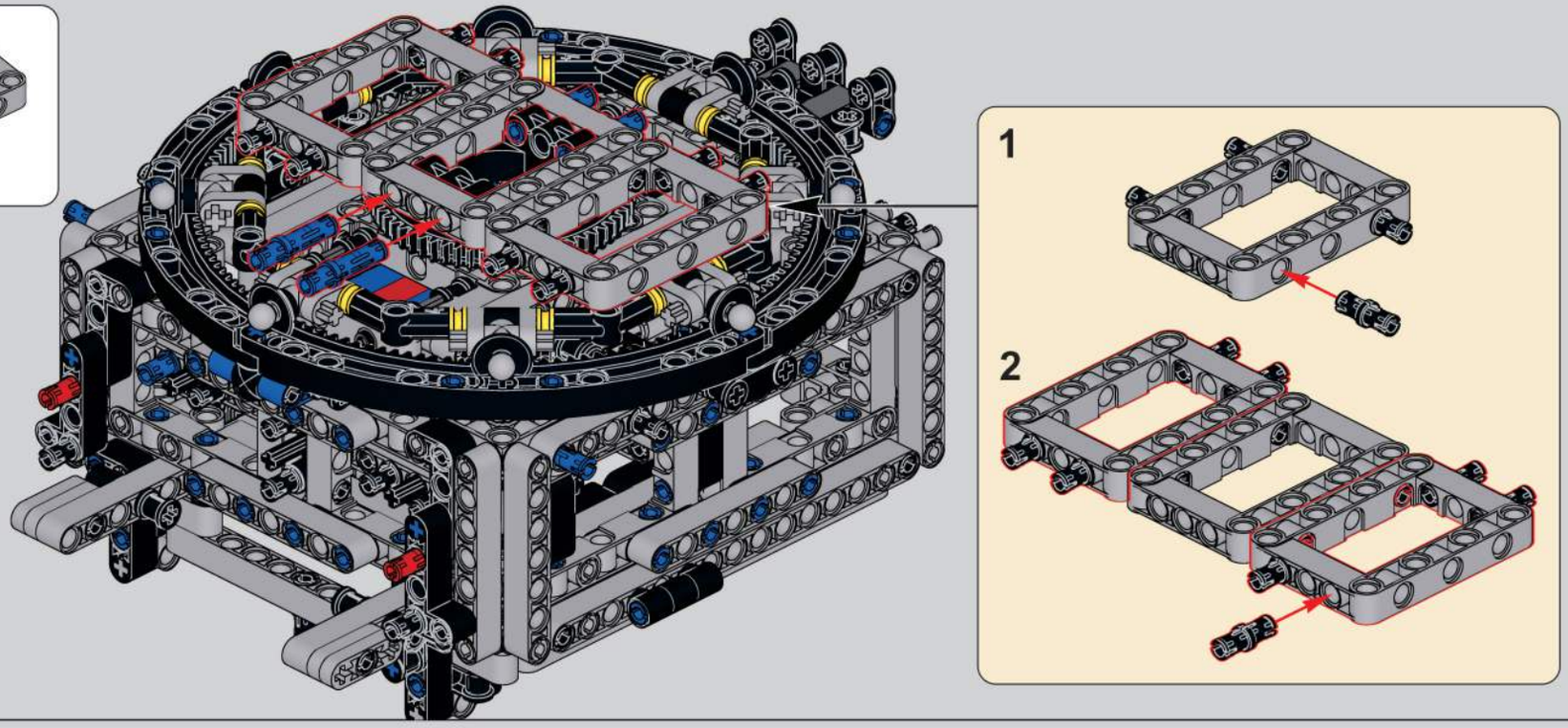

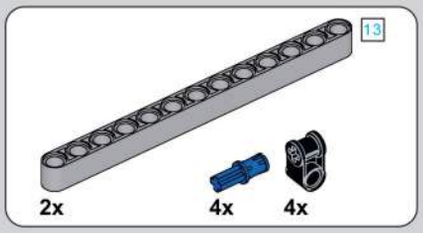

632

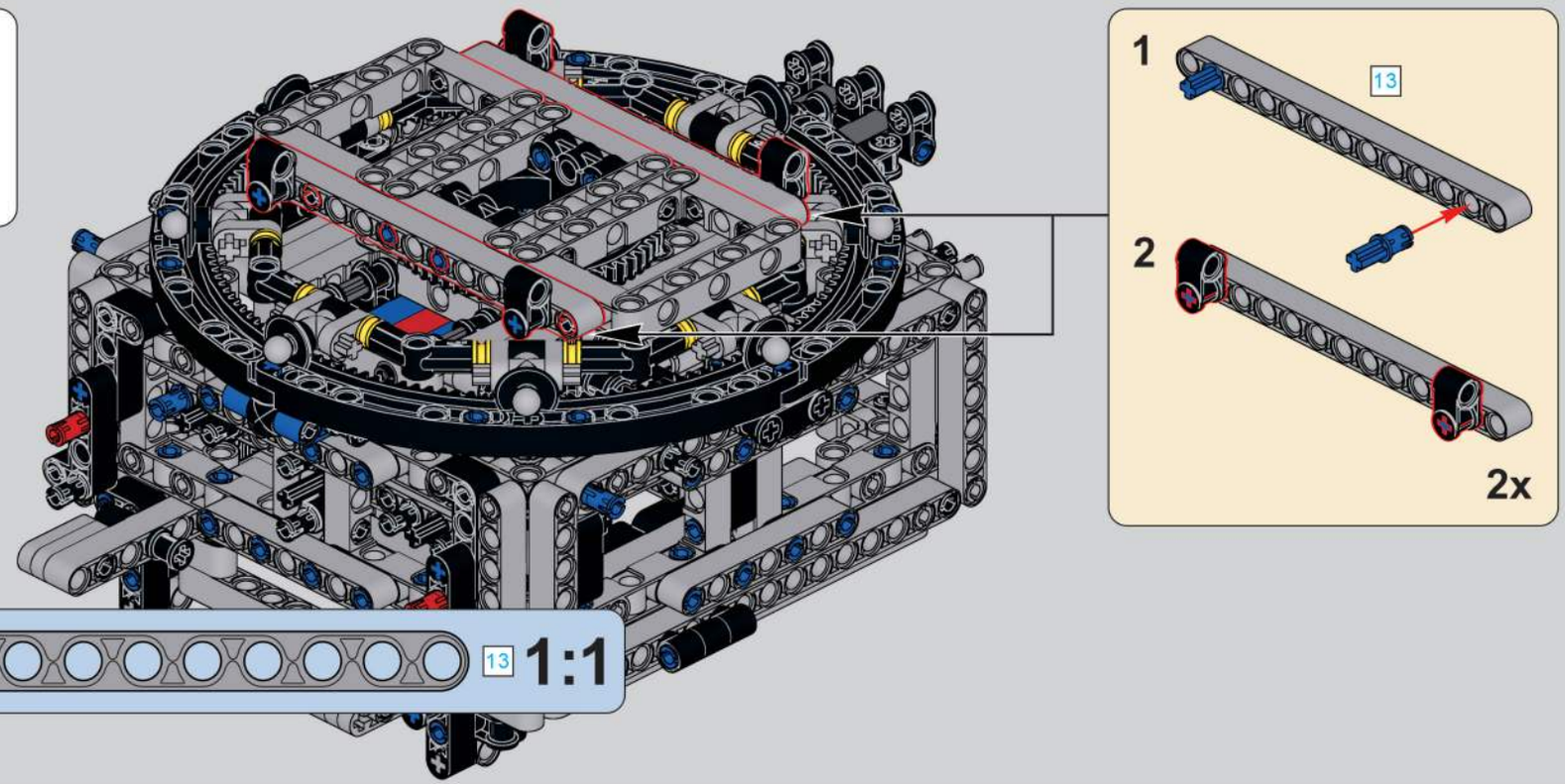

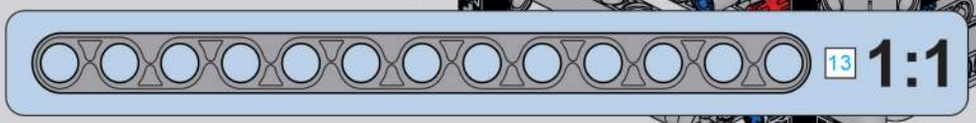

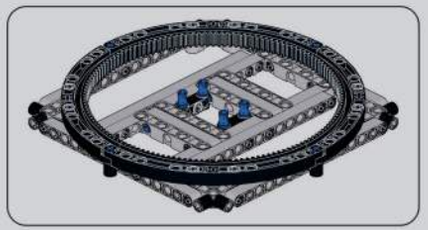

634

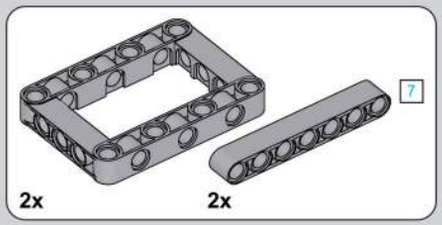

635

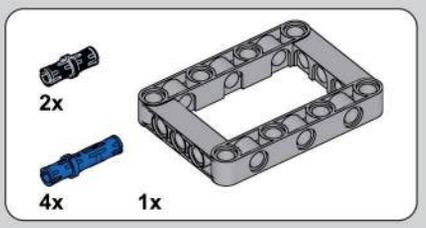

633

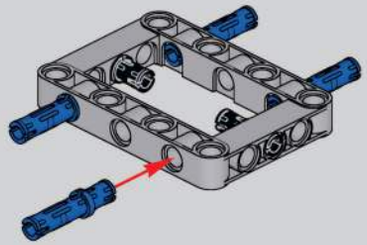

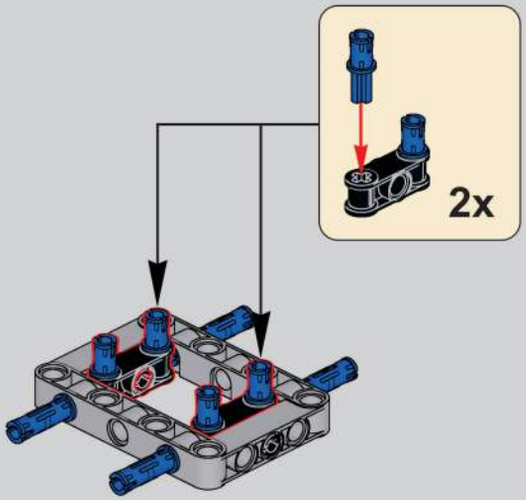

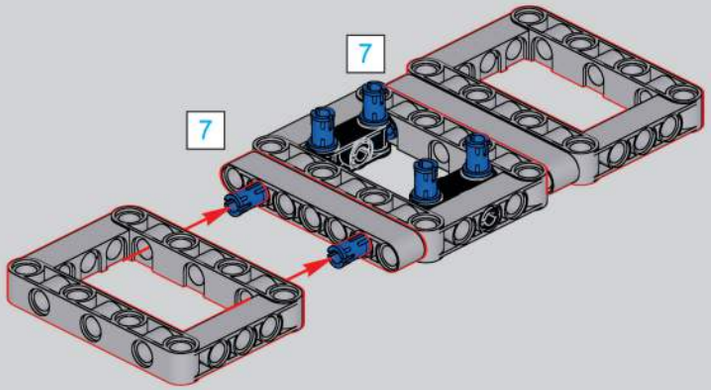

636

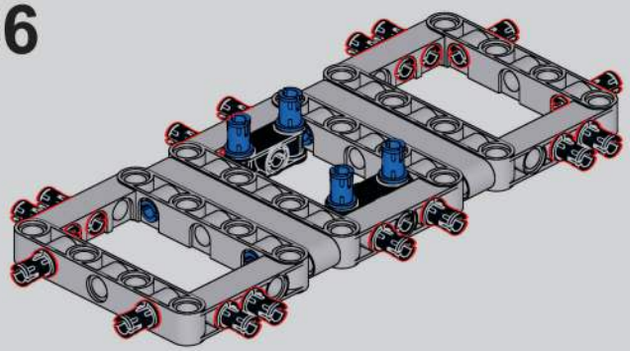

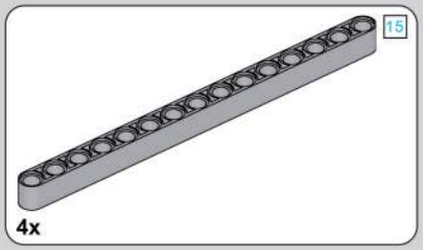

637

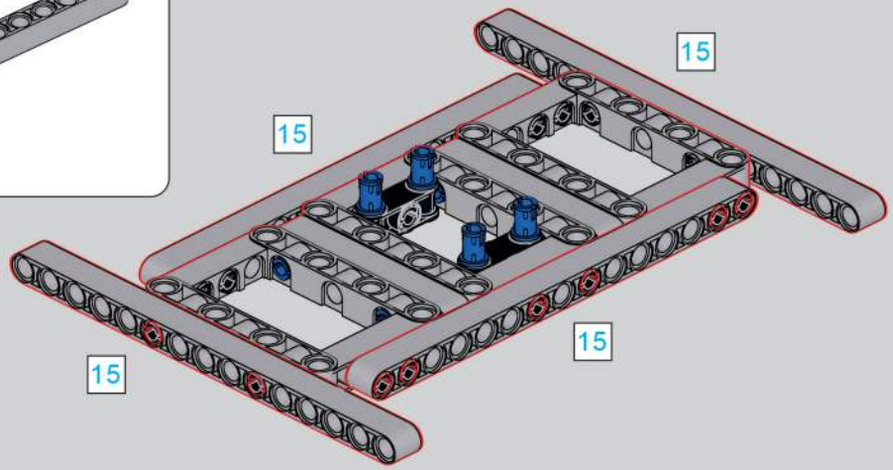

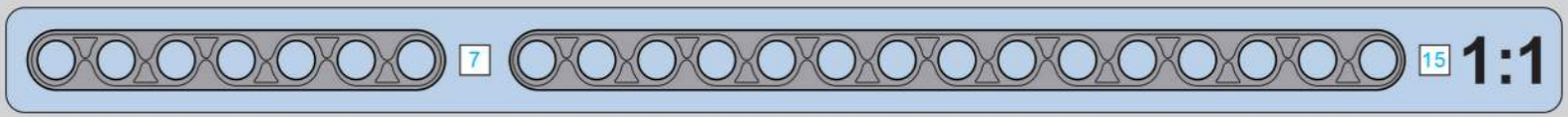

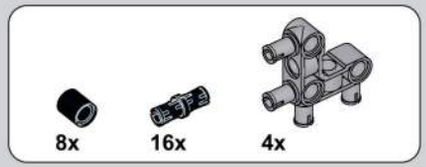

638

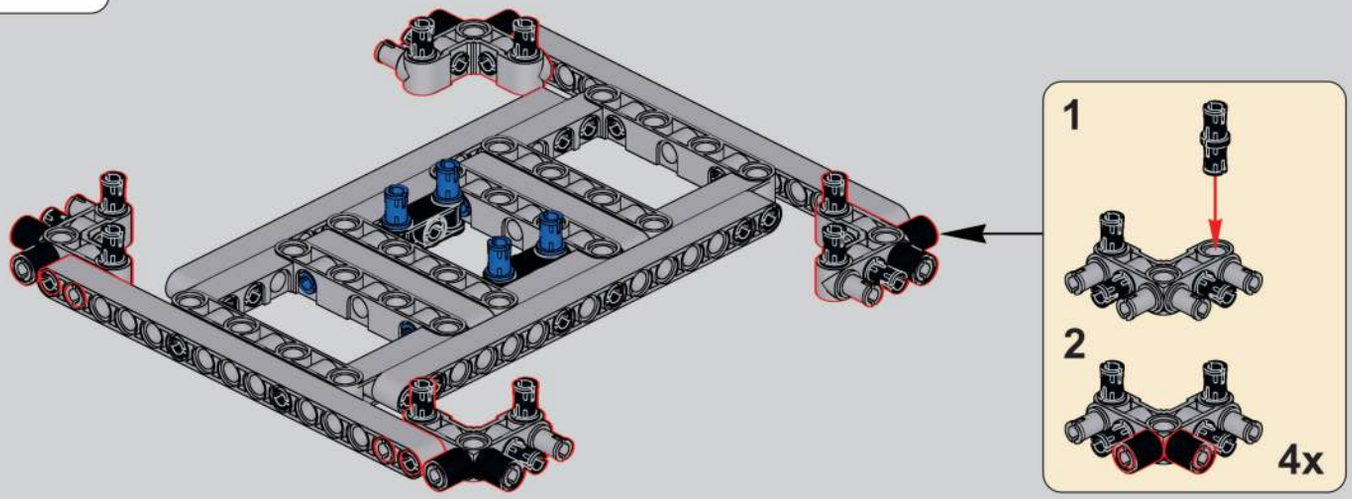

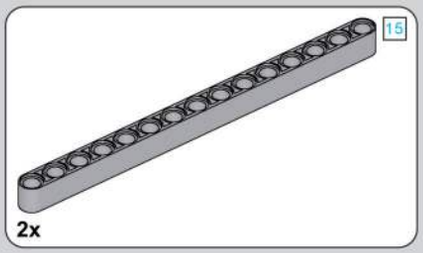

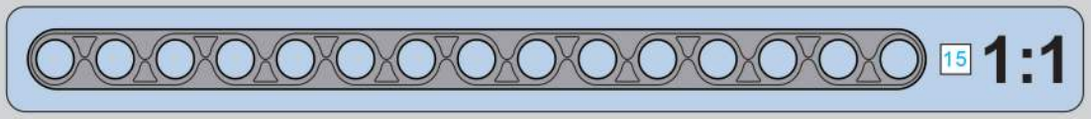

639

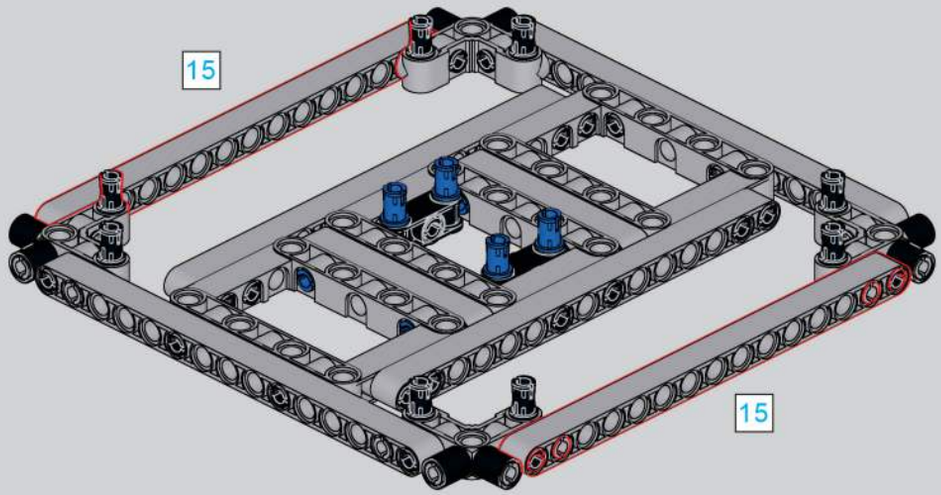

640

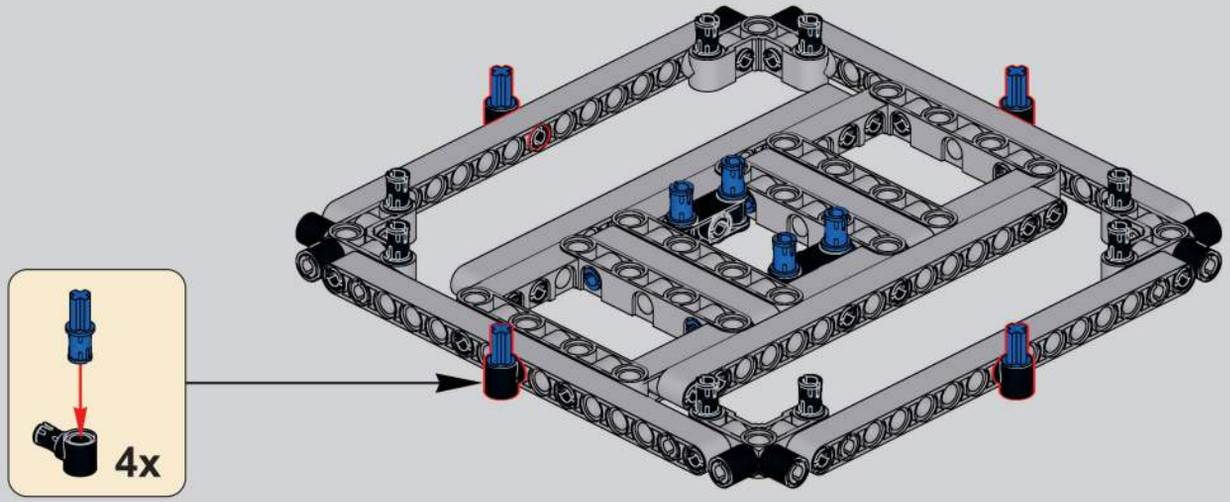

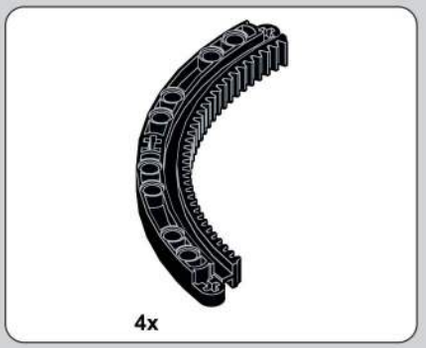

641

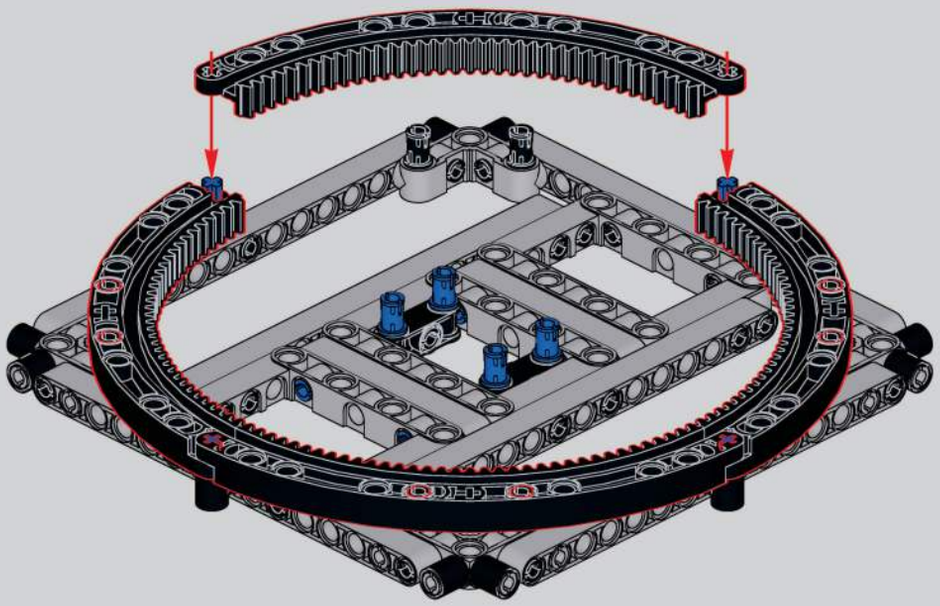

642

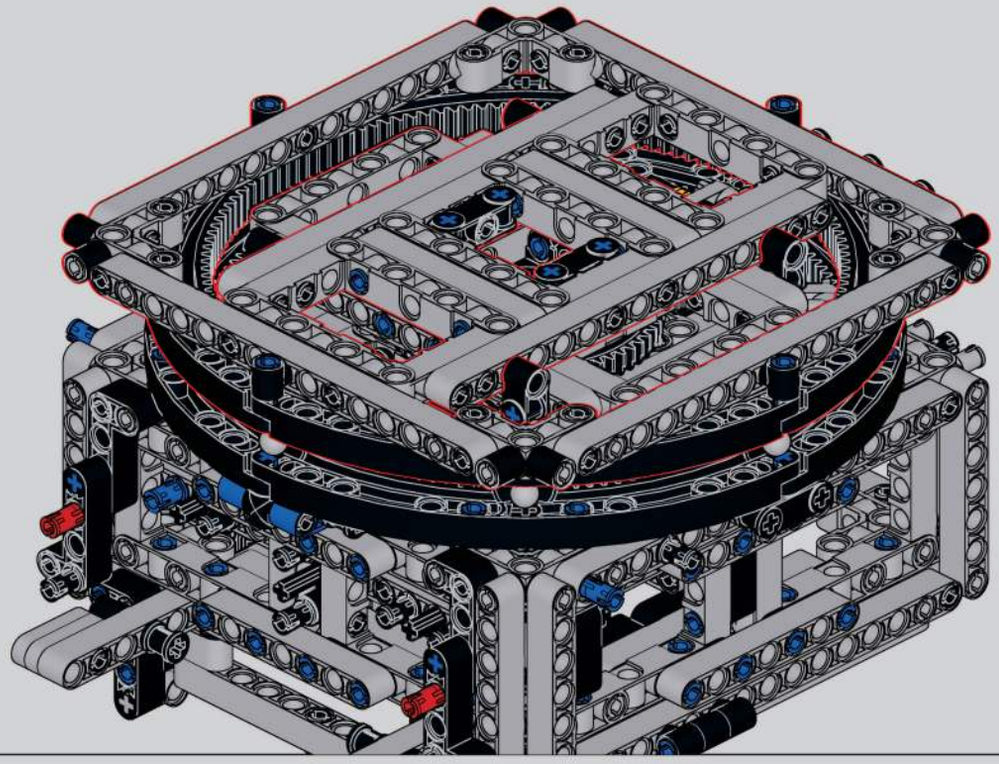

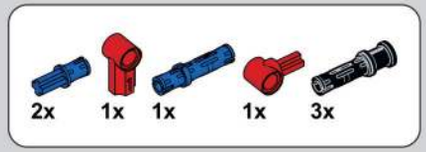

643

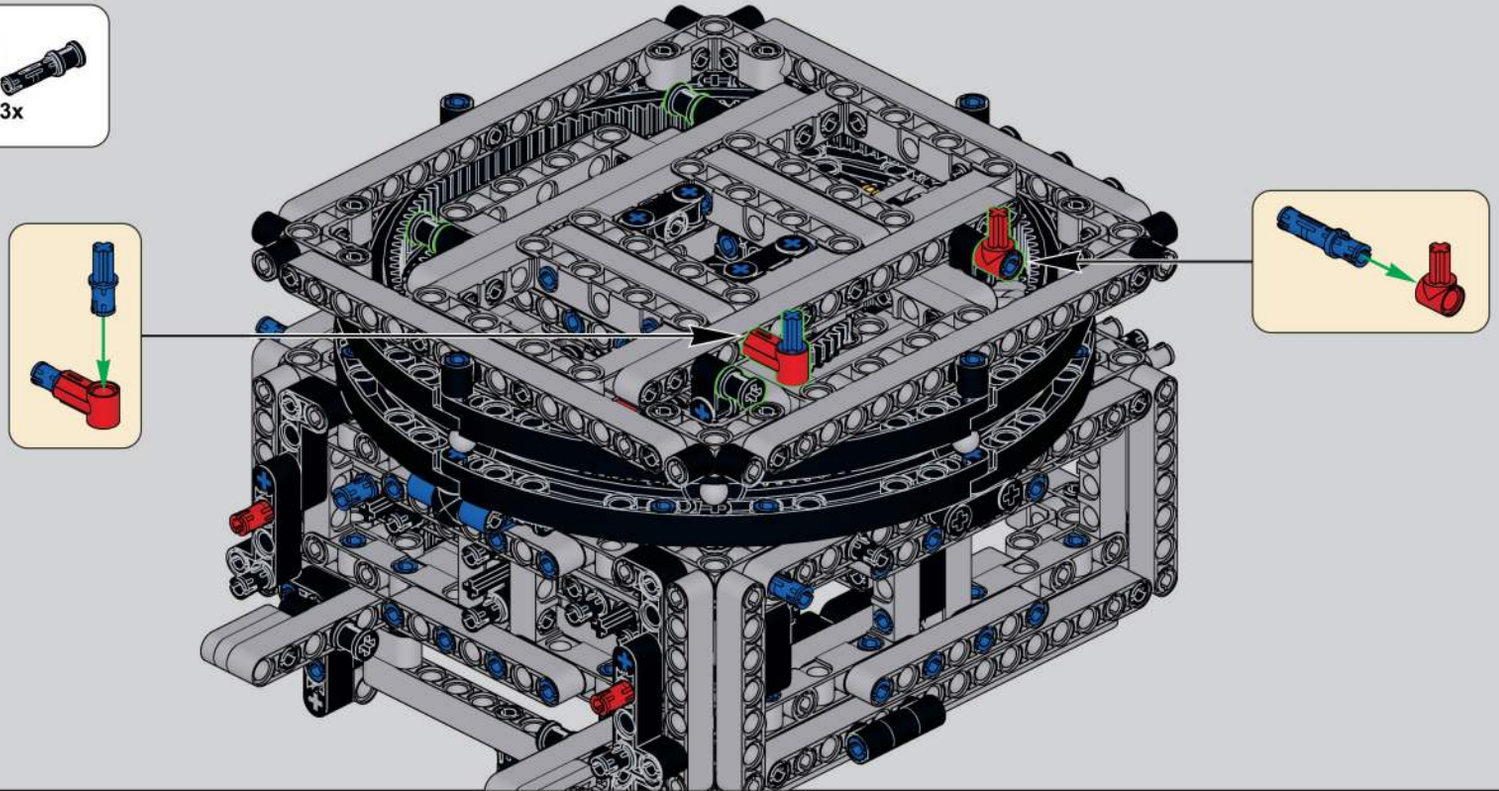

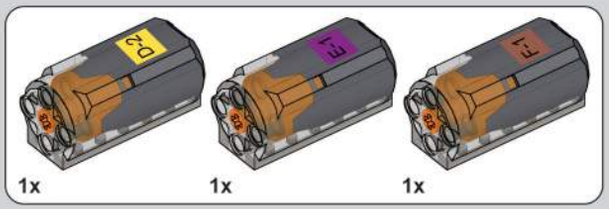

644

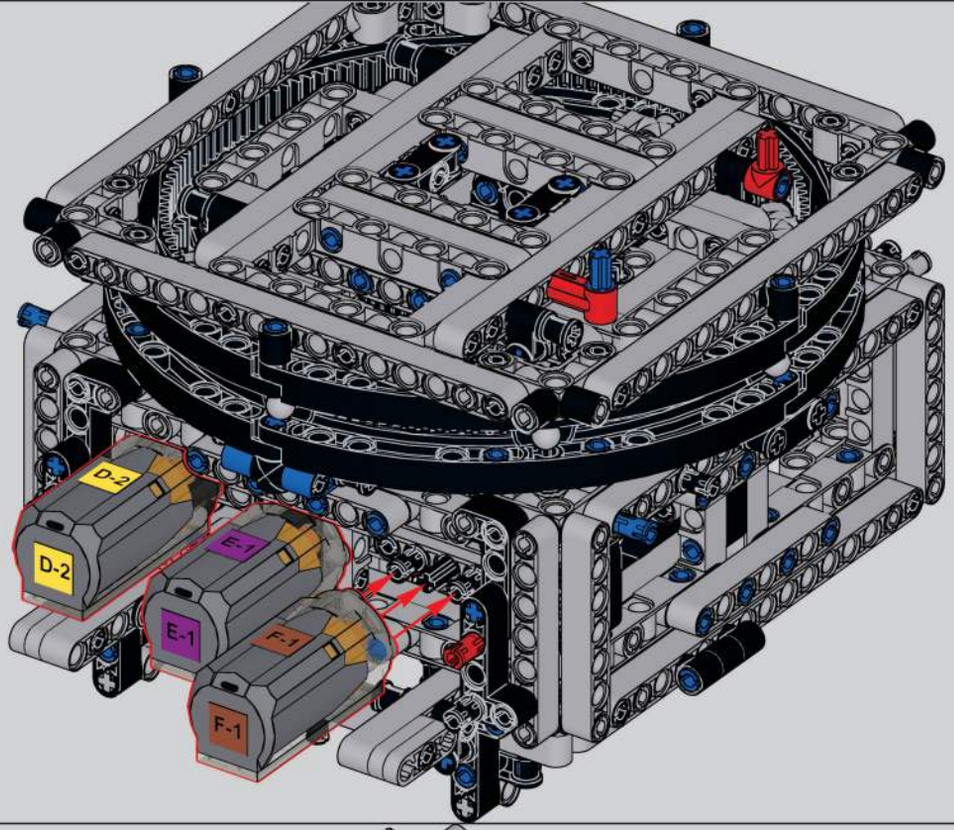

645

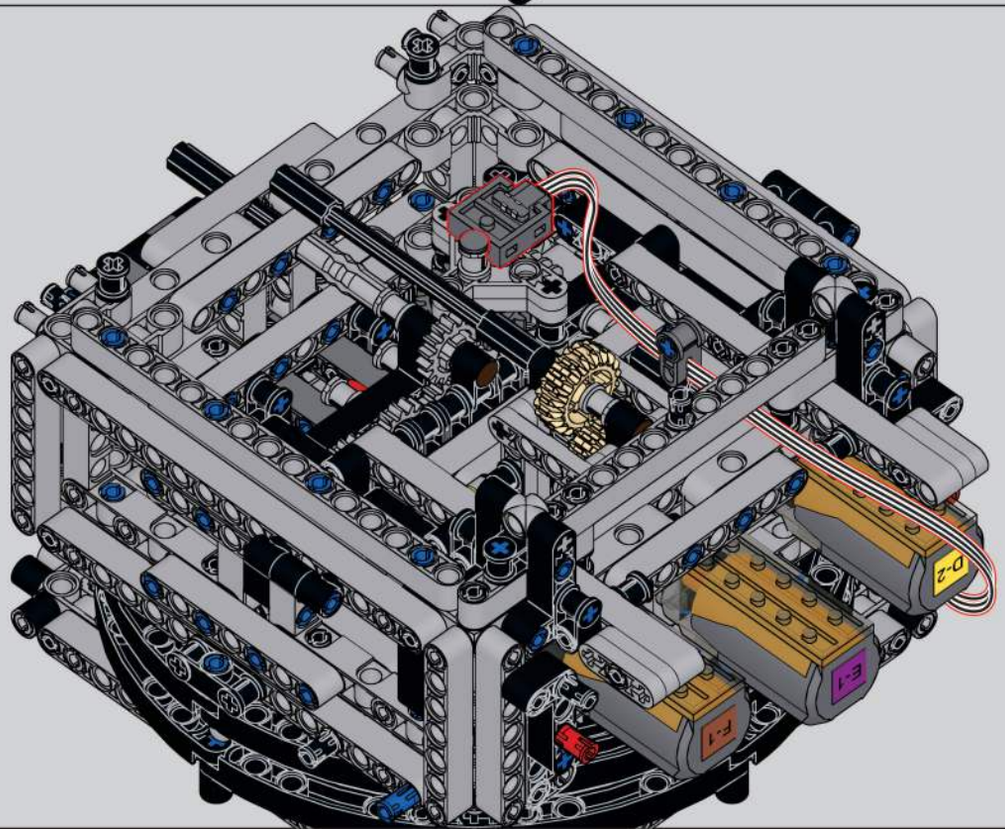

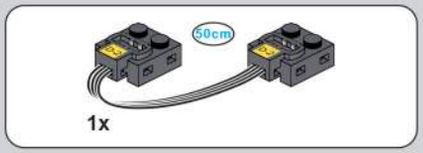

646

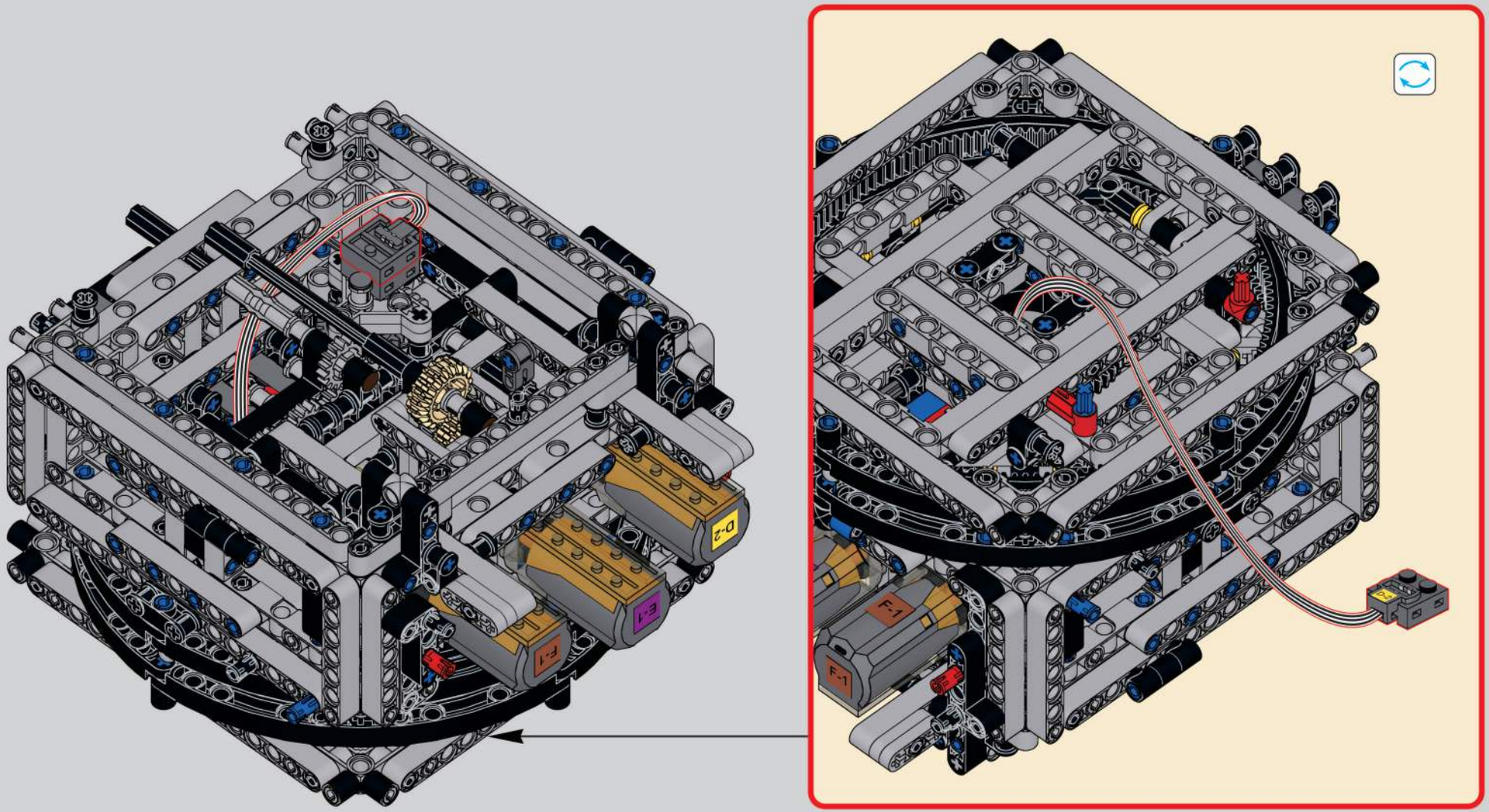

647

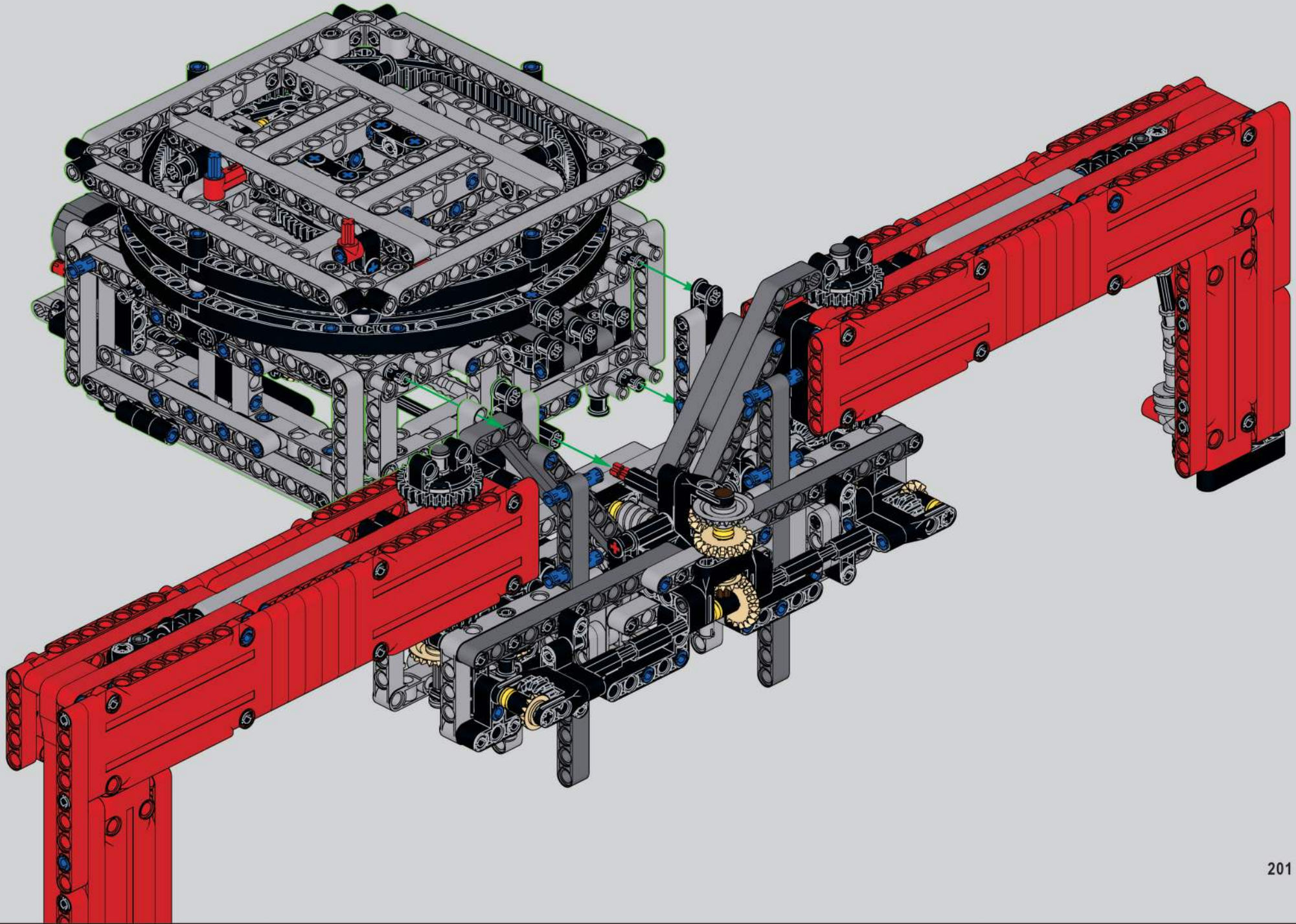

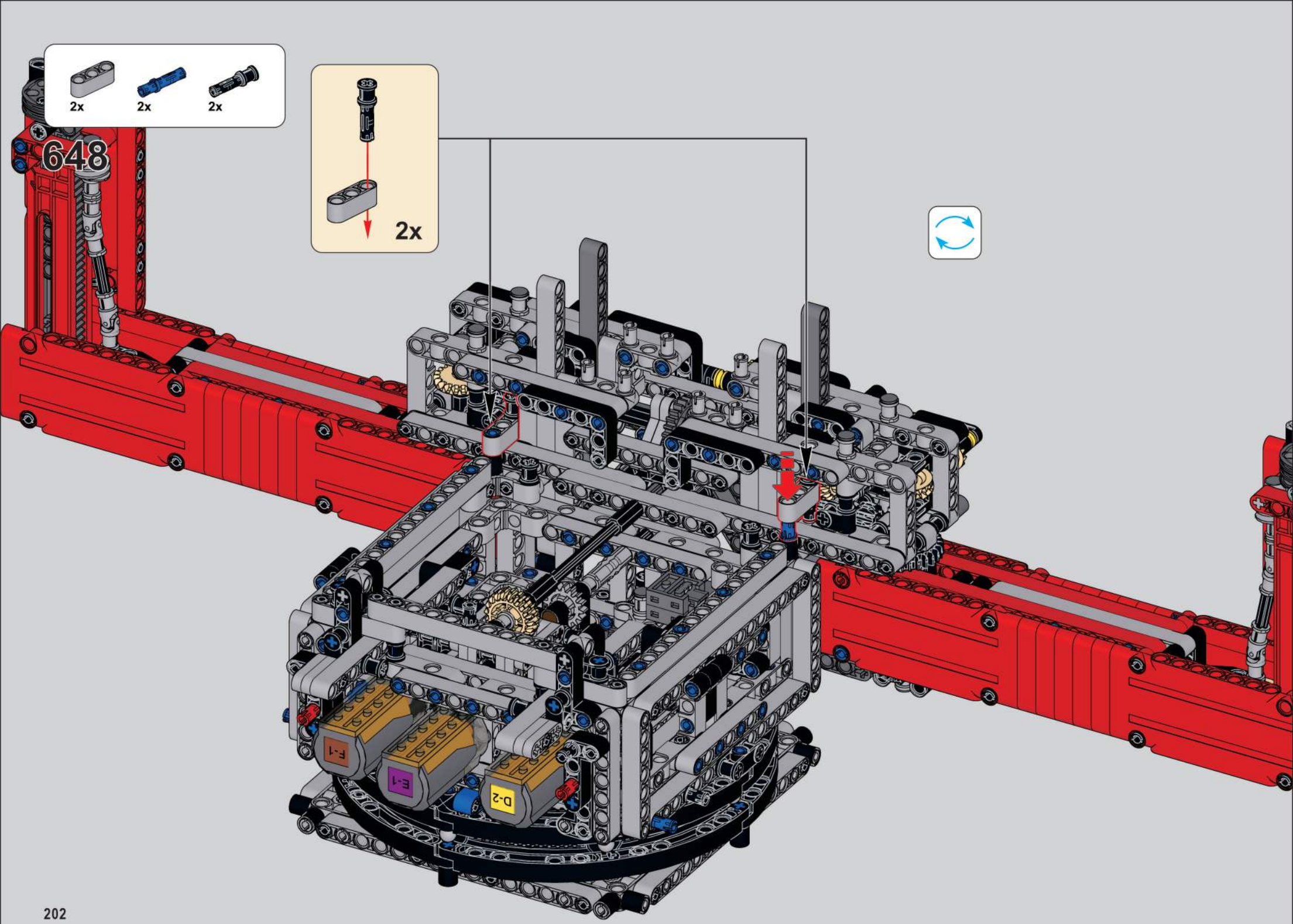
648
2x
2x
2x
2x
F-1
E-1
D-2

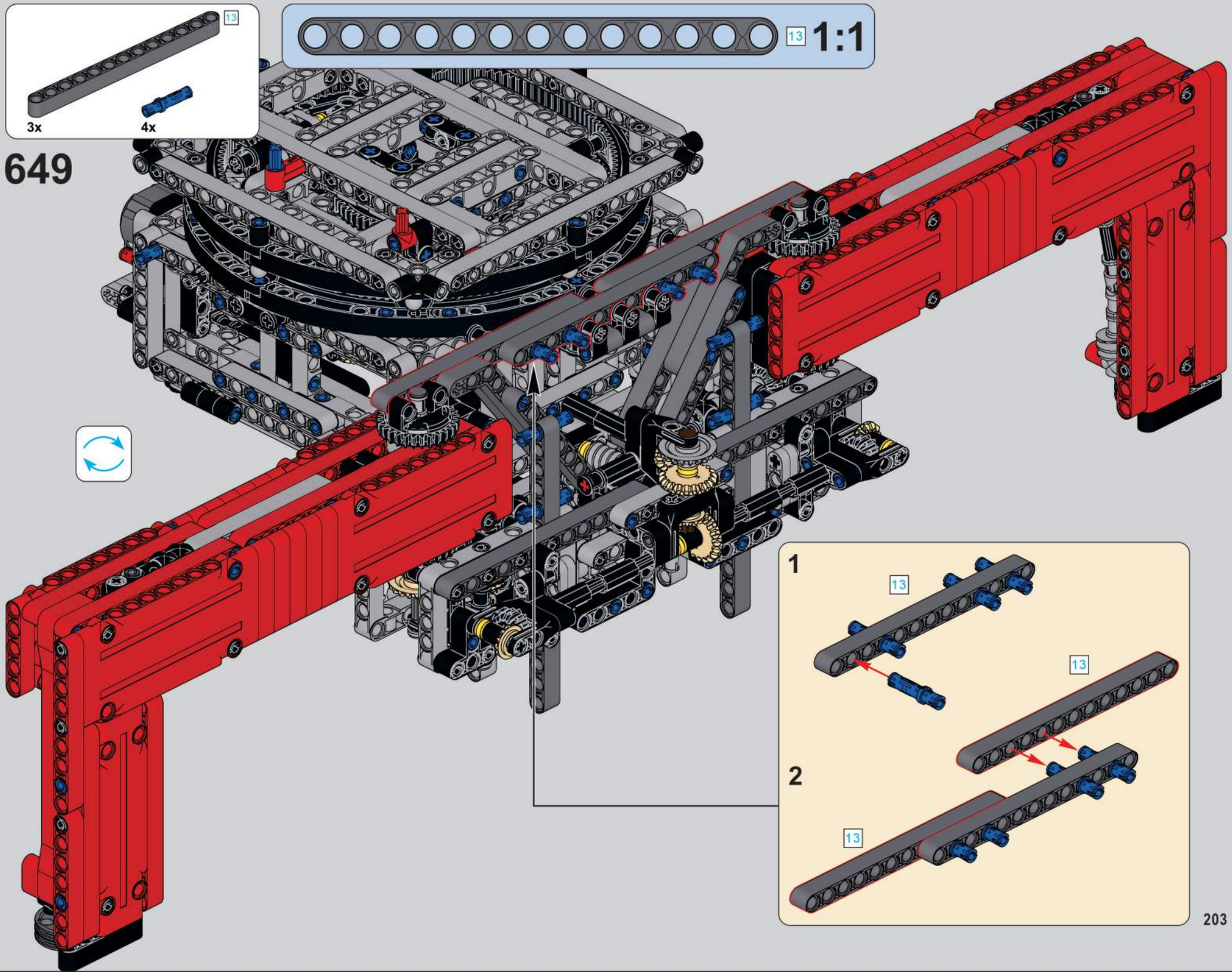
13
3x
4x
649
13
1:1
1
13
13
2
13

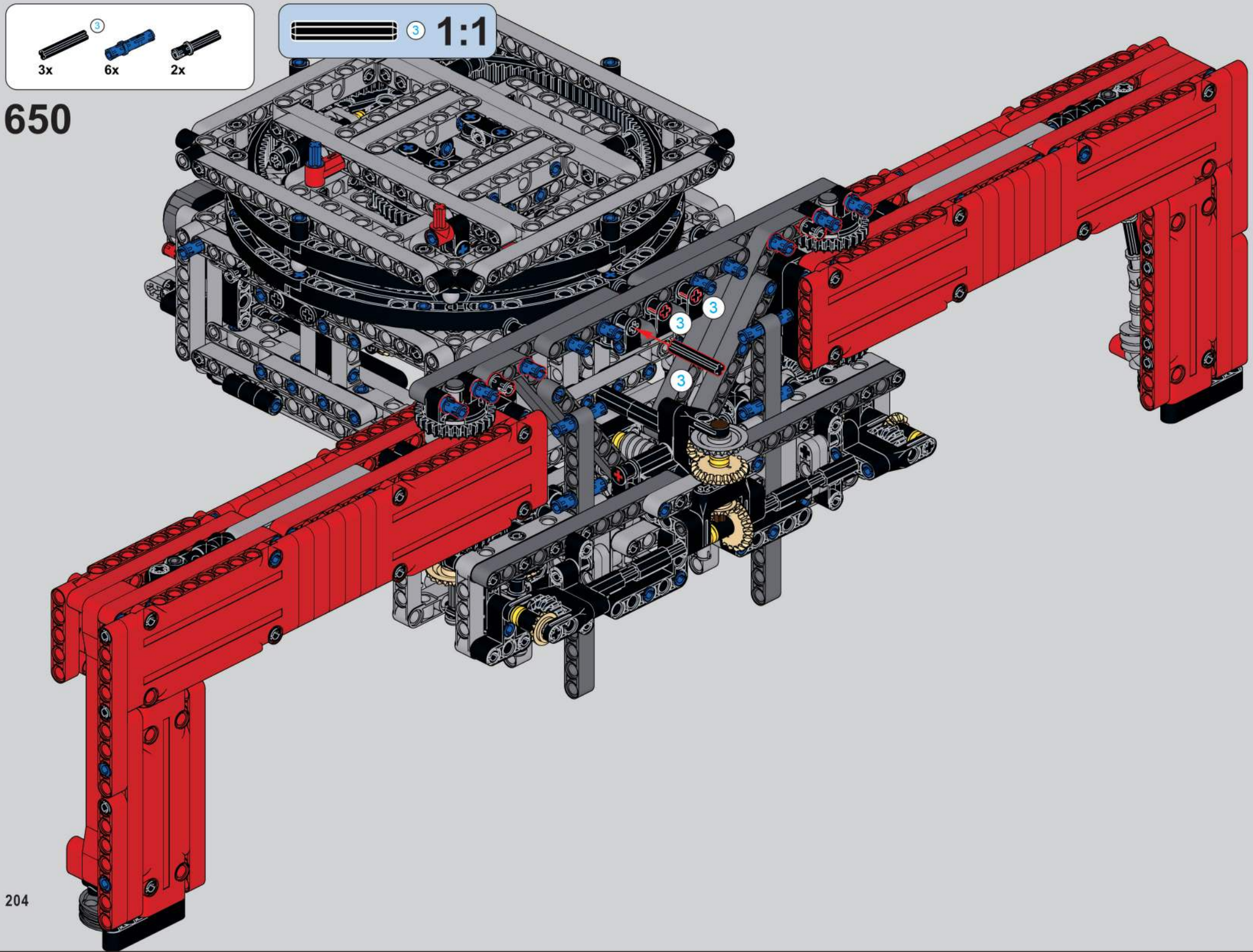
3
3x
6x
2x
3
1:1
650
3
3
3

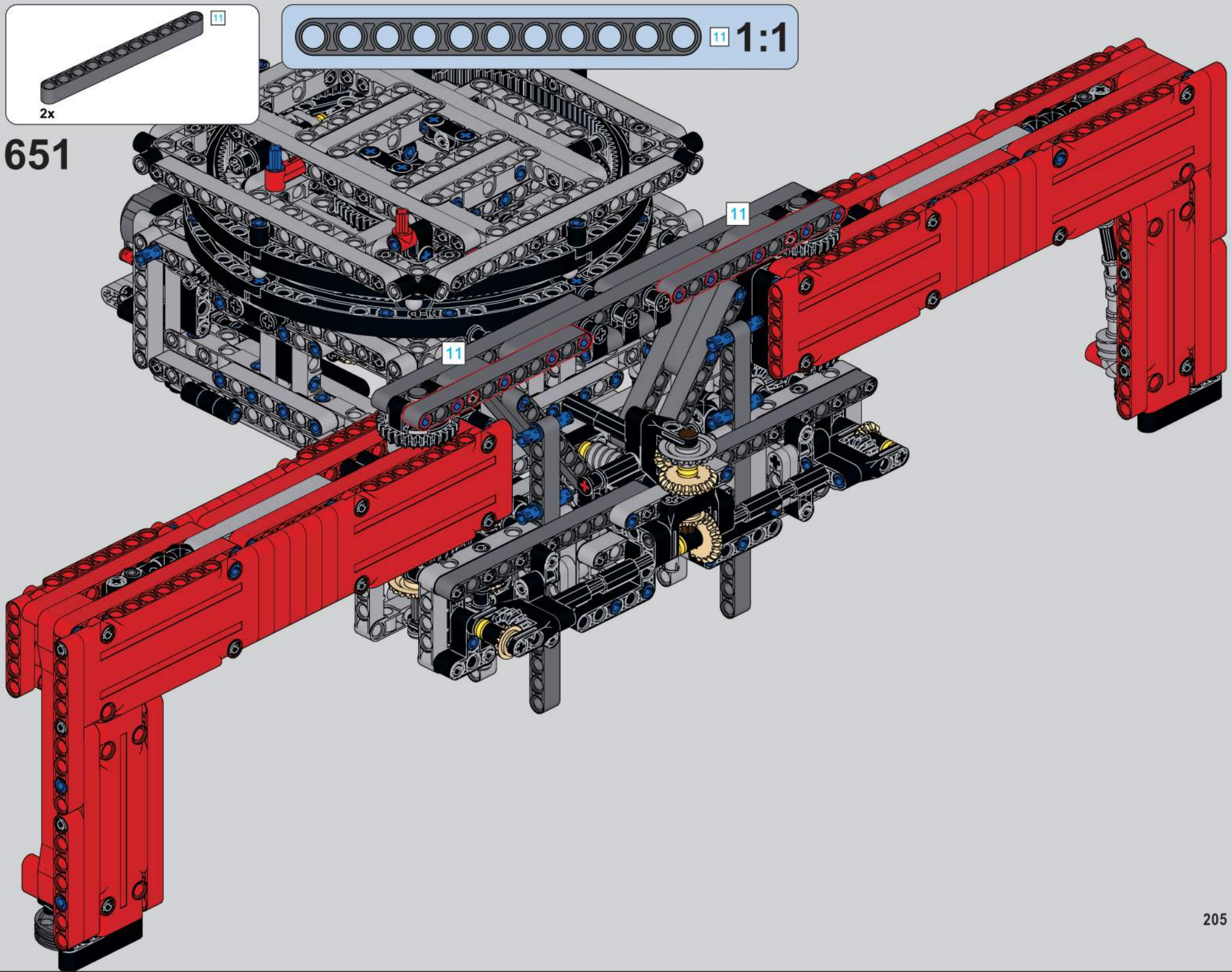
11
2x
11 1:1
651
11
11

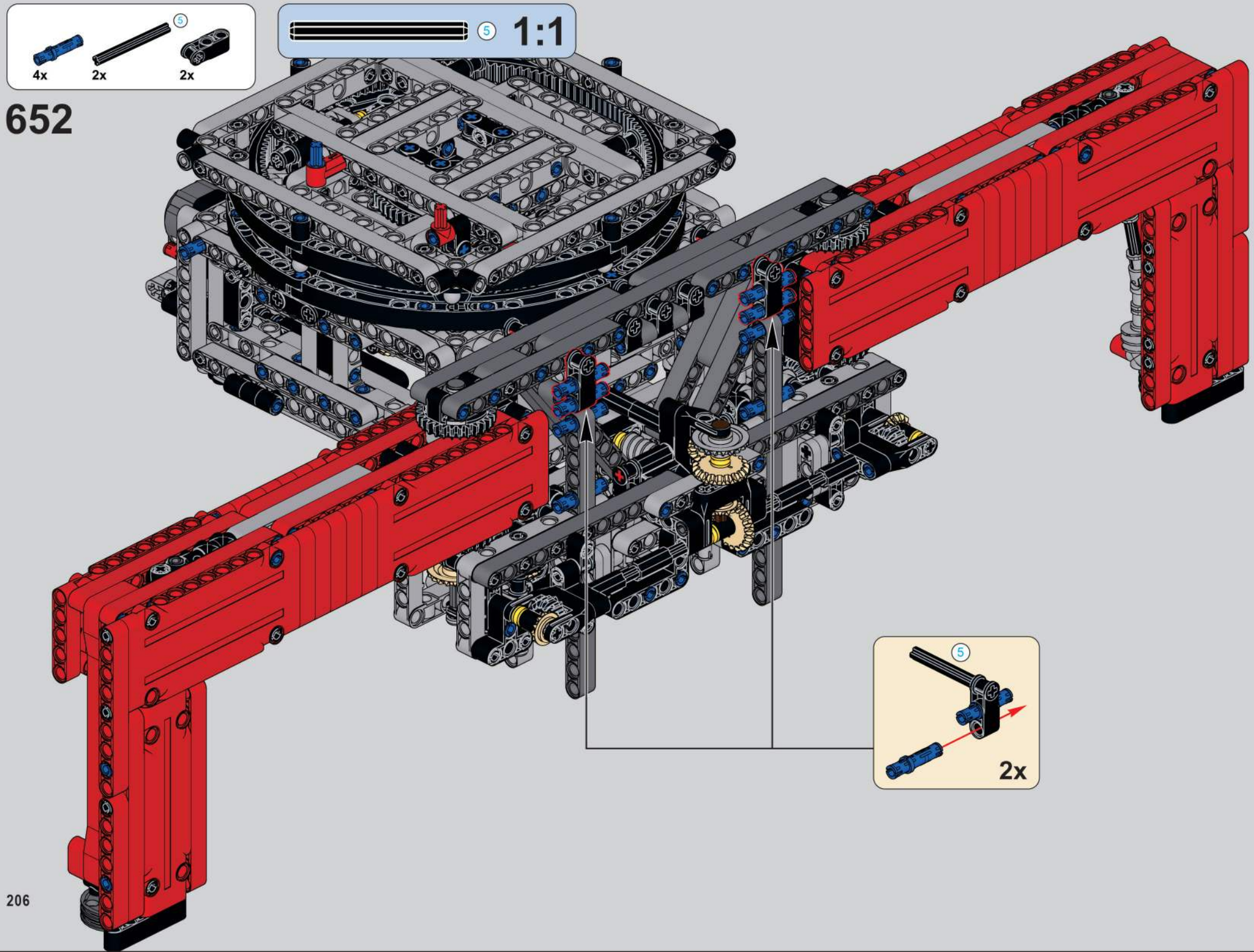
5
4x
2x
2x
652
5
1:1
5
2x

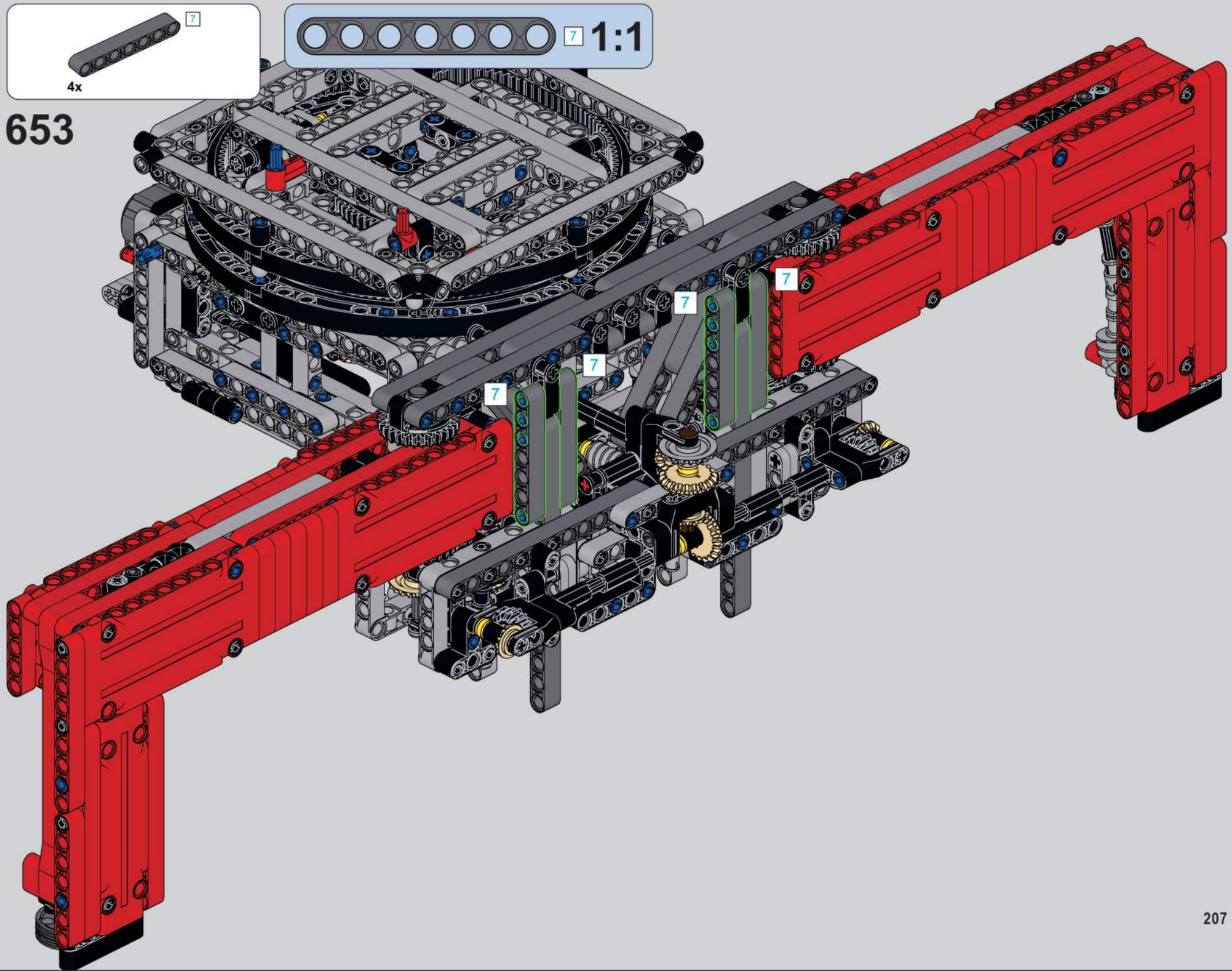
7
4x
7
1:1
653
7
7
7
7

654

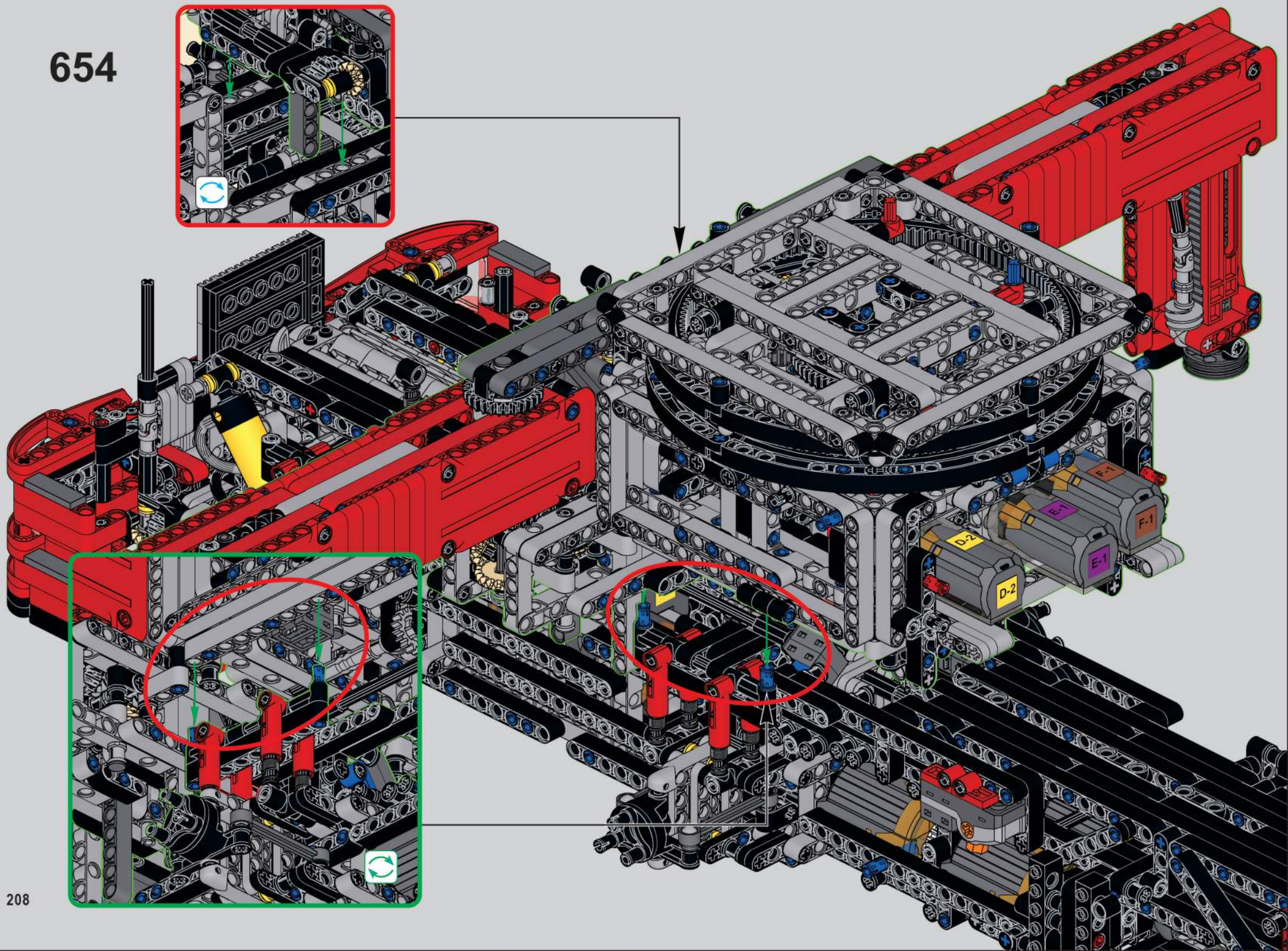

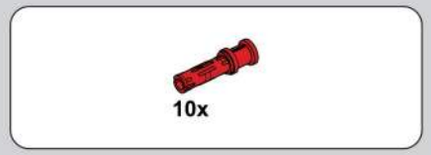

655

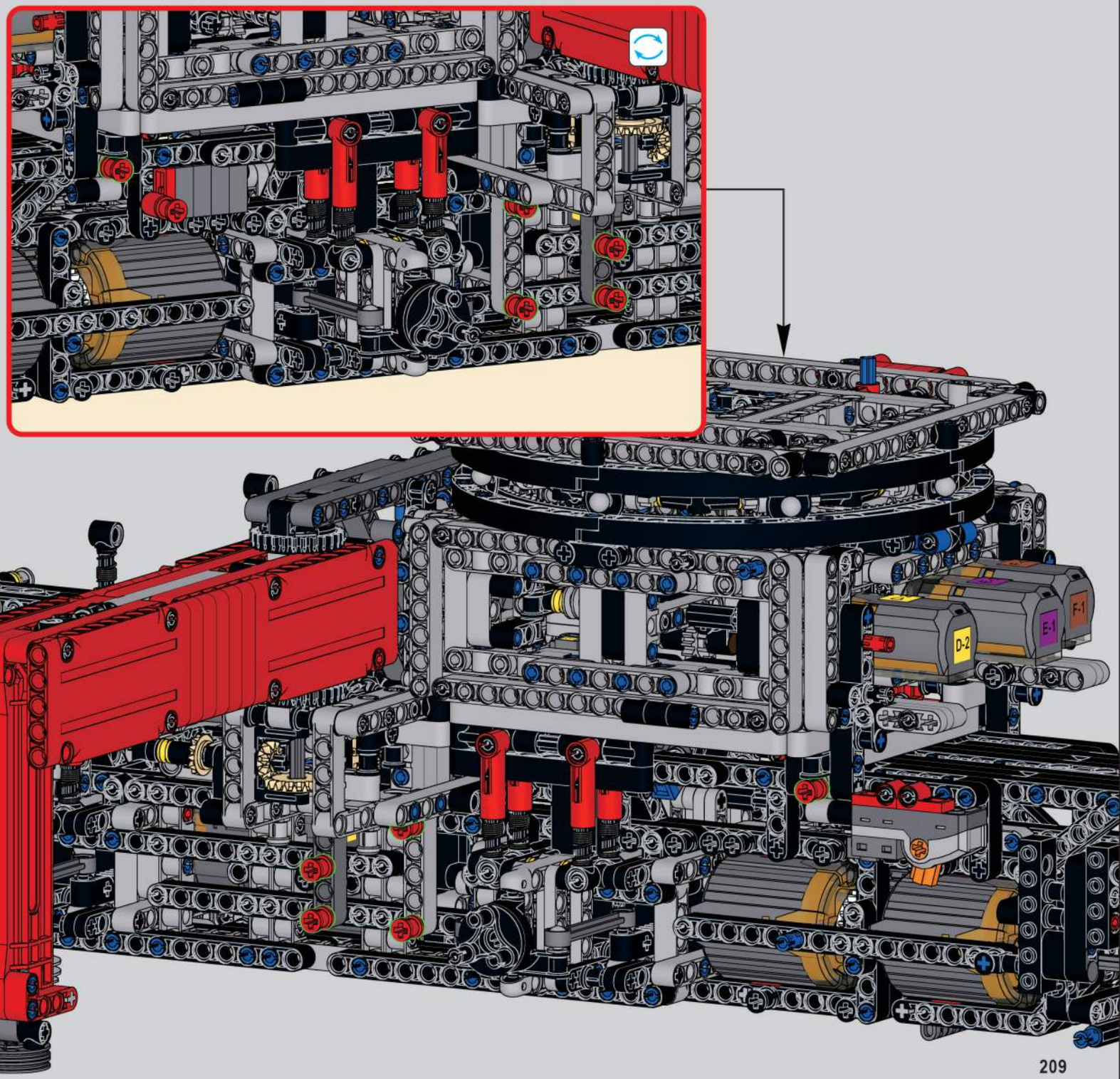

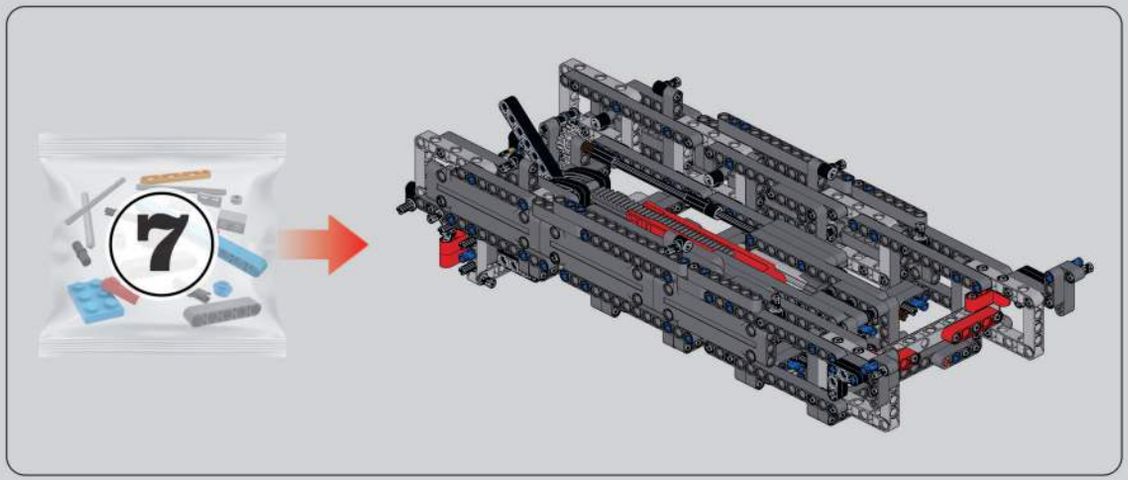

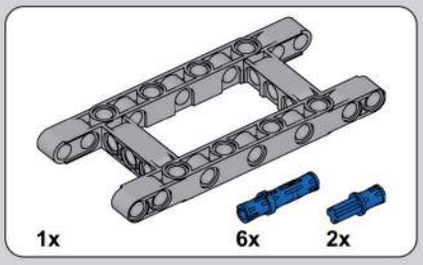

656

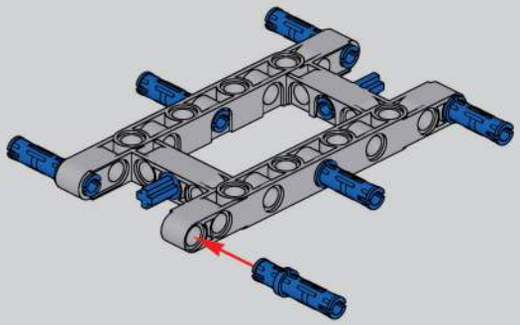

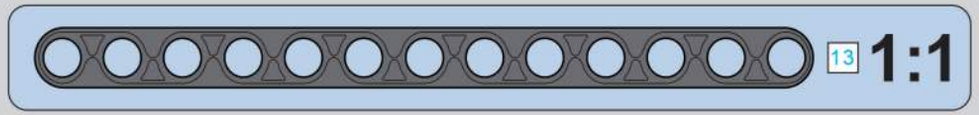

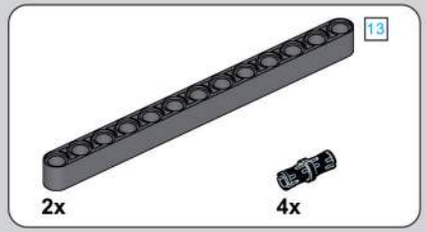

657

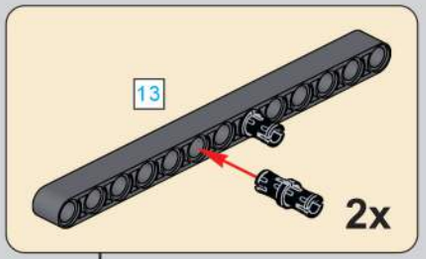

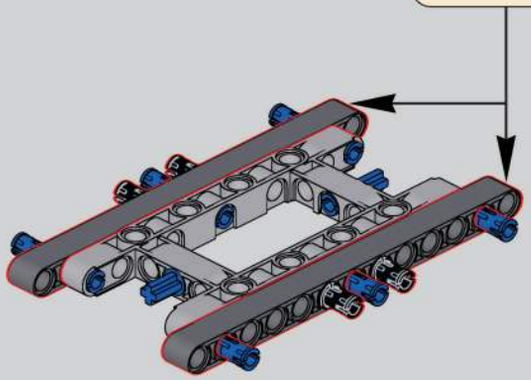

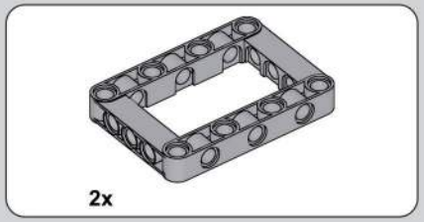

658

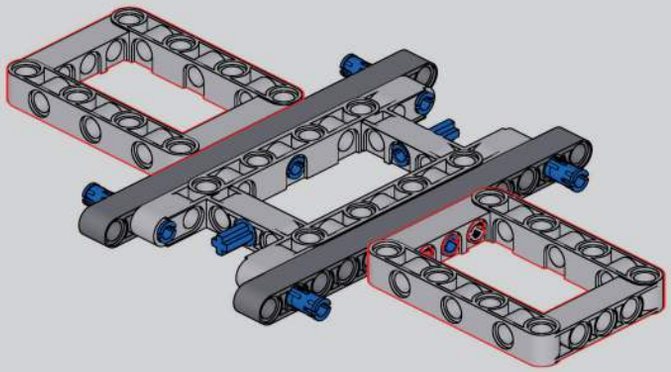

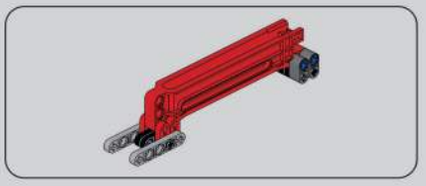

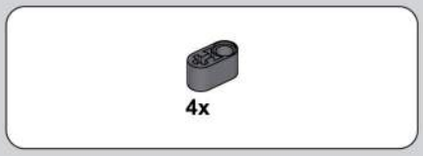

660

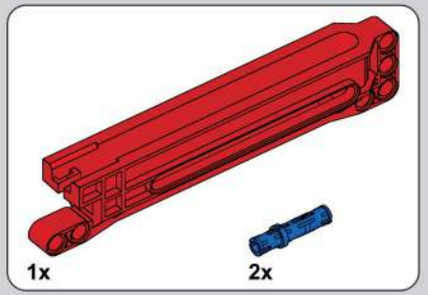

659

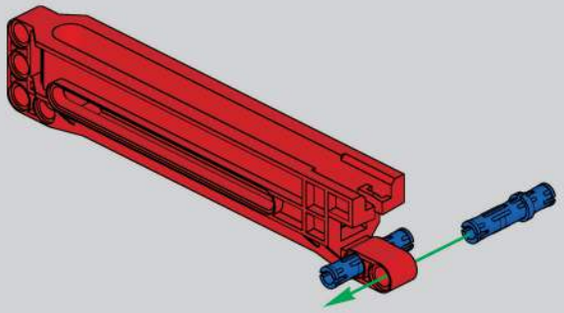

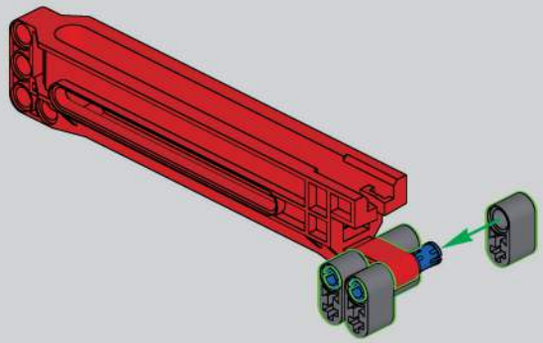

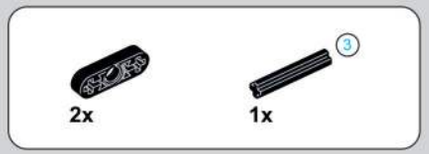

661

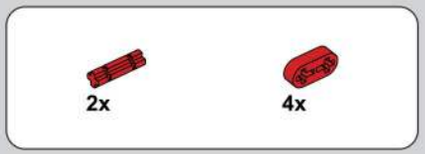

662

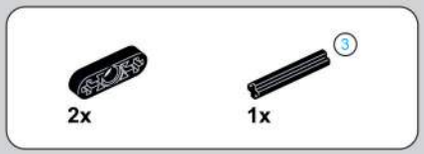

663

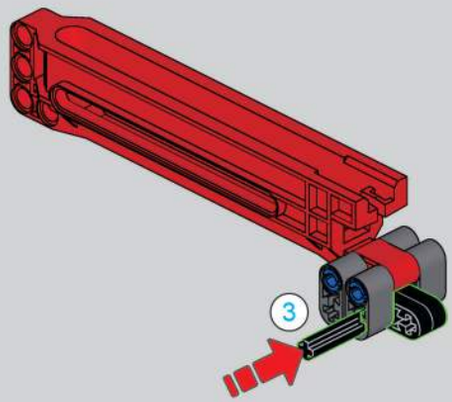

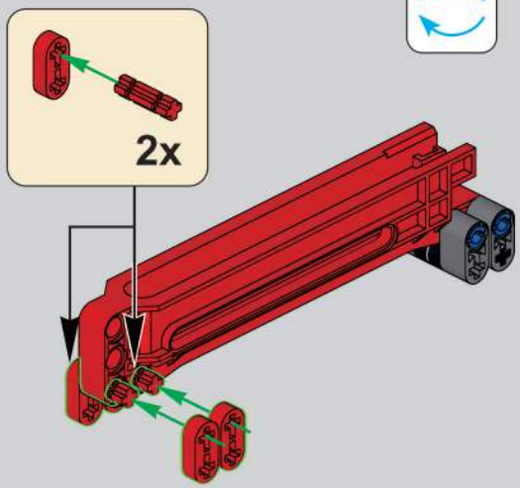

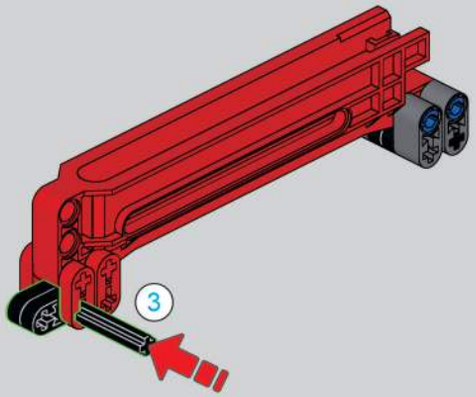

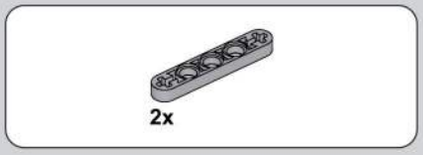

664

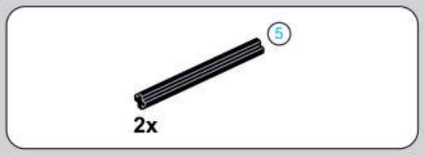

665

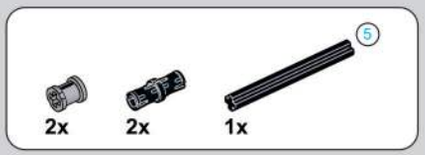

666

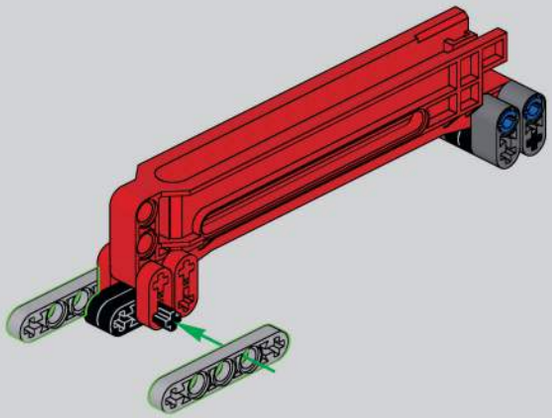

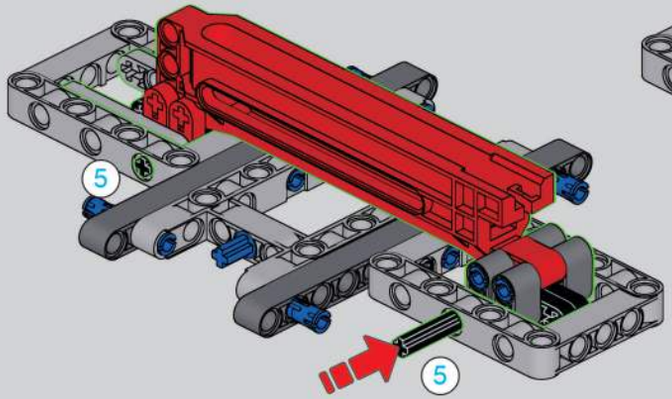

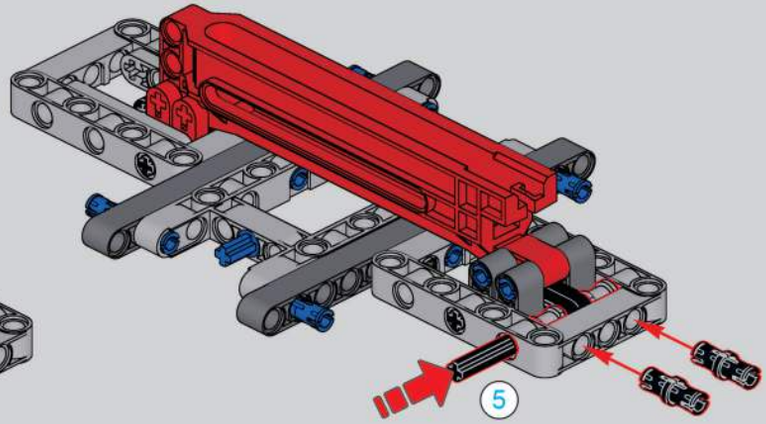

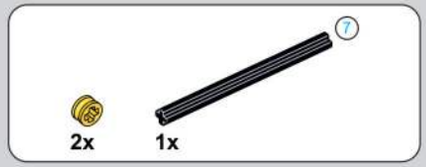

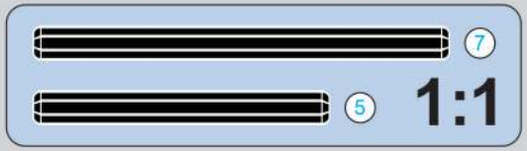

667

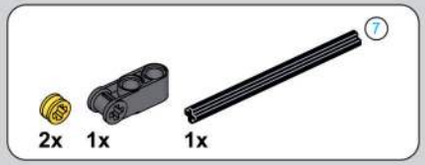

668

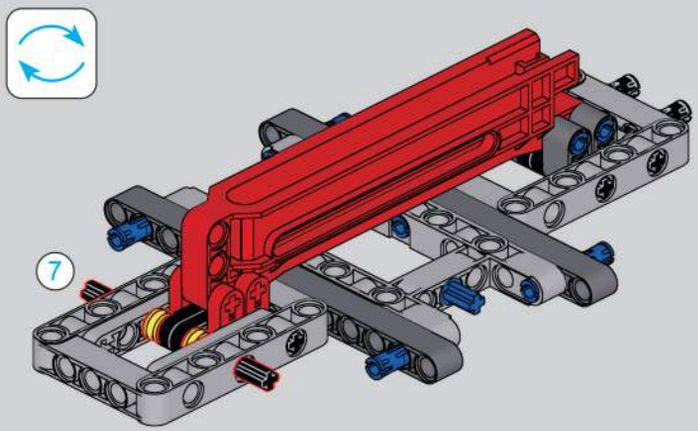

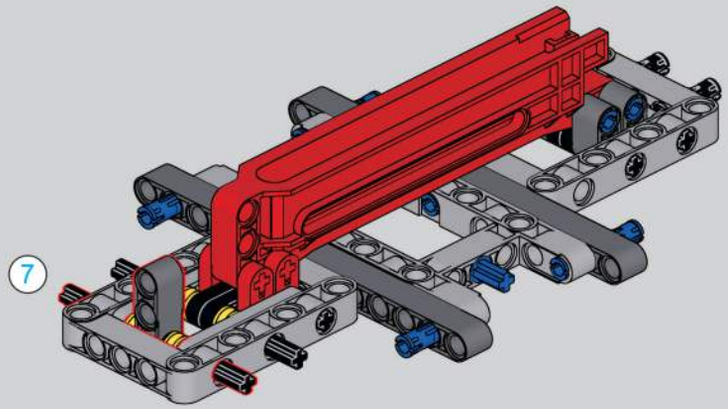

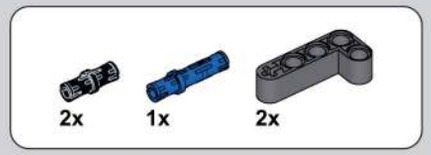

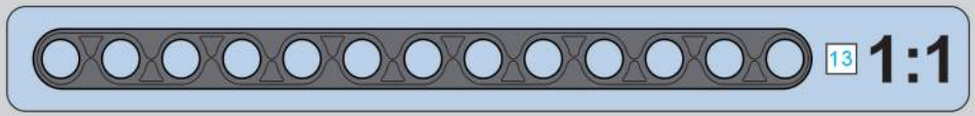

669

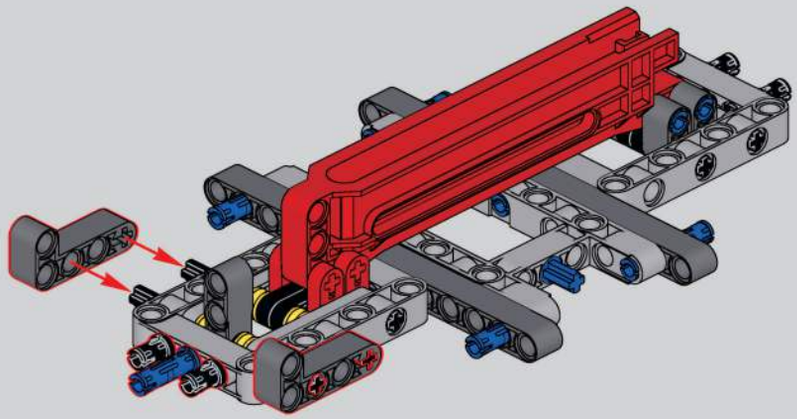

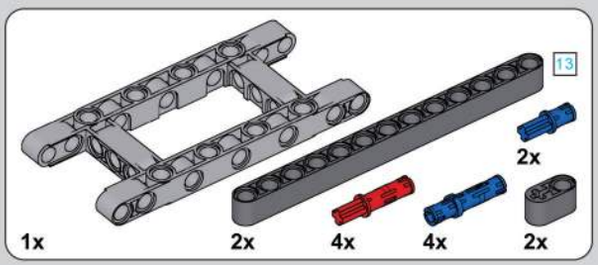

670

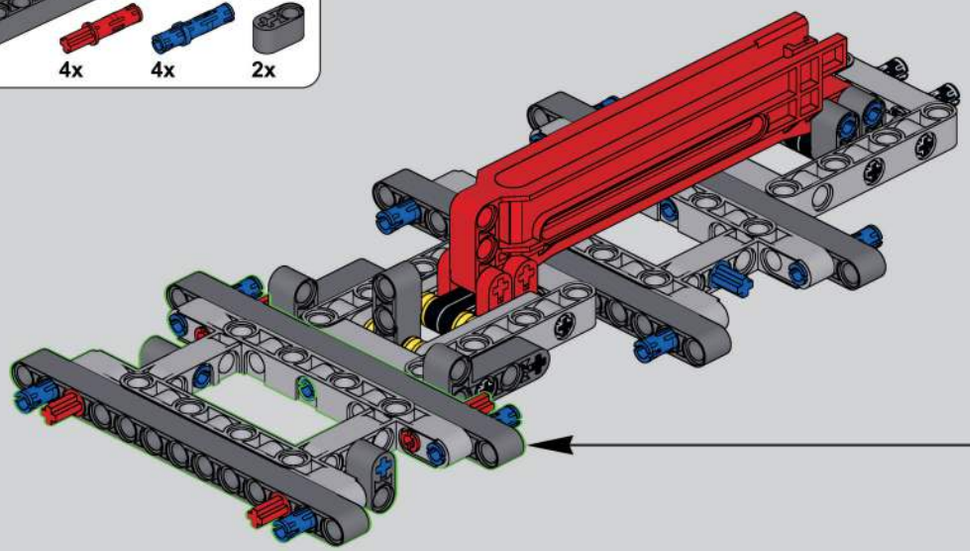

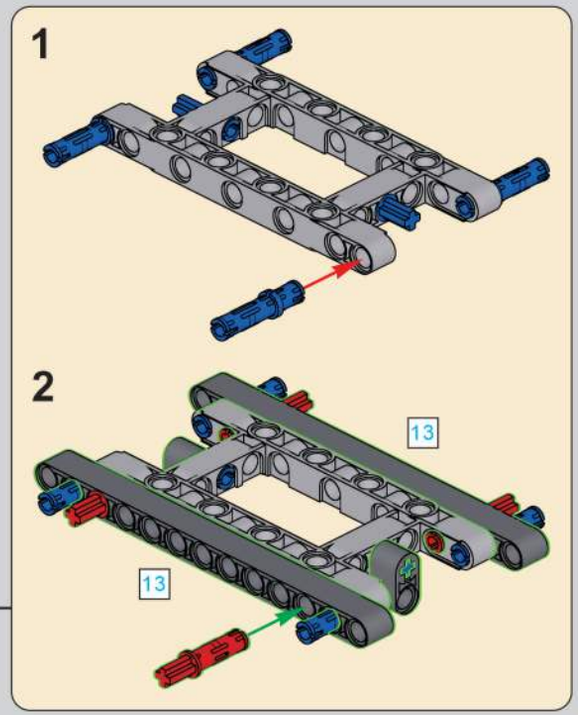

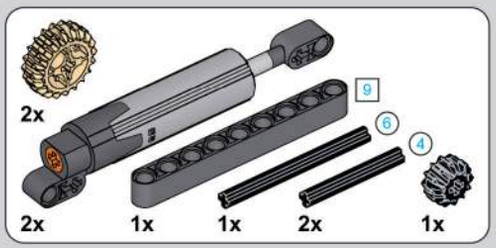

671

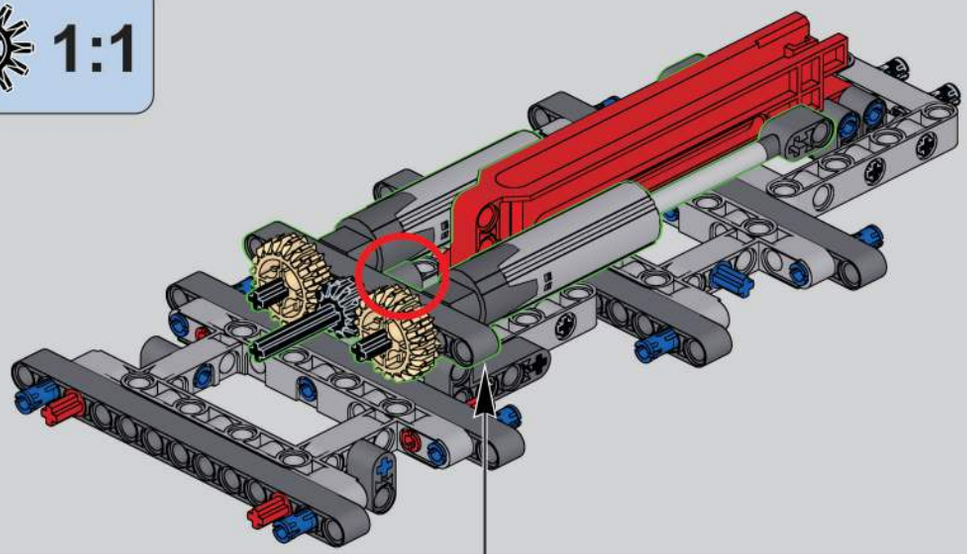

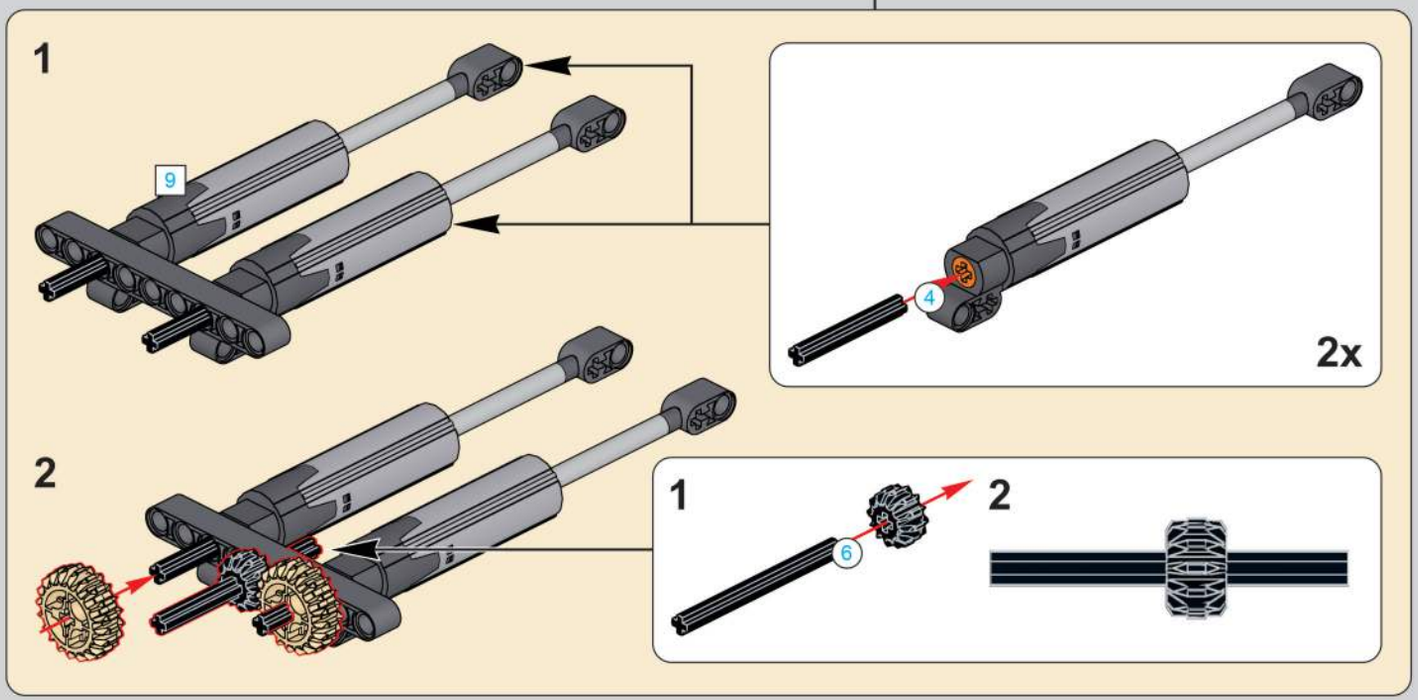

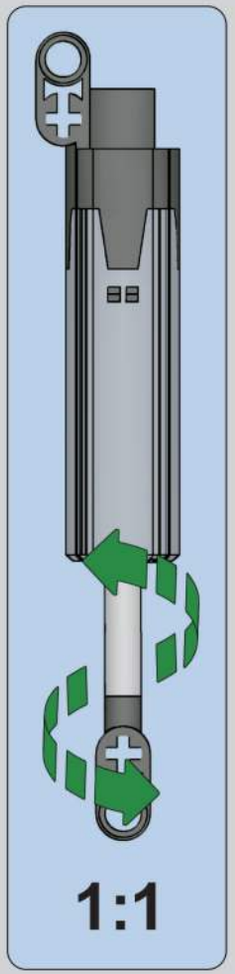

672

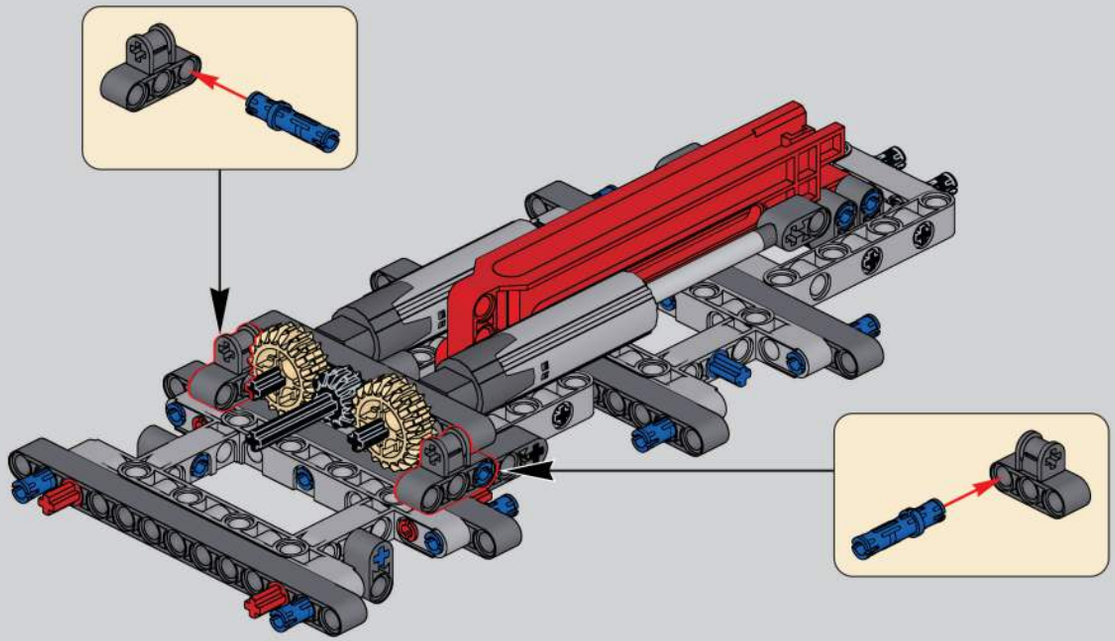

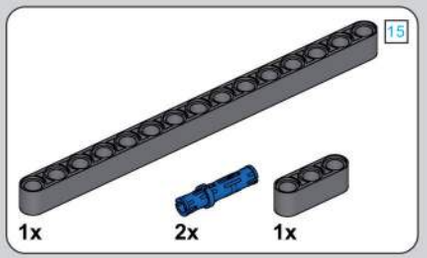

673

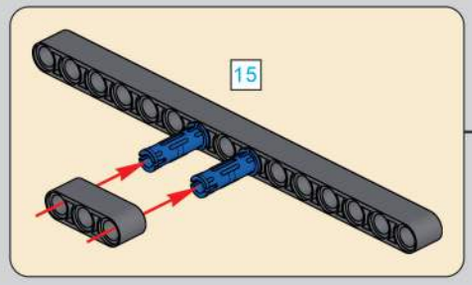

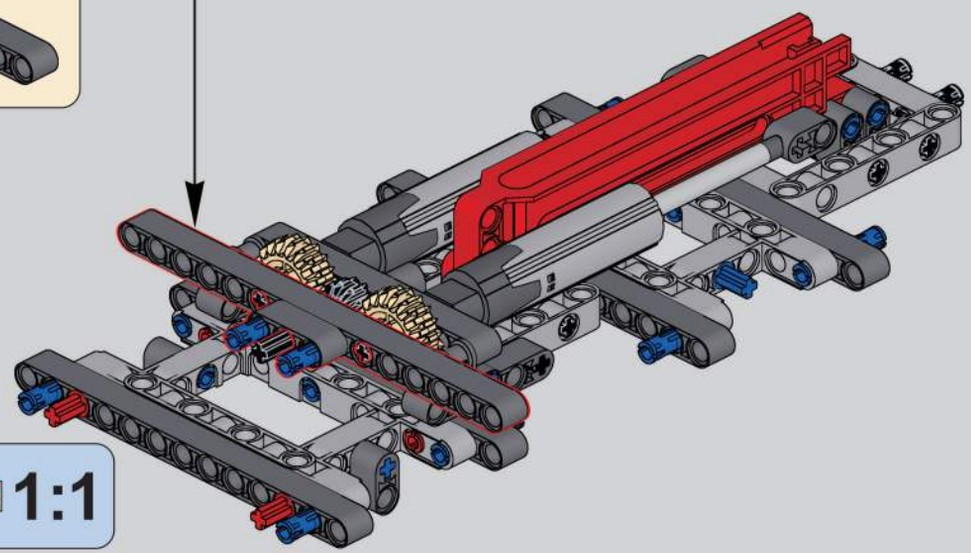

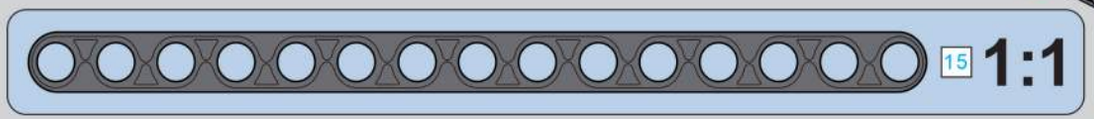

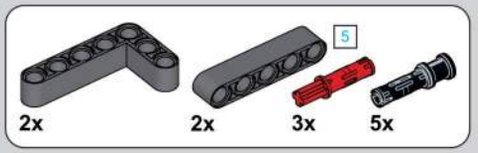

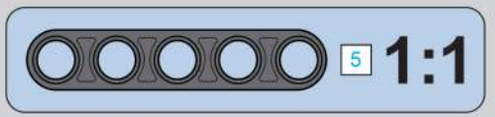

674

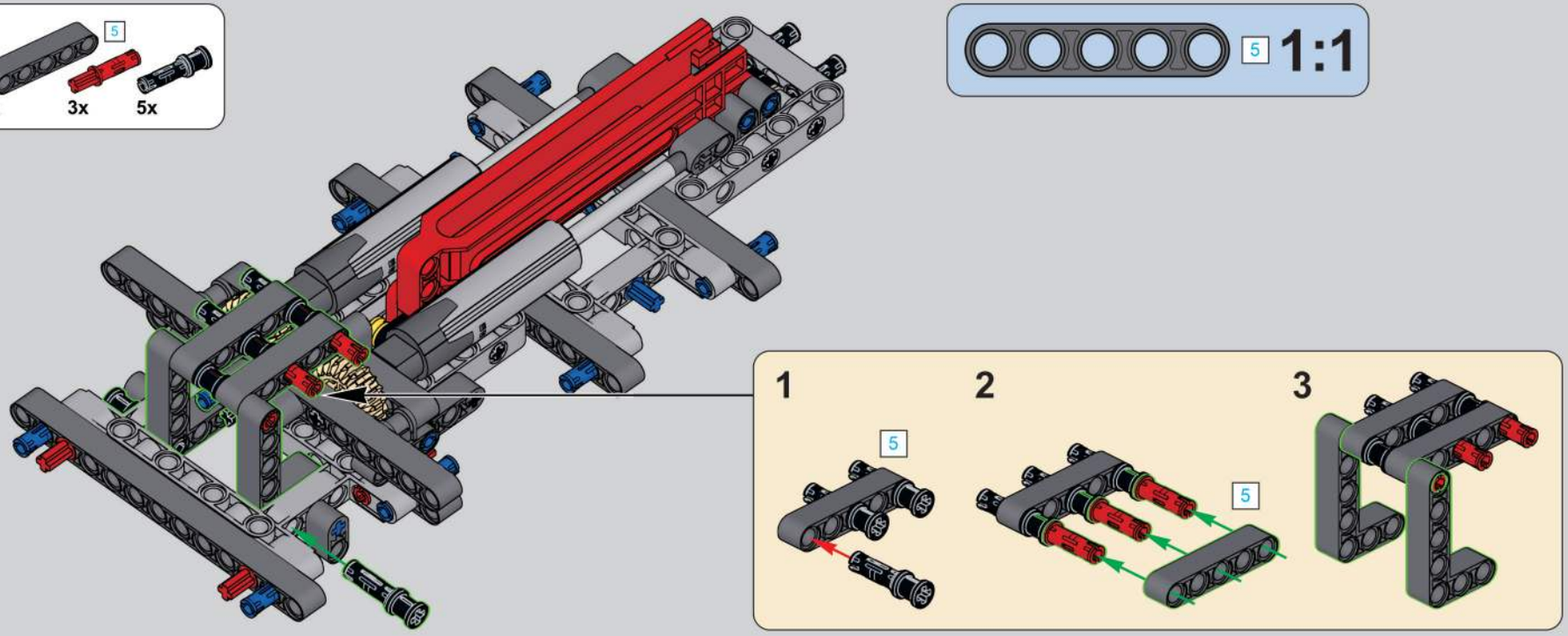

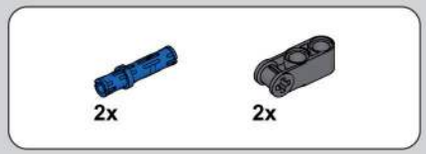

675

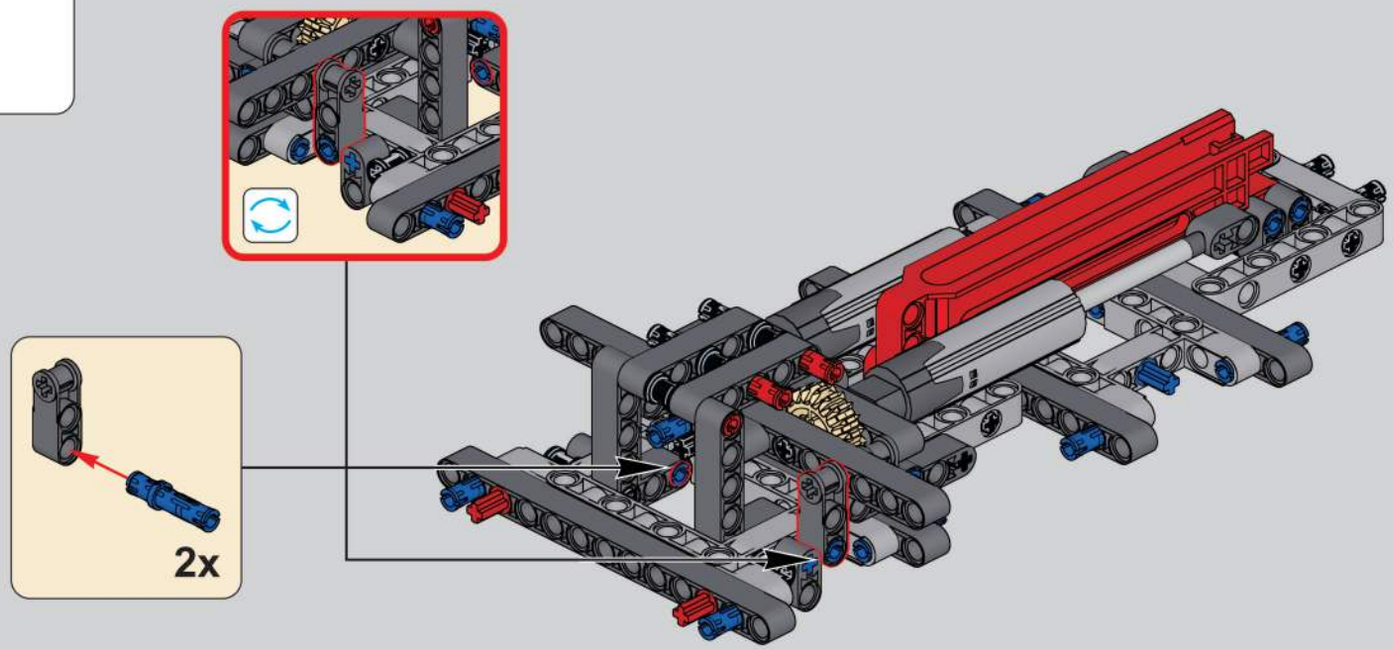

676

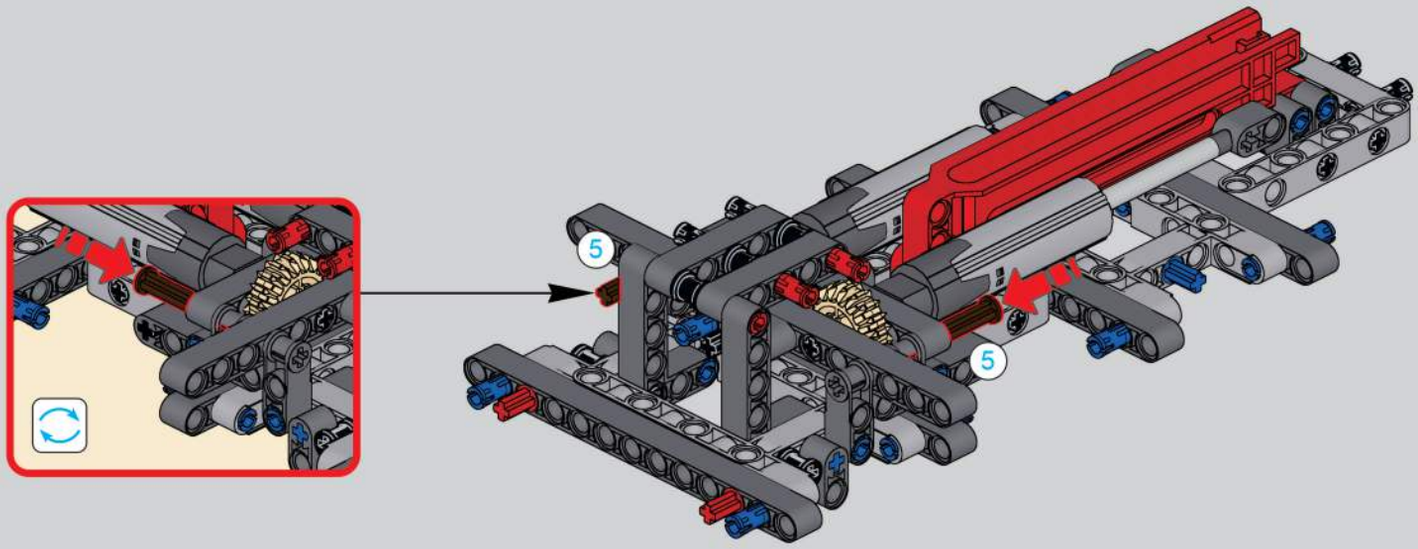

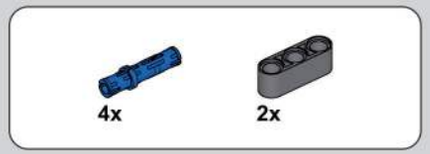

677

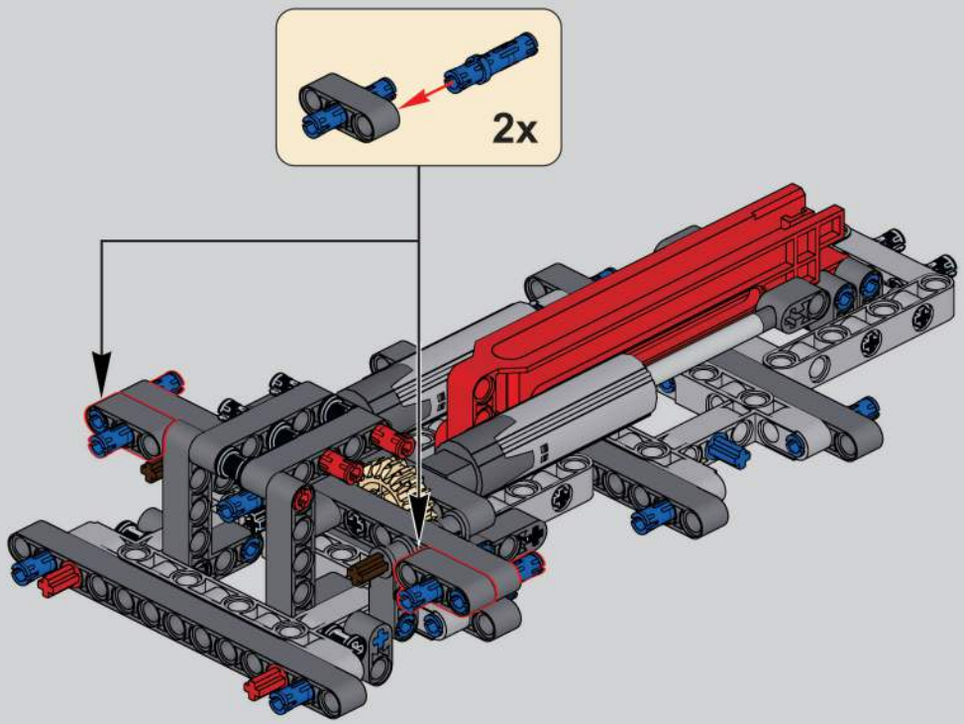

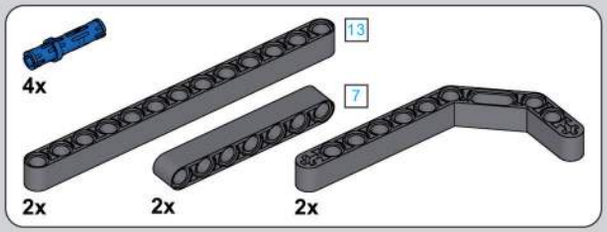

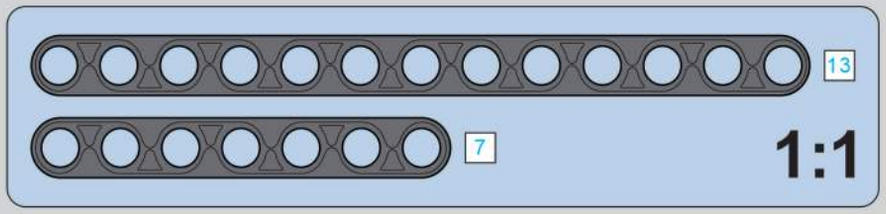

678

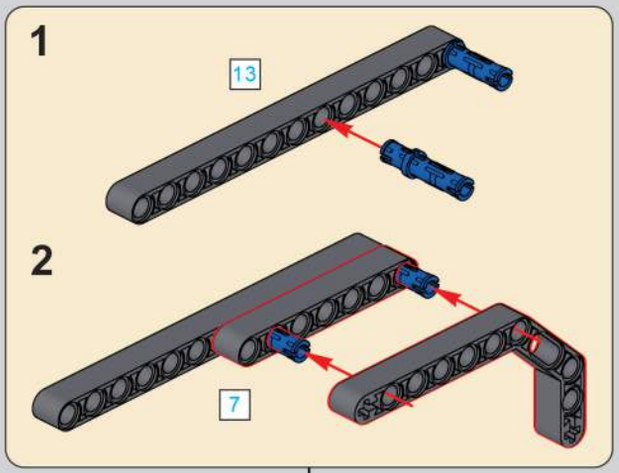

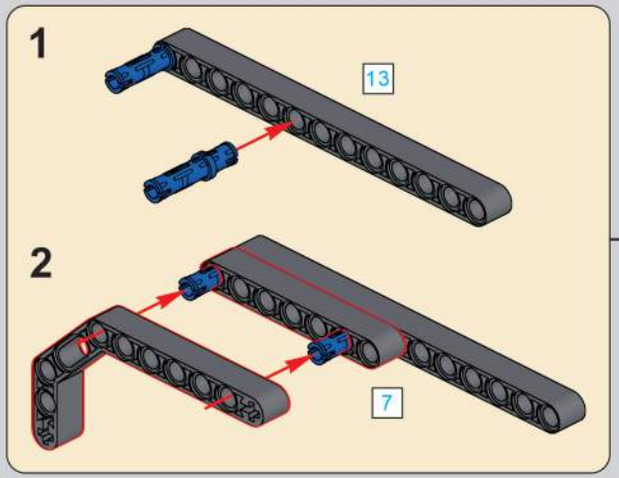

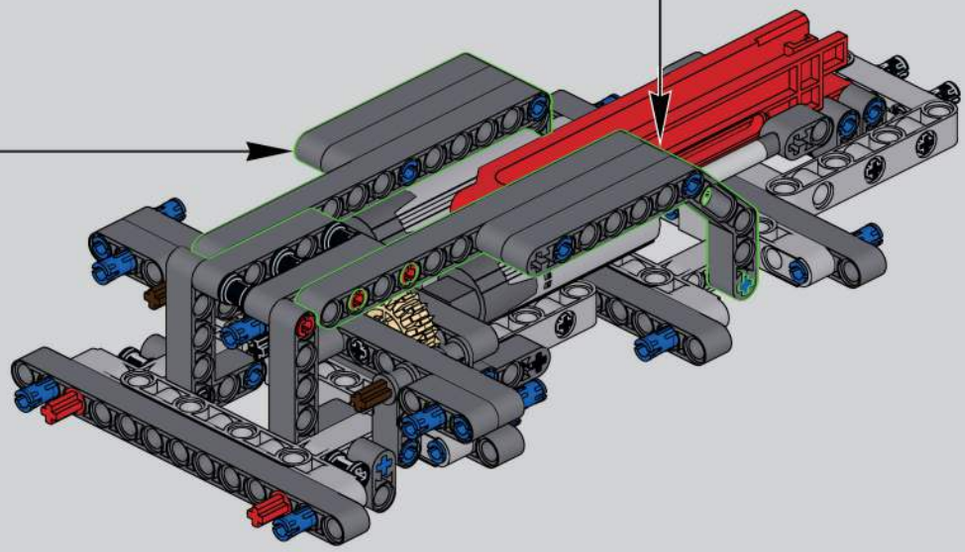

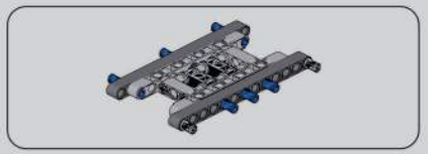

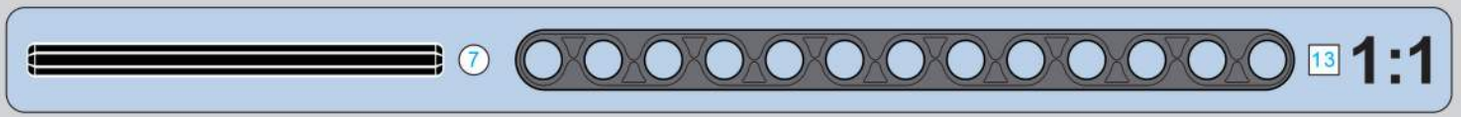

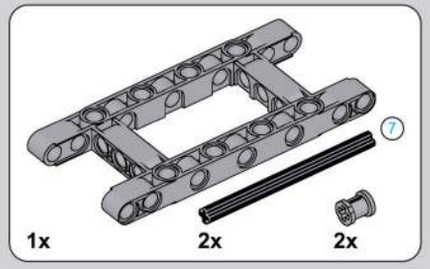

679

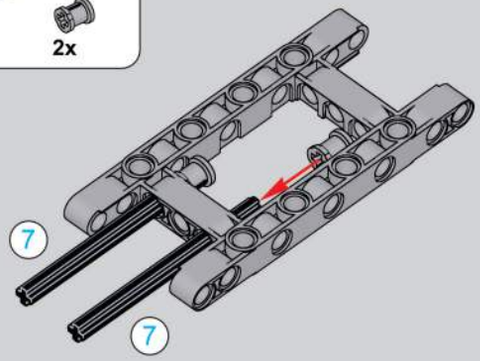

680

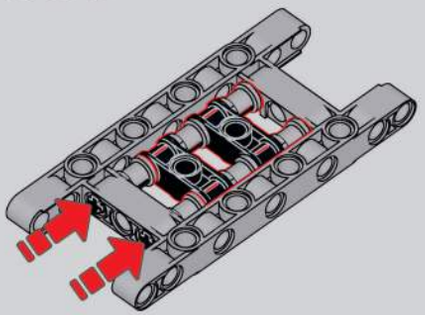

681

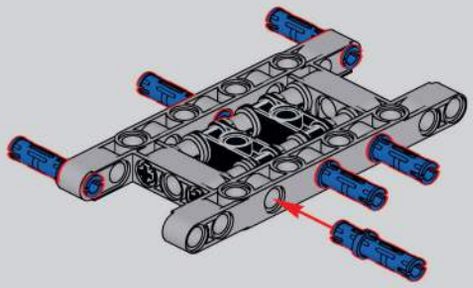

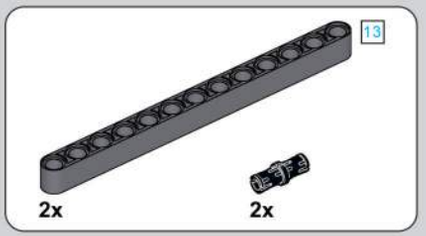

682

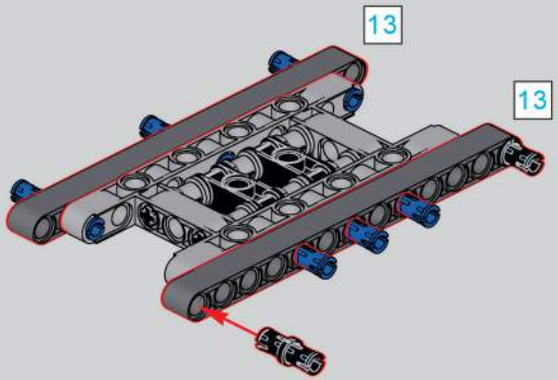

683

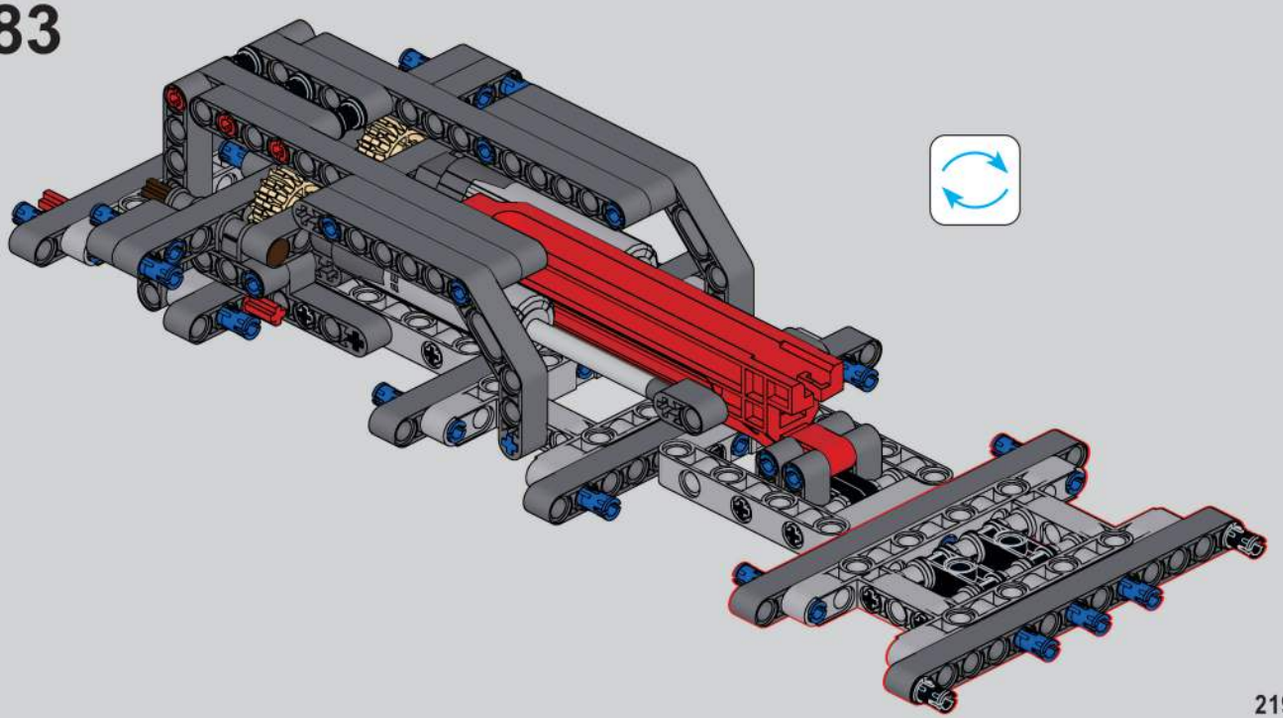

4x
9
3
1x
1x
2x
1x
(光滑栓)(Technic Pin without Friction)

3
9
1:1

684

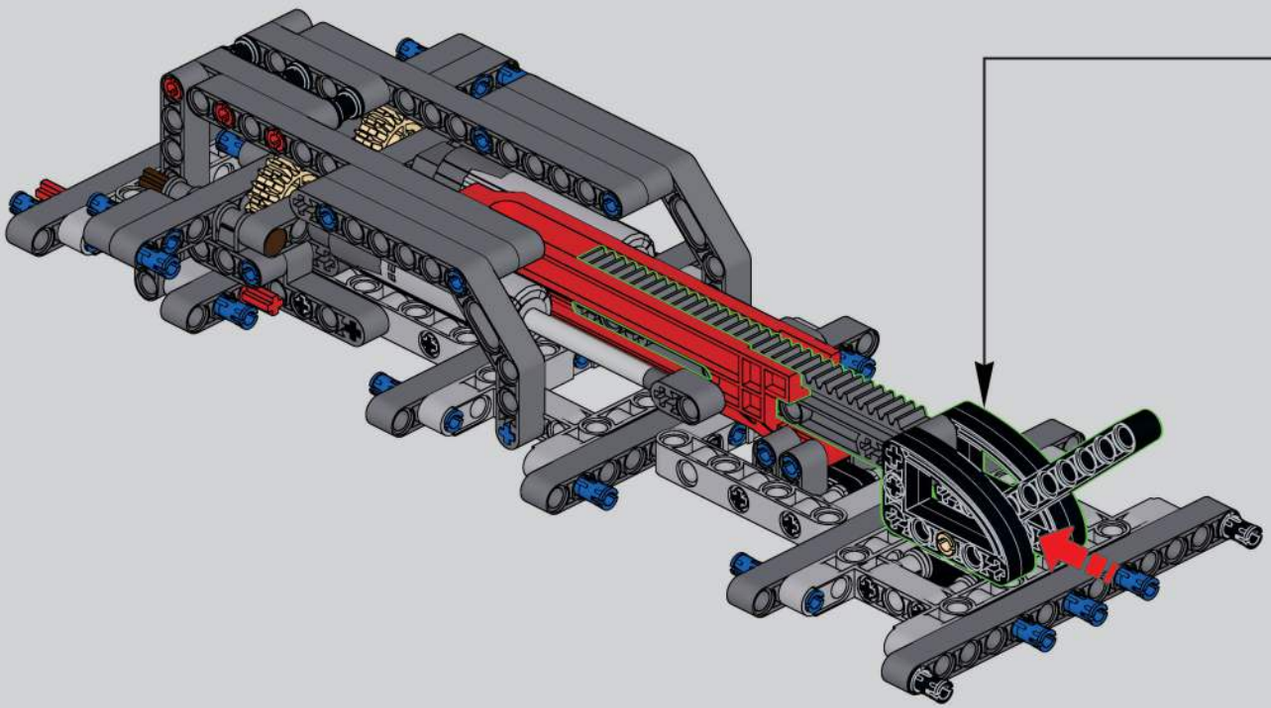

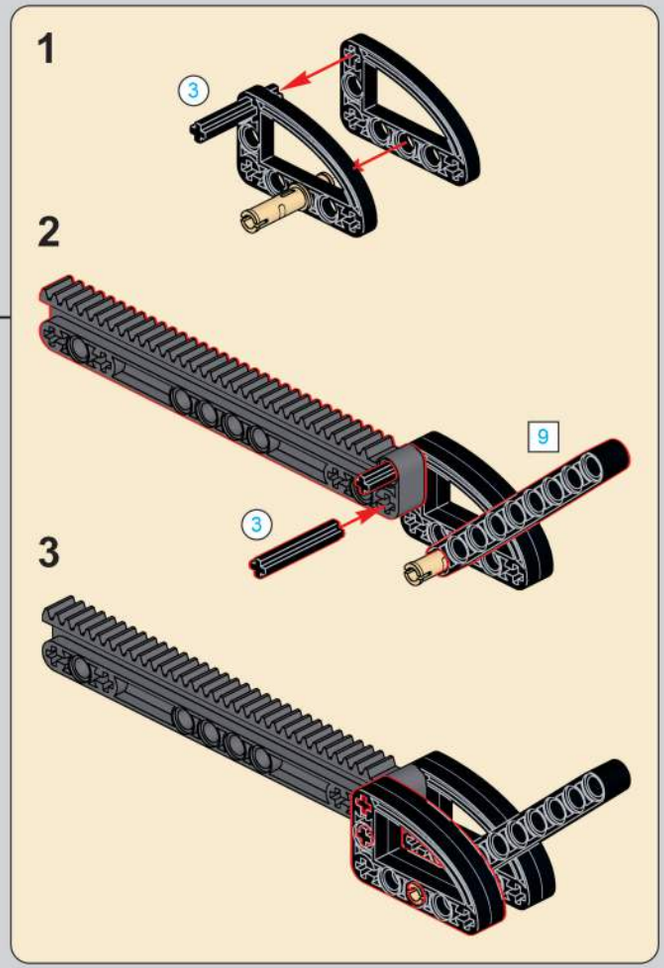
1
3
2
9
3
3

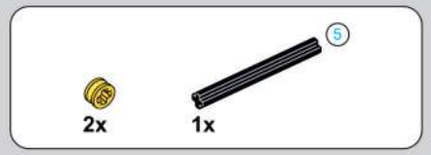

685

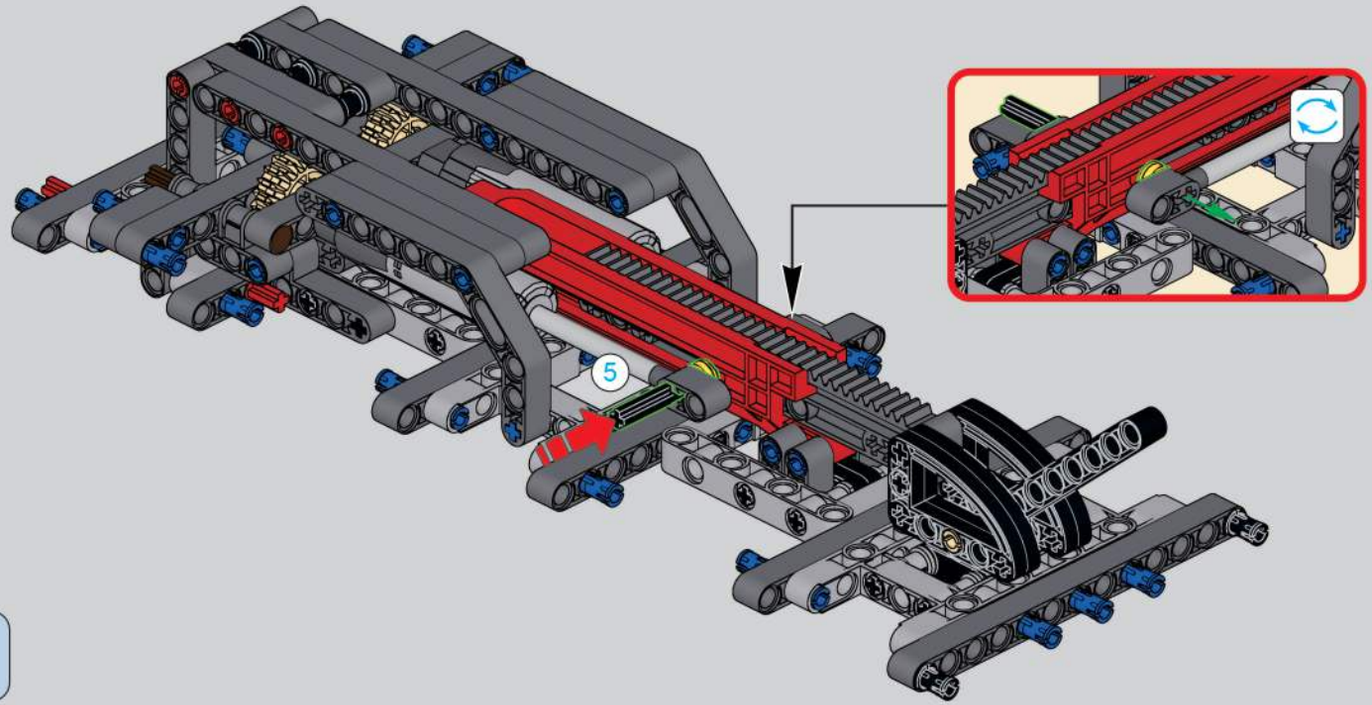

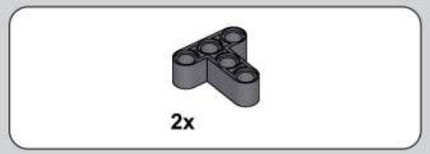

686

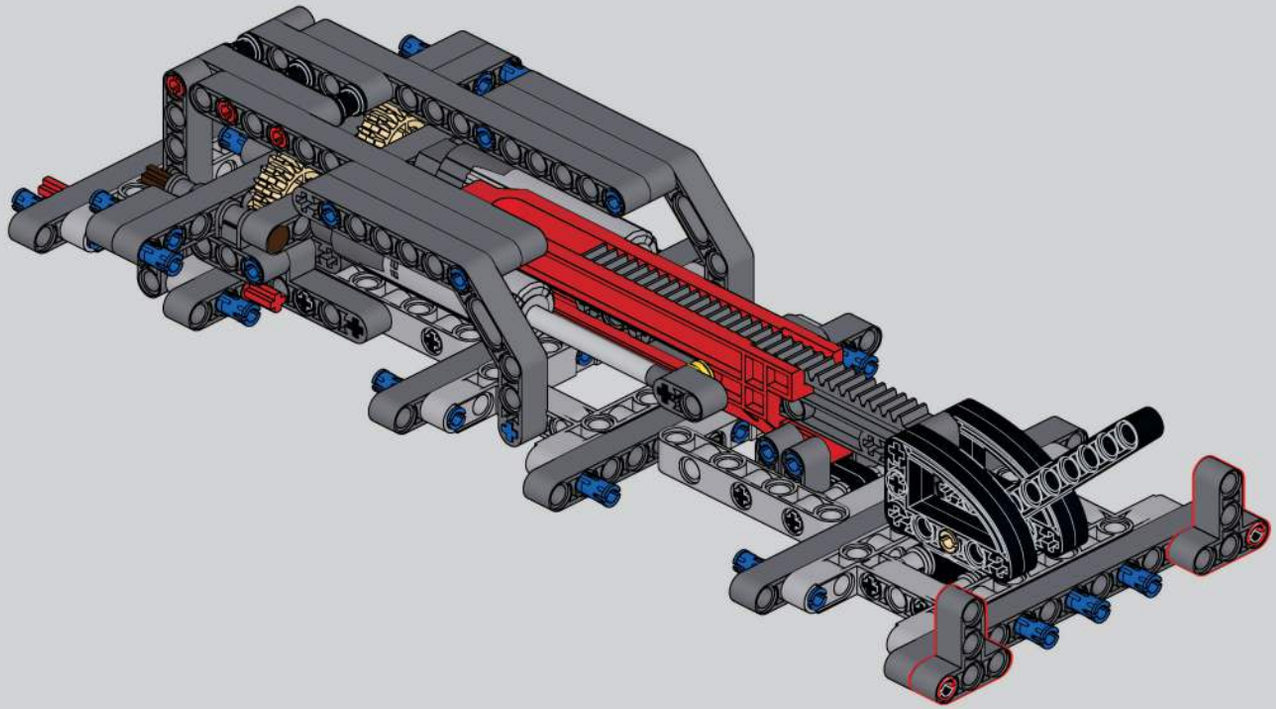

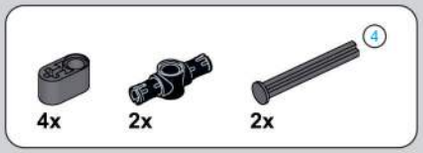

687

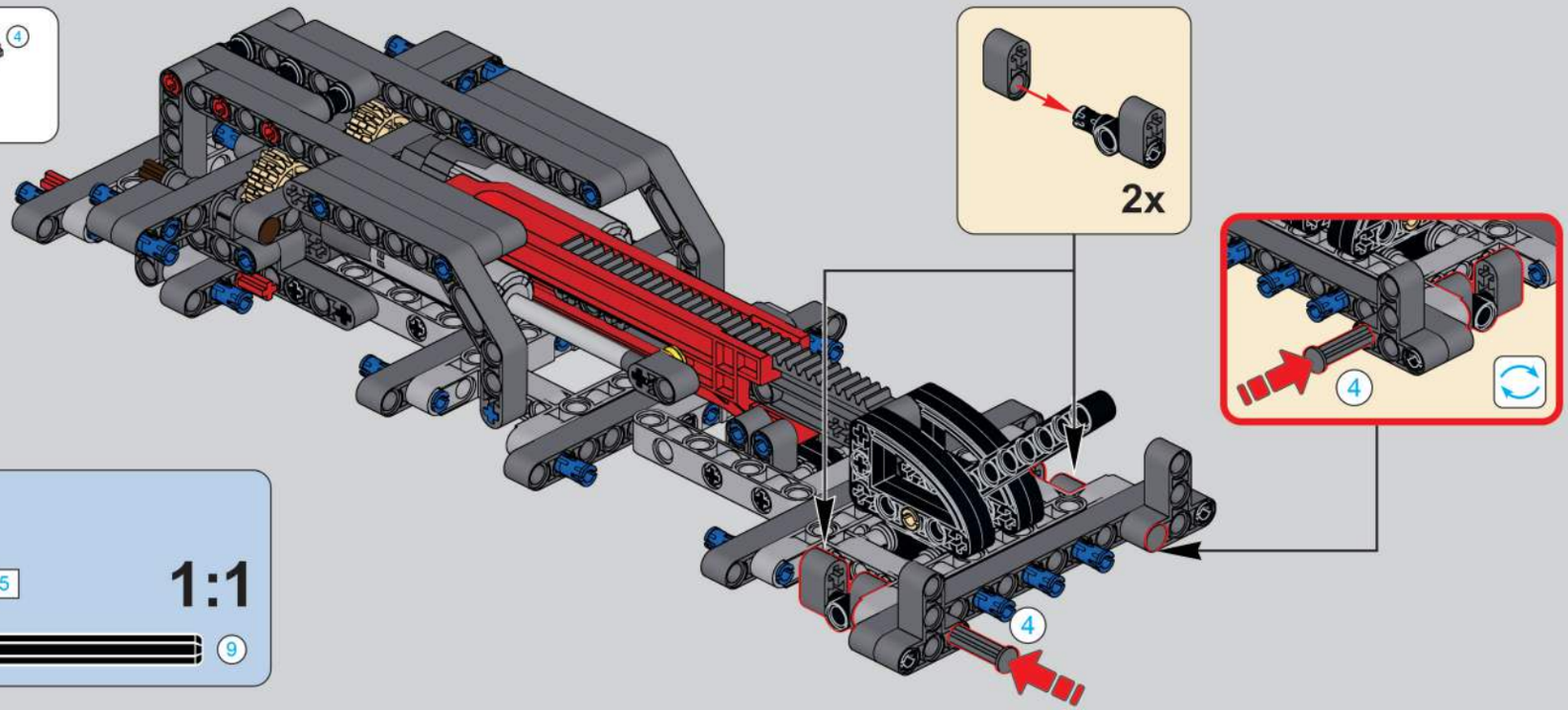

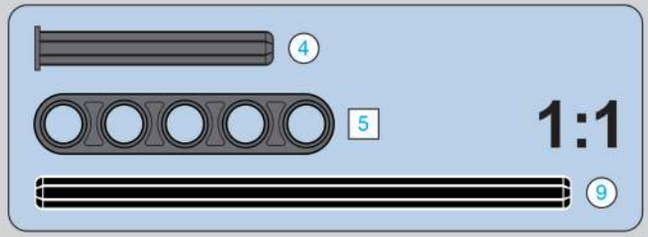

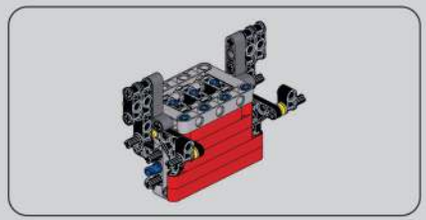

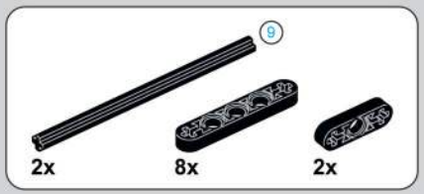

689

690

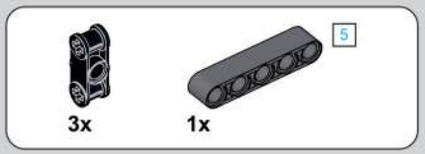

691

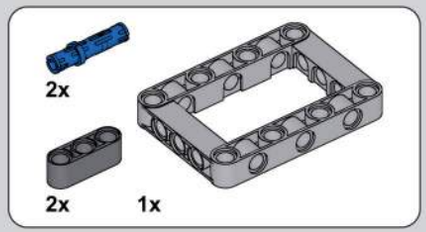

688

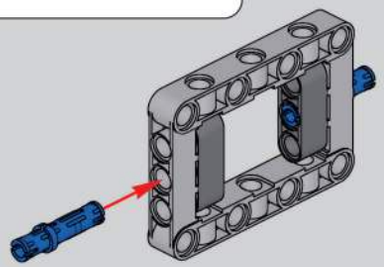

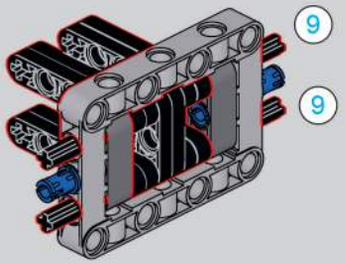

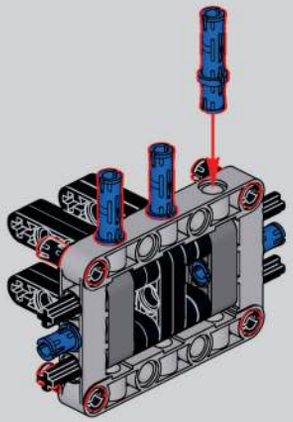

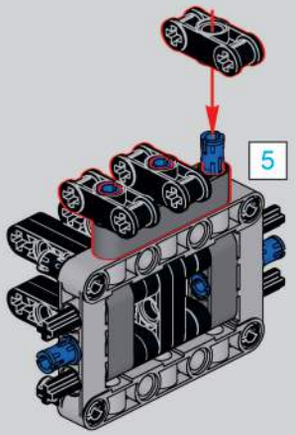

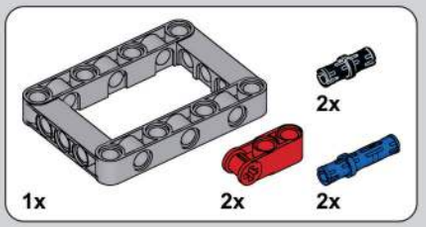
2x
1x
2x
2x

692

9
7
1:1

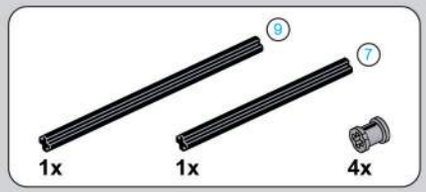
9
7
1x
1x
4x

693

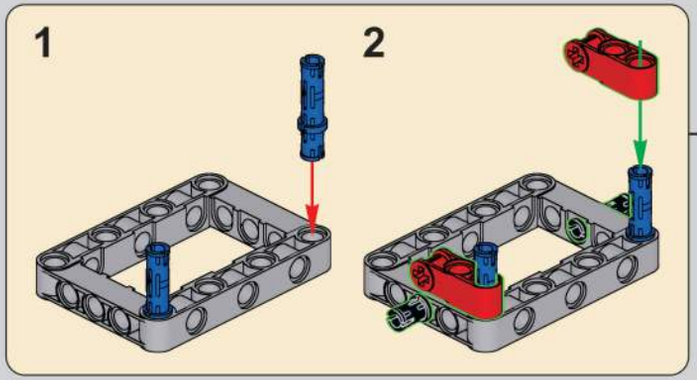
1
2

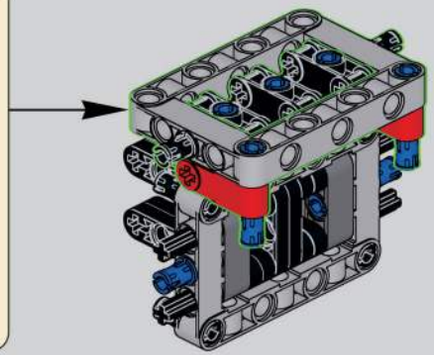

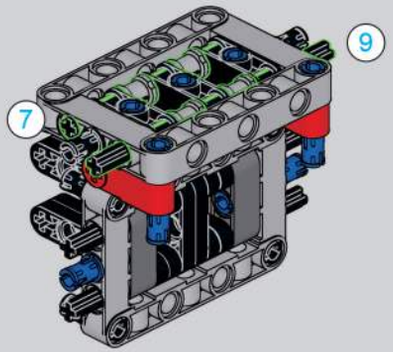
9
7

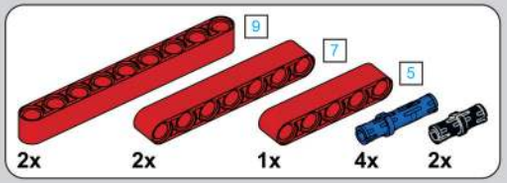
9
7
5
2x
2x
1x
4x
2x

694

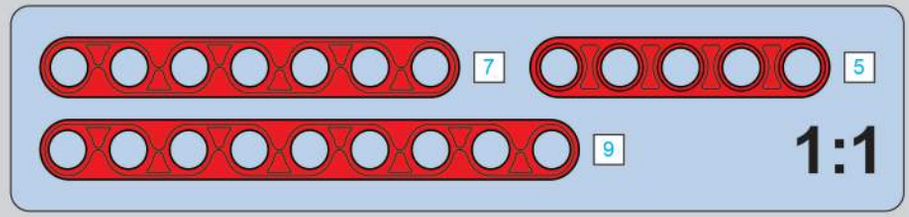
7
5
9
1:1

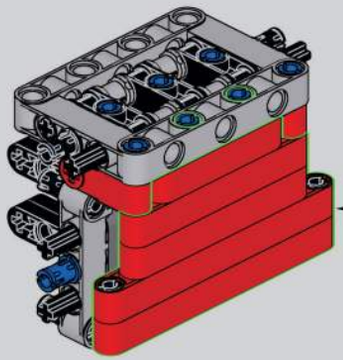

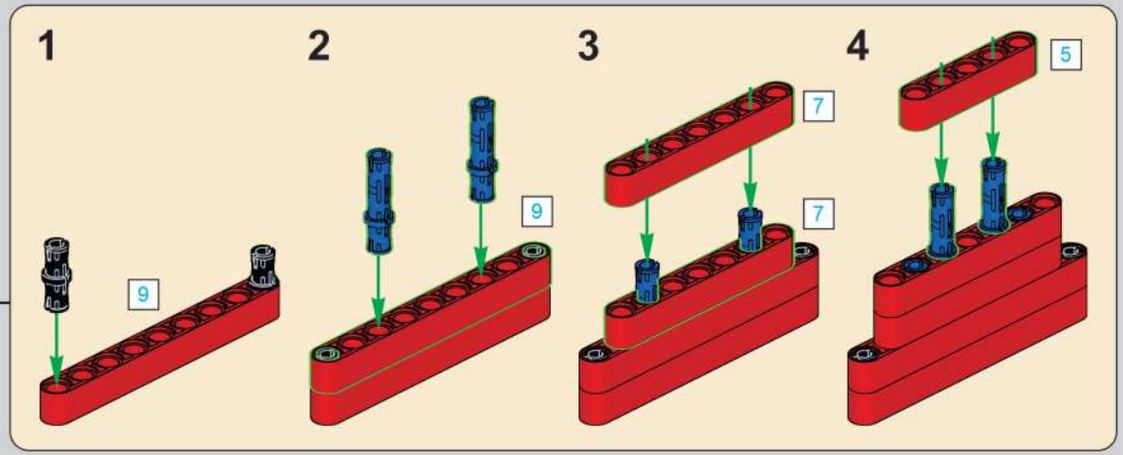
1
2
3
4
9
9
7
7
5

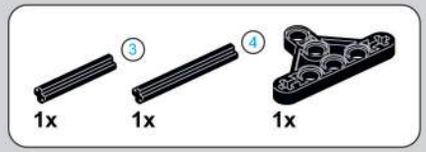

695

696

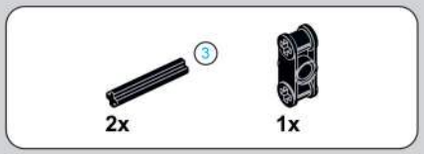

697

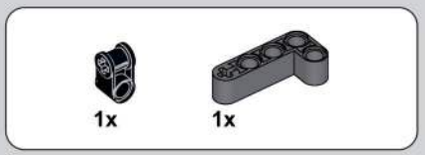

698

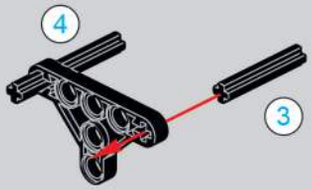

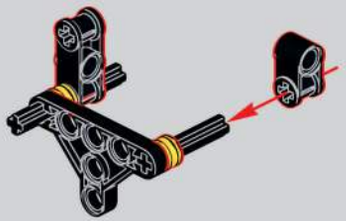

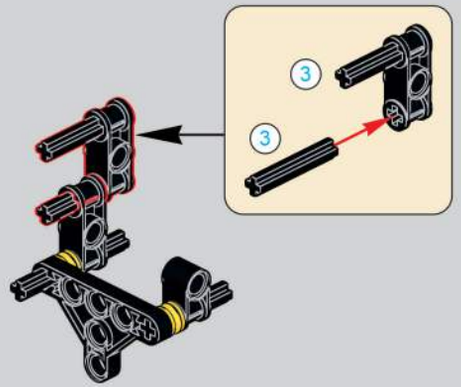

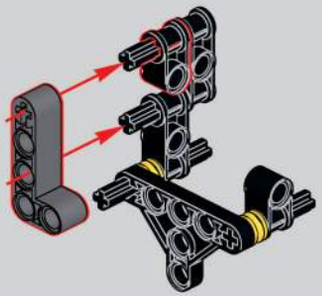

699

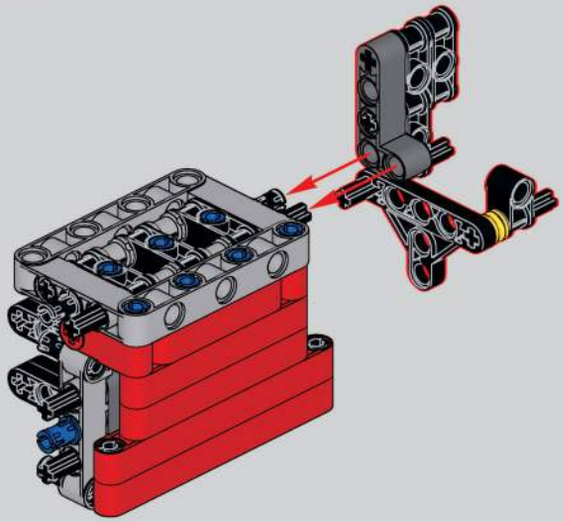

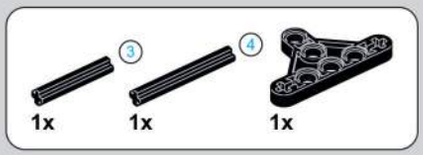

700

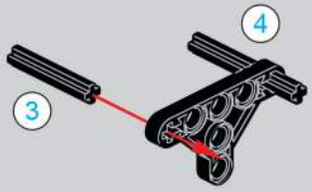

701

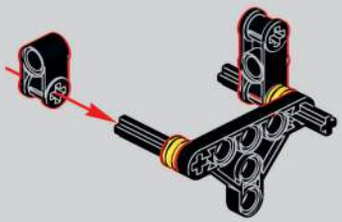

702

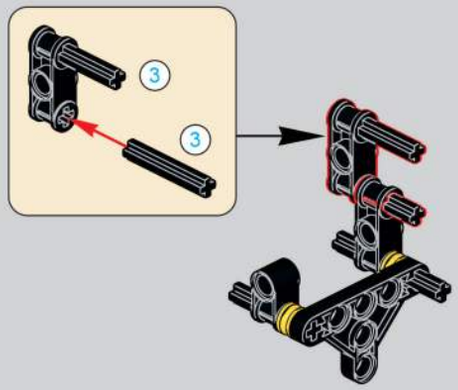

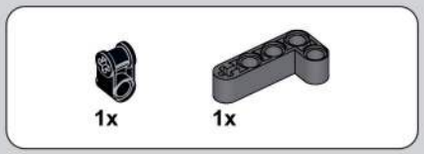

703

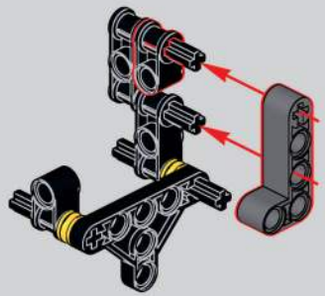

704

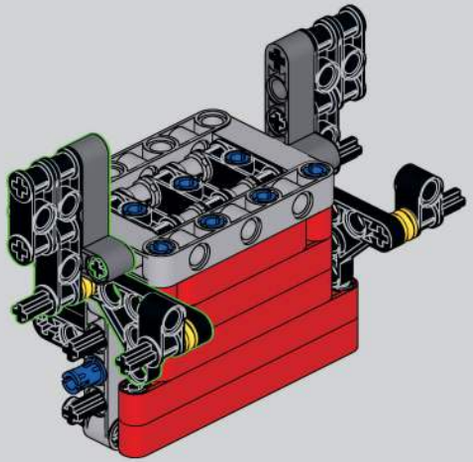

705

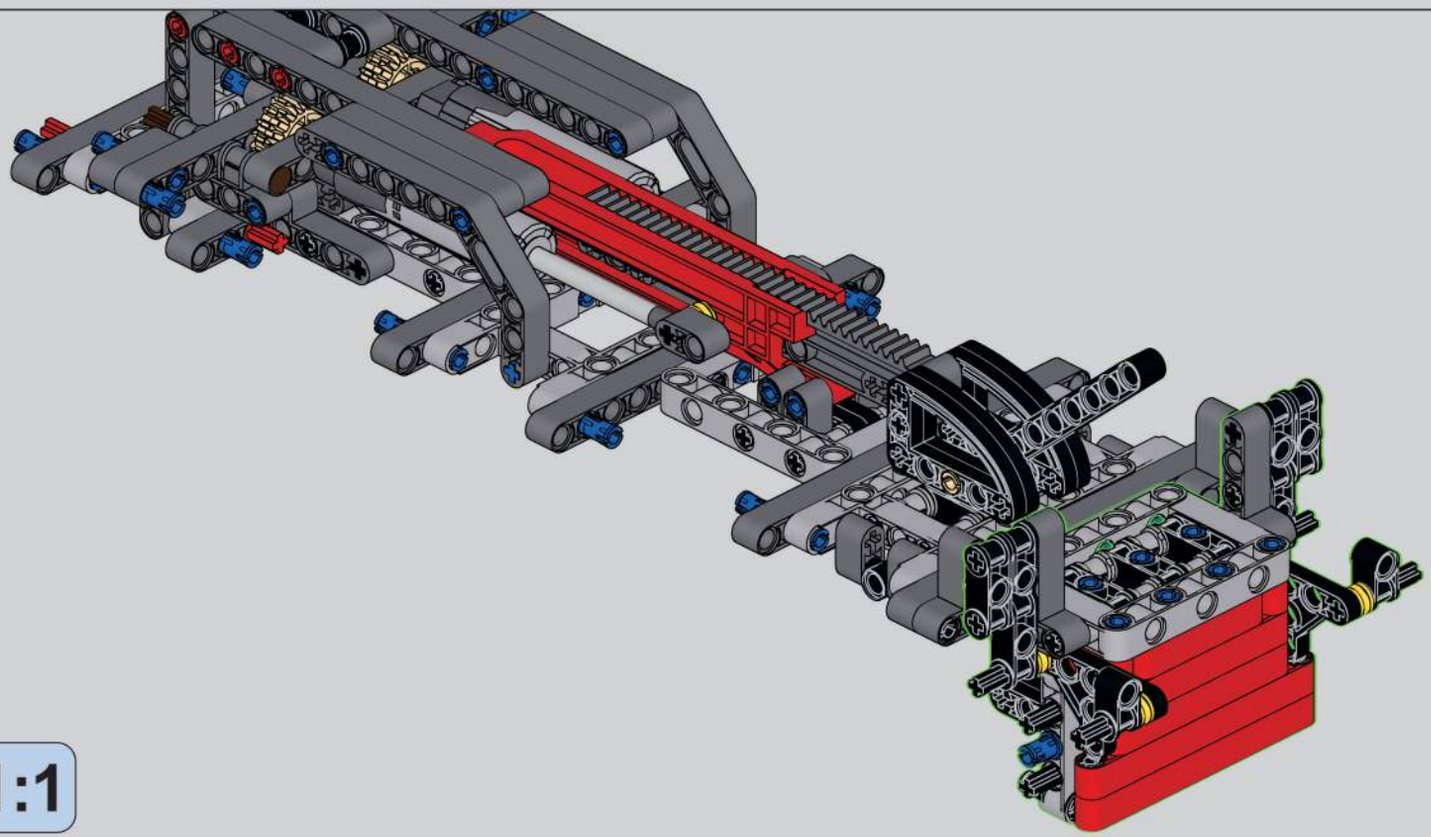

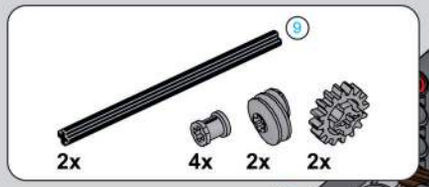

706

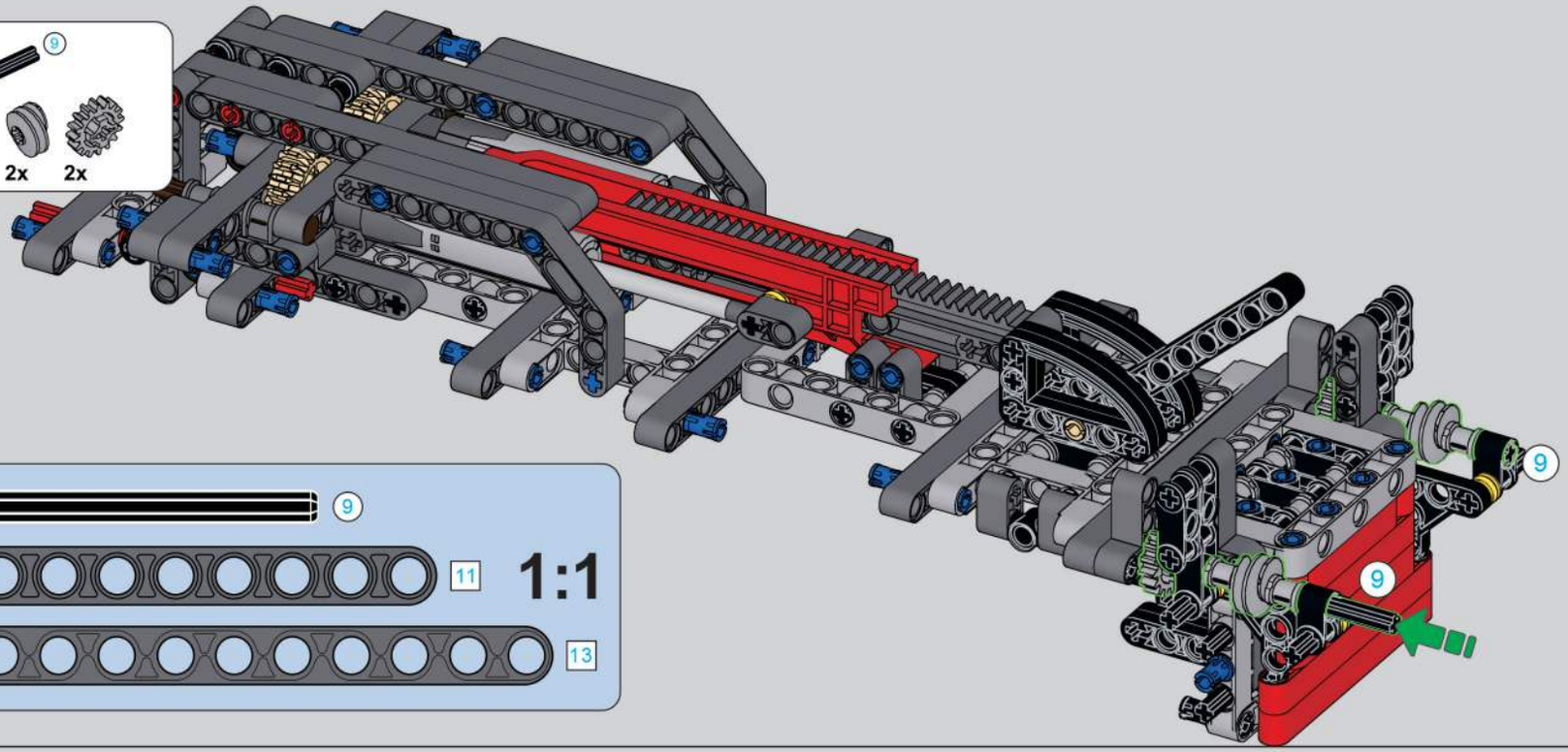

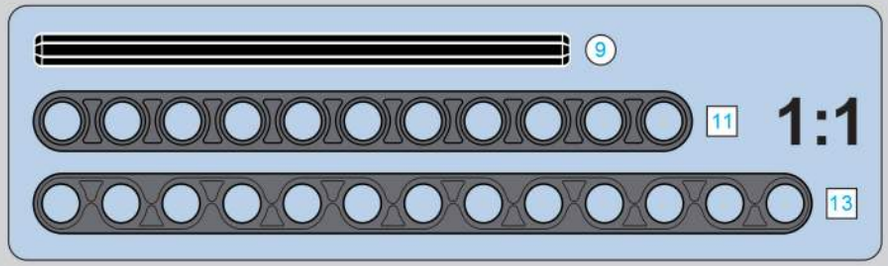

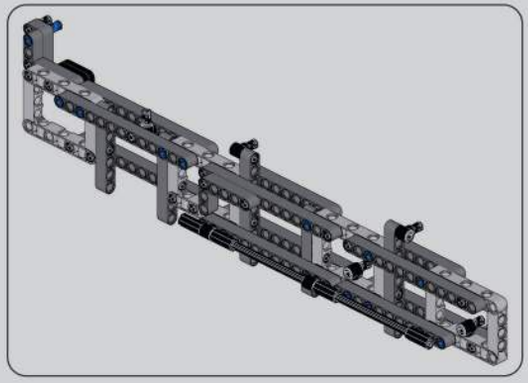

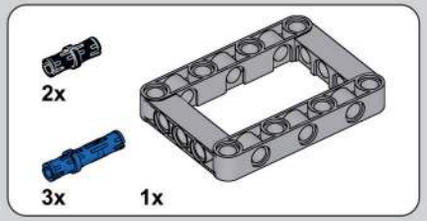

707

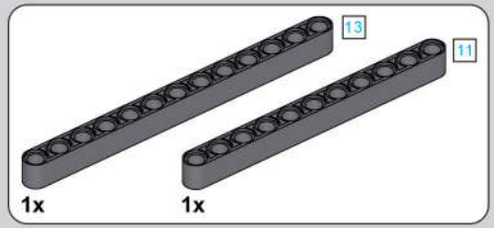

708

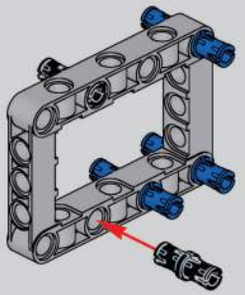

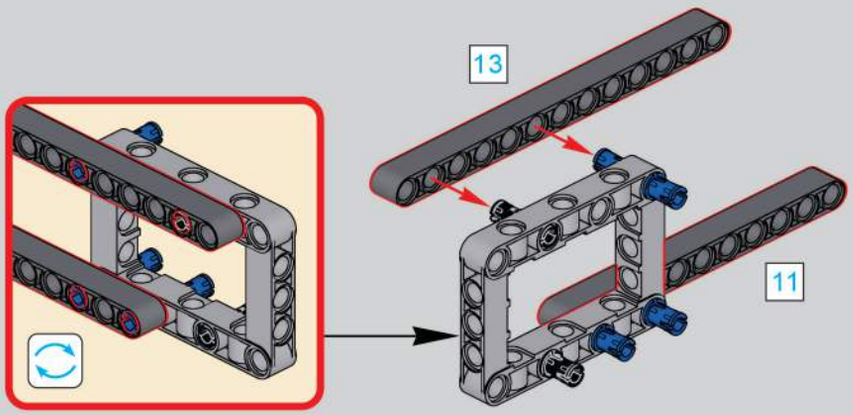

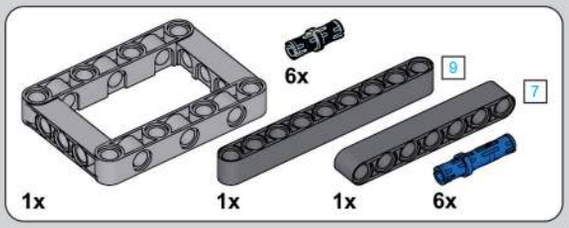

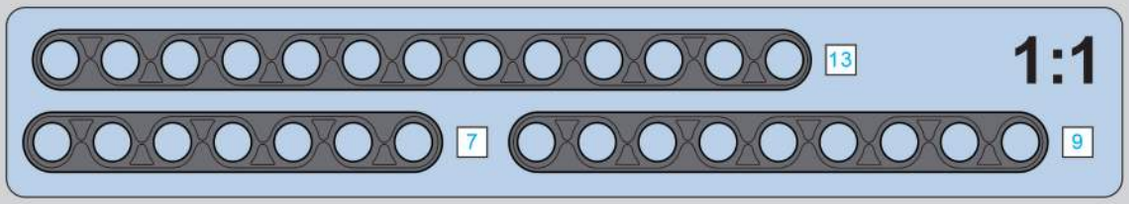

709

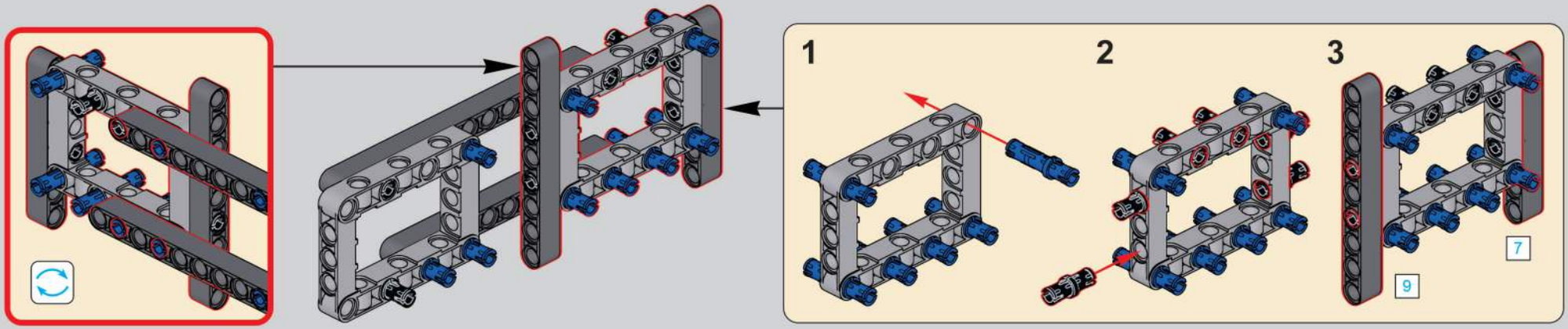

710

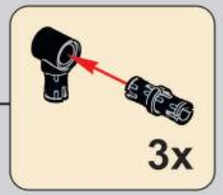

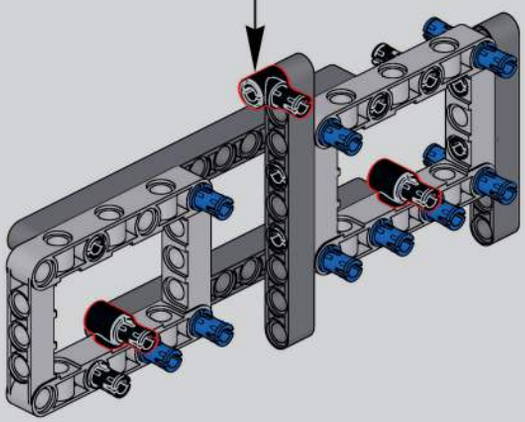

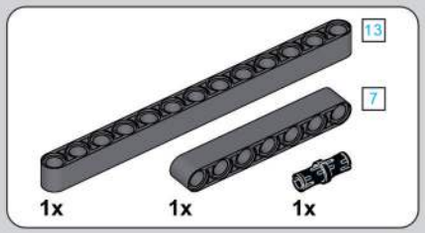

711

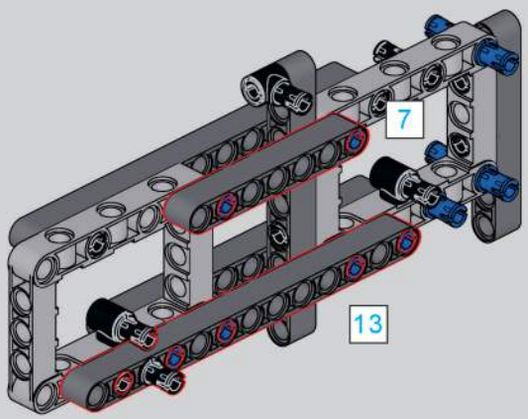

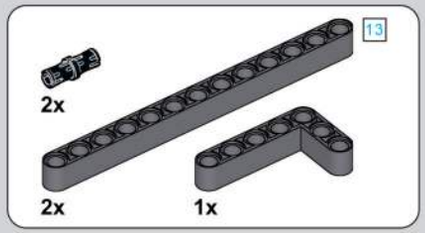

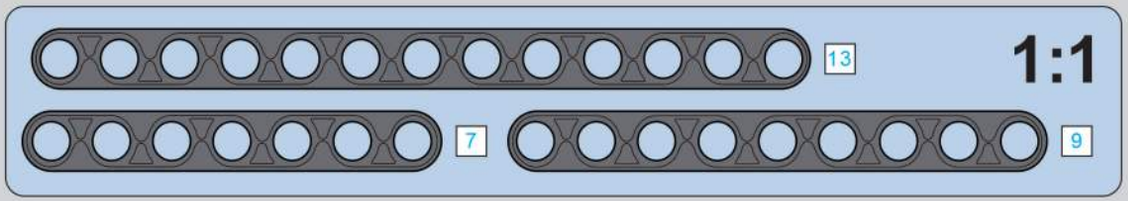

712

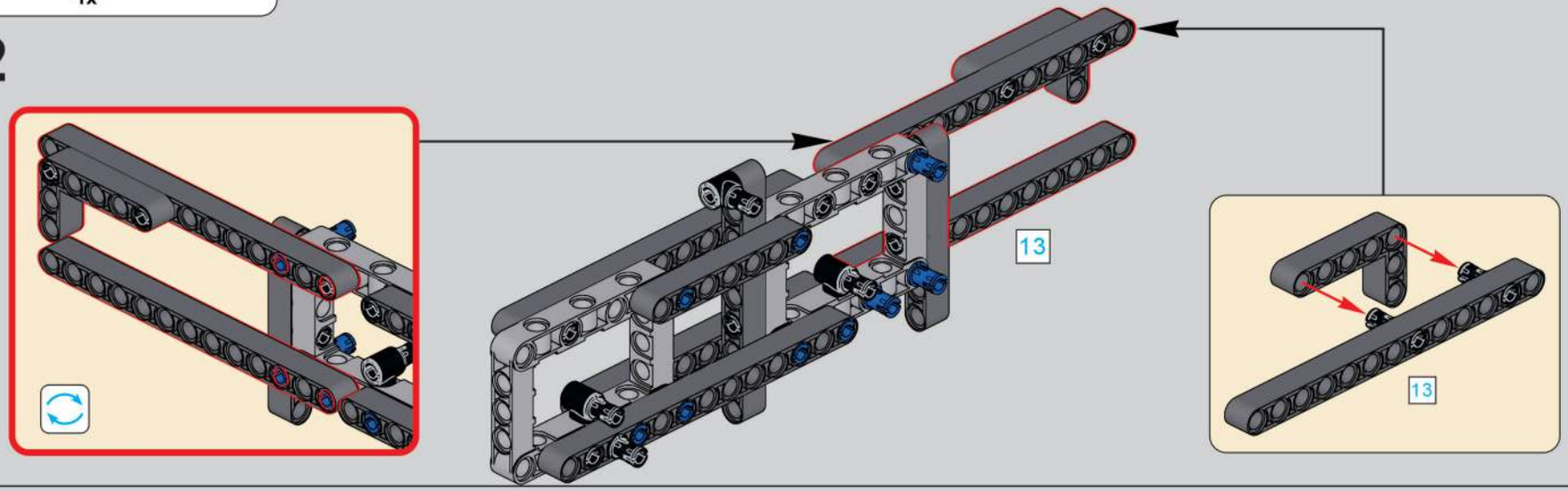

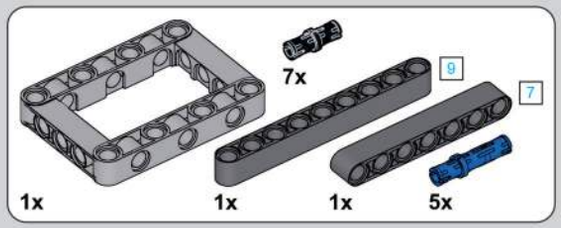

713

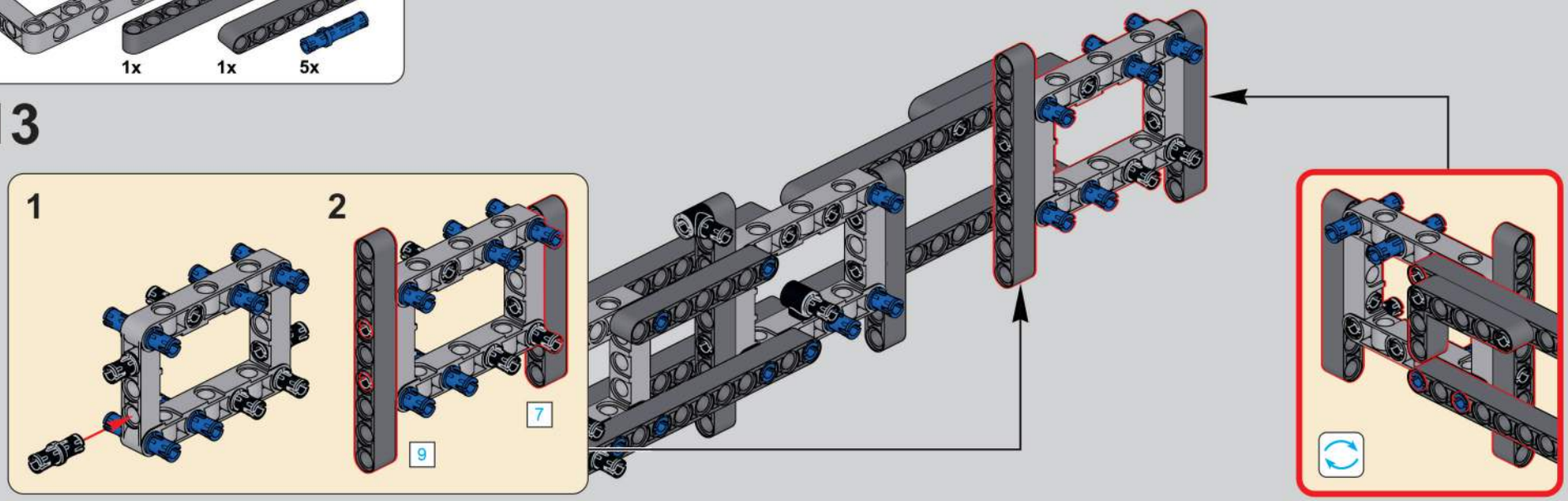

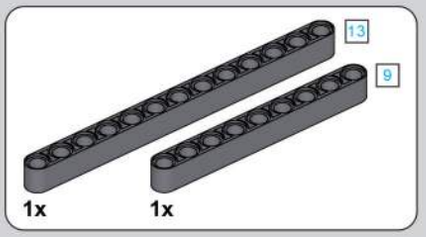

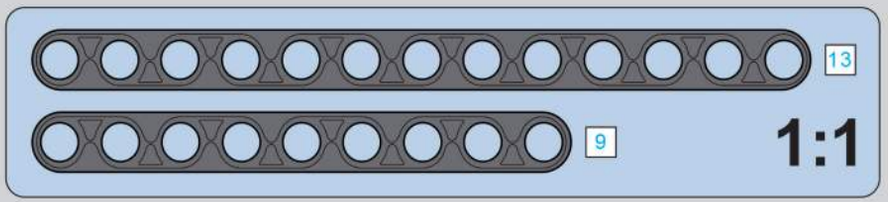

714

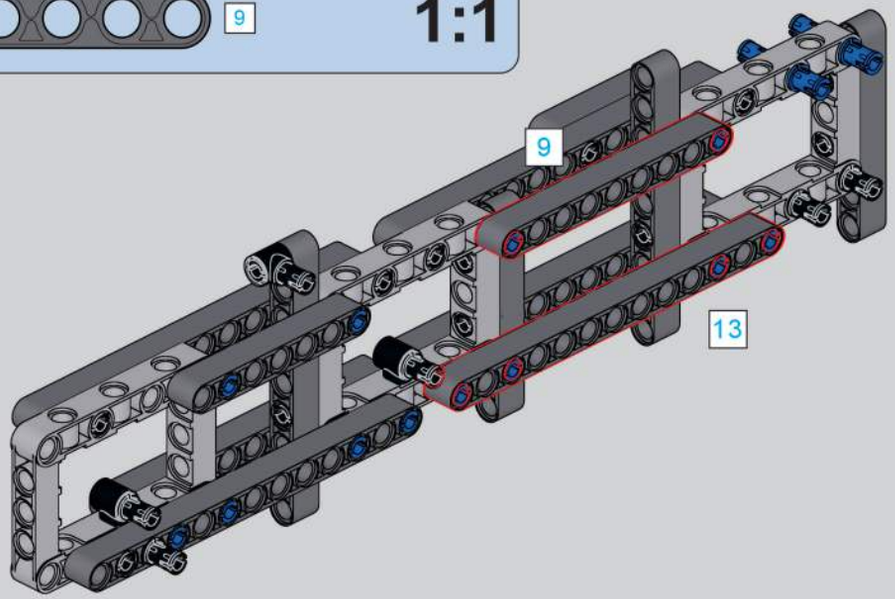

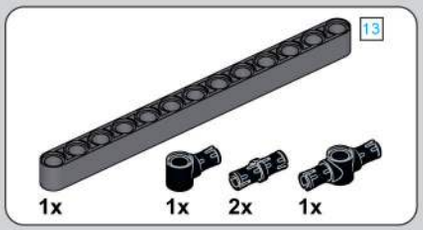

715

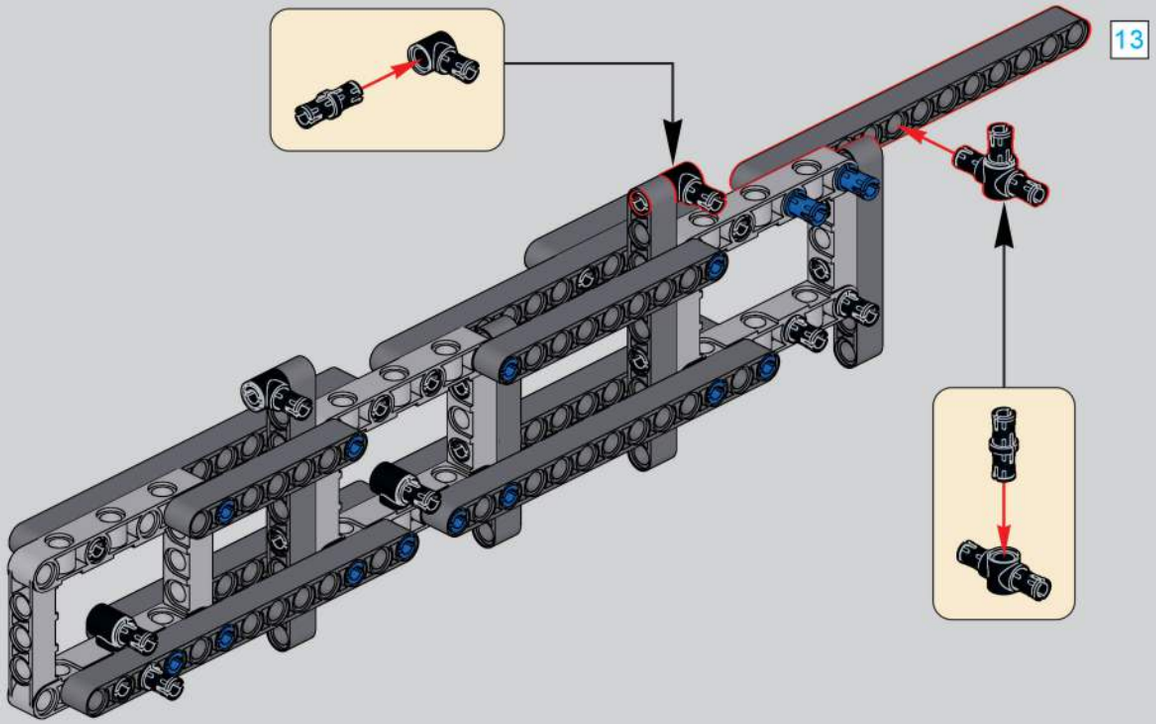

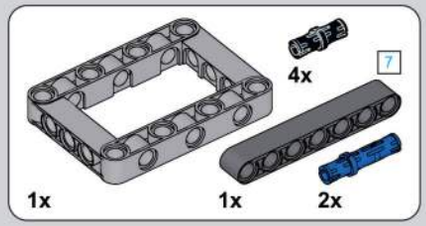

716

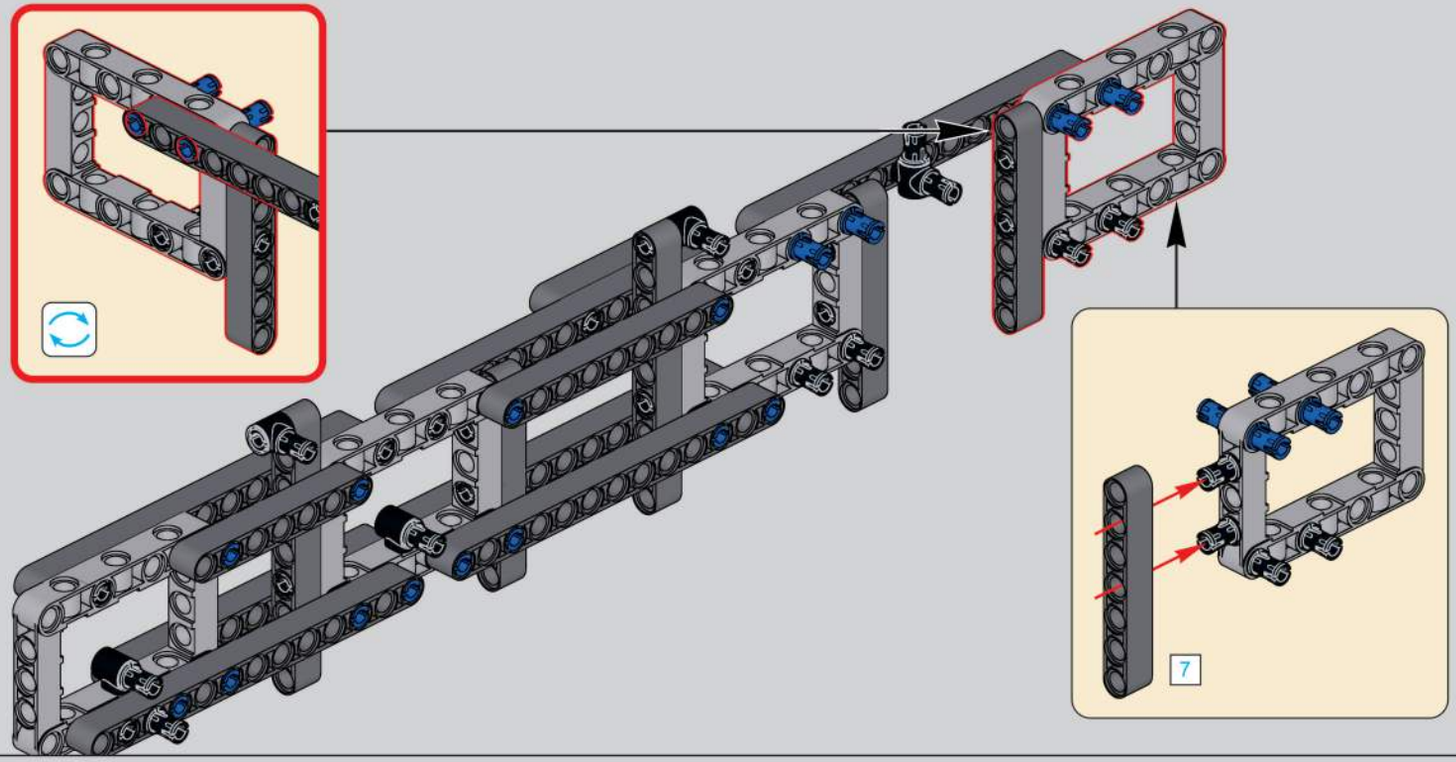

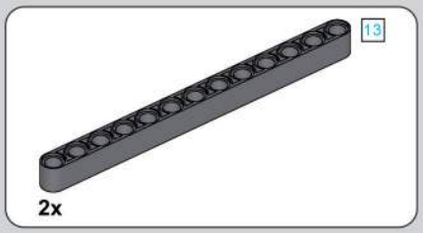

717

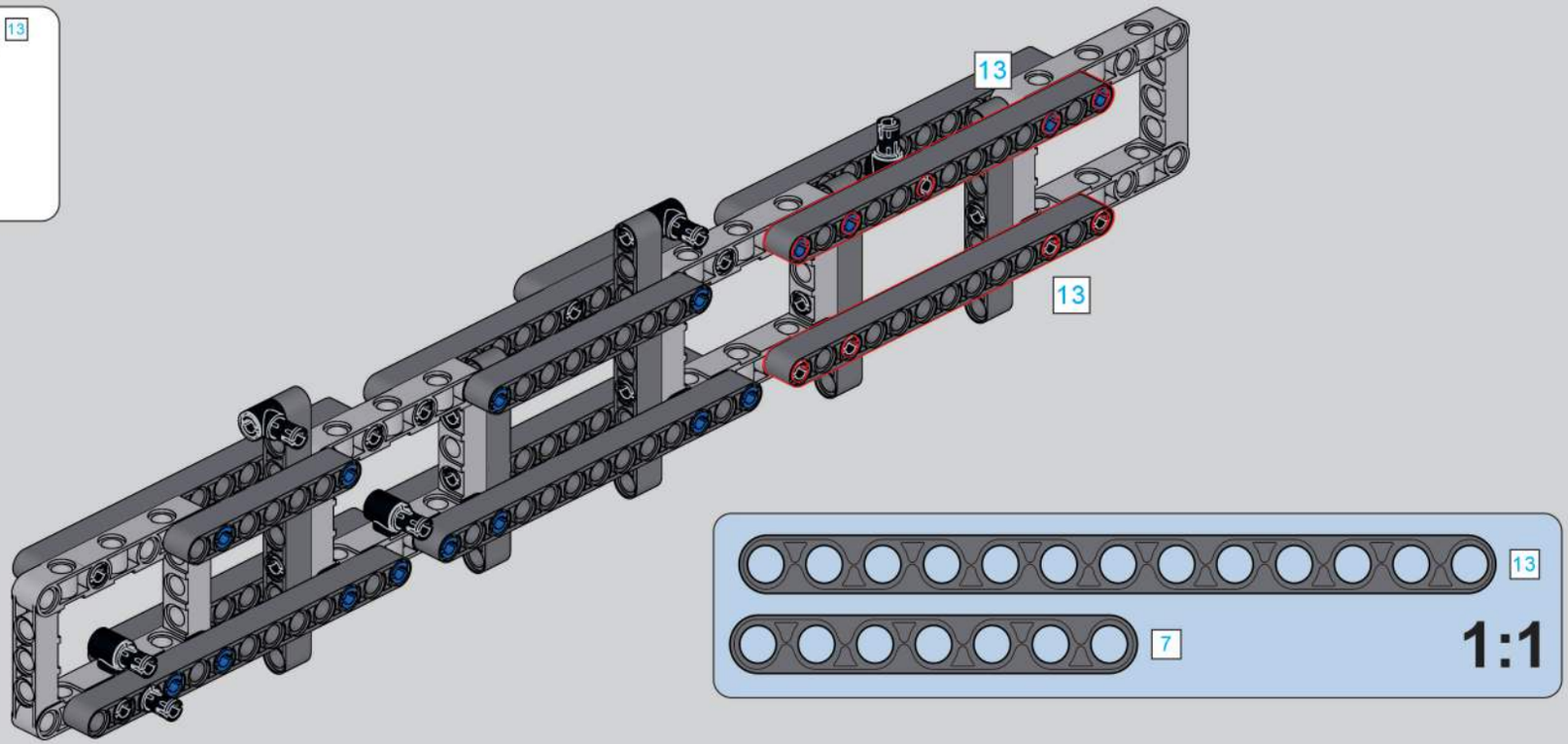

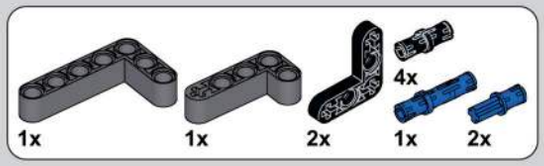

718

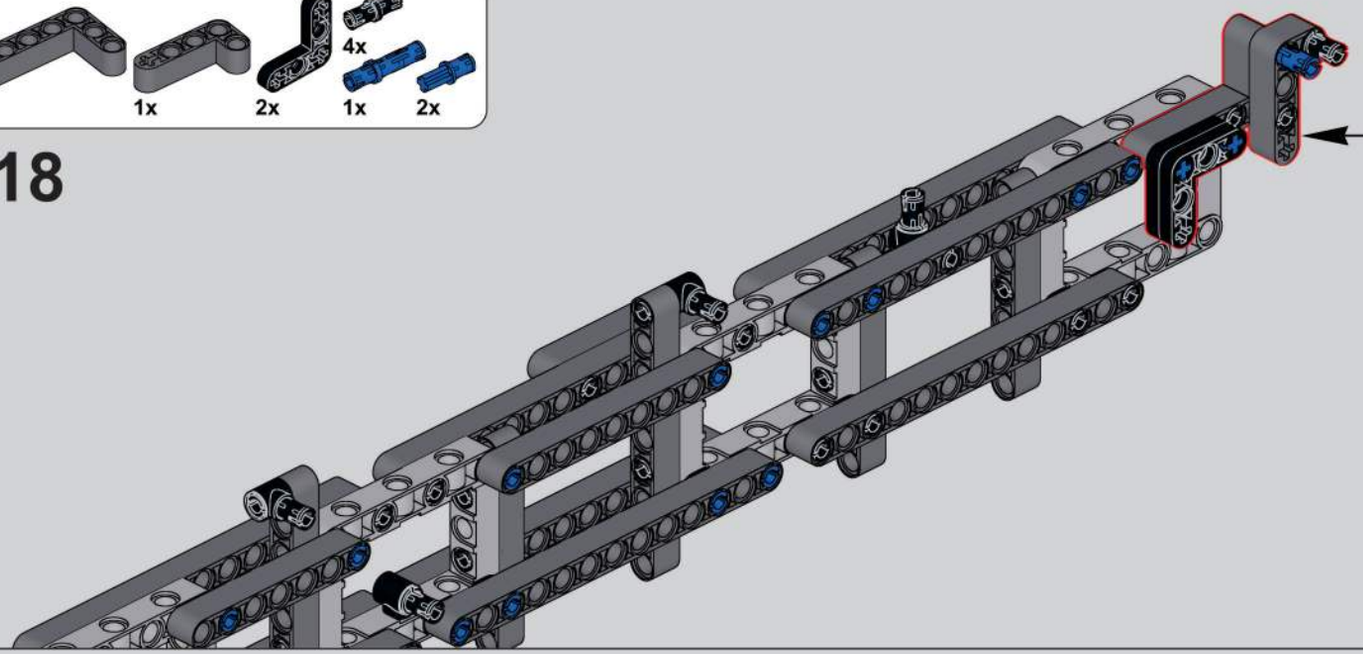

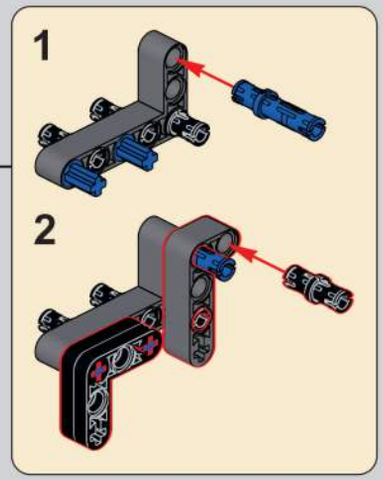

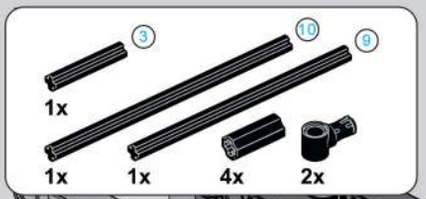

719

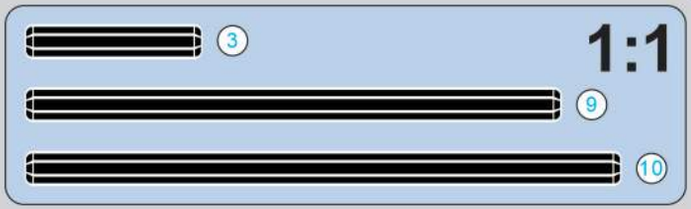

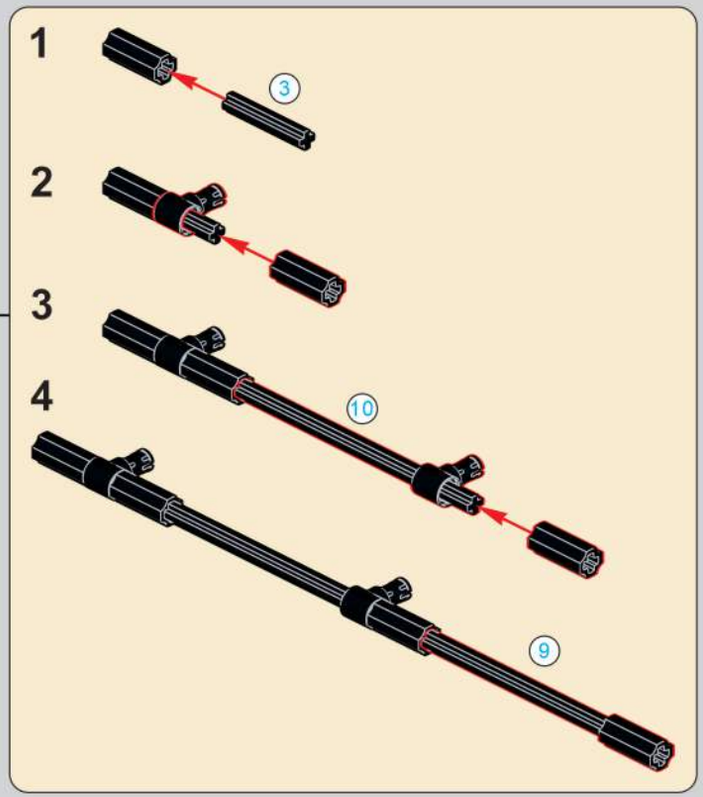

720

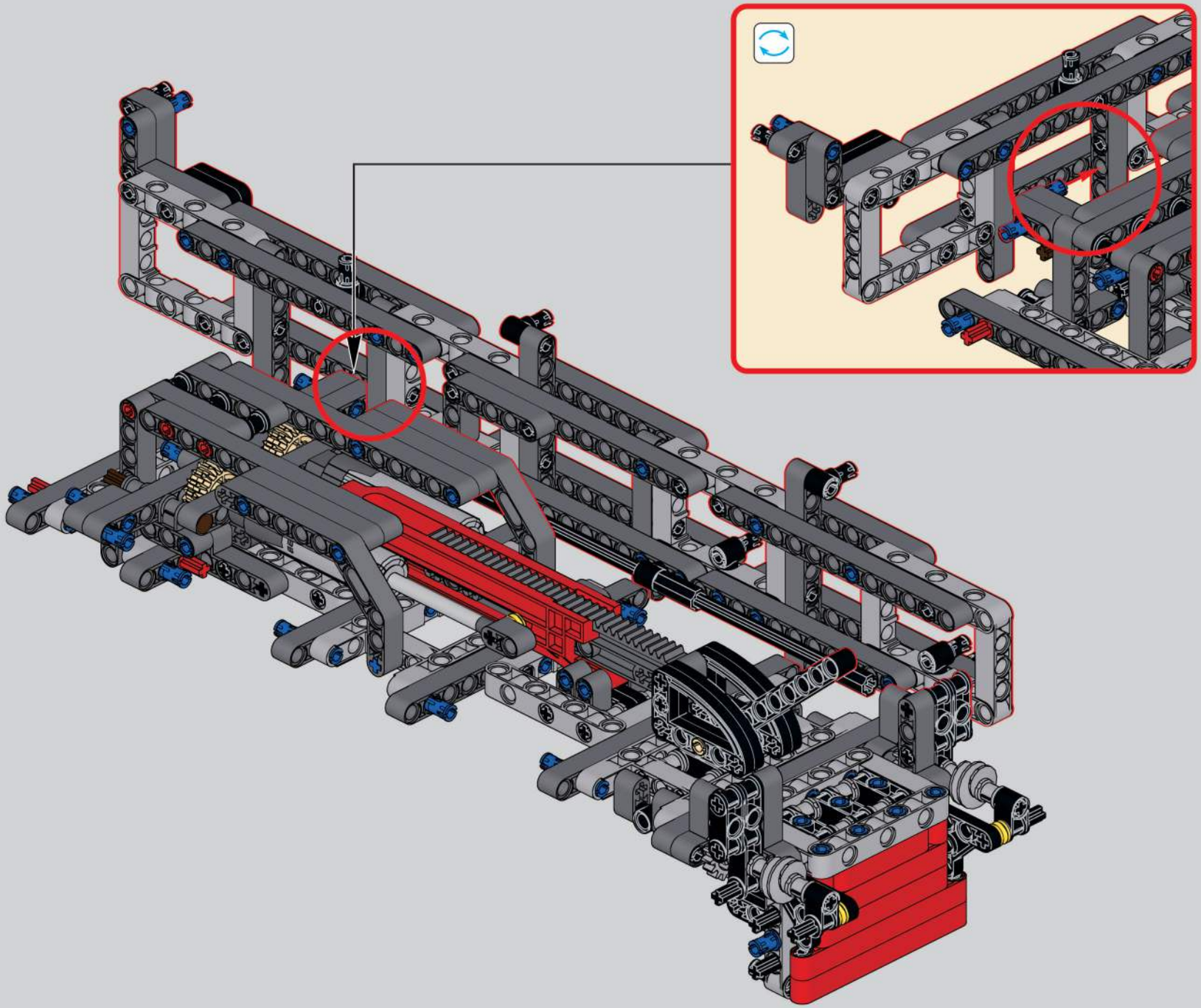

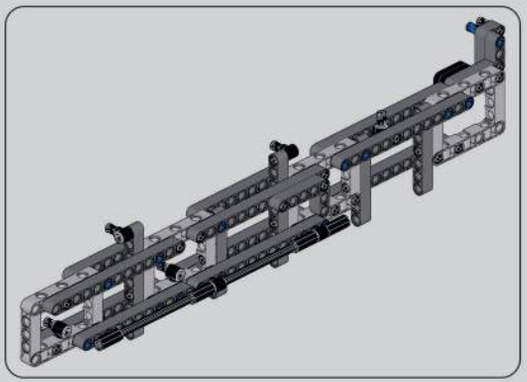

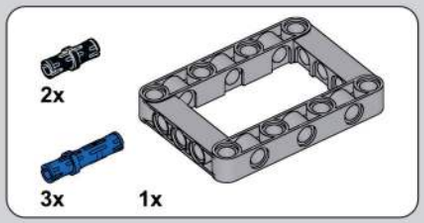

721

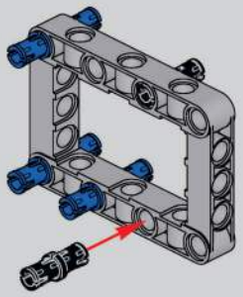

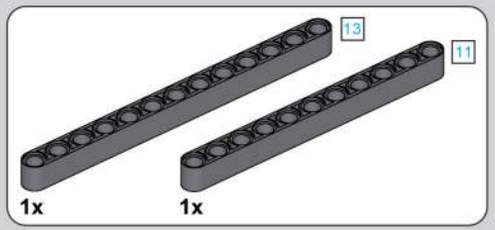

722

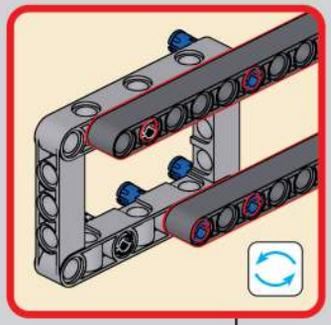

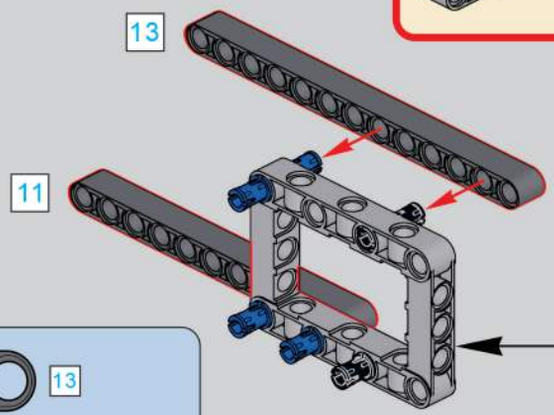

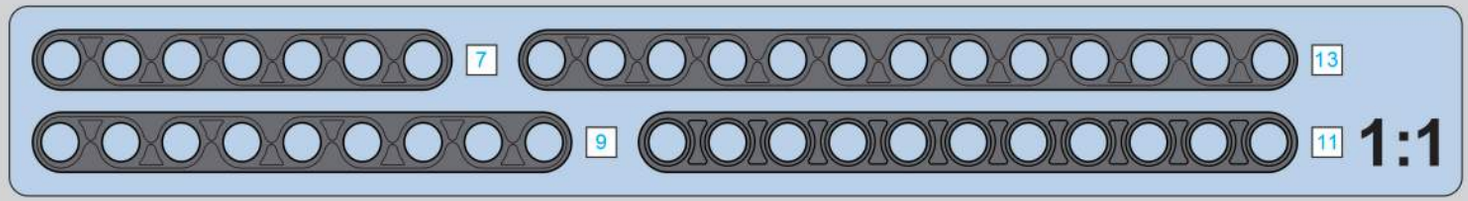

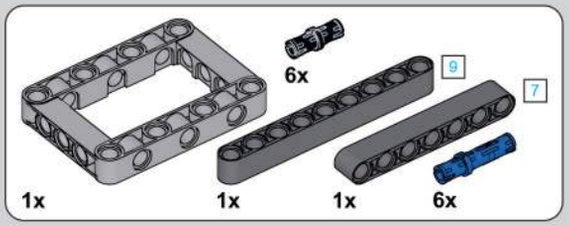

723

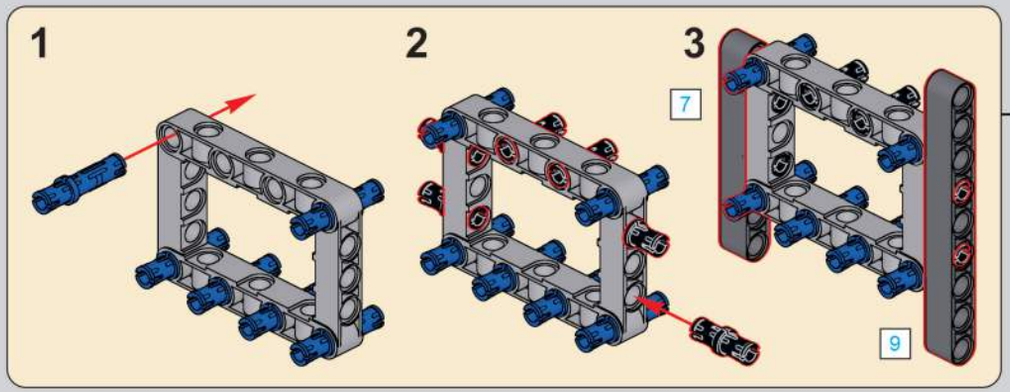

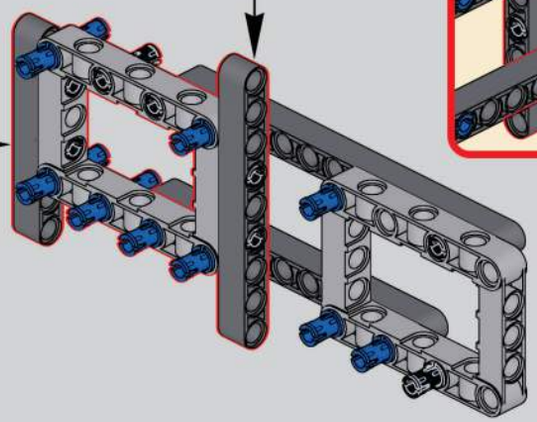

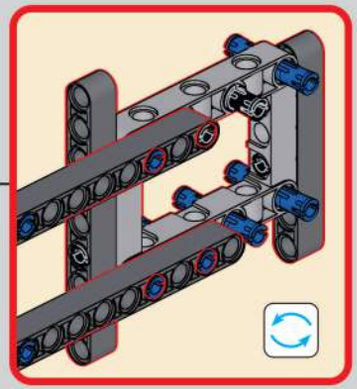

724

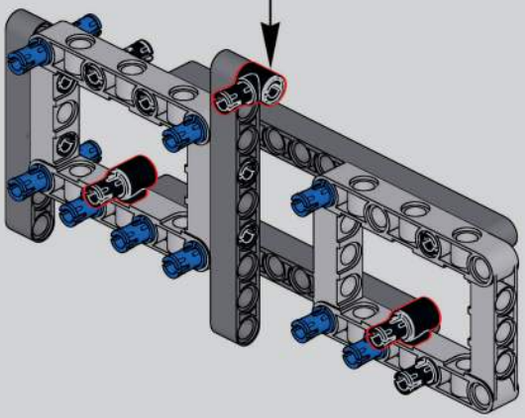

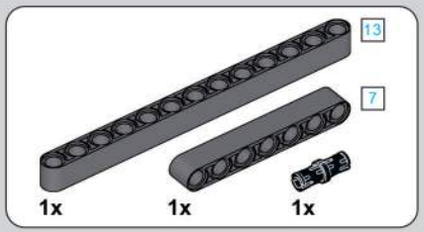

725

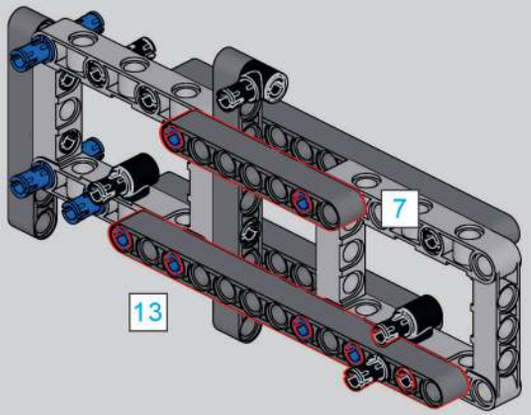

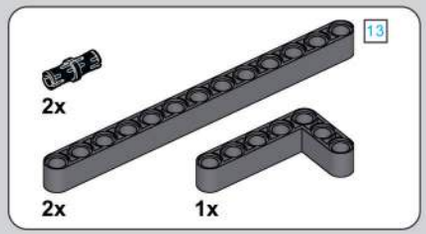

726

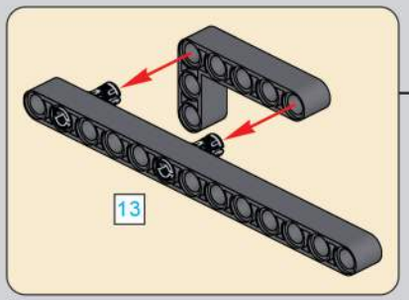

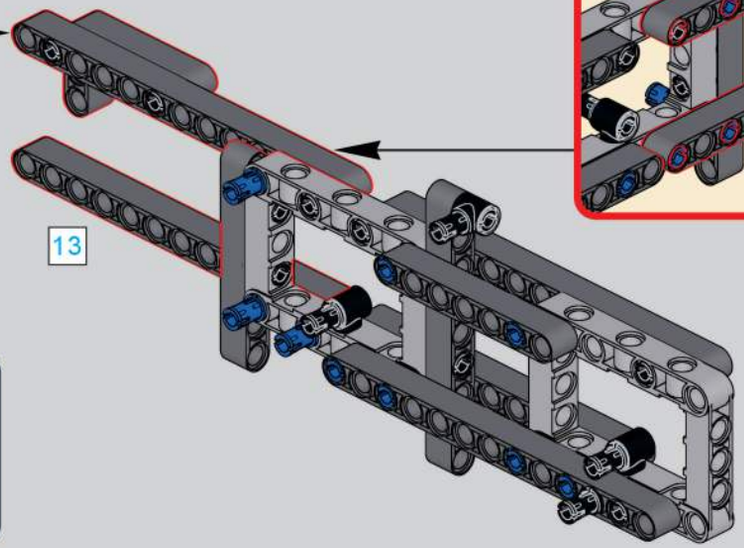

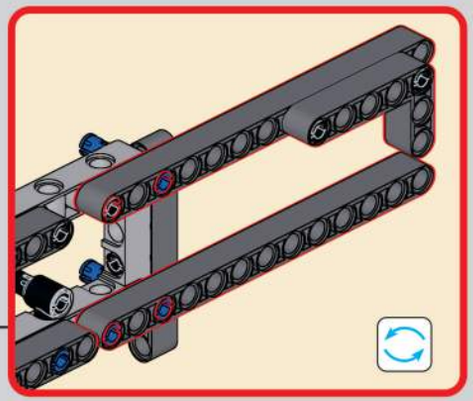

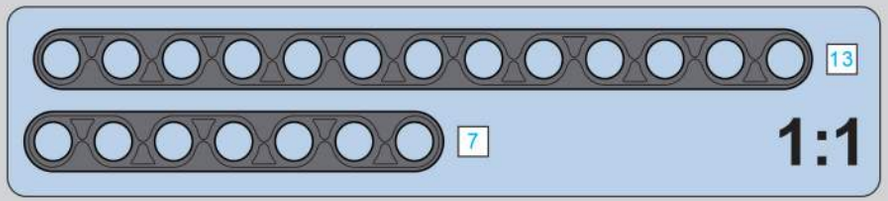

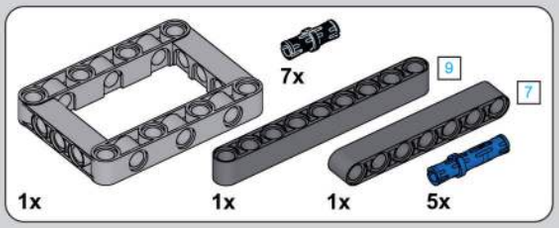

727

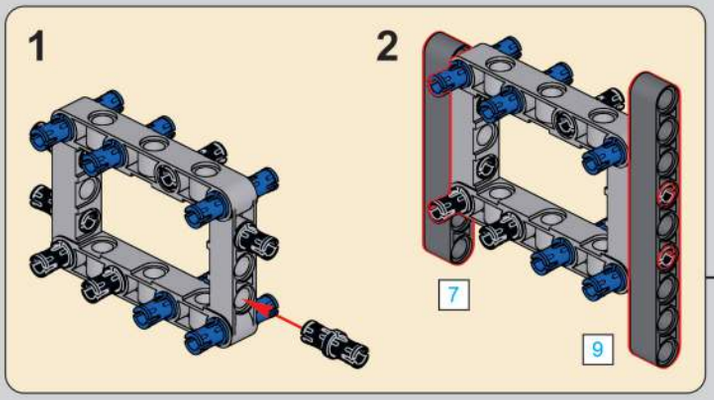

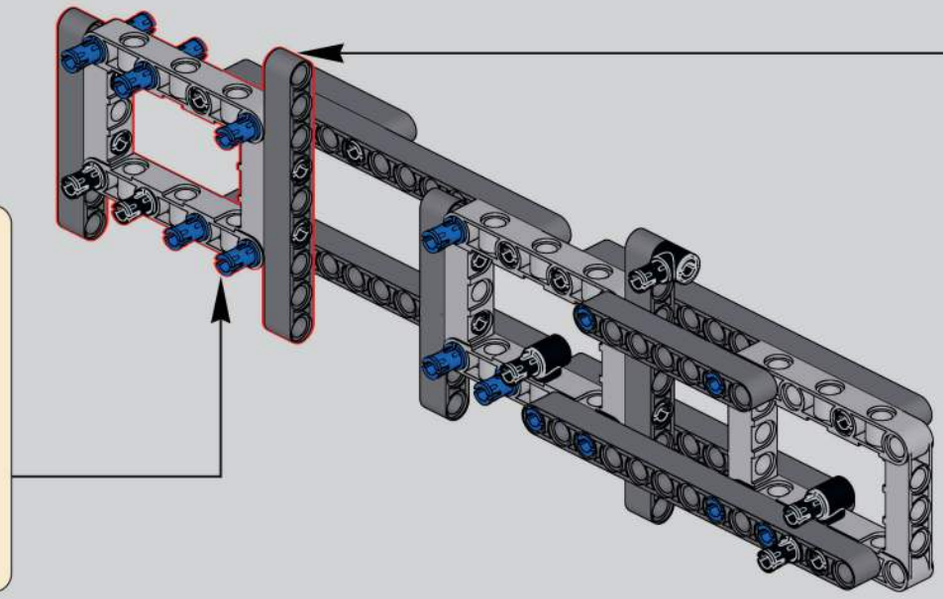

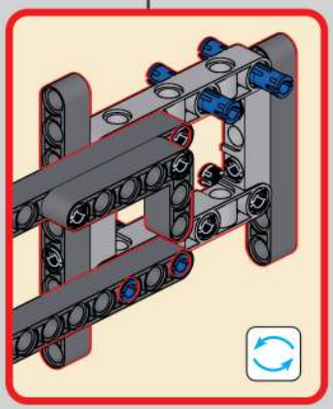

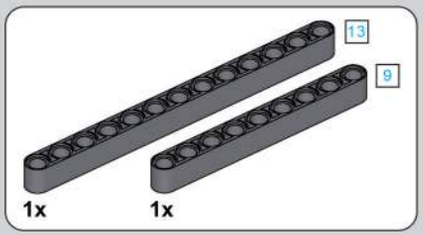

728

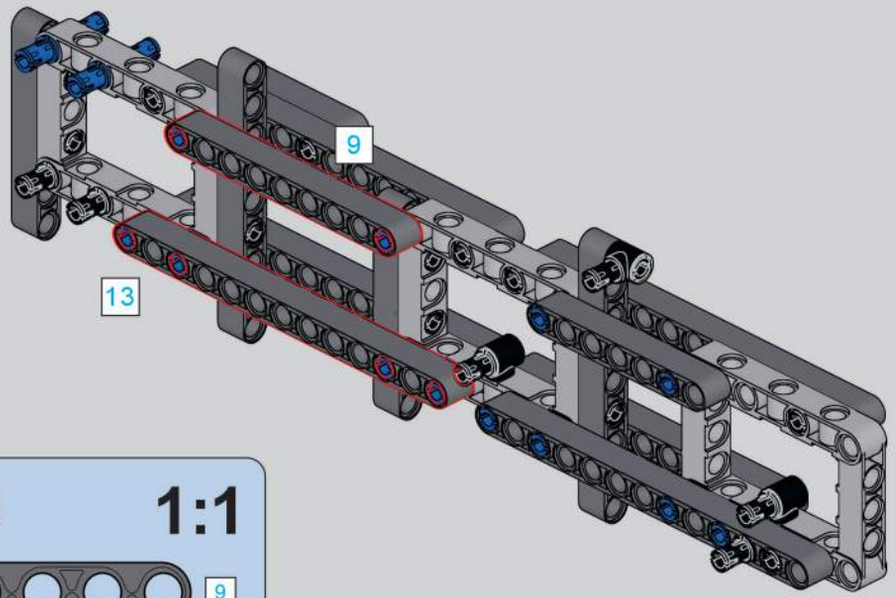

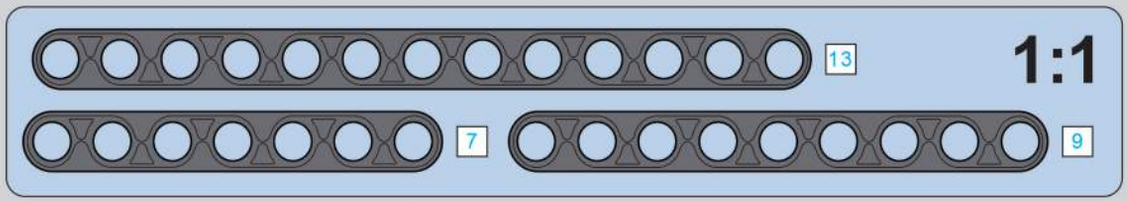

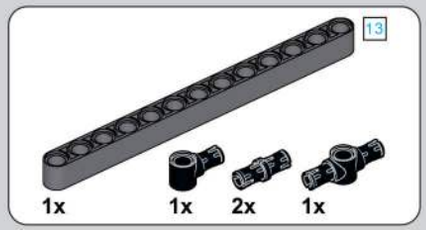

729

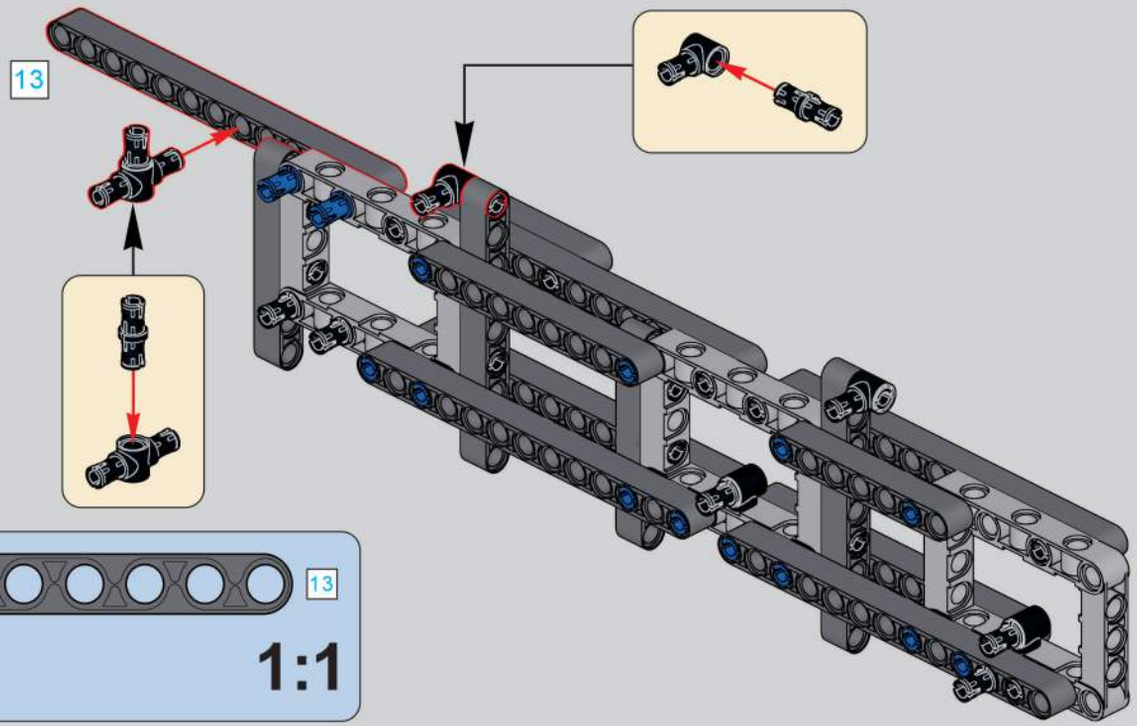

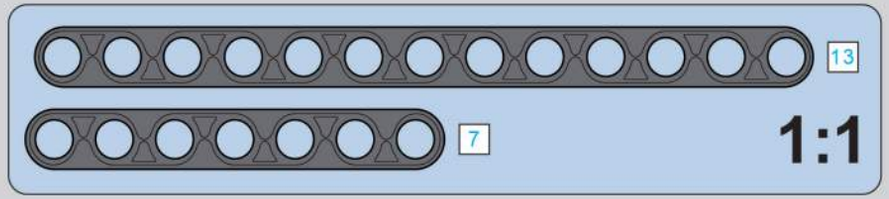

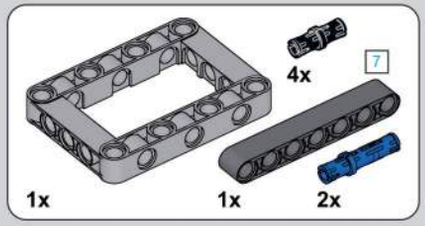

730

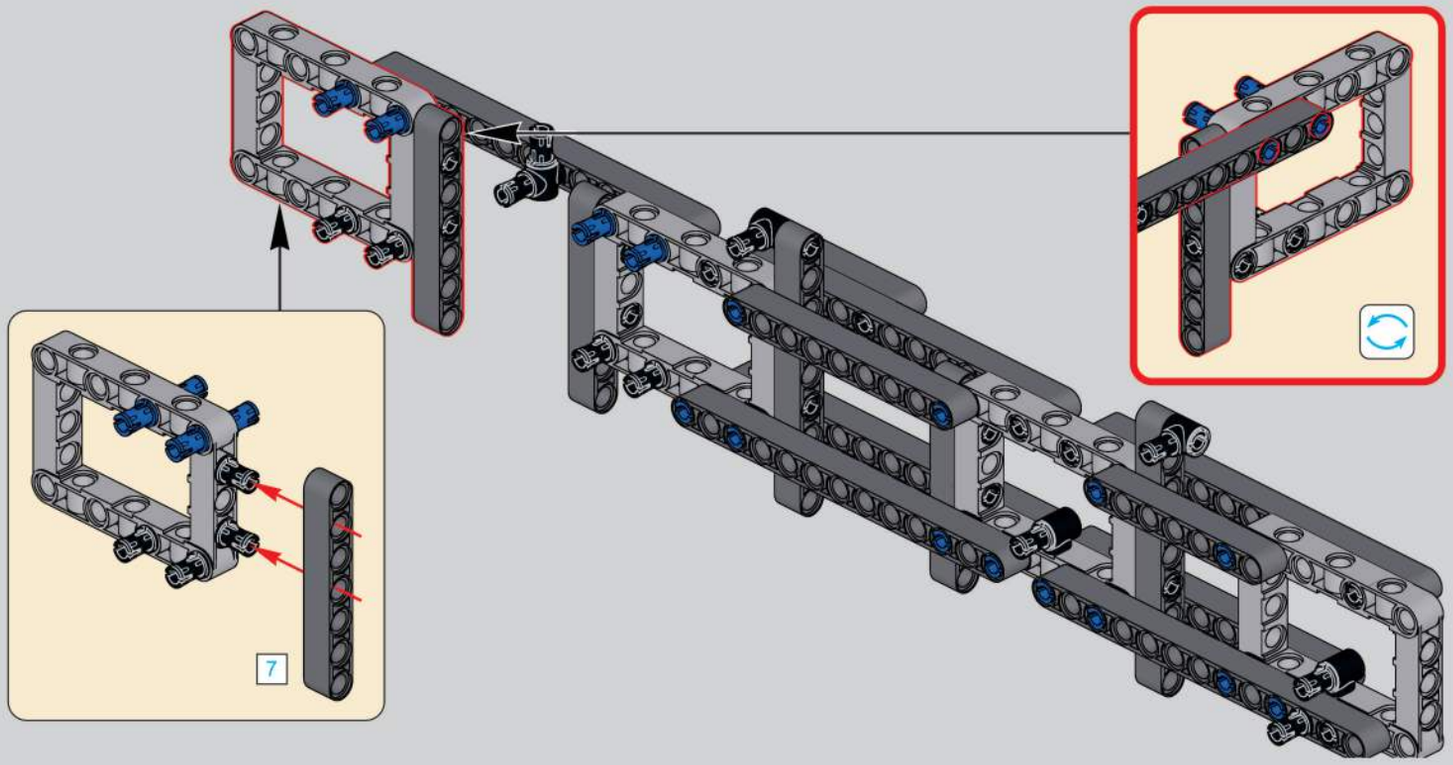

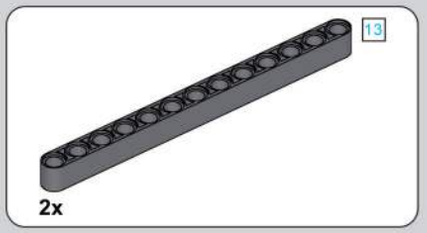

731

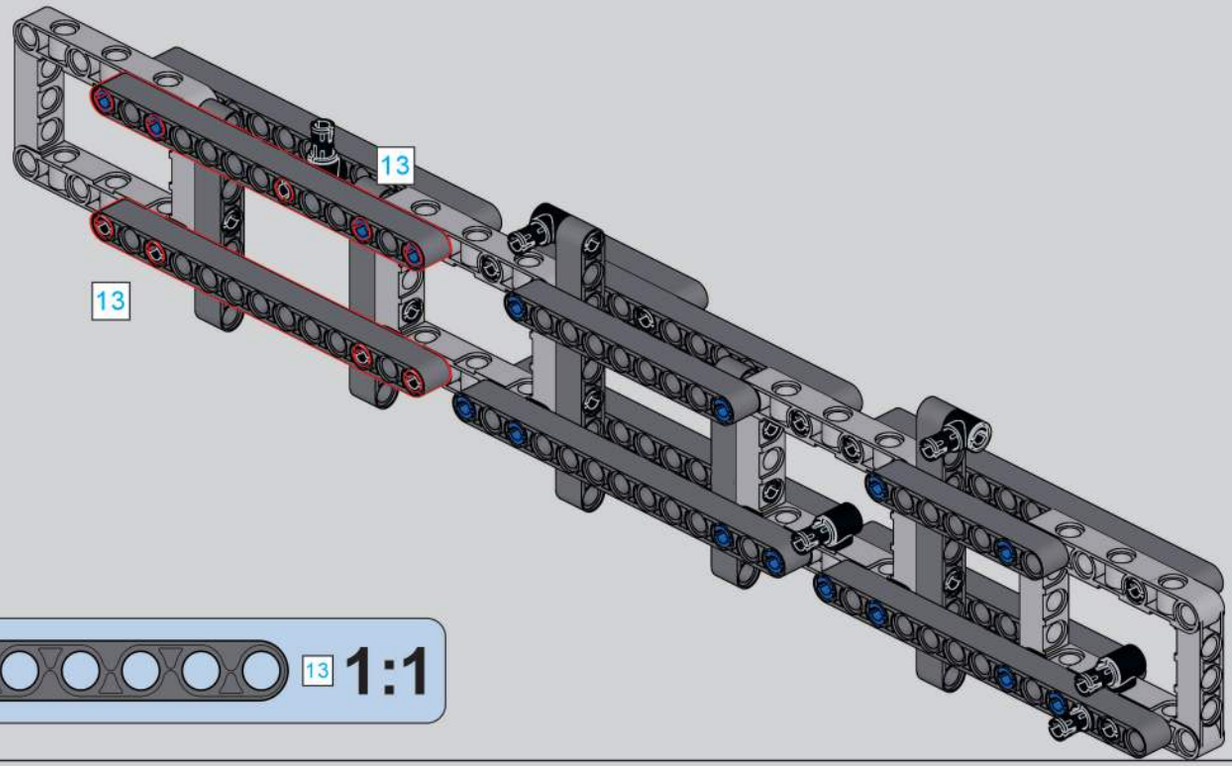

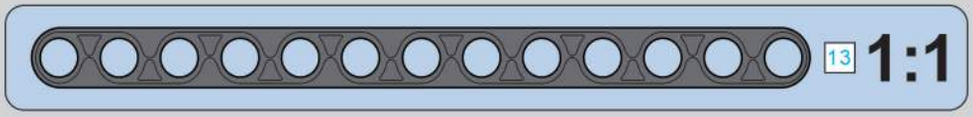

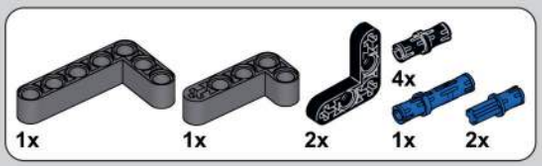

732

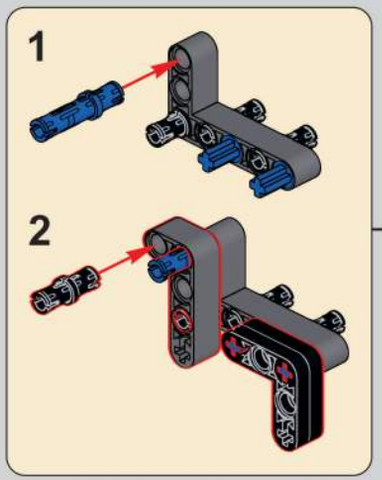

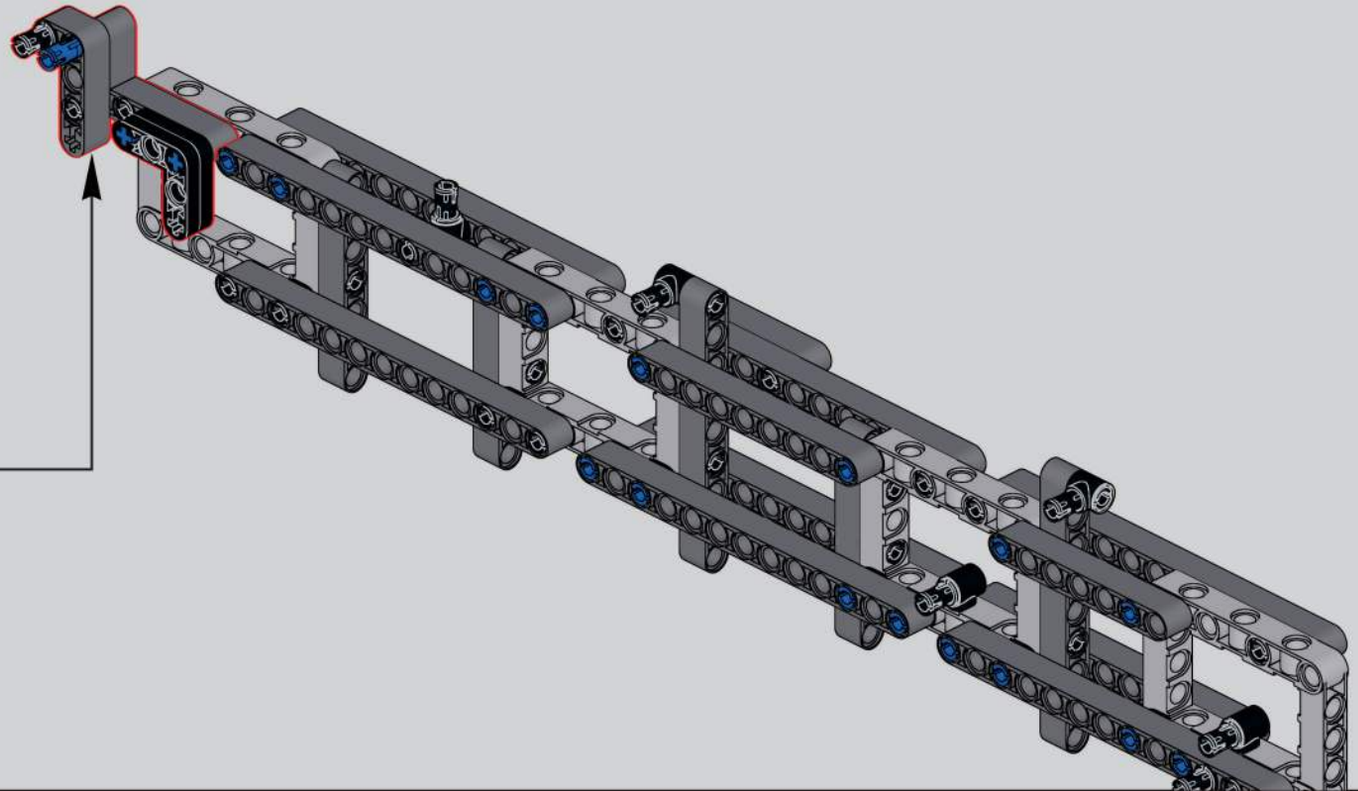

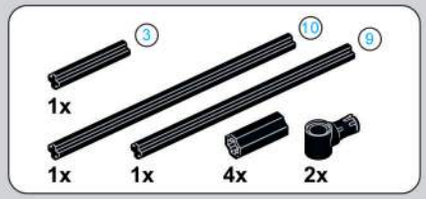

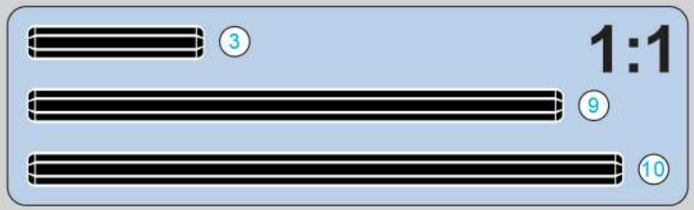

733

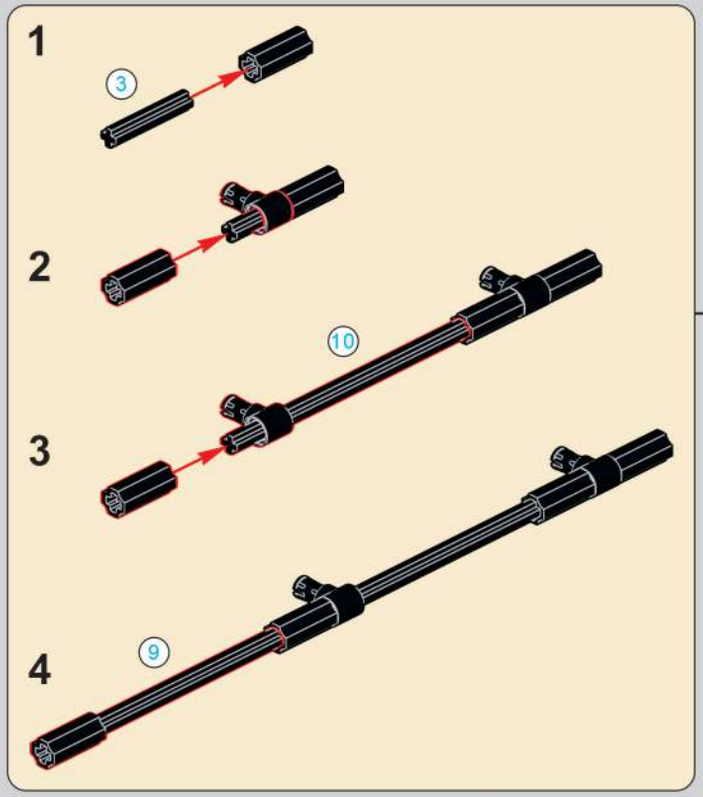

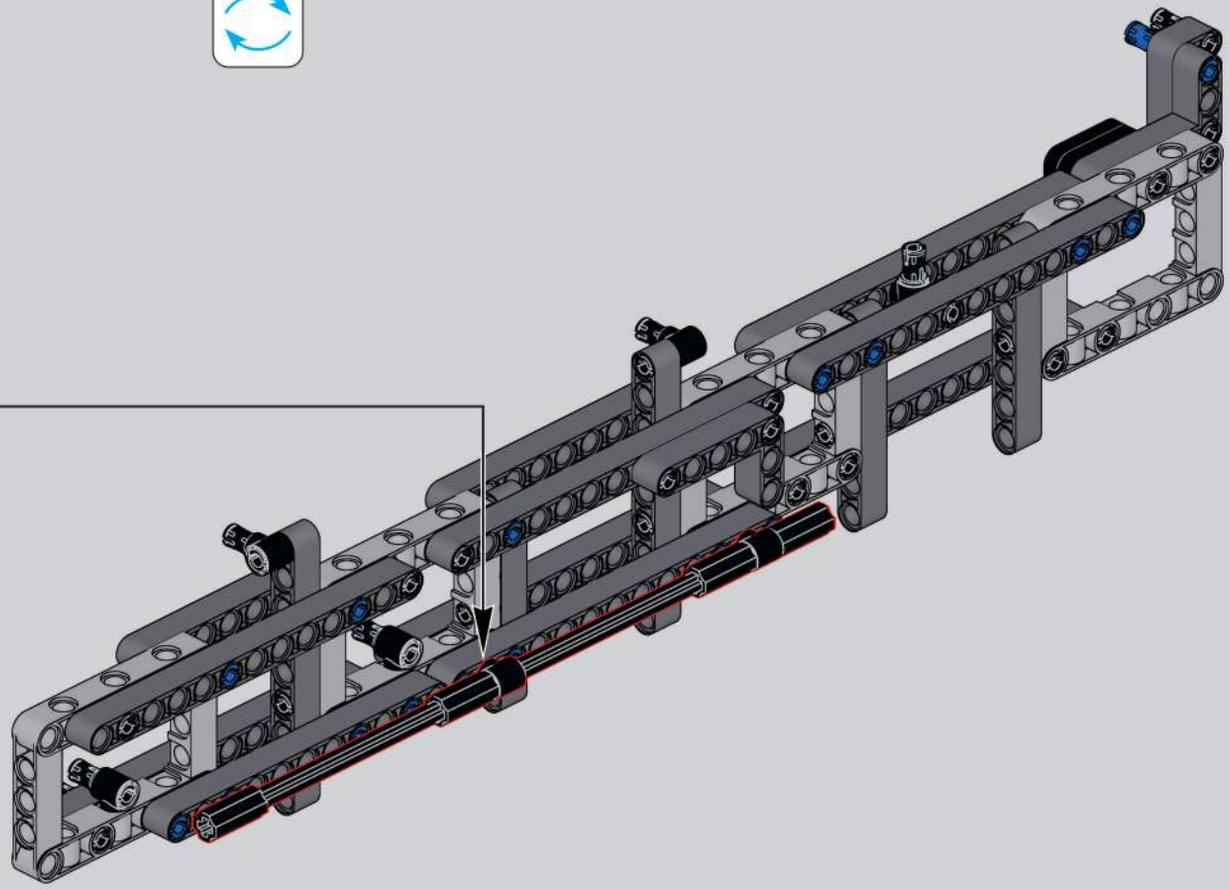

734

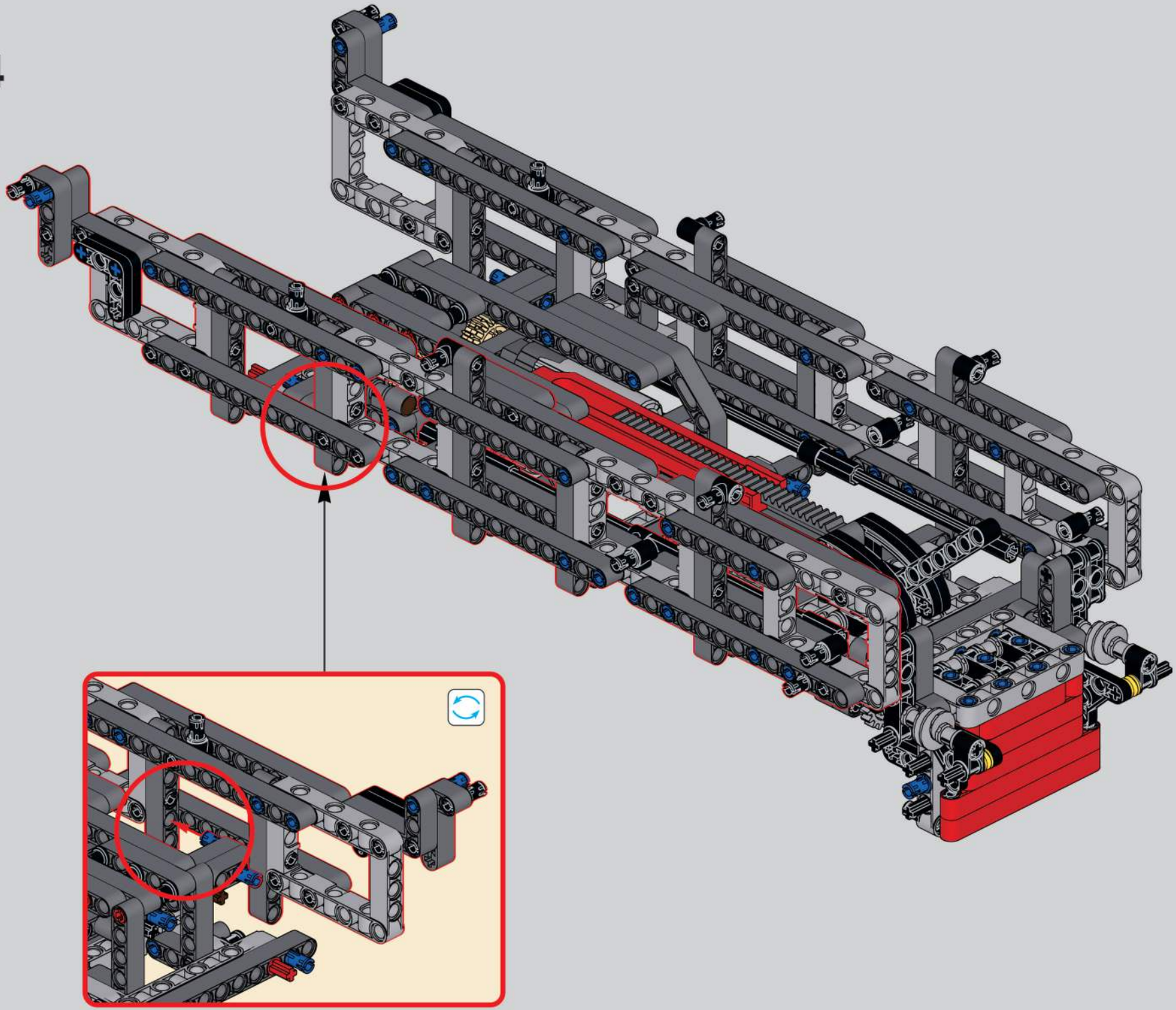

735

736

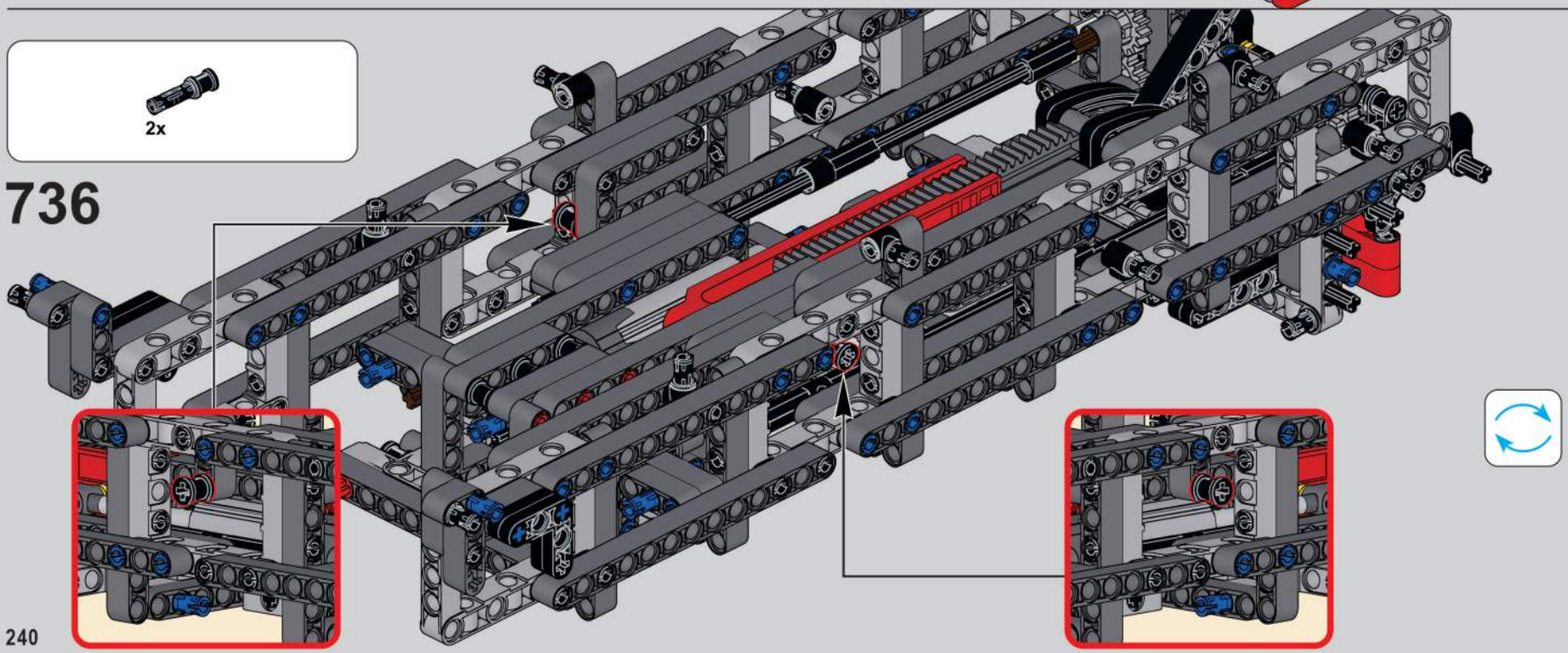

737

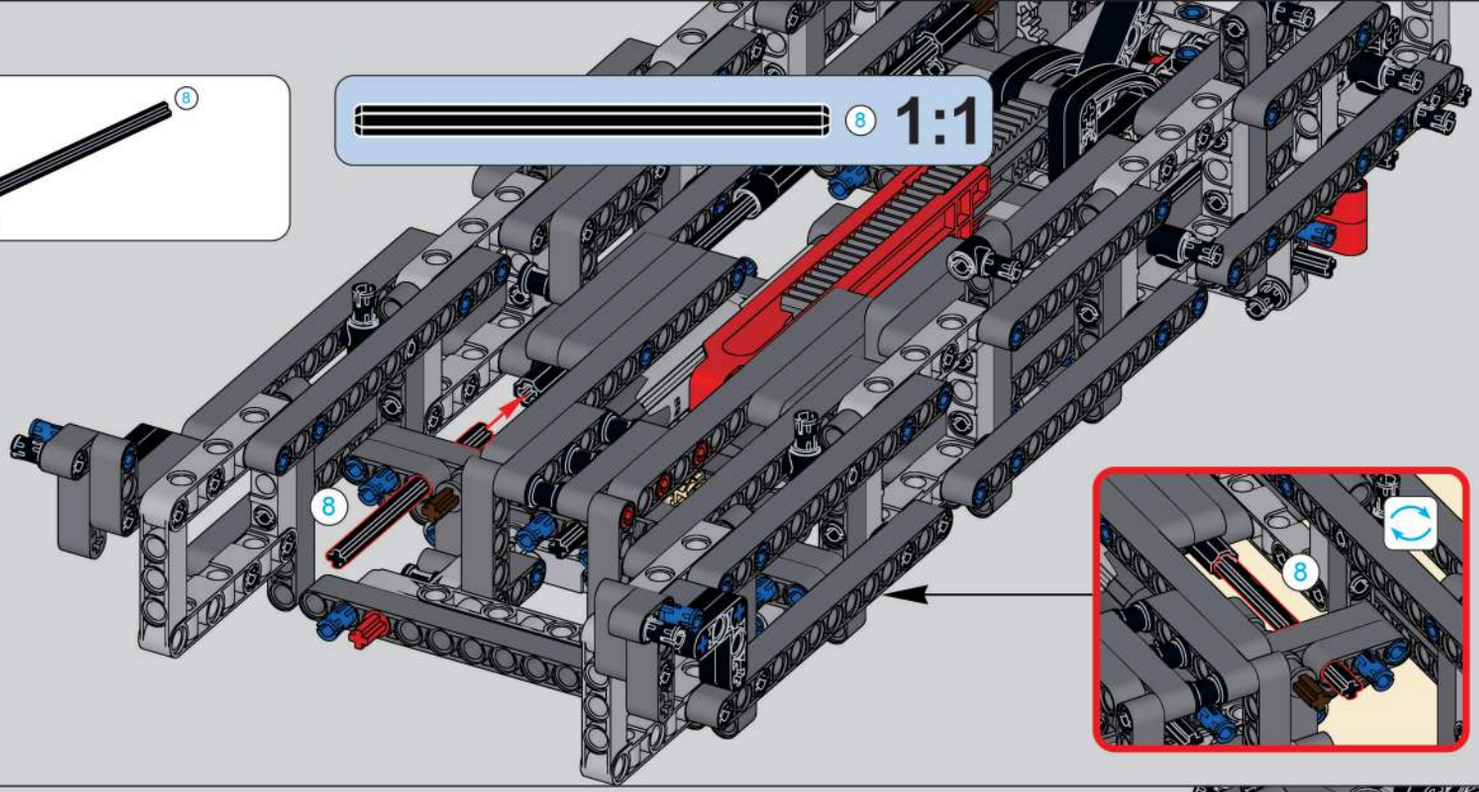

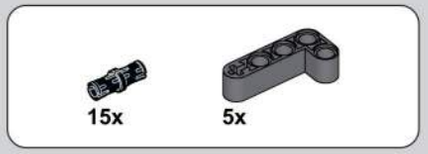

738

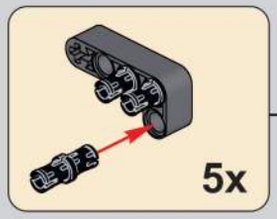

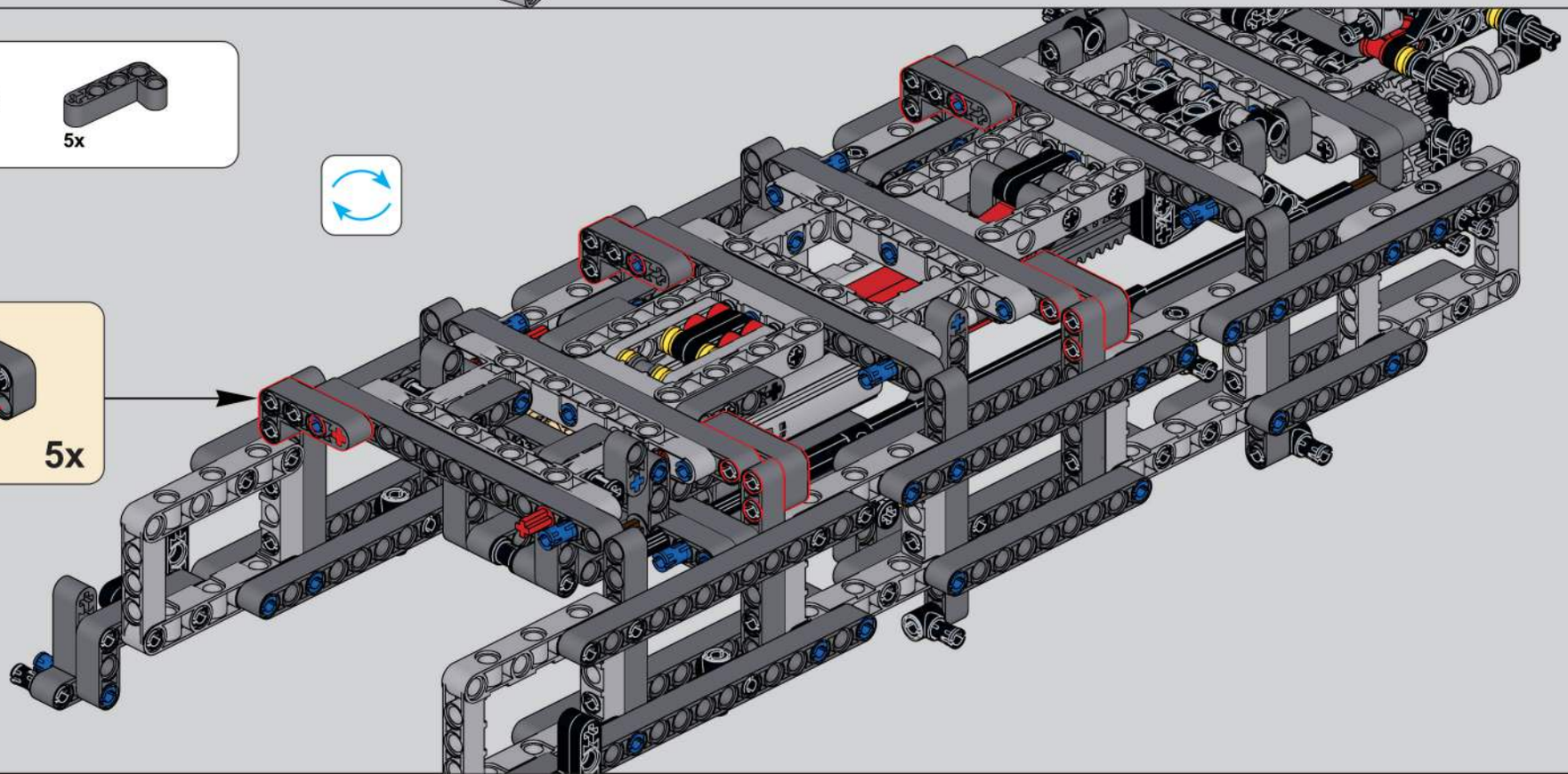

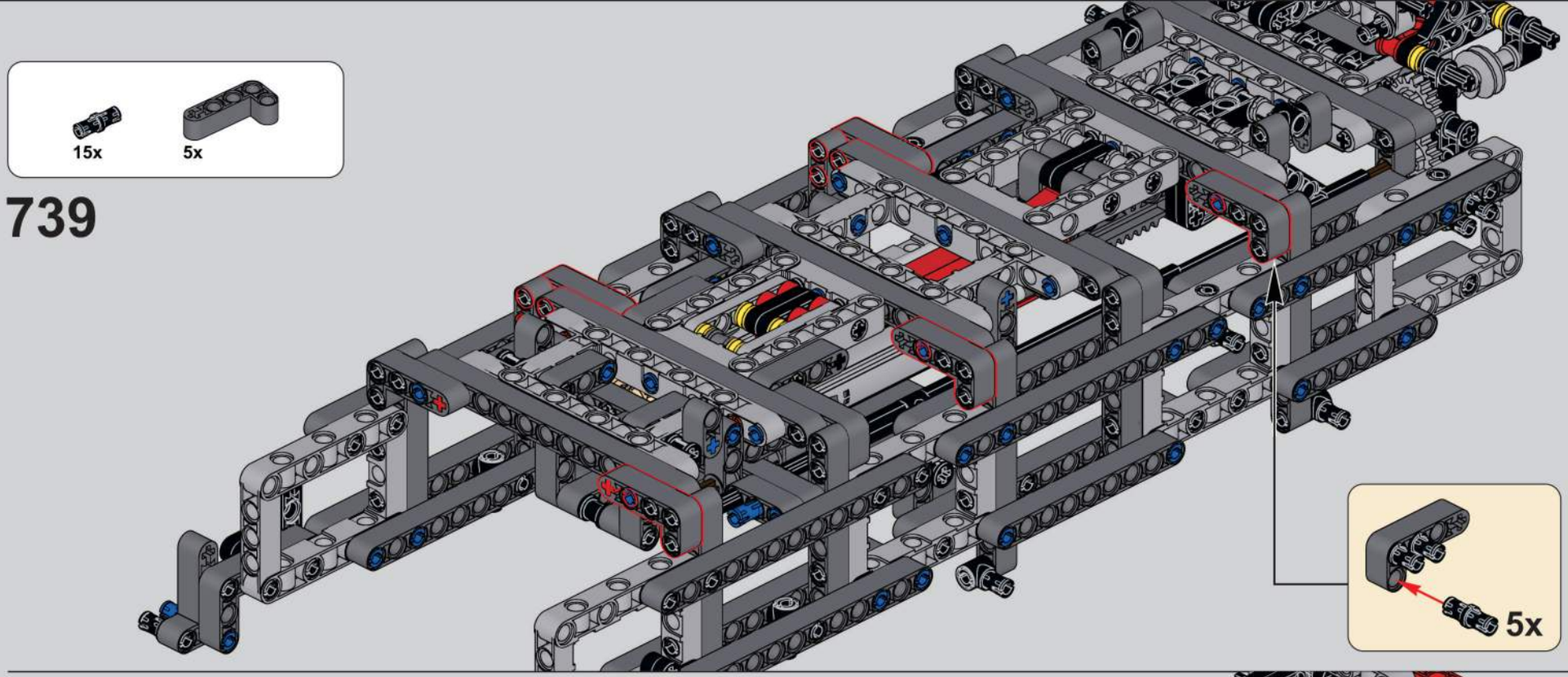
15x
5x
739
5x

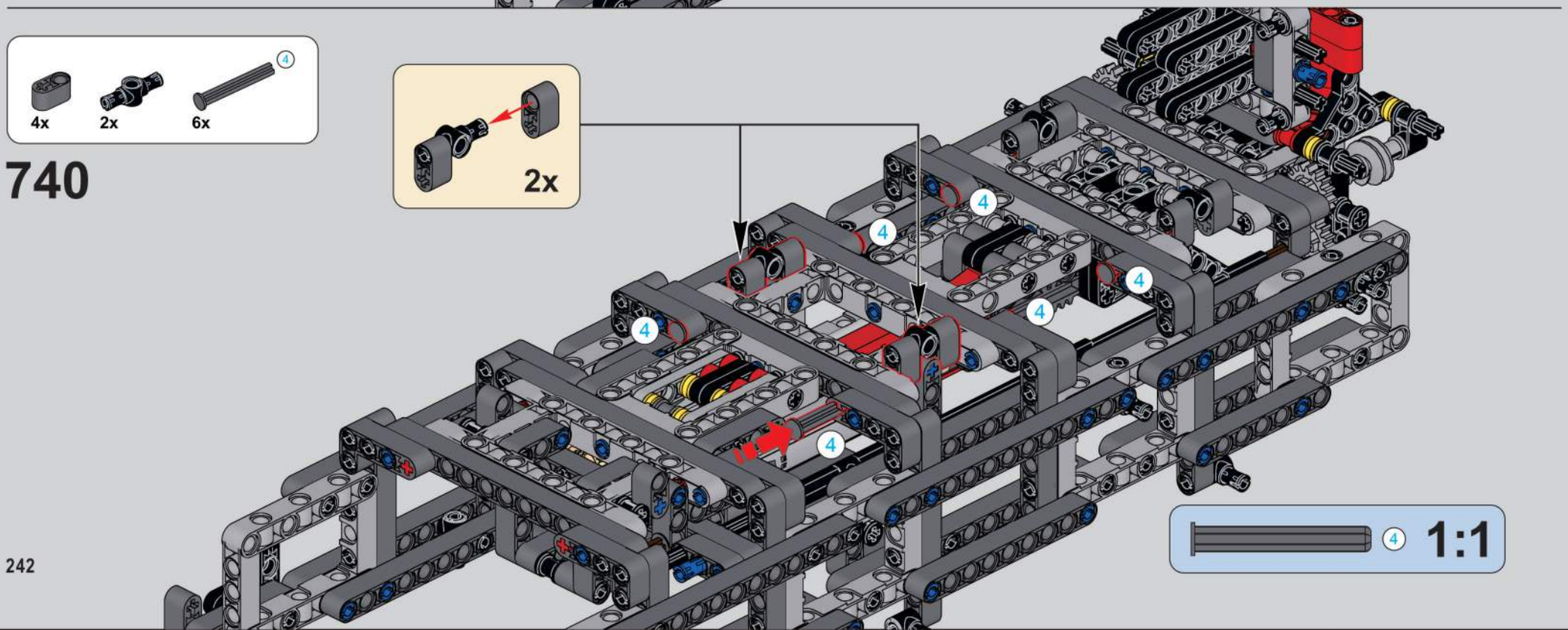
4x
2x
6x
4
740
2x
4
1:1

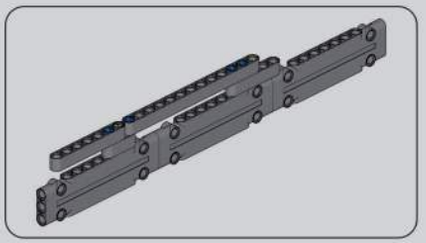

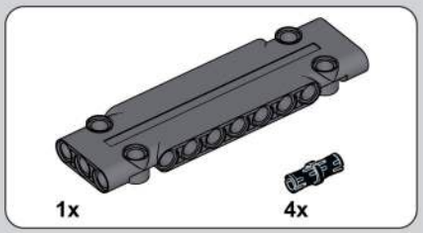

741

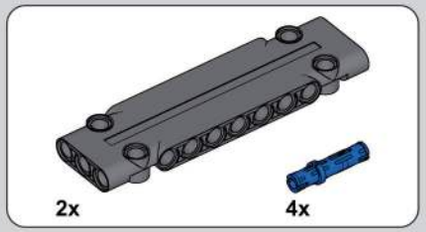

742

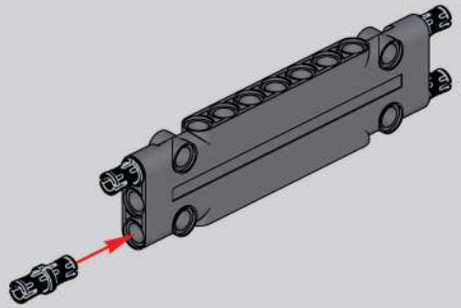

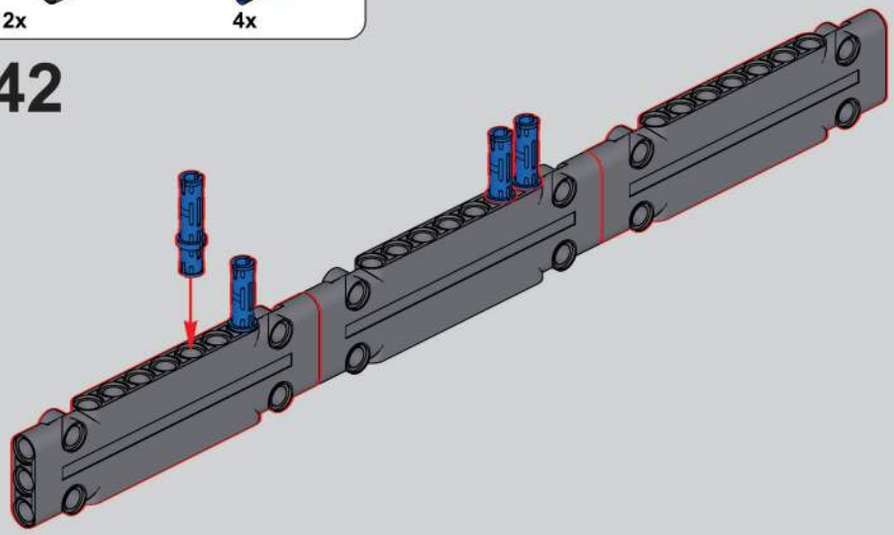

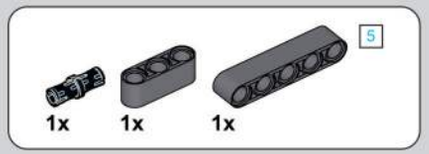

743

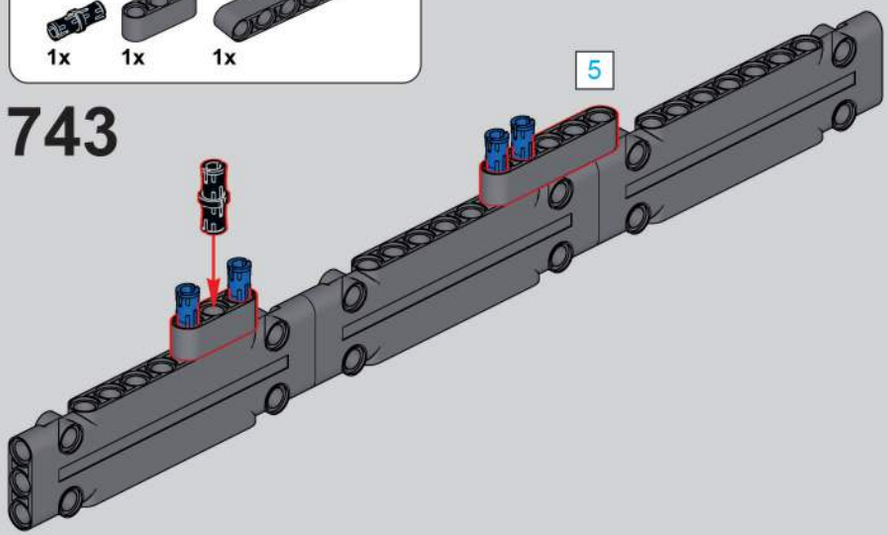

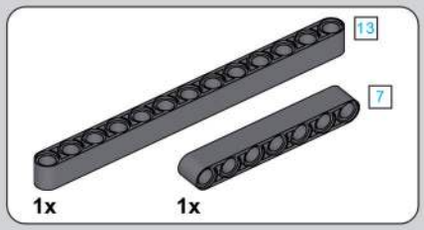

744

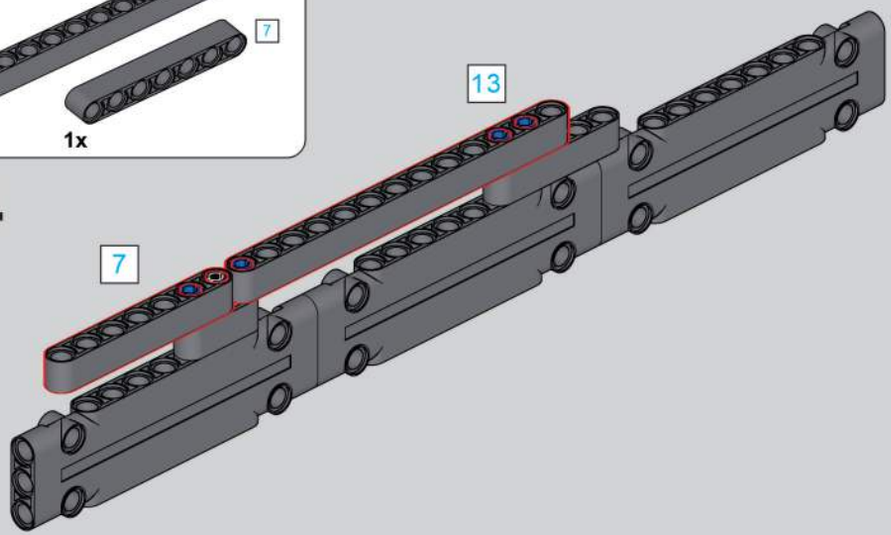

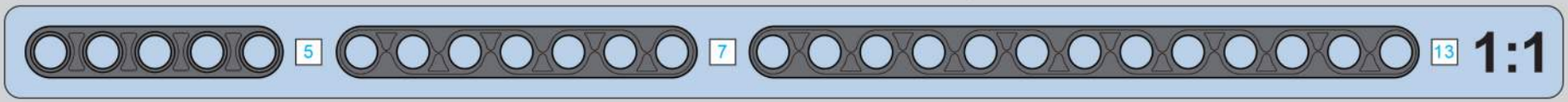

745

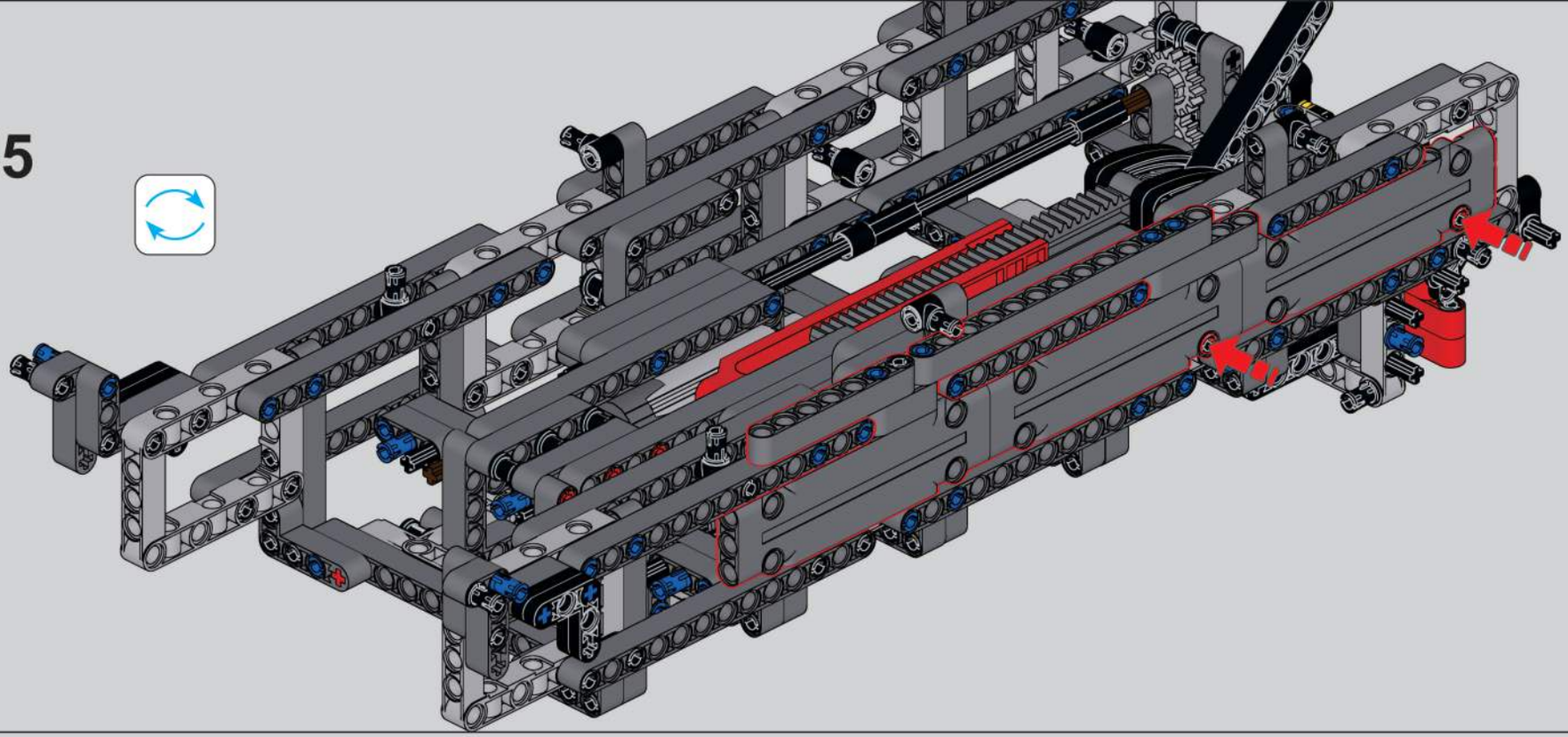

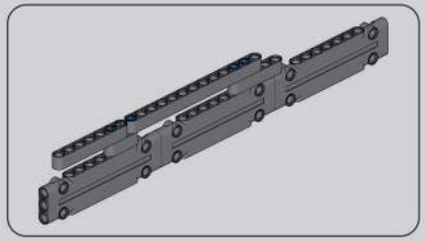

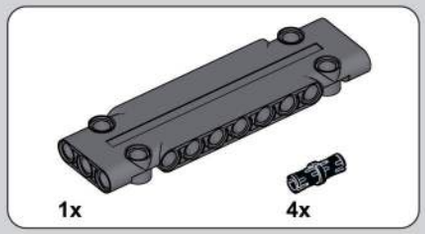

746

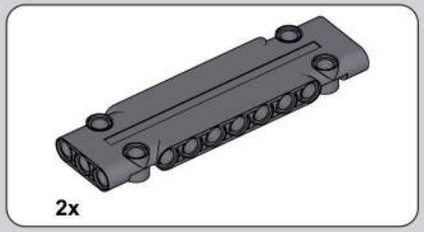

747

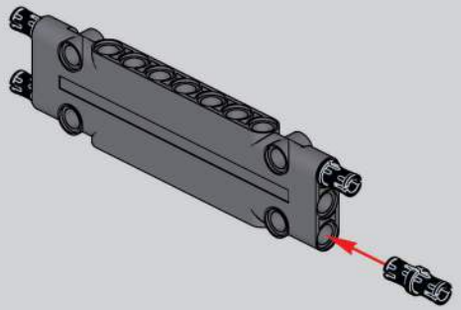

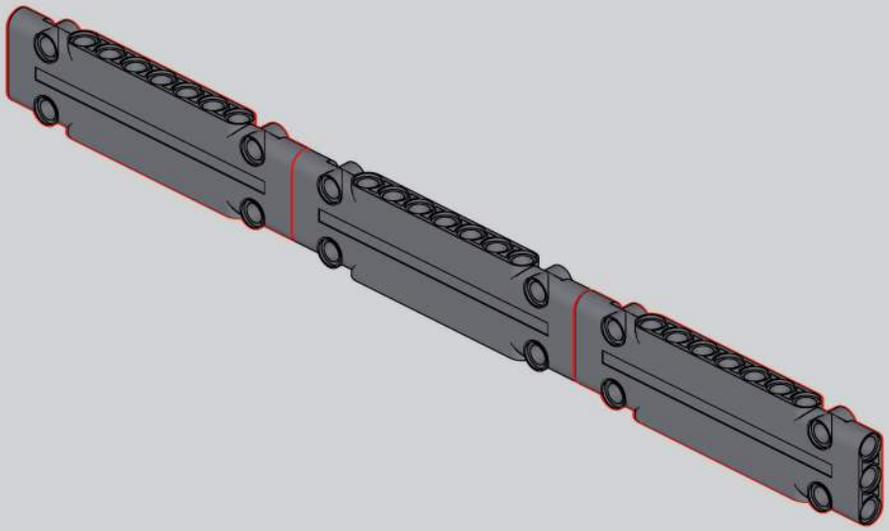

748

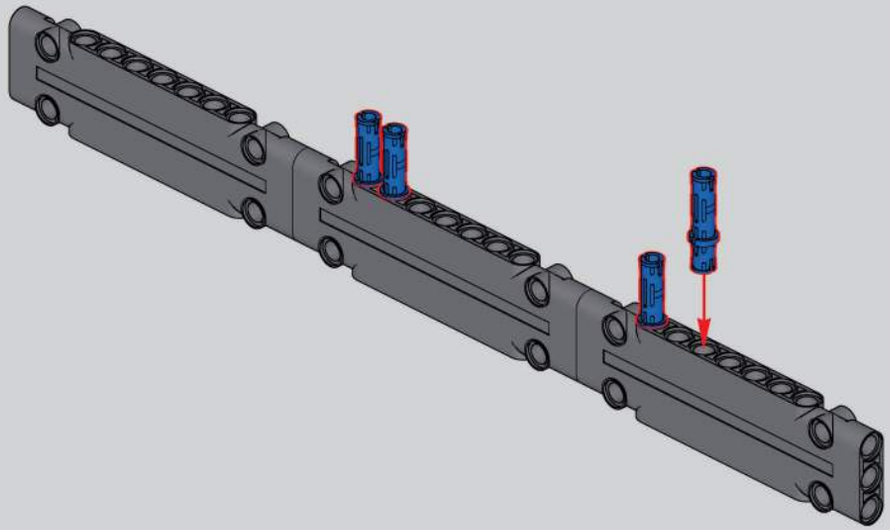

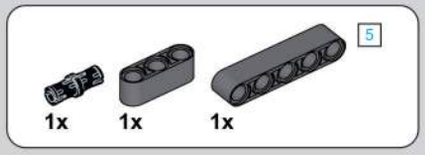

749

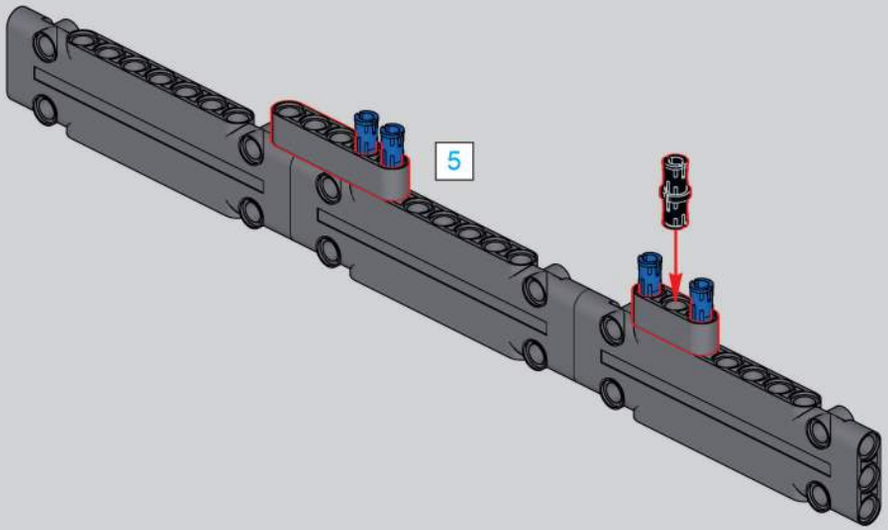

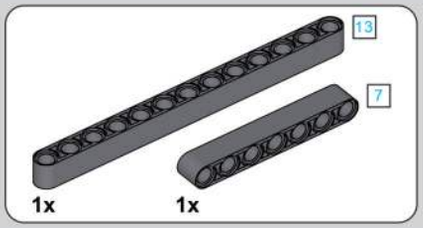

750

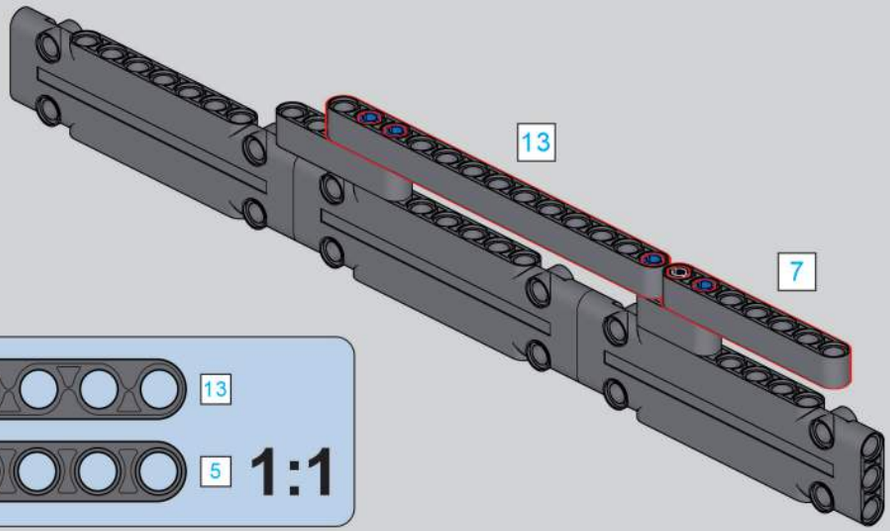

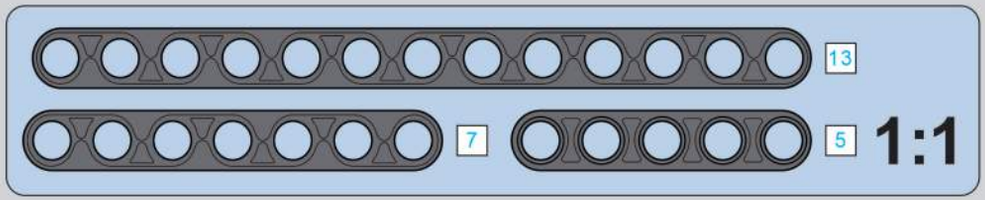

751

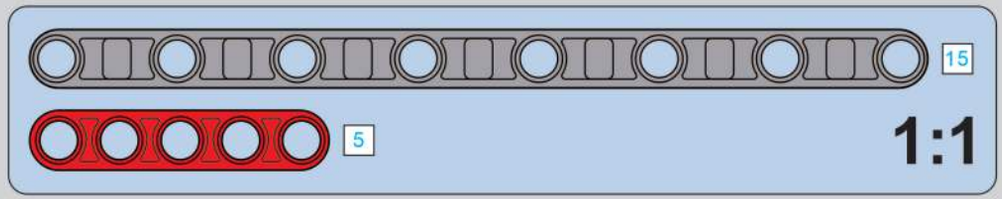

752

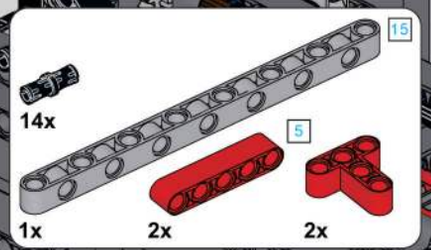

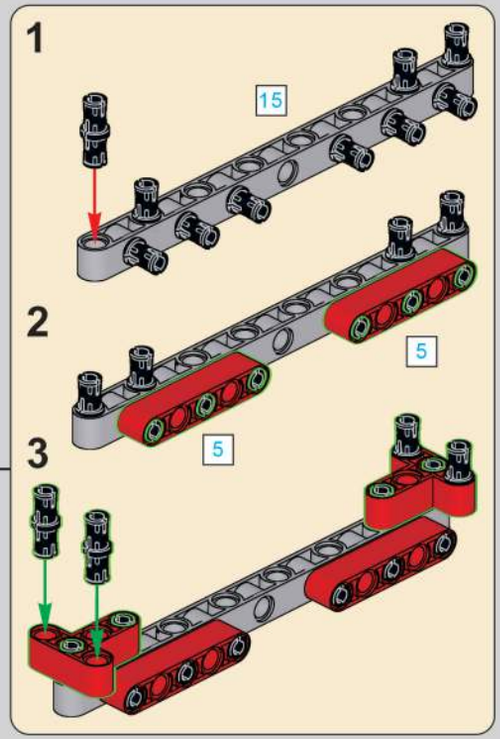

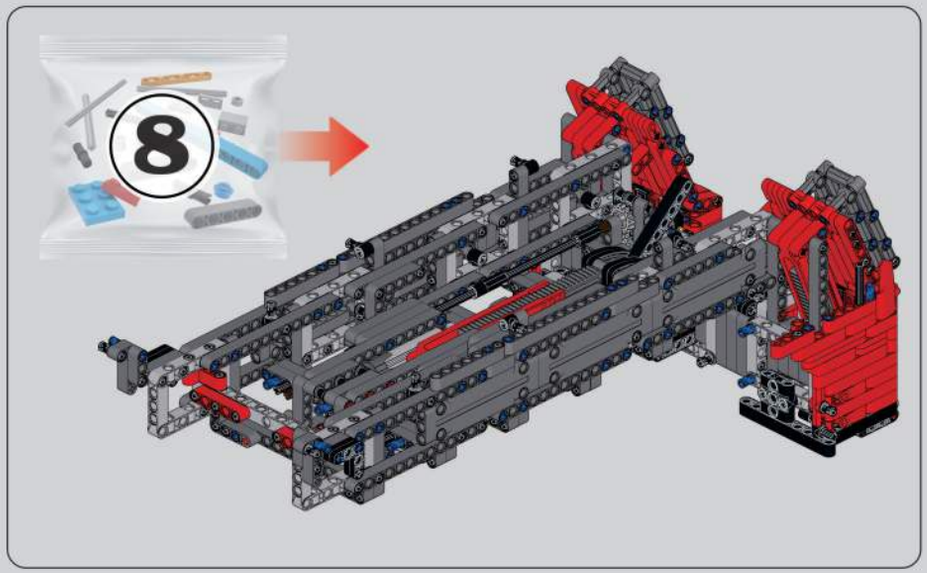

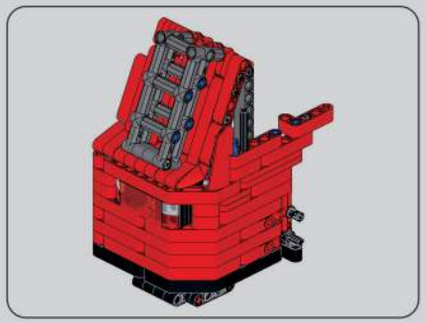

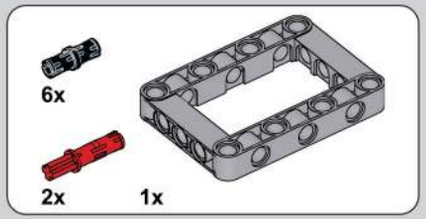

753

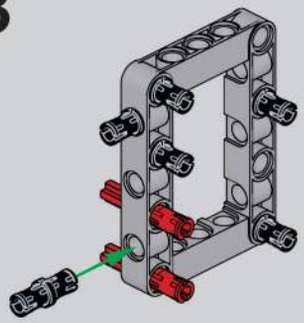

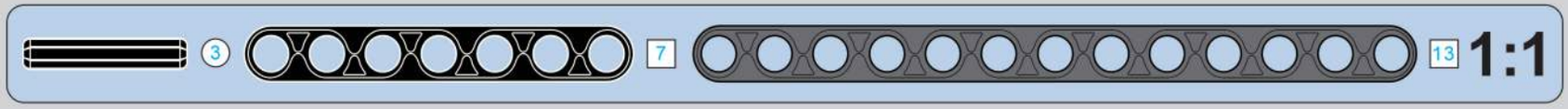

754

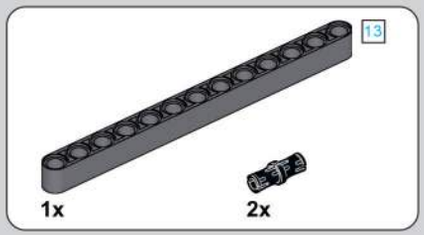

755

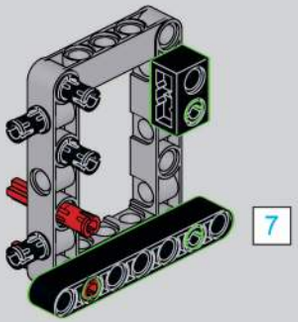

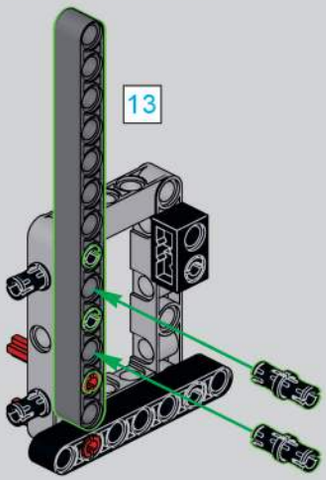

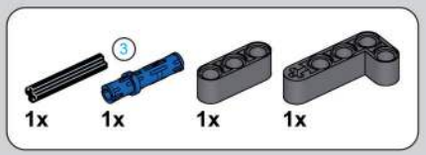

756

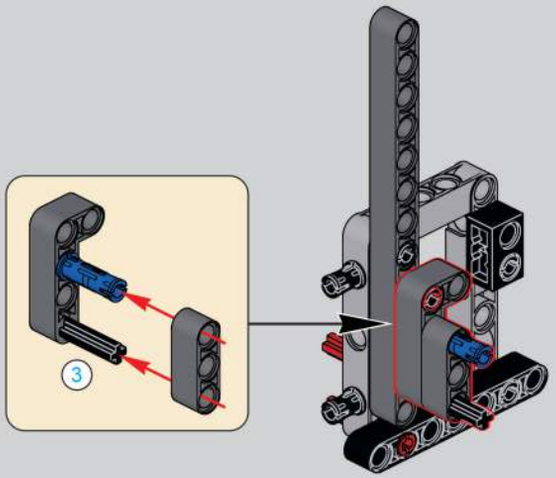

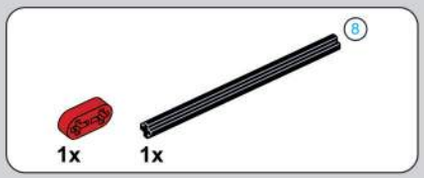

757

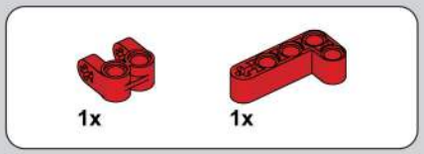

758

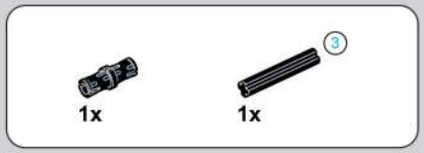

759

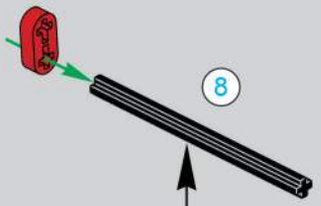

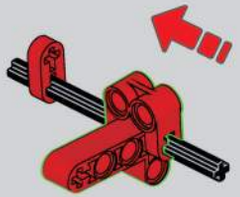

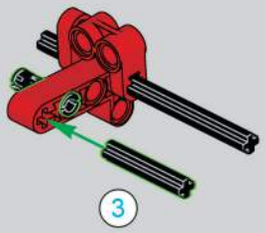

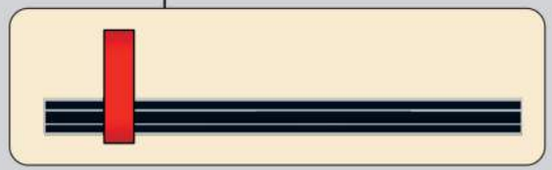

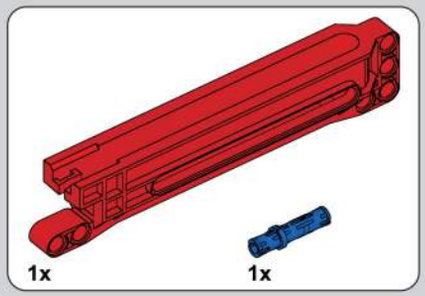

760

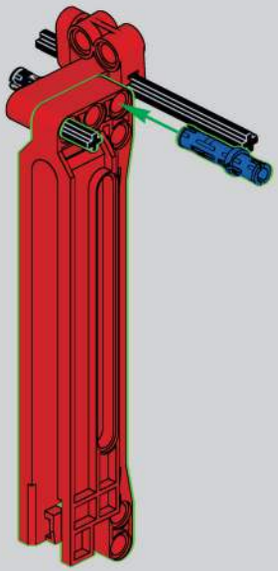

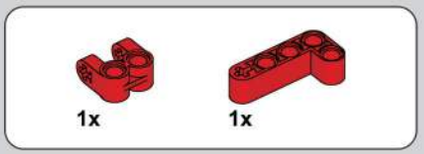

761

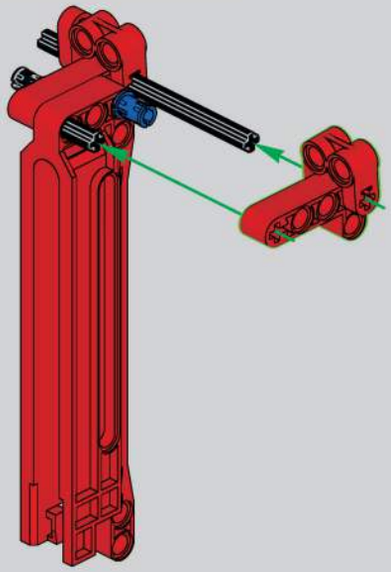

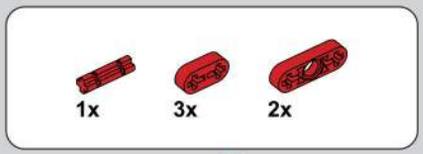

762

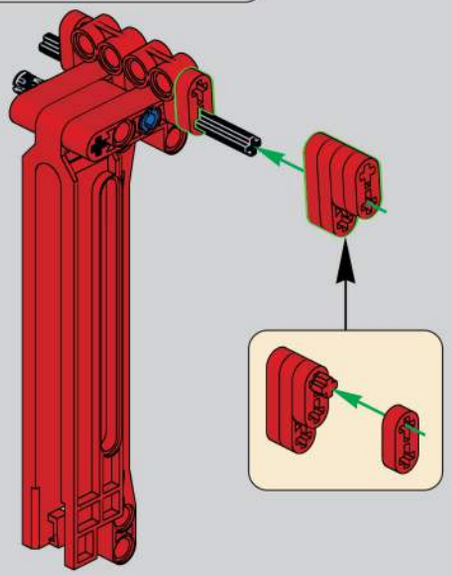

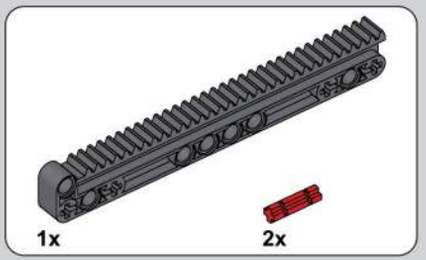

763

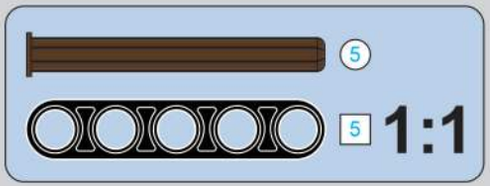

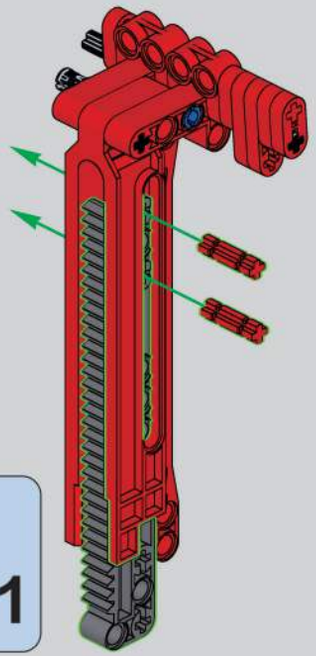

764

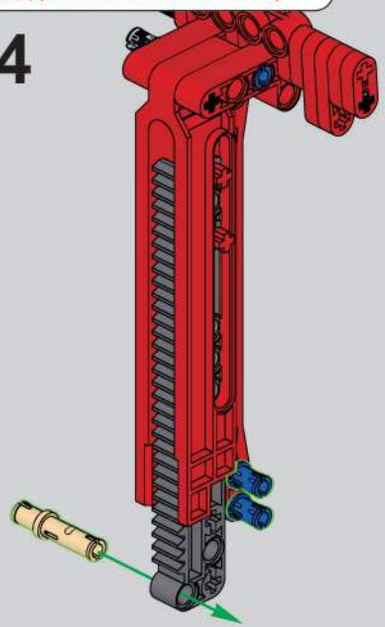

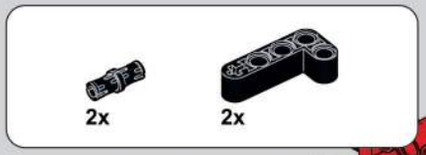

765

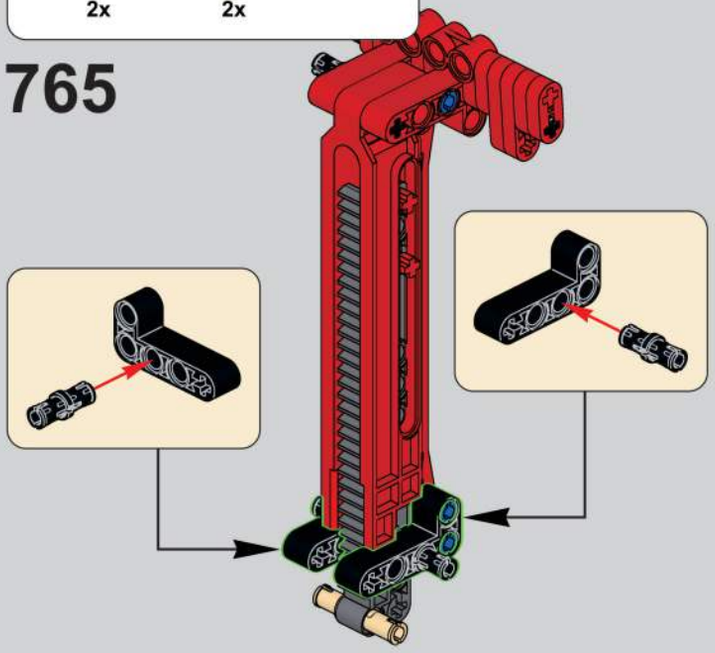

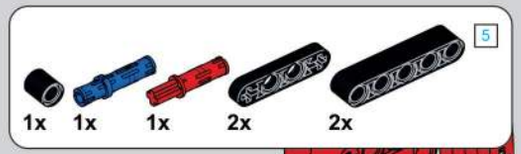

766

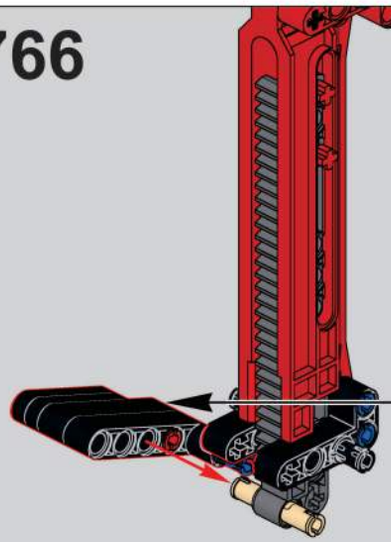

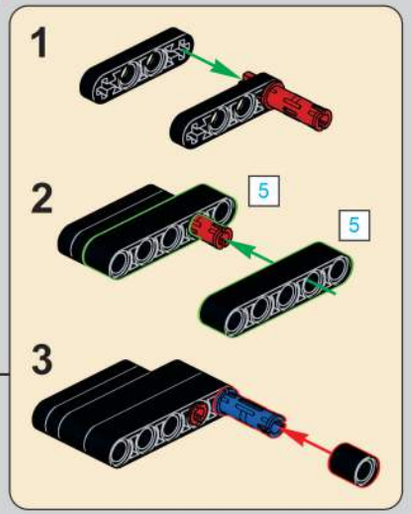

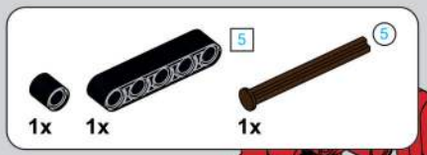

767

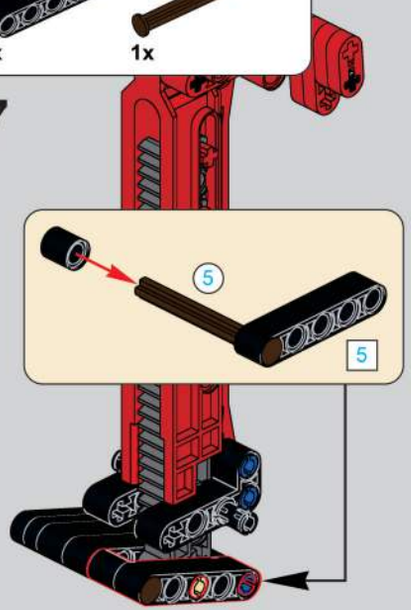

768

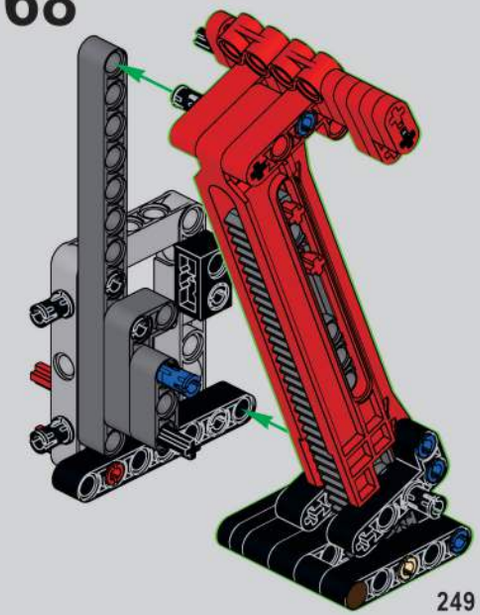

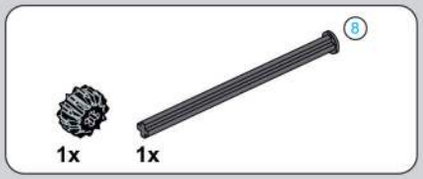

769

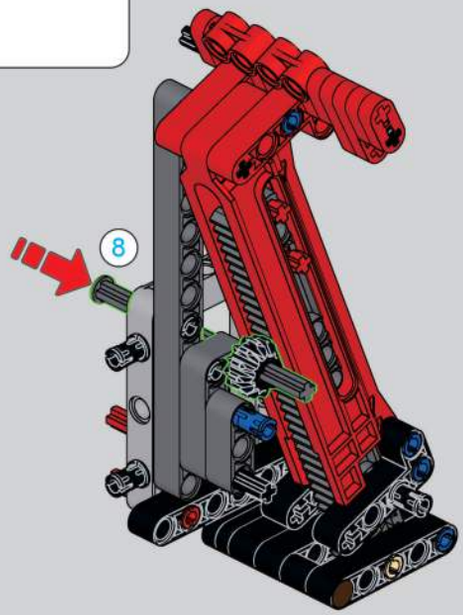

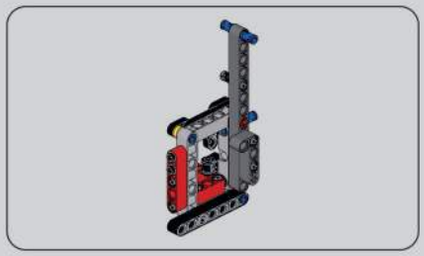

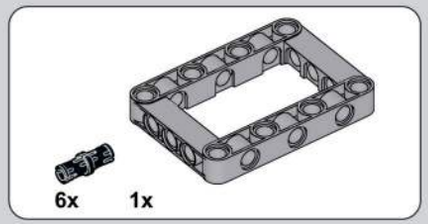

770

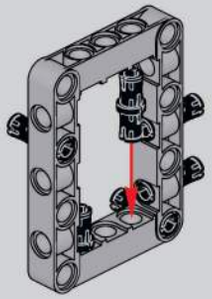

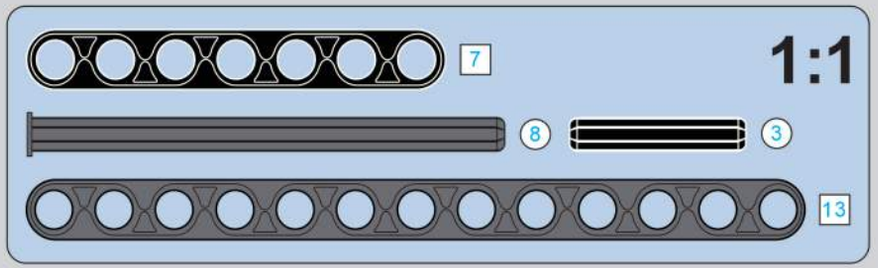

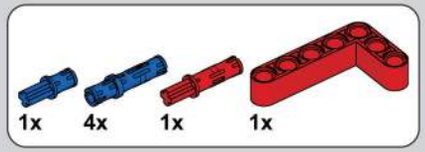

771

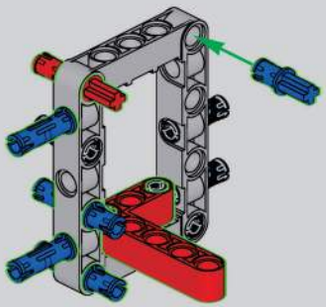

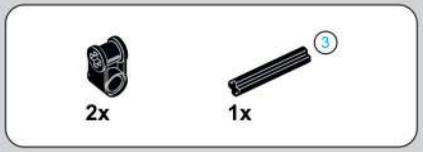

772

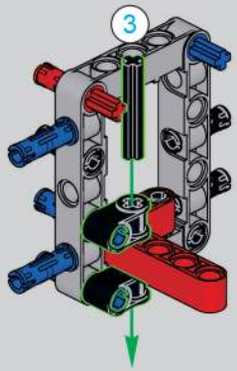

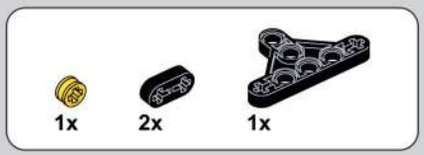

773

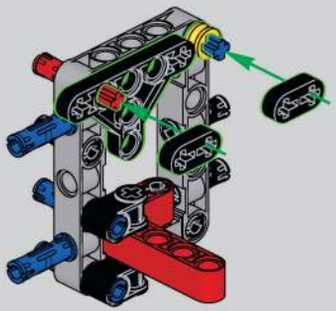

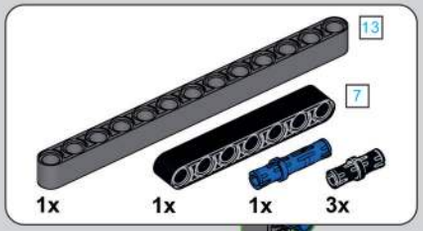

774

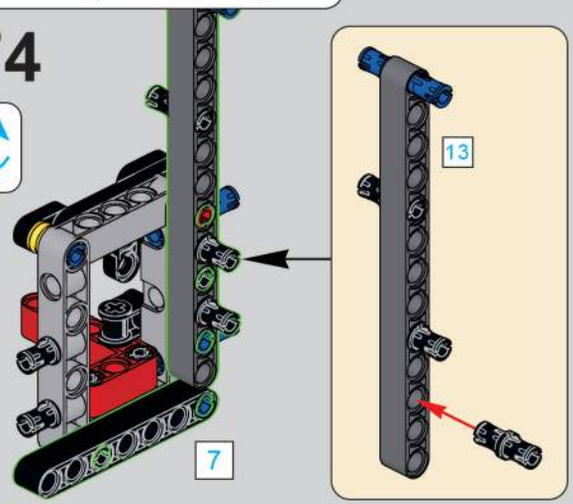

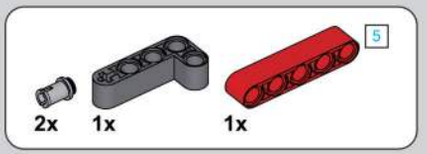

775

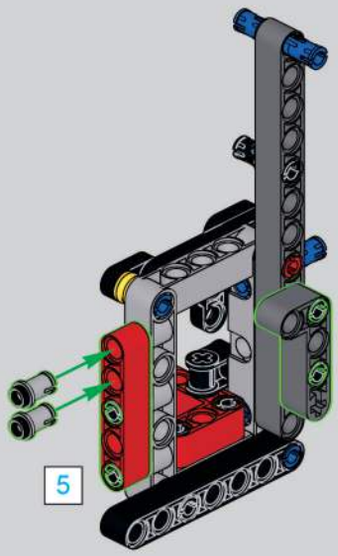

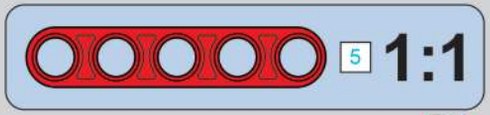

776

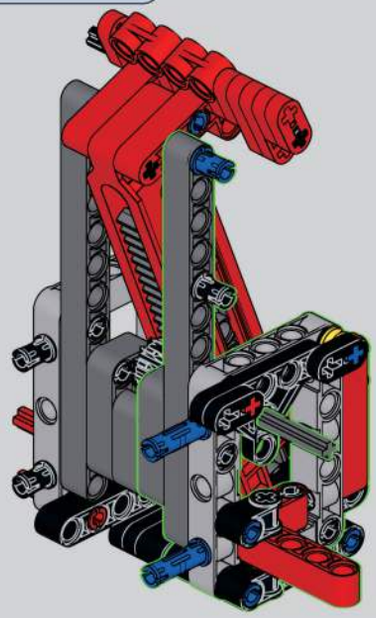

777

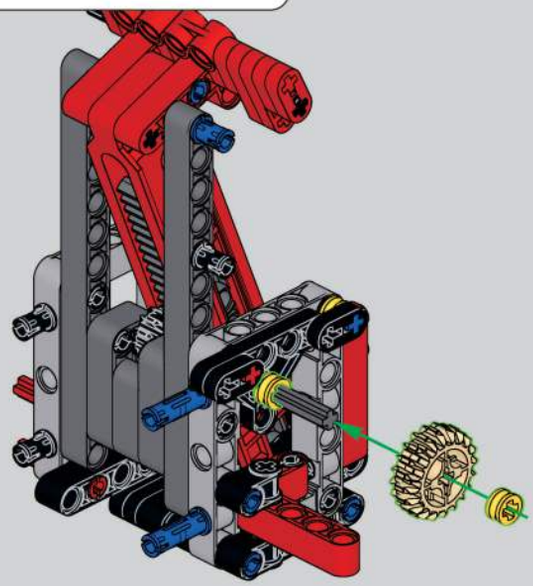

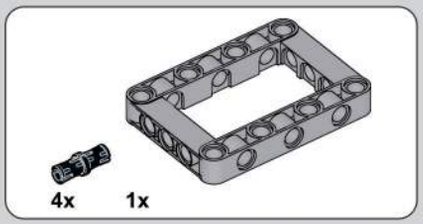

778

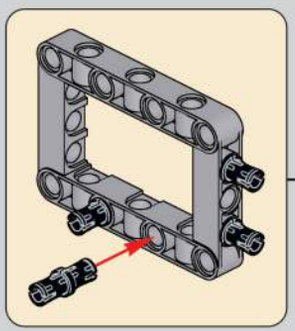

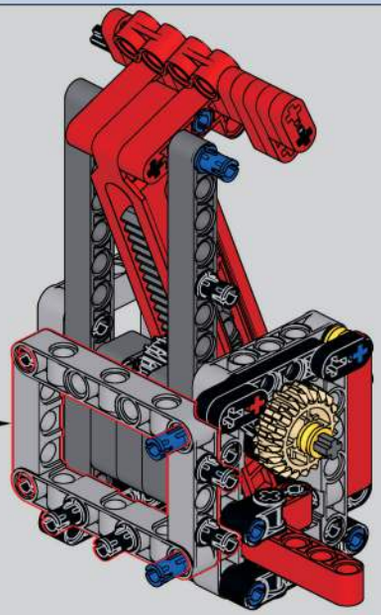

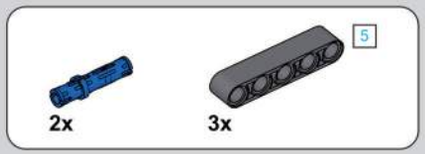

779

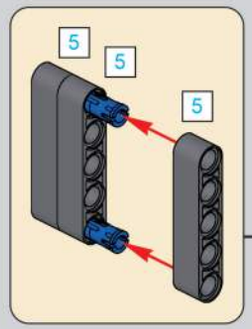

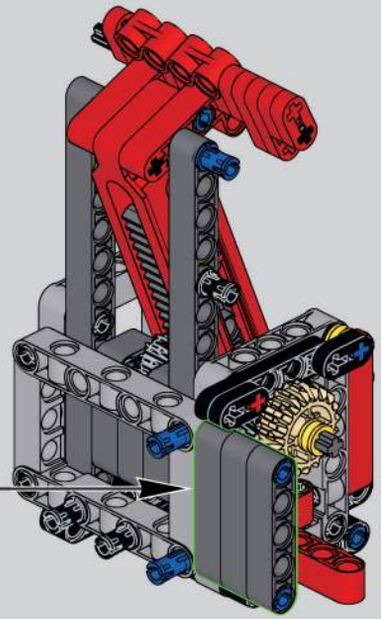

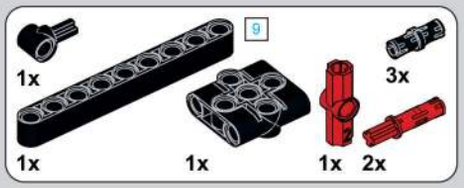

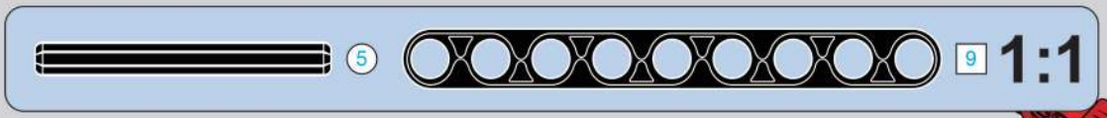

780

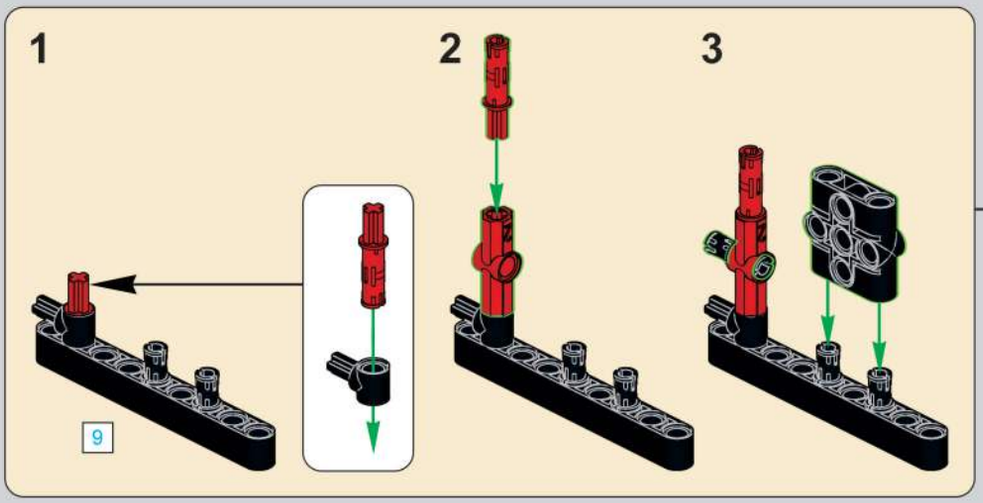

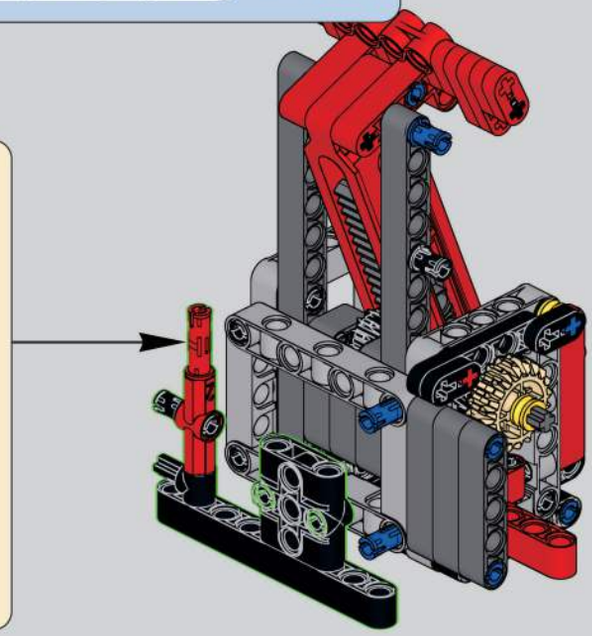

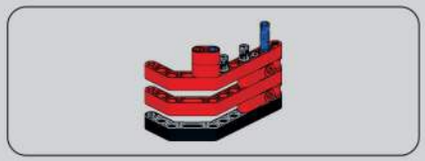

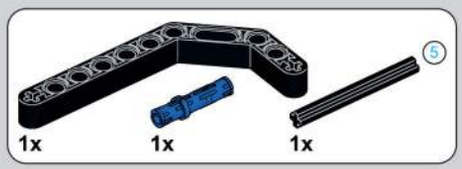

781

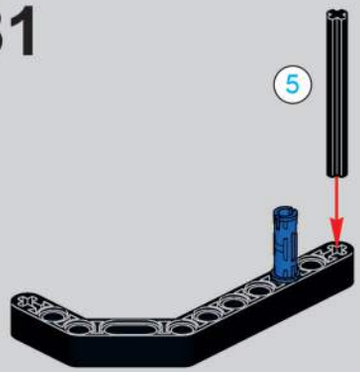

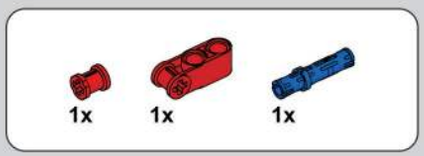

782

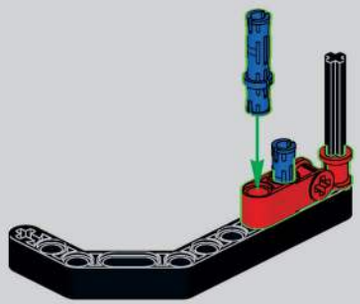

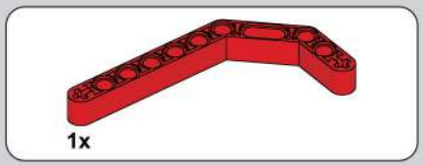

783

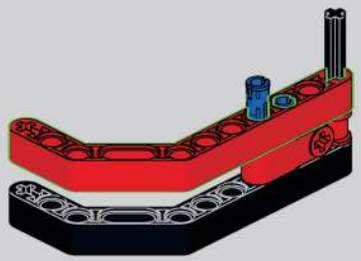

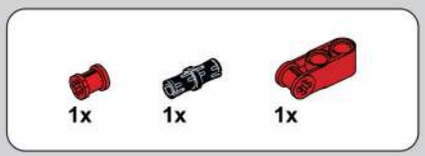

784

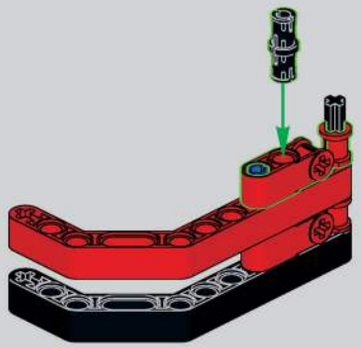

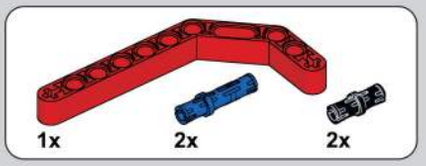

785

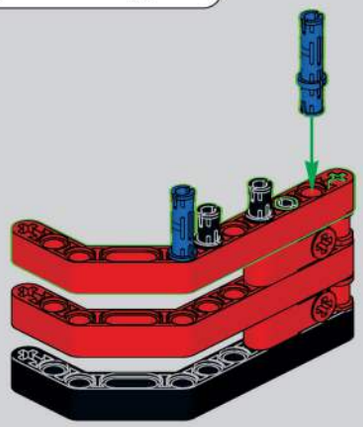

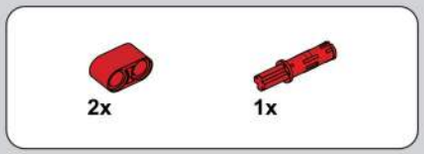

786

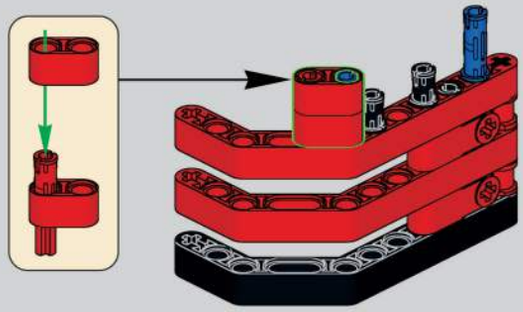

787

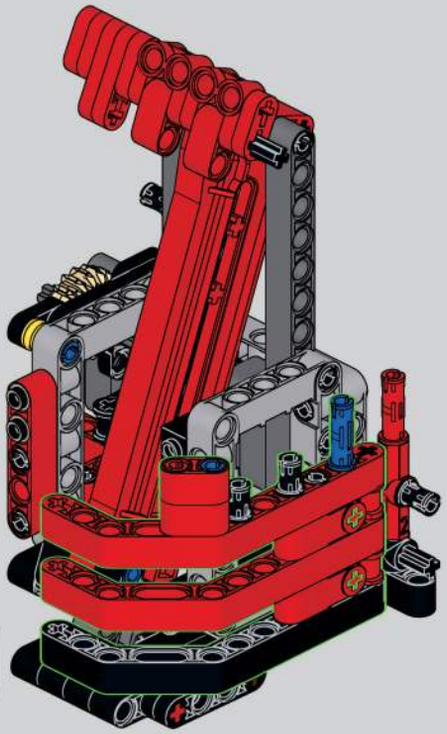

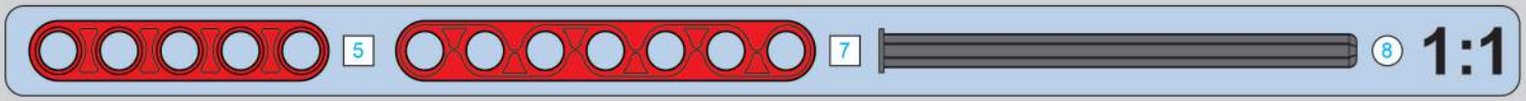

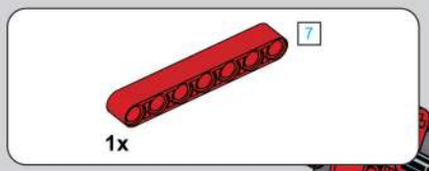

788

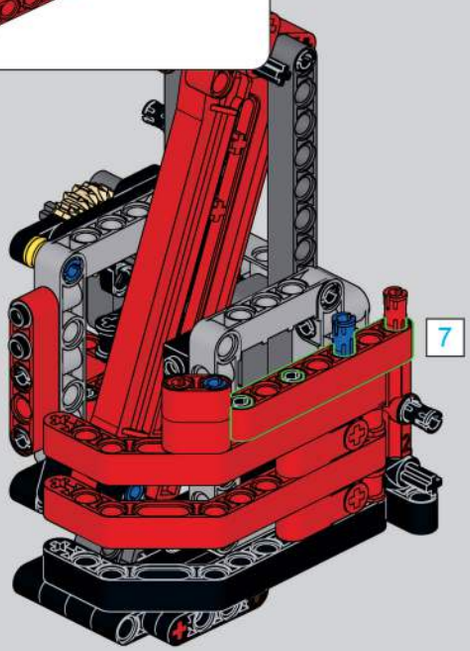

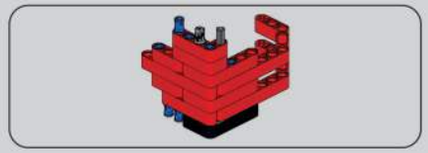

789

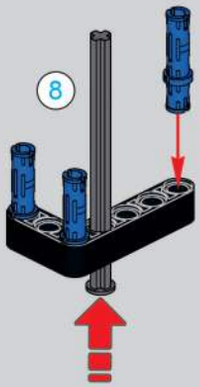

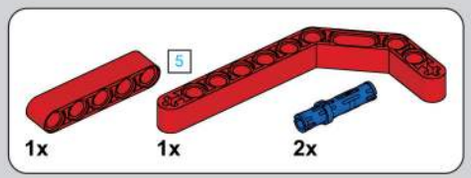

790

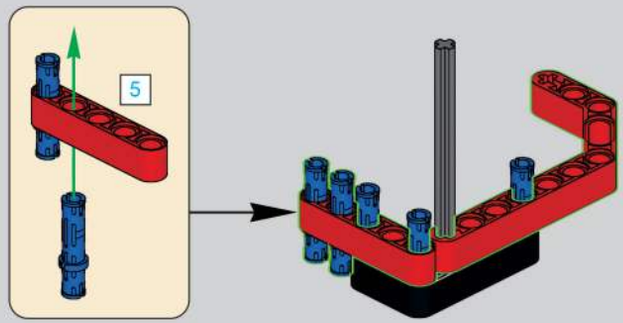

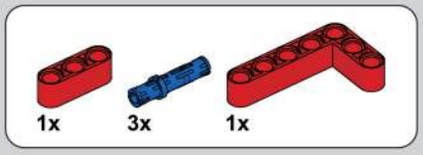

791

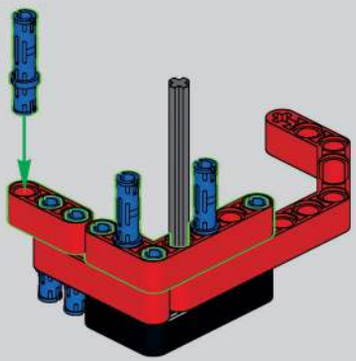

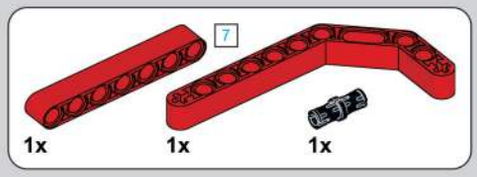

792

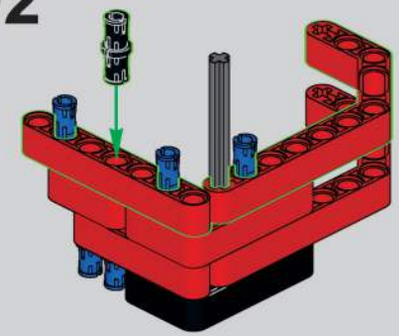

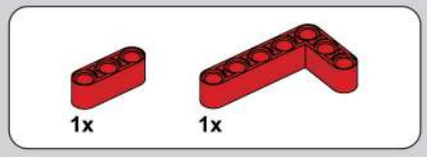

793

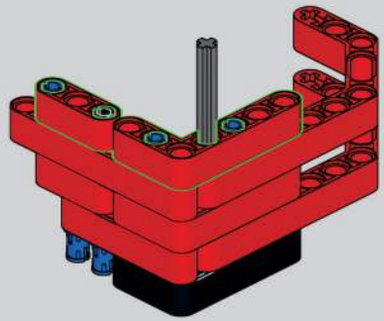

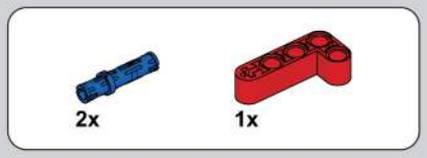

794

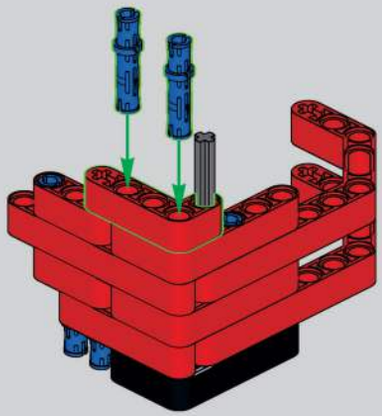

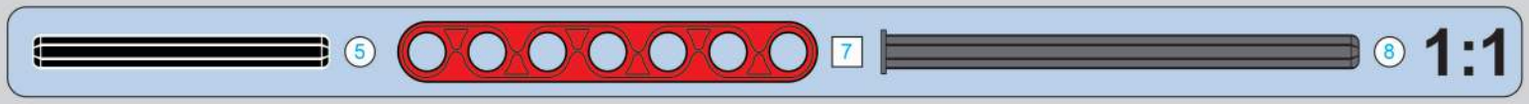

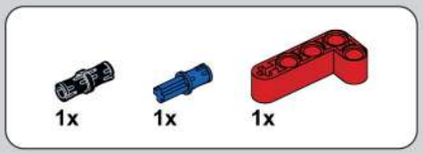

795

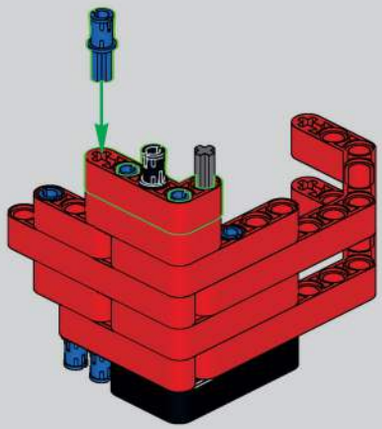

796

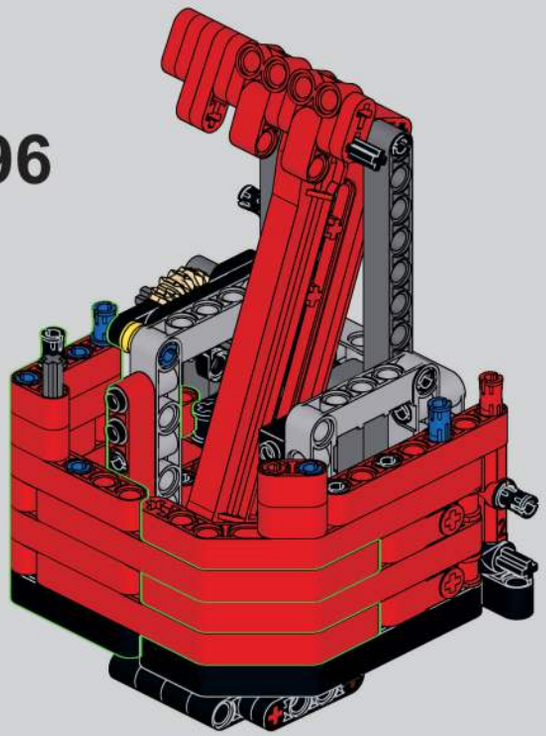

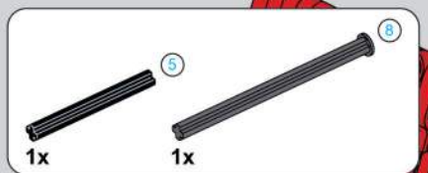

797

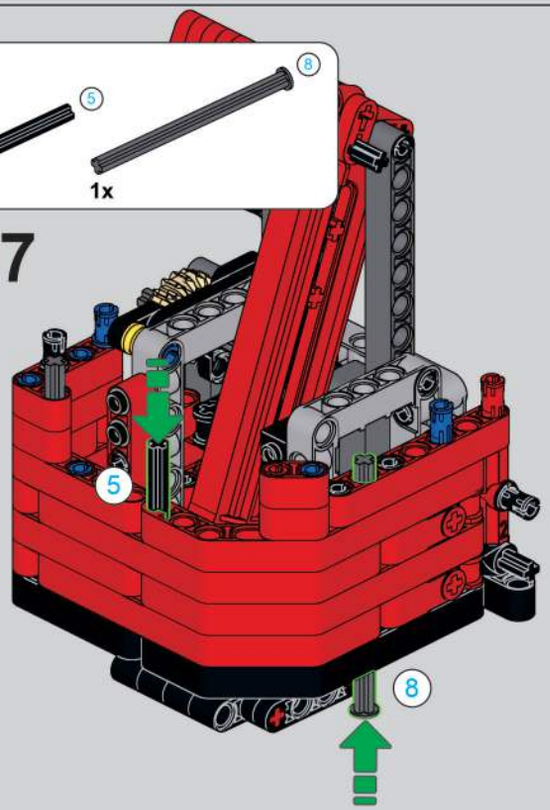

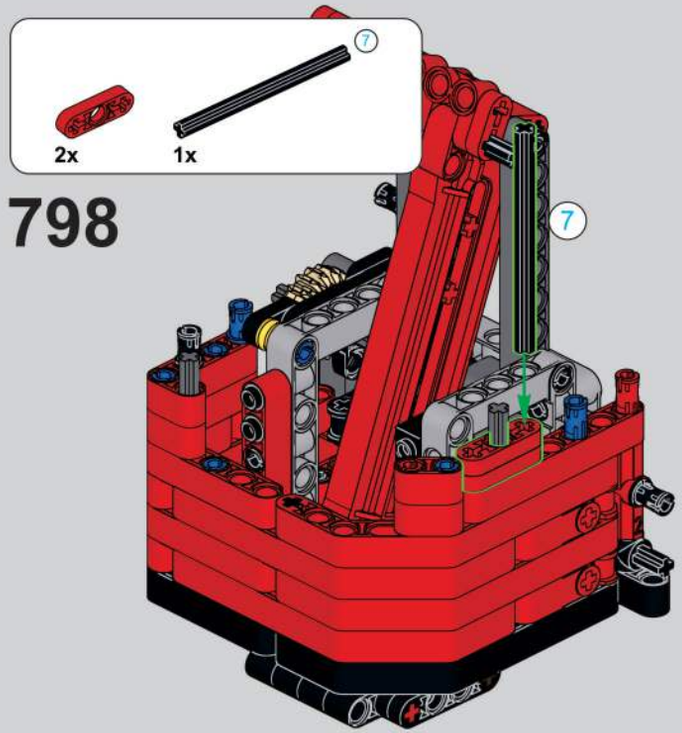

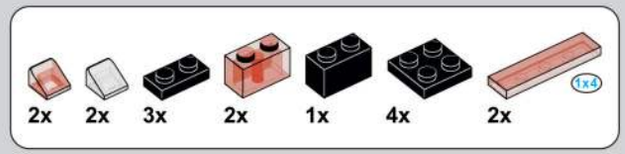

799

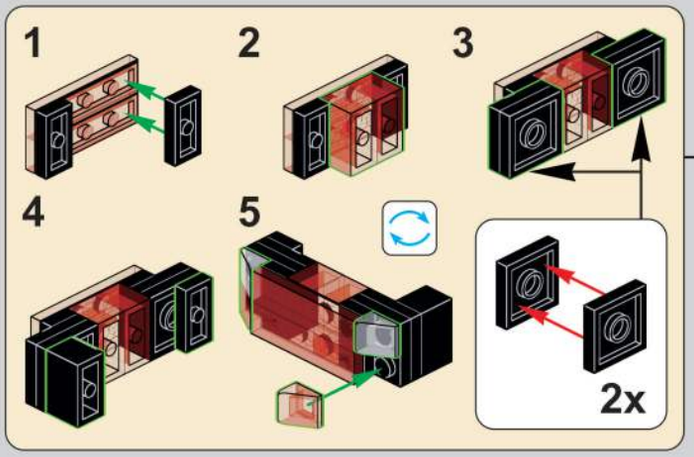

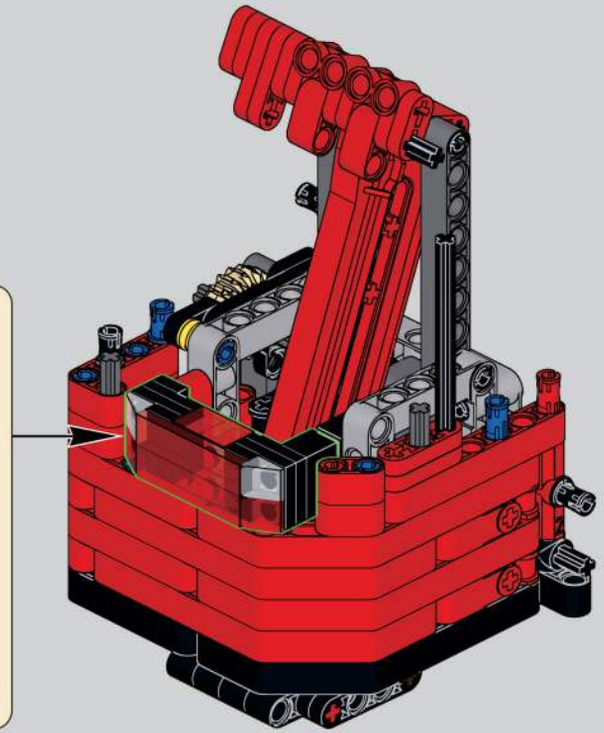

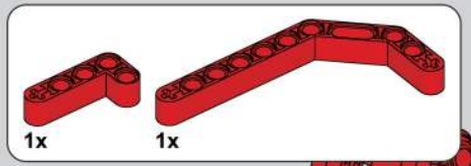

800

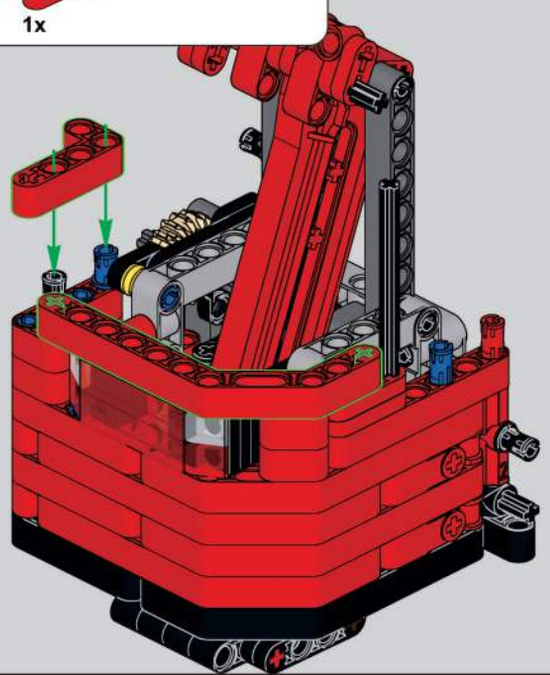

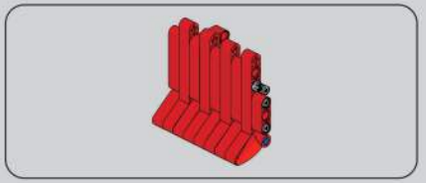

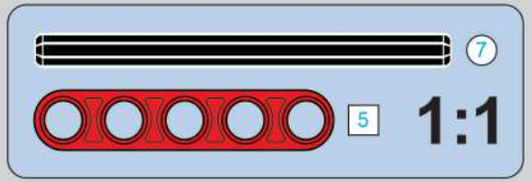

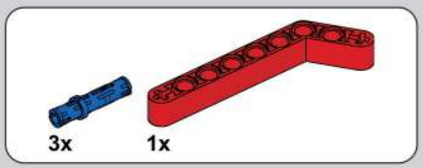

801

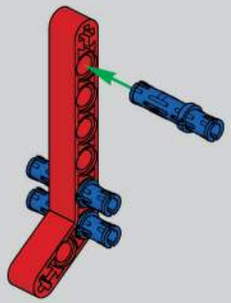

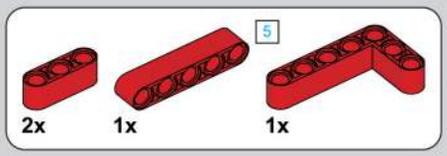

802

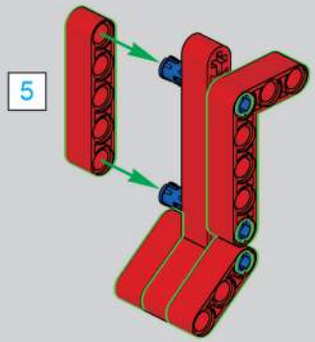

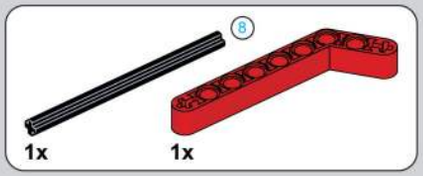

803

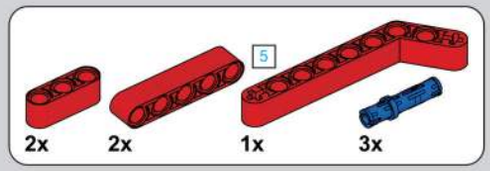

804

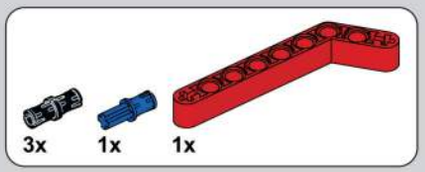

805

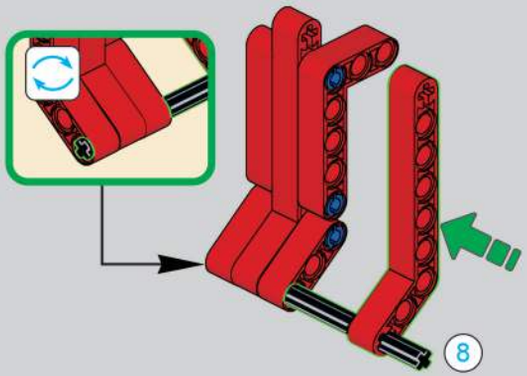

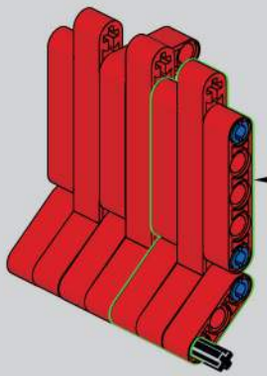

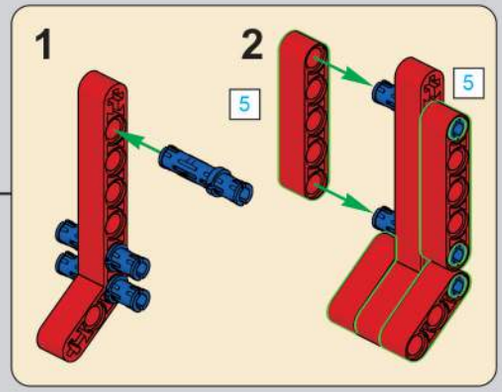

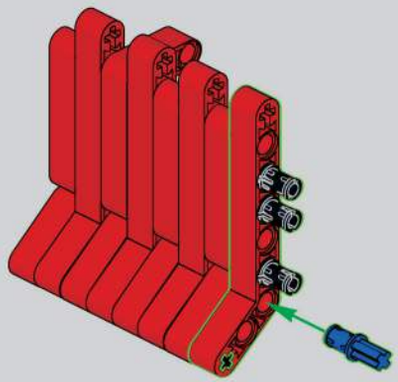

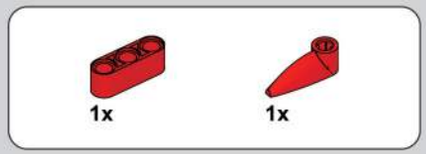

806

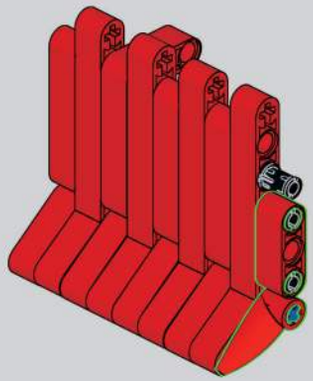

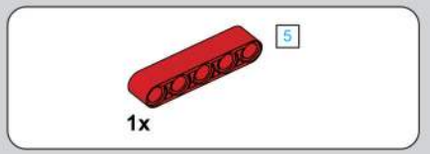

807

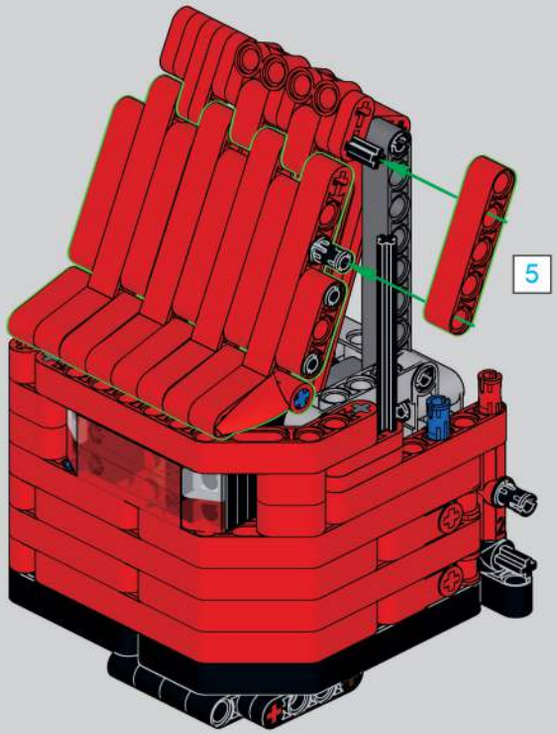

808

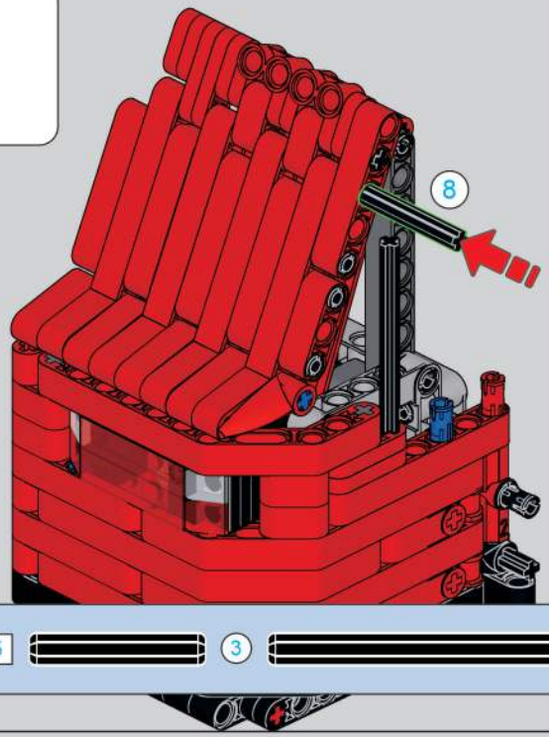

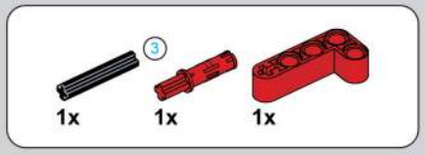

809

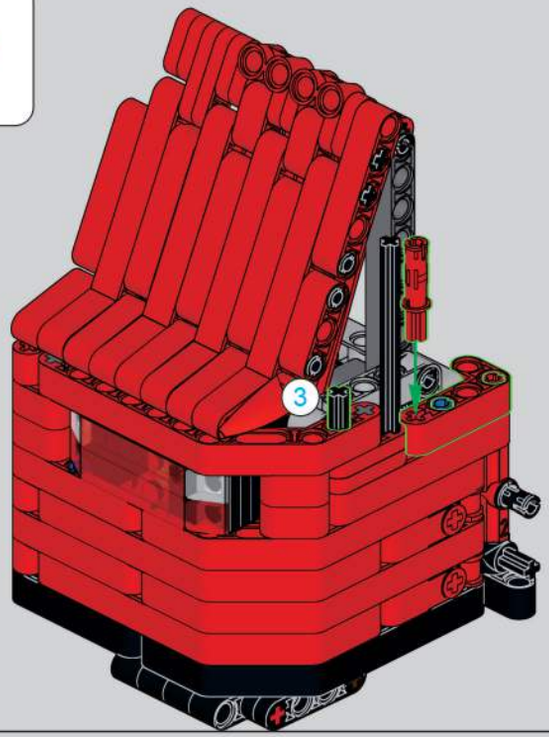

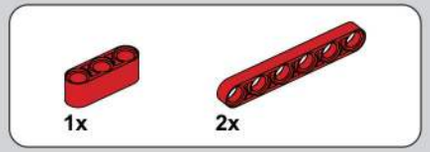

810

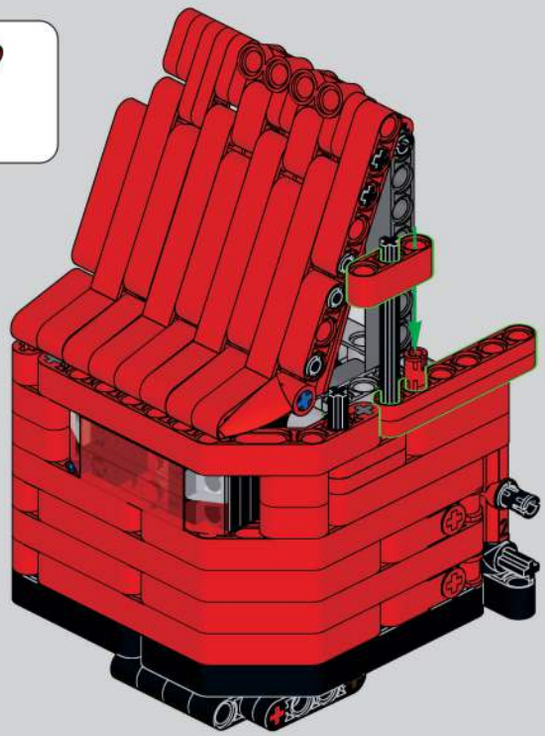

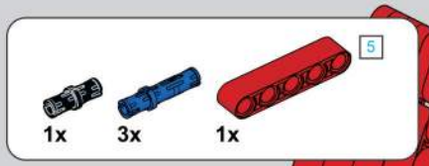

811

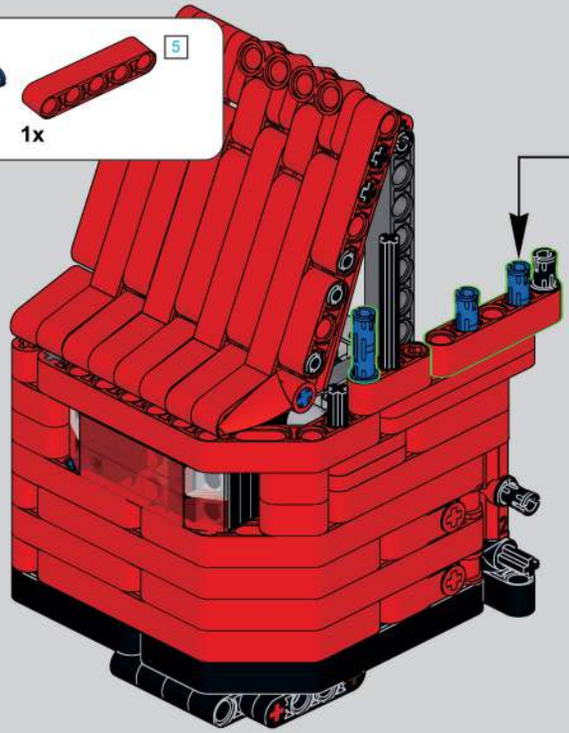

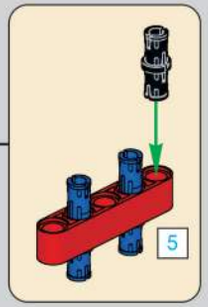

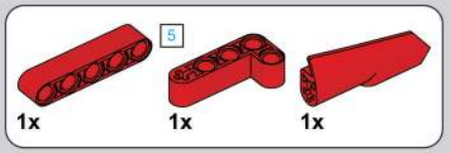

812

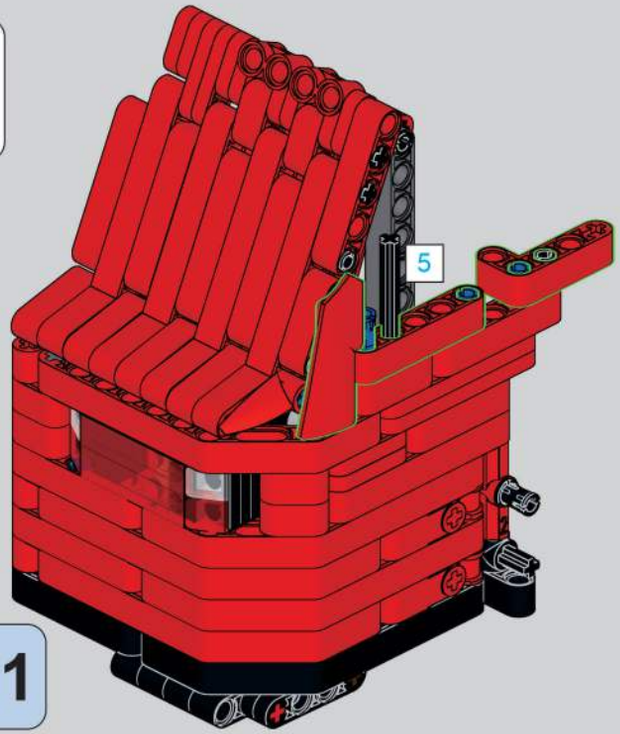

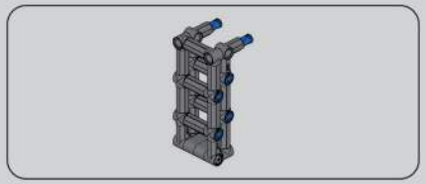

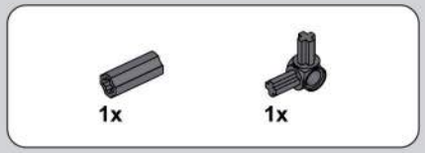

813

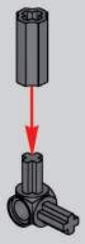

814

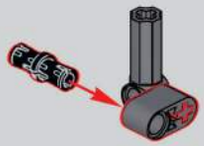

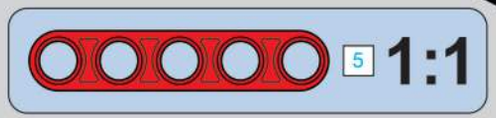

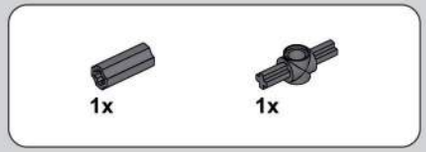

815

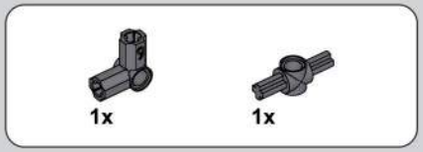

816

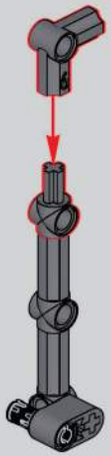

817

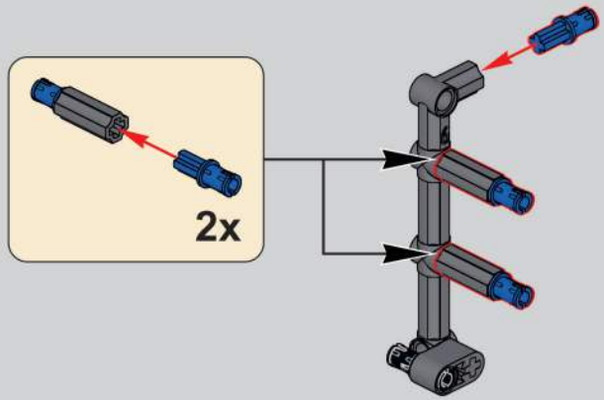

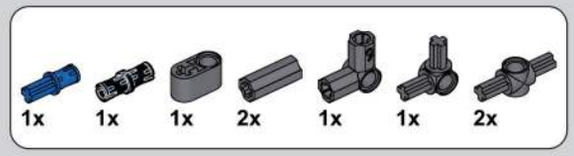

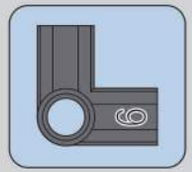

818

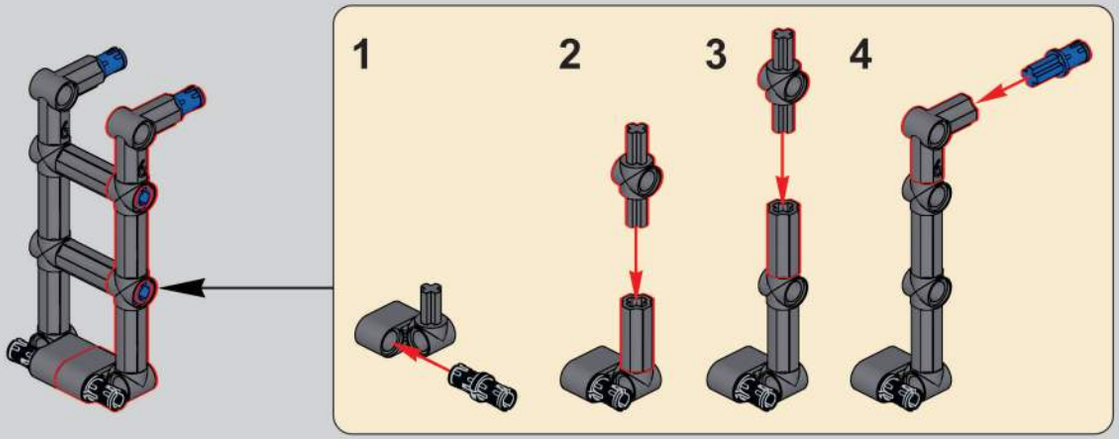

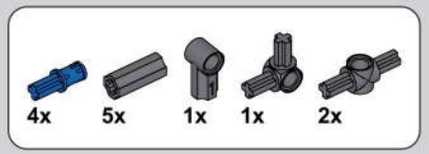

819

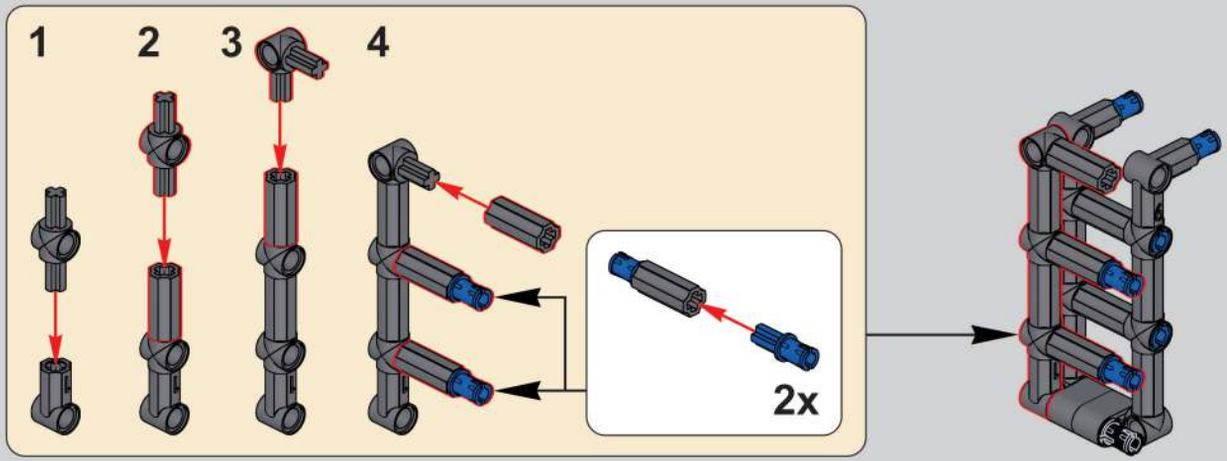

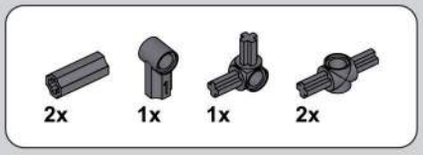

820

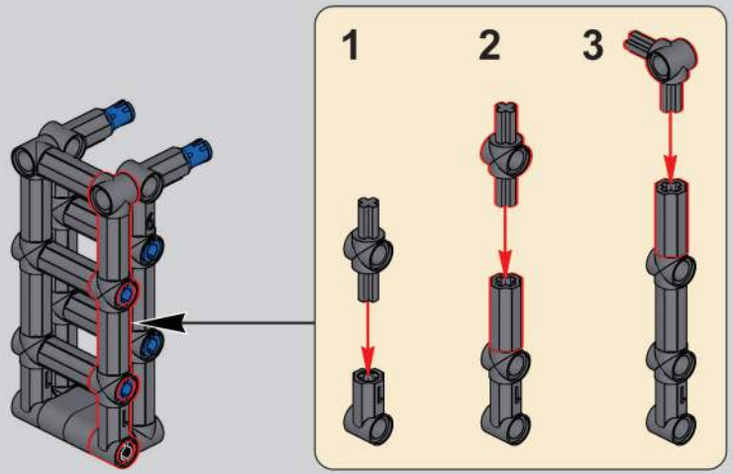

821

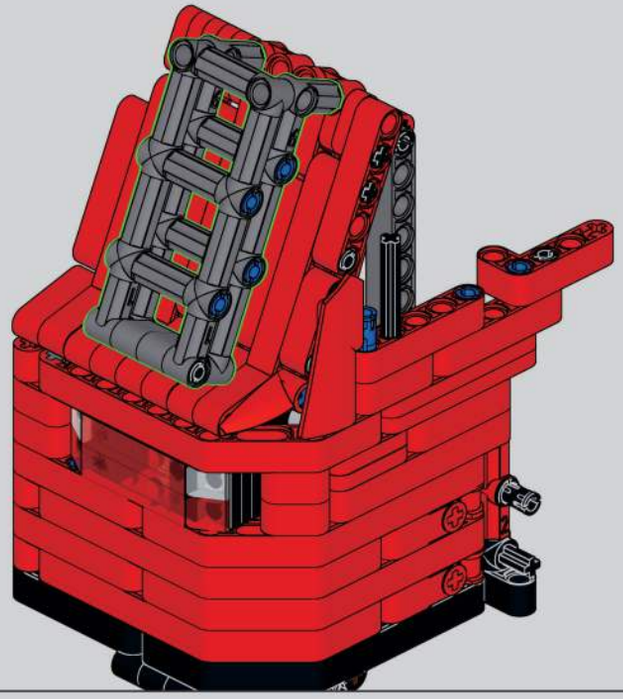

822

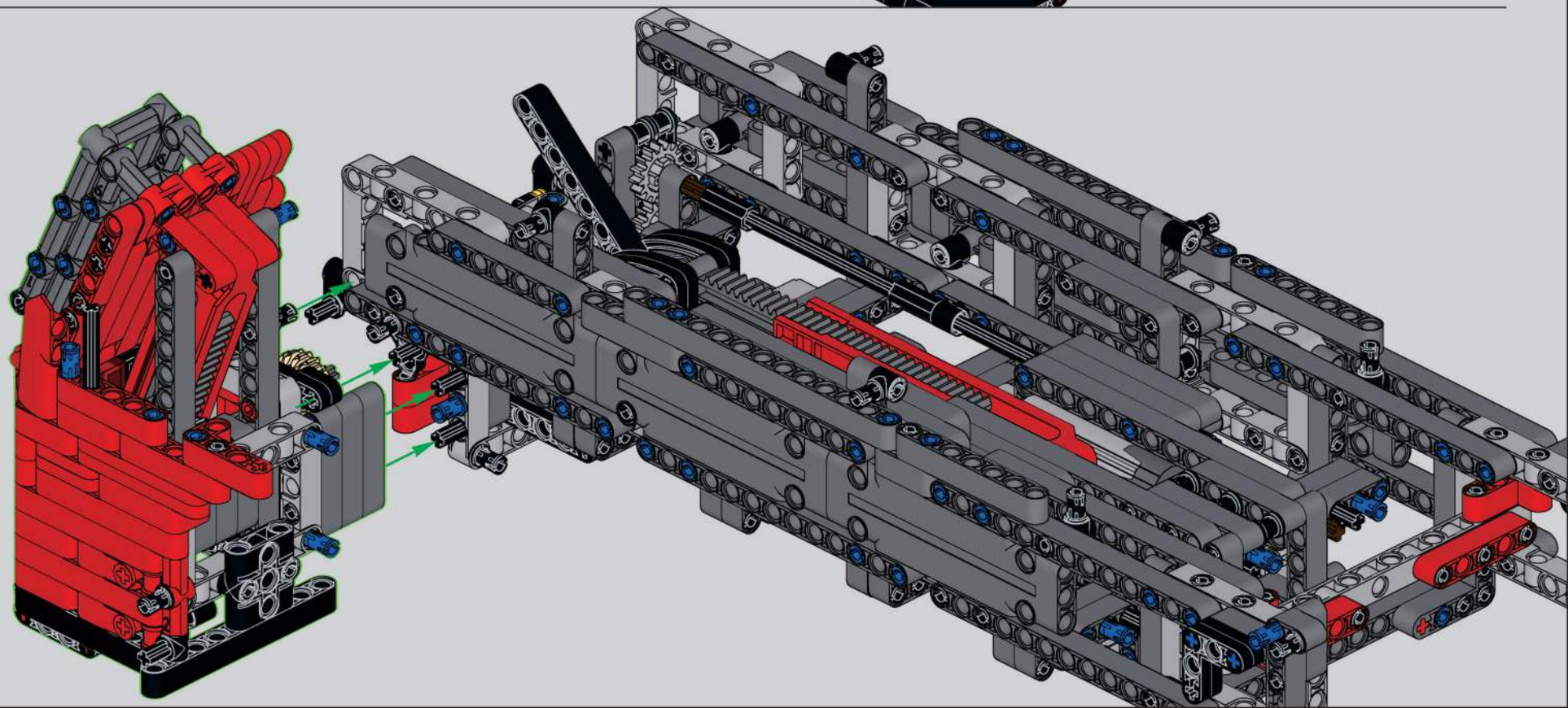

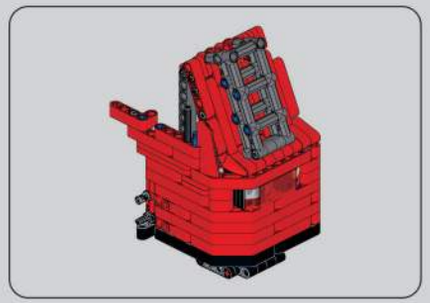

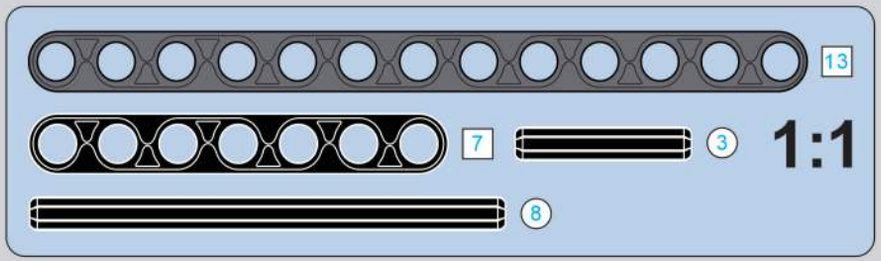

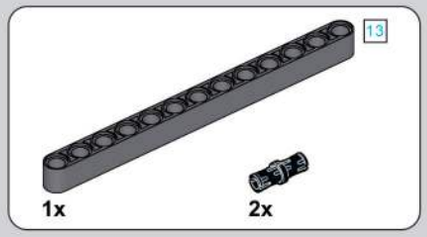

825

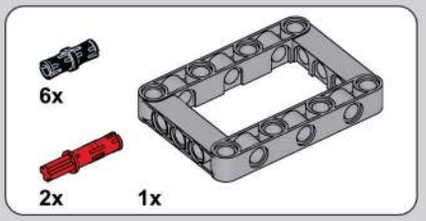

823

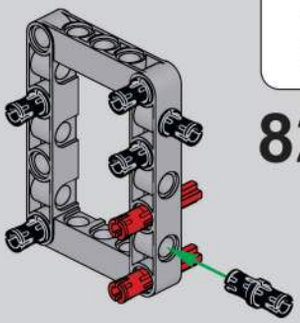

824

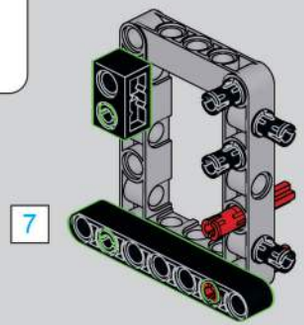

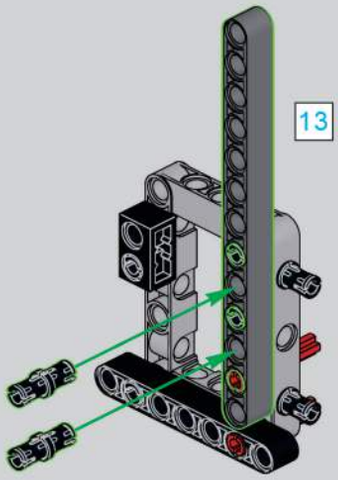

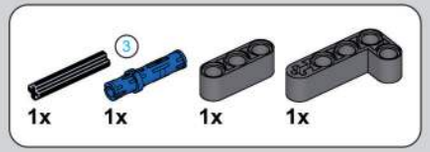

826

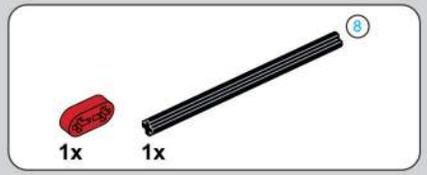

827

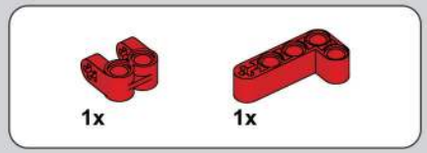

828

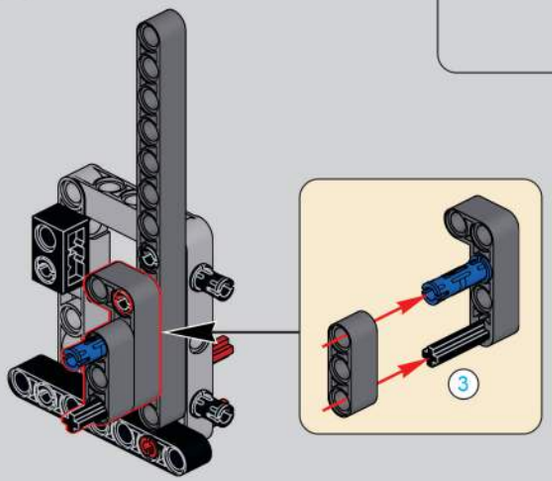

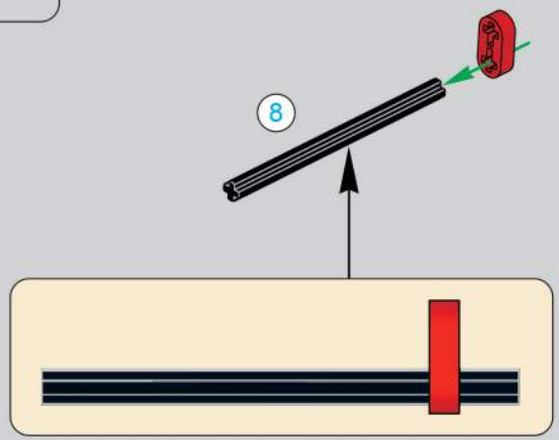

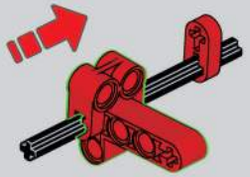

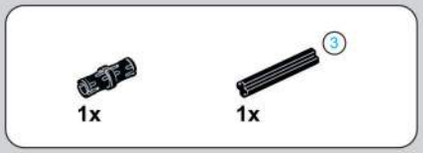

829

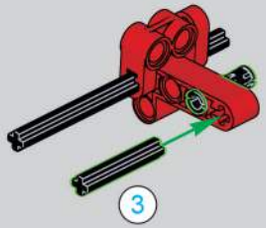

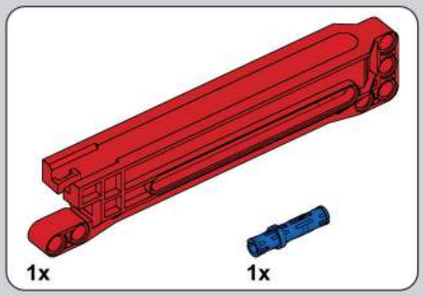

830

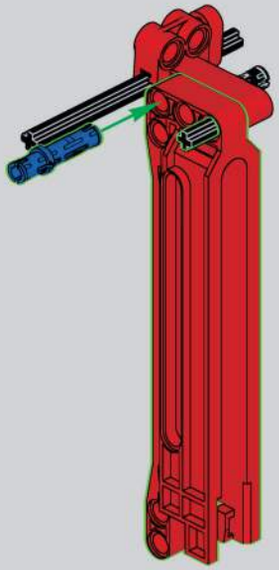

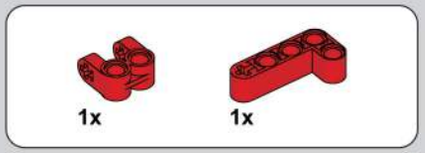

831

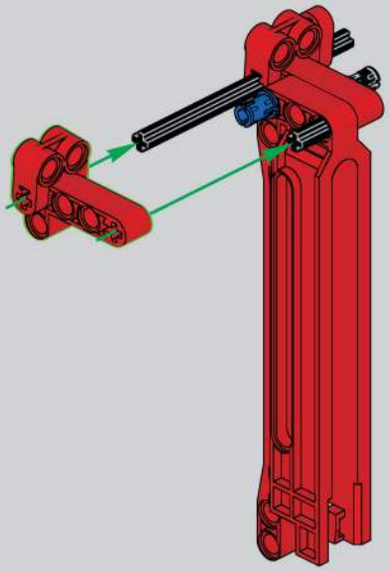

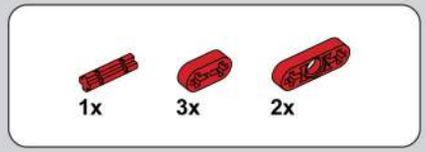

832

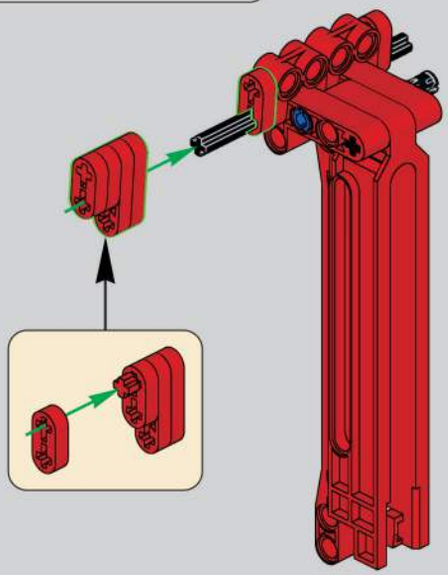

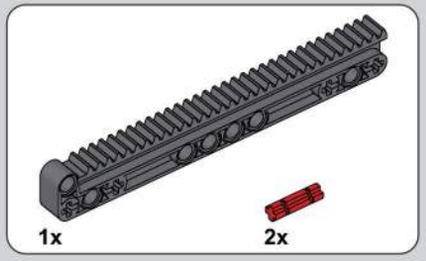

833

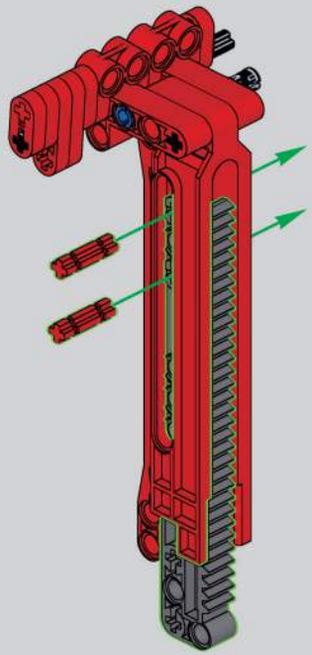

834

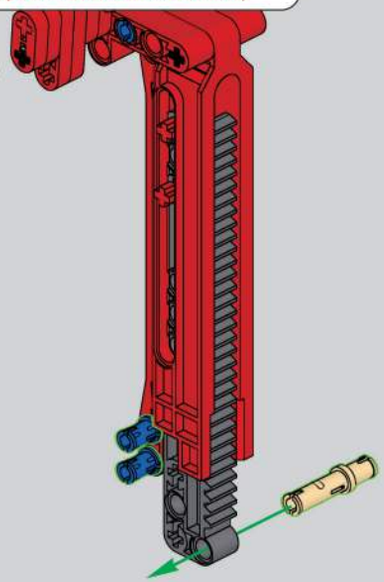

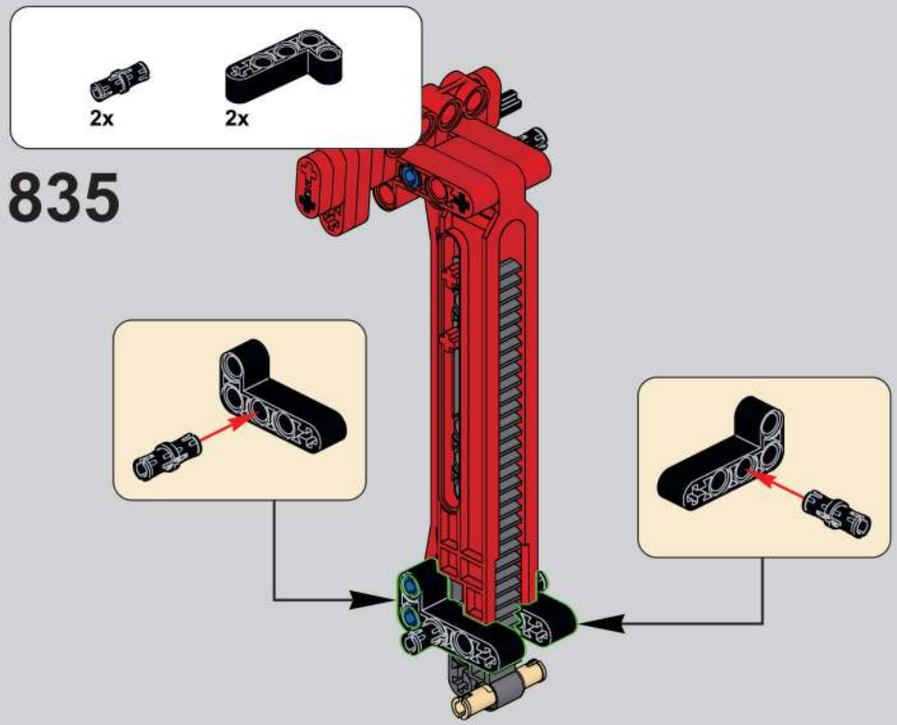
2x
2x
835

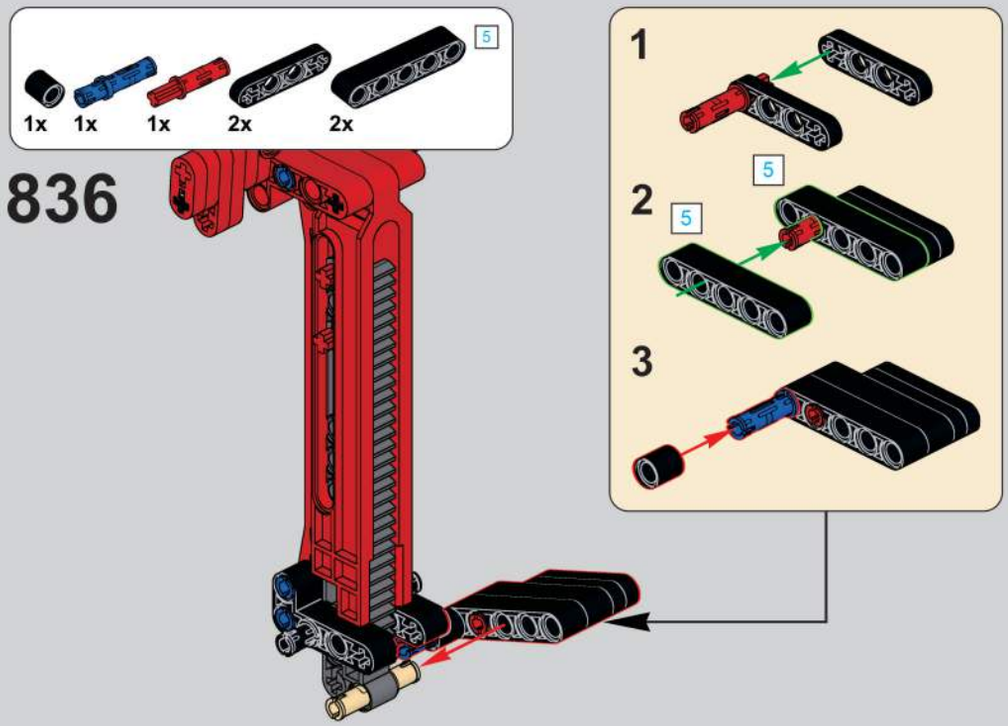
1x
1x
1x
2x
2x
5
836
1
2
5
5
3

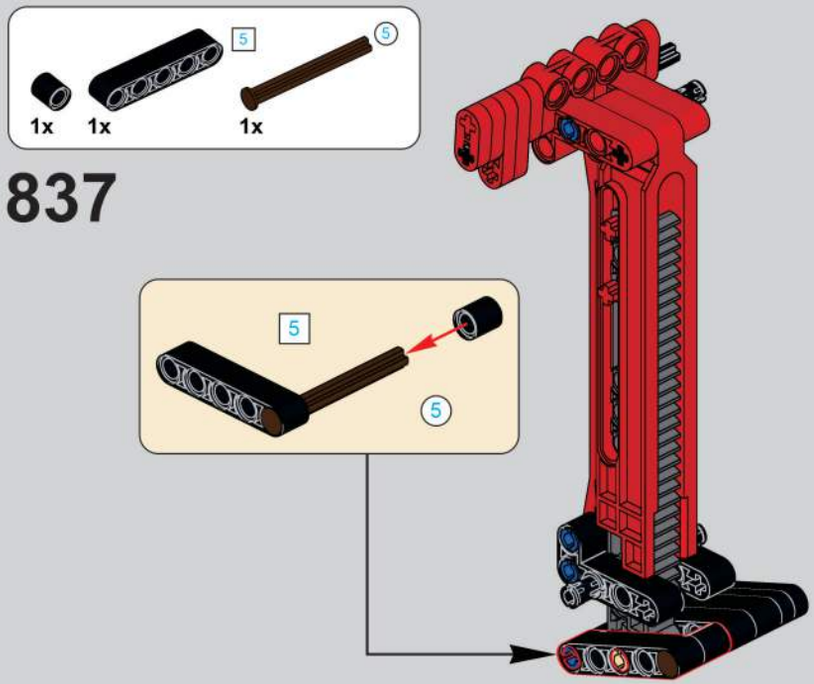
1x
1x
1x
5
5
837
5
5

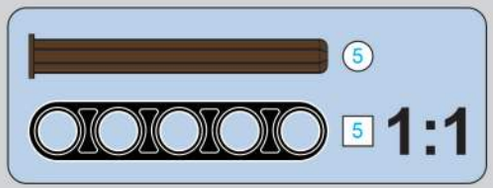
5
5
1:1

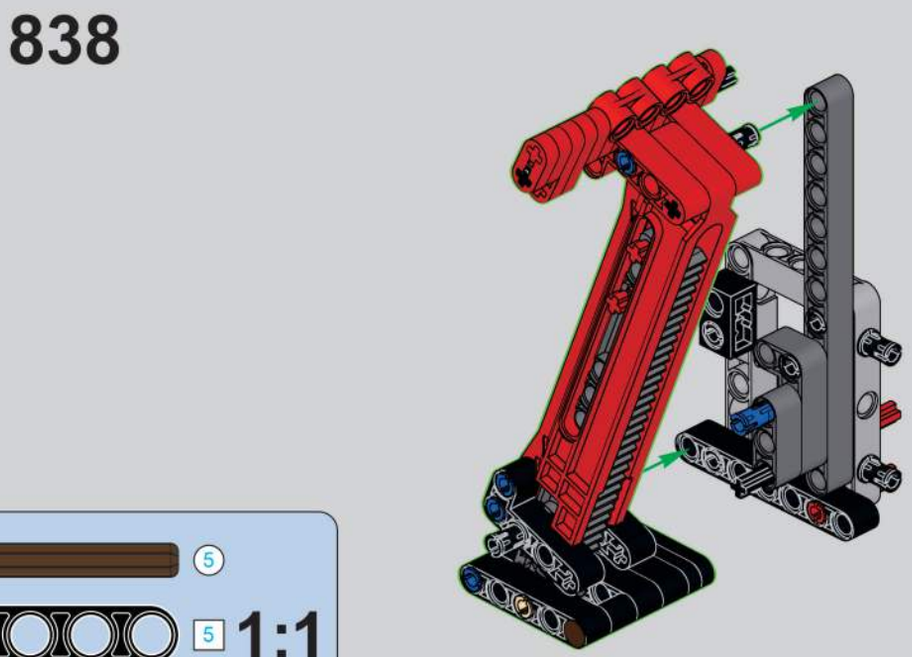
838

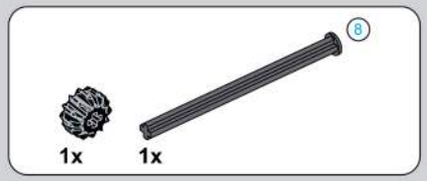

839

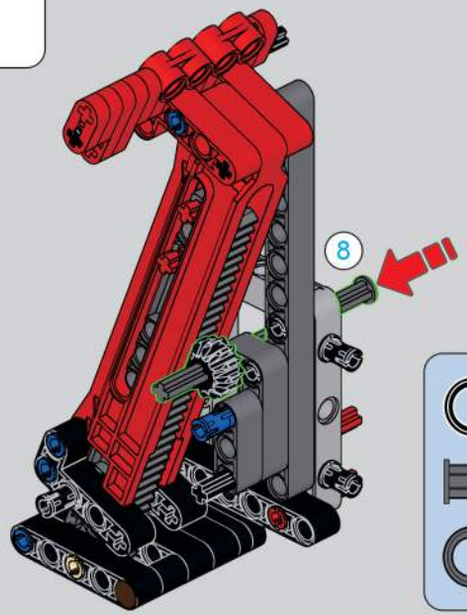

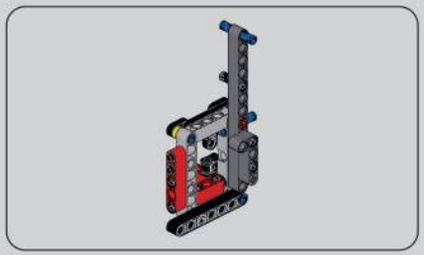

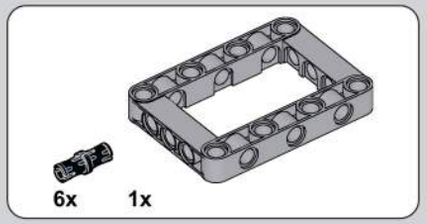

840

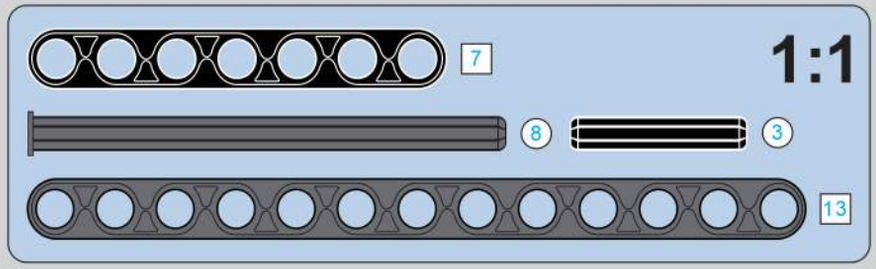

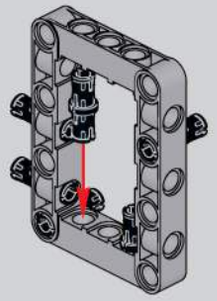

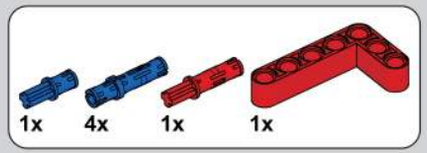

841

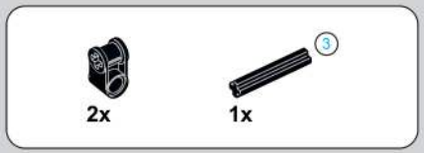

842

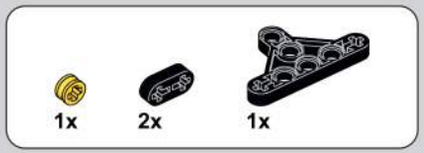

843

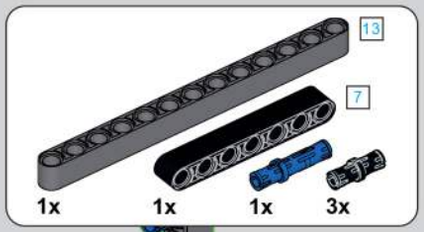

844

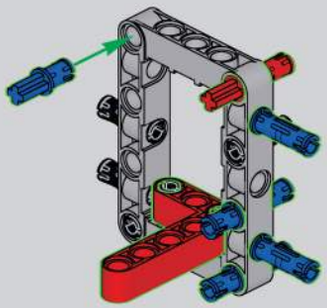

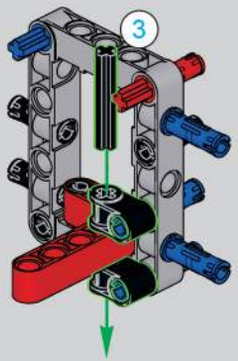

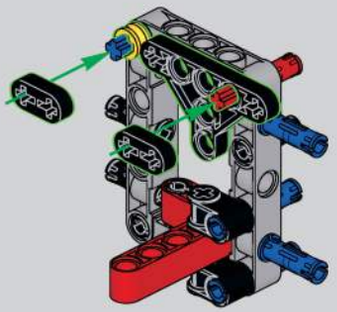

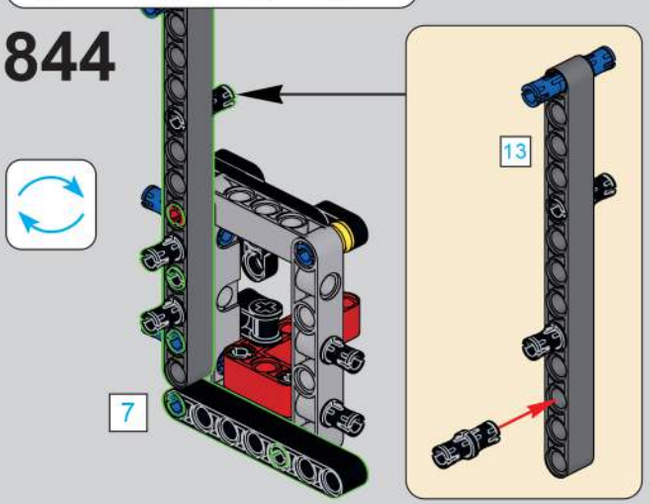

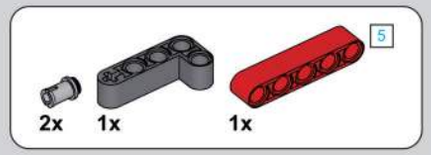

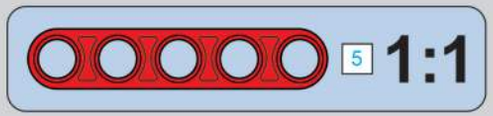

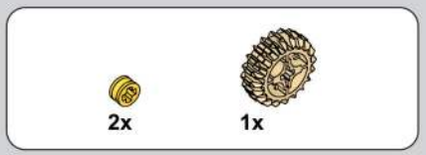

845

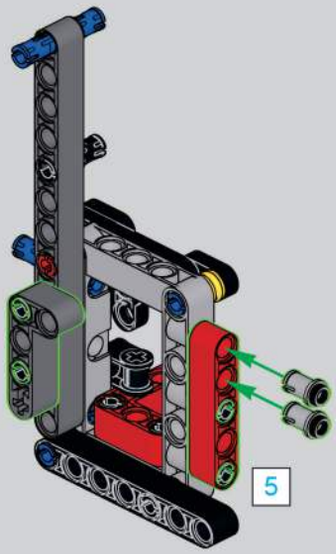

846

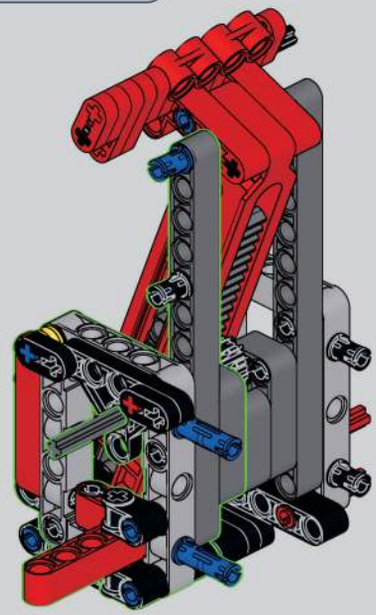

847

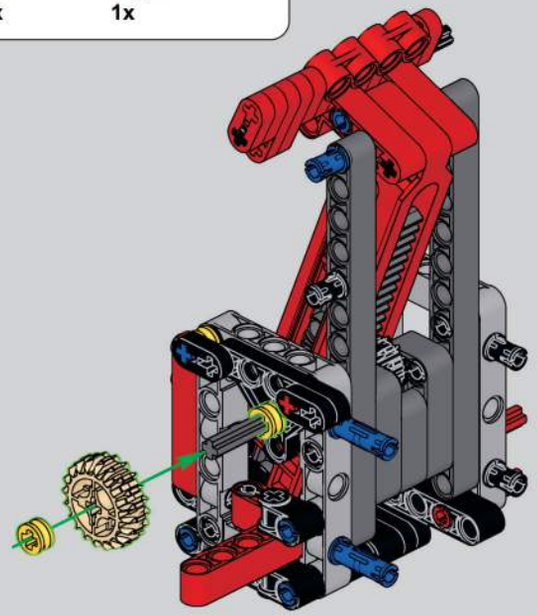

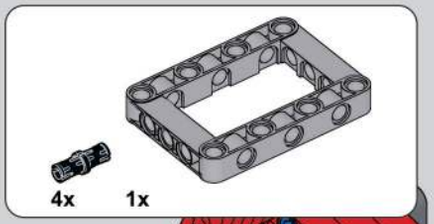

848

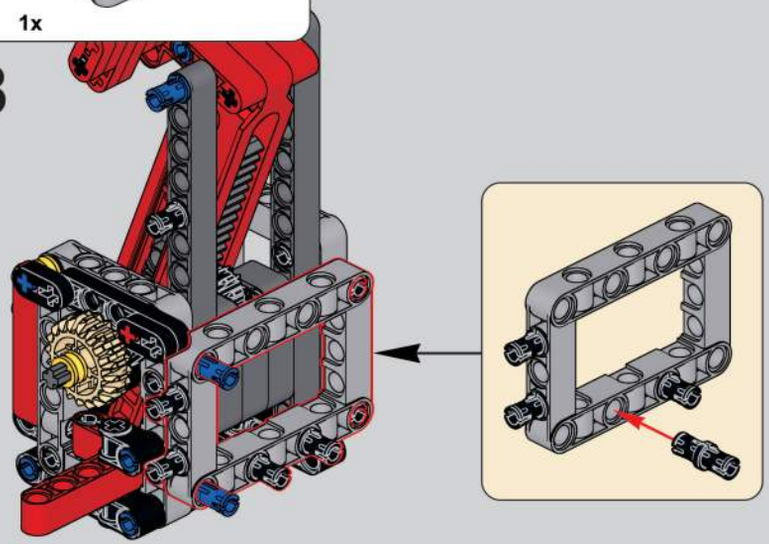

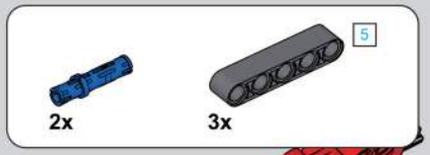

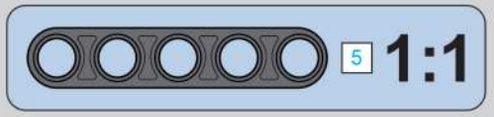

849

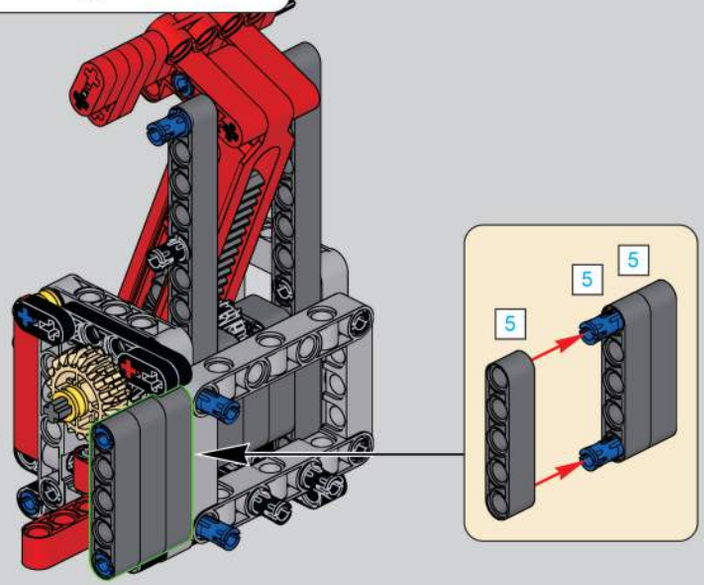

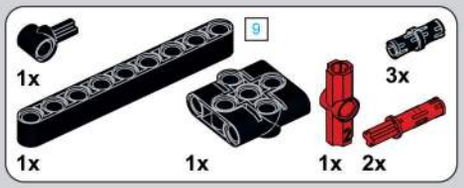

850

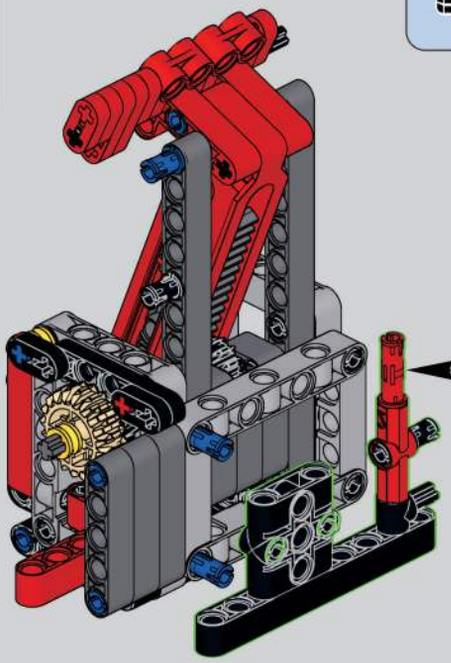

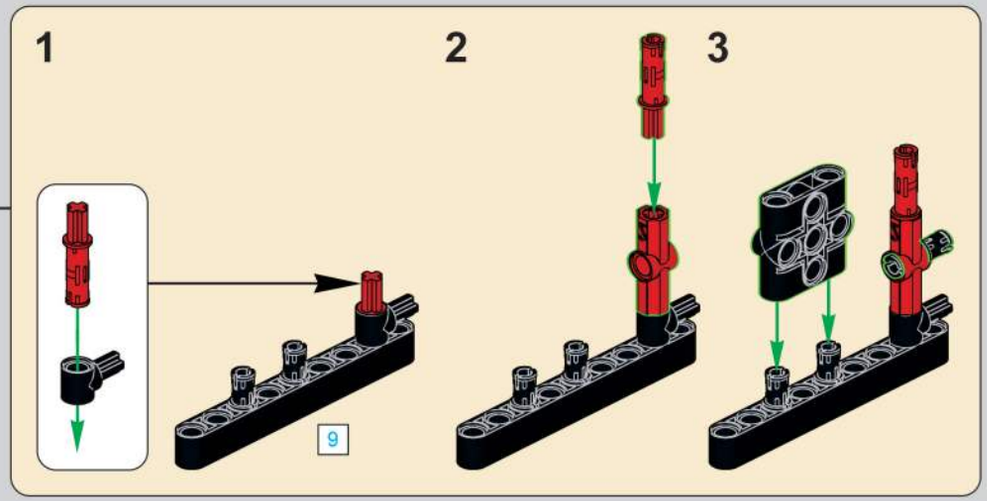

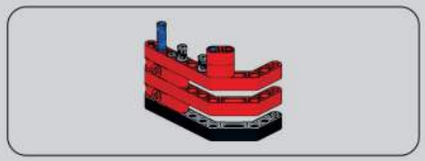

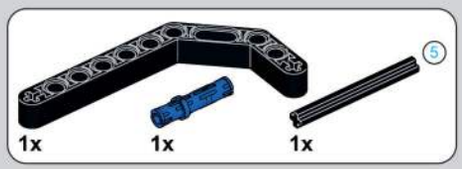

851

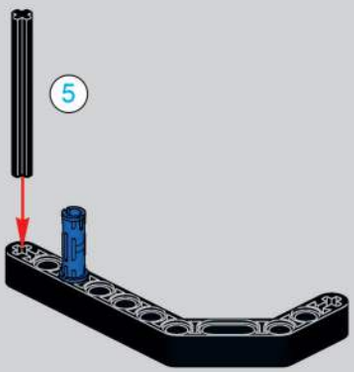

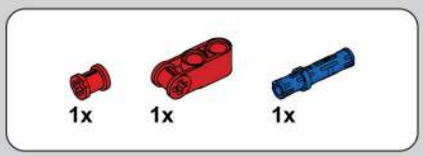

852

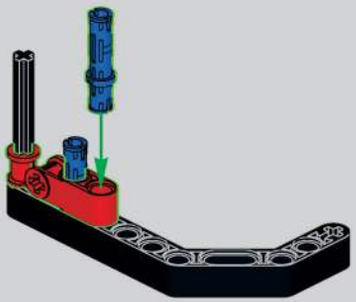

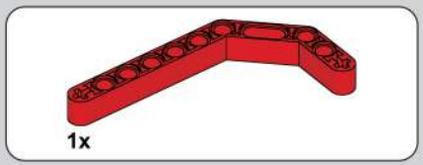

853

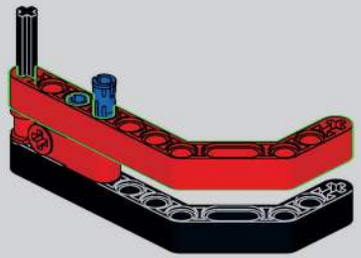

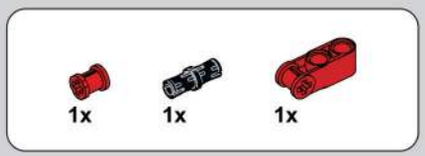

854

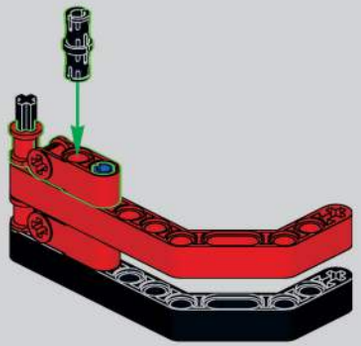

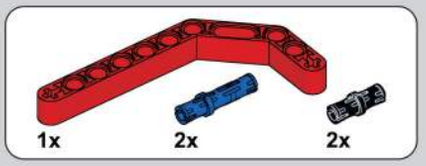

855

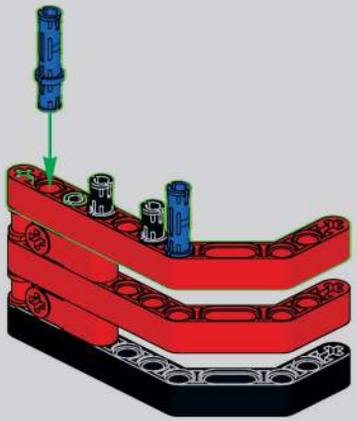

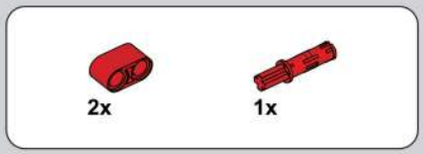

856

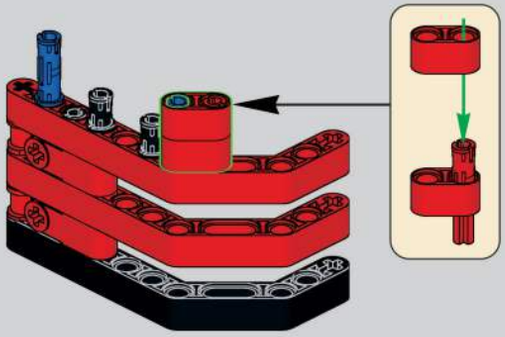

857

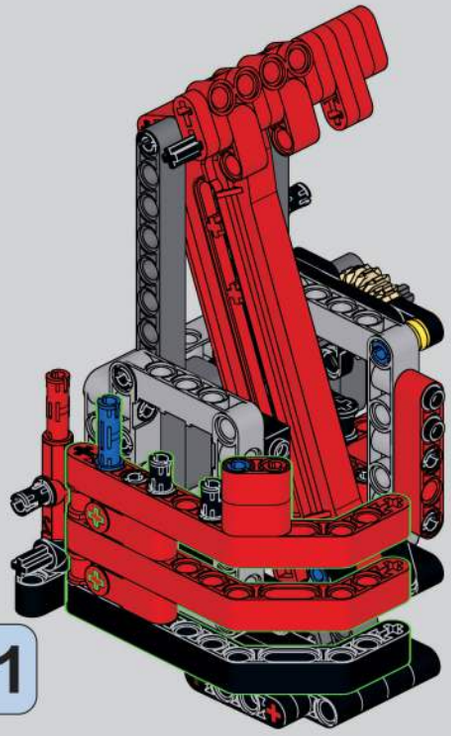

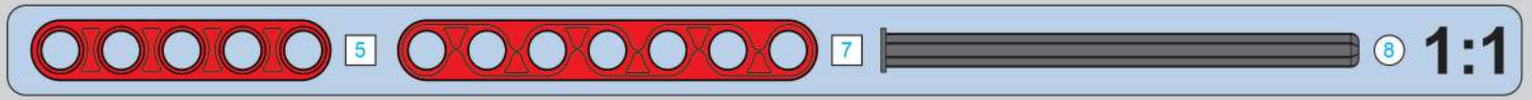

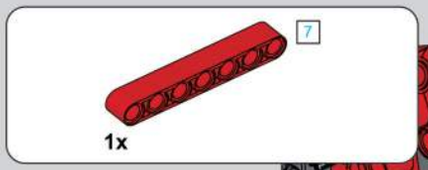

858

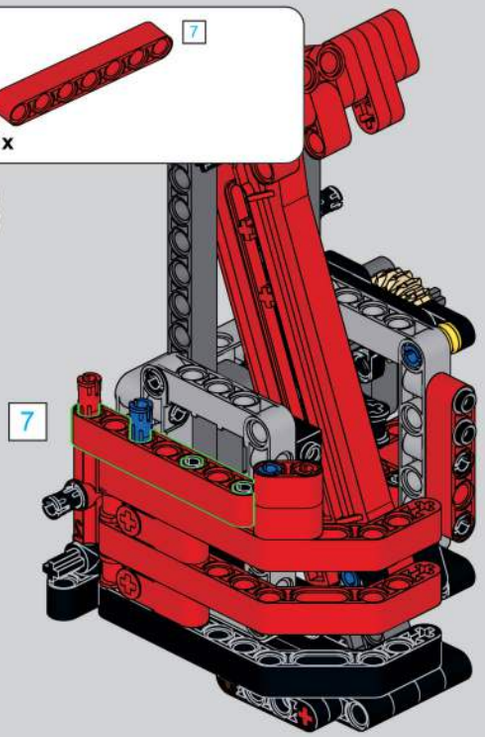

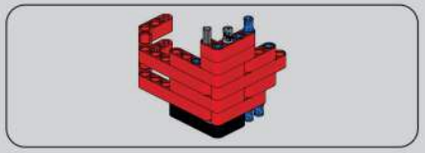

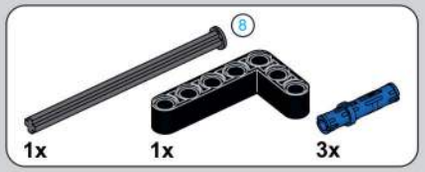

859

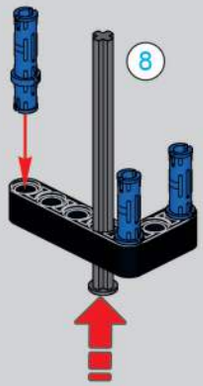

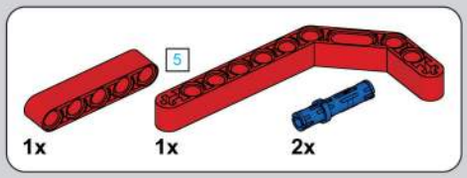

860

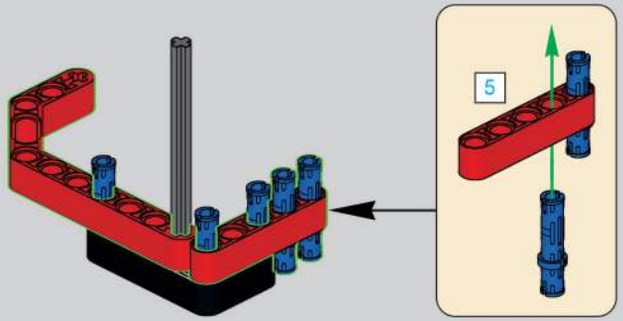

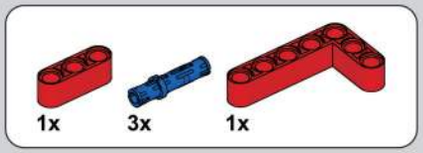

861

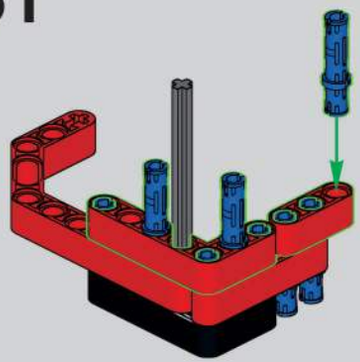

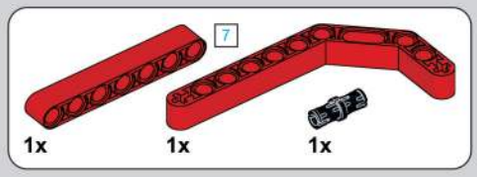

862

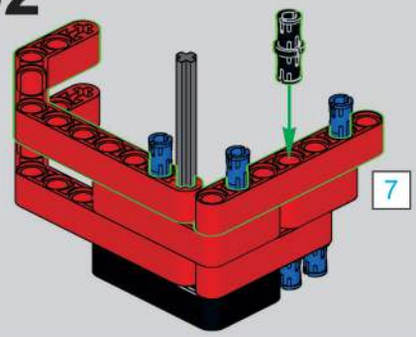

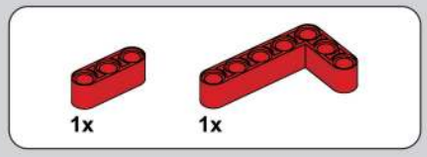

863

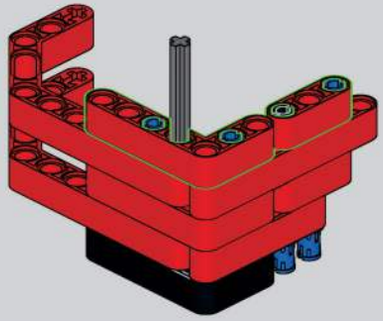

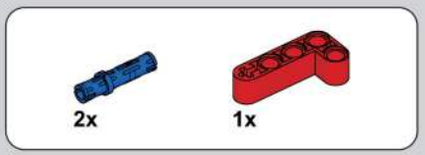

864

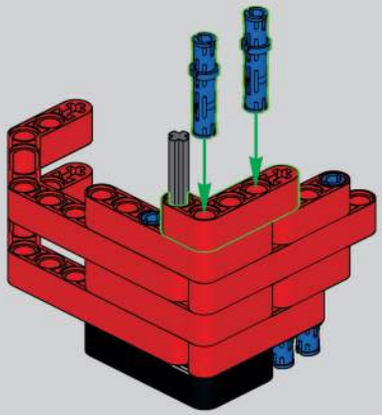

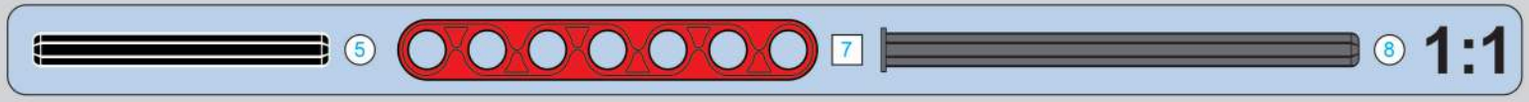

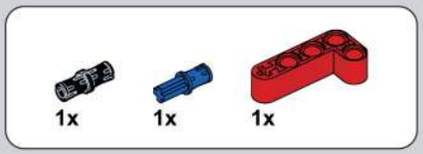

865

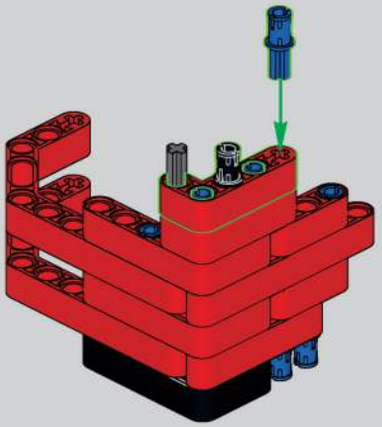

866

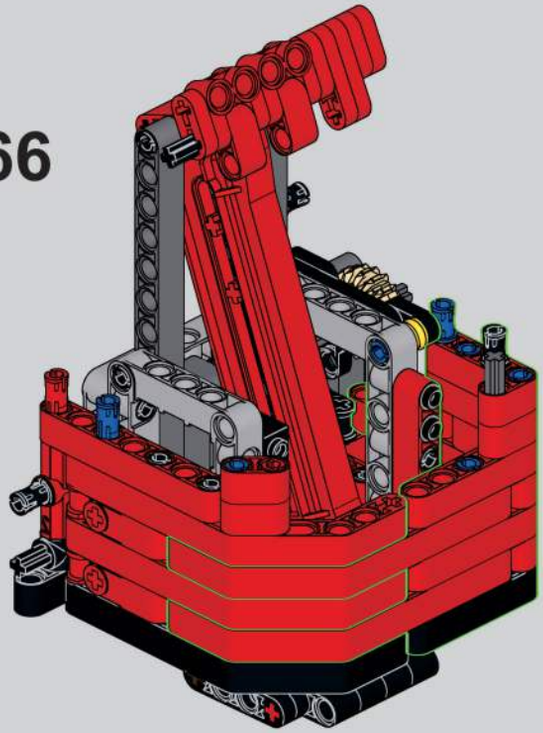

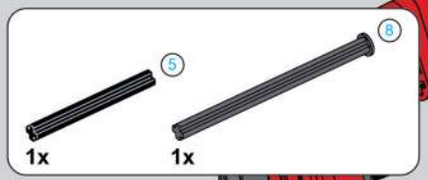

867

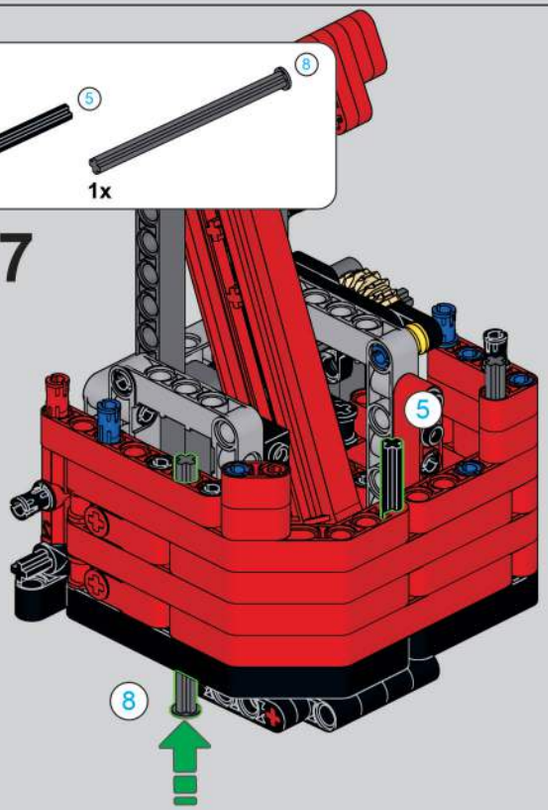

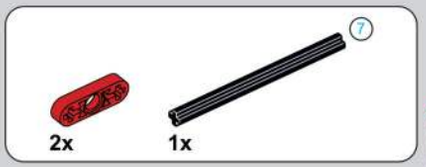

868

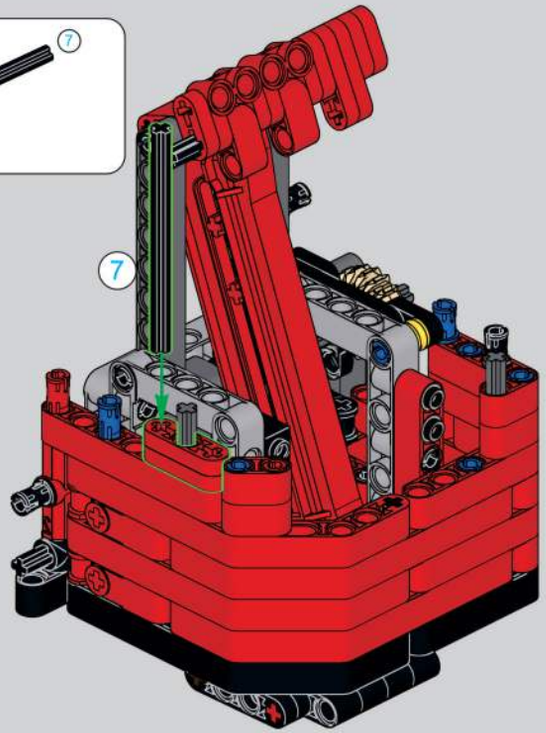

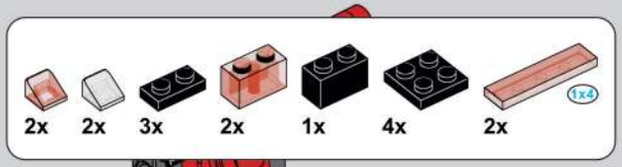

869

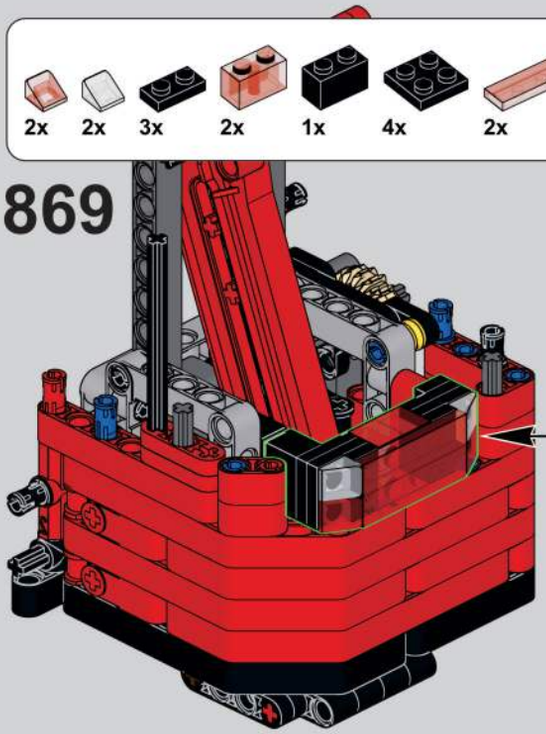

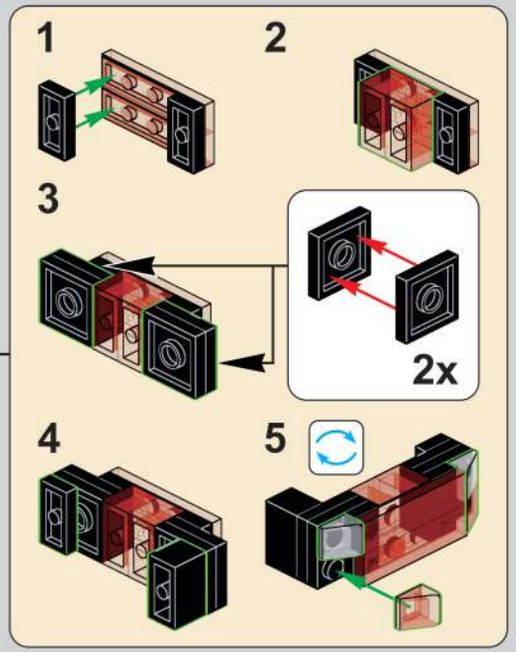

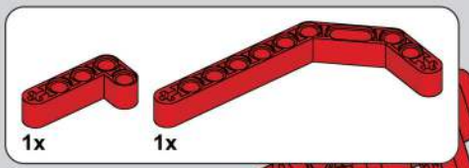

870

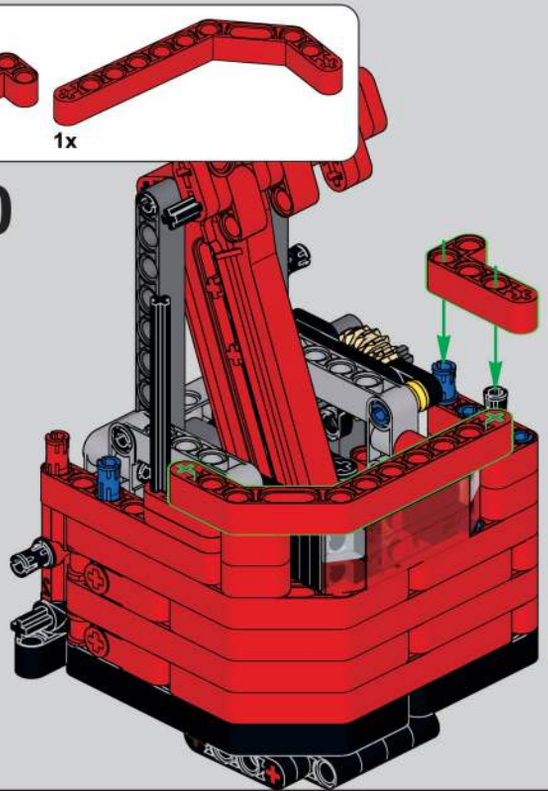

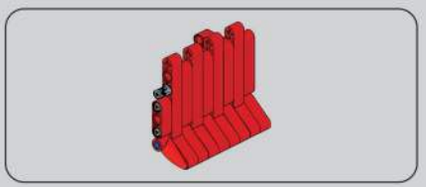

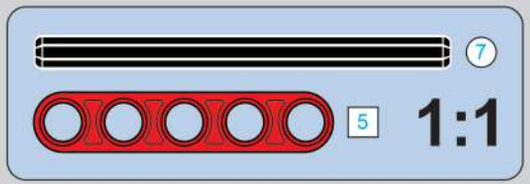

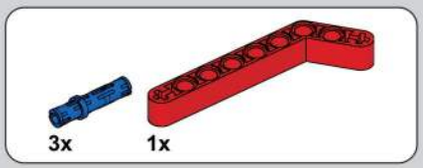

871

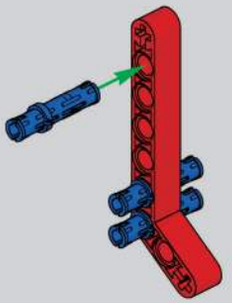

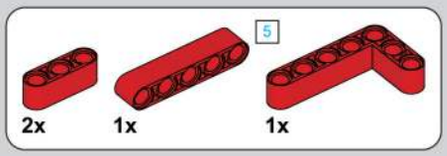

872

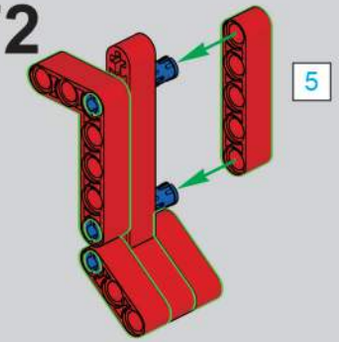

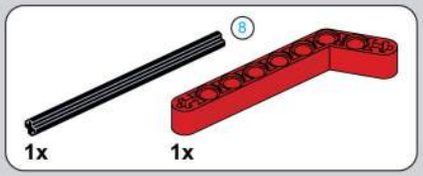

873

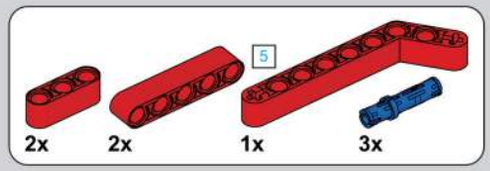

874

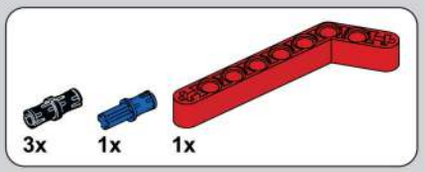

875

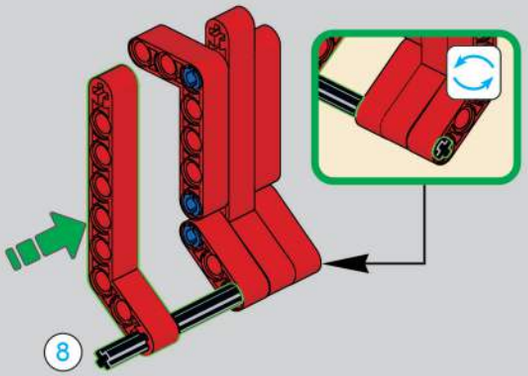

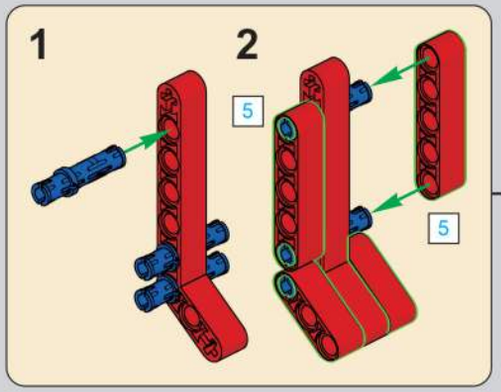

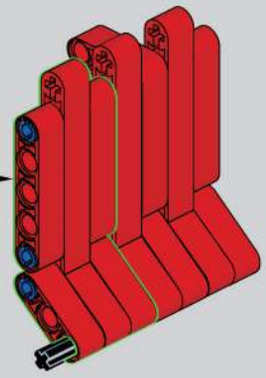

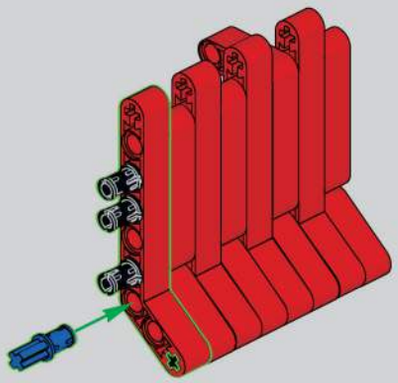

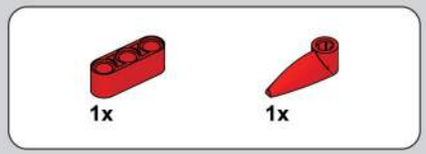

876

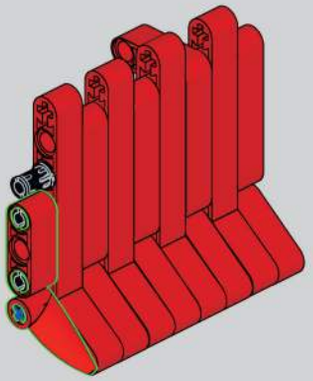

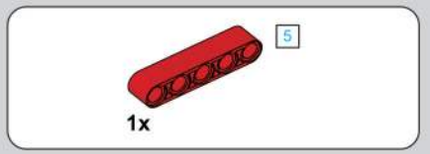

877

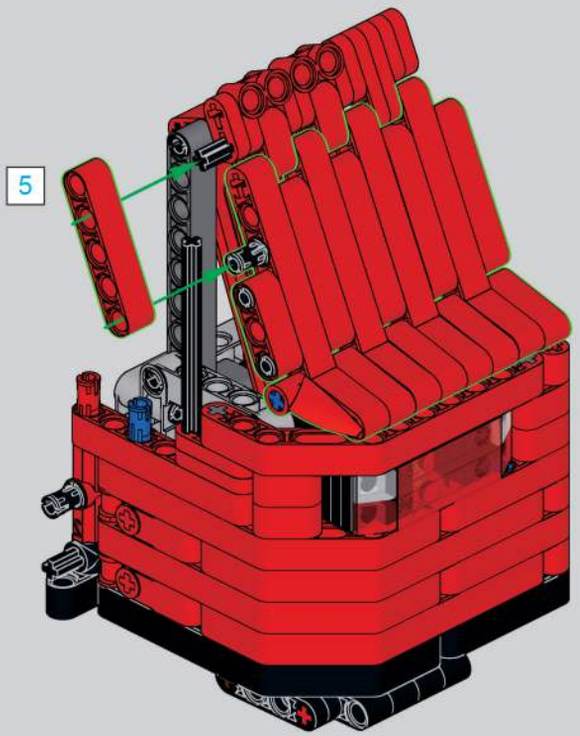

878

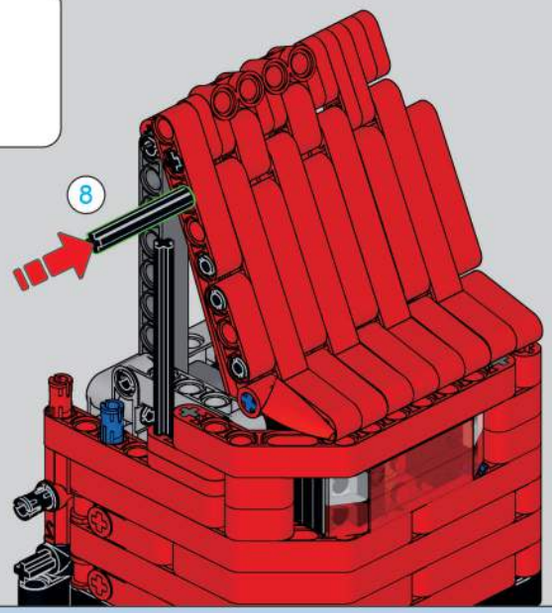

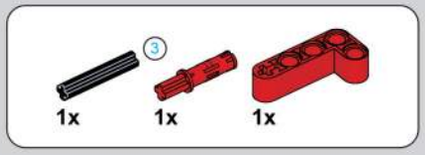

879

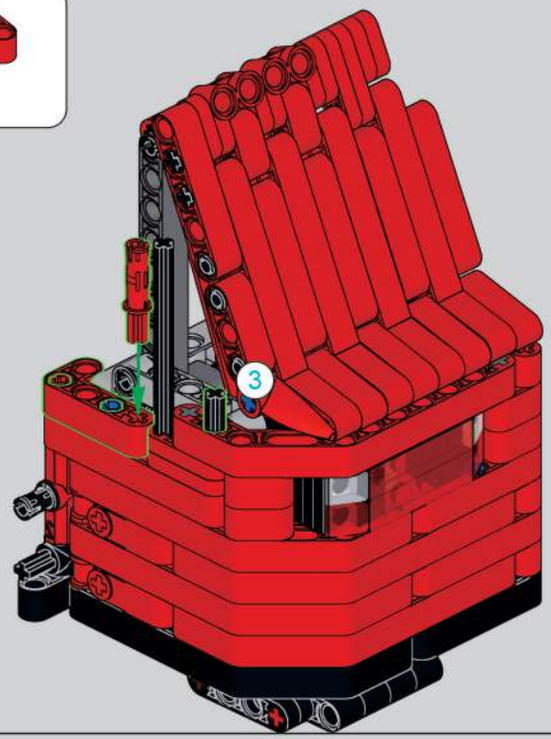

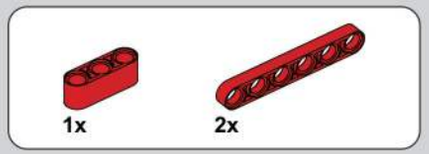

880

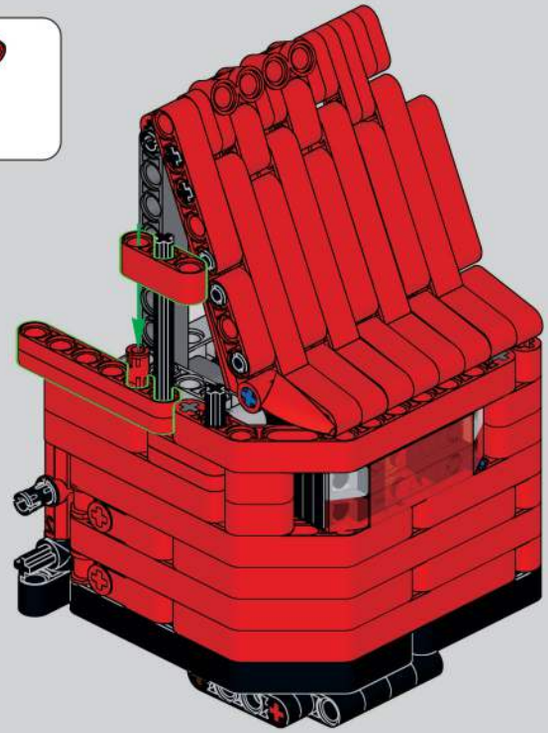

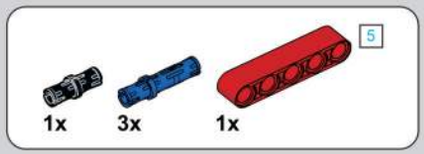

881

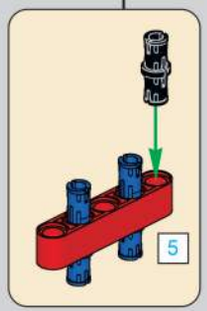

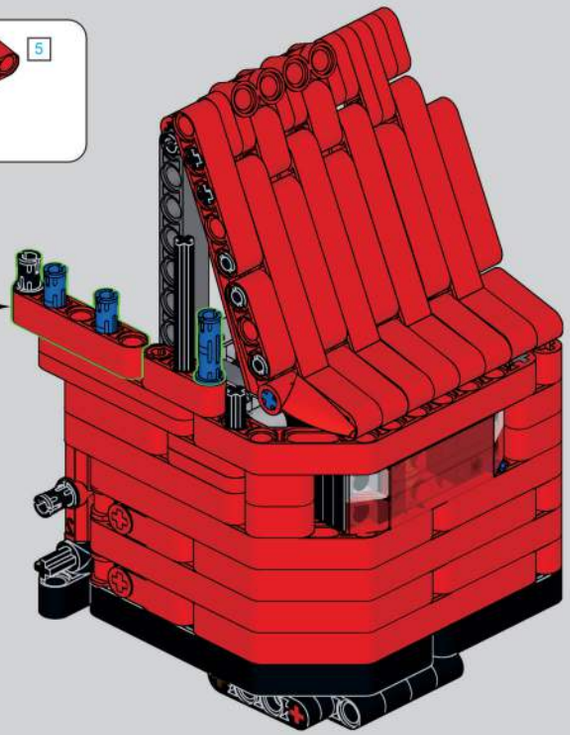

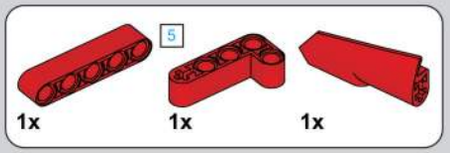

882

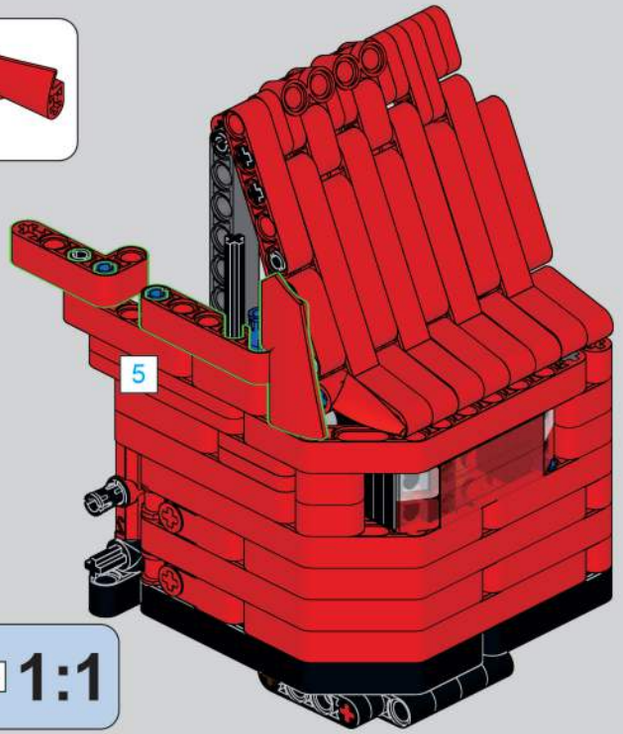

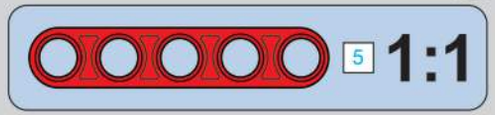

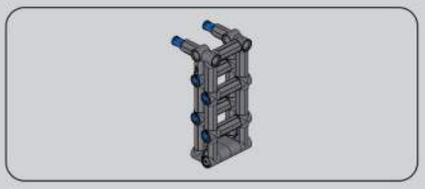

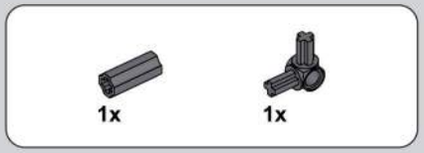

883

884

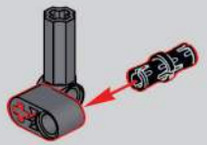

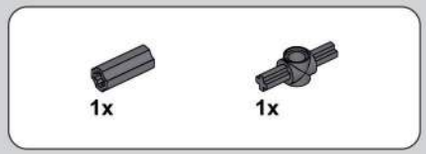

885

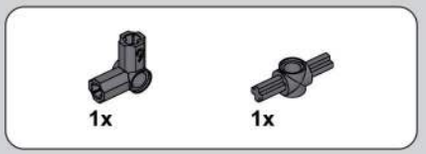

886

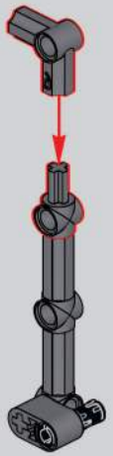

887

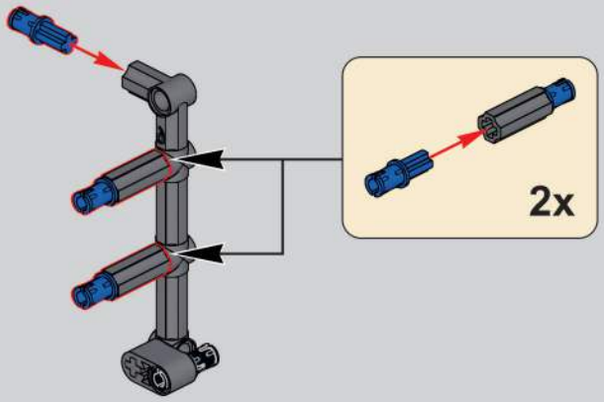

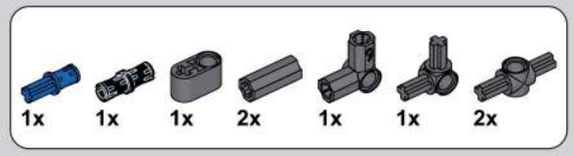

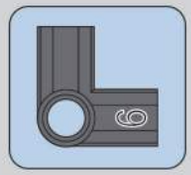

888

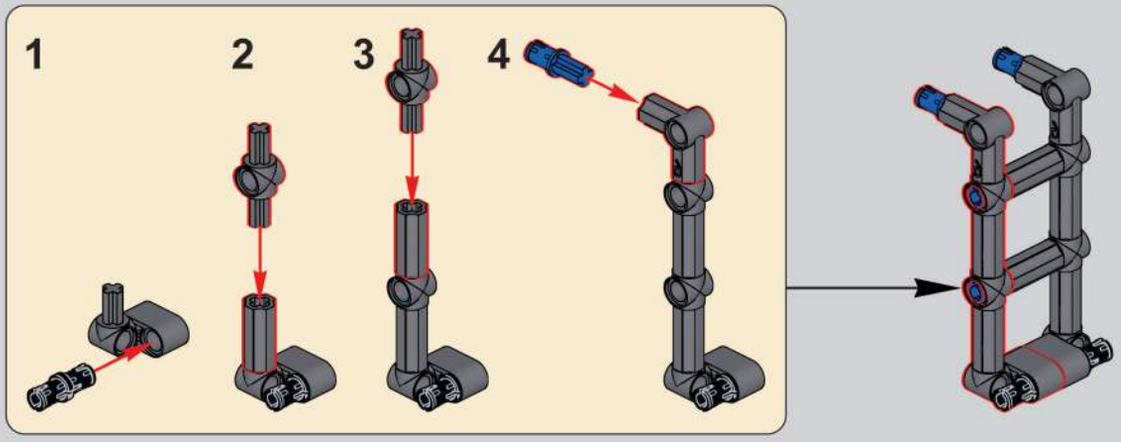

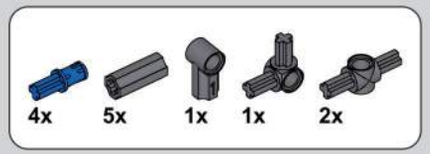

889

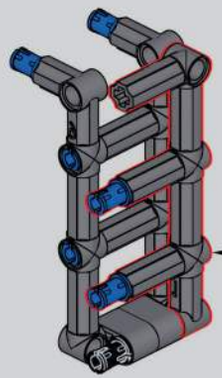

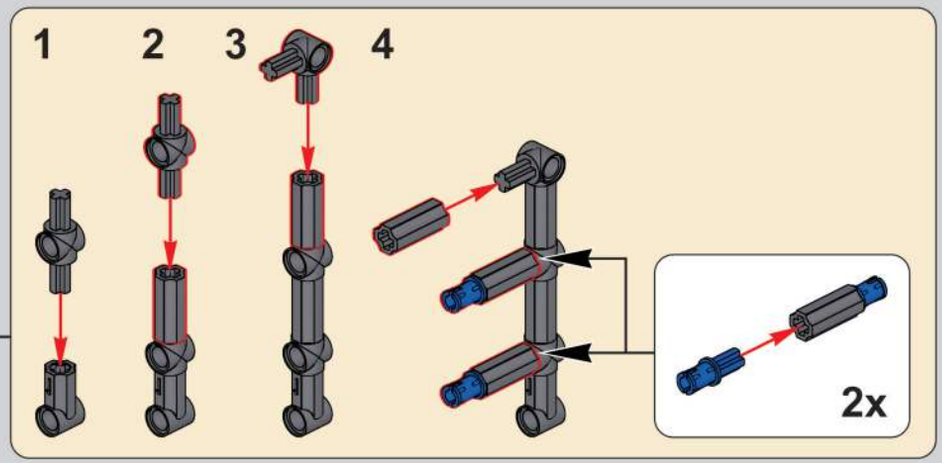

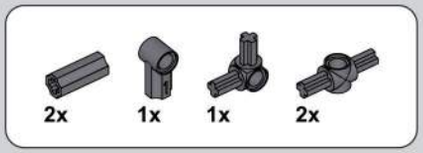

890

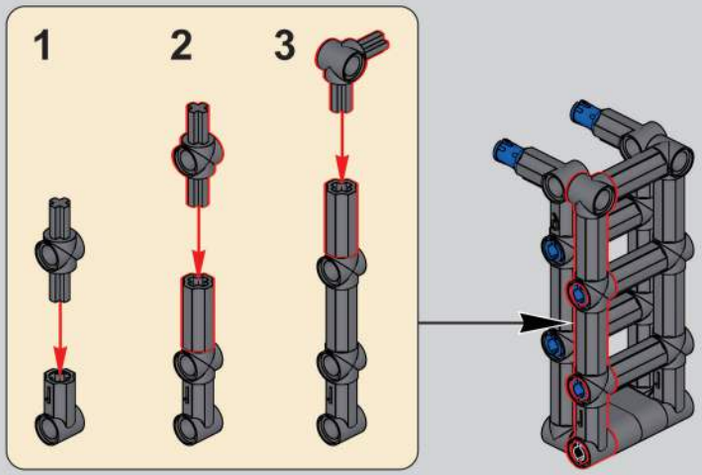

891

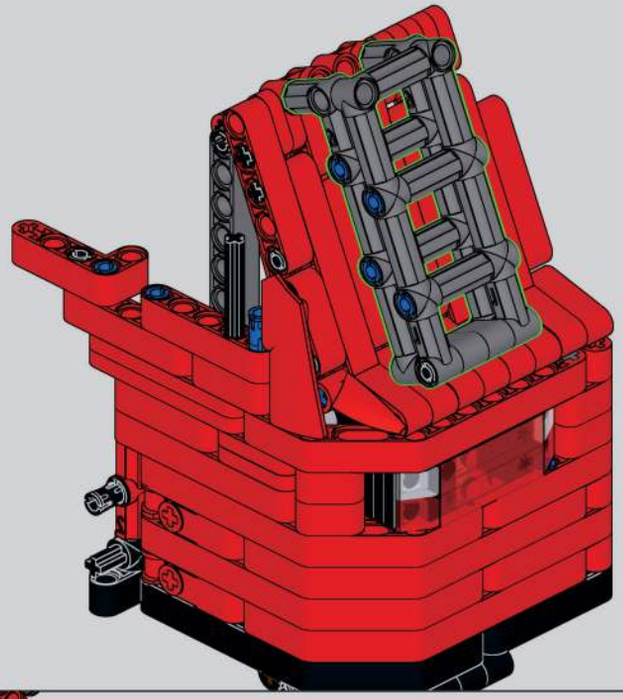

892

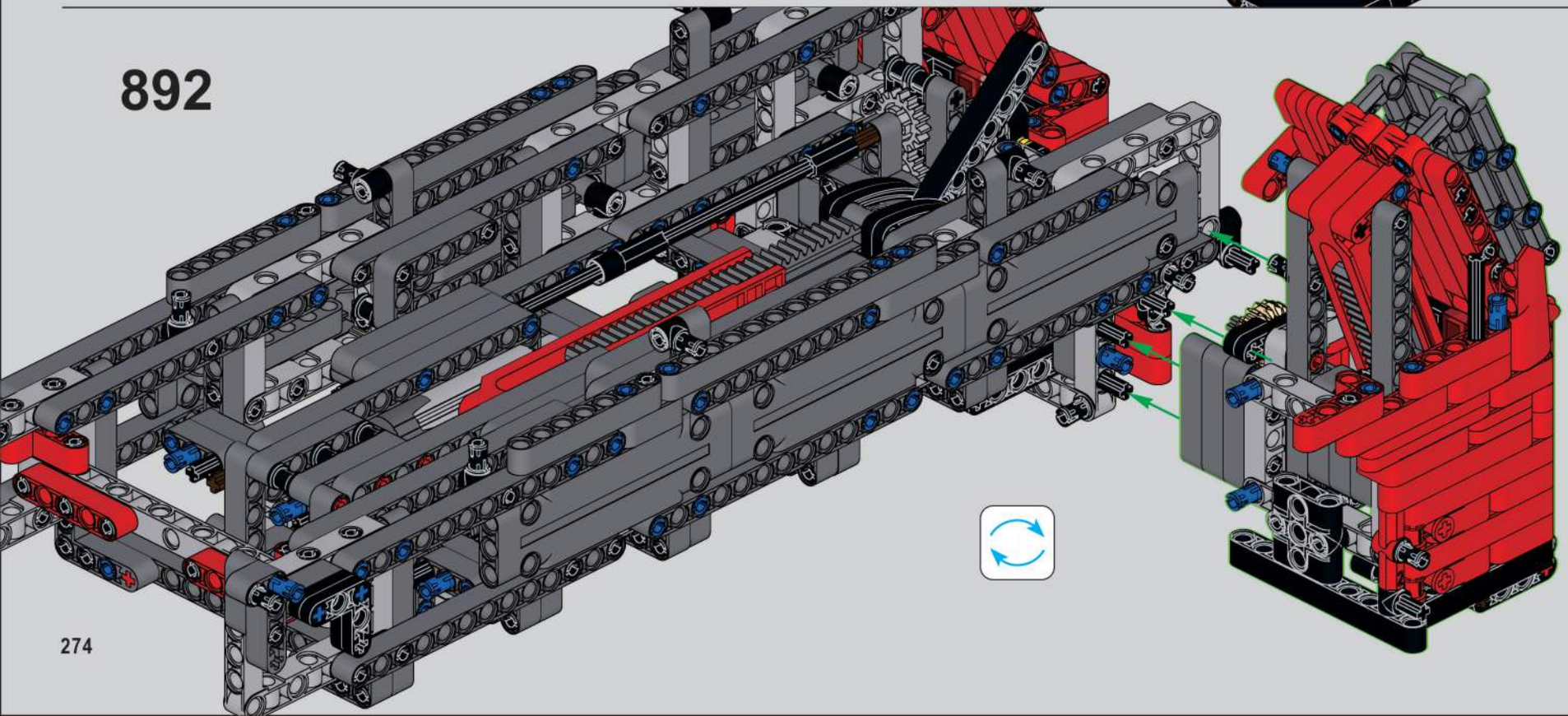

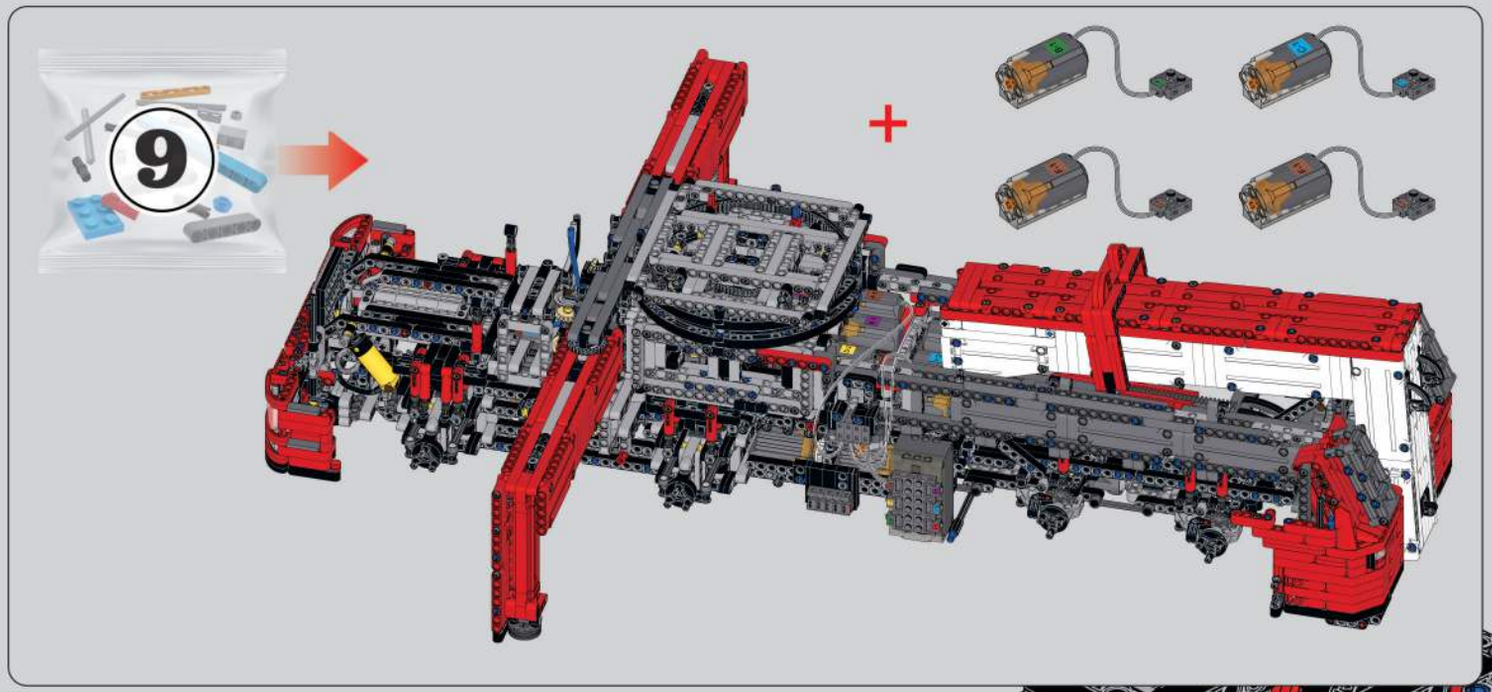

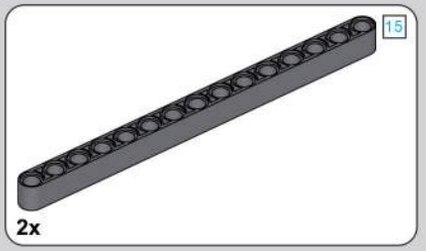

893

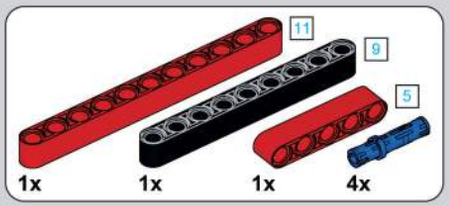

894

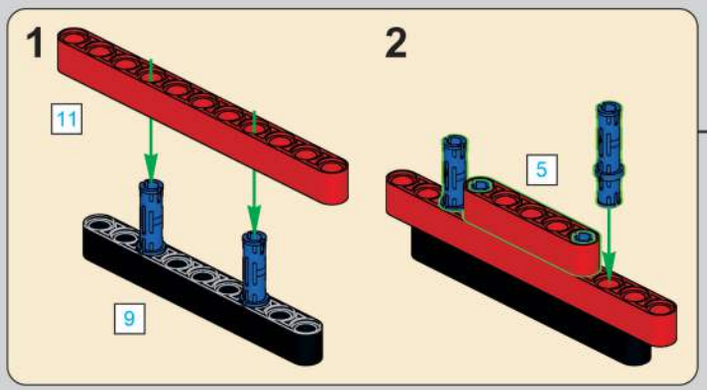

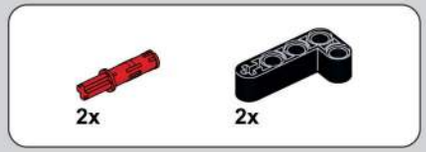

895

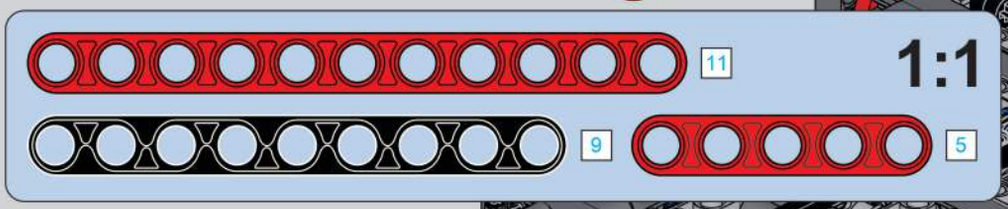

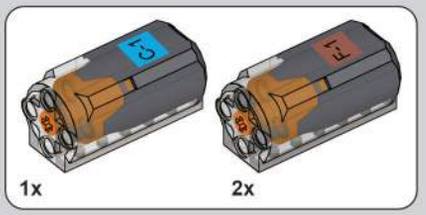

896

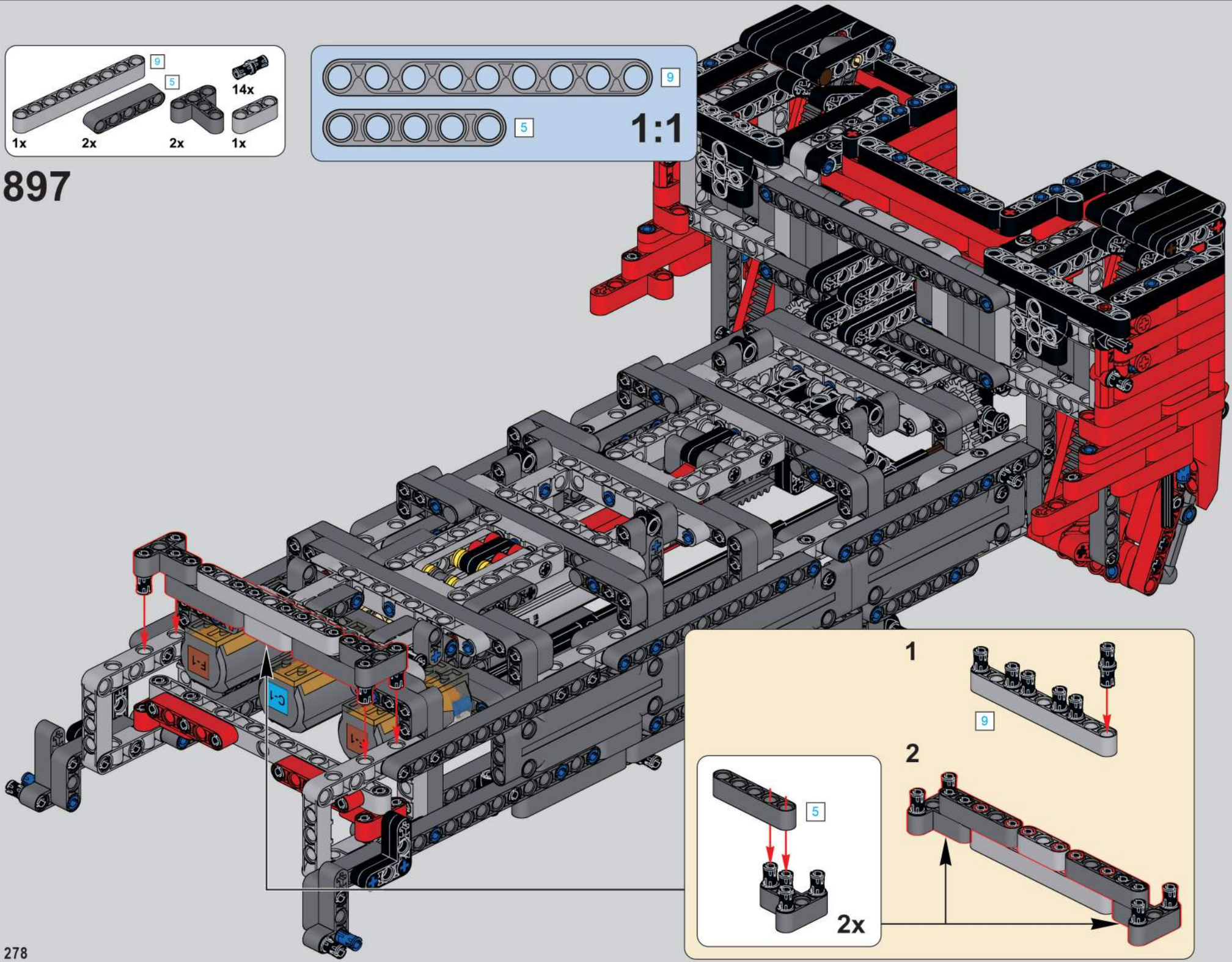

897

898

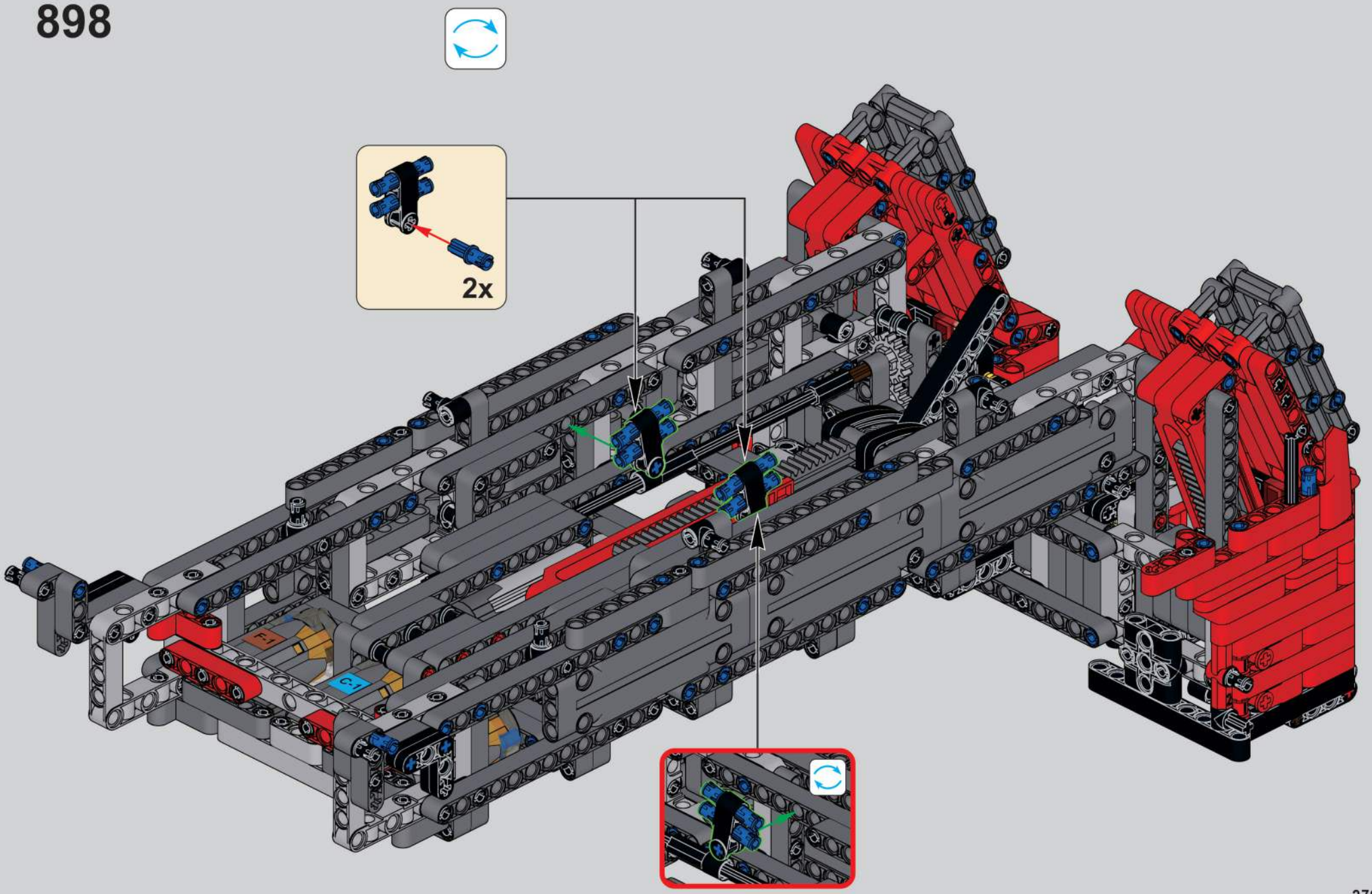

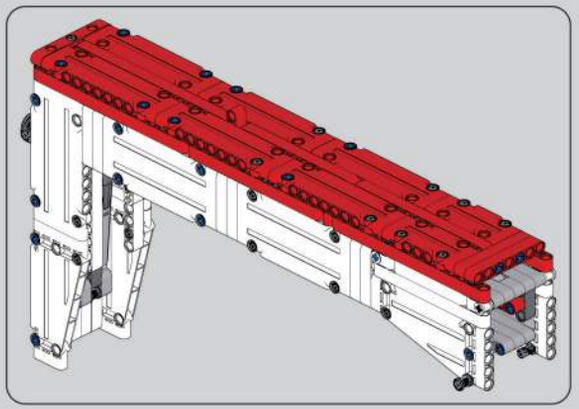

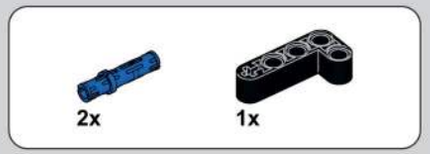

899

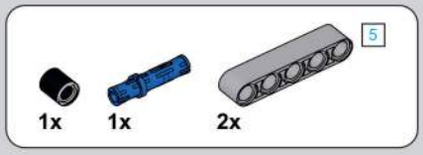

900

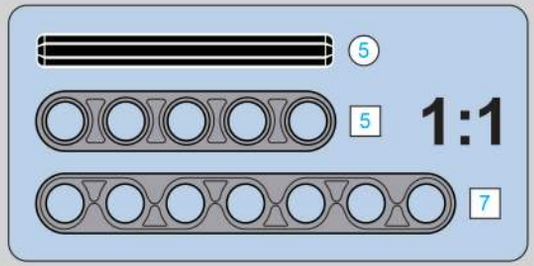

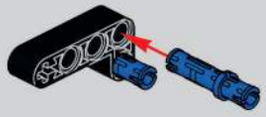

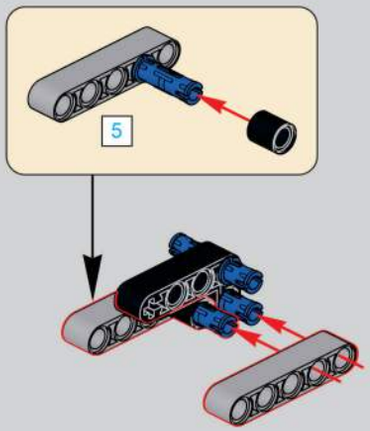

901

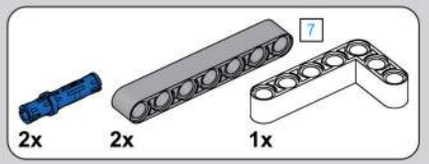

902

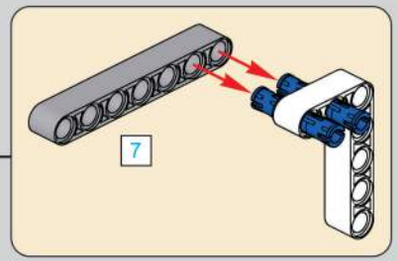

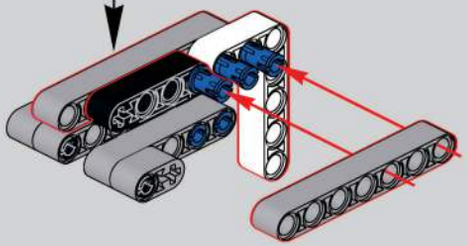

903

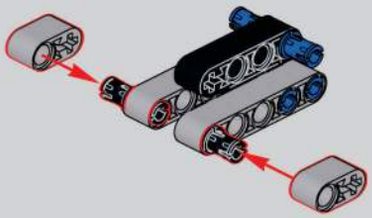

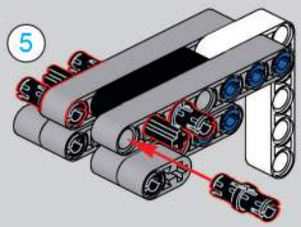

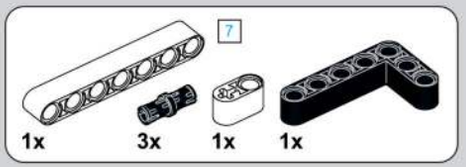

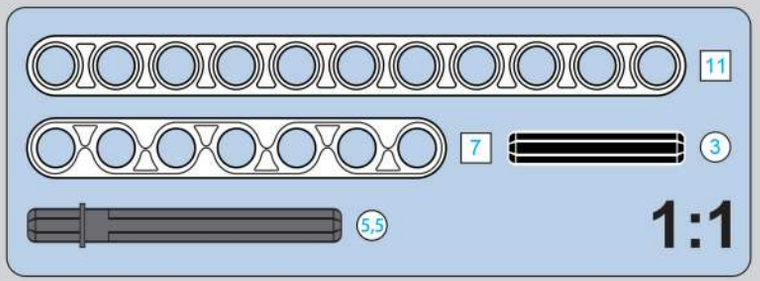

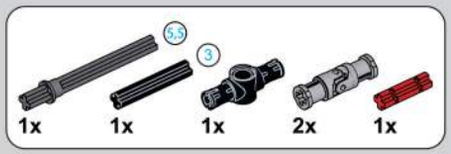

904

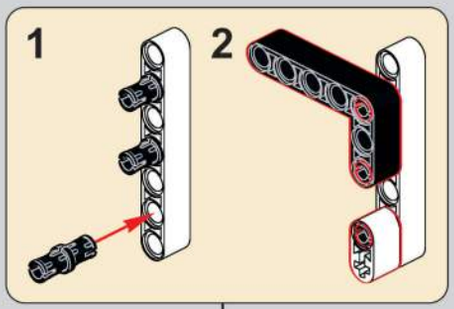

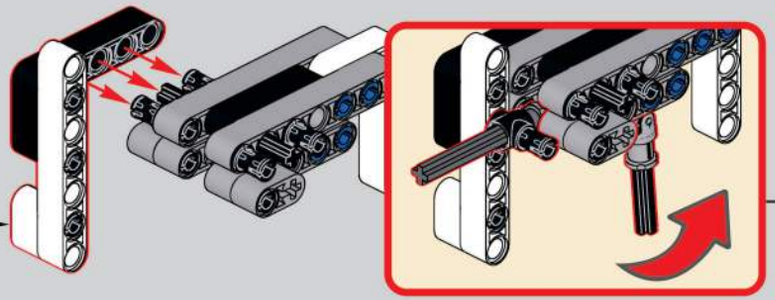

905

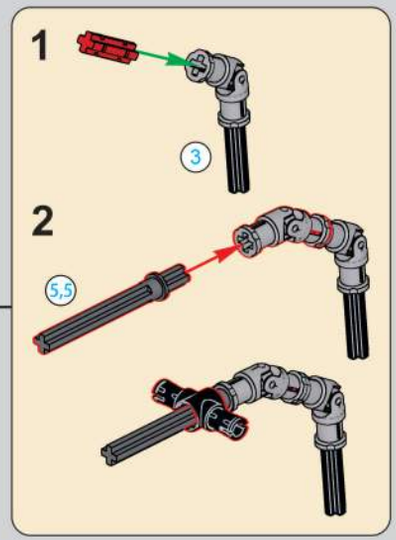

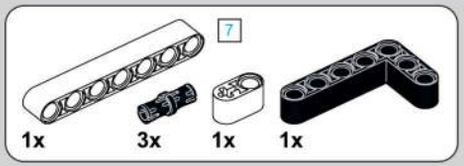

906

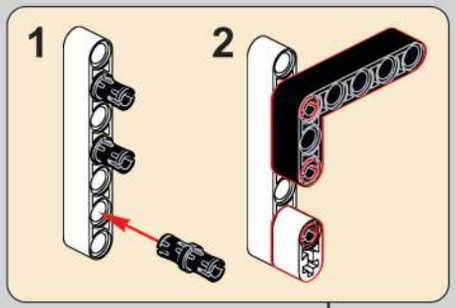

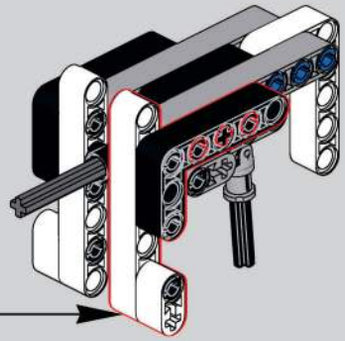

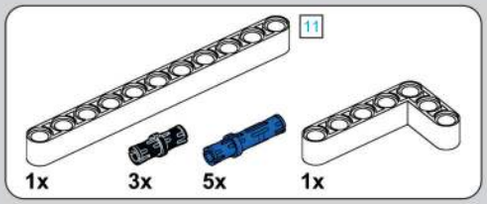

907

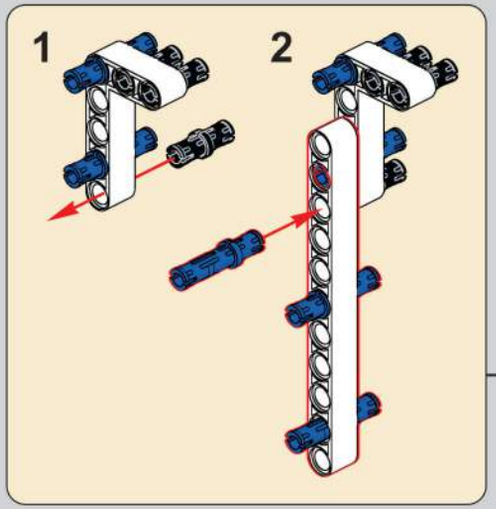

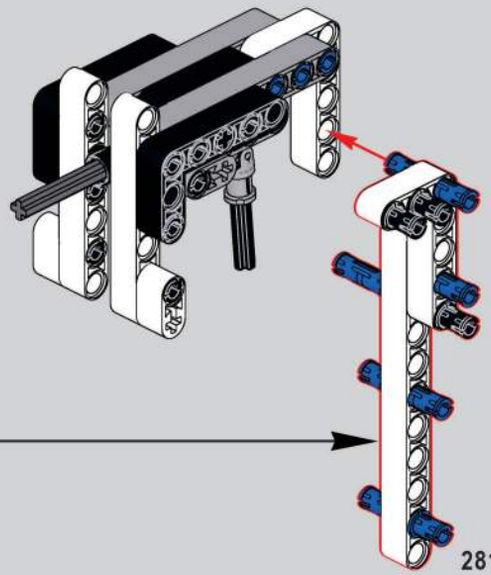

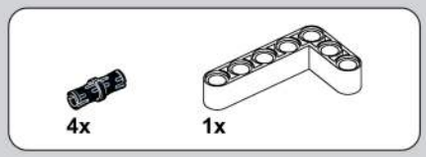

908

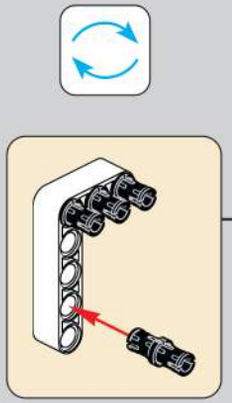

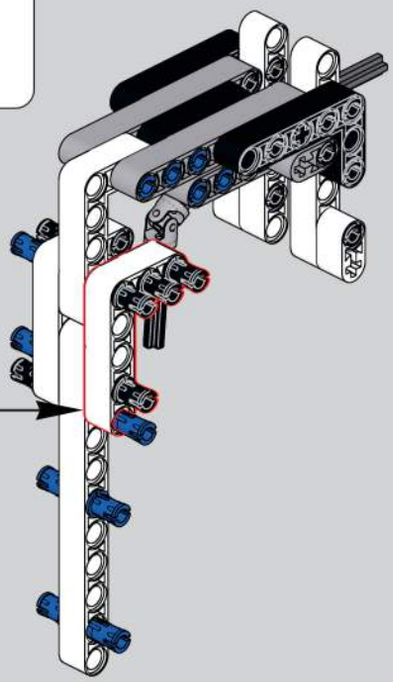

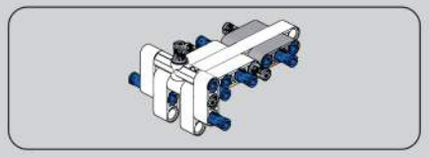

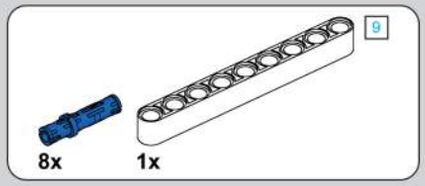

909

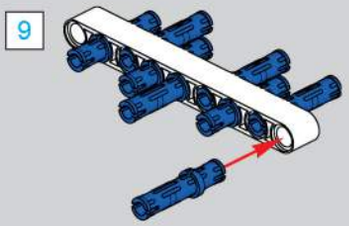

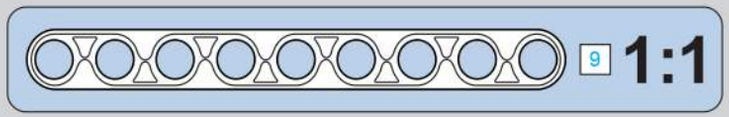

910

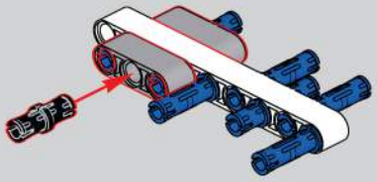

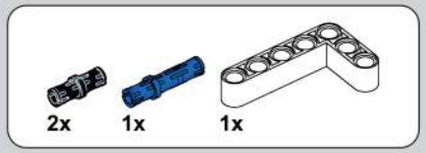

911

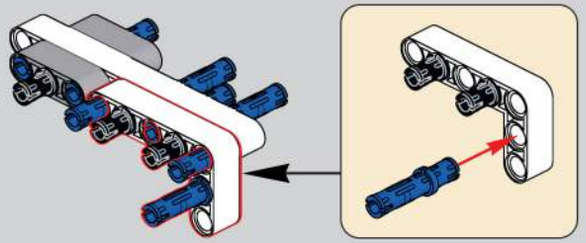

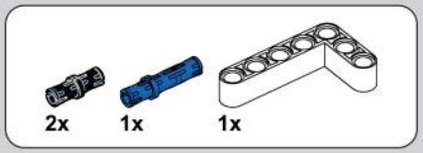

912

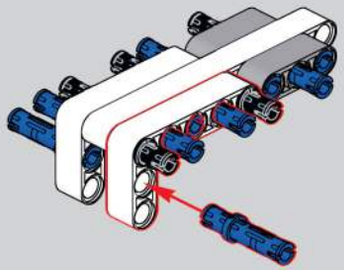

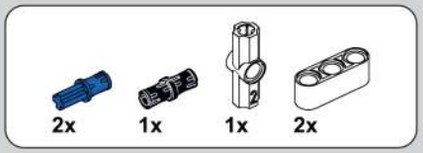

913

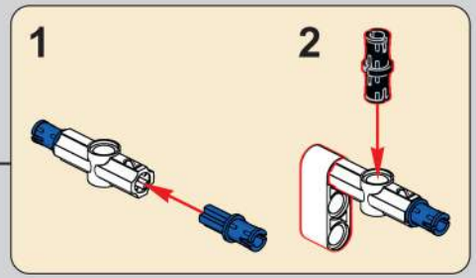

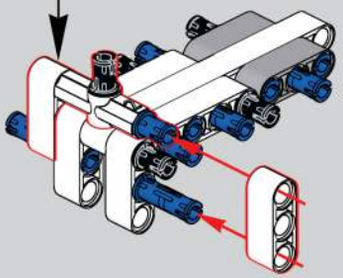

914

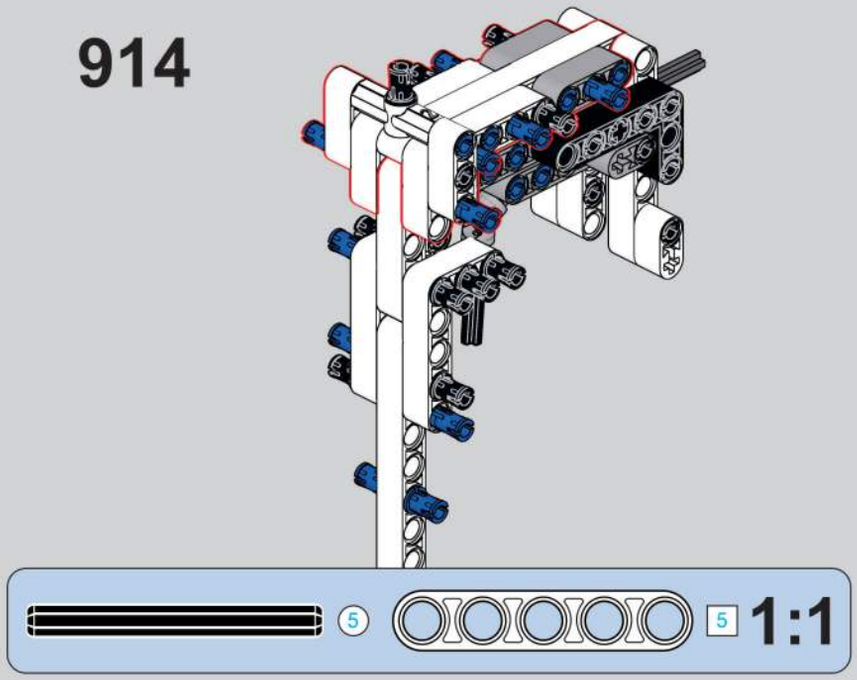

915

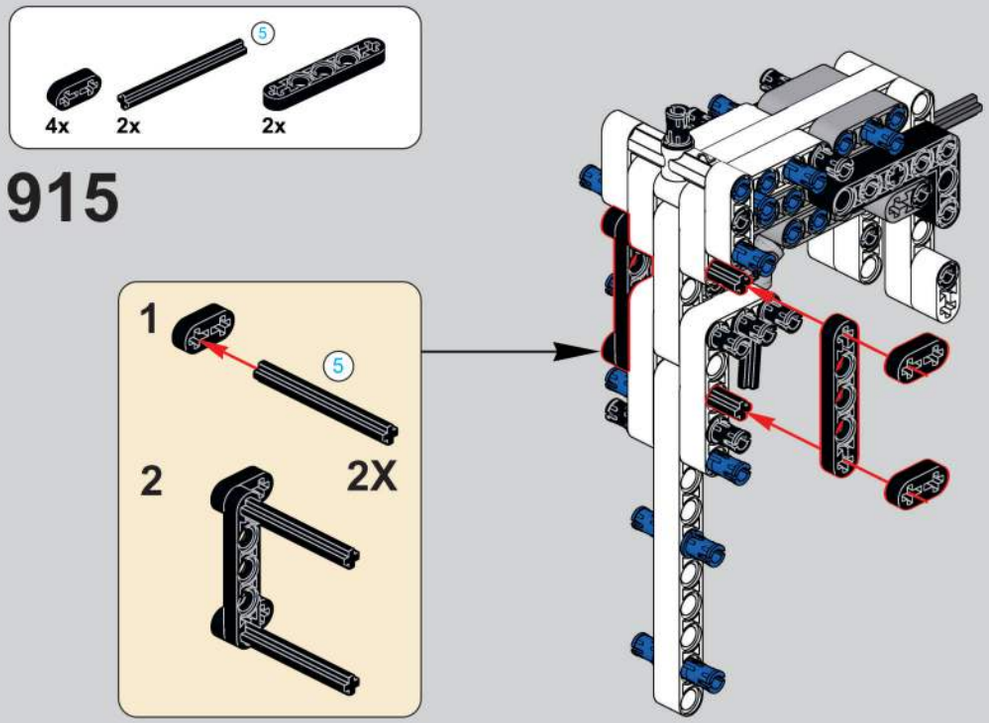

916

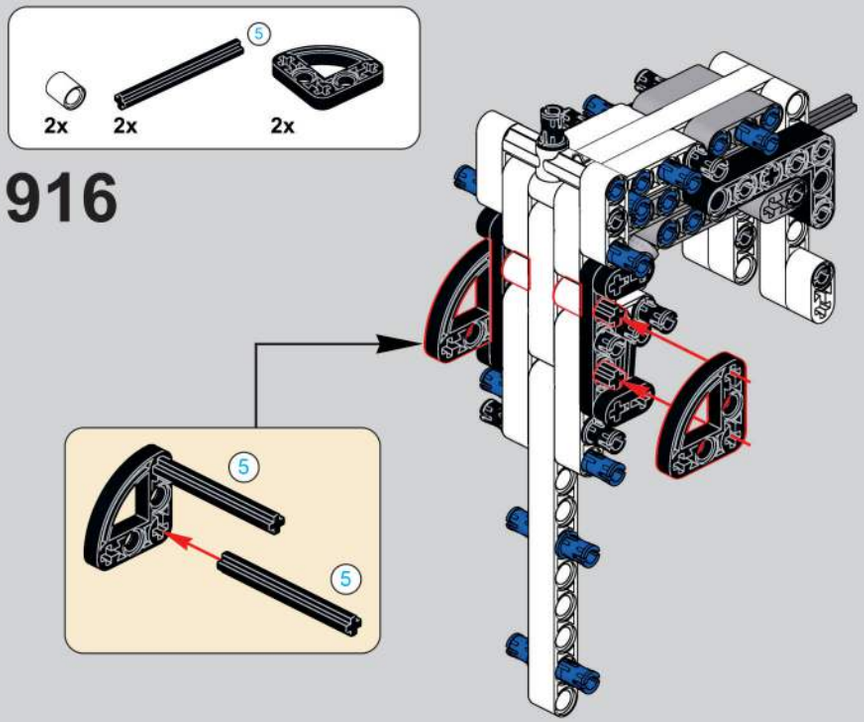

917

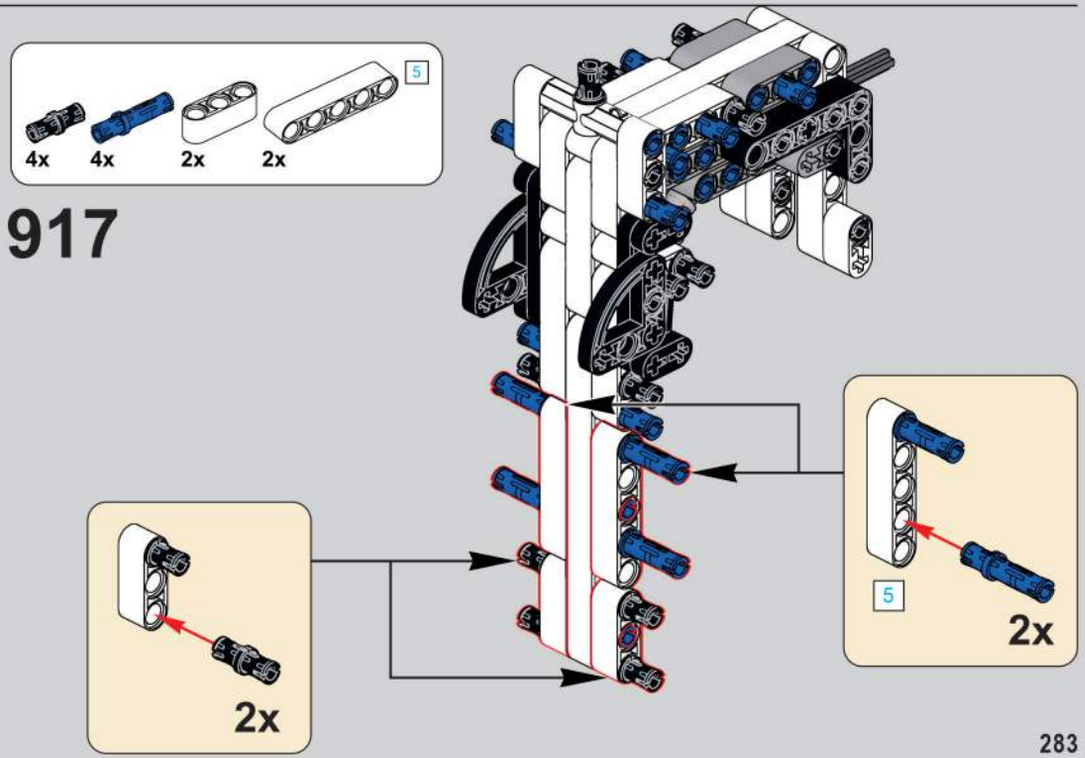

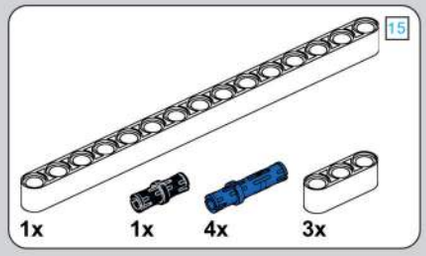

918

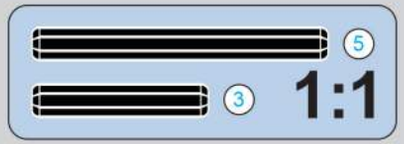

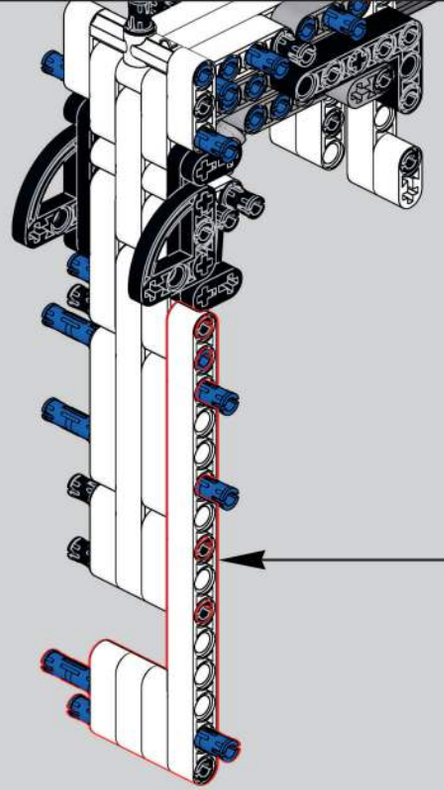

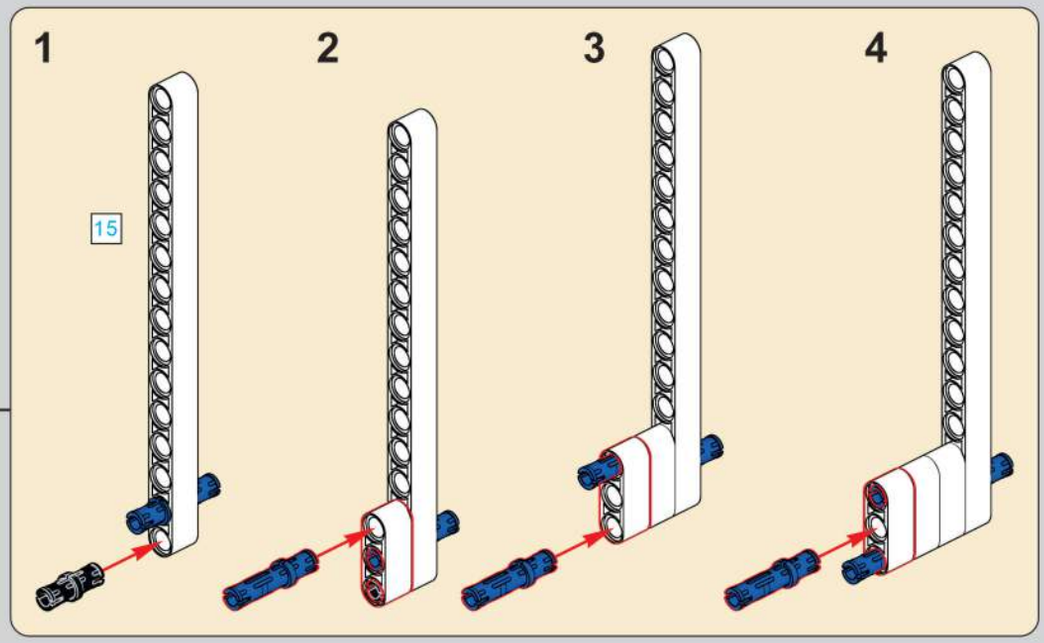

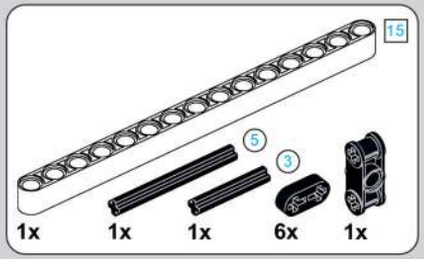

919

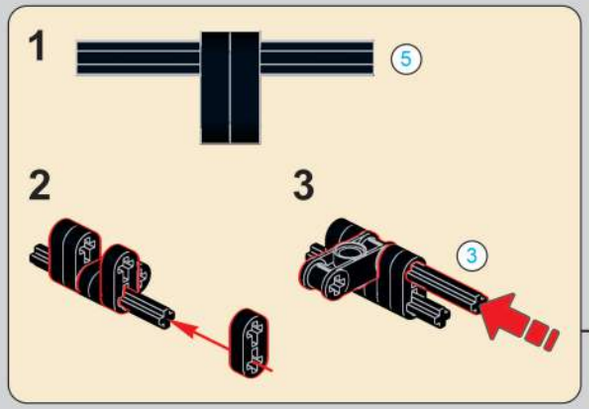

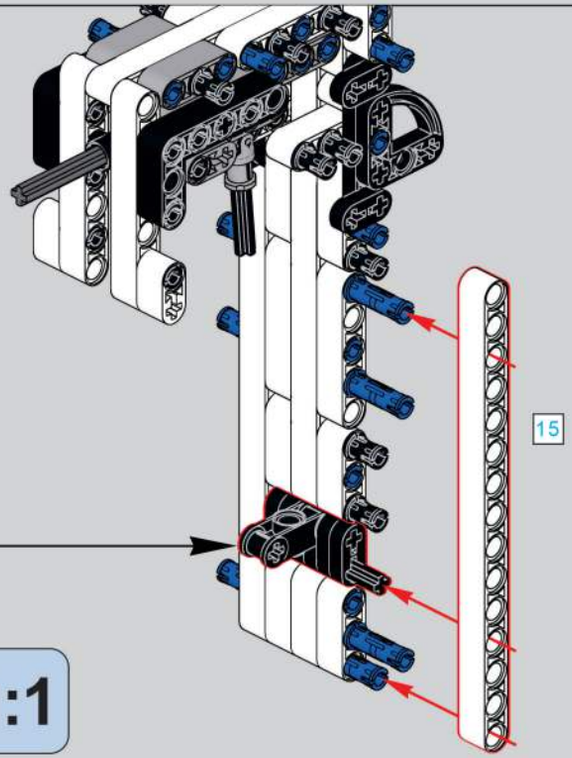

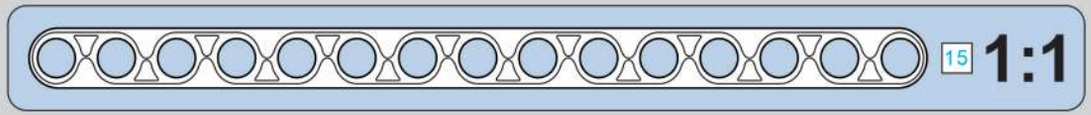

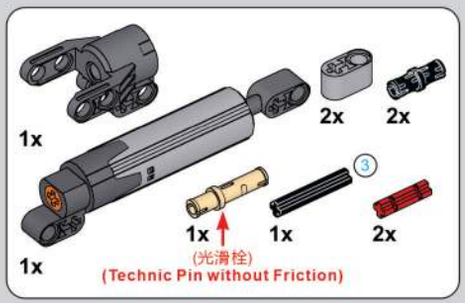

920

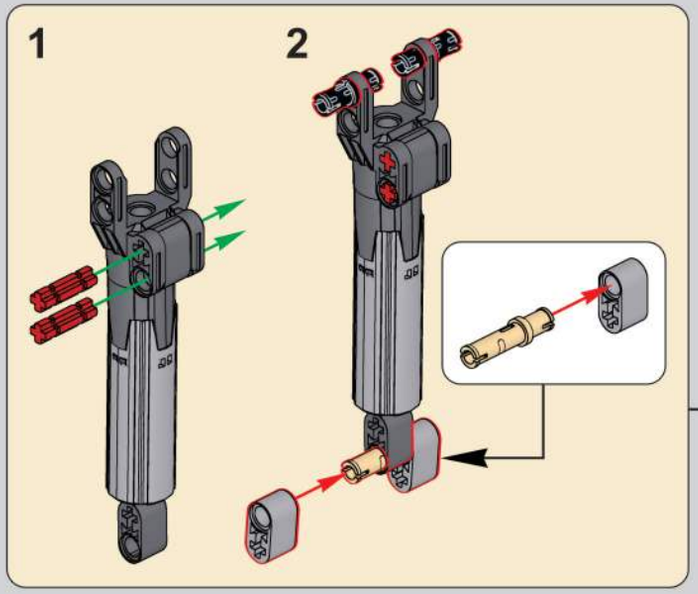

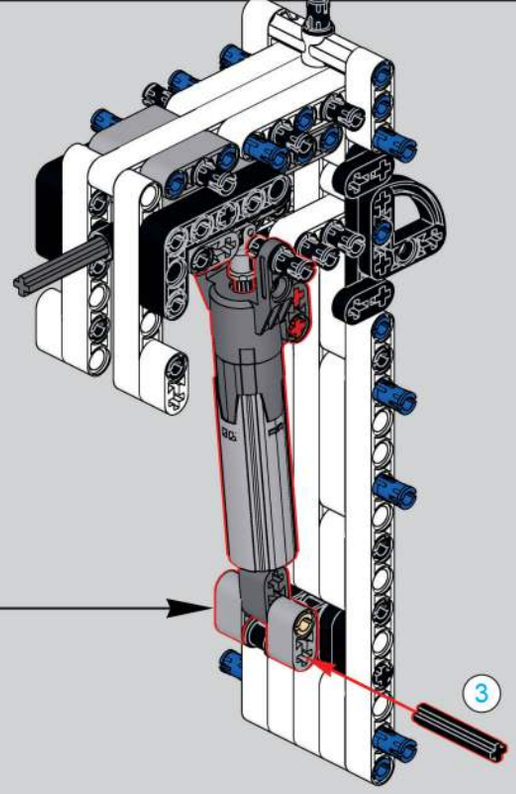

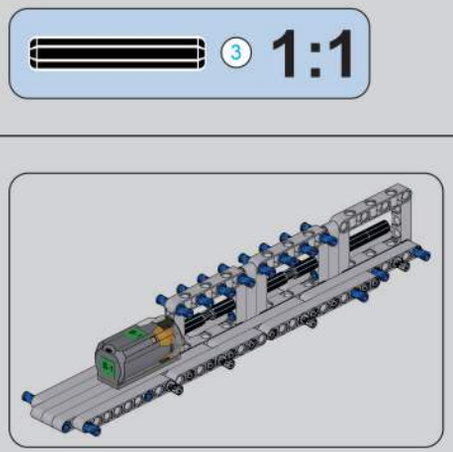

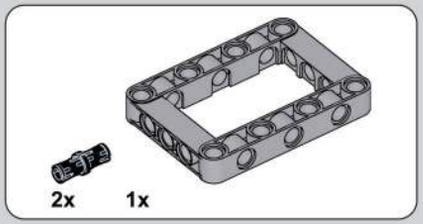

921

922

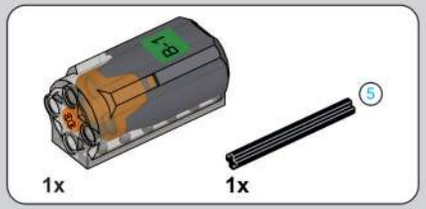

923

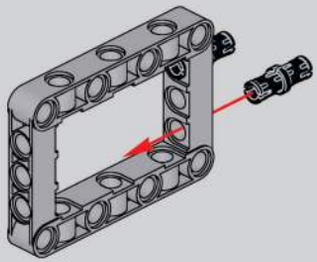

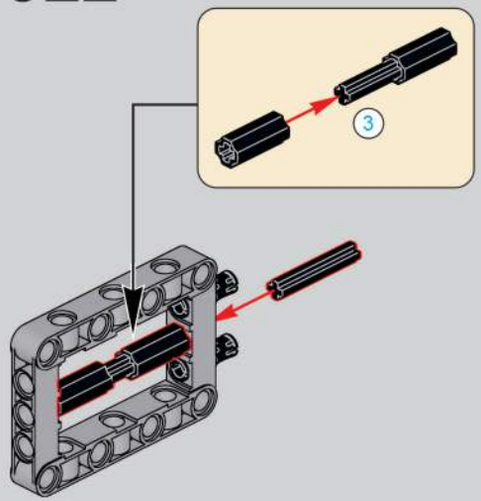

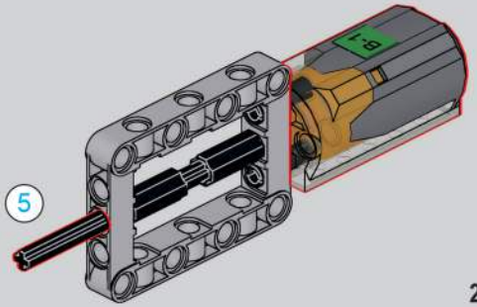

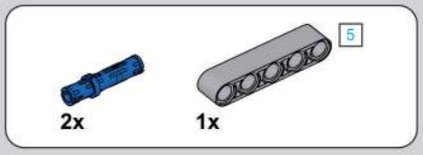

924

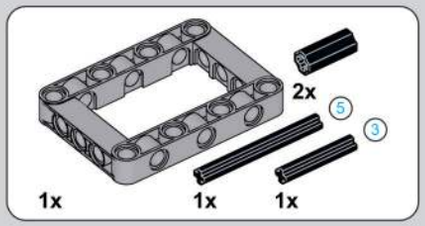

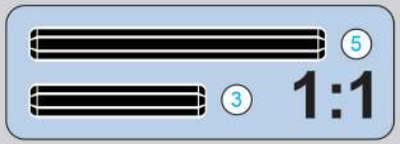

925

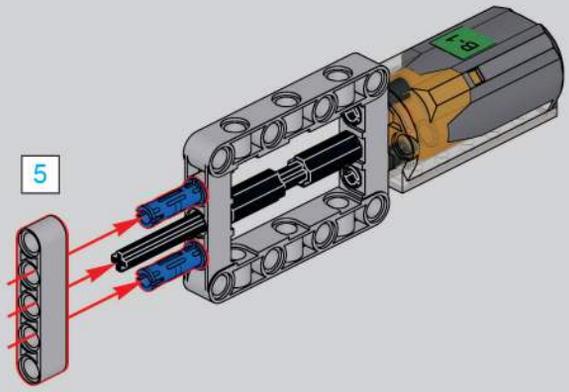

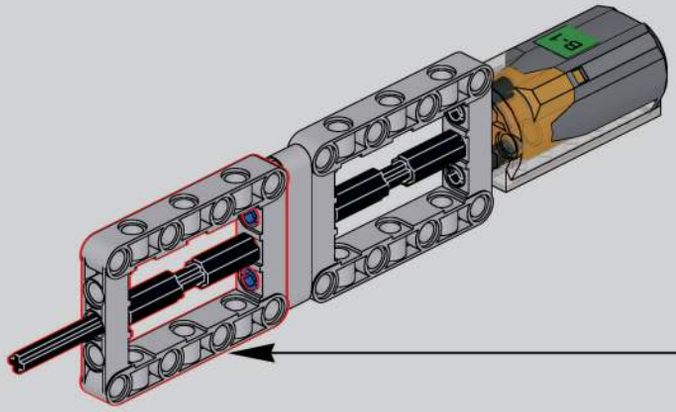

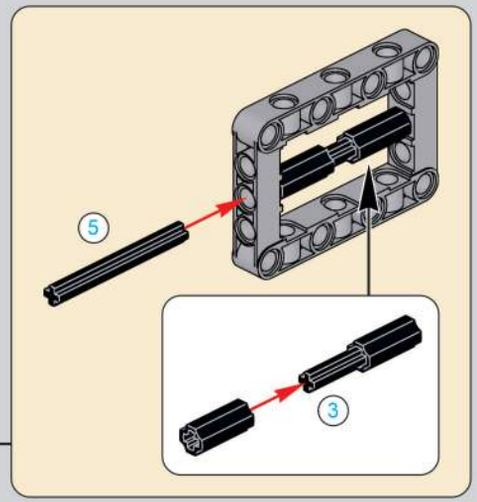

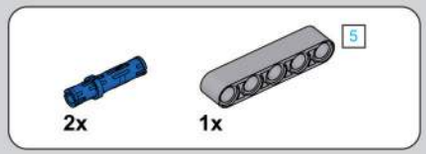

926

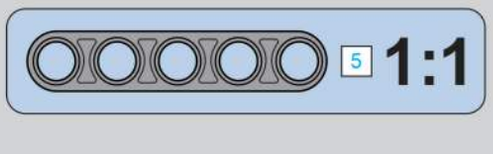

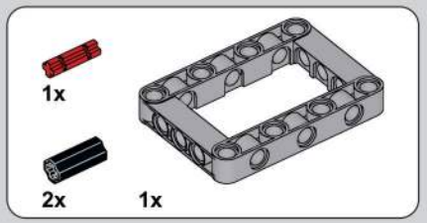

927

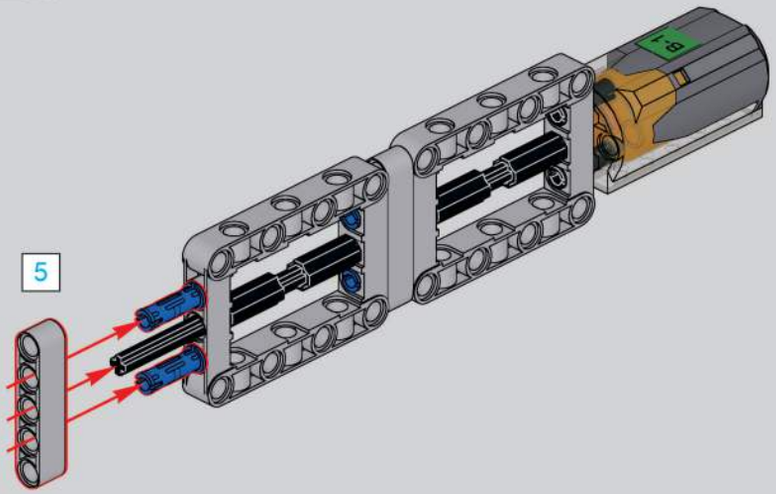

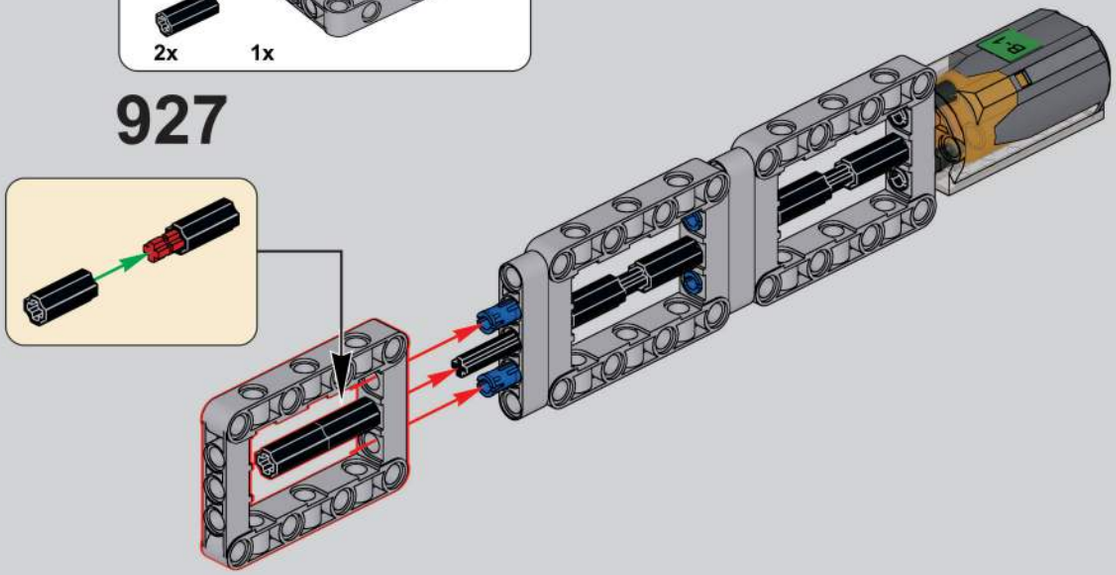

928

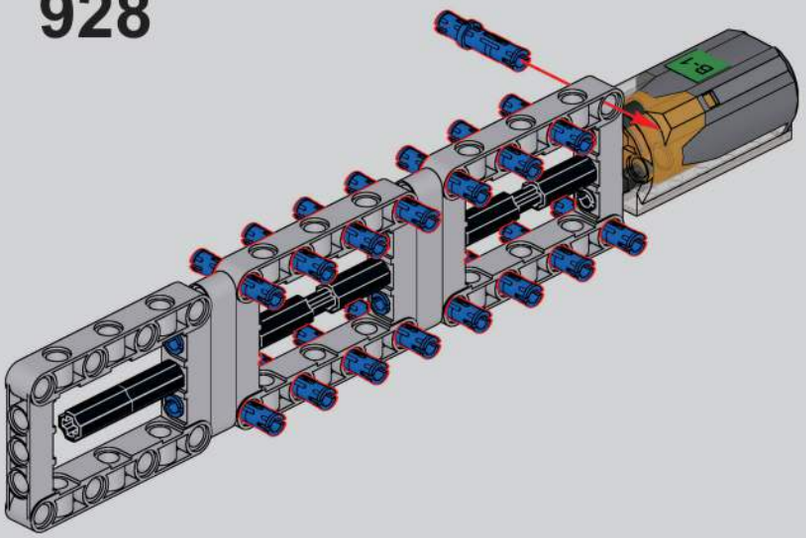

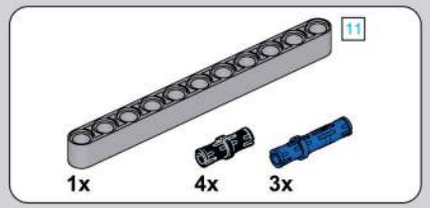

929

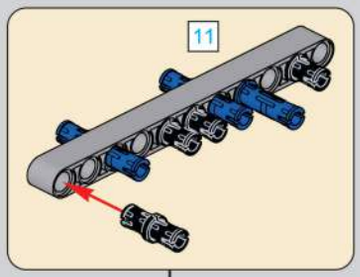

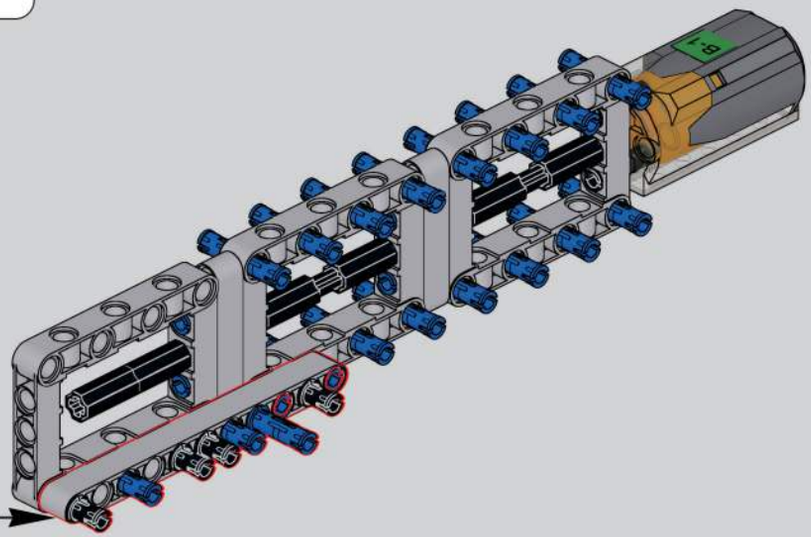

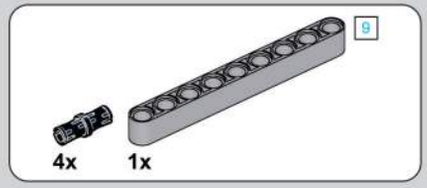

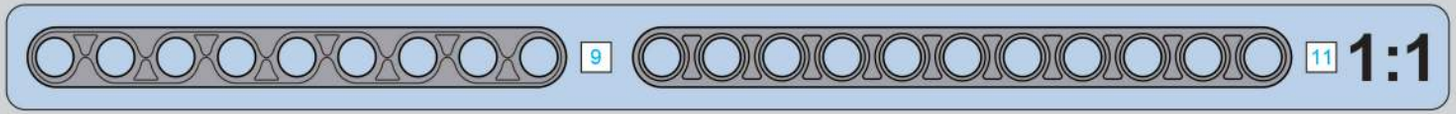

930

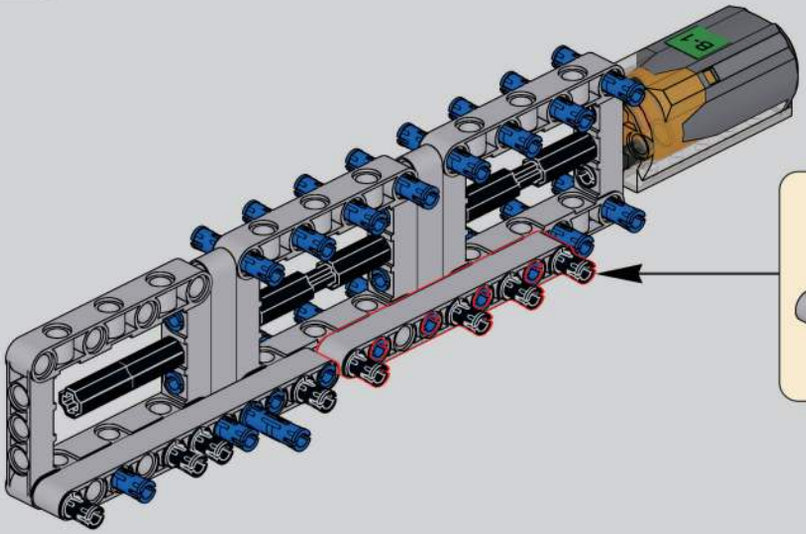

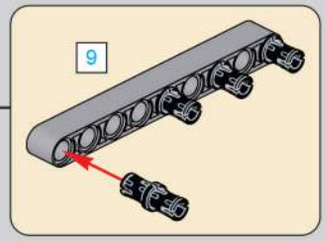

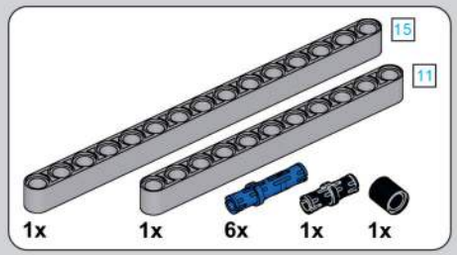
15
11
1x
1x
6x
1x
1x

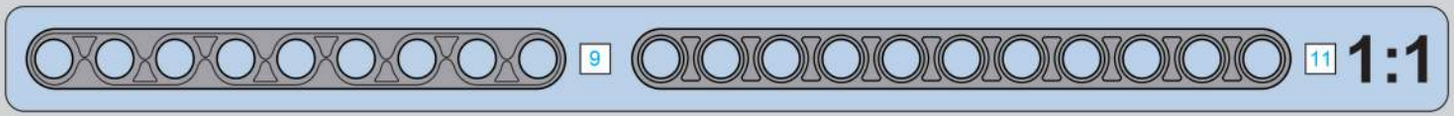
9
11
1:1

931

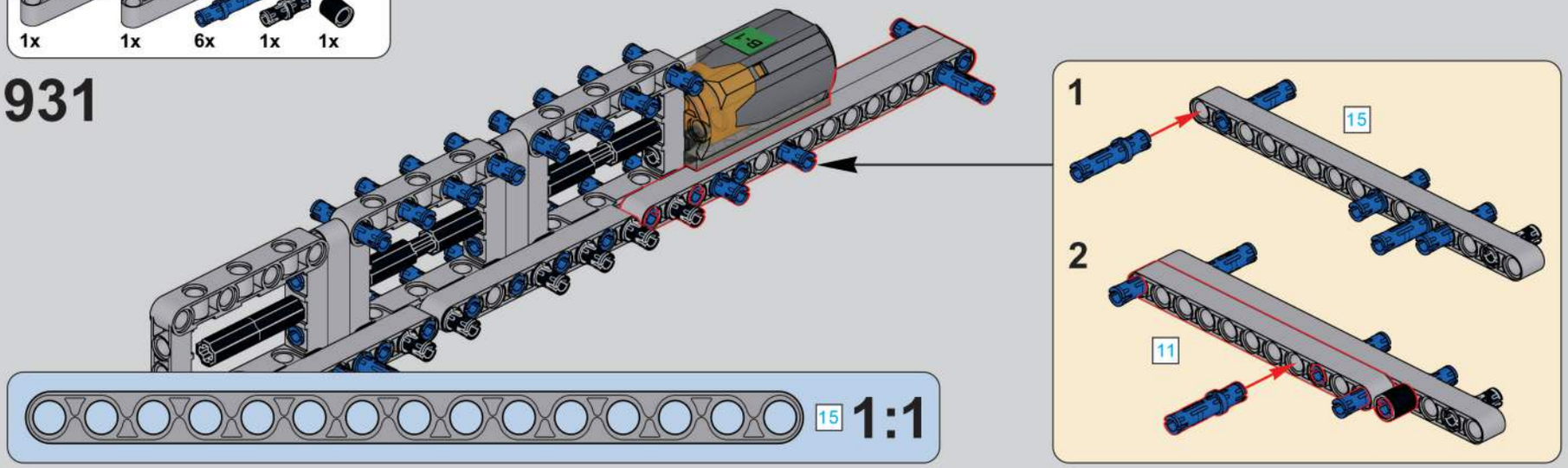
B-1
1
15
2
11
15
1:1

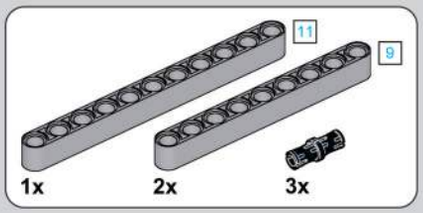
11
9
1x
2x
3x

932

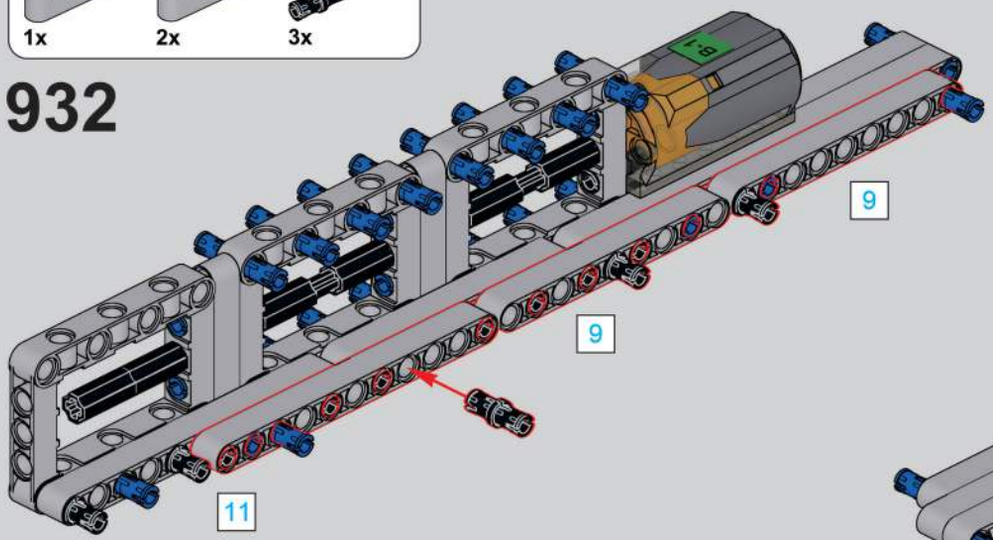
B-1
9
9
11

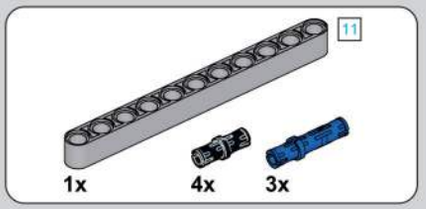
11
1x
4x
3x

933

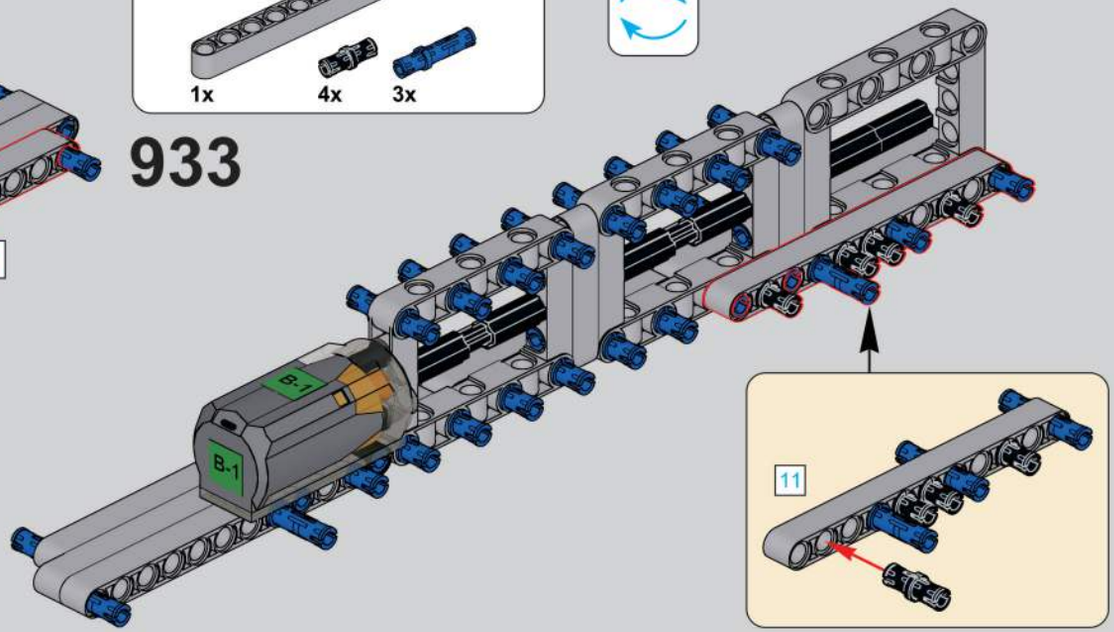
B-1
B-1
11

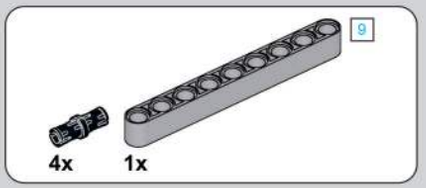
9
4x
1x

934

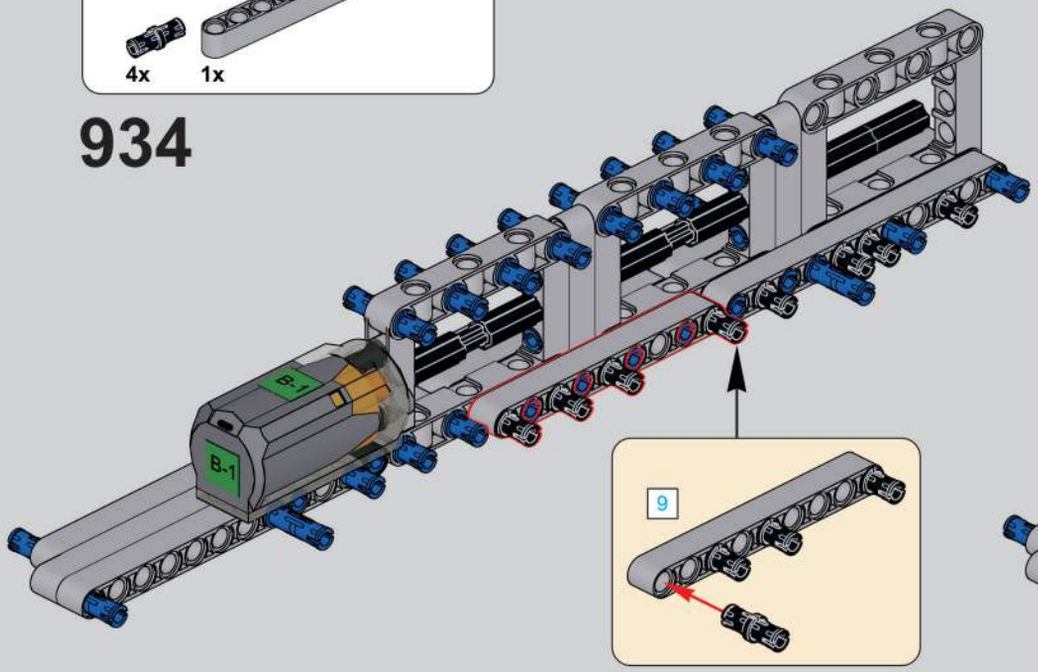
B-1
B-1
9

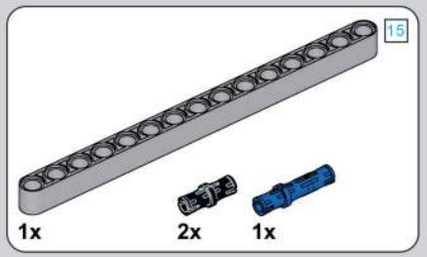
15
1x
2x
1x

935

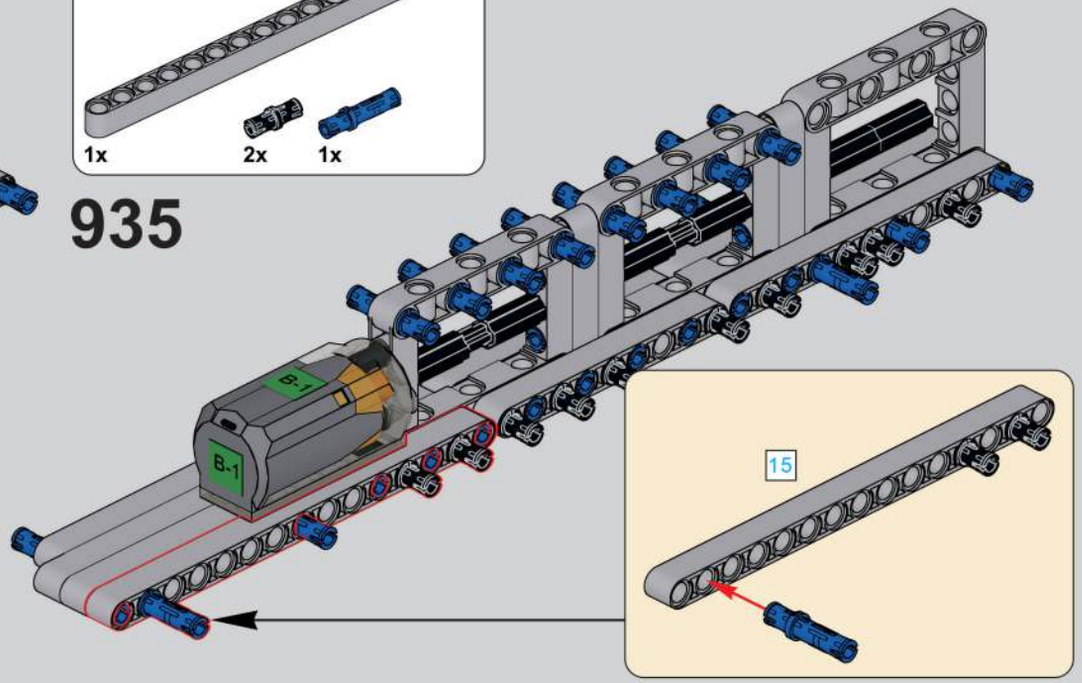
B-1
B-1
15

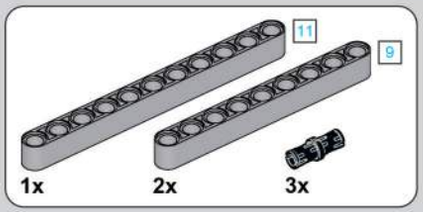
11
9
1x
2x
3x

936

9
11
1:1

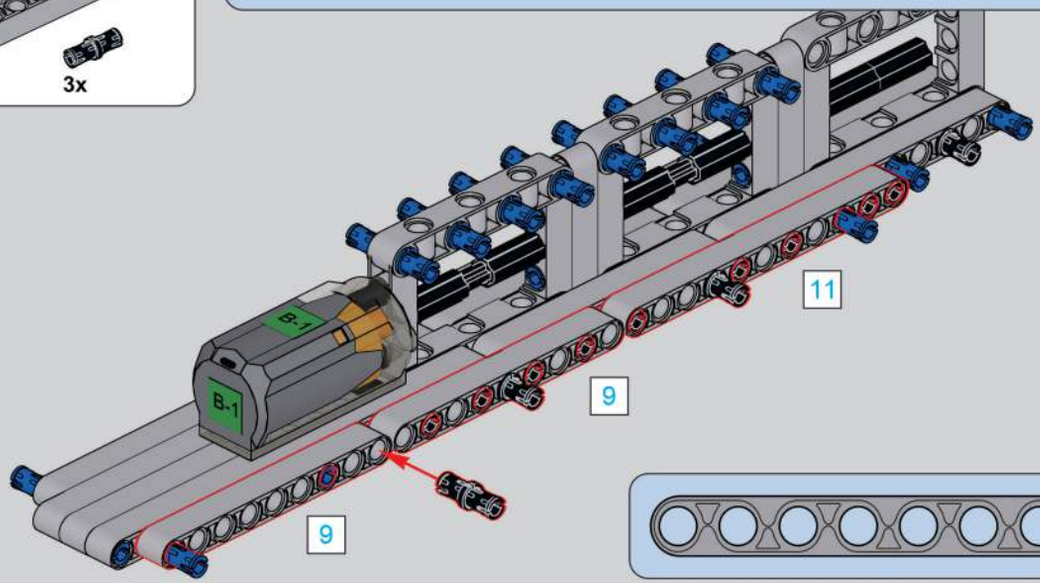
B-1
B-1
11
9
9

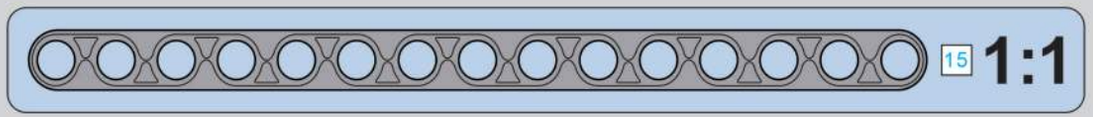
15
1:1

937

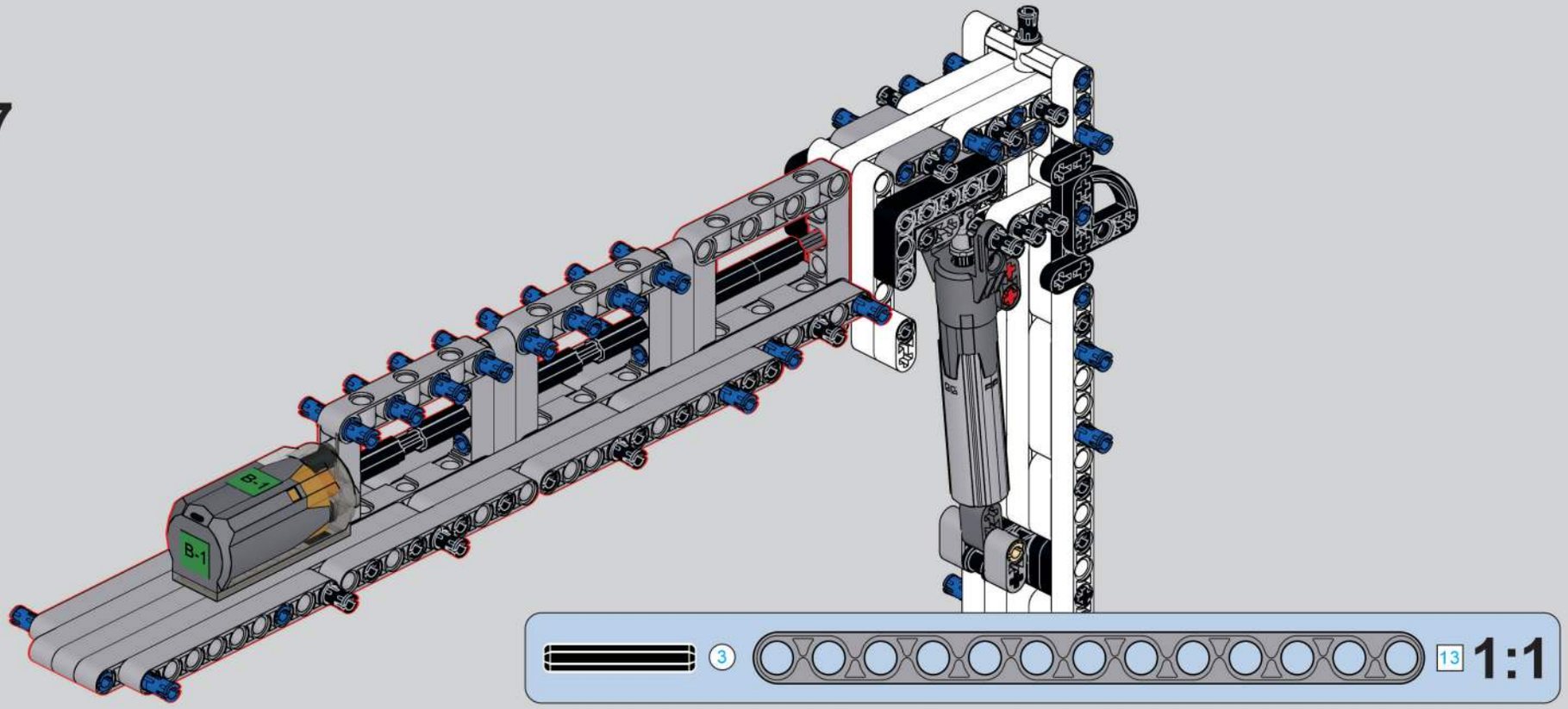

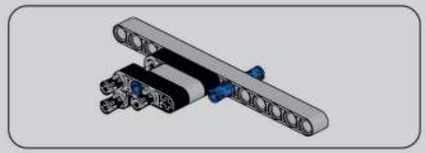

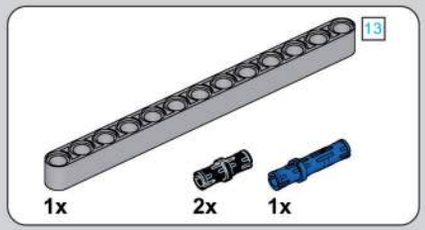

938

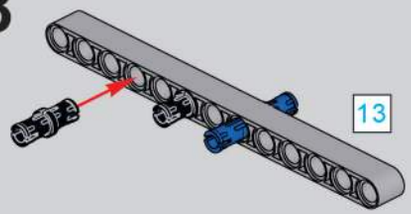

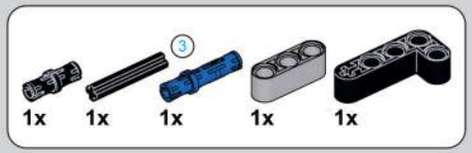

939

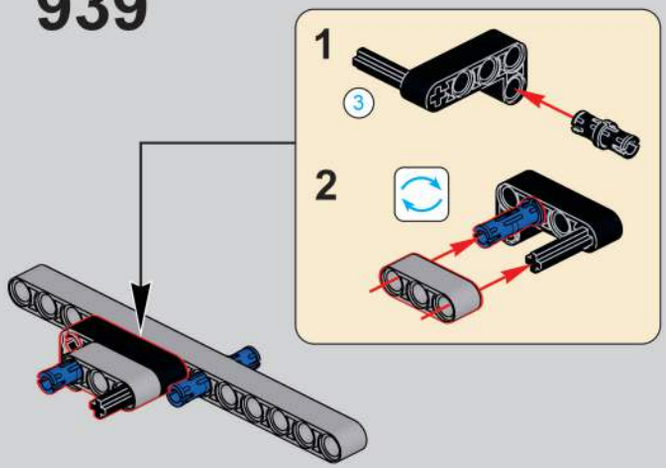

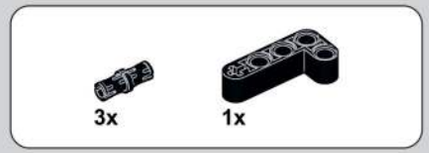

940

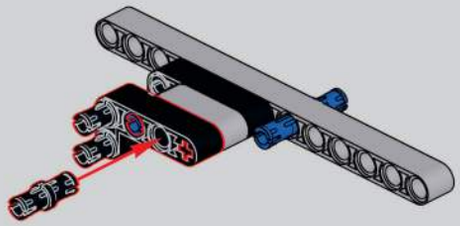

941

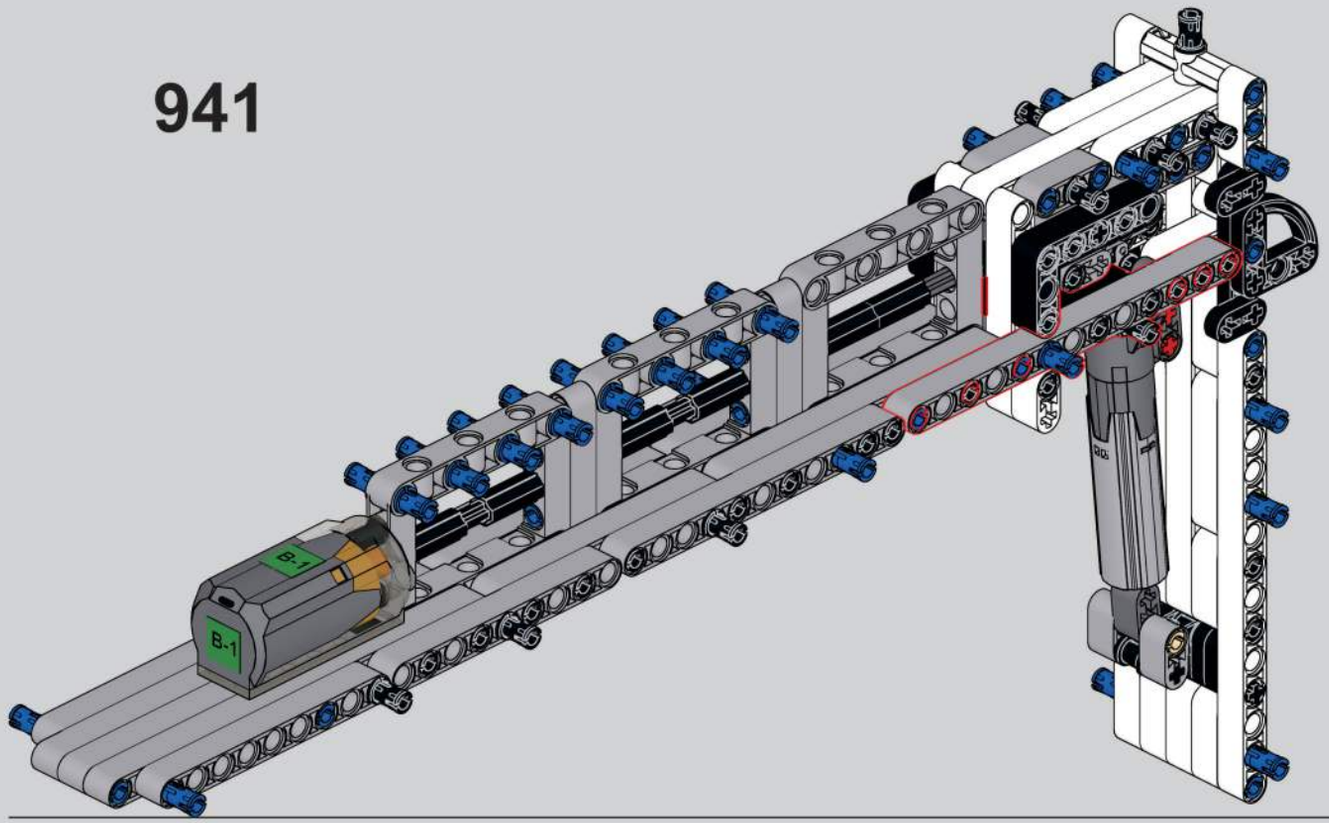

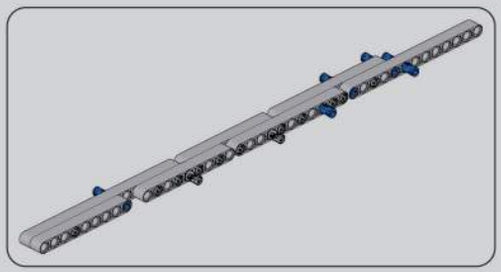

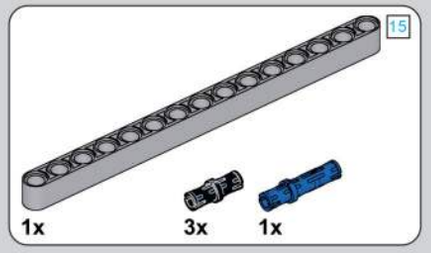

942

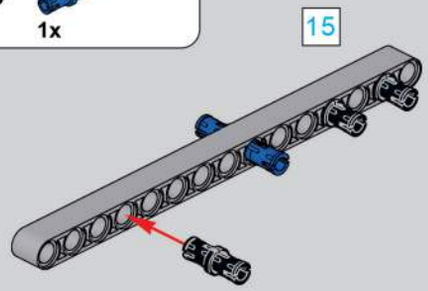

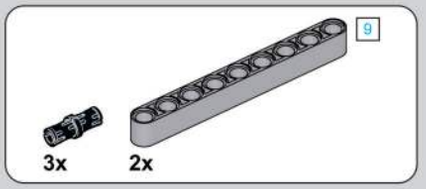

943

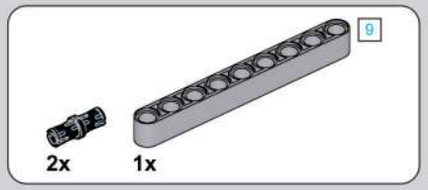

944

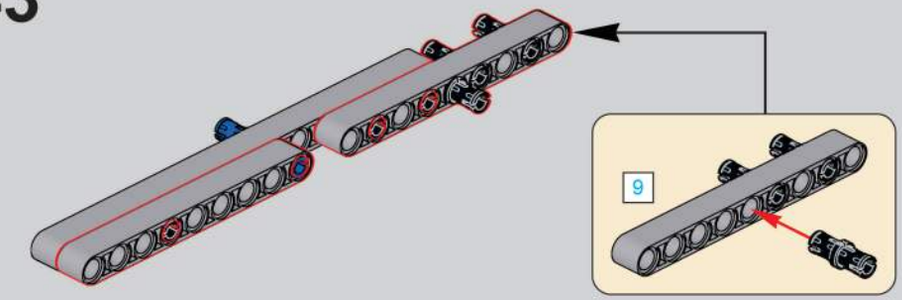

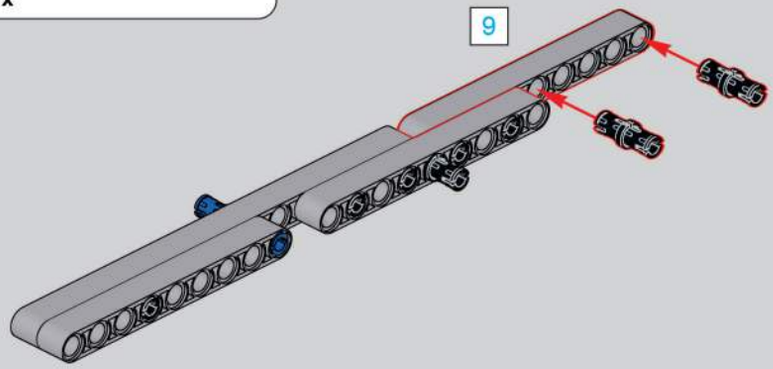

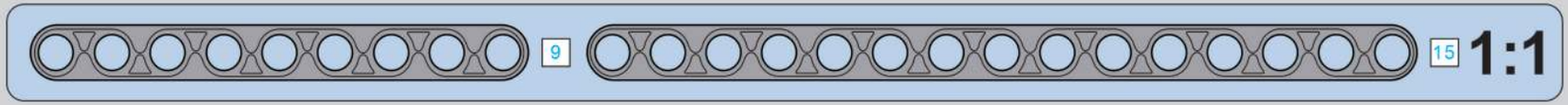

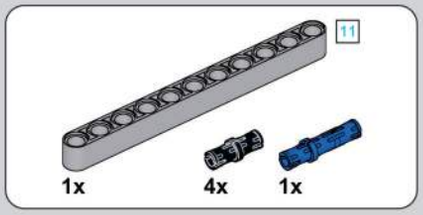

945

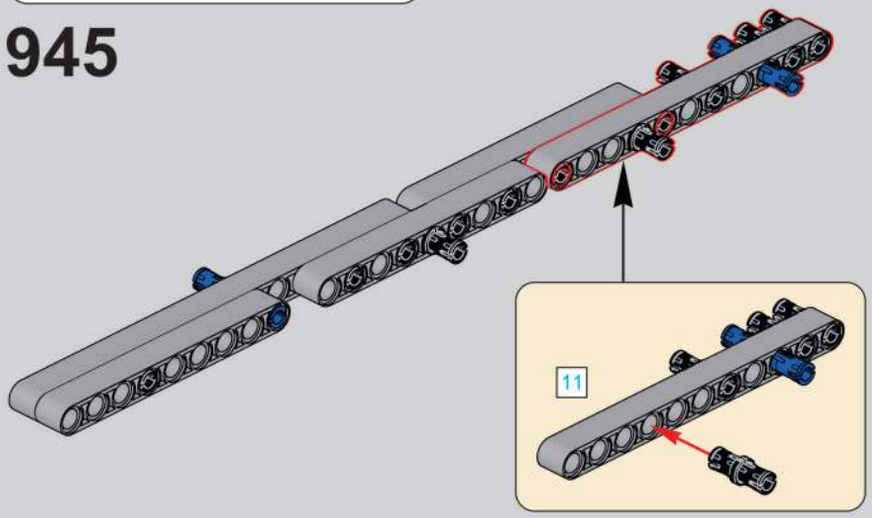

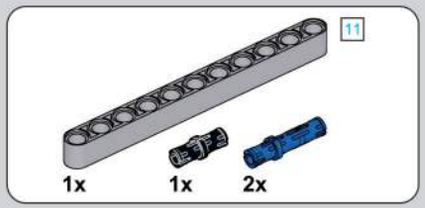

946

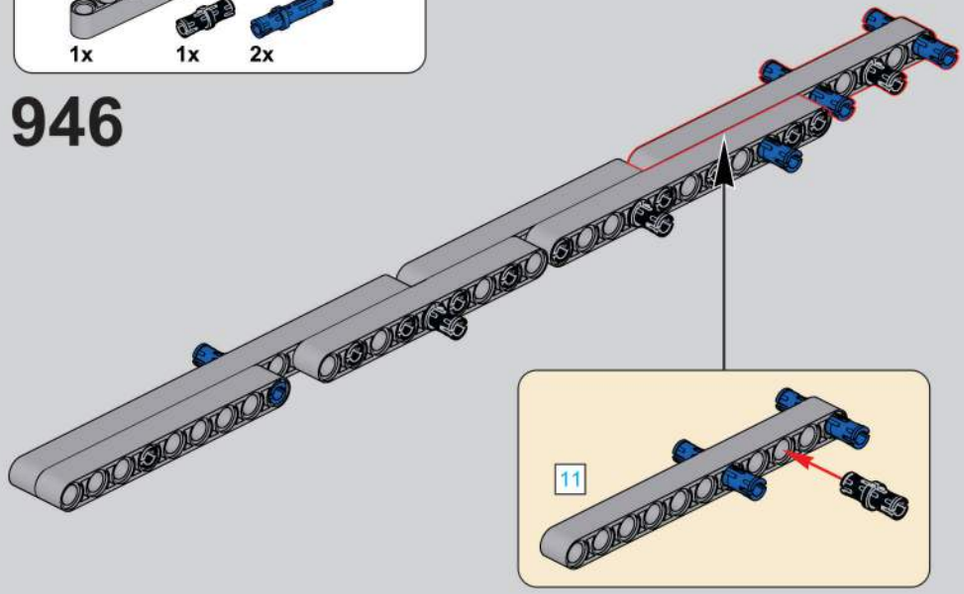

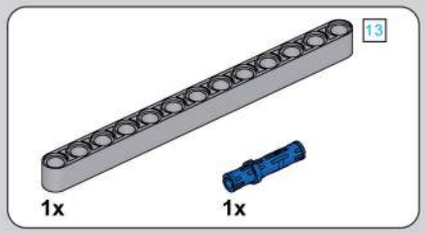

947

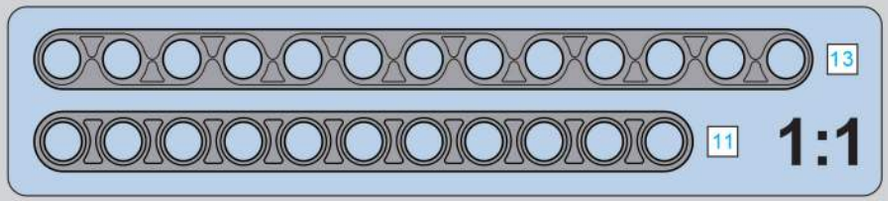

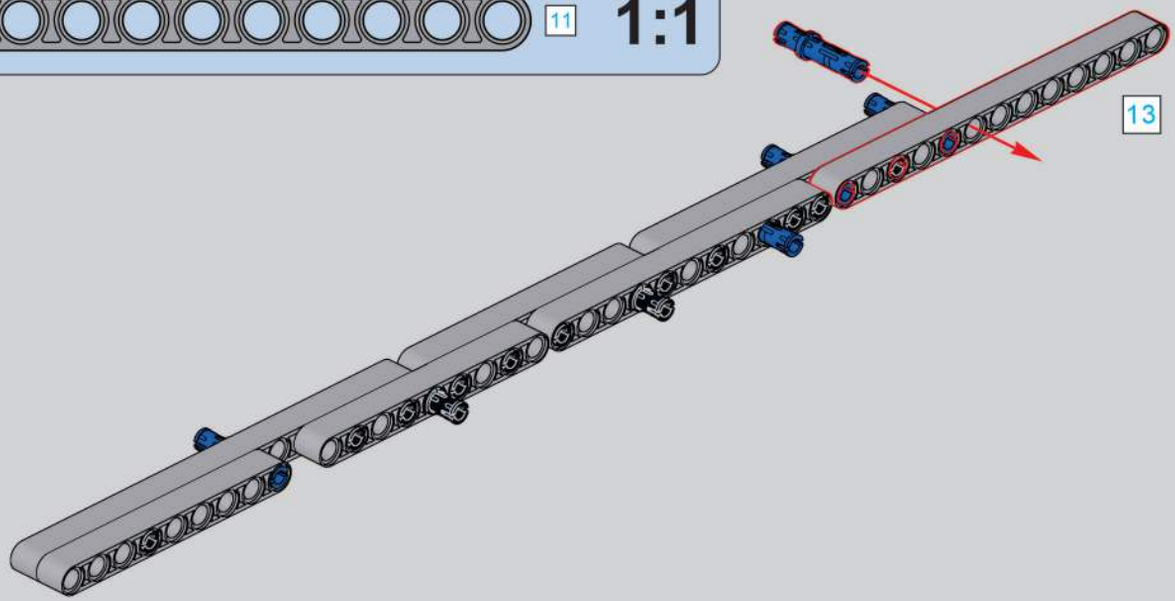

948

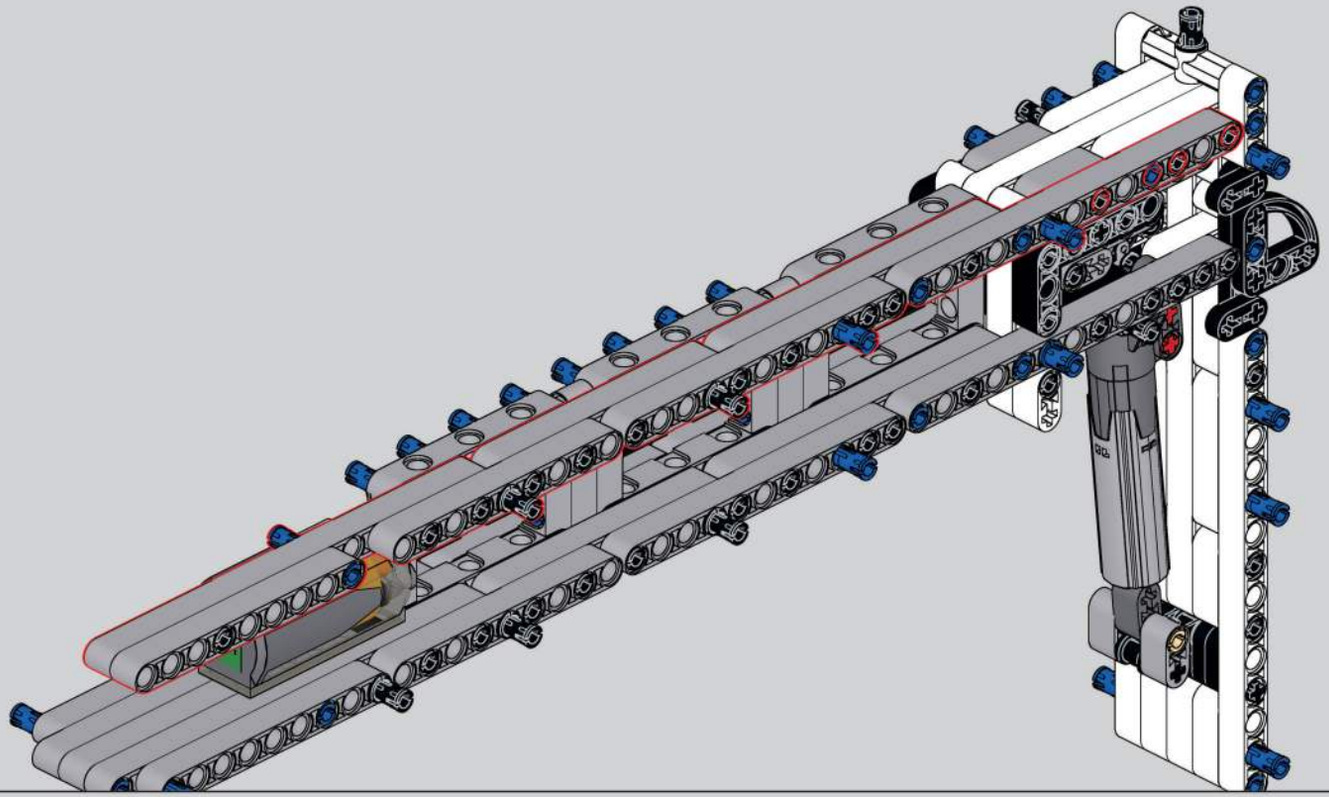

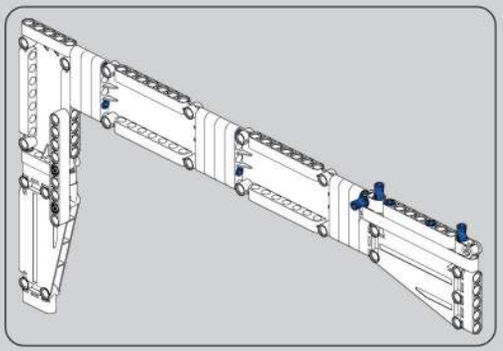

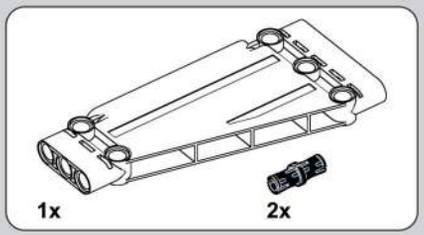

949

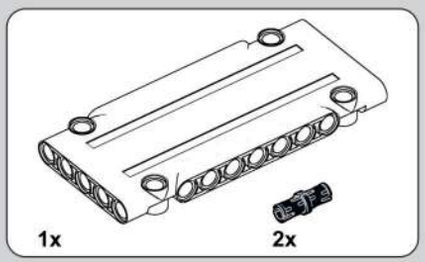

950

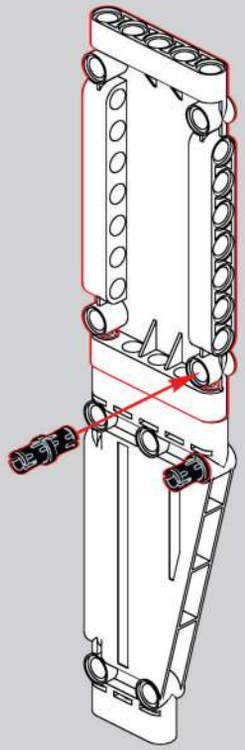

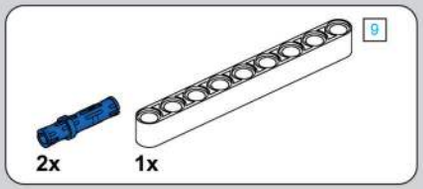

951

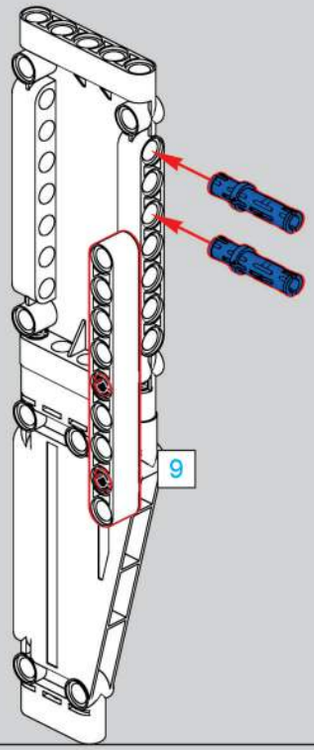

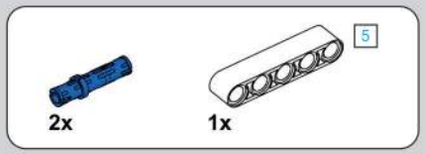

952

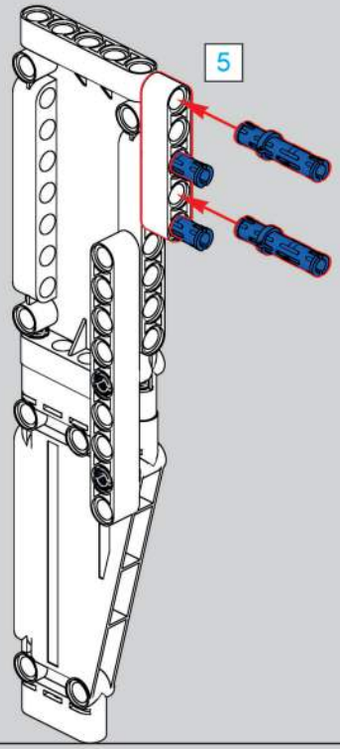

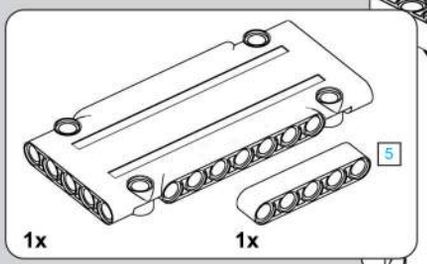

953

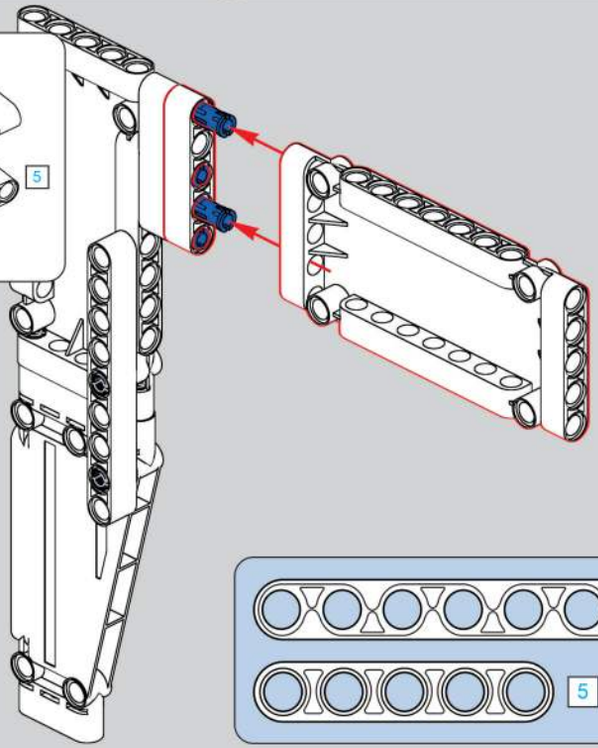

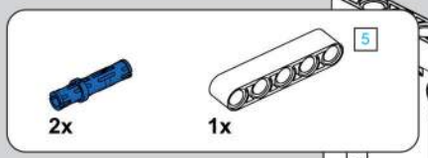

954

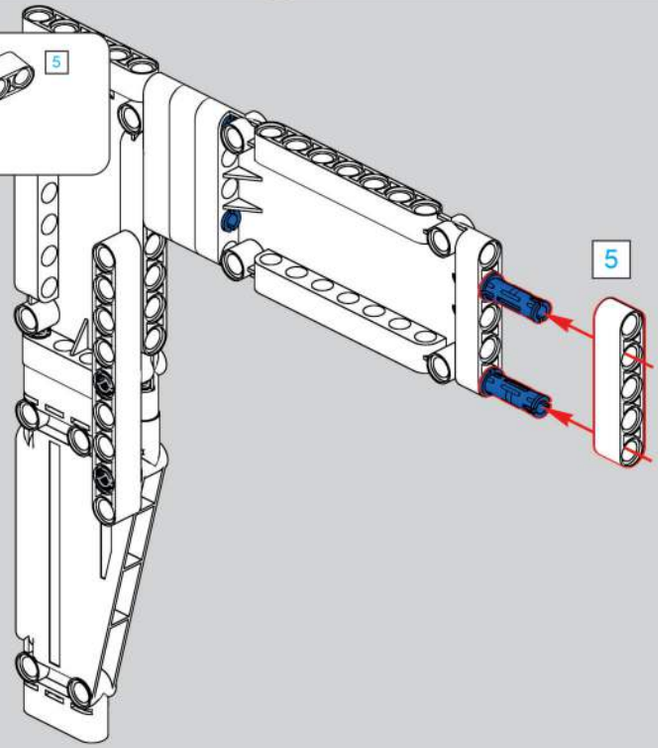

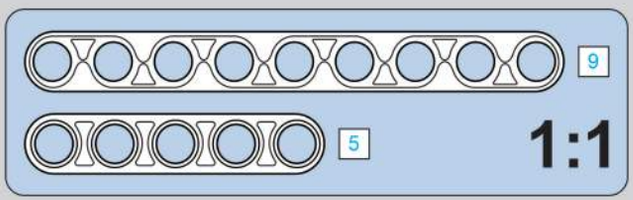

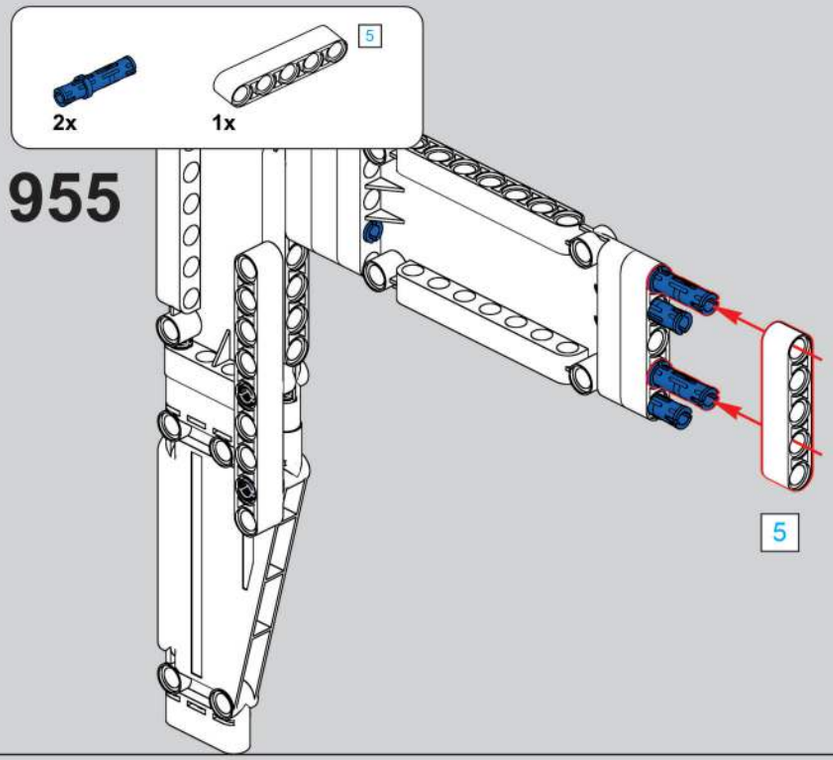

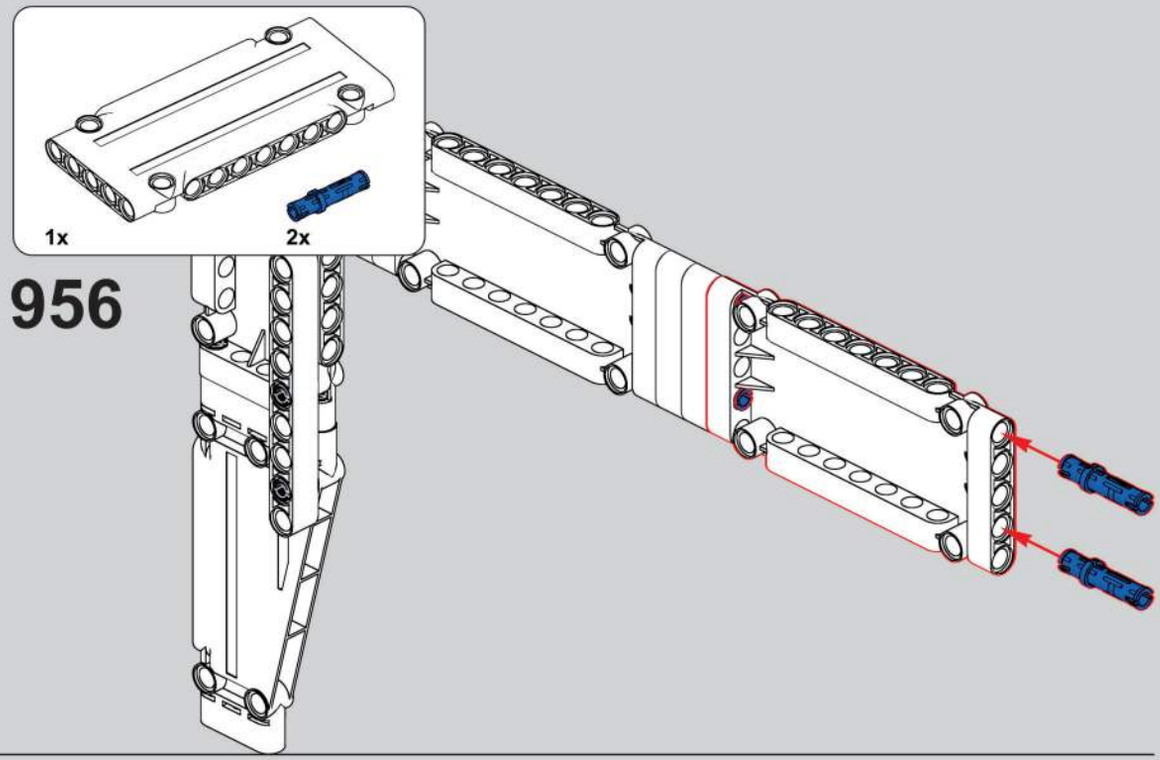

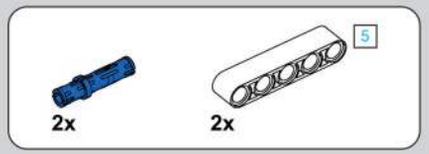

957

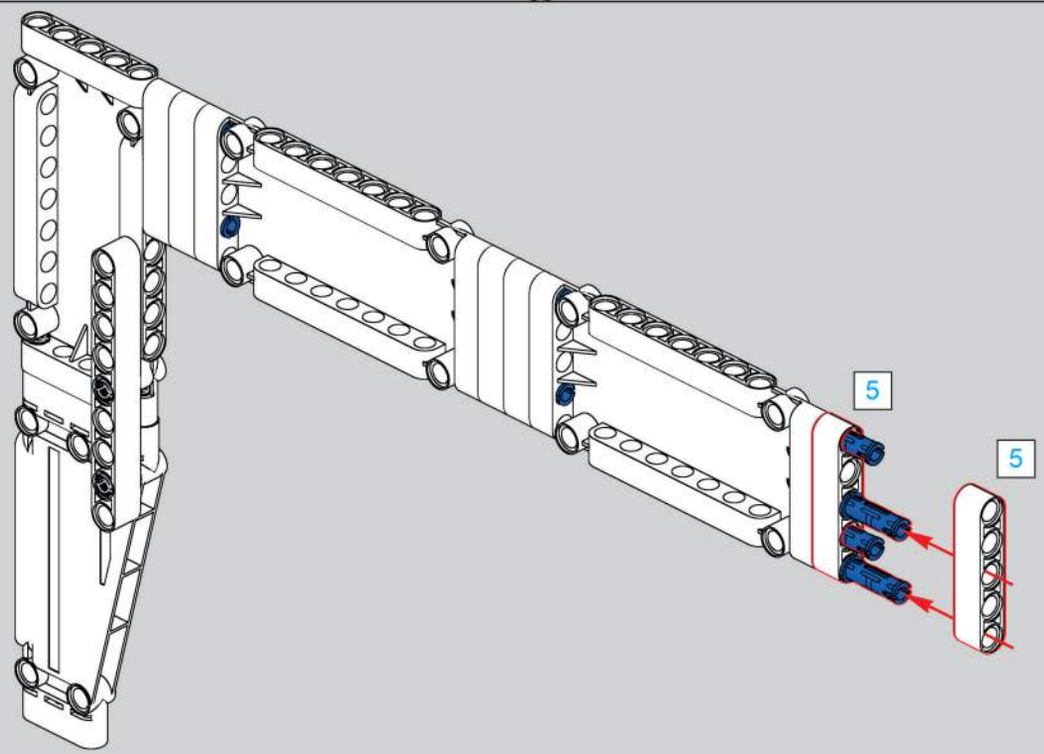

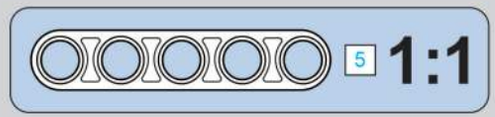

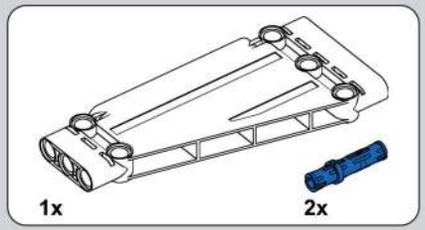

958

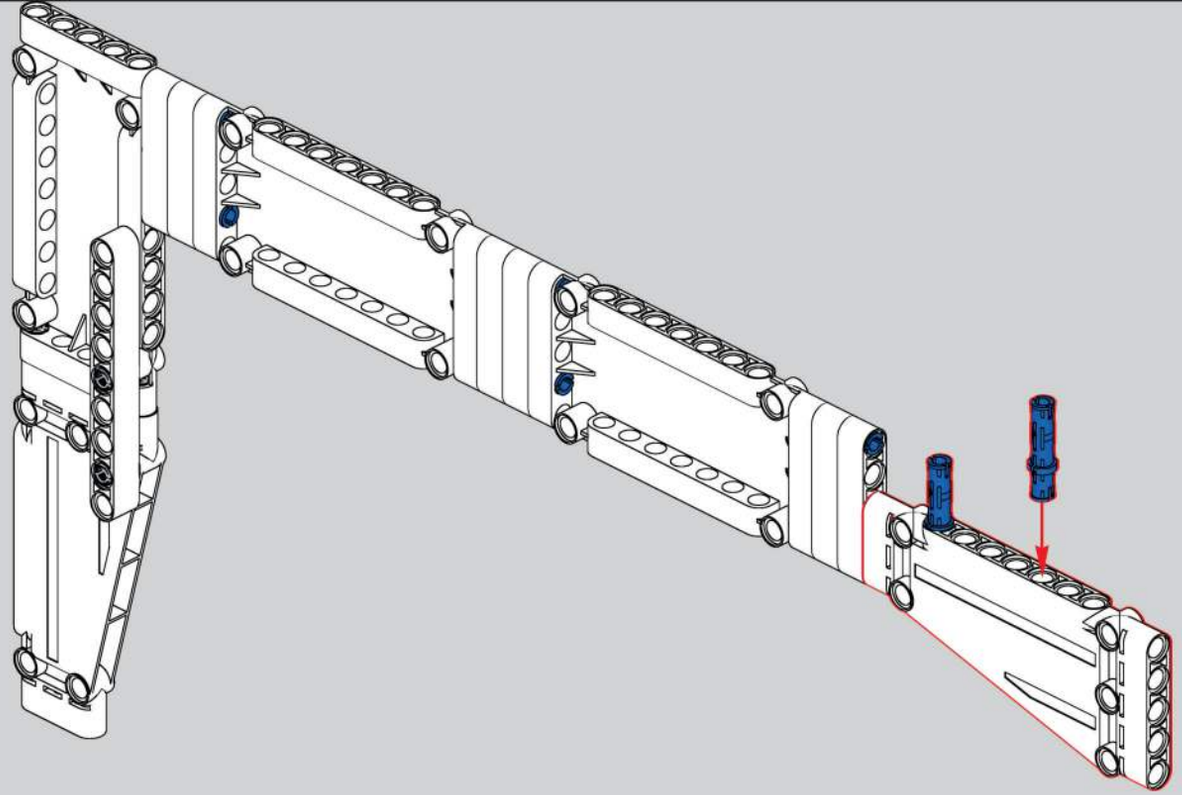

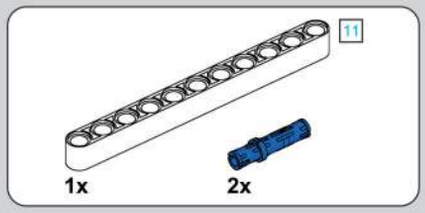

959

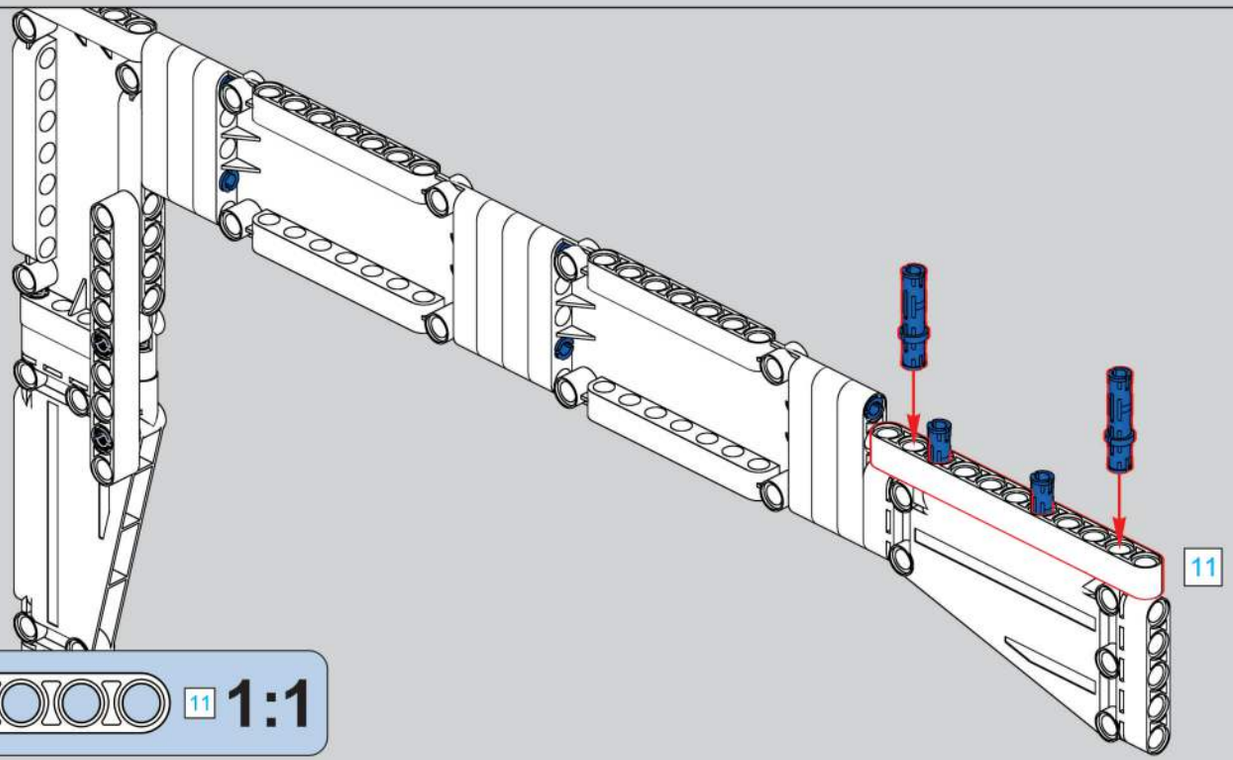

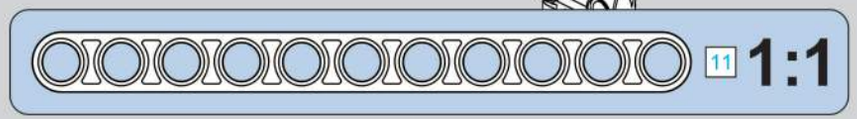

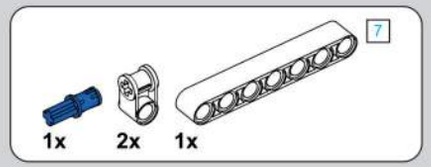

960

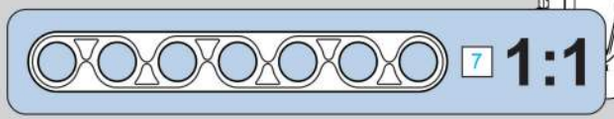

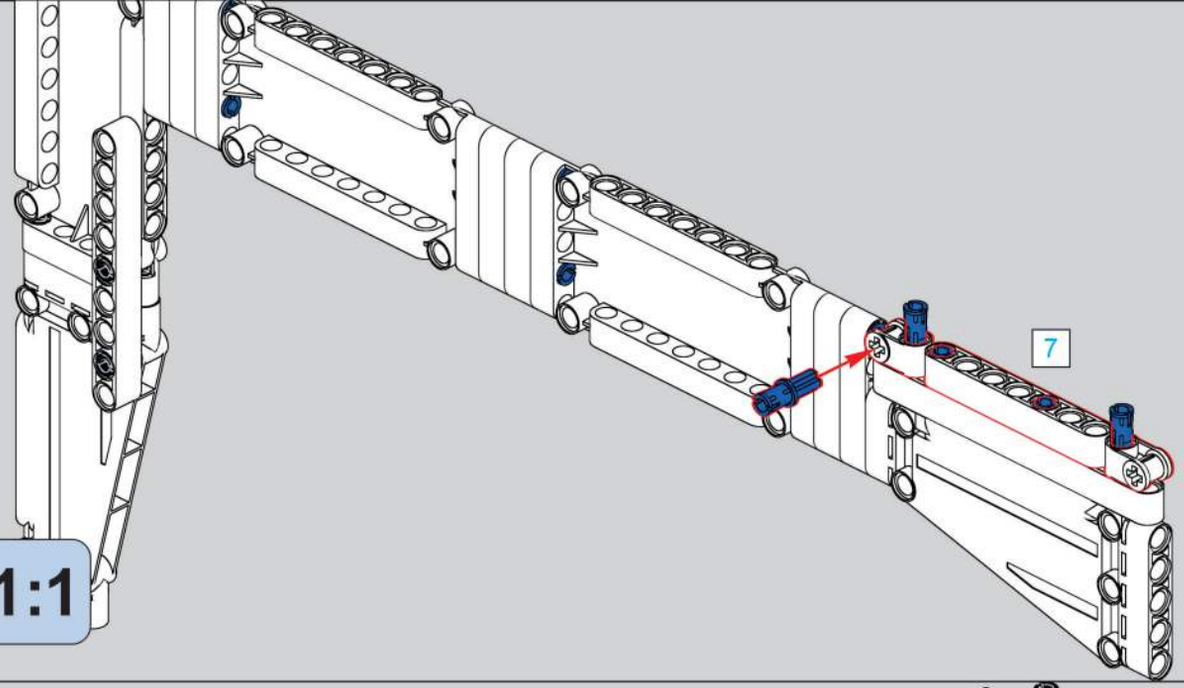

961

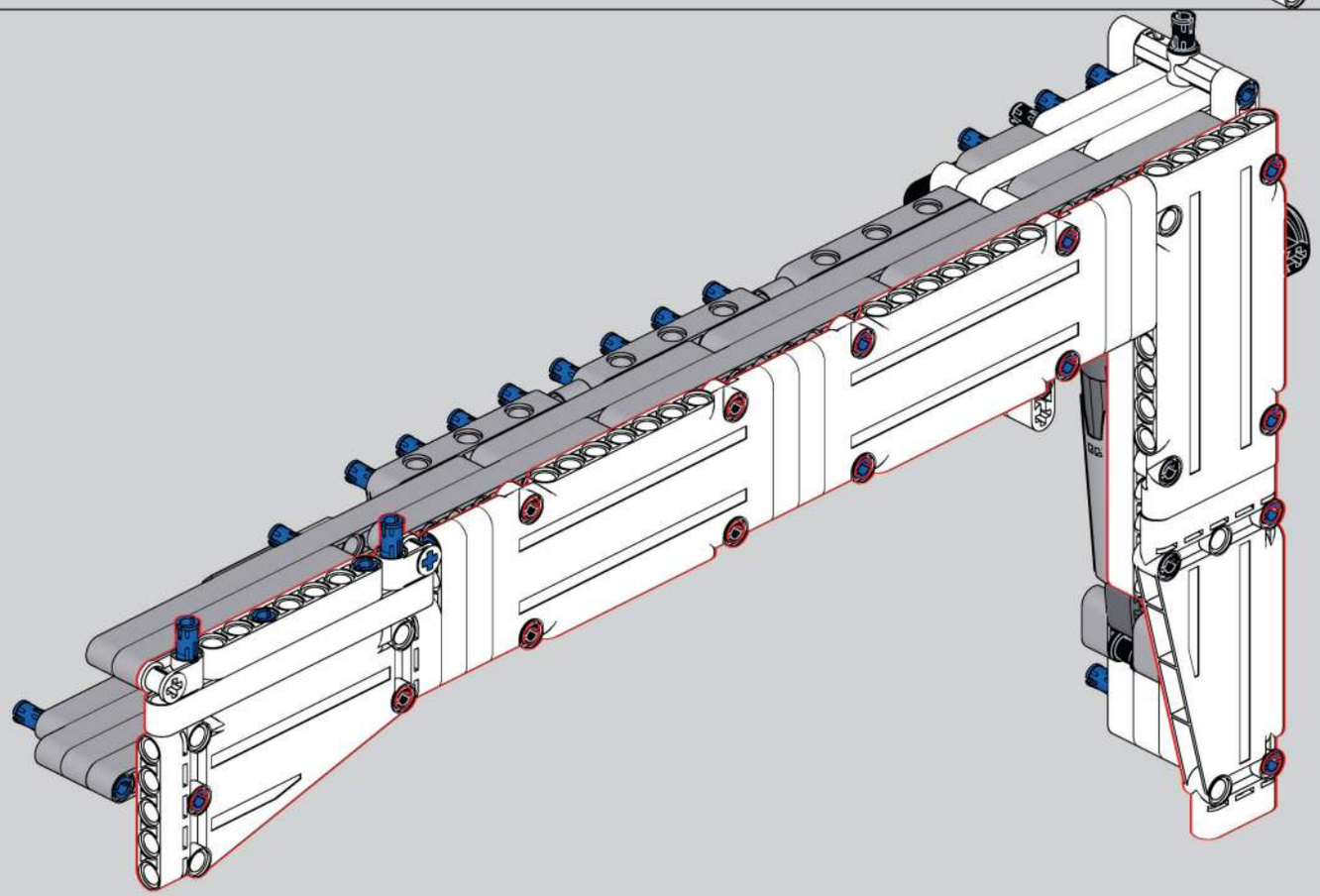

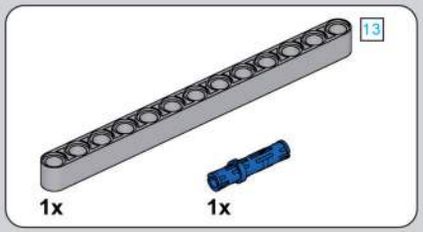

962

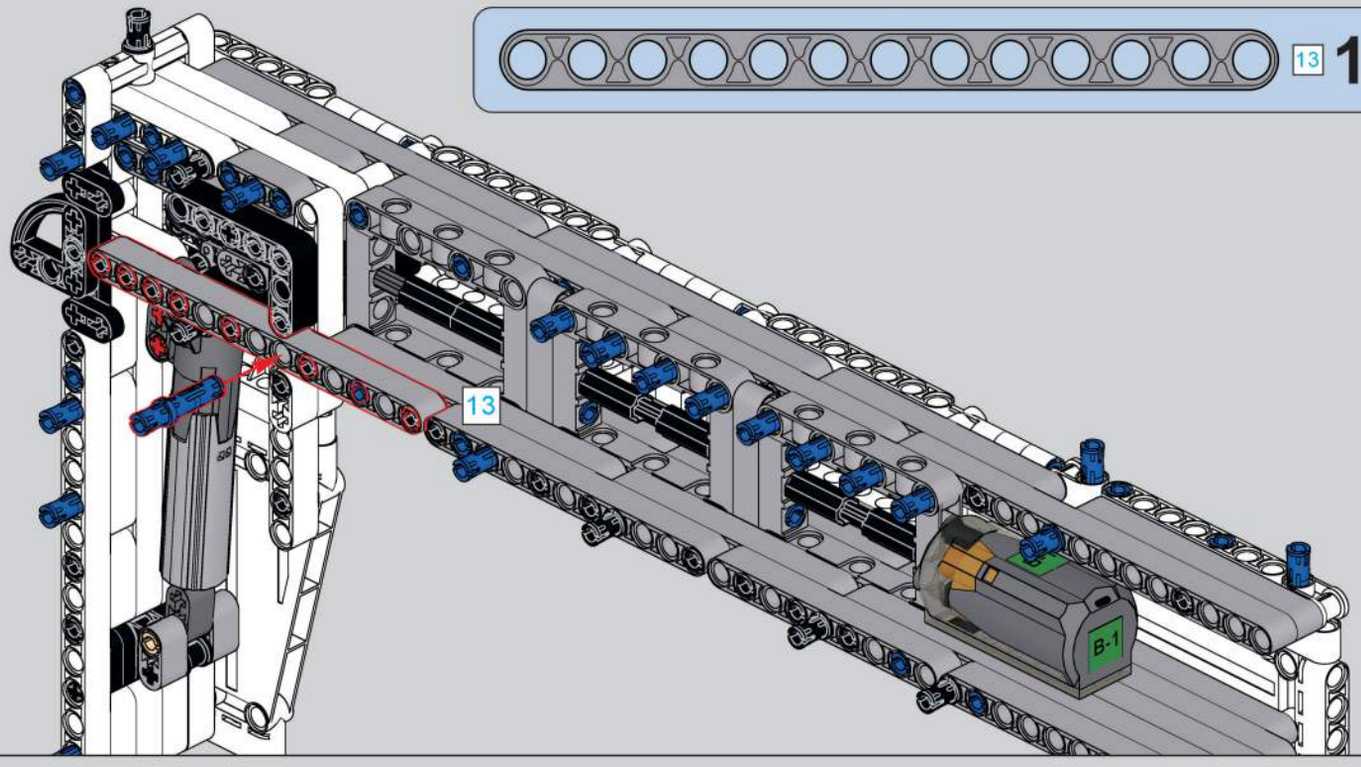

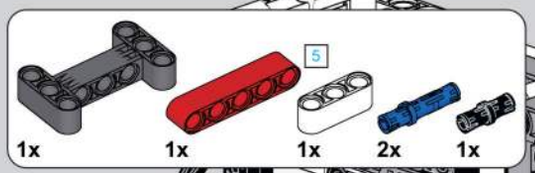

963

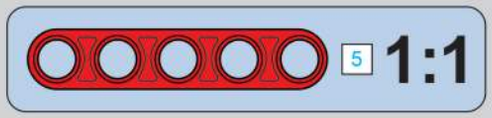

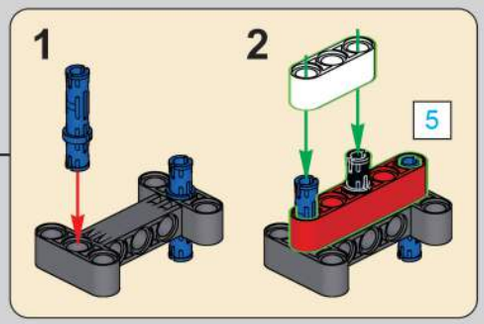

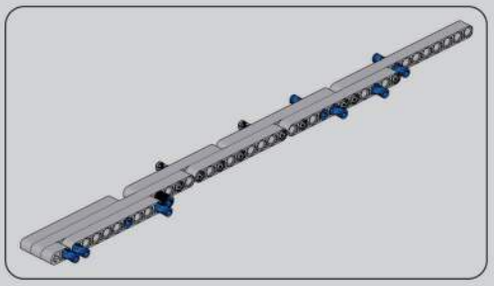

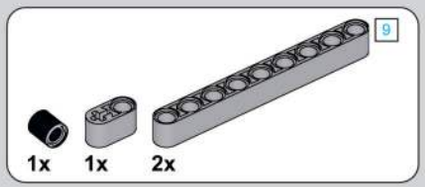

965

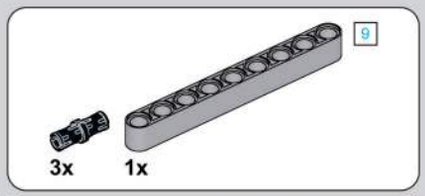

966

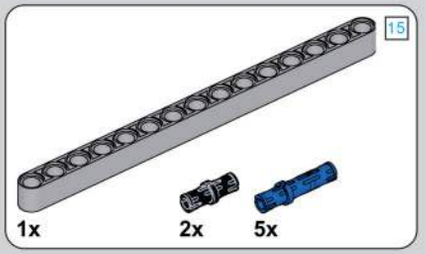

964

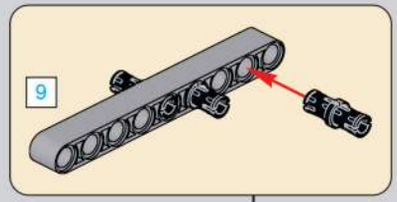

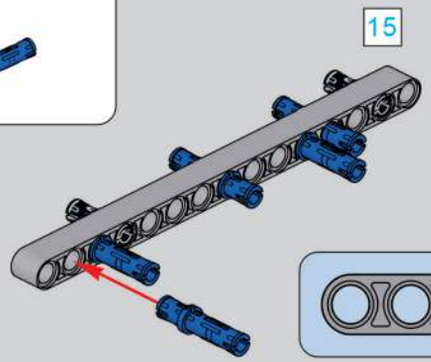

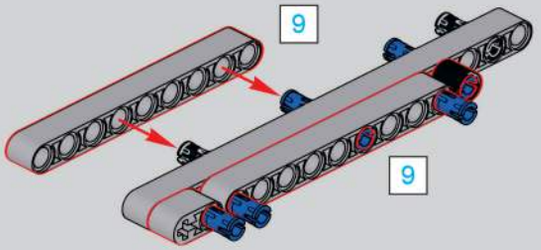

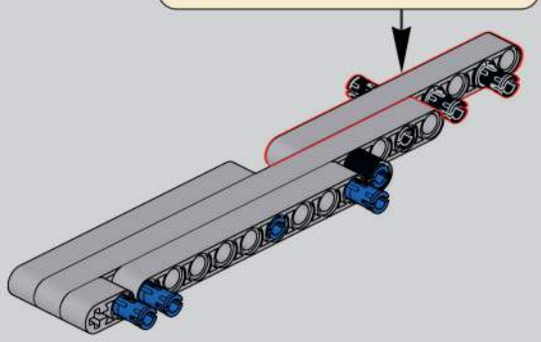

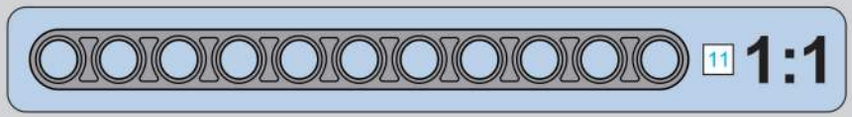

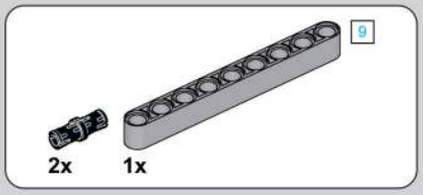

967

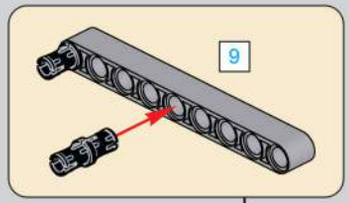

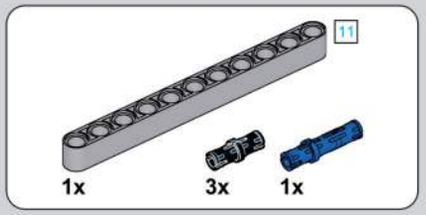

968

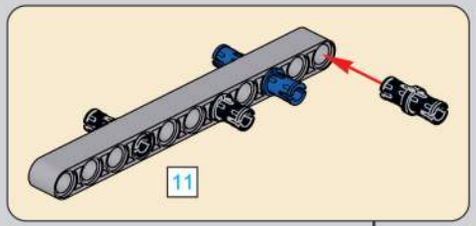

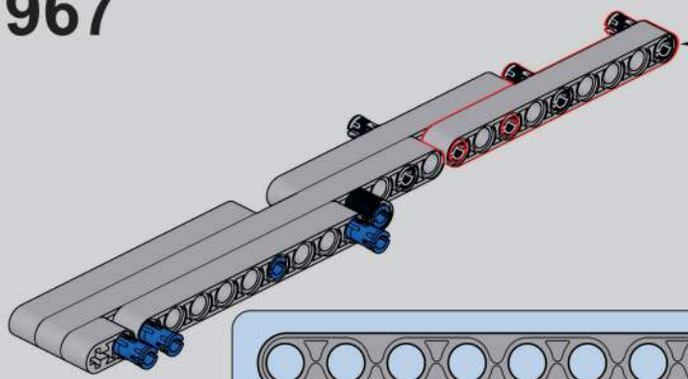

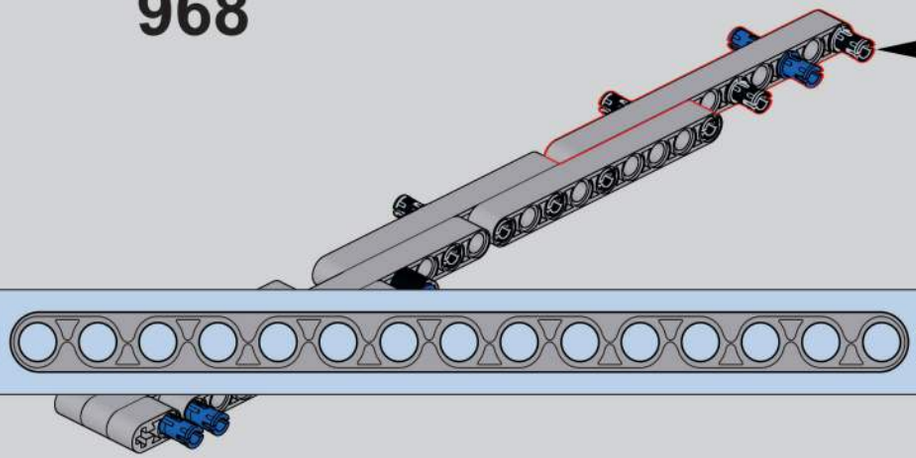

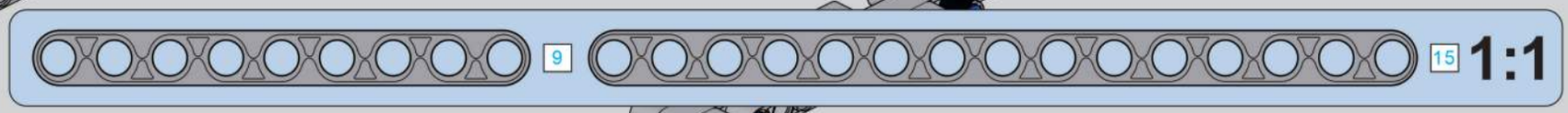

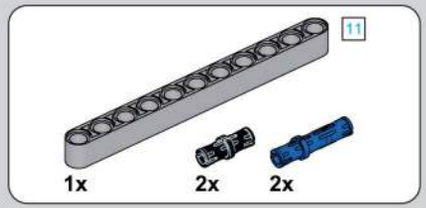

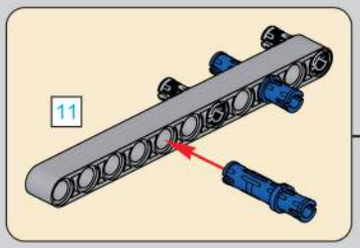

969

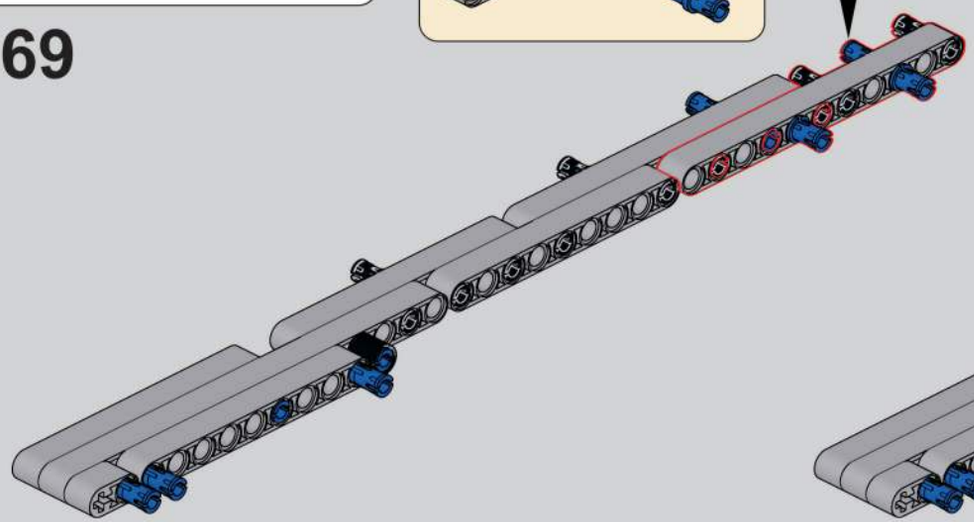

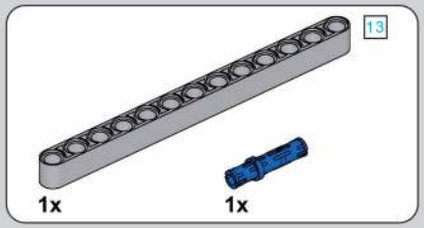

970

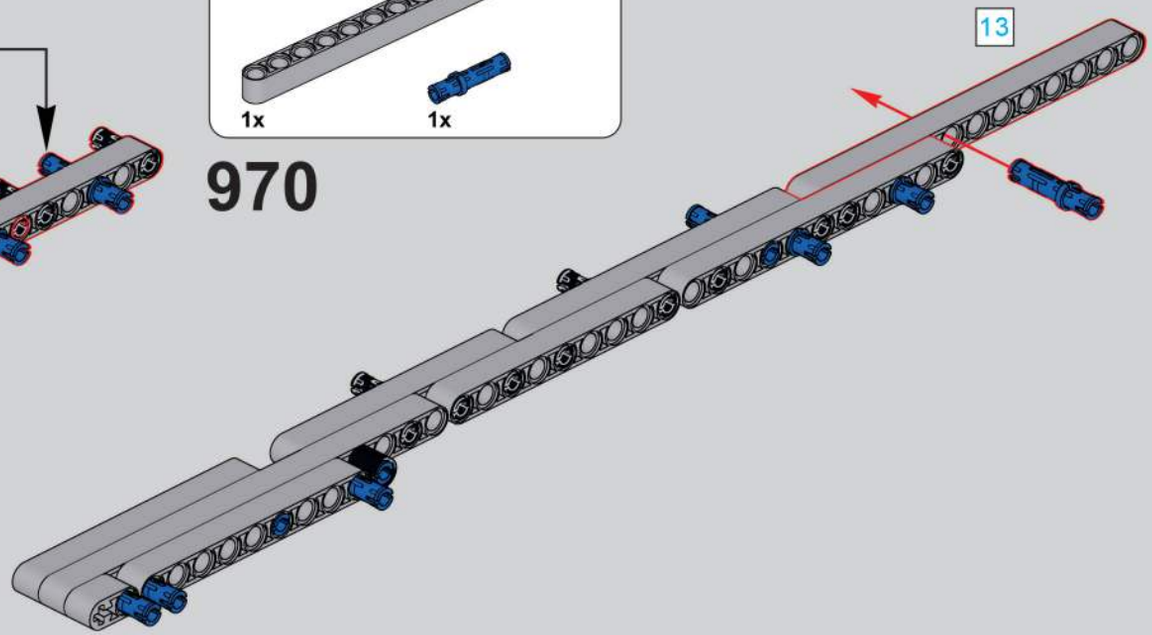

971

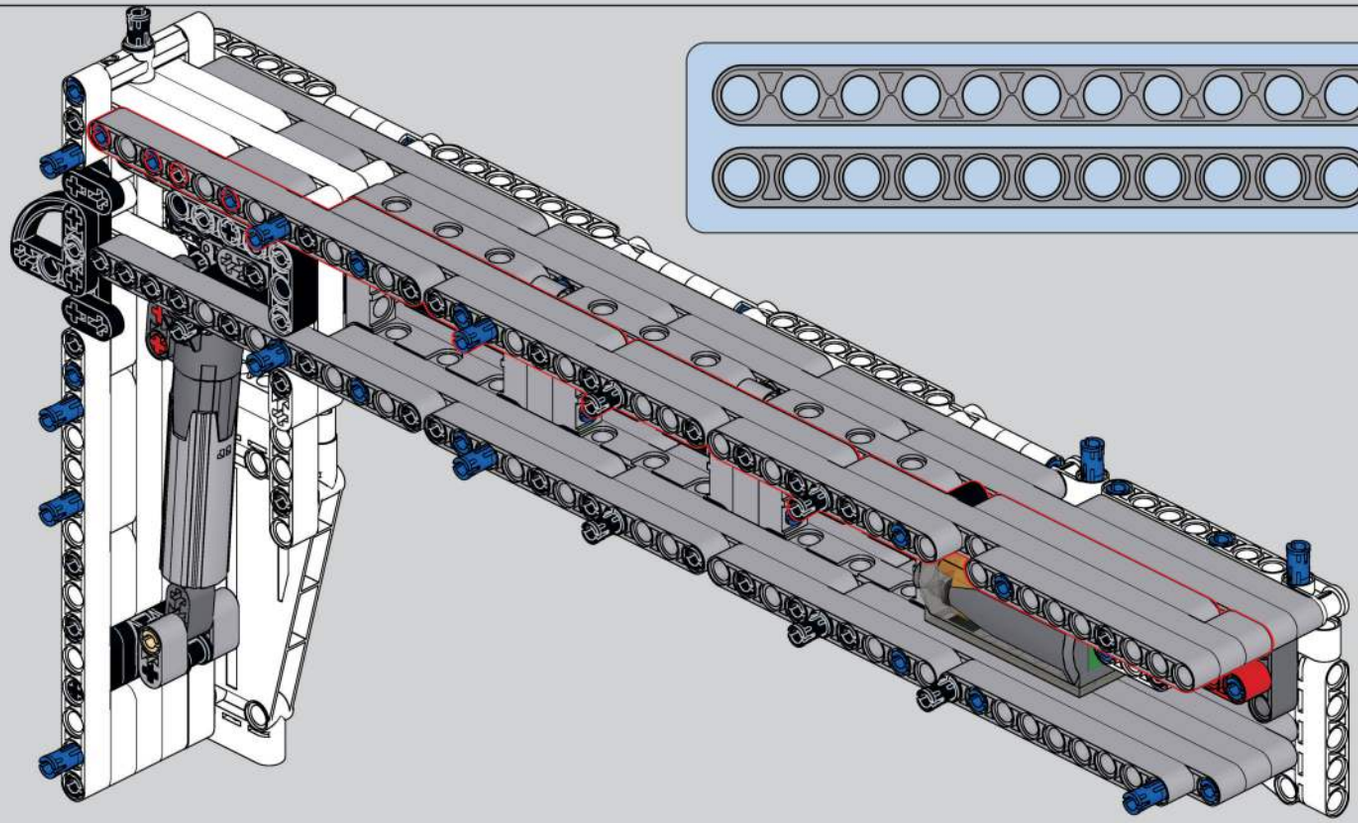

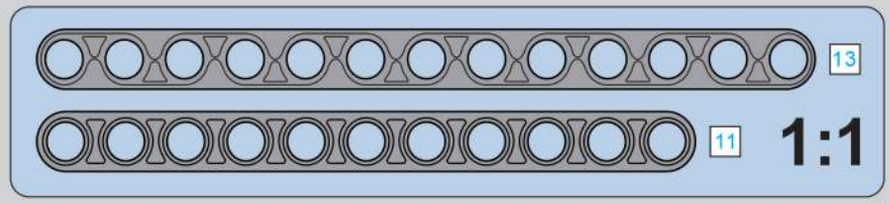

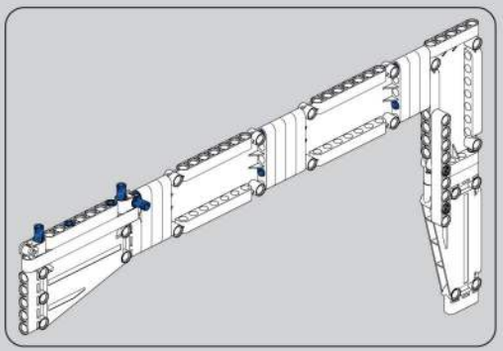

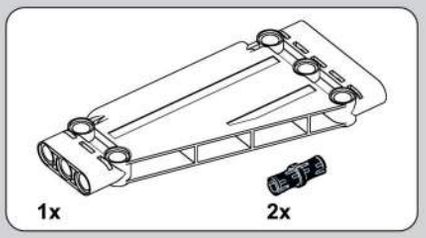

972

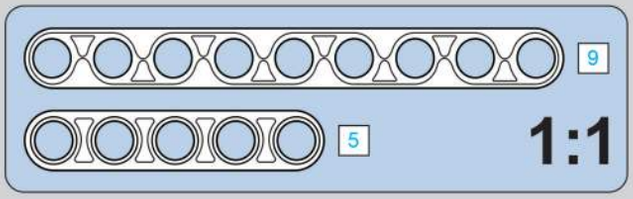

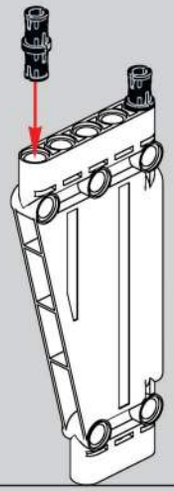

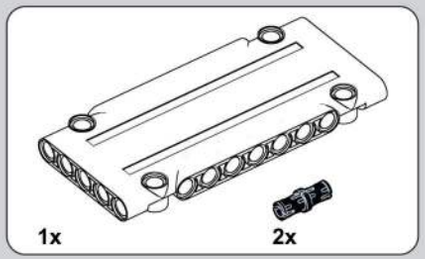

973

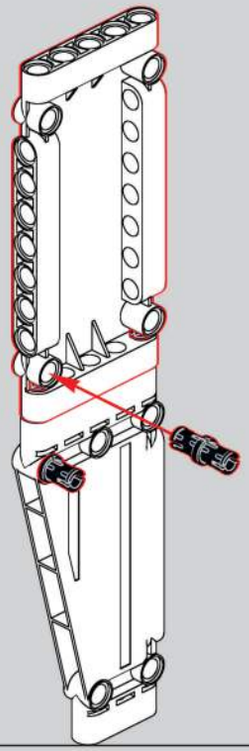

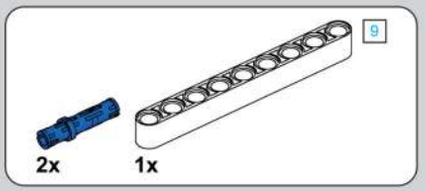

974

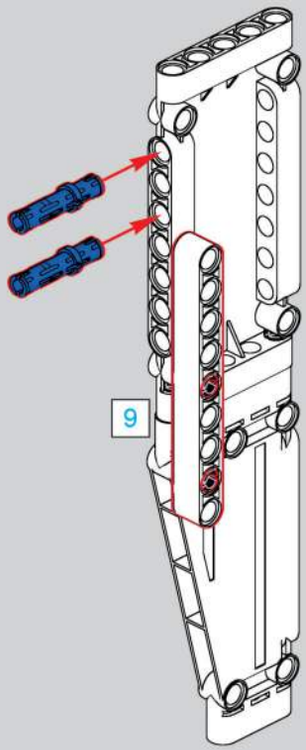

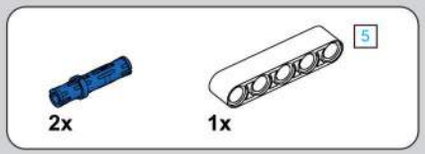

975

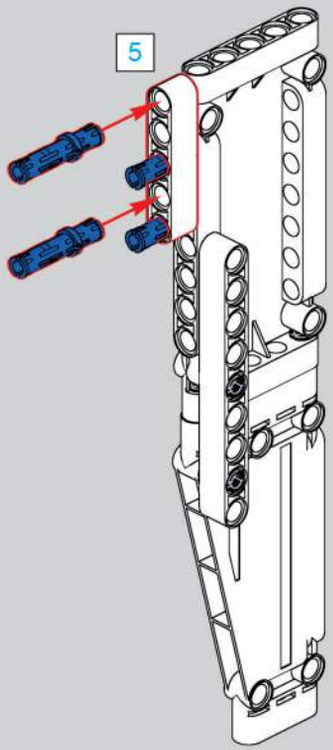

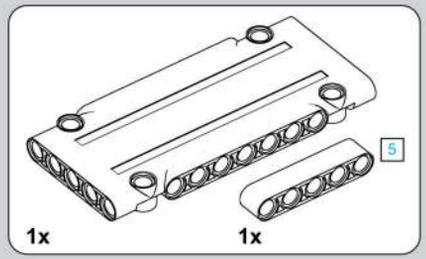

976

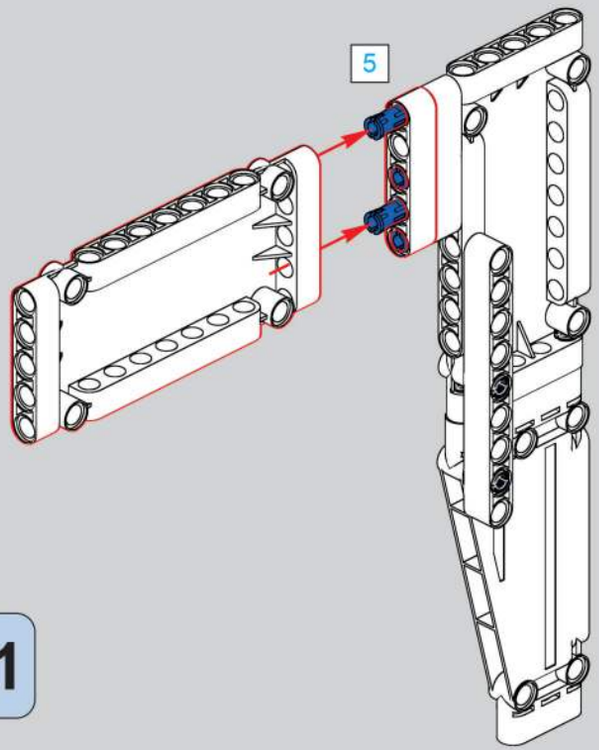

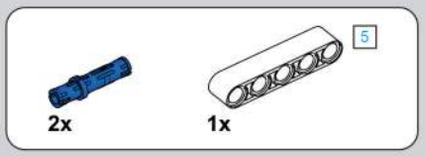

977

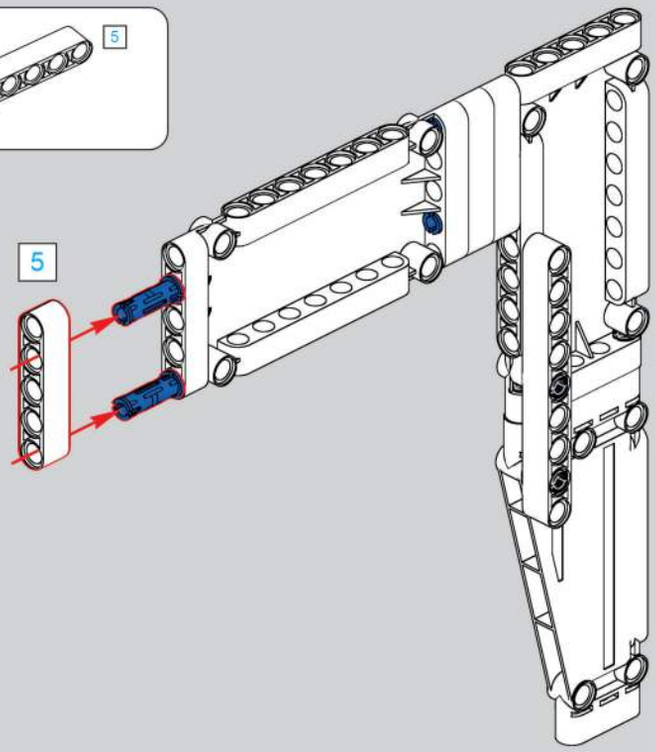

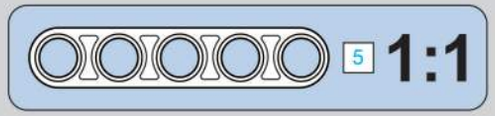

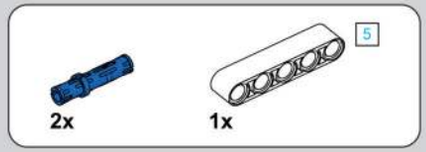

978

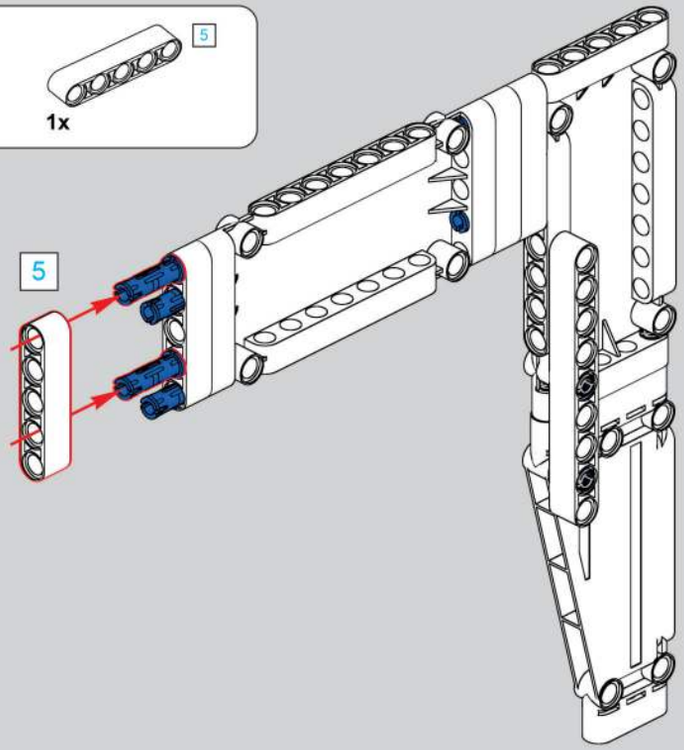

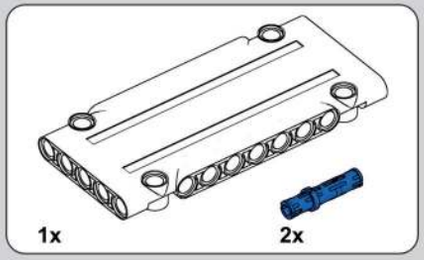

979

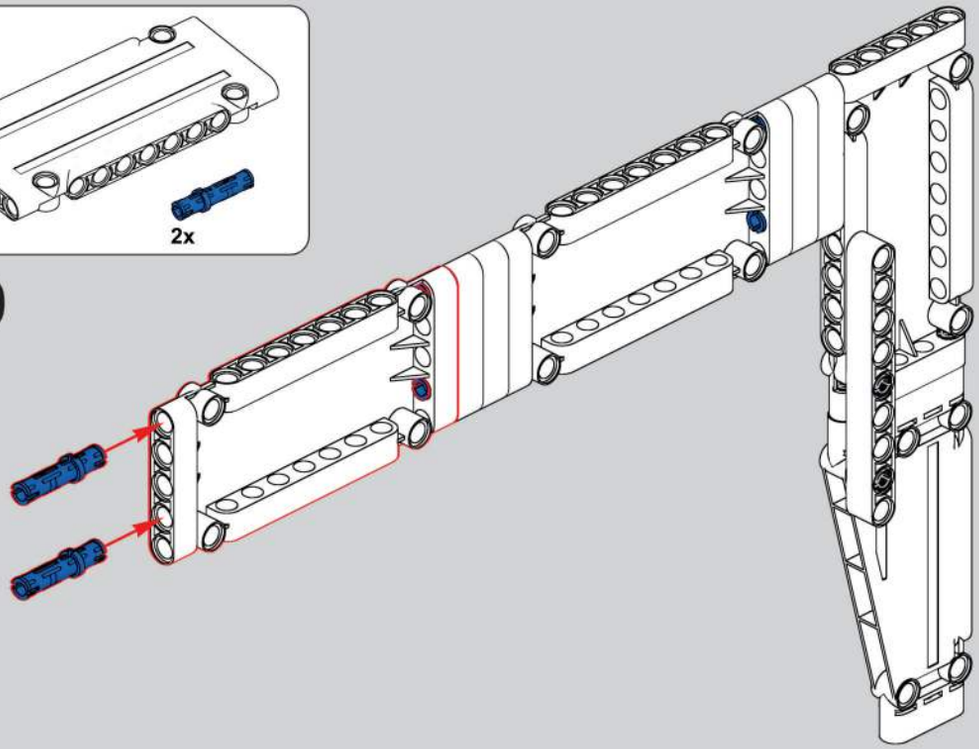

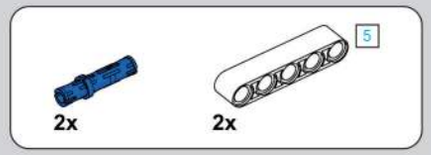

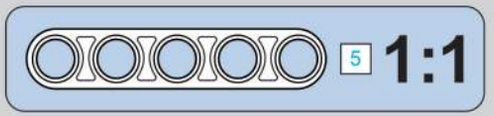

980

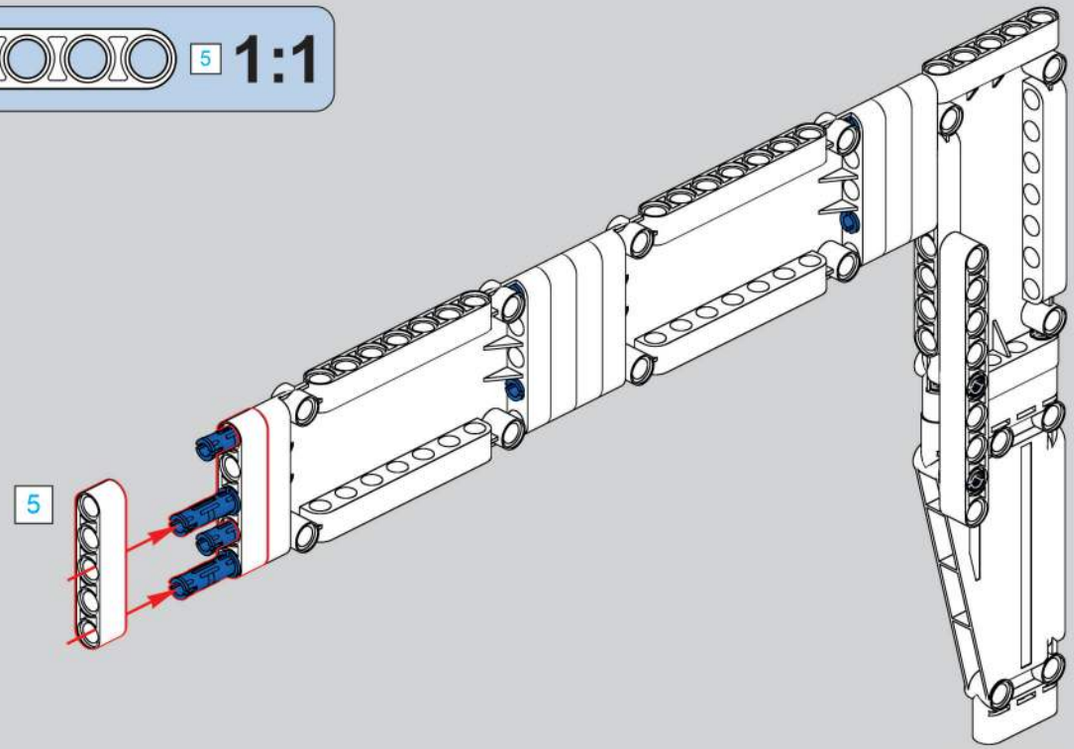

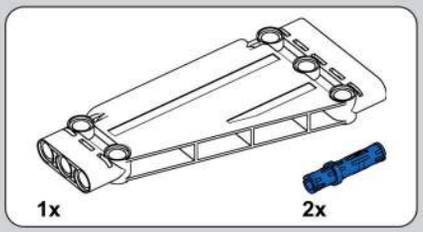

981

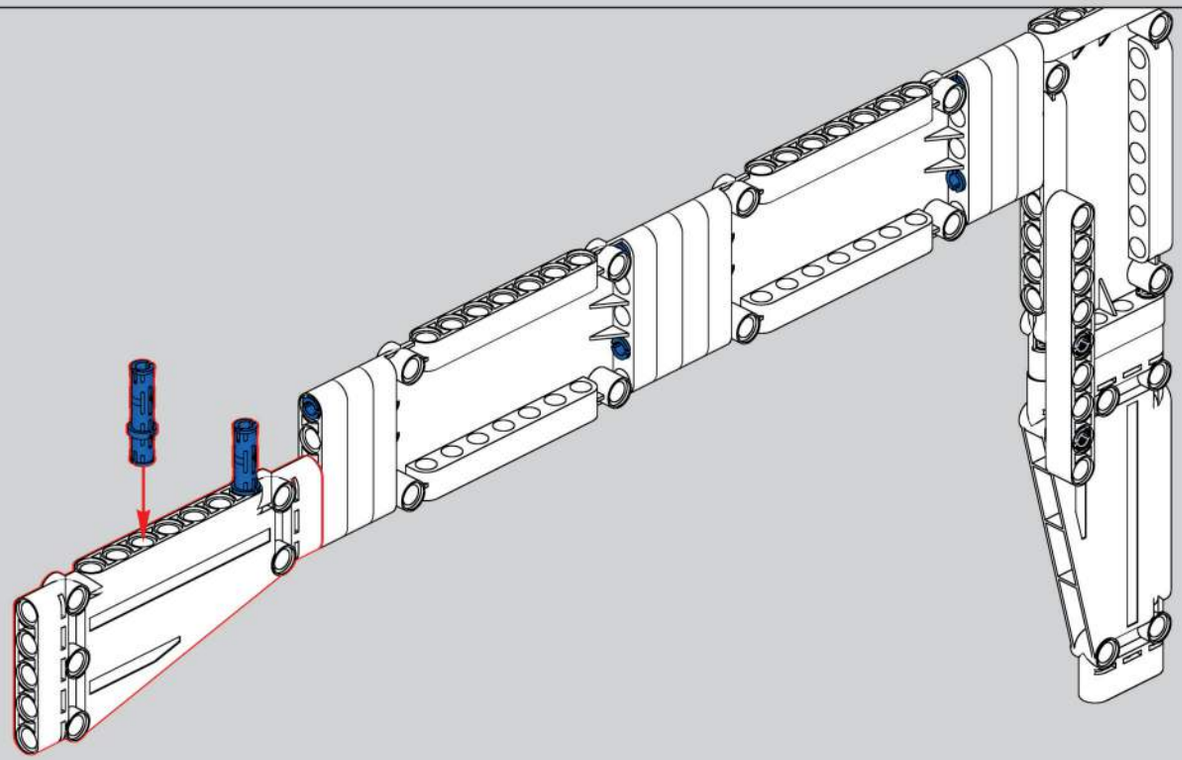

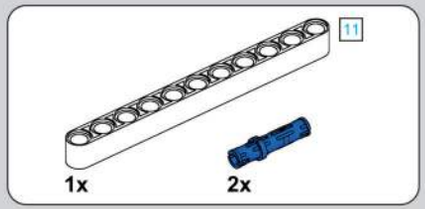

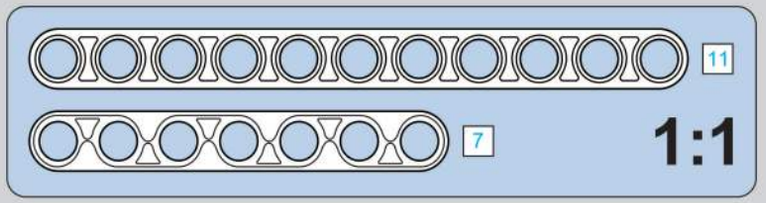

982

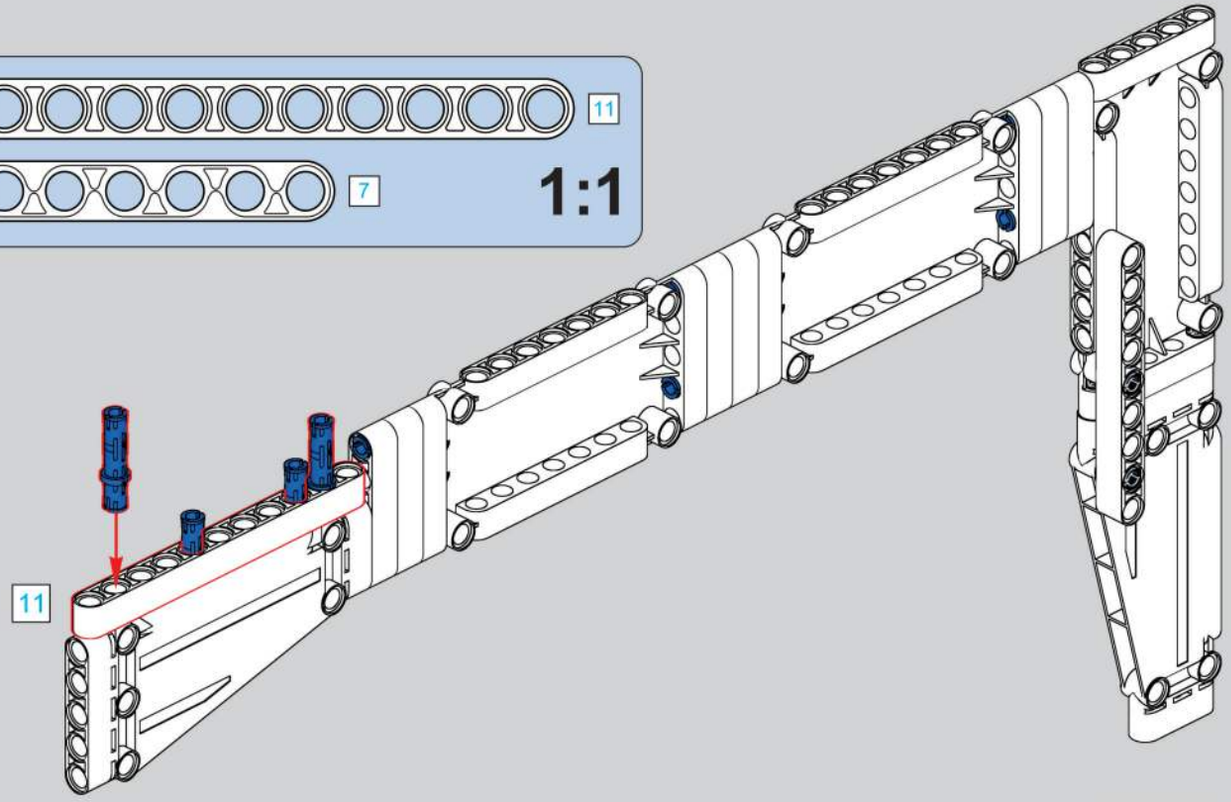

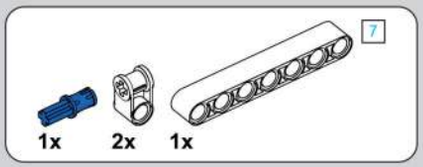

983

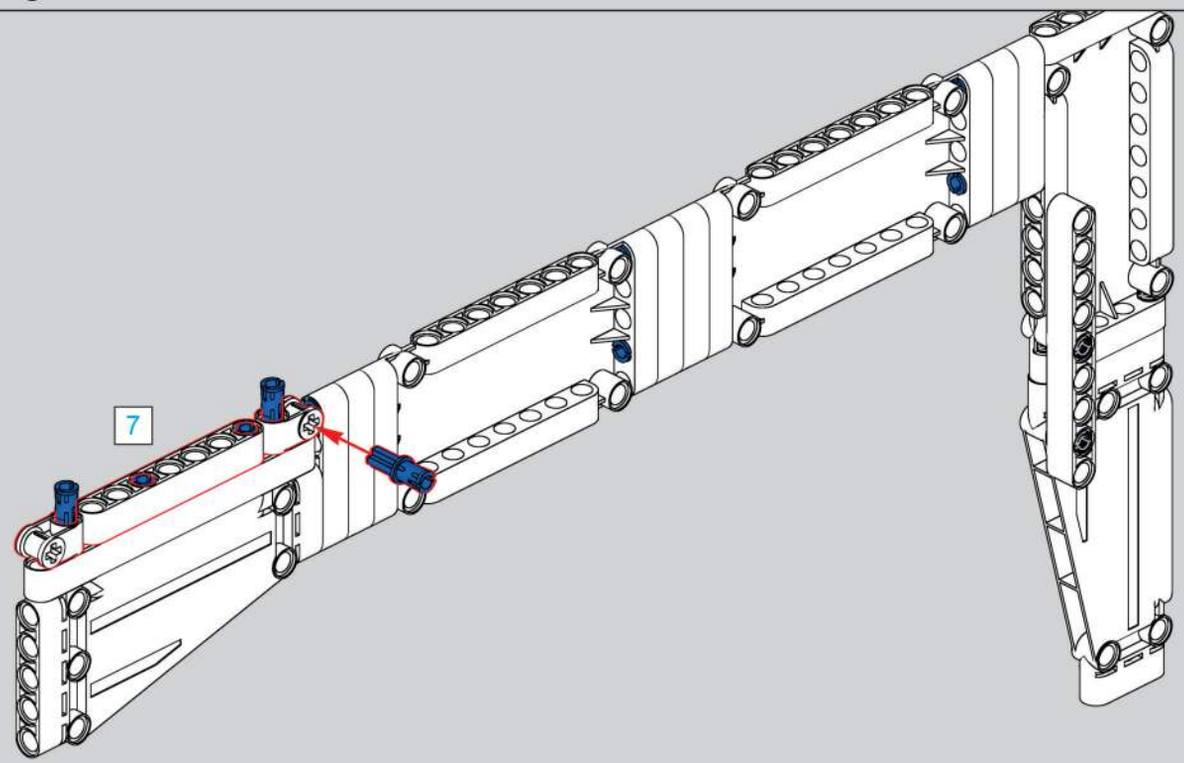

984

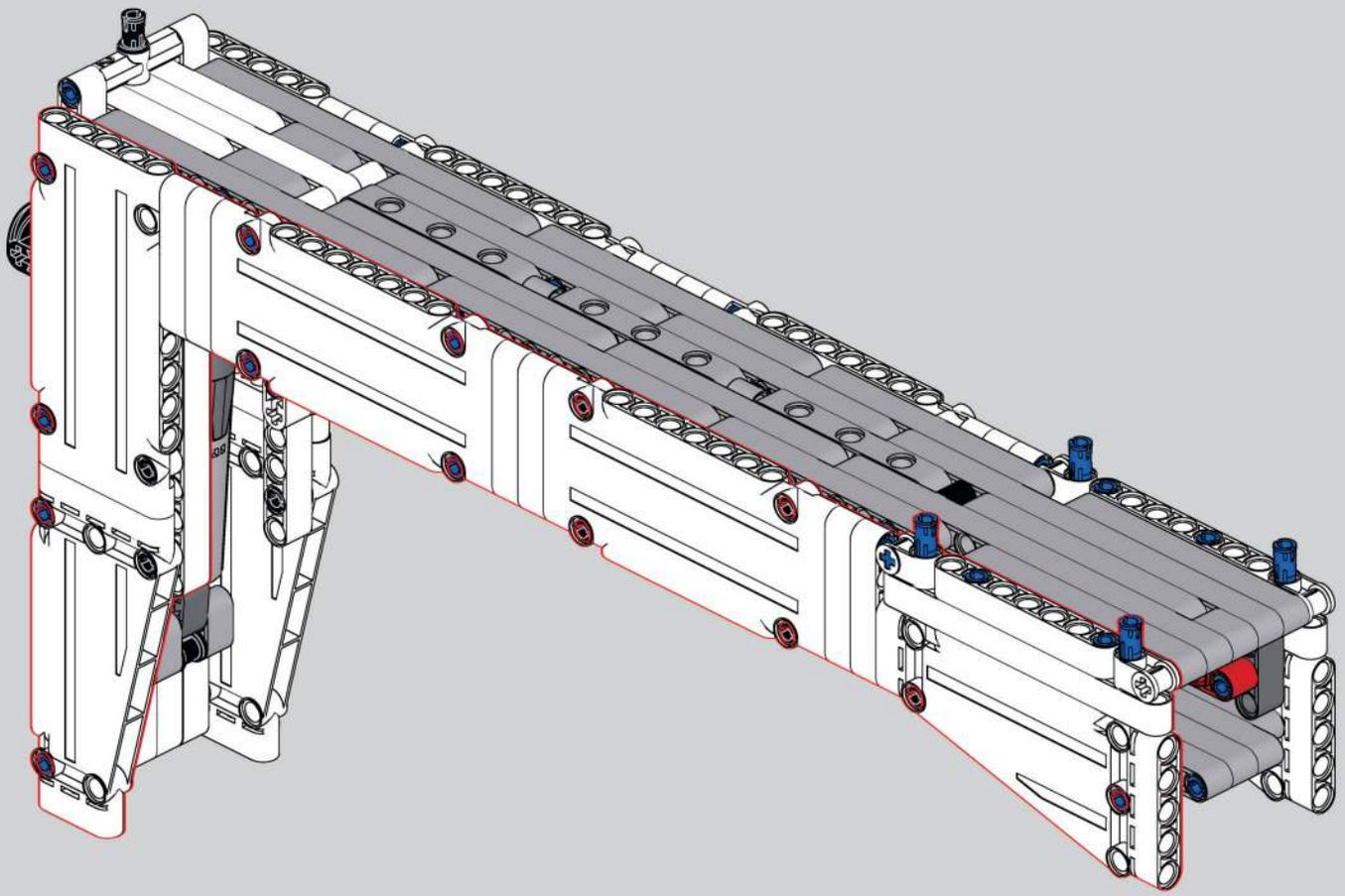

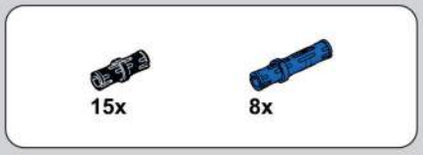

985

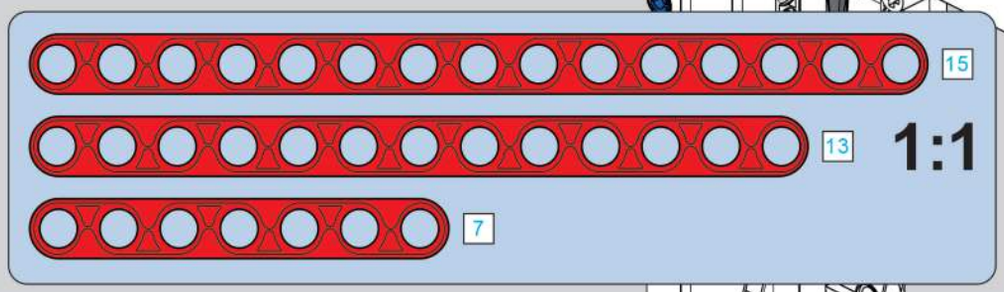

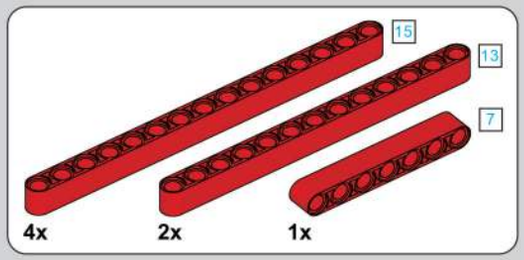

986

987

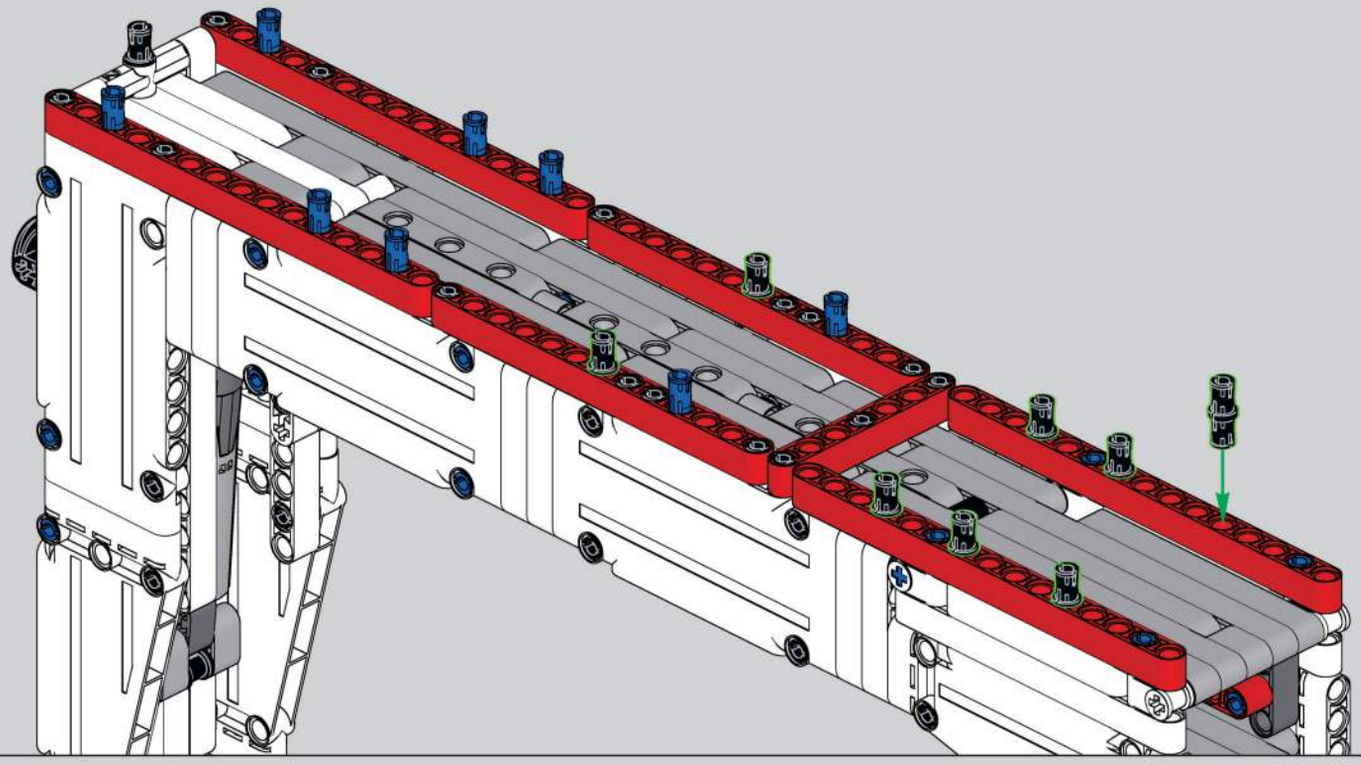

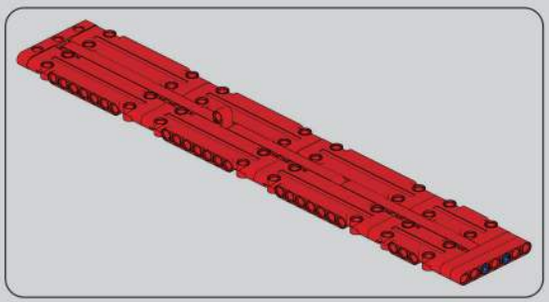

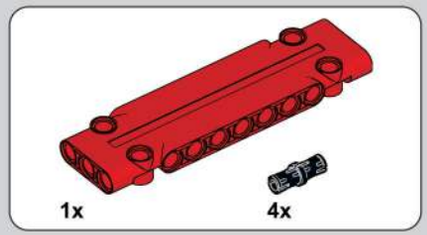

988

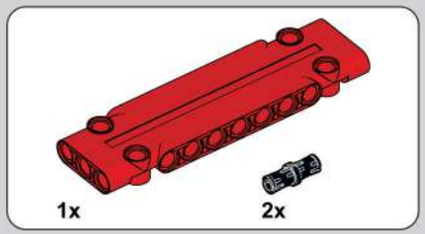

989

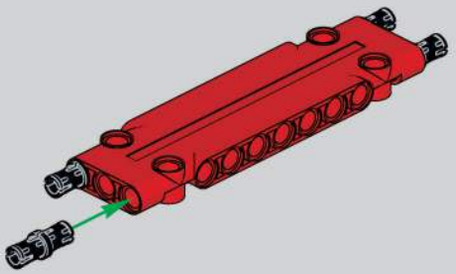

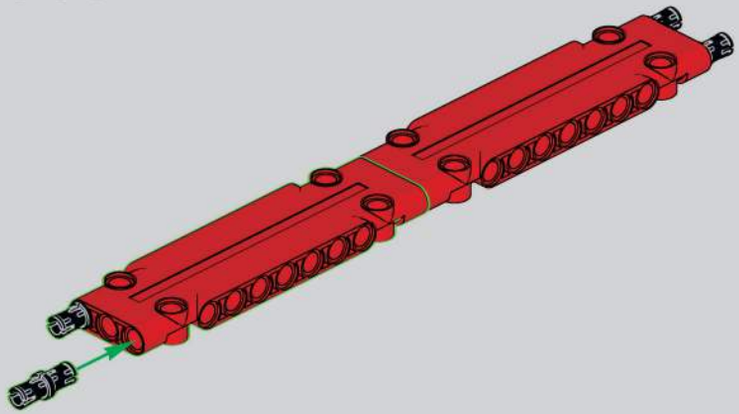

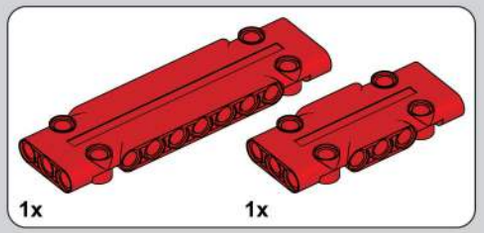

990

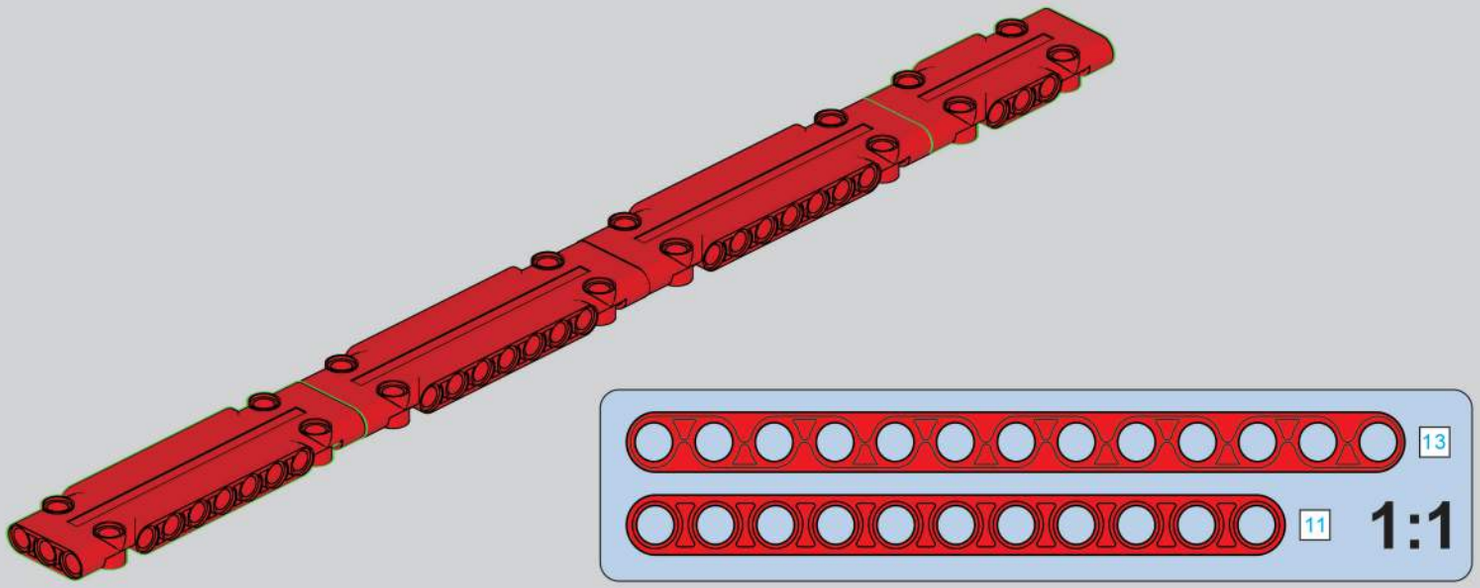

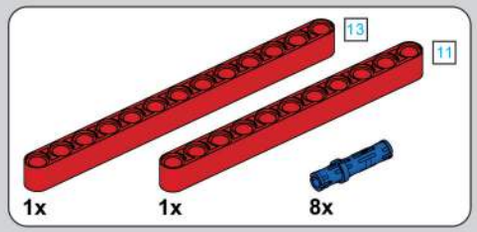

991

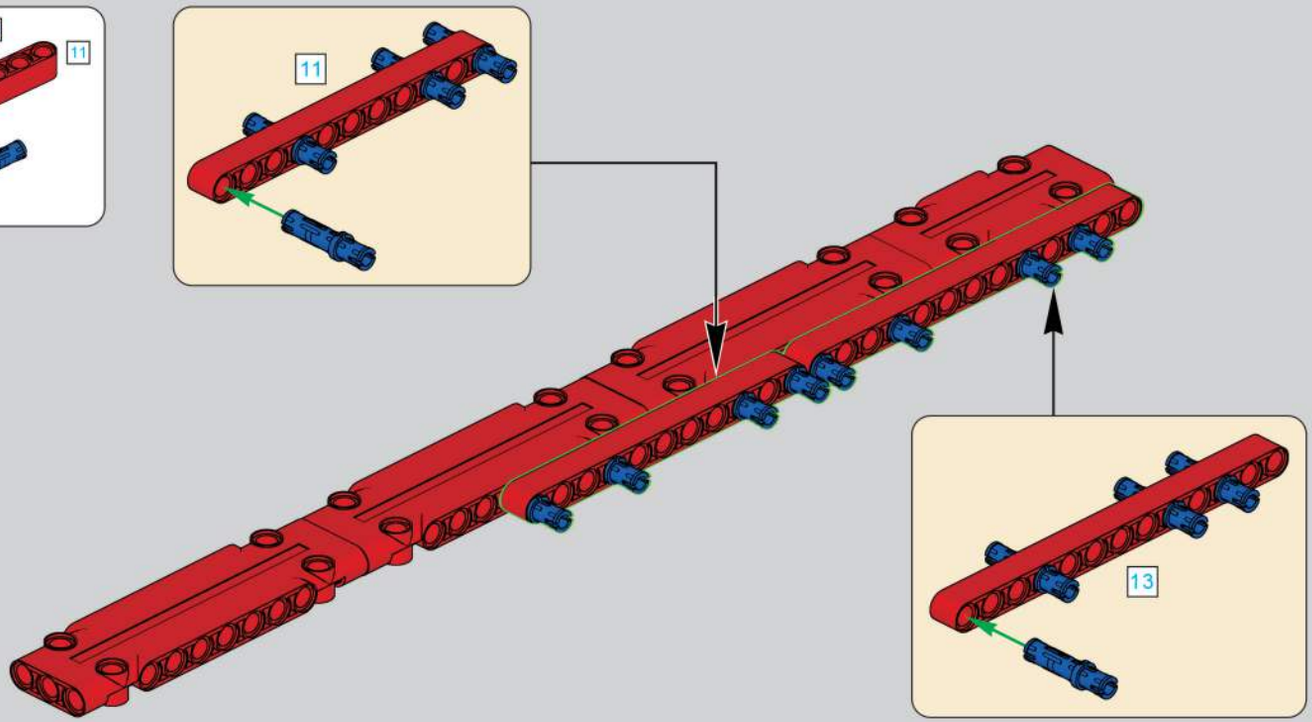

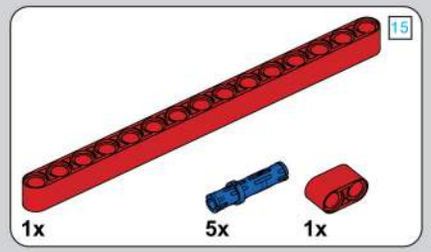

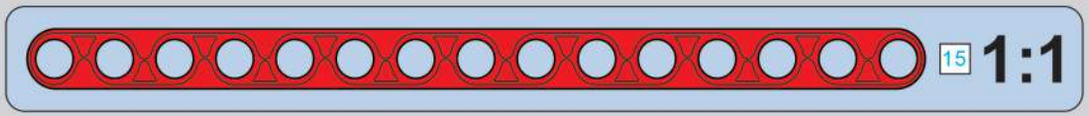

992

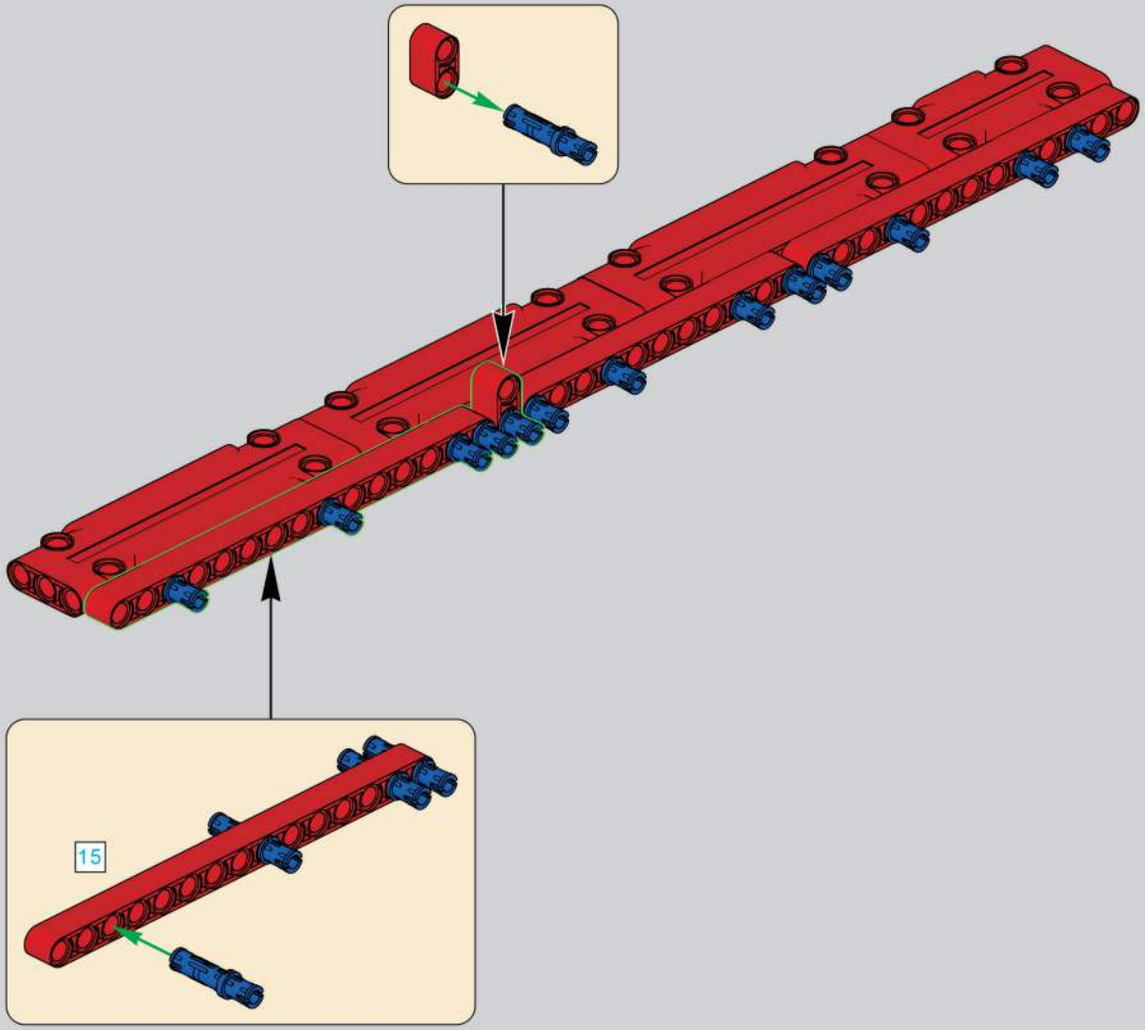

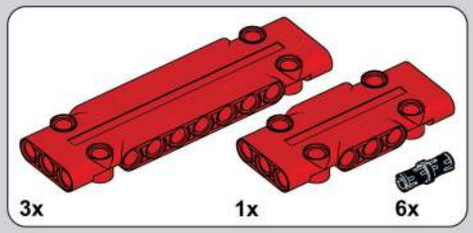

993

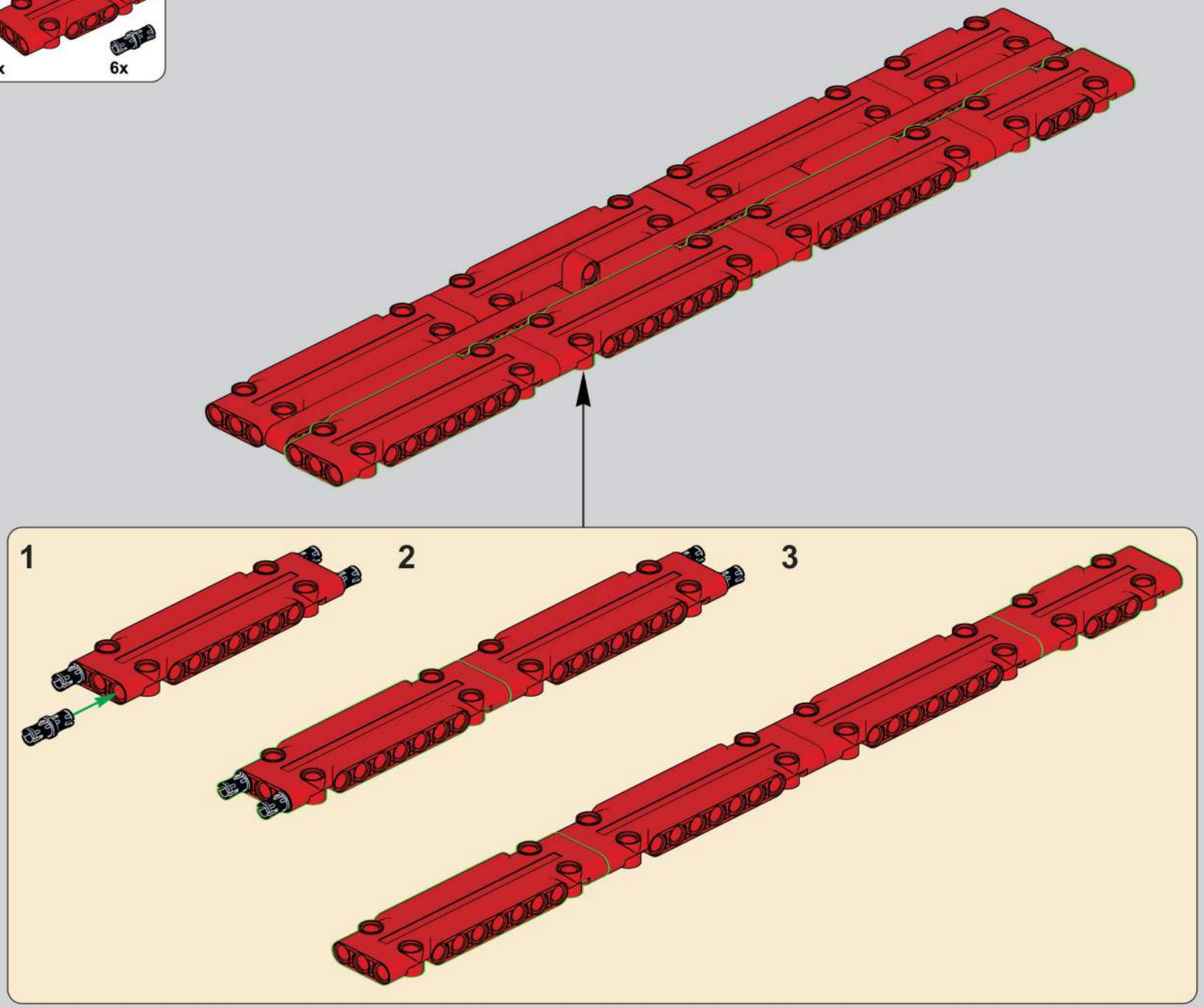

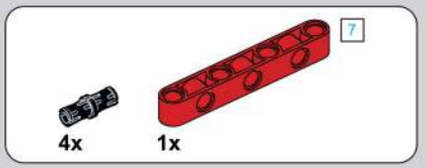

994

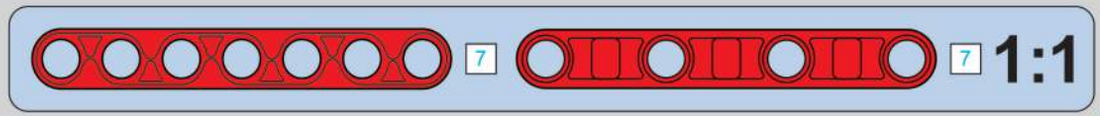

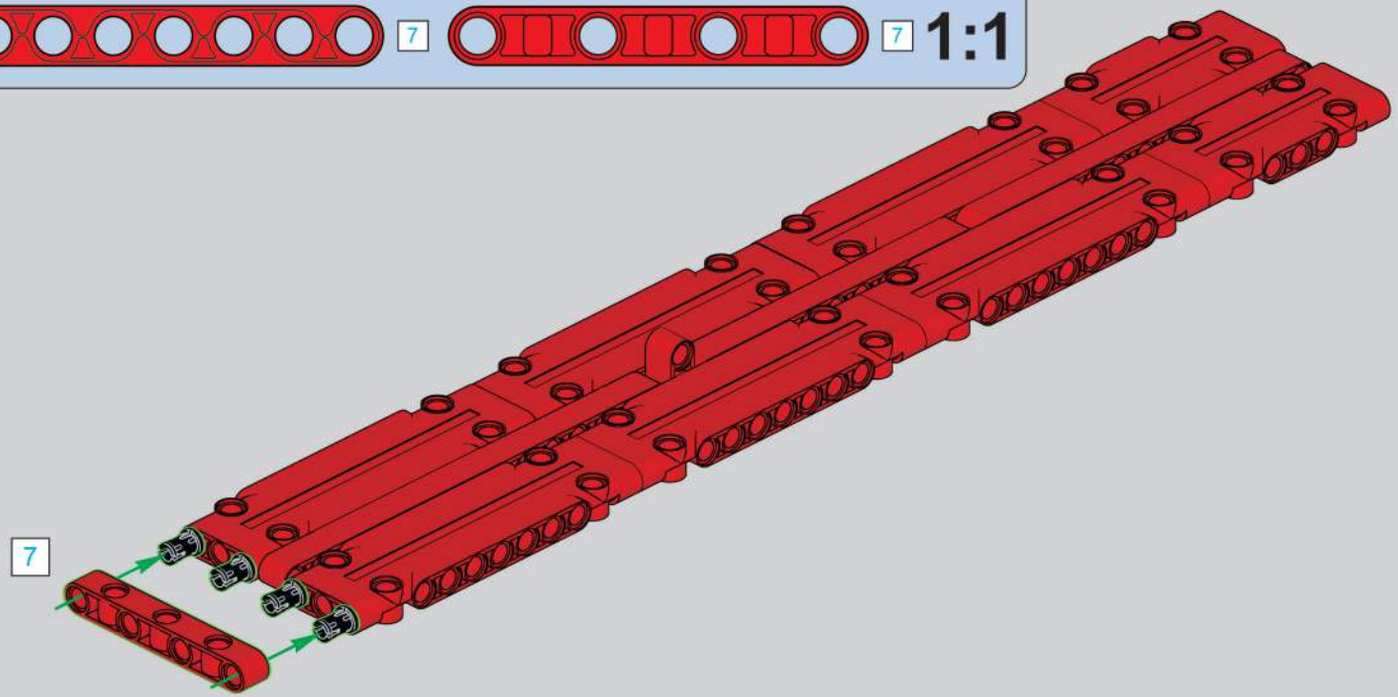

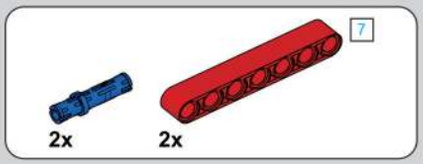

995

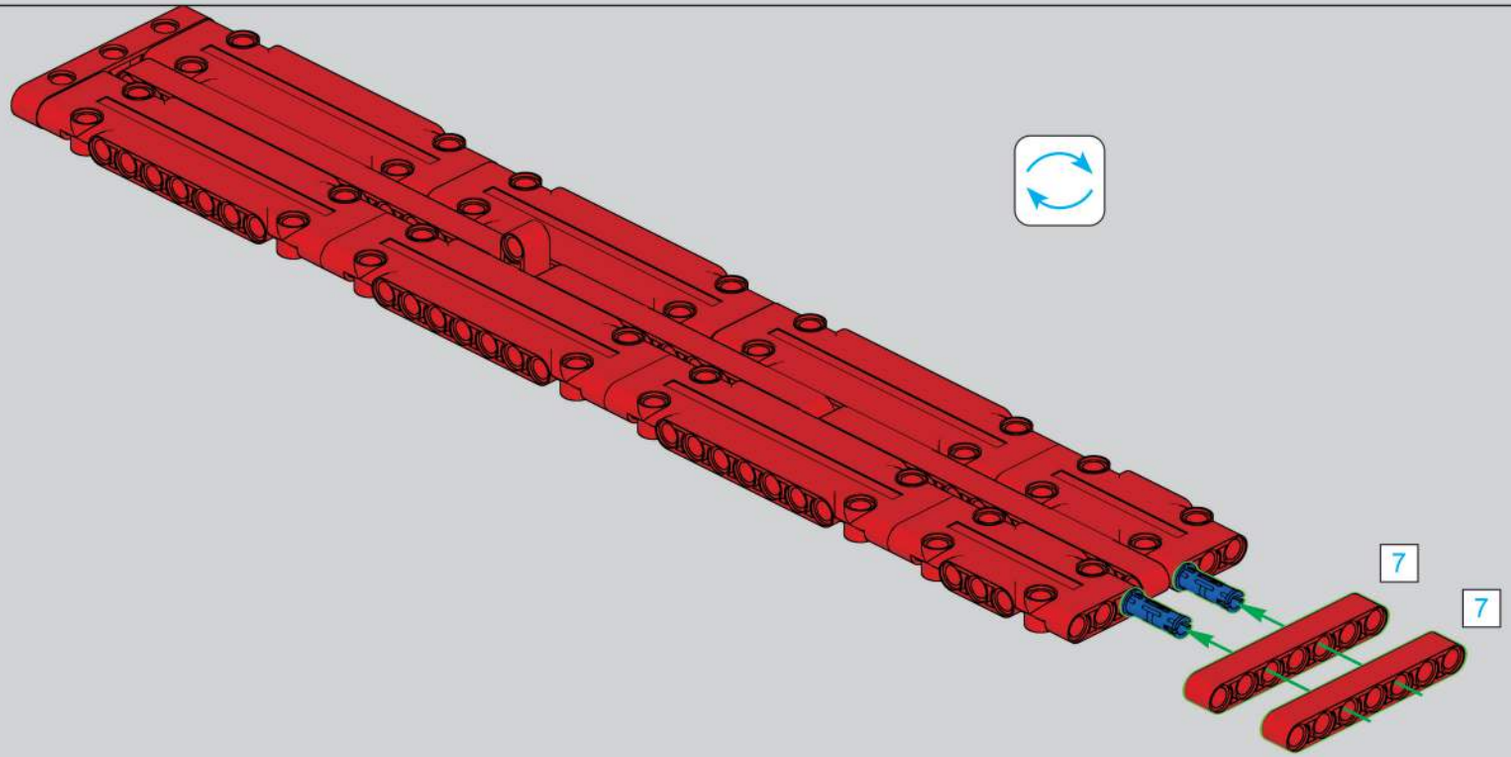

996

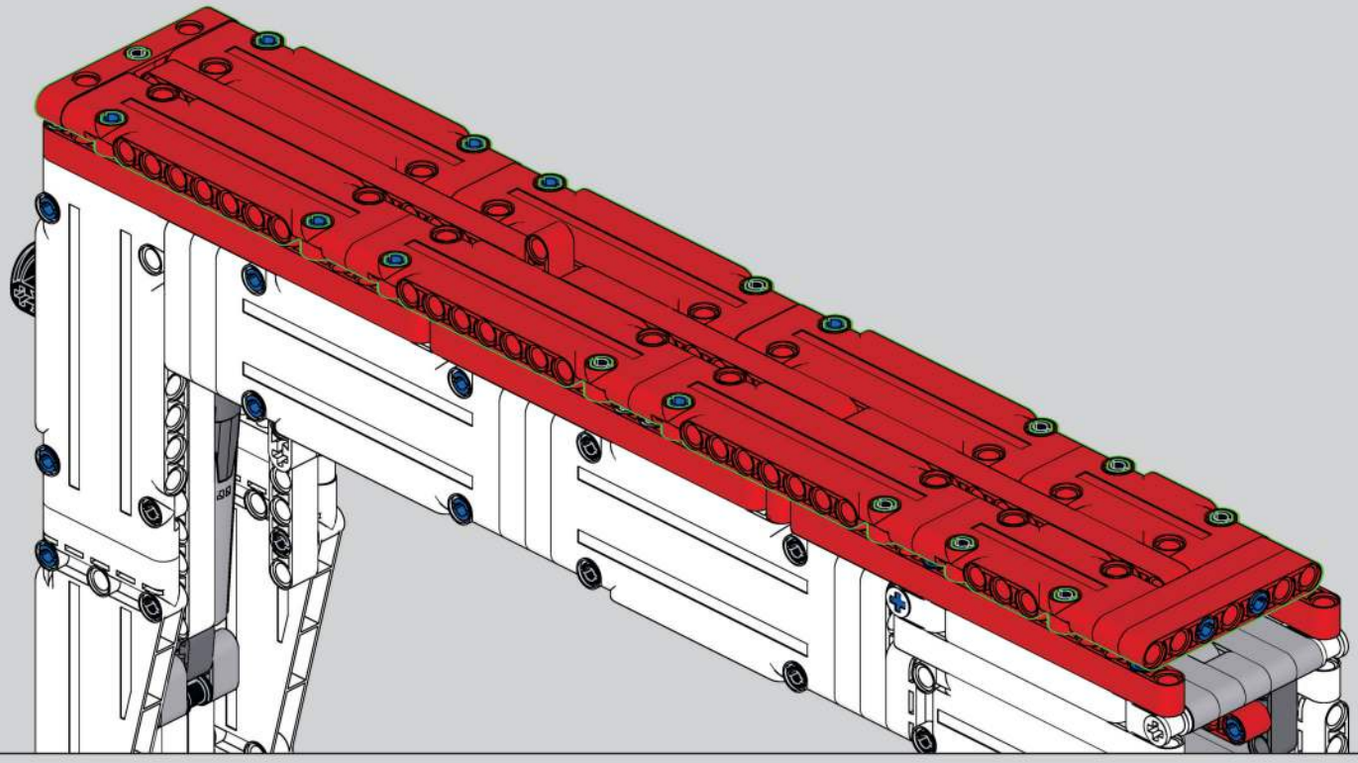

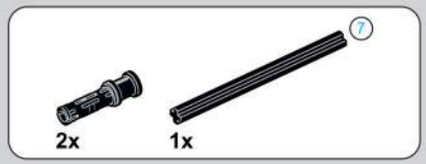

997

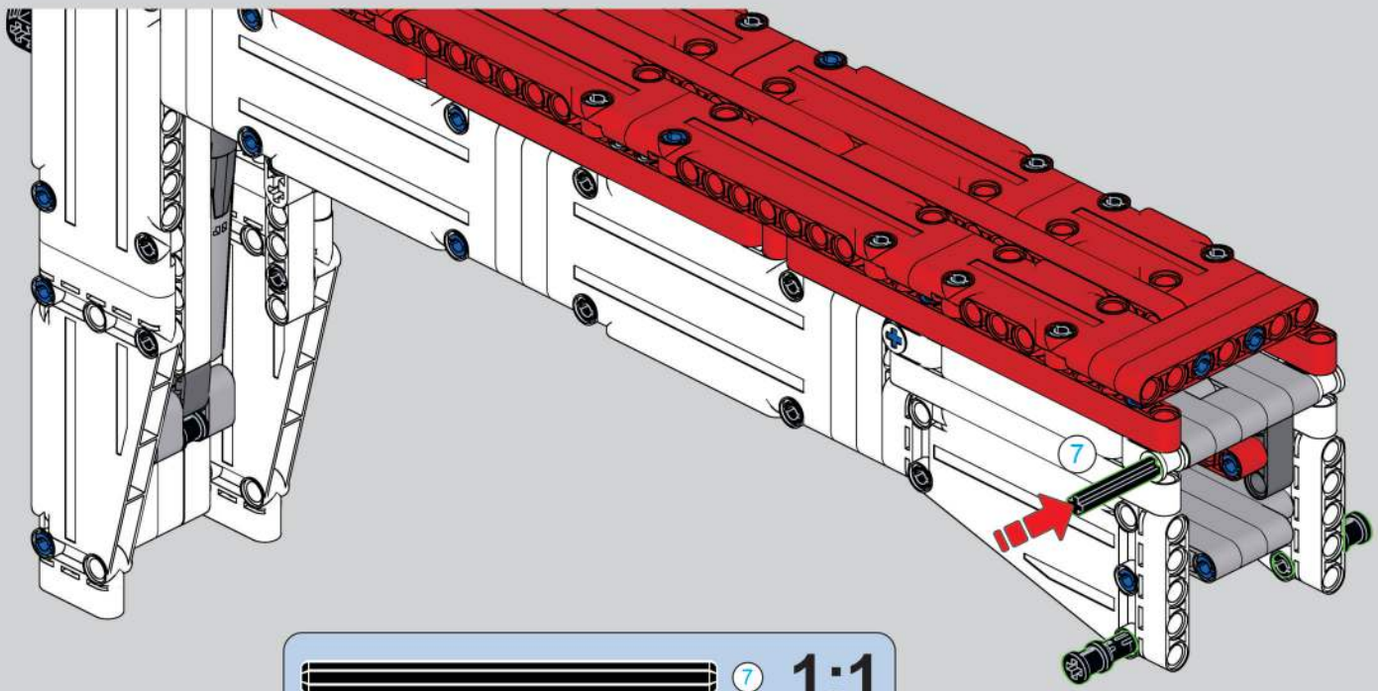

998

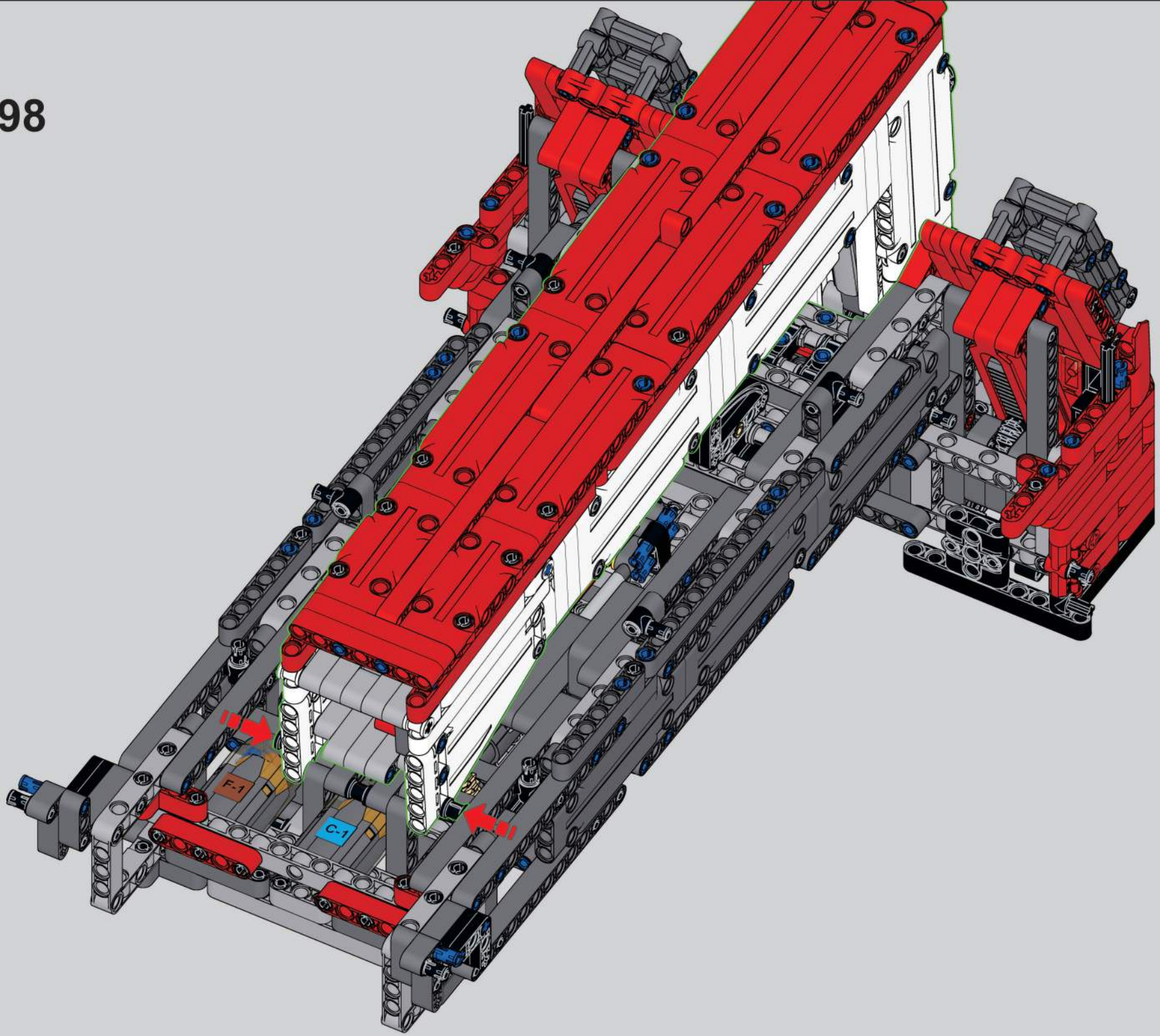

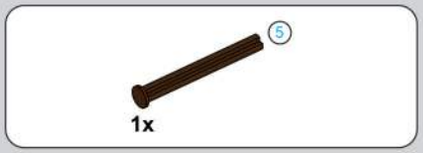

999

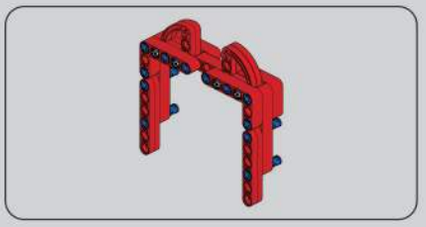

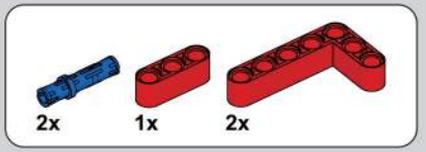

1000

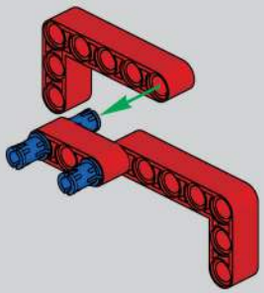

1001

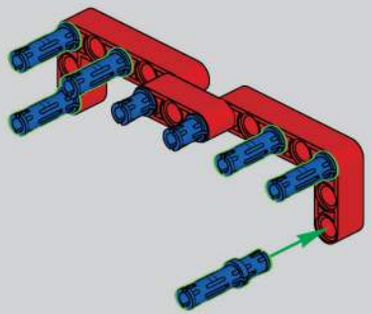

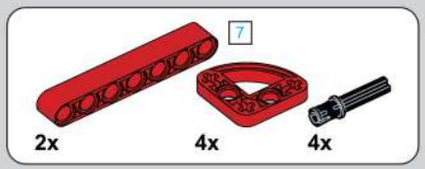

1002

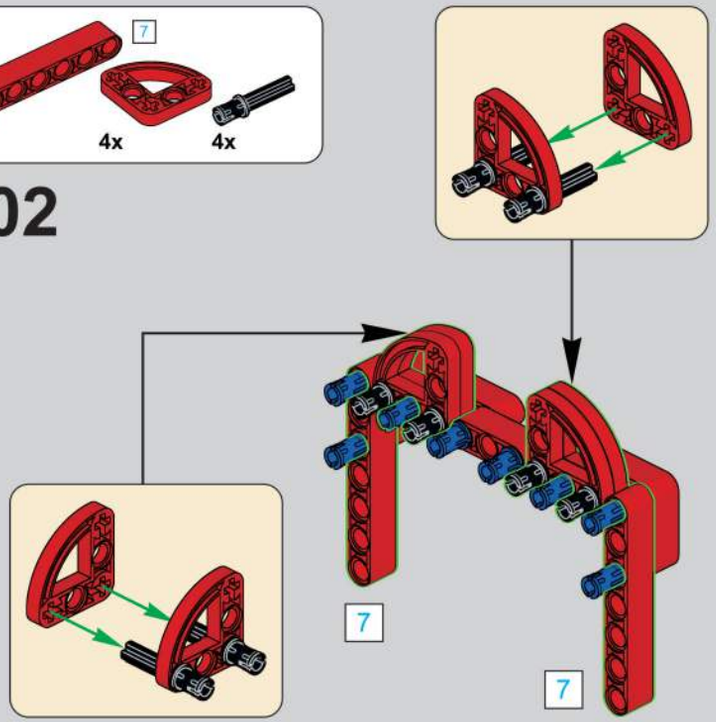

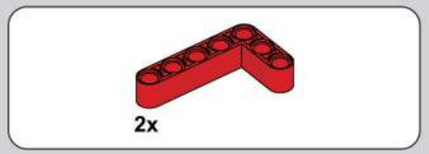

1003

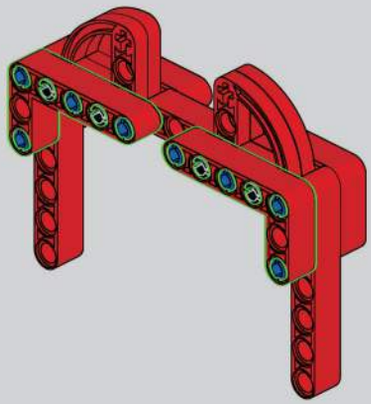

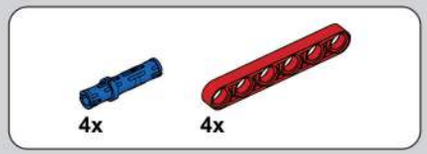

1004

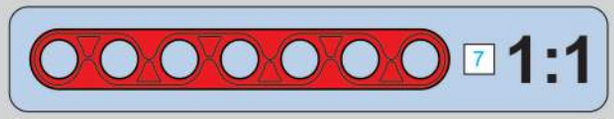

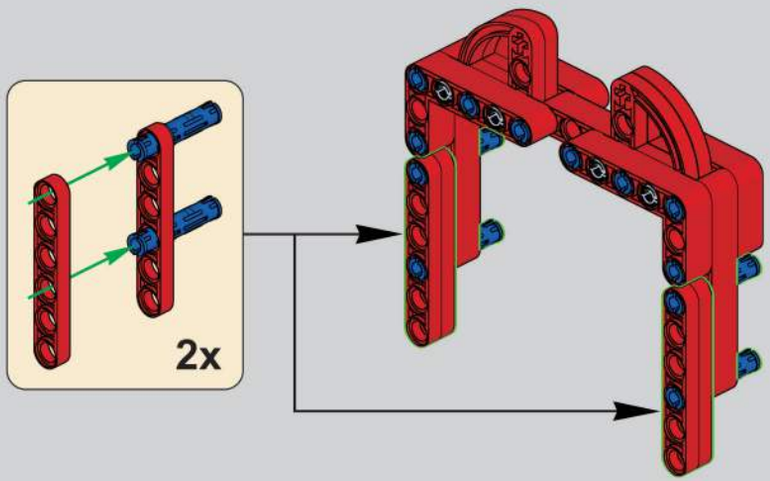

1005

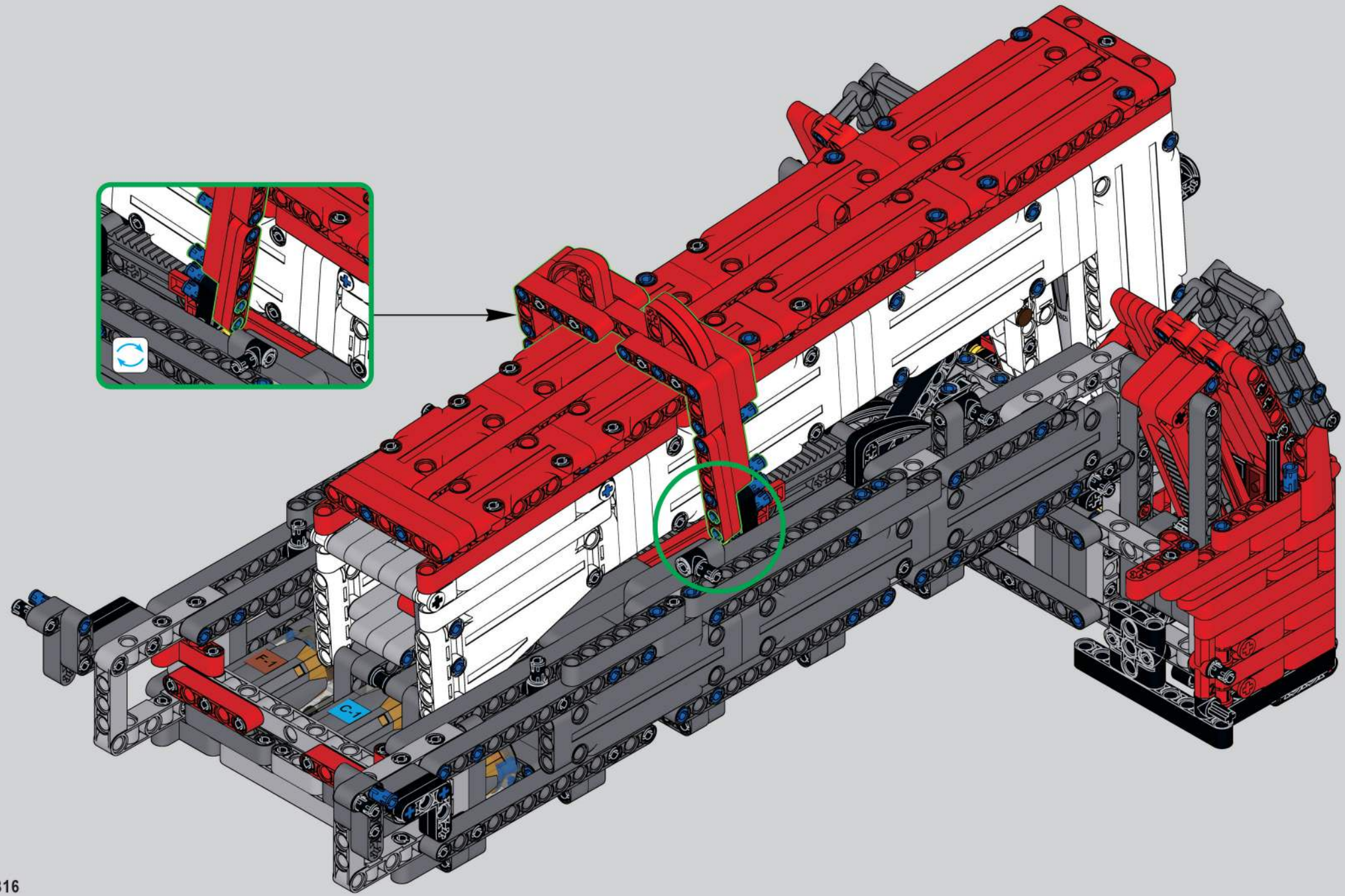

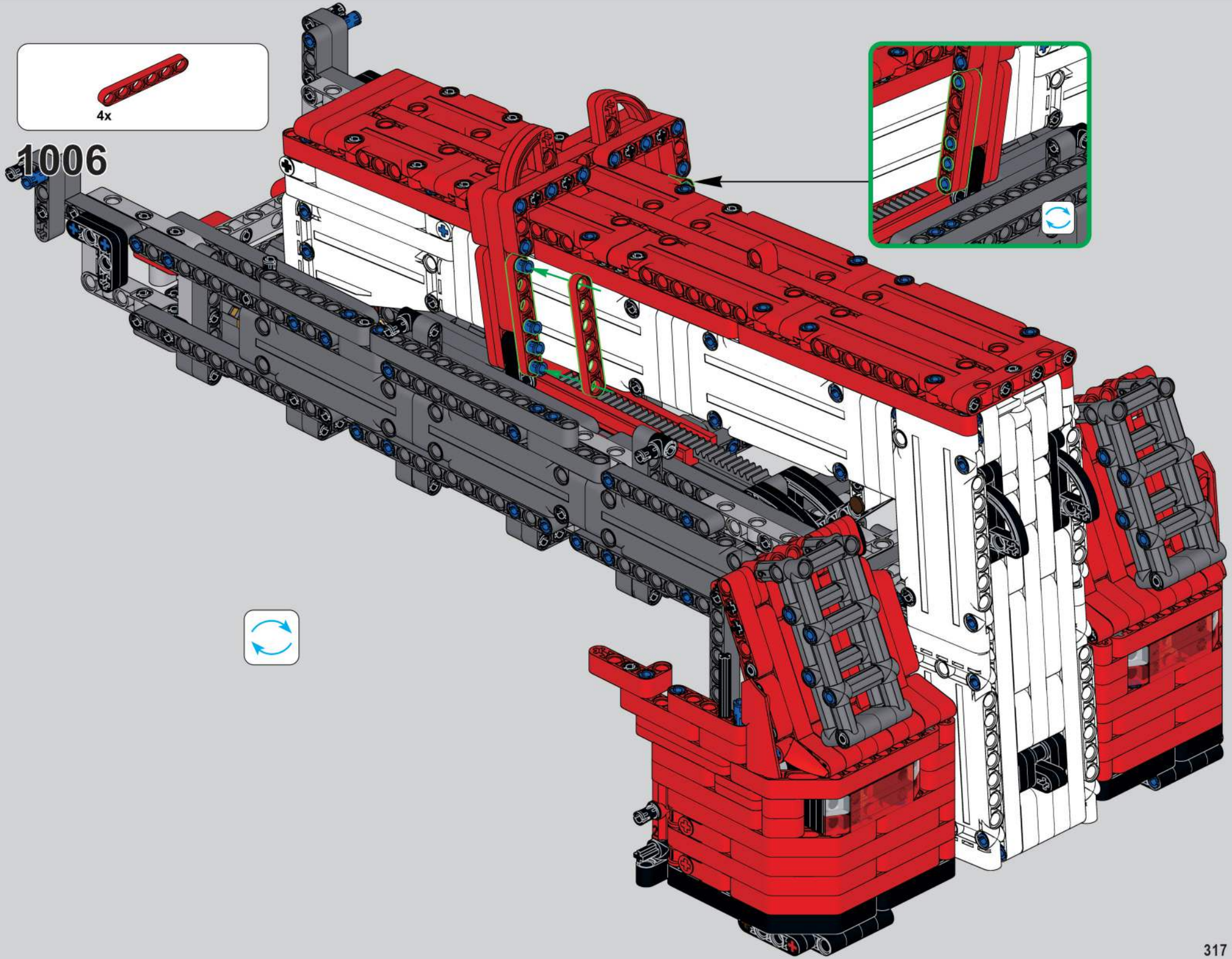
4x
1006

1007

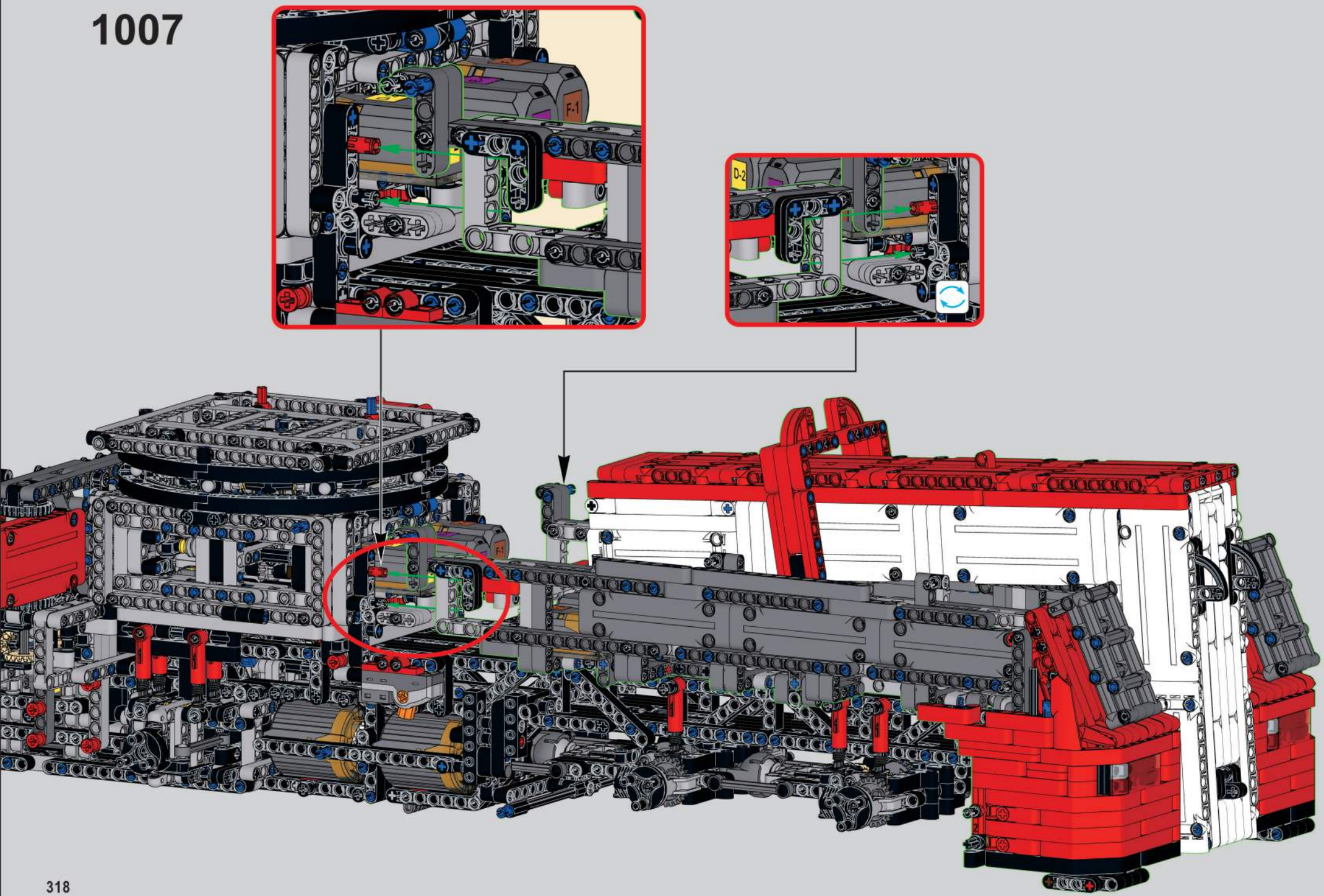

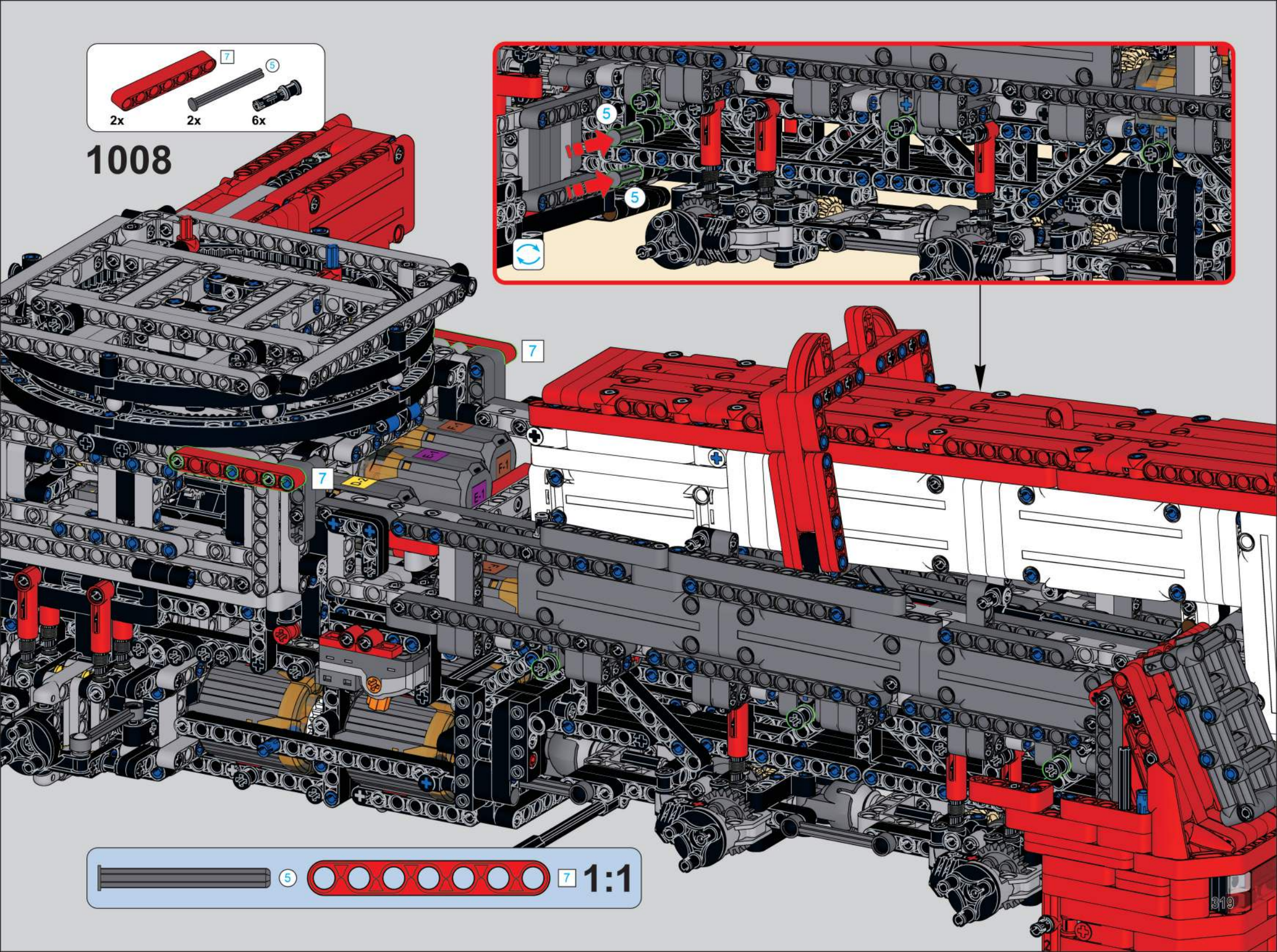
7
5
2x
2x
6x
1008
5
5
7
7
F-1
E-1
5
7
1:1
319

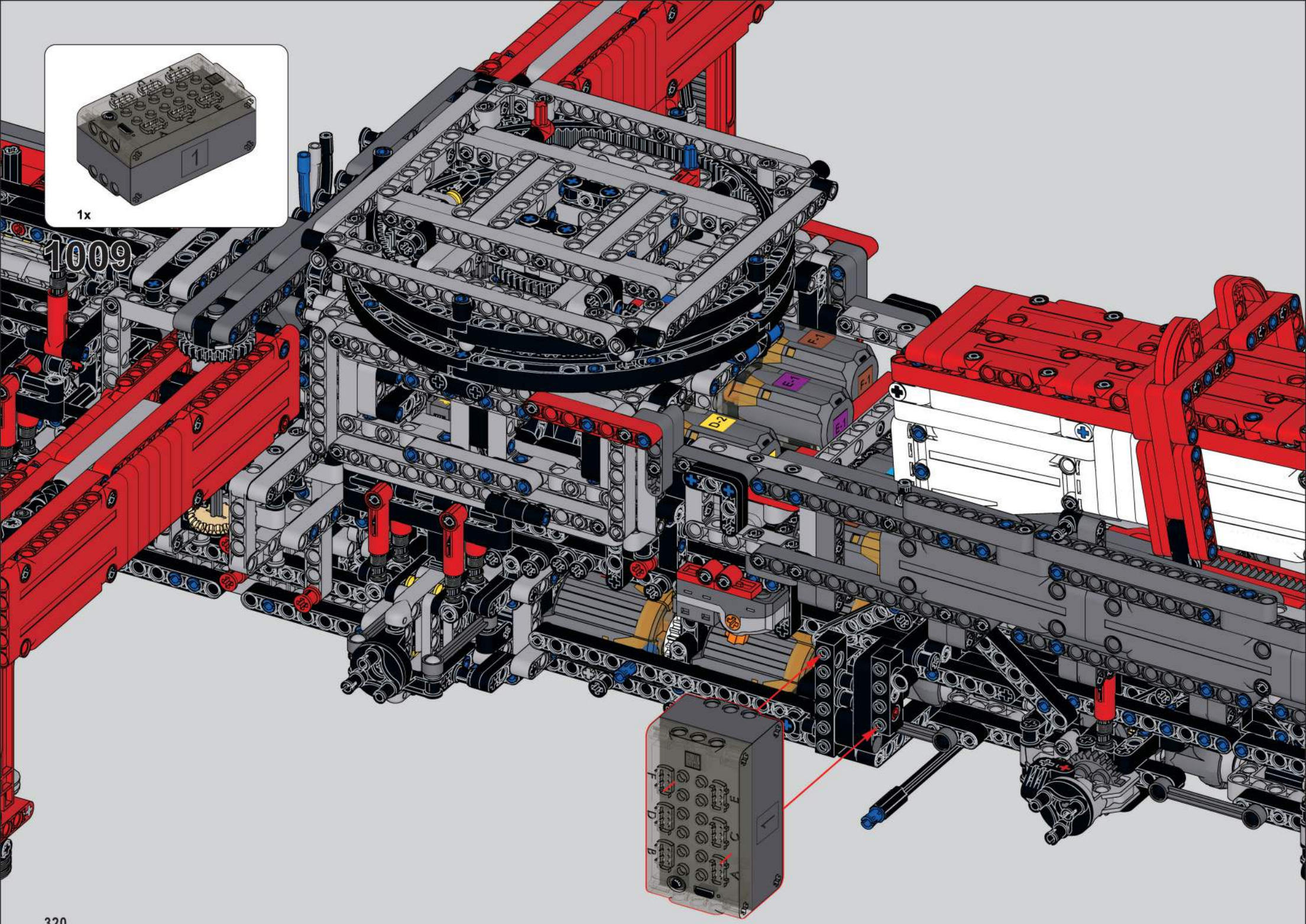
1x
1009
D-2
E-1
F-1
E-2
1

1010

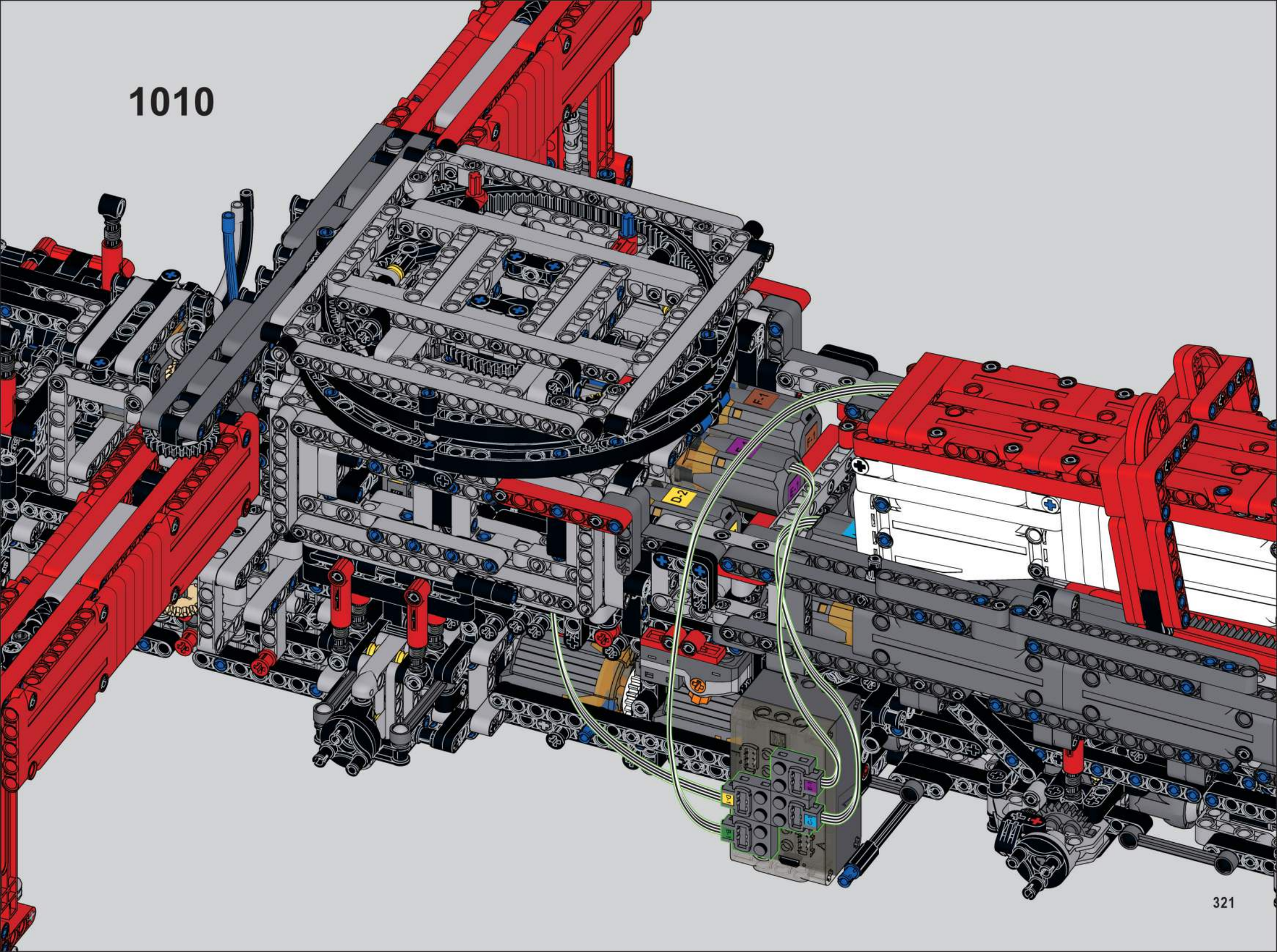

打开模块
Open module

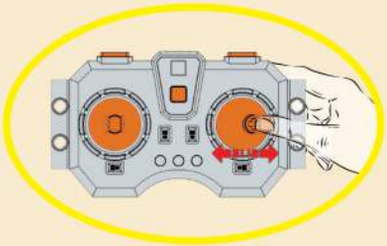

(D通道) 检测左右转向功能是否正常

(D channel) Detects whether the left and right turn function is normal

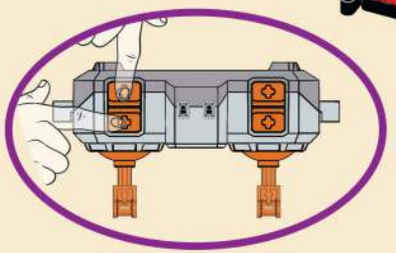

(E通道) 检测驻锄臂开合功能是否正常

(E channel) Check whether the opening and closing function of the hoe-standing arm is normal

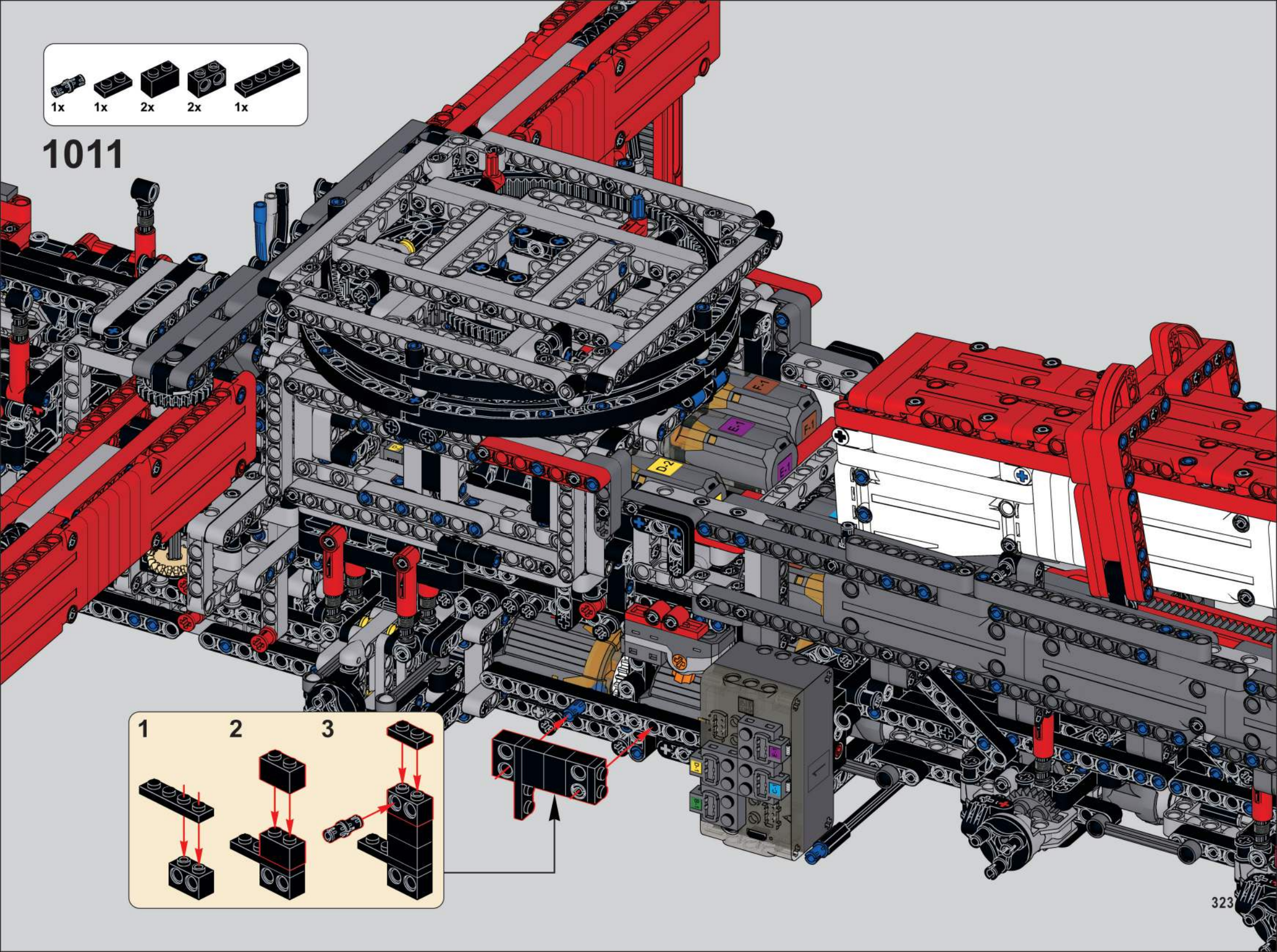
1x
1x
2x
2x
1x
1011
1
2
3
323

1012

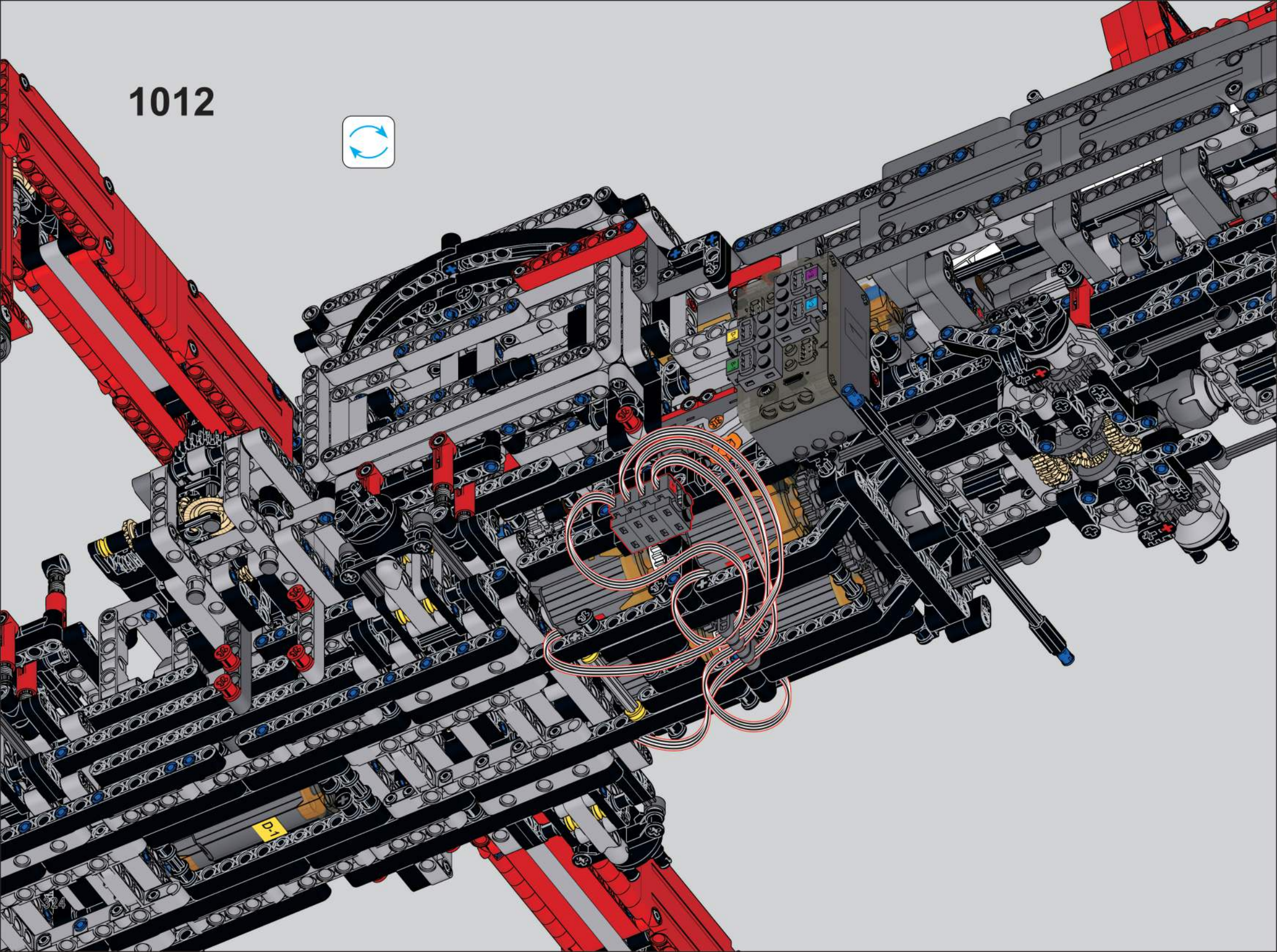

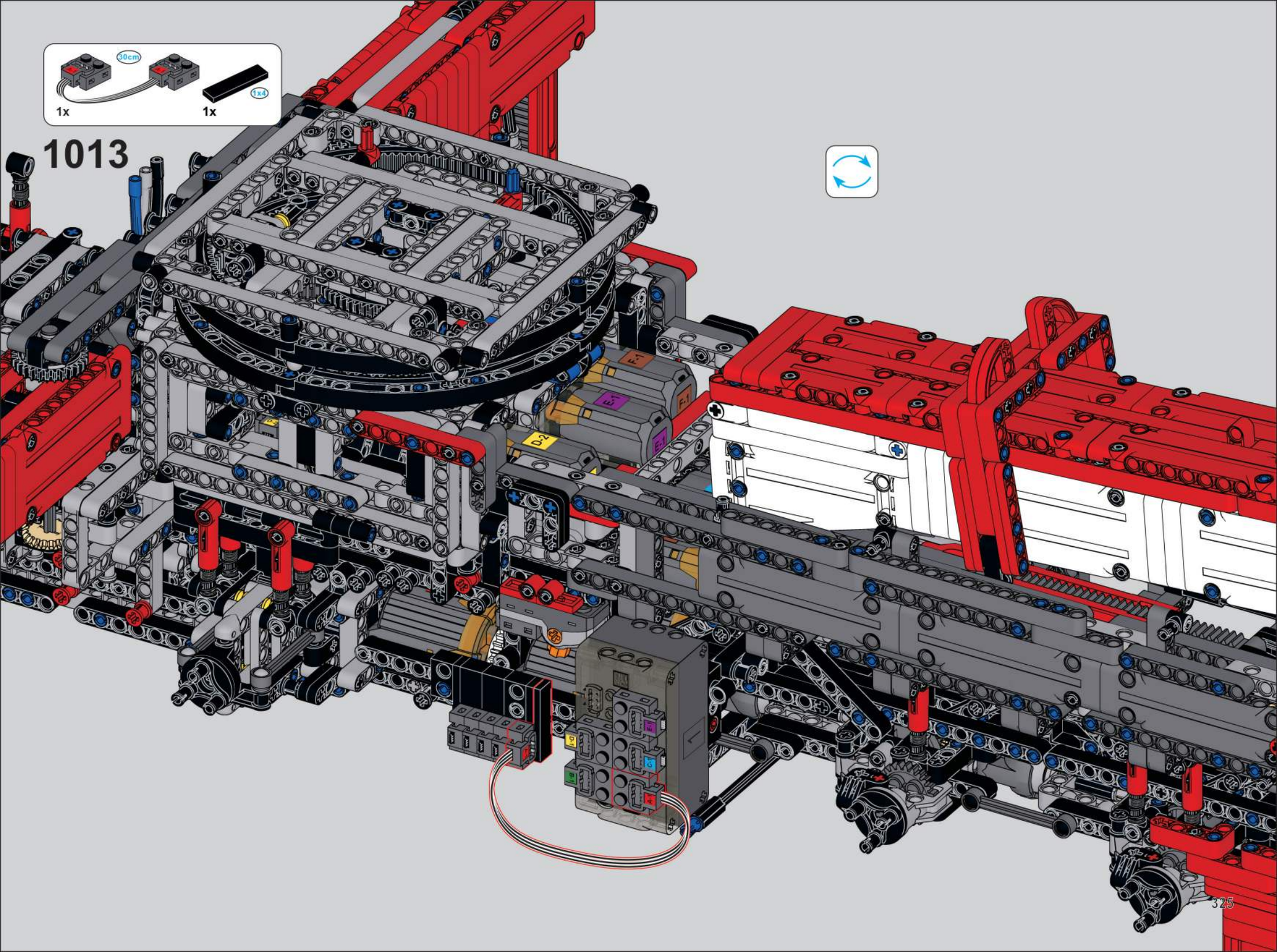
30cm
1x
1x4
1x
1013
D-2
F-1
E-1
C-2
B-2
A-2
669

打开模块
Open module

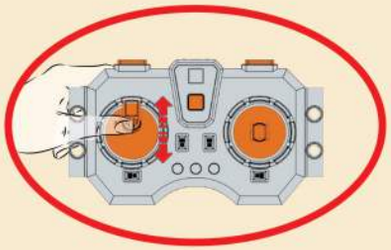

(A通道) 检测前进后退功能是否正常
(E channel) Detects whether the forward and backward functions are normal

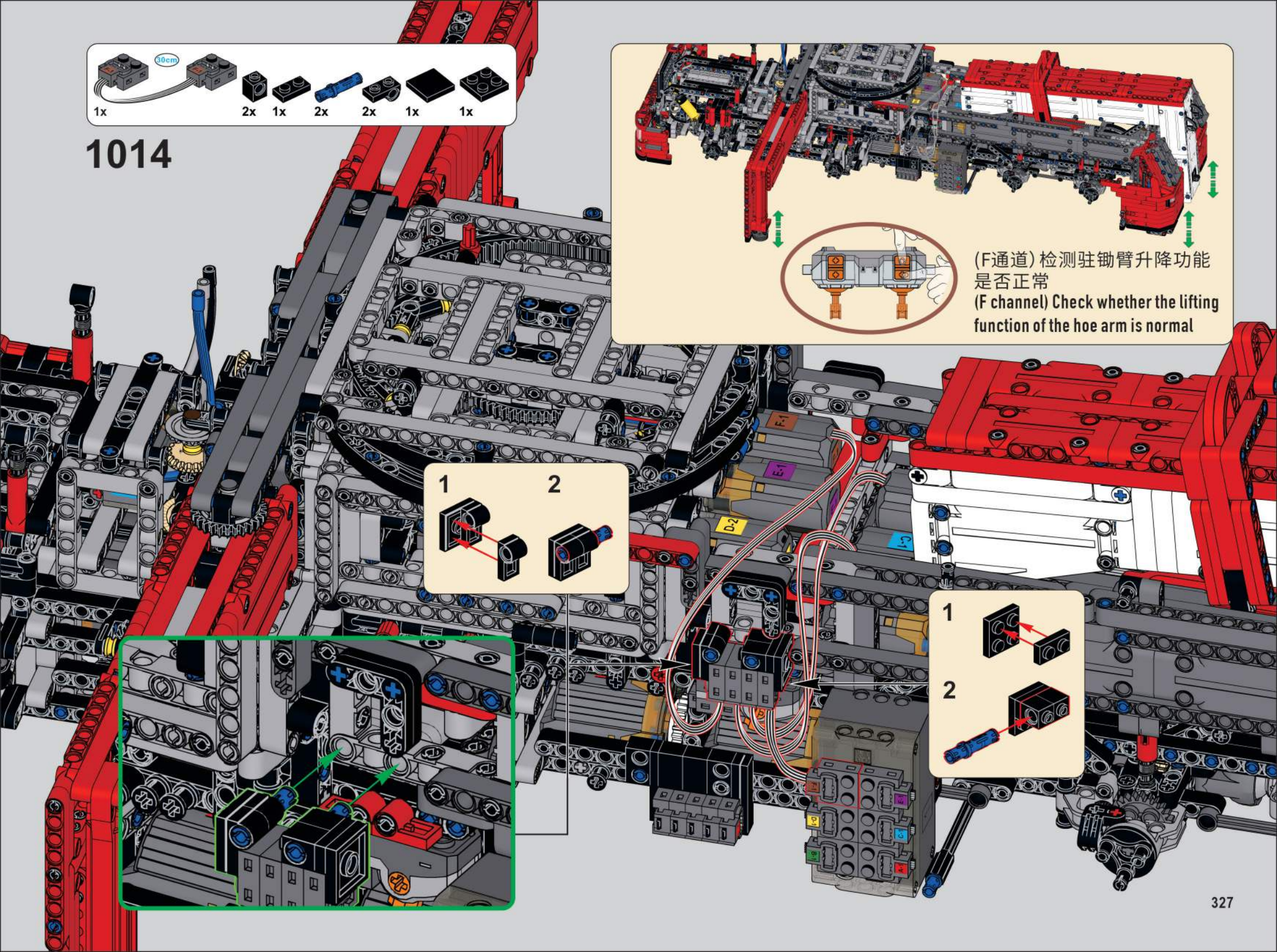
30cm
1x
2x
1x
2x
2x
1x
1x
1014
(F通道) 检测驻锄臂升降功能是否正常
(F channel) Check whether the lifting function of the hoe arm is normal
1
2
1
2

MOULD KING®

宇 星 模 王