MOULD KING®

宇星模王

宇星工程系列

MODELS 清障车

NO.TOW TRUCK

B

19008

10966+ Pcs/Pza

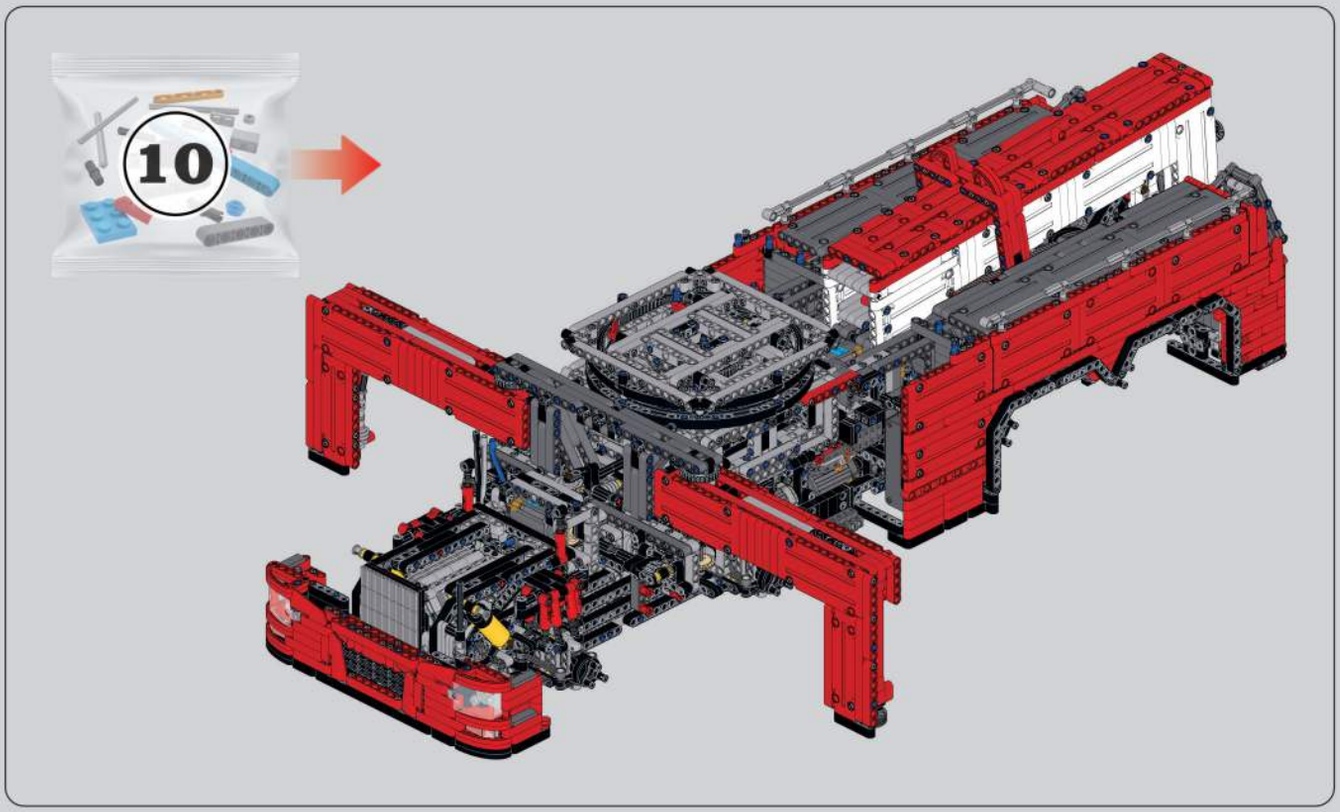

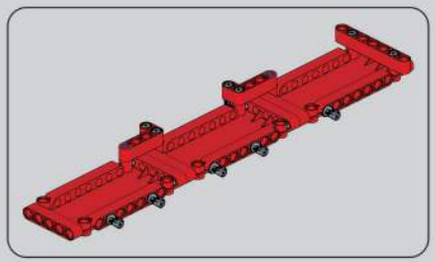

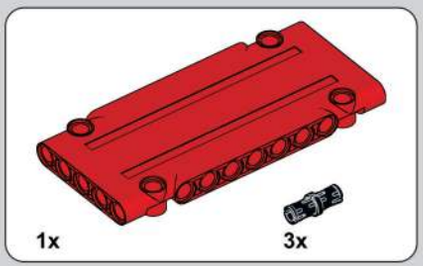

1015

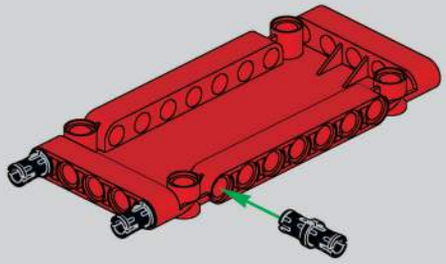

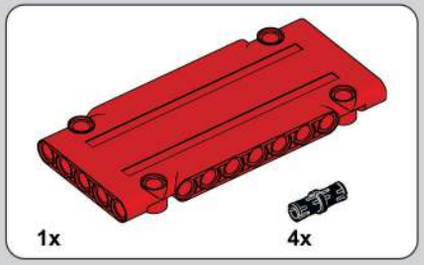

1016

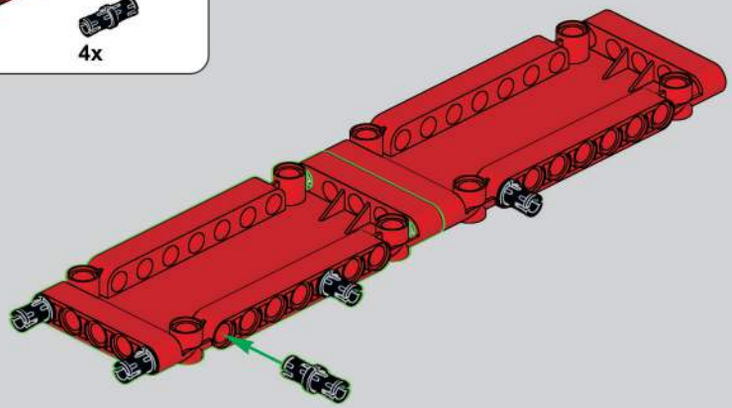

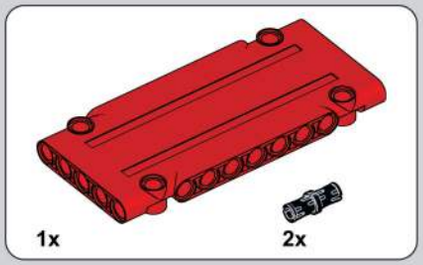

1017

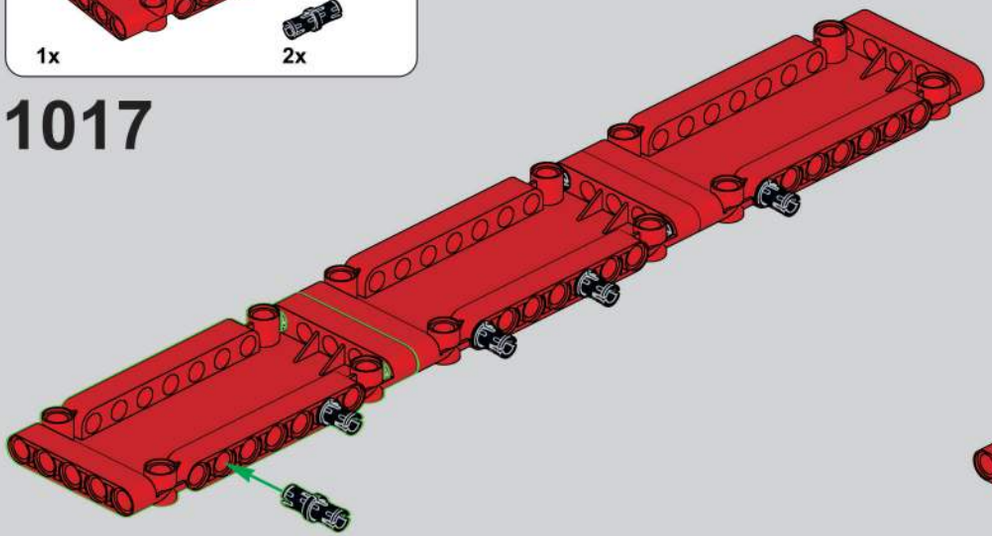

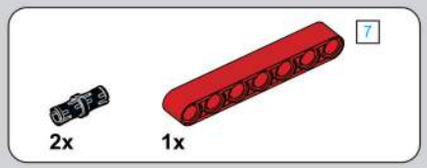

1018

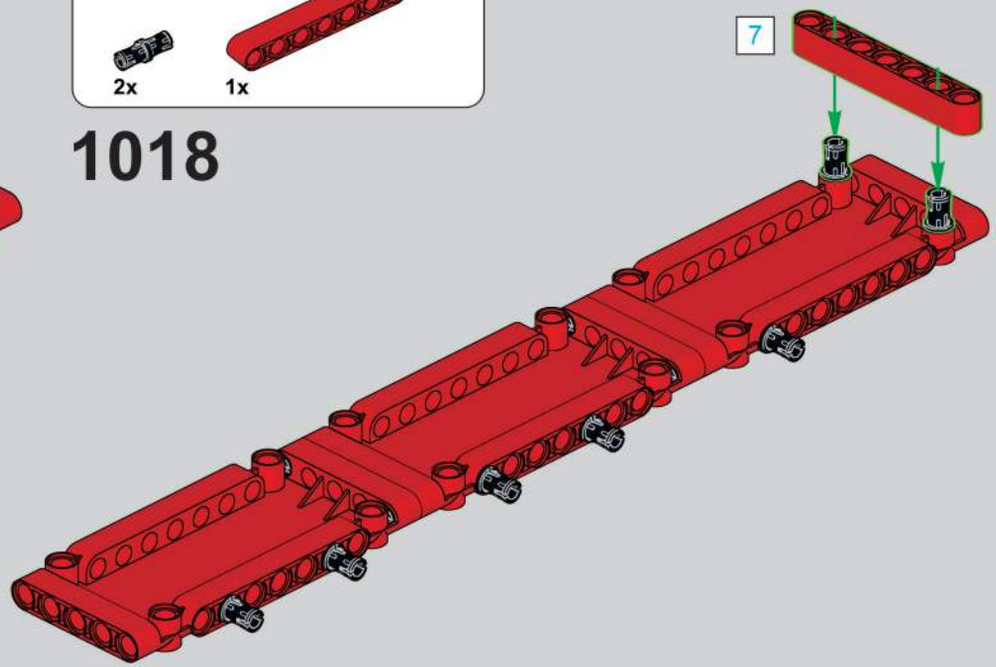

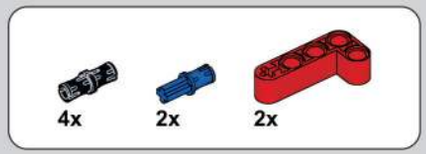

1019

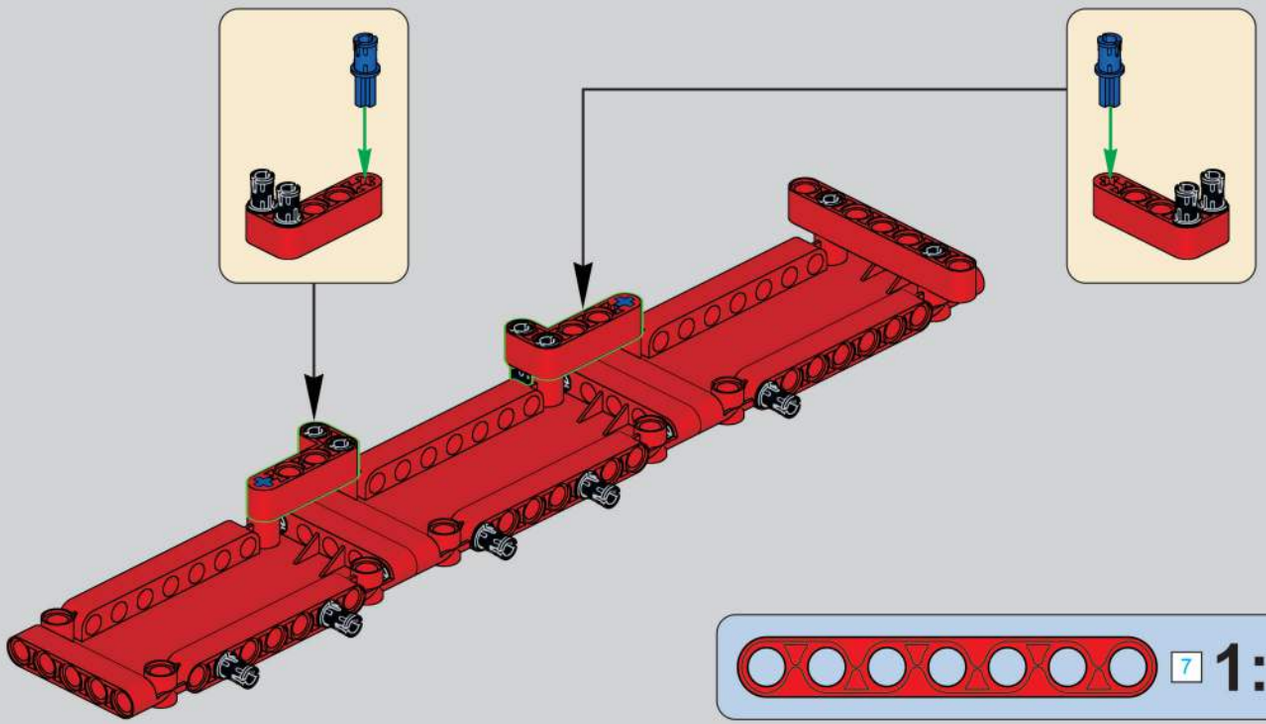

1020

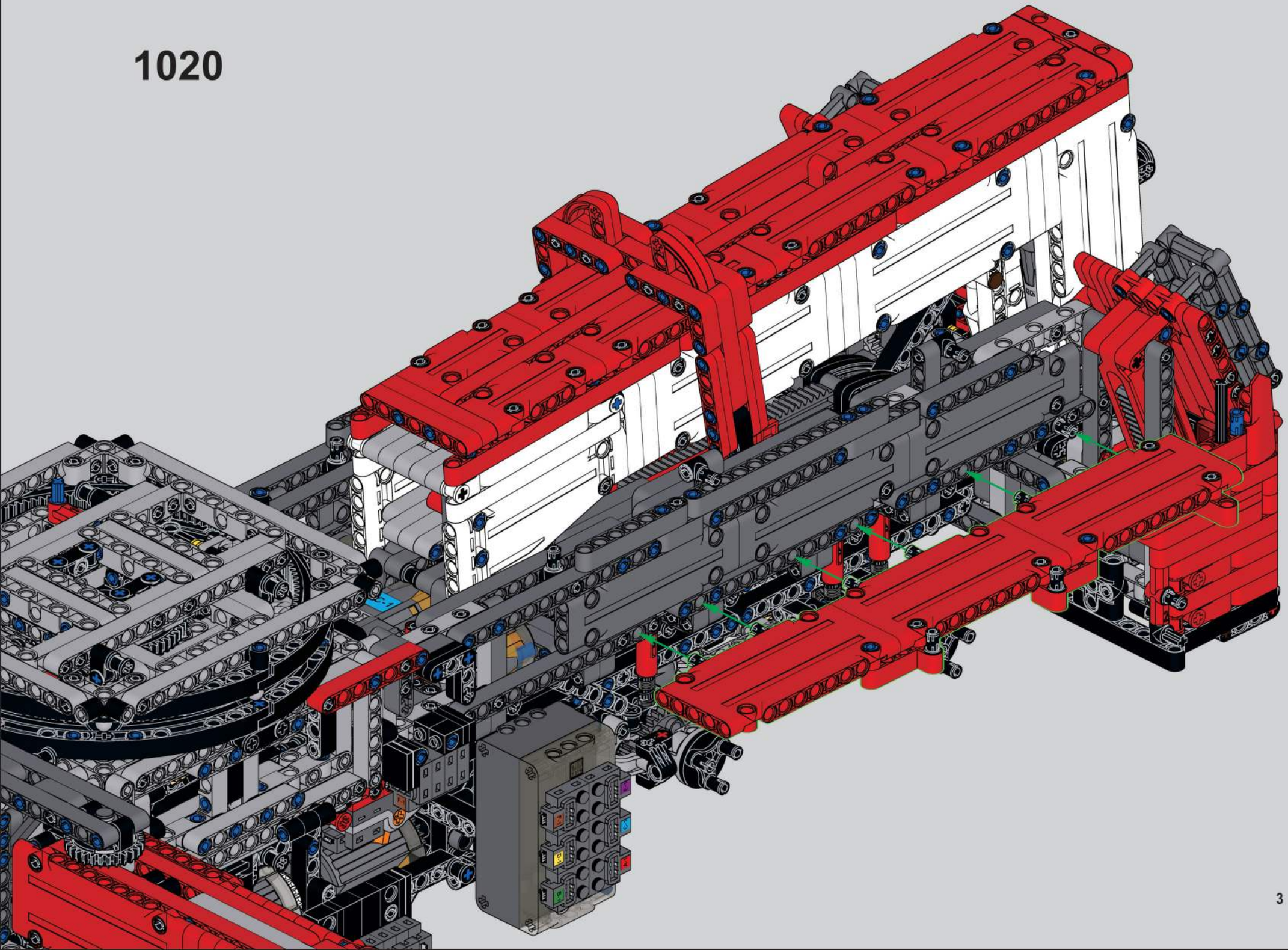

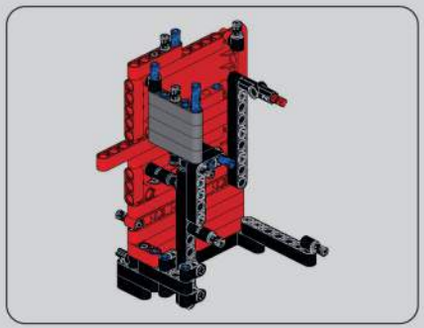

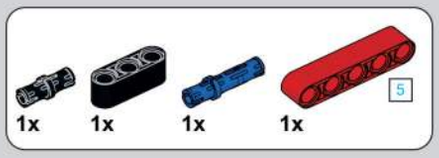

1022

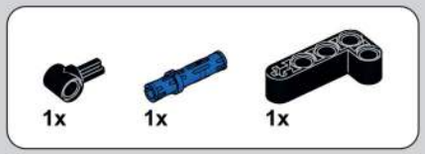

1023

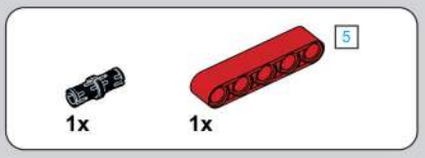

1024

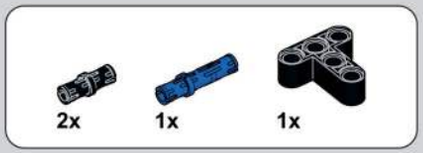

1021

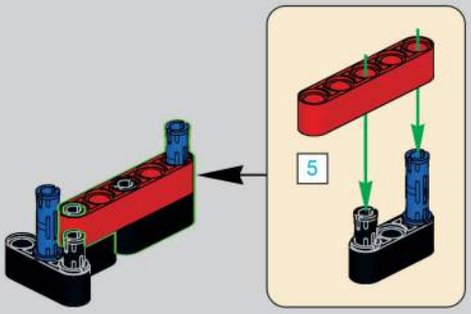

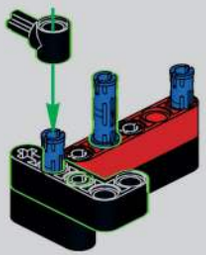

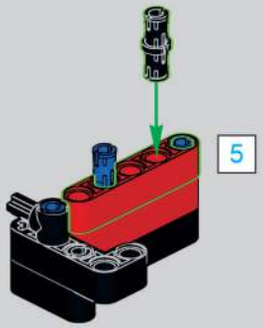

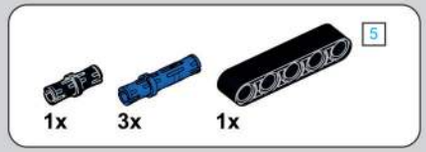

1025

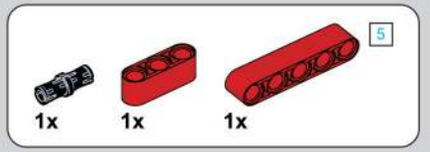

1026

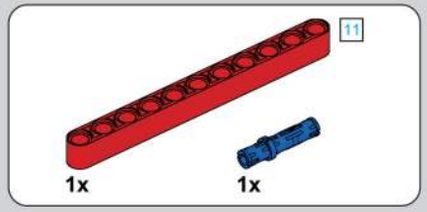

1027

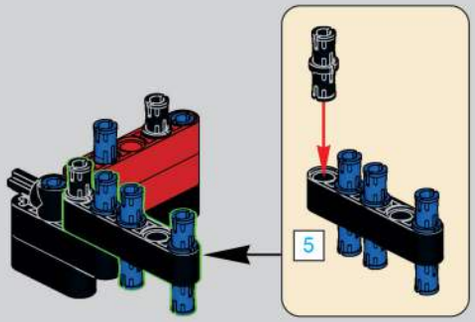

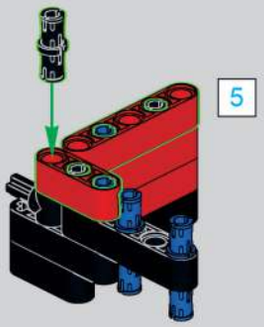

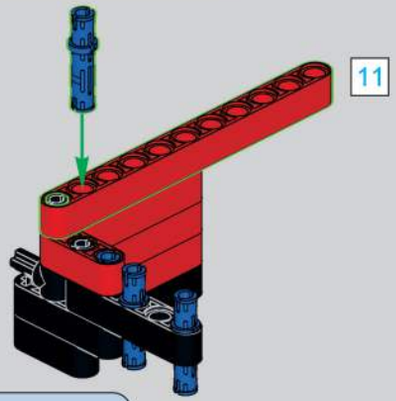

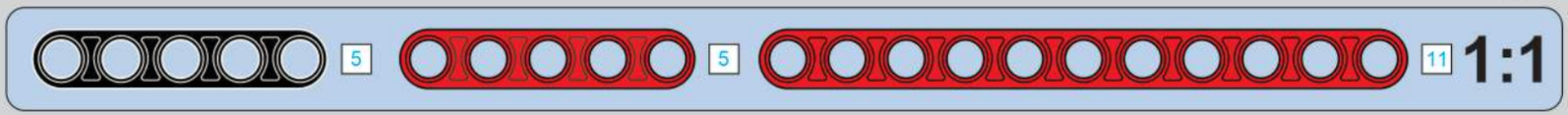

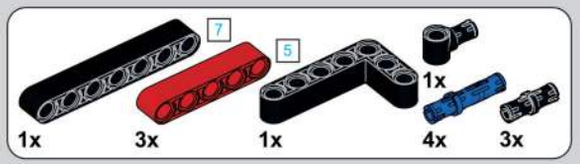

1028

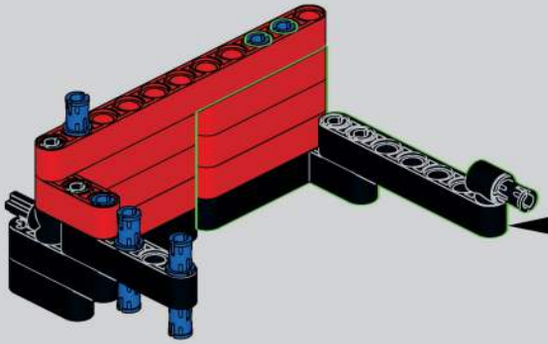

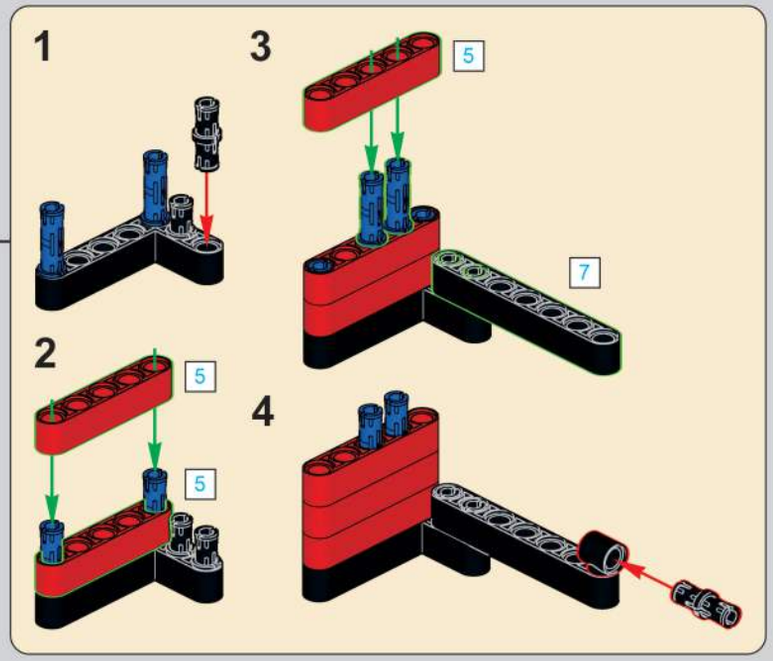

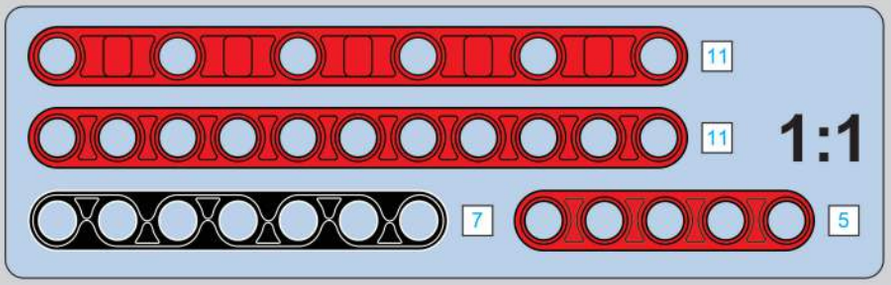

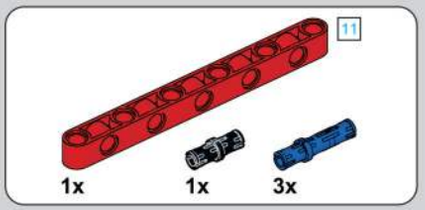

1029

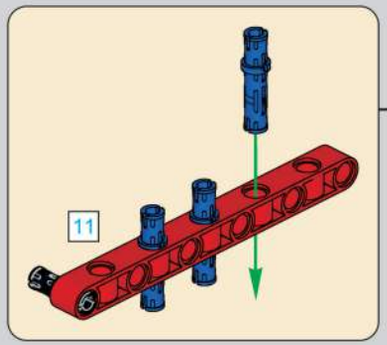

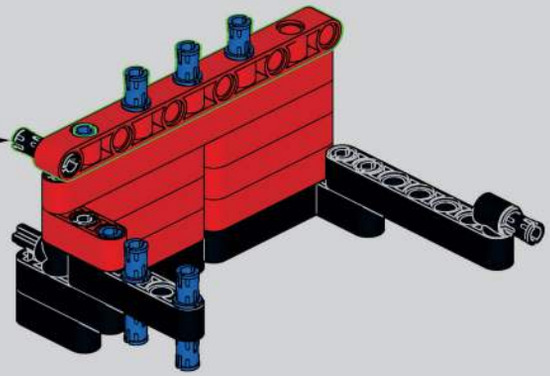

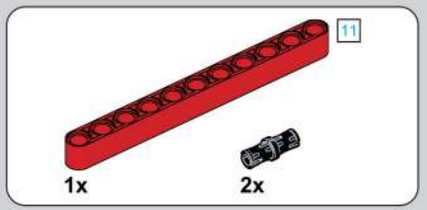

1030

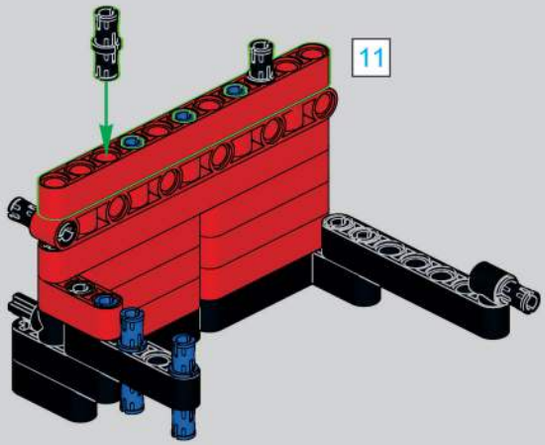

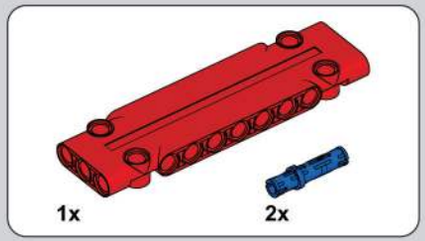

1031

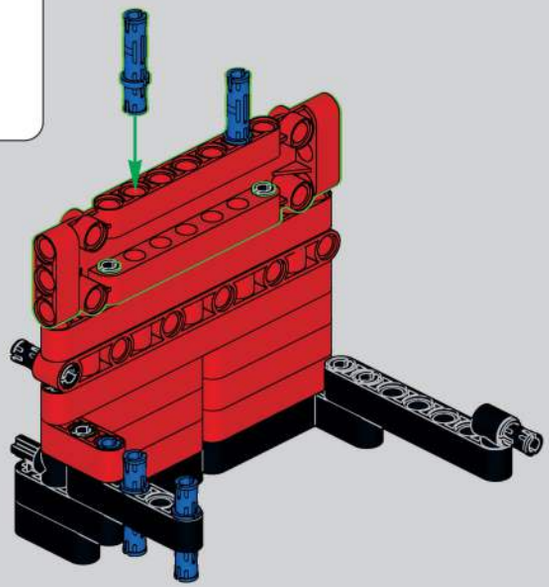

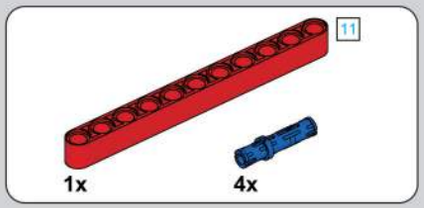

1032

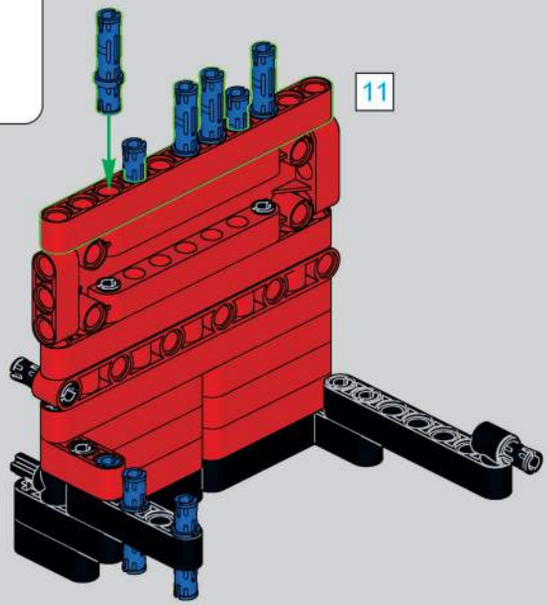

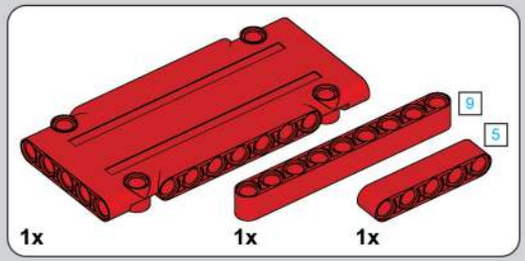

1033

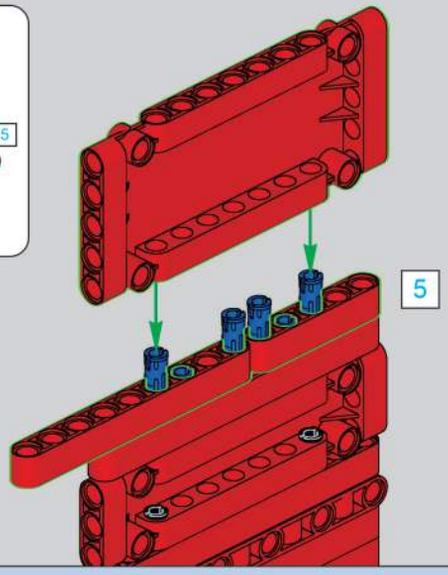

1034

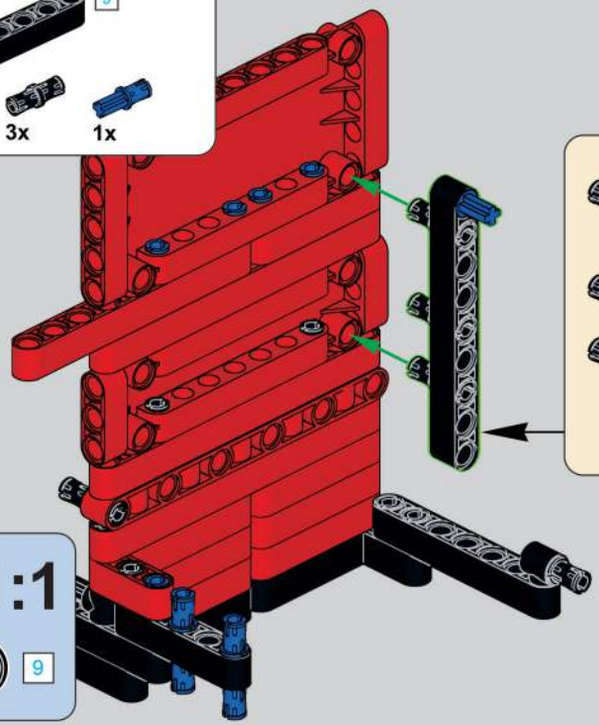

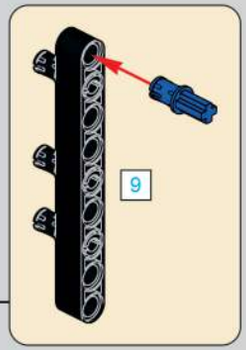

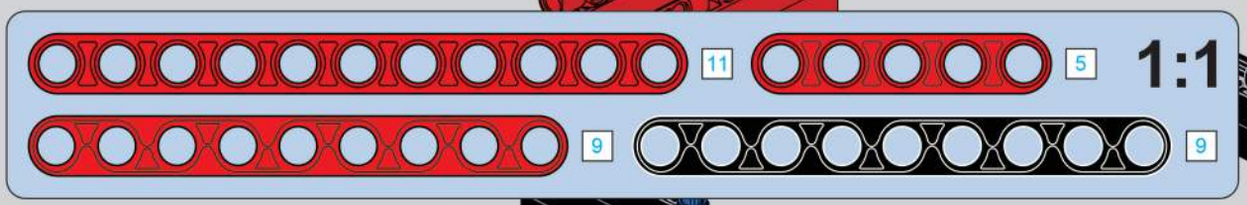

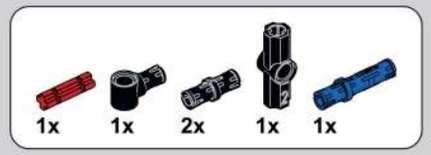

1035

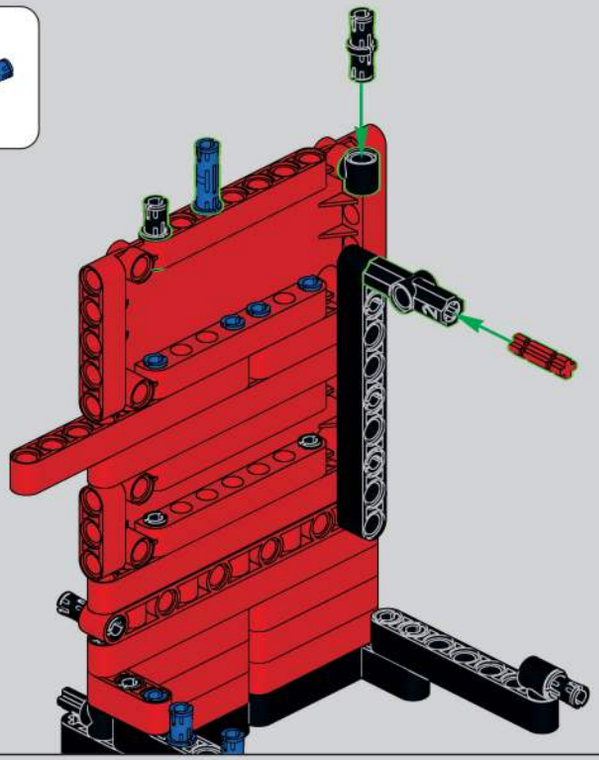

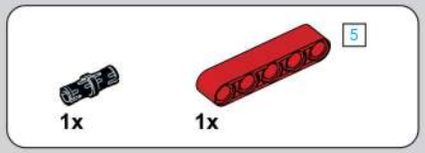

1036

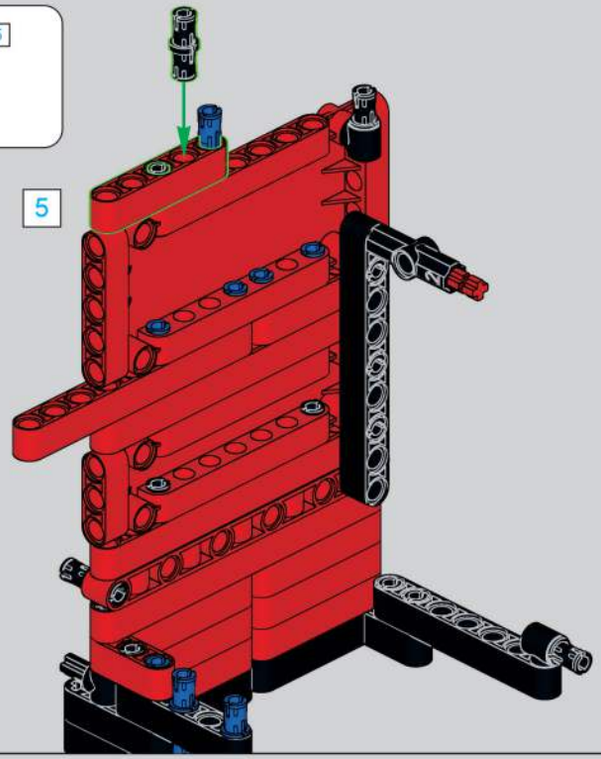

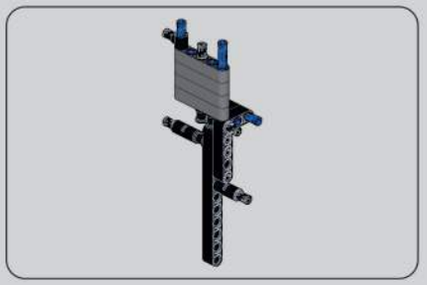

1037

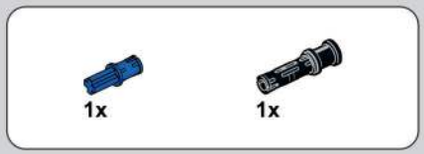

1038

1039

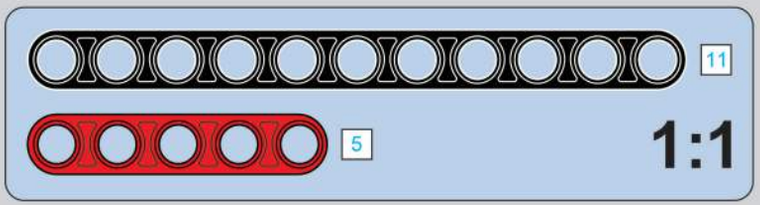

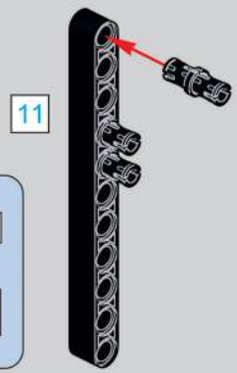

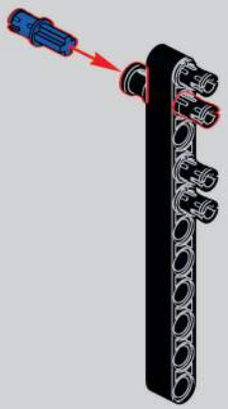

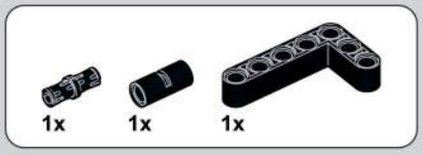

1040

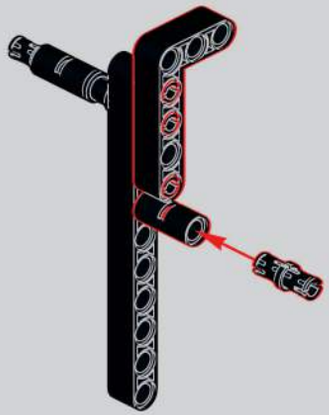

1041

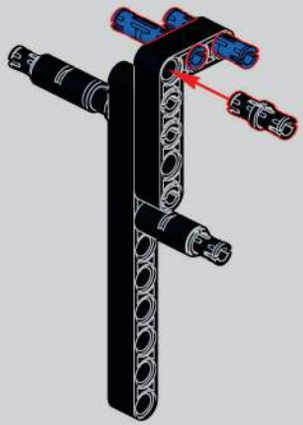

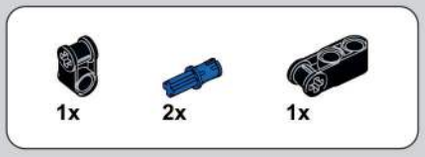

1042

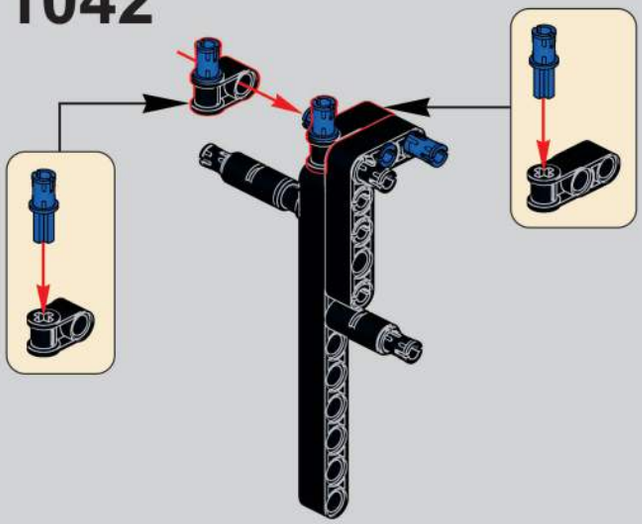

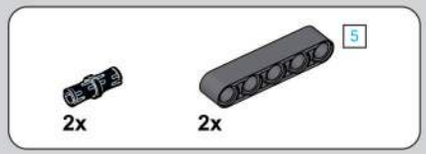

1043

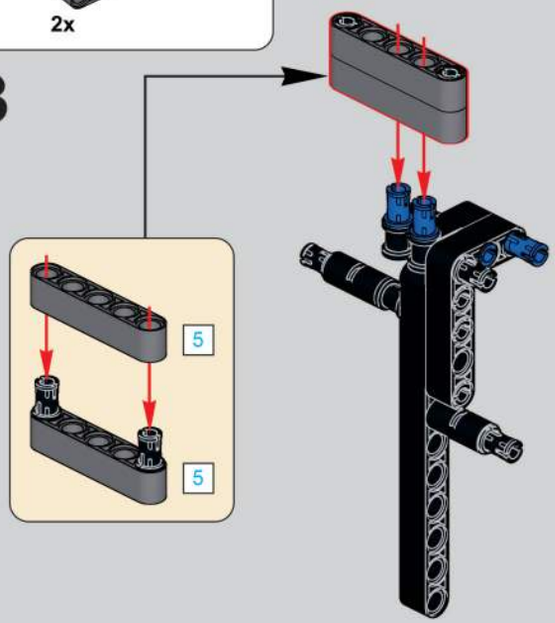

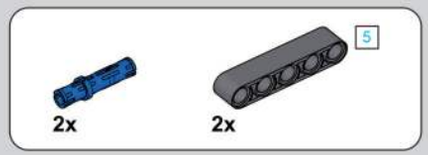

1044

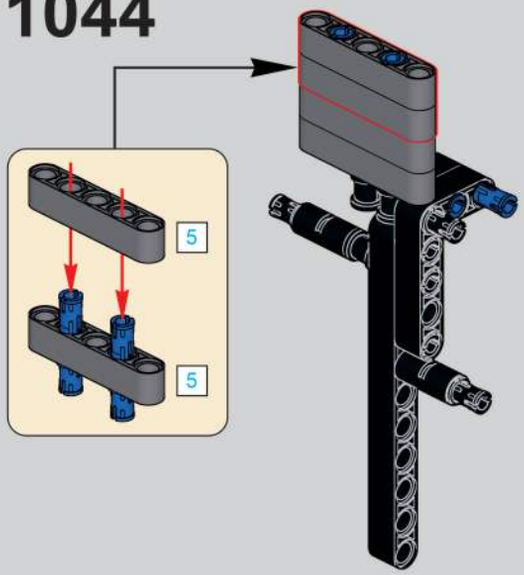

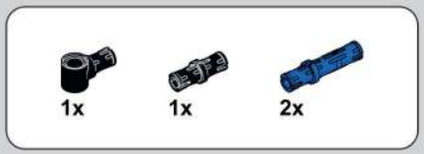

1045

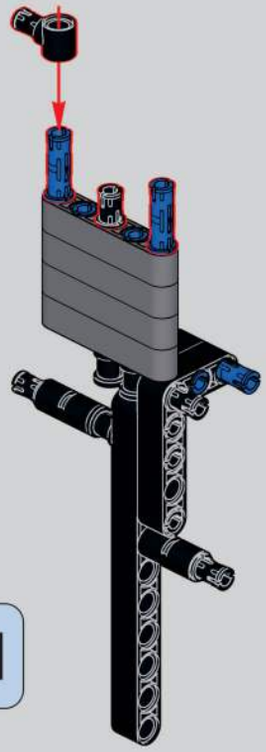

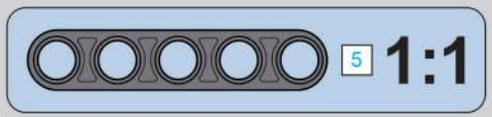

1046

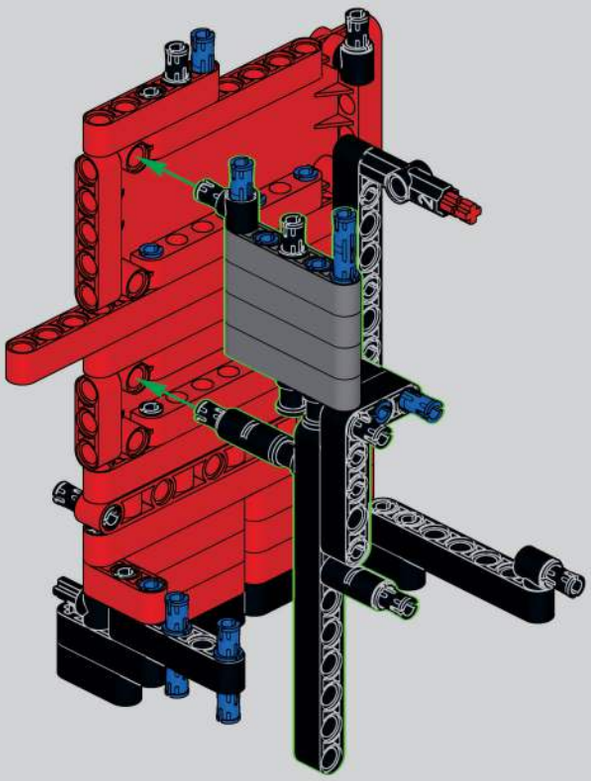

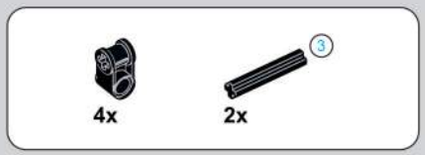

1047

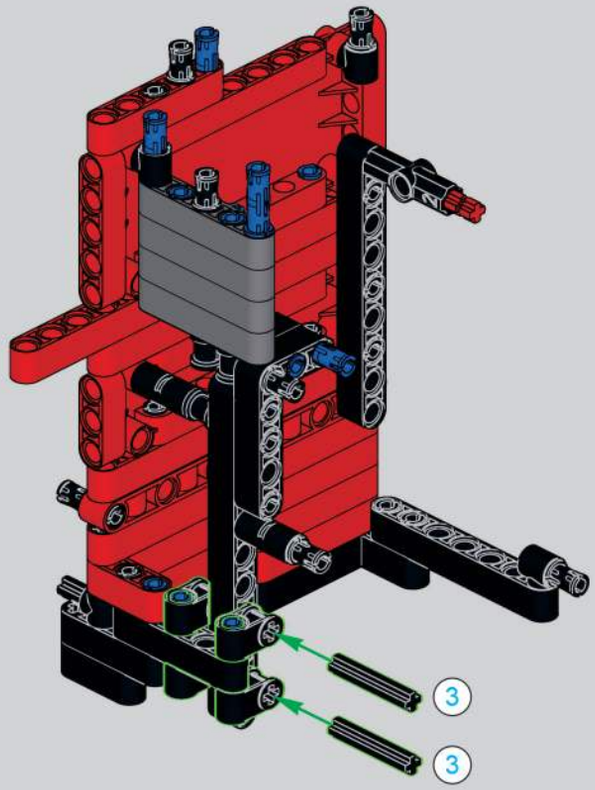

1048

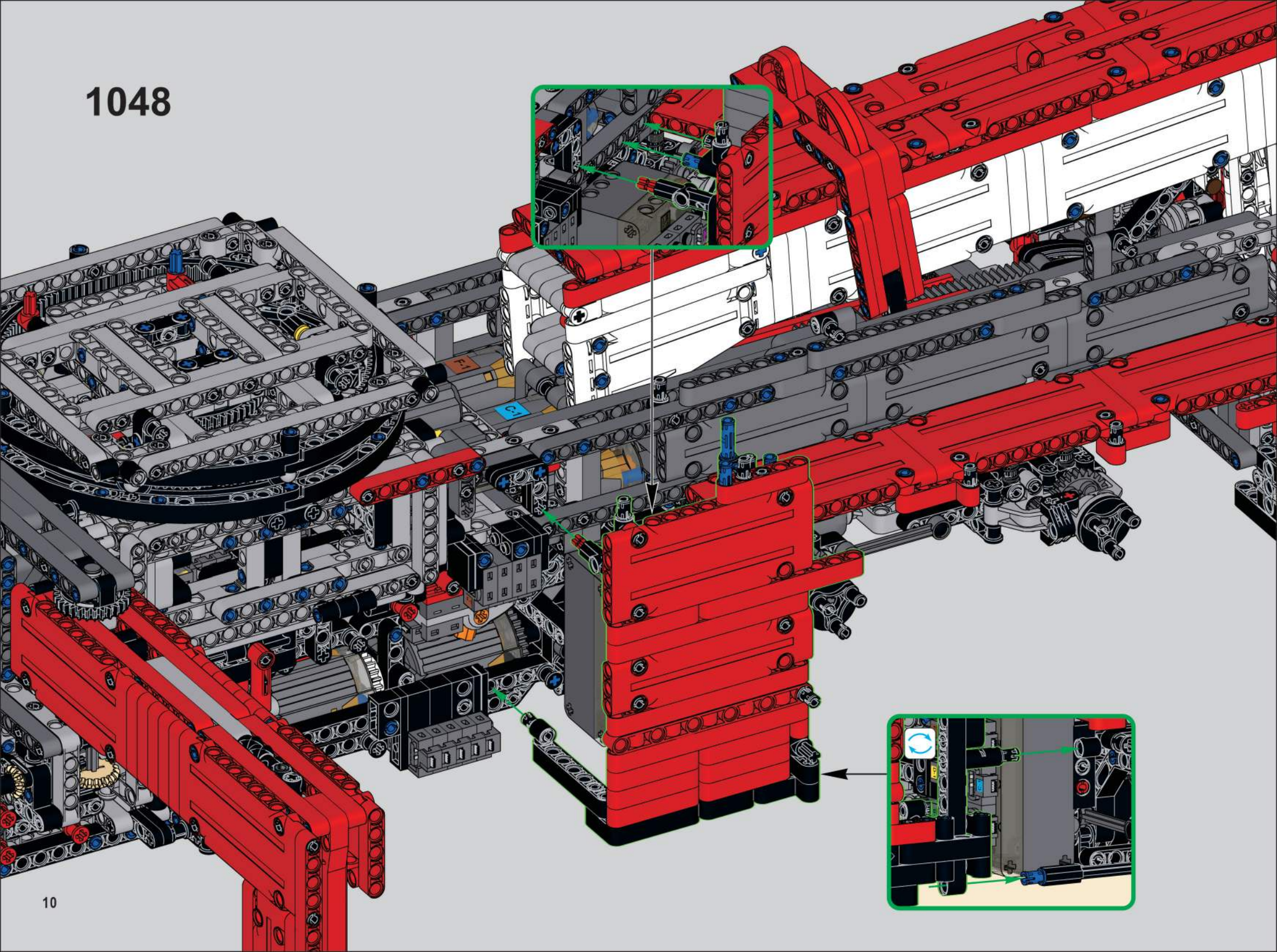

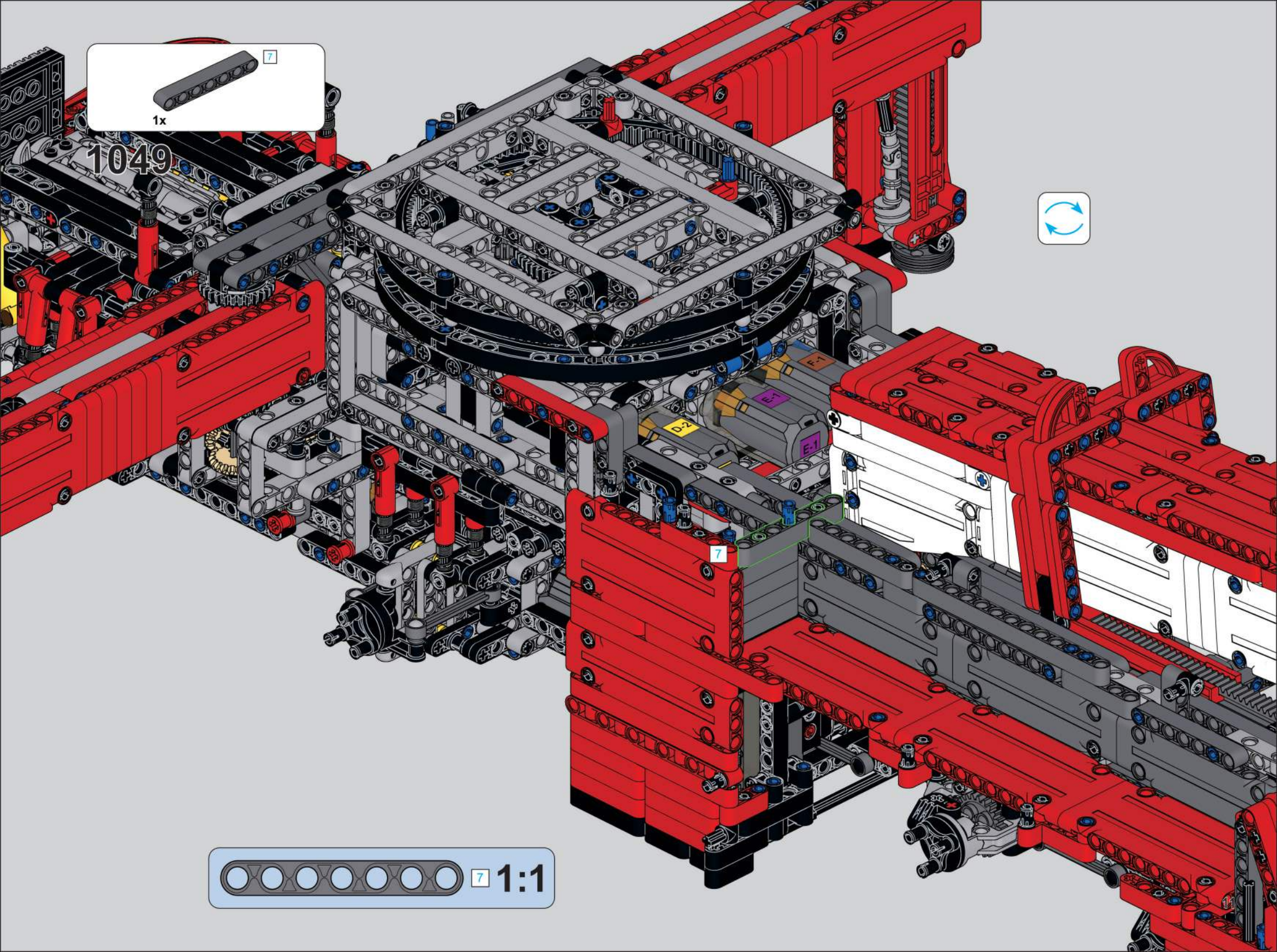
7
1x
1049
7
1:1

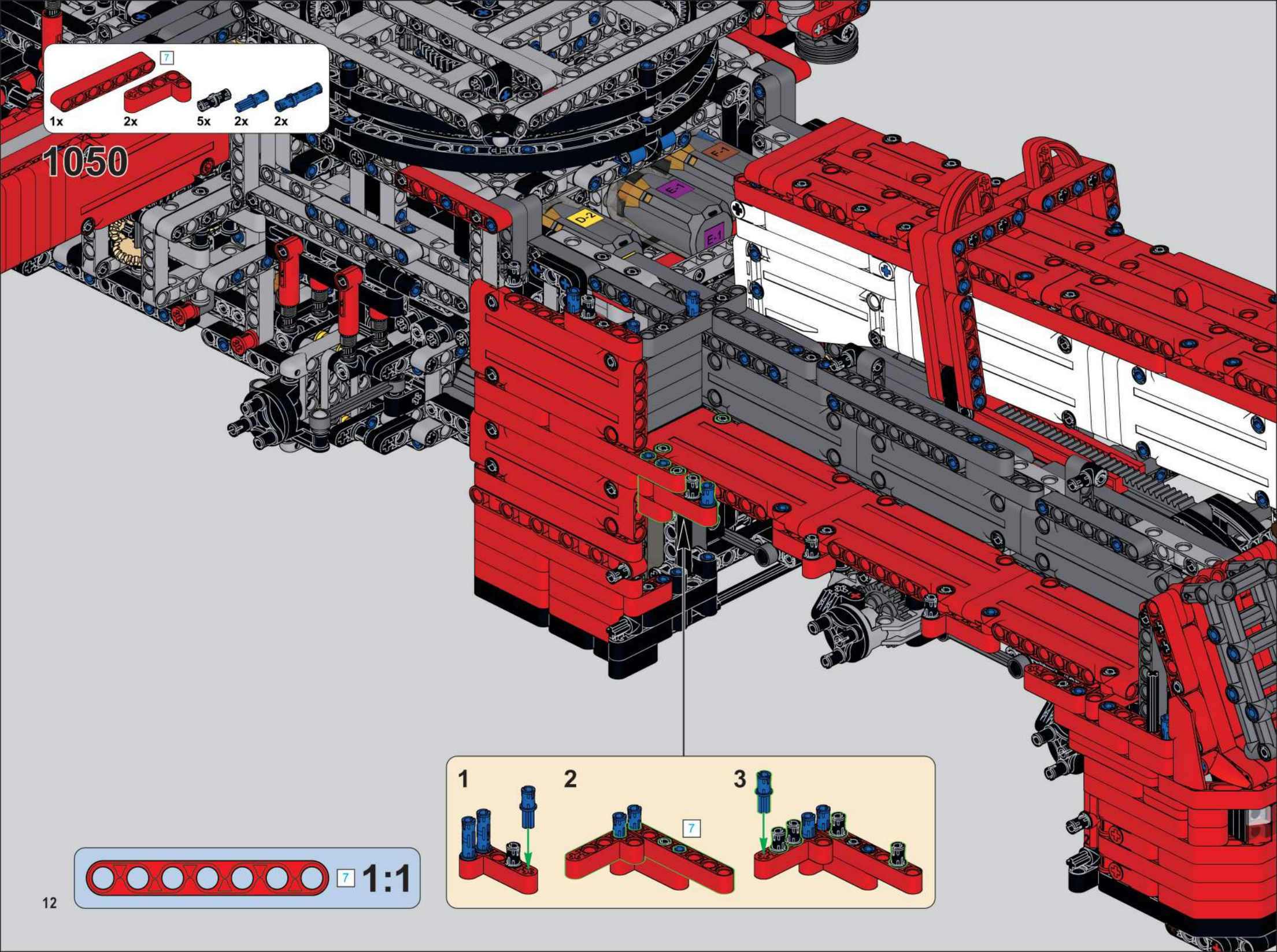
7
1x
2x
5x
2x
2x
1050
D-2
E-1
E-1
1
2
3
7
7
1:1

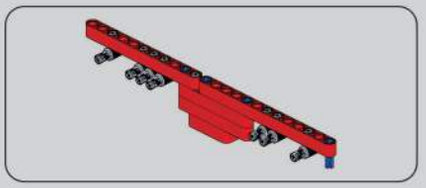

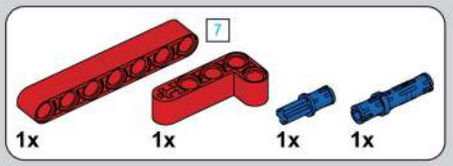

1051

1052

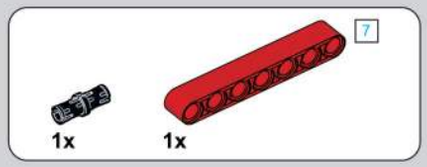

1053

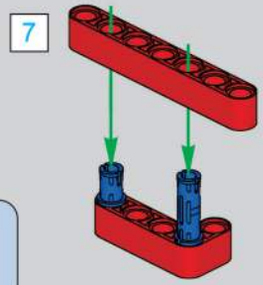

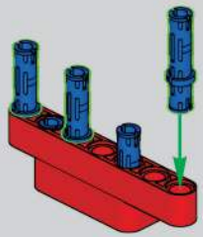

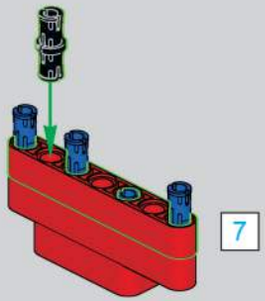

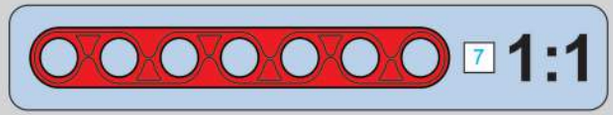

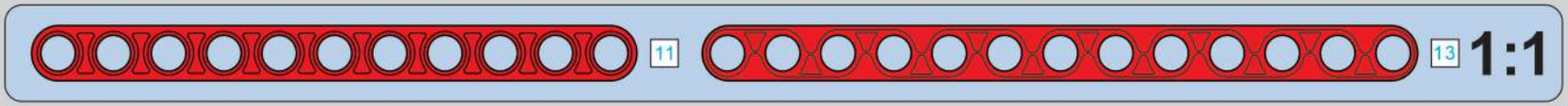

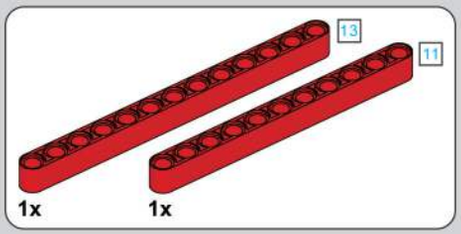

1054

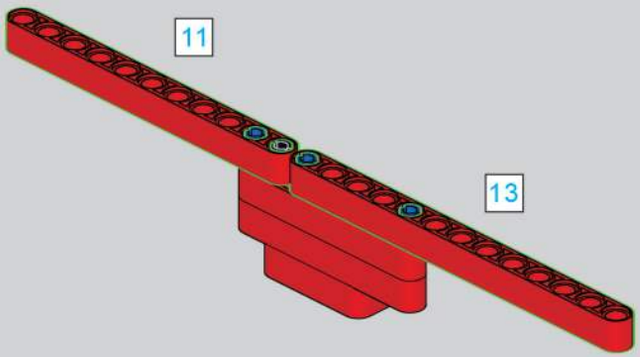

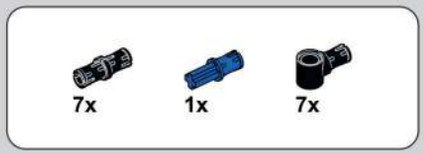

1055

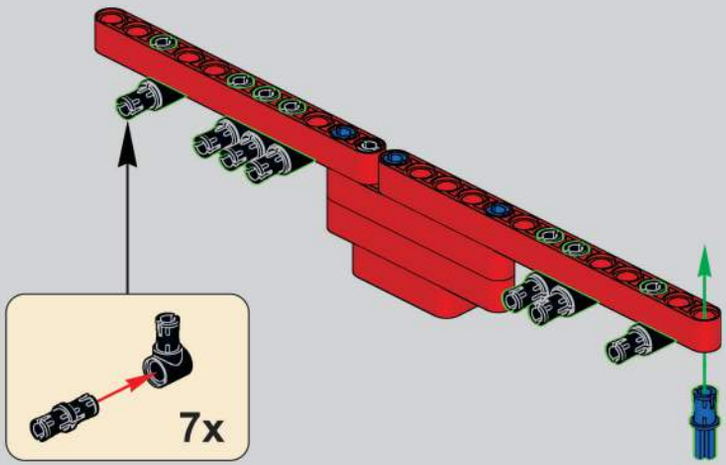

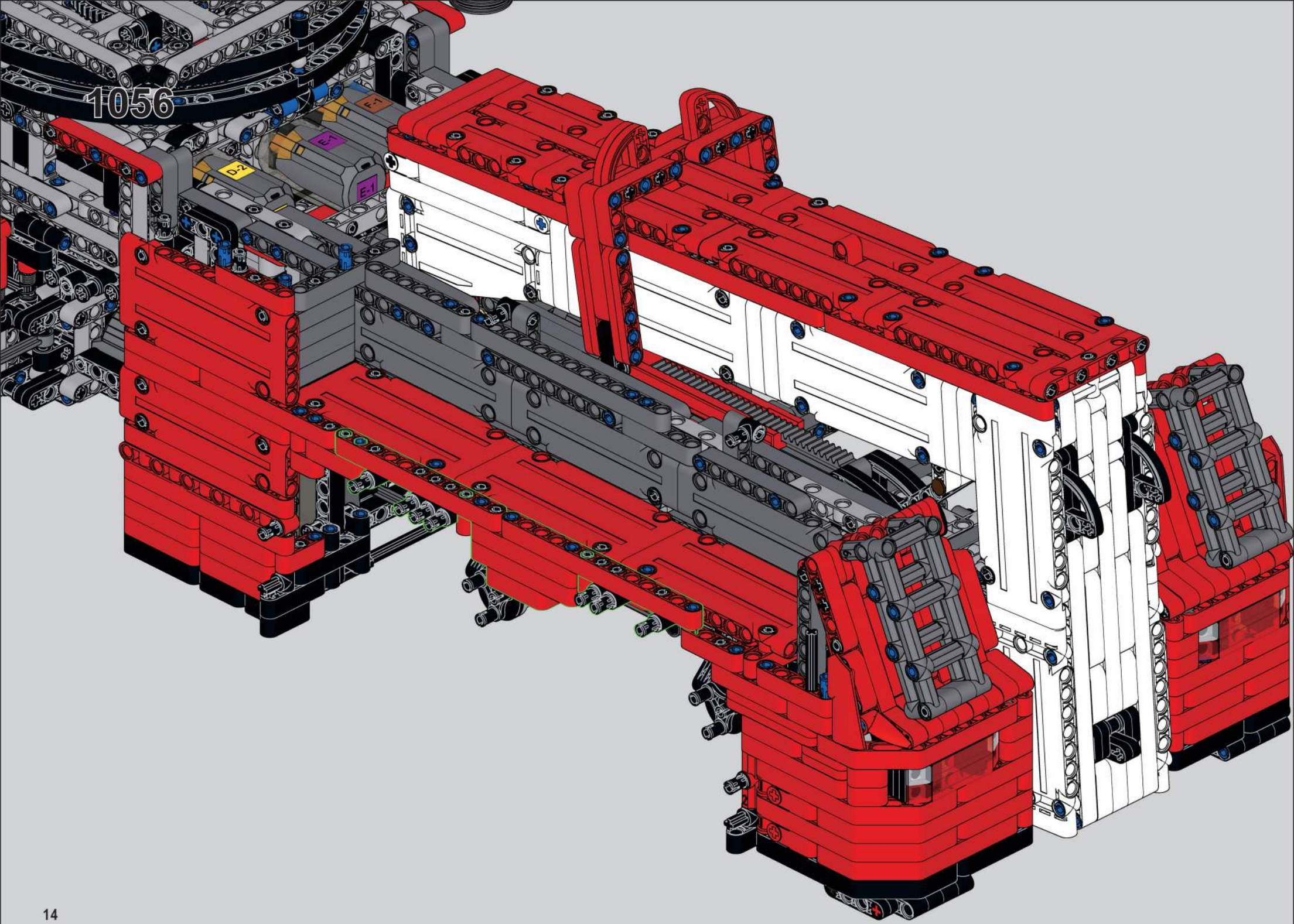
1056
E-1
E-1
D-2
E-1

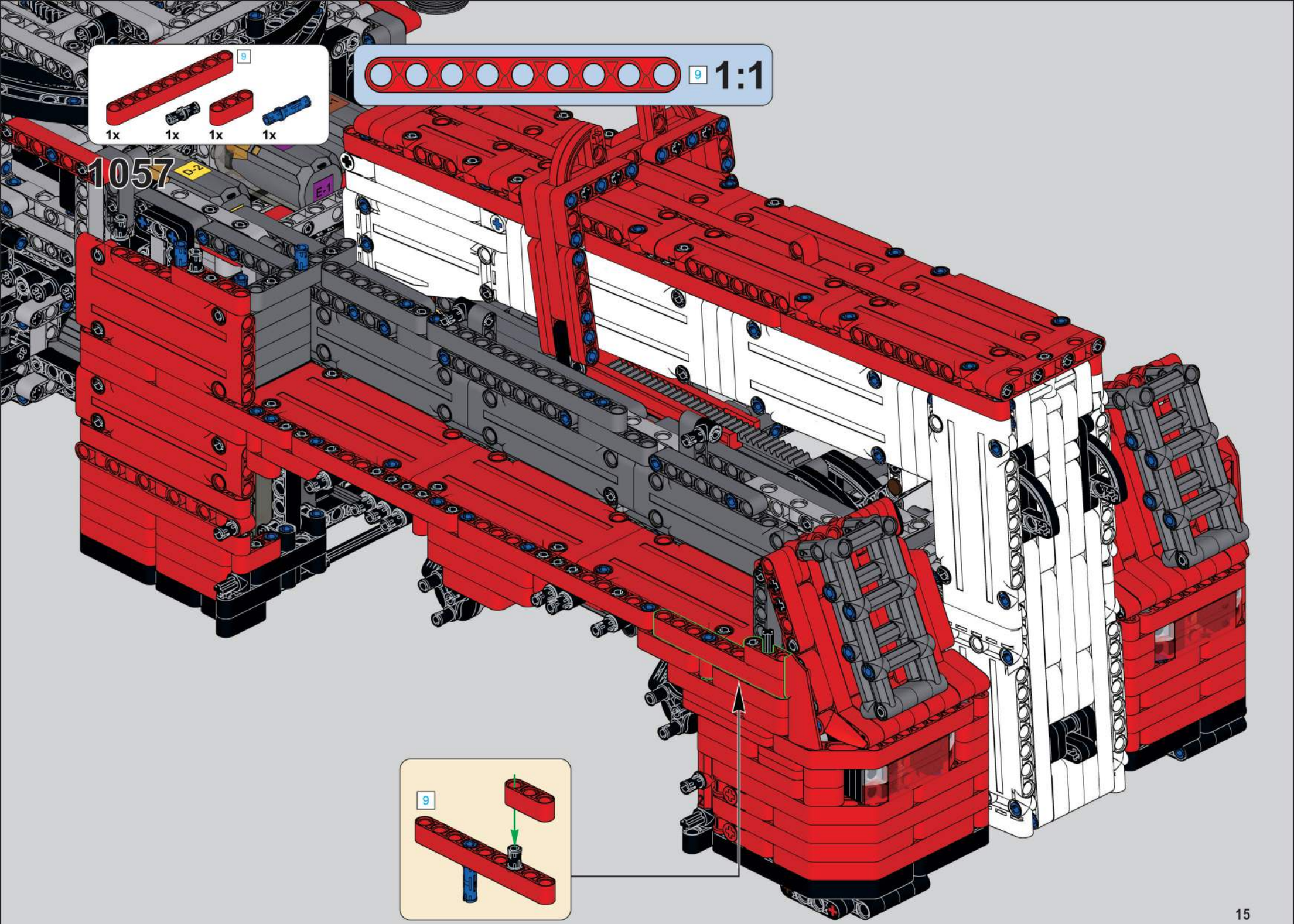
9
1x
1x
1x
1x
1057
D-2
E-1
9
1:1
9

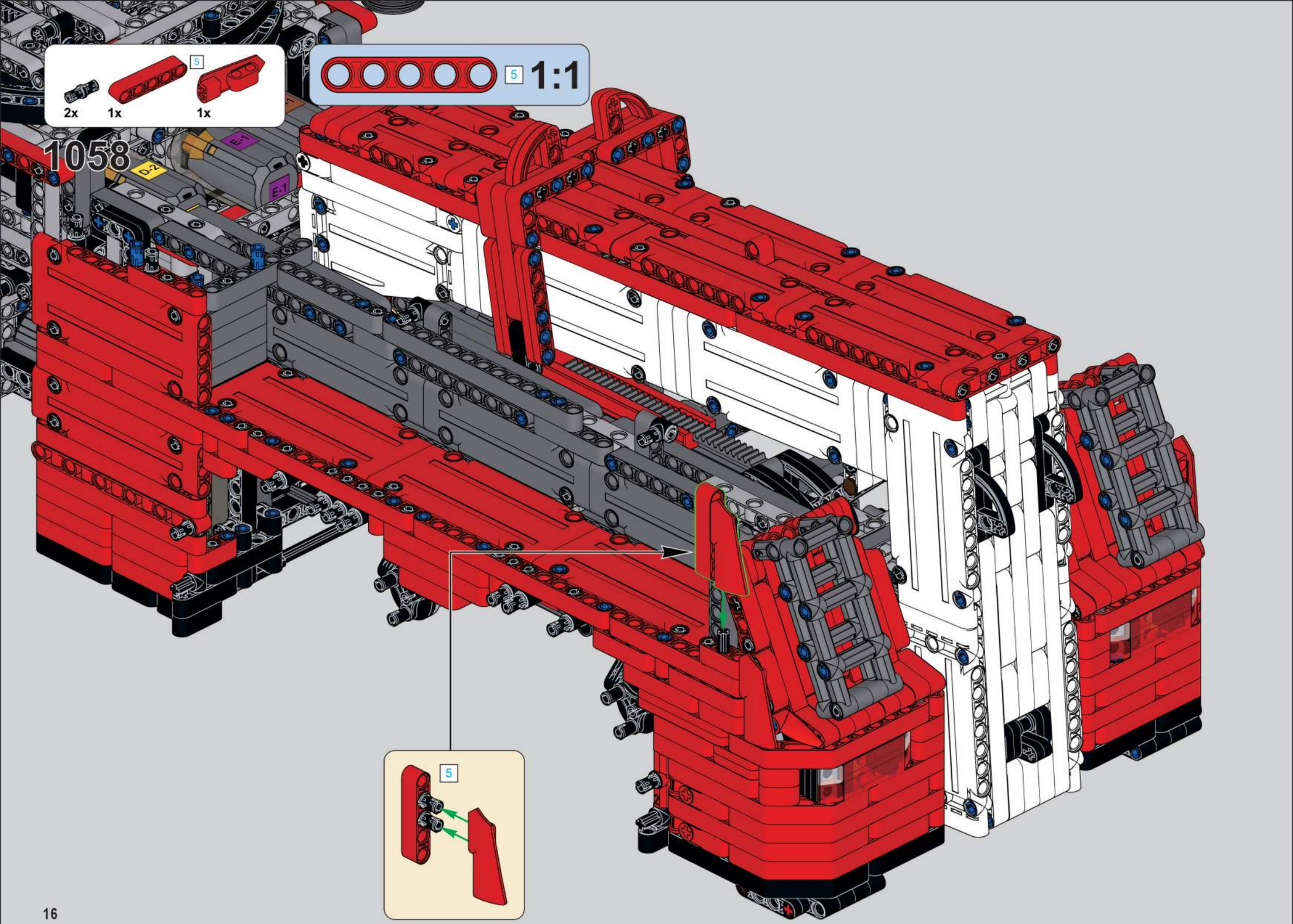
5
2x
1x
1x
5
1:1
1058
E-1
D-2
E-1
5

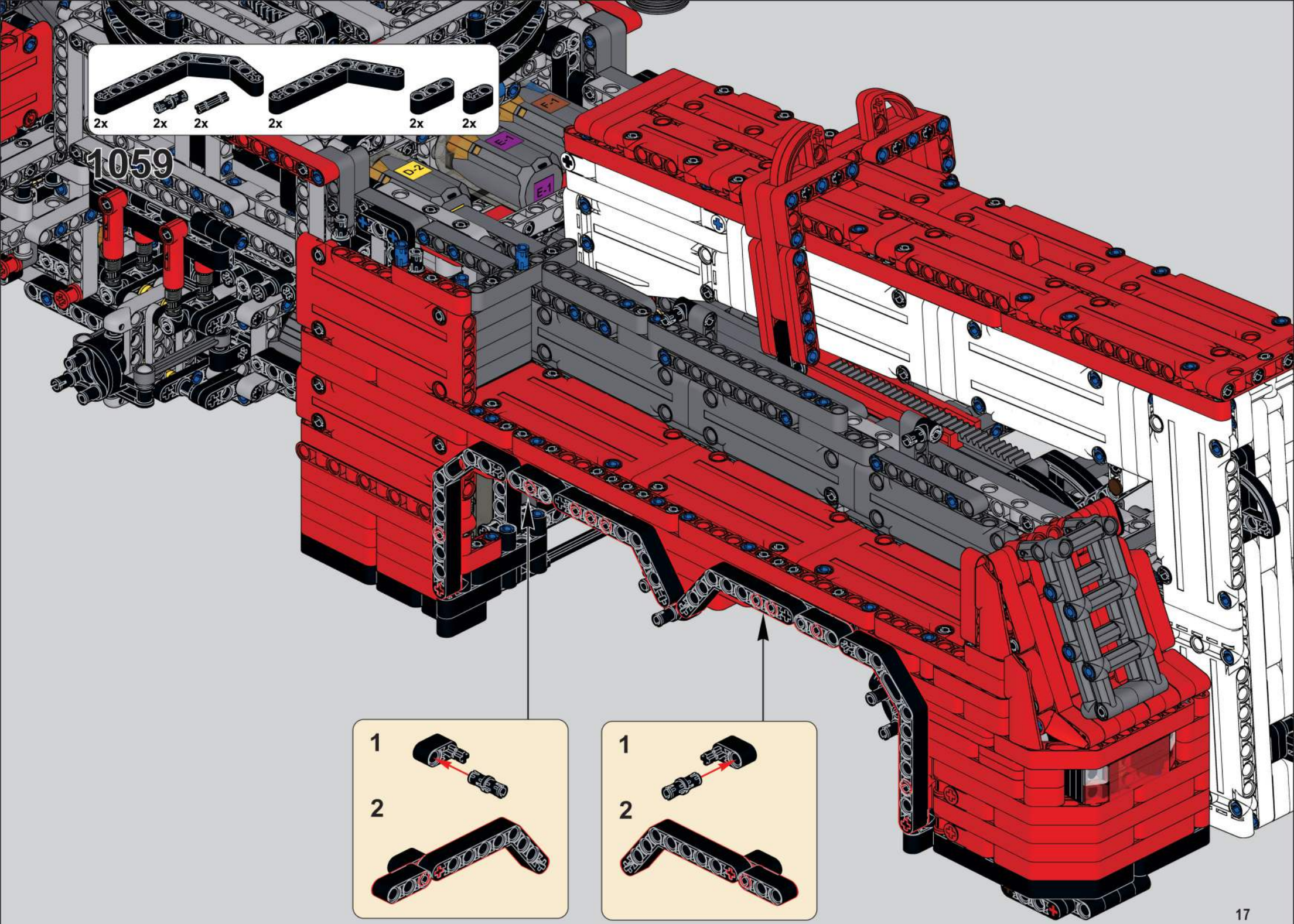
2x
2x
2x
2x
2x
2x
1059
D-2
E-1
E-7
1
2
1
2

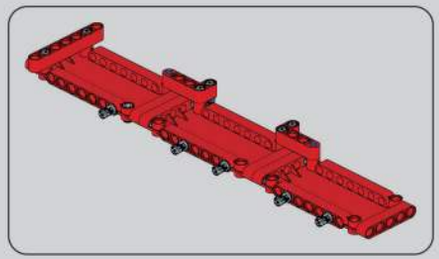

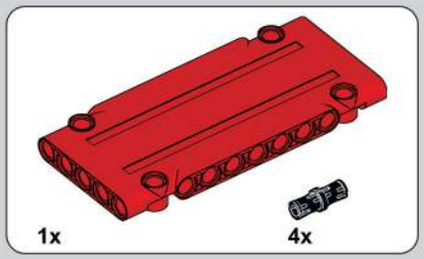

1060

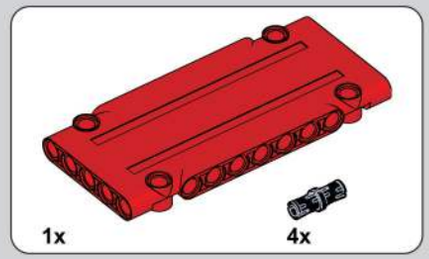

1061

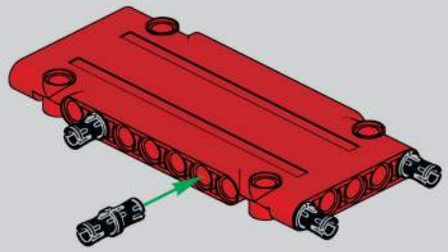

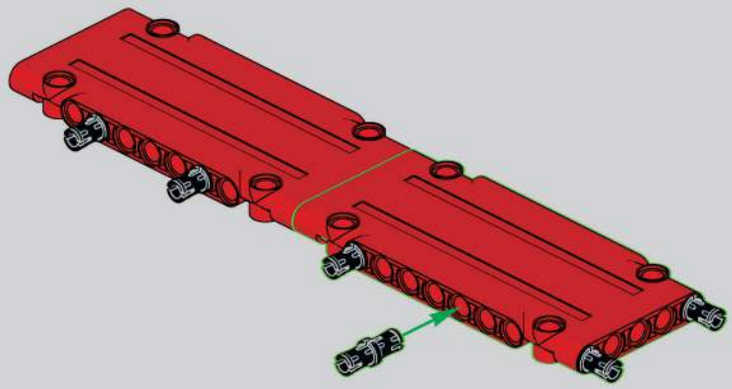

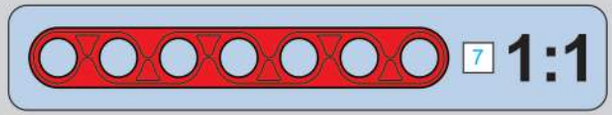

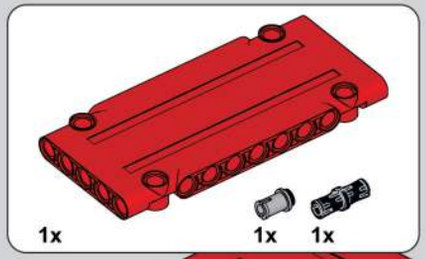

1062

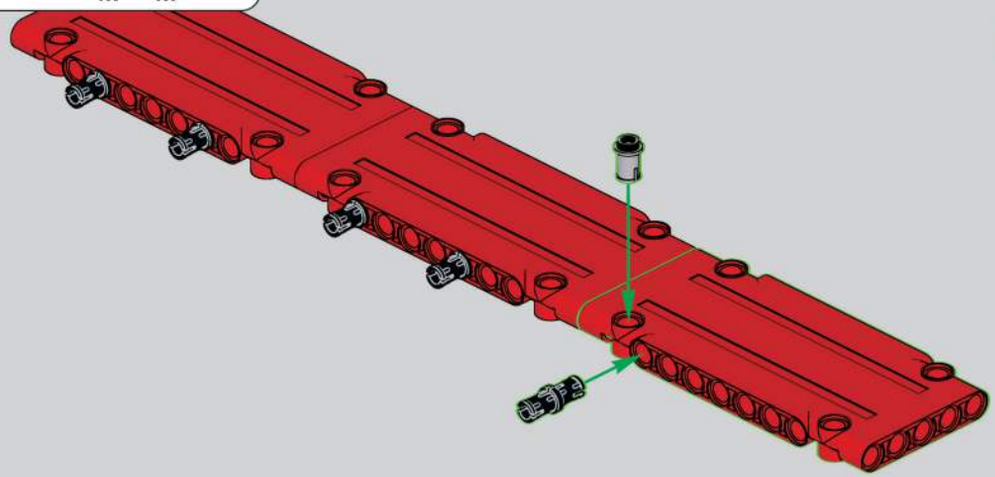

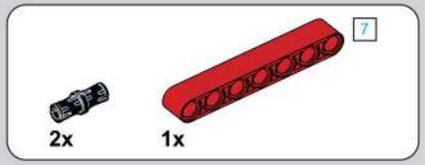

1063

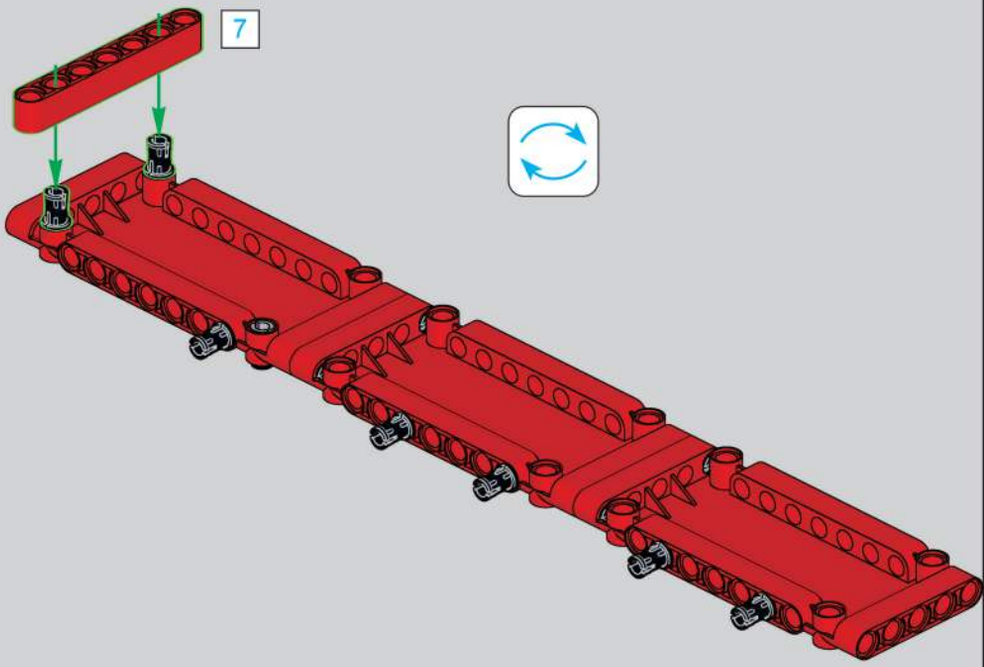

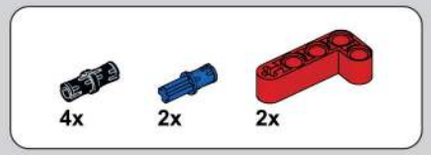

1064

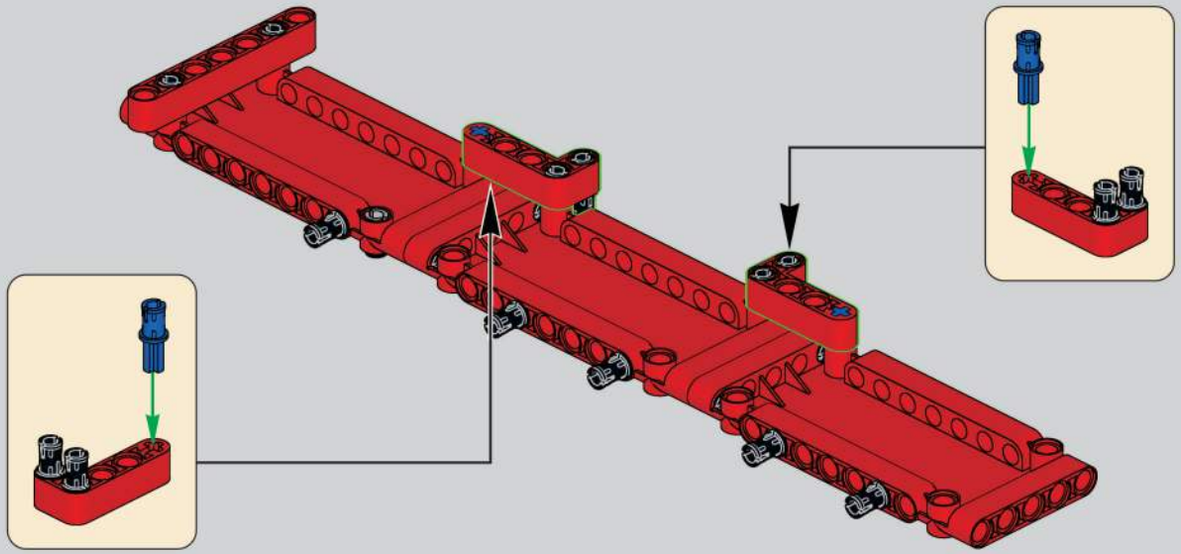

1065

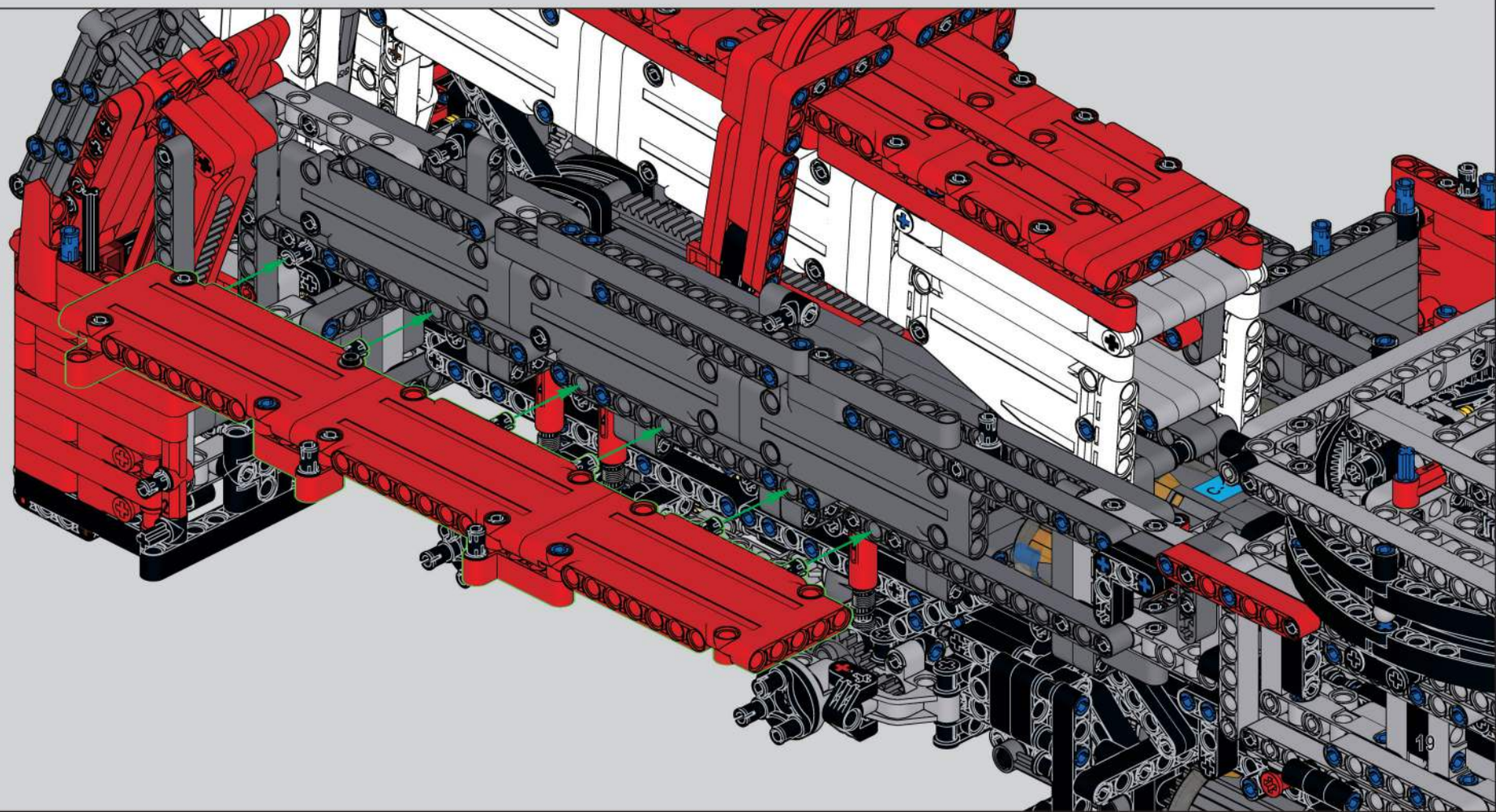

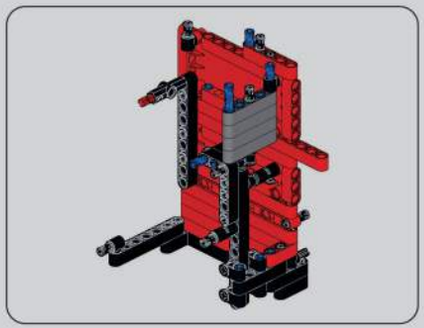

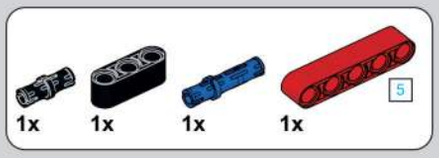

1067

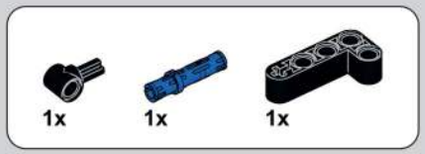

1068

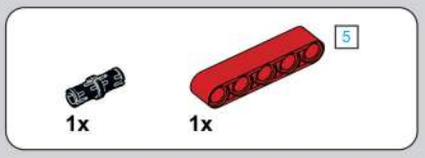

1069

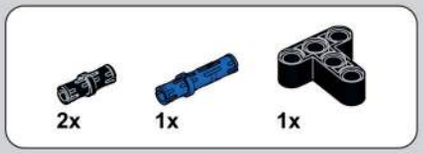

1066

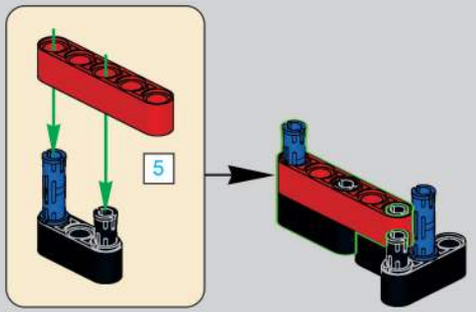

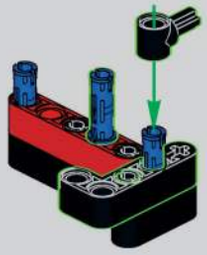

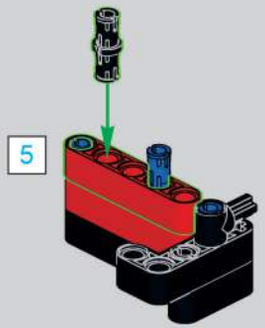

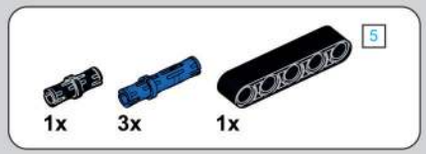

1070

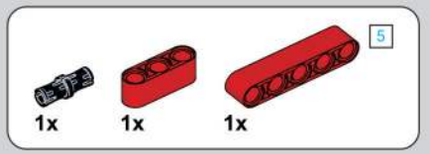

1071

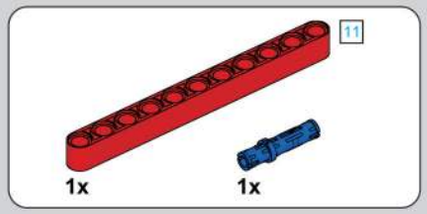

1072

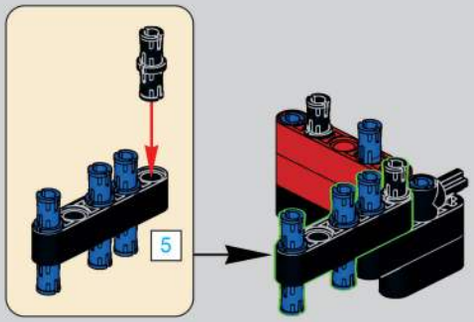

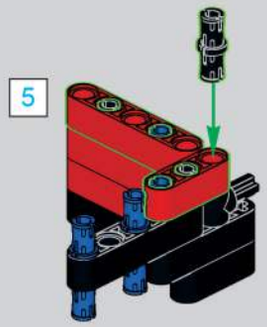

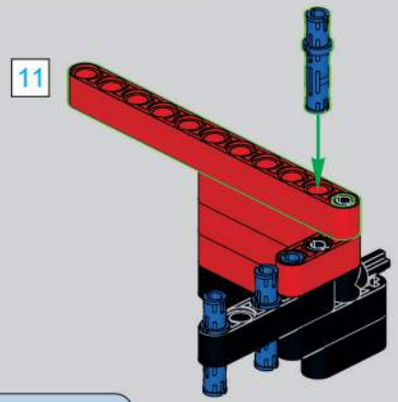

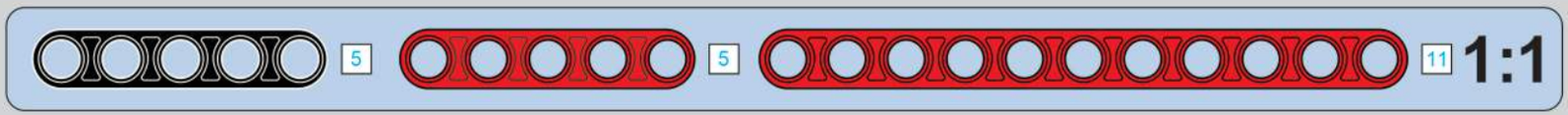

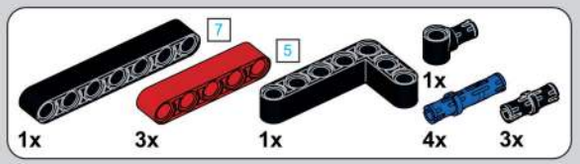

1073

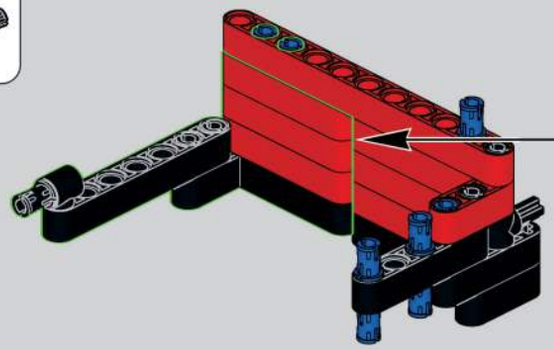

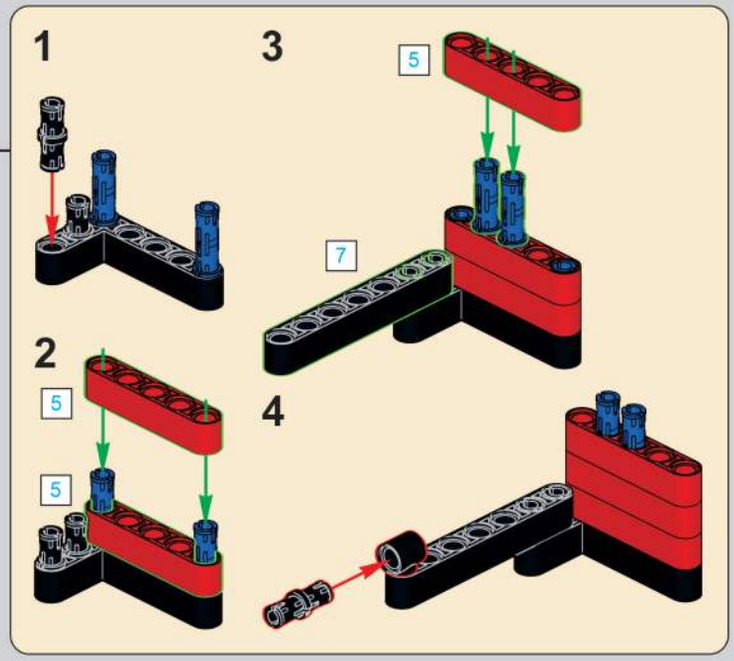

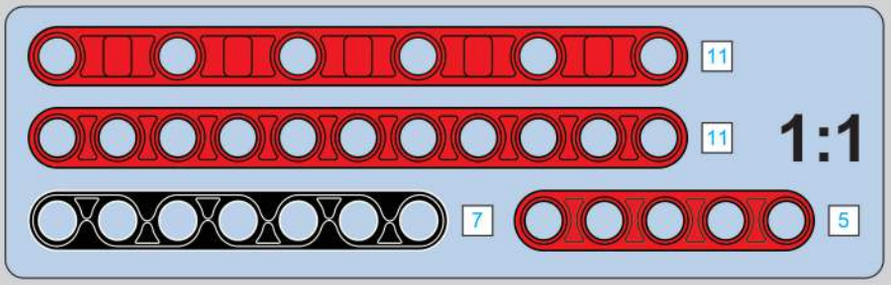

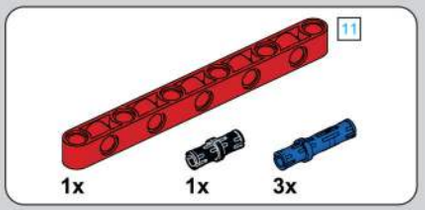

1074

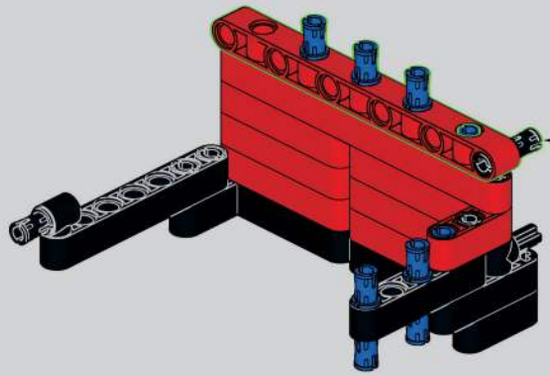

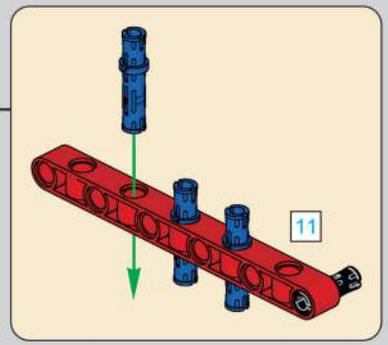

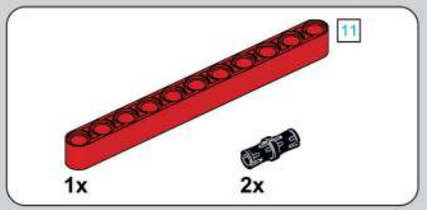

1075

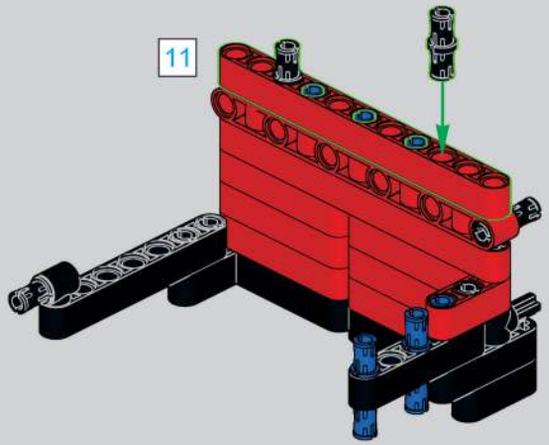

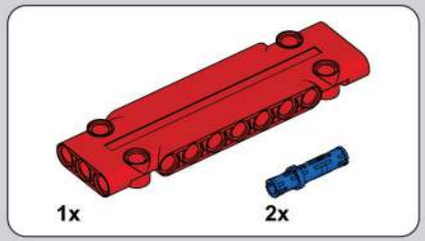

1076

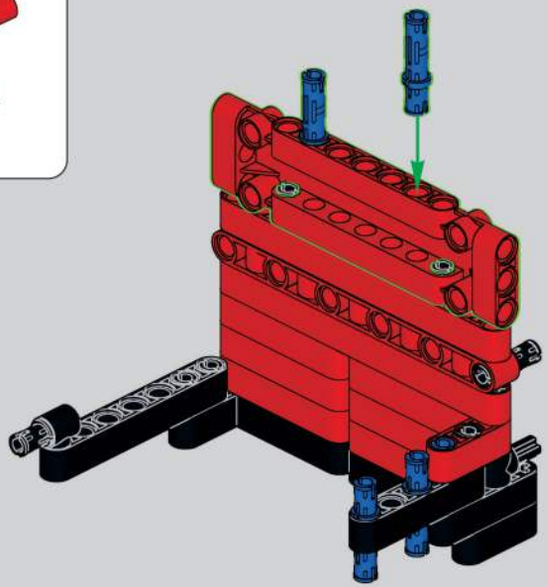

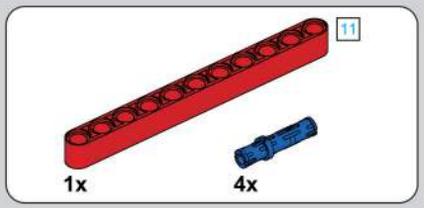

1077

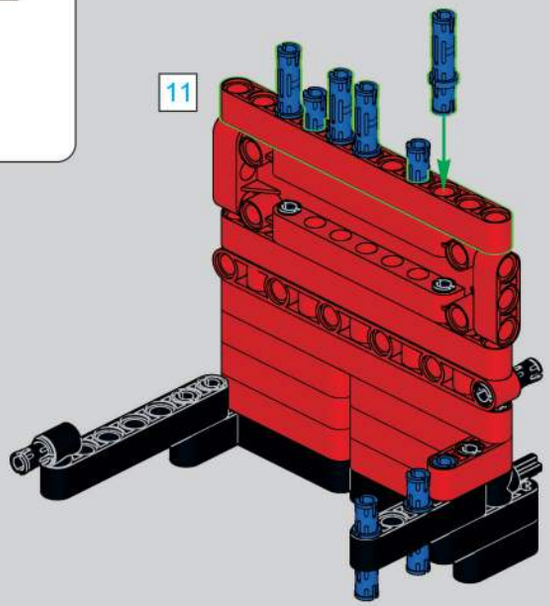

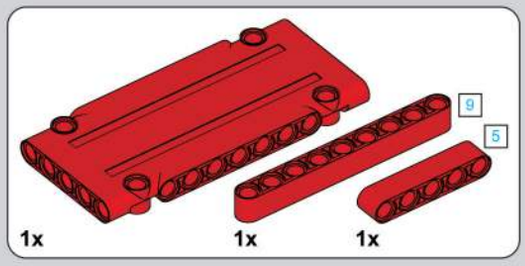

1078

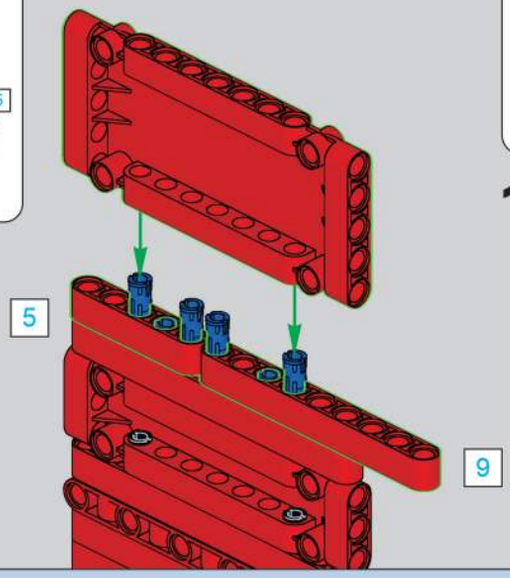

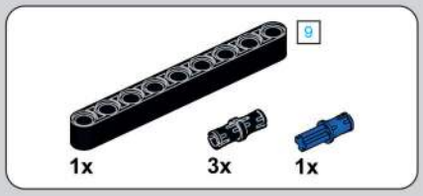

1079

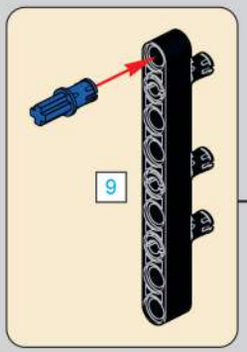

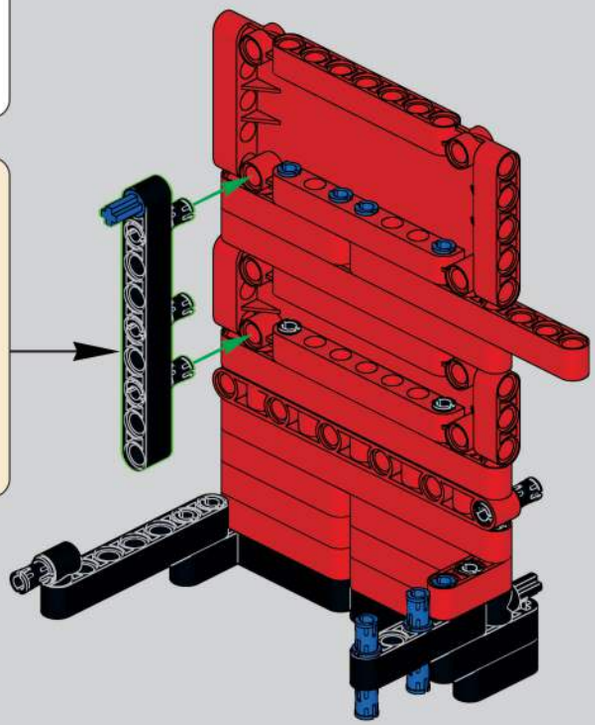

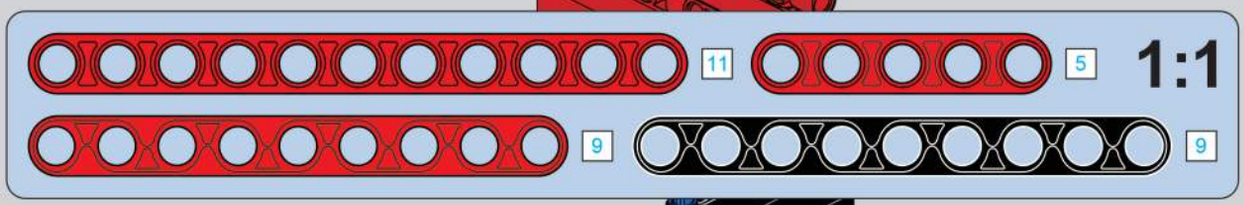

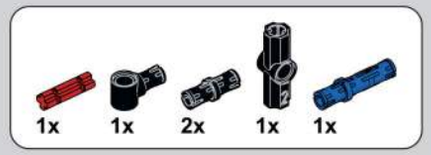

1080

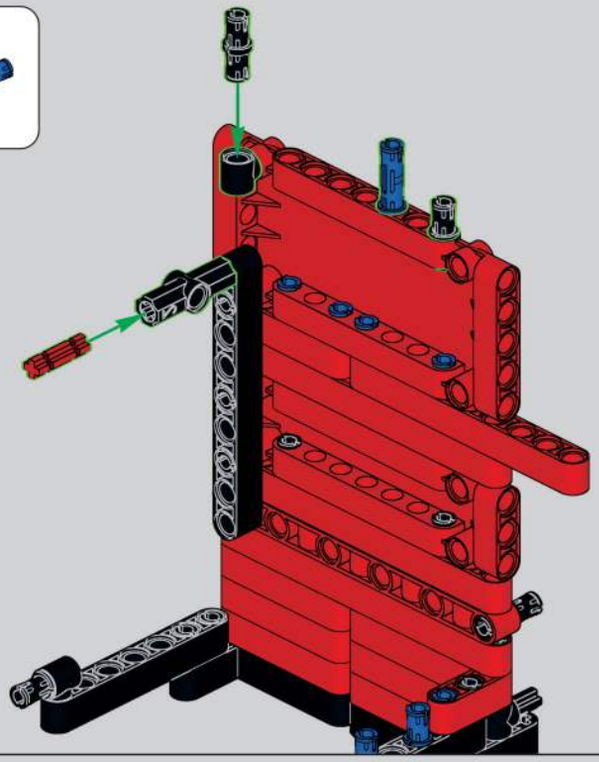

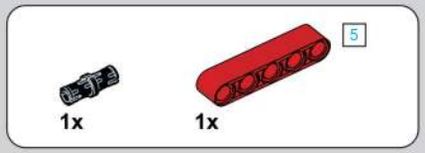

1081

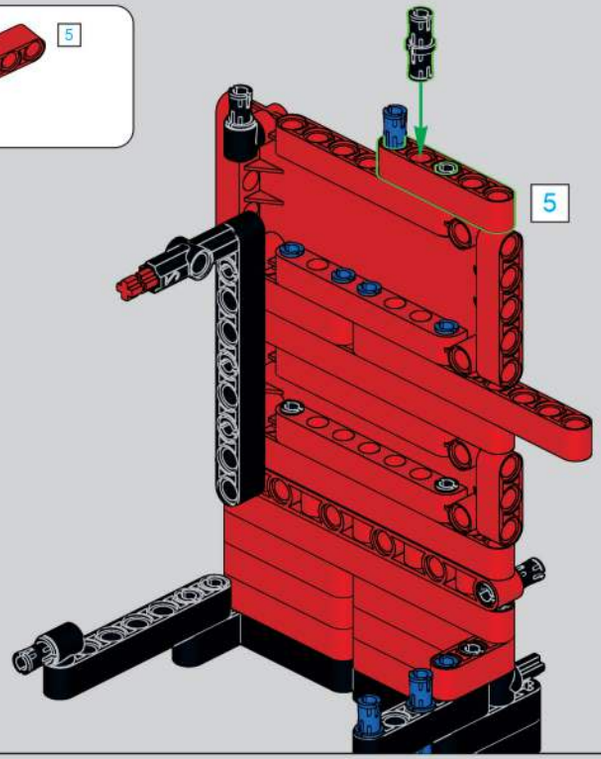

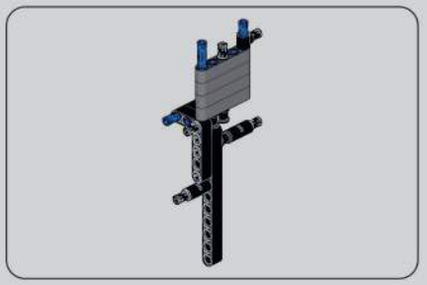

1082

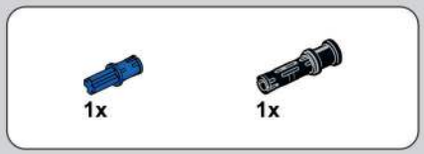

1083

1084

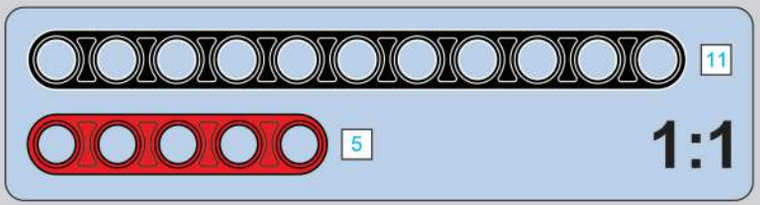

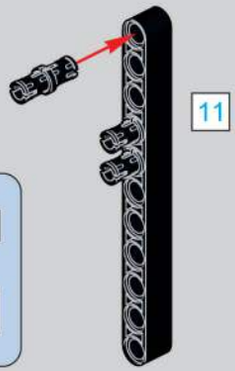

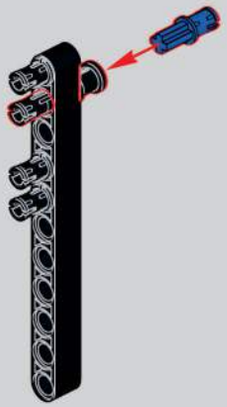

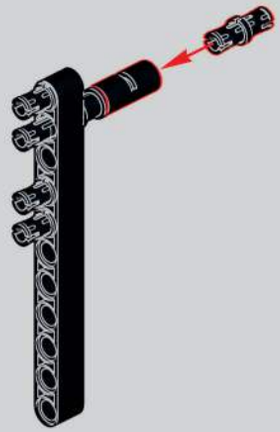

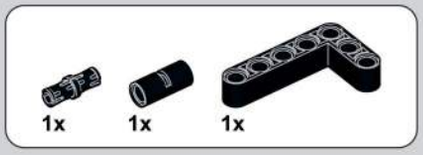

1085

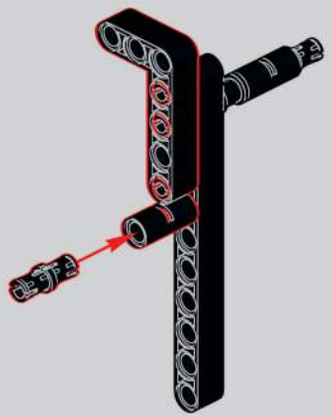

1086

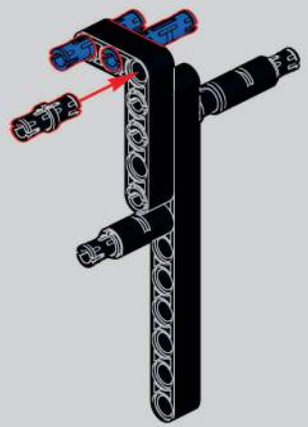

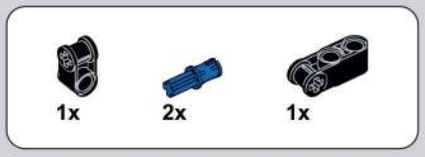

1087

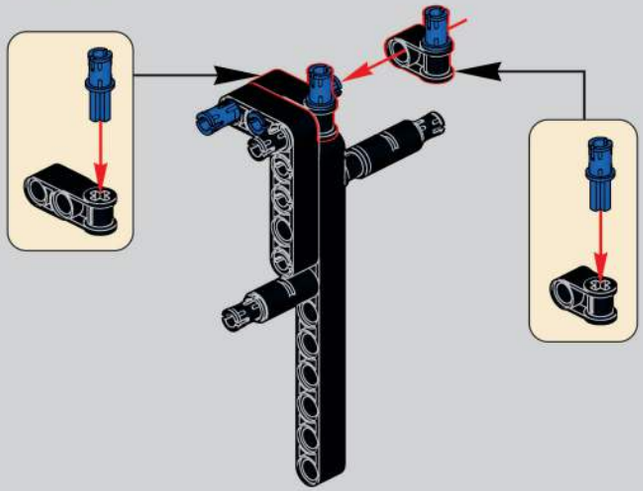

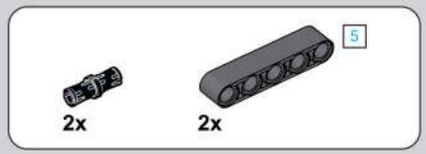

1088

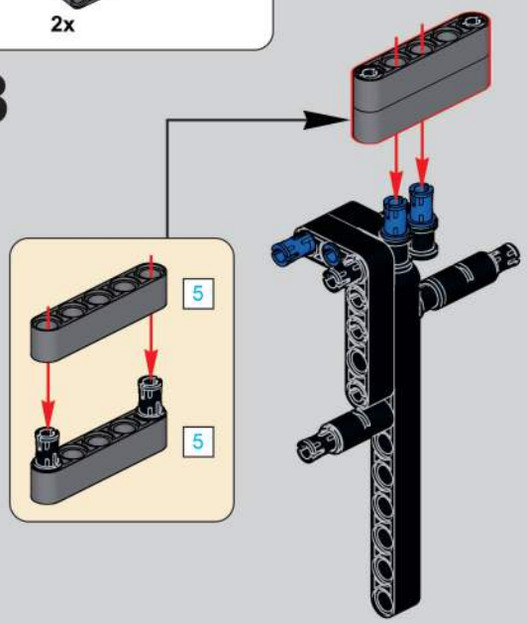

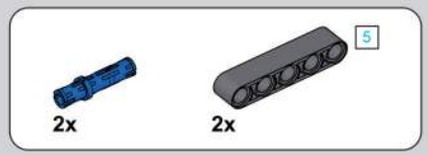

1089

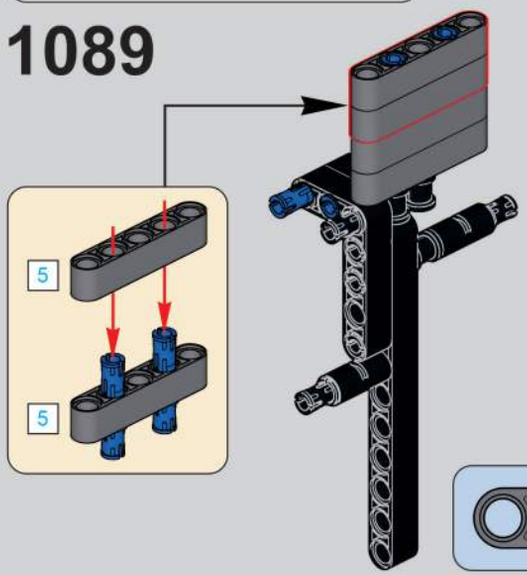

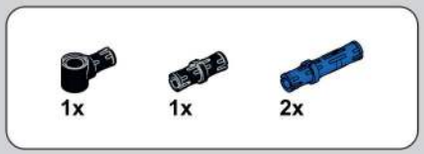

1090

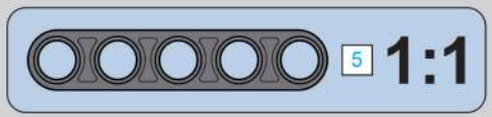

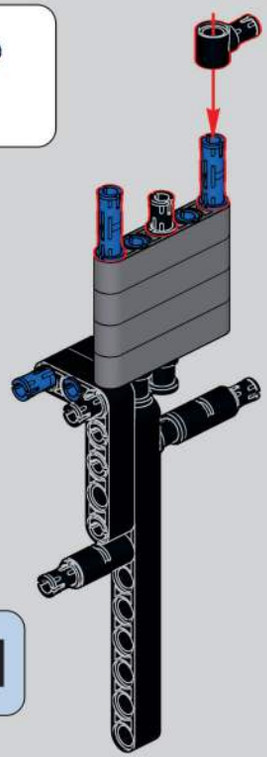

1091

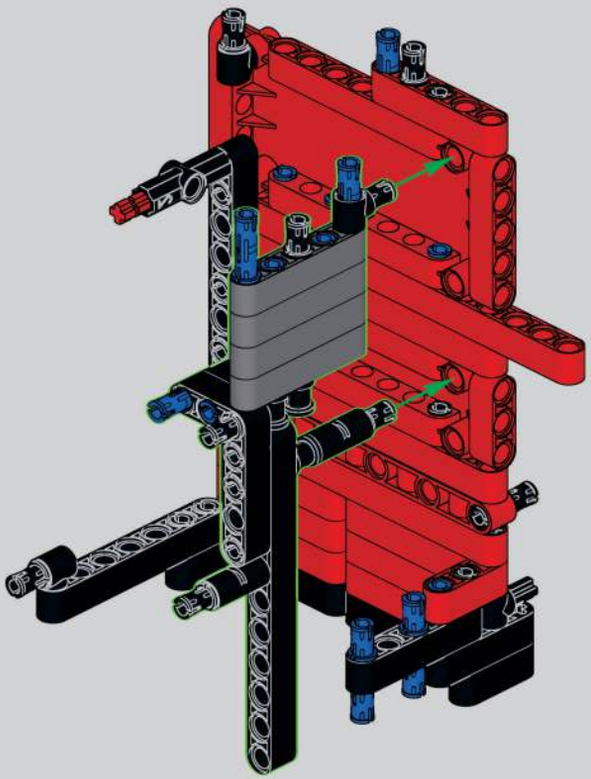

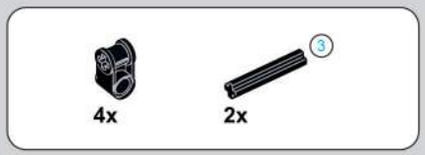

1092

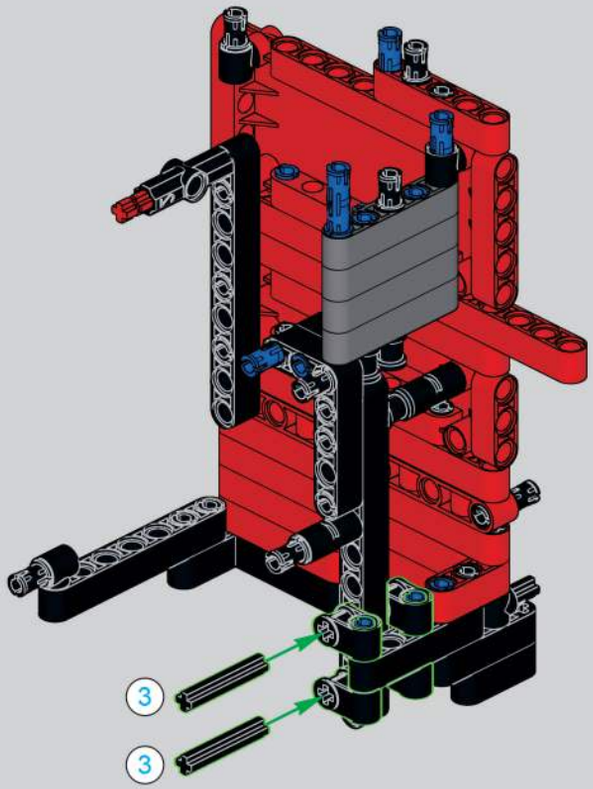

1093

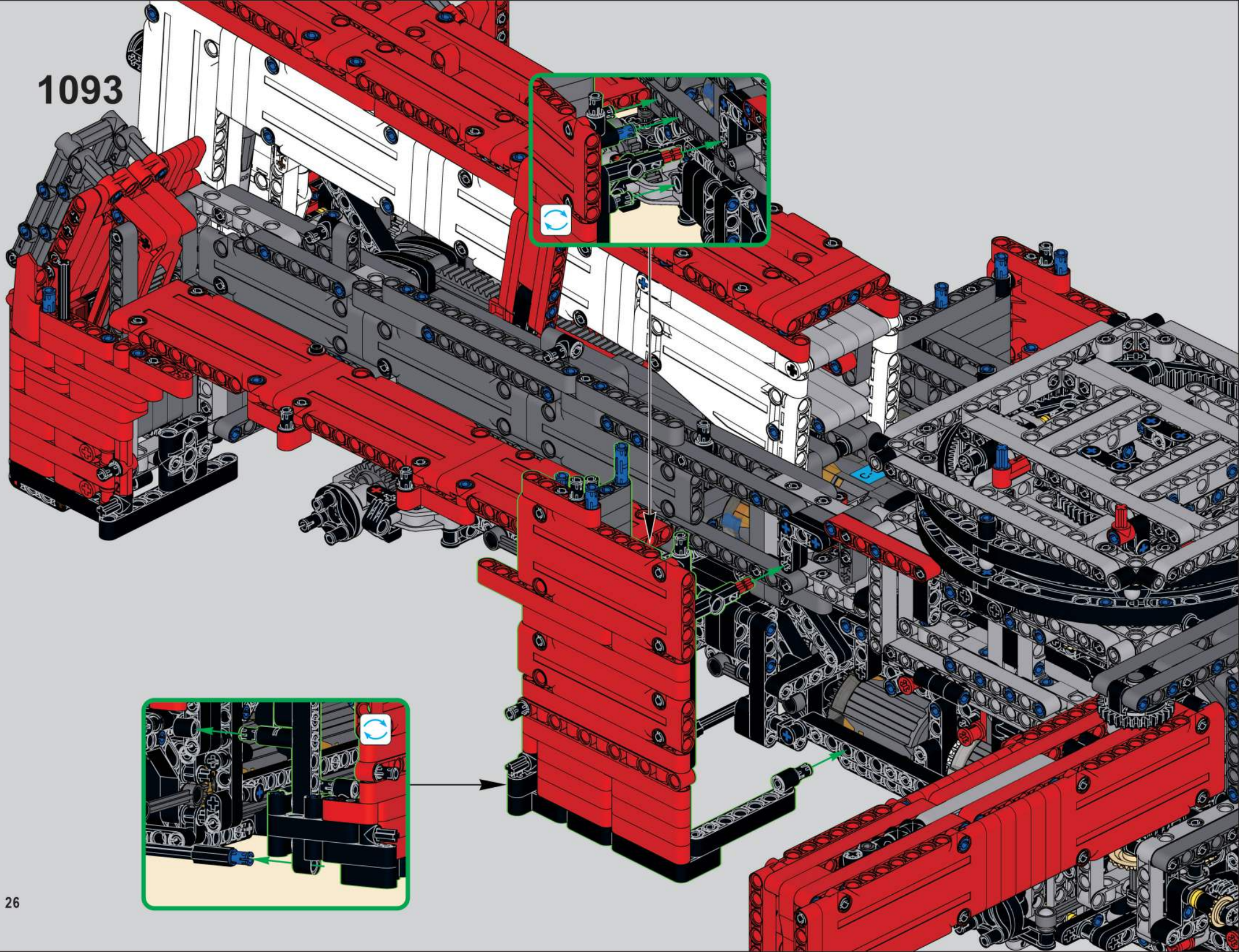

1094

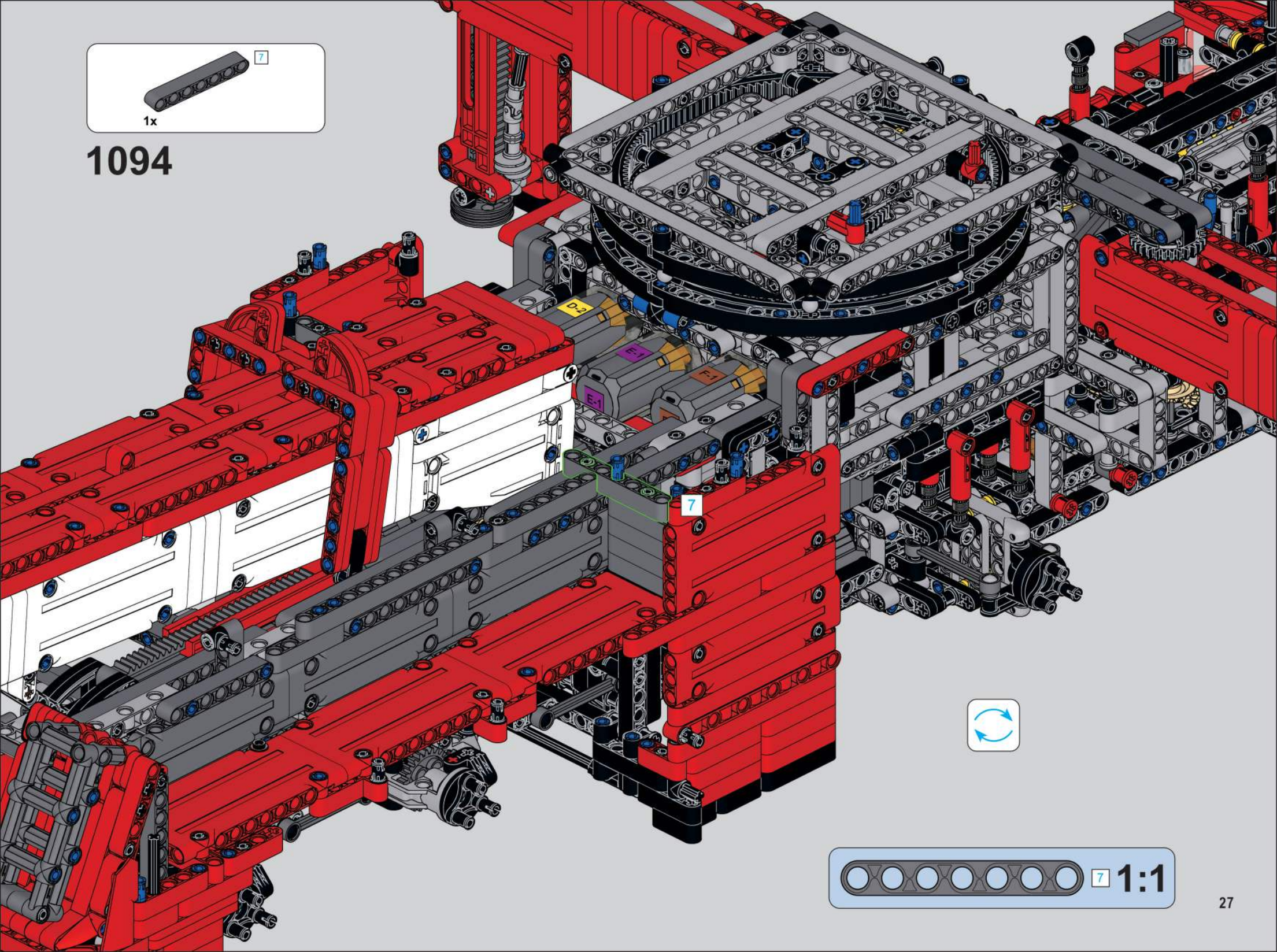

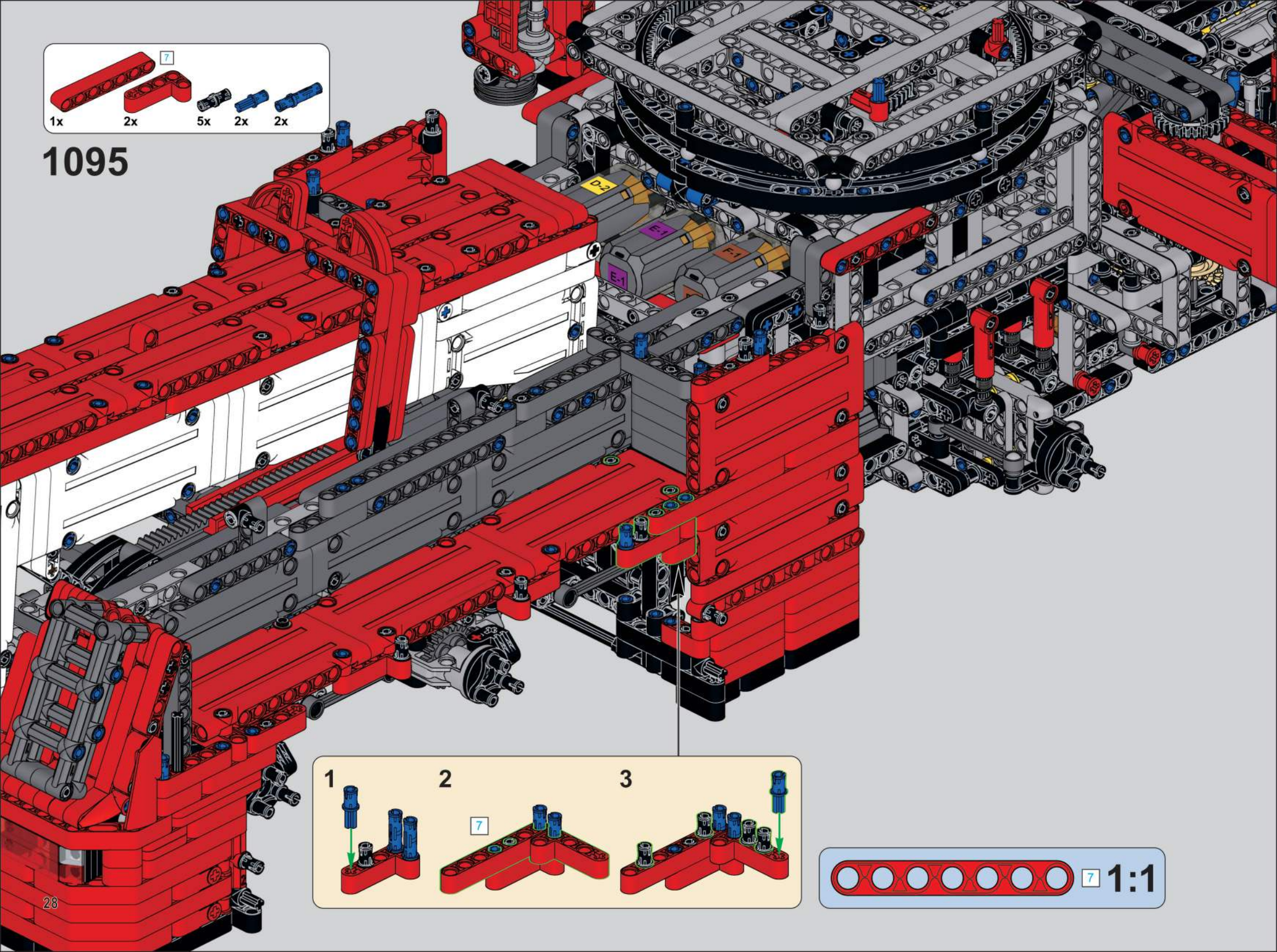
7
1x
2x
5x
2x
2x
1095
D-2
E-1
E-1
F-1
1
2
3
7
7
1:1

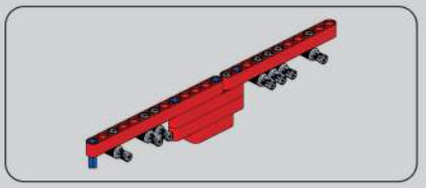

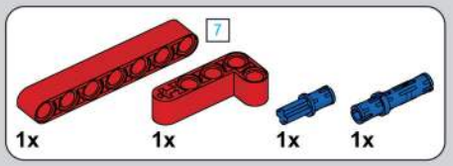

1096

1097

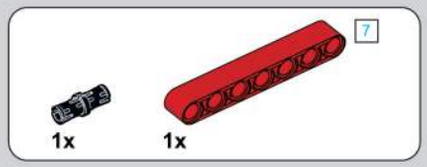

1098

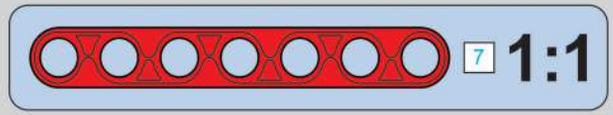

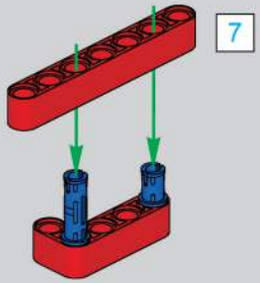

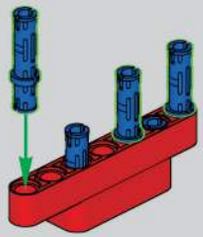

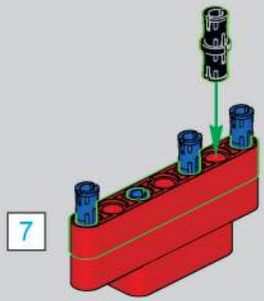

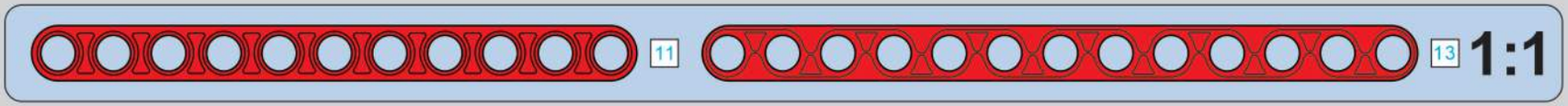

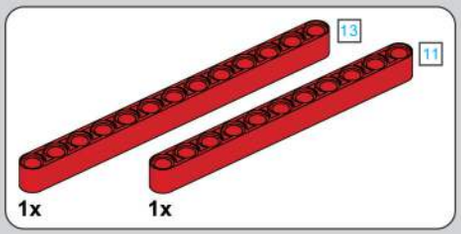

1099

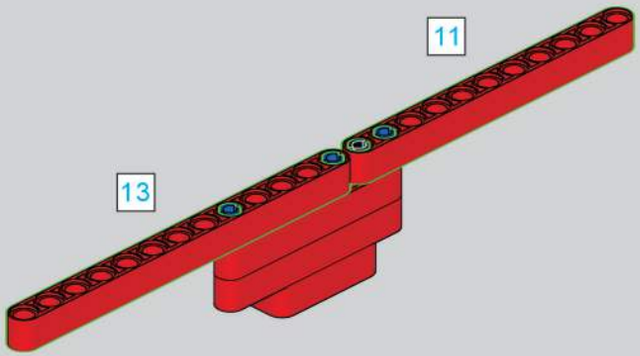

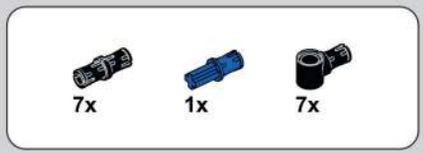

1100

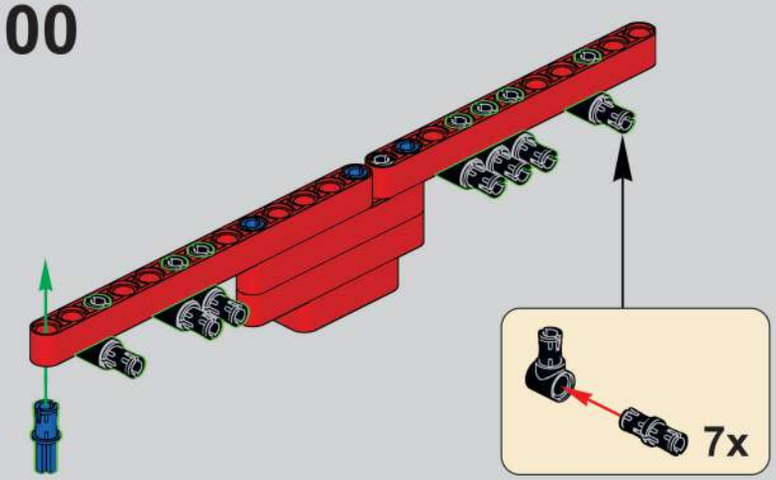

1101

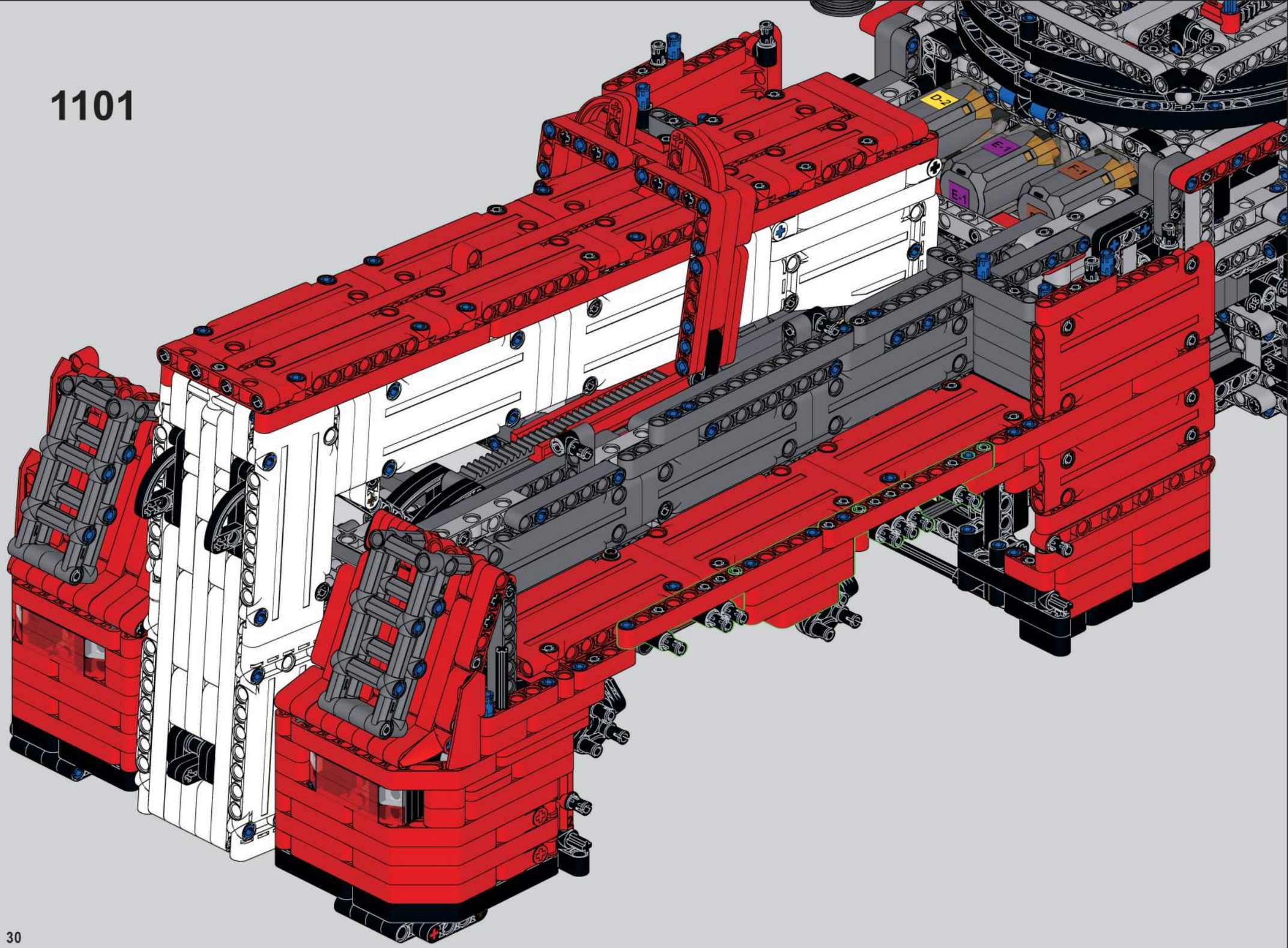

1102

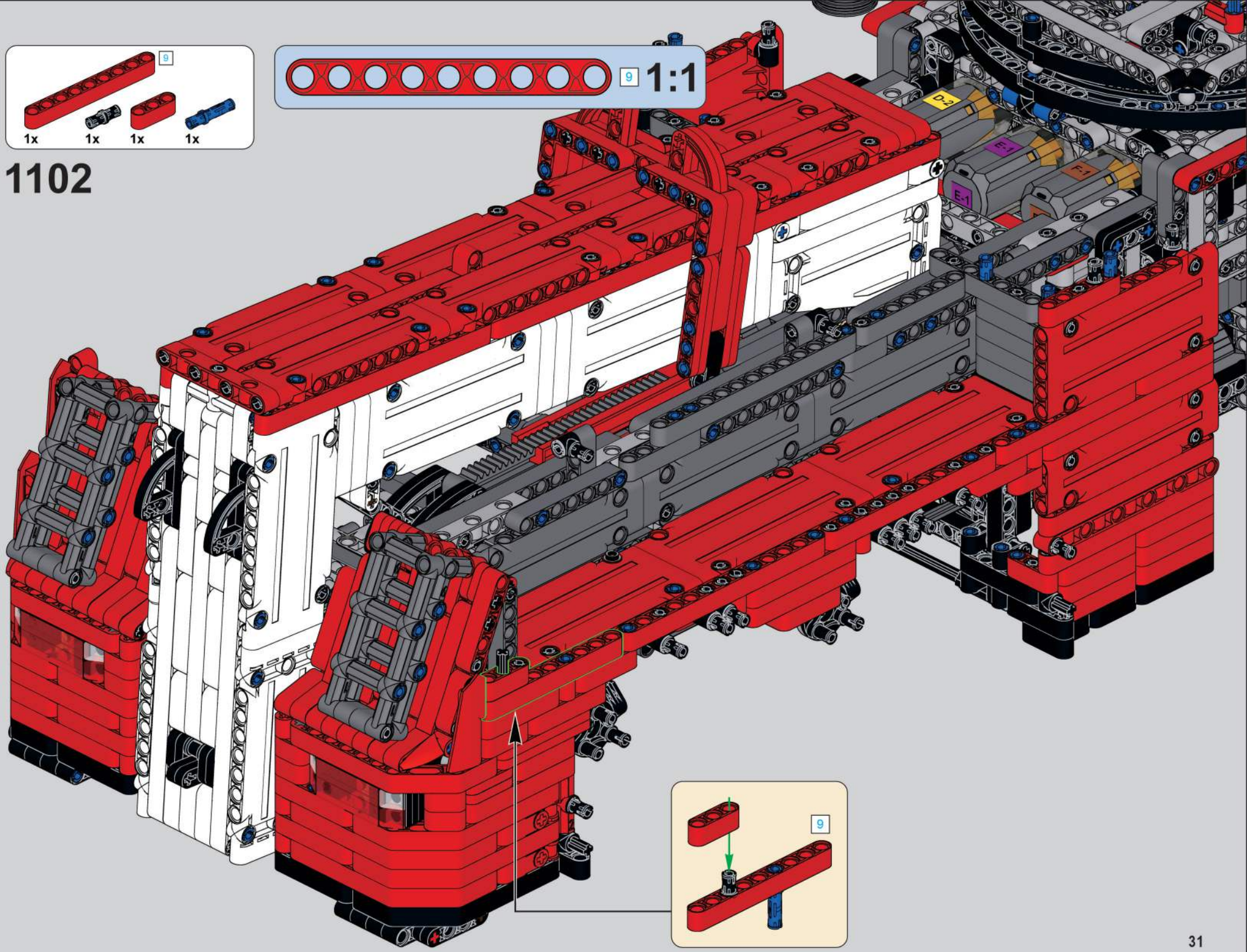

1103

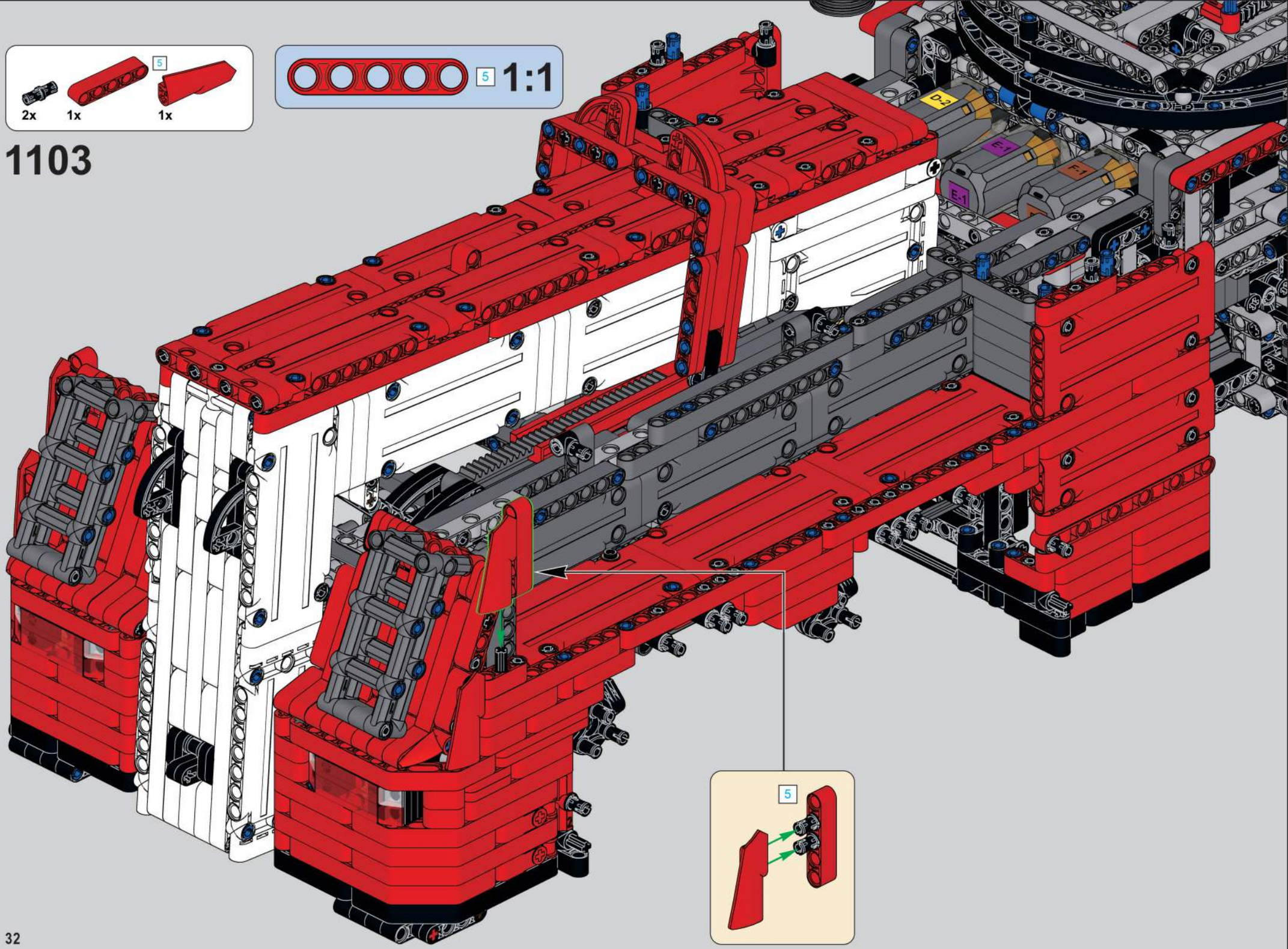

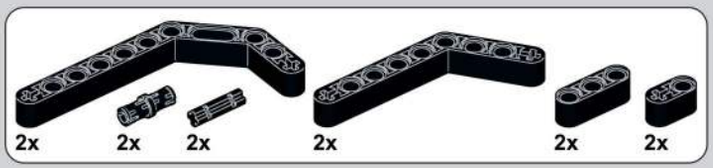

1104

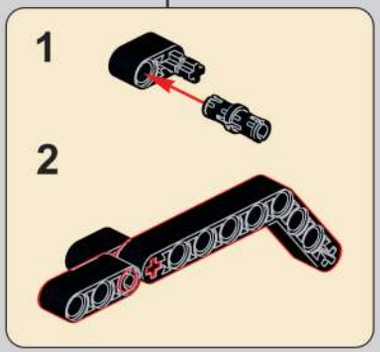

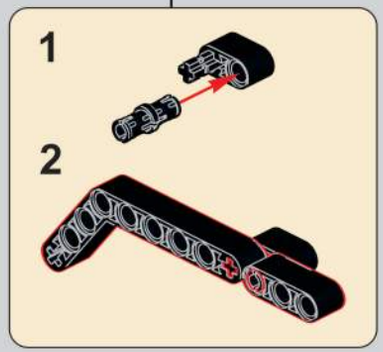

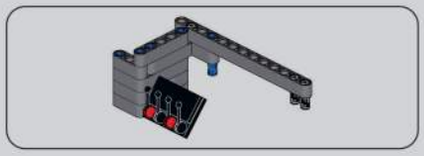

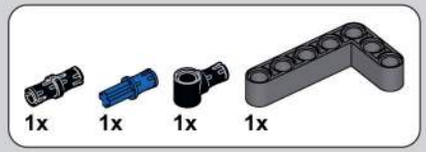

1105

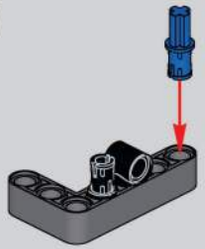

1106

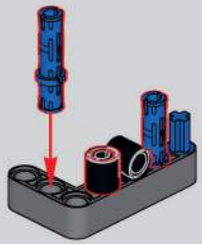

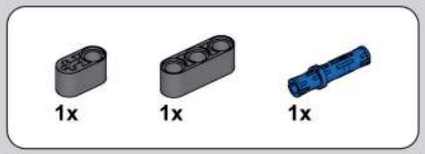

1107

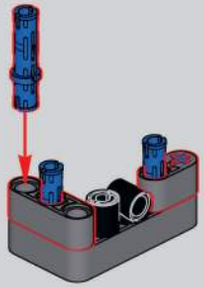

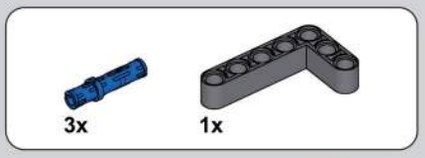

1108

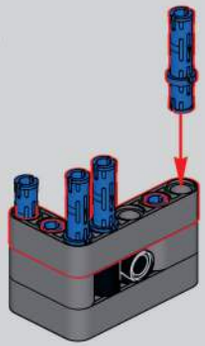

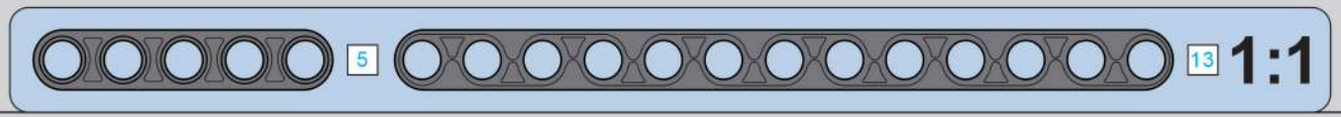

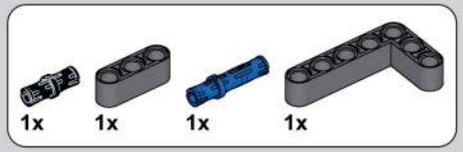

1109

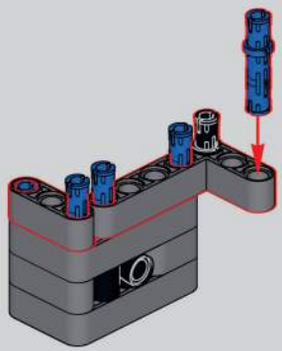

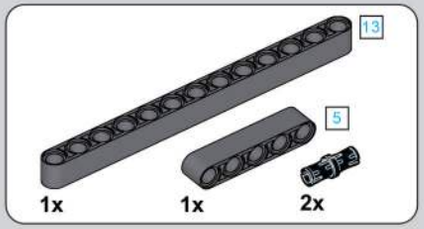

1110

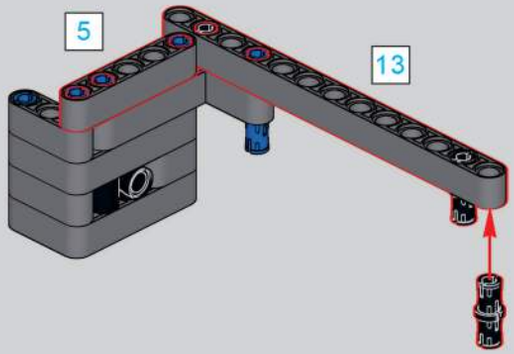

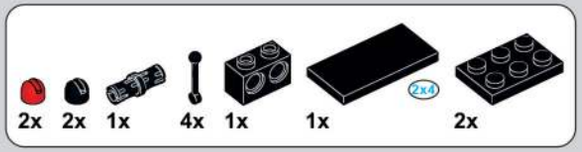

1111

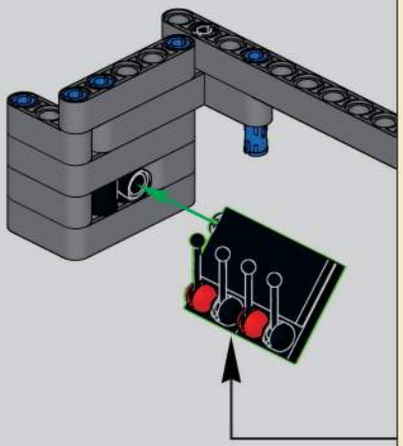

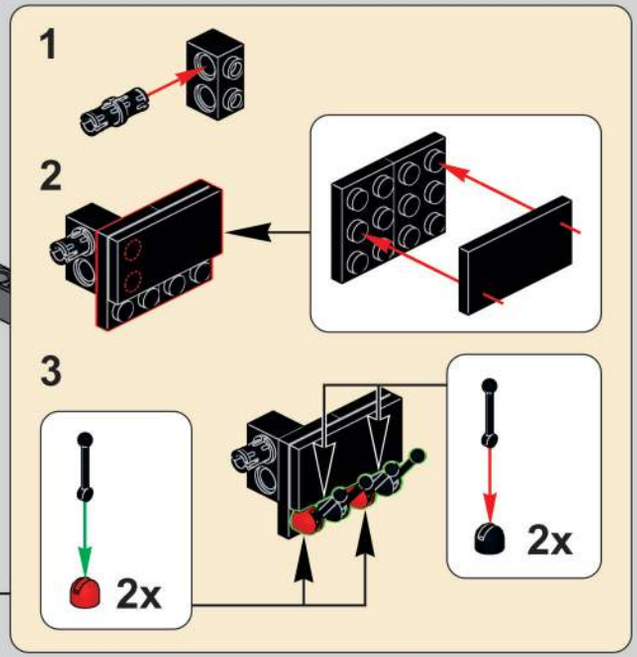

1112

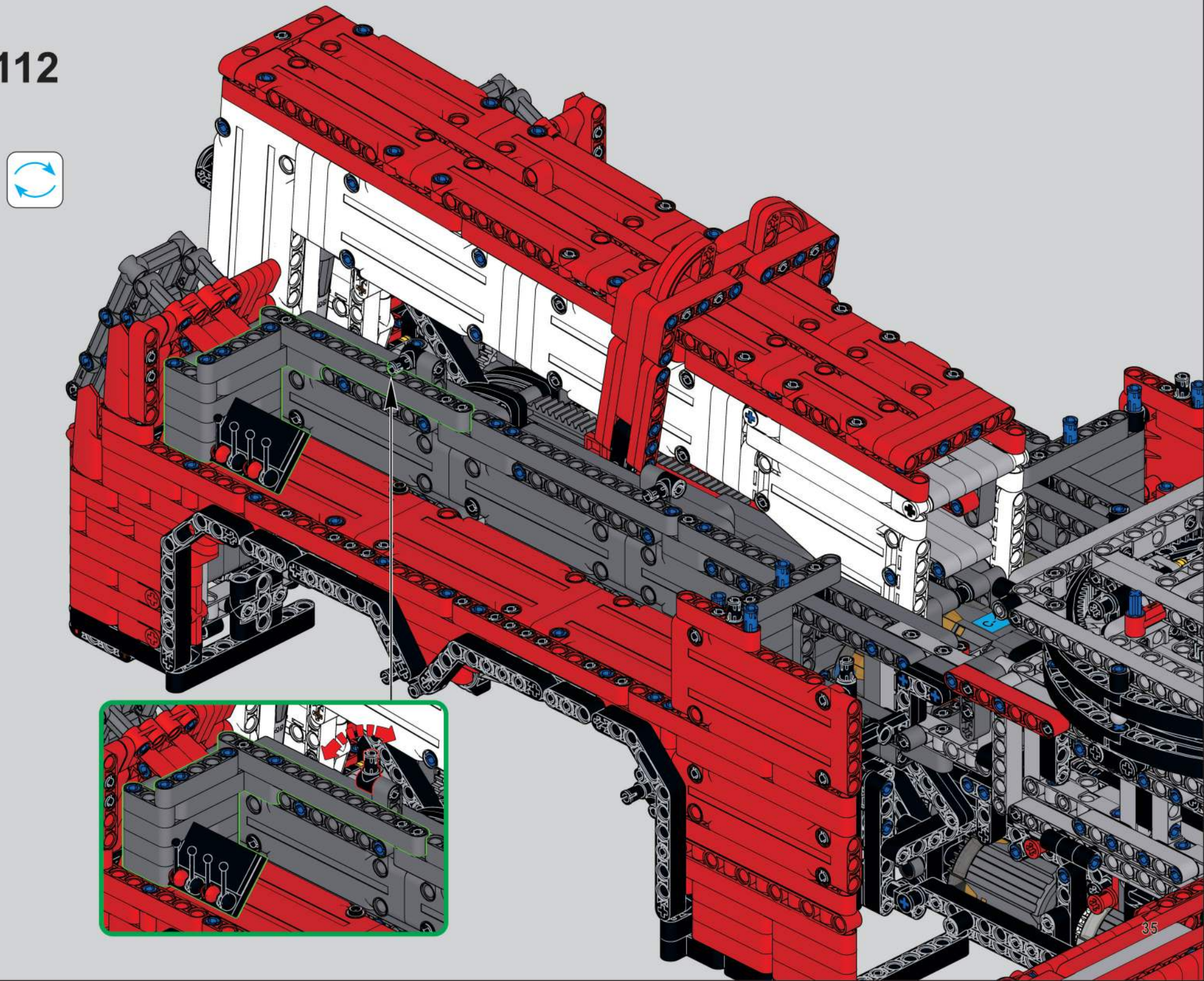

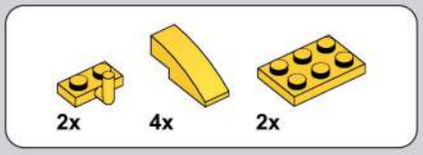

1113

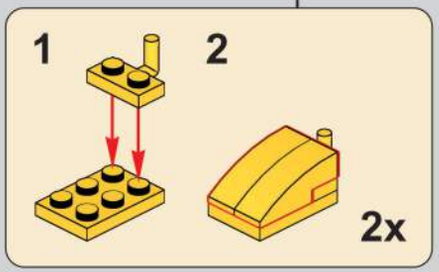

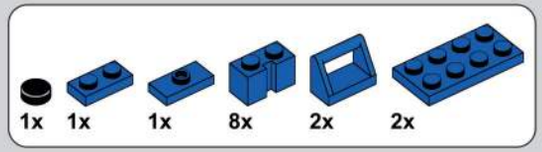

1114

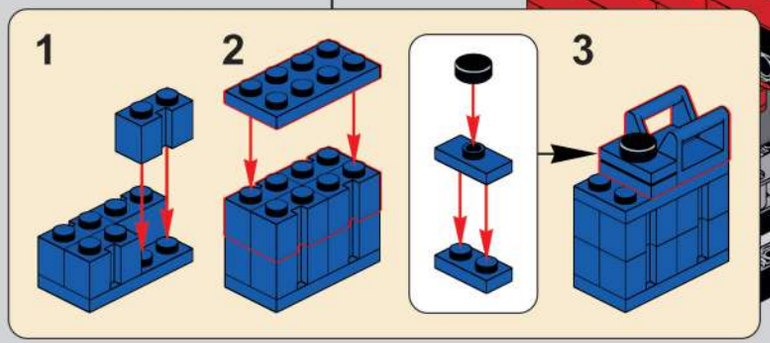

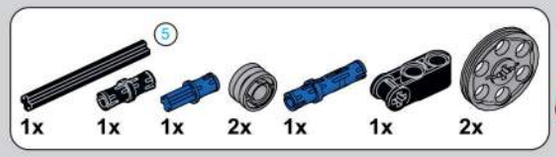

1115

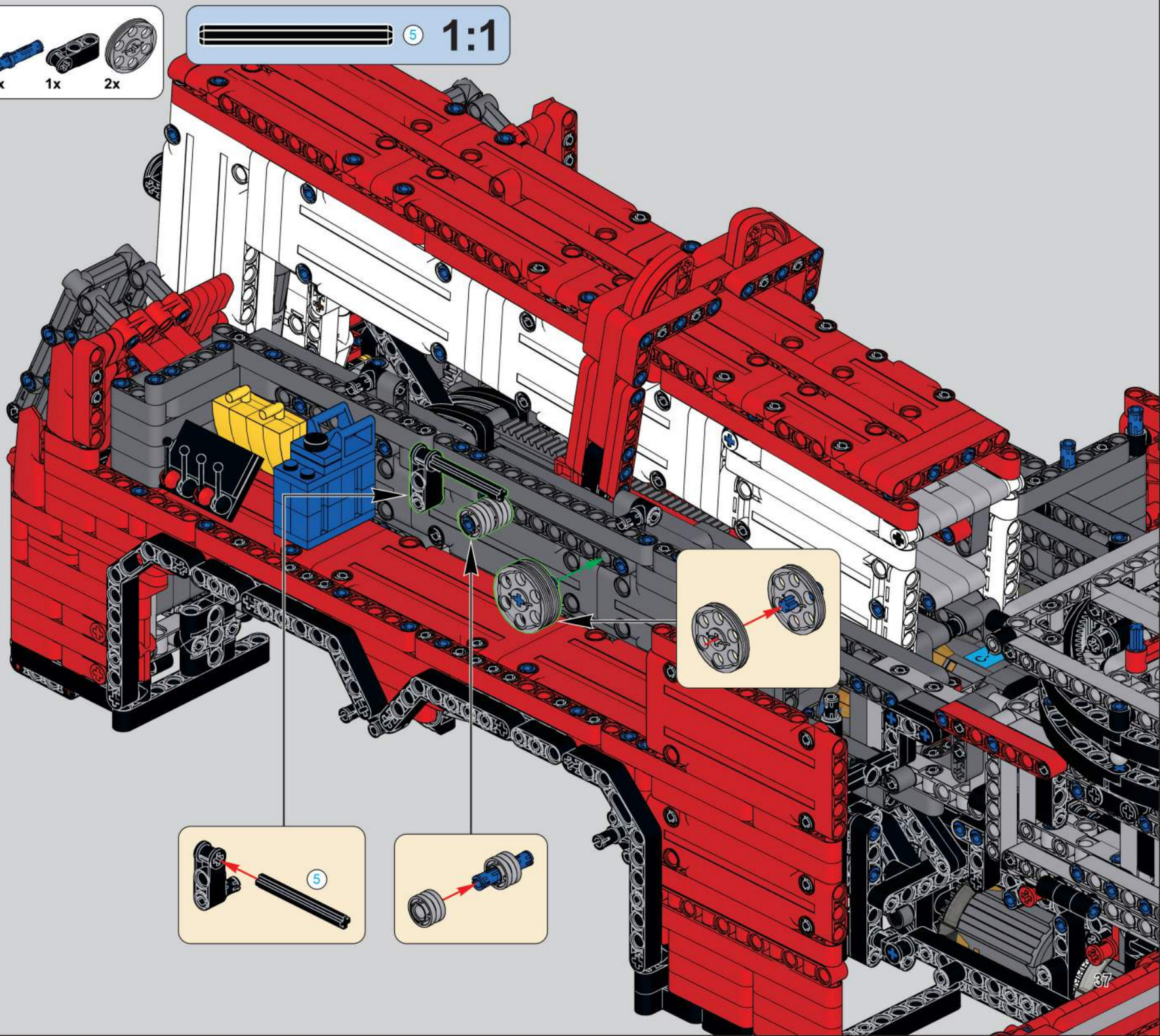

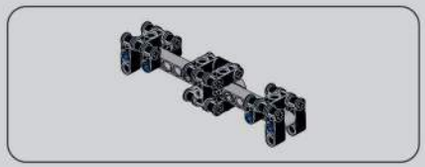

1117

1118

1119

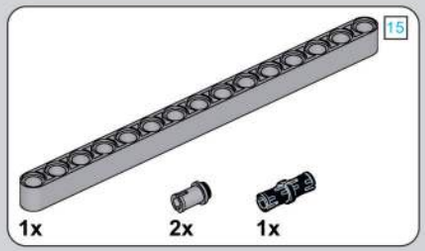

1116

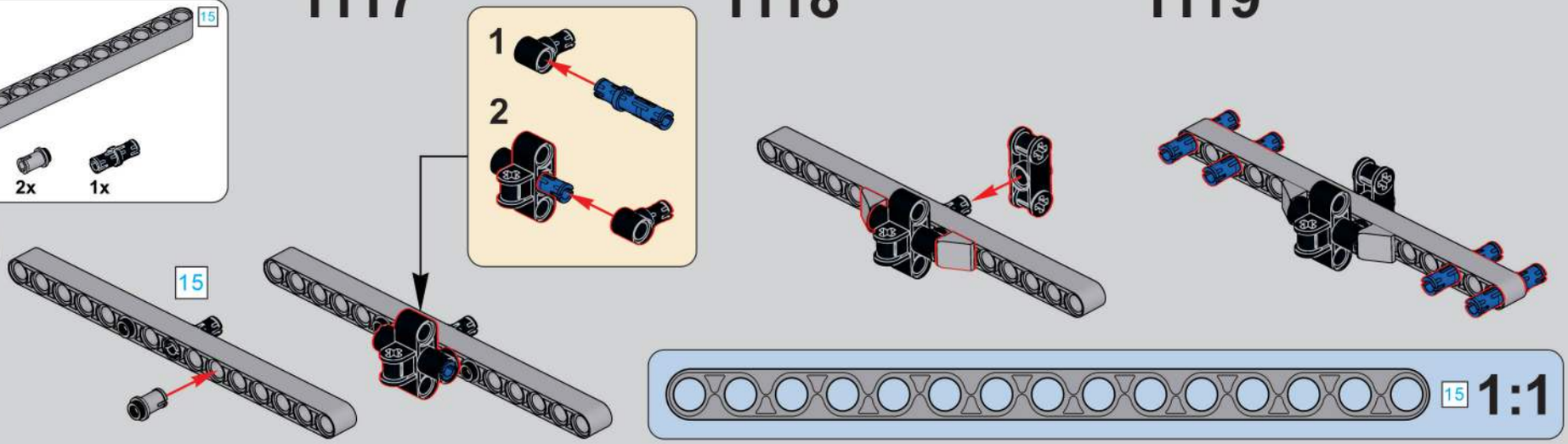

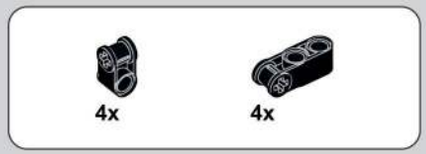

1120

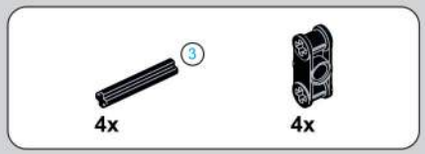

1121

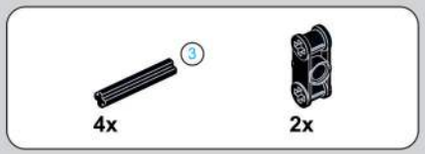

1122

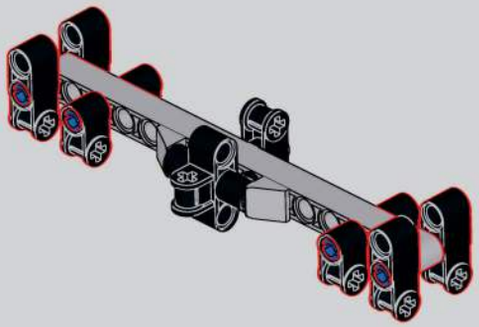

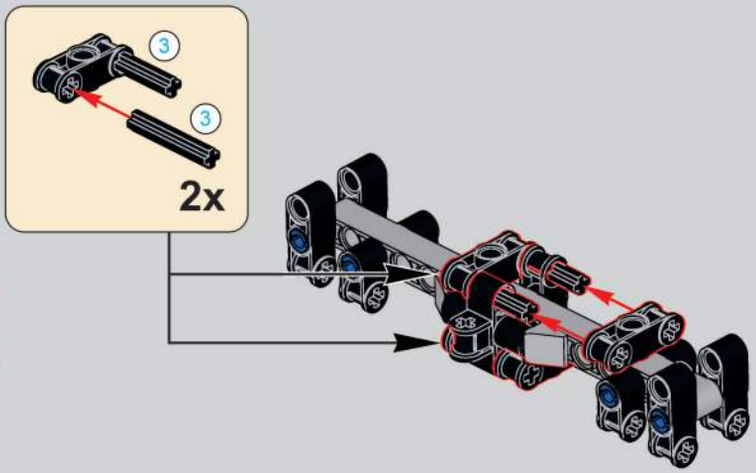

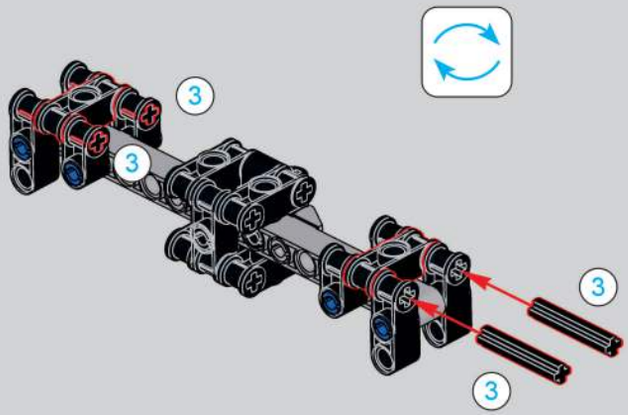

1123

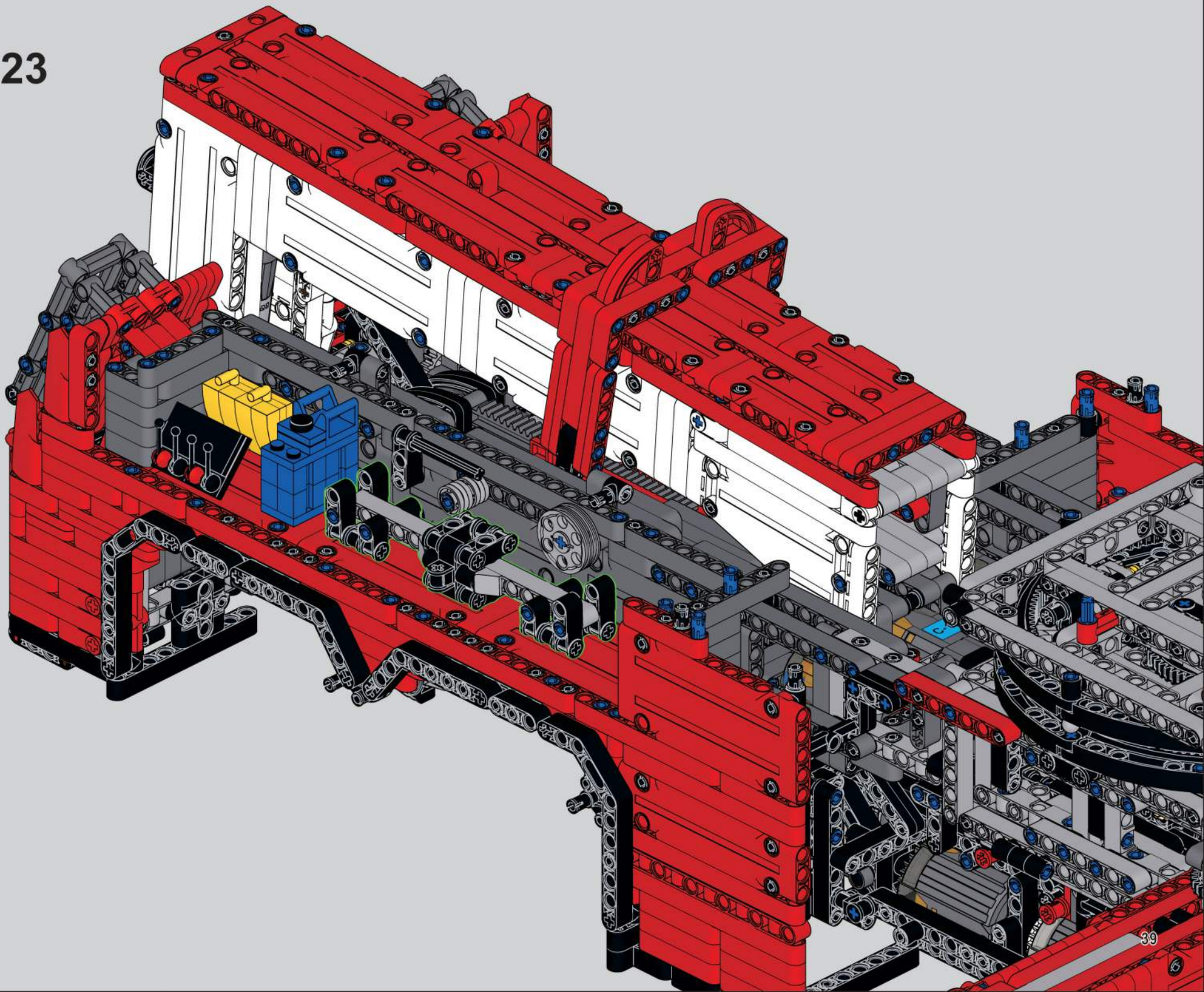

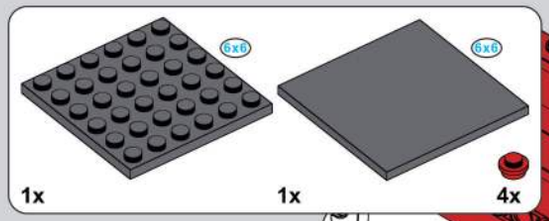

1124

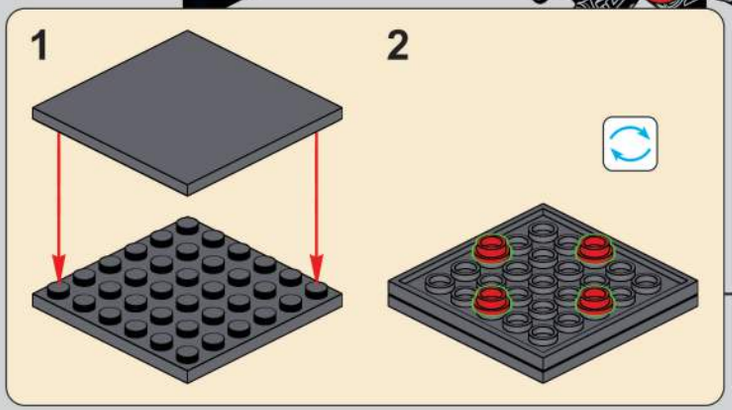

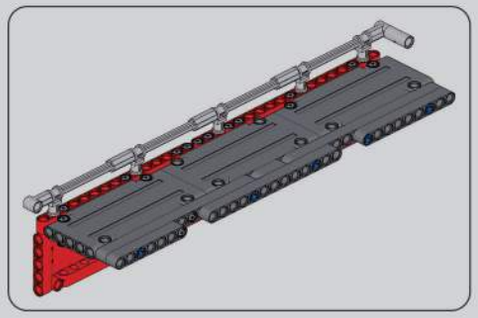

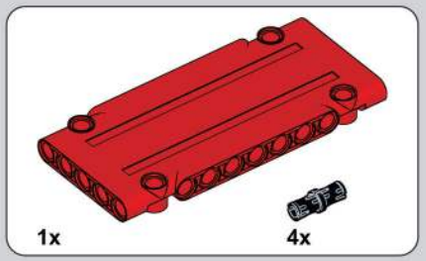

1125

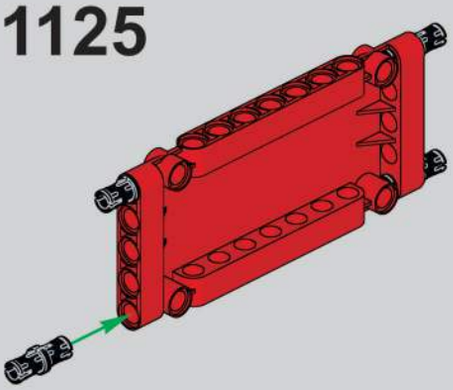

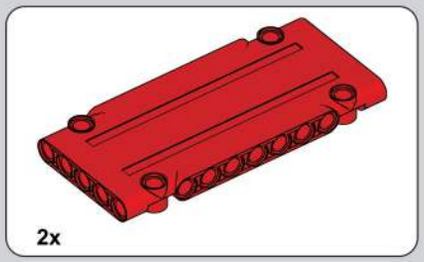

1126

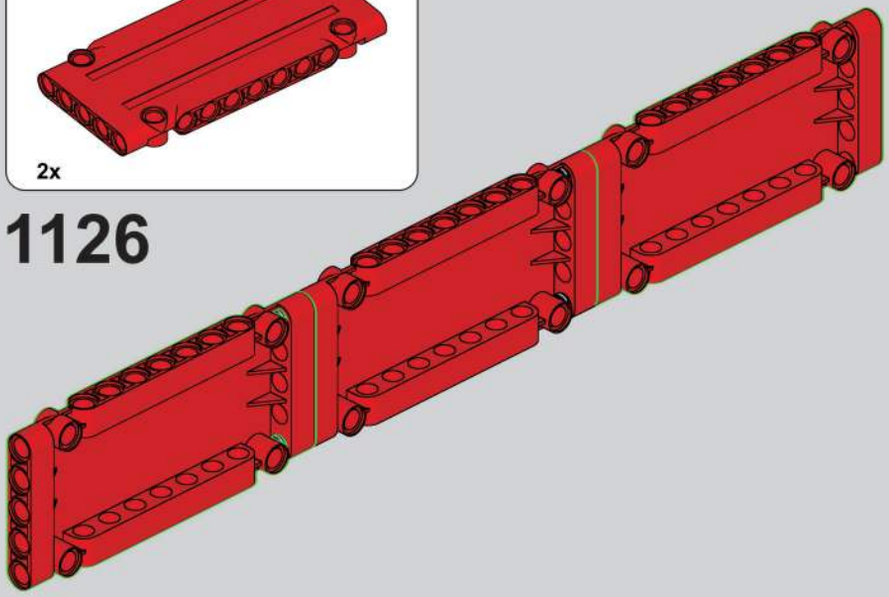

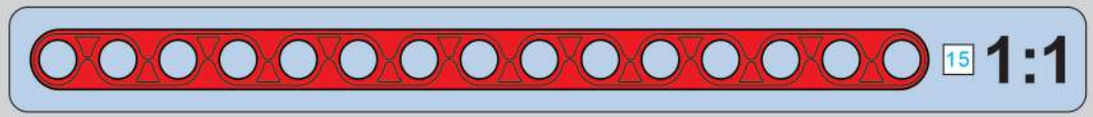

1127

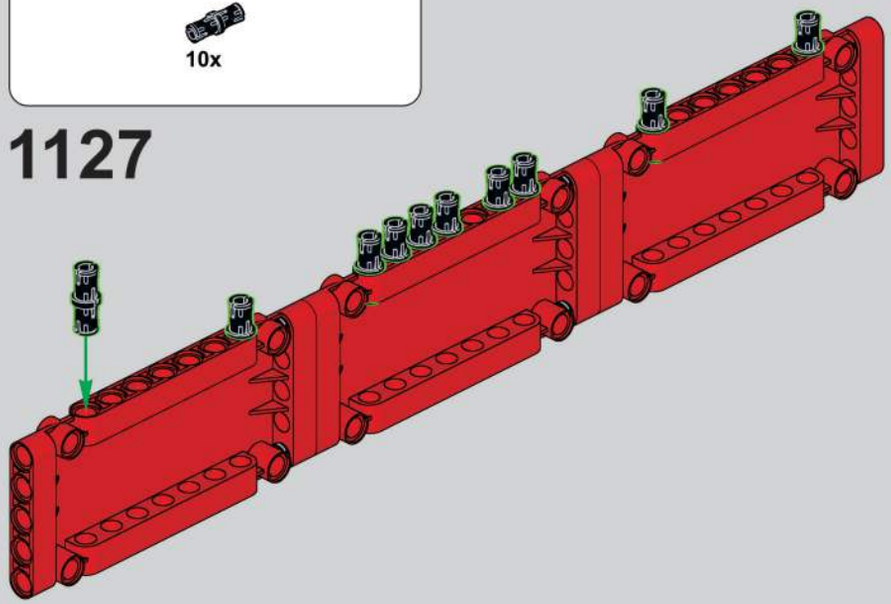

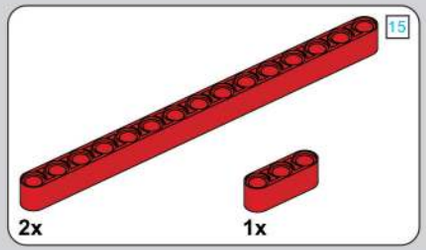

1128

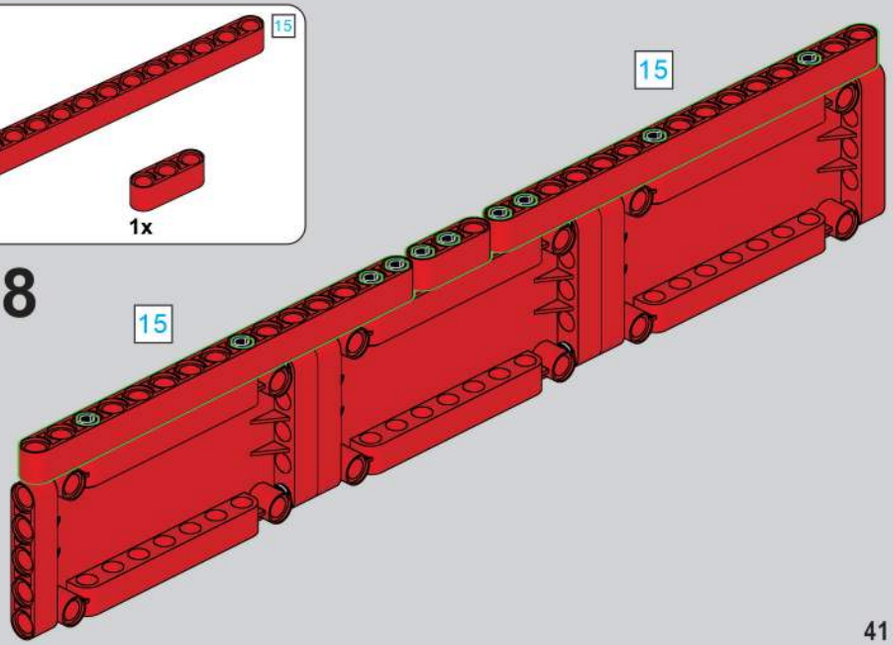

1129

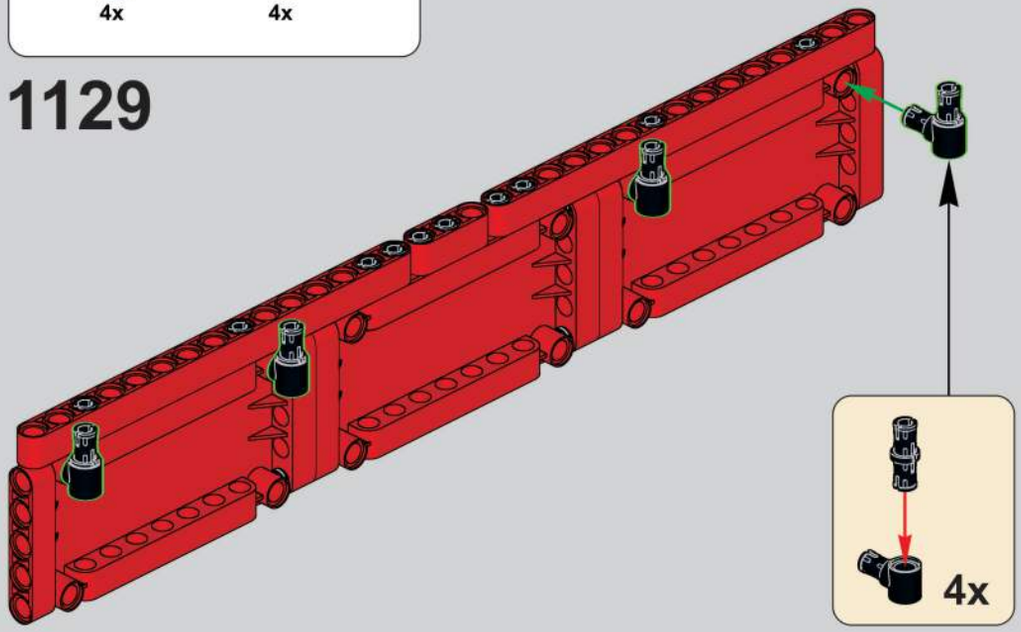

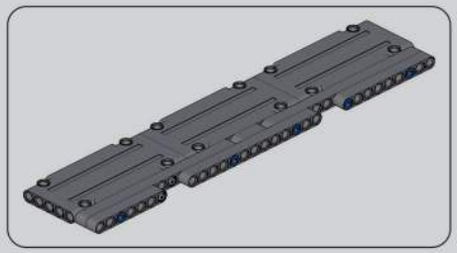

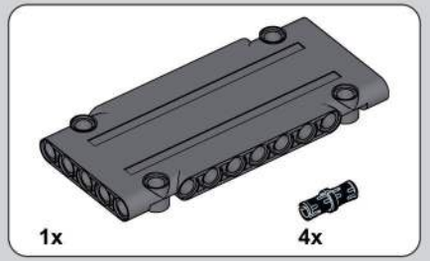

1130

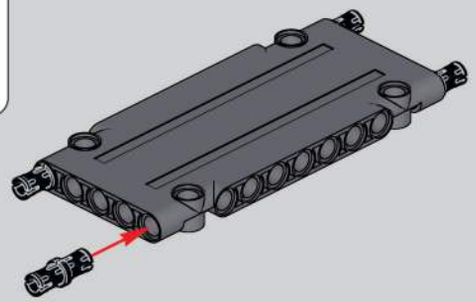

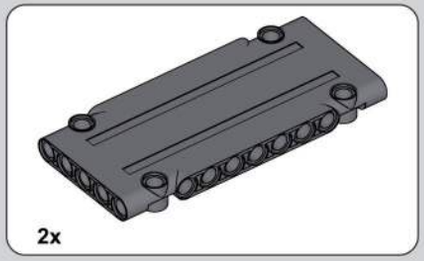

1131

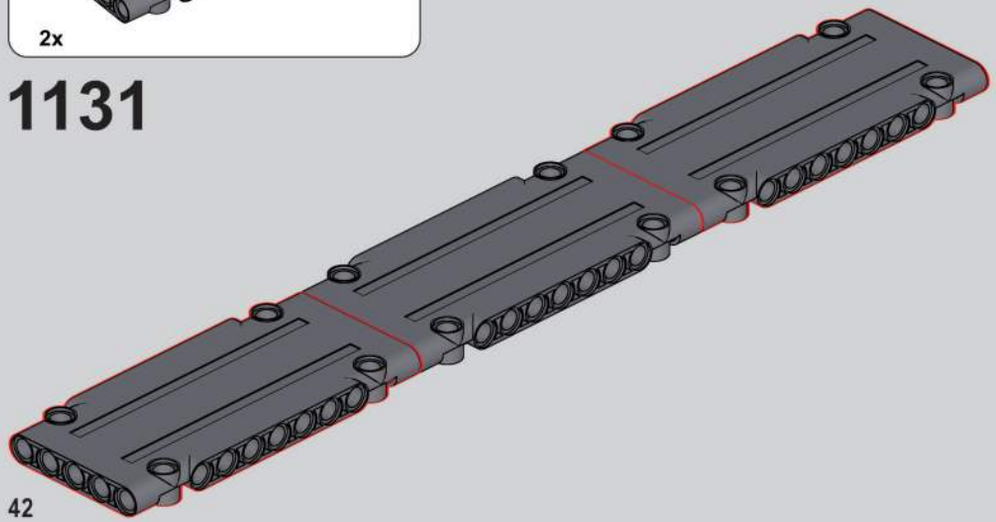

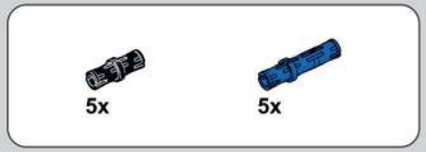

1132

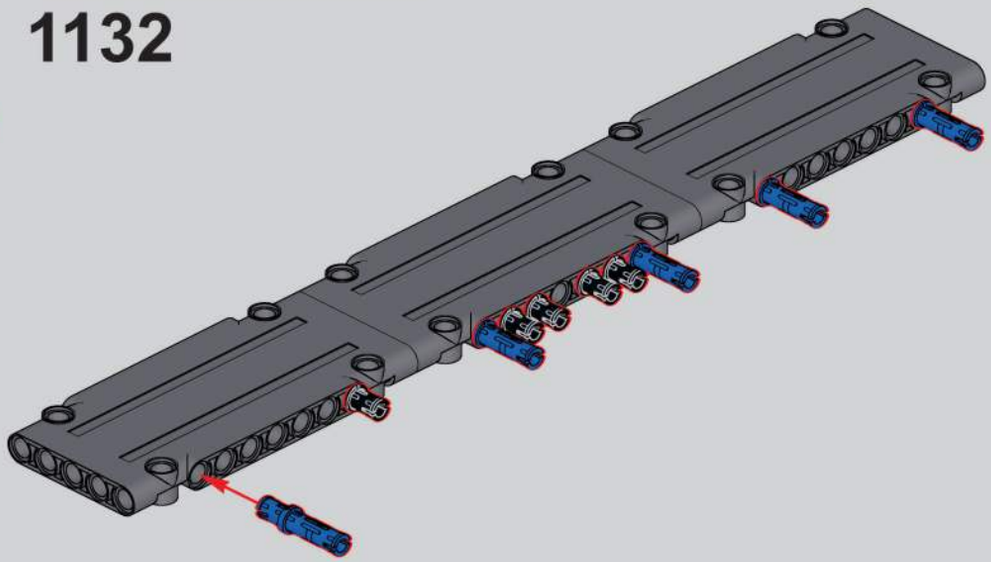

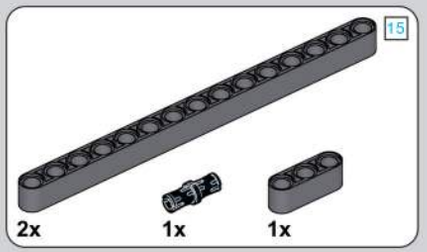

1133

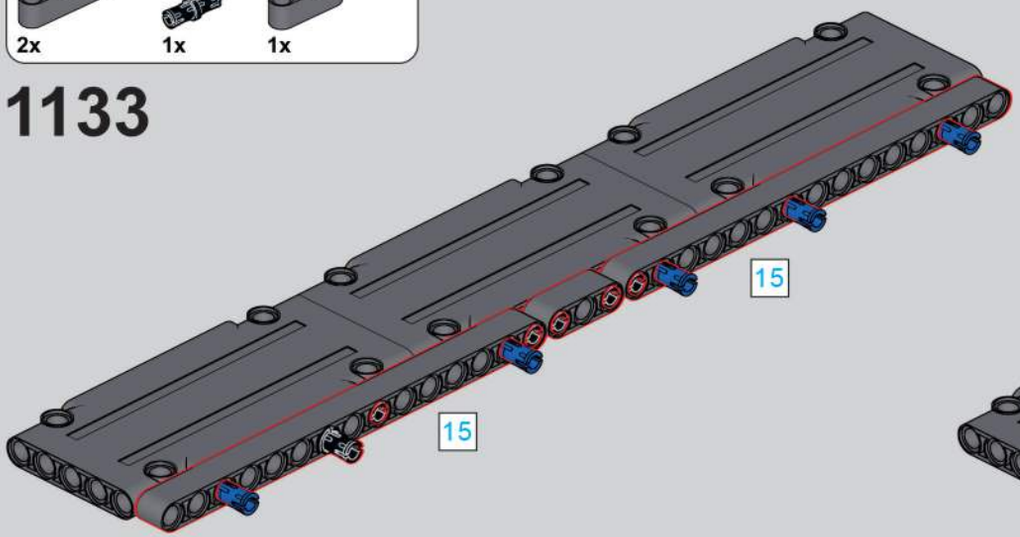

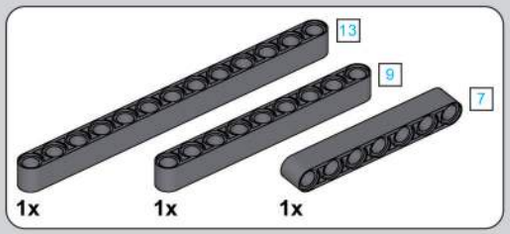

1134

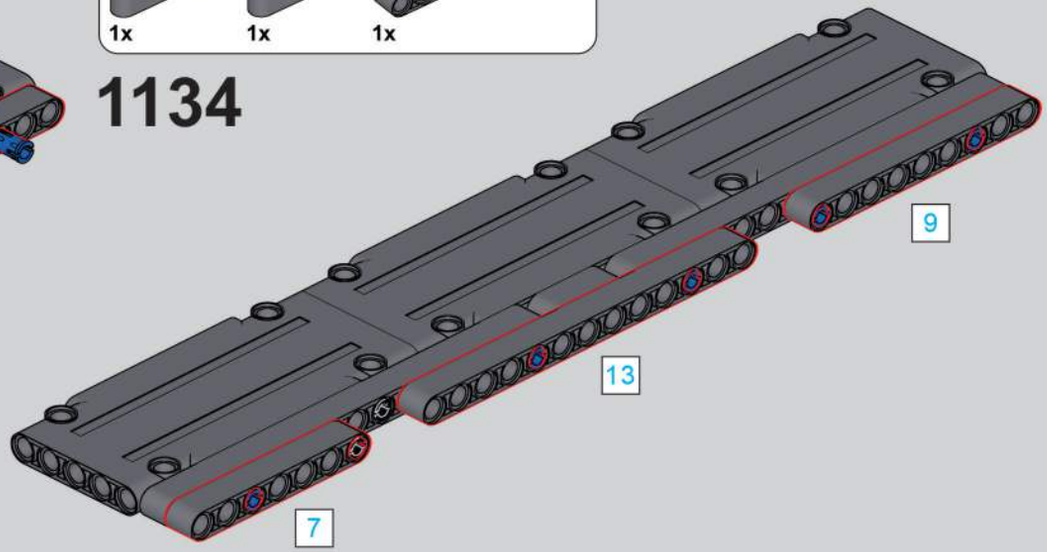

1135

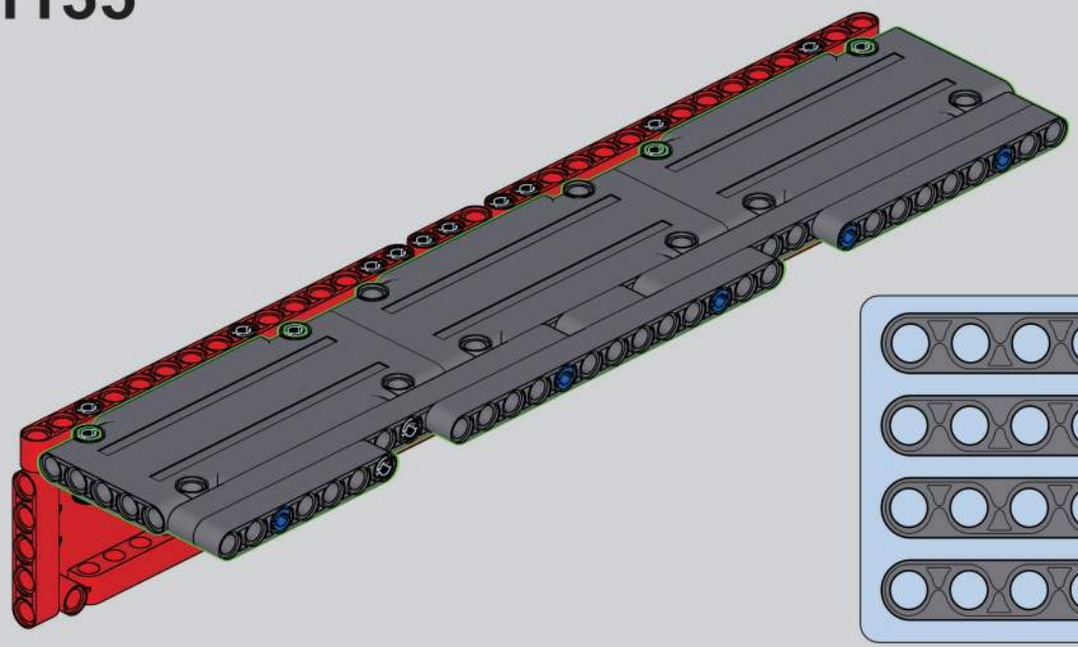

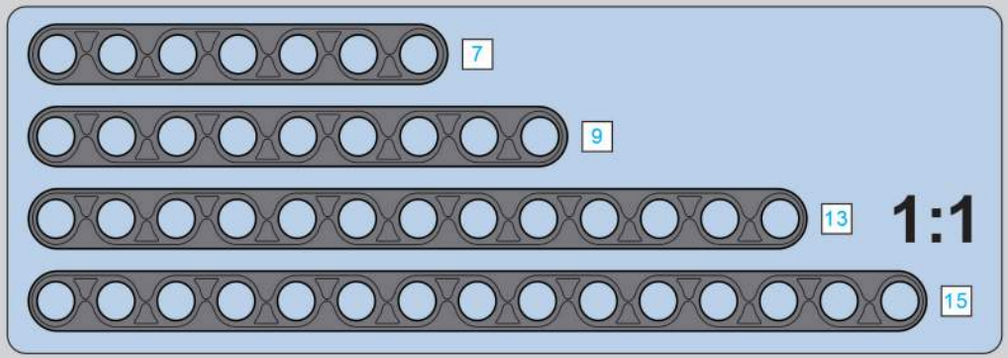

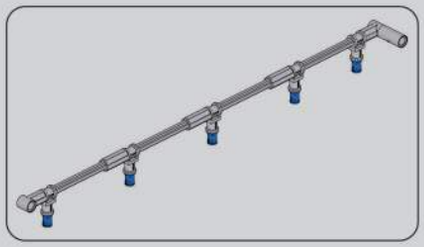

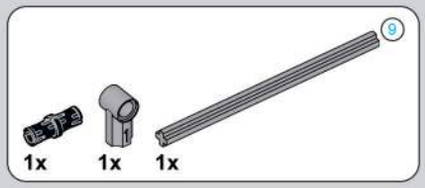

1136

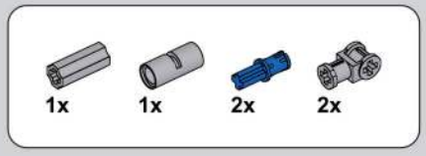

1137

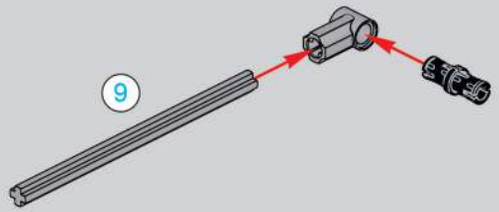

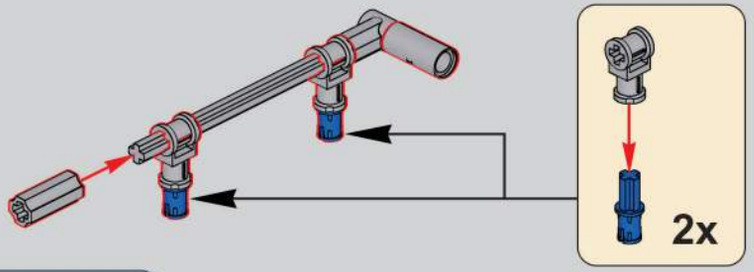

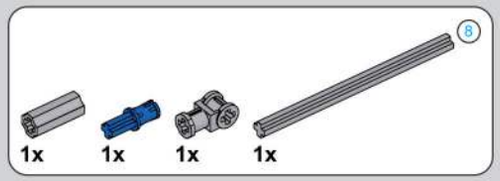

1138

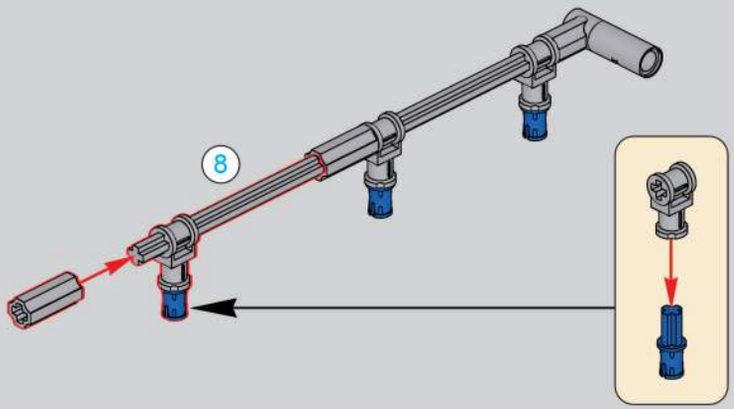

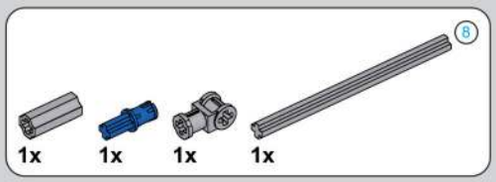

1139

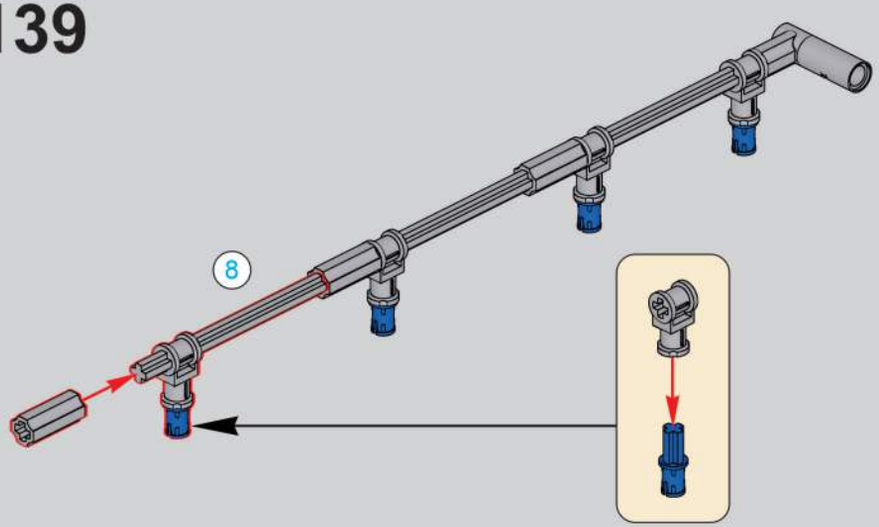

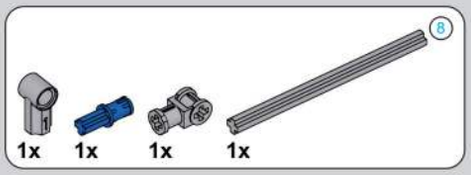

1140

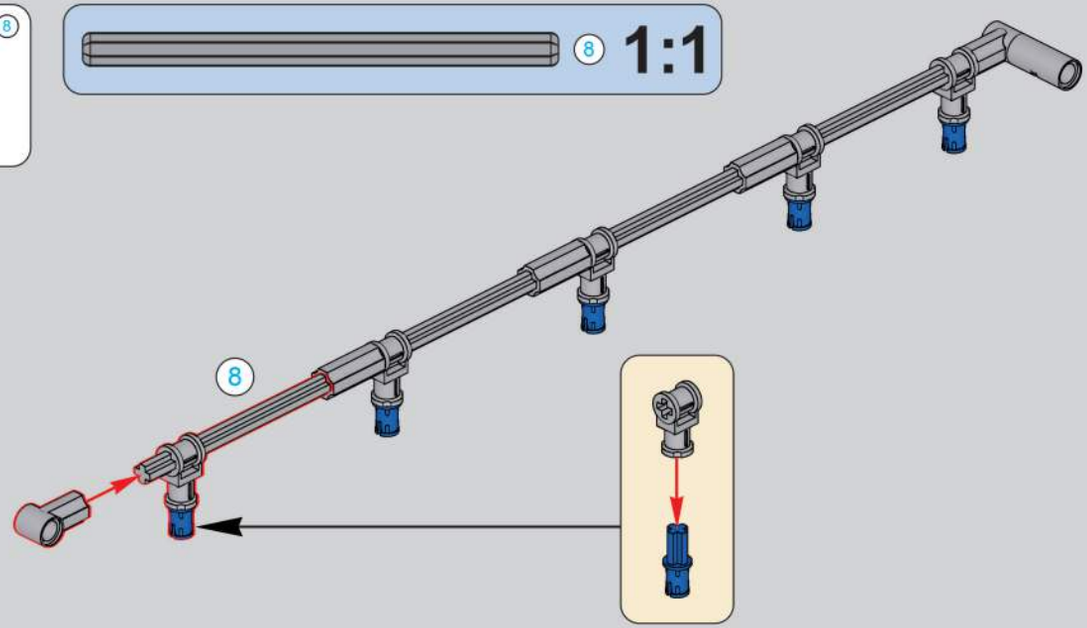

1141

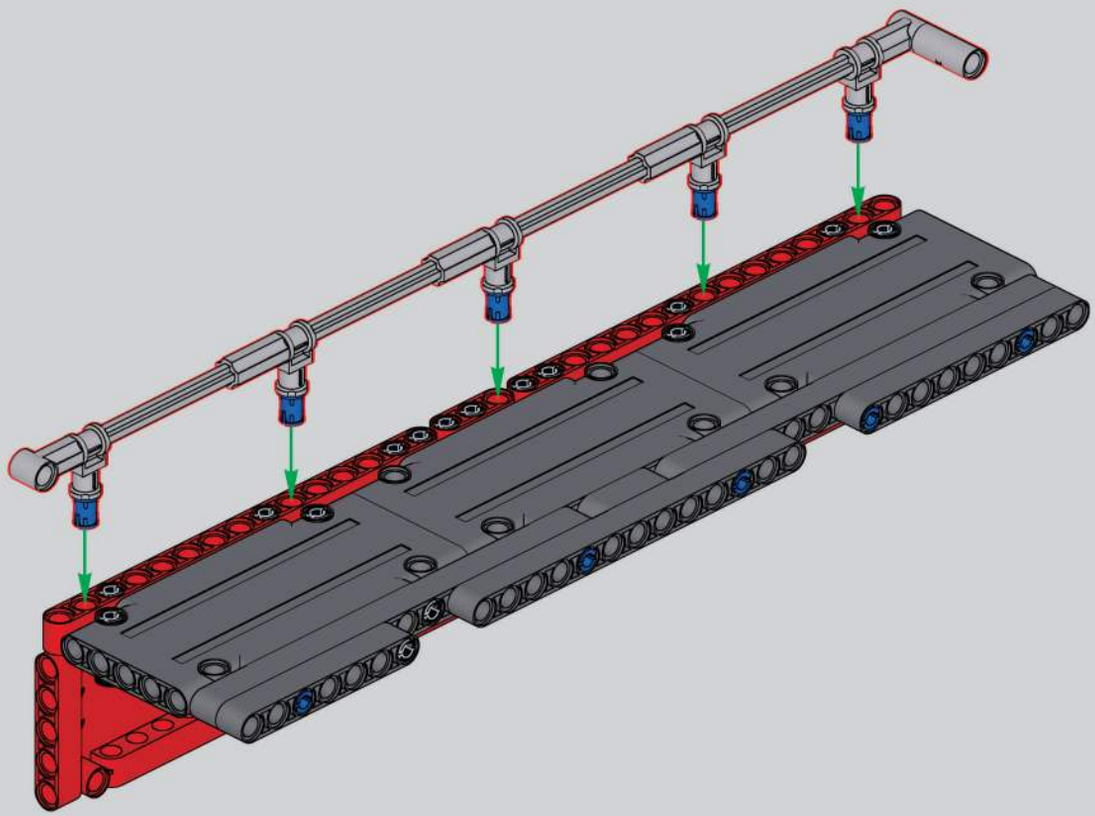

1142

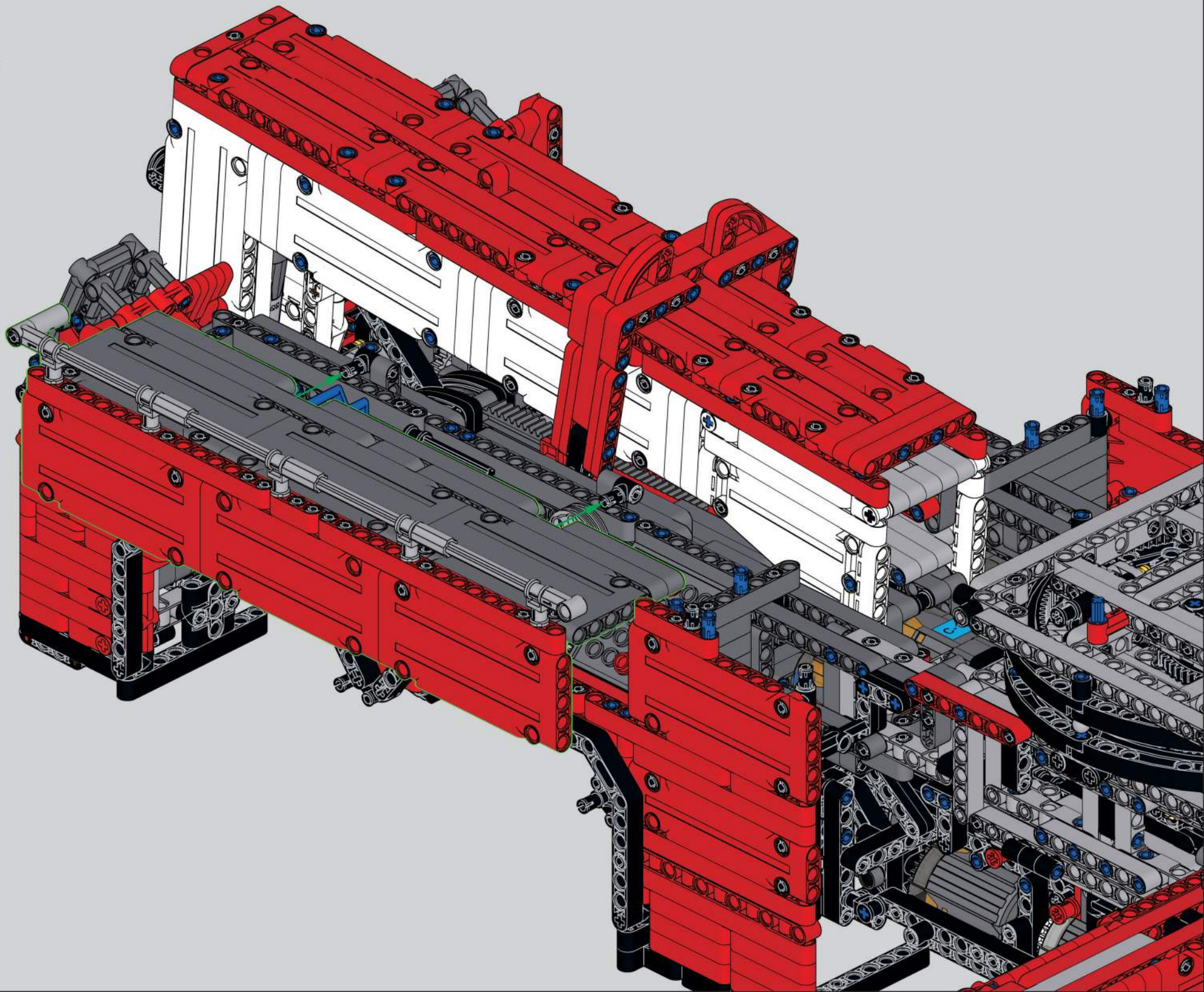

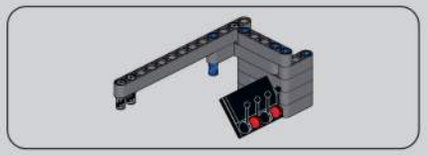

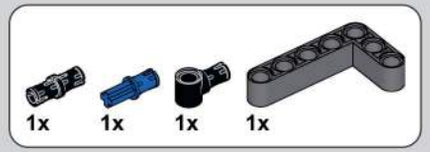

1143

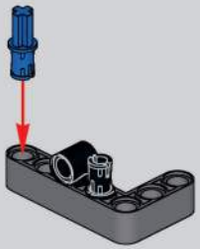

1144

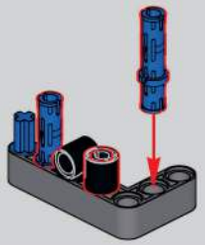

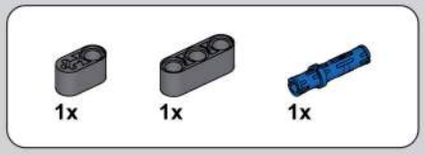

1145

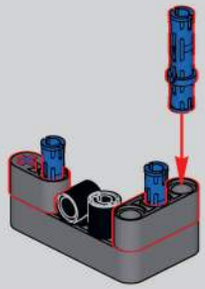

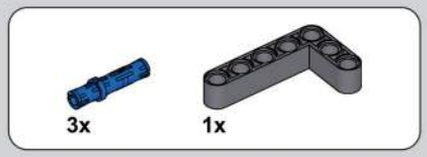

1146

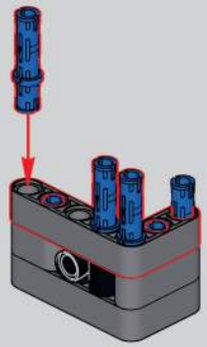

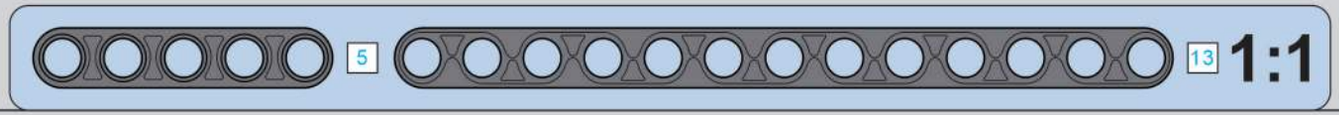

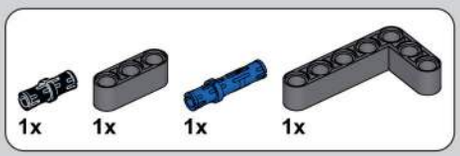

1147

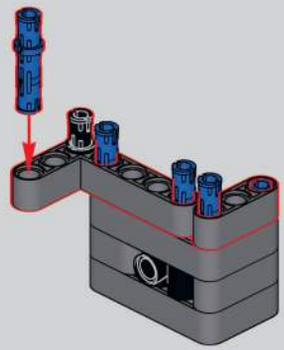

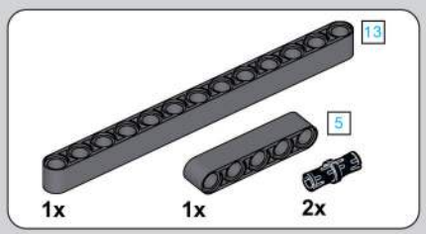

1148

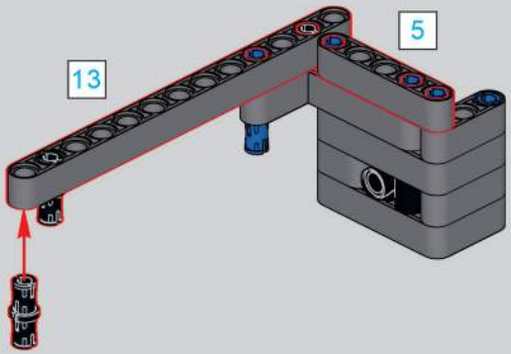

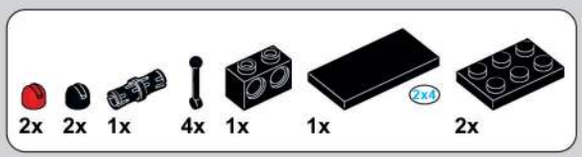

1149

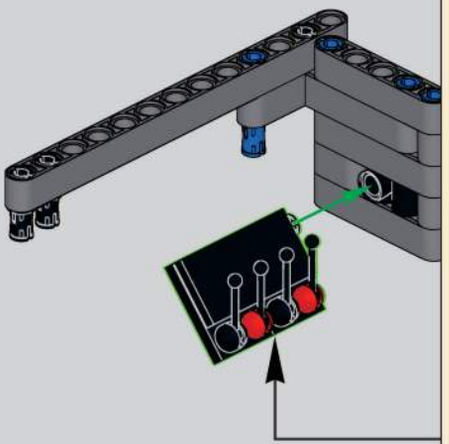

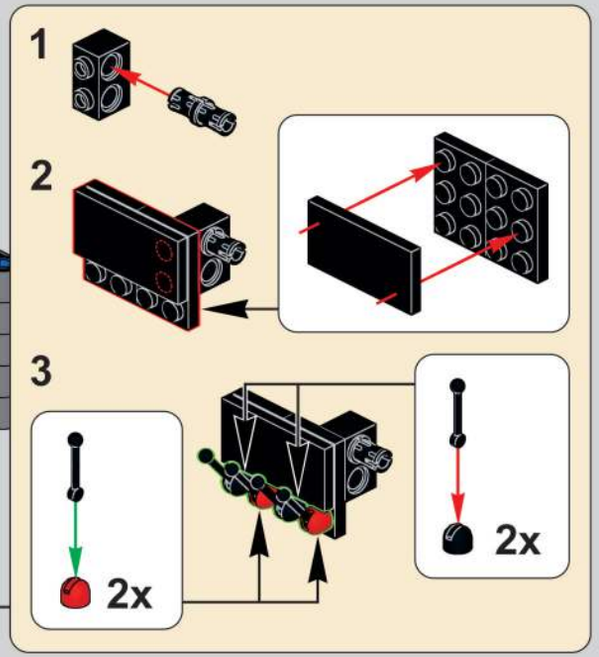

1150

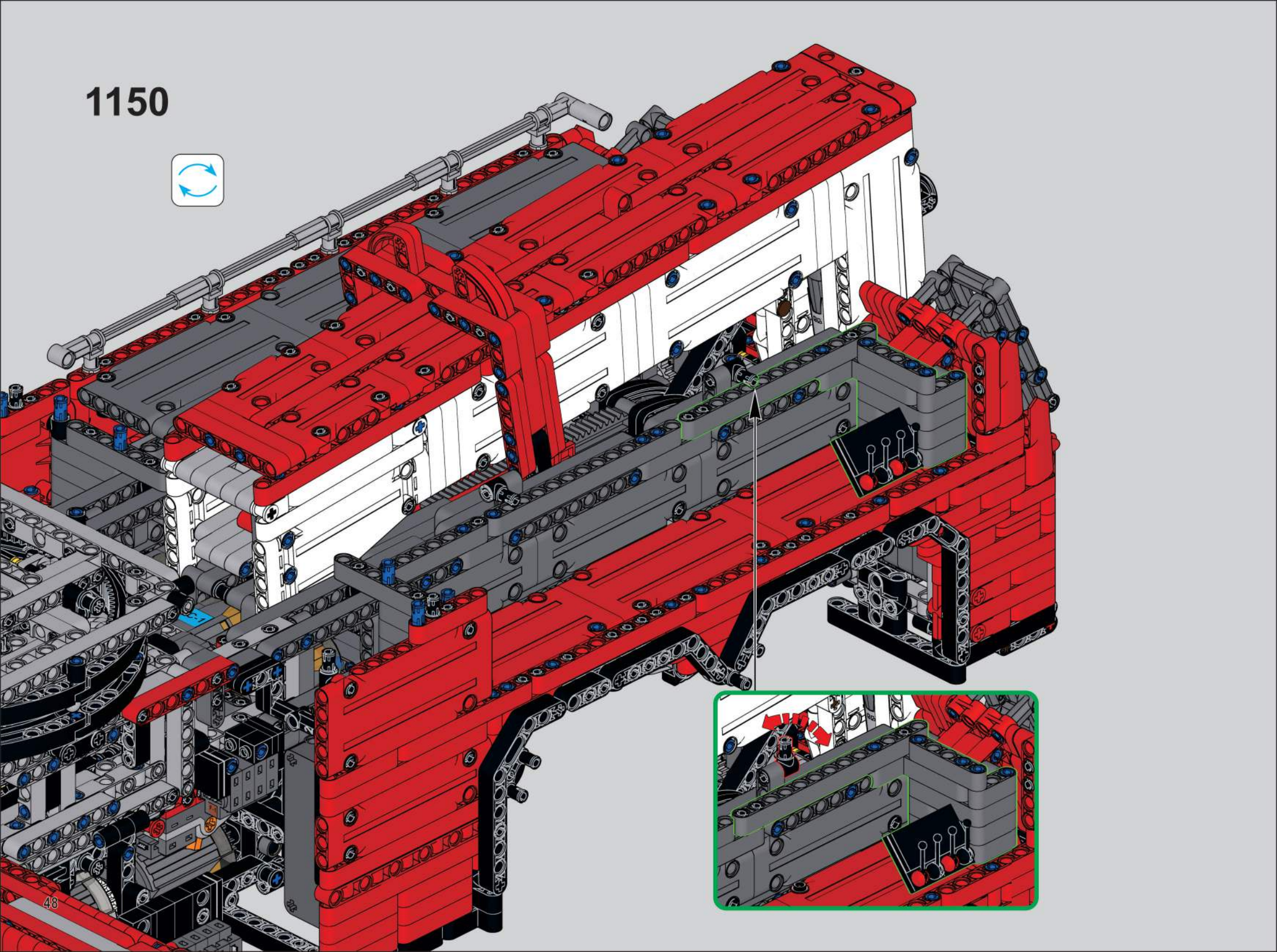

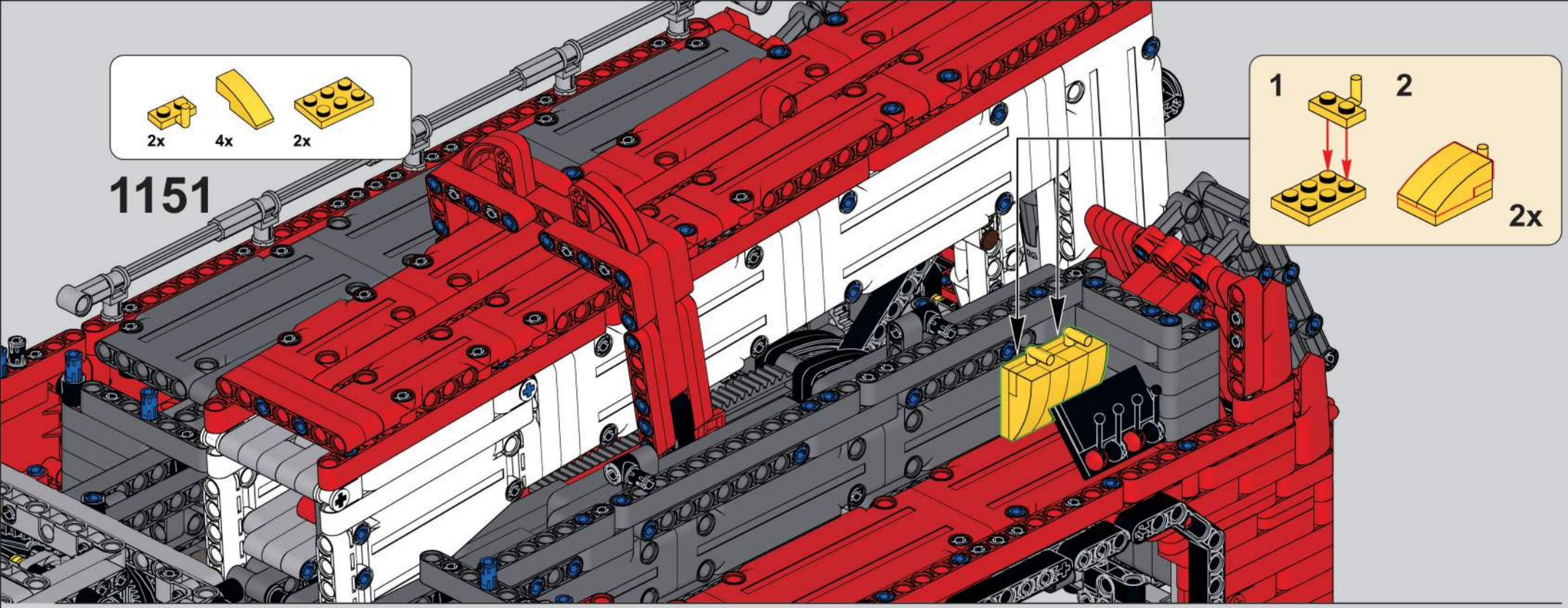
2x
4x
2x
1151
1
2
2x

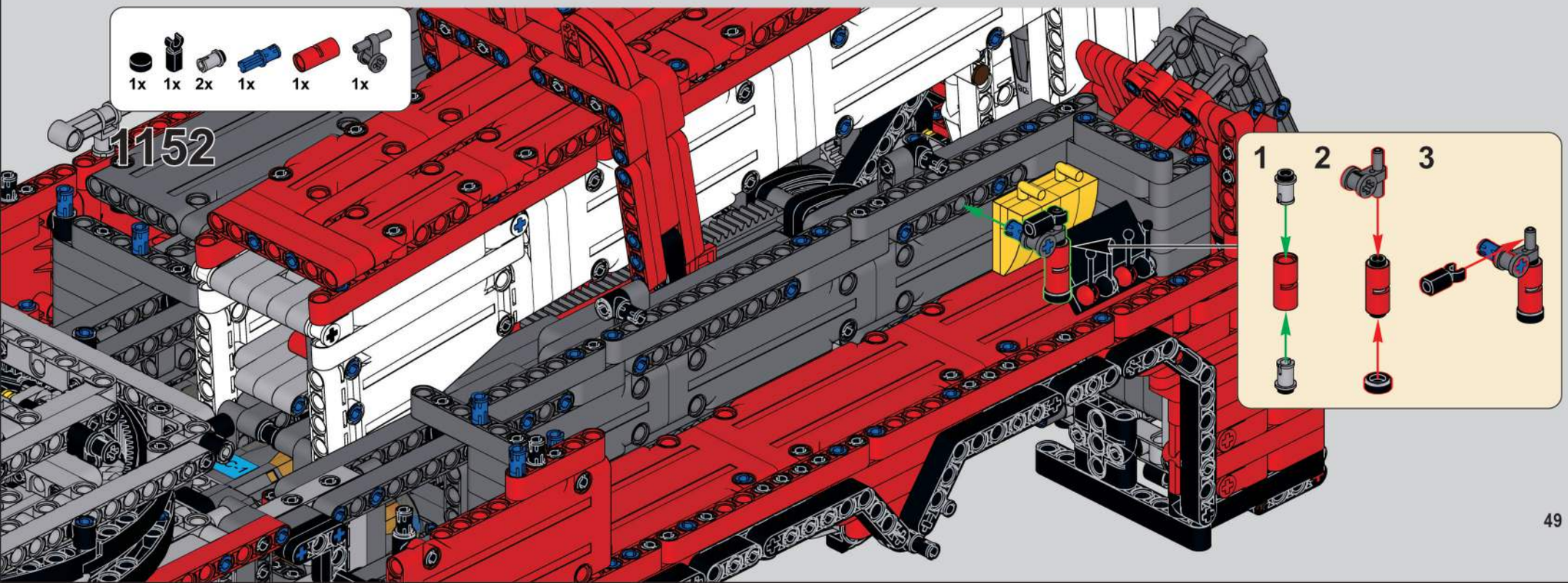
1x
1x
2x
1x
1x
1x
1152
1
2
3

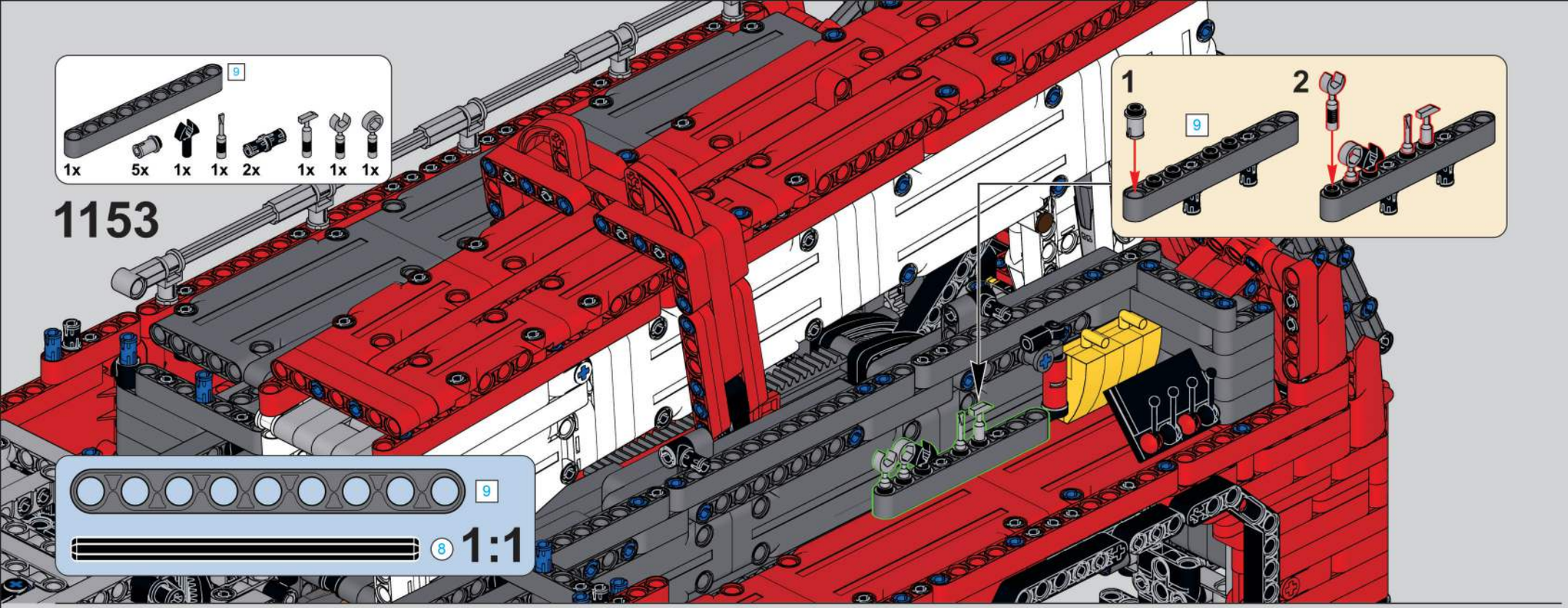
9
1x 5x 1x 1x 2x 1x 1x 1x
1153
1
9
2
9
8
1:1

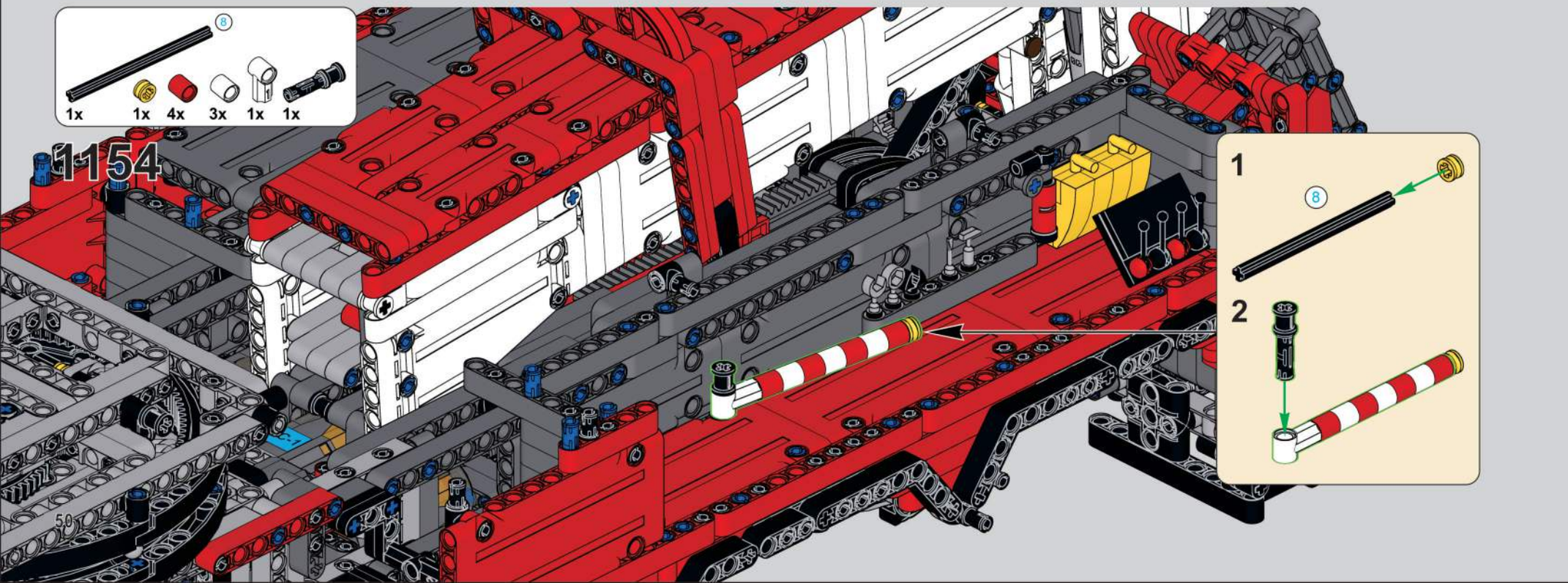
8
1x 1x 4x 3x 1x 1x
1154
1
8
2

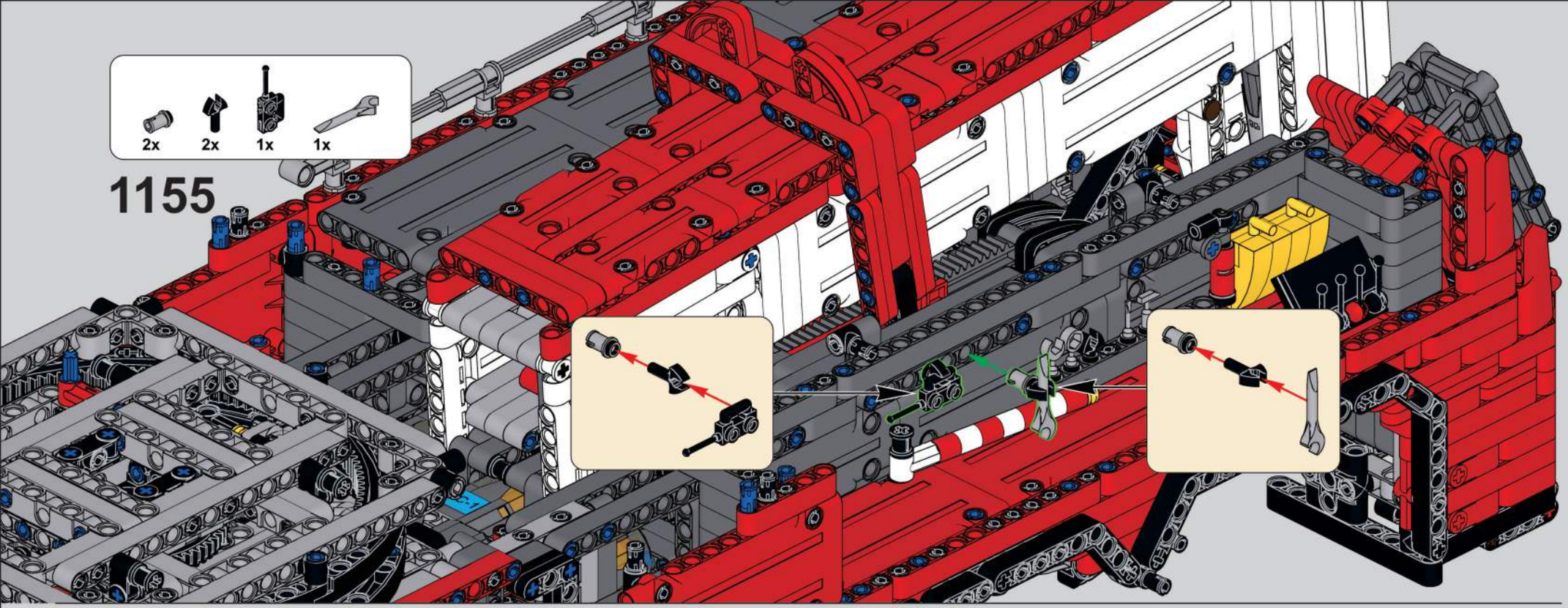
2x
2x
1x
1x
1155

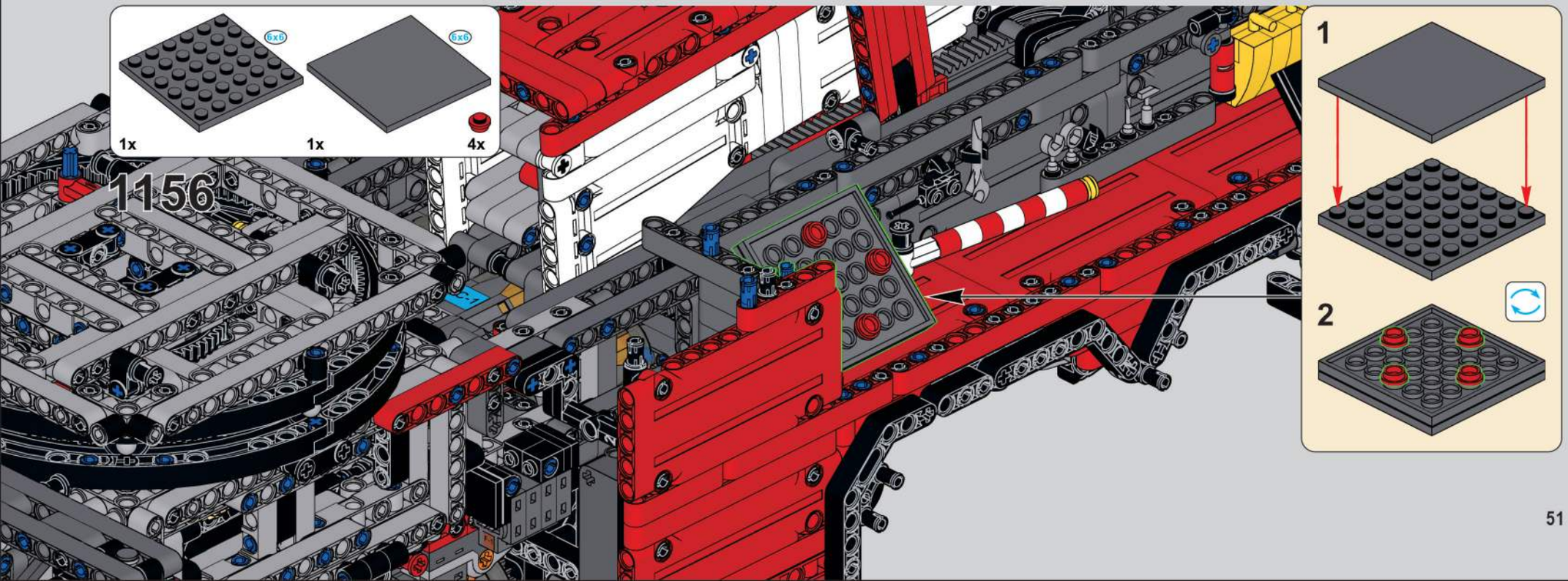
6x6
6x6
1x
1x
4x
1156
1
2

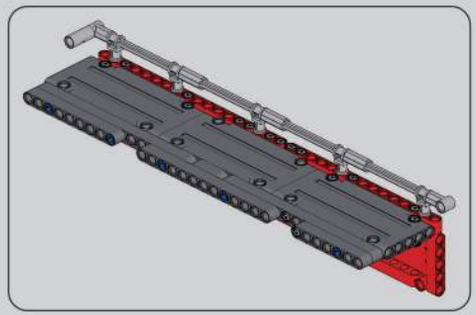

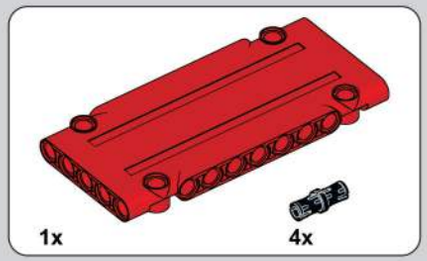

1157

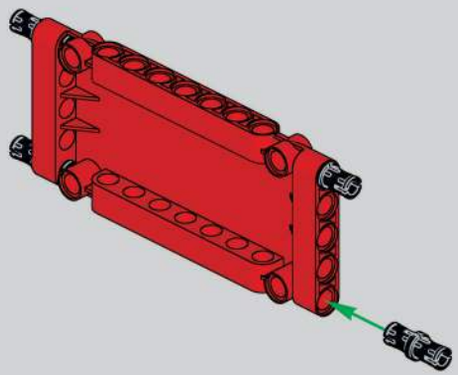

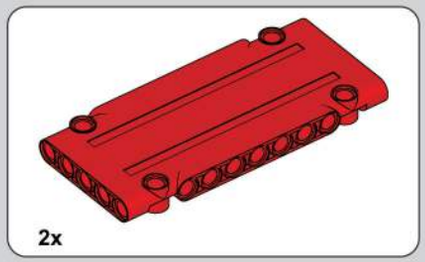

1158

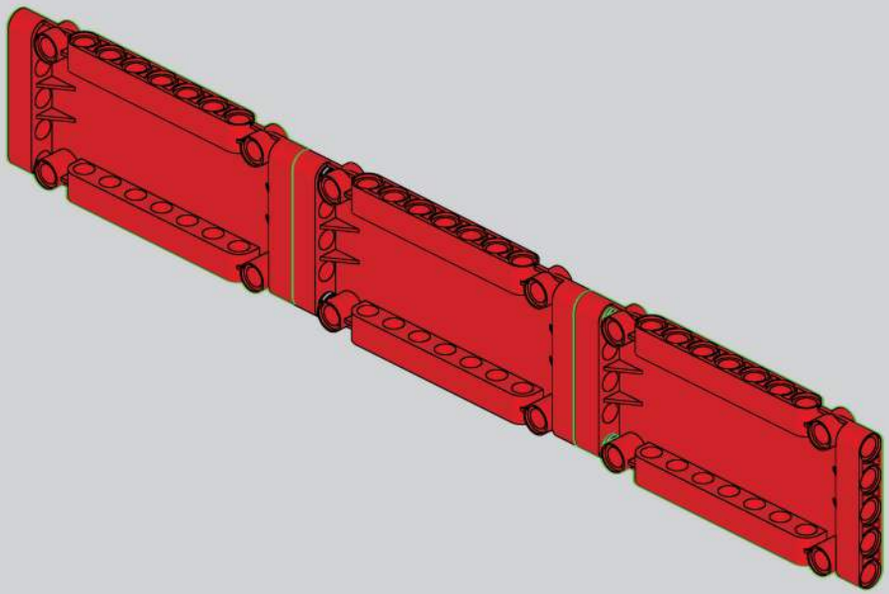

1159

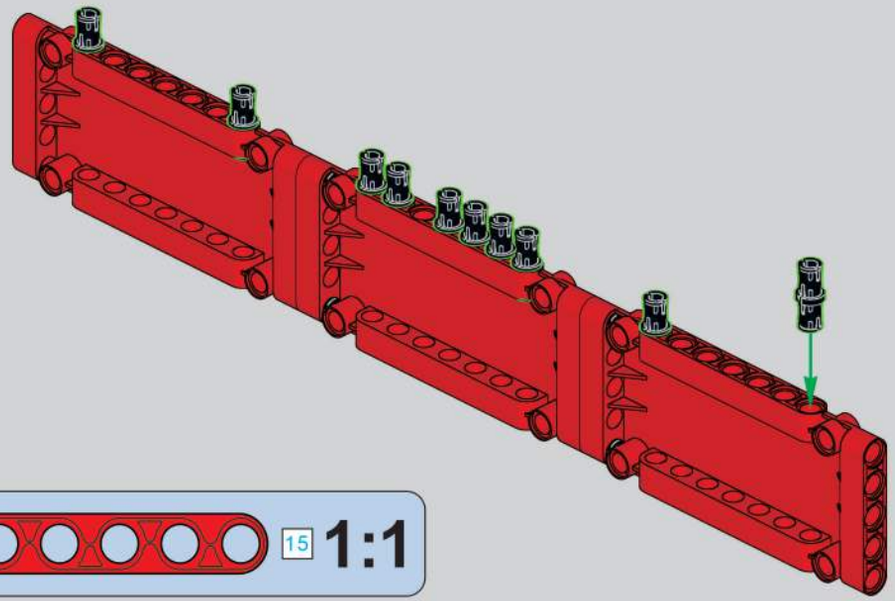

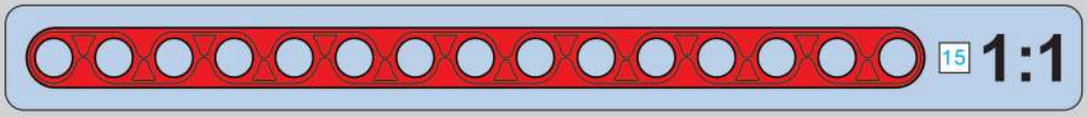

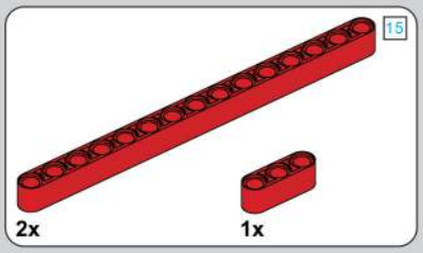

1160

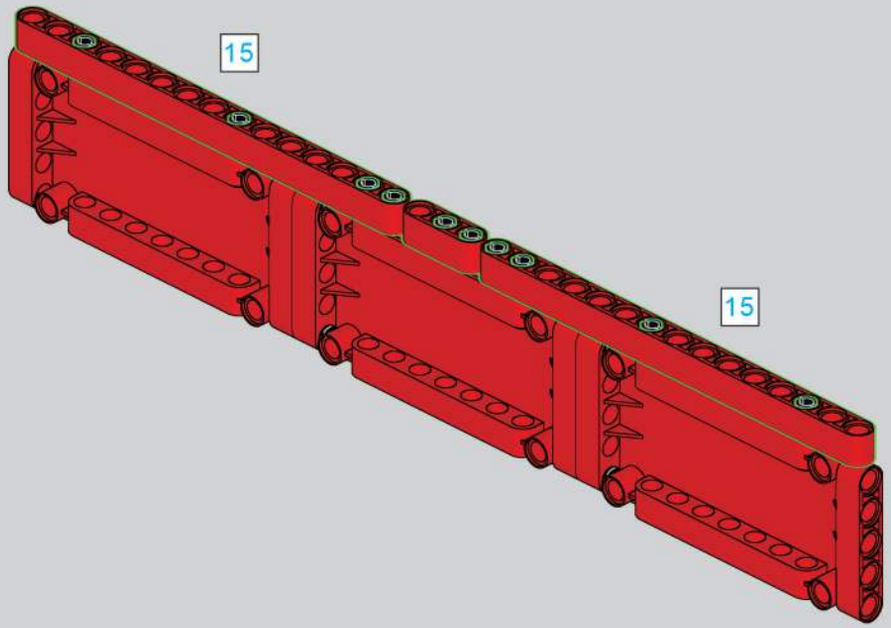

1161

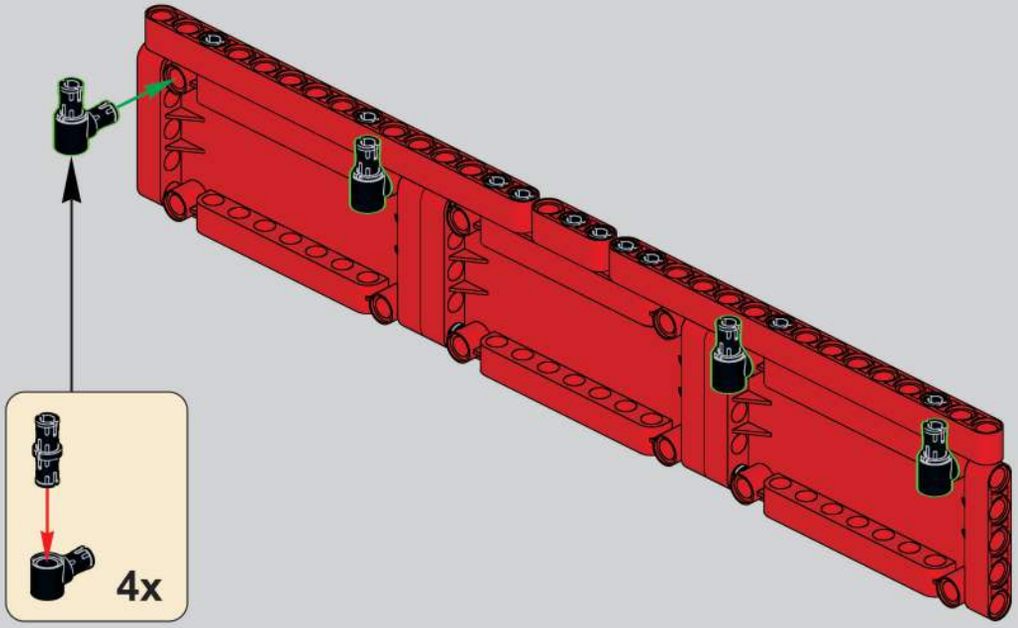

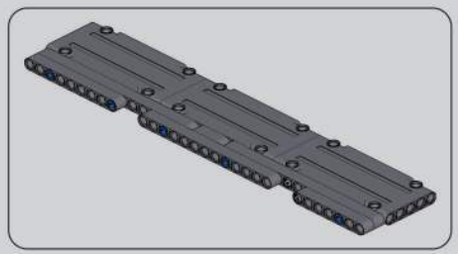

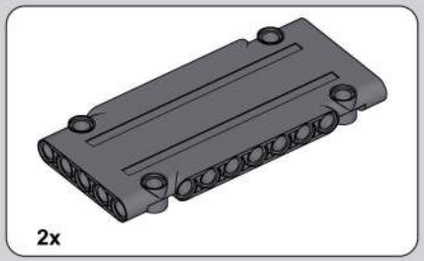

1163

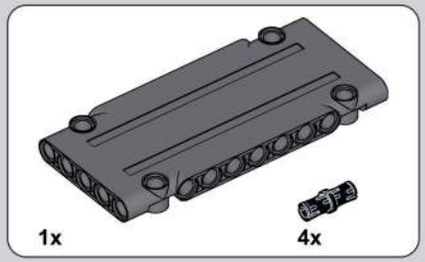

1162

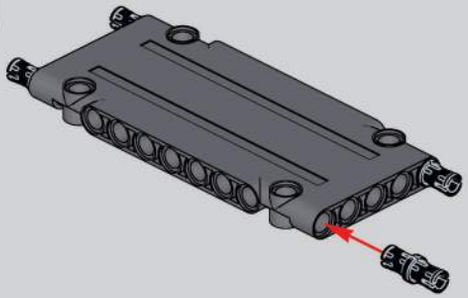

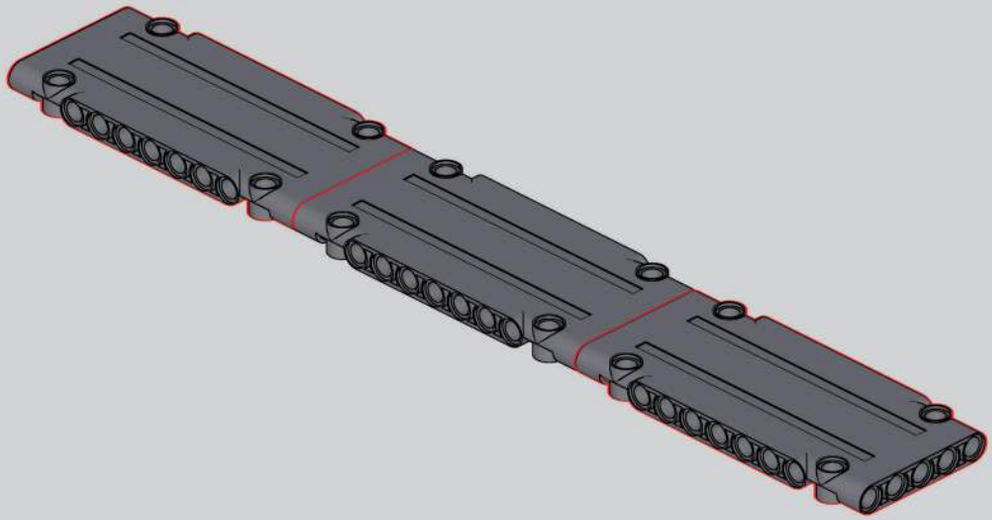

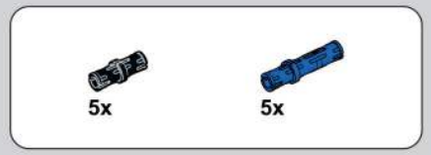

1164

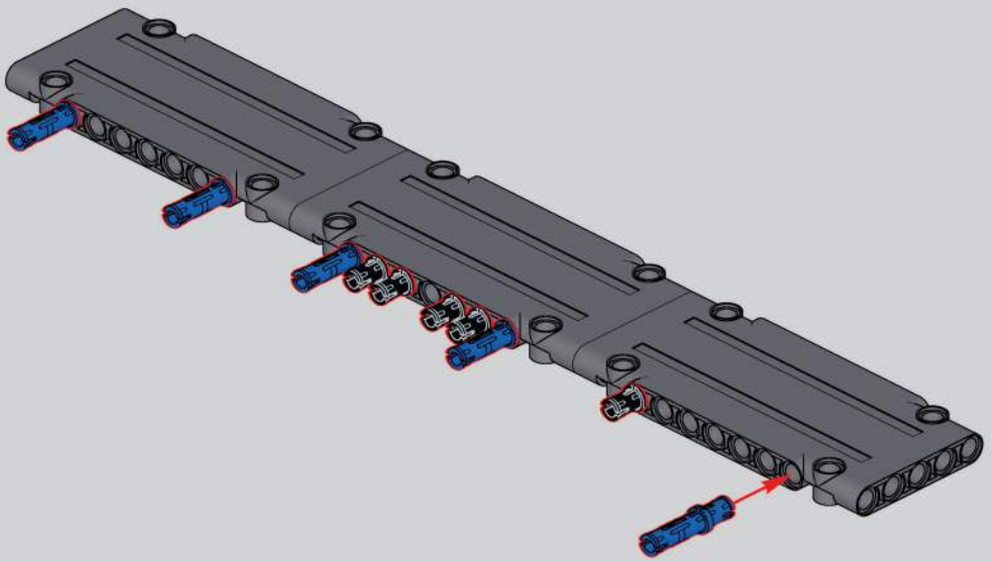

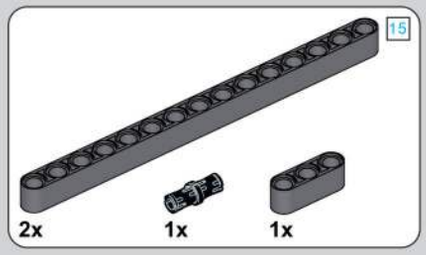

1165

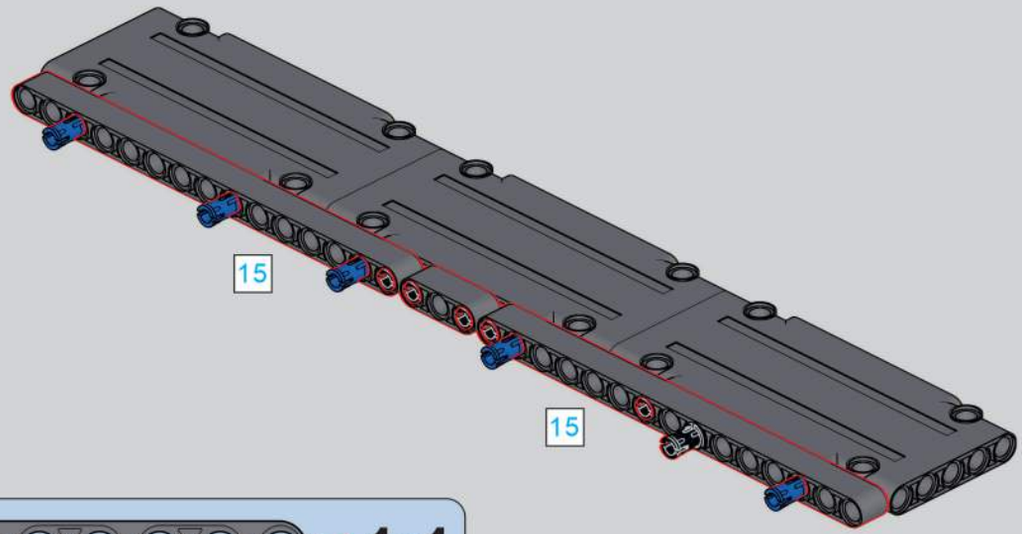

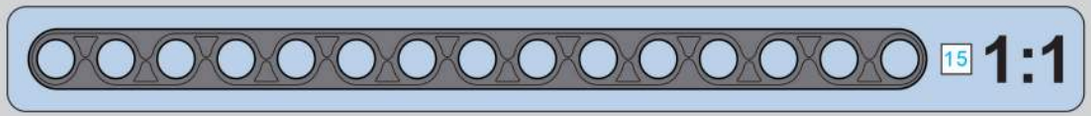

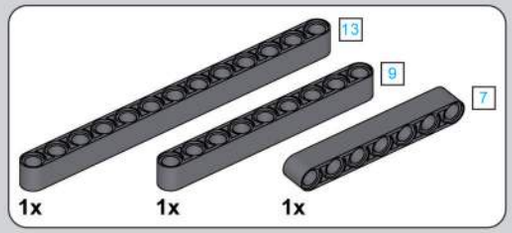

1166

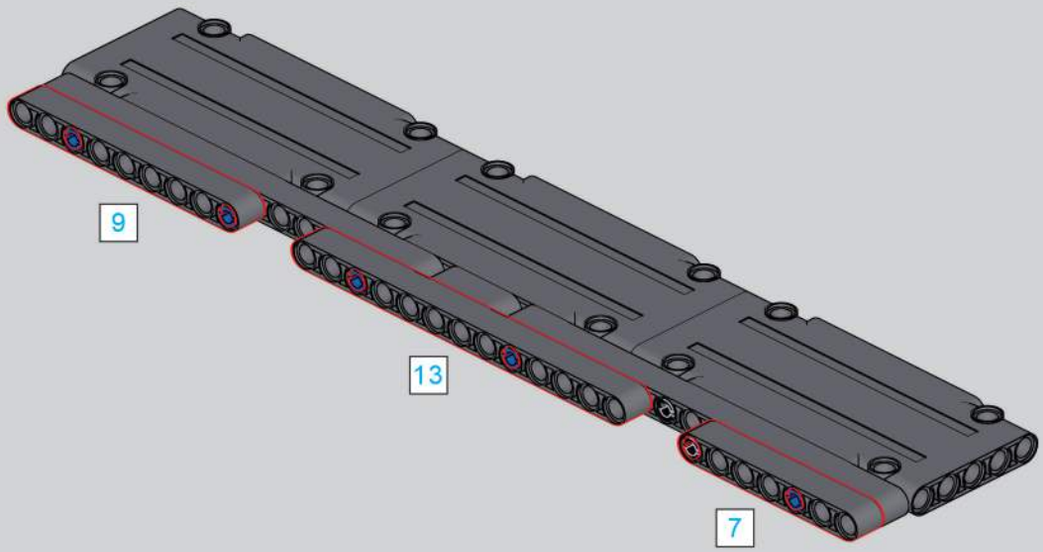

1167

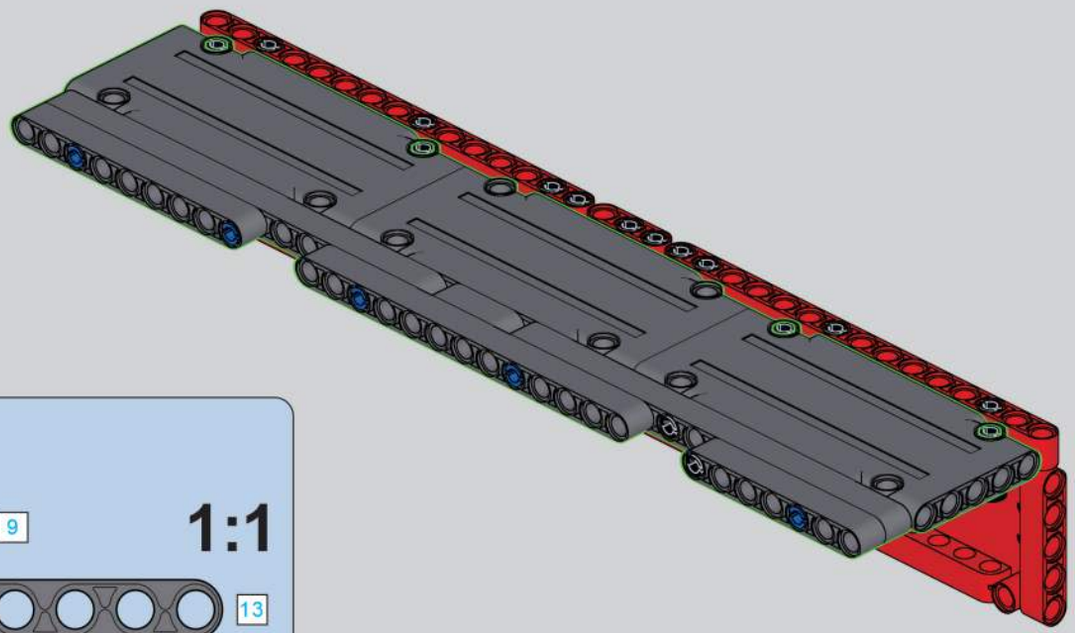

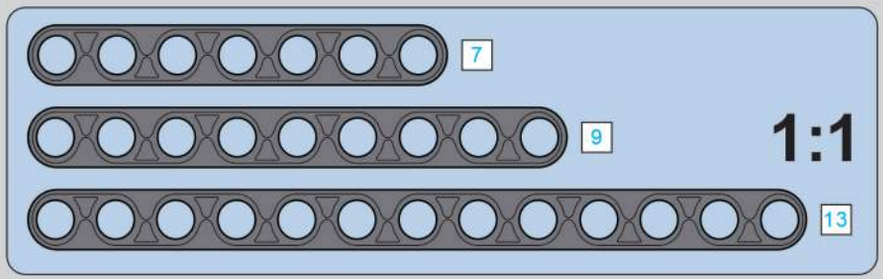

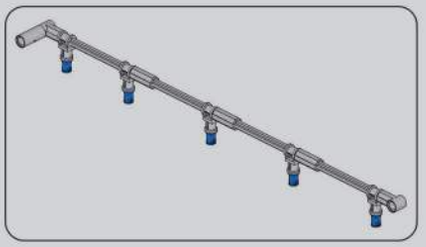

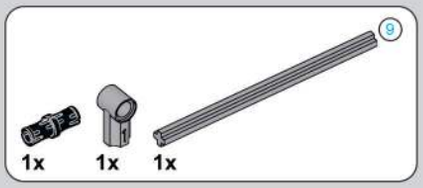

1168

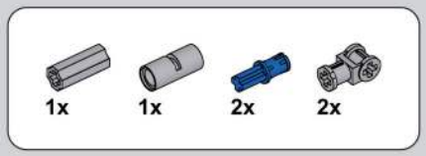

1169

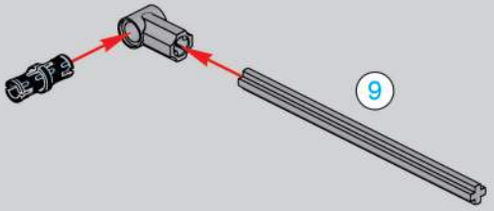

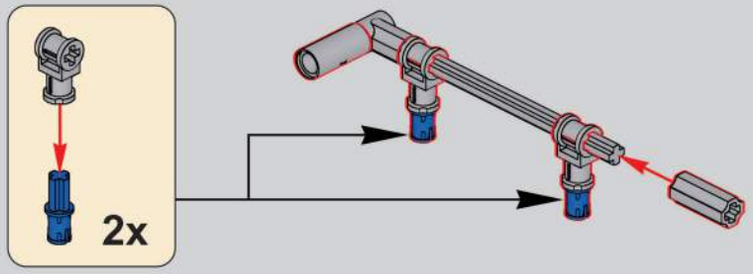

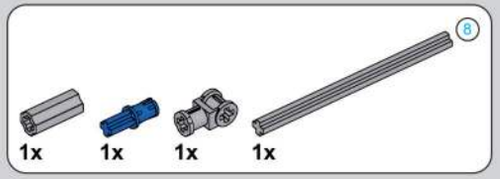

1170

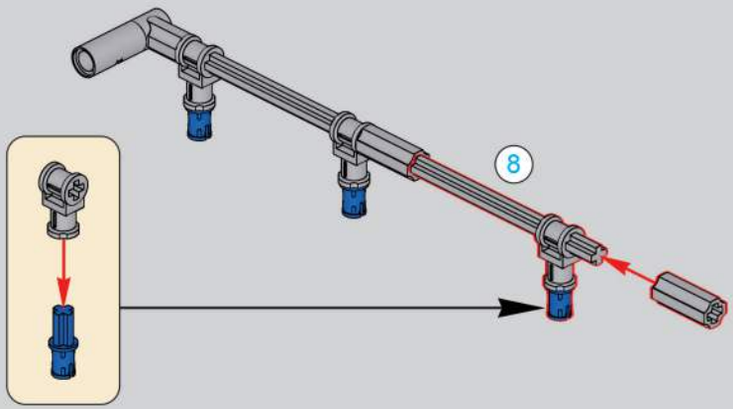

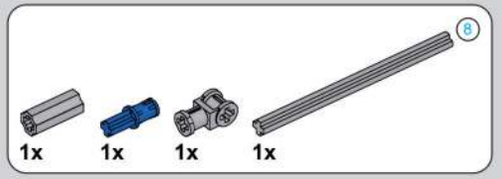

1171

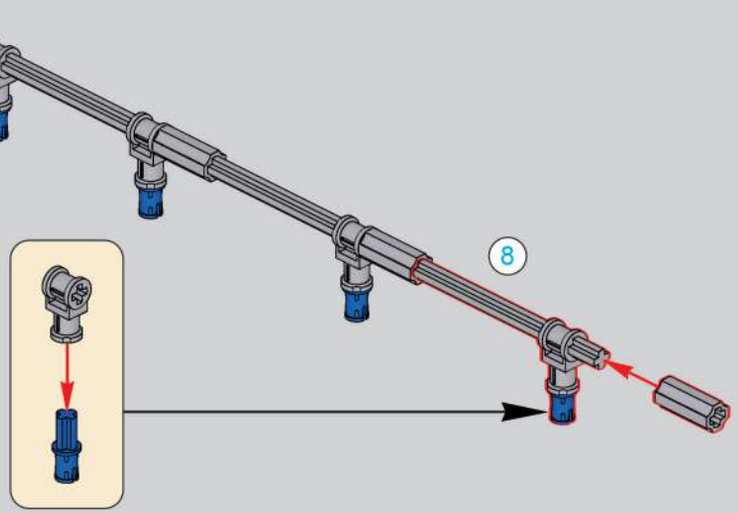

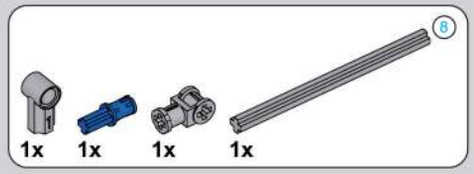

1172

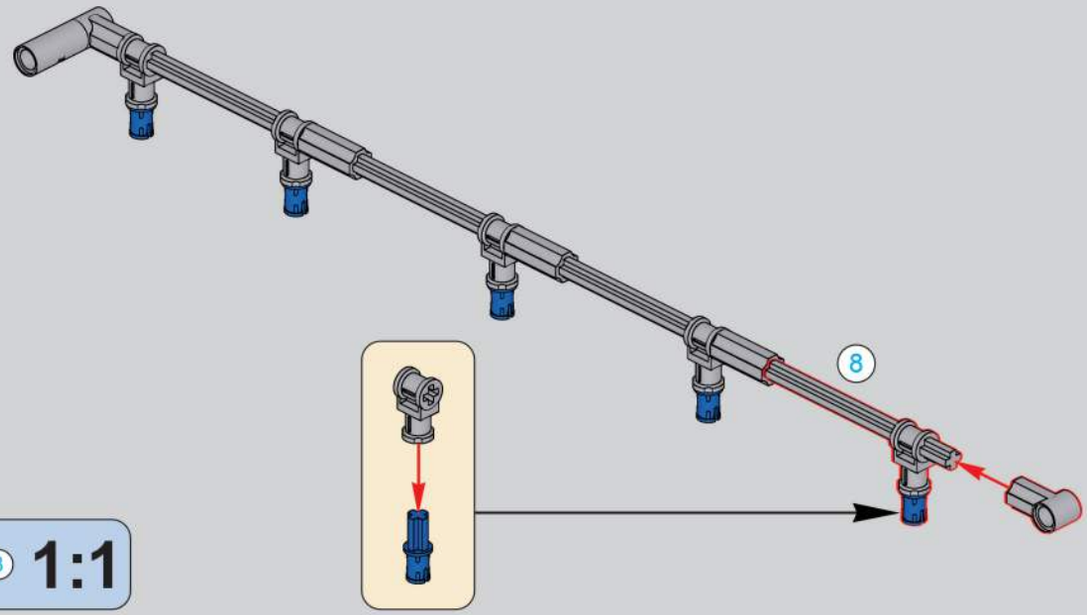

1173

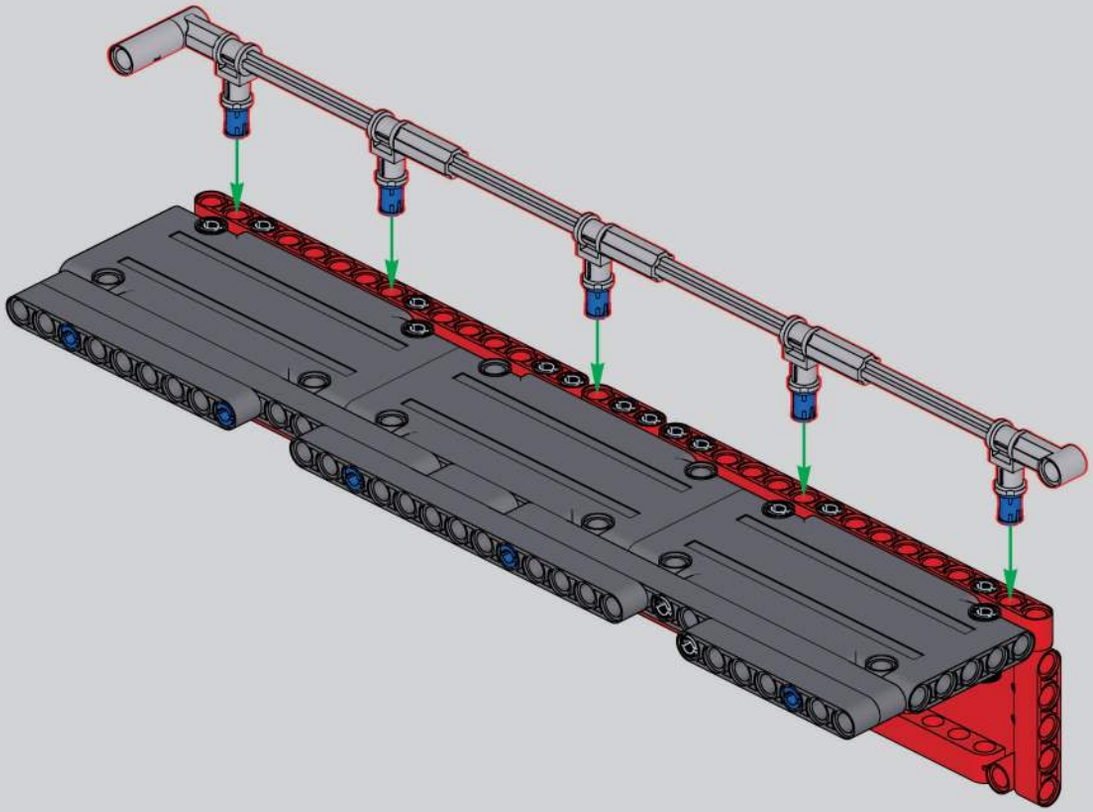

1174

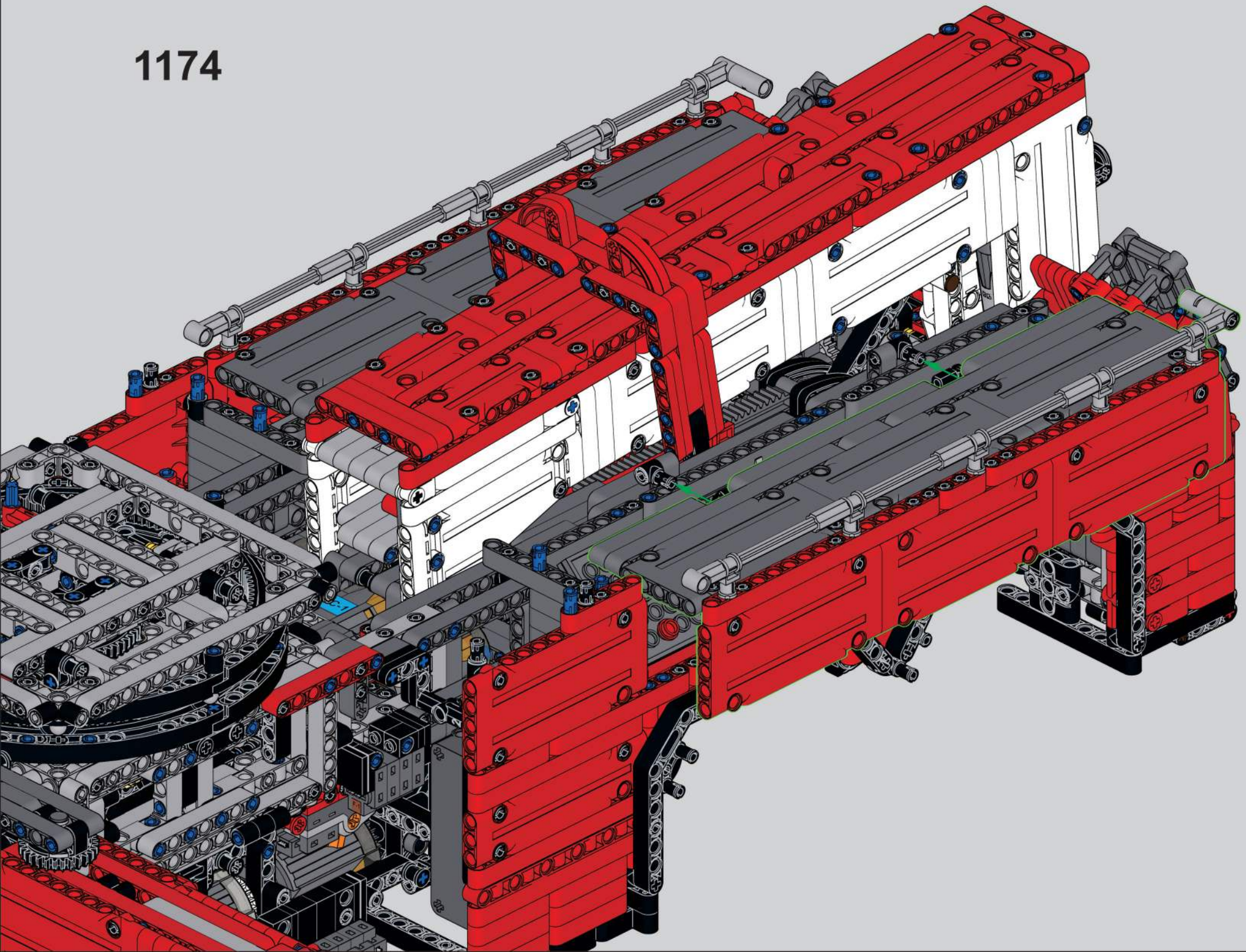

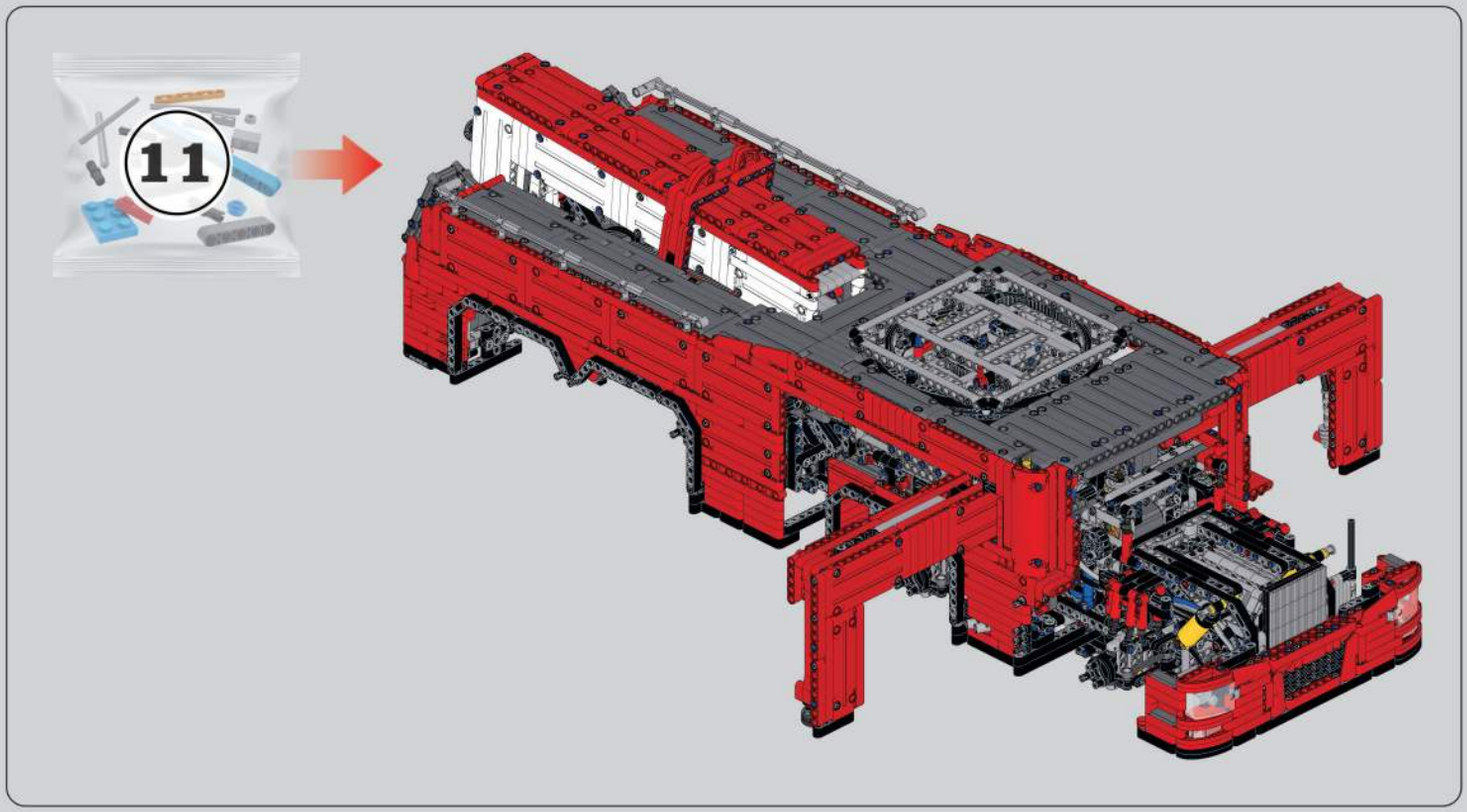

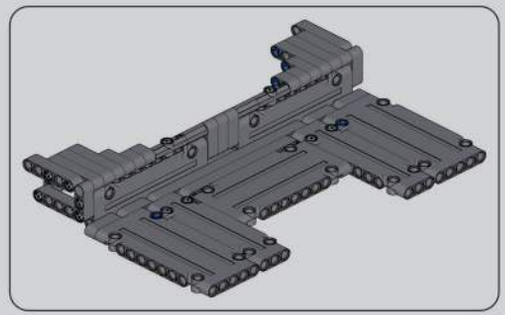

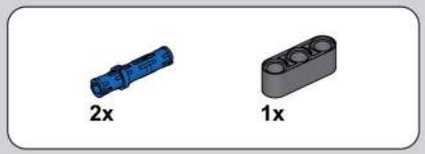

1175

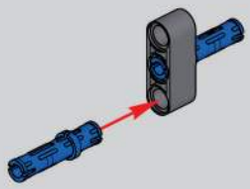

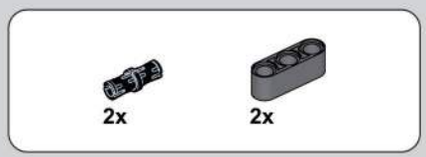

1176

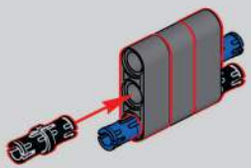

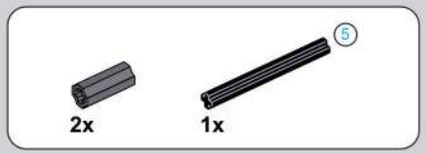

1177

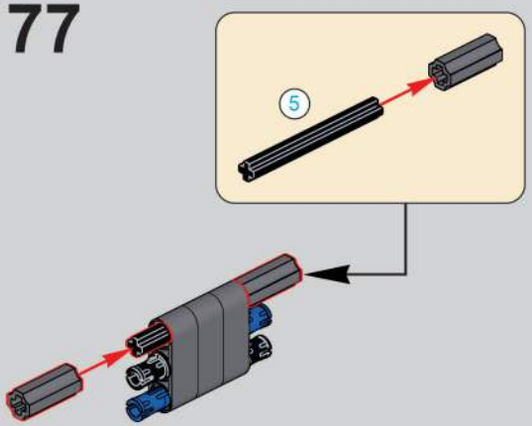

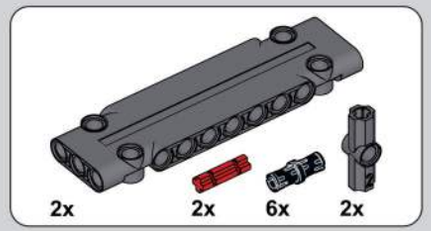

1178

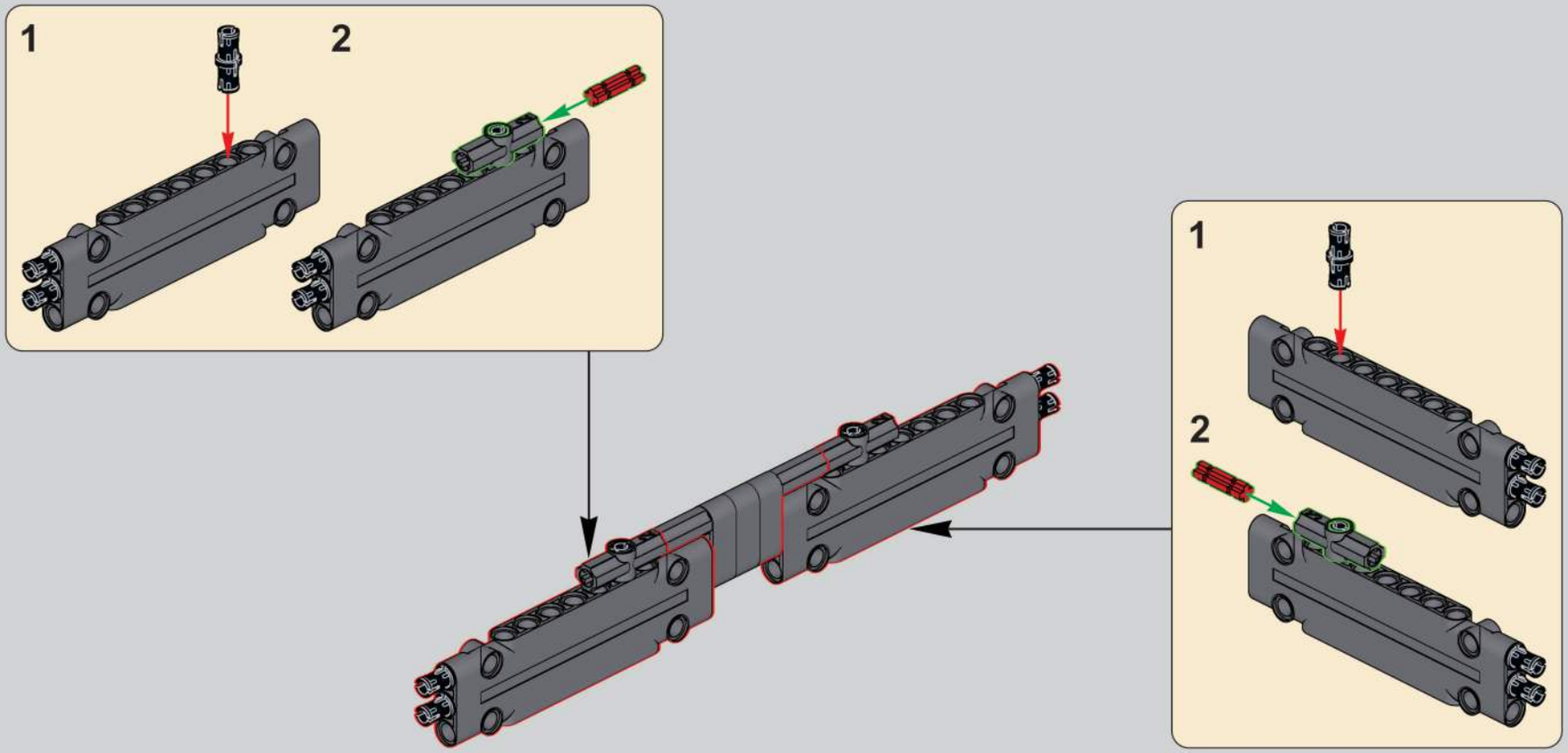

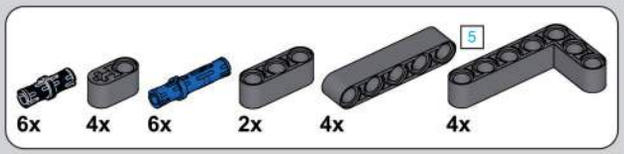

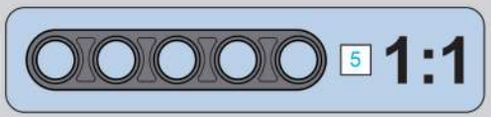

1179

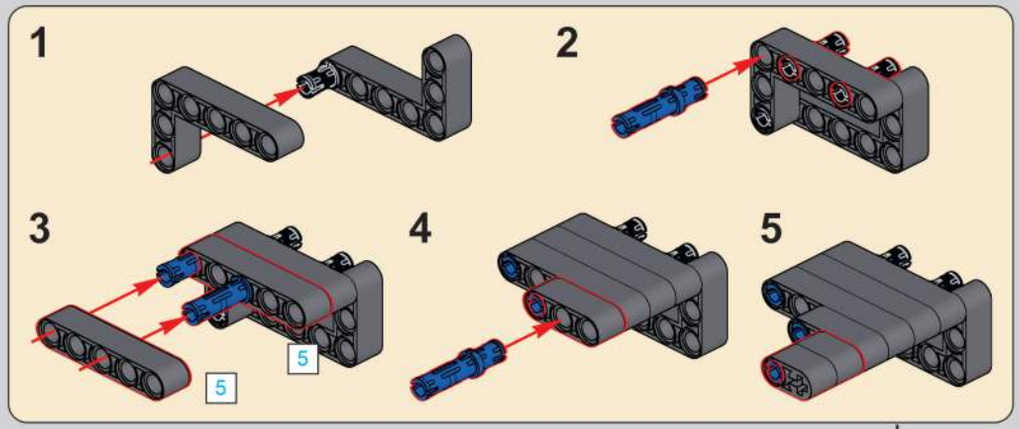

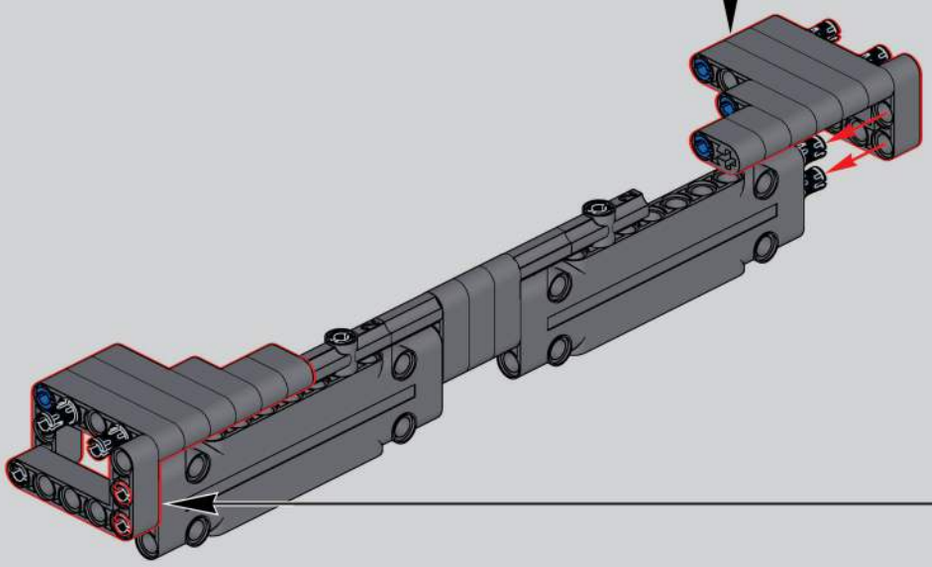

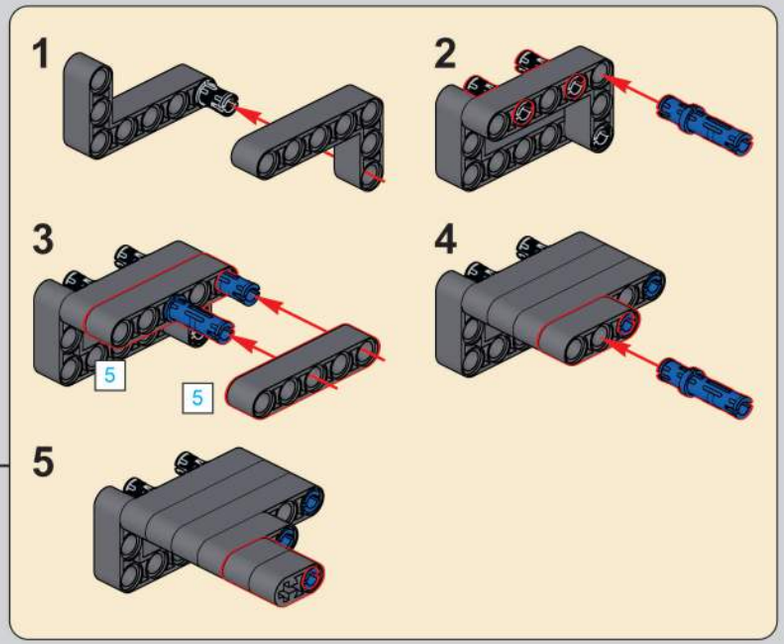

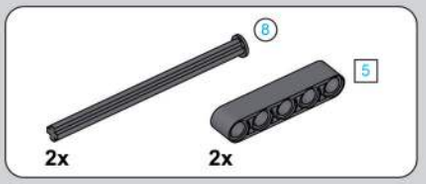

1180

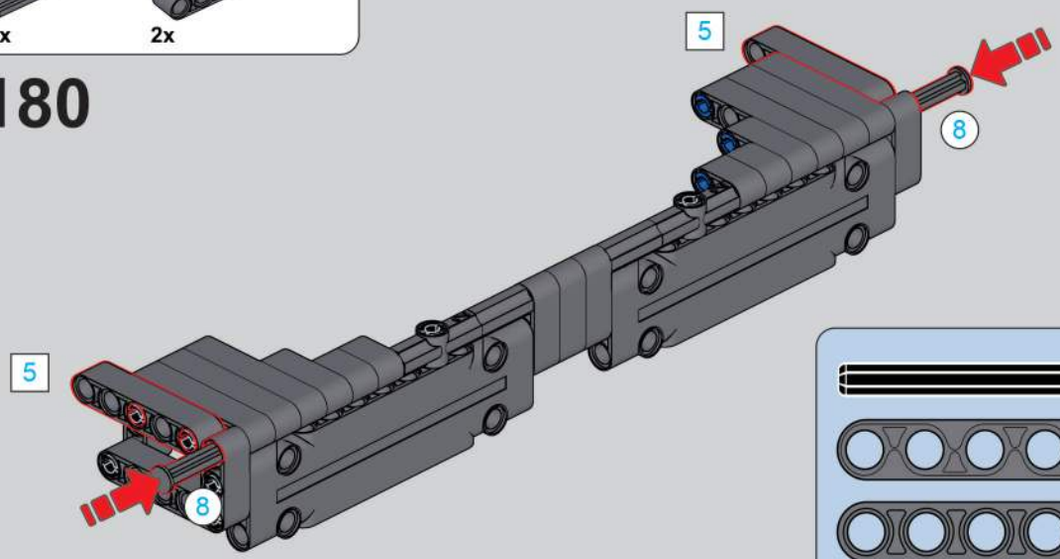

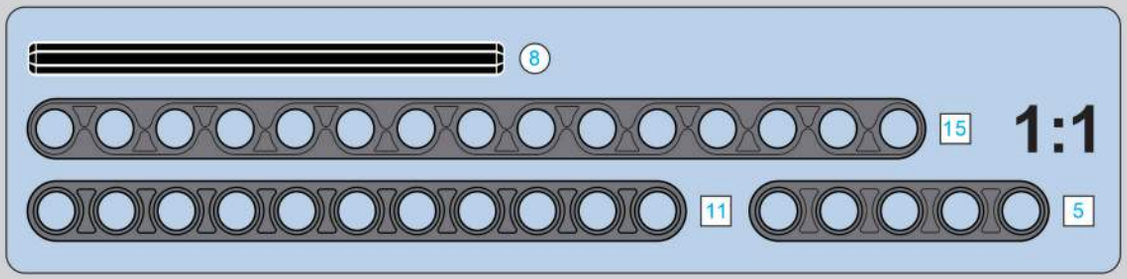

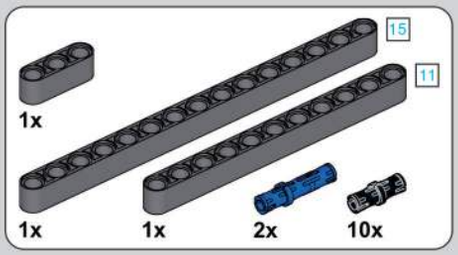

1181

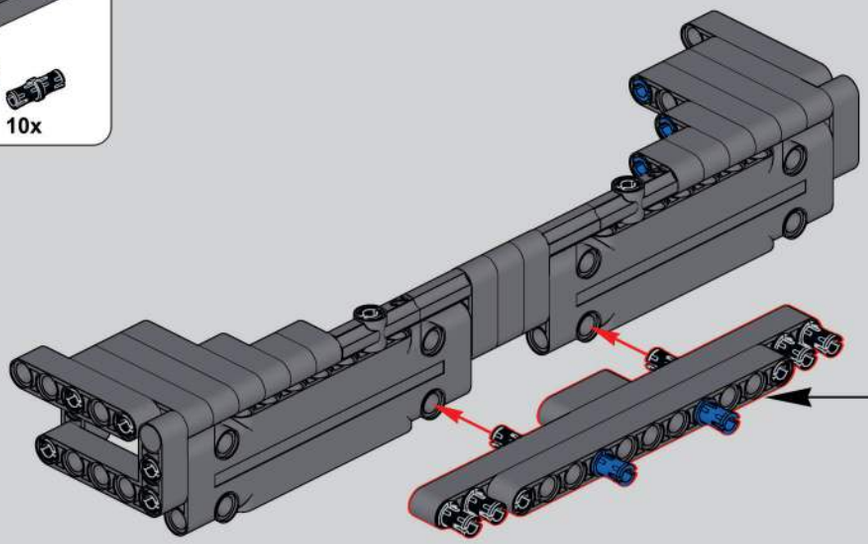

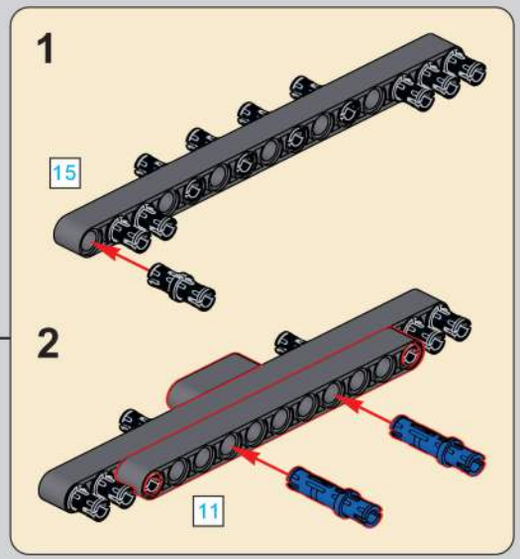

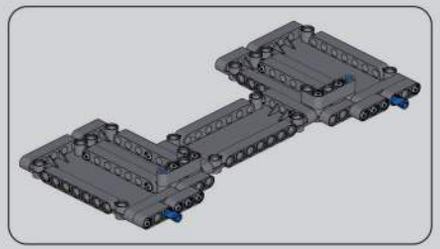

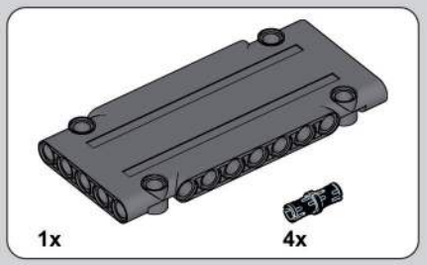

1182

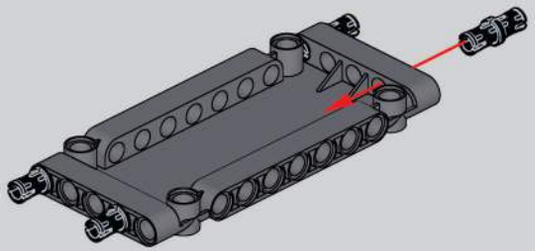

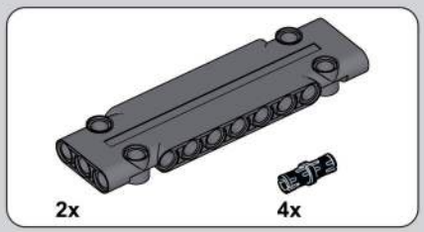

1183

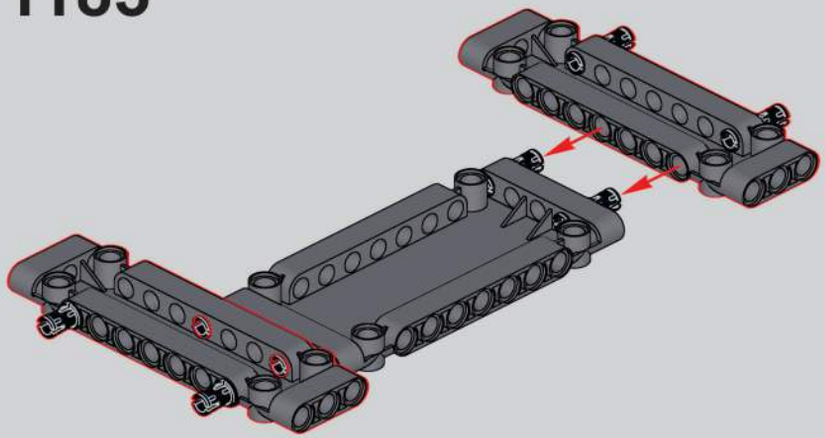

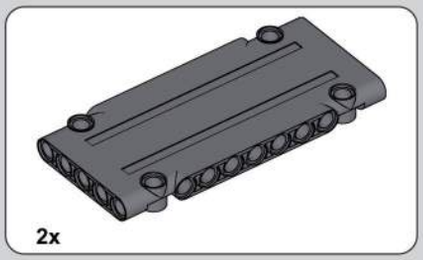

1184

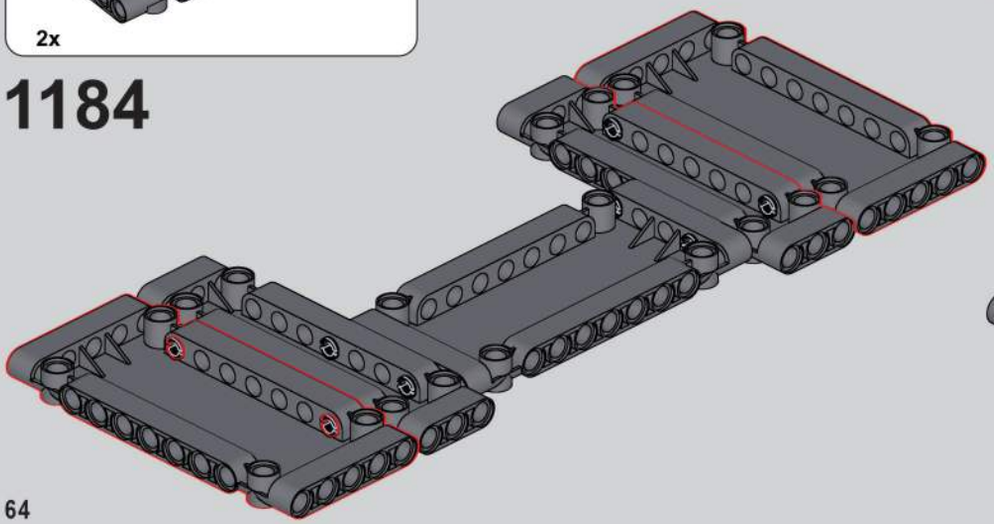

1185

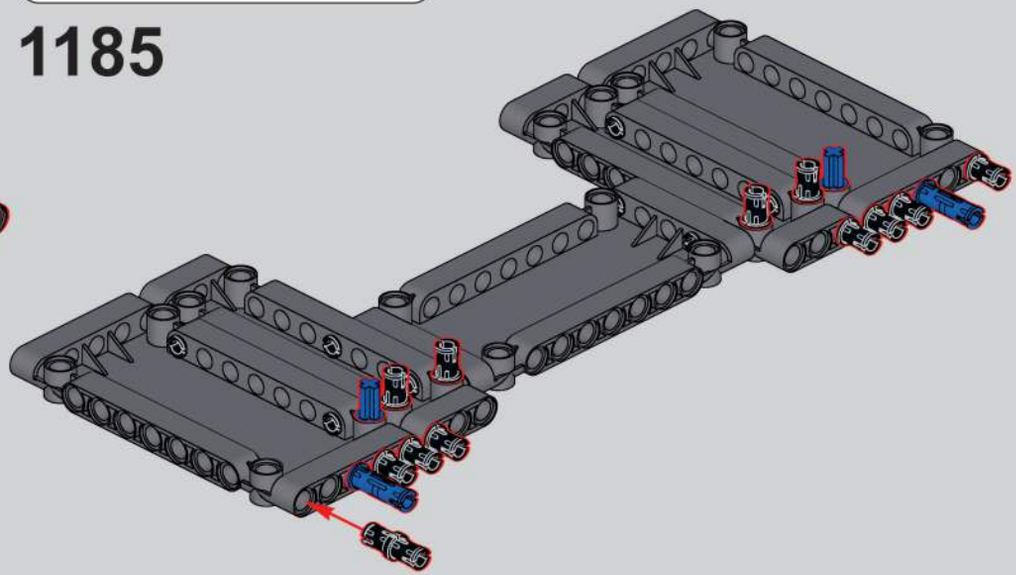

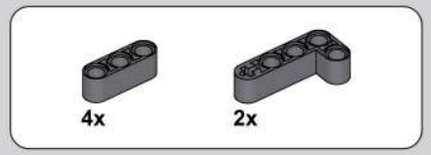

1186

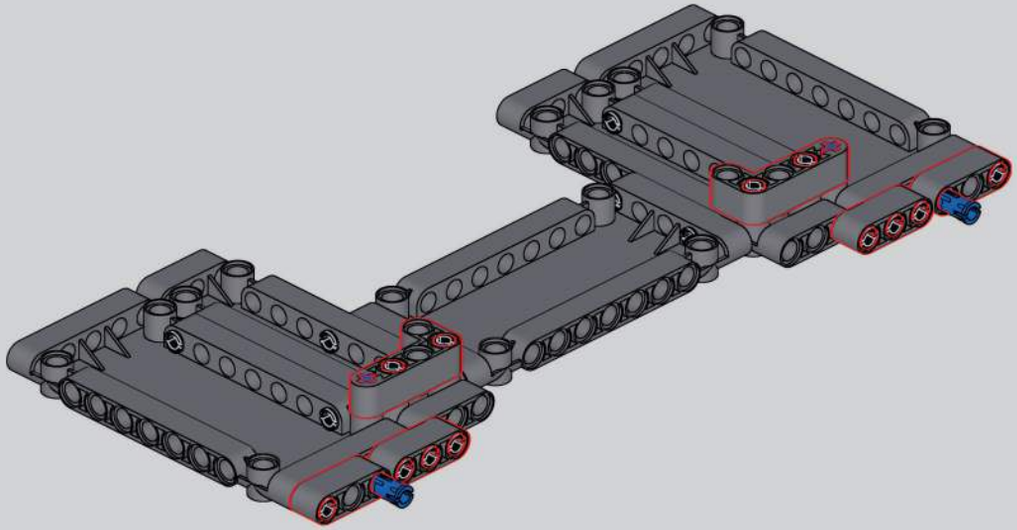

1187

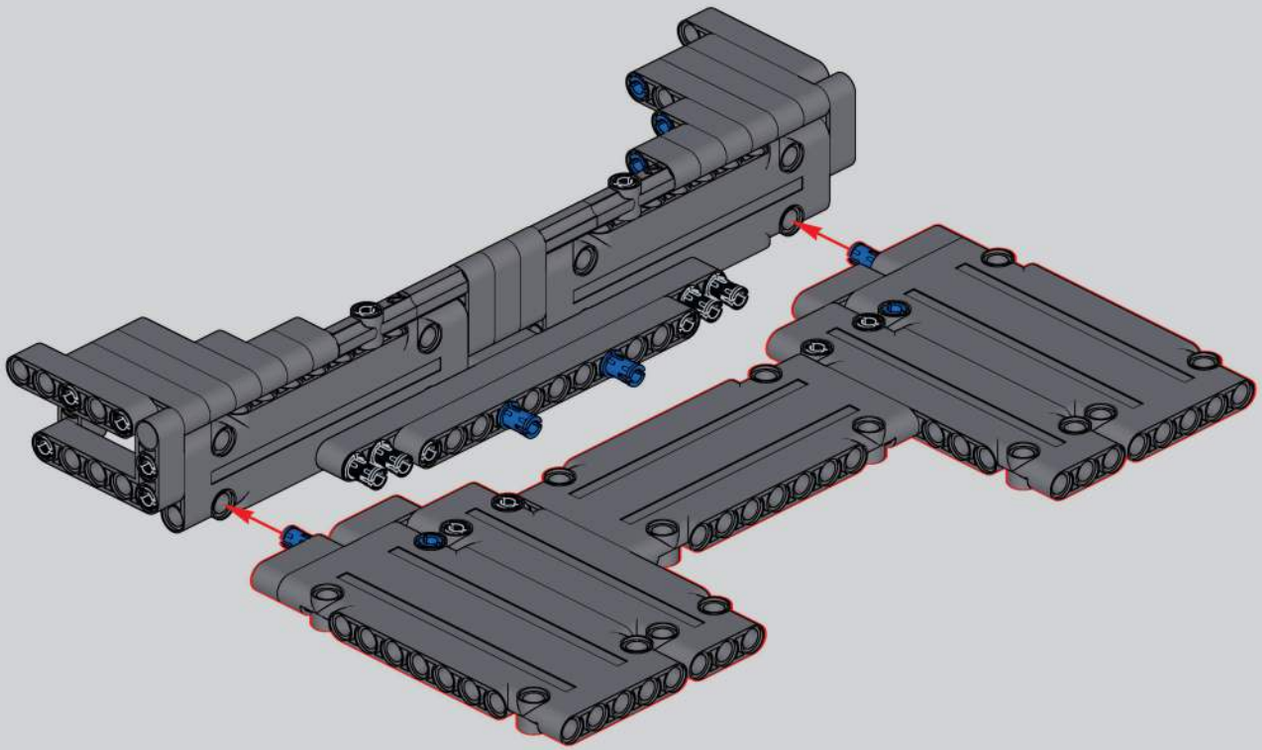

1188

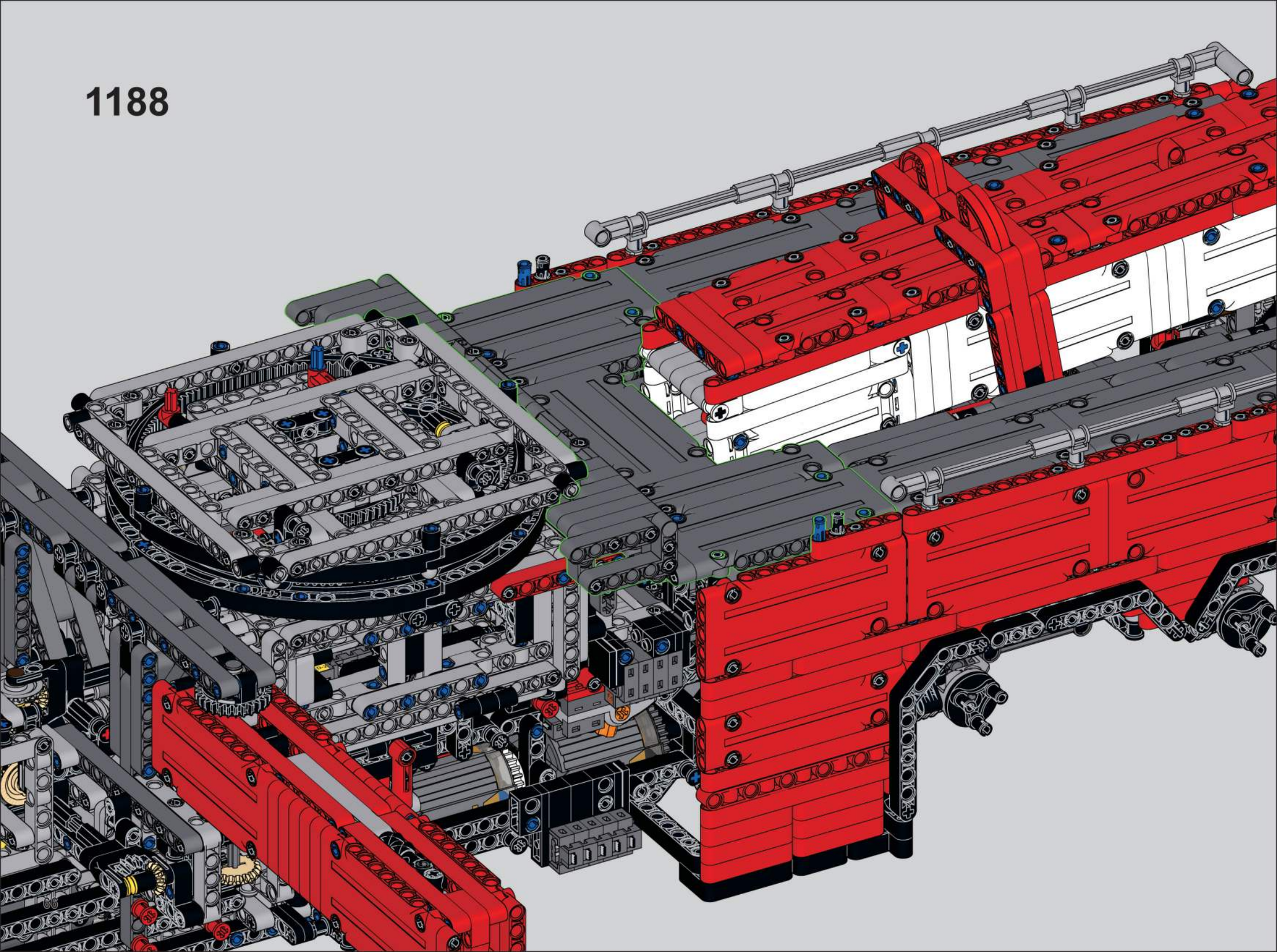

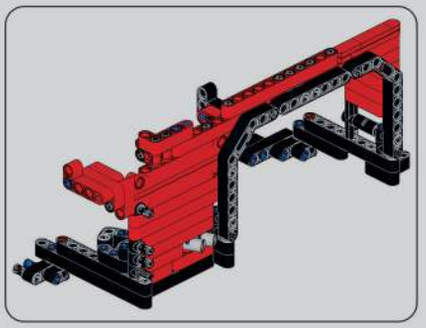

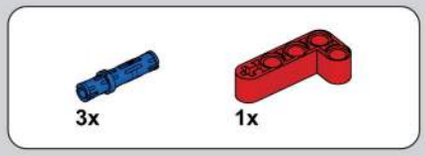

1190

1191

1189

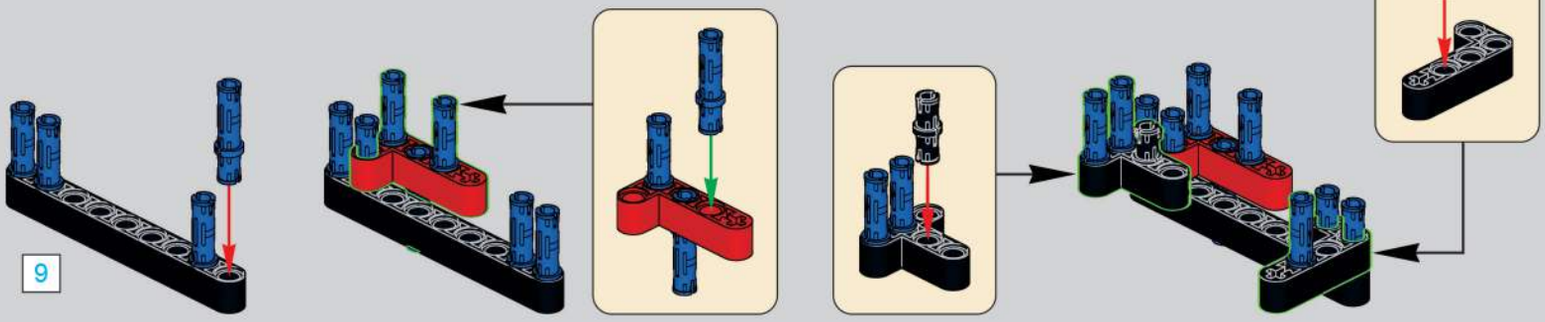

1192

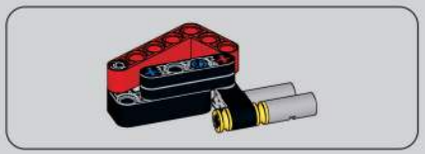

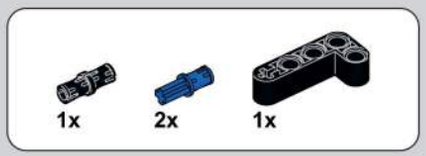

1193

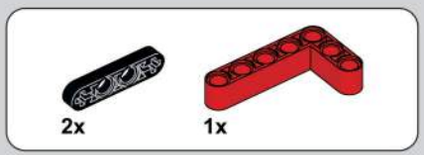

1194

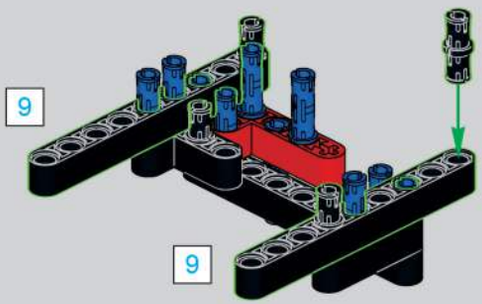

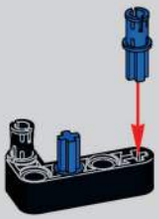

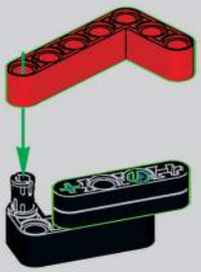

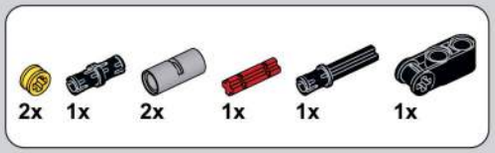

1195

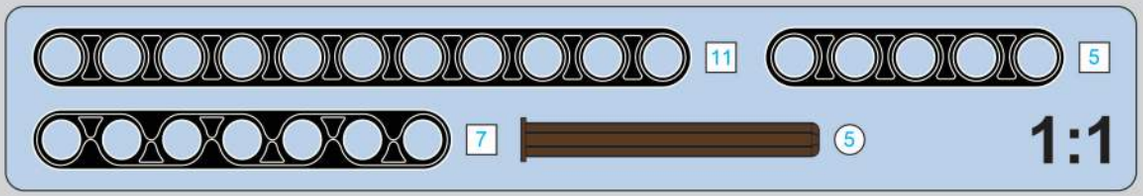

1196

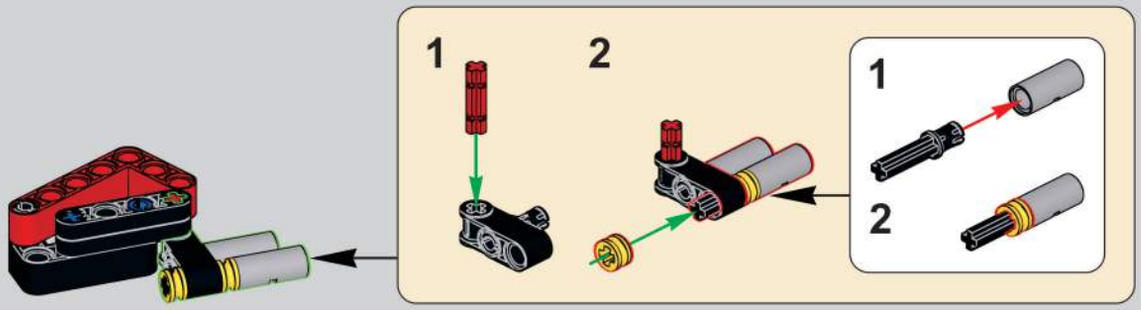

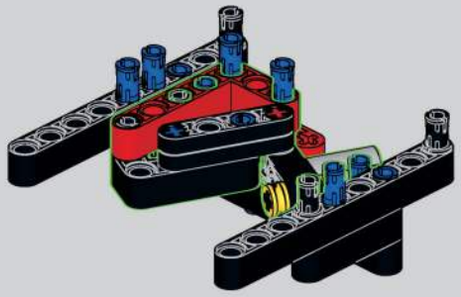

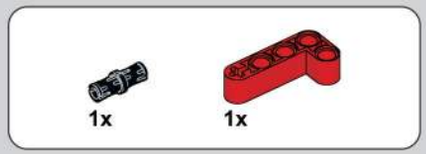

1197

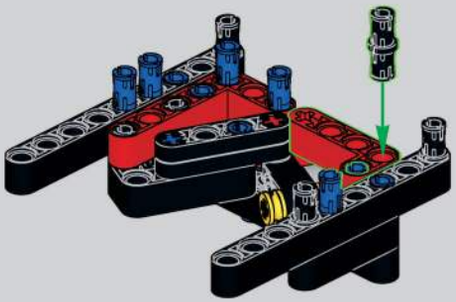

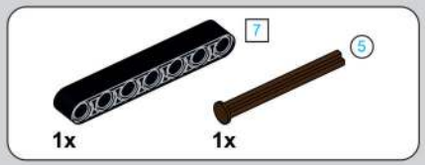

1198

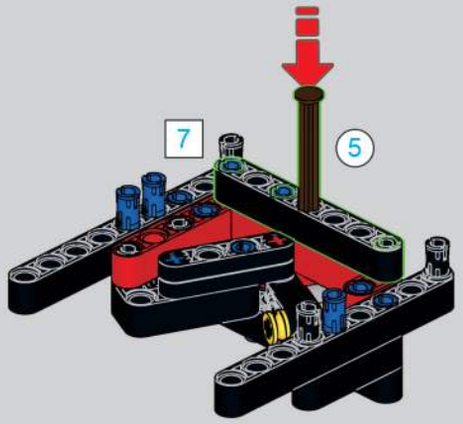

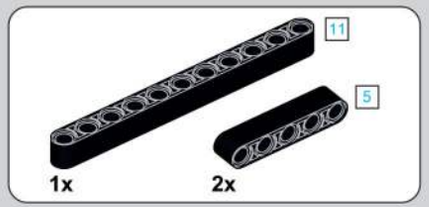

1199

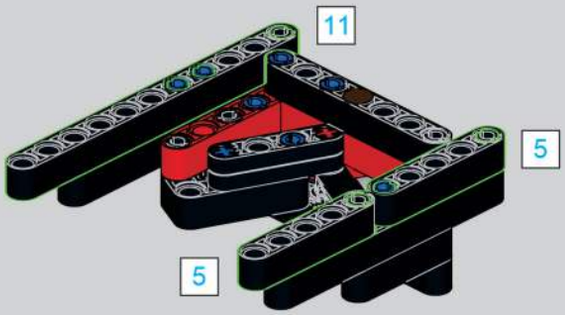

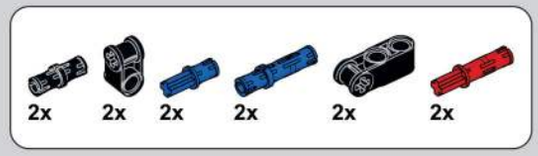

1200

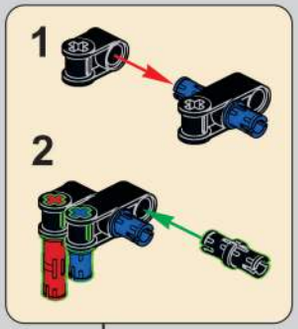

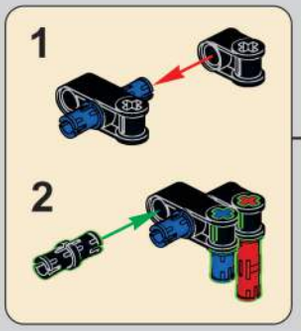

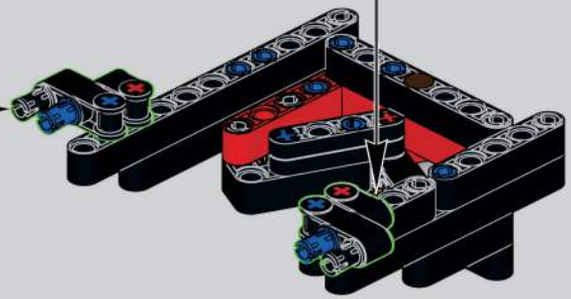

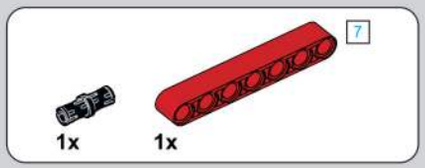

1201

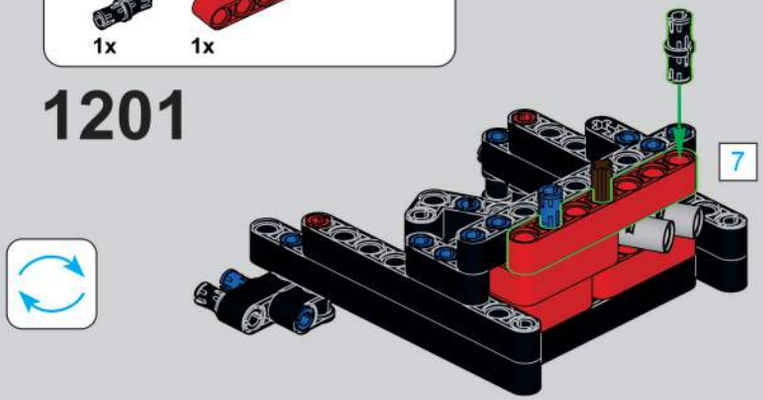

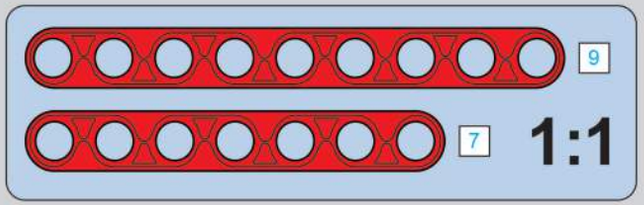

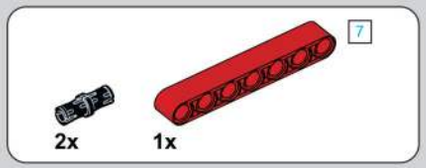

1202

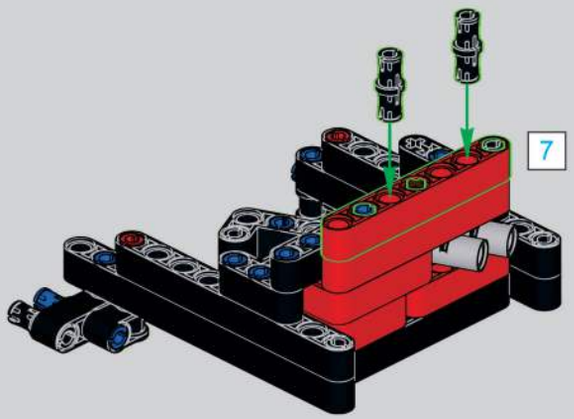

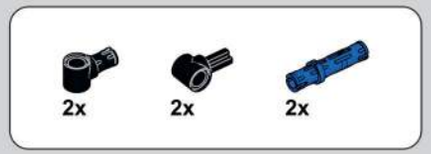

1203

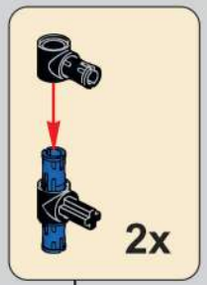

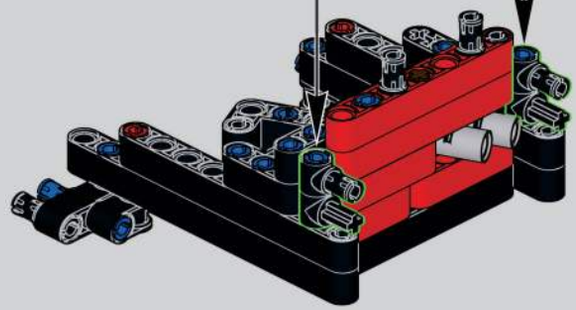

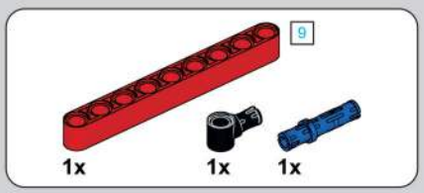

1204

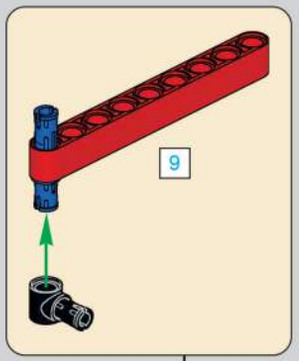

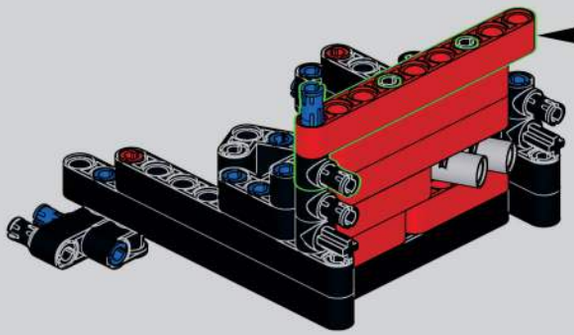

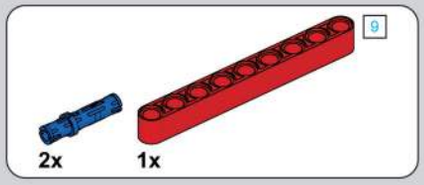

1205

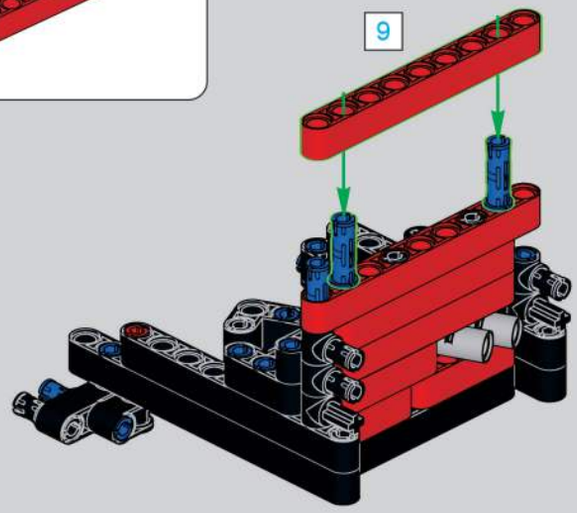

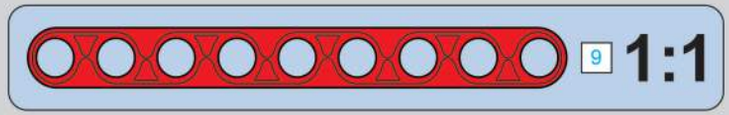

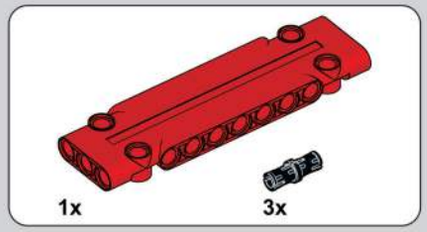

1206

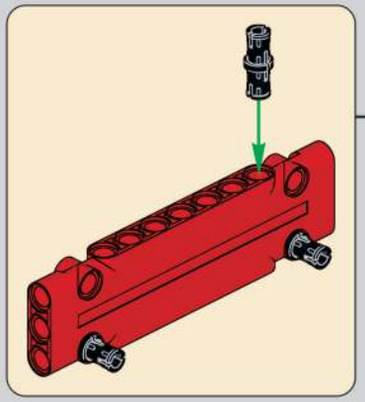

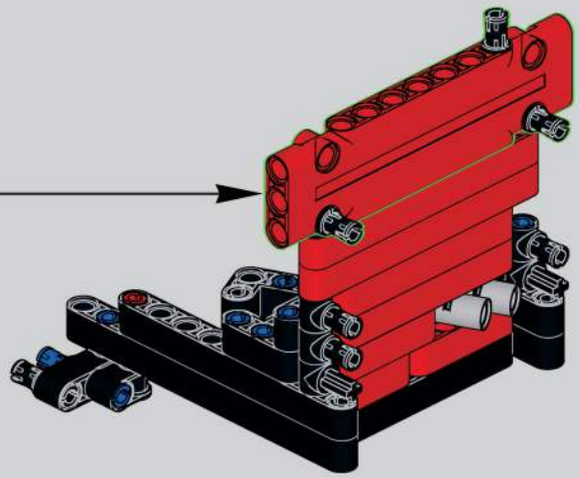

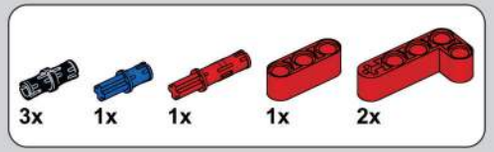

1207

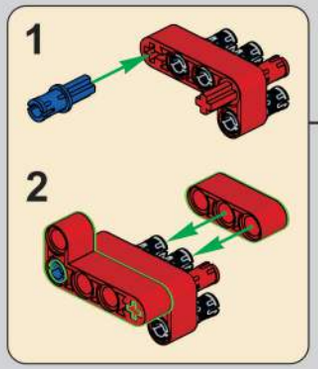

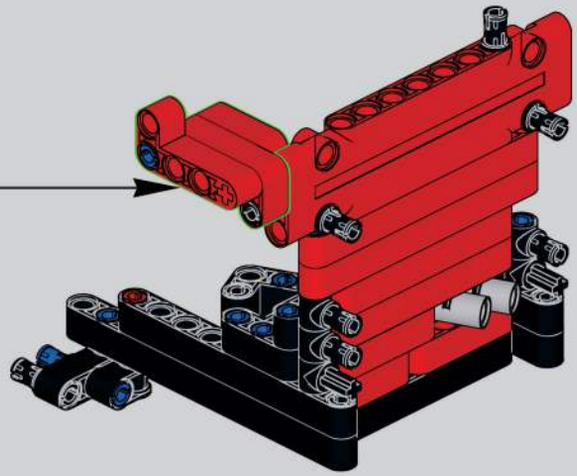

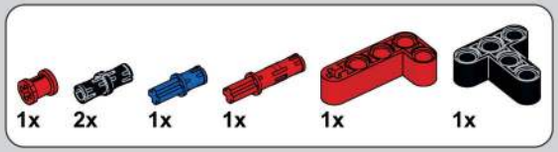

1208

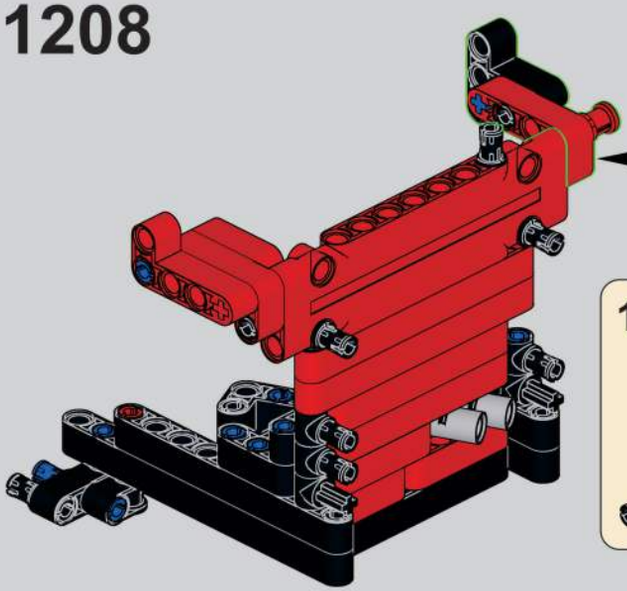

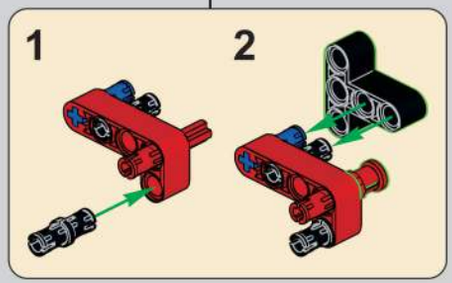

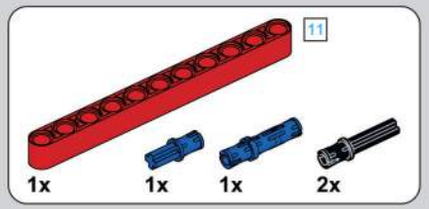

1209

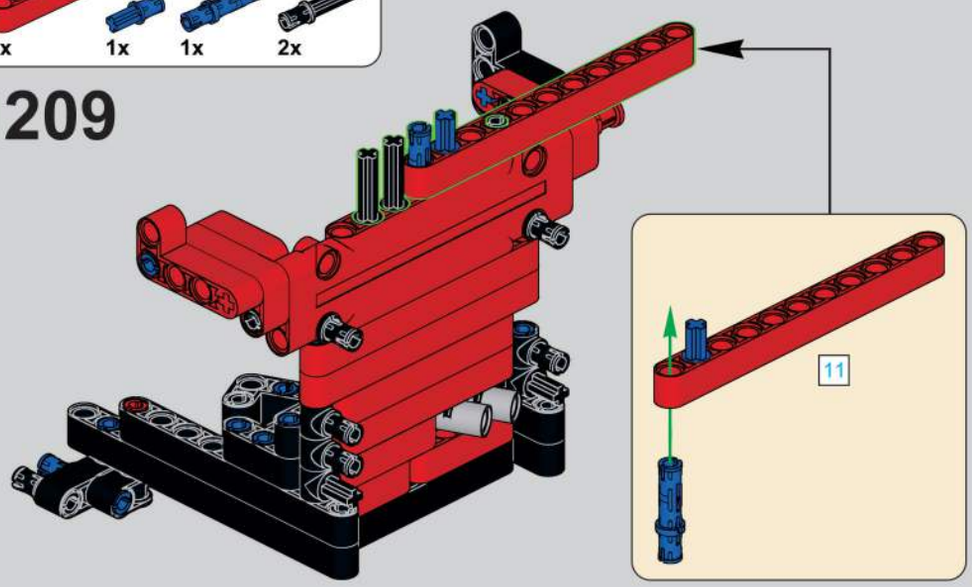

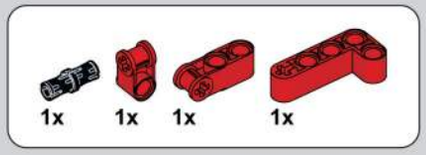

1210

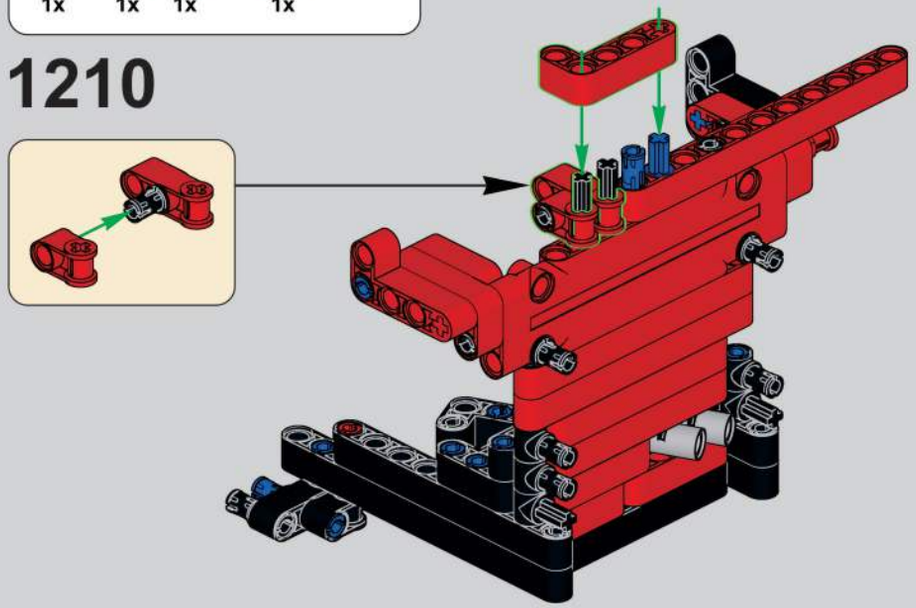

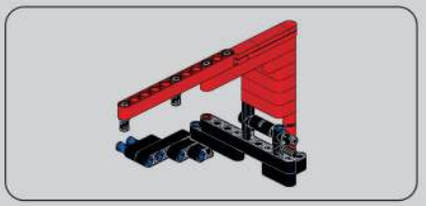

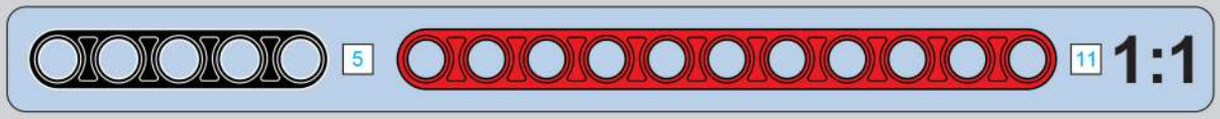

1211

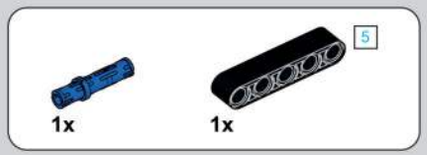

1212

1213

1214

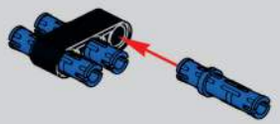

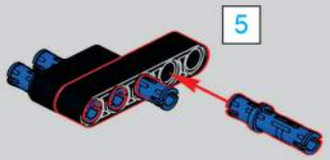

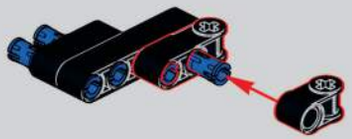

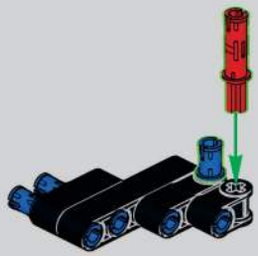

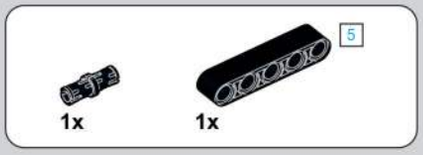

1215

1216

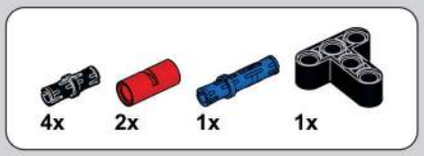

1217

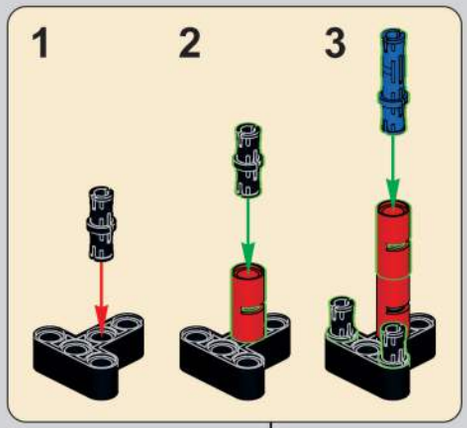

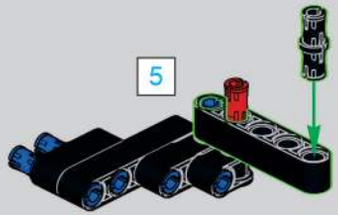

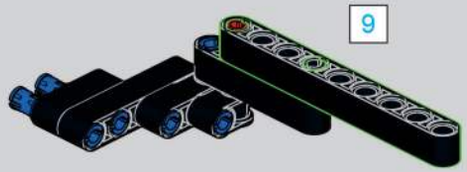

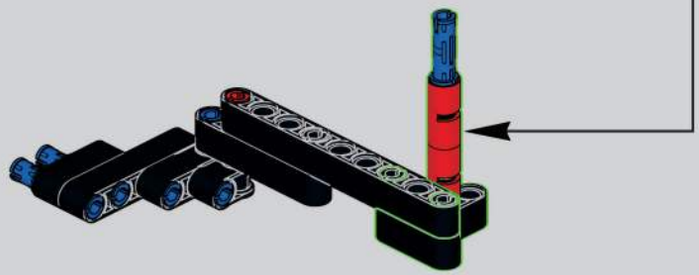

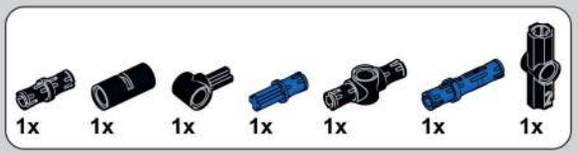

1218

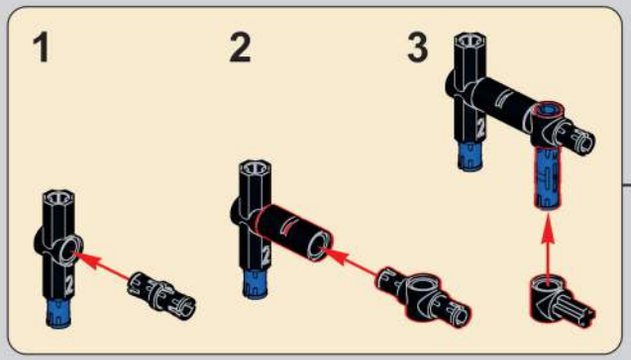

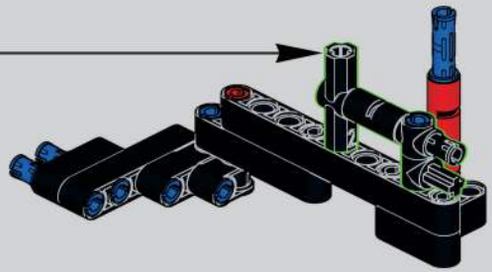

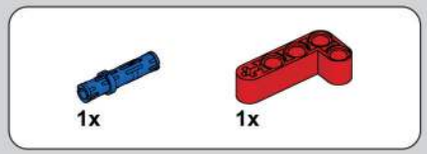

1219

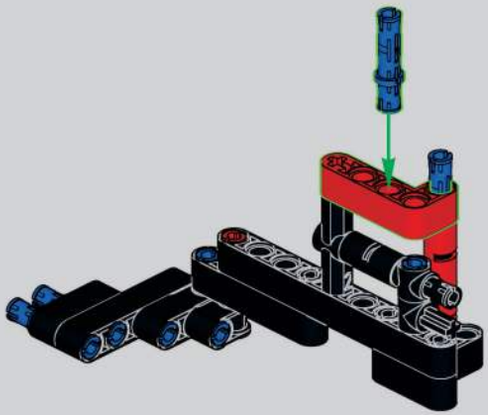

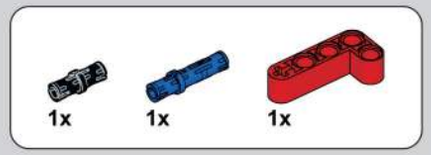

1220

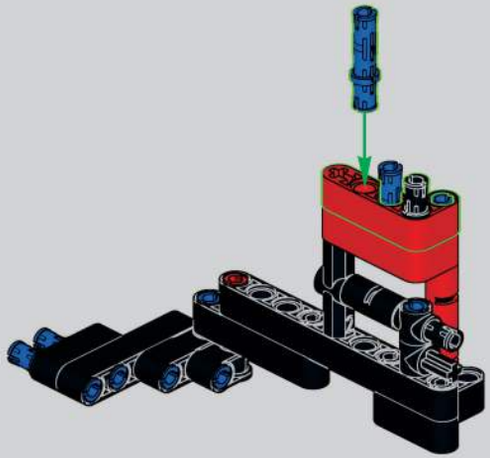

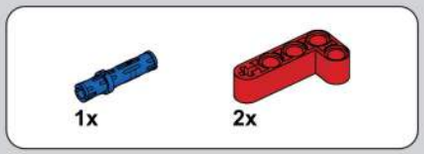

1221

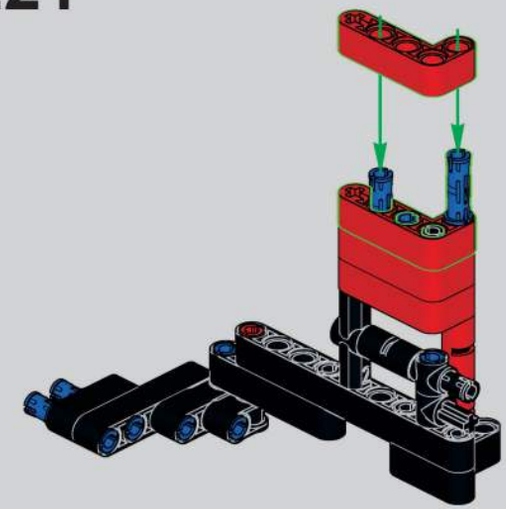

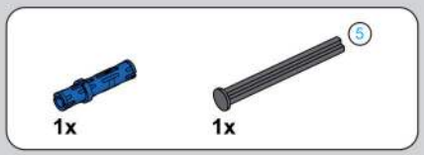

1222

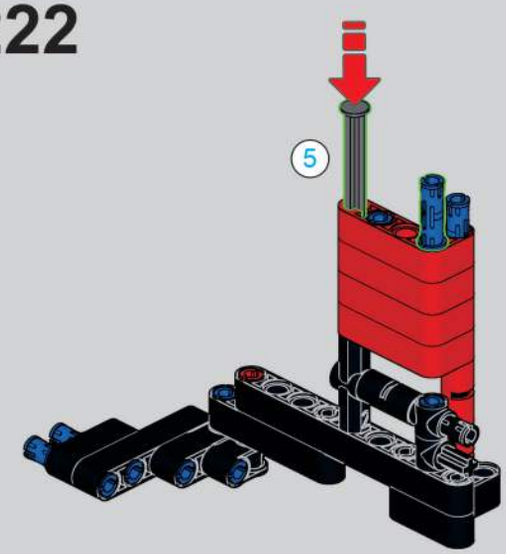

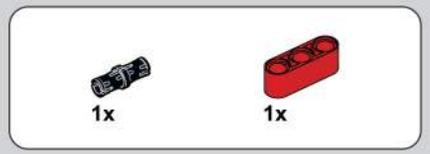

1223

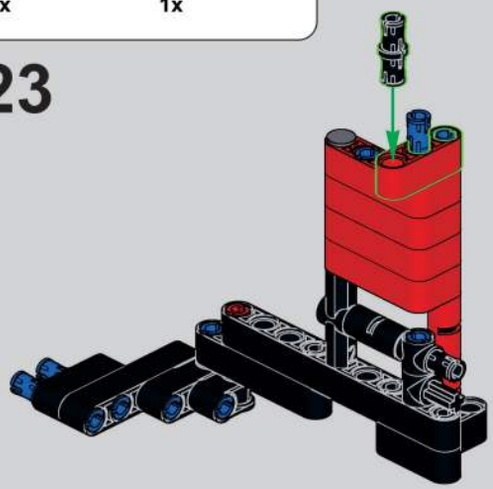

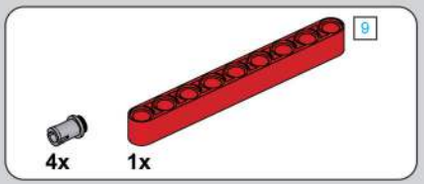

1224

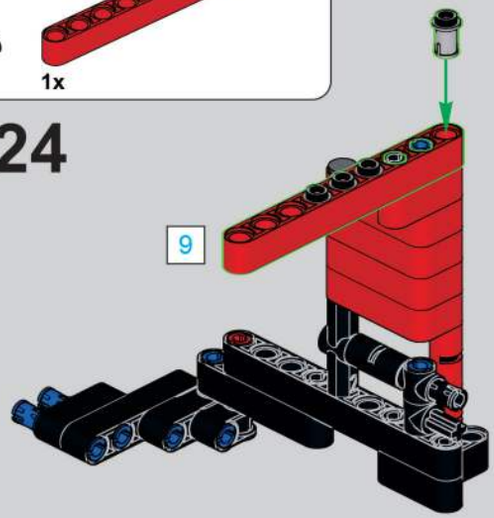

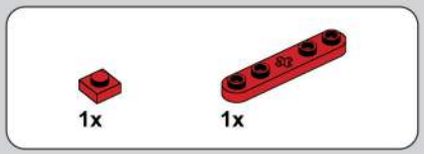

1225

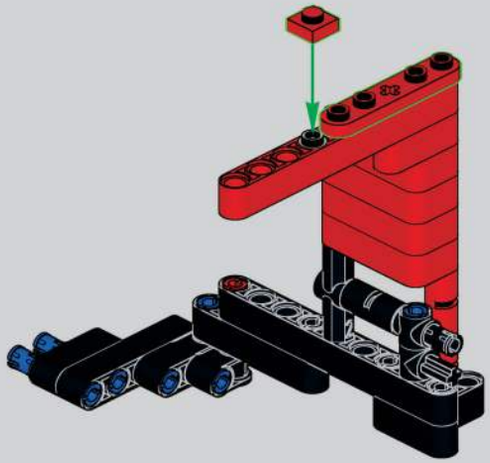

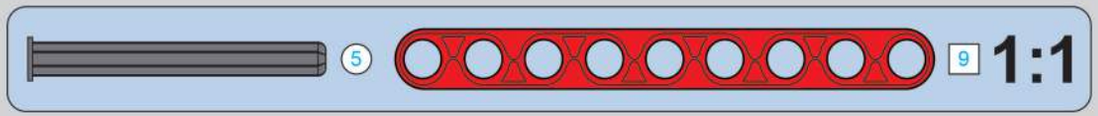

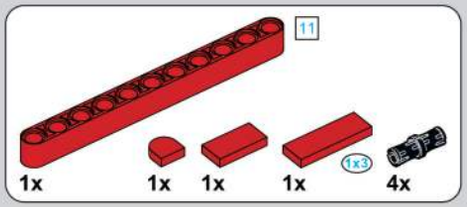

1226

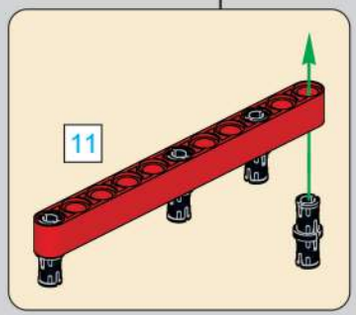

1227

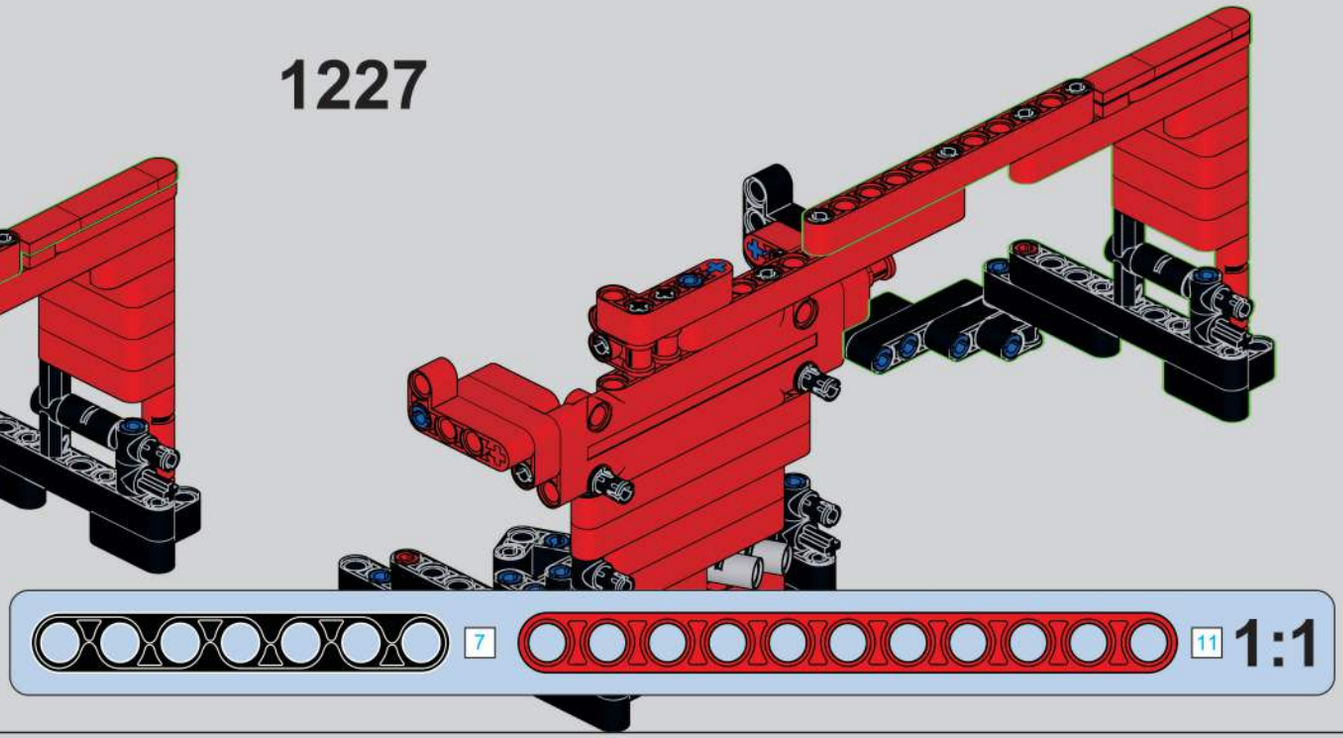

1228

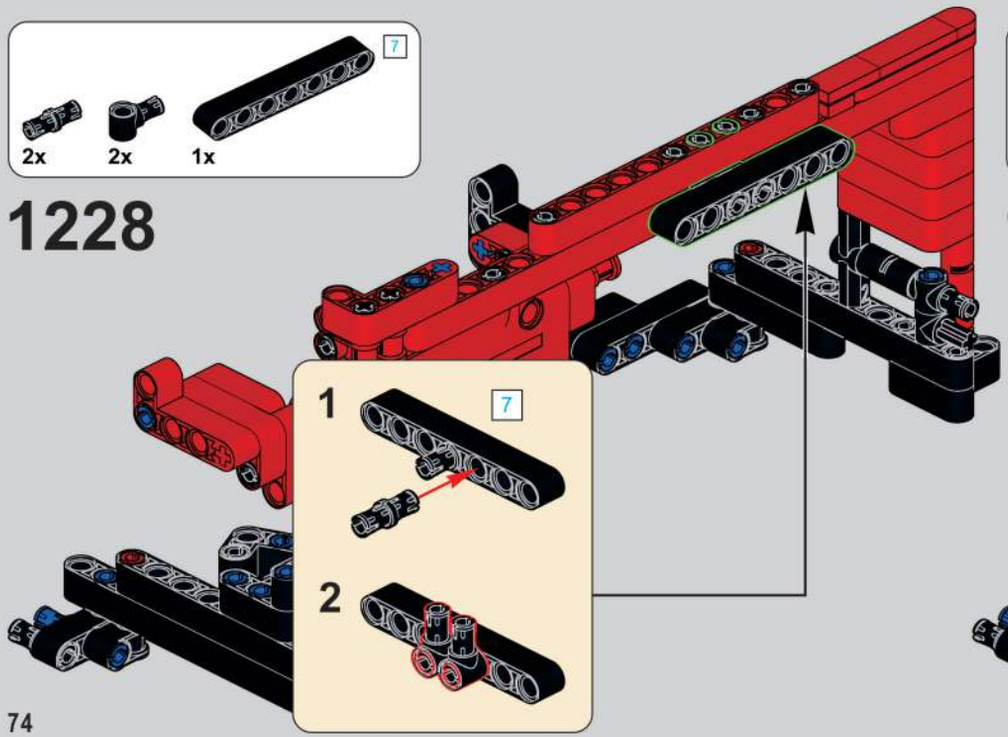

1229

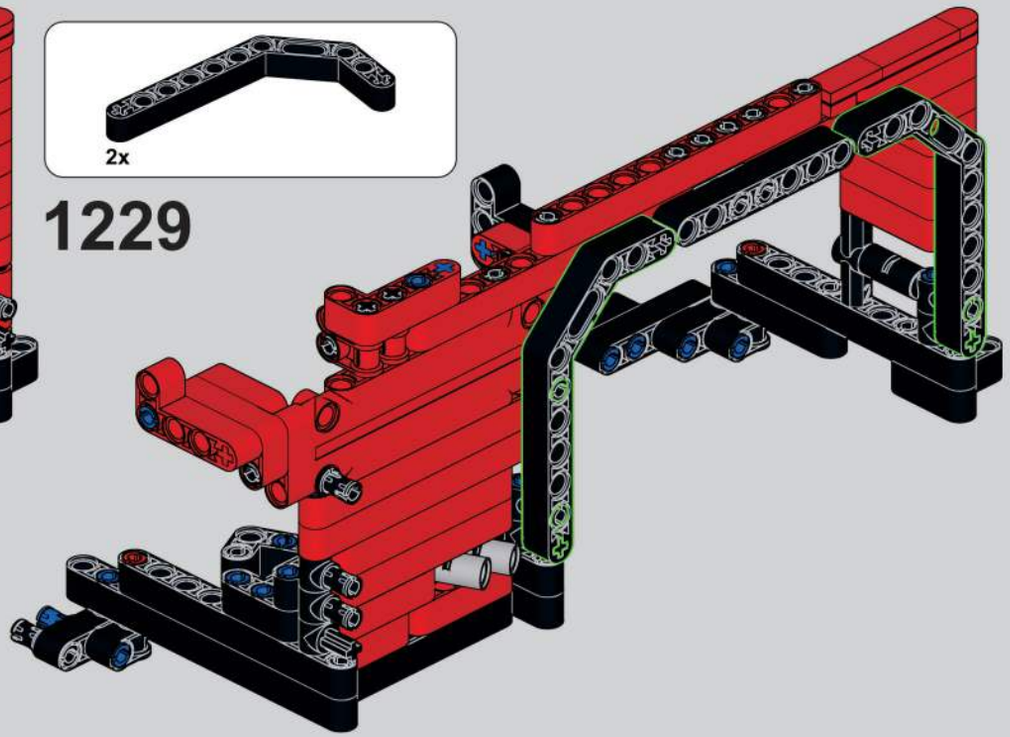

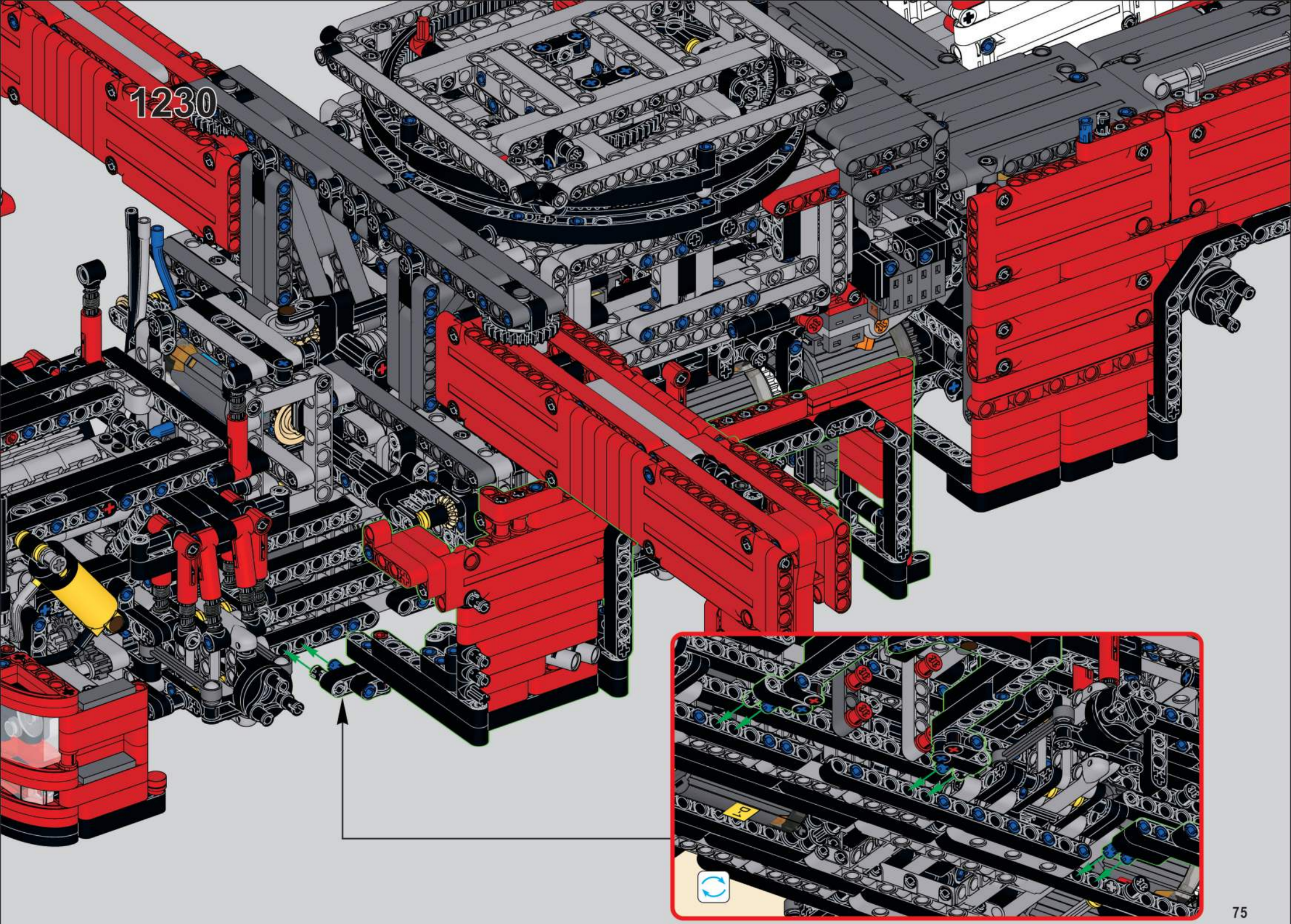
1230
0-1

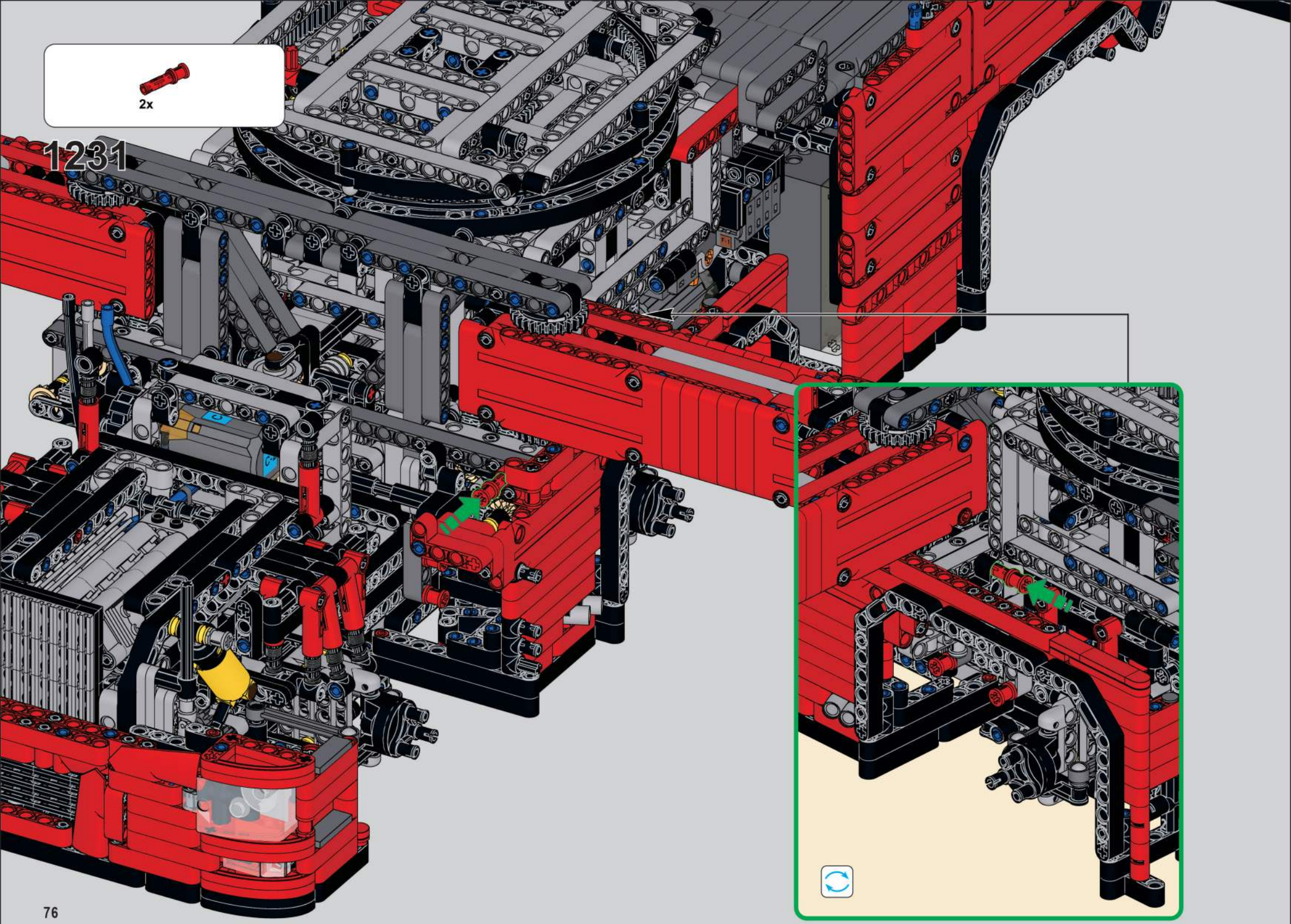
2x
1231

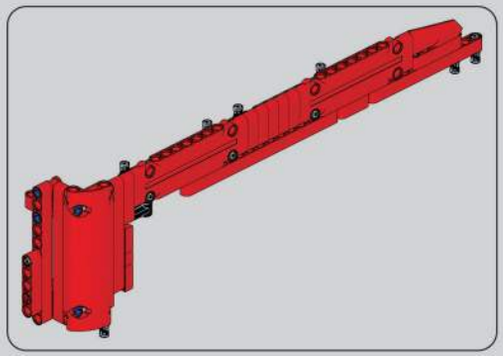

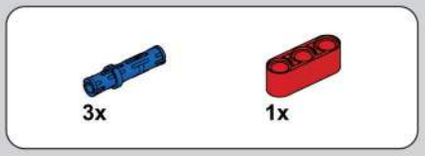

1232

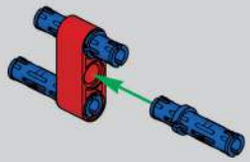

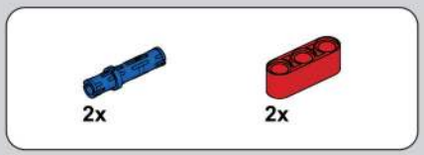

1233

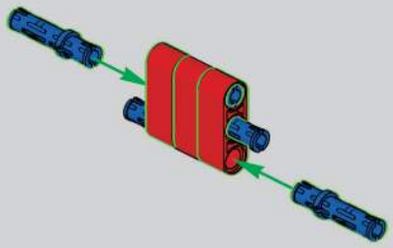

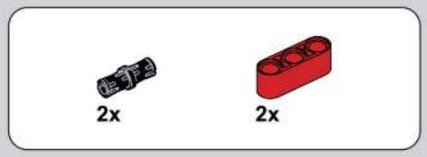

1234

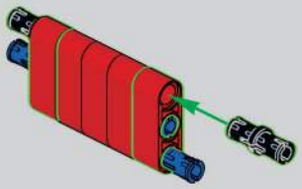

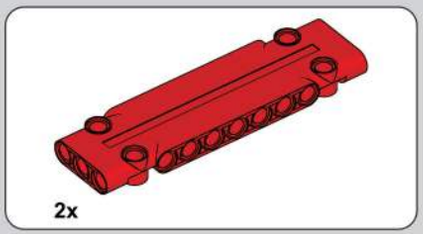

1235

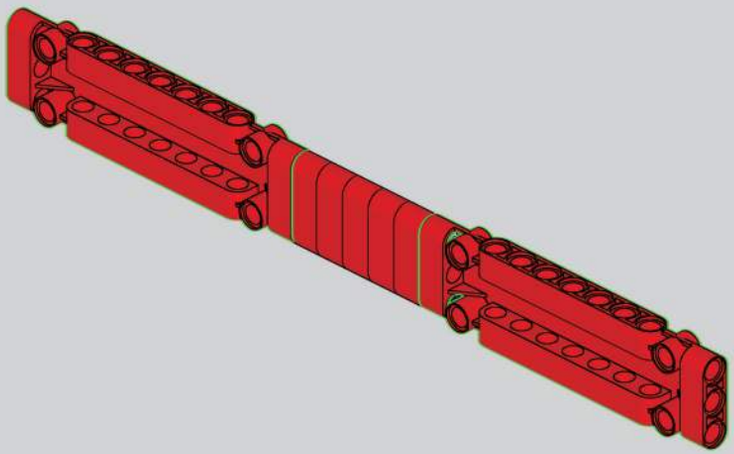

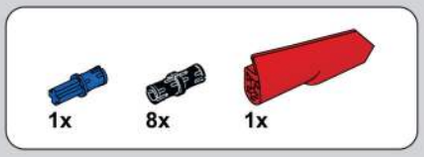

1236

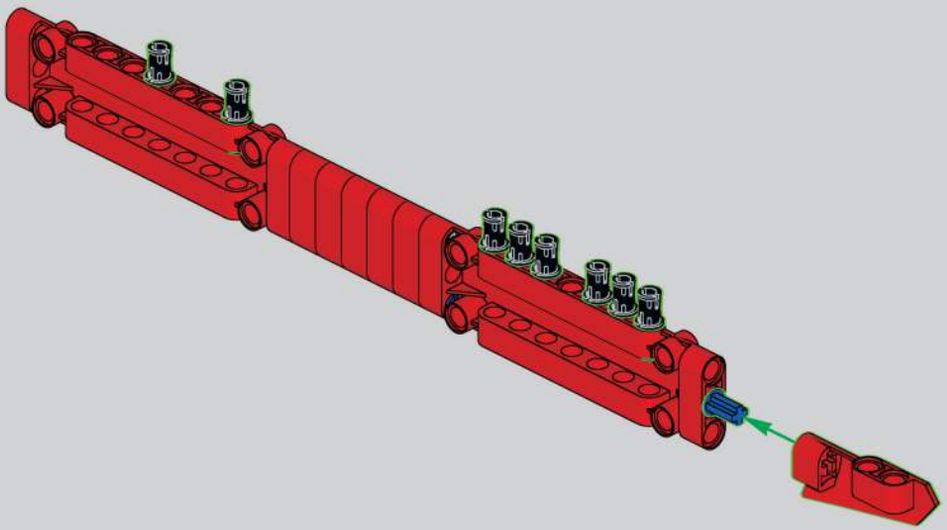

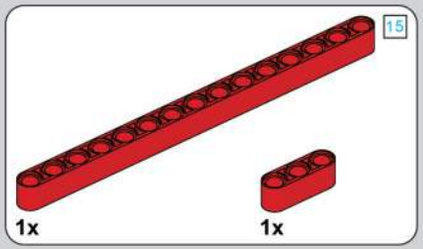

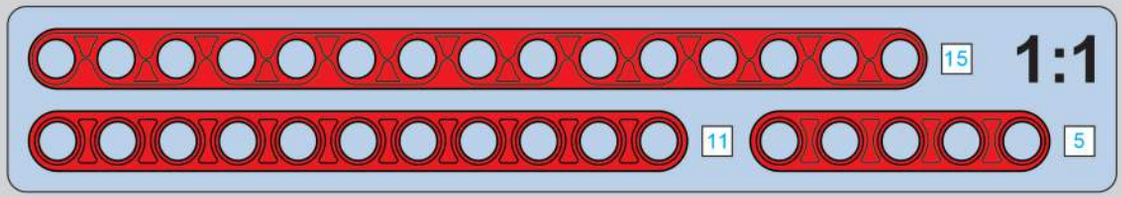

1237

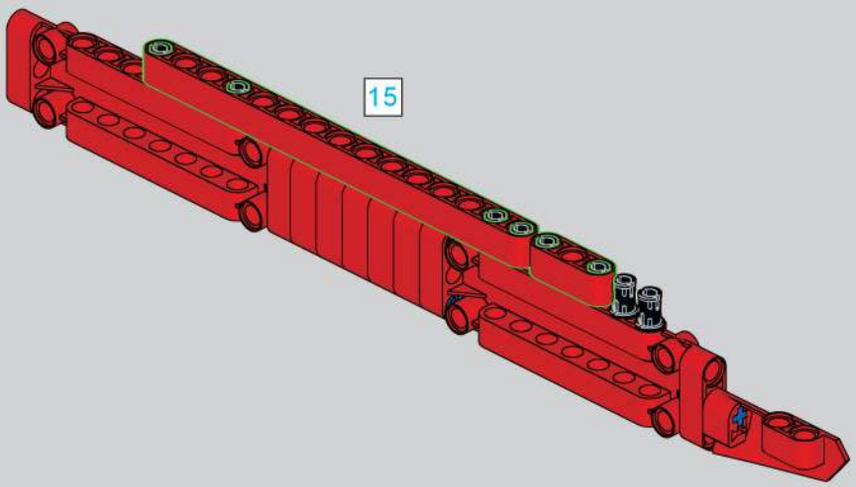

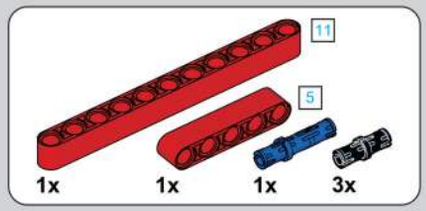

1238

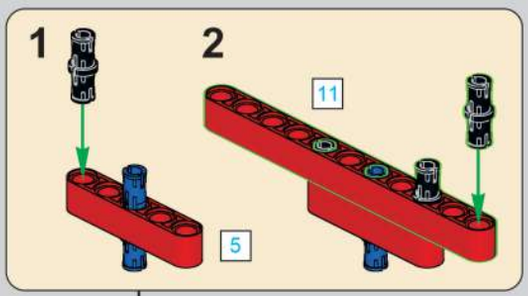

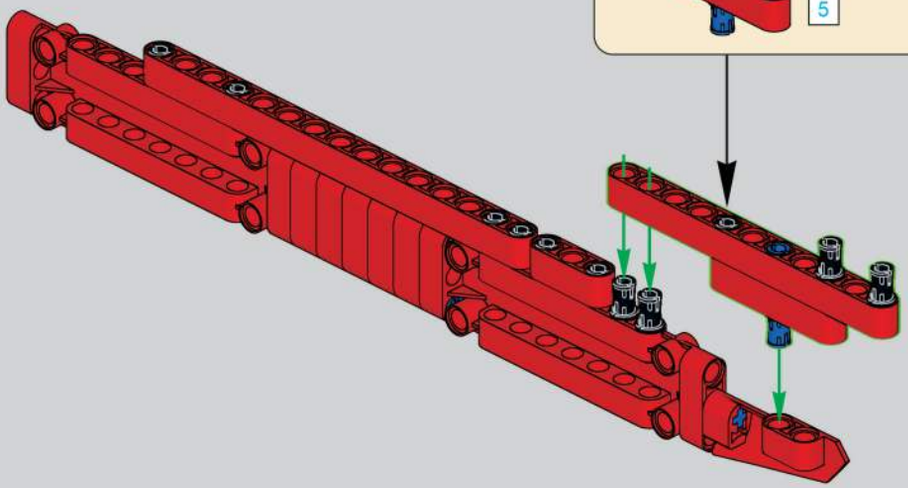

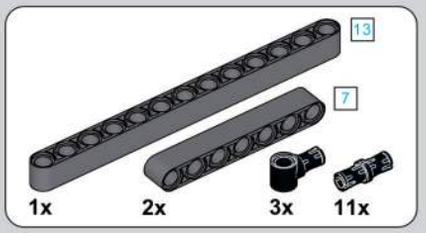

1239

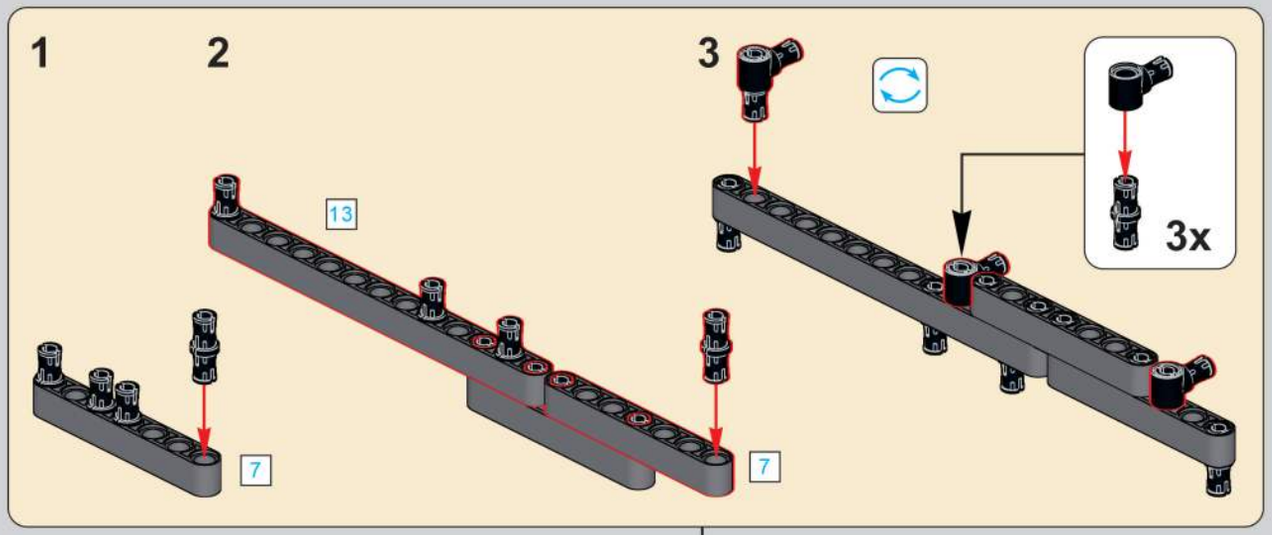

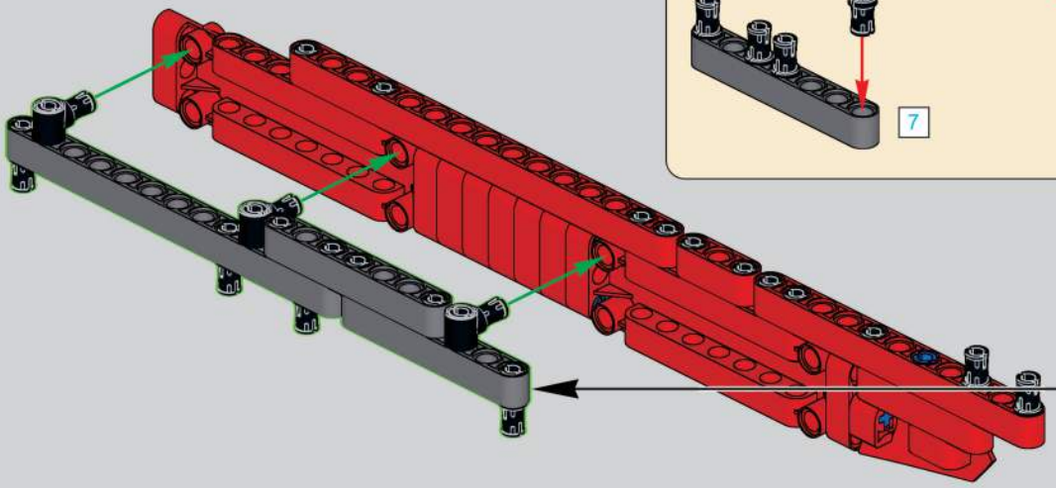

1240

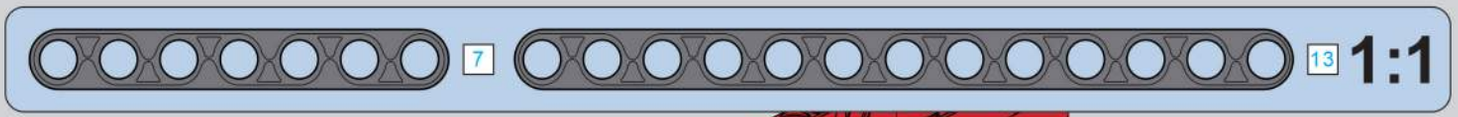

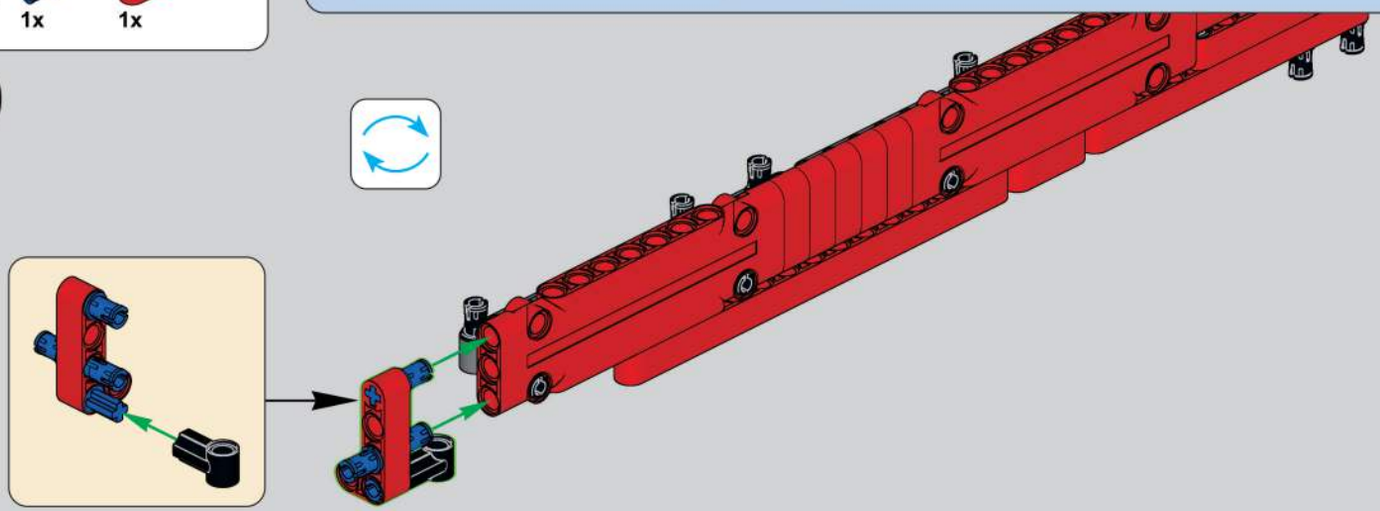

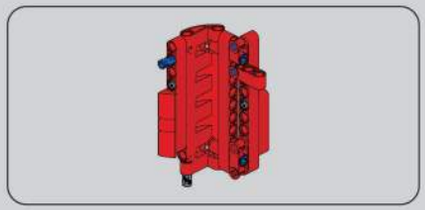

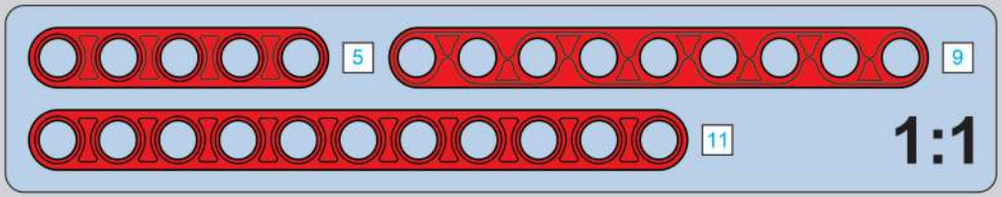

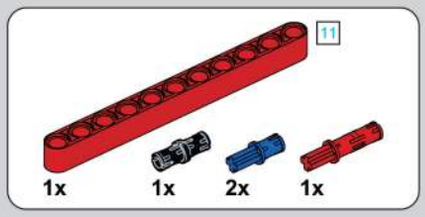

1241

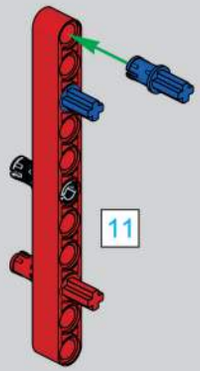

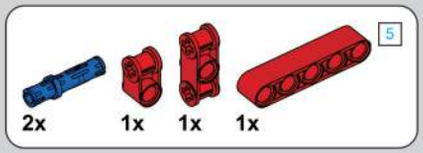

1242

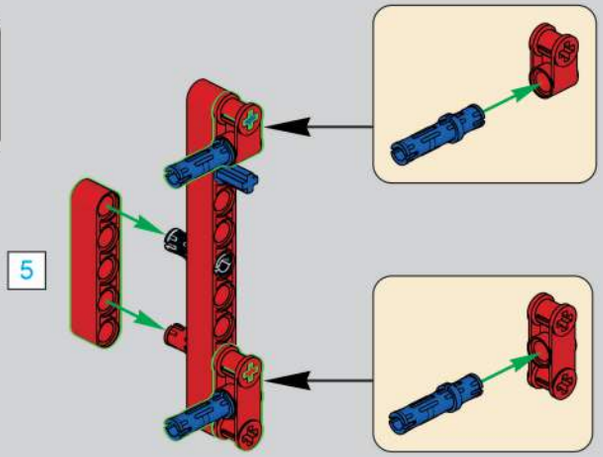

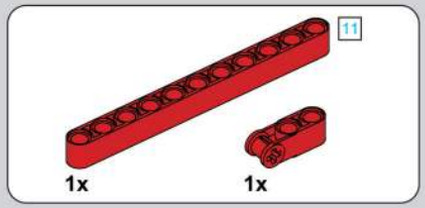

1243

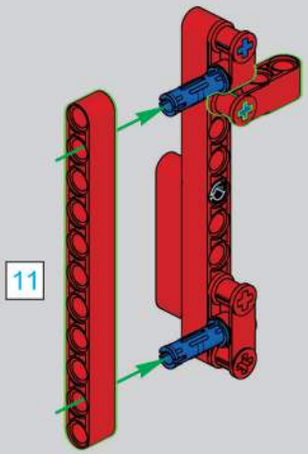

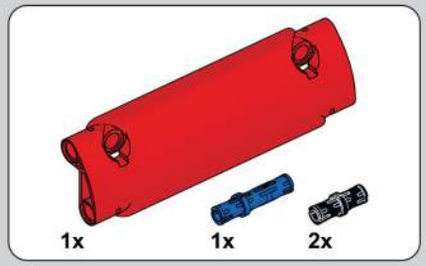

1244

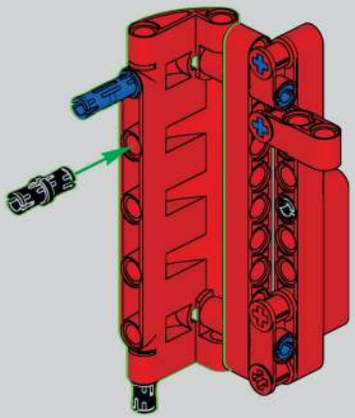

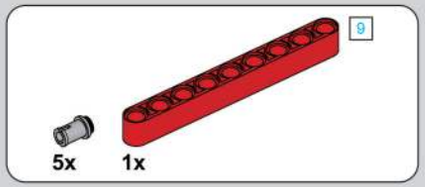

1245

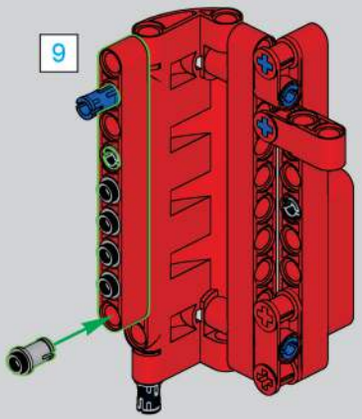

1246

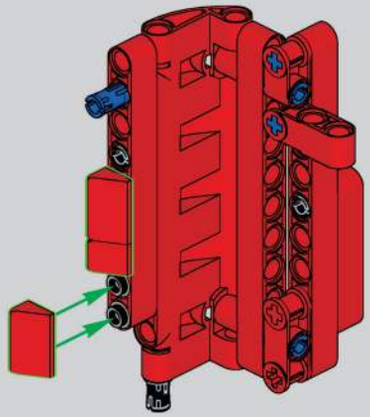

1247

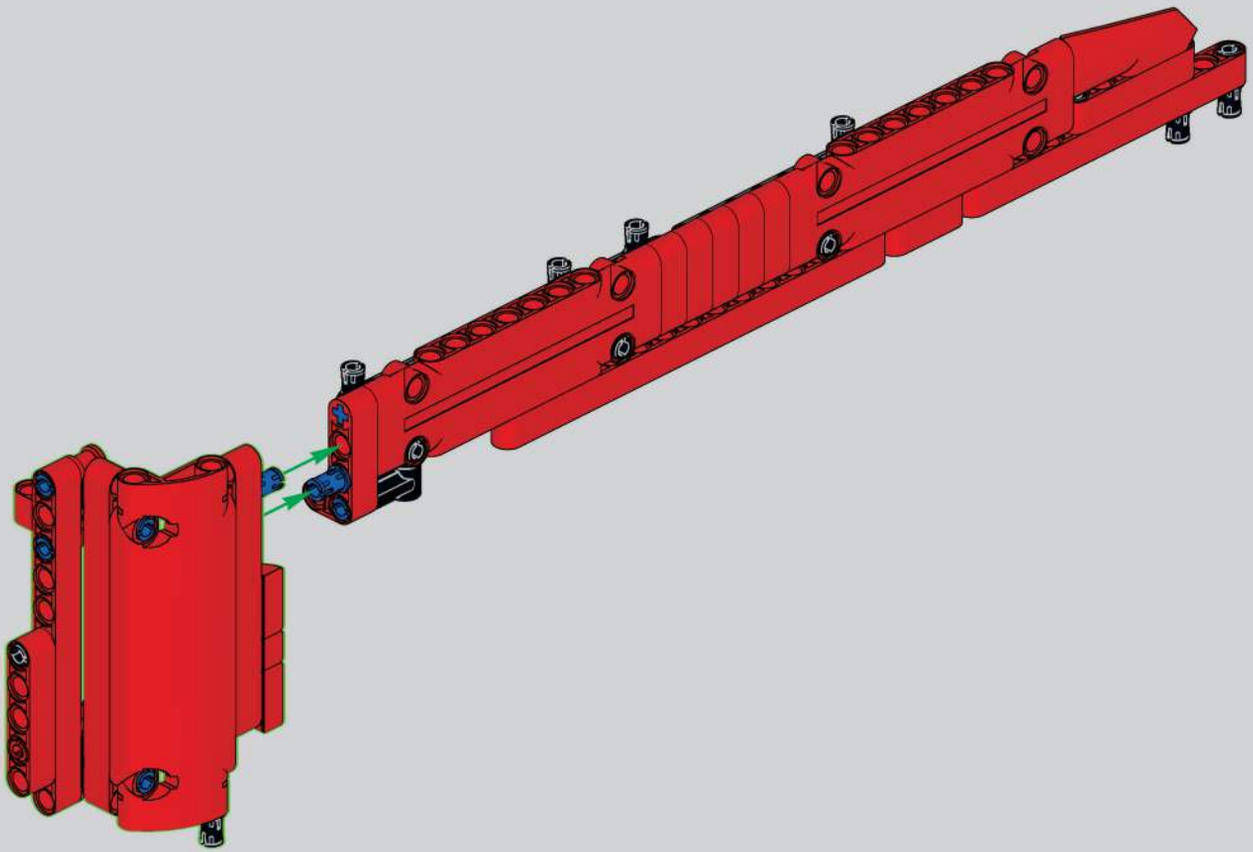

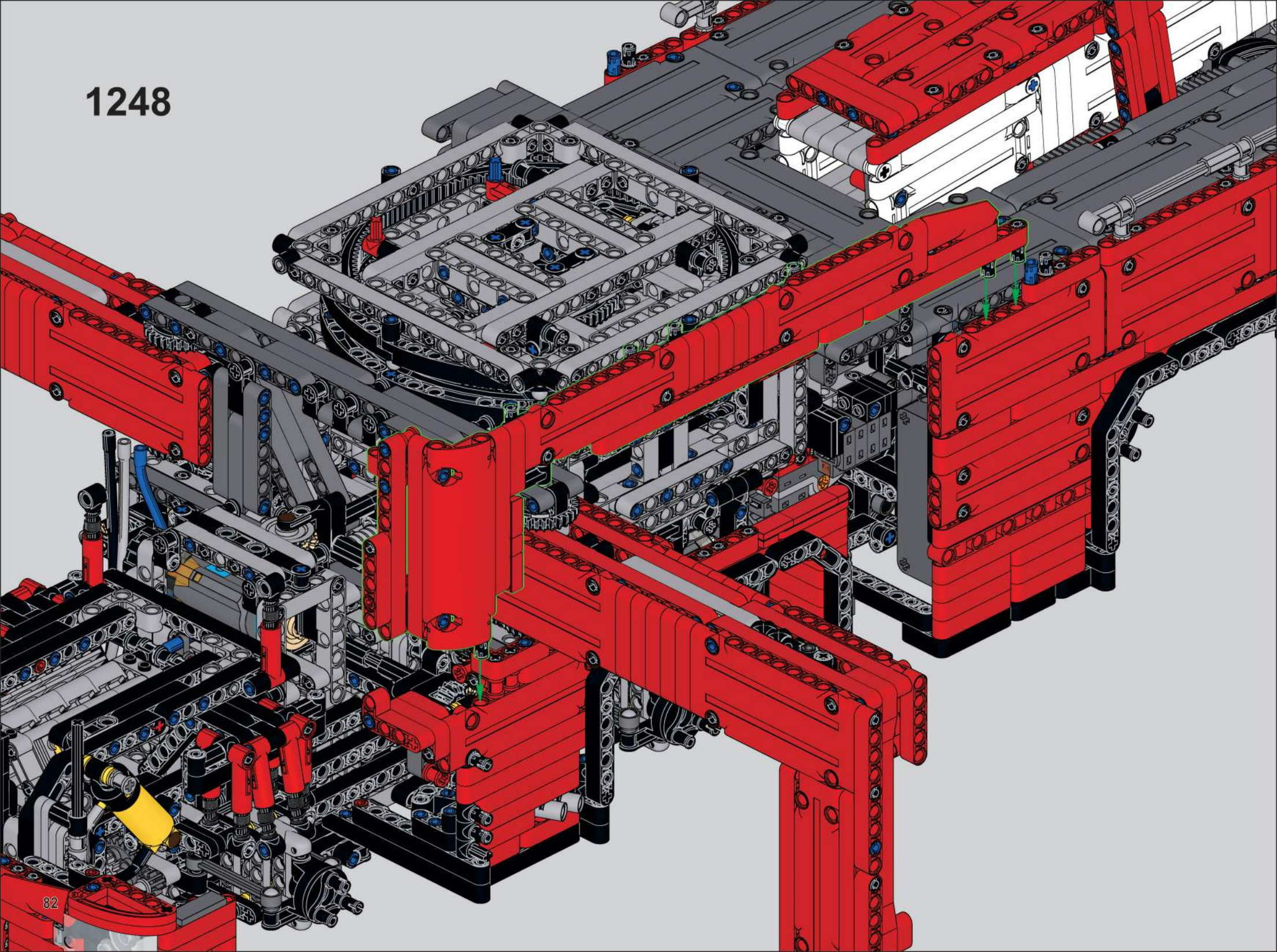
1248

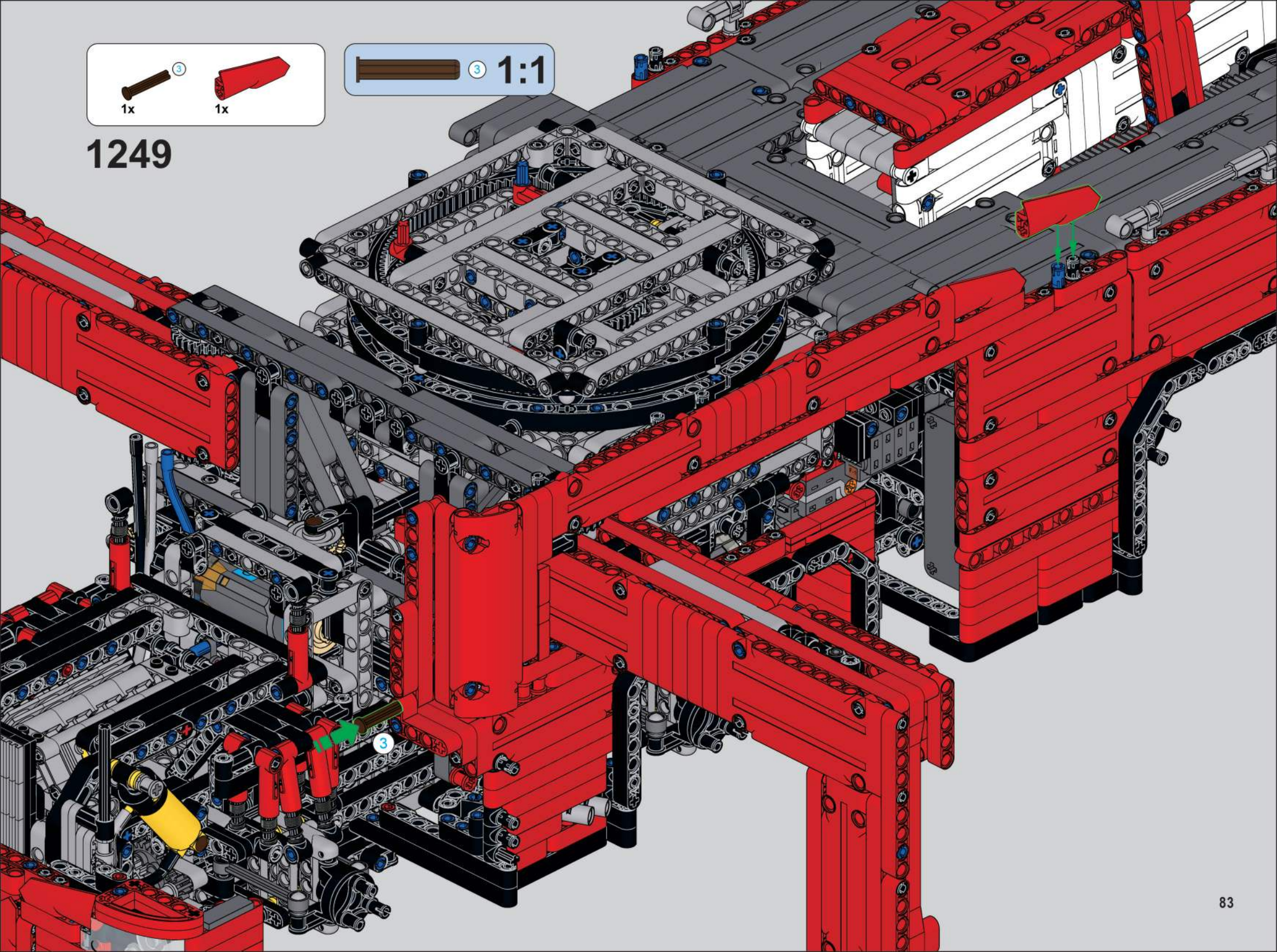
3
1x
1x
3
1:1
1249
3

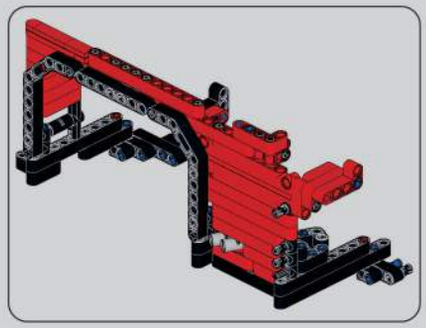

1250

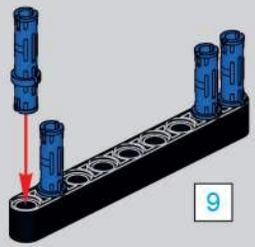

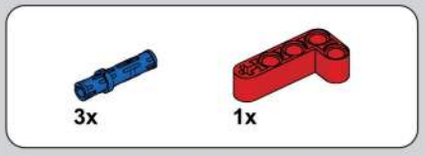

1251

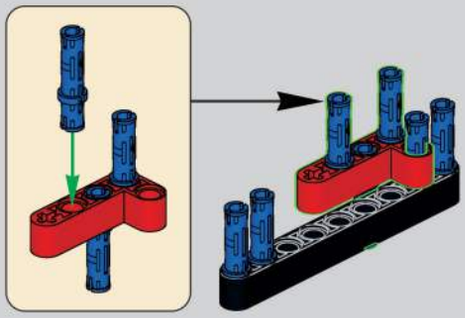

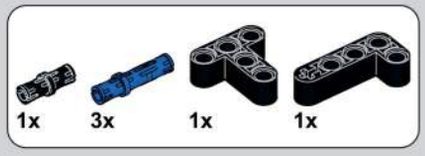

1252

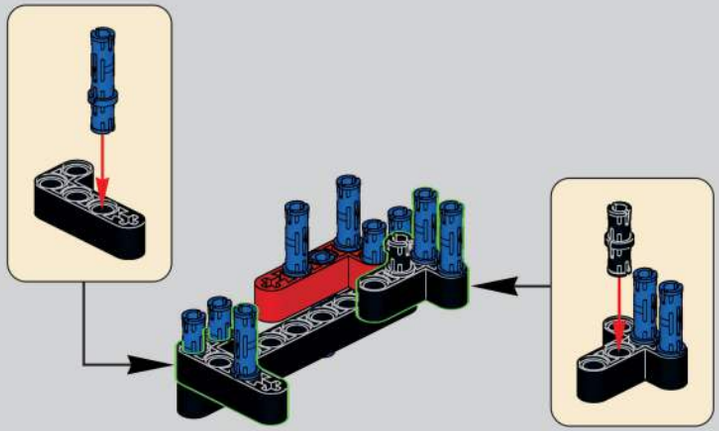

1253

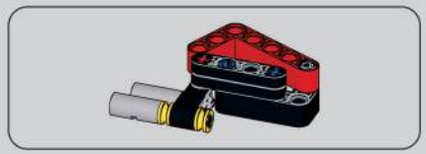

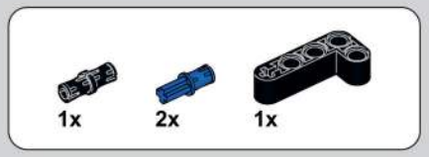

1254

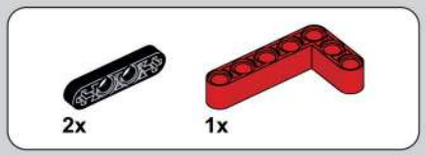

1255

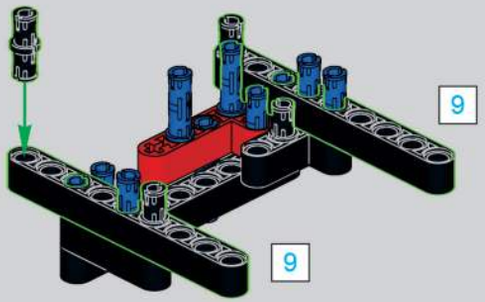

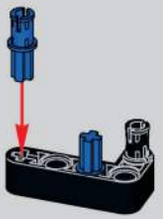

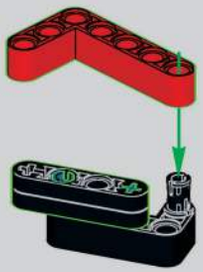

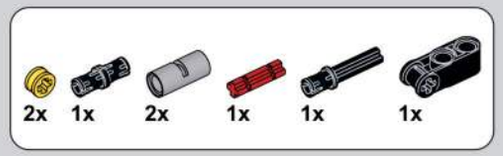

1256

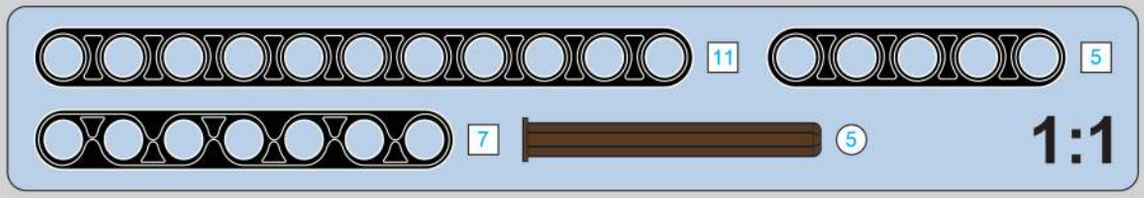

1257

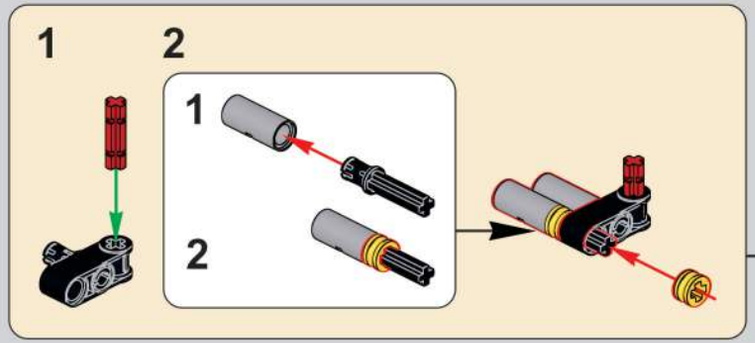

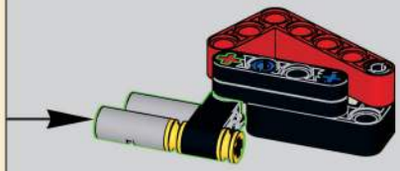

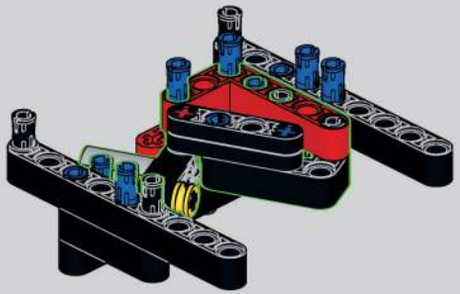

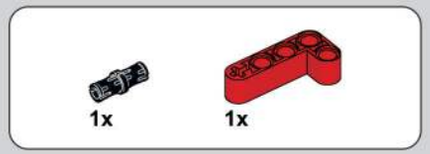

1258

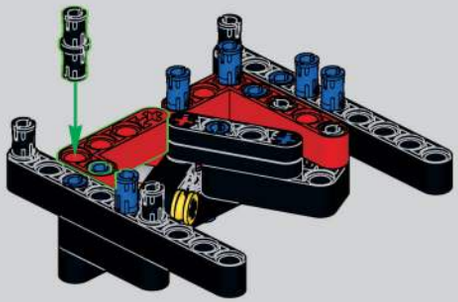

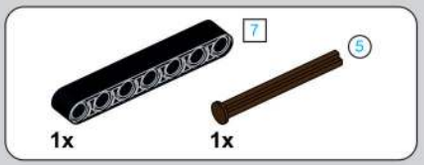

1259

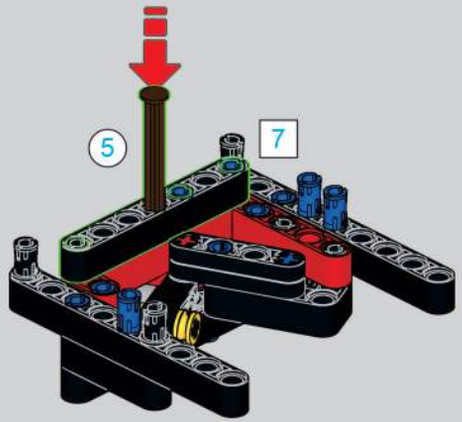

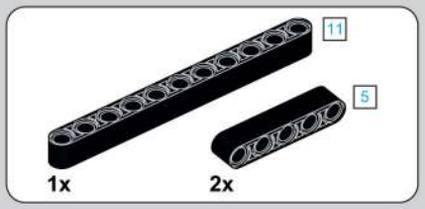

1260

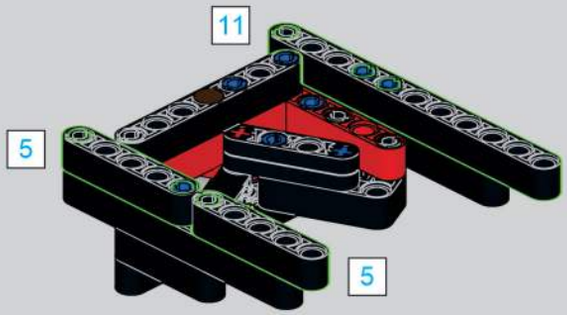

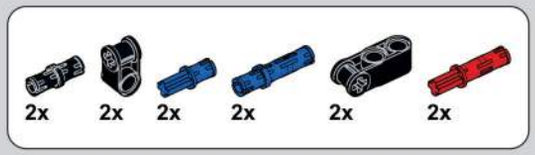

1261

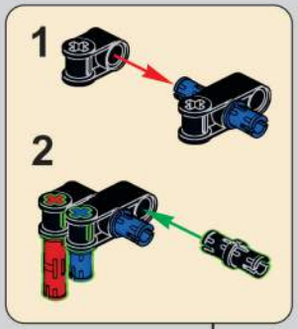

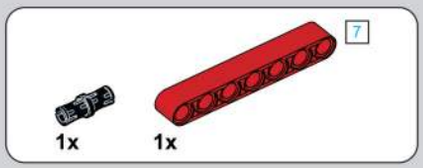

1262

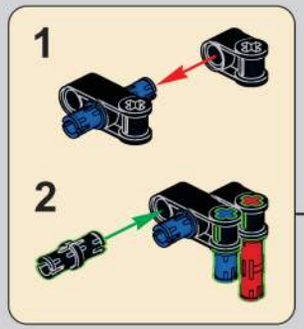

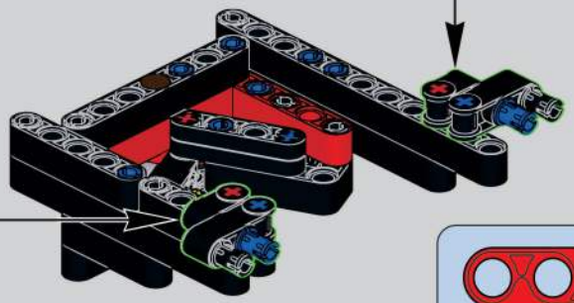

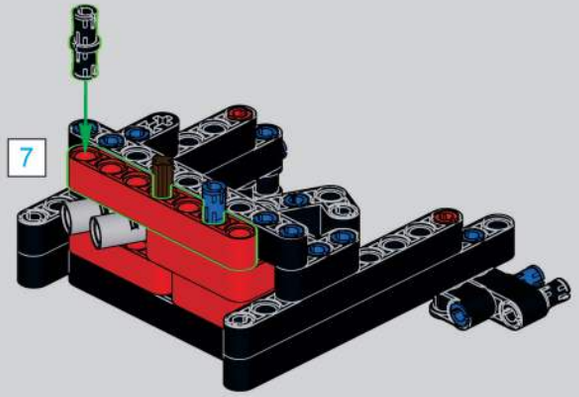

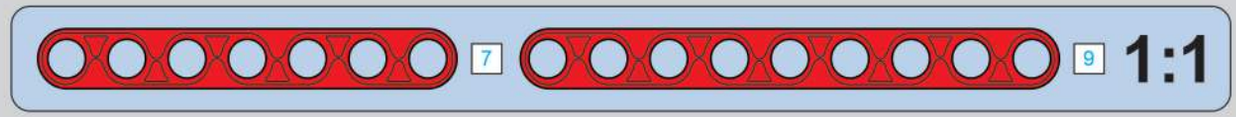

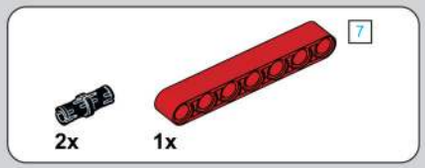

1263

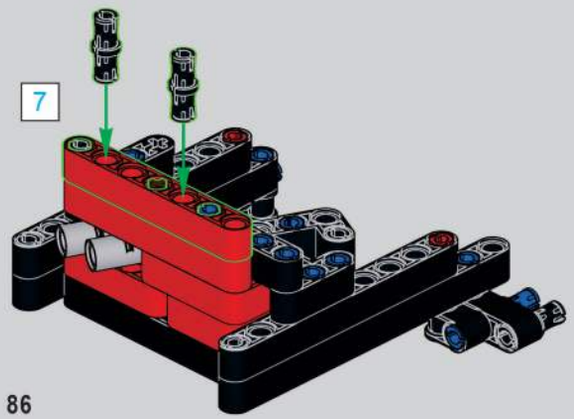

1264

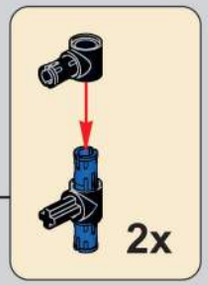

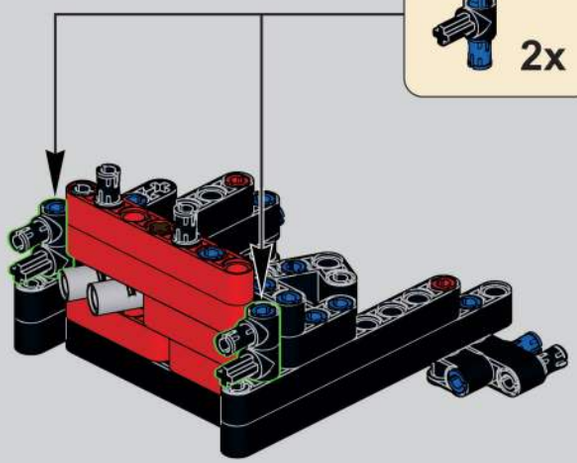

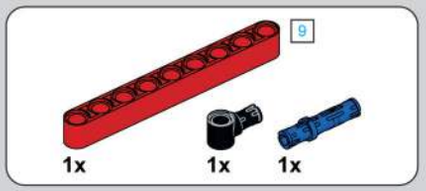

1265

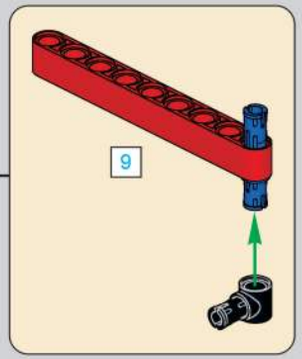

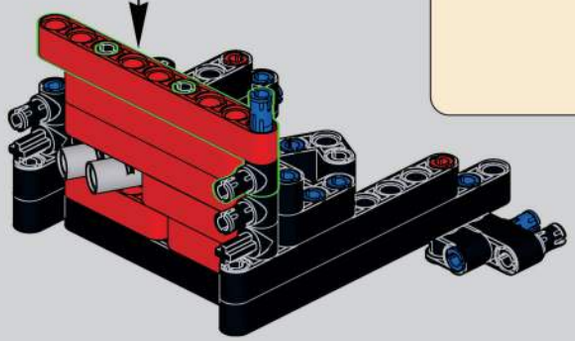

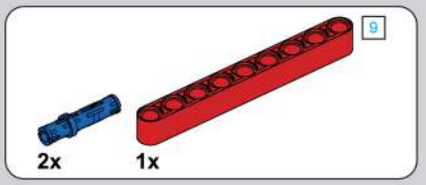

1266

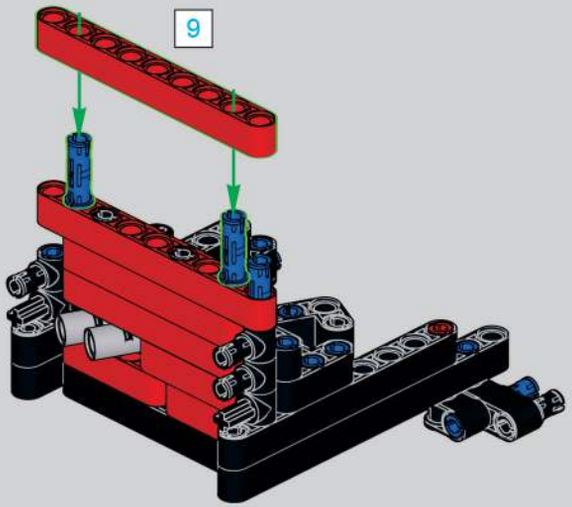

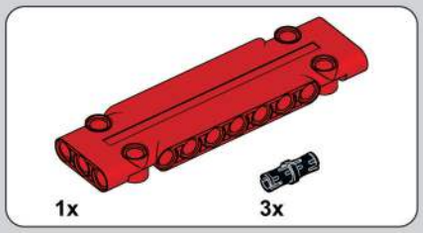

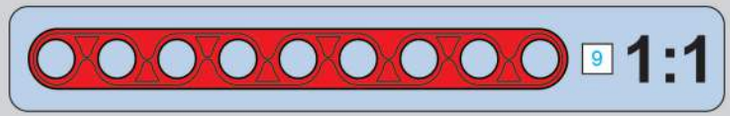

1267

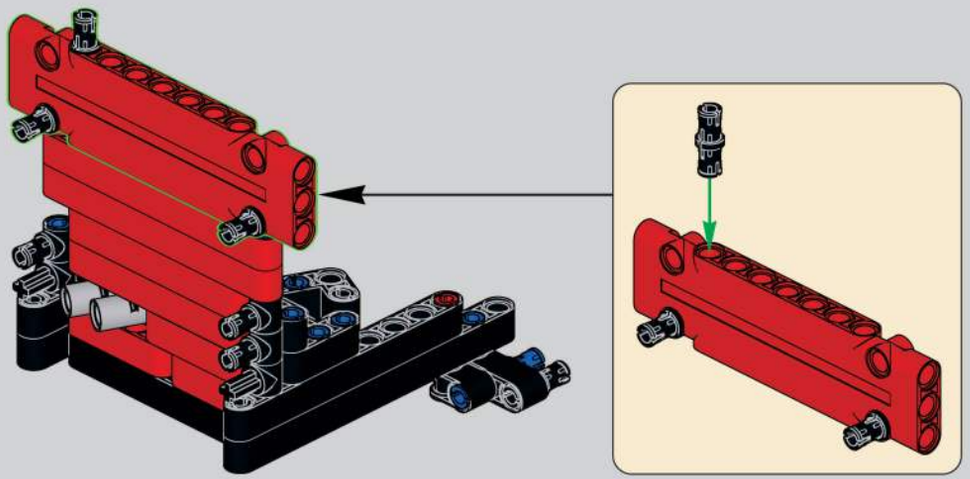

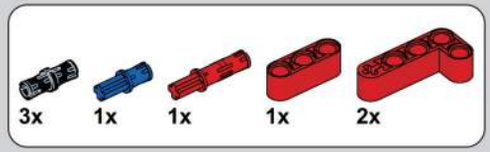

1268

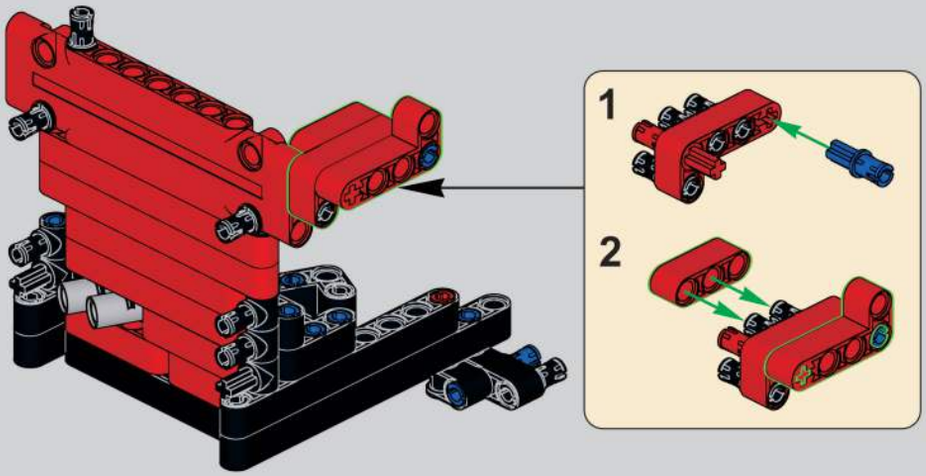

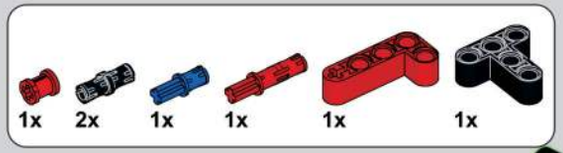

1269

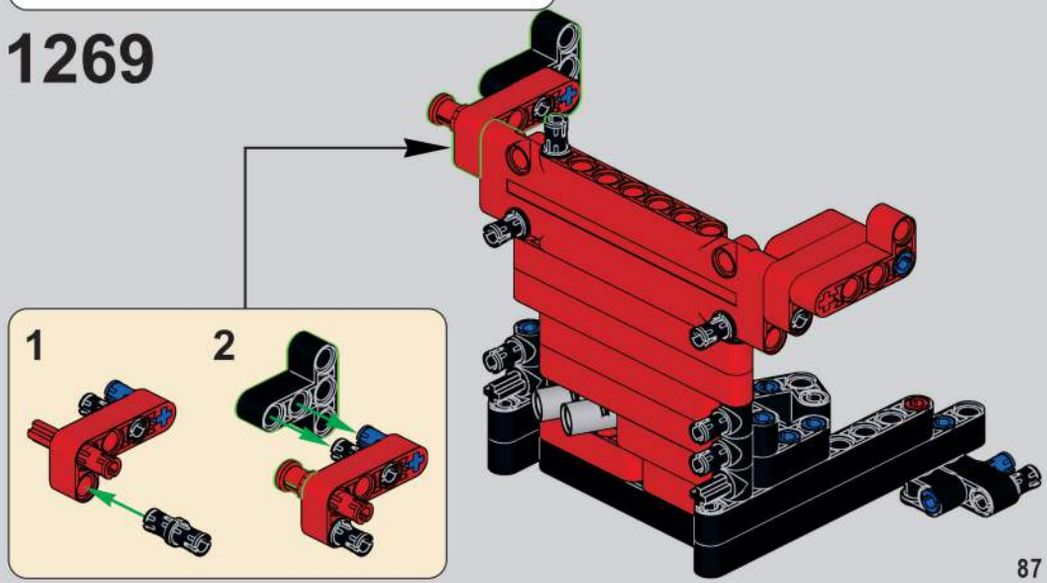

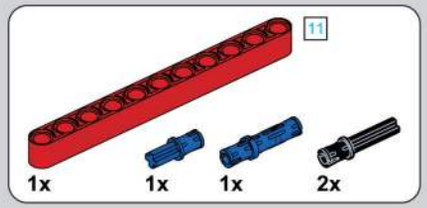

1270

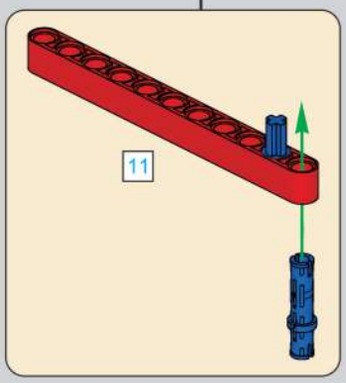

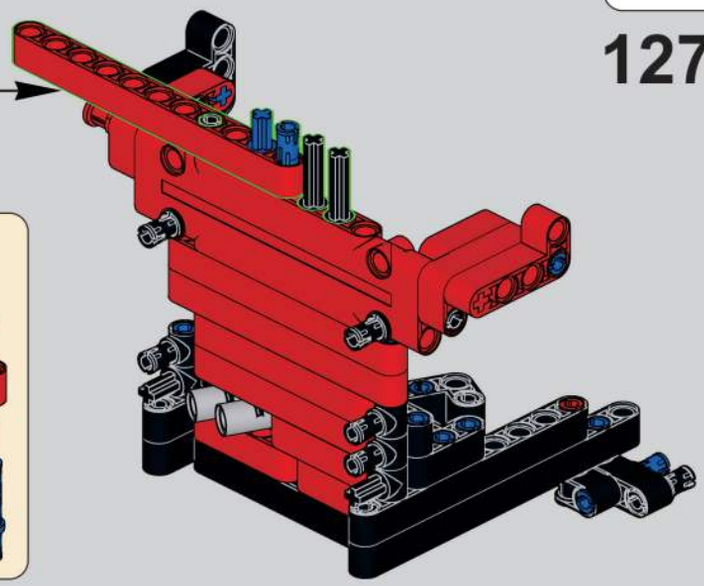

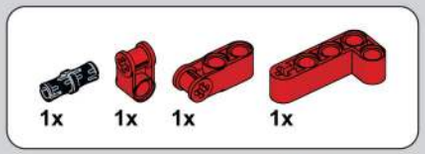

1271

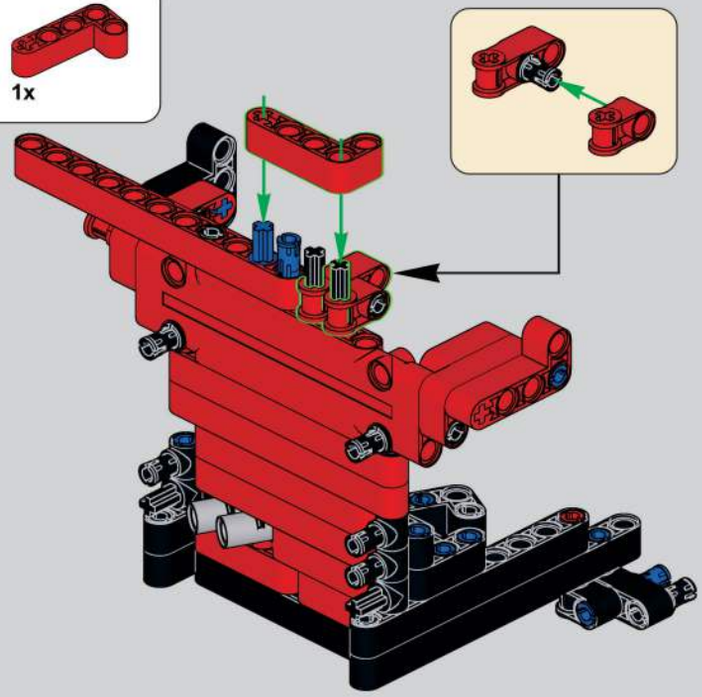

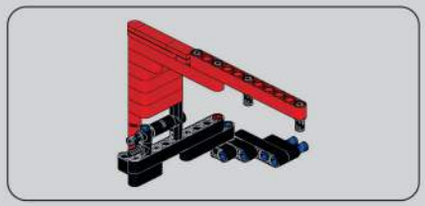

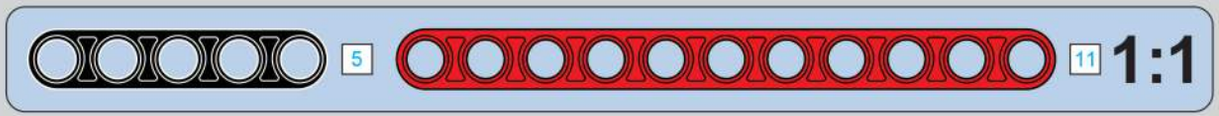

1272

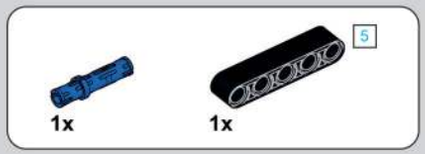

1273

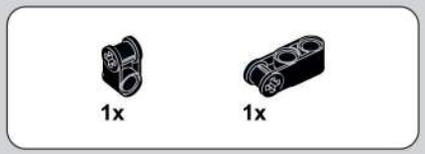

1274

1275

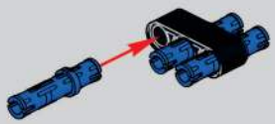

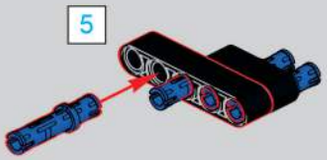

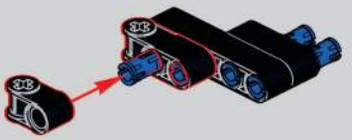

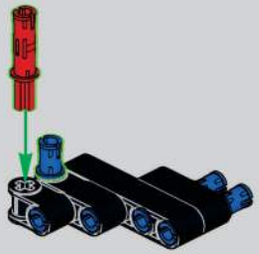

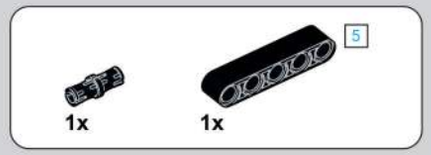

1276

1277

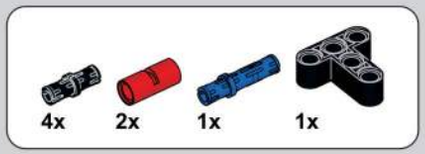

1278

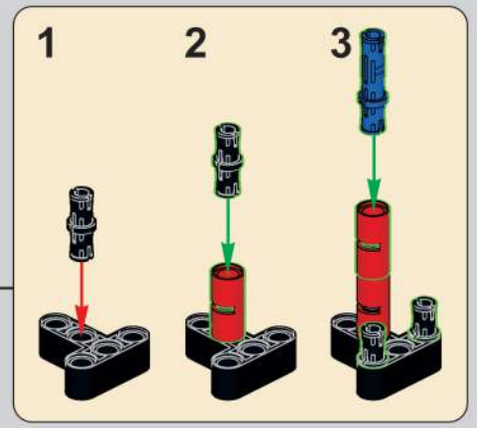

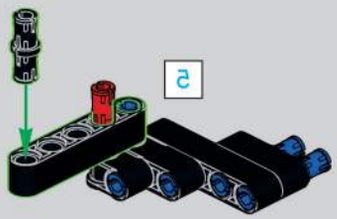

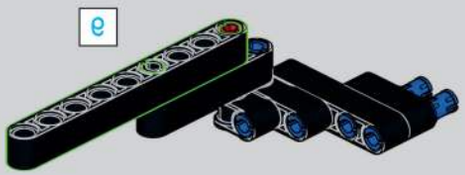

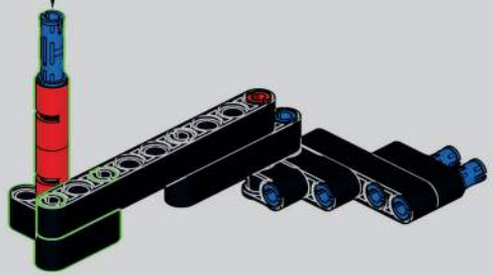

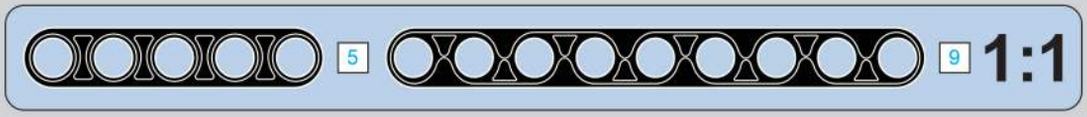

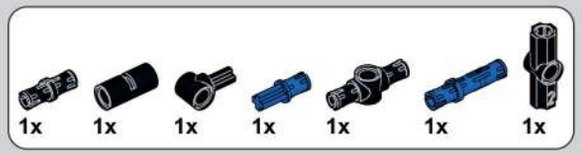

1279

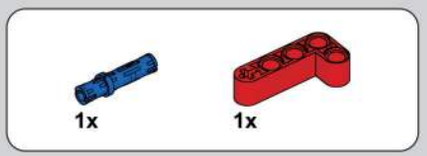

1280

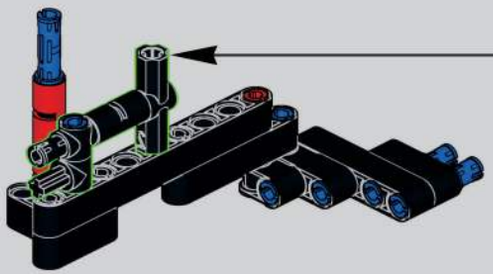

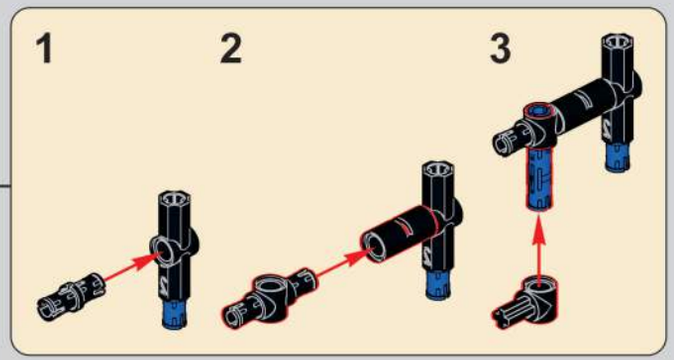

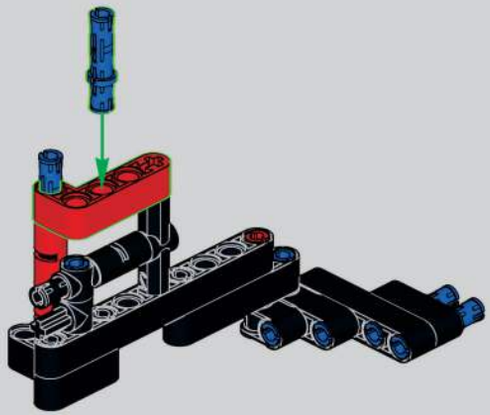

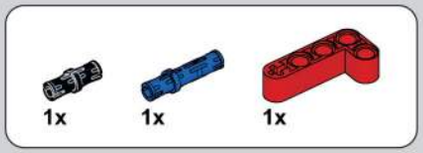

1281

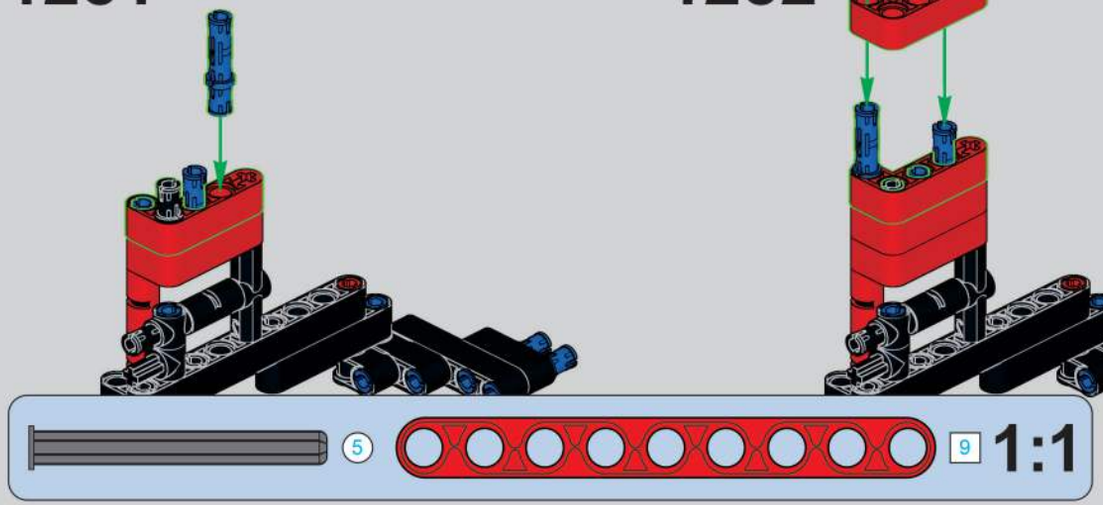

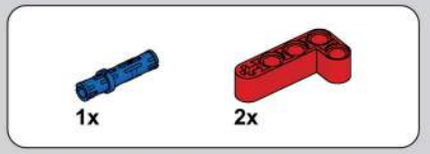

1282

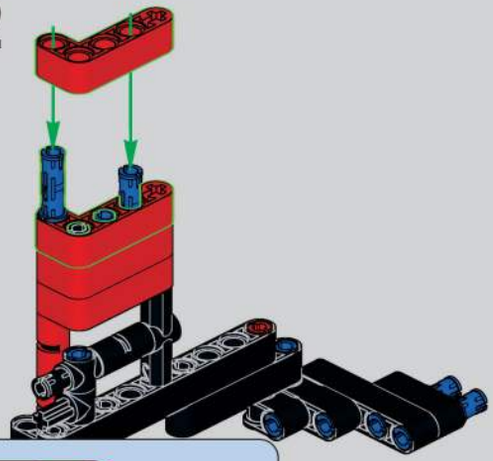

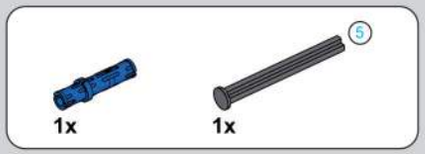

1283

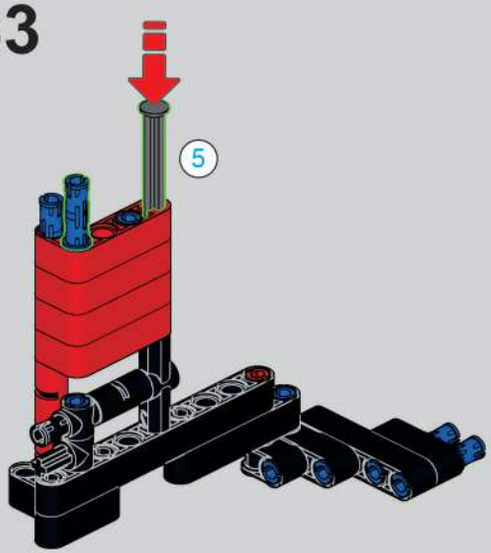

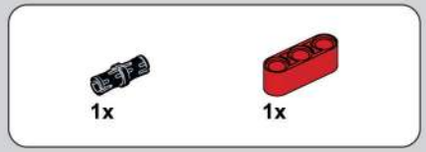

1284

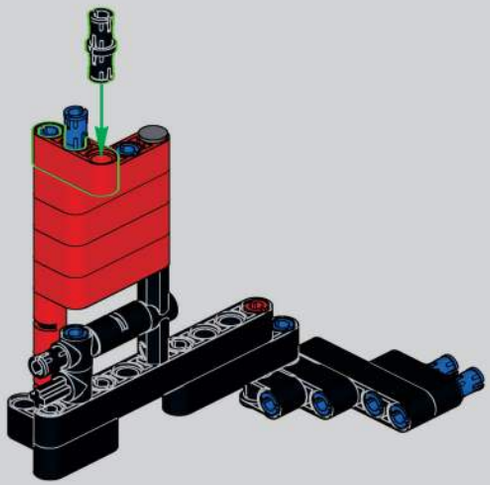

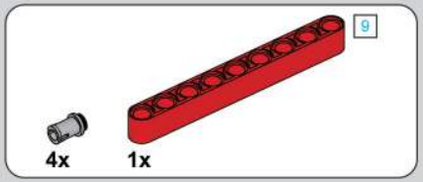

1285

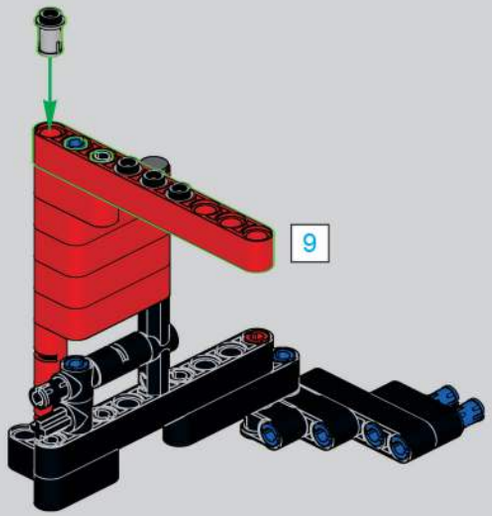

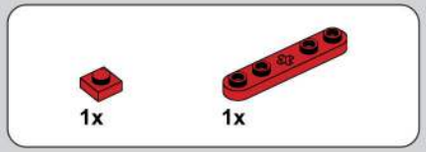

1286

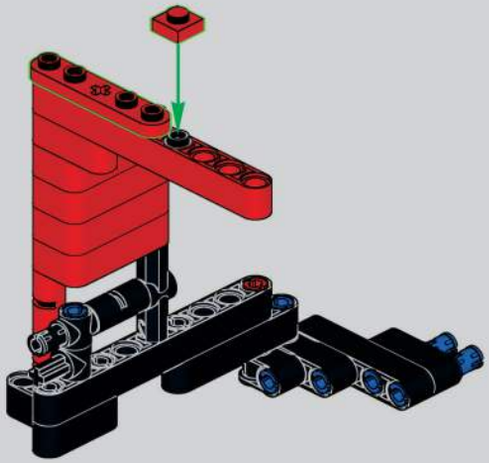

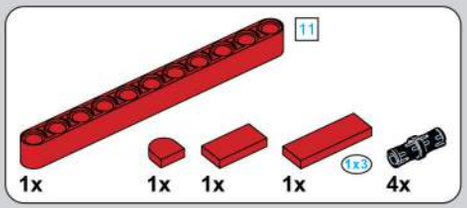

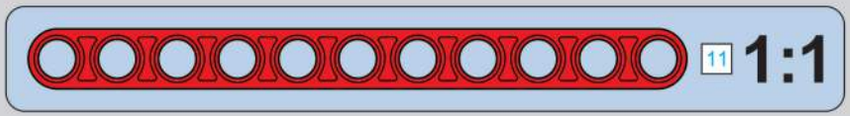

1287

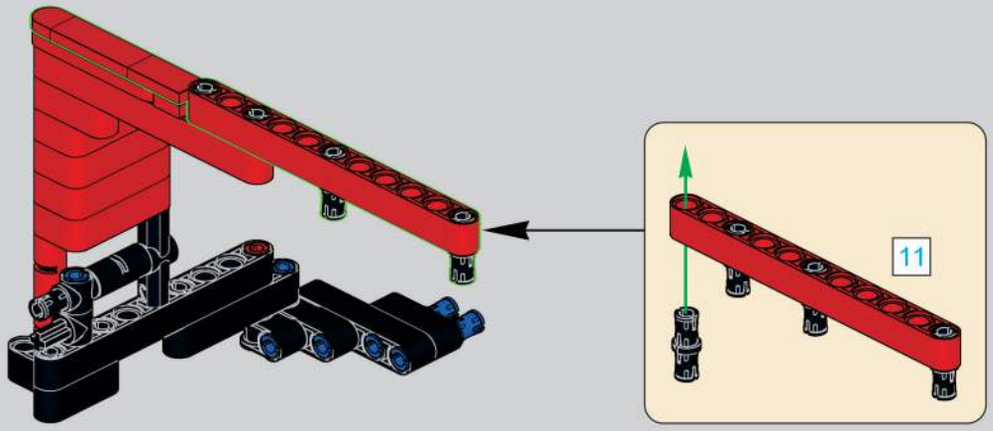

1288

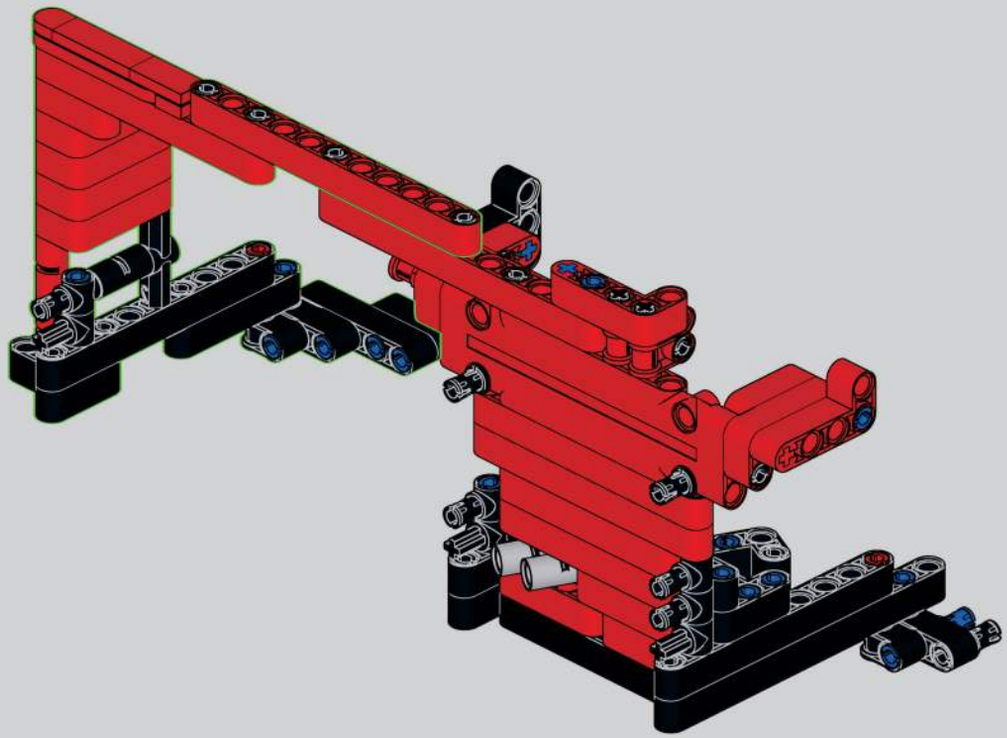

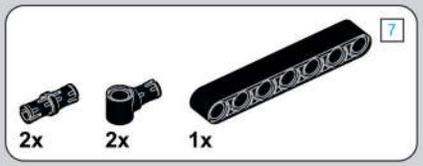

1289

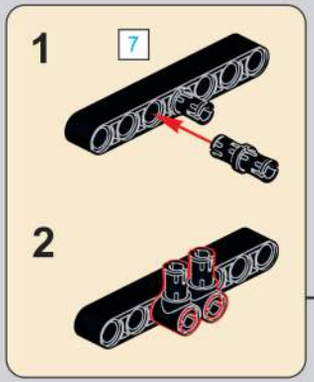

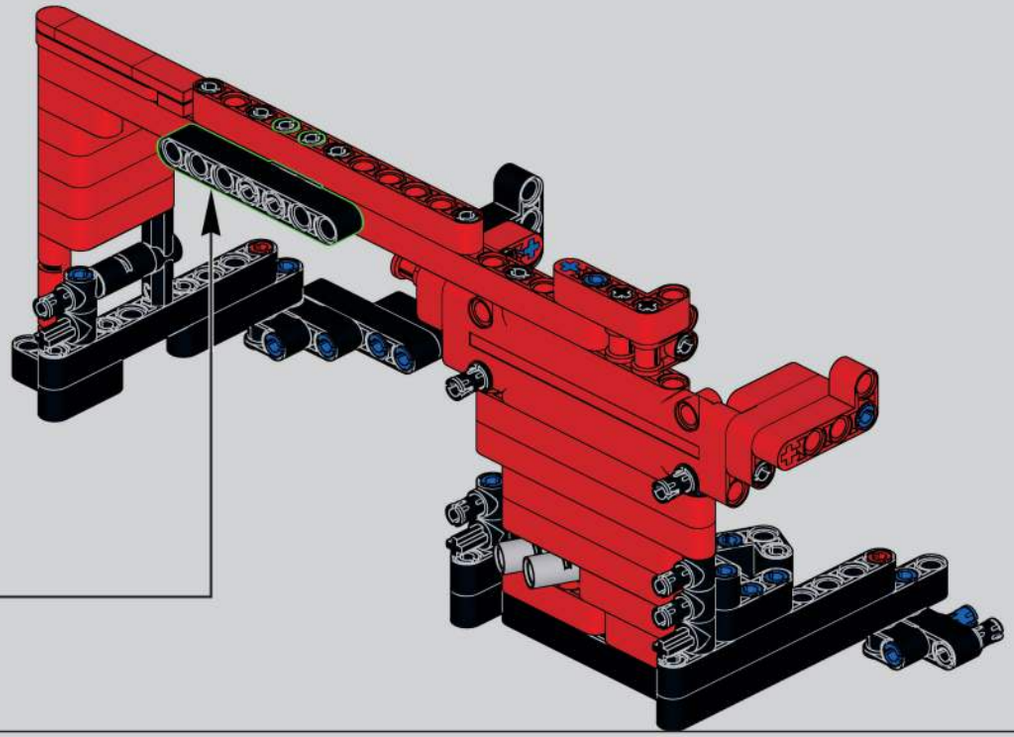

1290

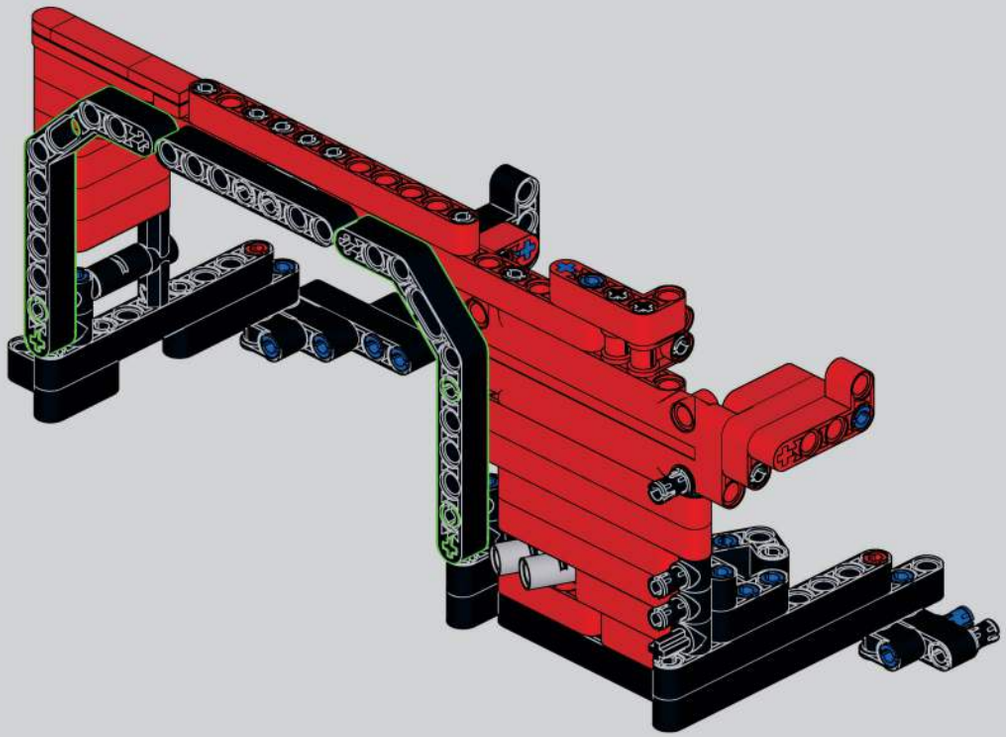

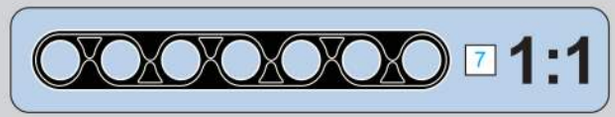

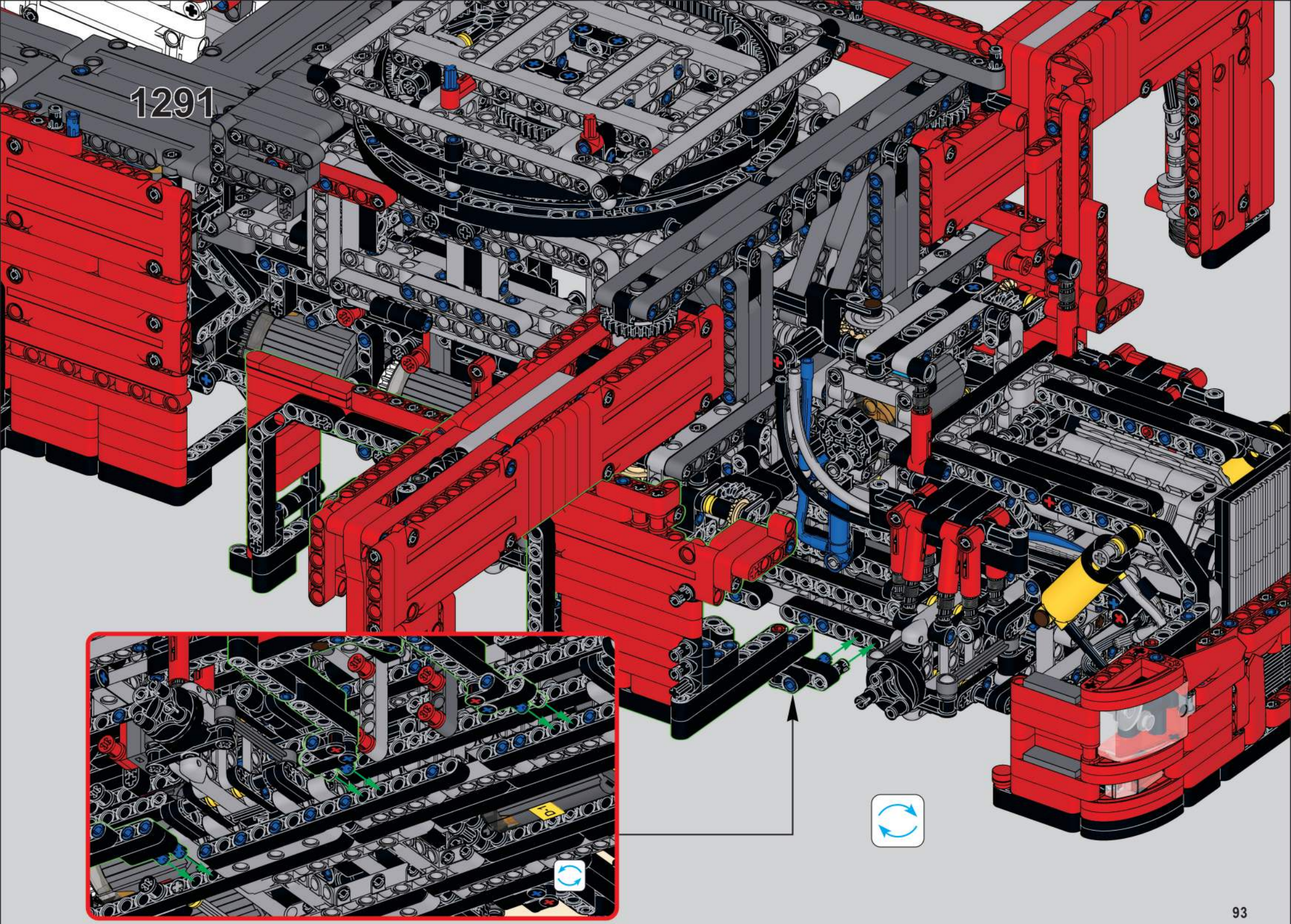
1291

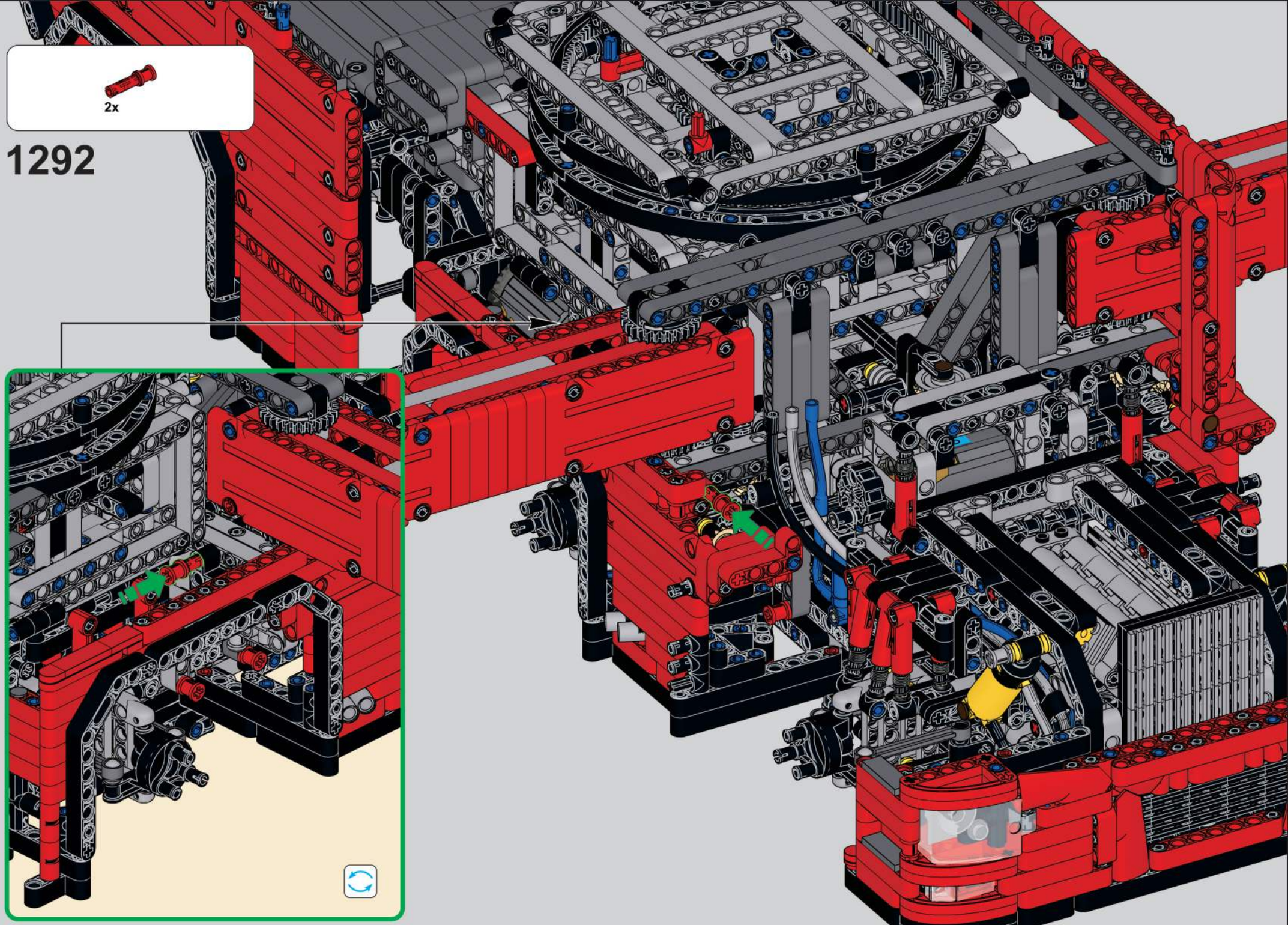
2x
1292

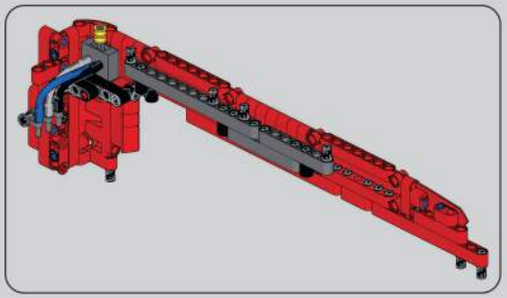

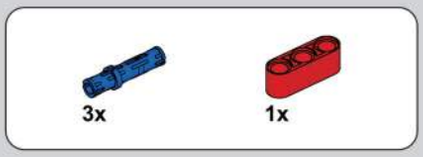

1293

1294

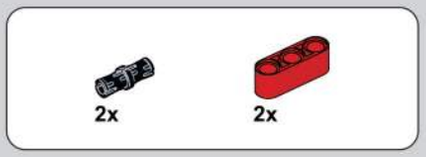

1295

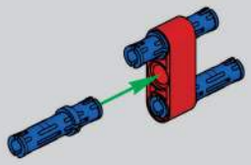

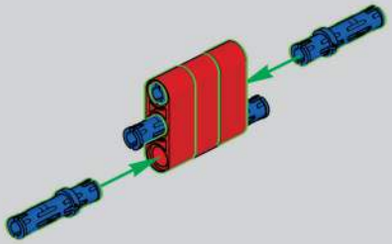

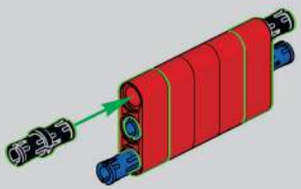

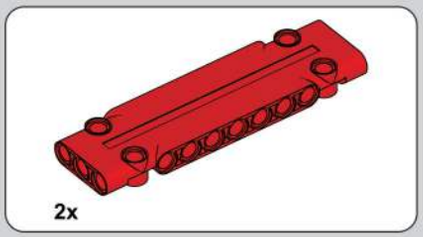

1296

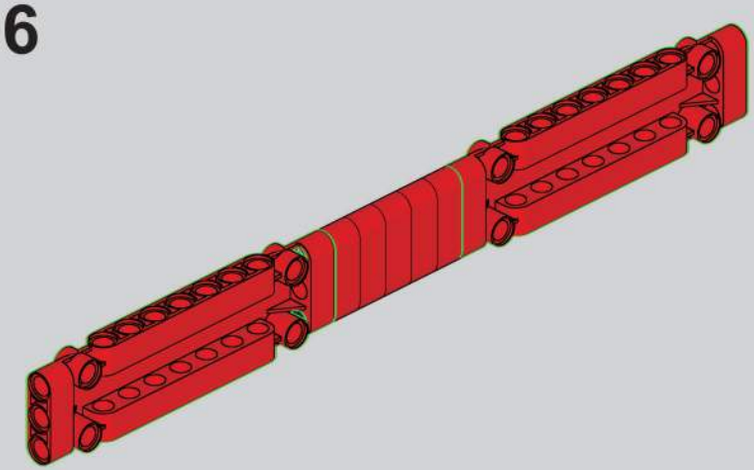

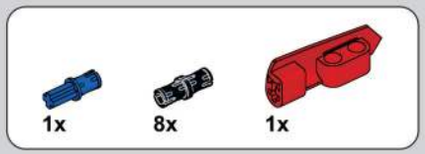

1297

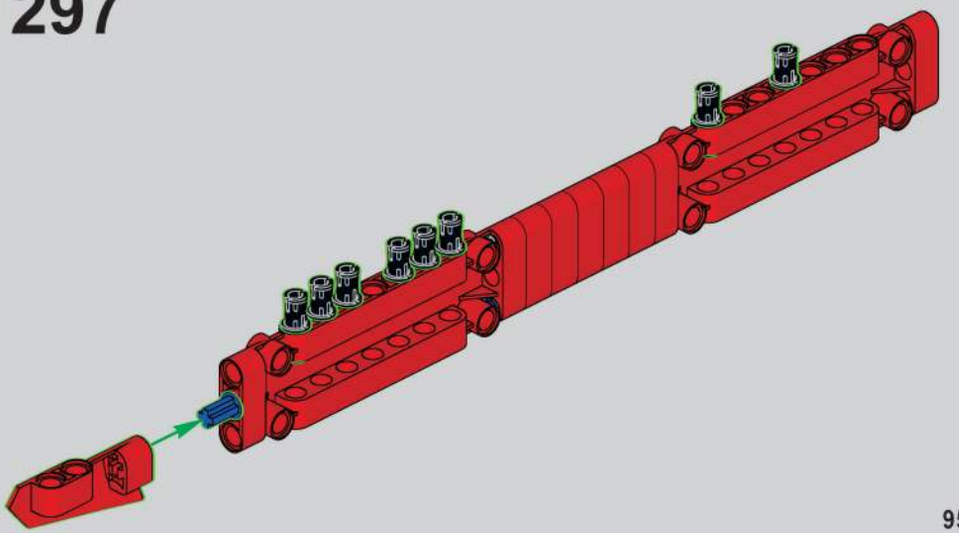

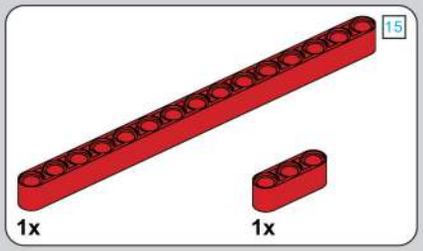

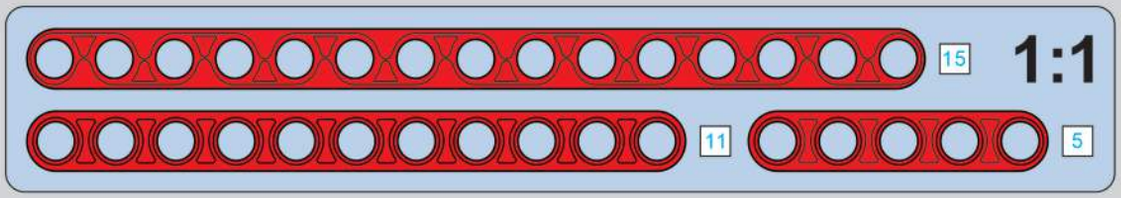

1298

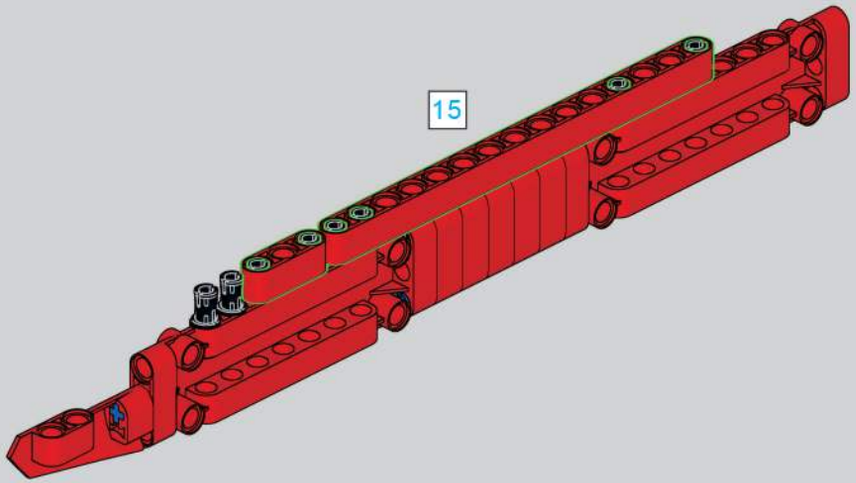

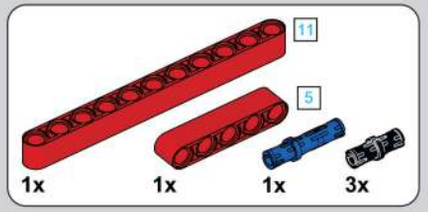

1299

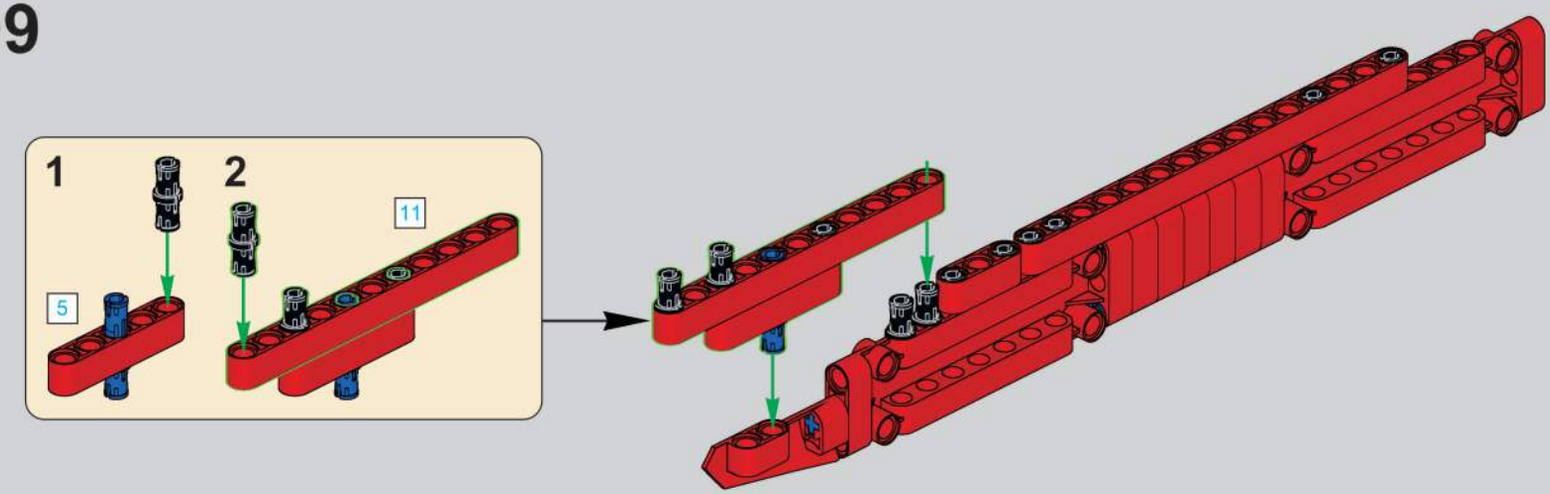

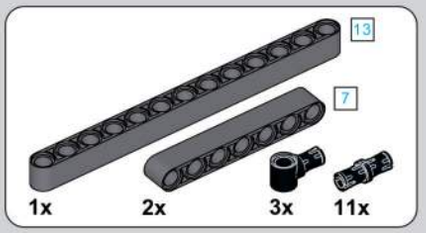

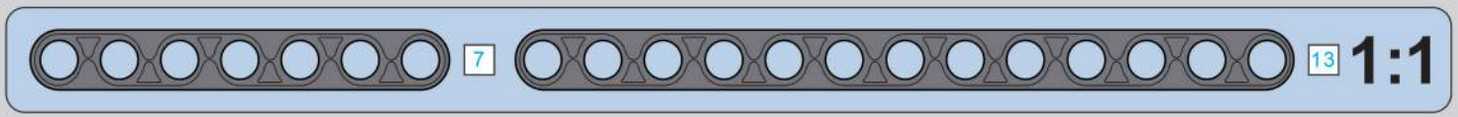

1300

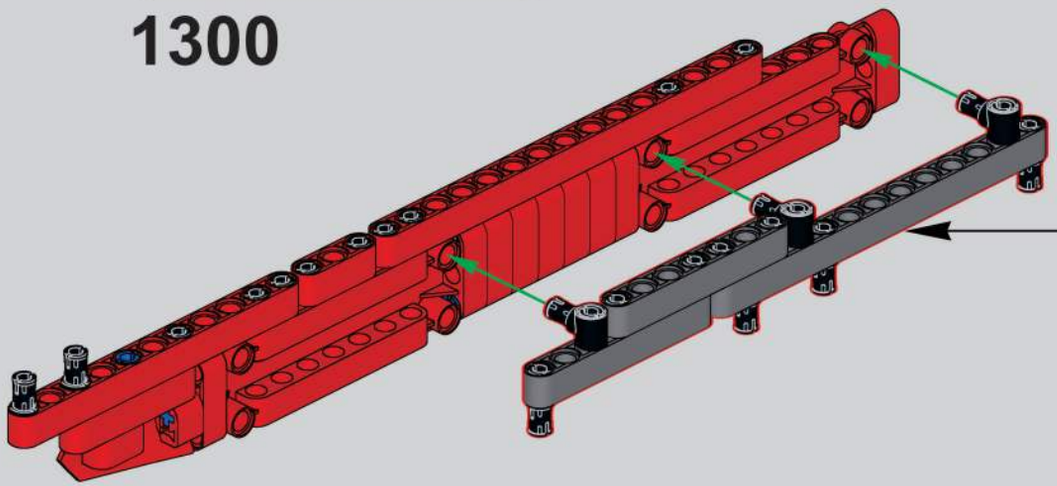

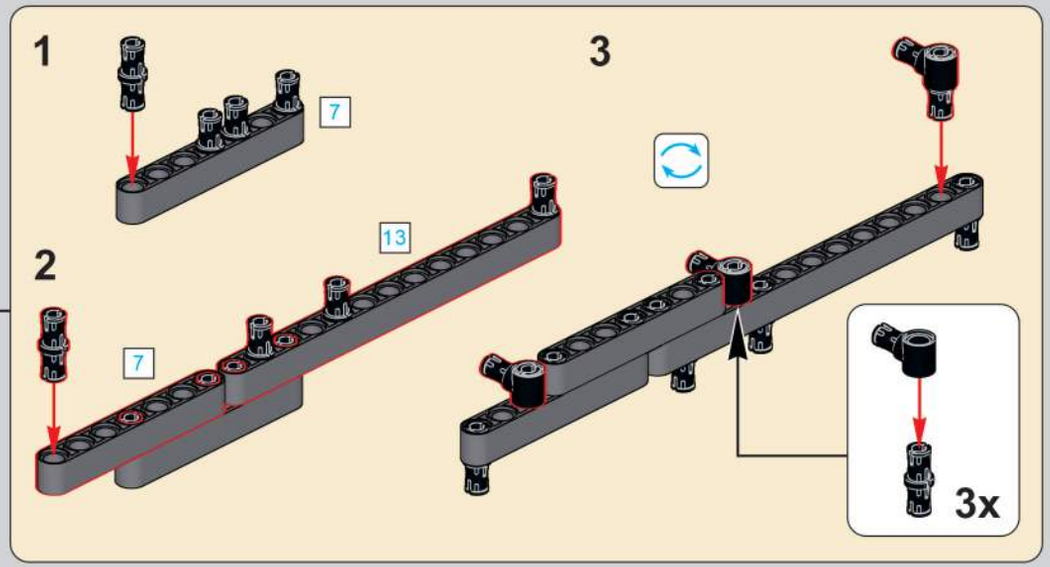

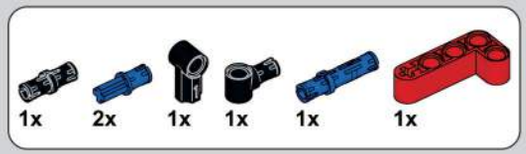

1301

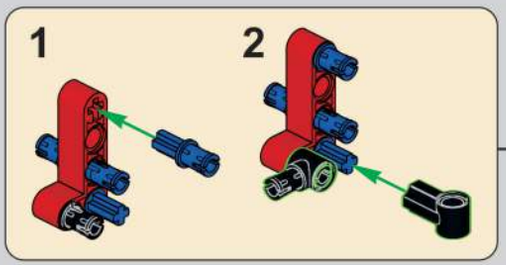

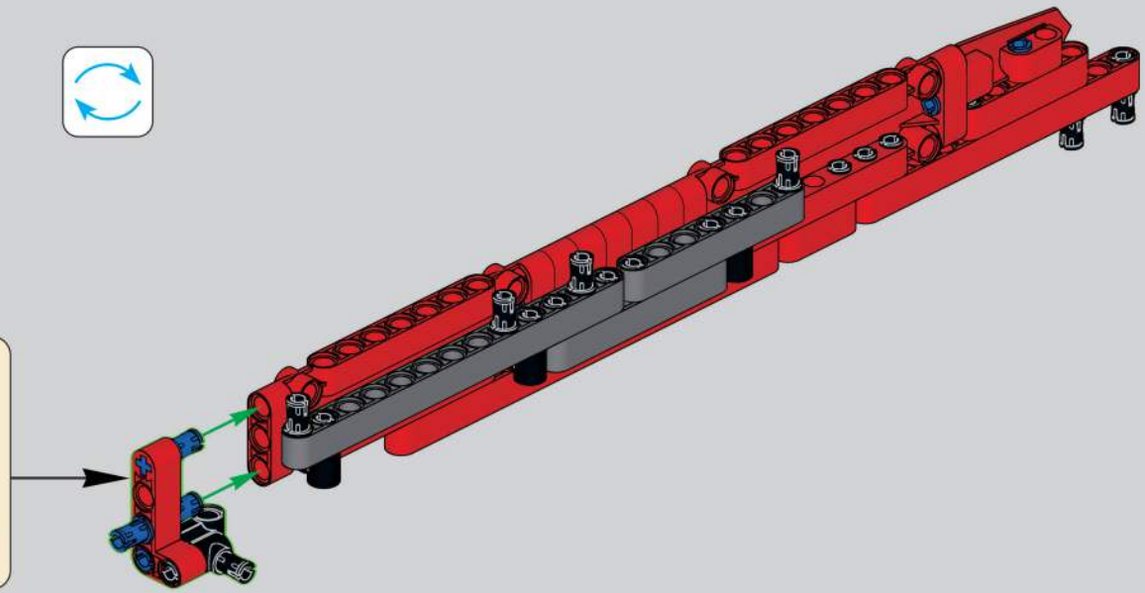

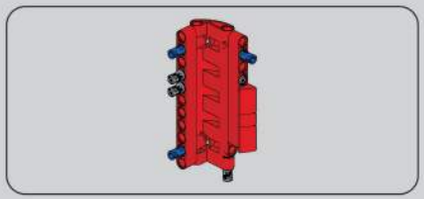

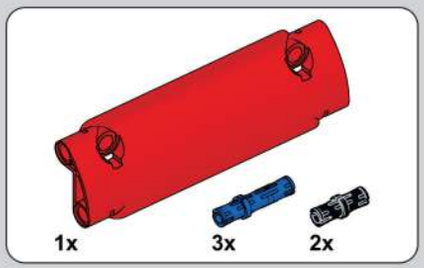

1302

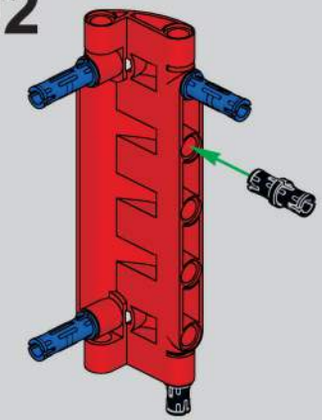

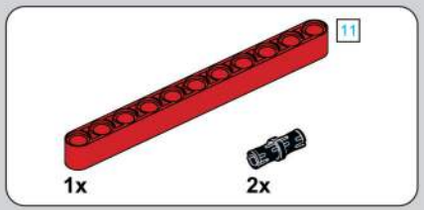

1303

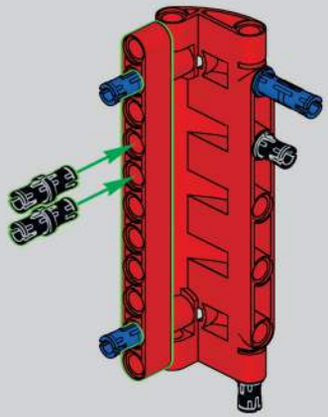

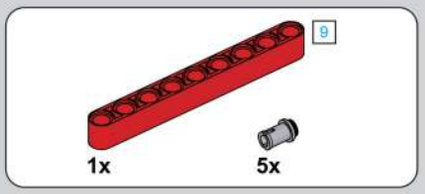

1304

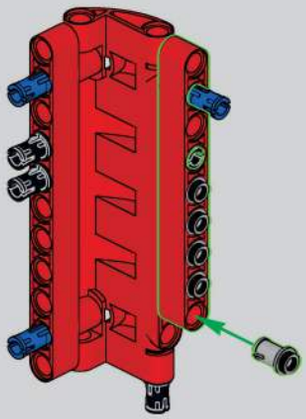

1305

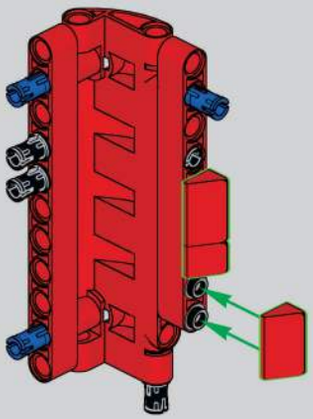

1306

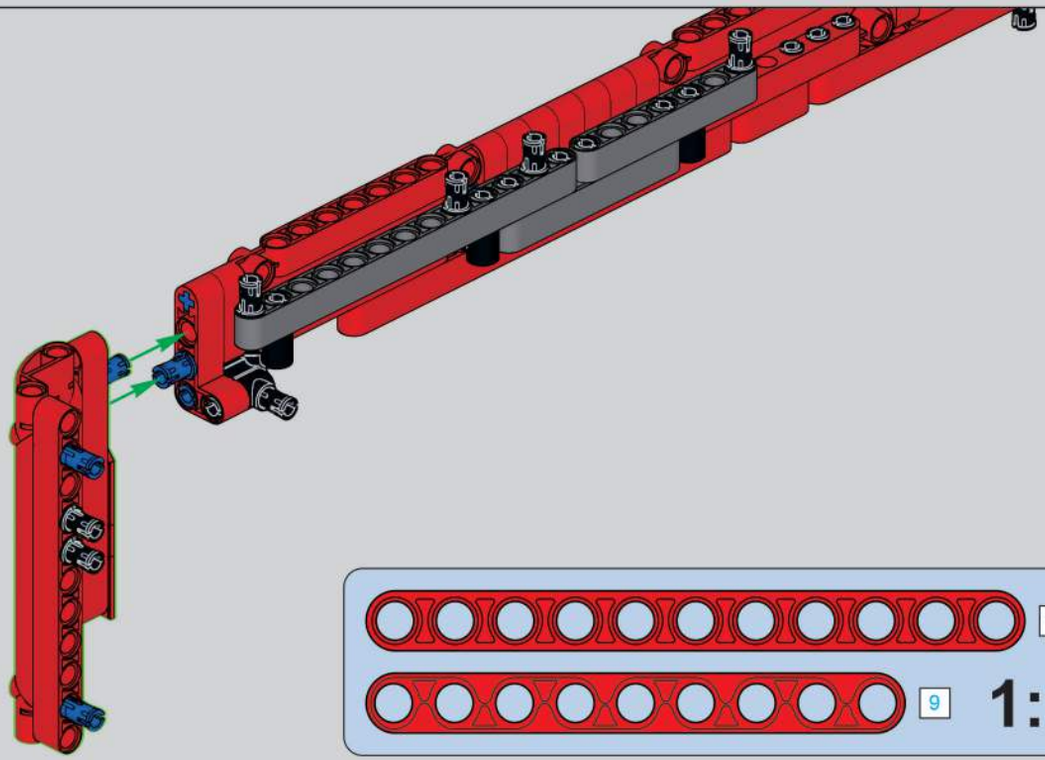

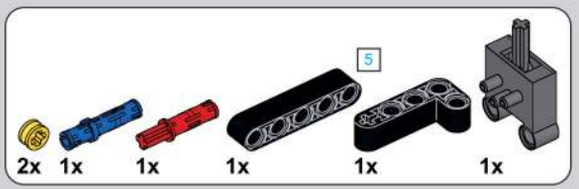

1307

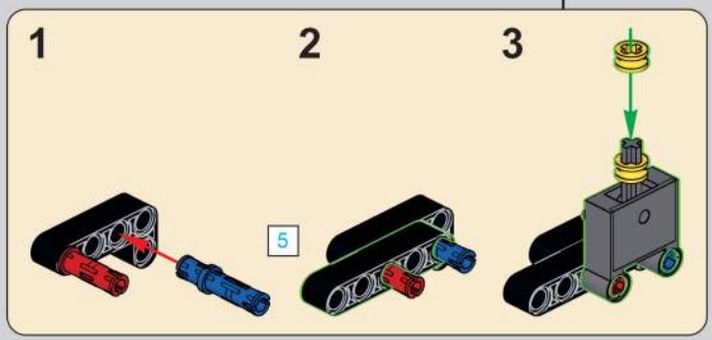

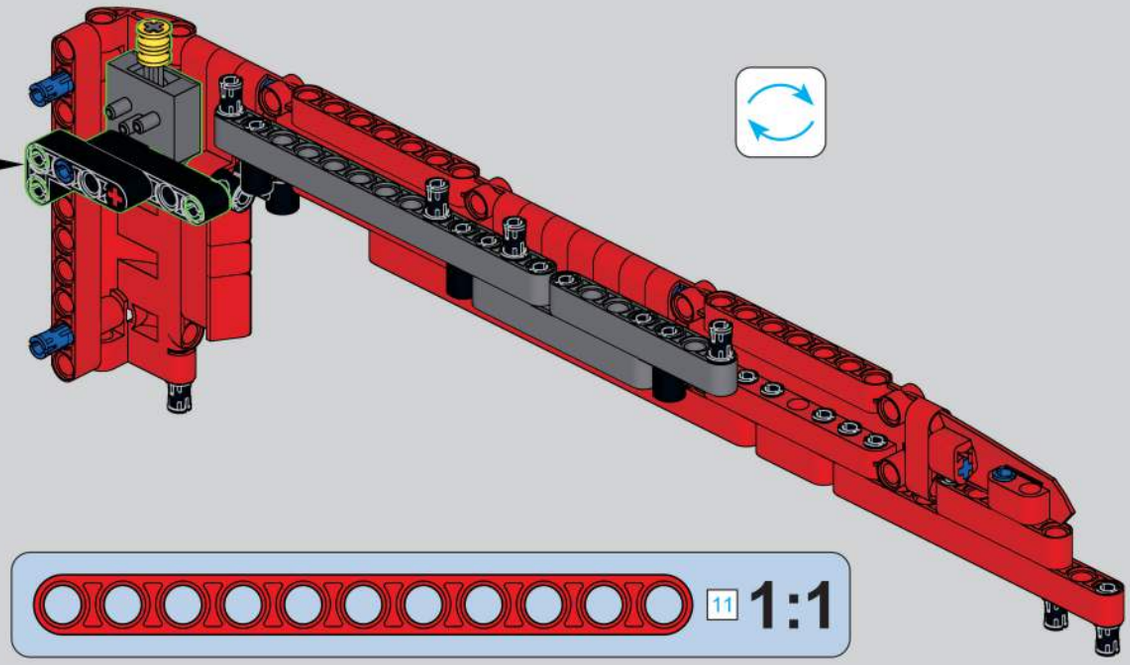

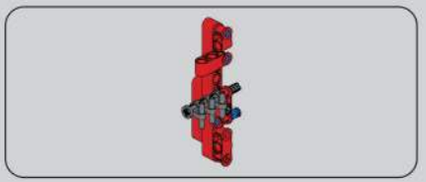

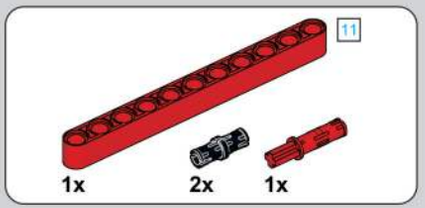

1308

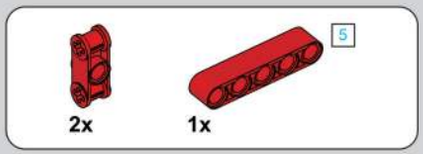

1309

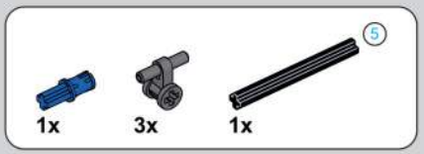

1310

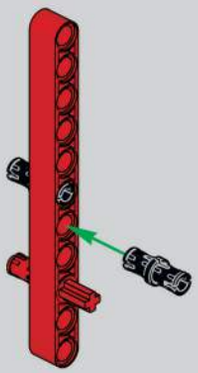

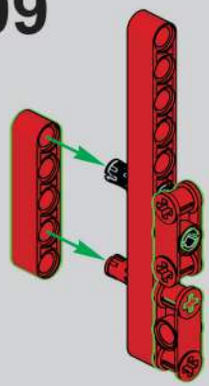

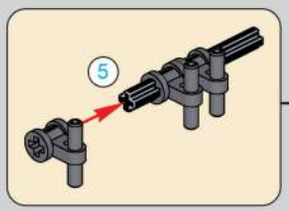

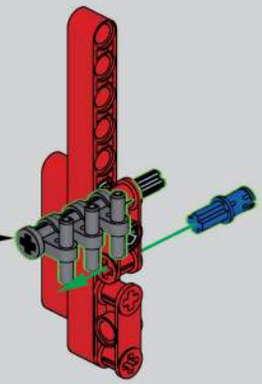

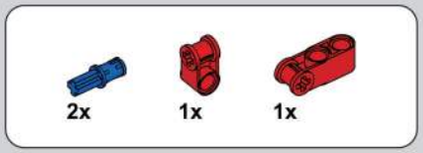

1311

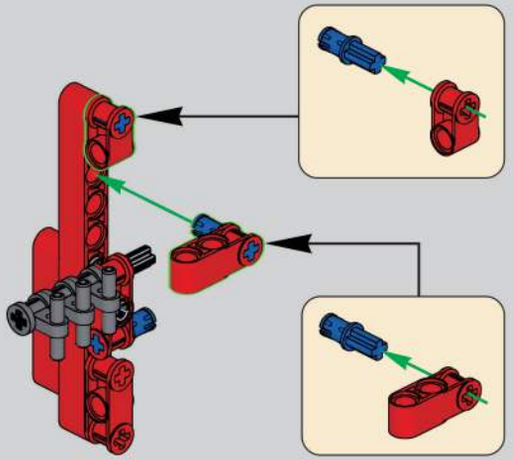

1312

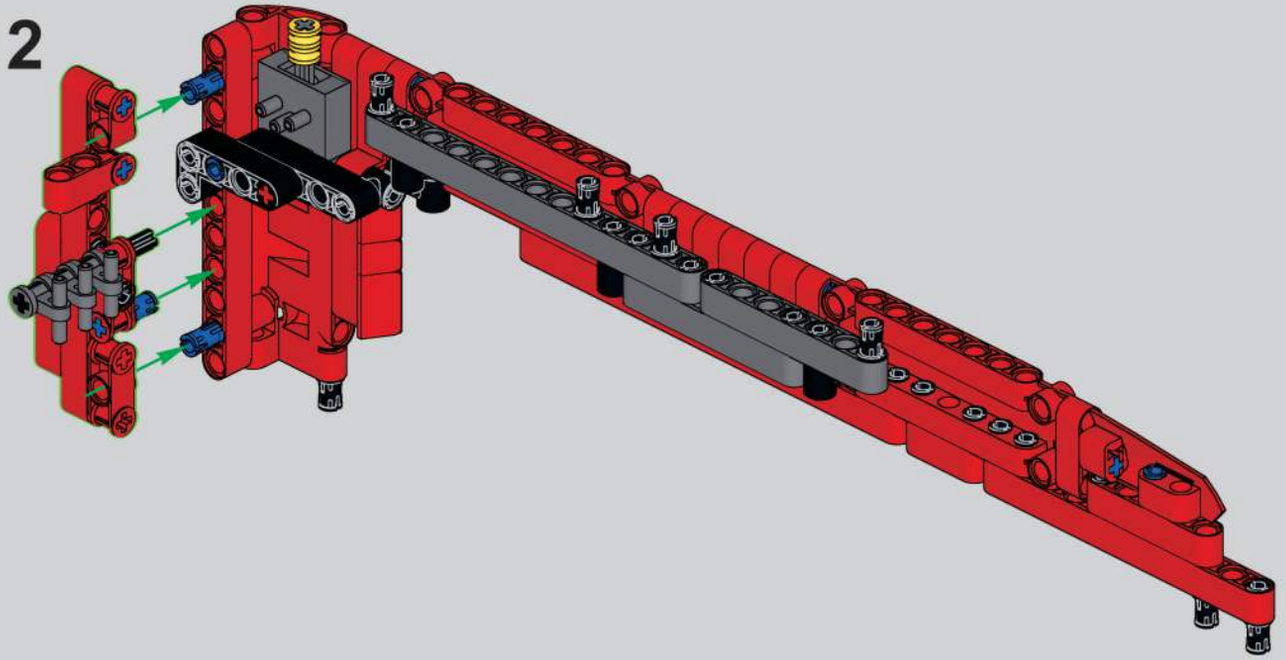

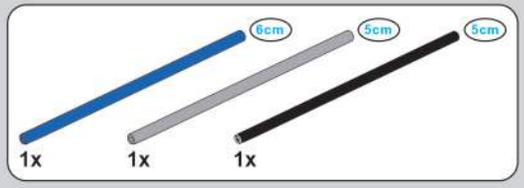

1313

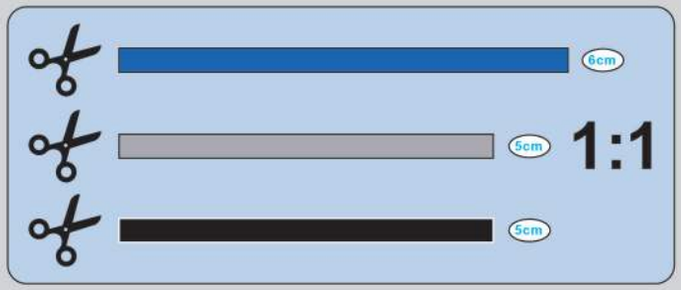

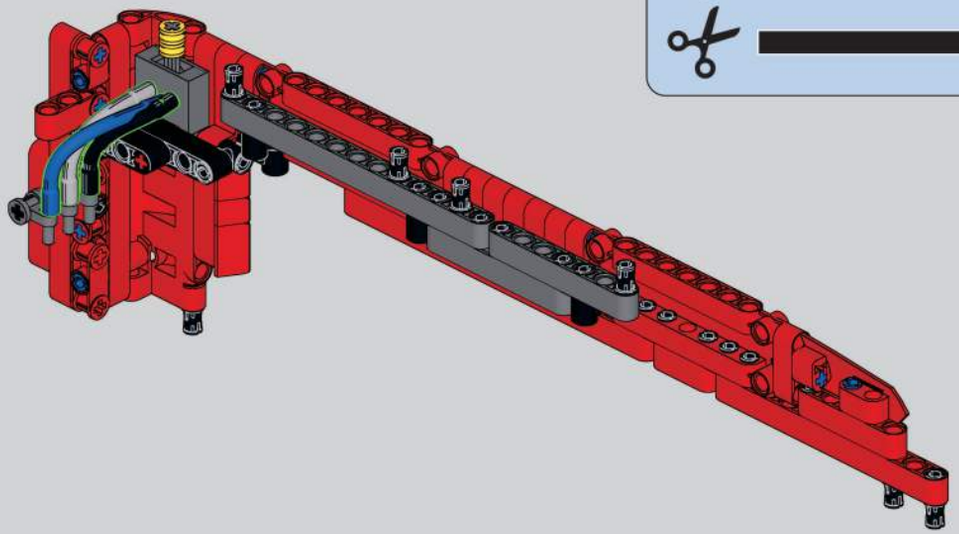

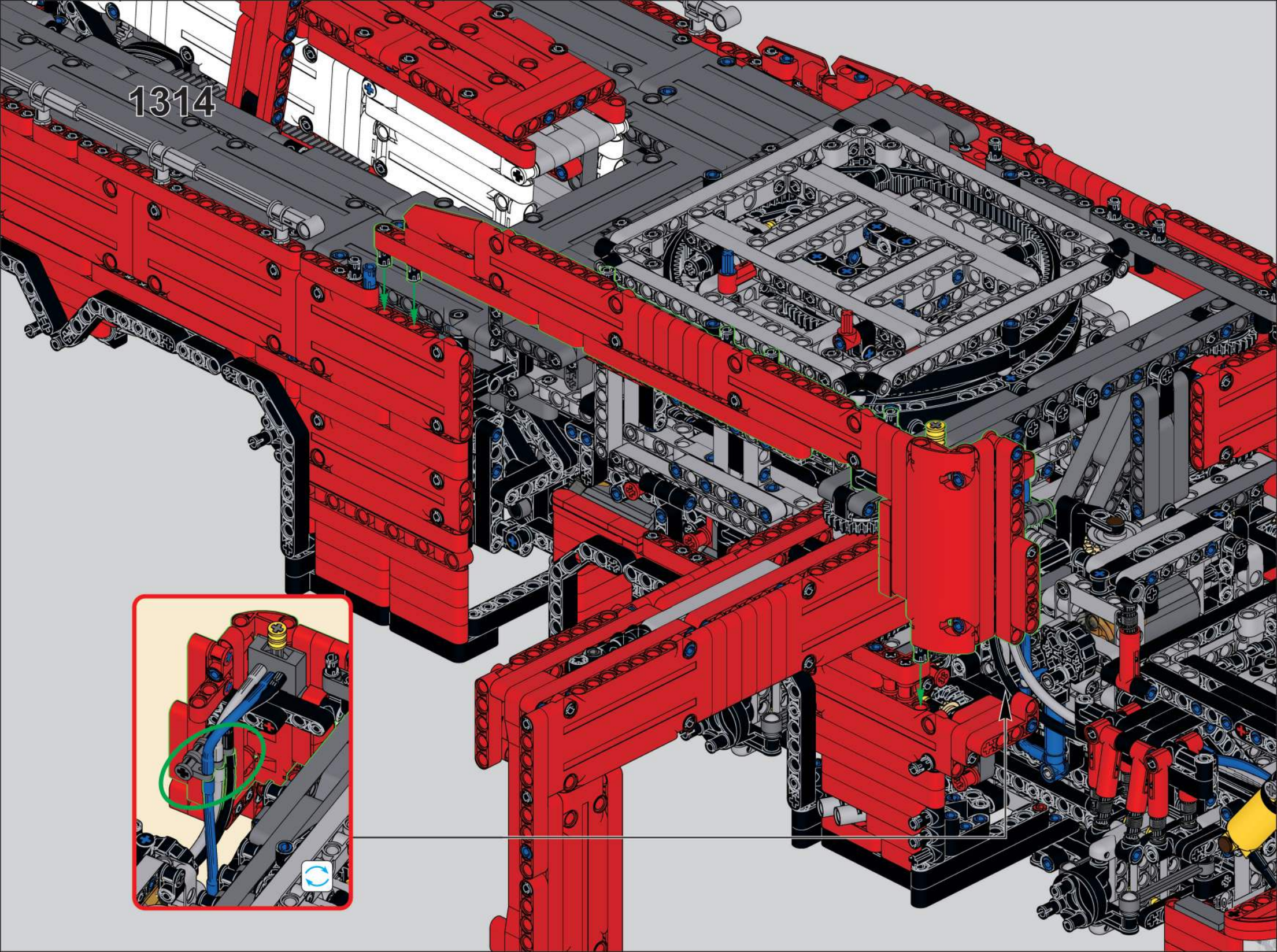
1314

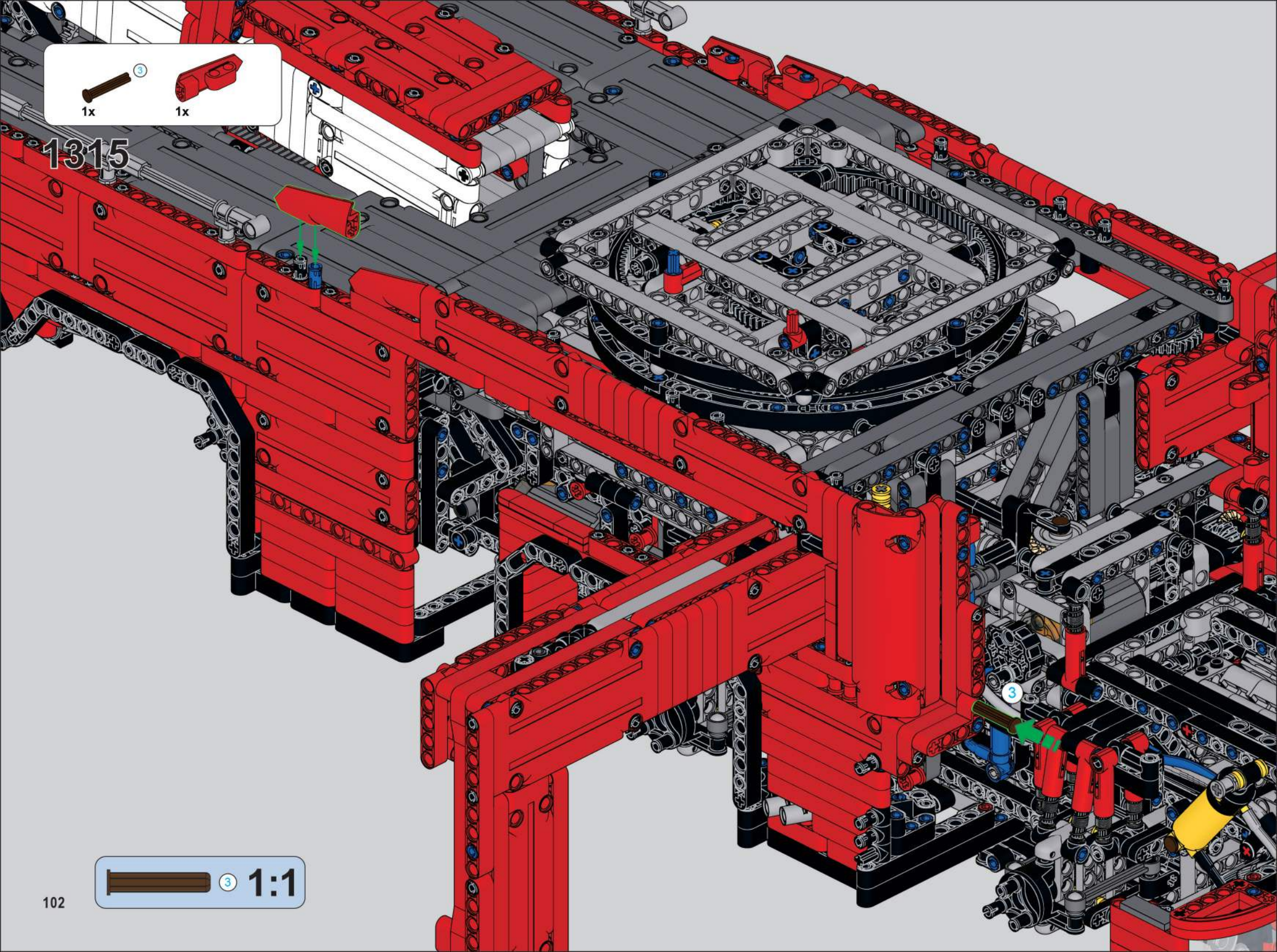
3
1x
1x
1315
3
3
1:1

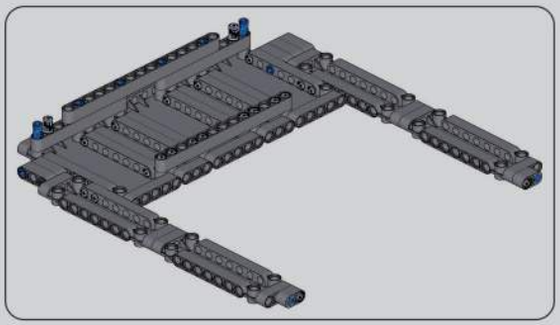

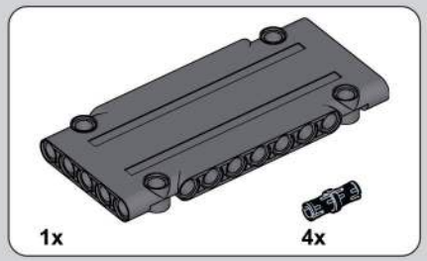

1316

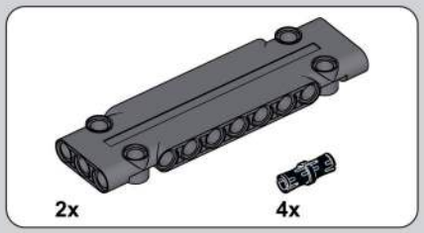

1317

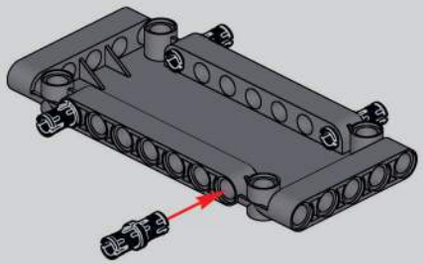

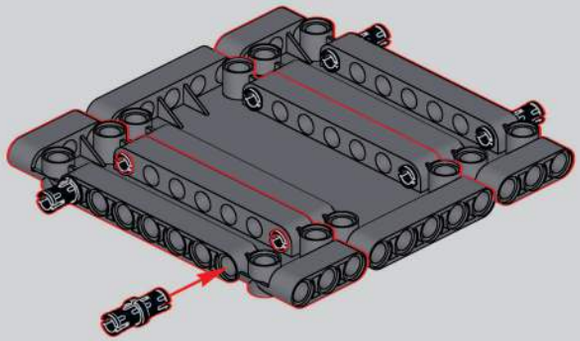

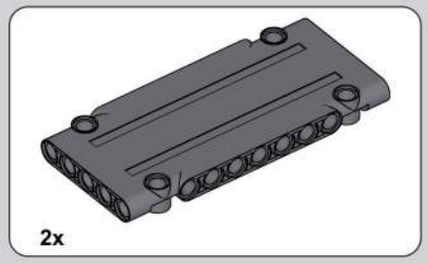

1318

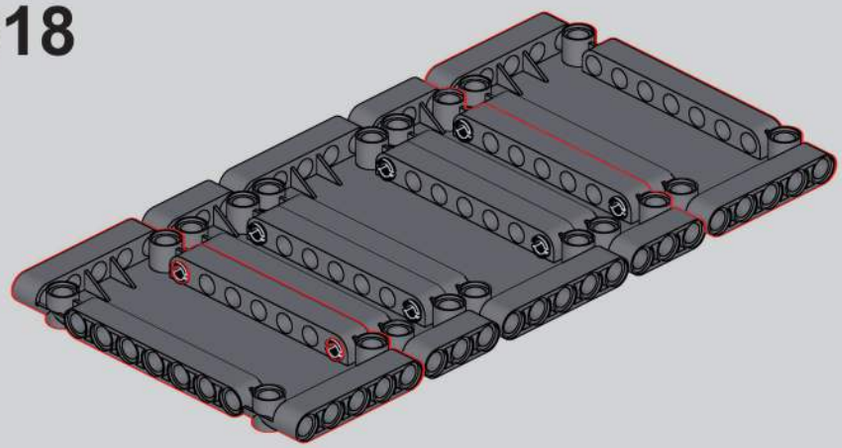

1319

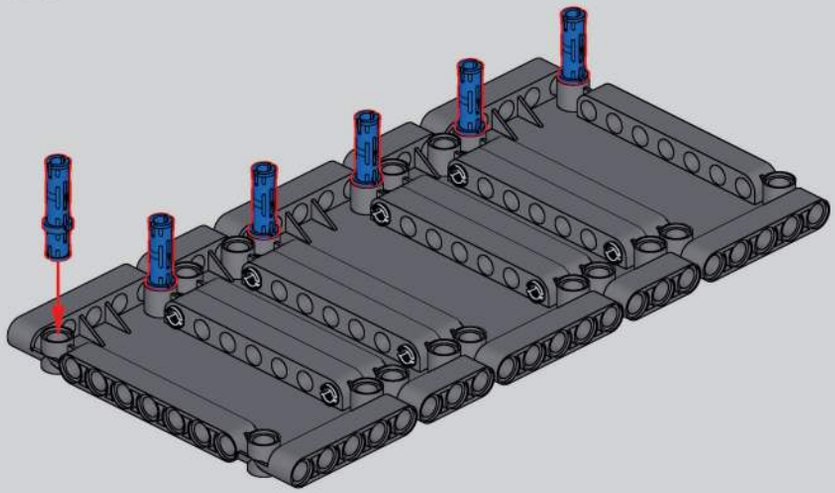

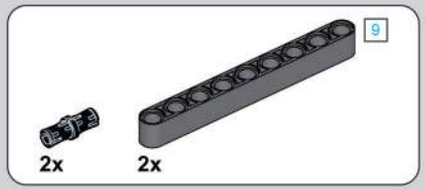

1320

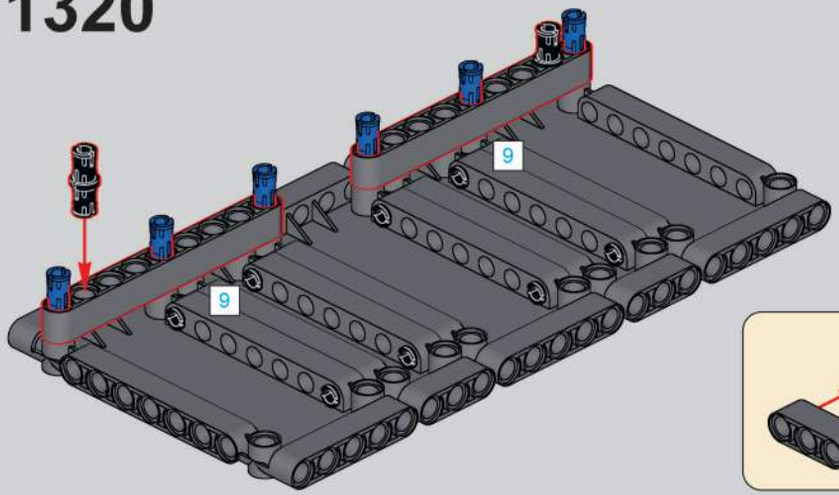

1321

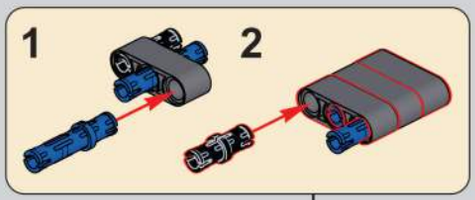

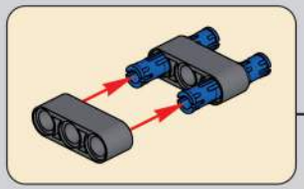

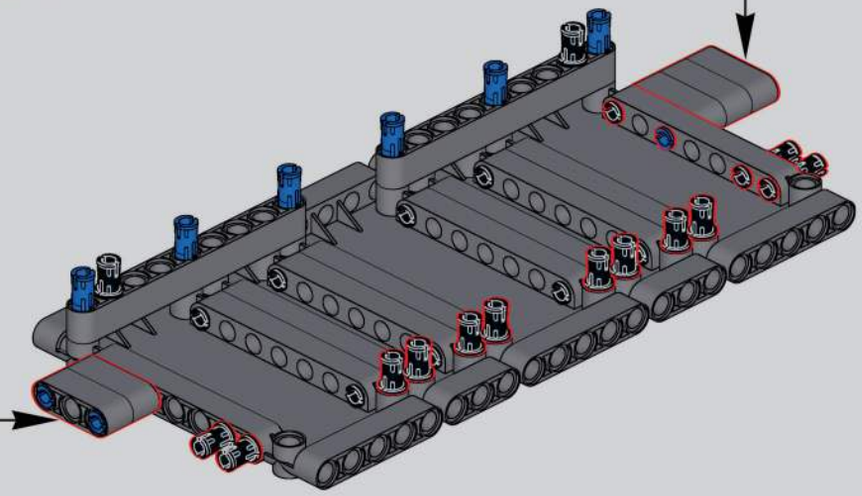

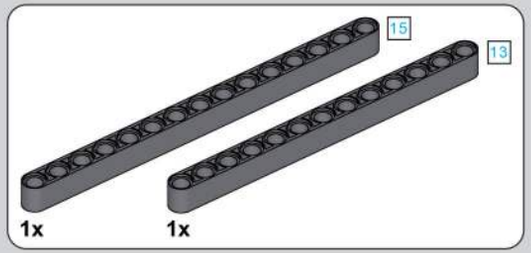

1322

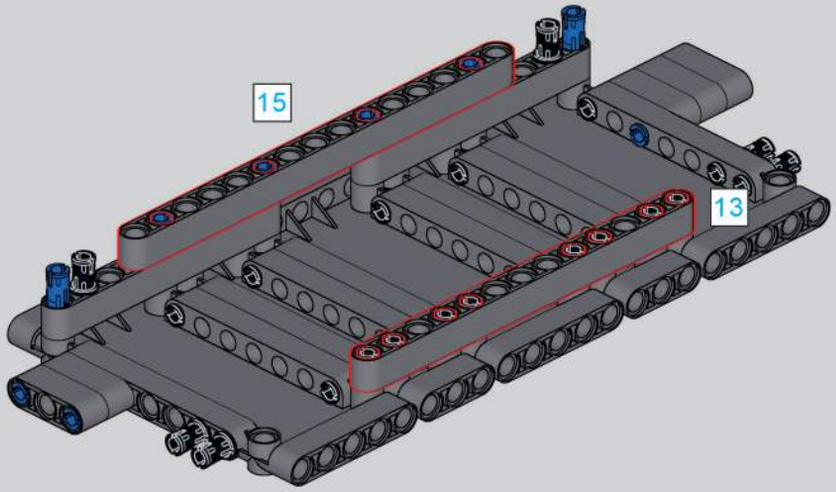

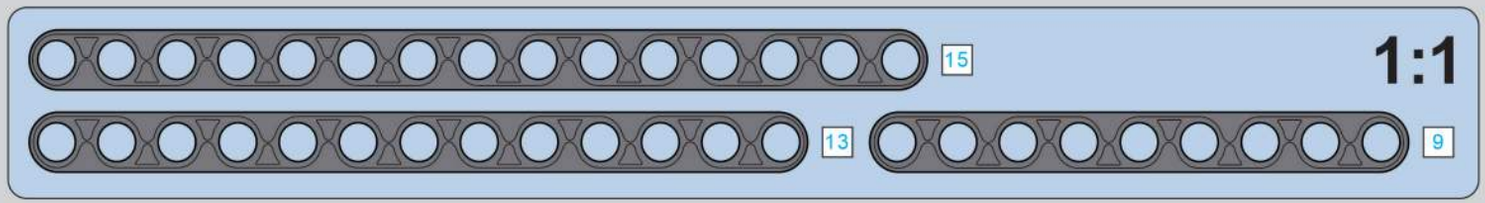

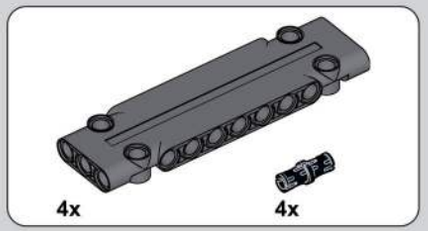

1323

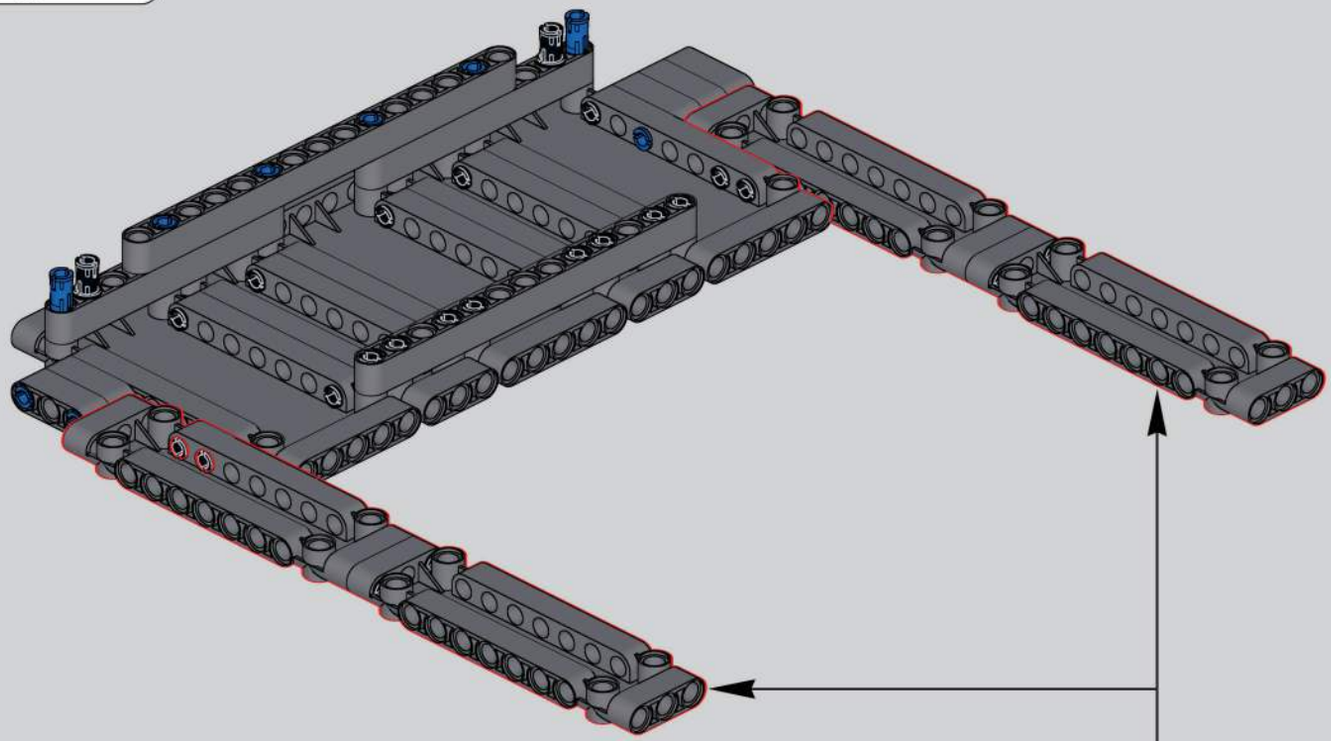

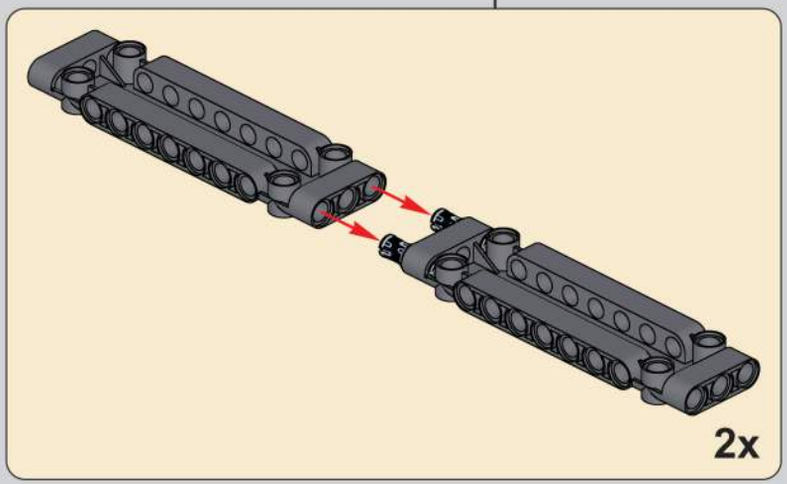

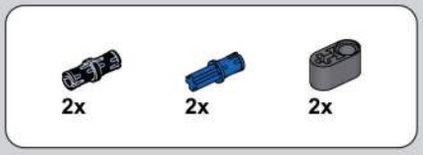

1324

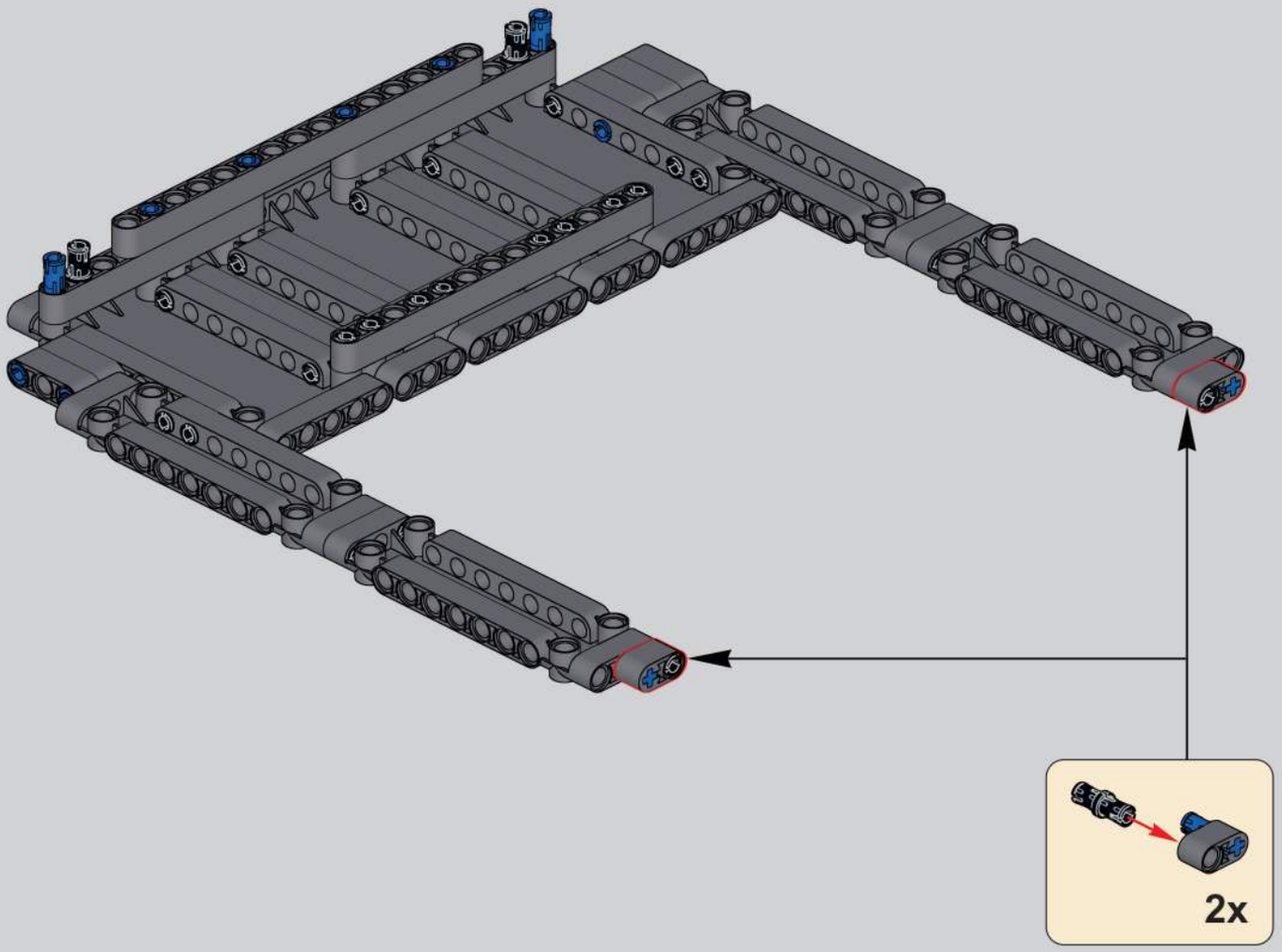

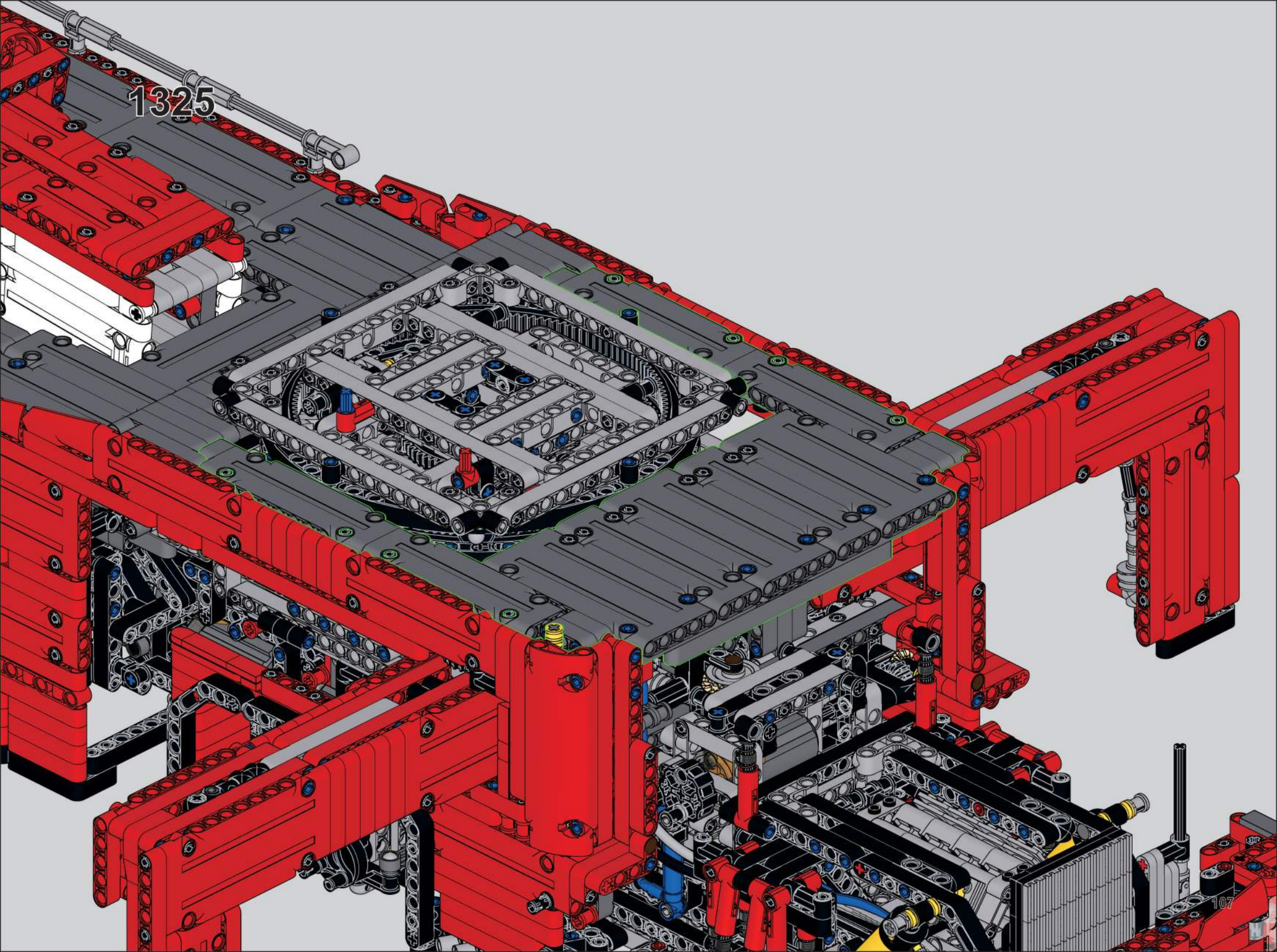
1325
107

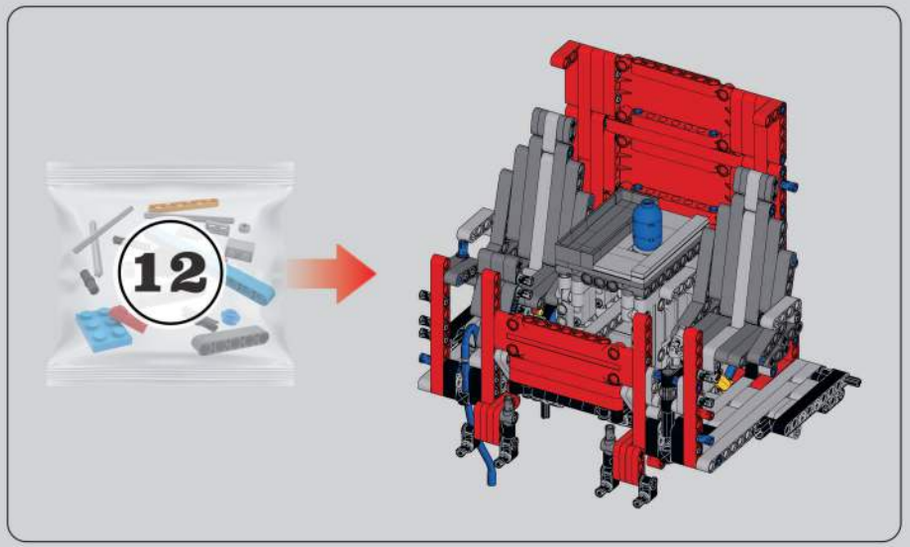

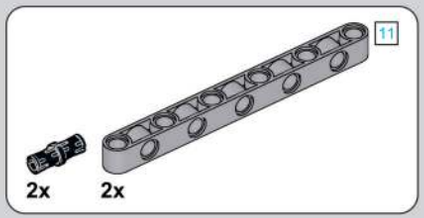

1326

1327

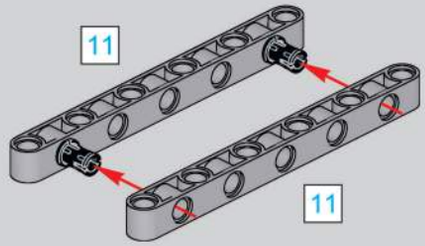

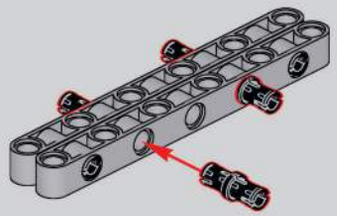

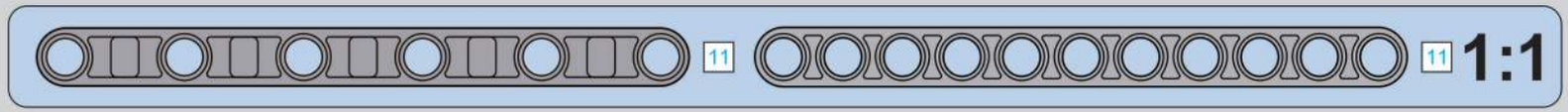

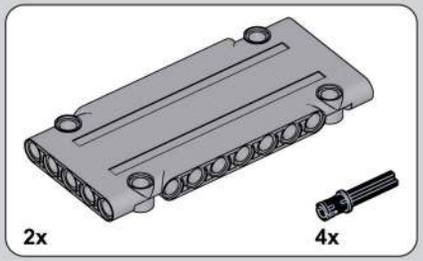

1328

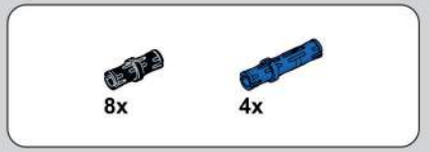

1329

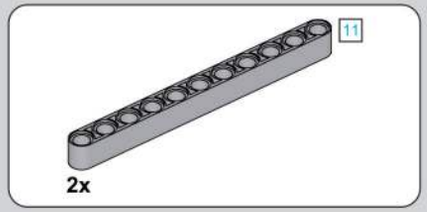

1330

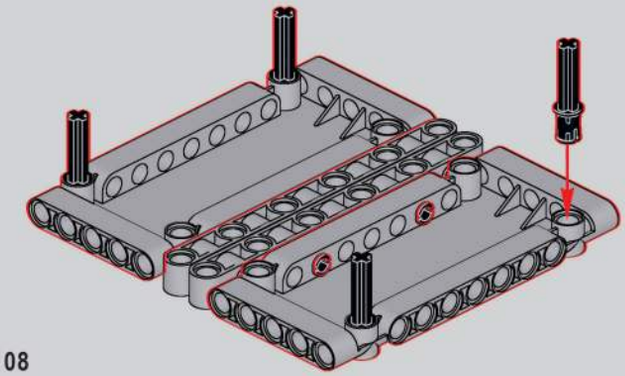

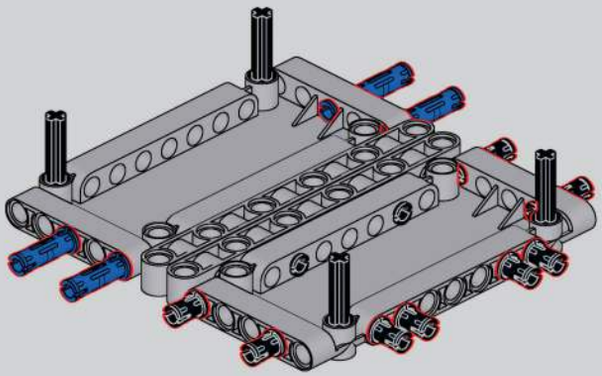

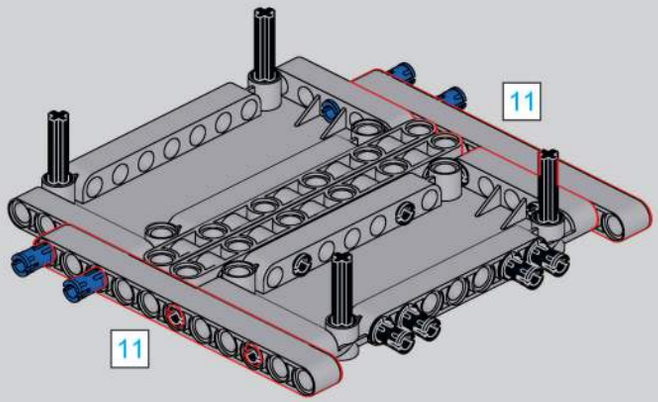

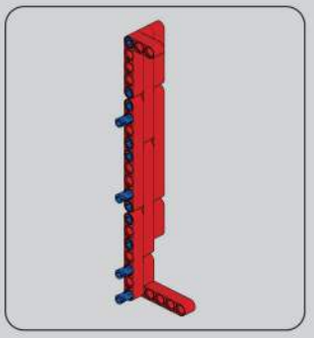

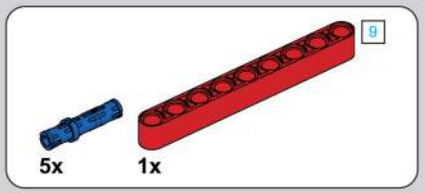

1331

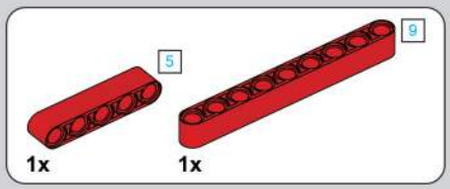

1332

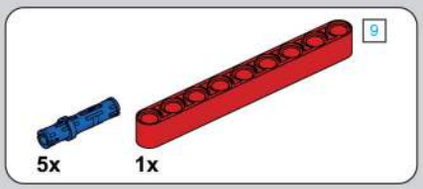

1333

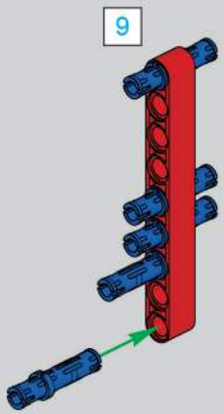

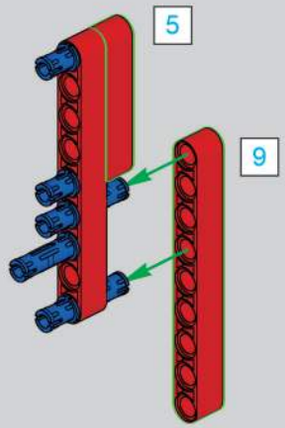

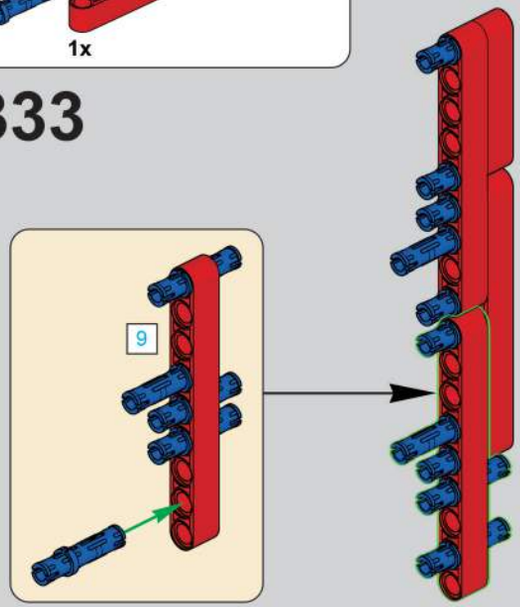

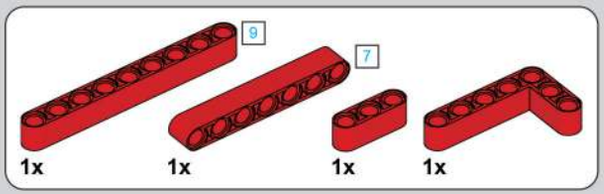

1334

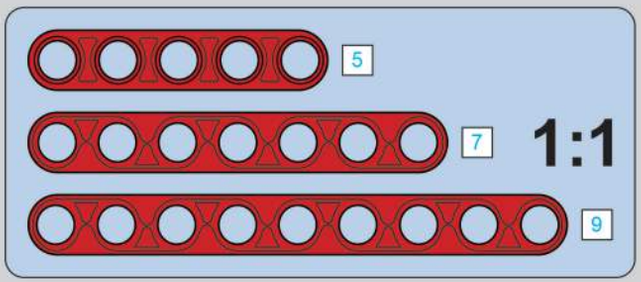

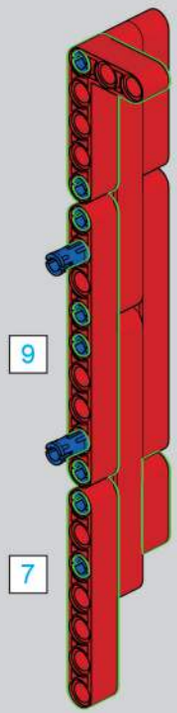

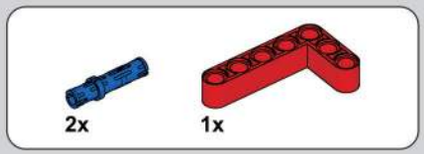

1335

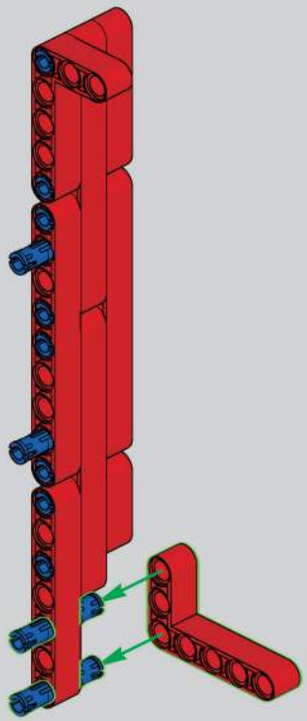

1336

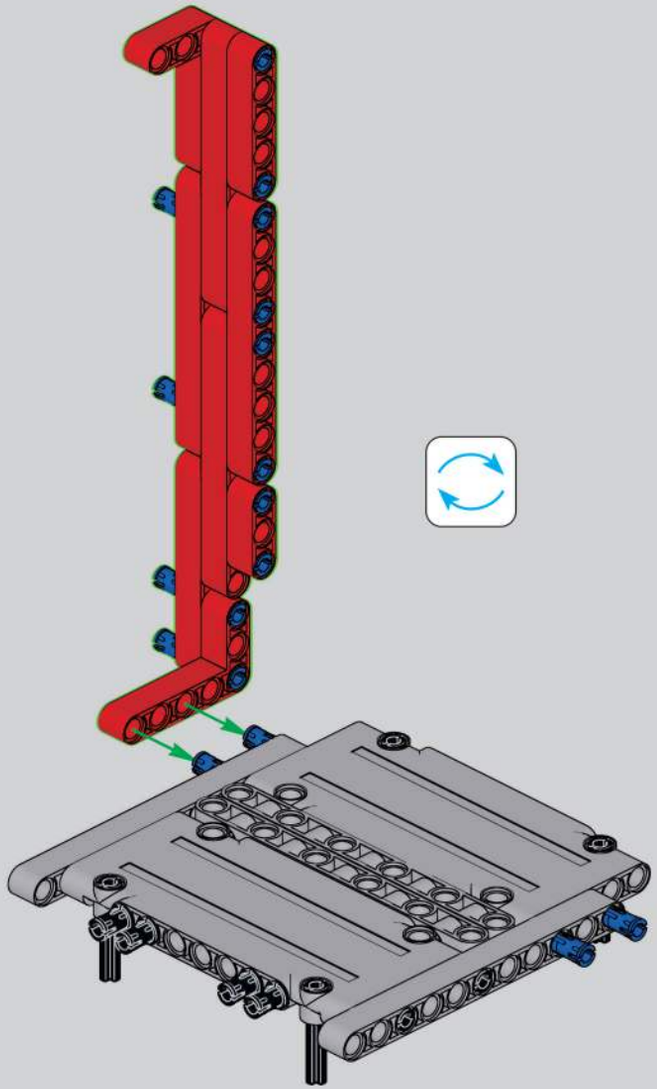

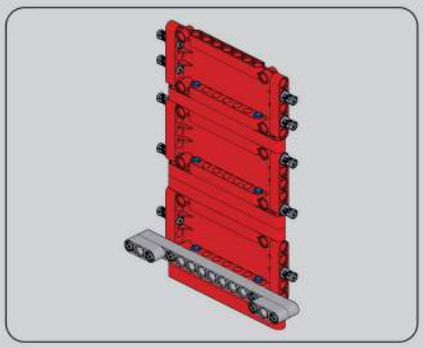

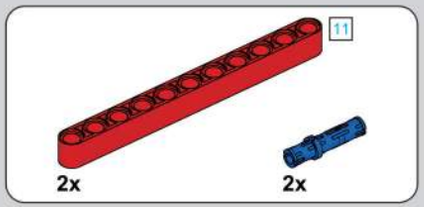

1337

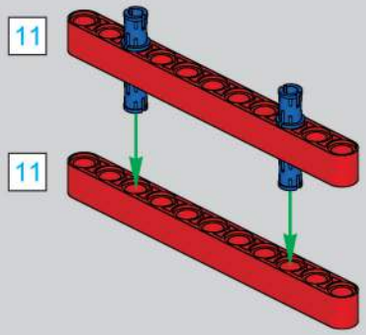

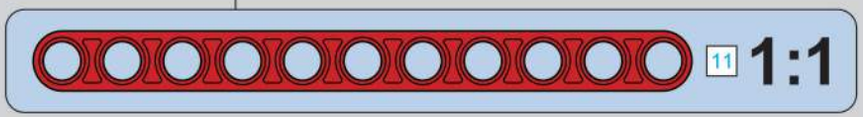

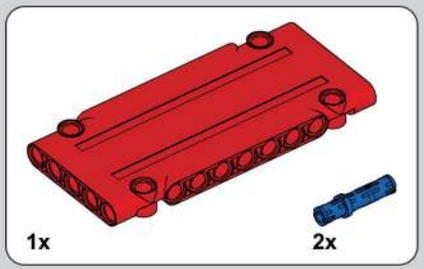

1338

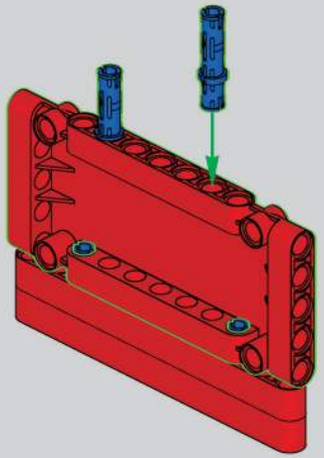

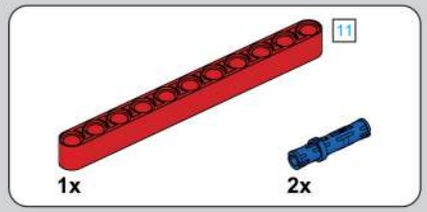

1339

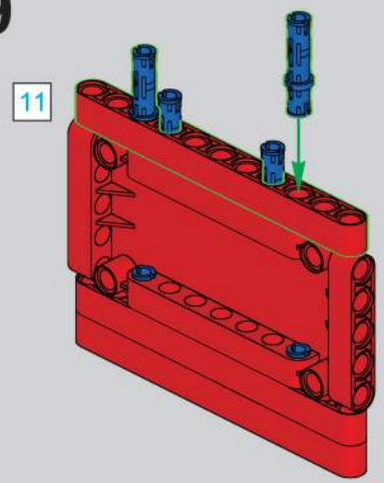

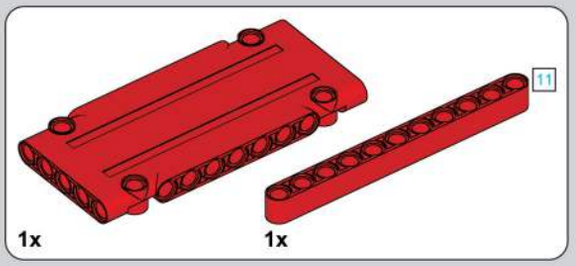

1340

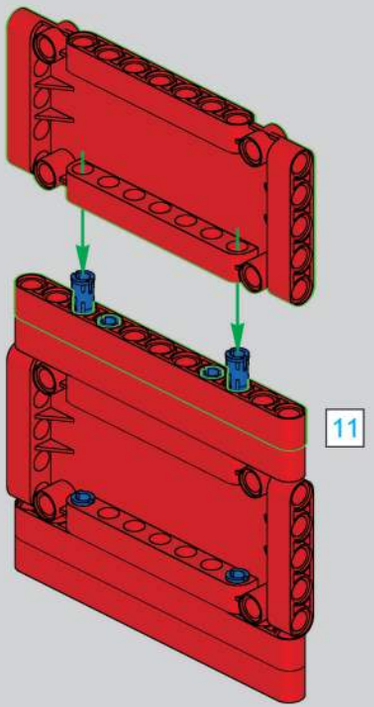

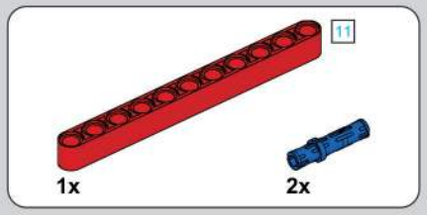

1341

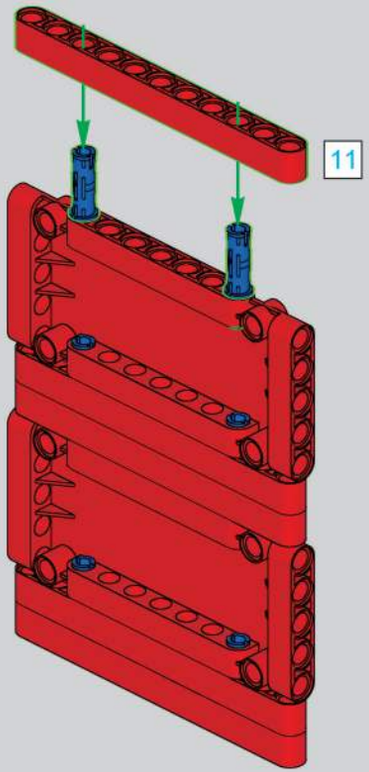

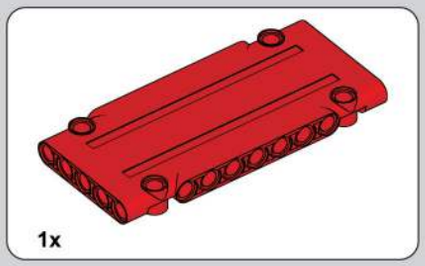

1342

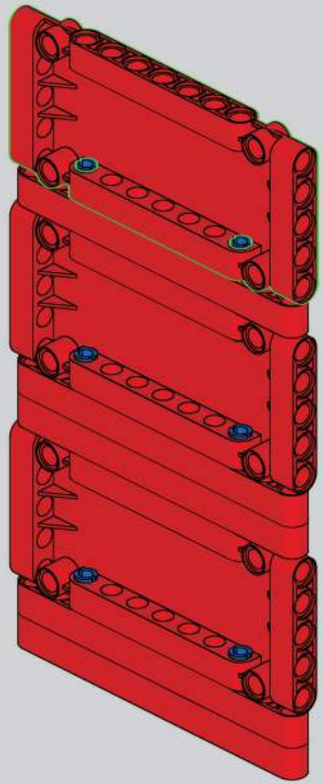

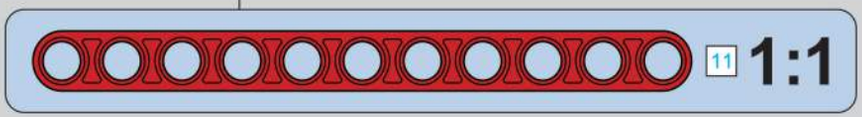

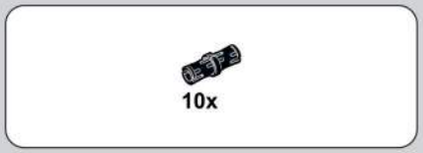

1343

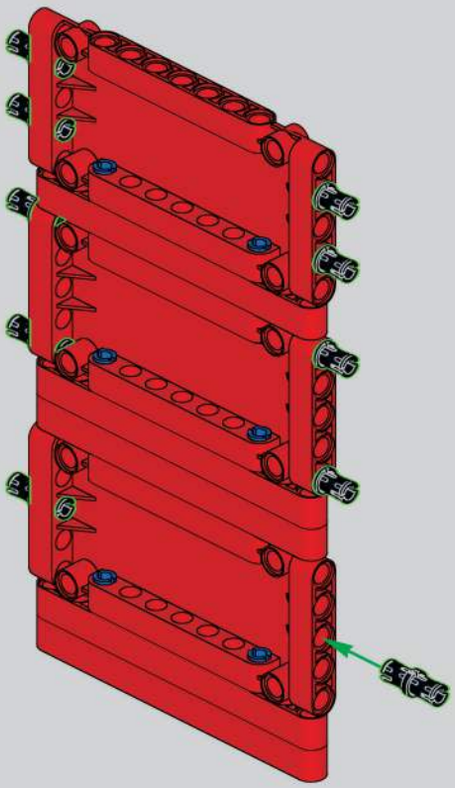

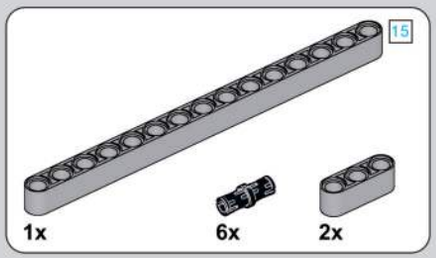

1344

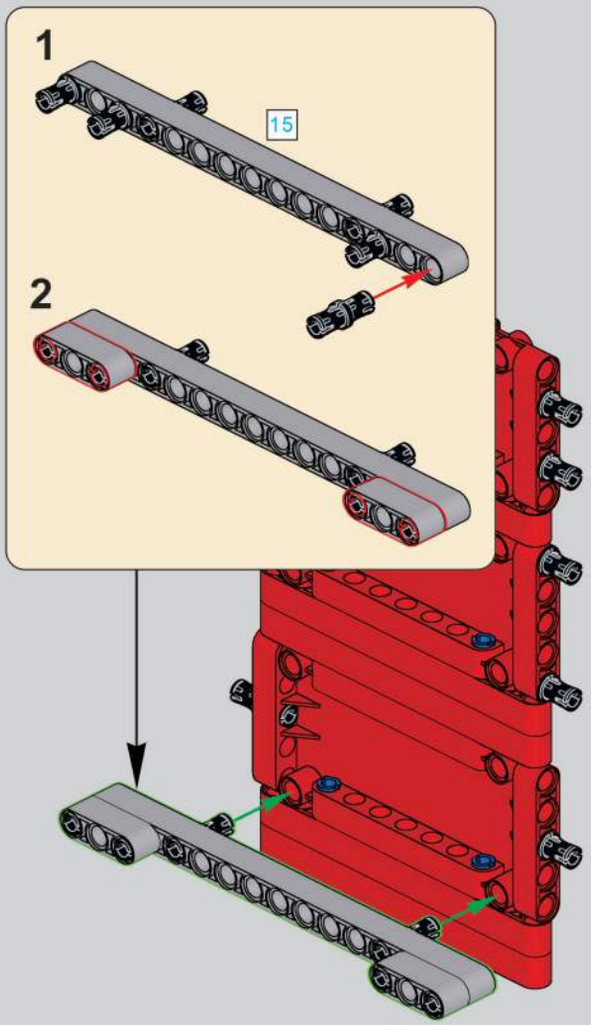

1345

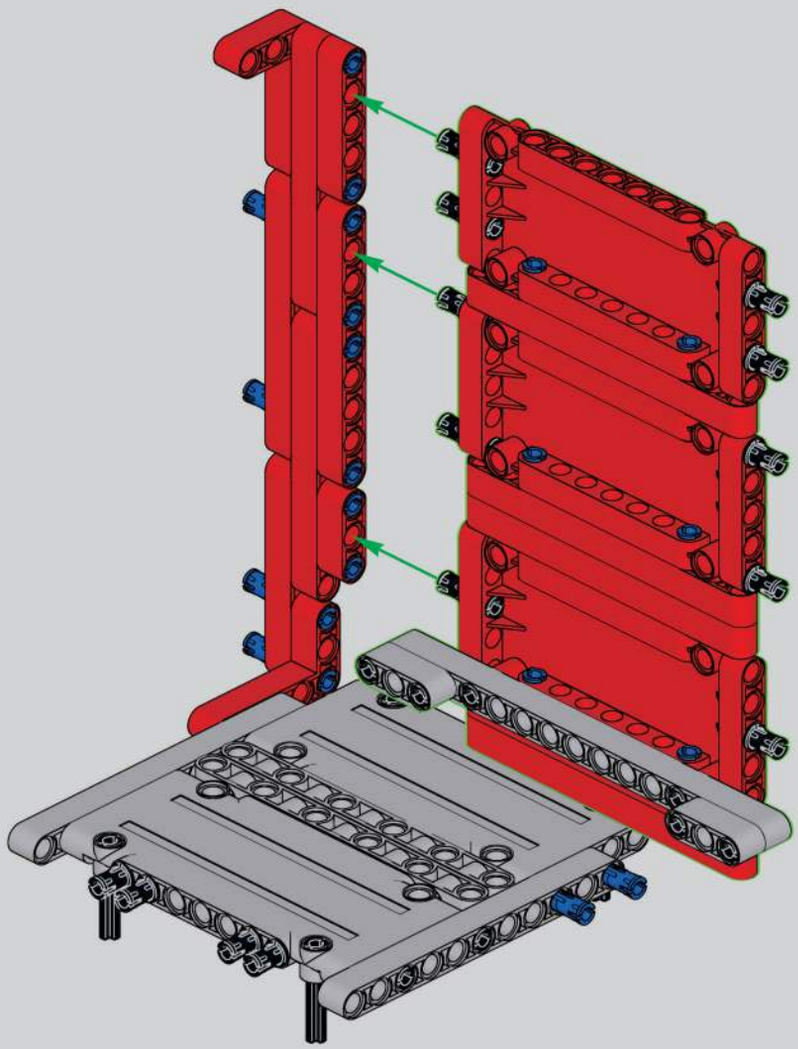

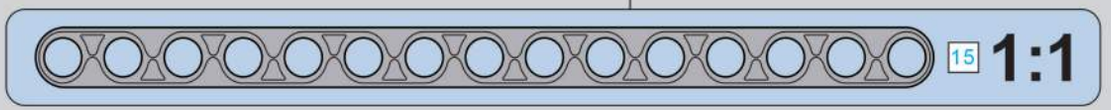

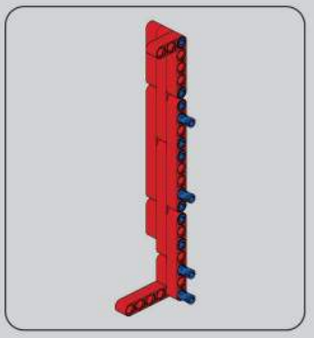

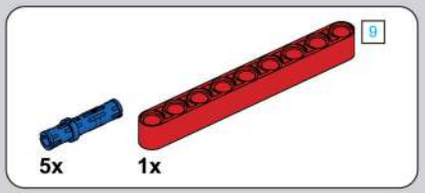

1346

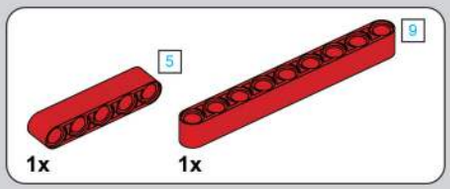

1347

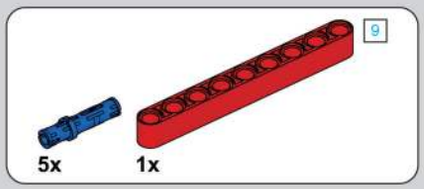

1348

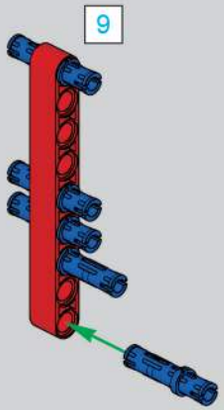

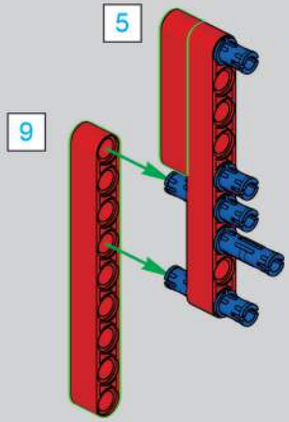

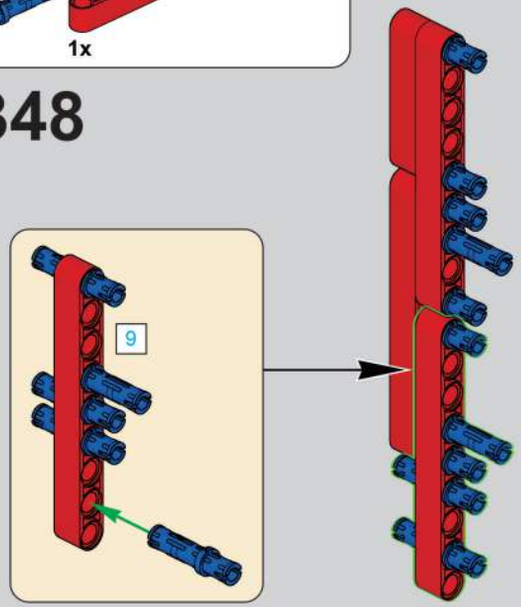

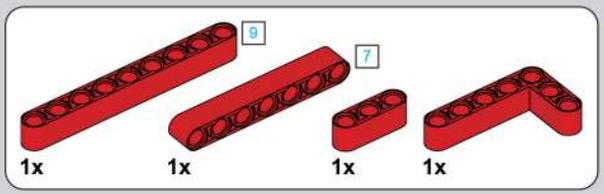

1349

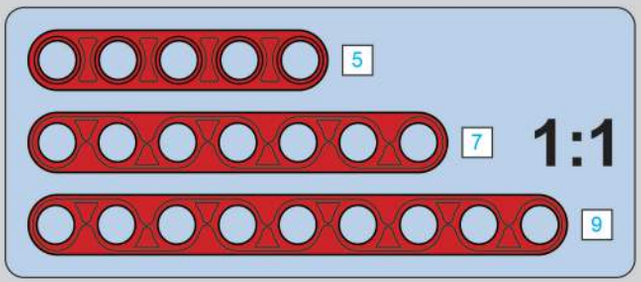

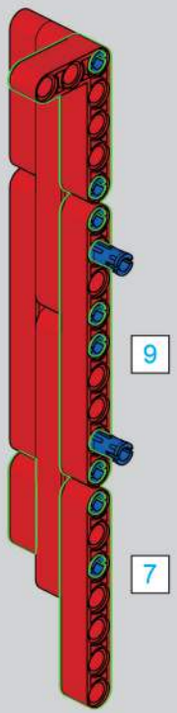

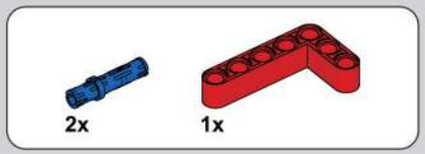

1350

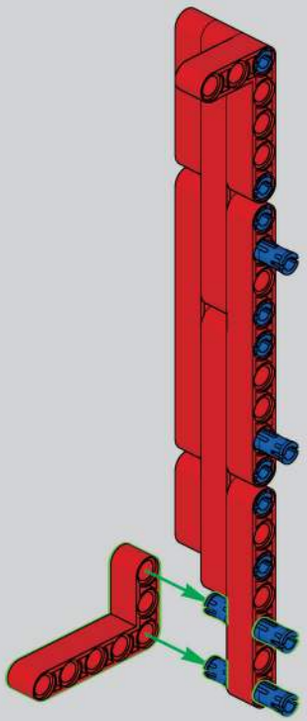

1351

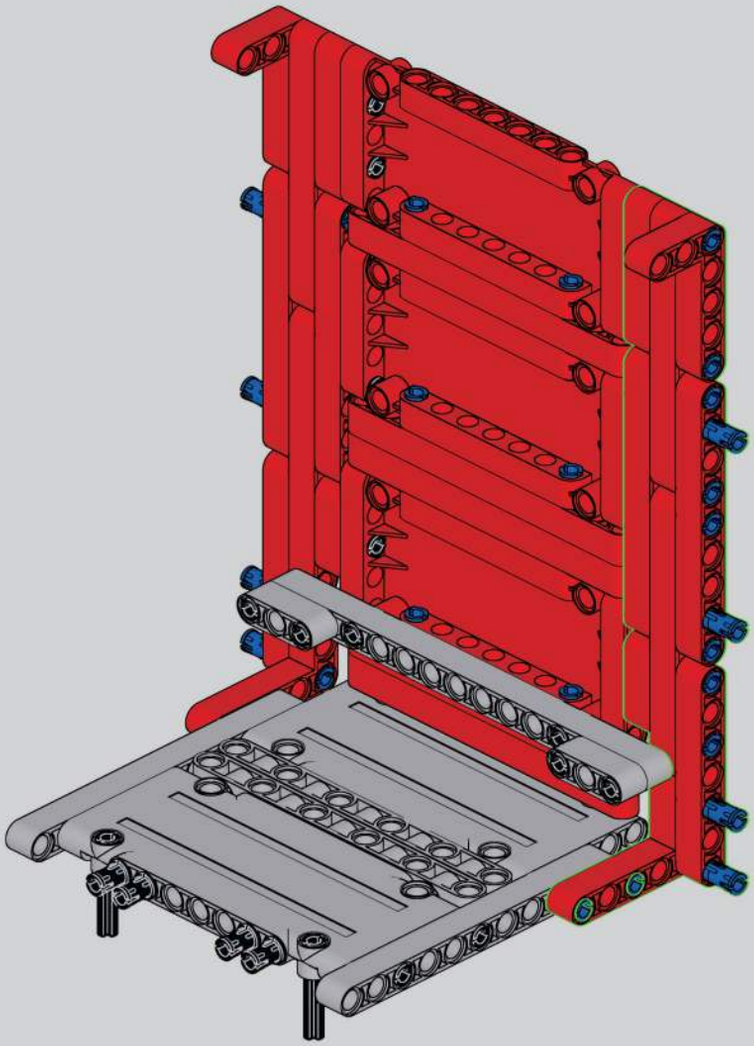

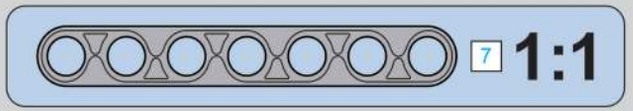

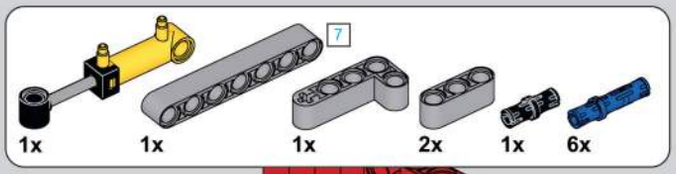

1352

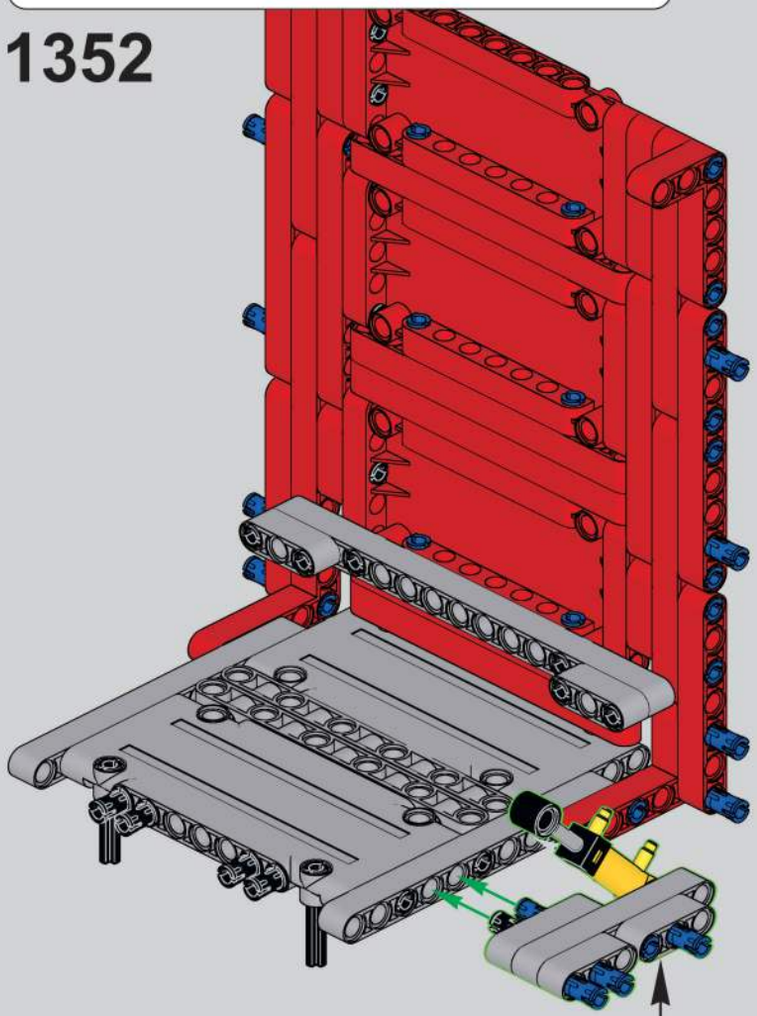

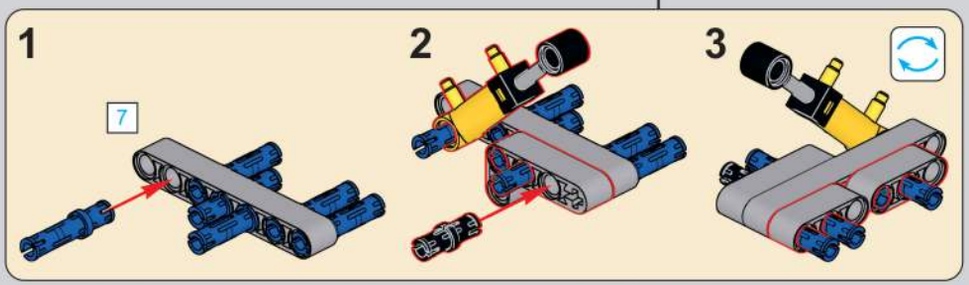

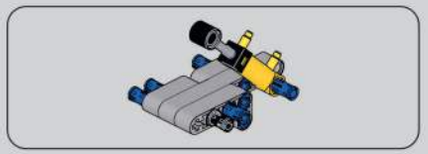

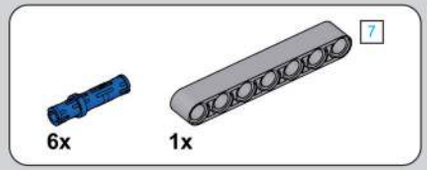

1353

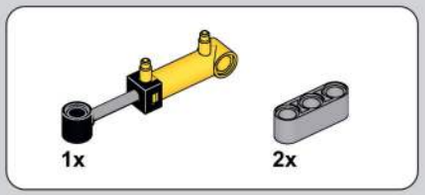

1354

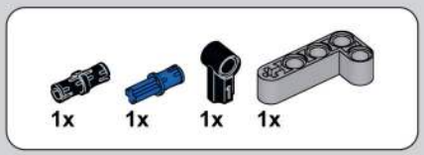

1355

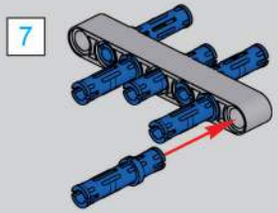

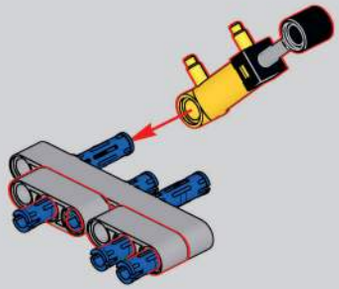

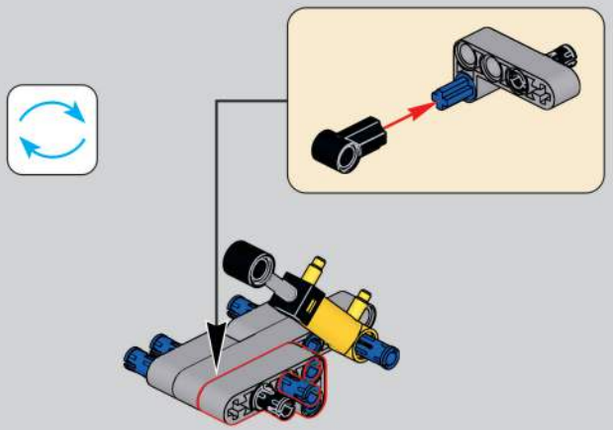

1356

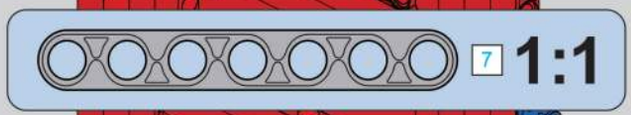

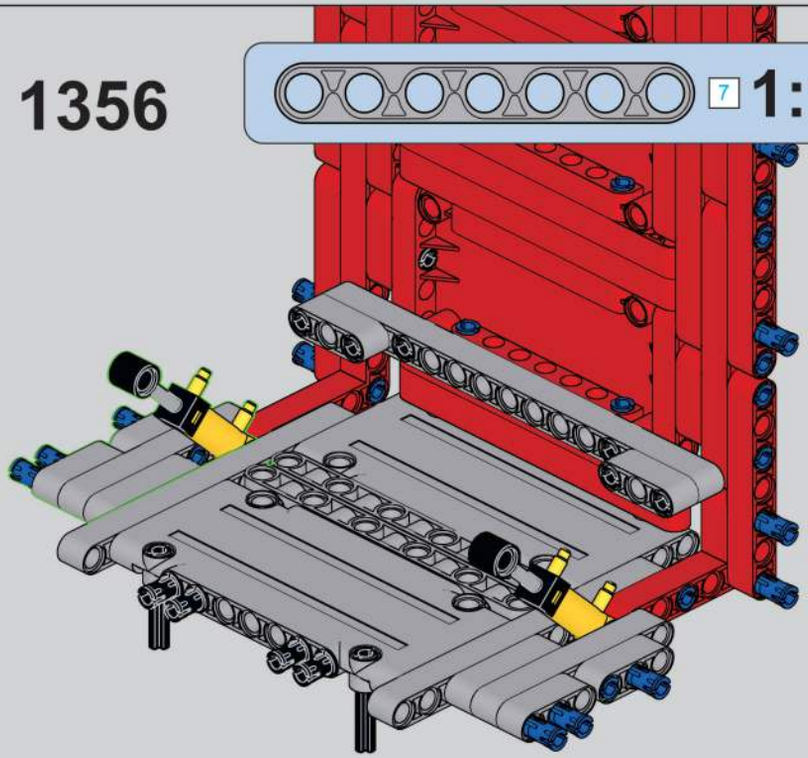

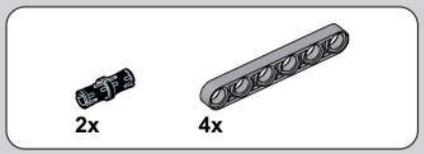

1357

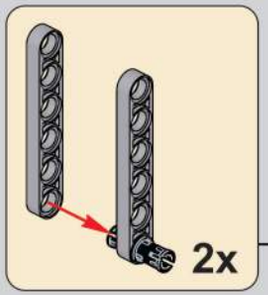

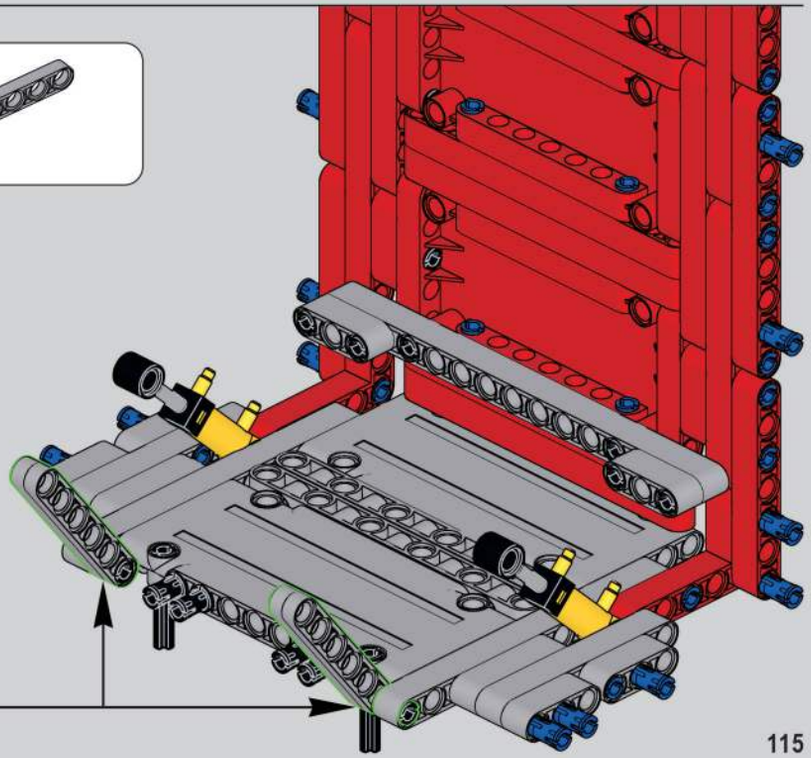

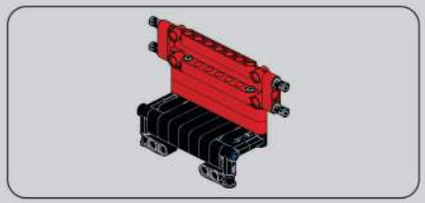

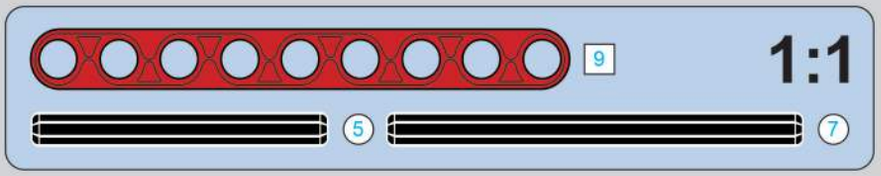

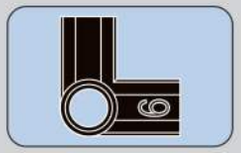

1358

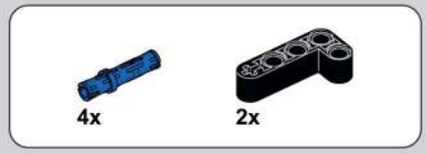

1359

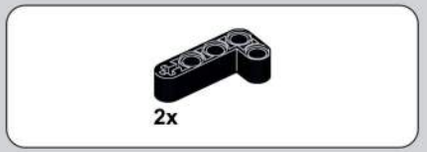

1360

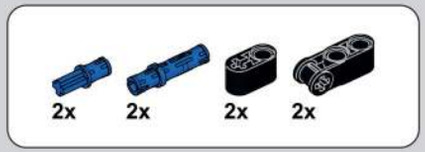

1361

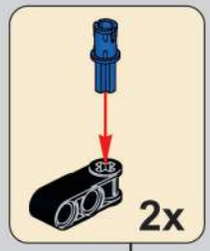

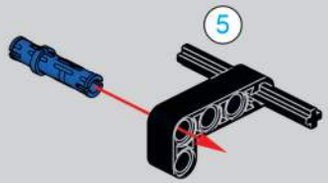

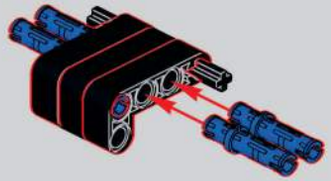

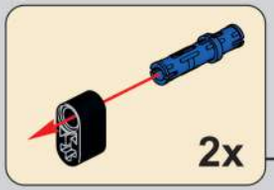

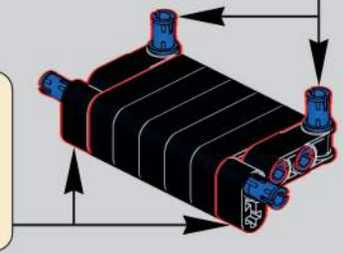

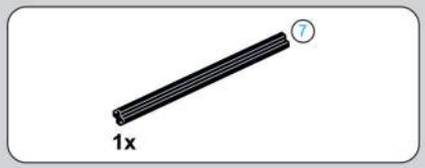

1362

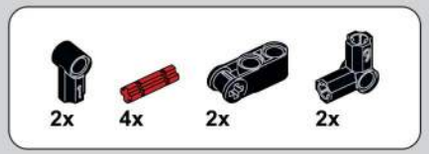

1363

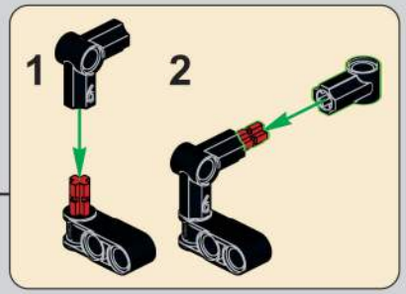

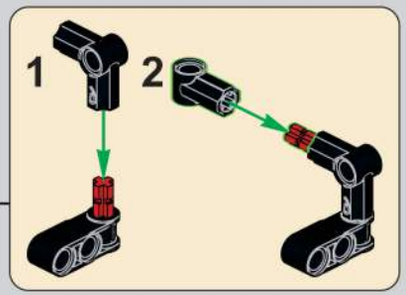

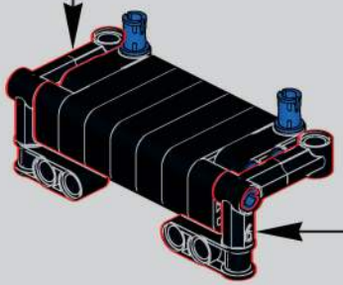

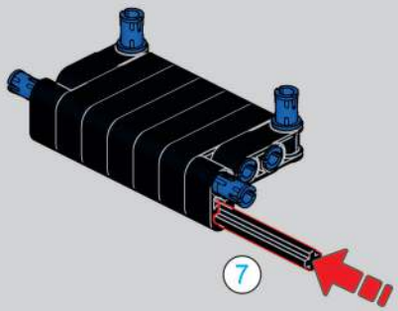

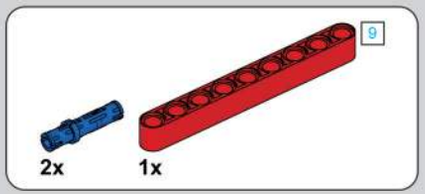

1364

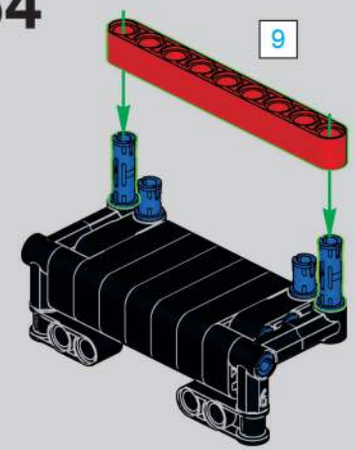

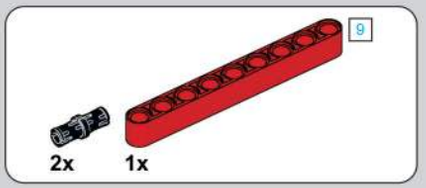

1365

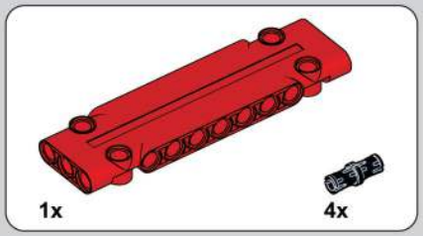

1366

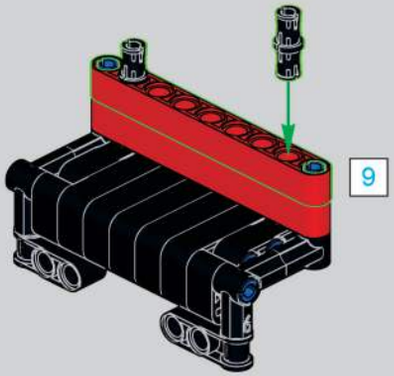

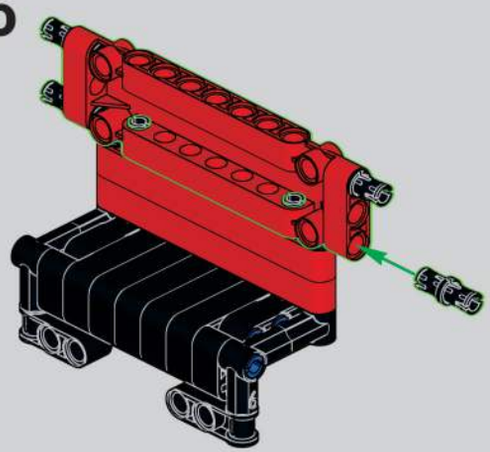

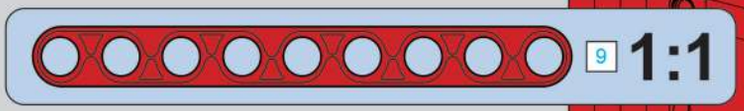

1367

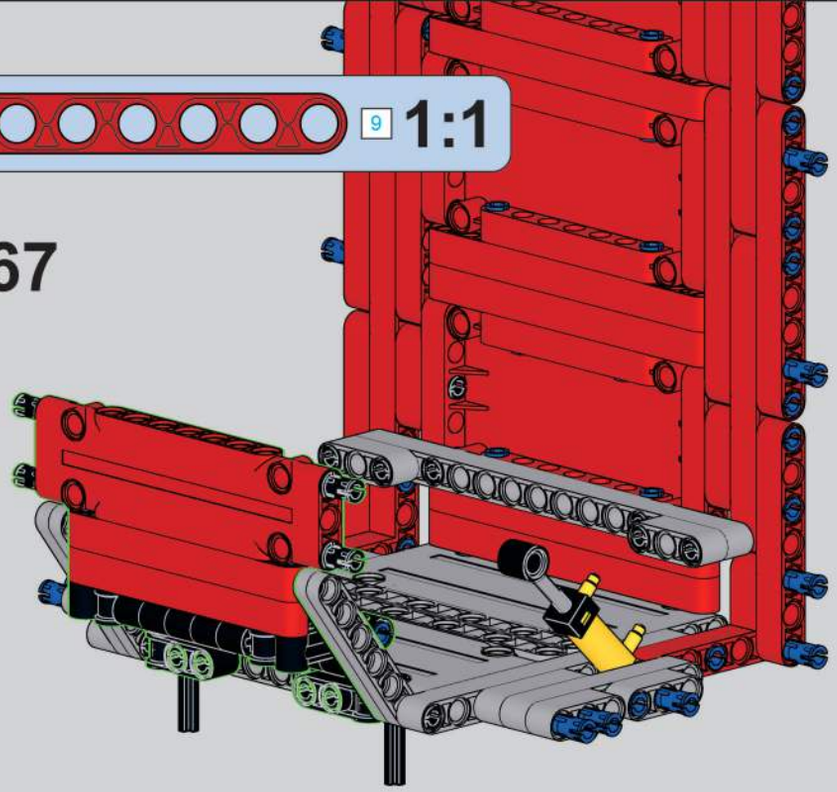

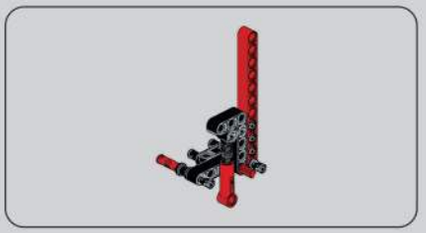

1368

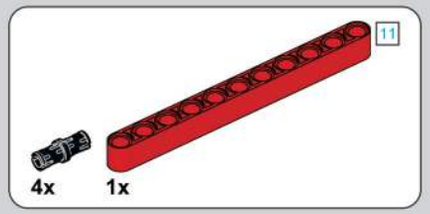

1369

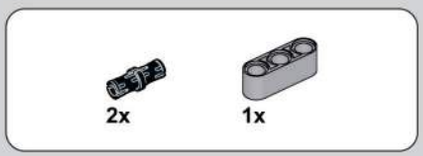

1370

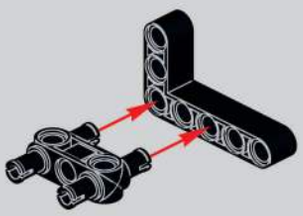

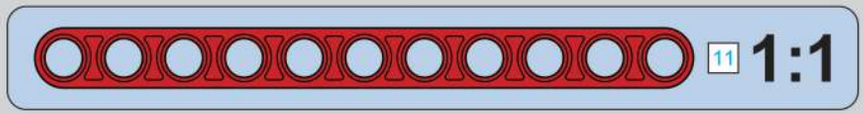

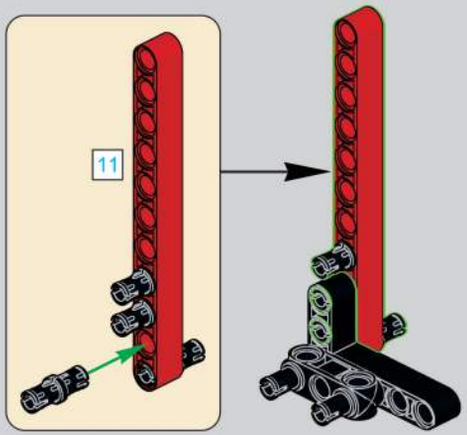

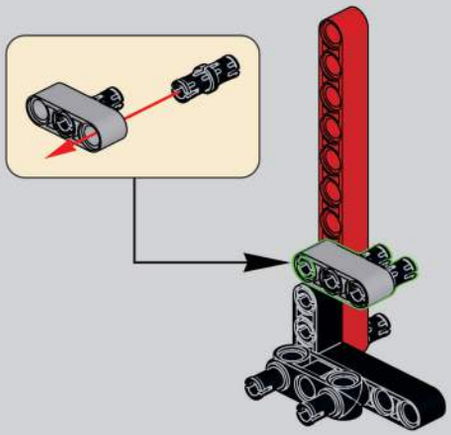

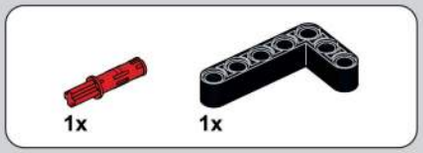

1371

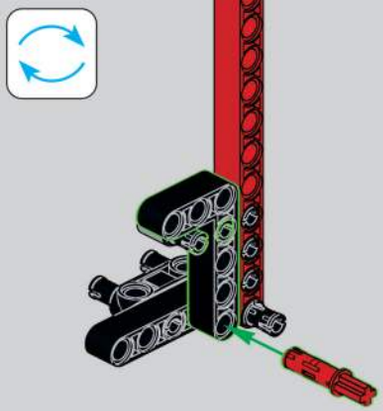

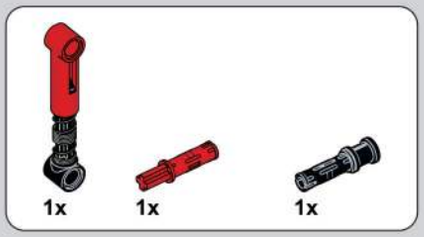

1372

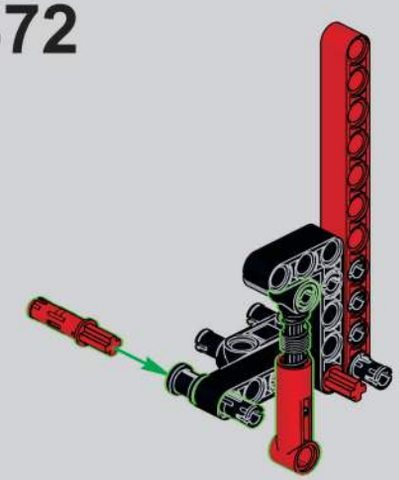

1373

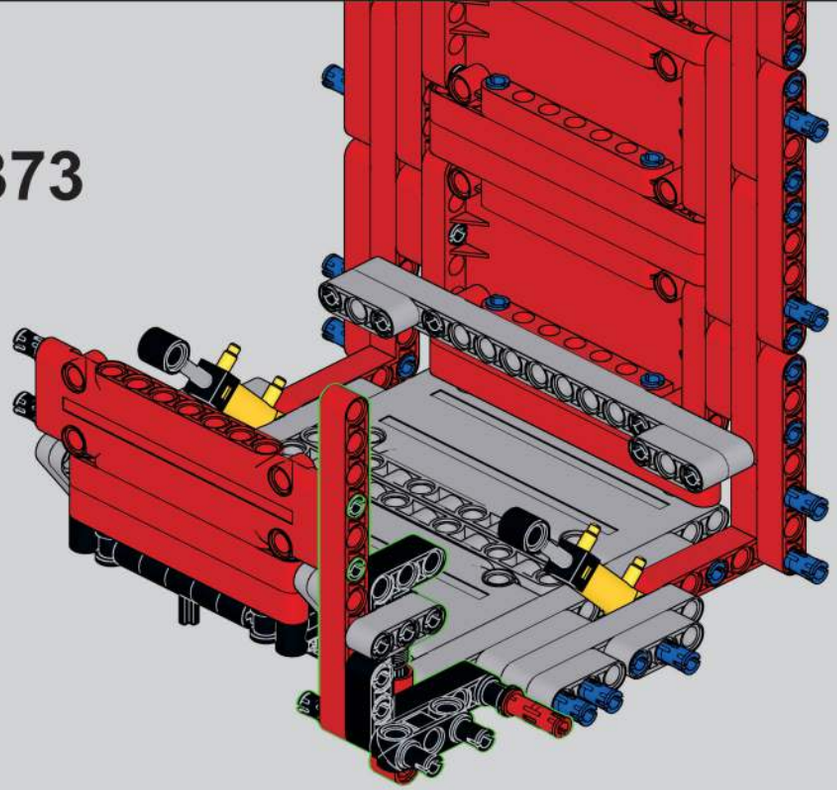

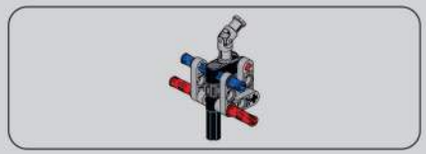

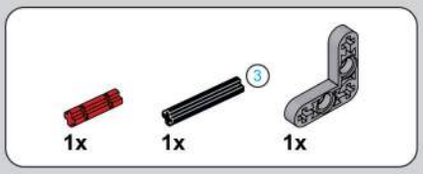

1374

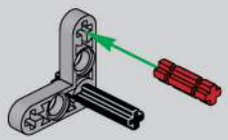

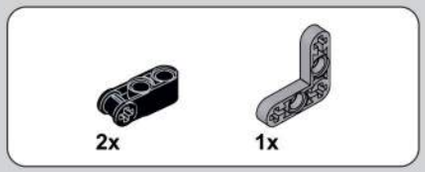

1375

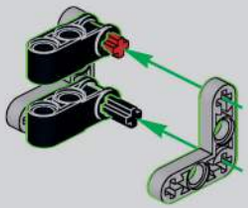

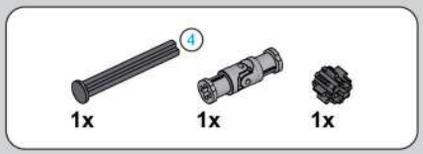

1376

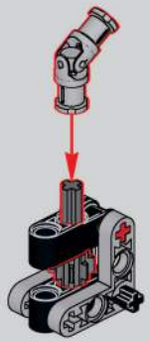

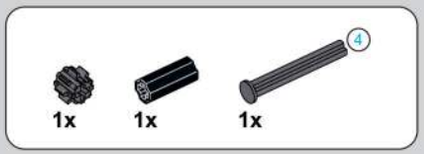

1377

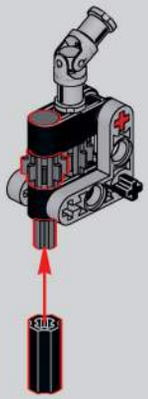

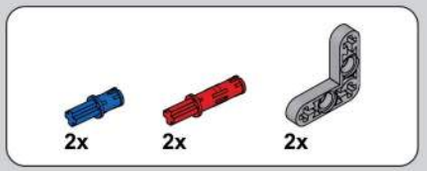

1378

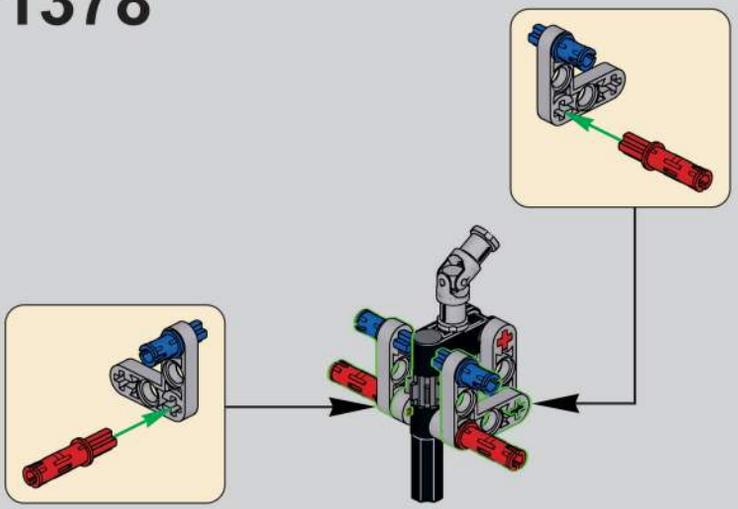

1379

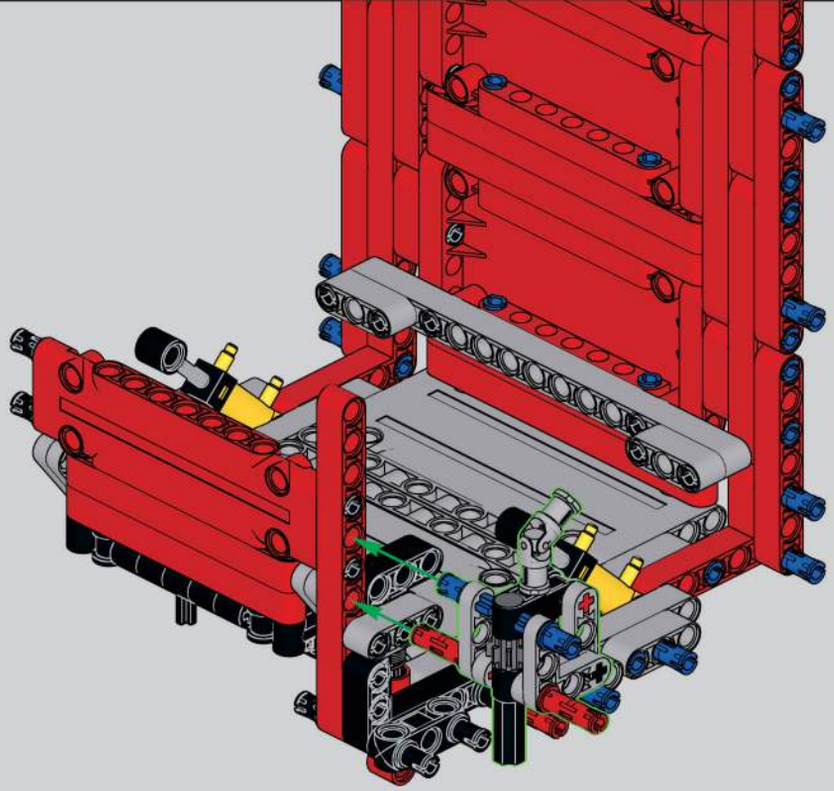

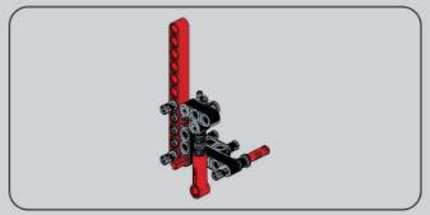

1380

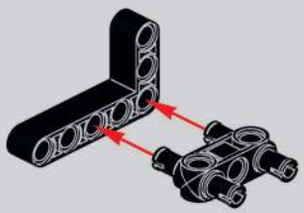

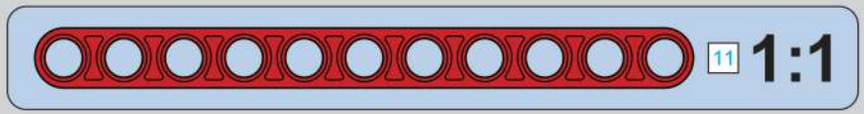

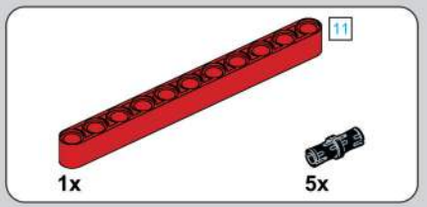

1381

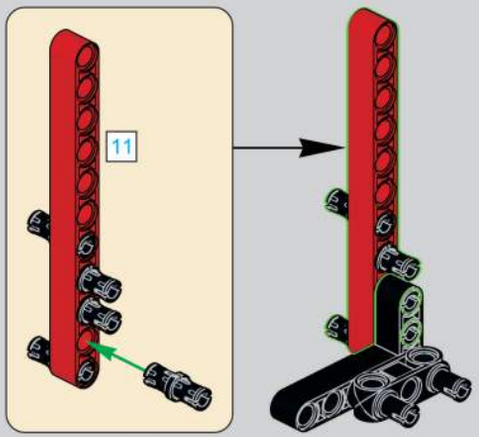

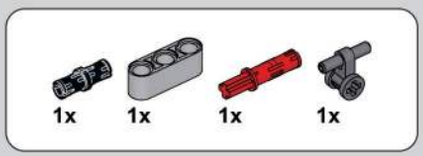

1382

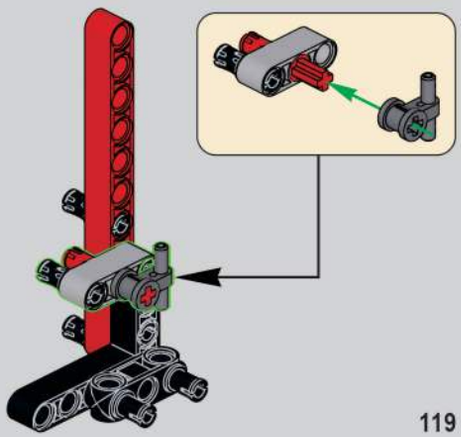

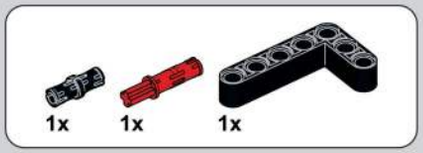

1383

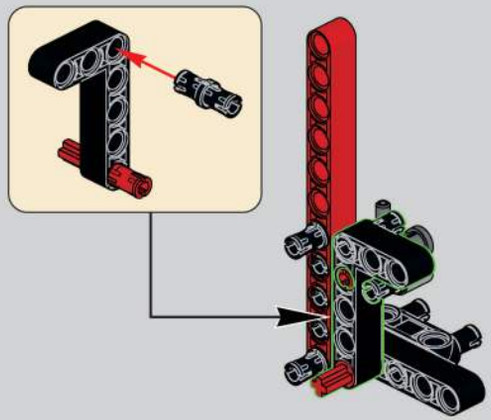

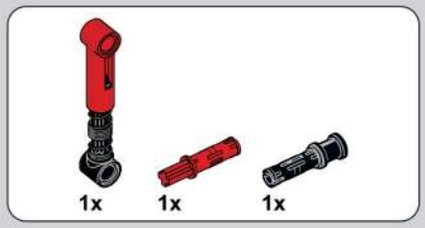

1384

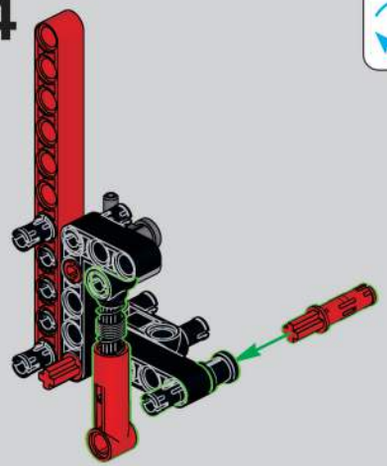

1385

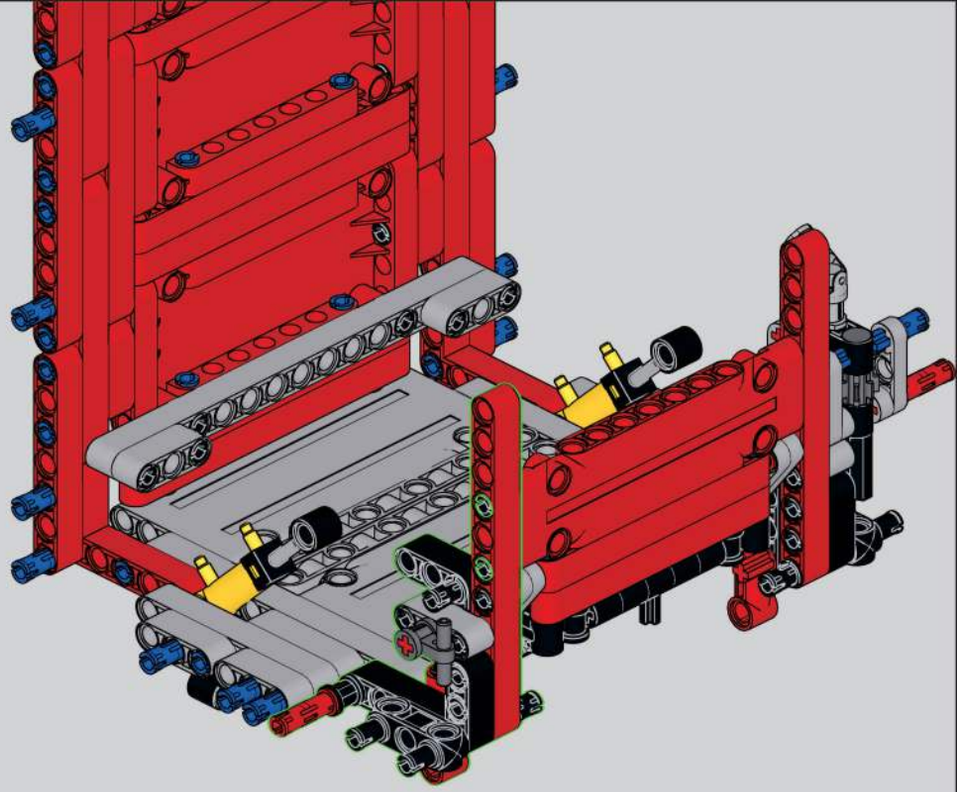

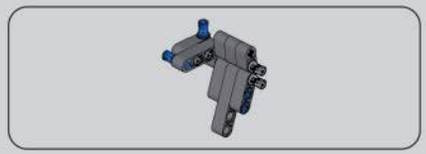

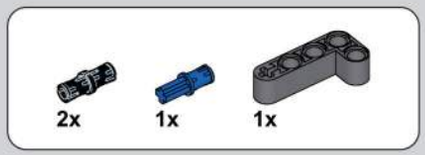

1386

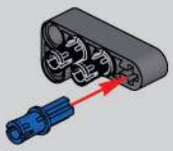

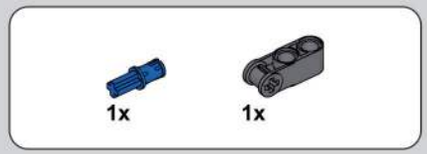

1387

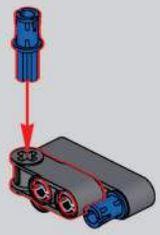

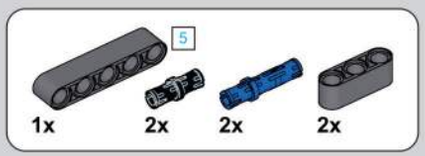

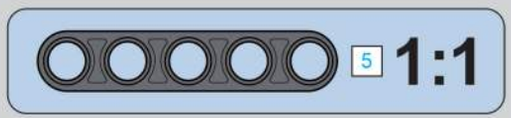

1388

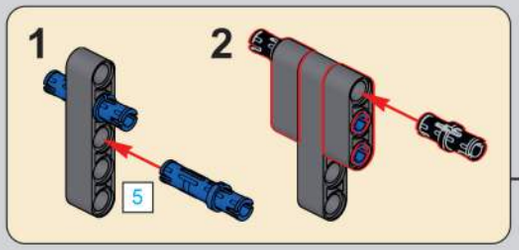

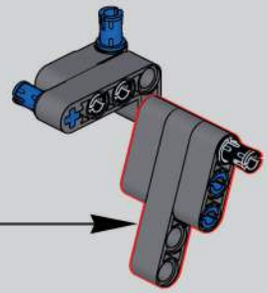

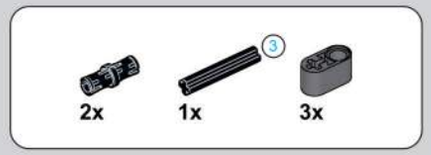

1389

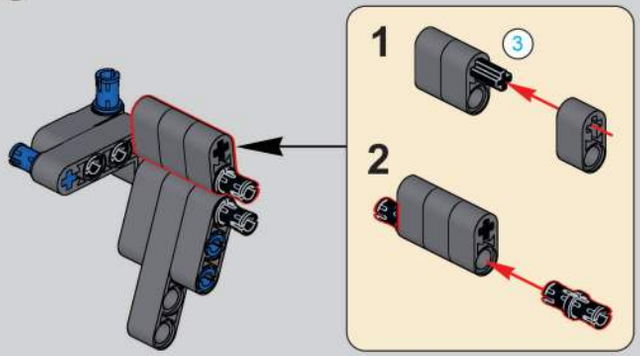

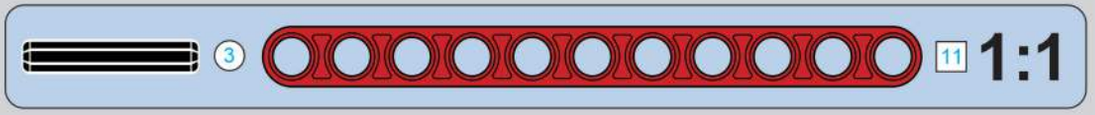

1390

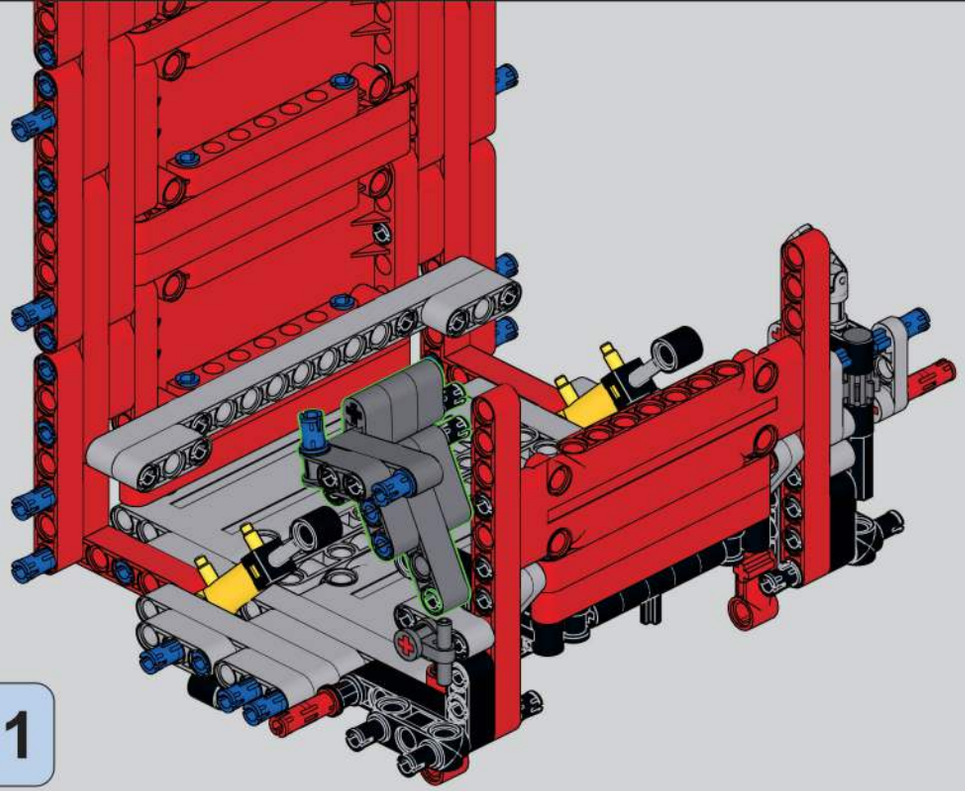

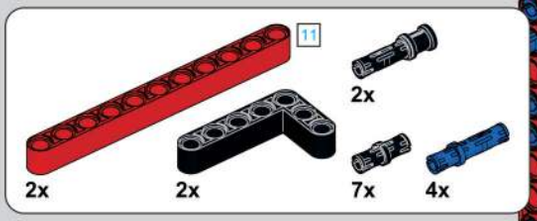

1391

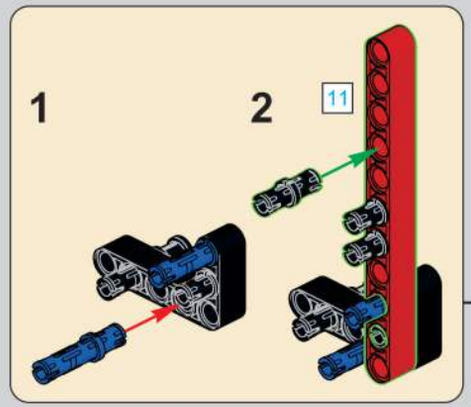

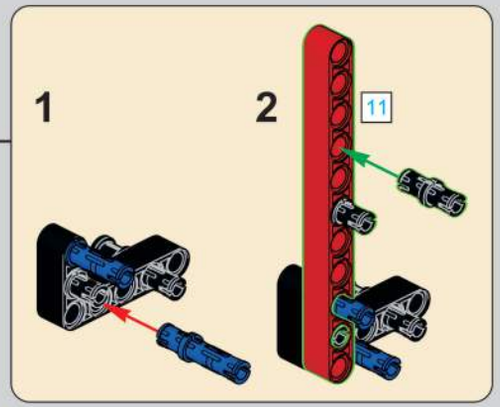

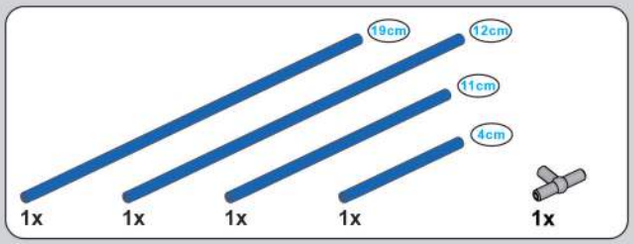
19cm
12cm
11cm
4cm
1x
1x
1x
1x
1x

1392

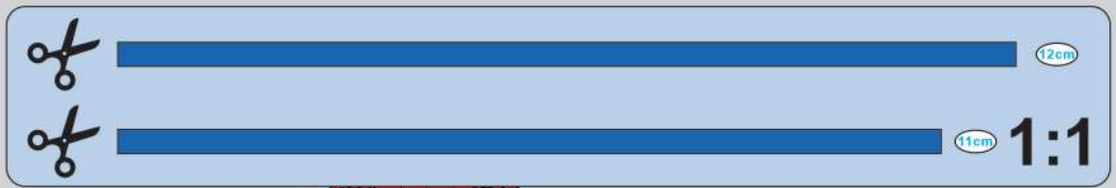
12cm
11cm
1:1

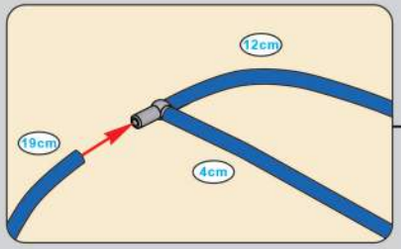
12cm
19cm
4cm

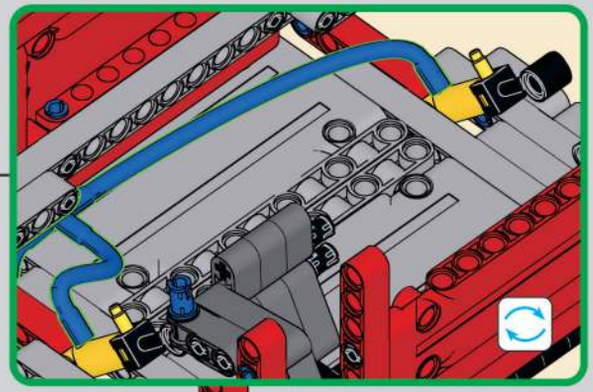

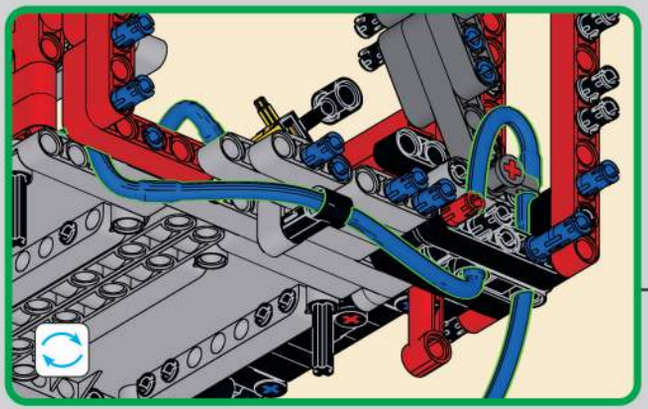

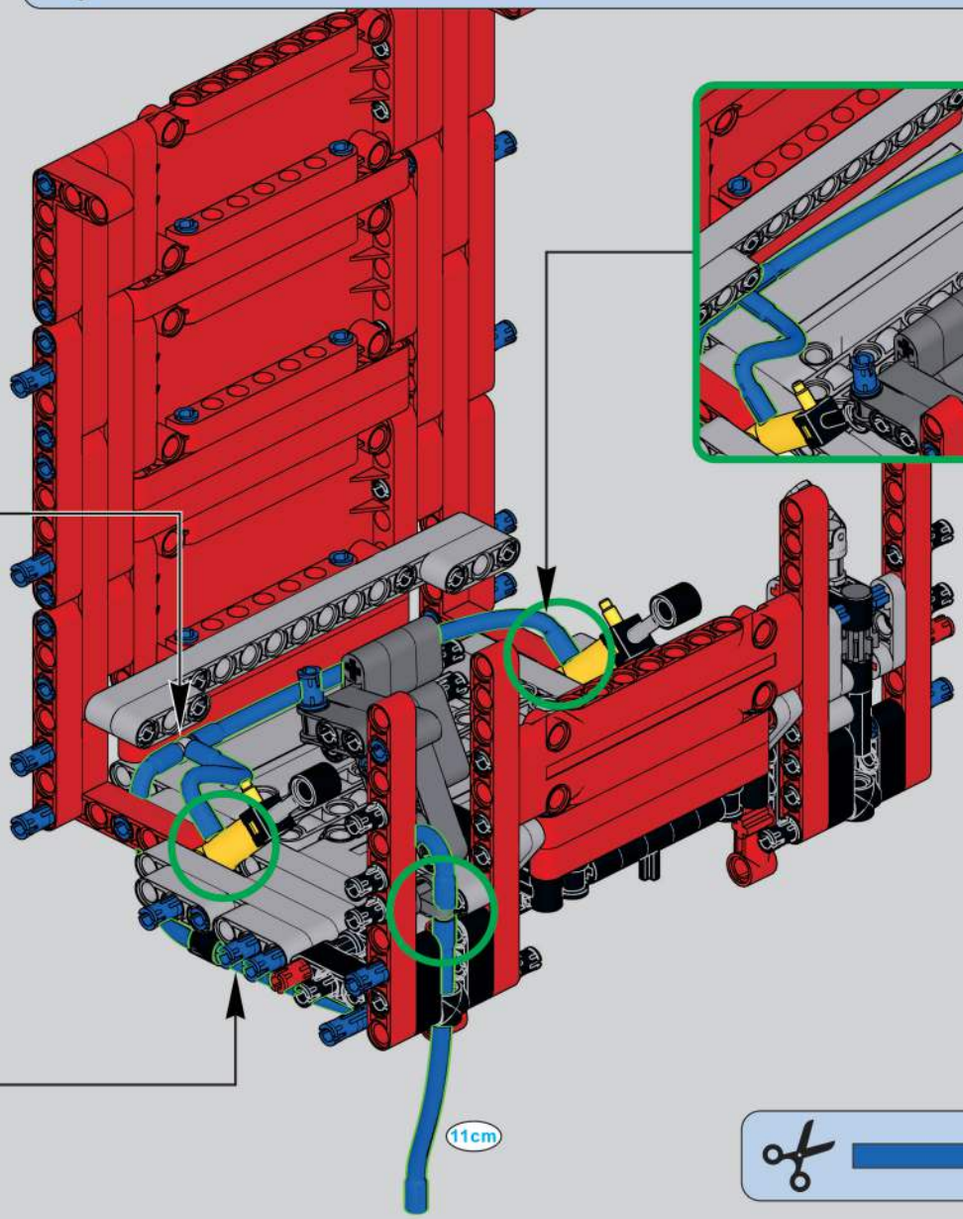
11cm

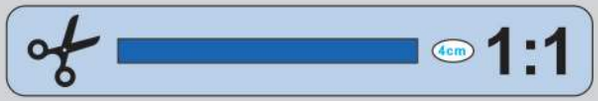
4cm
1:1

19cm
1:1

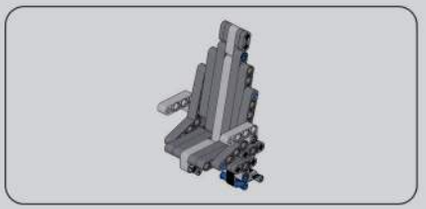

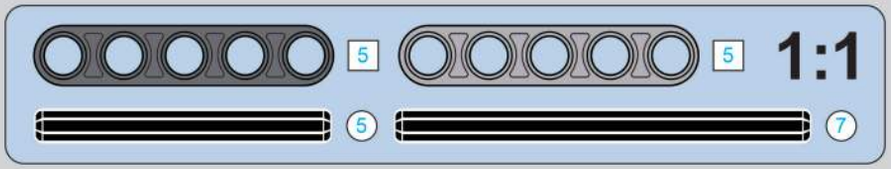

1393

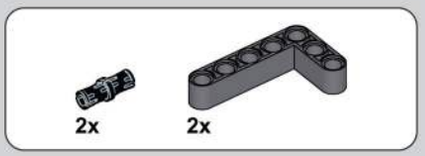

1394

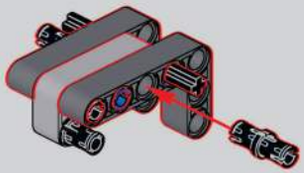

1395

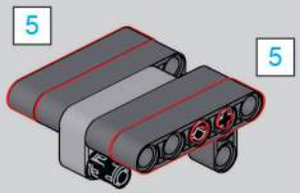

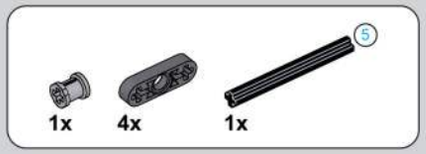

1396

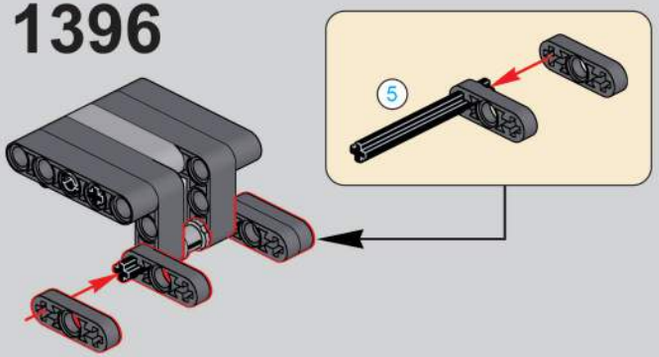

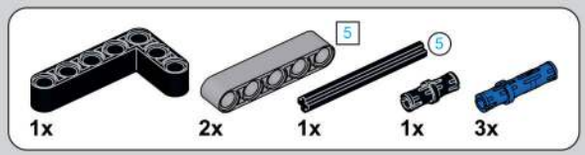

1397

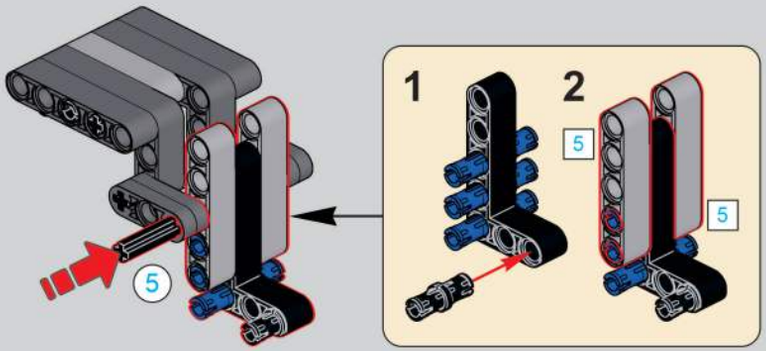

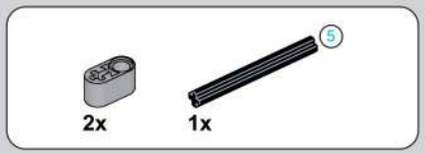

1398

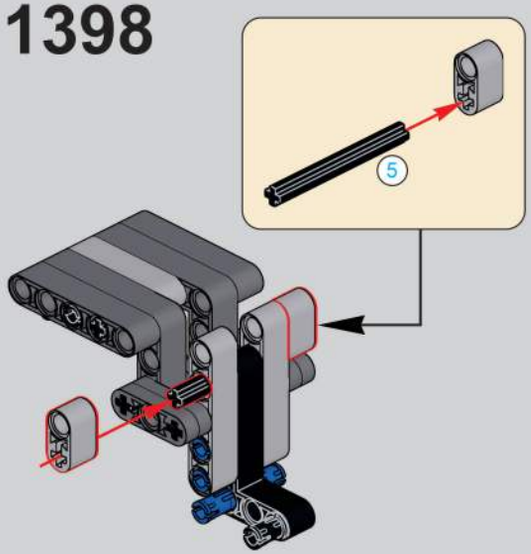

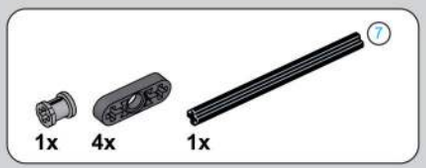

1399

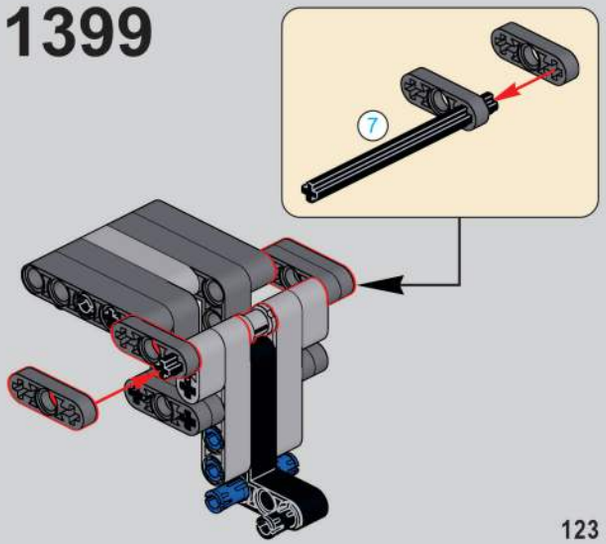

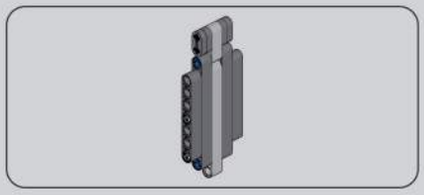

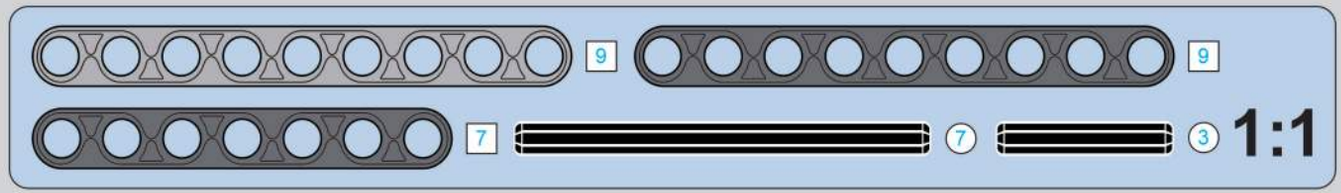

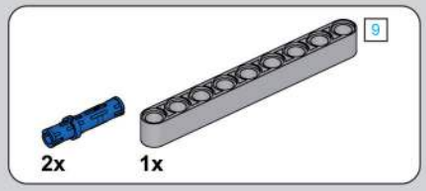

1400

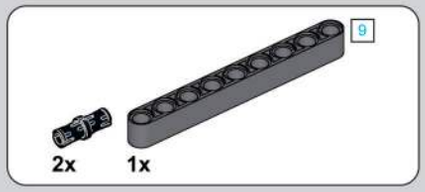

1401

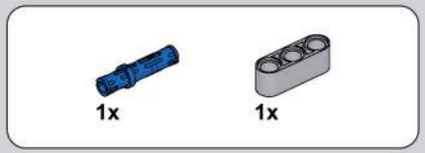

1402

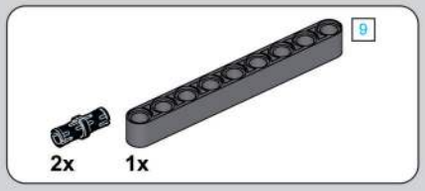

1403

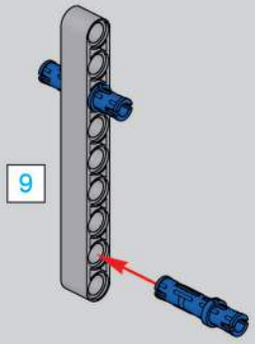

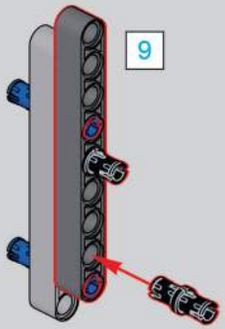

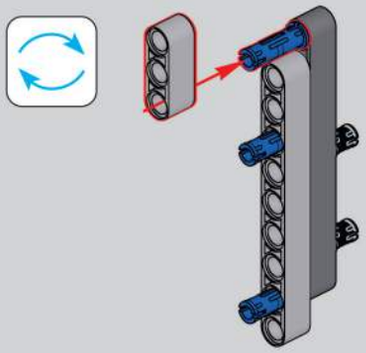

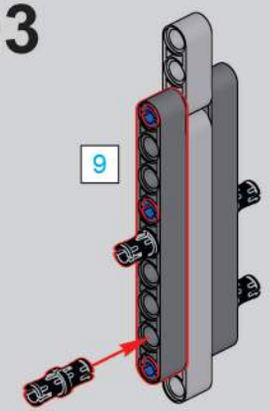

1404

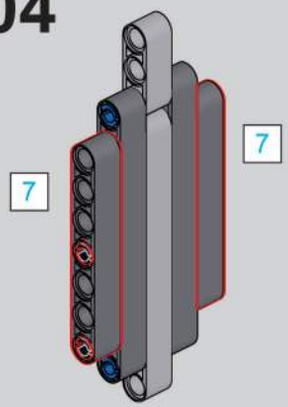

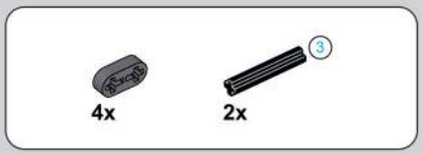

1405

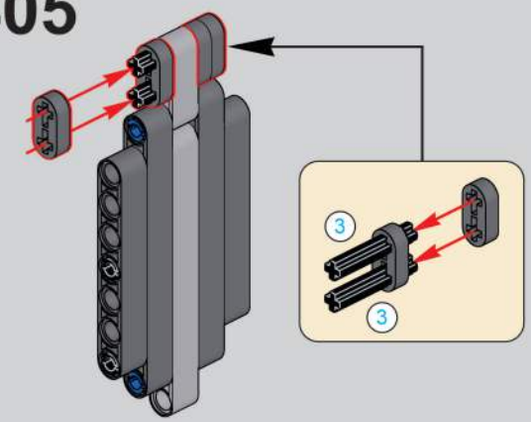

1406

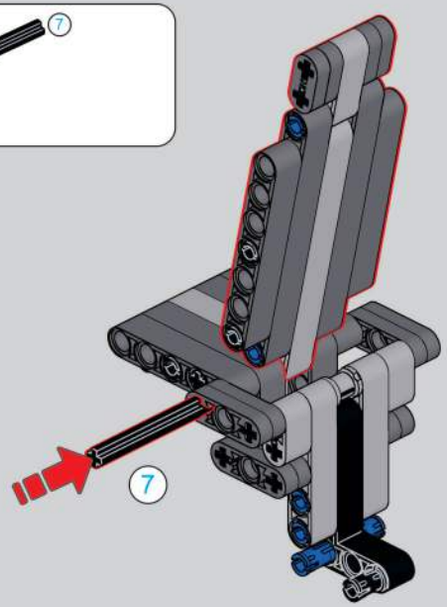

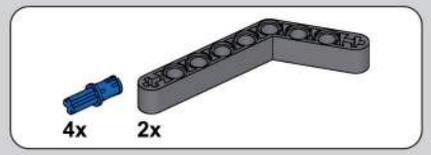

1407

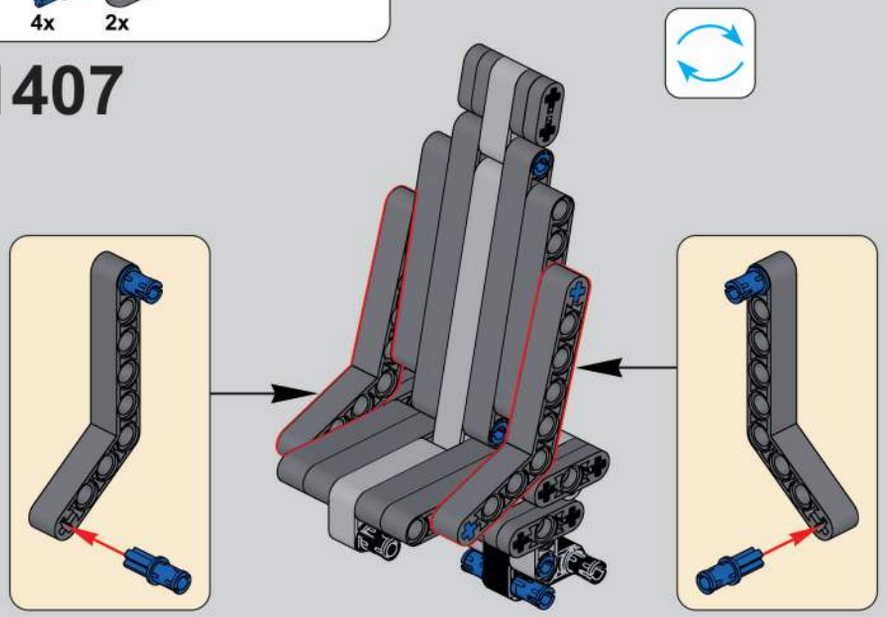

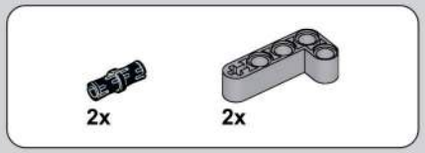

1408

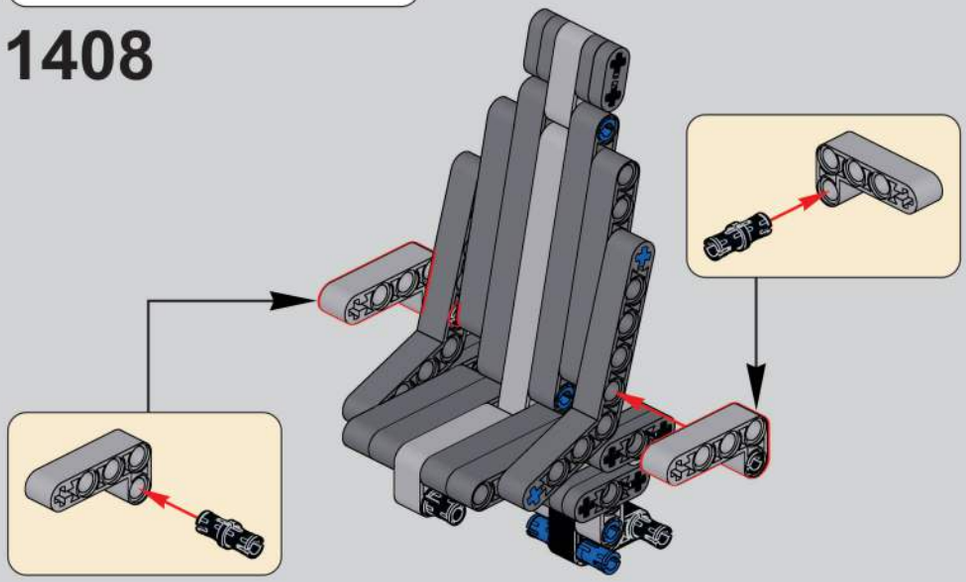

1409

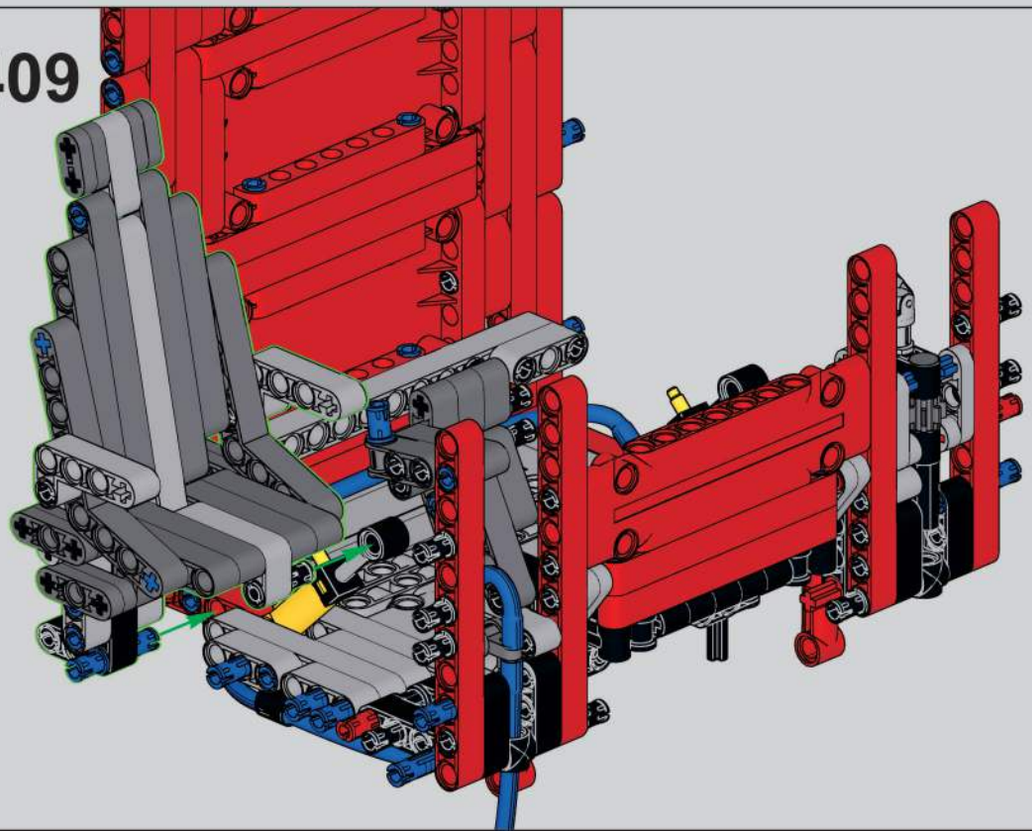

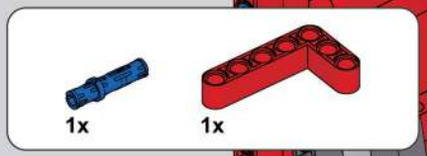

1410

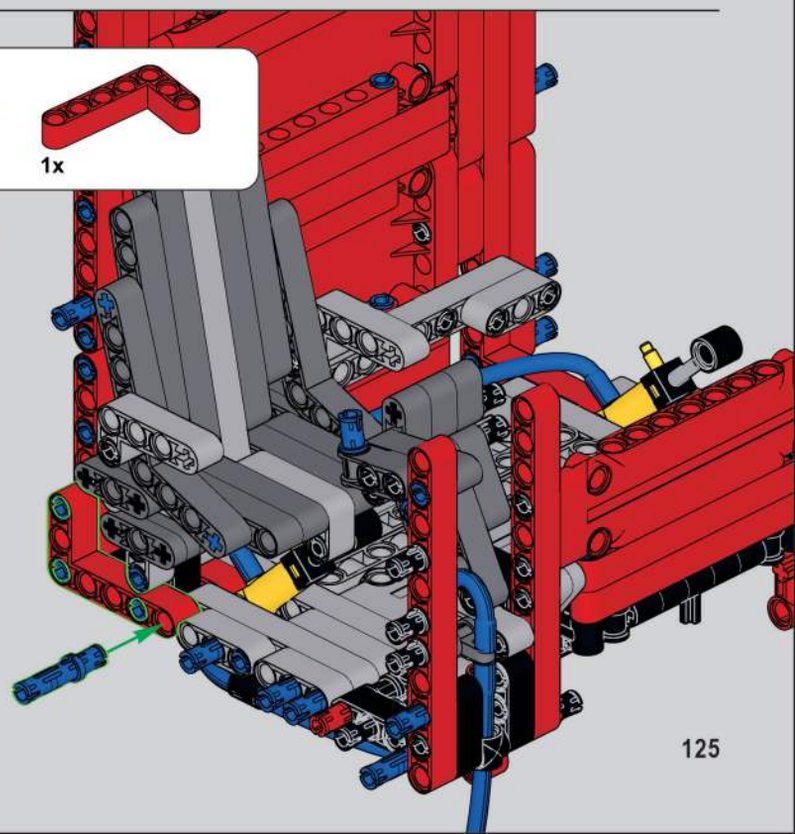

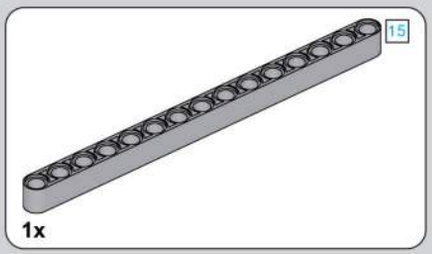

1411

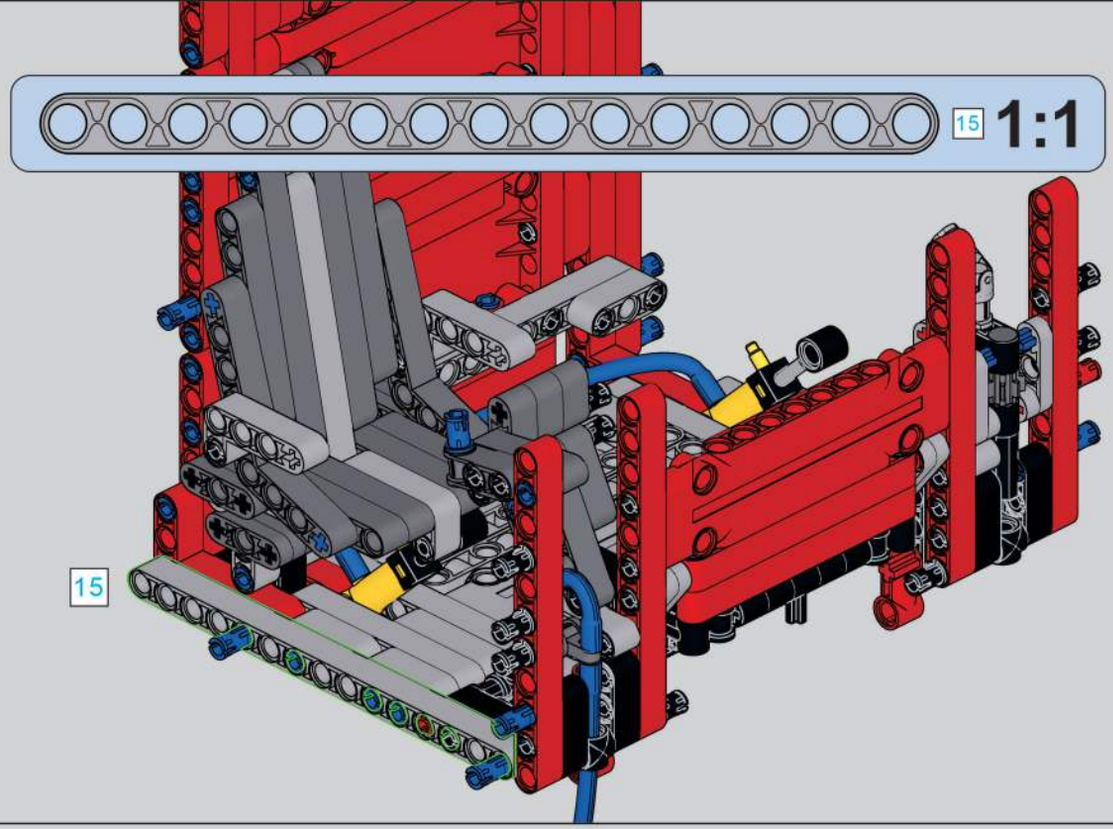

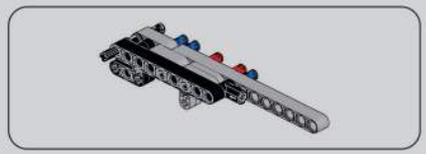

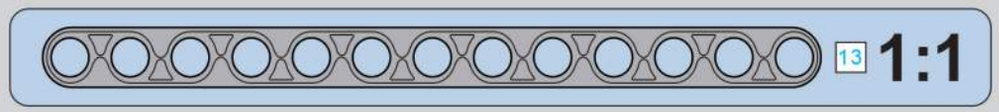

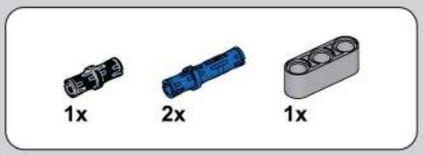

1412

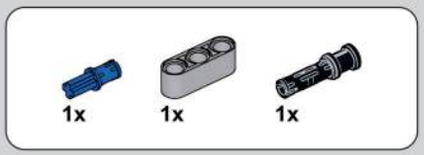

1413

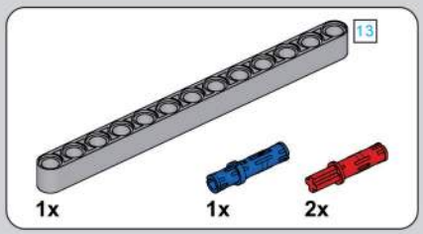

1414

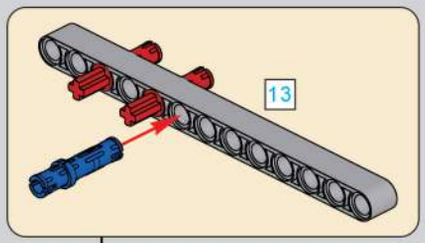

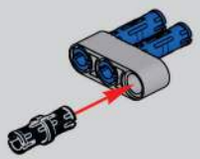

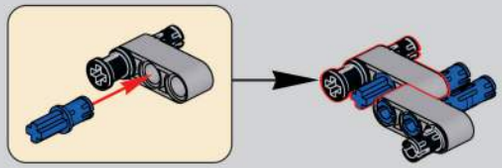

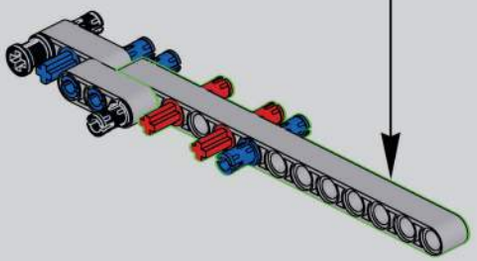

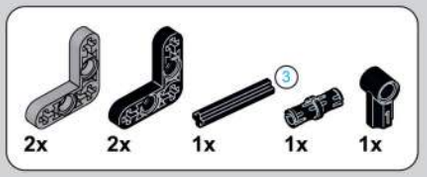

1415

1416

1417

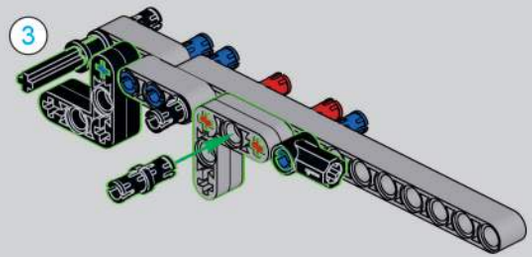

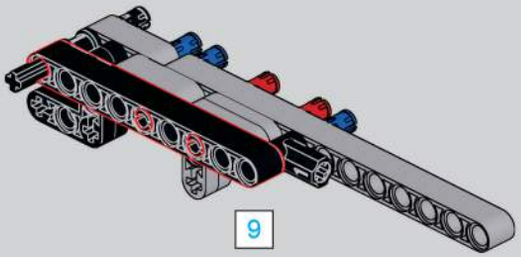

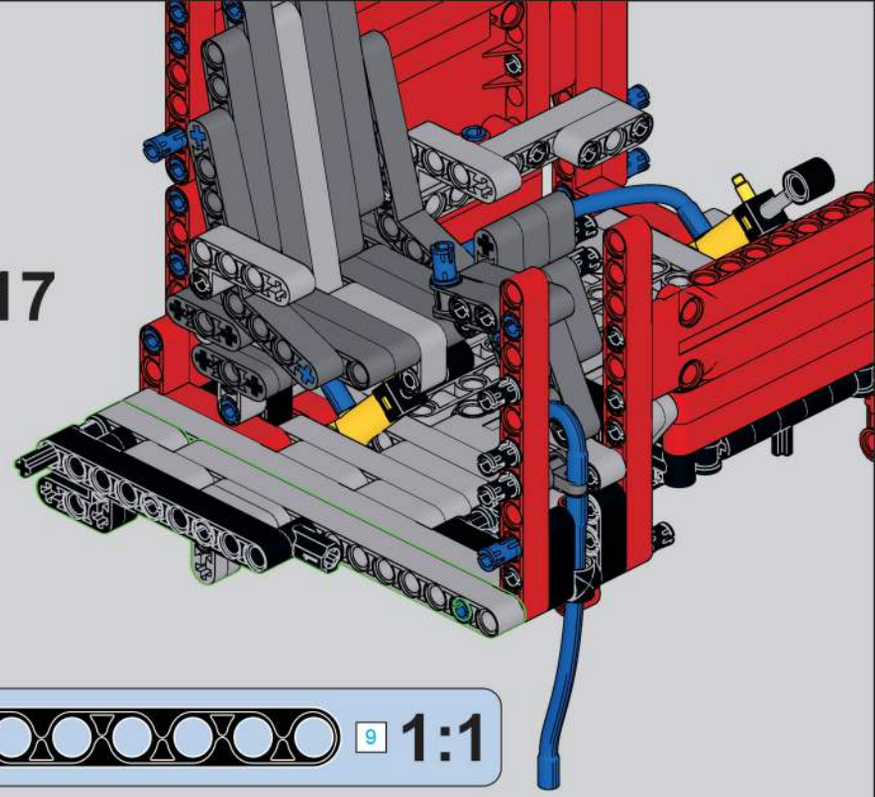

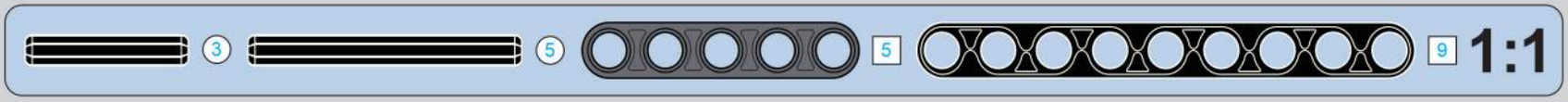

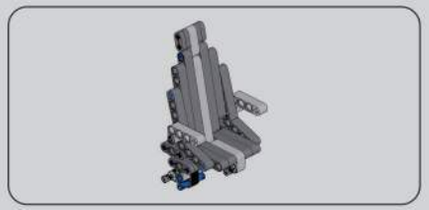

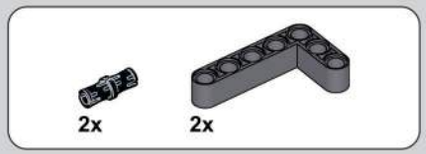

1419

1420

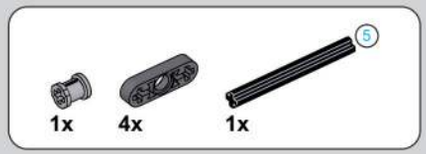

1421

1418

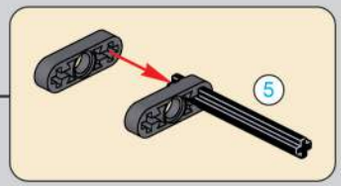

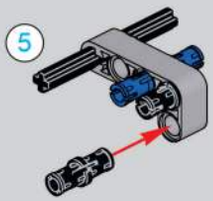

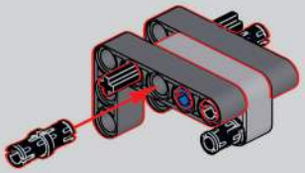

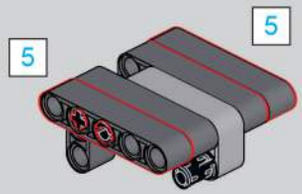

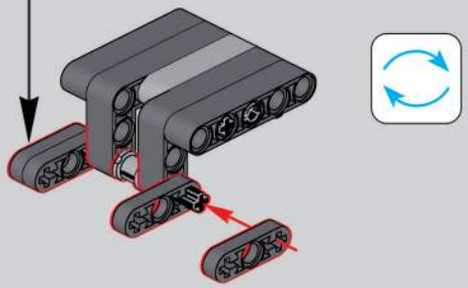

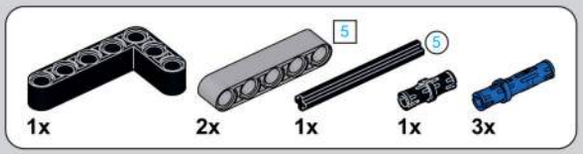

1422

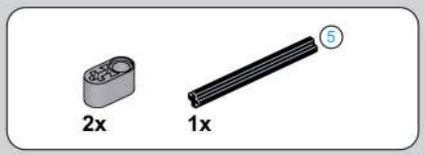

1423

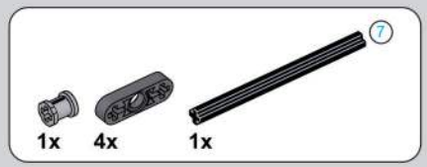

1424

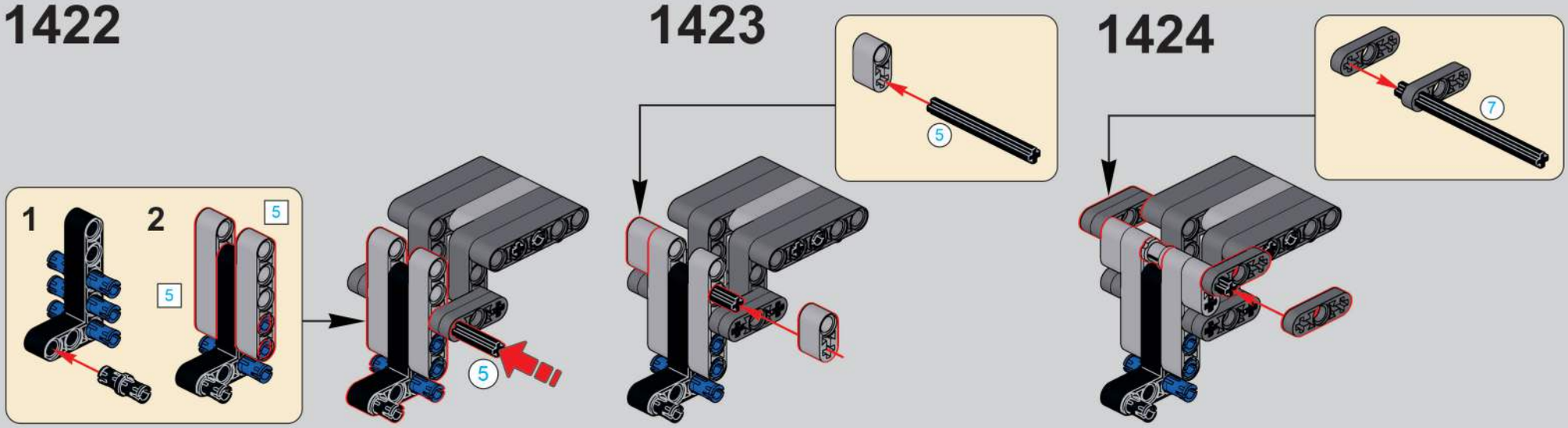

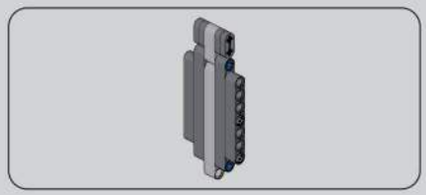

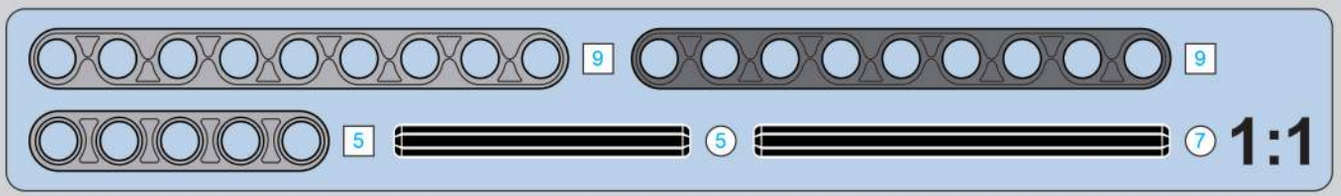

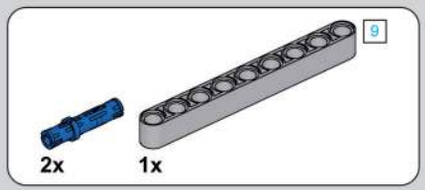

1425

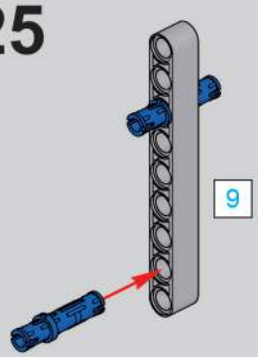

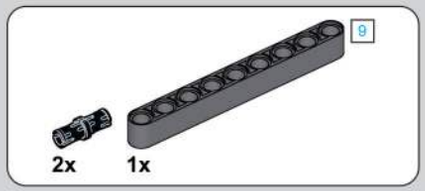

1426

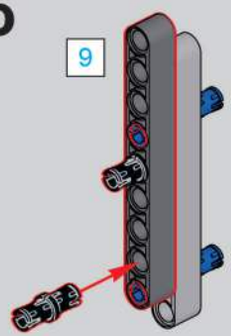

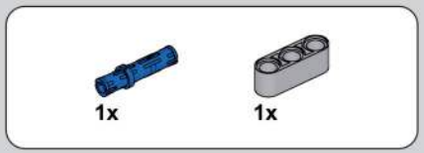

1427

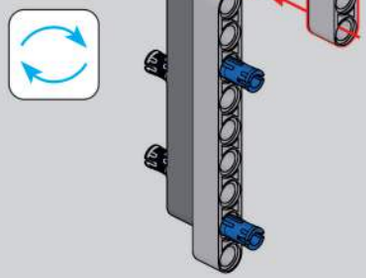

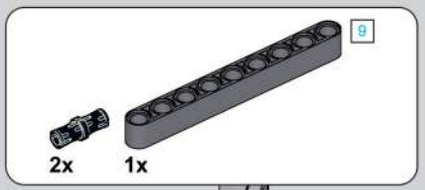

1428

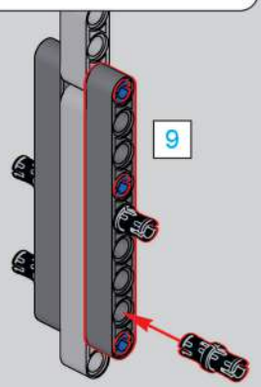

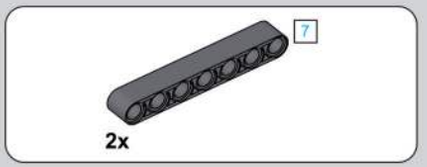

1429

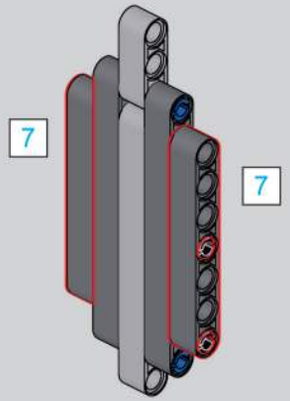

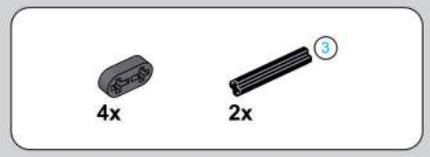

1430

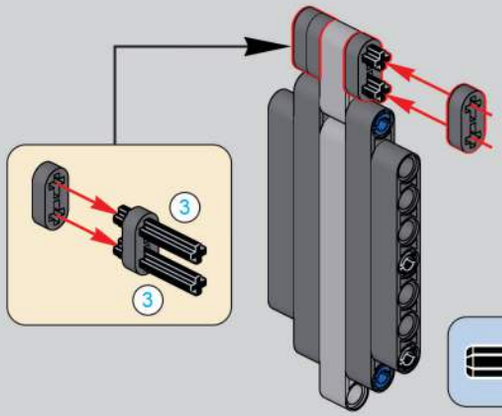

1431

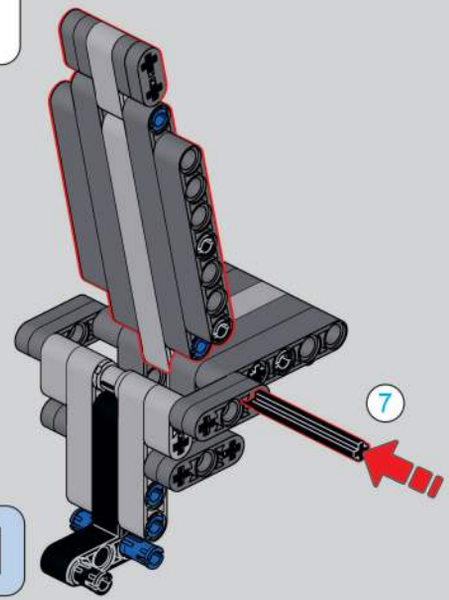

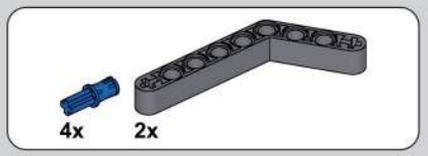

1432

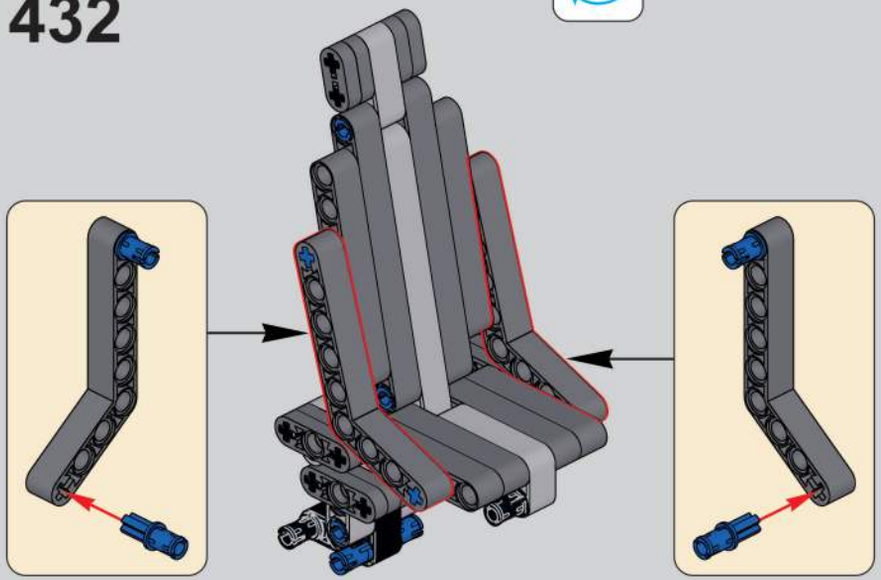

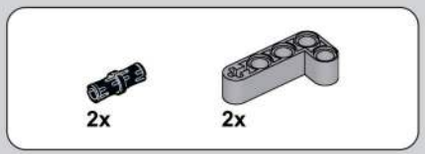

1433

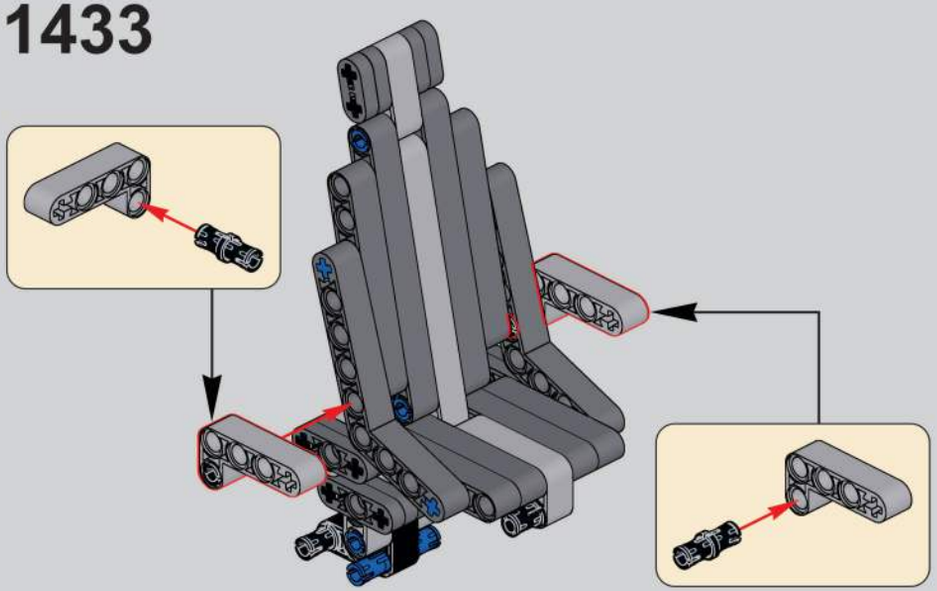

1434

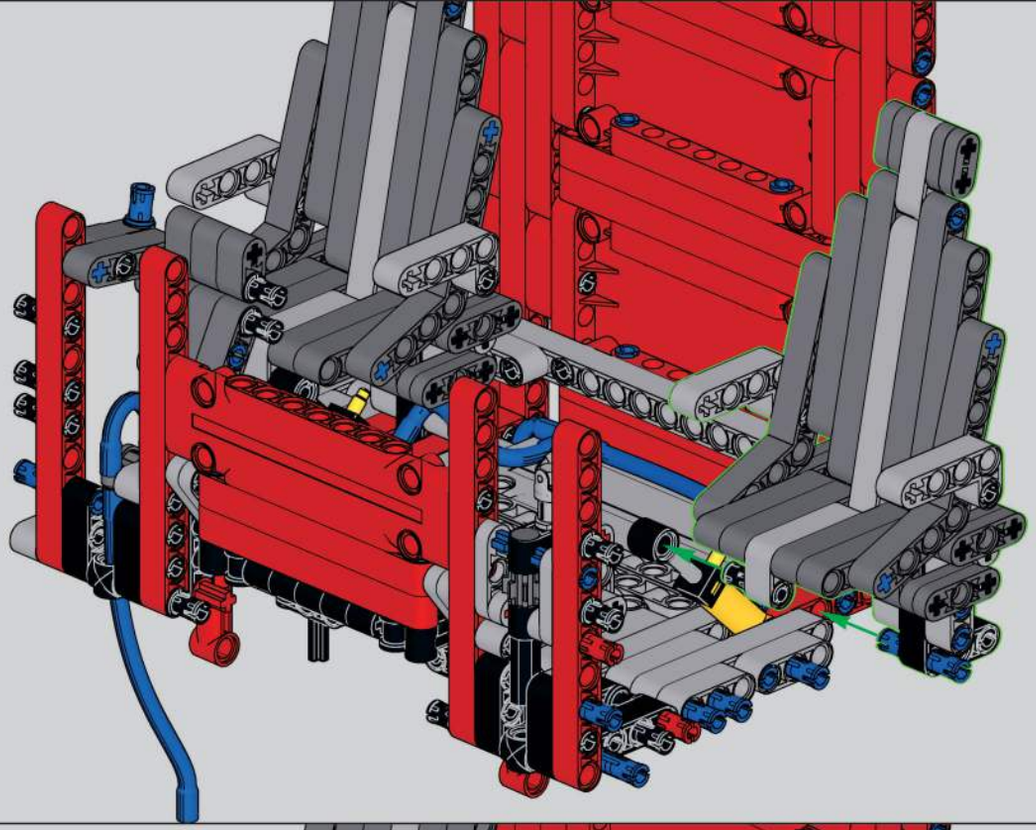

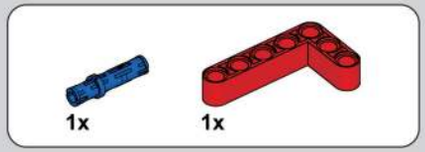

1435

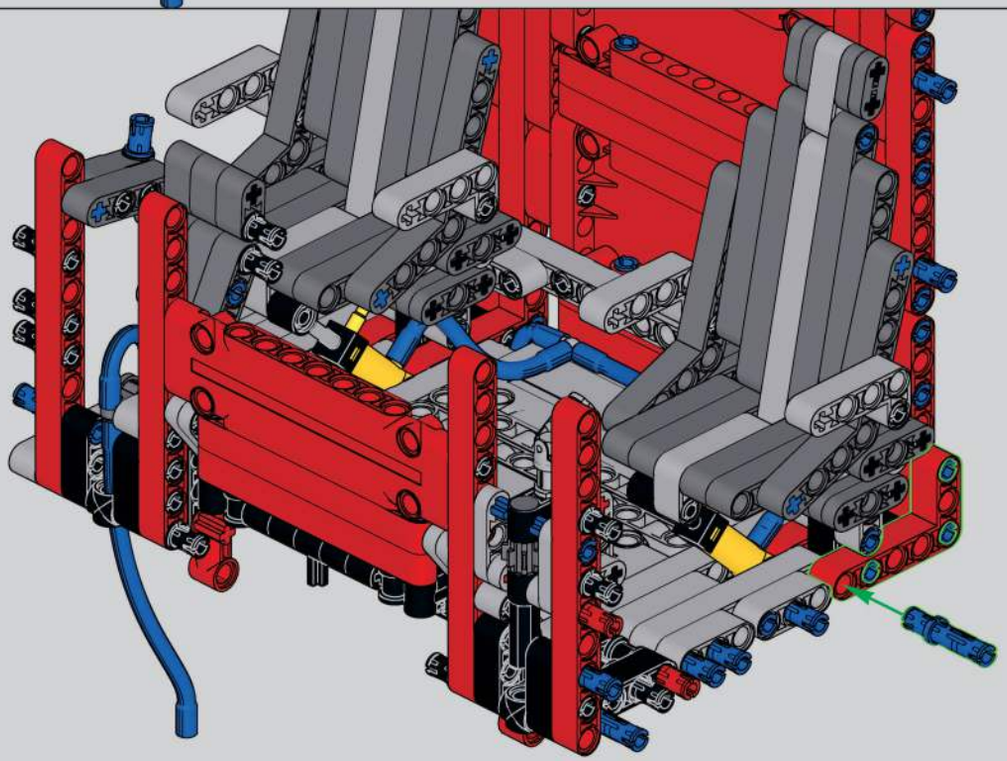

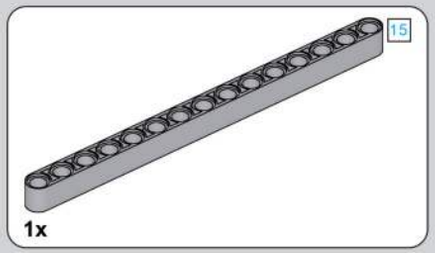

1436

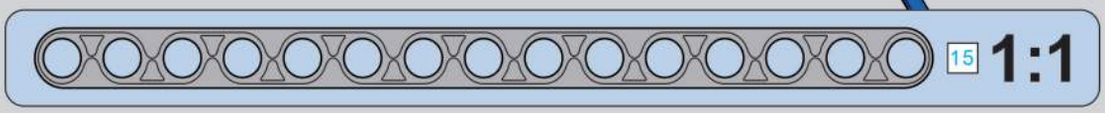

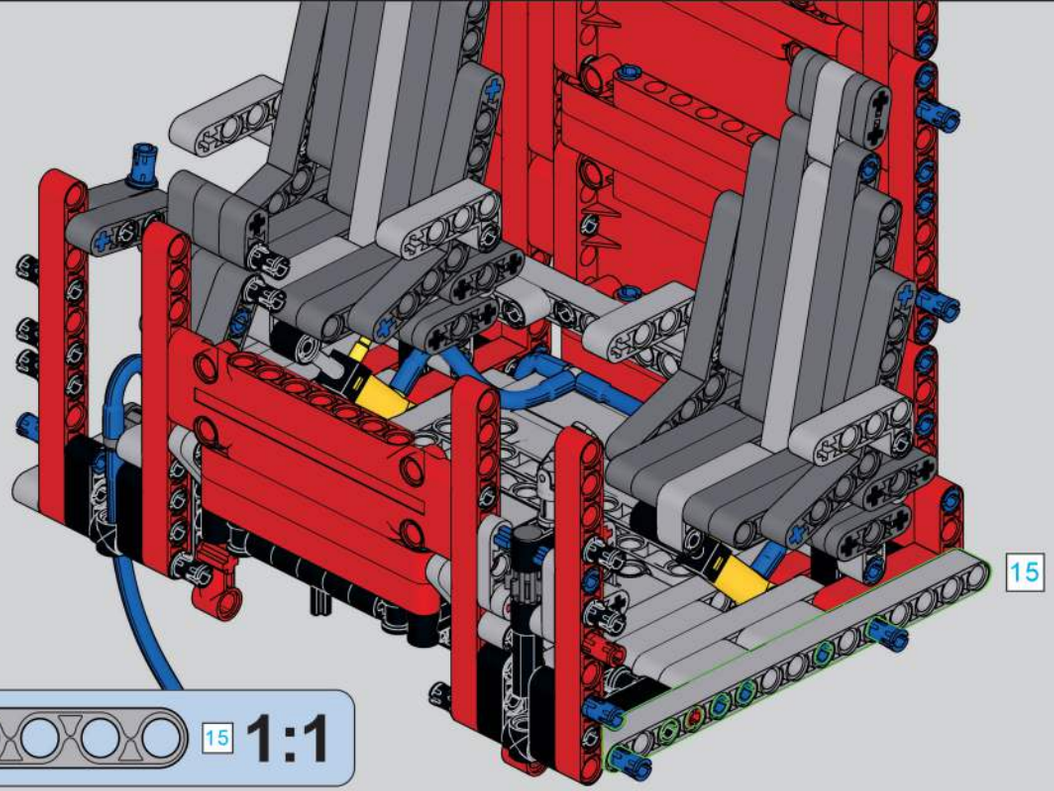

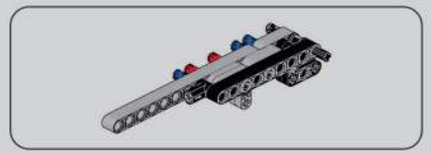

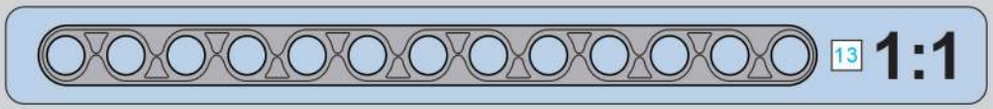

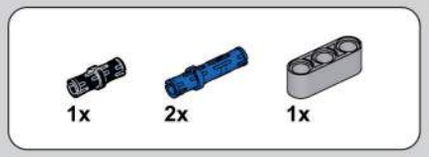

1437

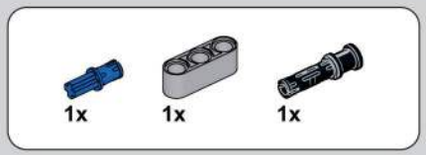

1438

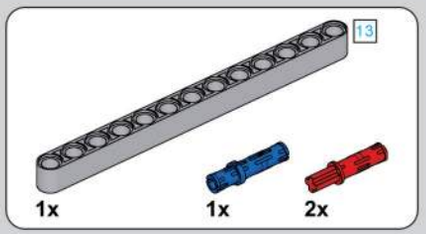

1439

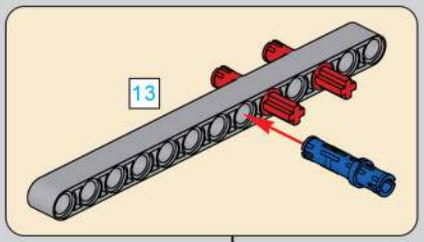

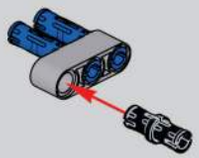

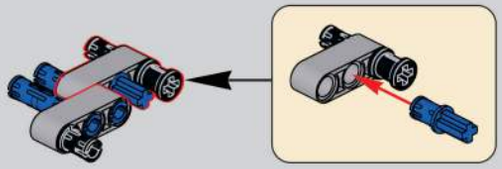

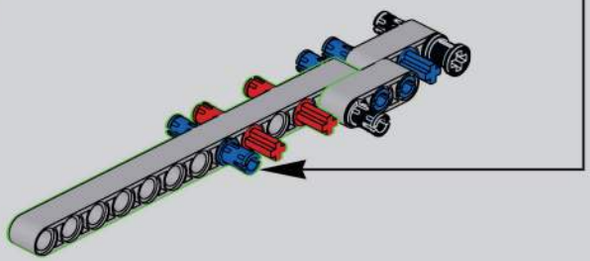

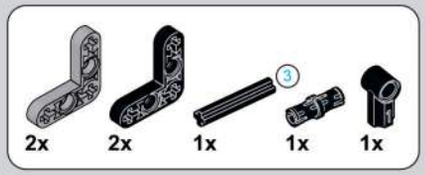

1440

1441

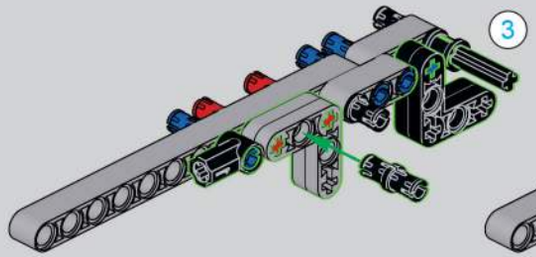

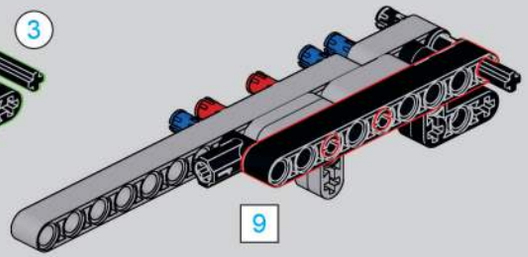

1442

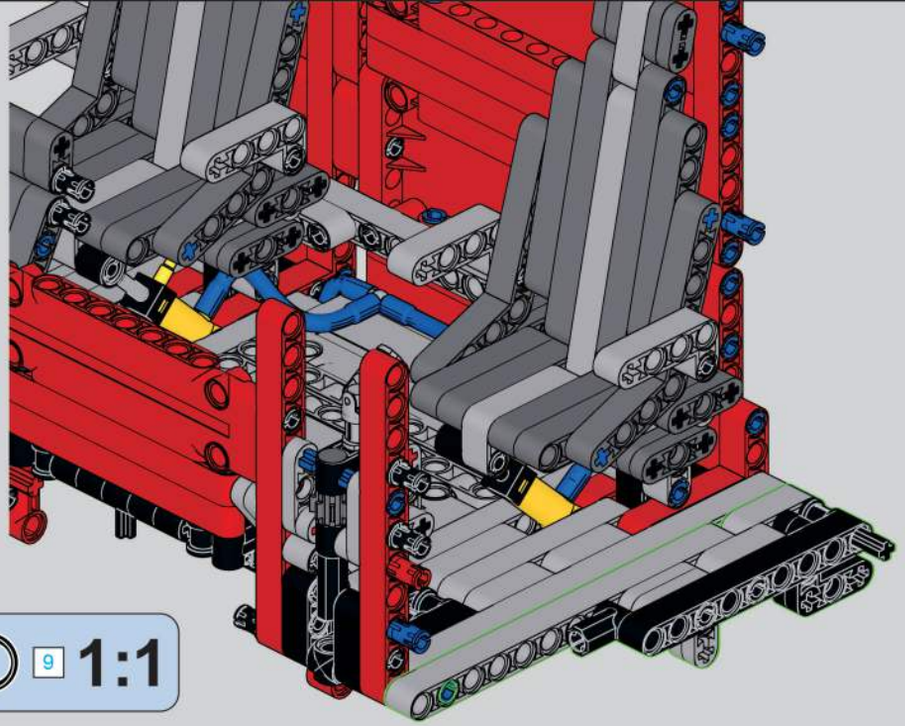

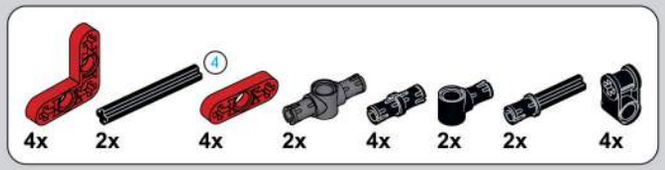

1443

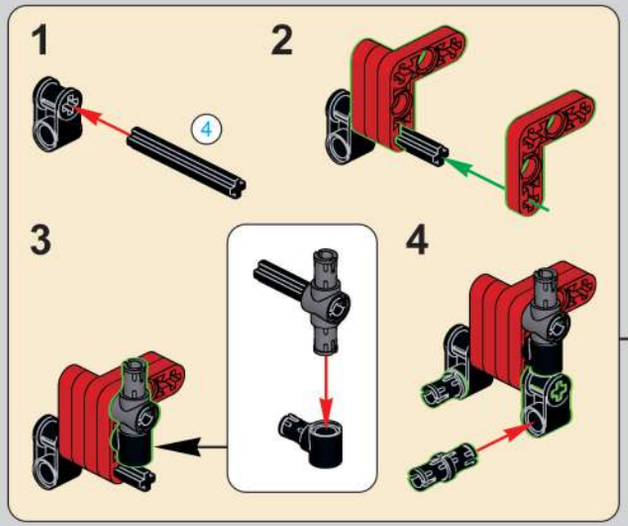

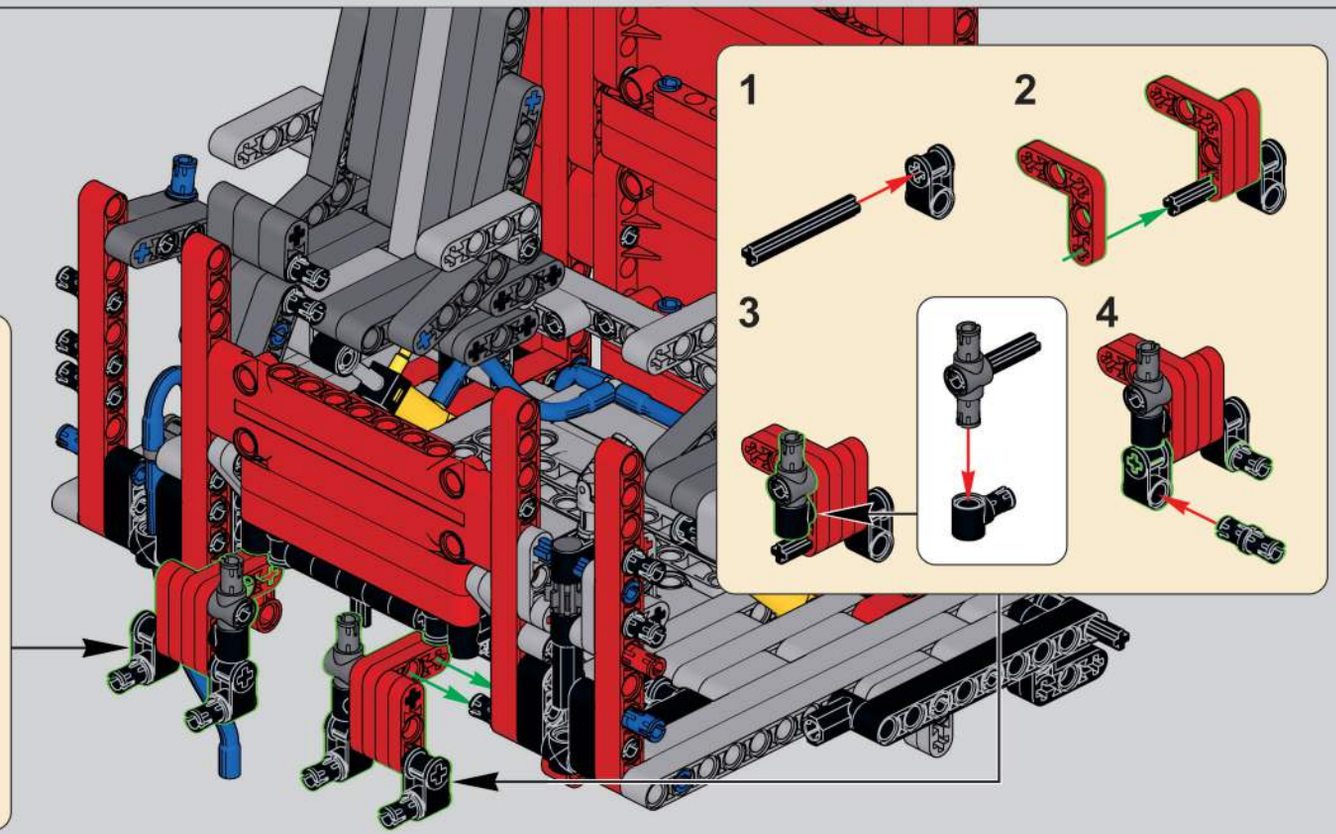

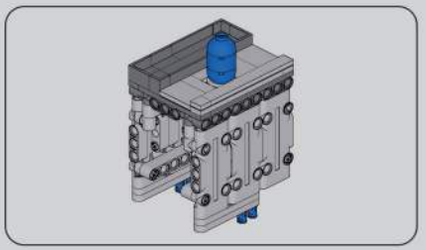

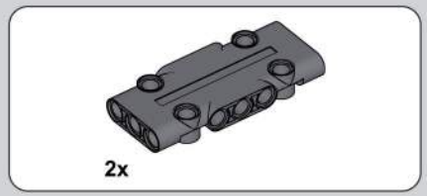

1445

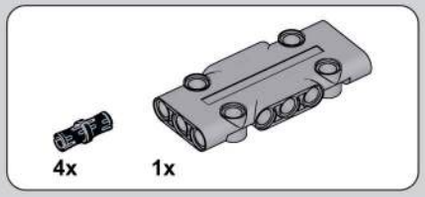

1446

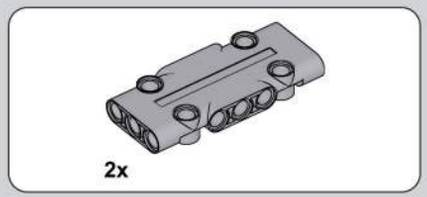

1447

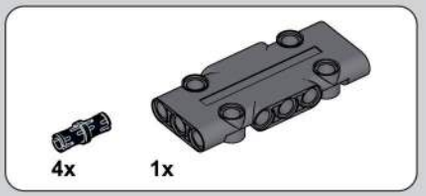

1444

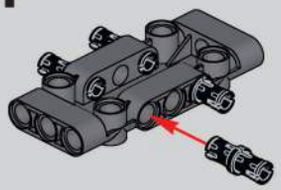

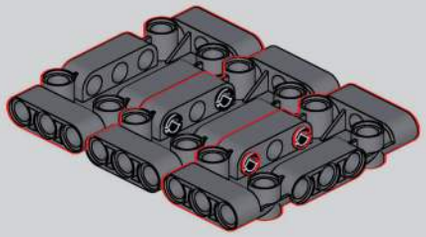

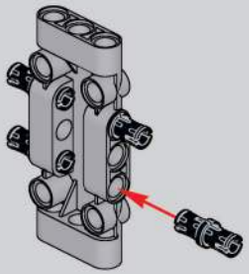

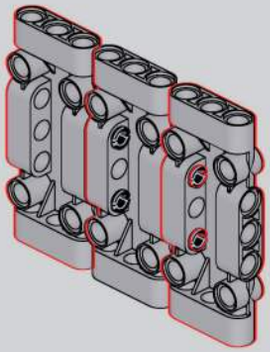

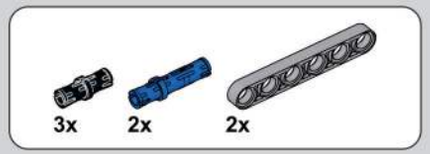

1448

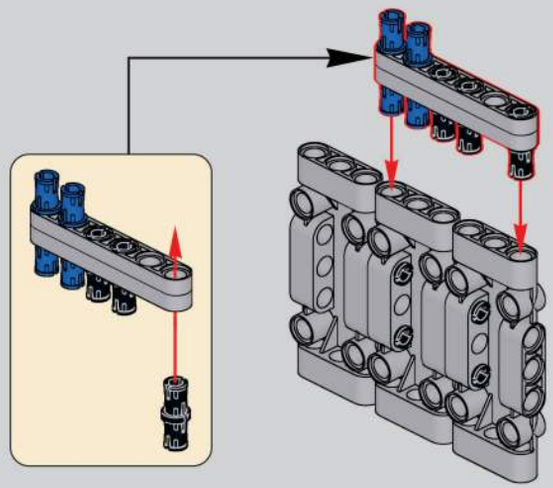

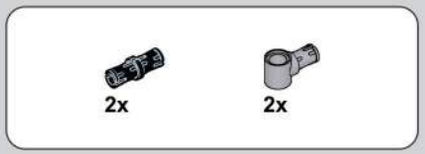

1449

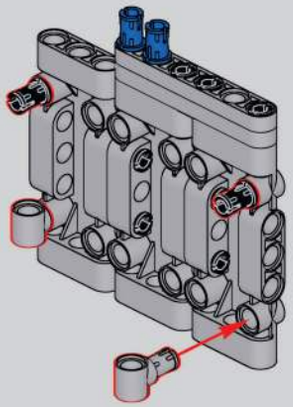

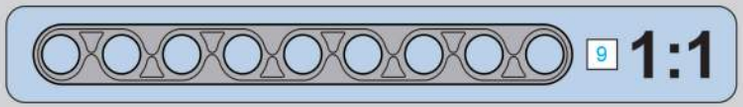

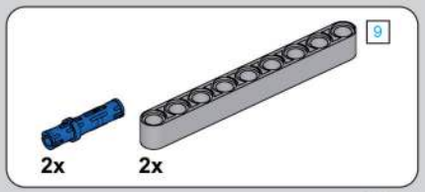

1450

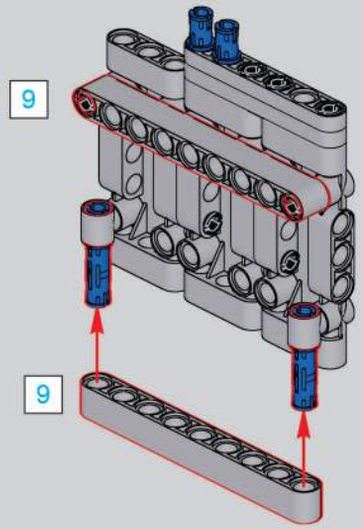

1451

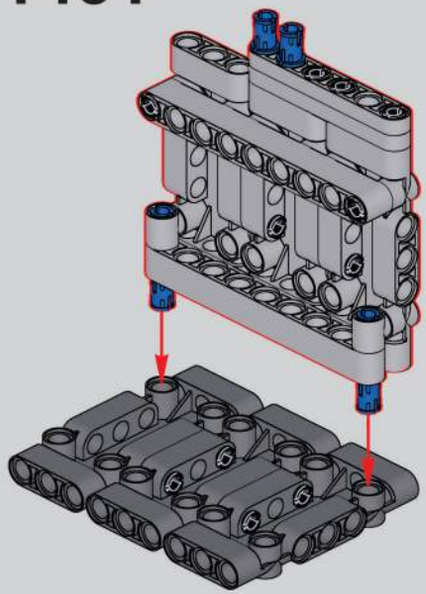

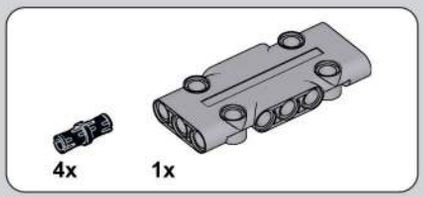

1452

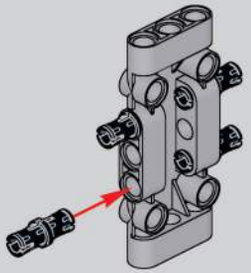

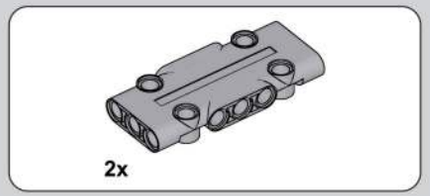

1453

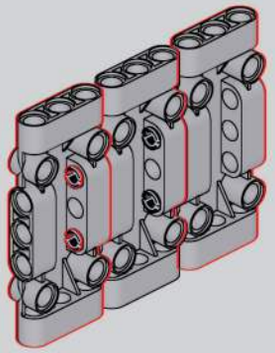

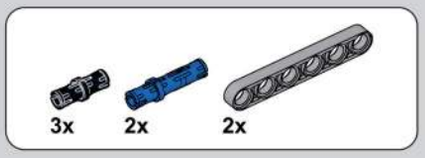

1454

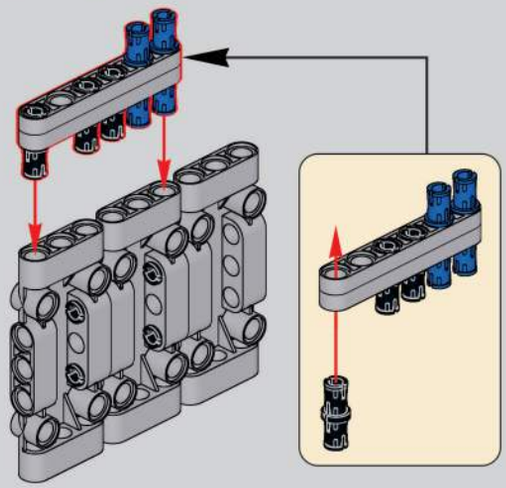

1455

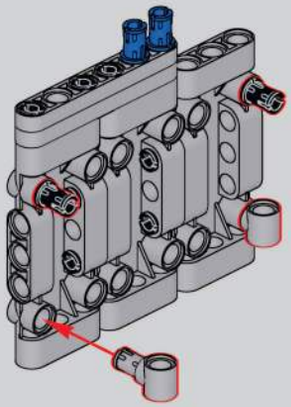

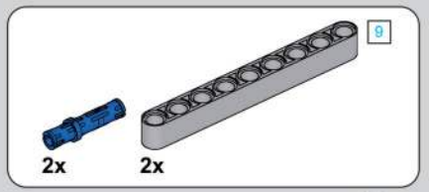

1456

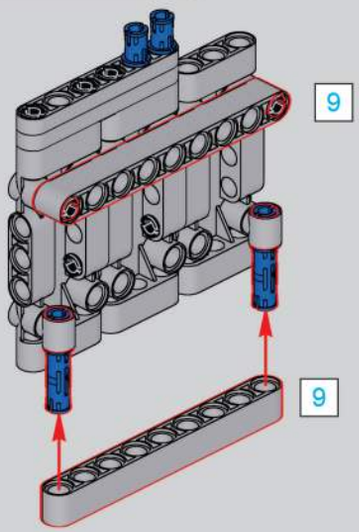

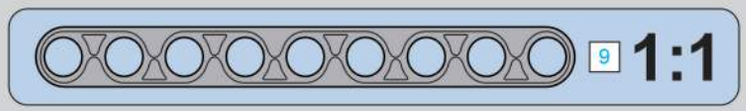

1457

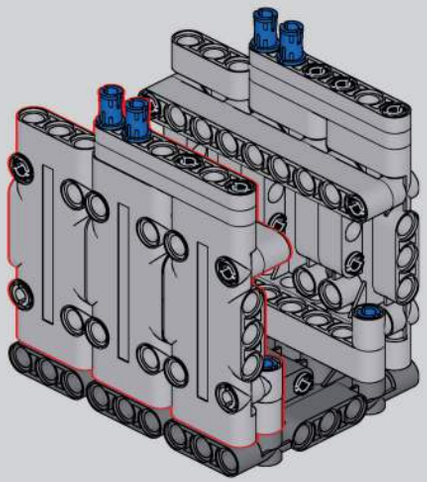

1458

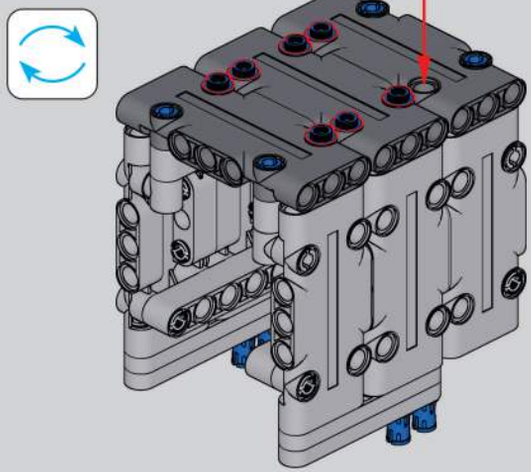

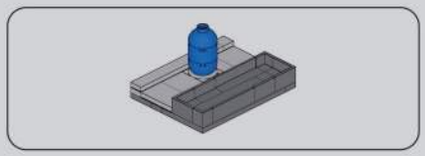

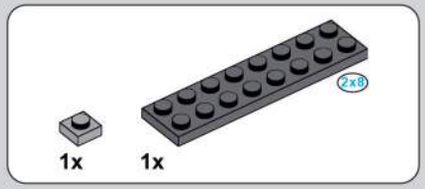

1459

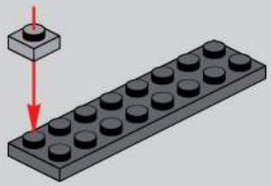

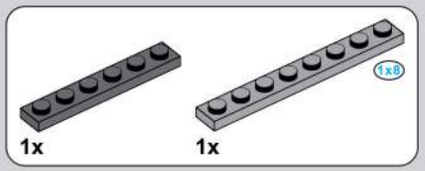

1460

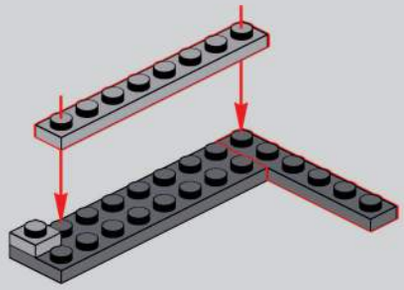

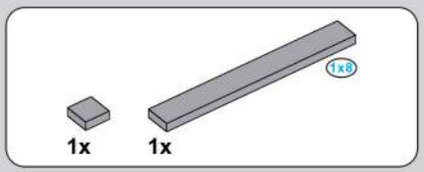

1461

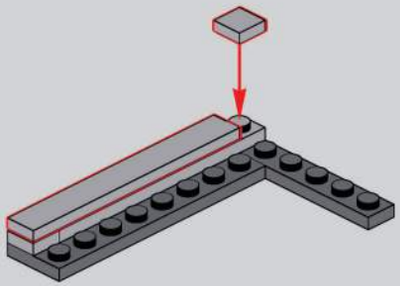

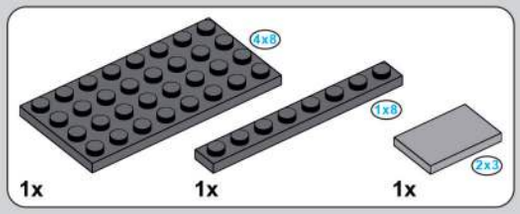

1462

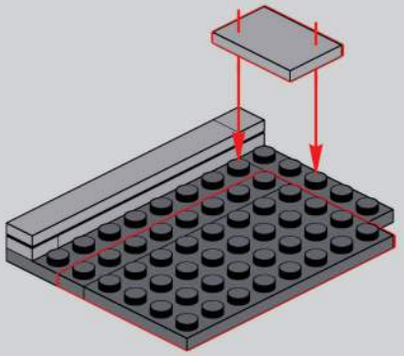

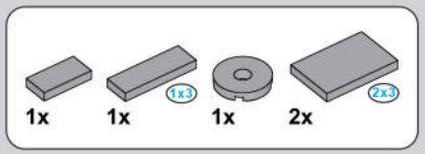

1463

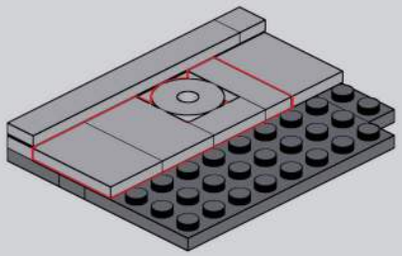

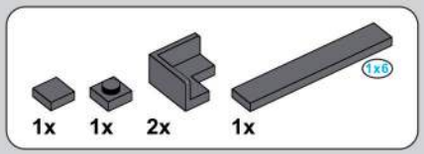

1464

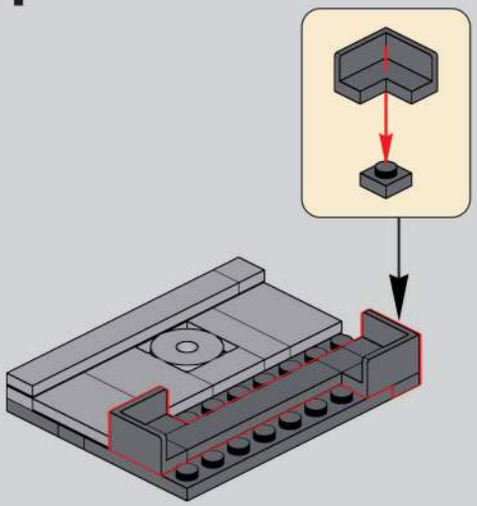

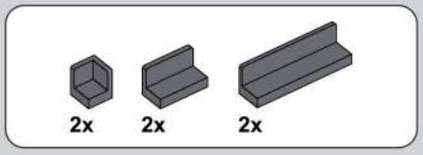

1465

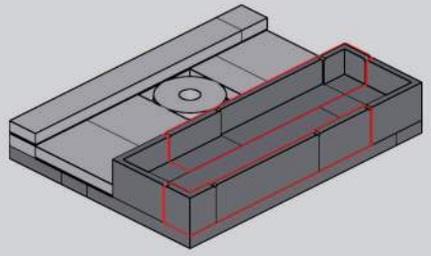

1466

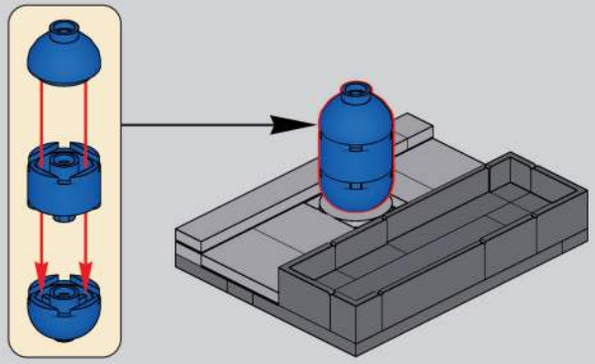

1467

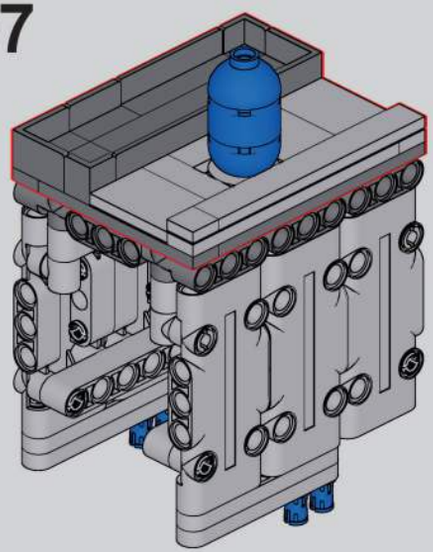

1468

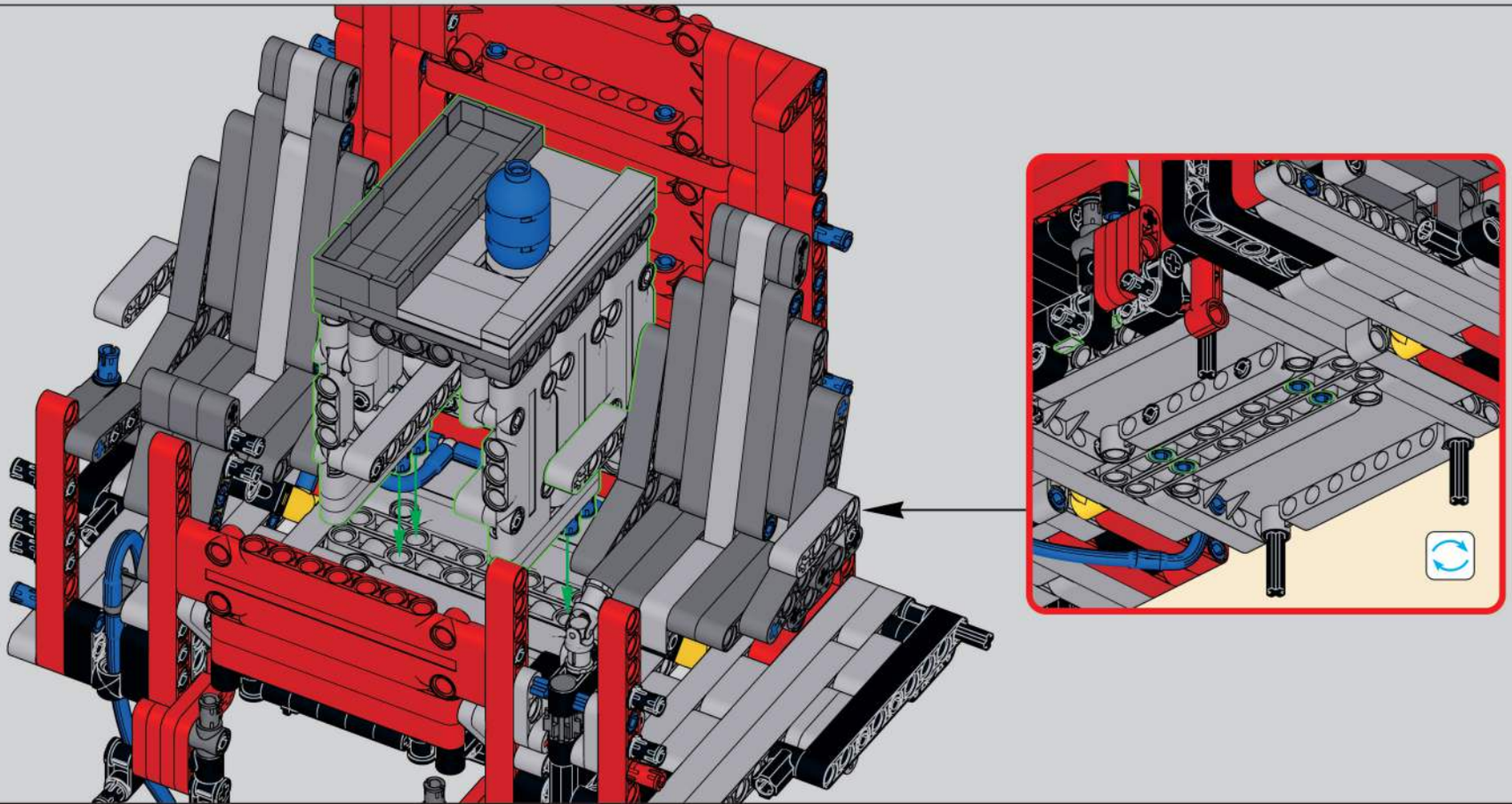

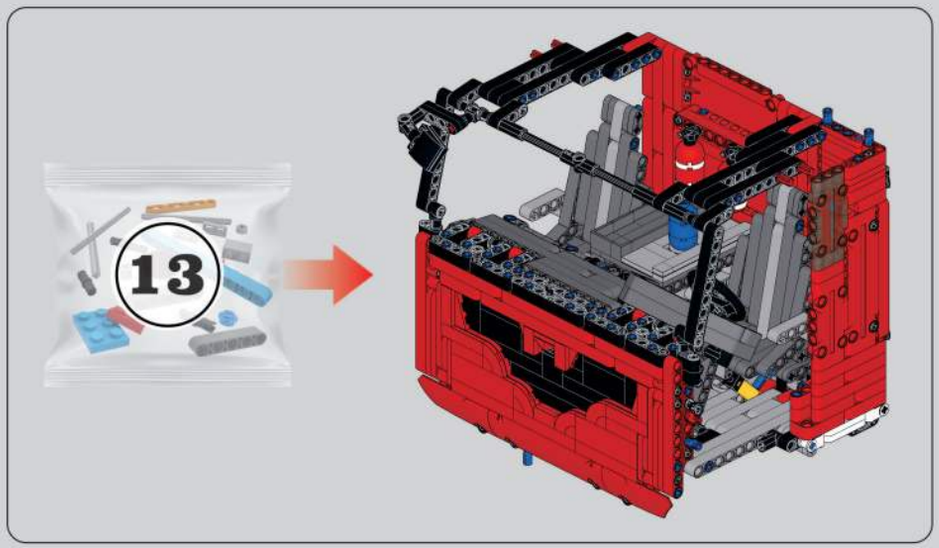

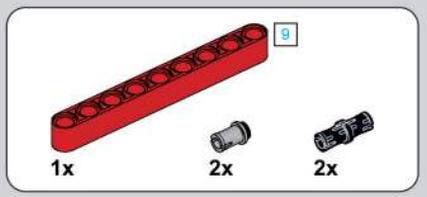

1469

1470

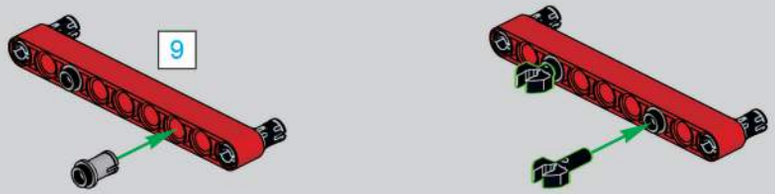

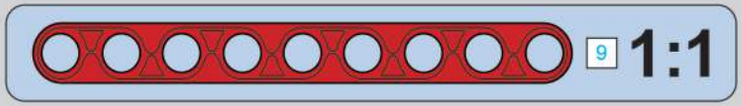

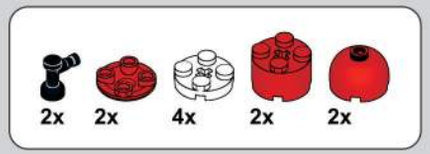

1471

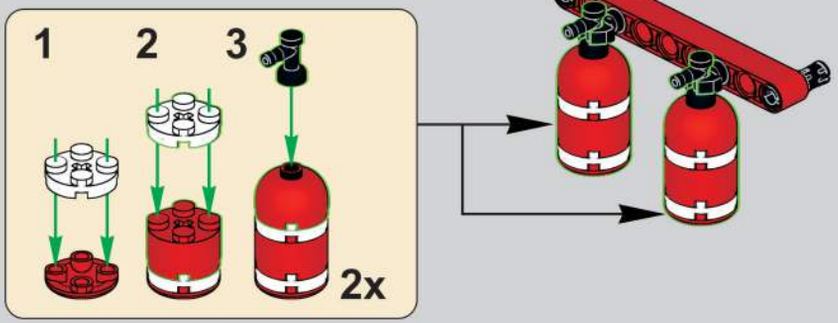

1472

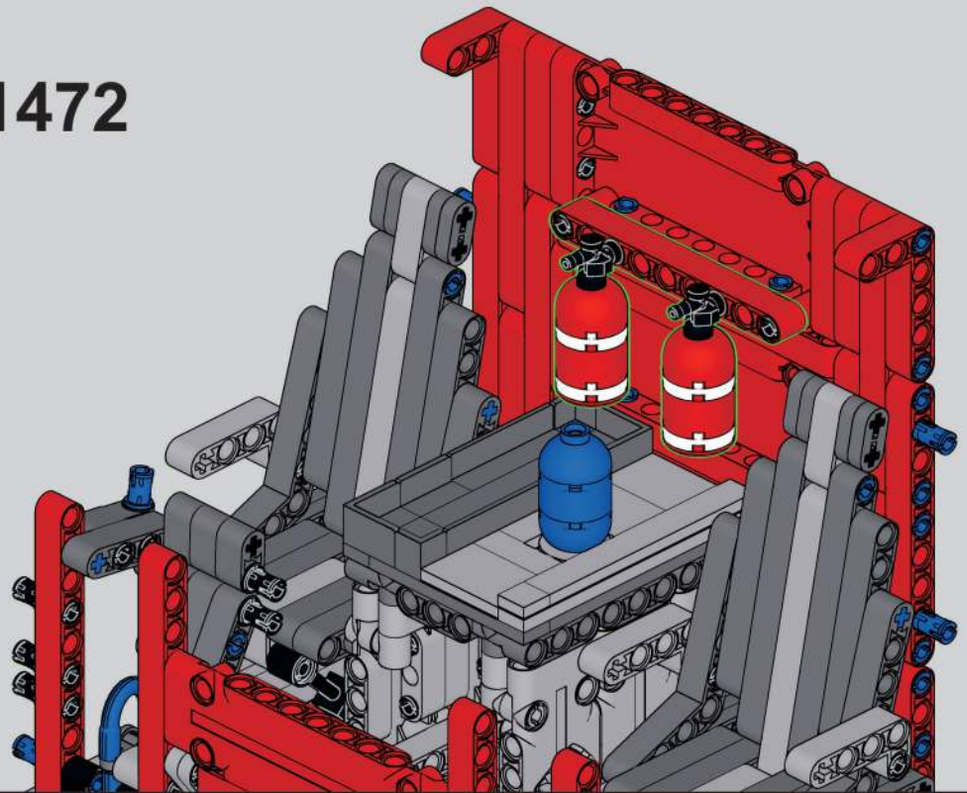

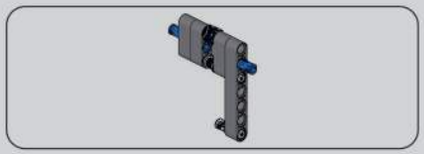

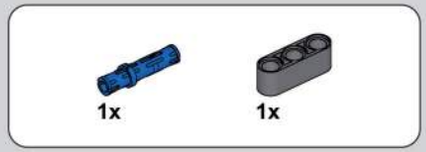

1473

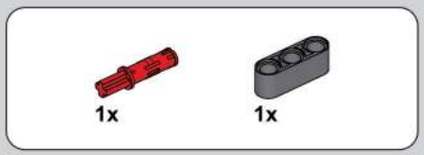

1474

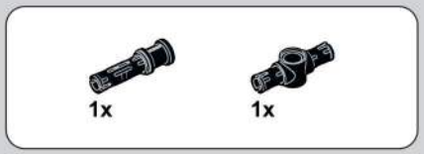

1475

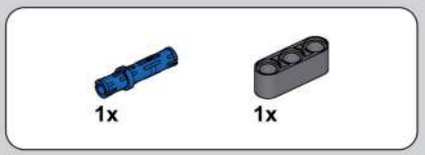

1476

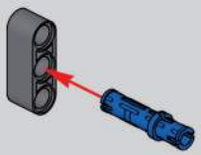

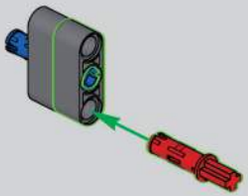

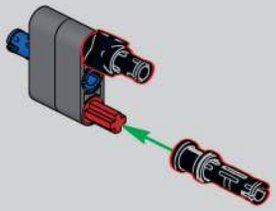

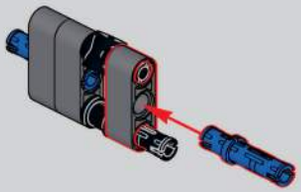

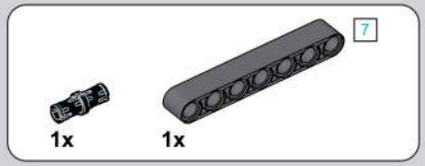

1477

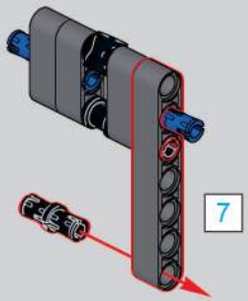

1478

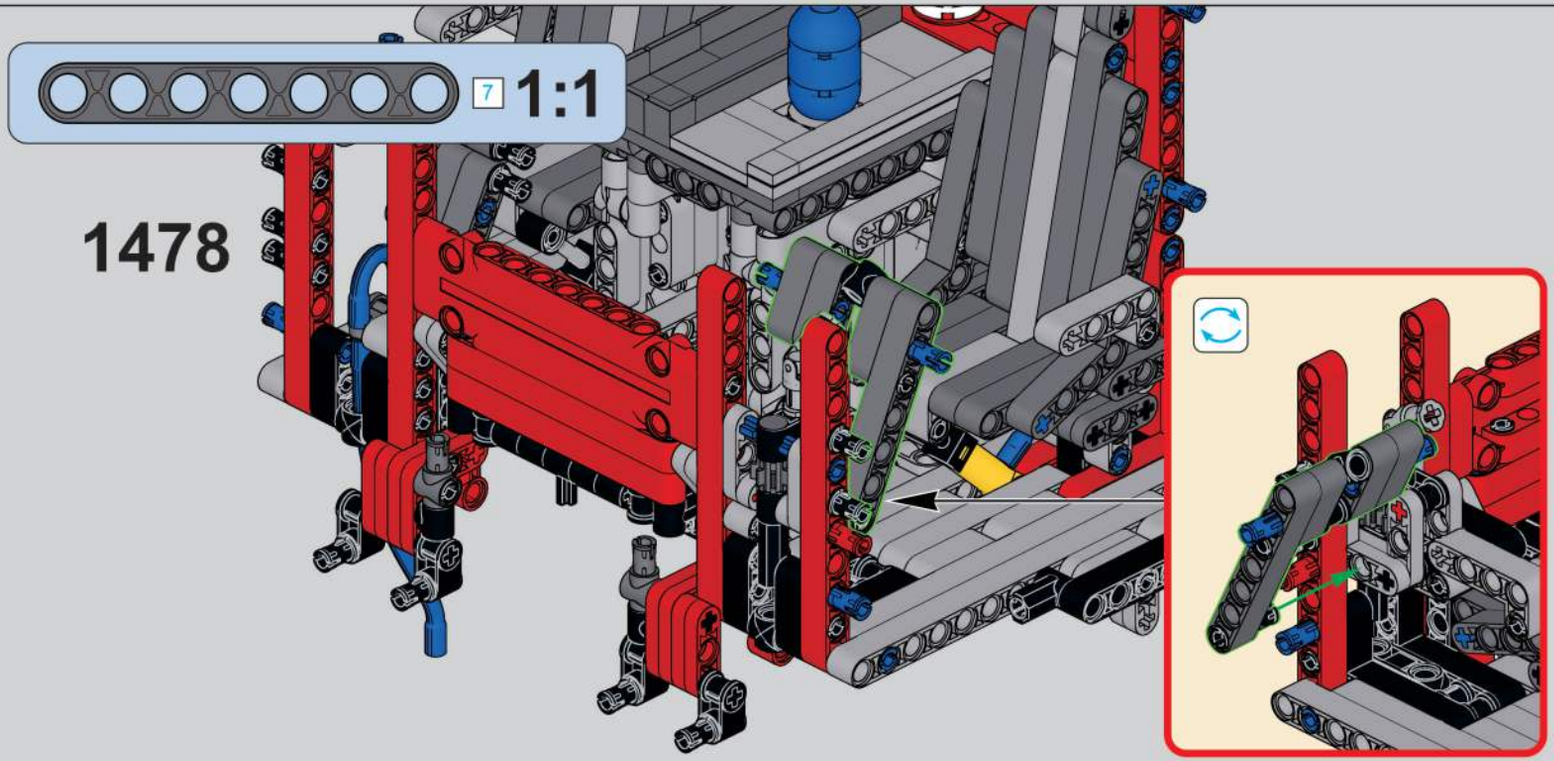

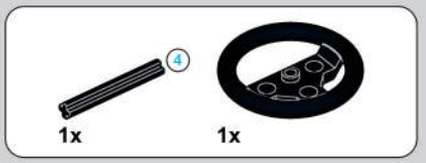

1479

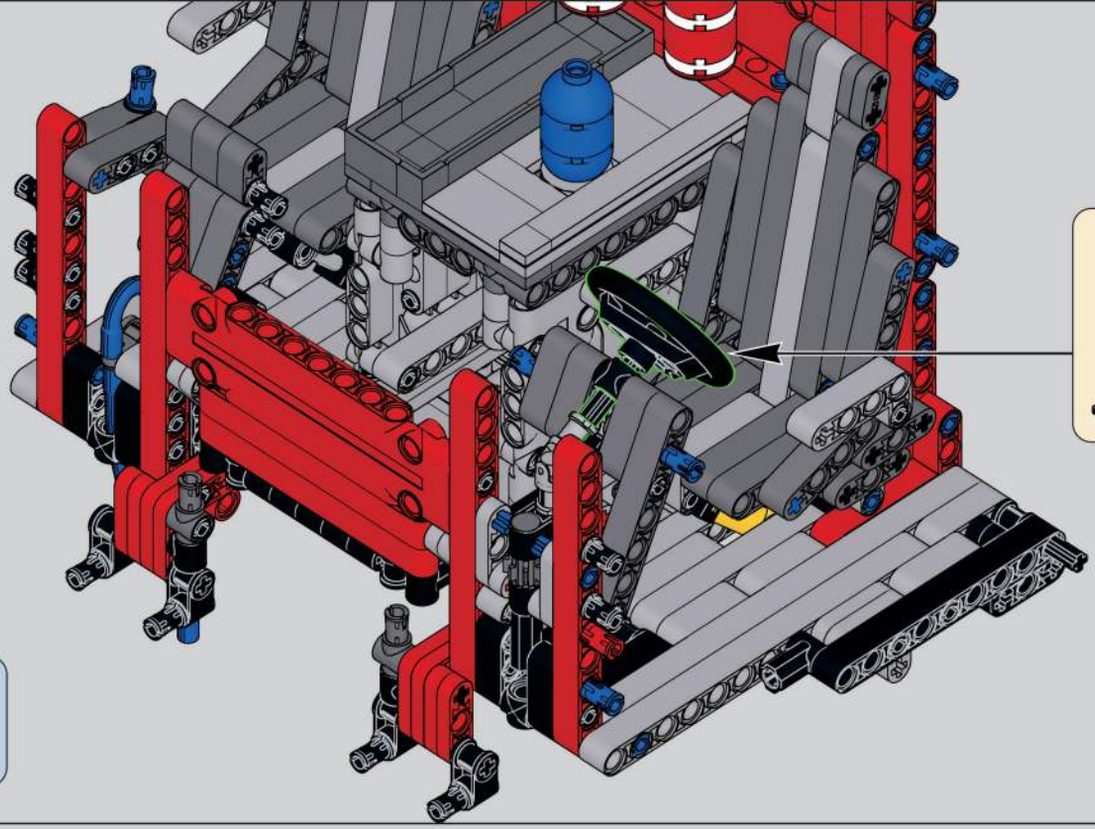

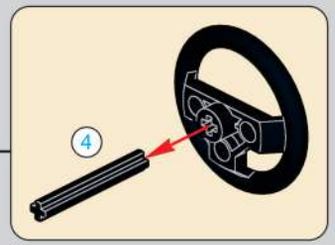

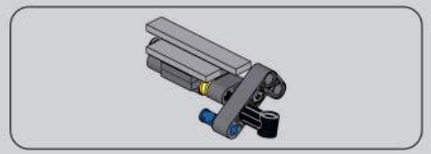

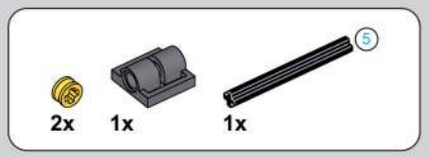

1480

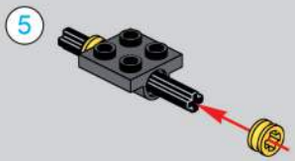

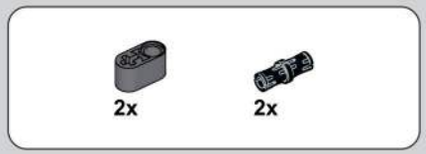

1481

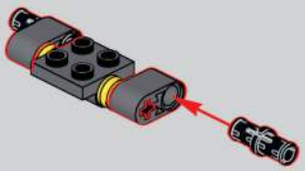

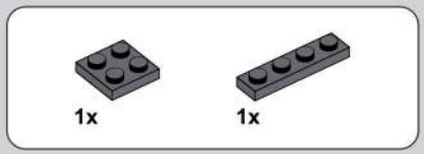

1482

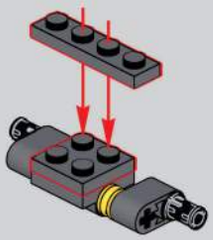

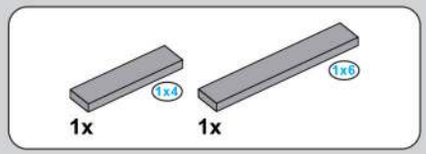

1483

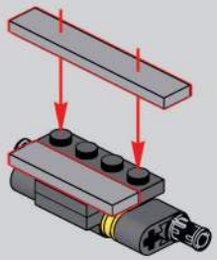

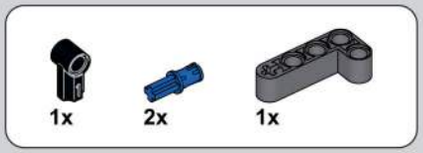

1484

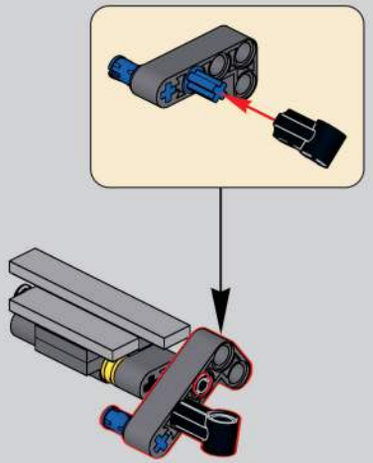

1485

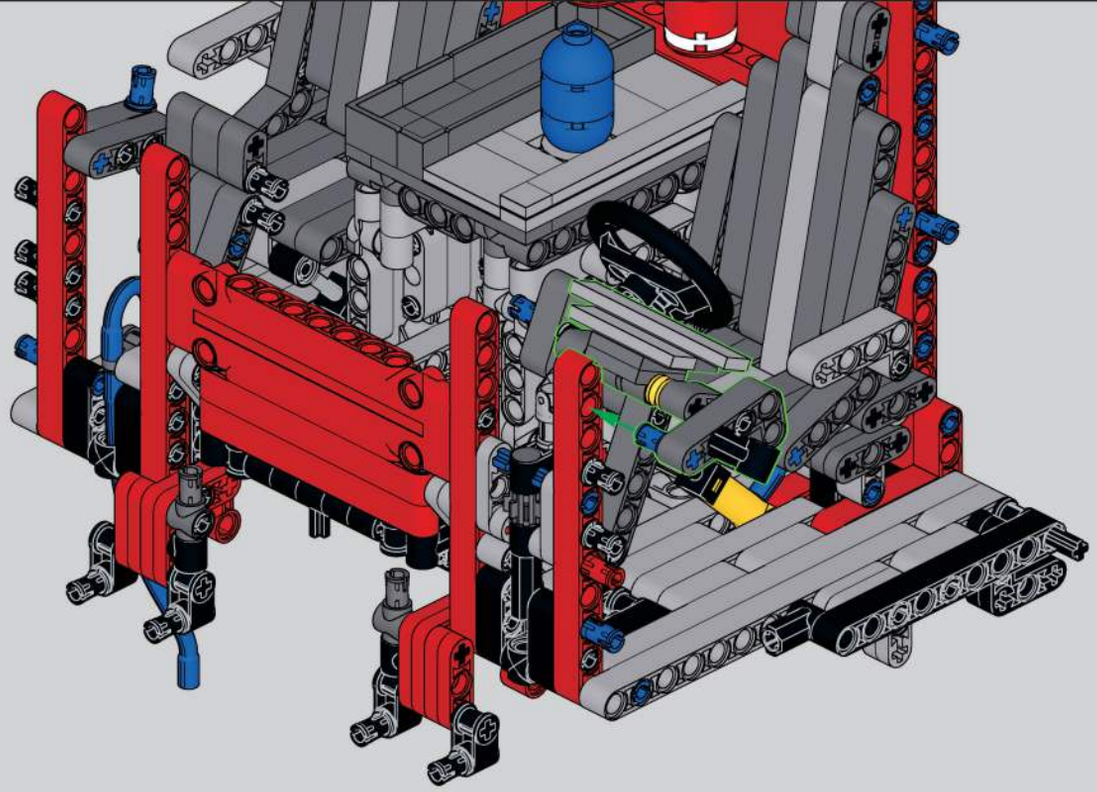

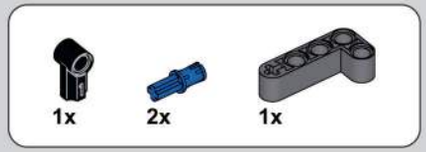

1486

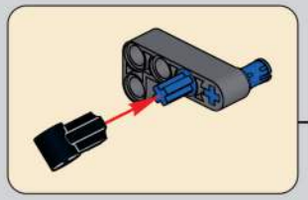

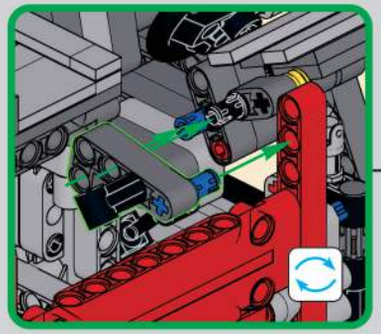

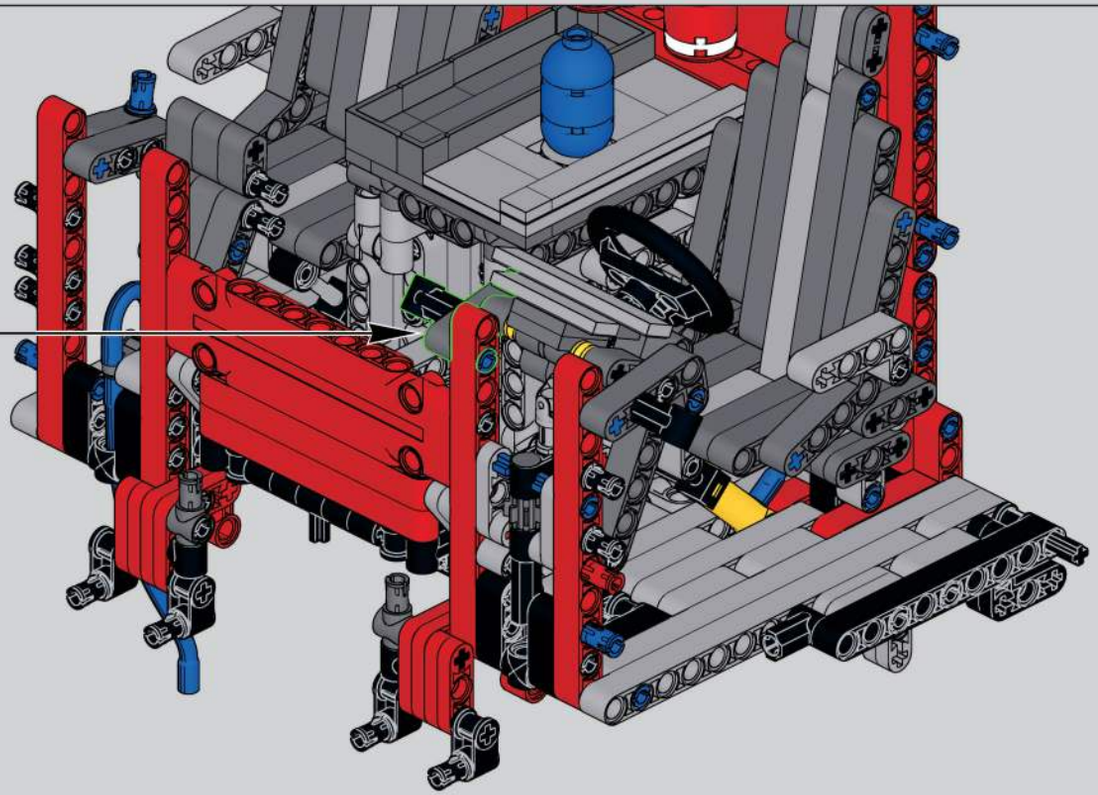

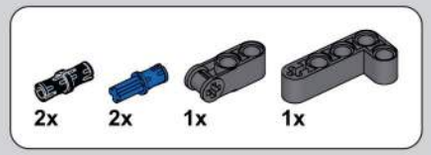

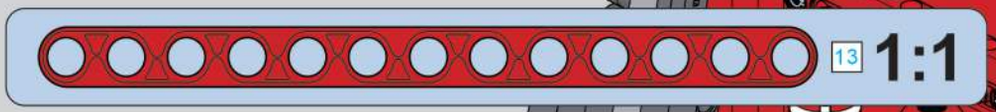

1487

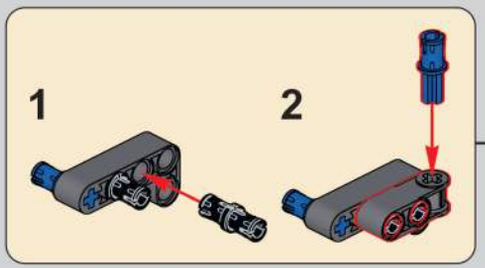

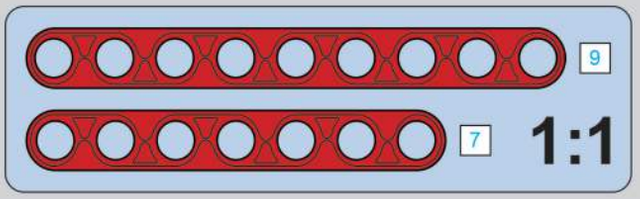

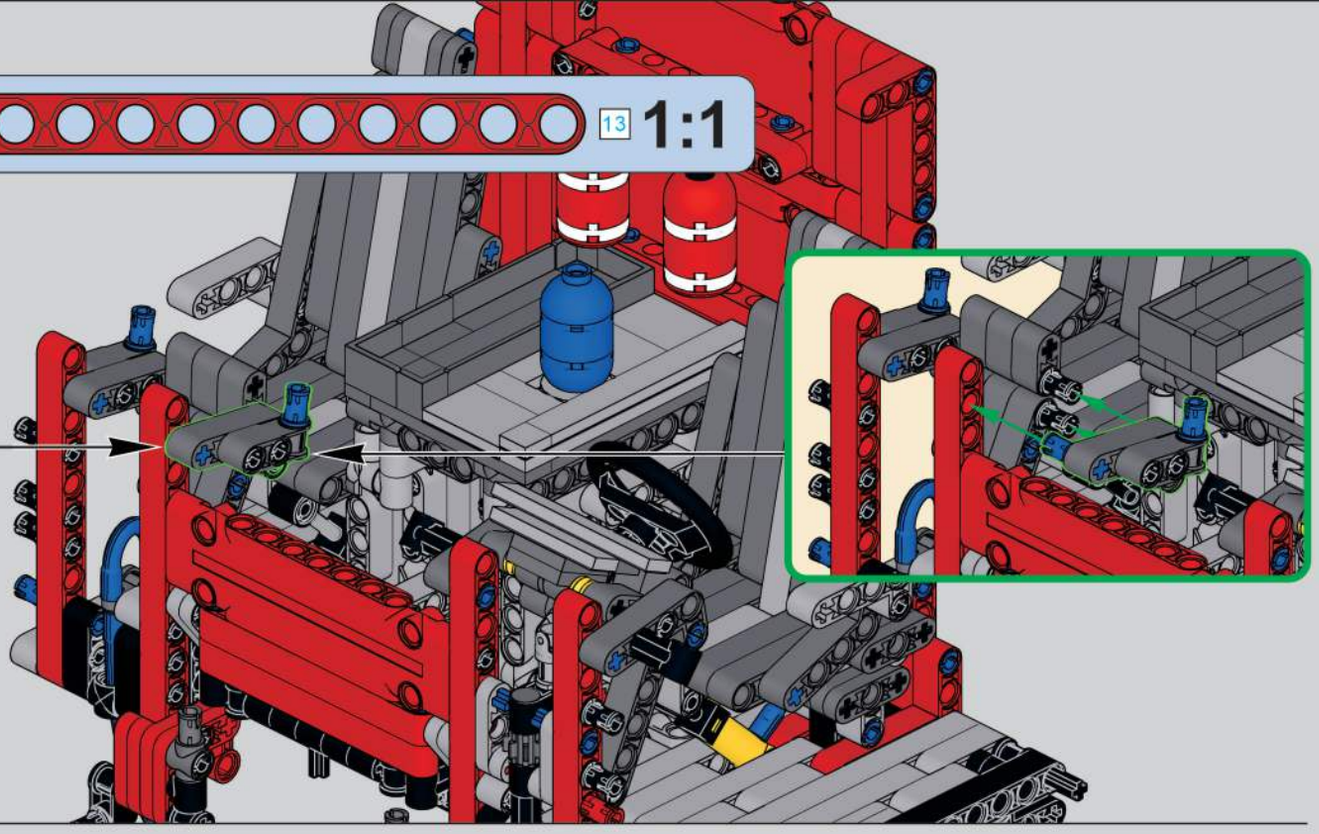

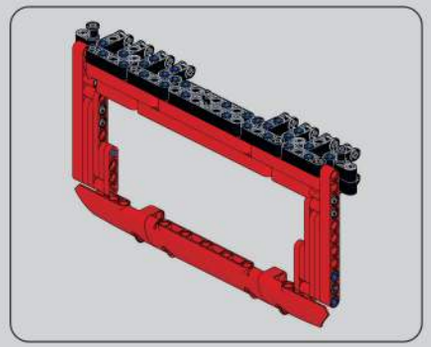

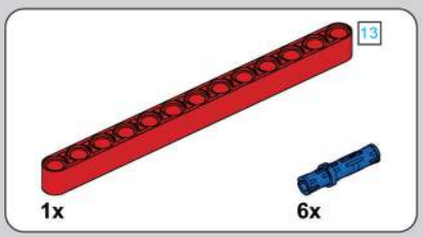

1488

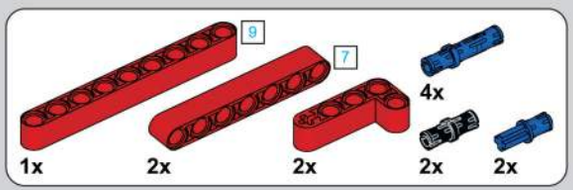

1489

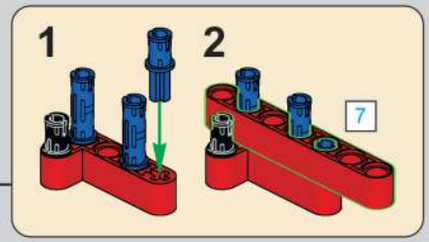

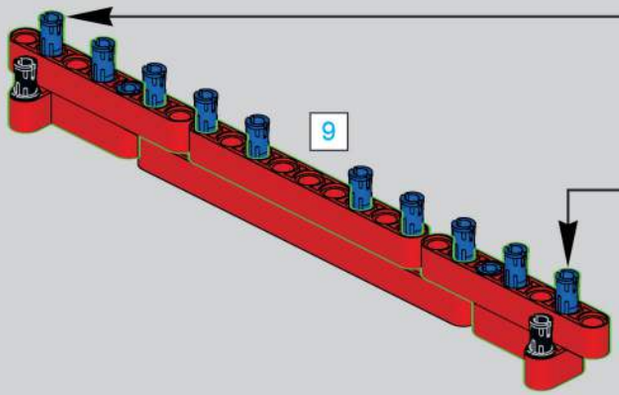

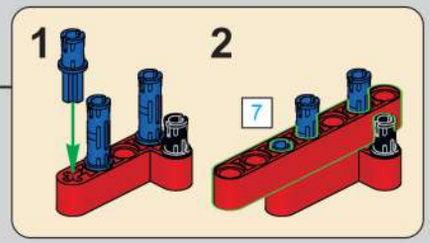

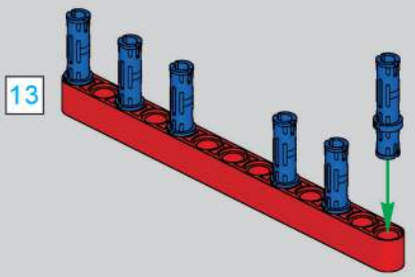

1490

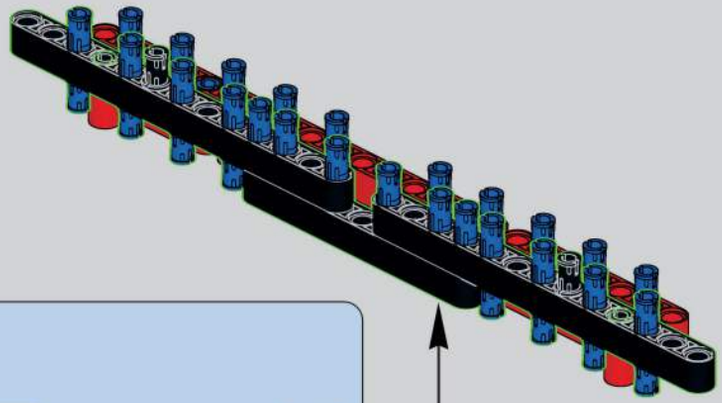

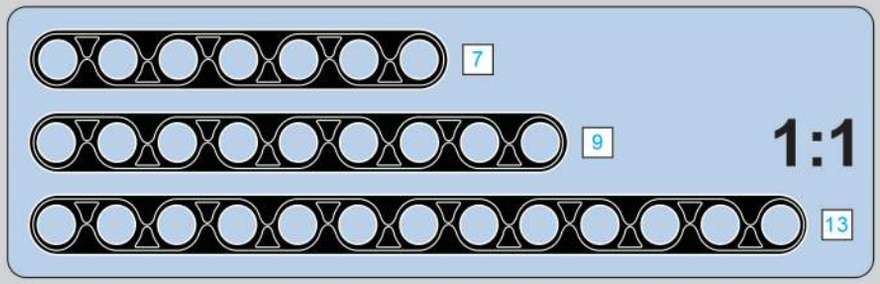

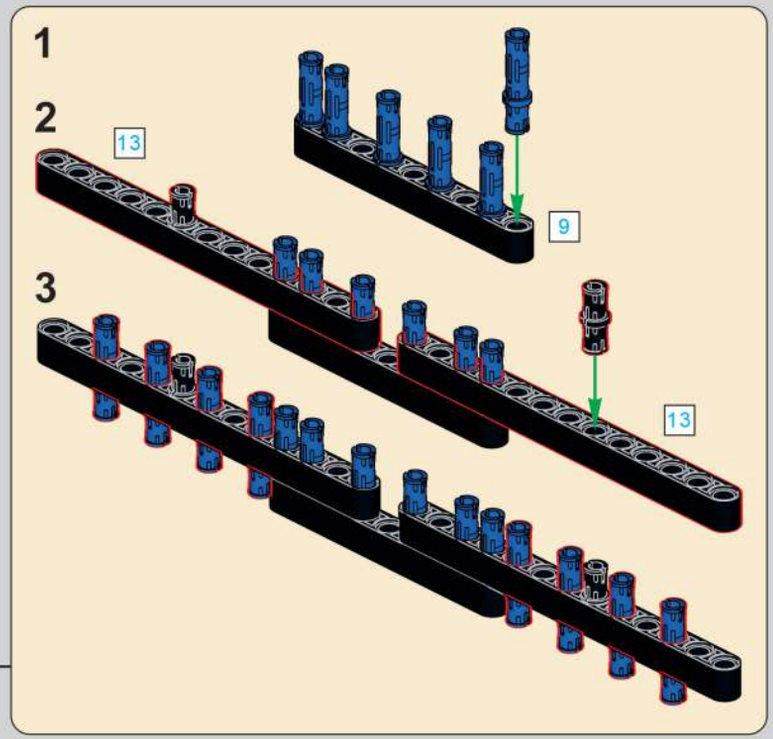

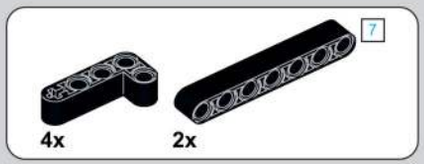

1491

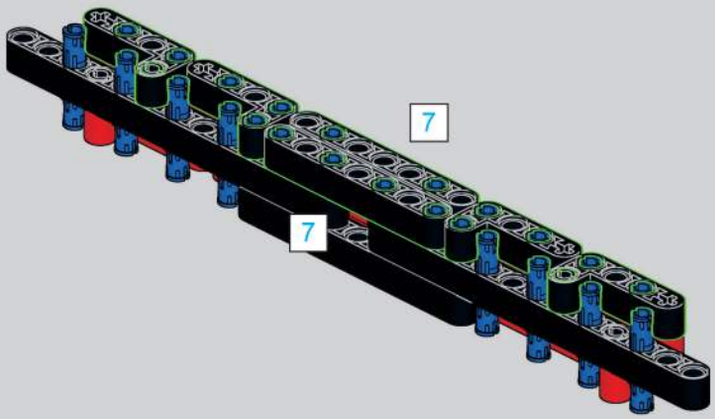

1492

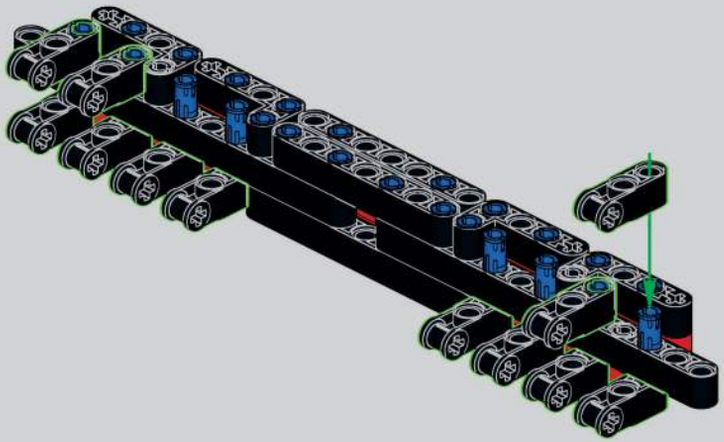

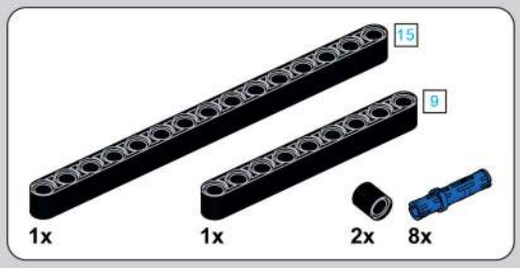

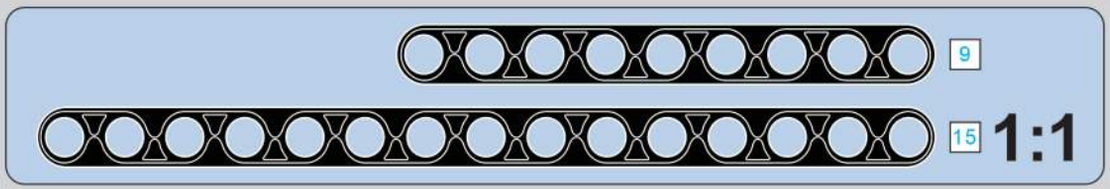

1493

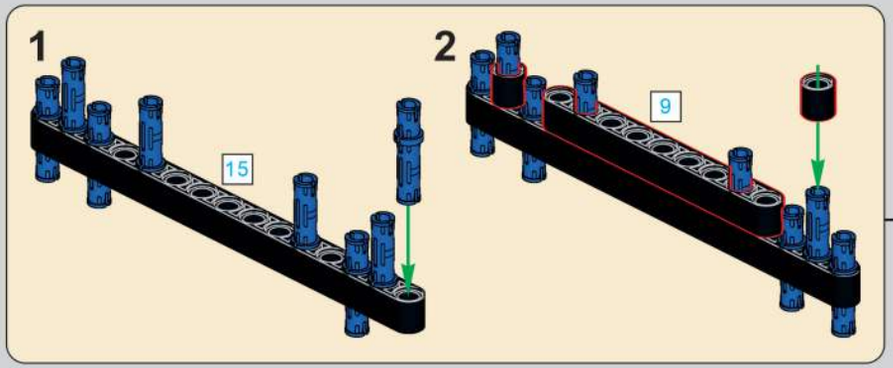

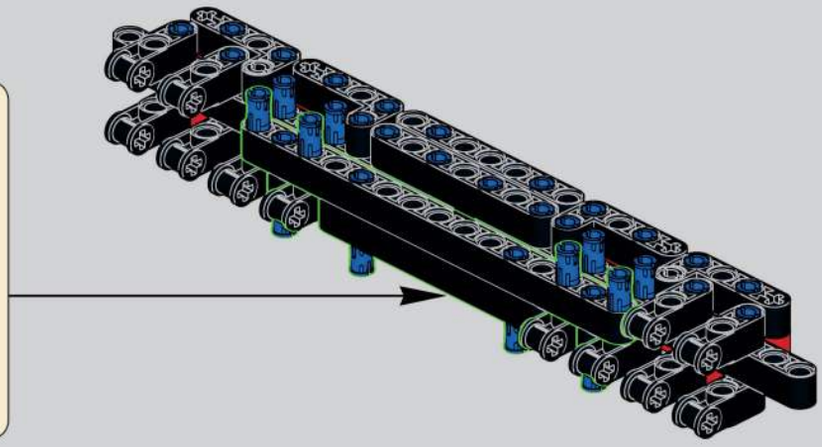

1494

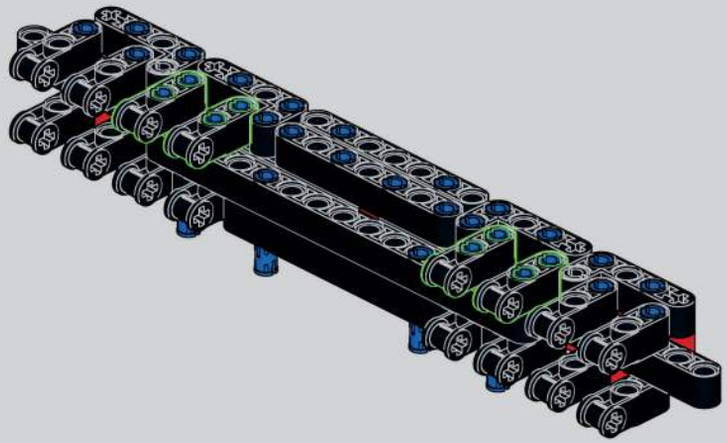

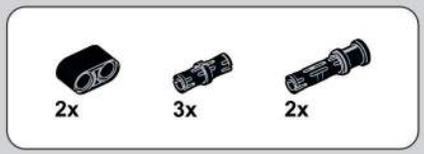

1495

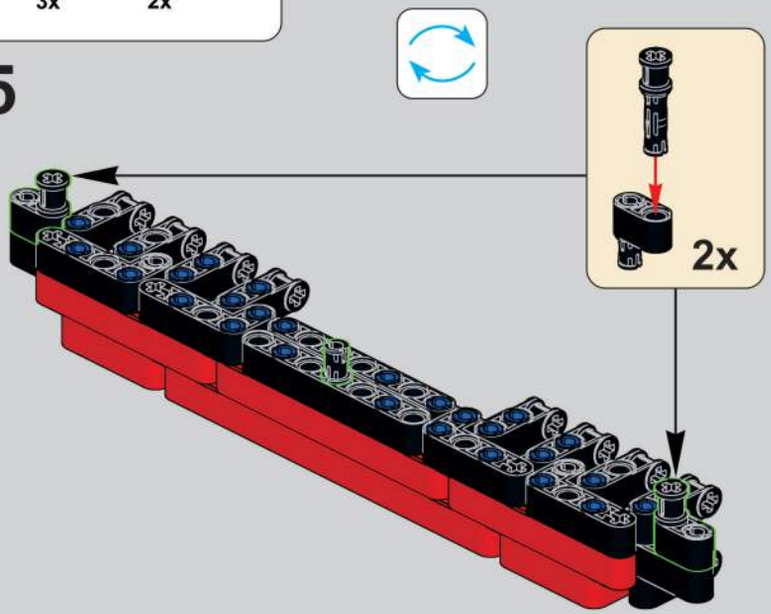

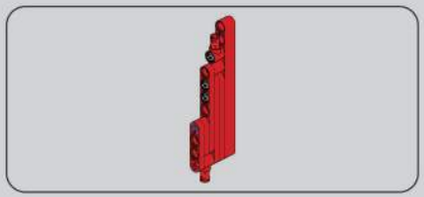

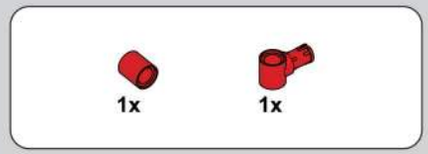

1497

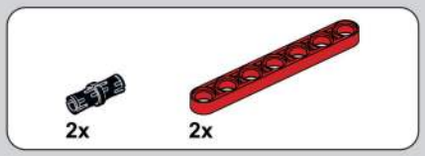

1498

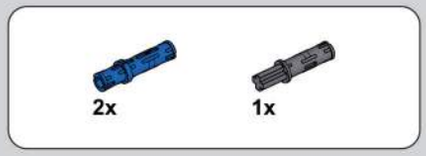

1499

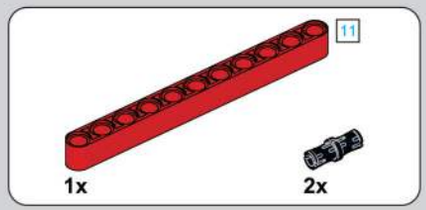

1496

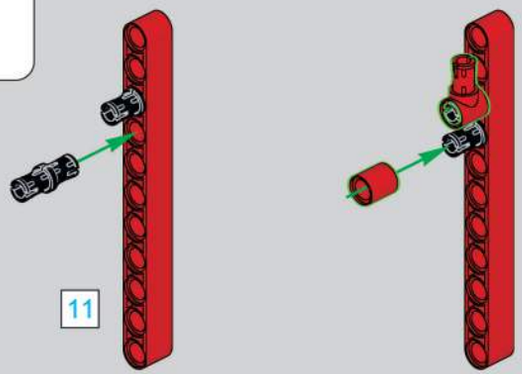

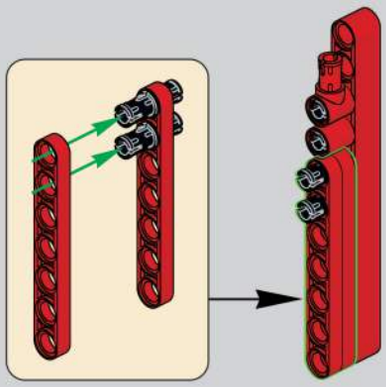

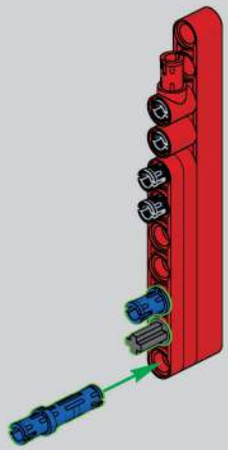

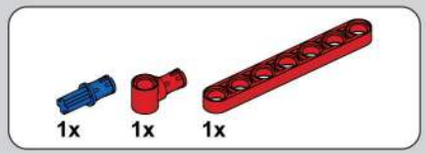

1500

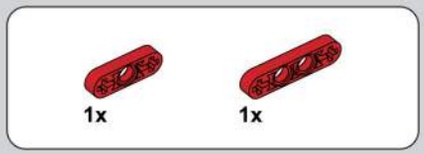

1501

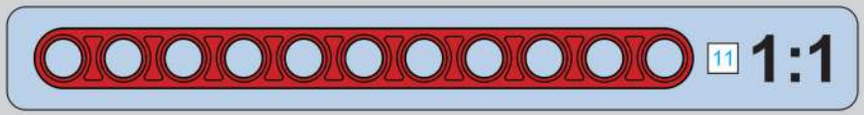

1502

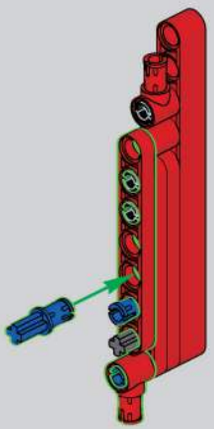

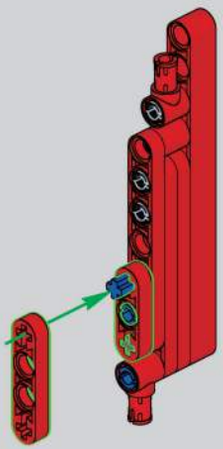

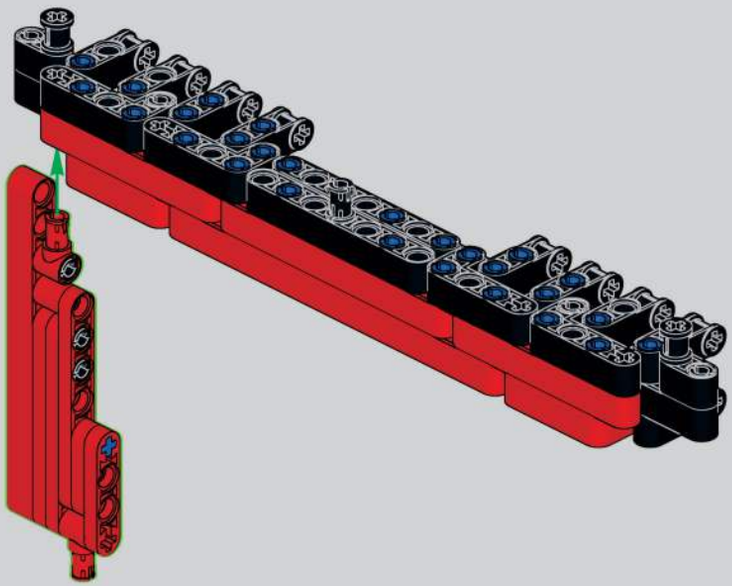

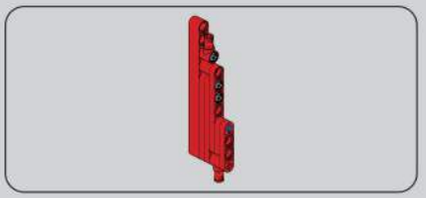

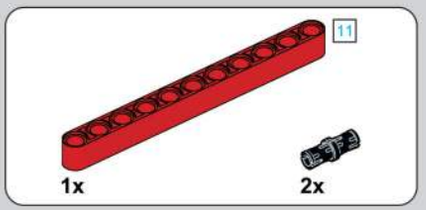

1503

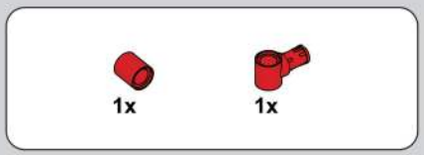

1504

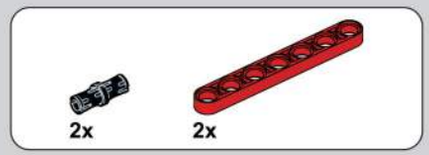

1505

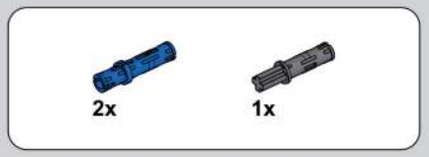

1506

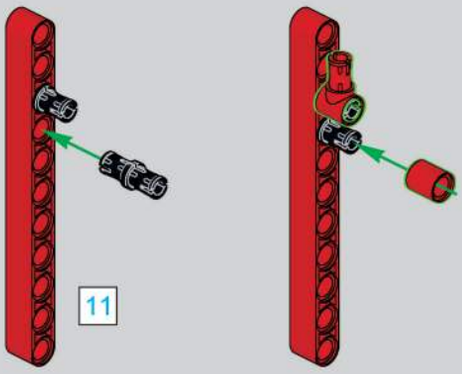

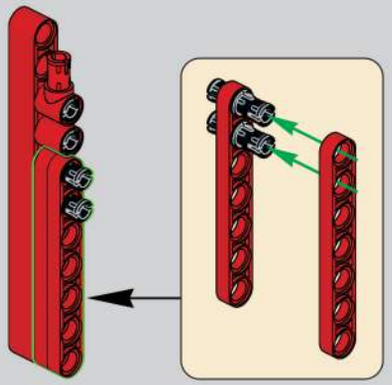

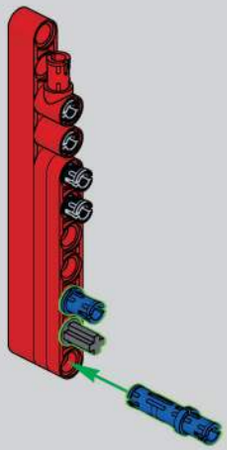

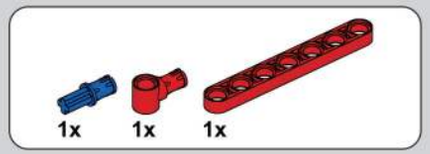

1507

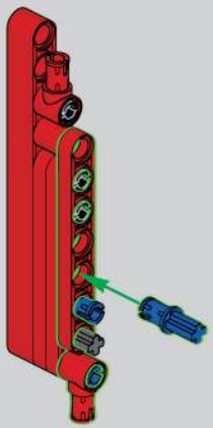

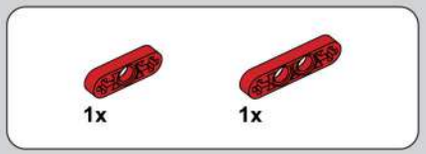

1508

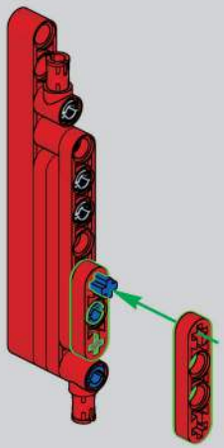

1509

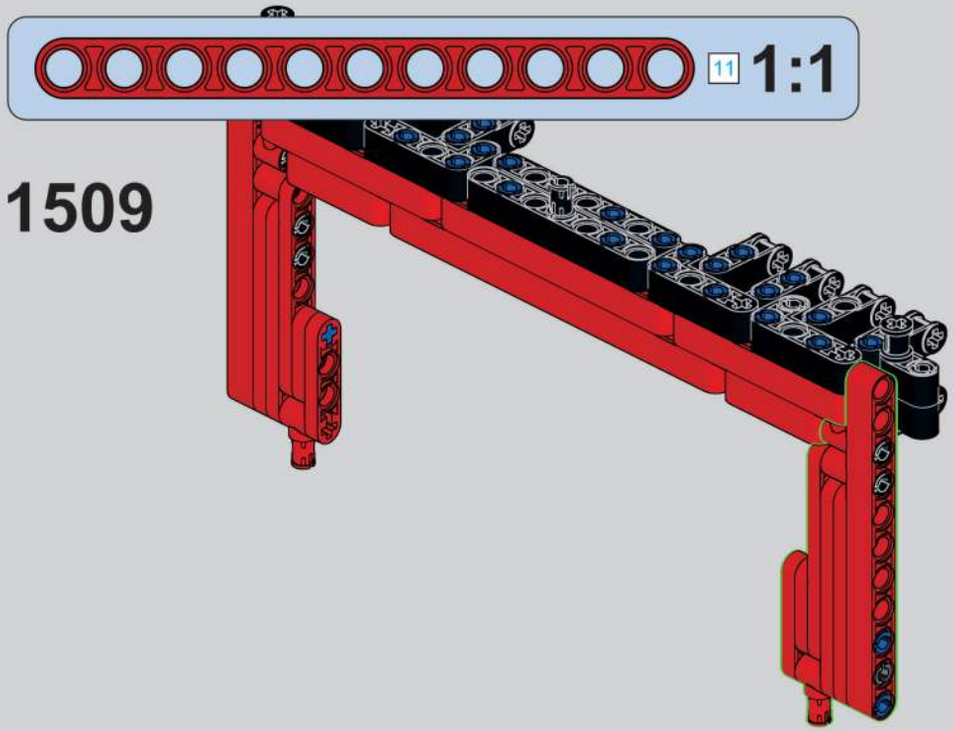

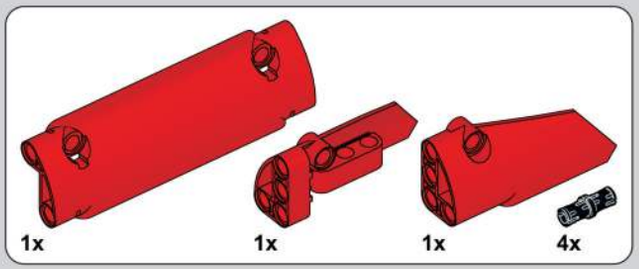

1510

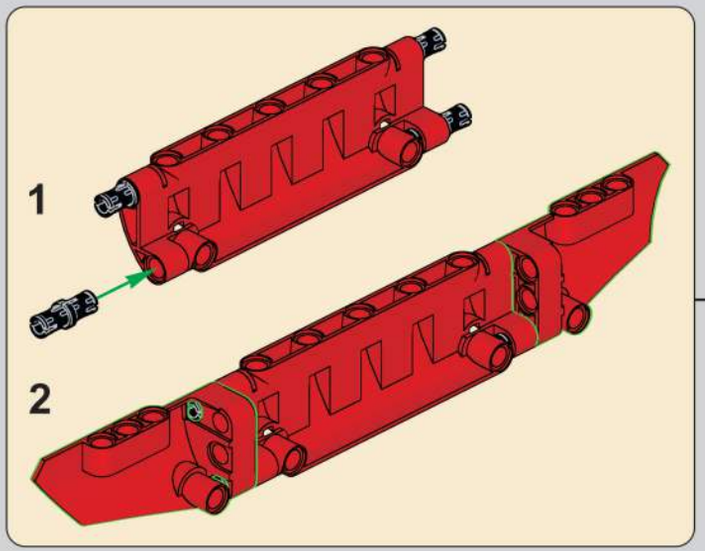

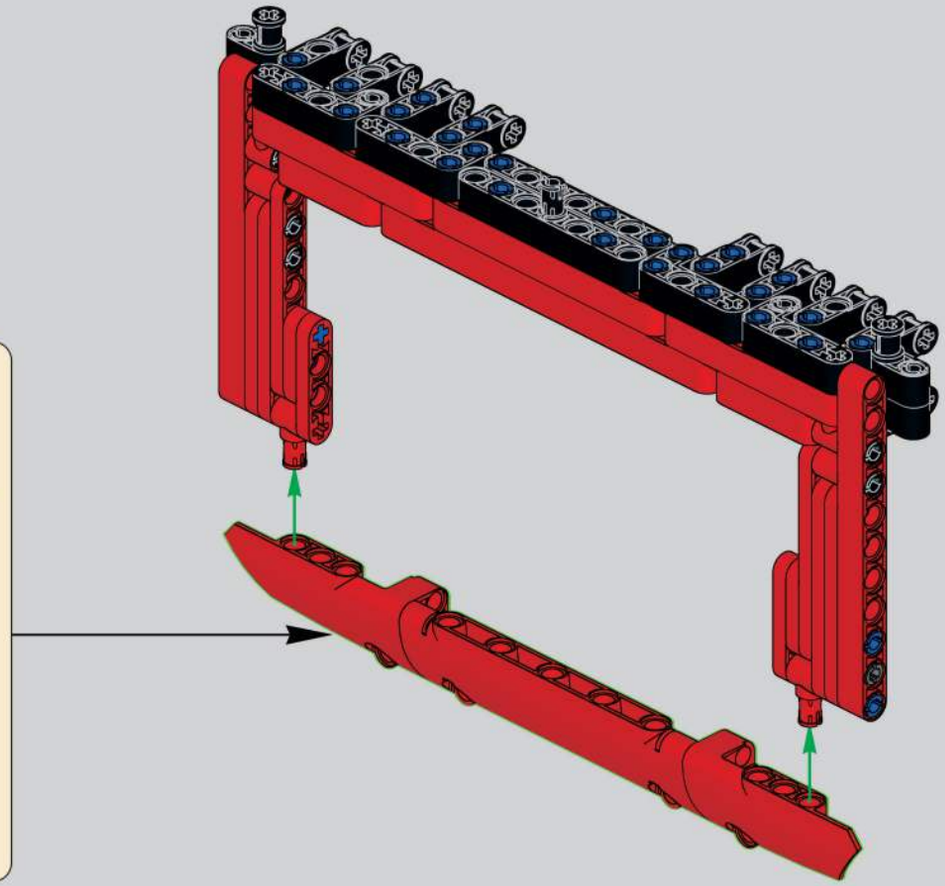

1511

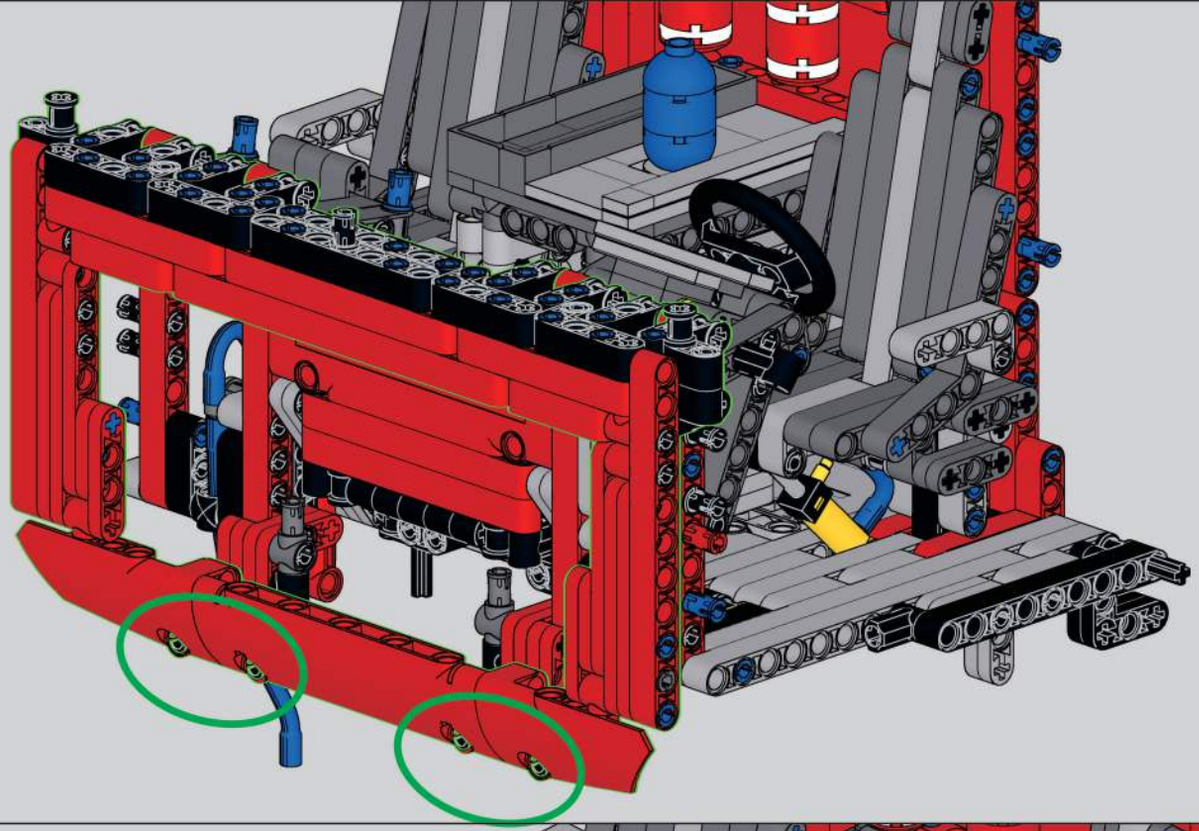

1512

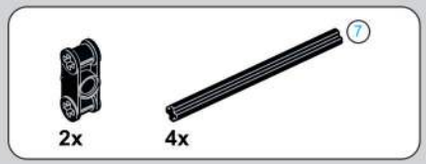

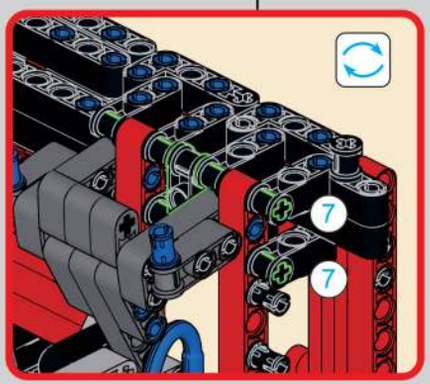

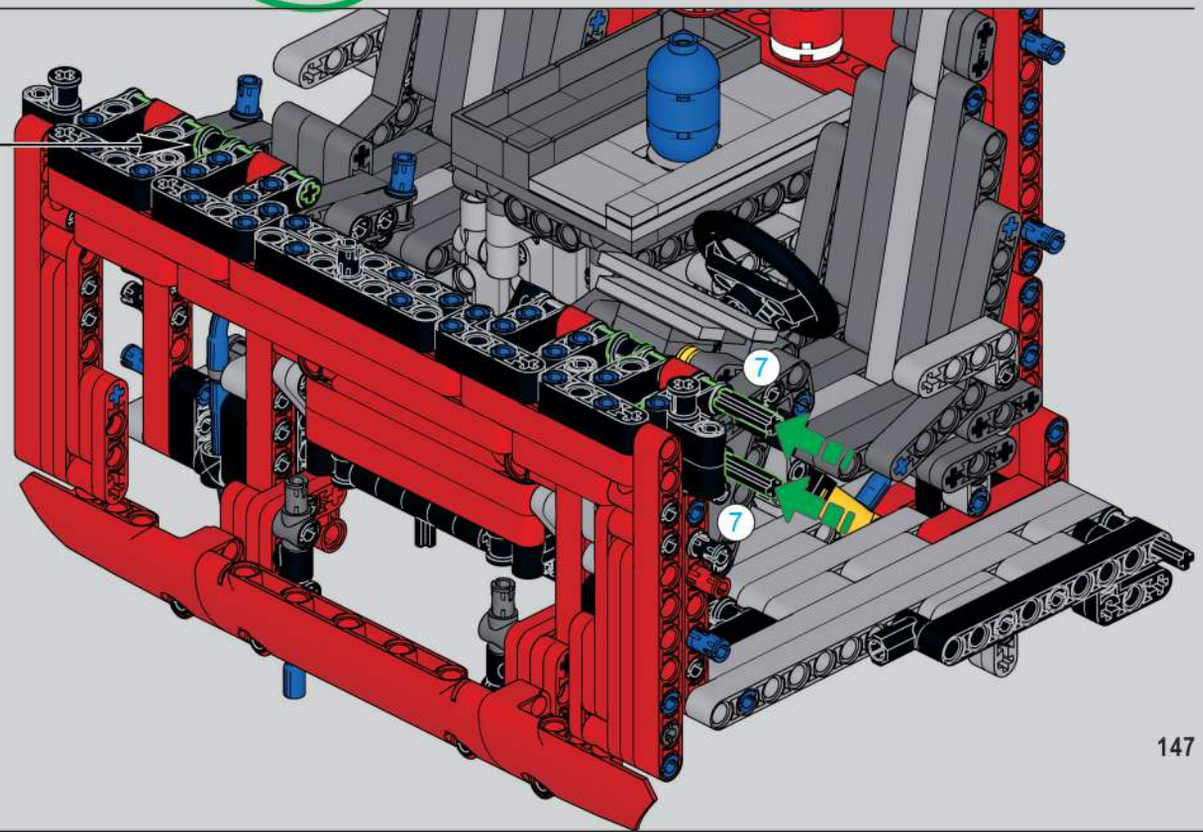

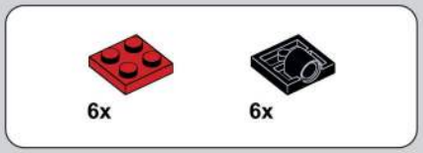

1513

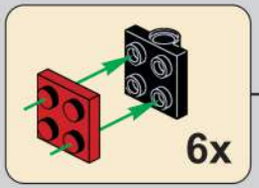

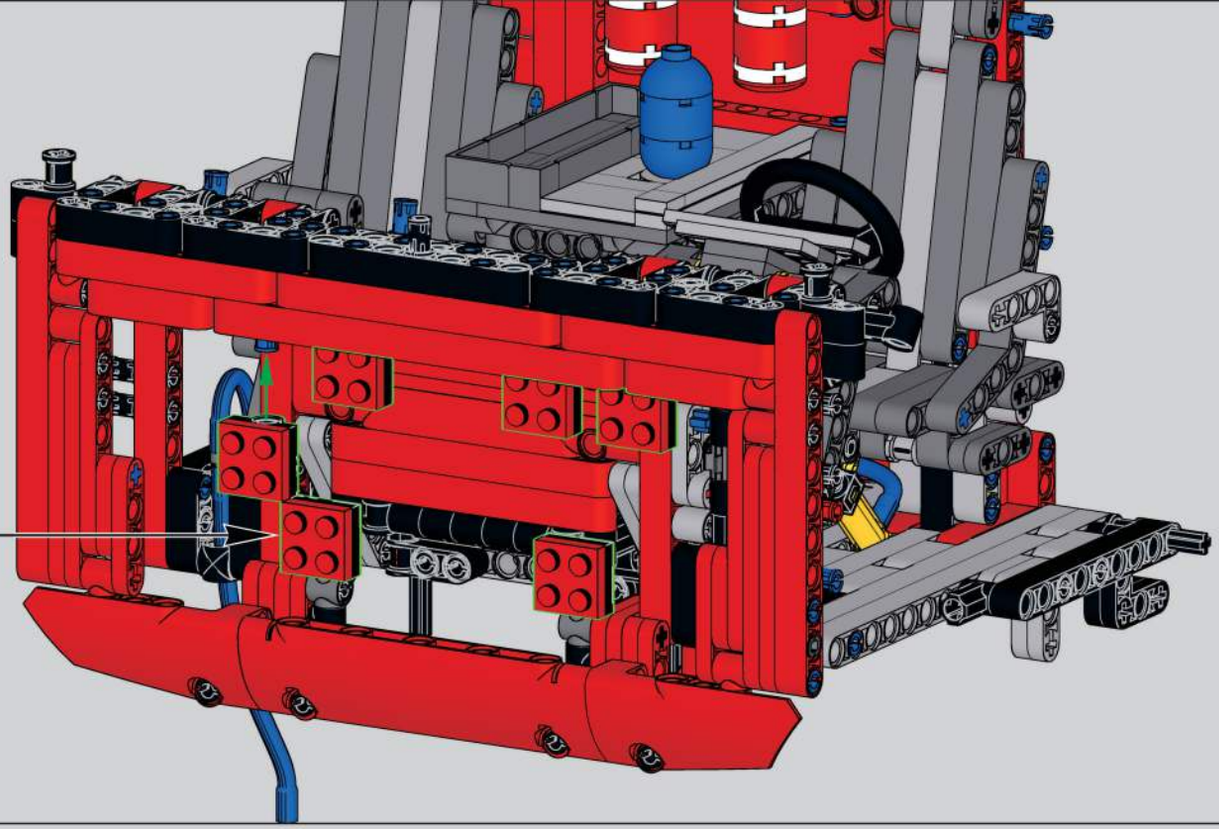

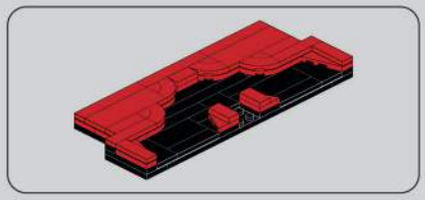

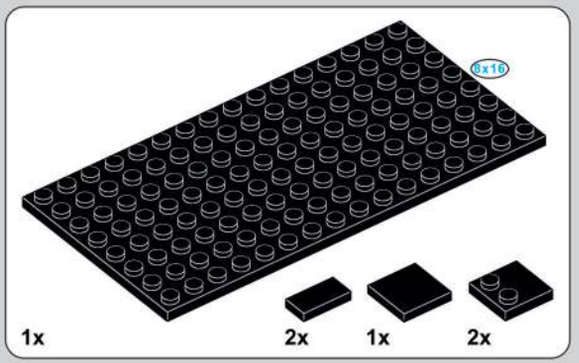

1514

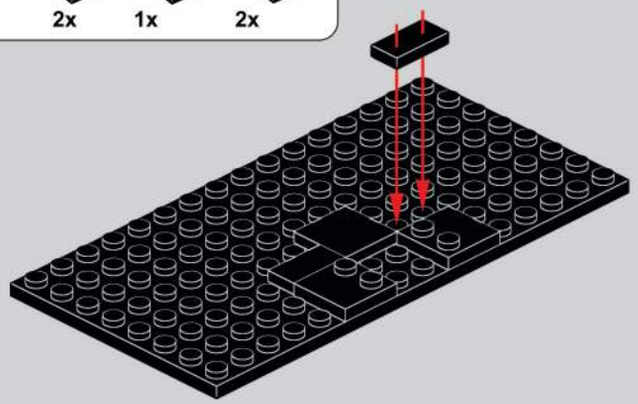

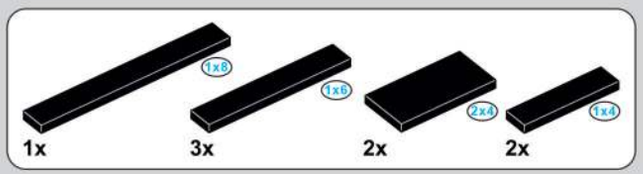

1515

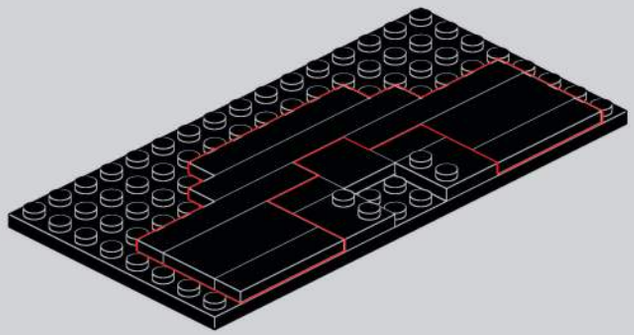

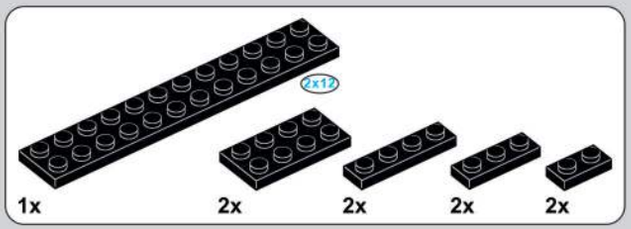

1516

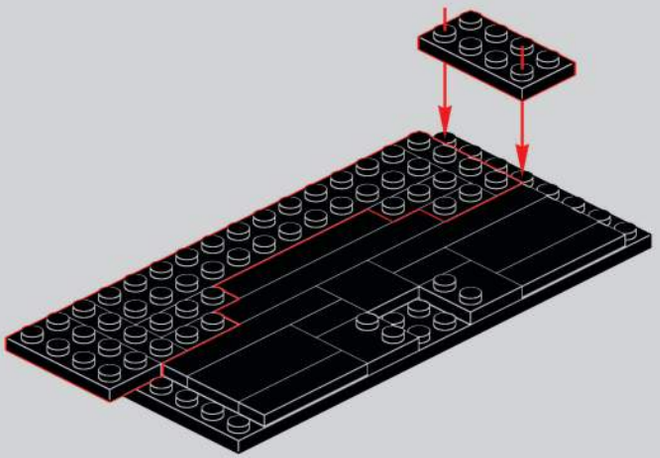

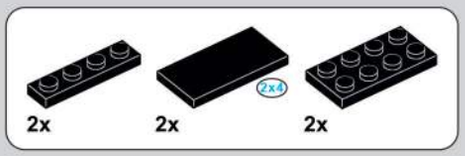

1517

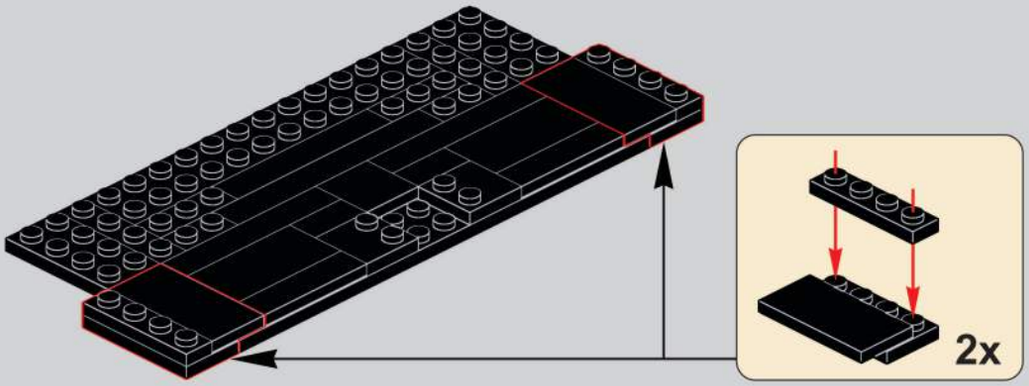

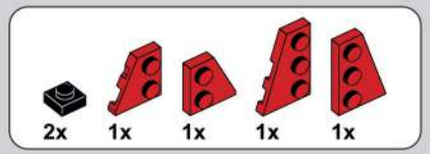

1518

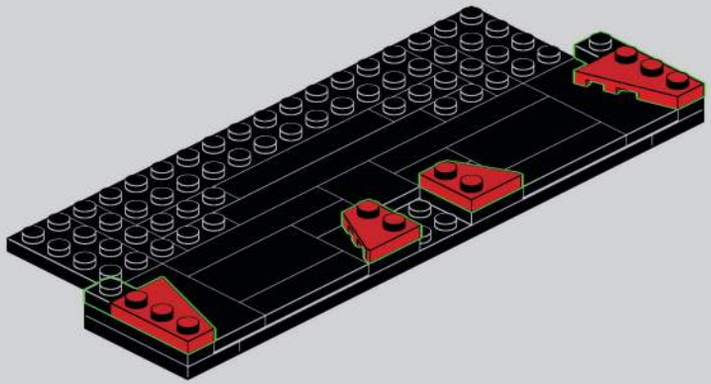

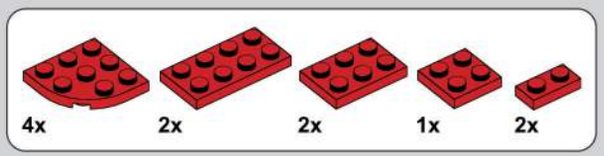

1519

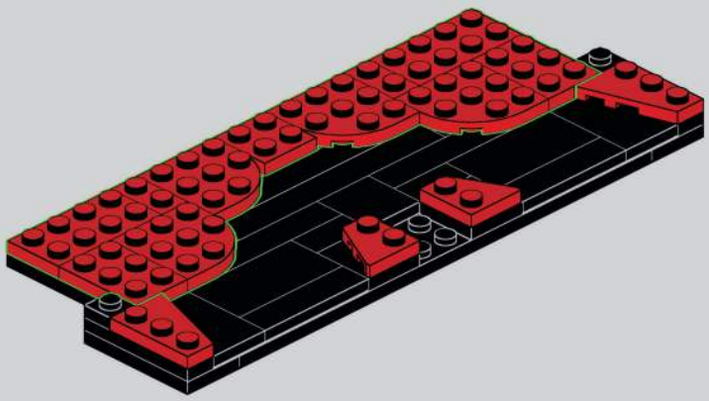

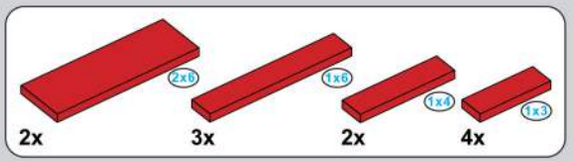

1520

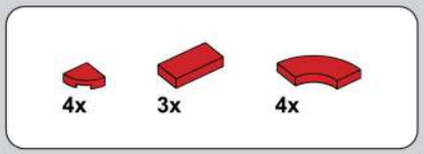

1521

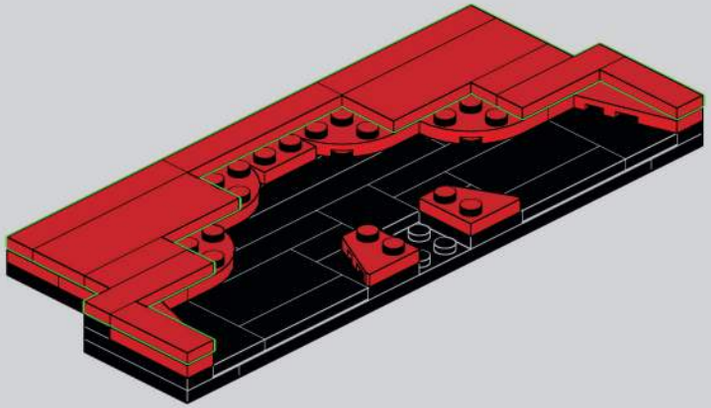

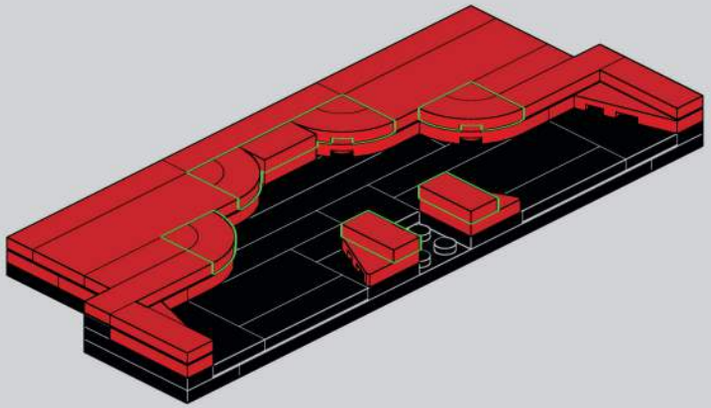

1522

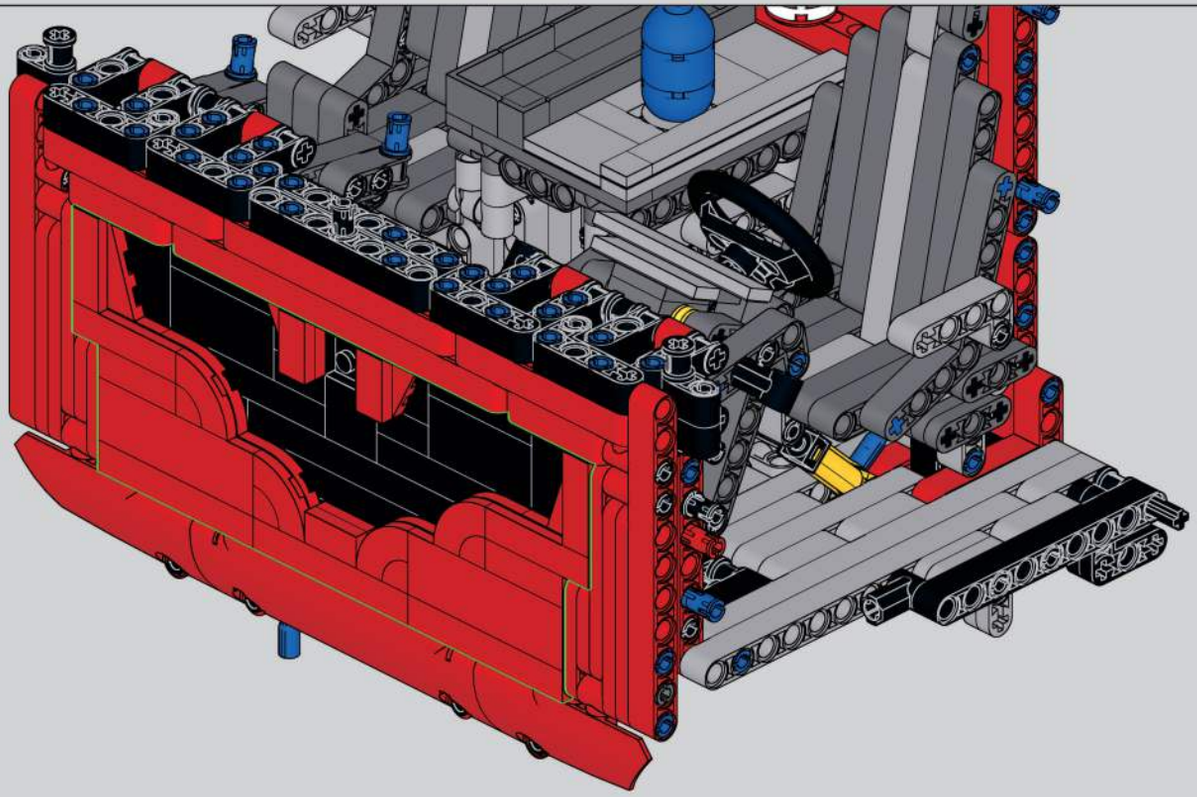

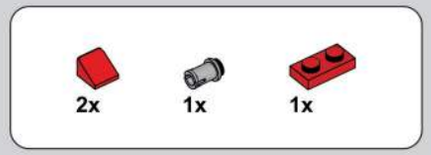

1523

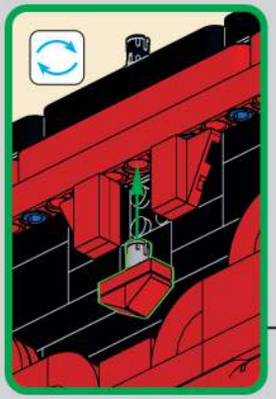

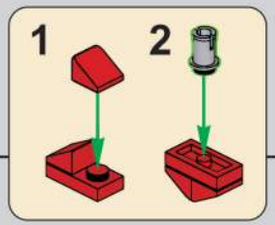

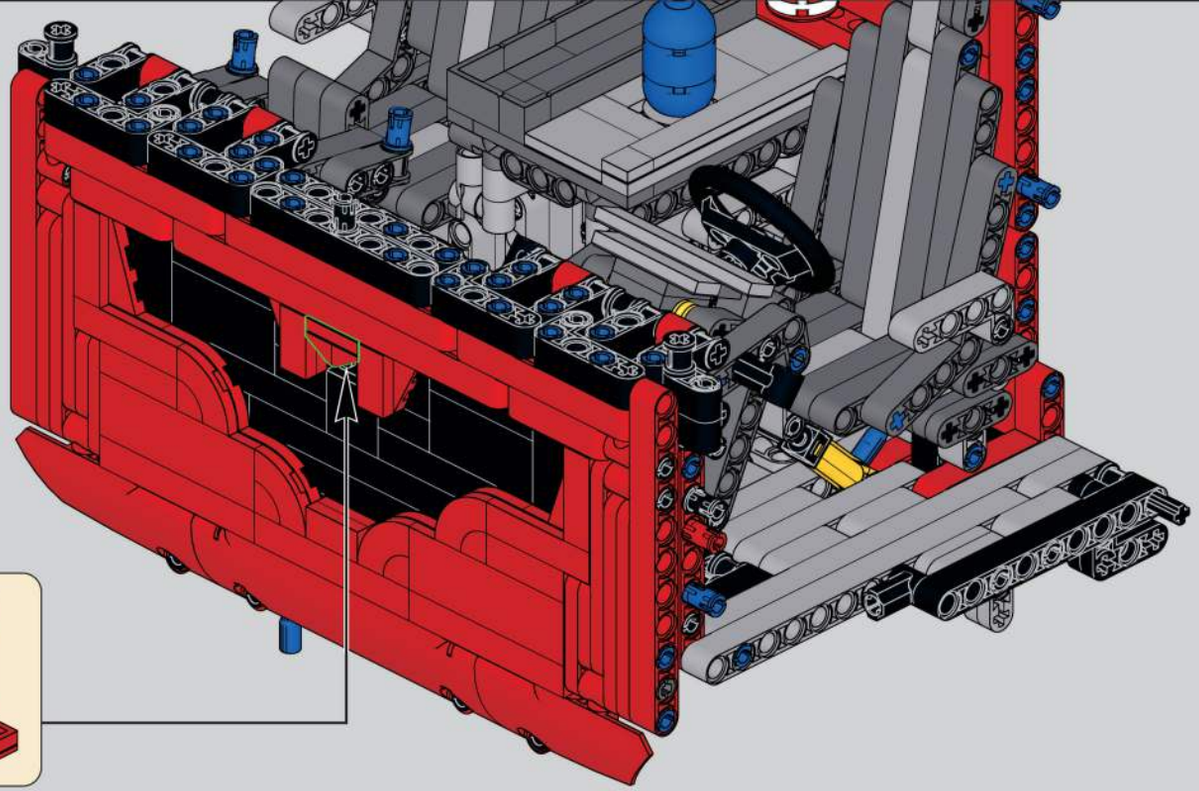

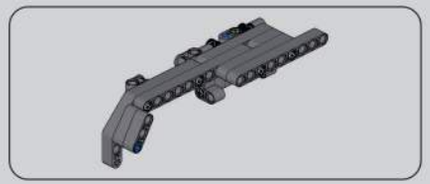

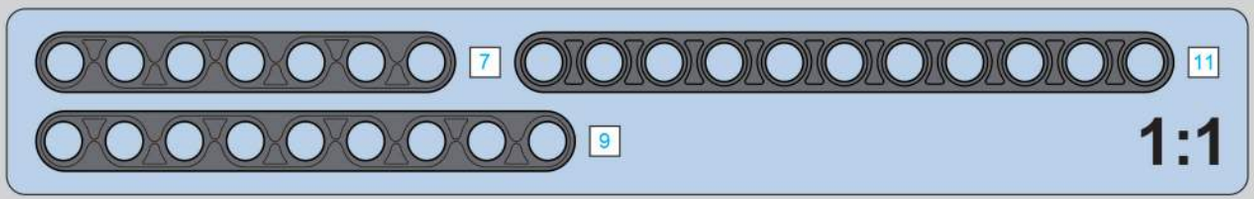

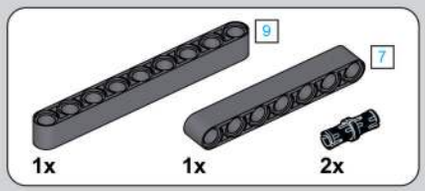

1524

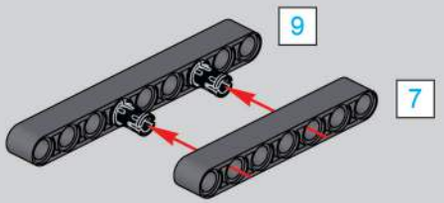

1525

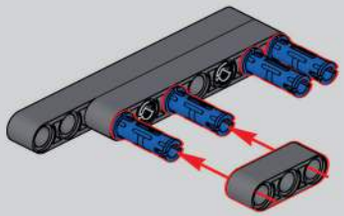

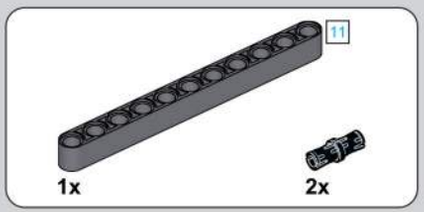

1526

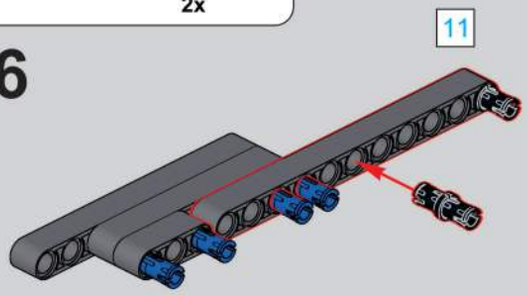

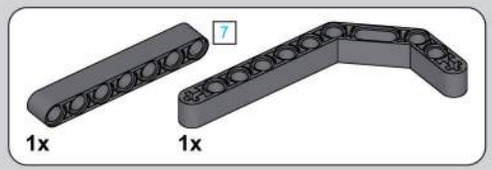

1527

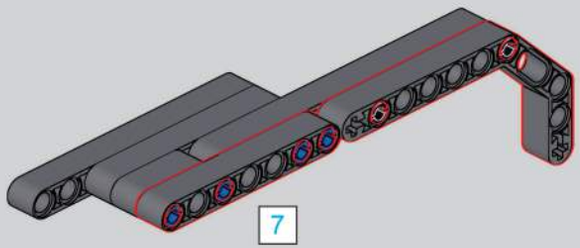

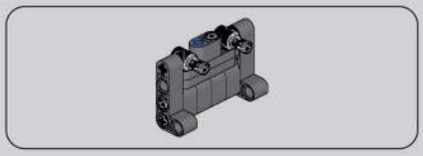

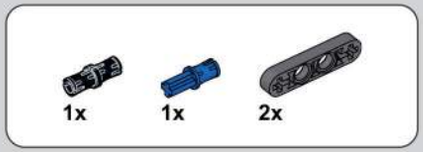

1528

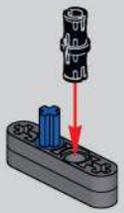

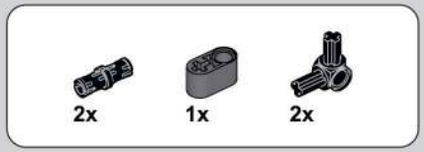

1529

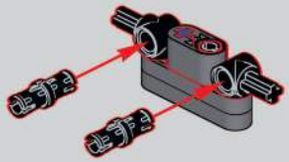

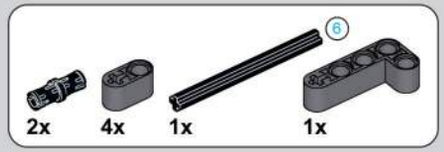

1530

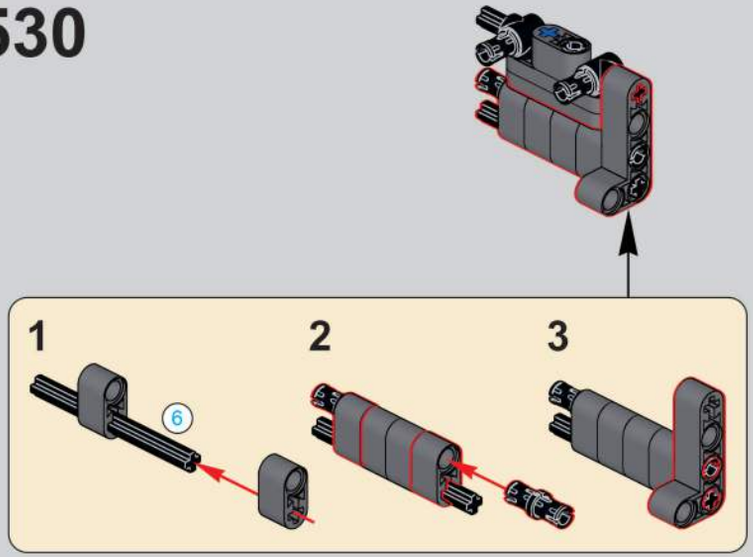

1531

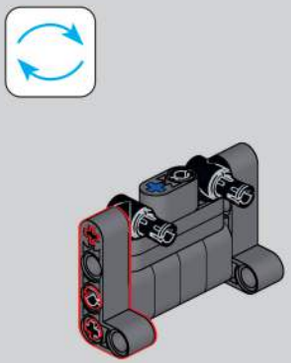

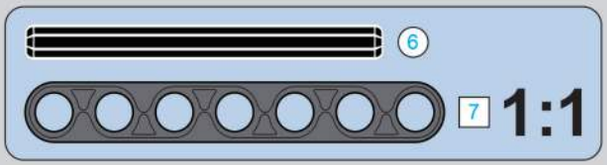

1532

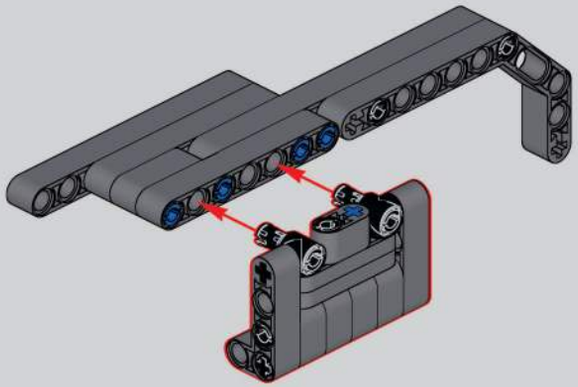

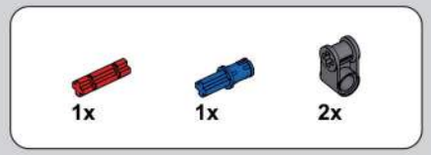

1533

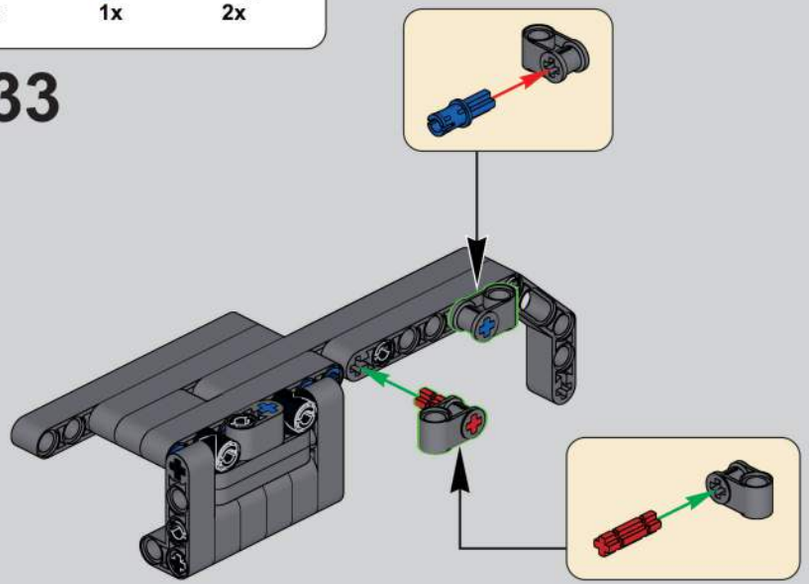

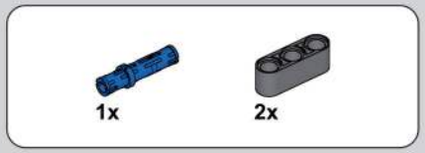

1534

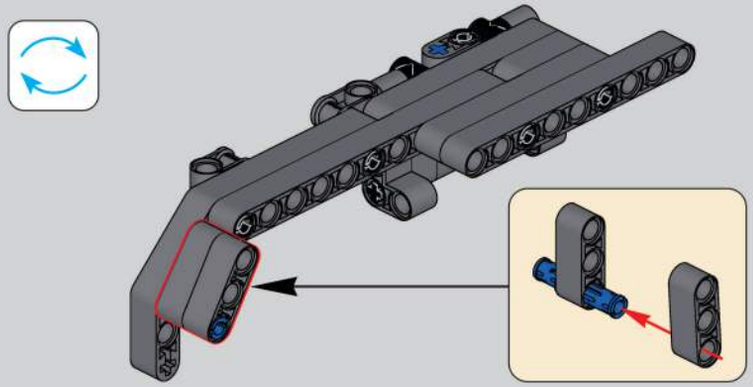

1535

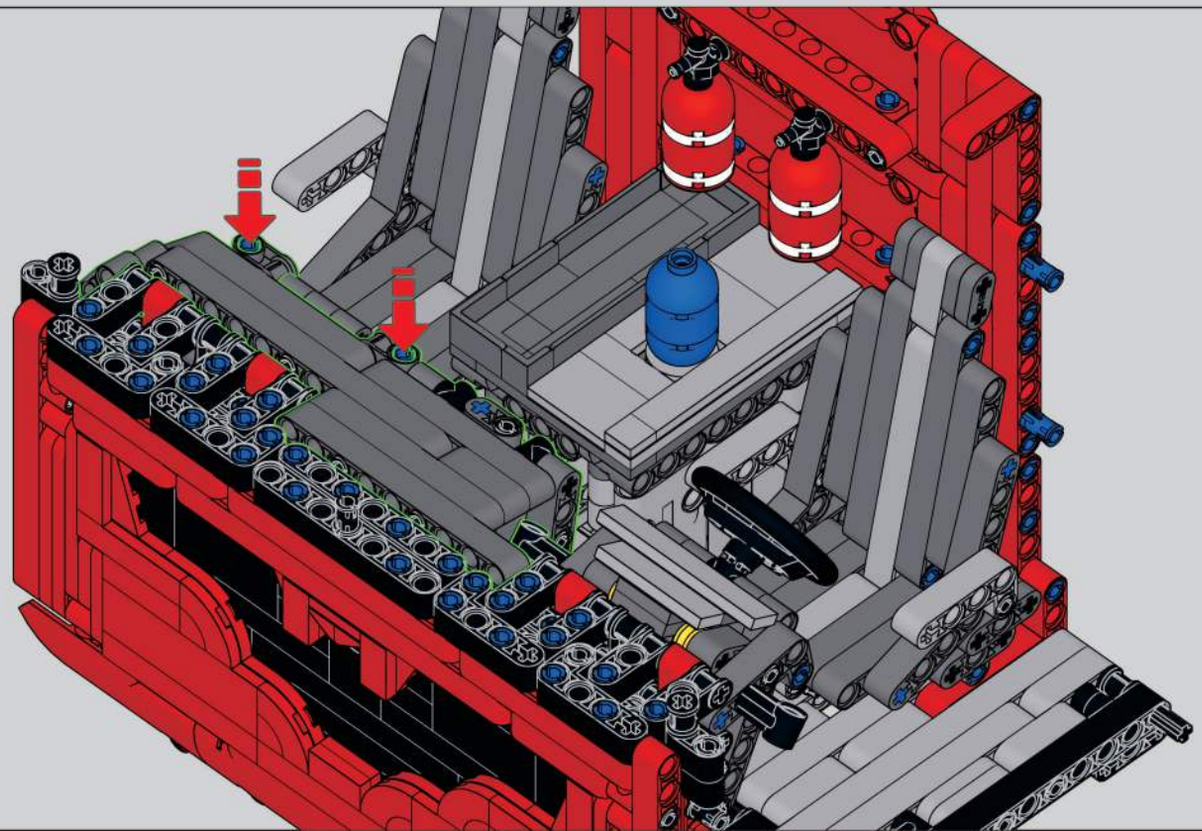

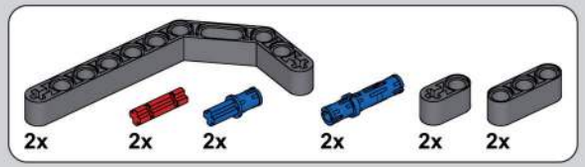

1536

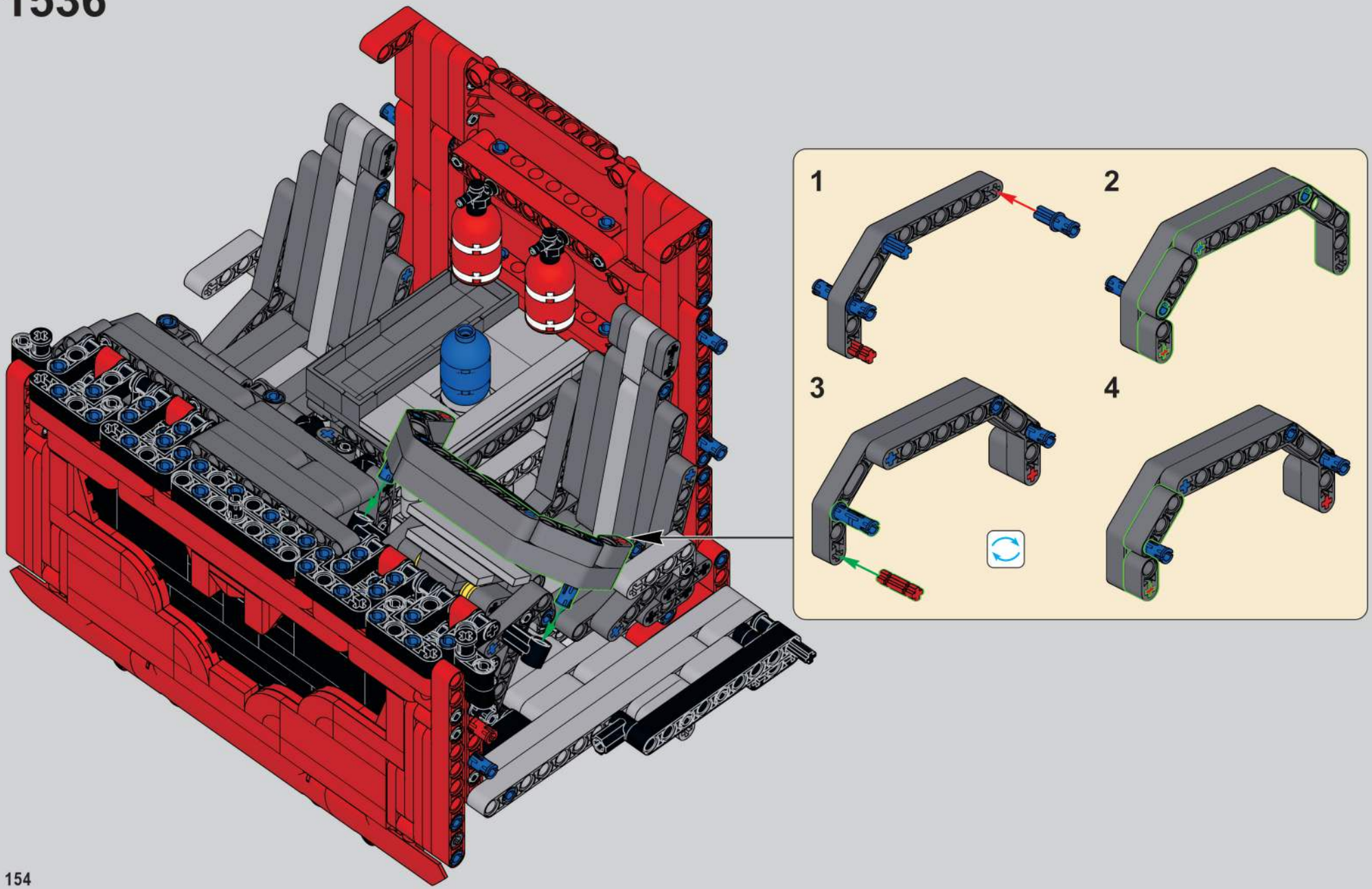

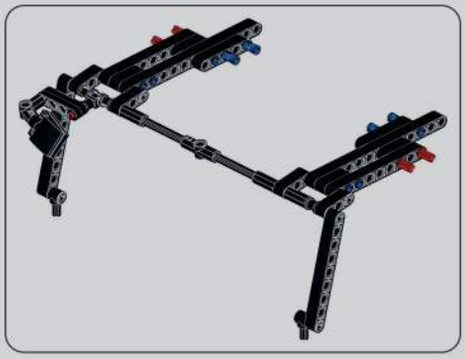

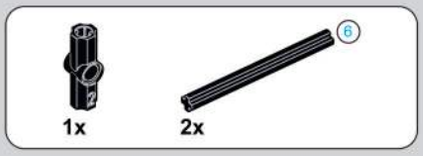

1537

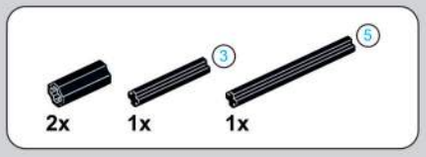

1538

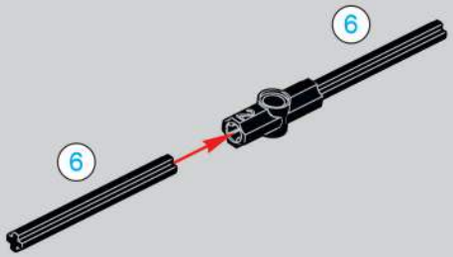

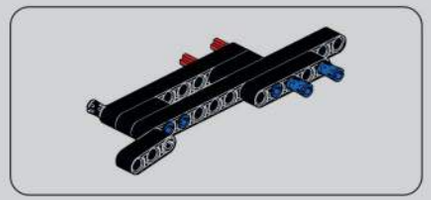

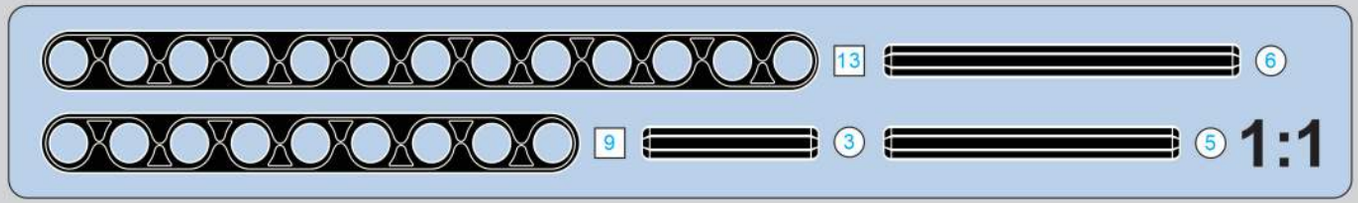

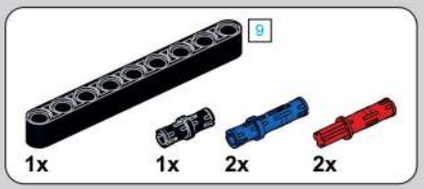

1539

1540

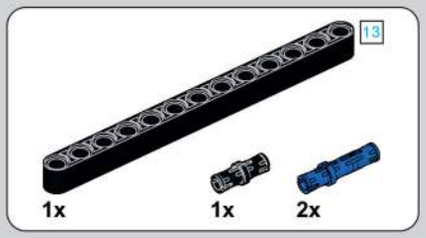

1541

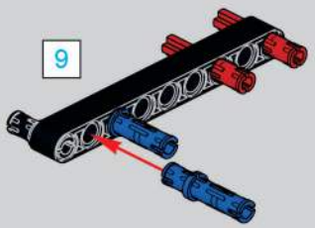

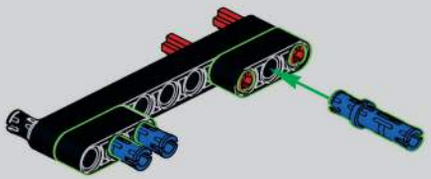

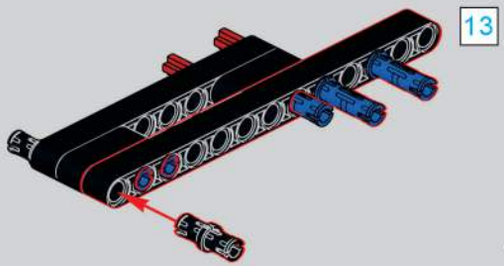

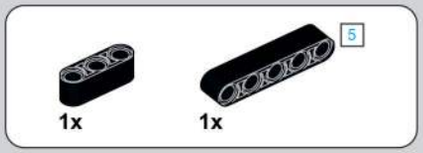

1542

1543

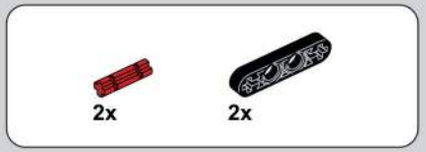

1544

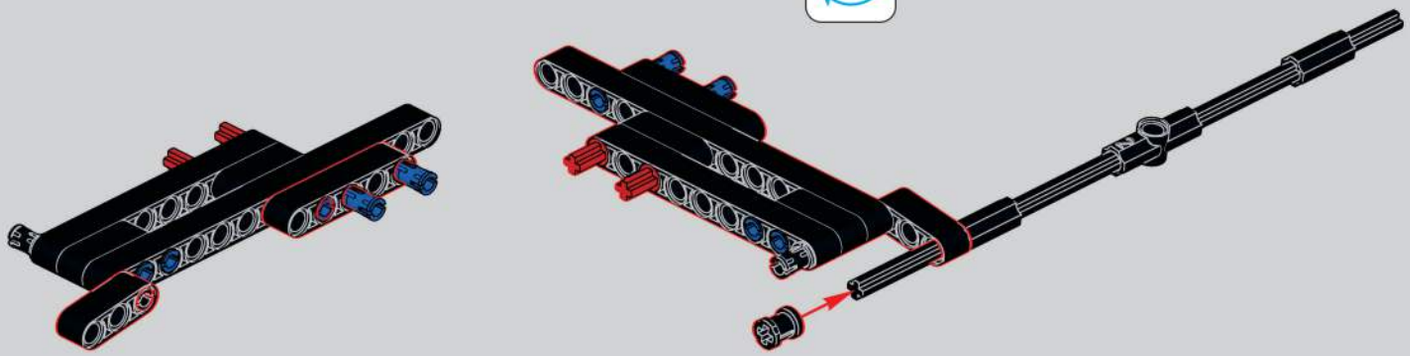

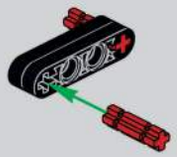

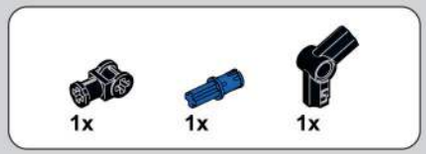

1545

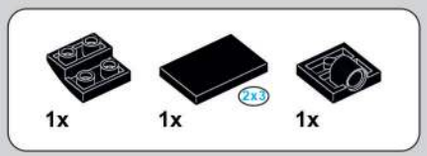

1546

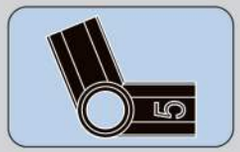

1547

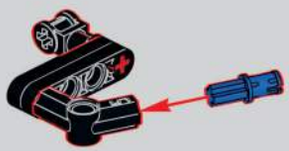

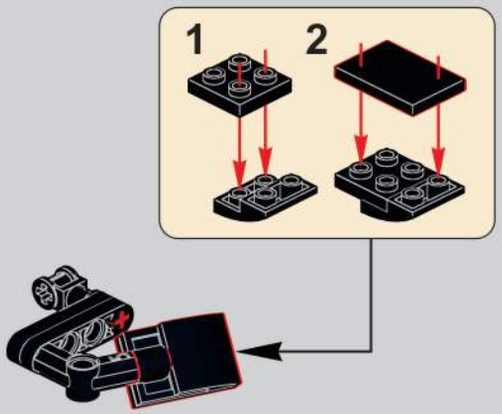

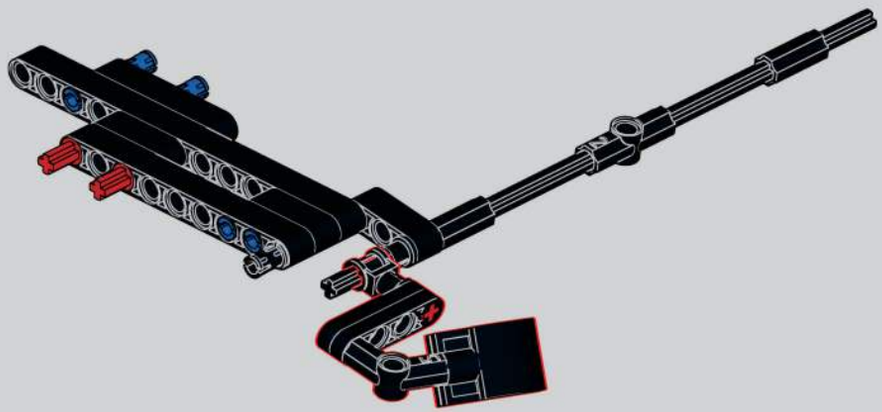

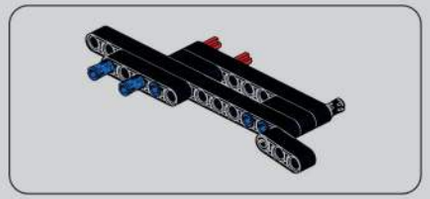

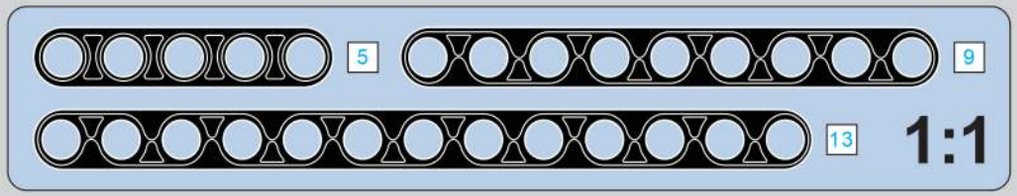

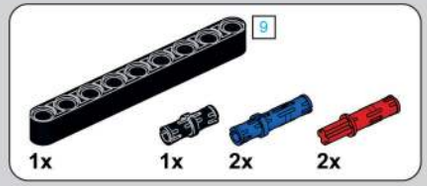

1548

1549

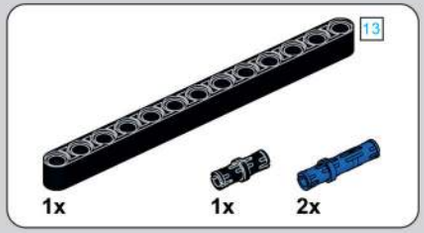

1550

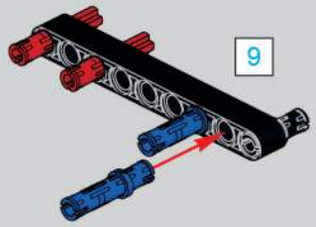

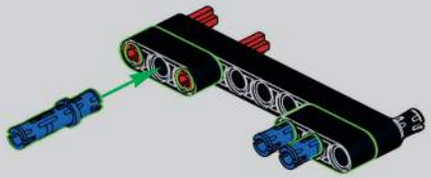

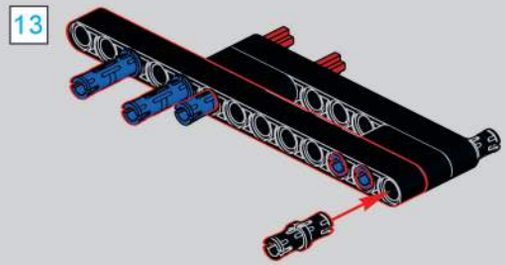

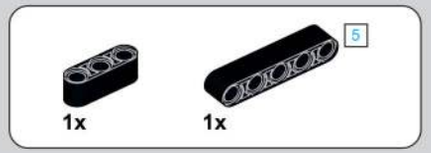

1551

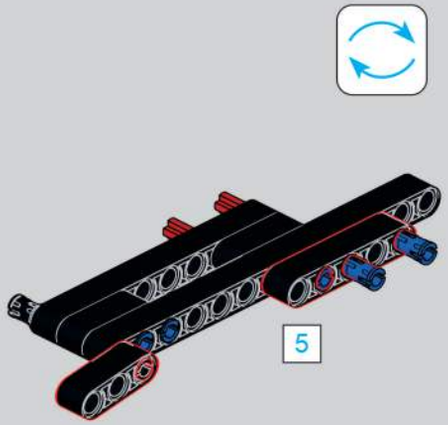

1552

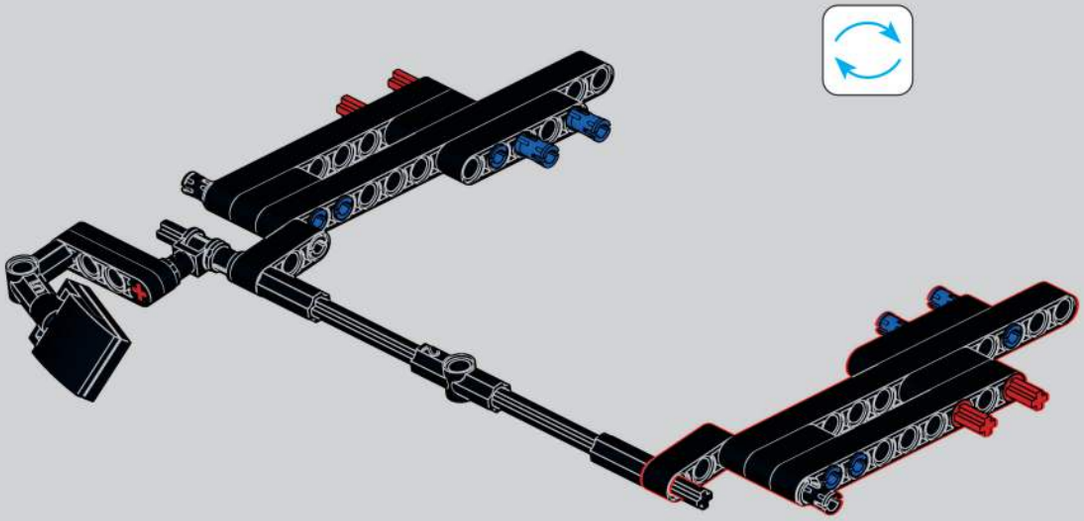

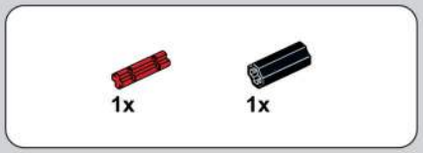

1553

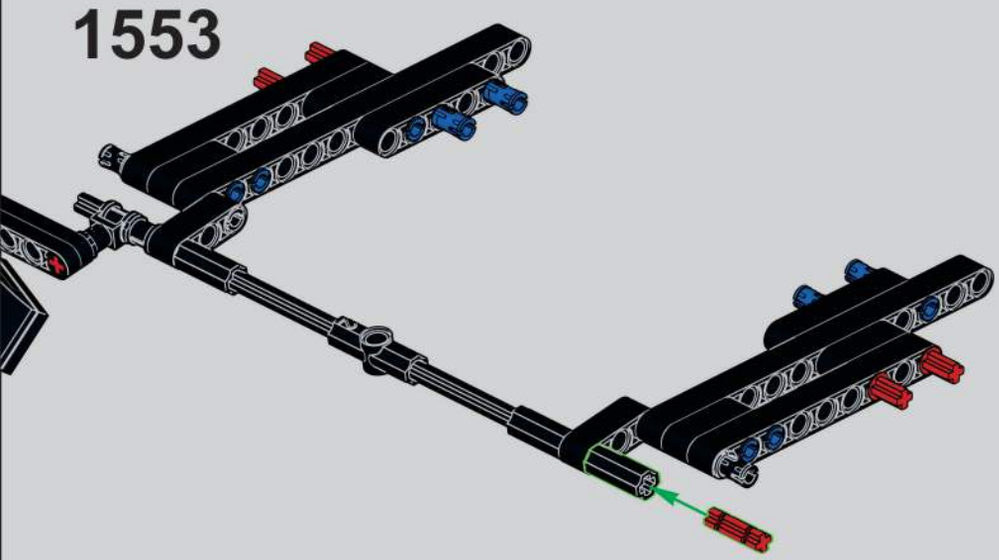

1554

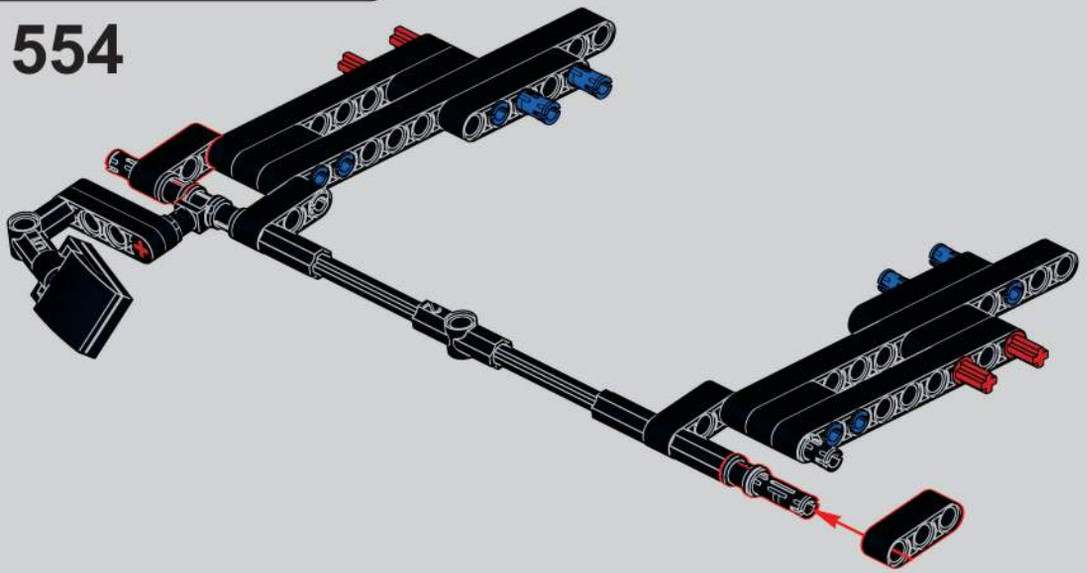

1555

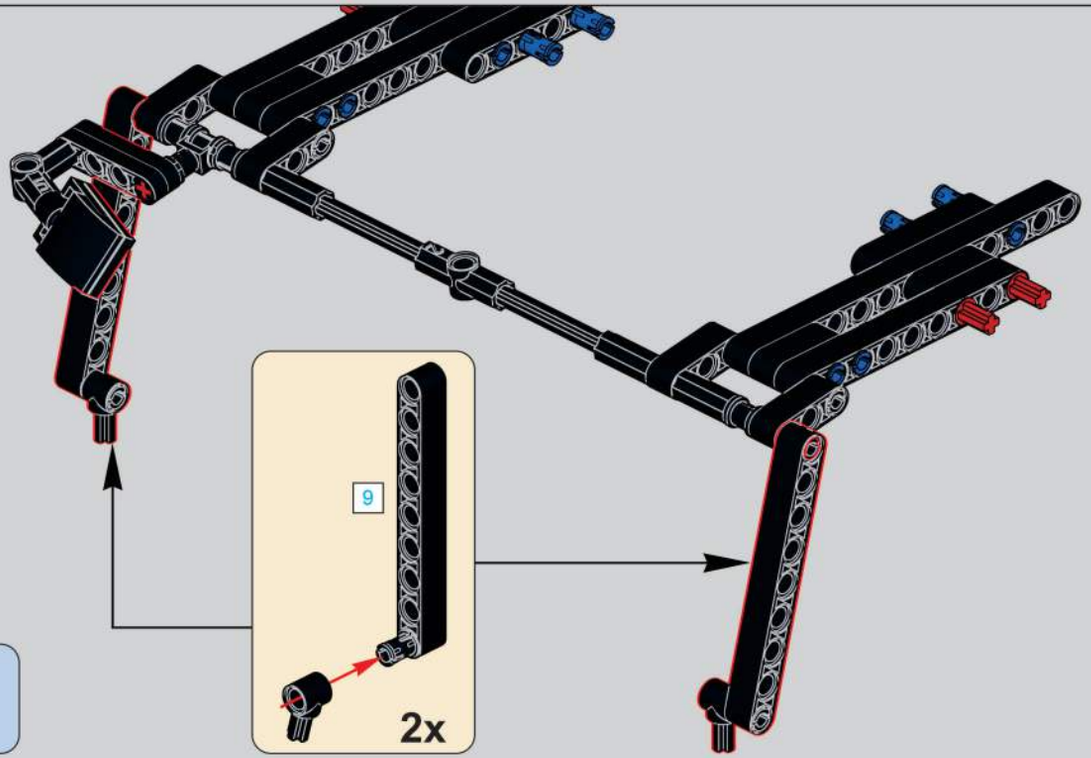

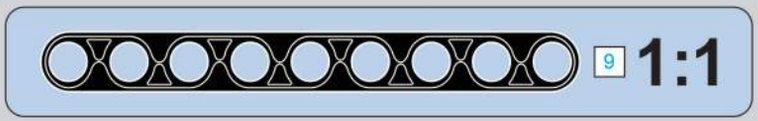

1556

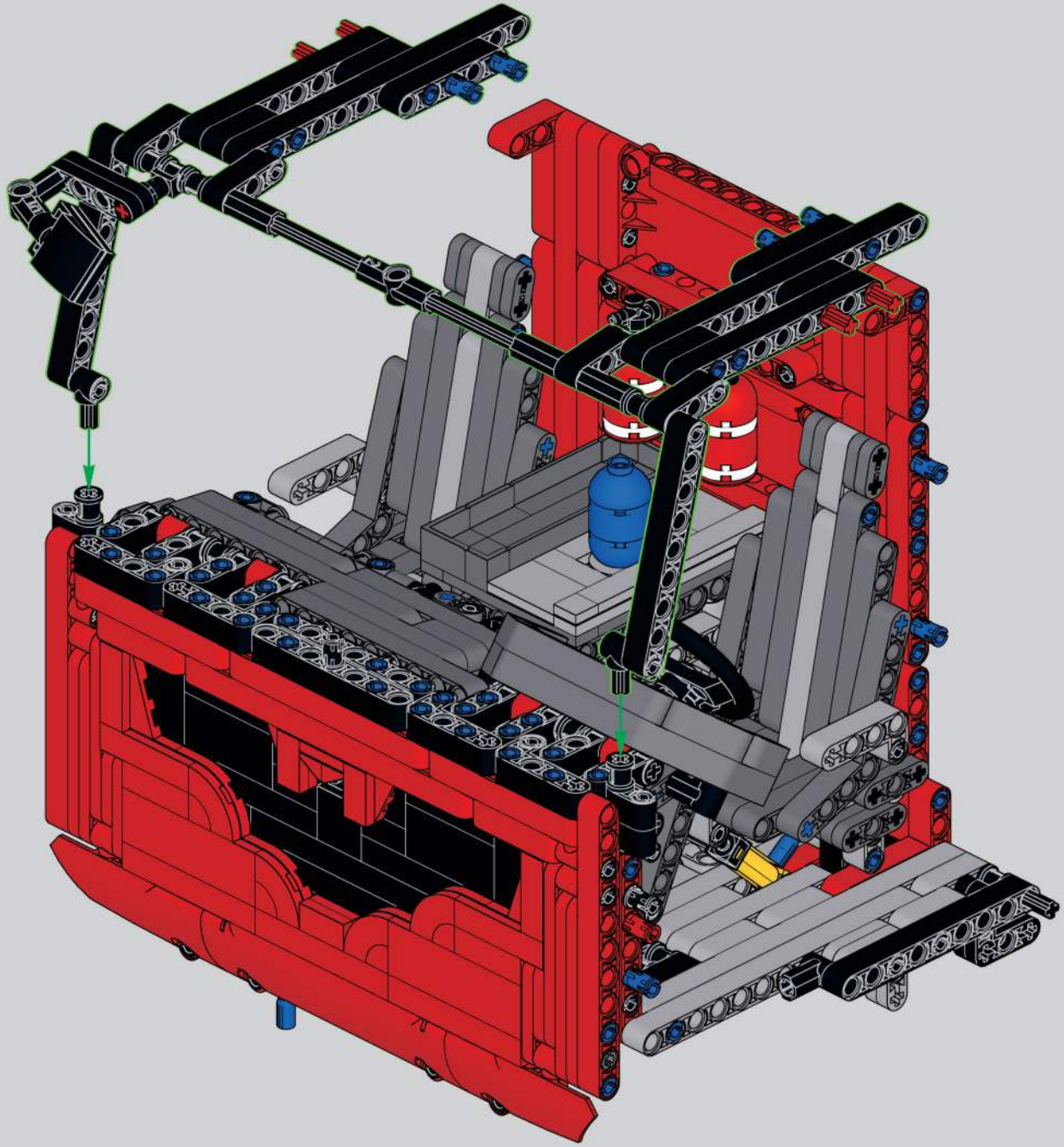

1557

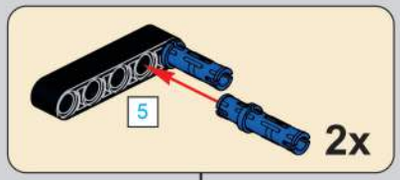

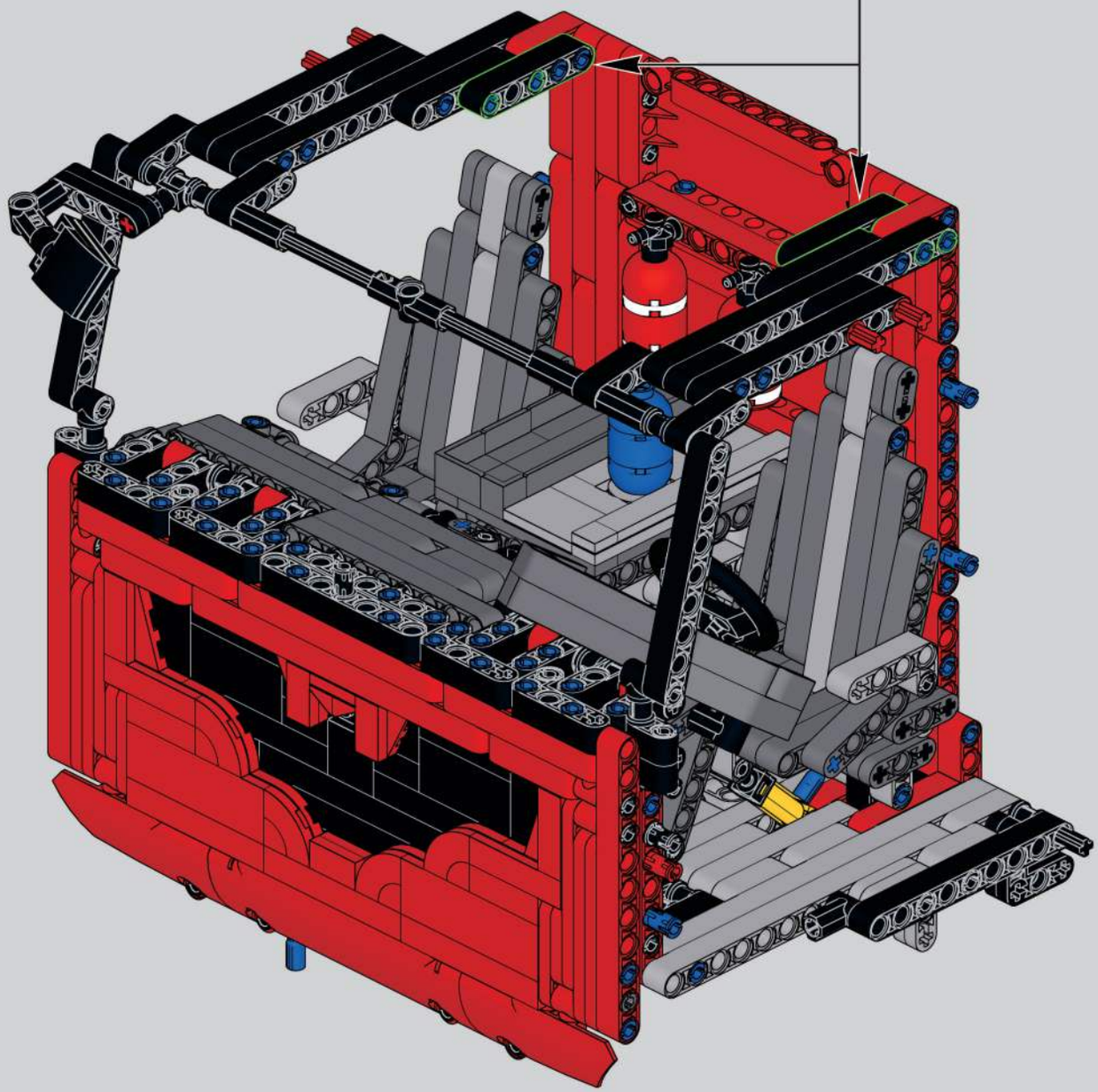

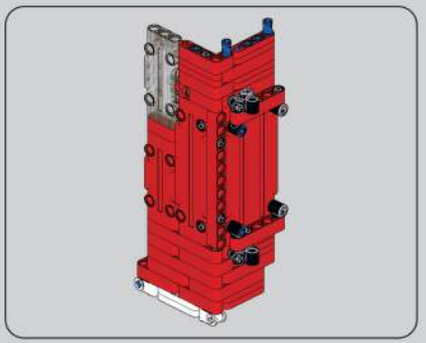

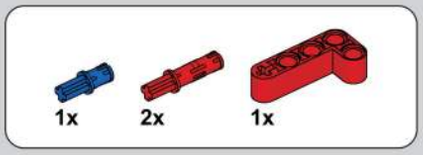

1558

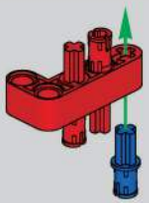

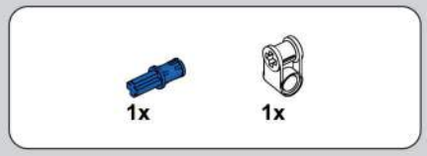

1559

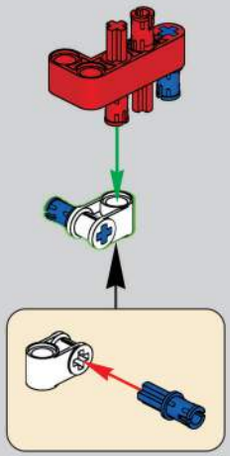

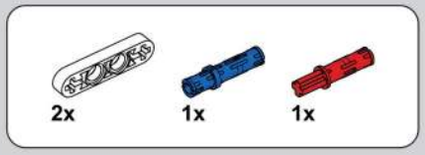

1560

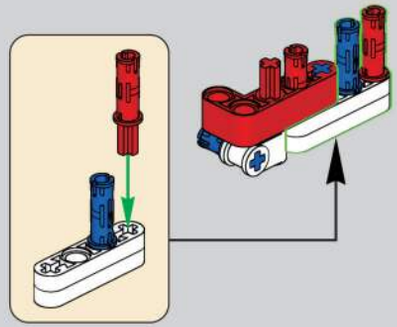

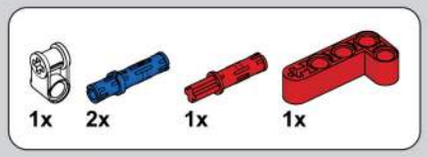

1561

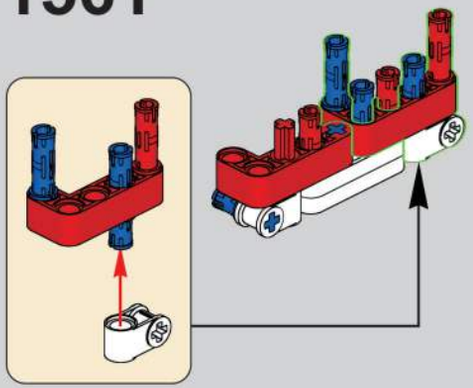

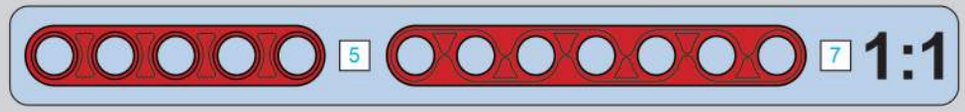

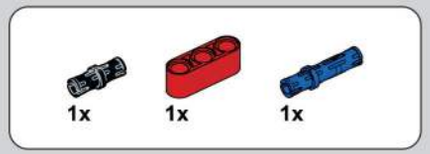

1562

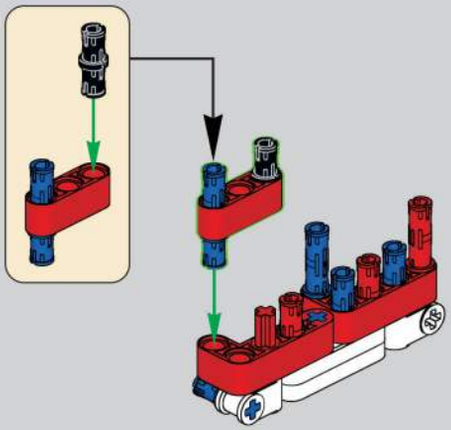

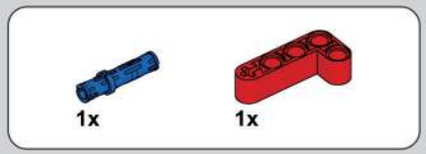

1563

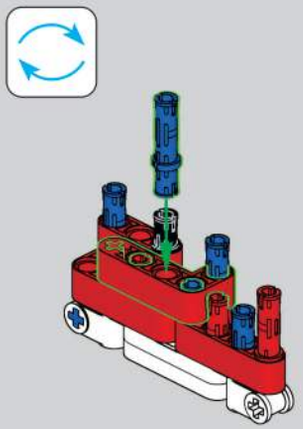

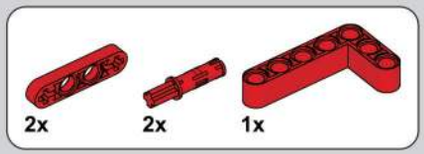

1564

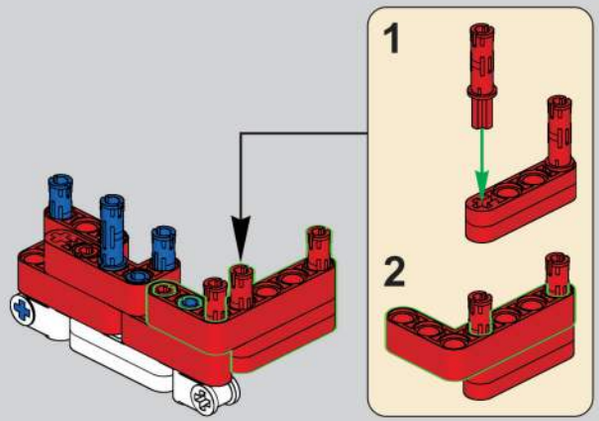

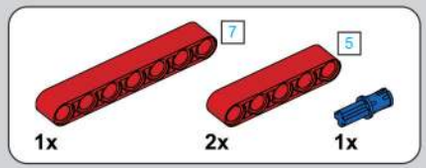

1565

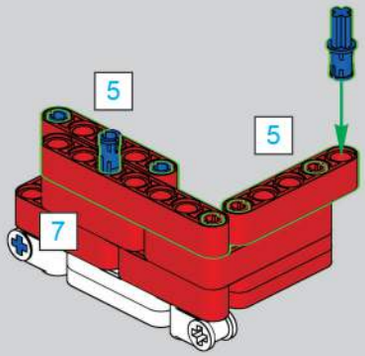

1566

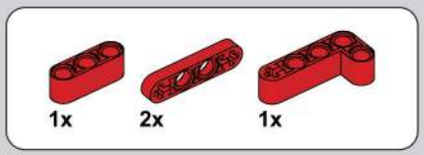

1567

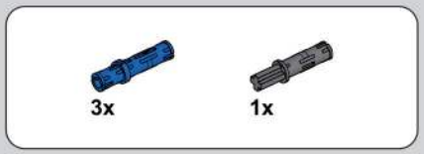

1568

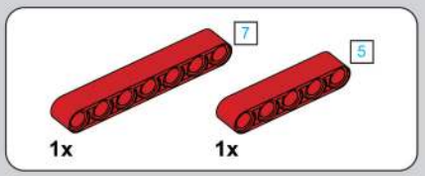

1569

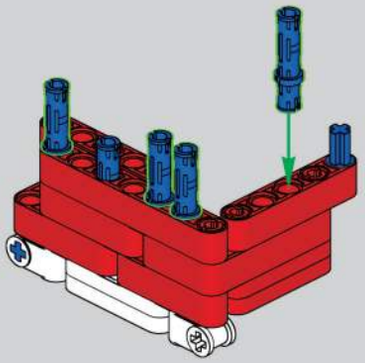

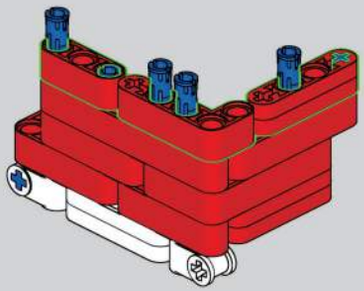

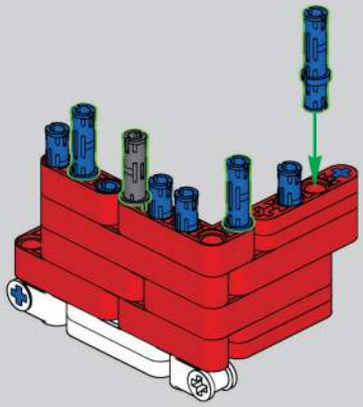

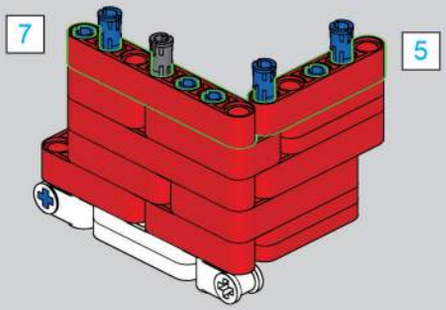

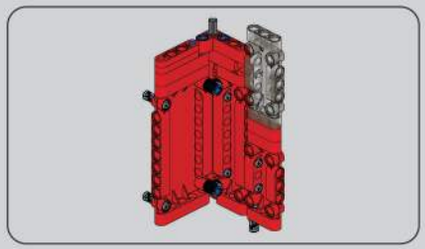

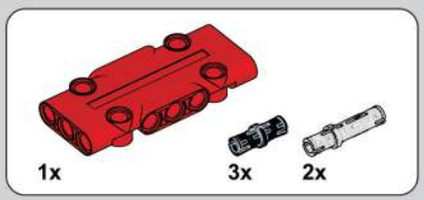

1570

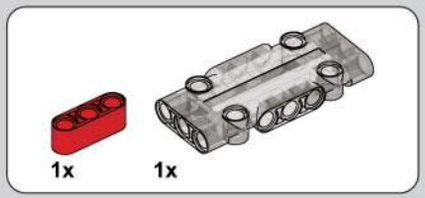

1571

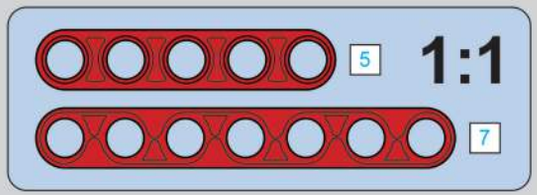

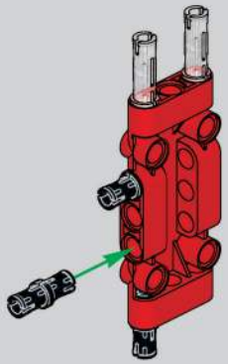

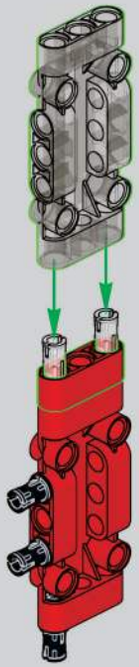

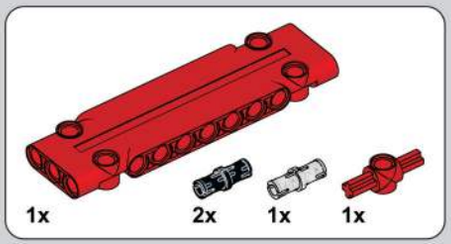

1572

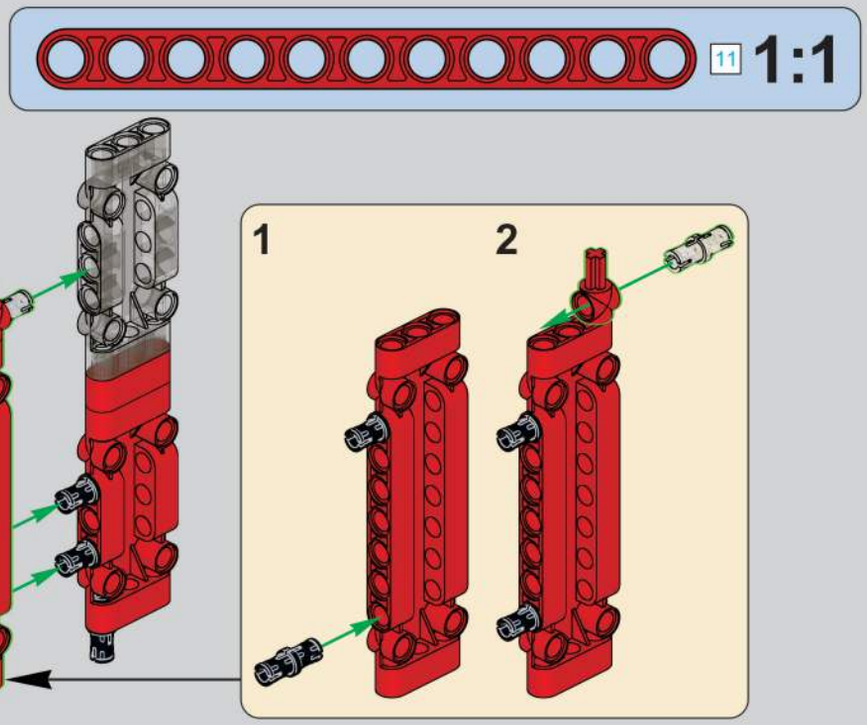

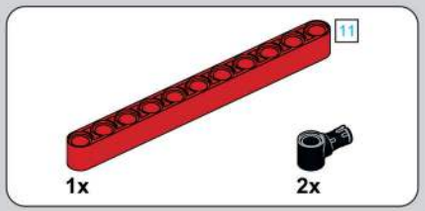

1573

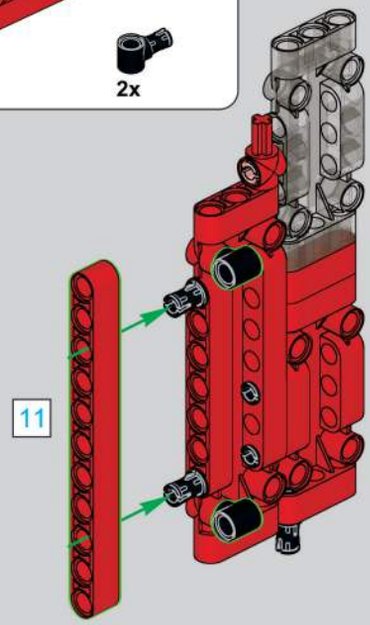

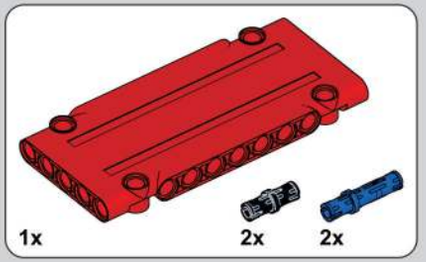

1574

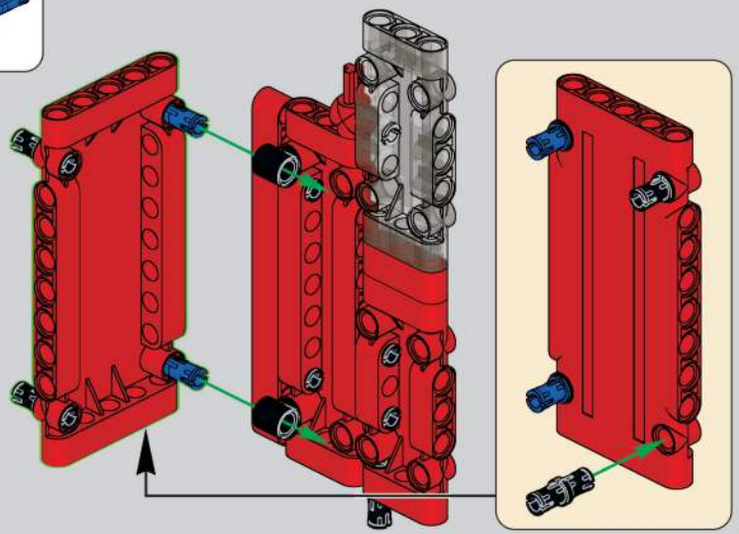

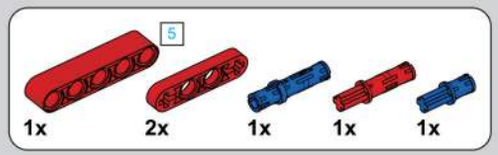

1575

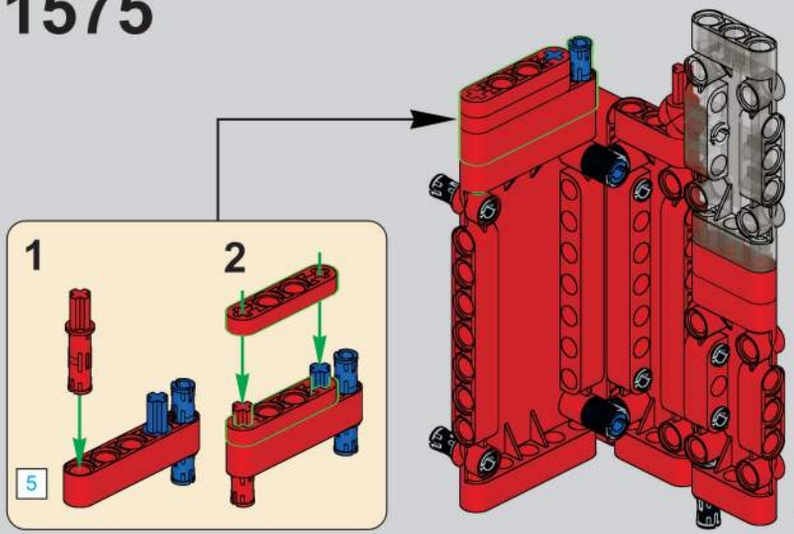

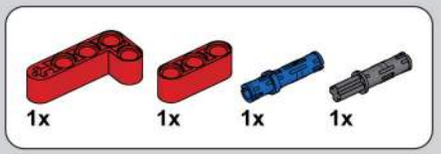

1576

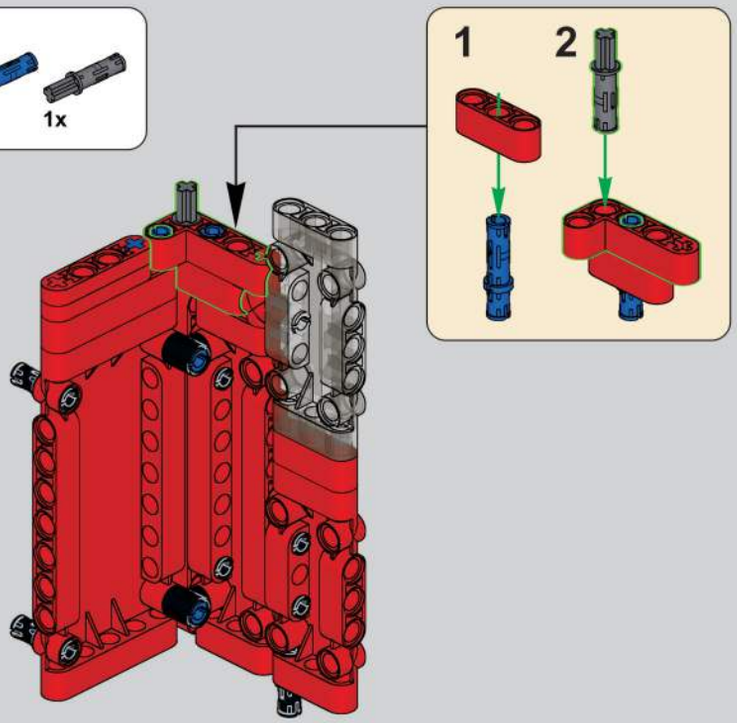

1577

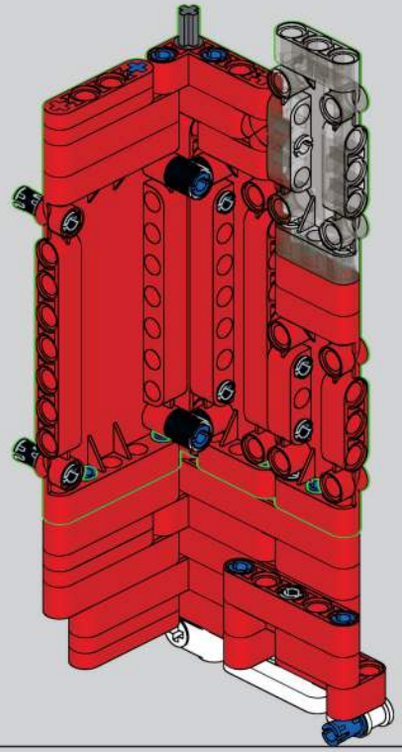

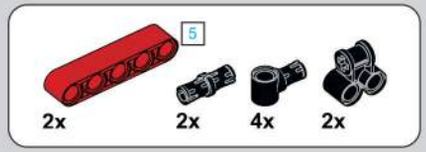

1578

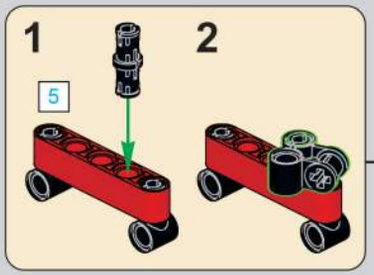

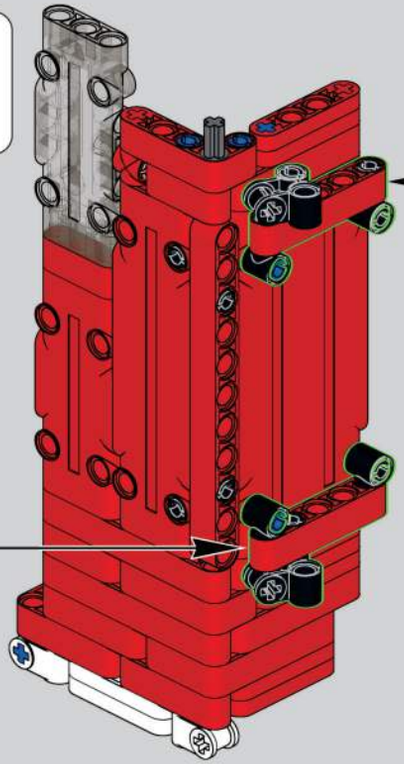

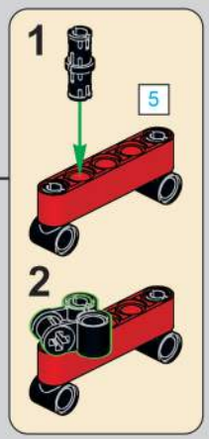

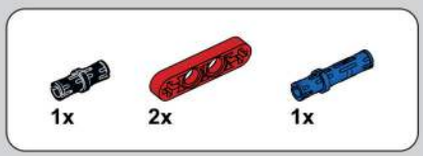

1579

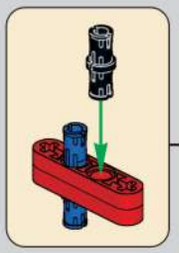

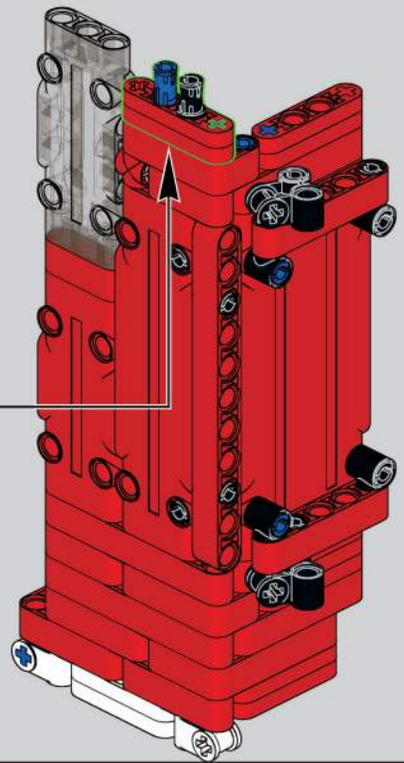

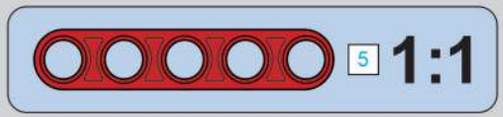

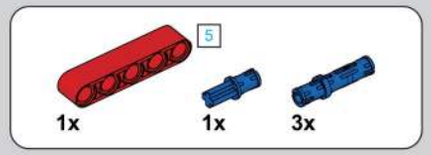

1580

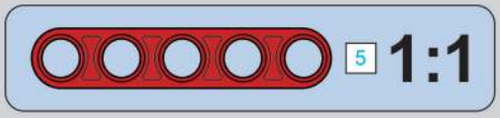

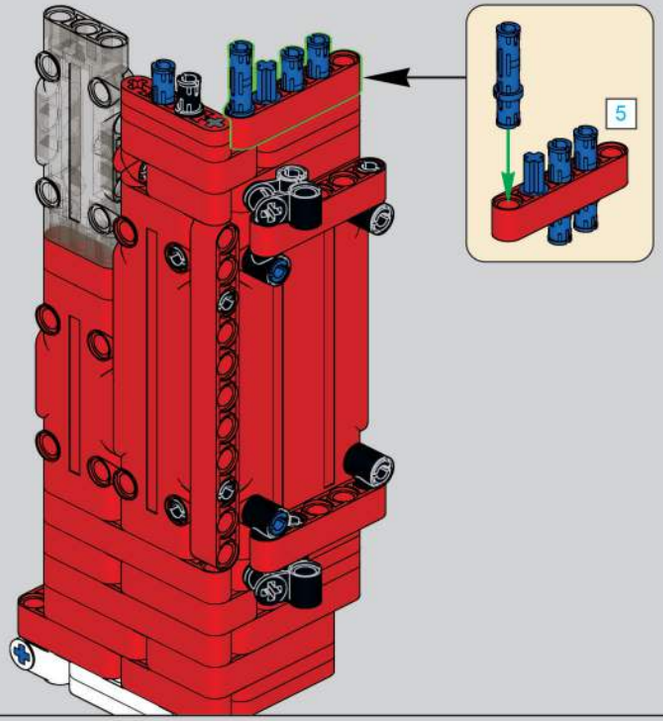

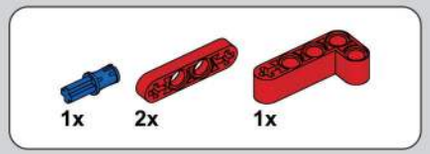

1581

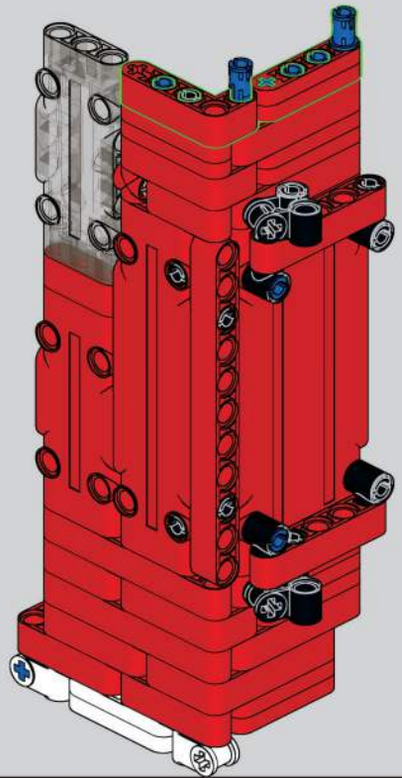

1582

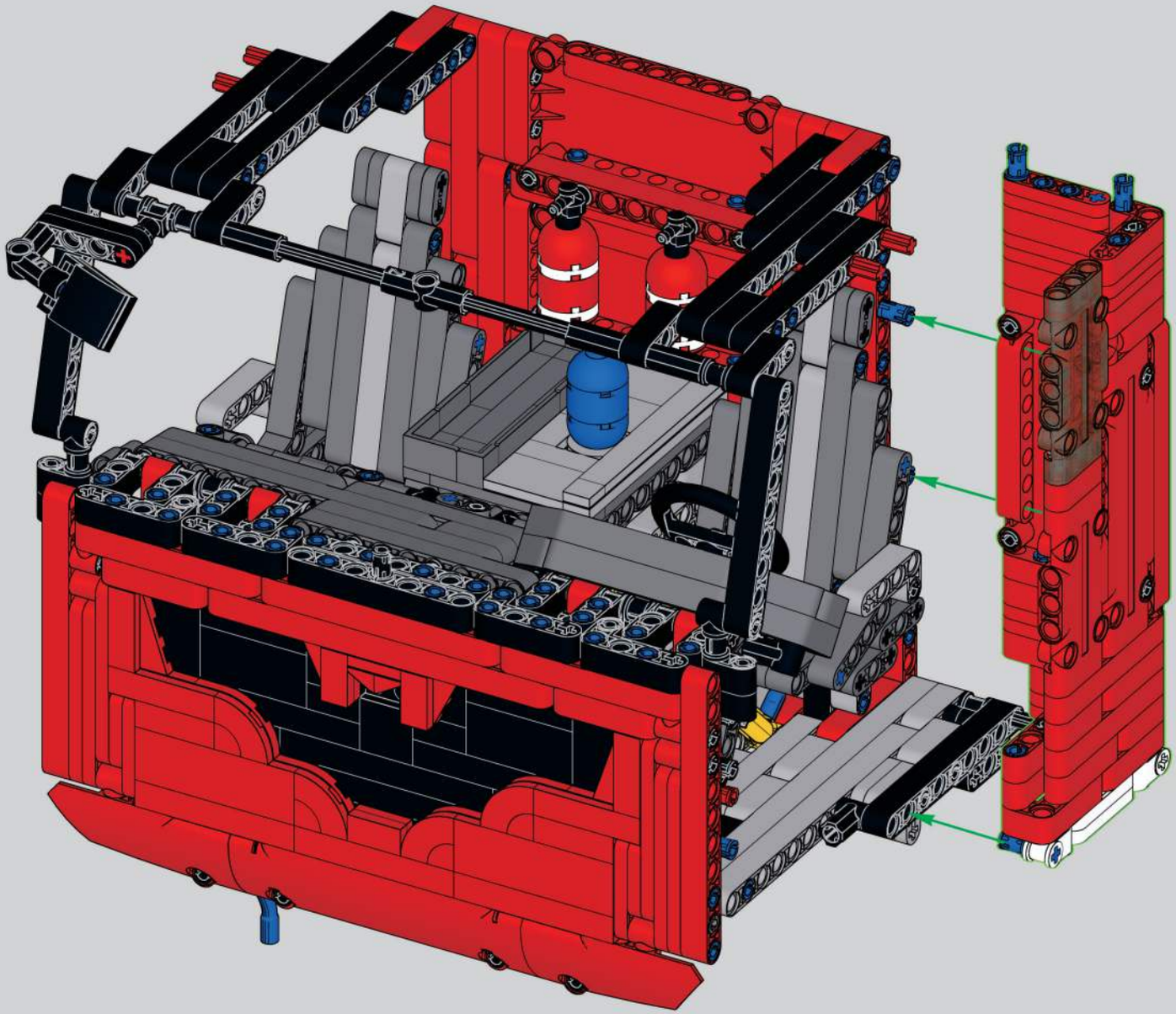

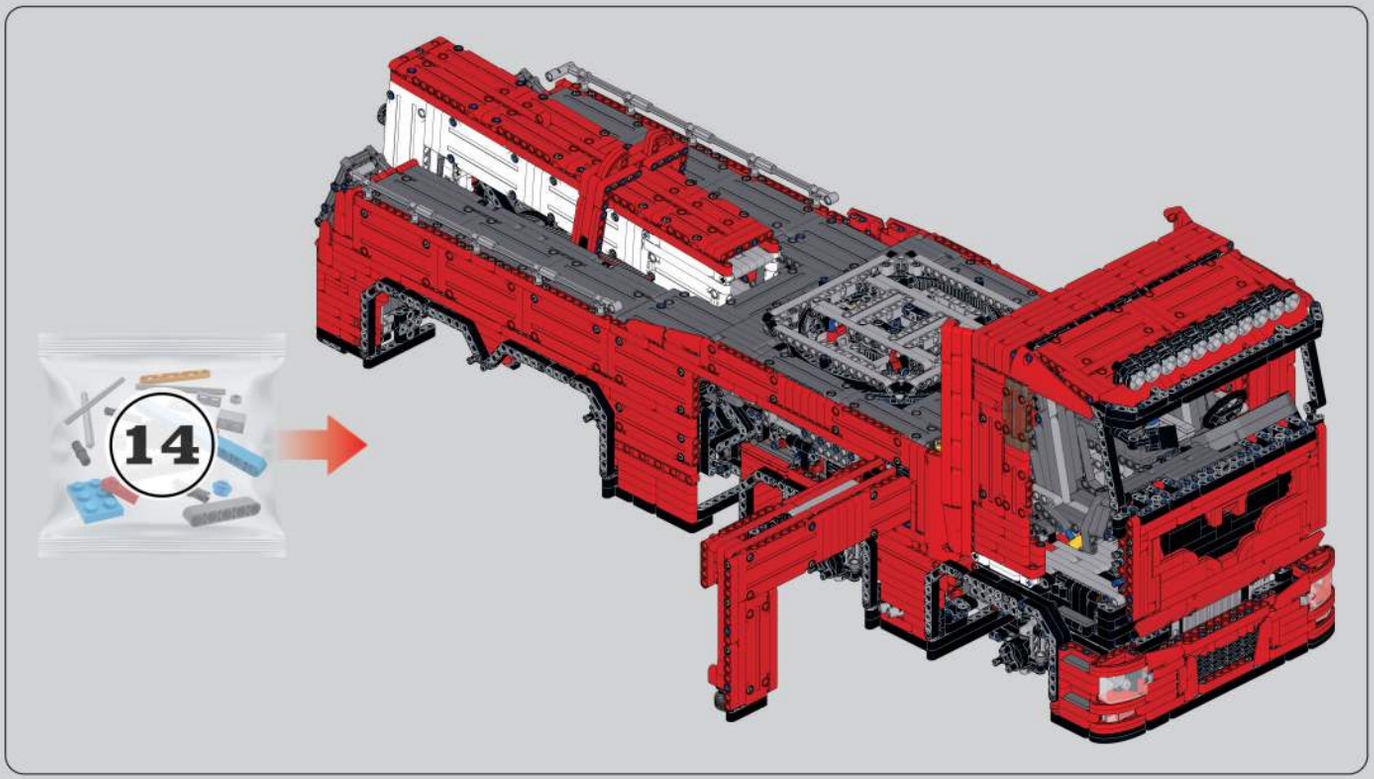

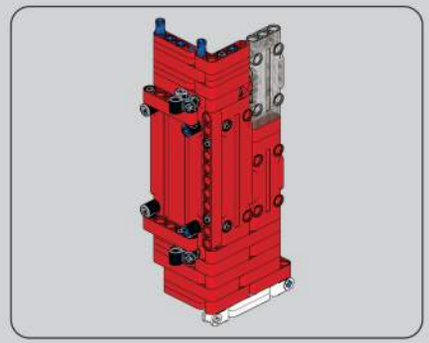

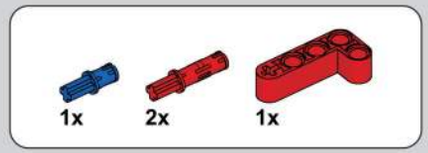

1583

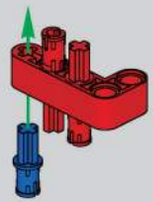

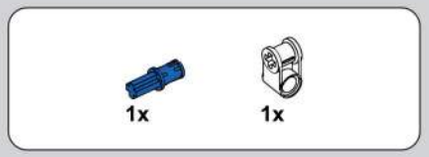

1584

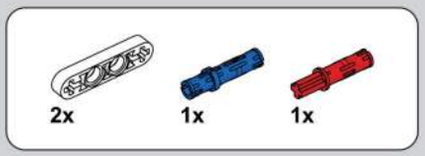

1585

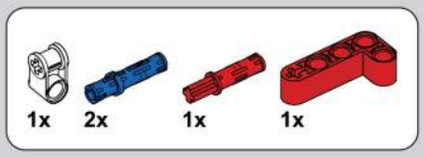

1586

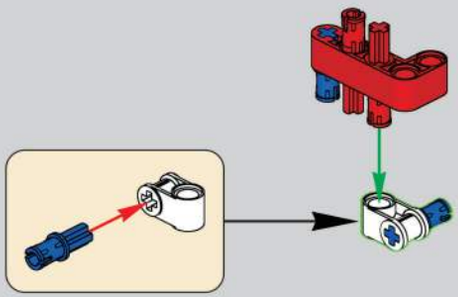

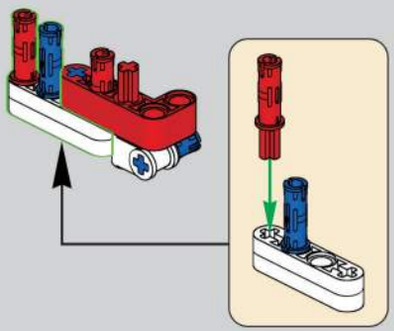

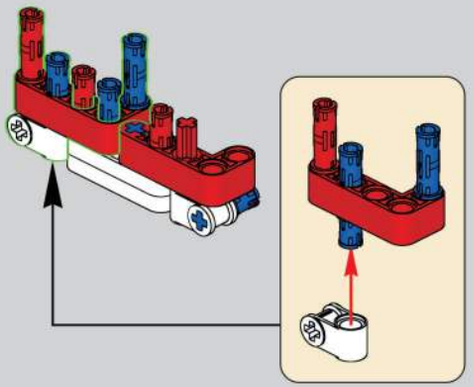

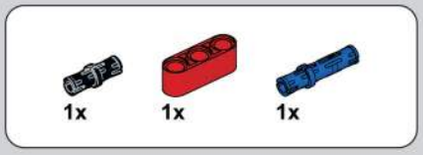

1587

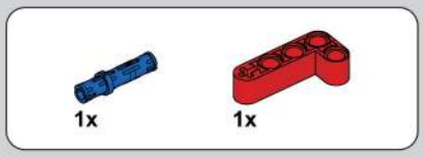

1588

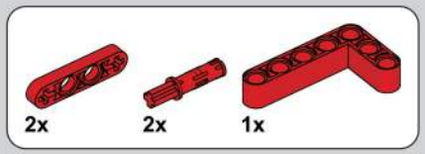

1589

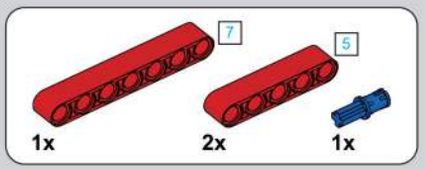

1590

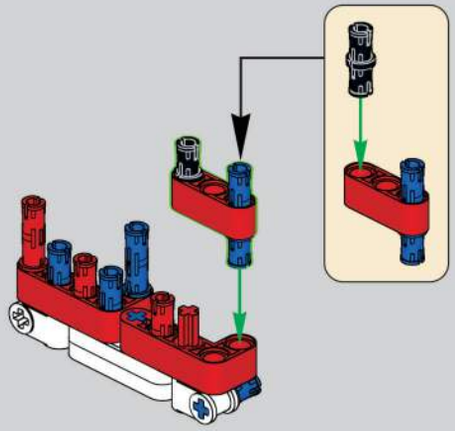

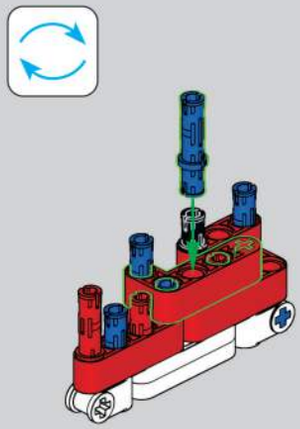

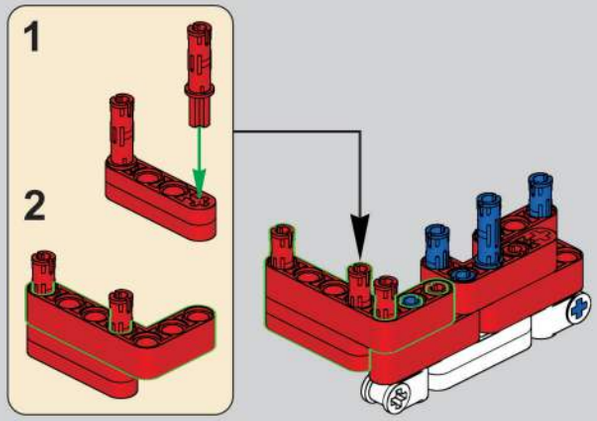

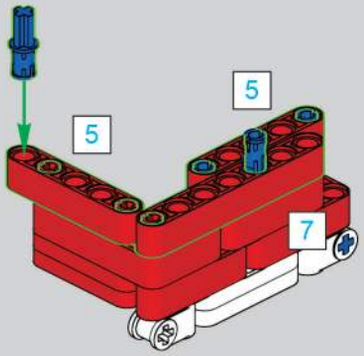

1591

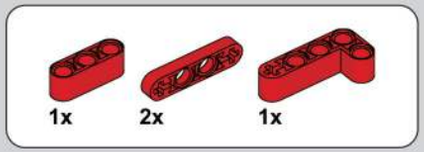

1592

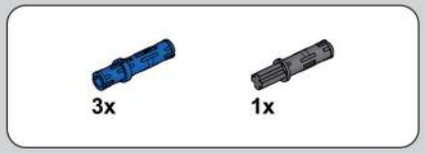

1593

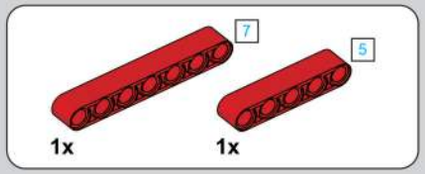

1594

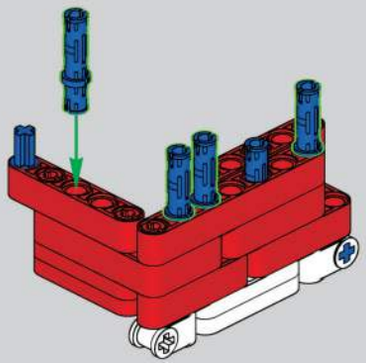

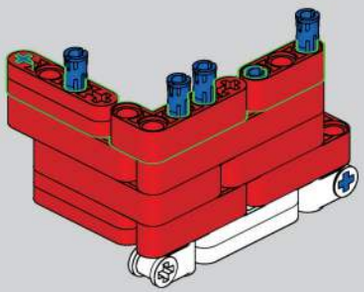

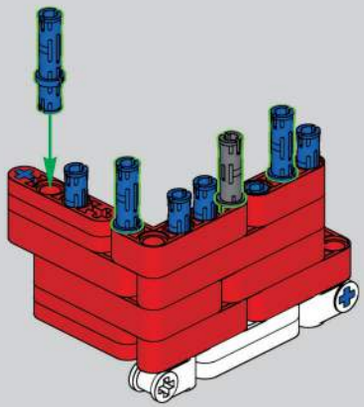

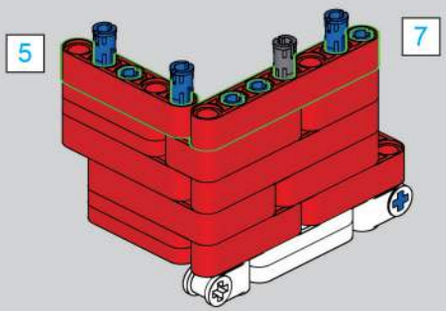

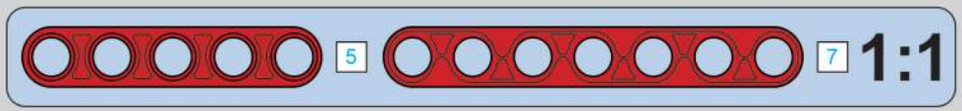

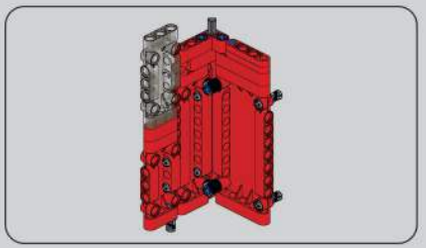

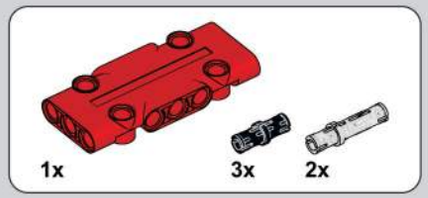

1595

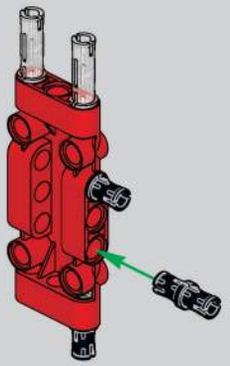

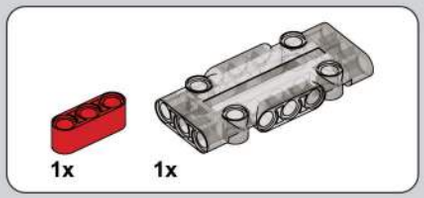

1596

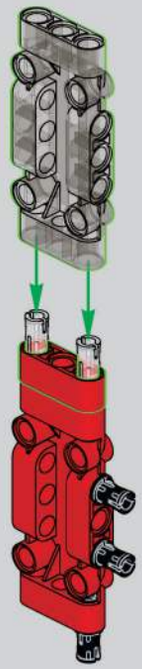

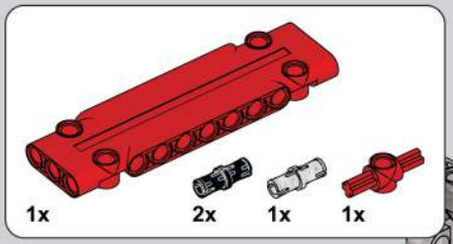

1597

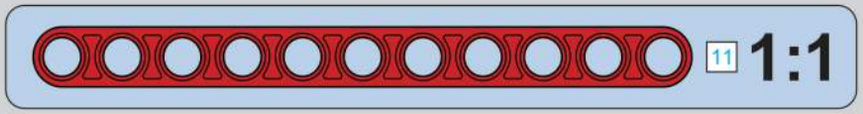

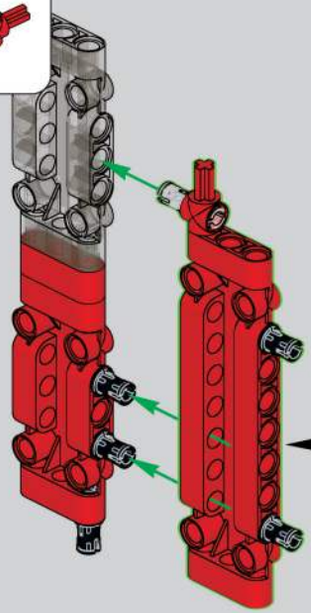

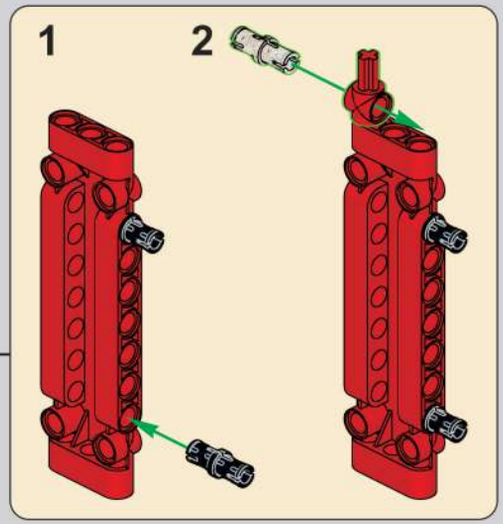

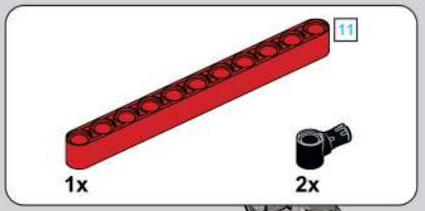

1598

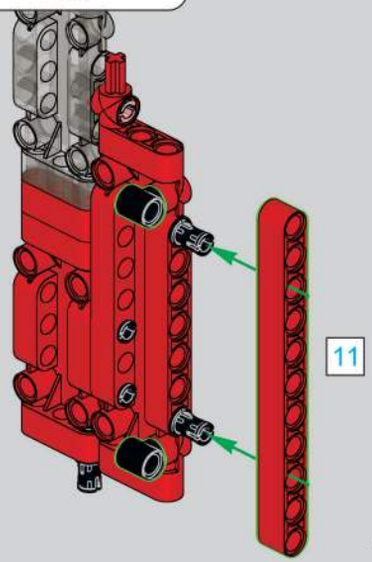

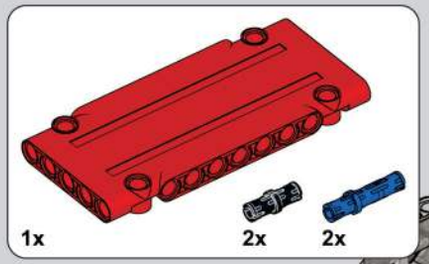

1599

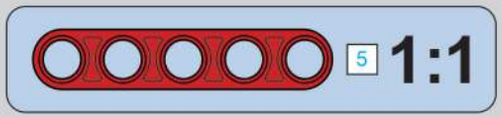

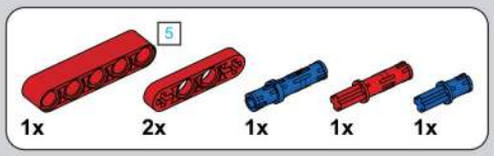

1600

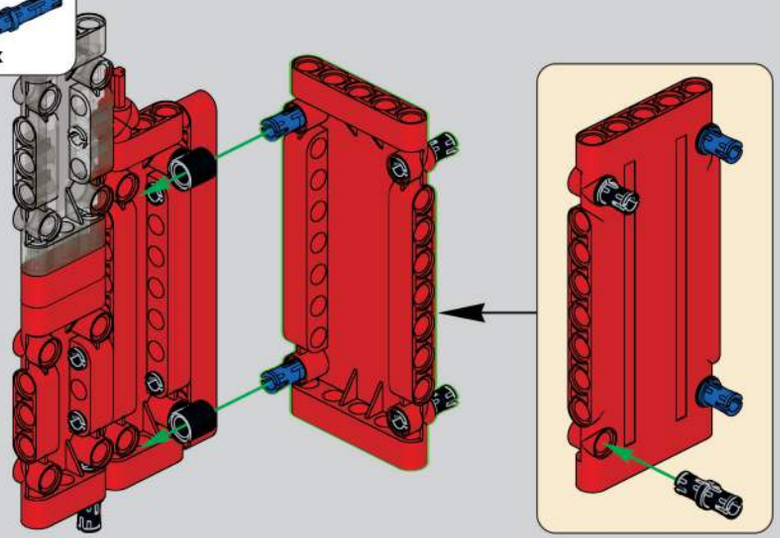

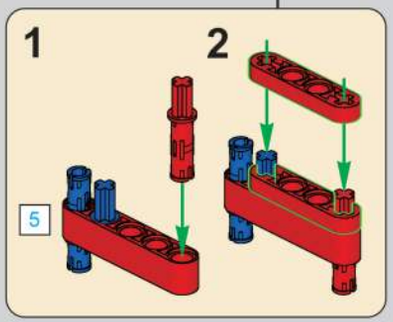

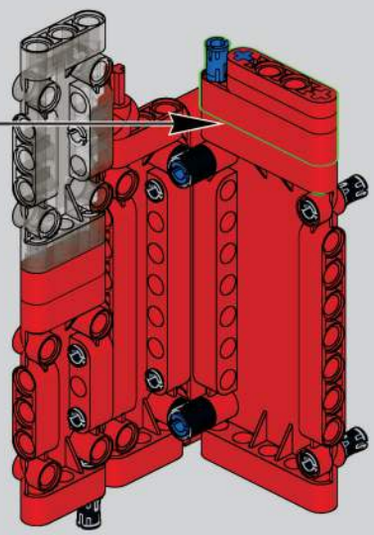

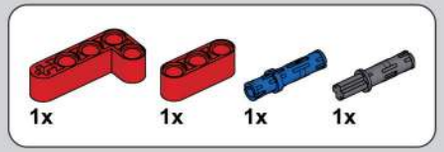

1601

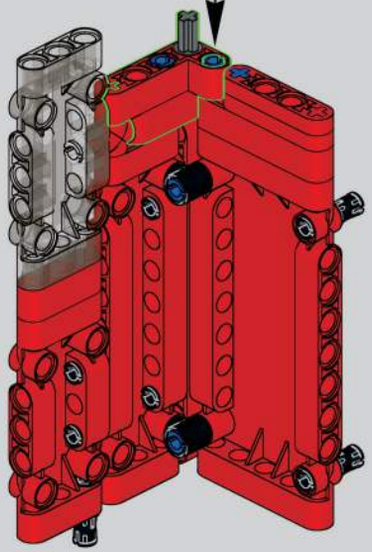

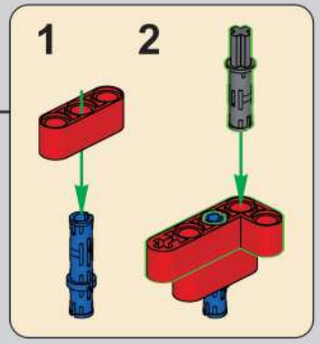

1602

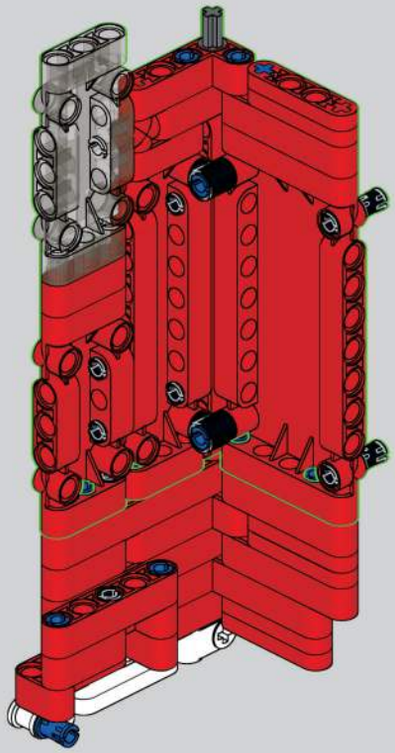

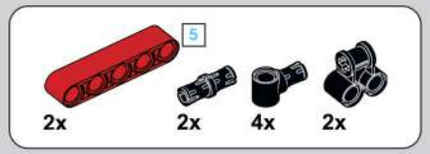

1603

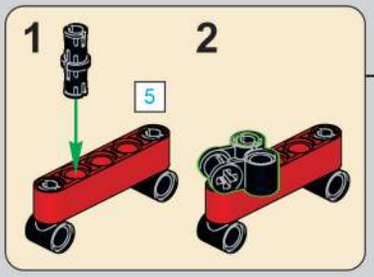

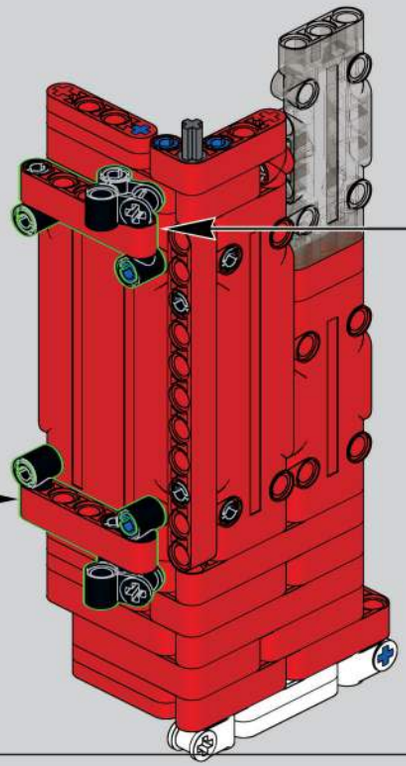

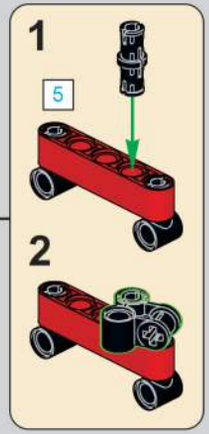

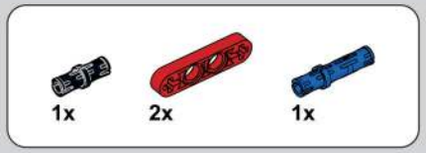

1604

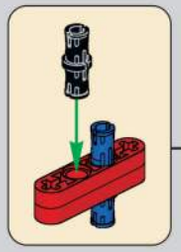

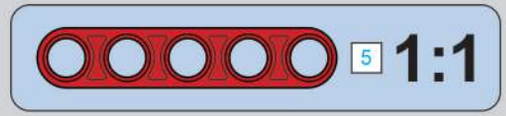

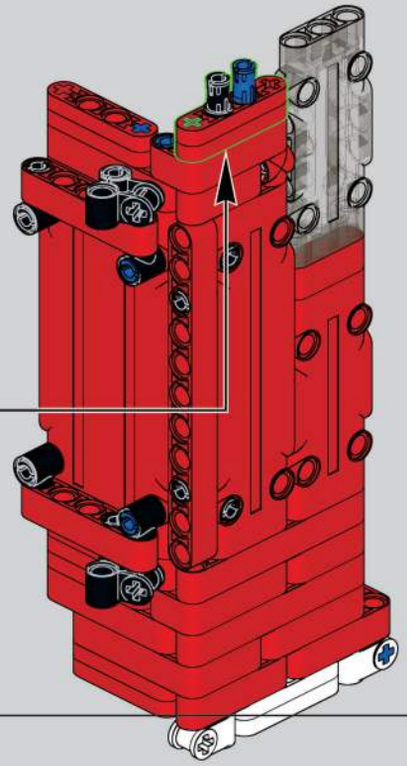

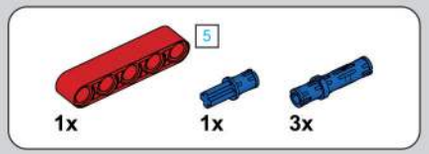

1605

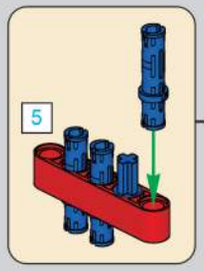

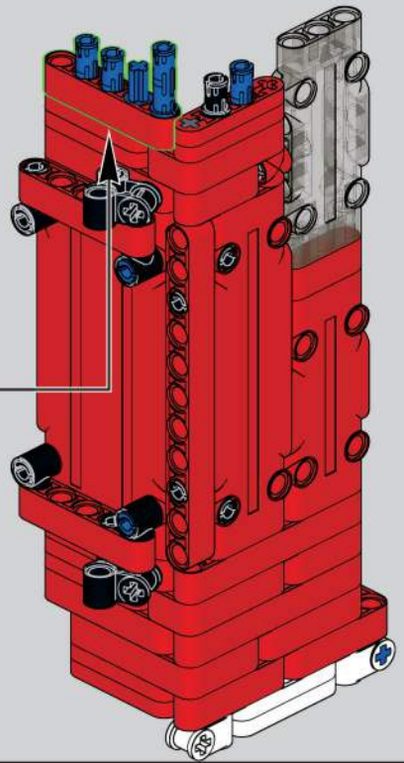

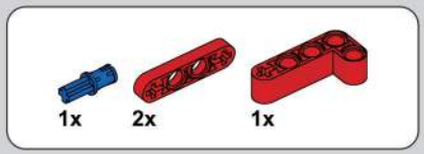

1606

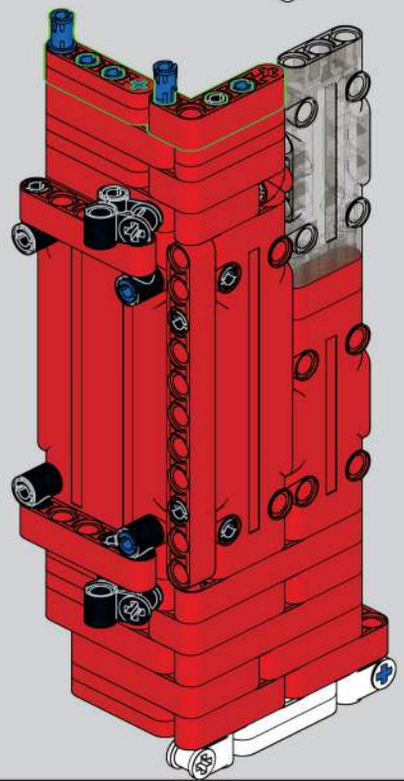

1607

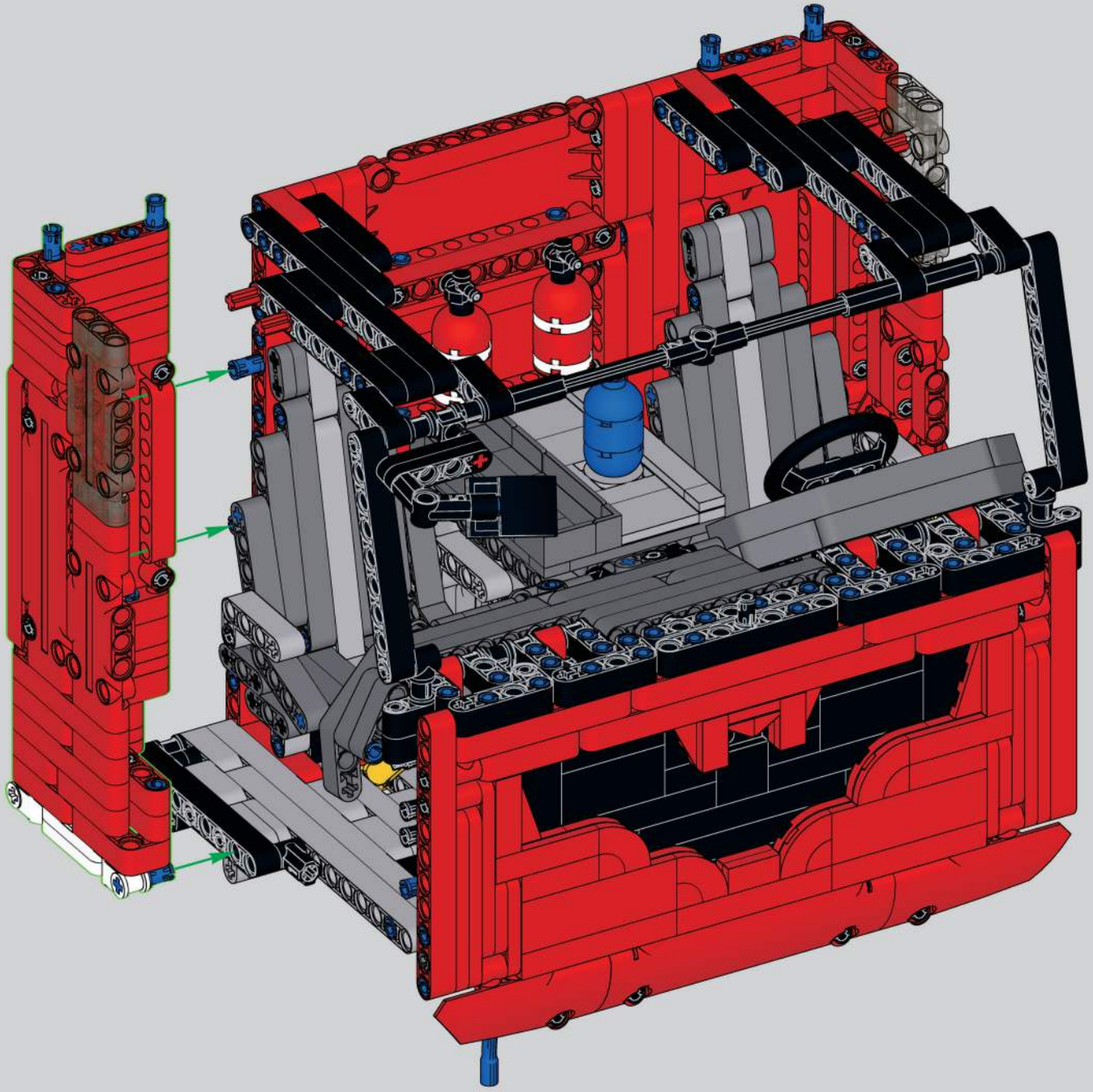

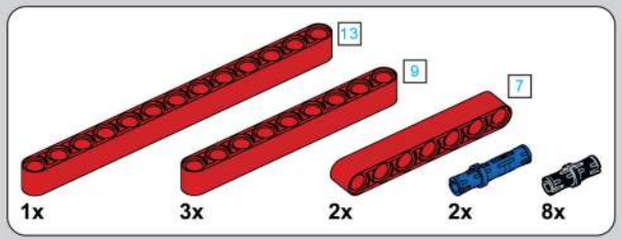

1608

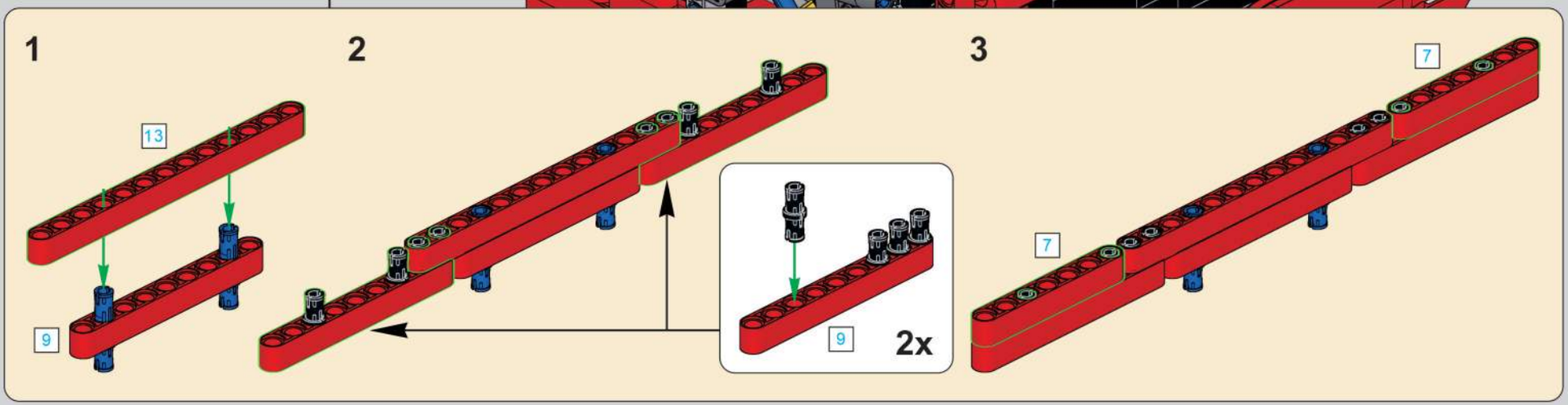

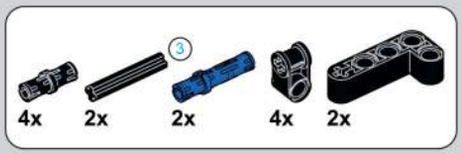

1609

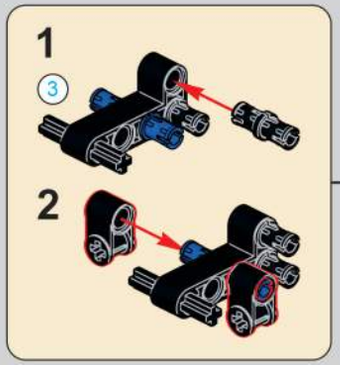

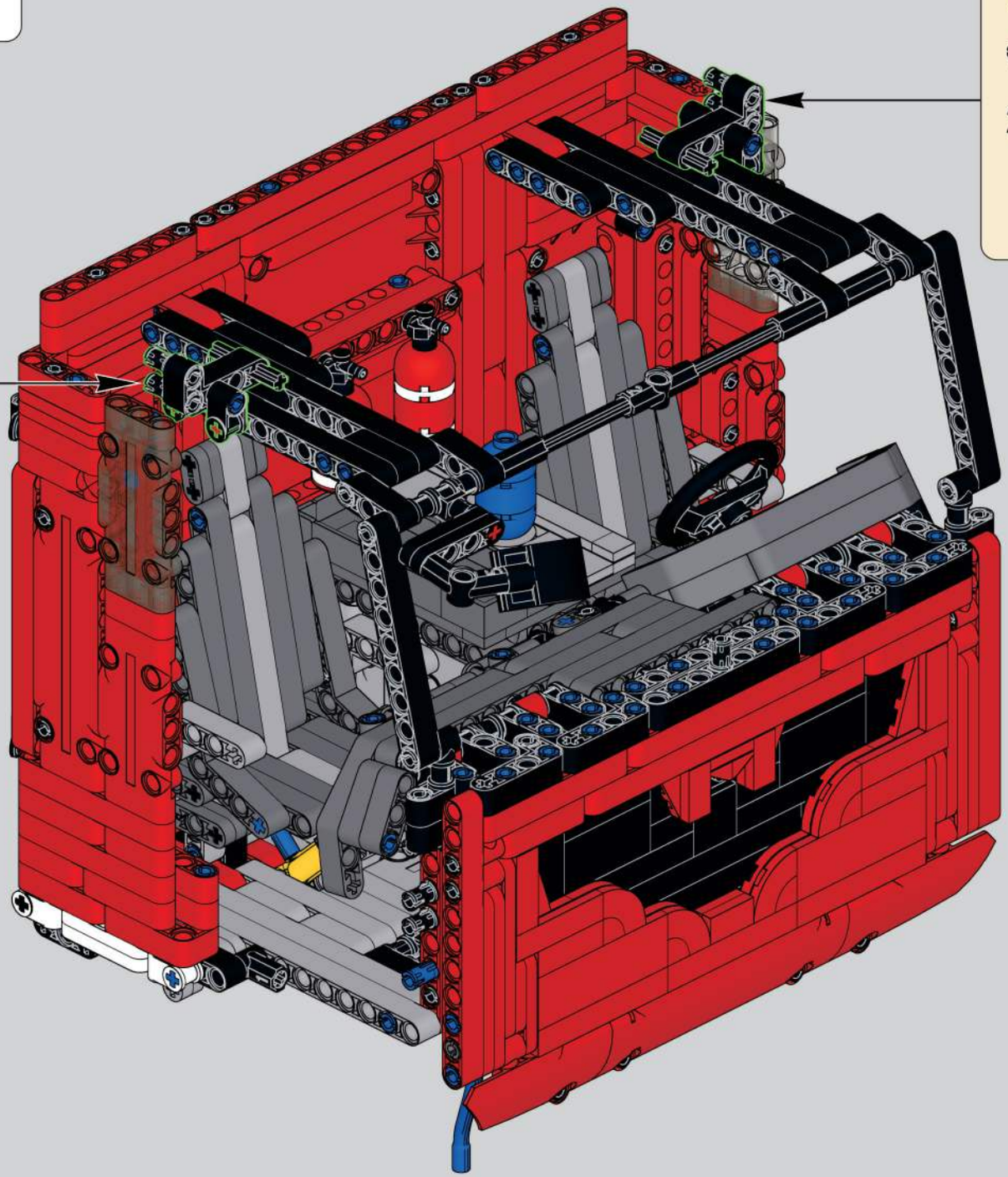

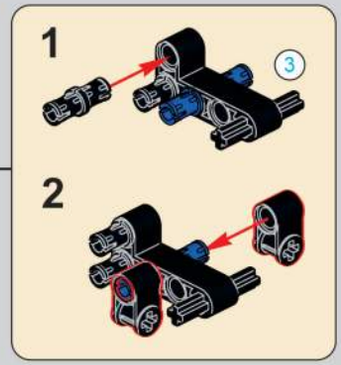

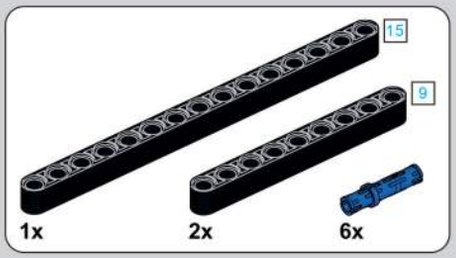

1610

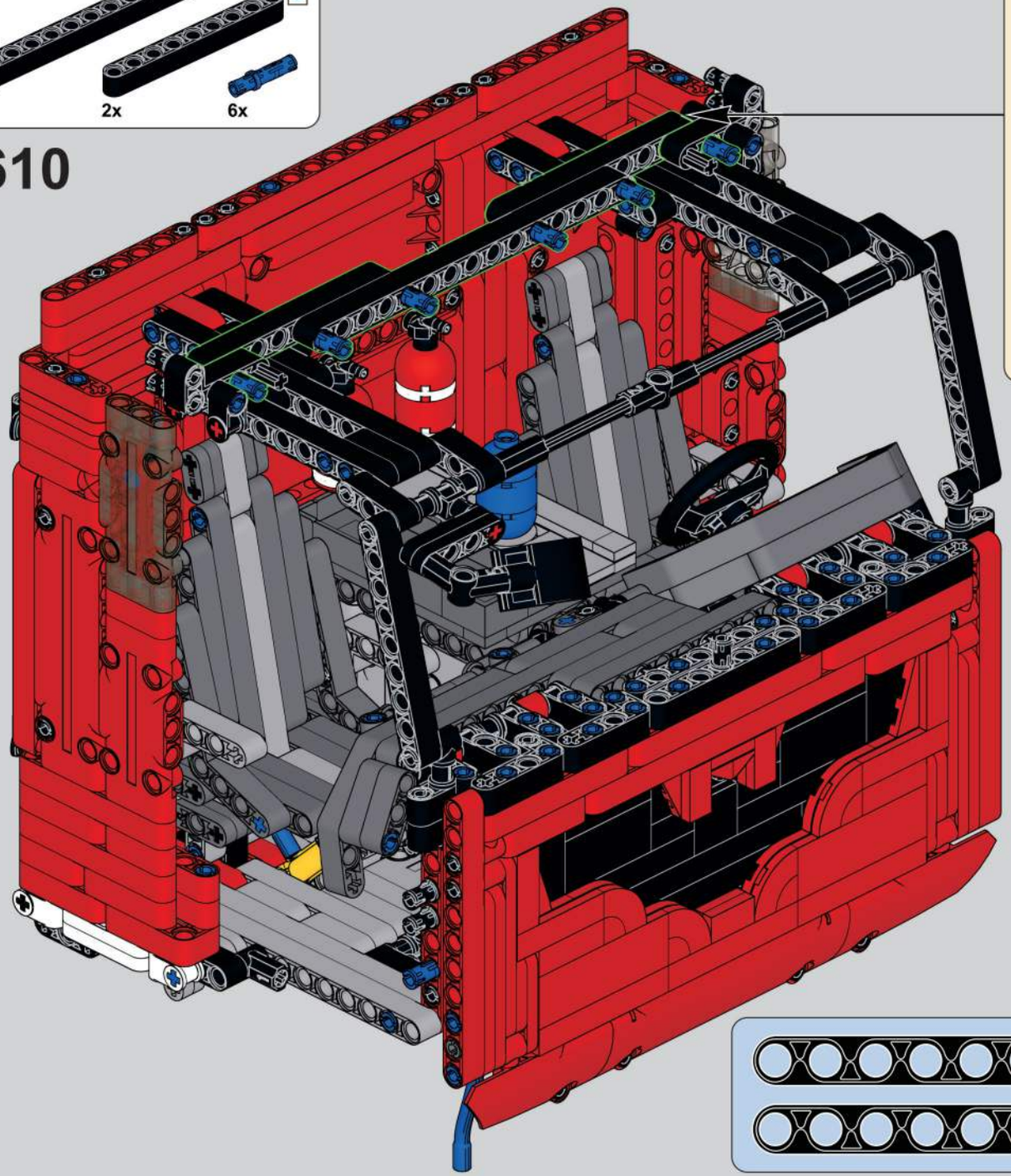

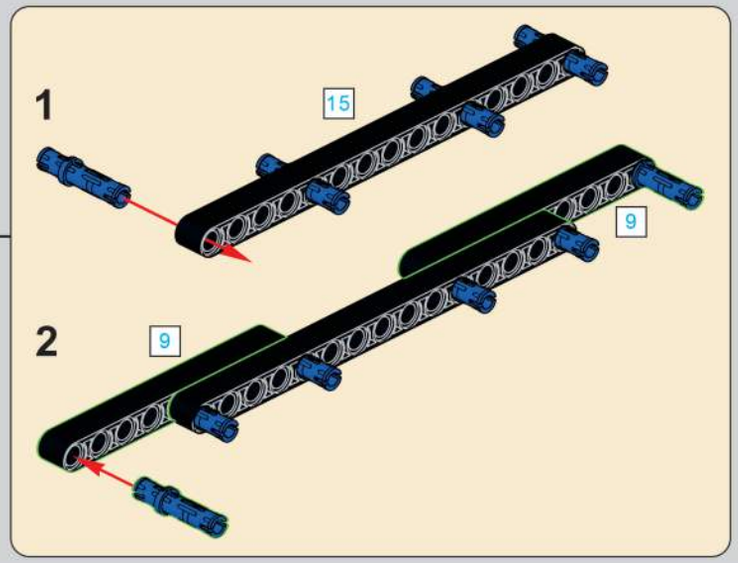

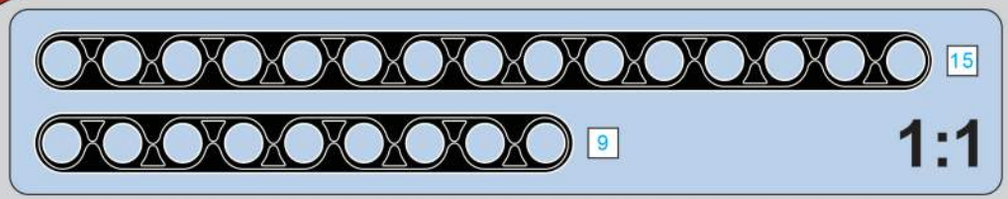

1611

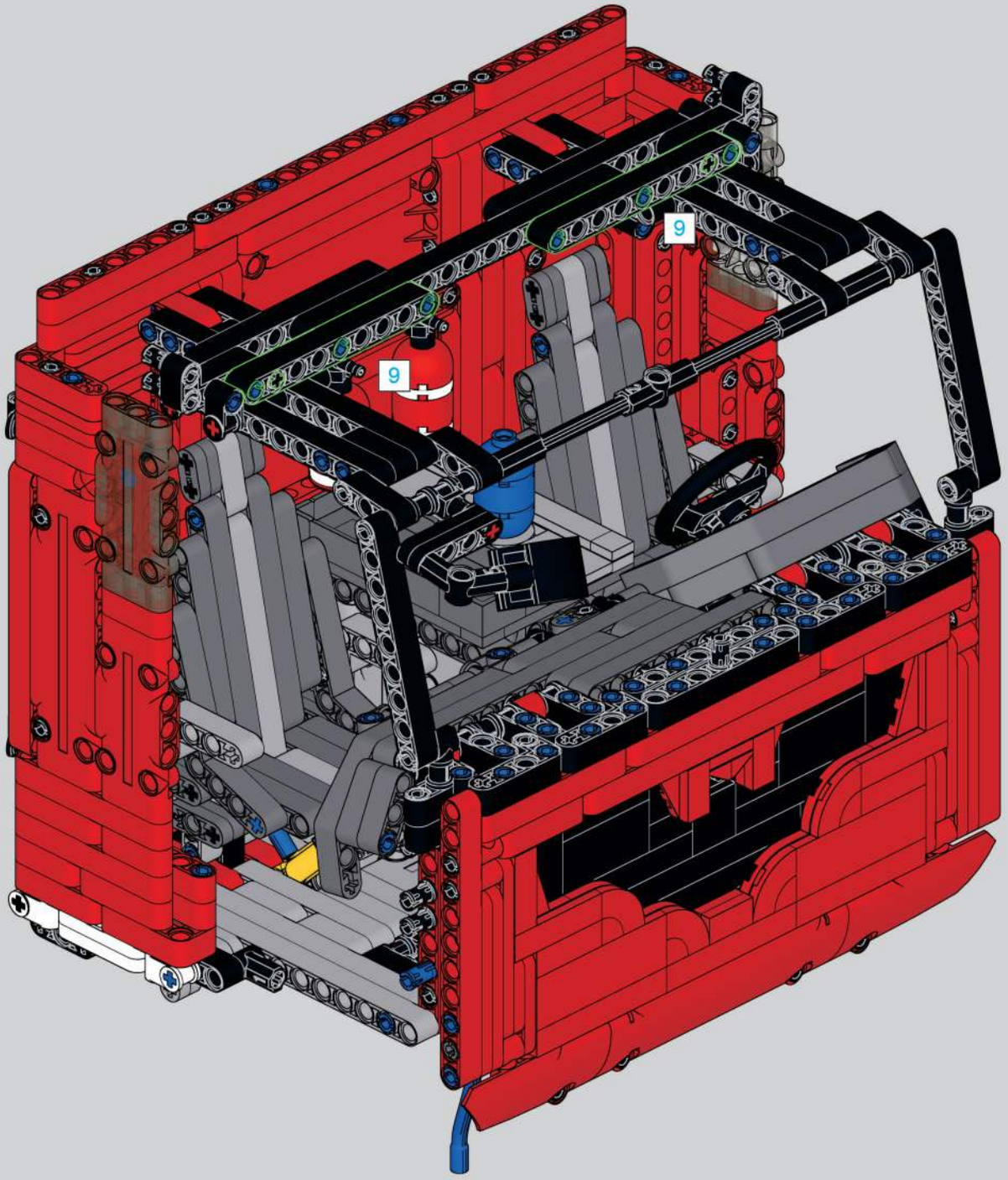

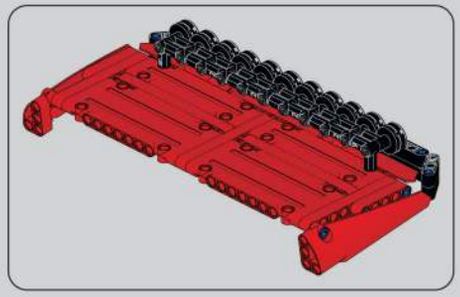

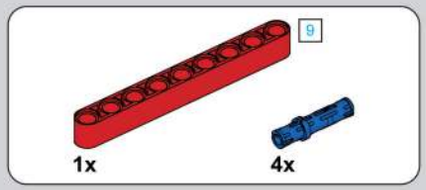

1612

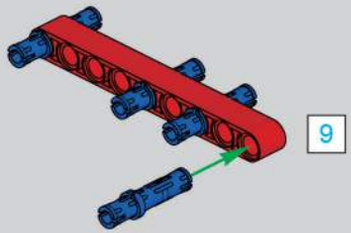

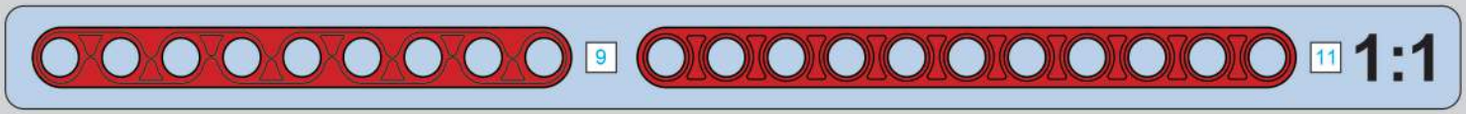

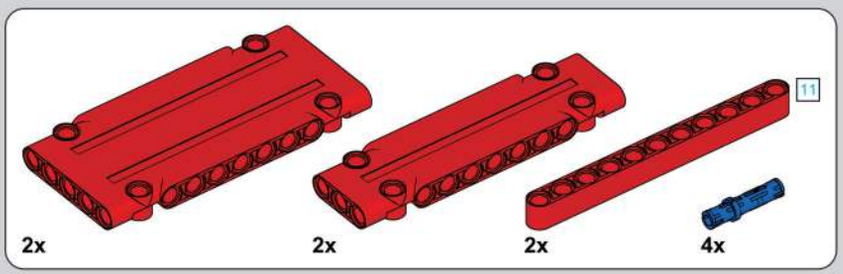

1613

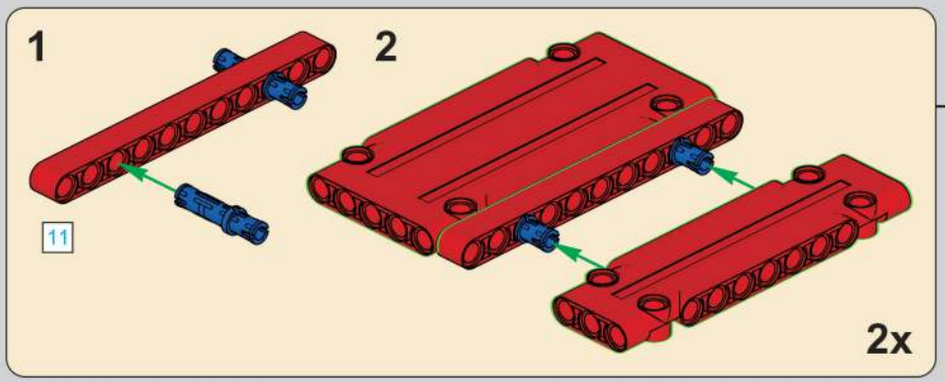

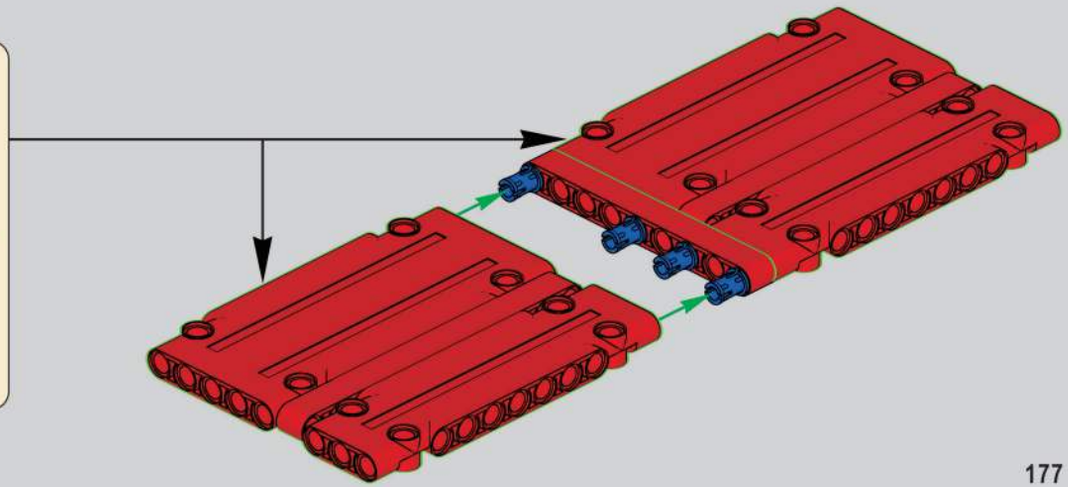

1614

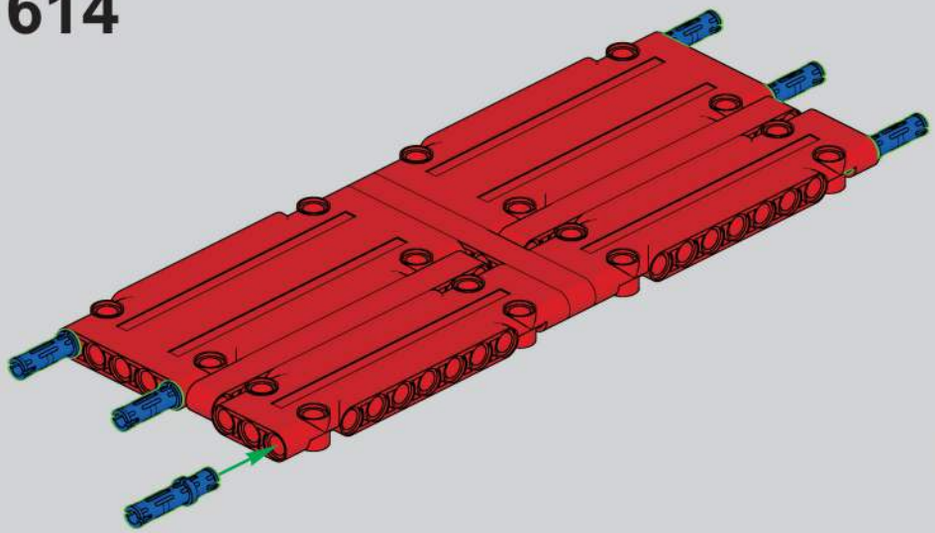

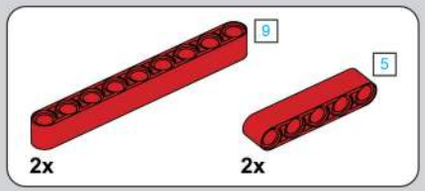

1615

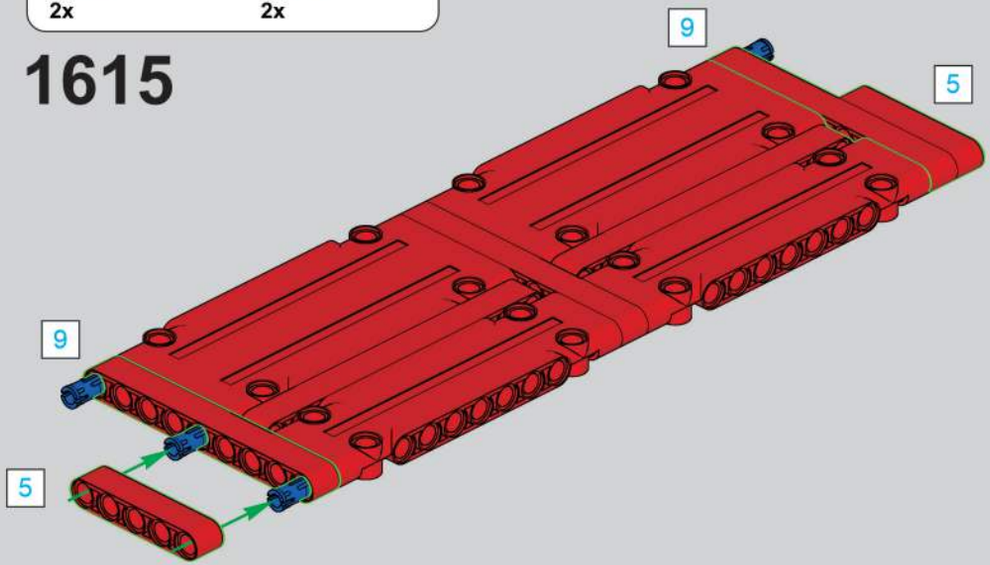

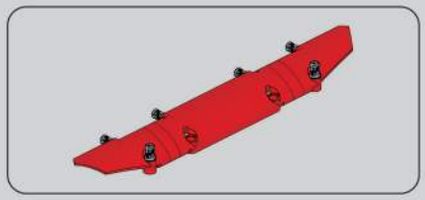

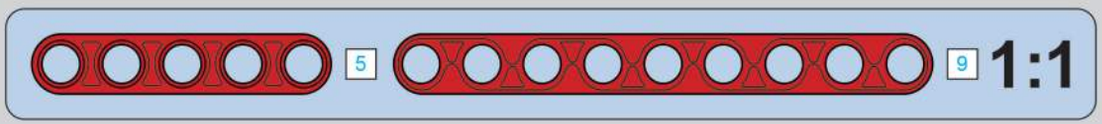

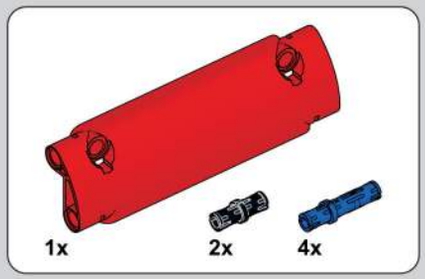

1616

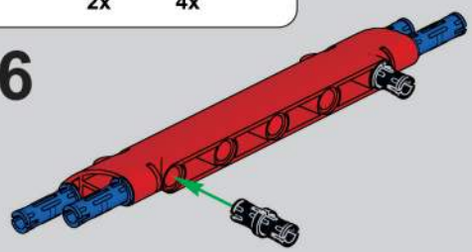

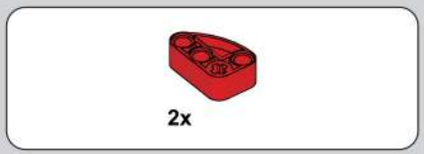

1617

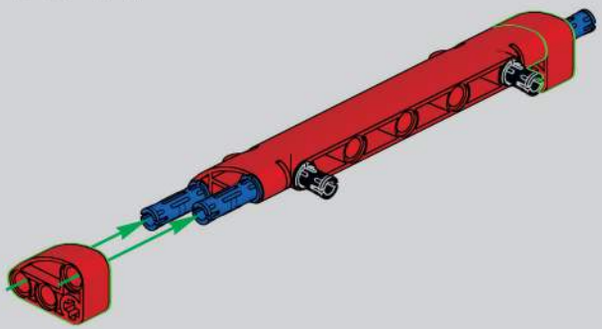

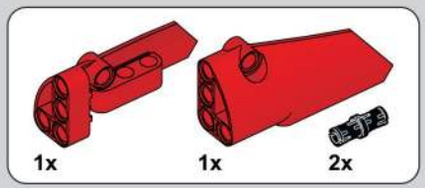

1618

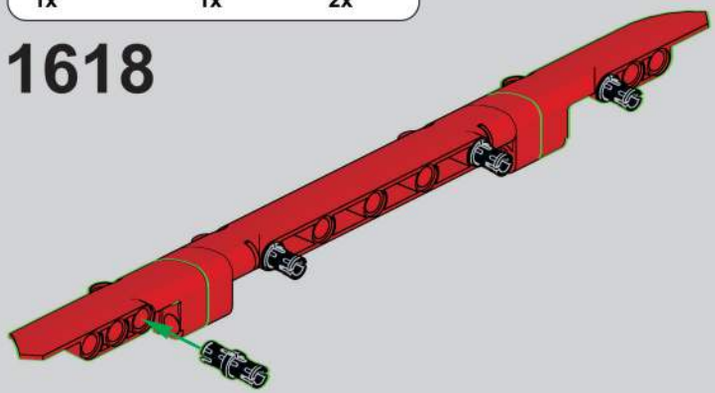

1619

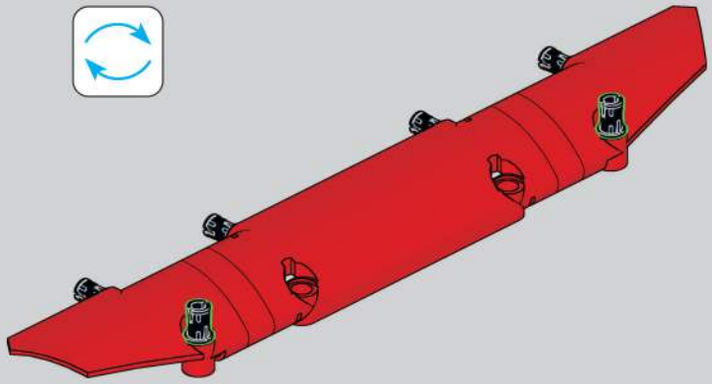

1620

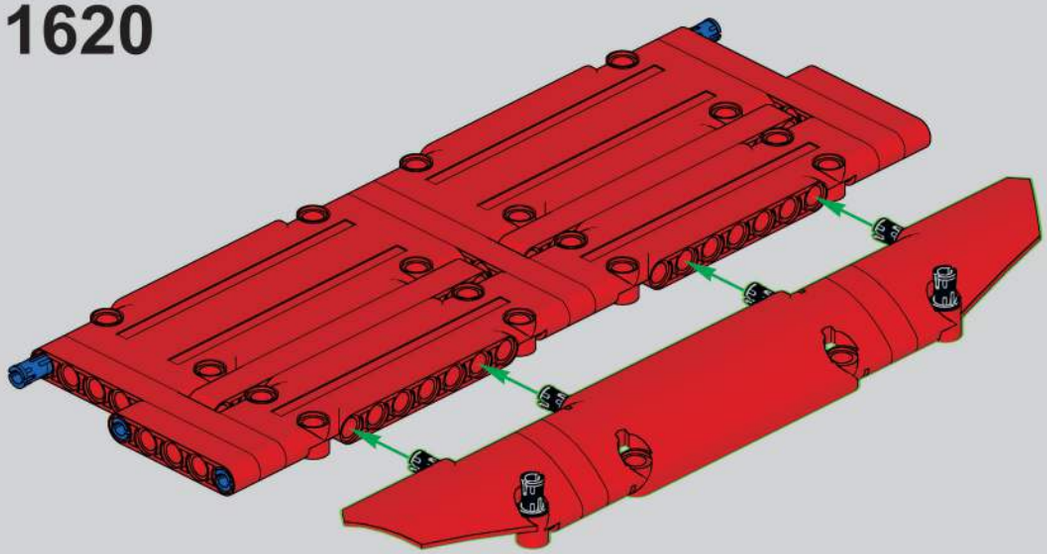

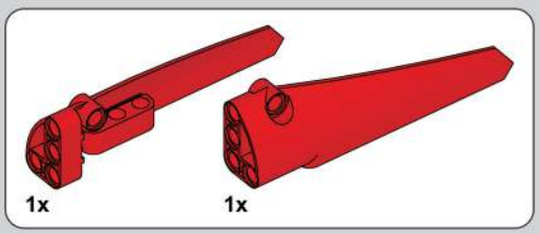

1621

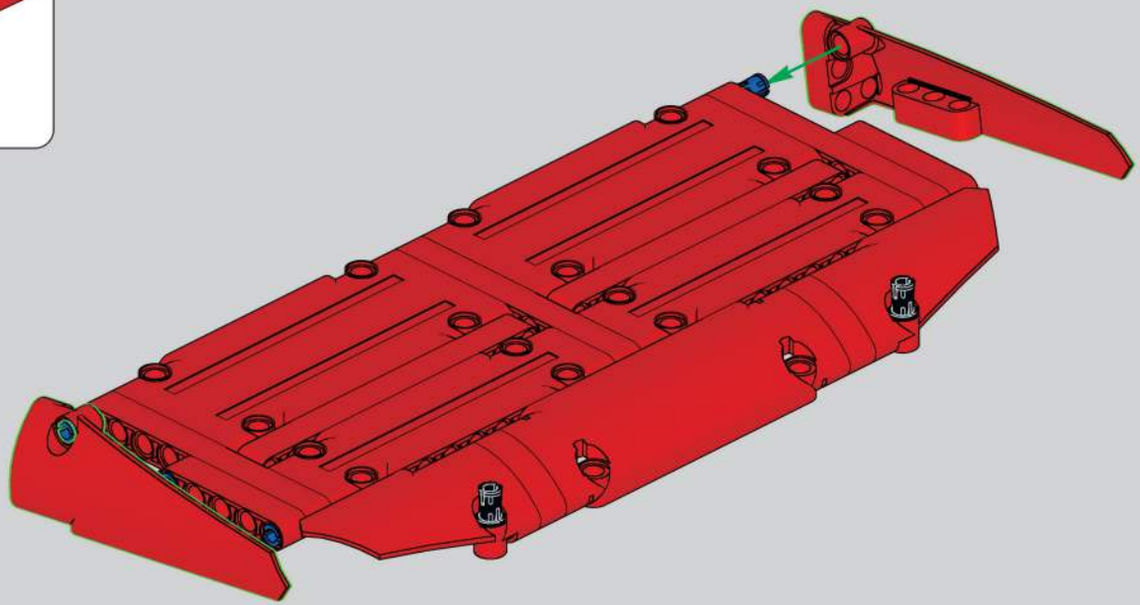

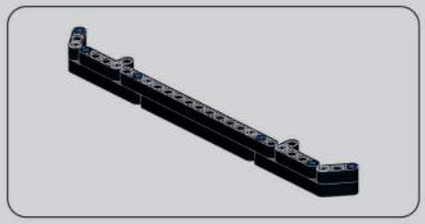

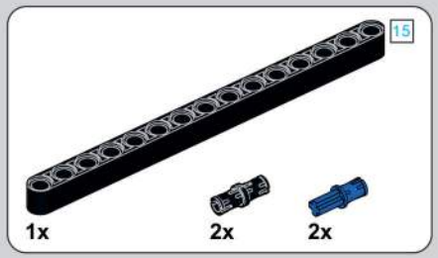

1622

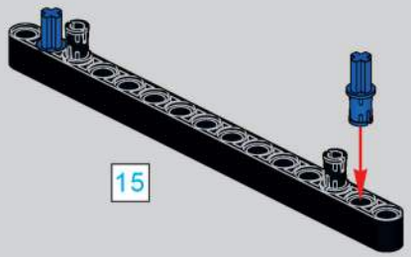

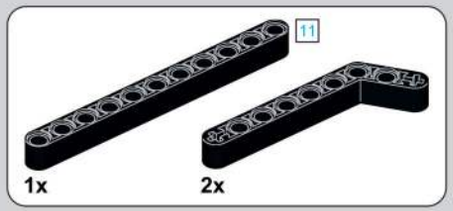

1623

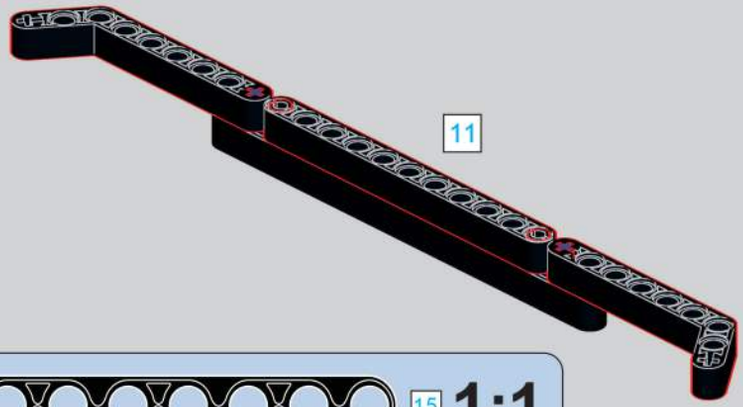

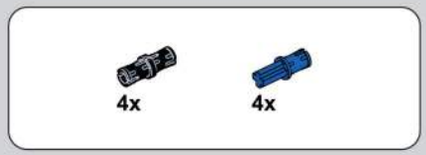

1624

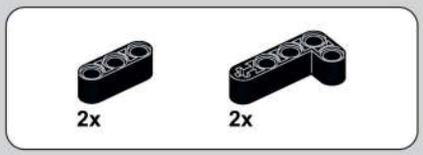

1625

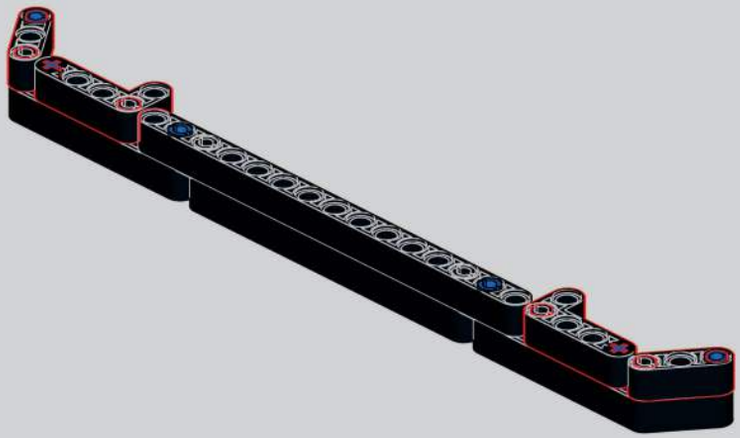

1626

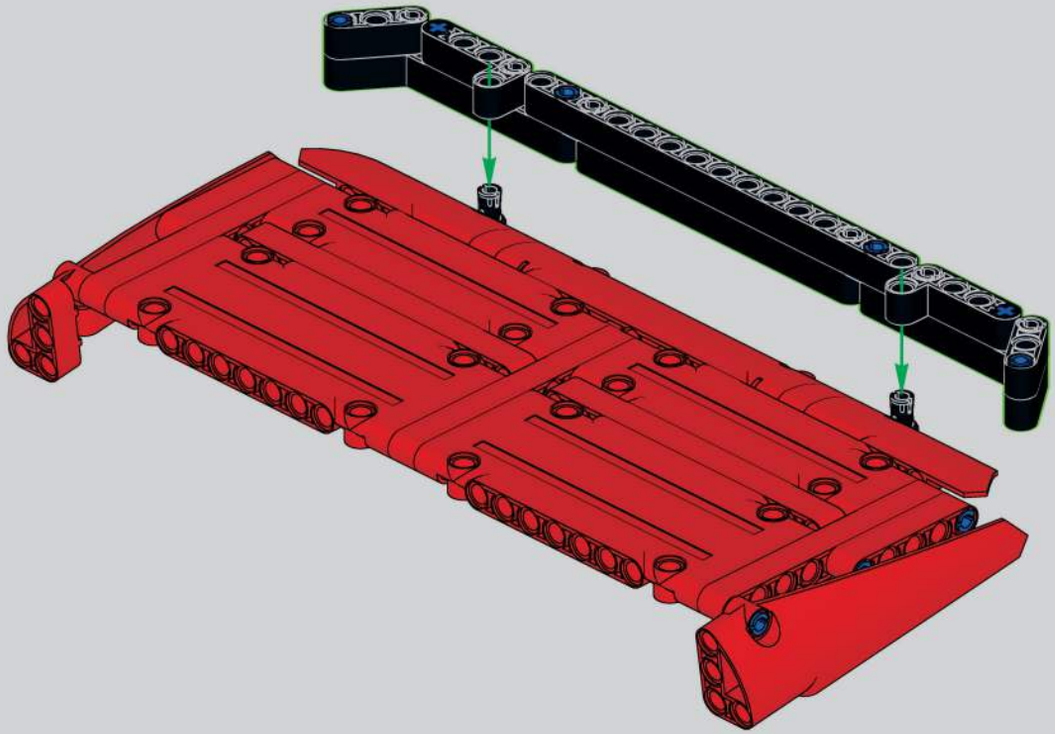

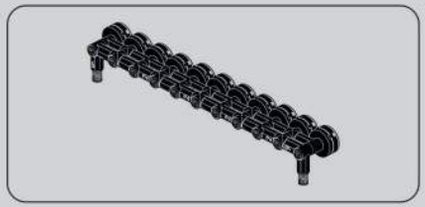

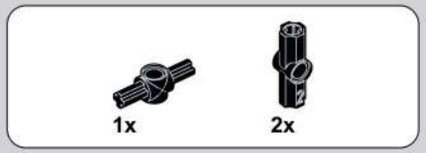

1627

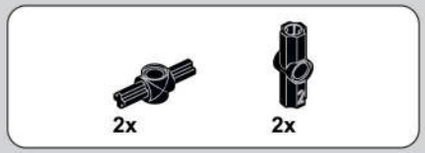

1628

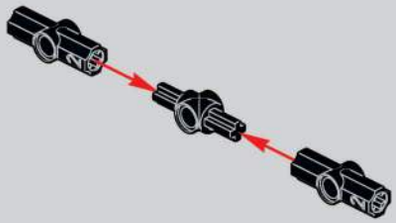

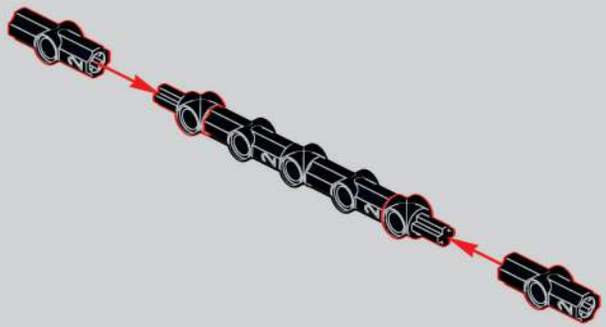

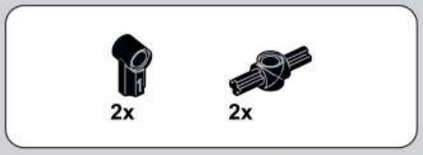

1629

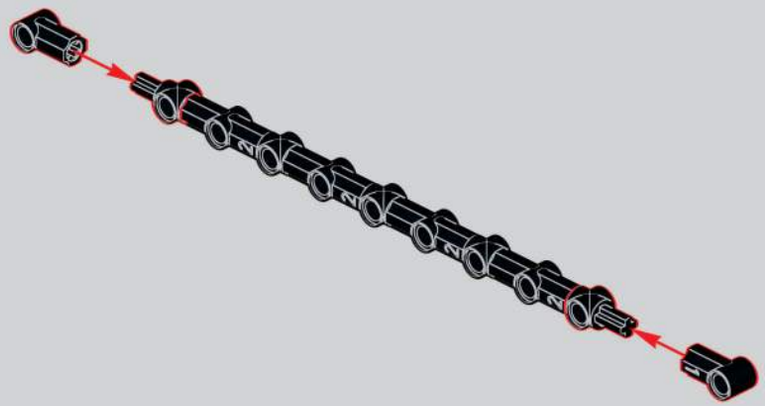

1630

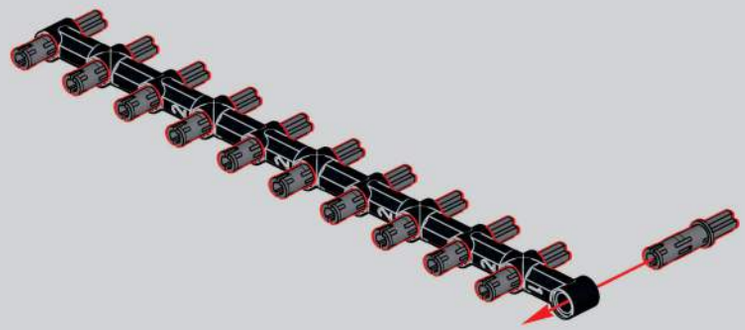

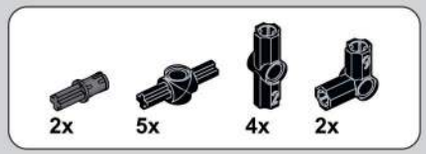

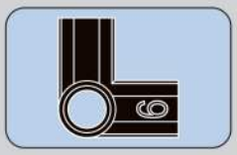

1631

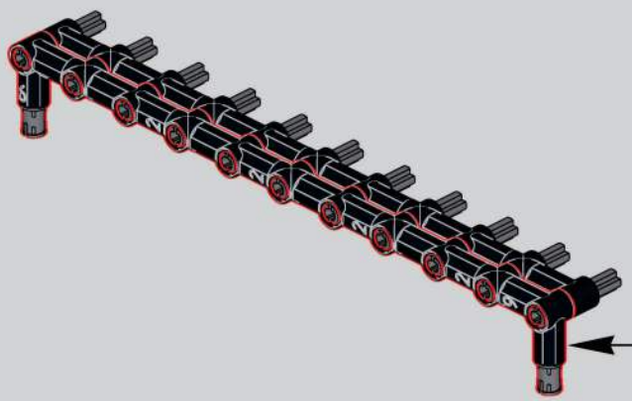

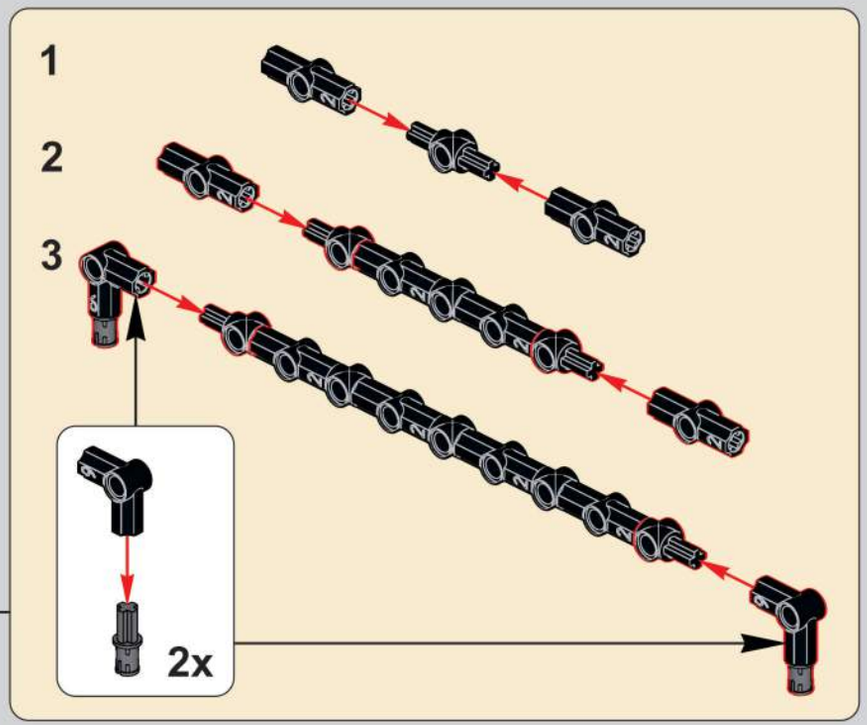

1632

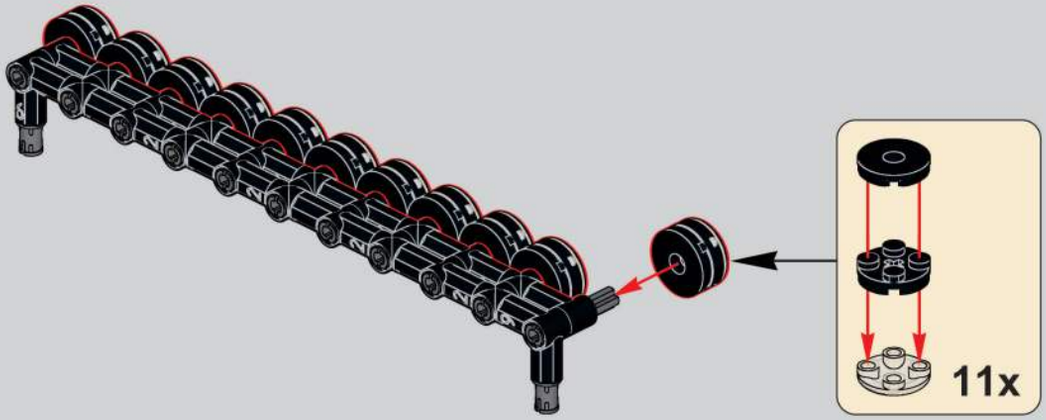

1633

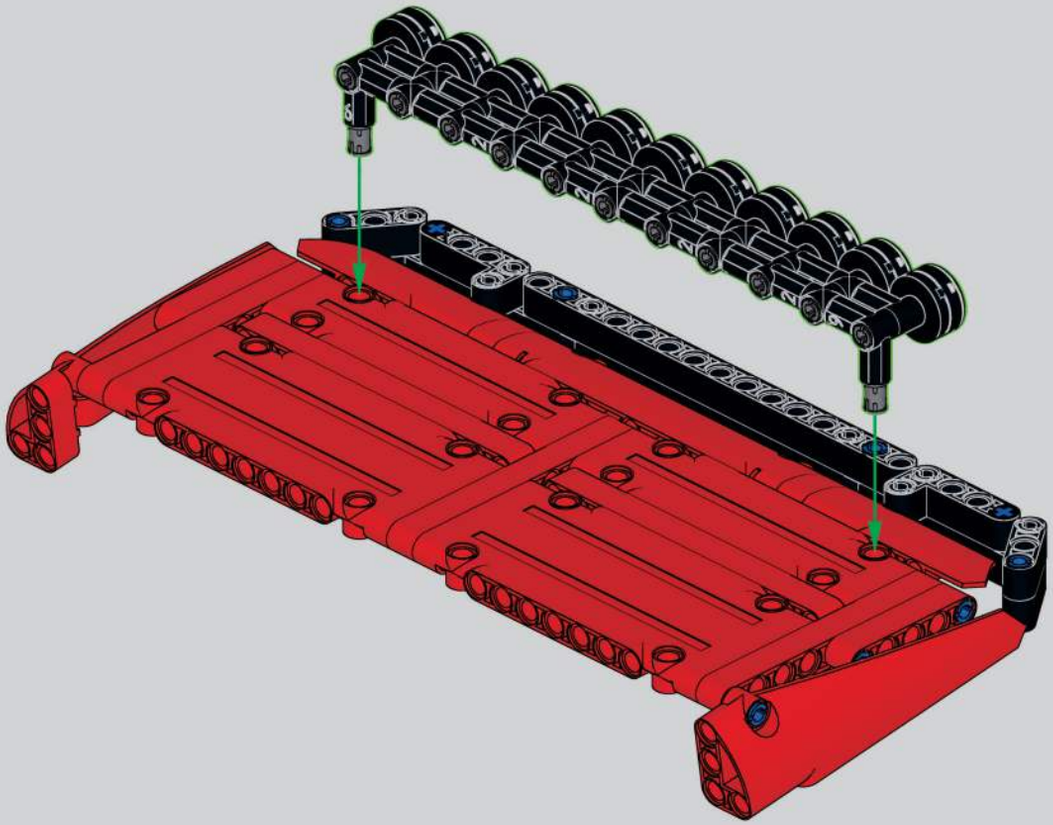

1634

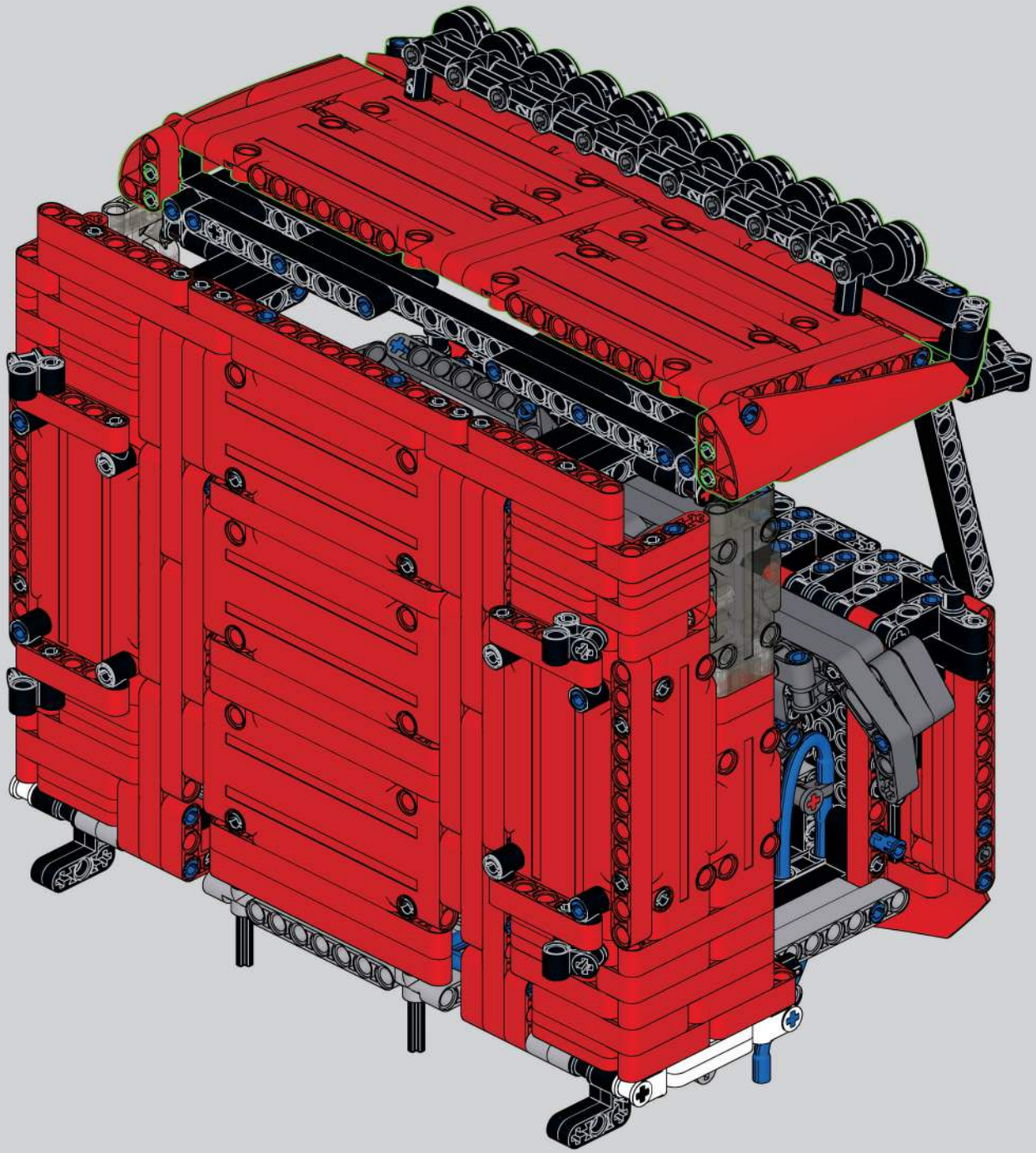

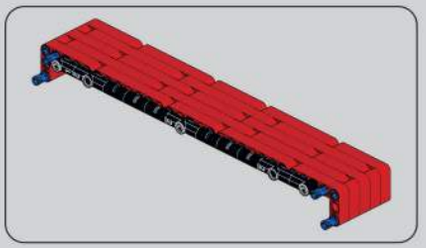

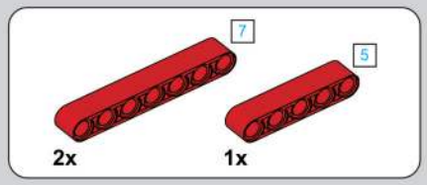

1636

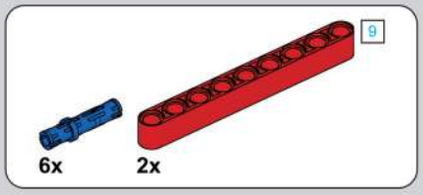

1637

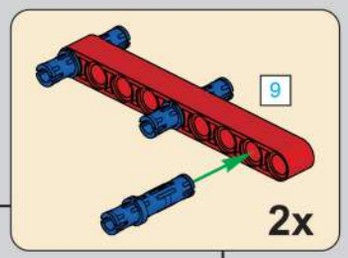

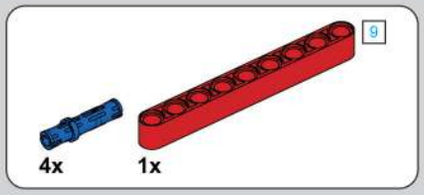

1635

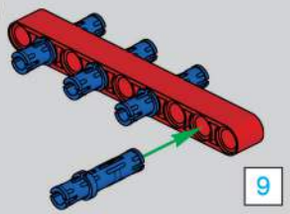

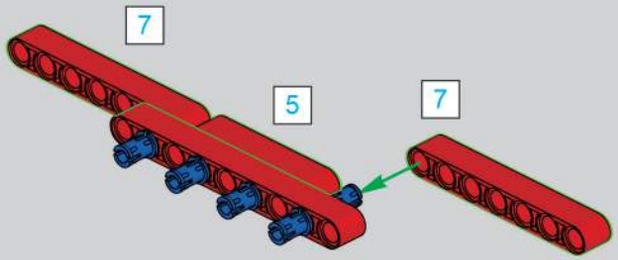

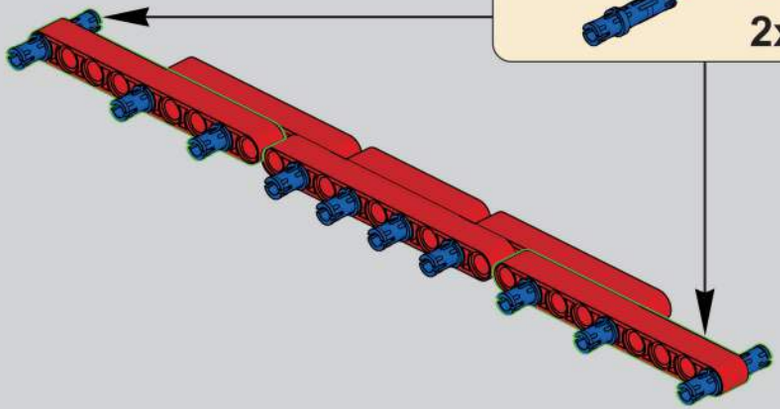

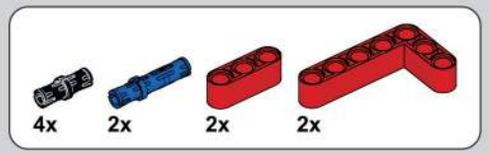

1638

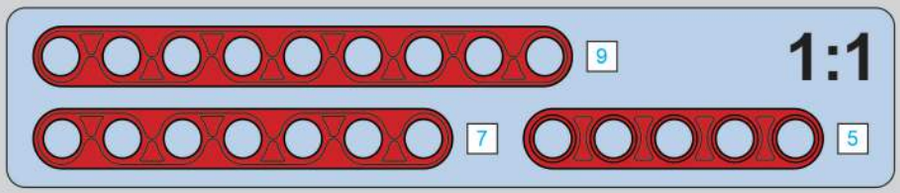

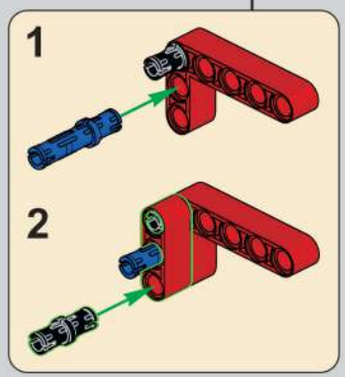

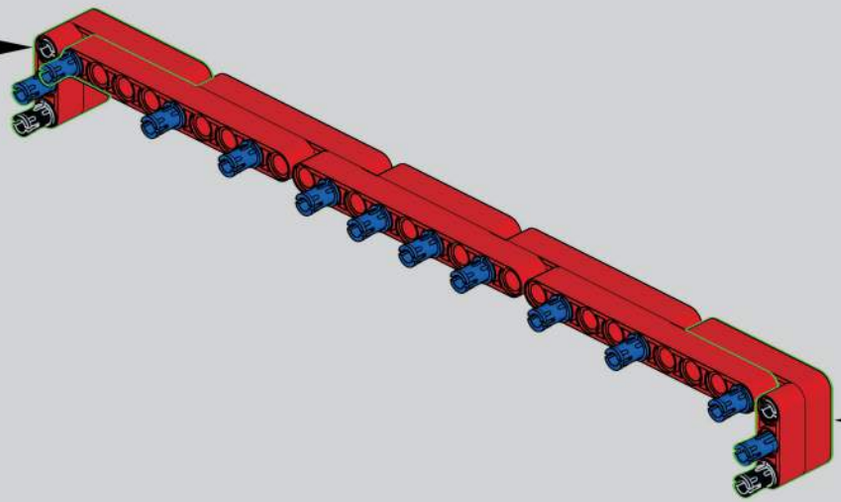

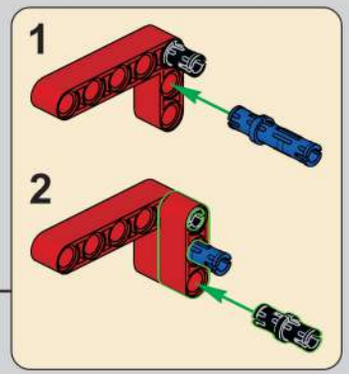

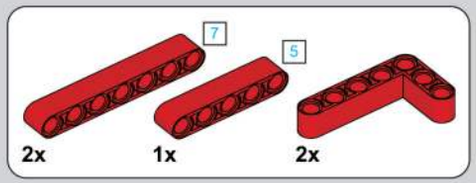

1639

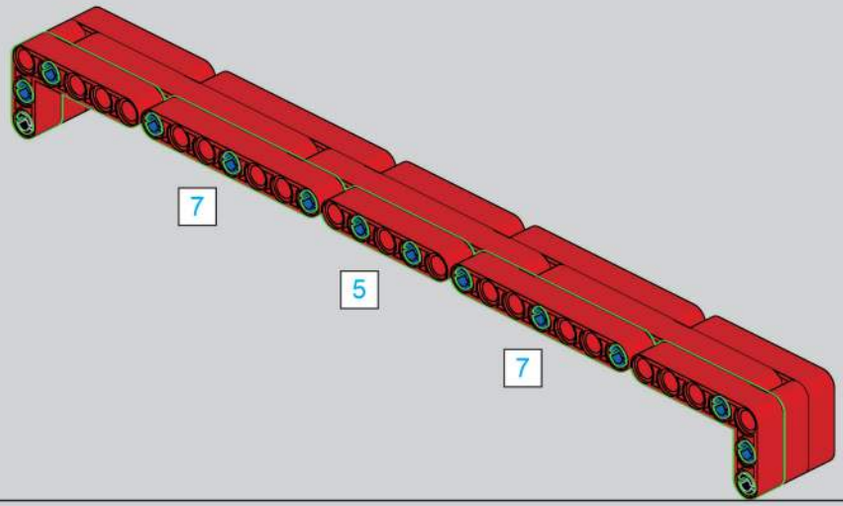

1640

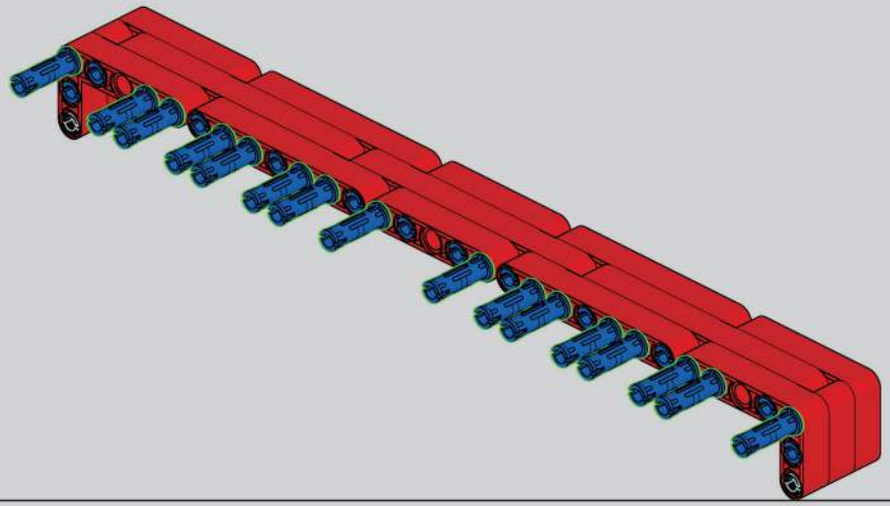

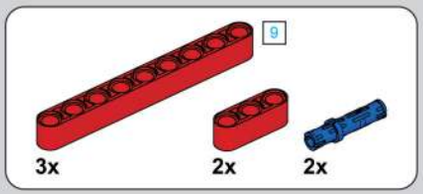

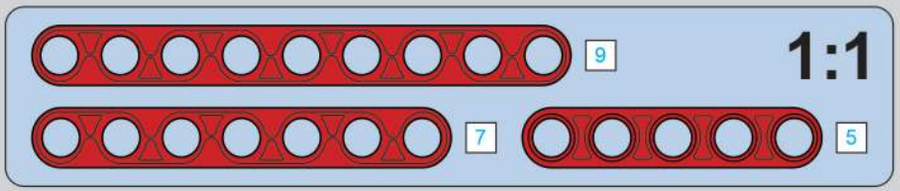

1641

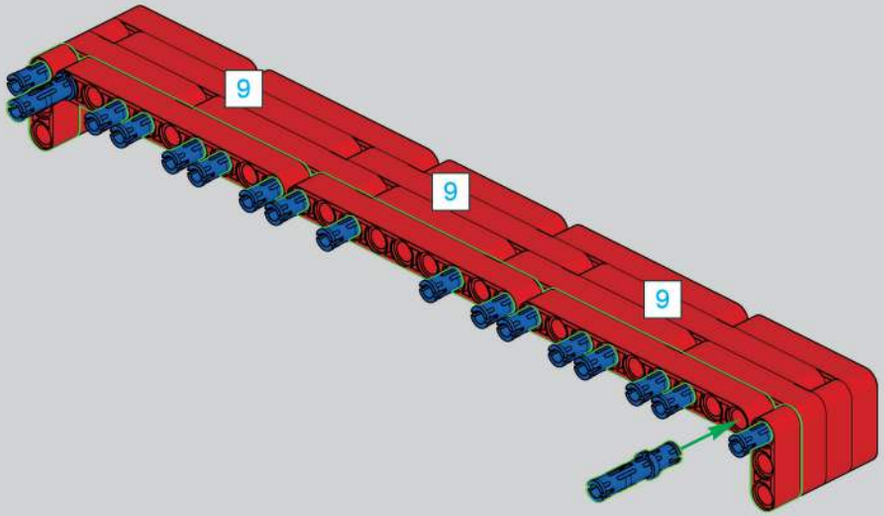

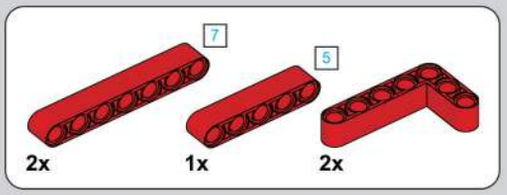

1642

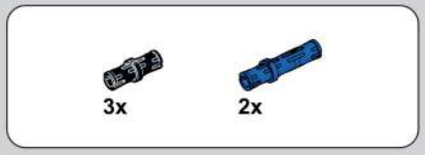

1643

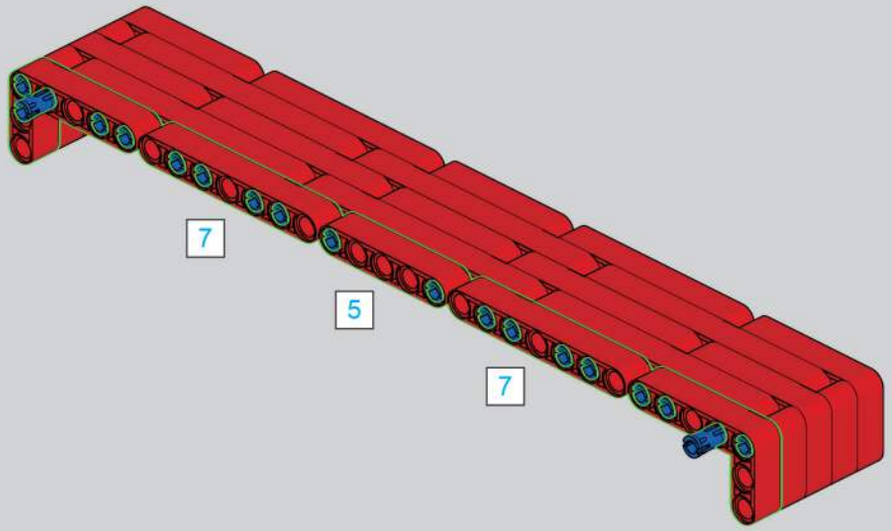

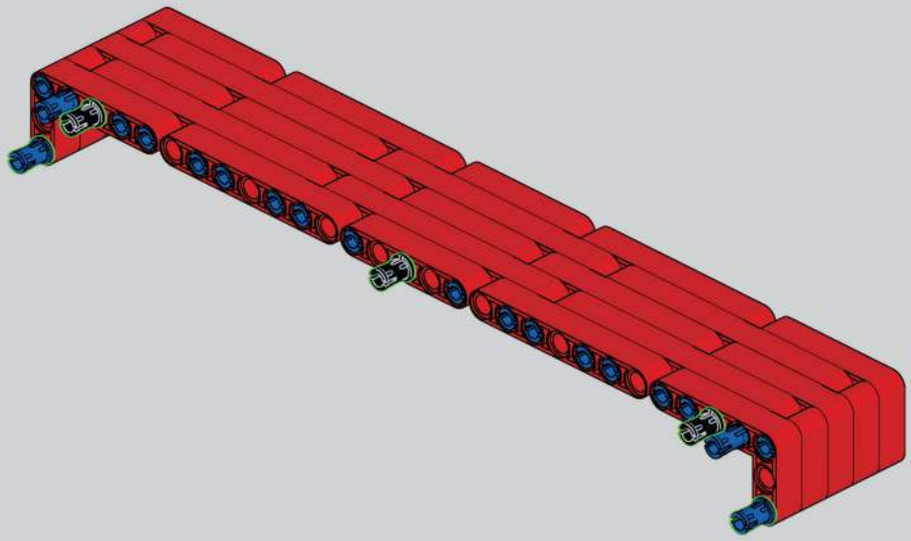

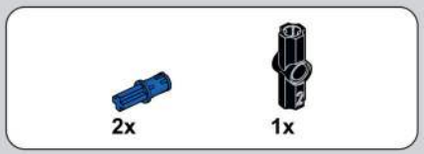

1644

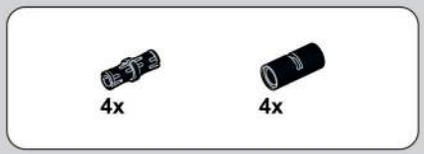

1645

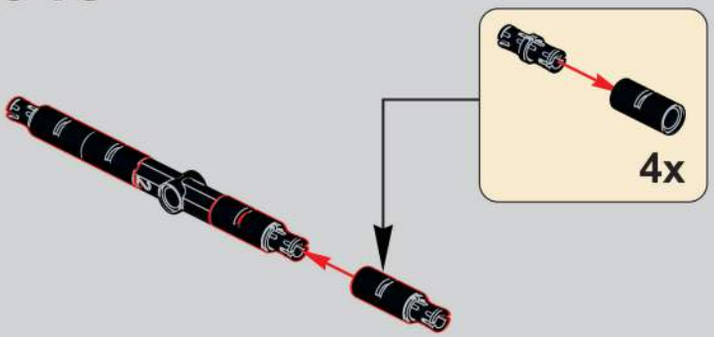

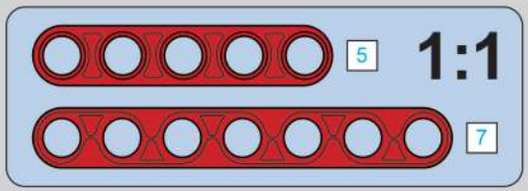

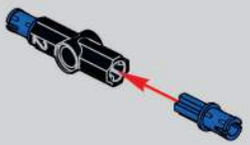

1646

1647

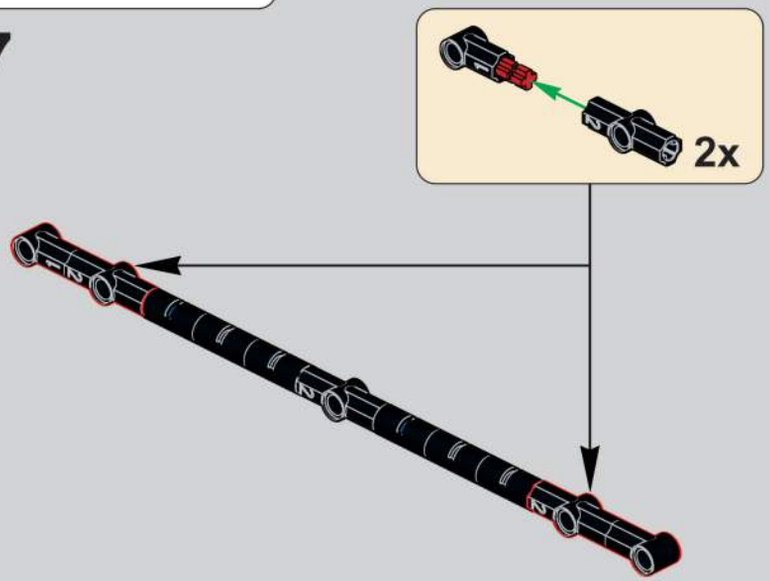

1648

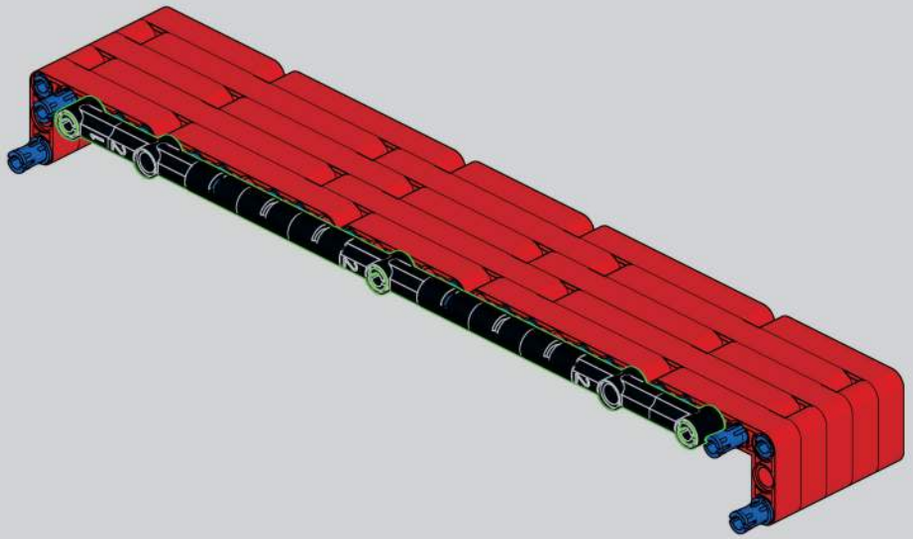

1649

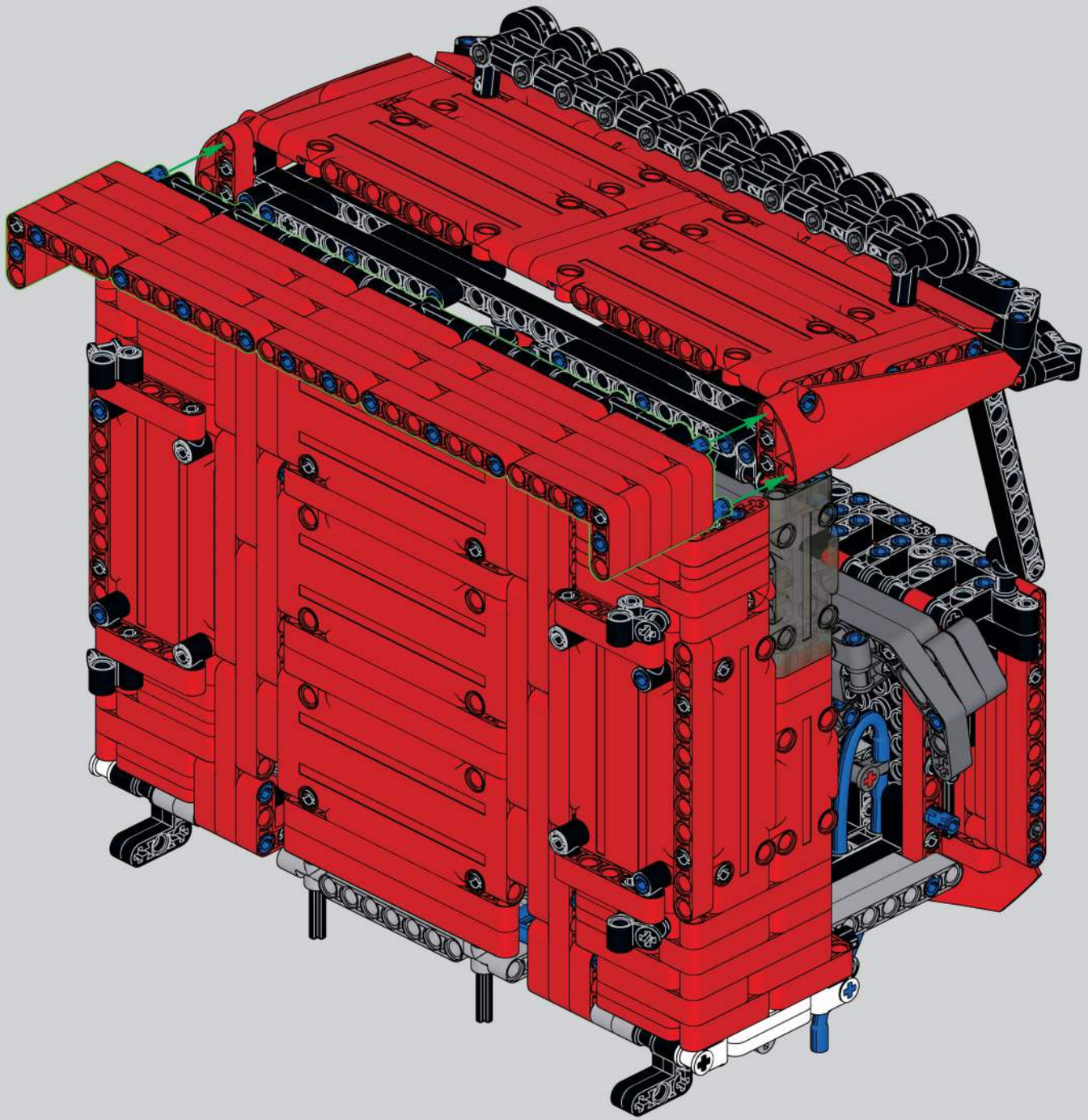

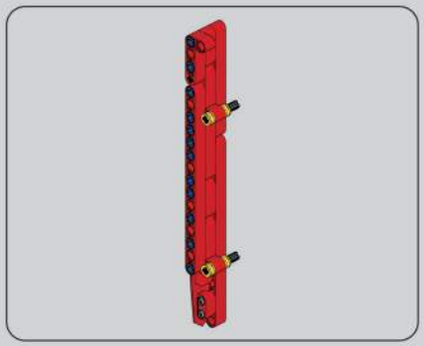

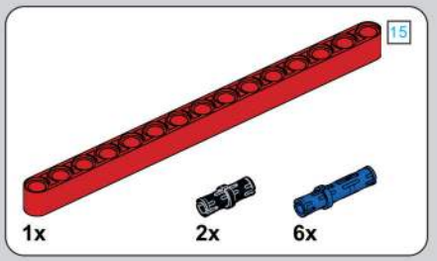

1650

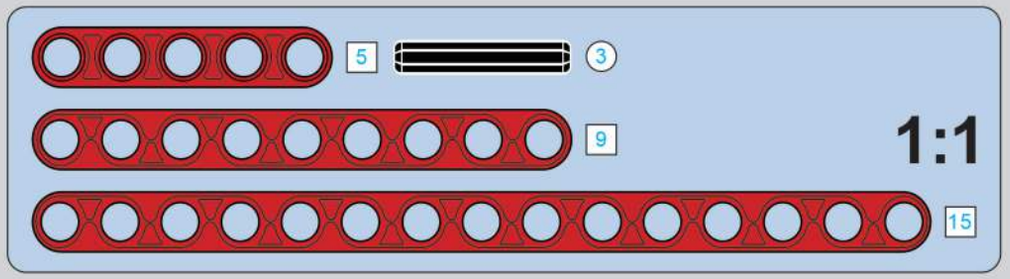

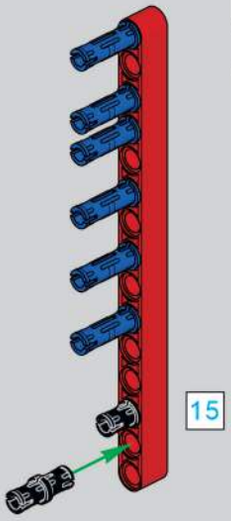

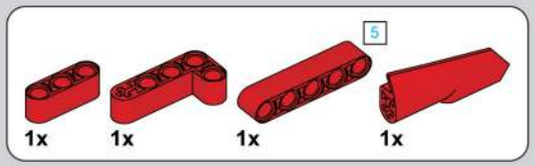

1651

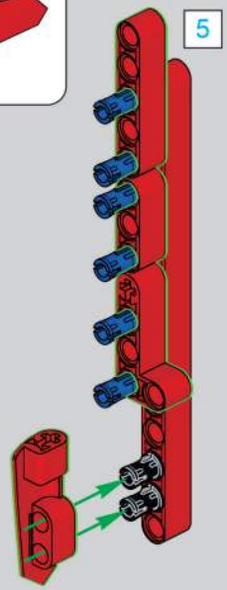

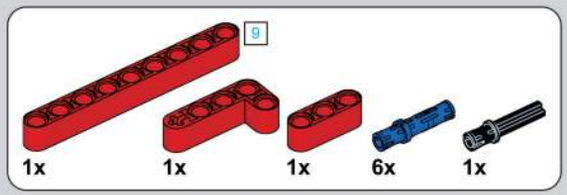

1652

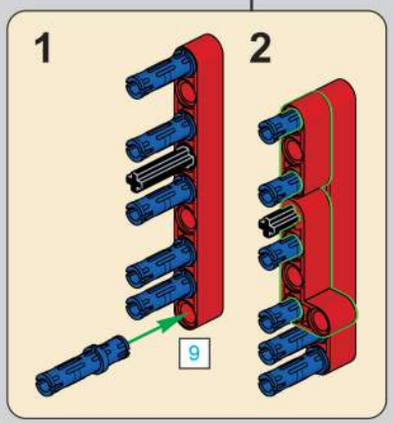

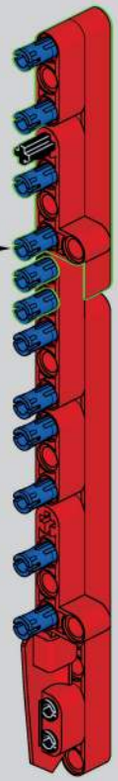

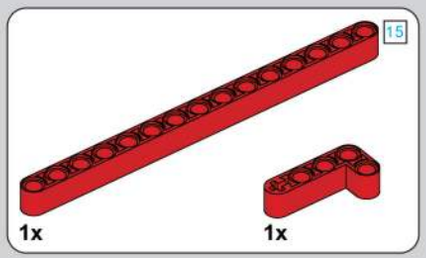

1653

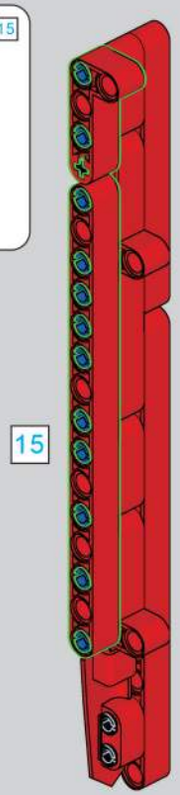

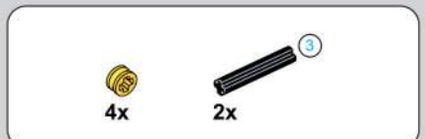

1654

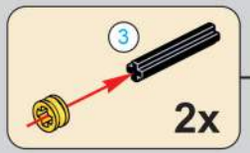

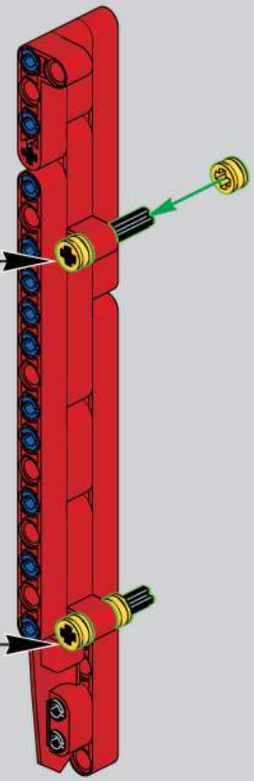

1655

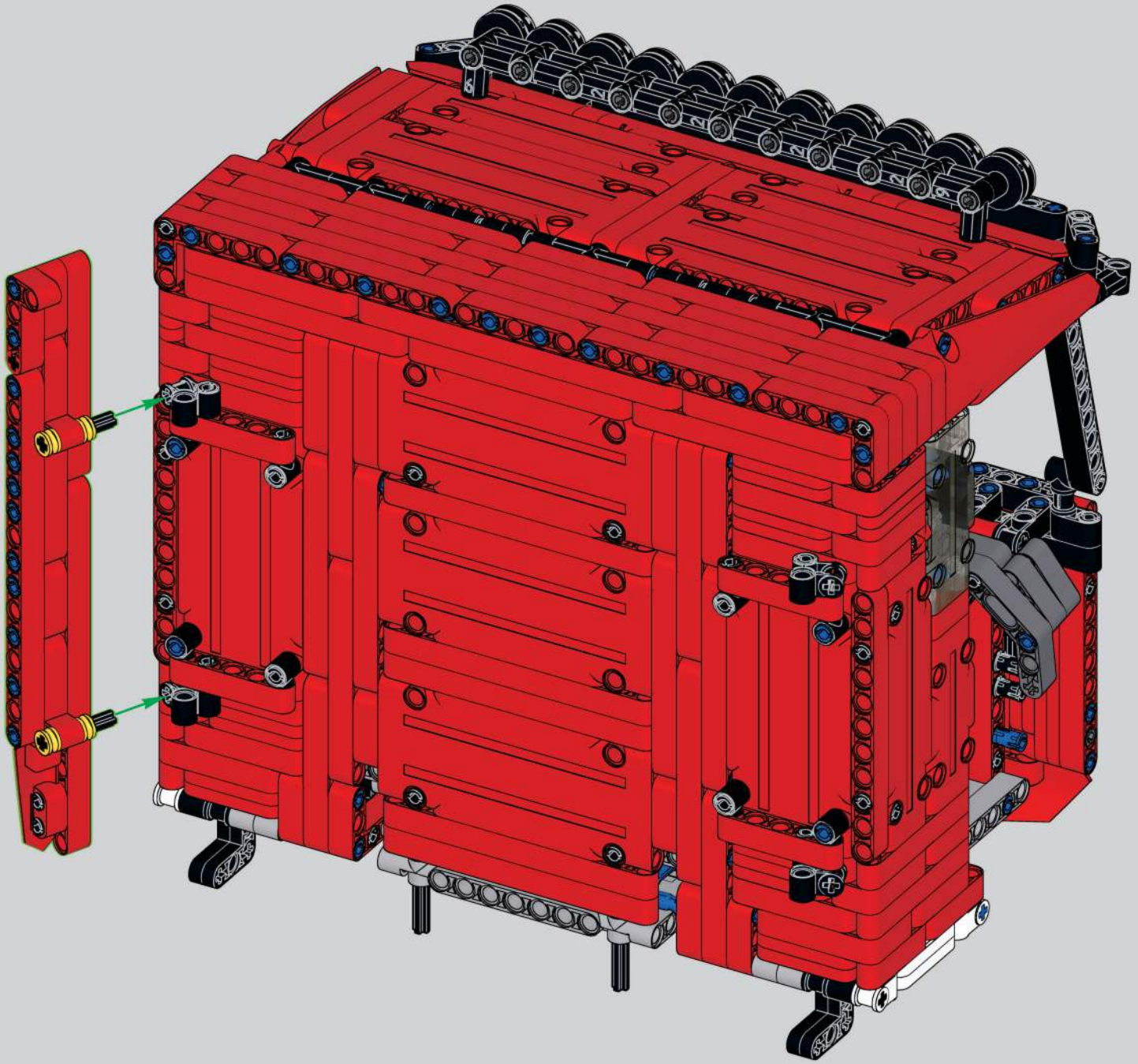

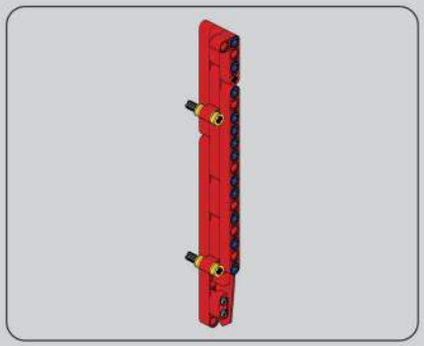

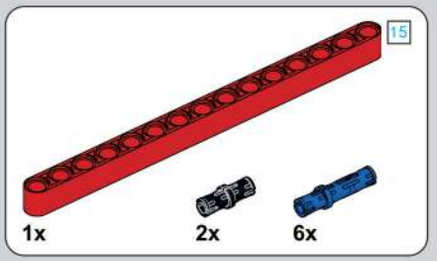

1656

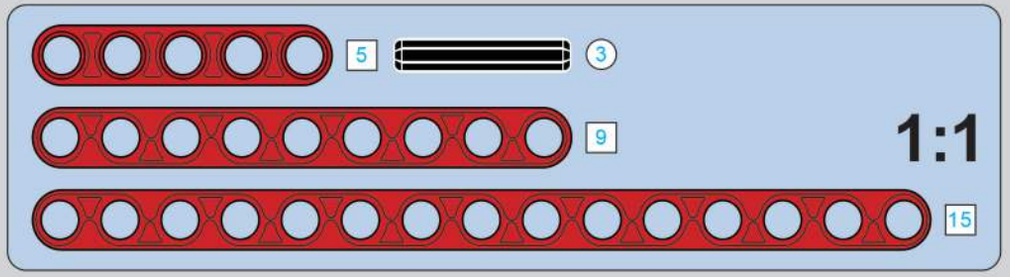

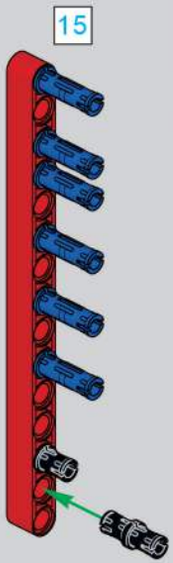

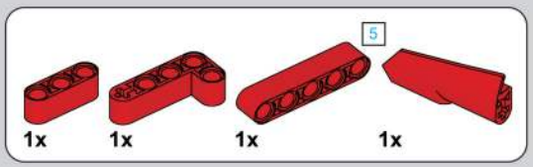

1657

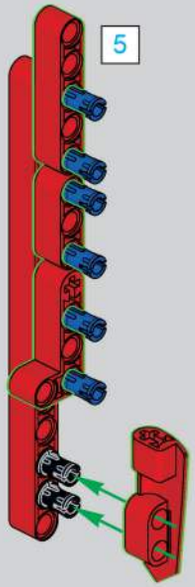

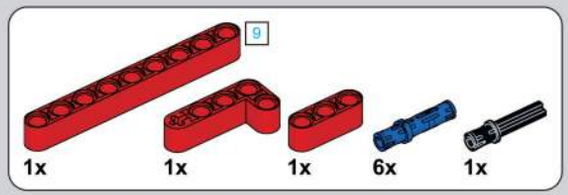

1658

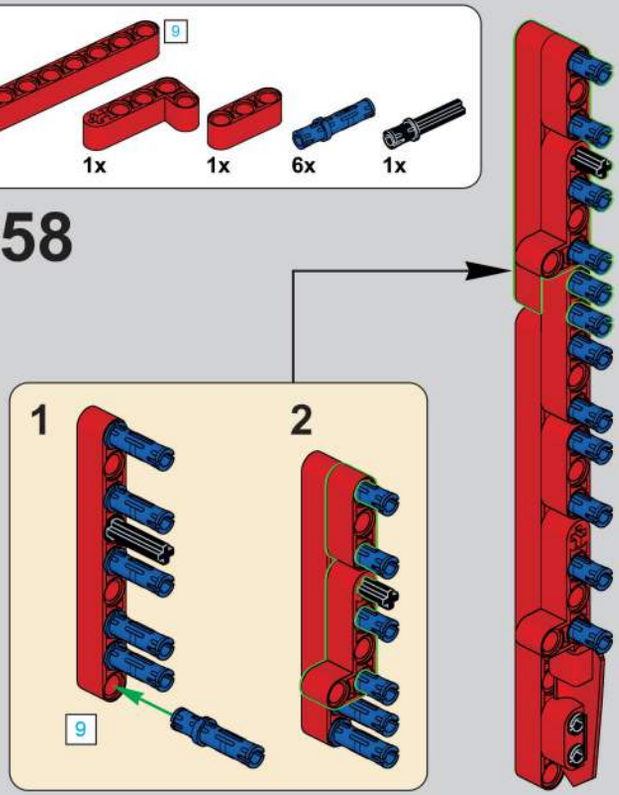

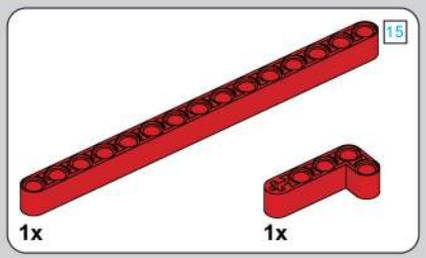

1659

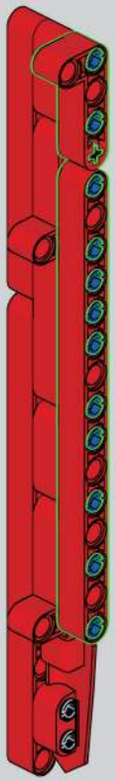

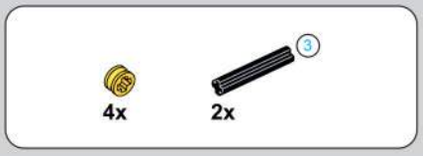

1660

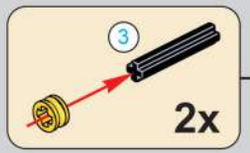

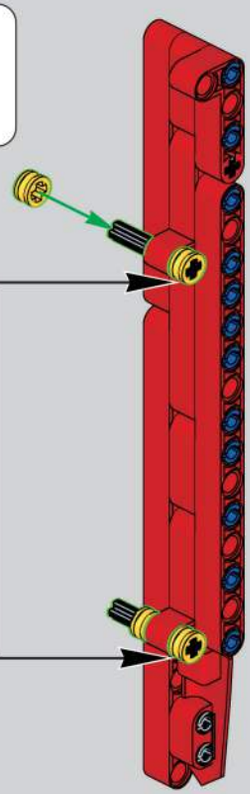

1661

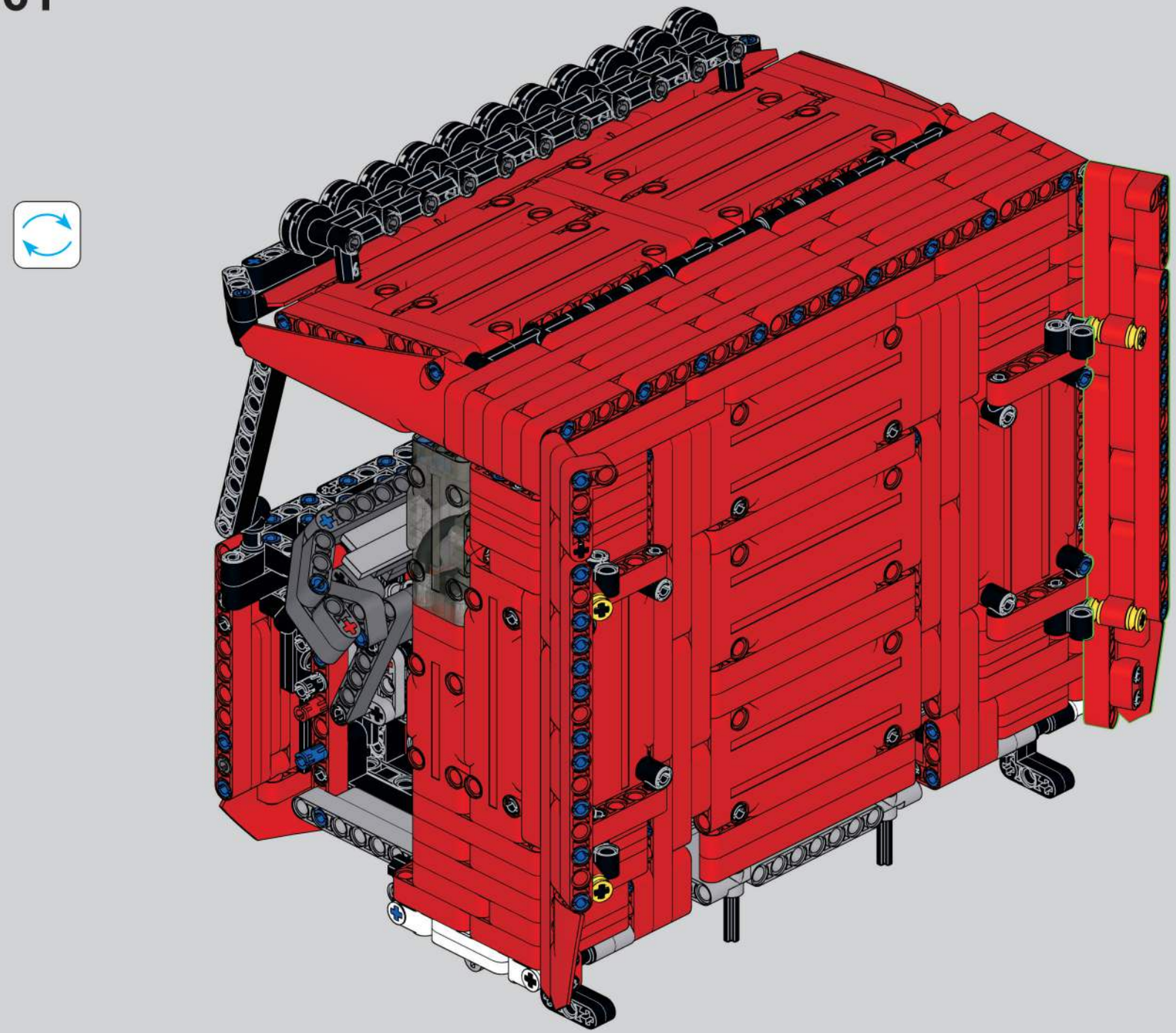

1662

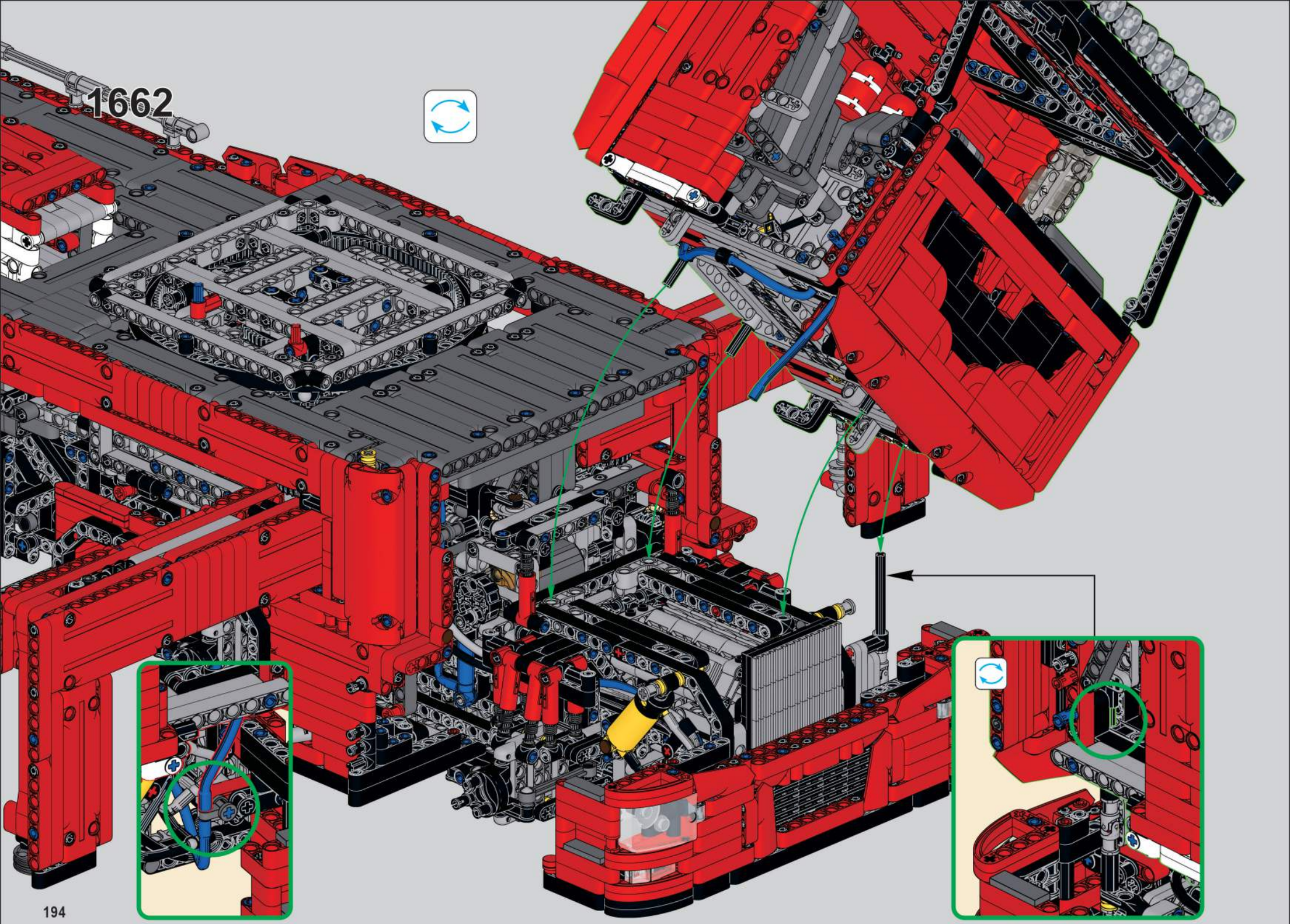

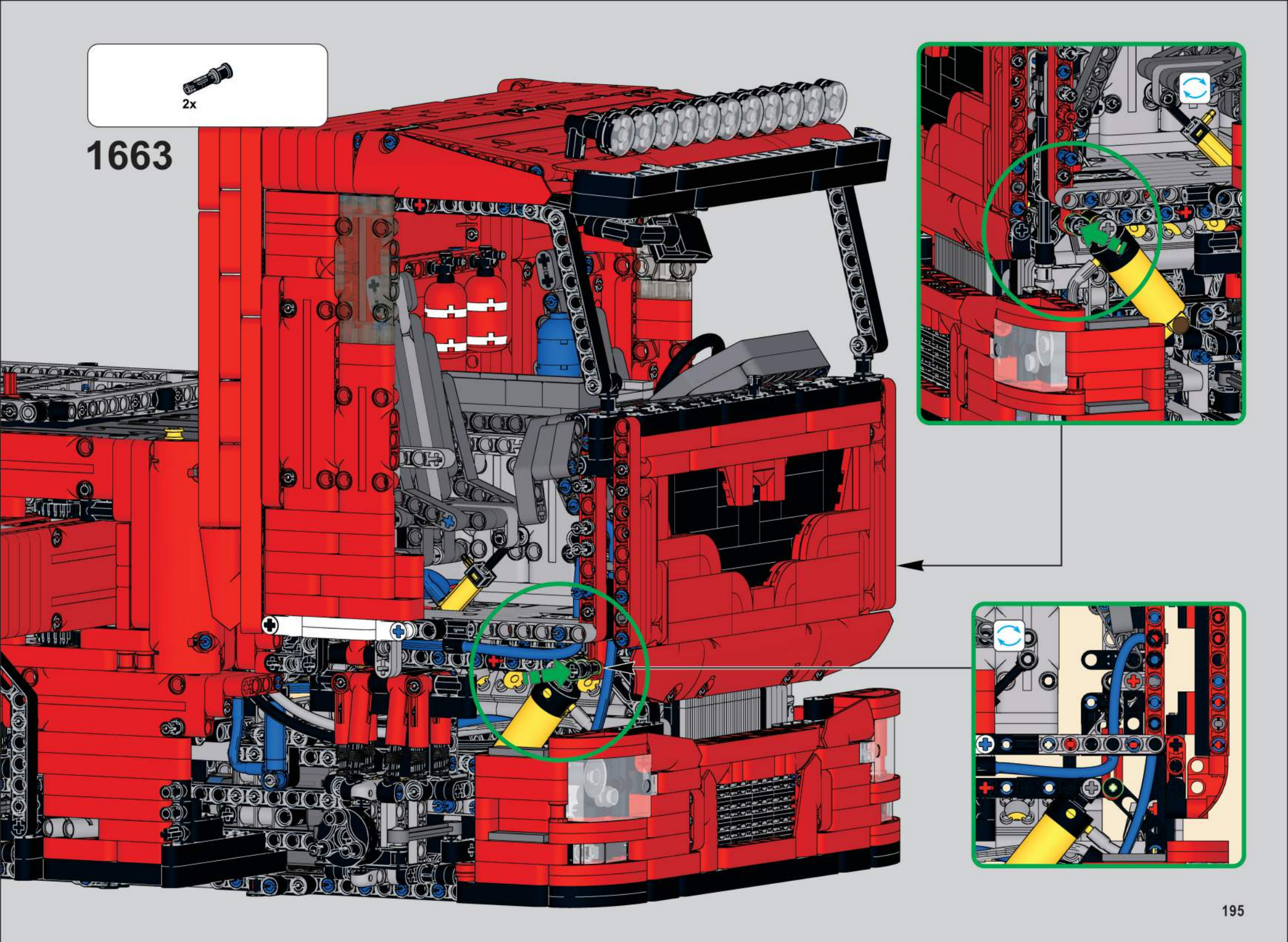
2x
1663

1664

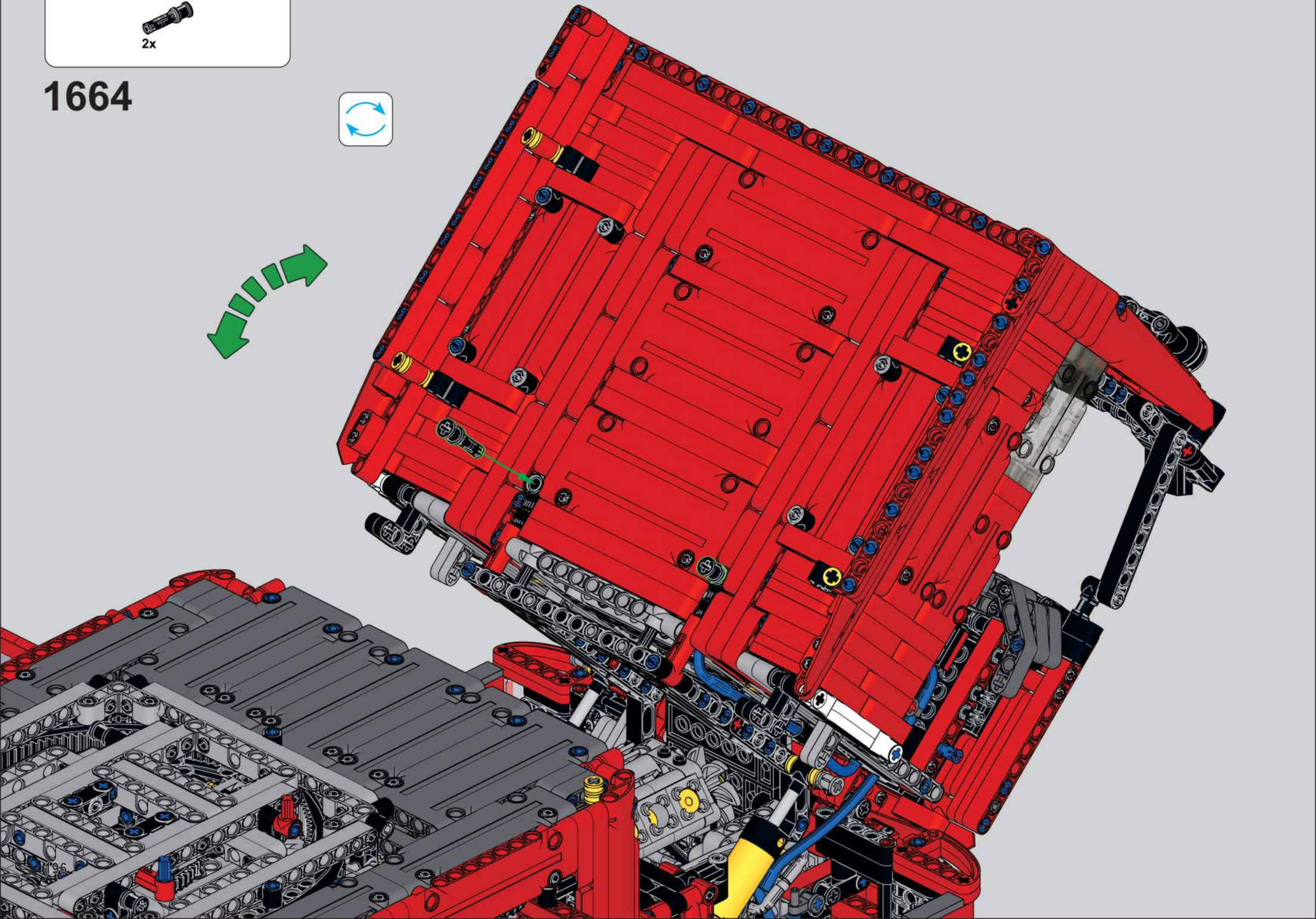

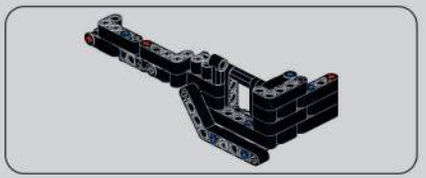

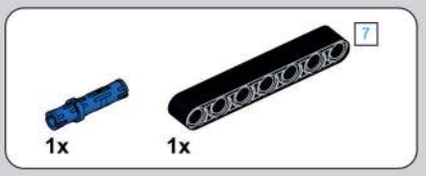

1665

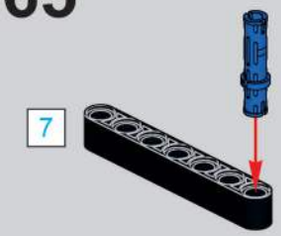

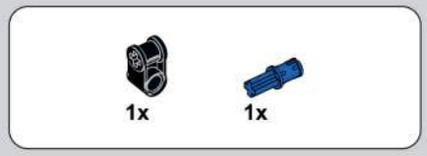

1666

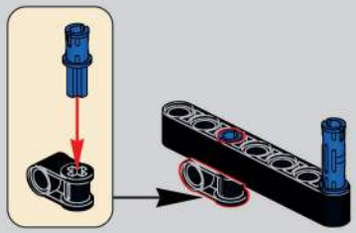

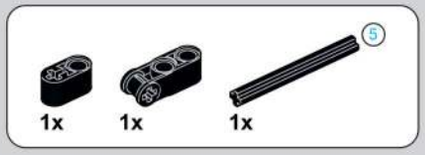

1667

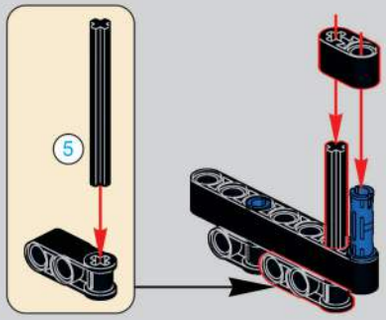

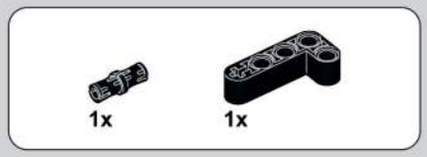

1668

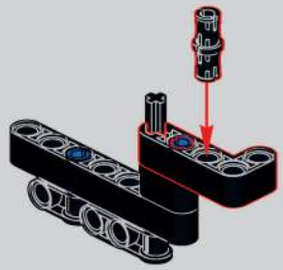

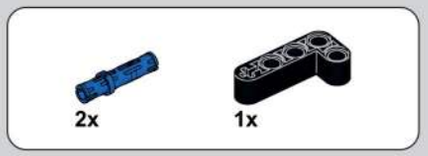

1669

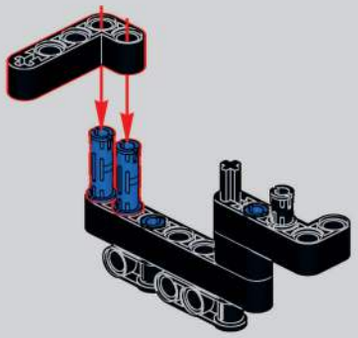

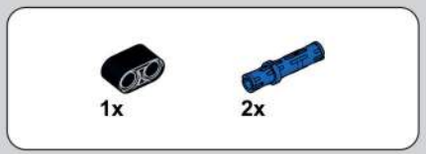

1670

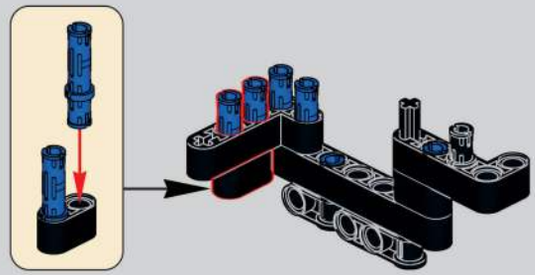

1671

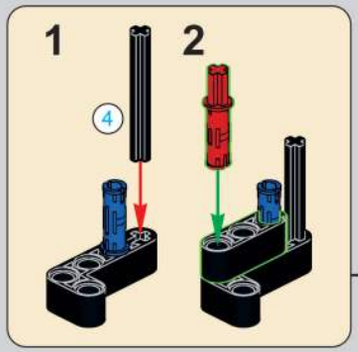

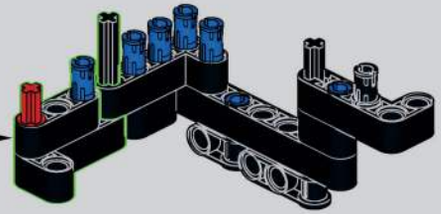

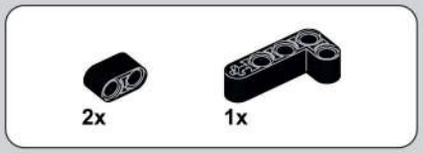

1672

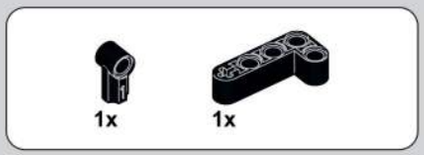

1673

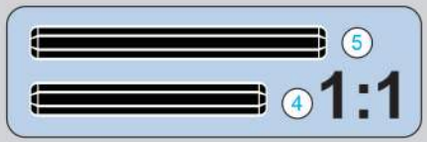

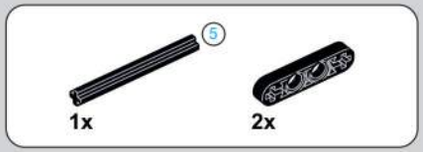

1674

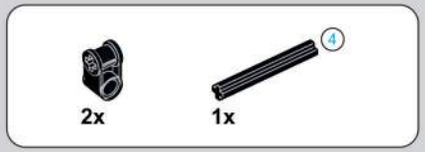

1675

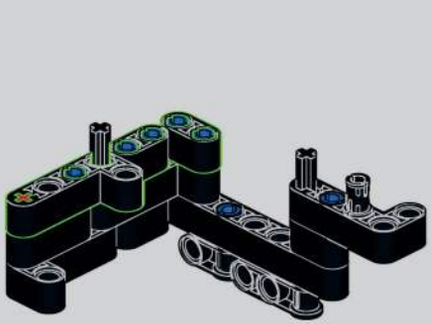

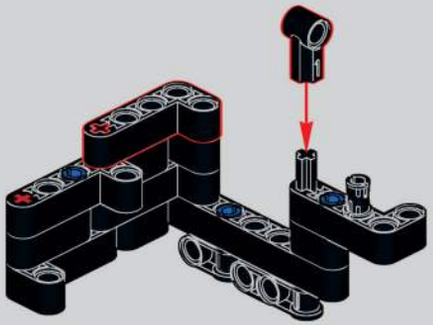

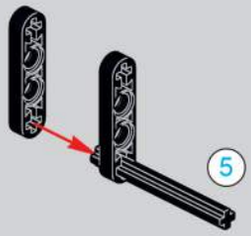

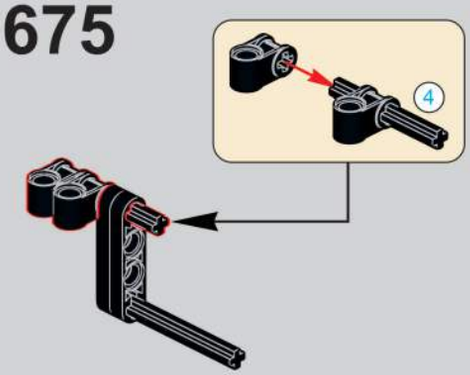

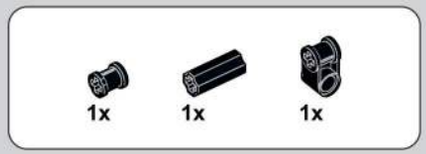

1676

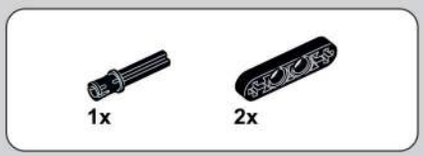

1677

1678

1679

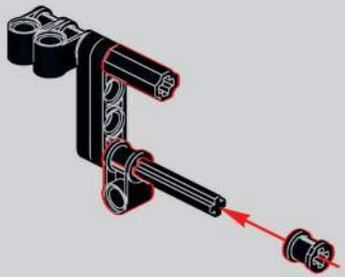

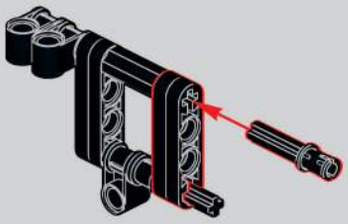

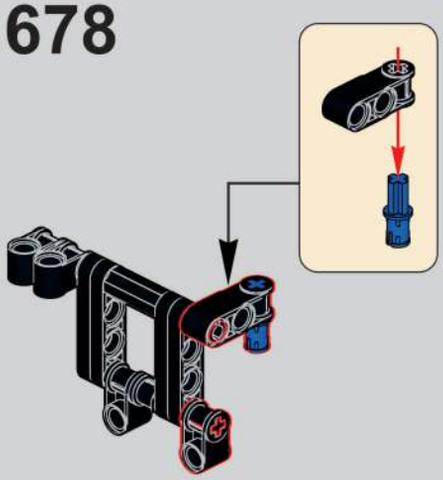

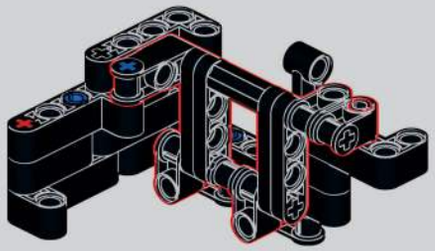

1680

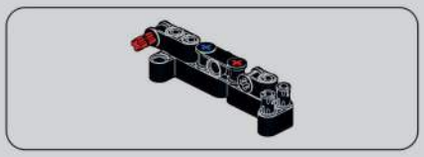

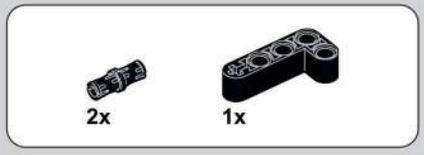

1681

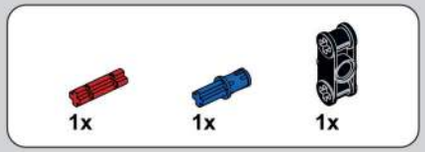

1682

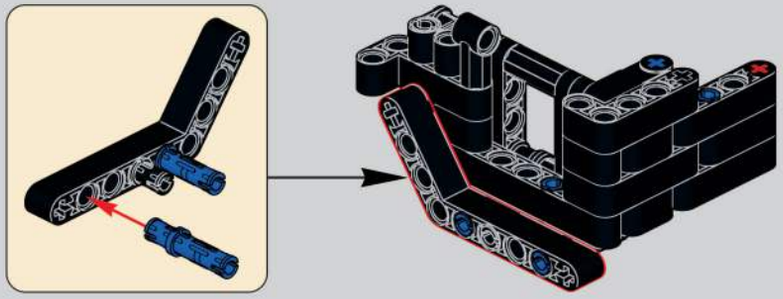

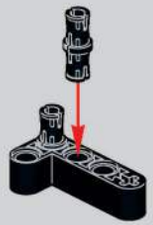

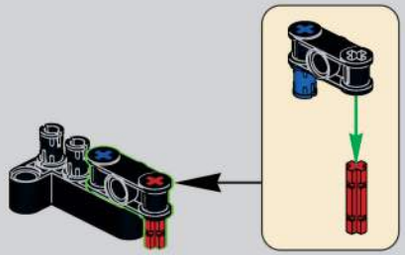

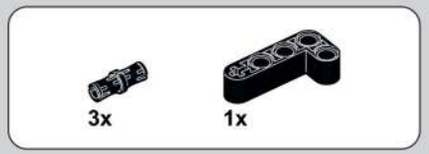

1683

1684

1685

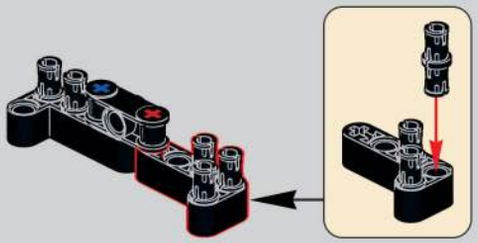

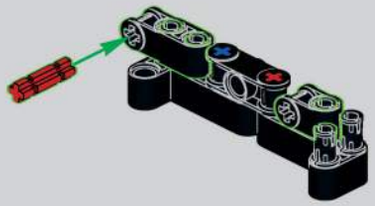

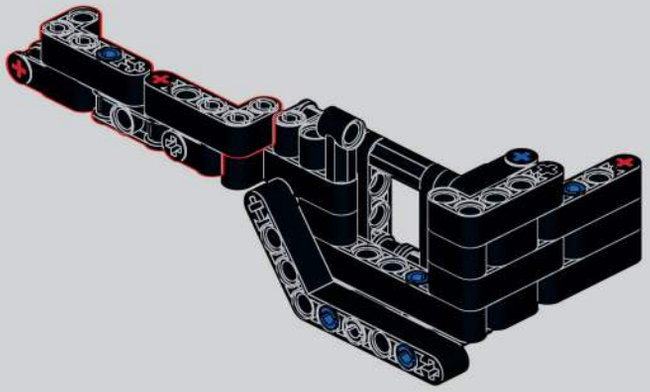

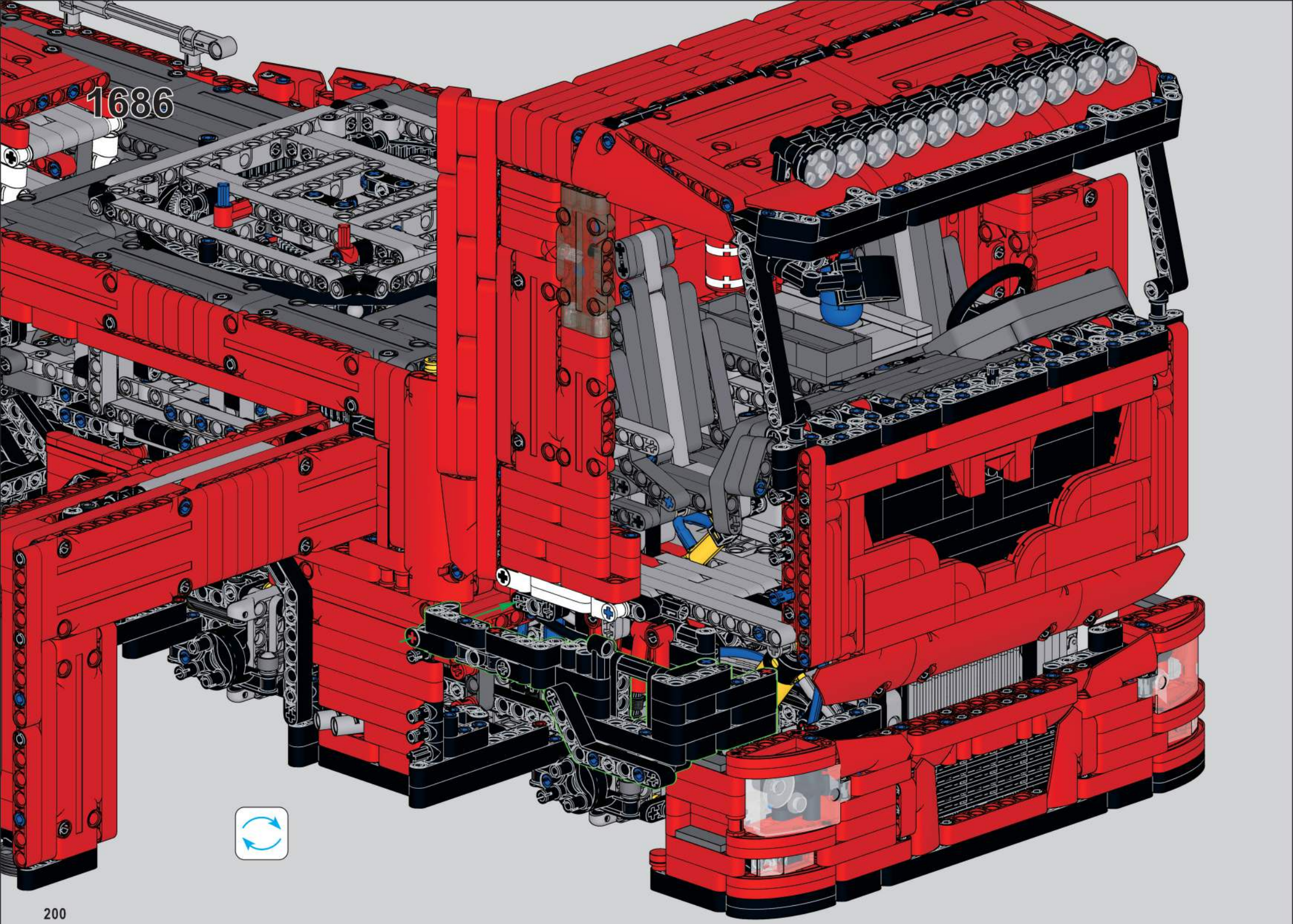
1686

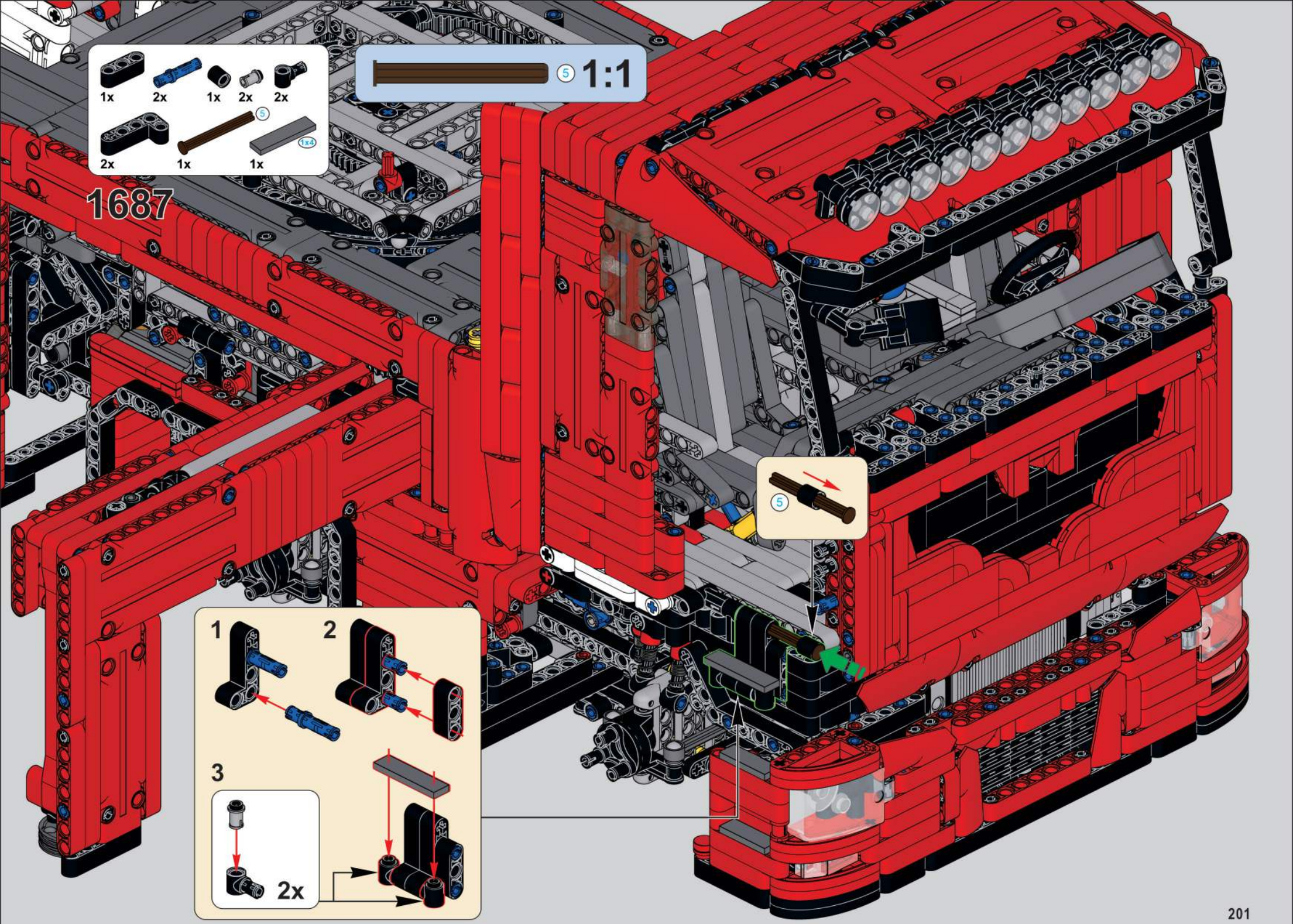
1687
1x
2x
1x
2x
2x
2x
1x
1x
1x4
5
1:1
5
1
2
3
2x

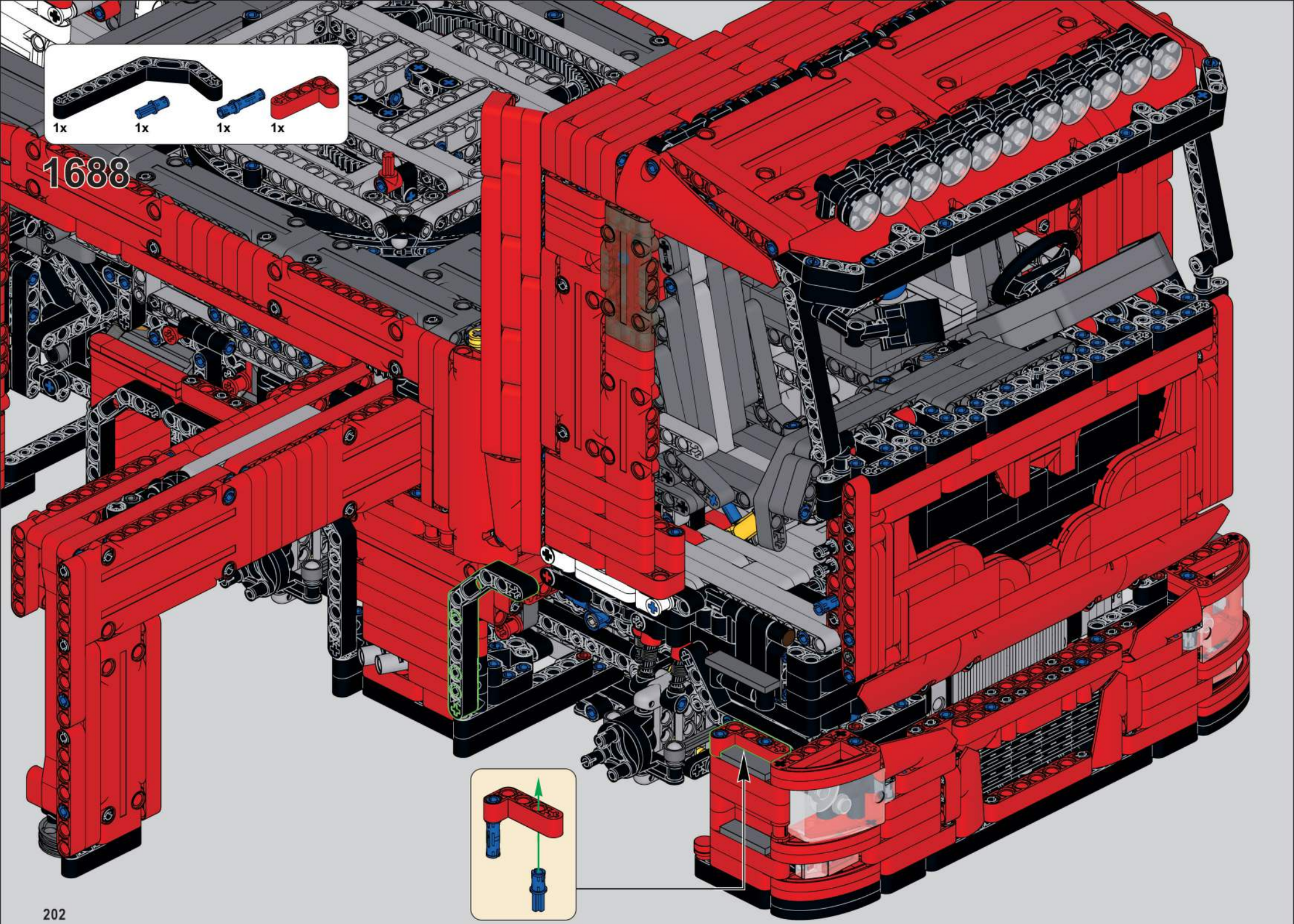
1x
1x
1x
1x
1688

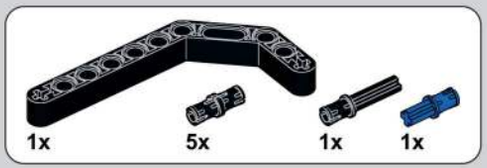

1689

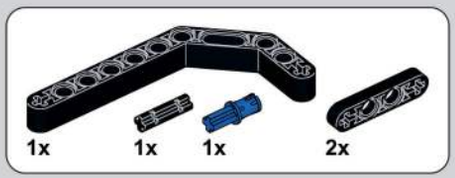

1690

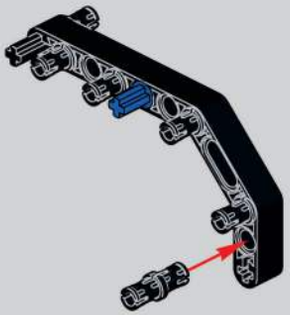

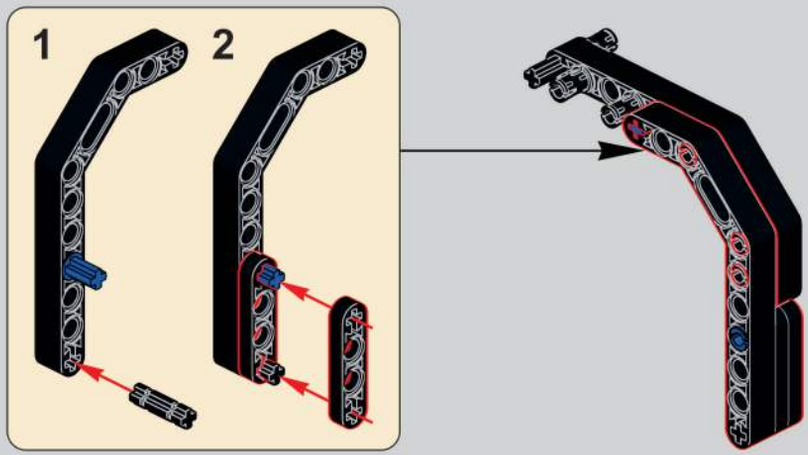

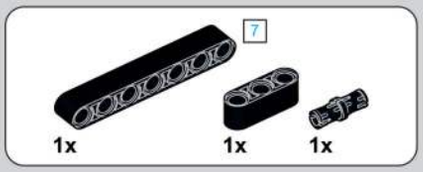

1691

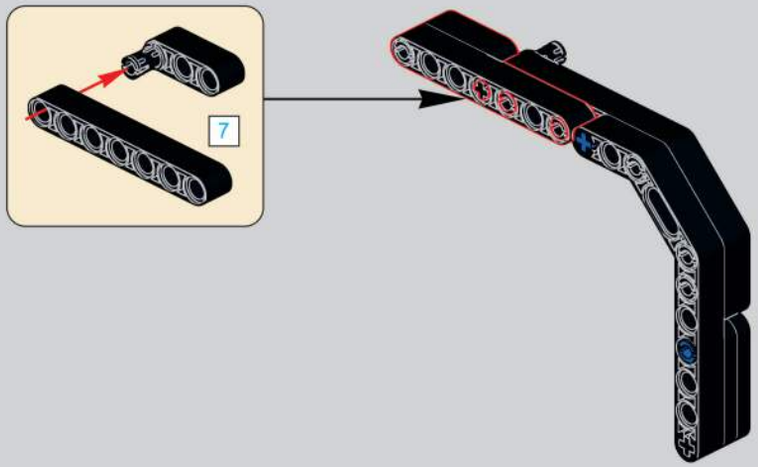

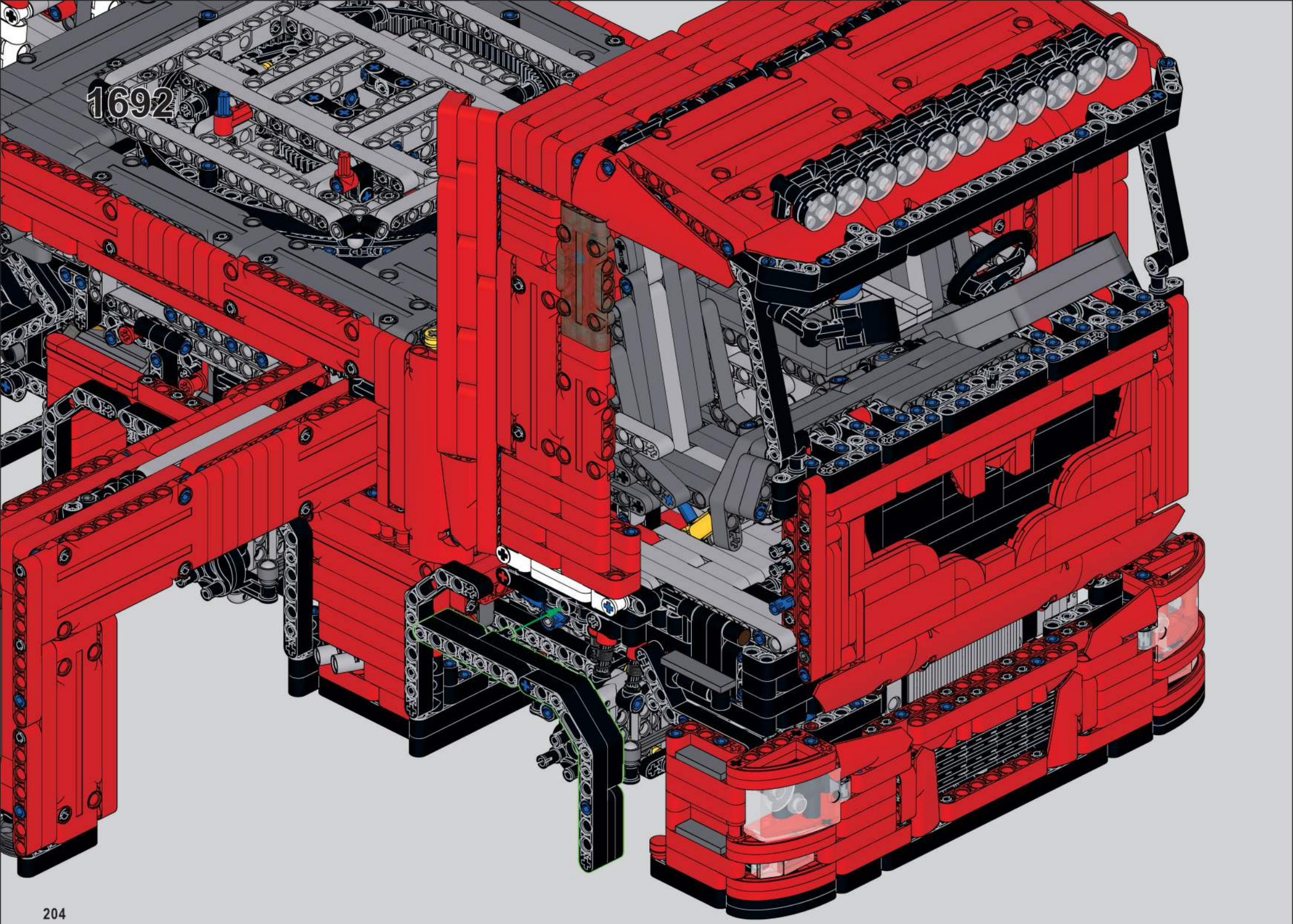
1692

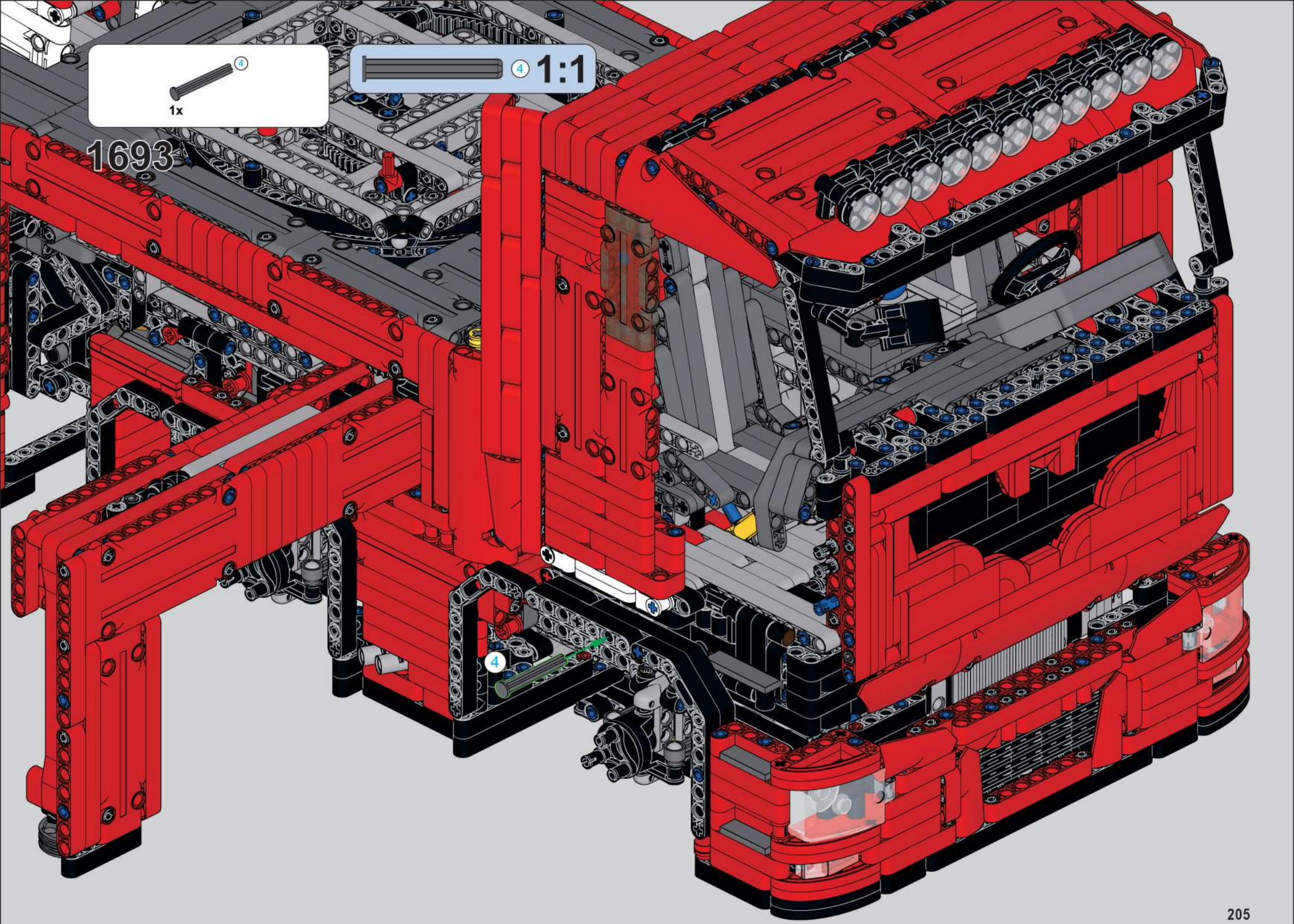
4
1x
1693
4
1:1
4

15

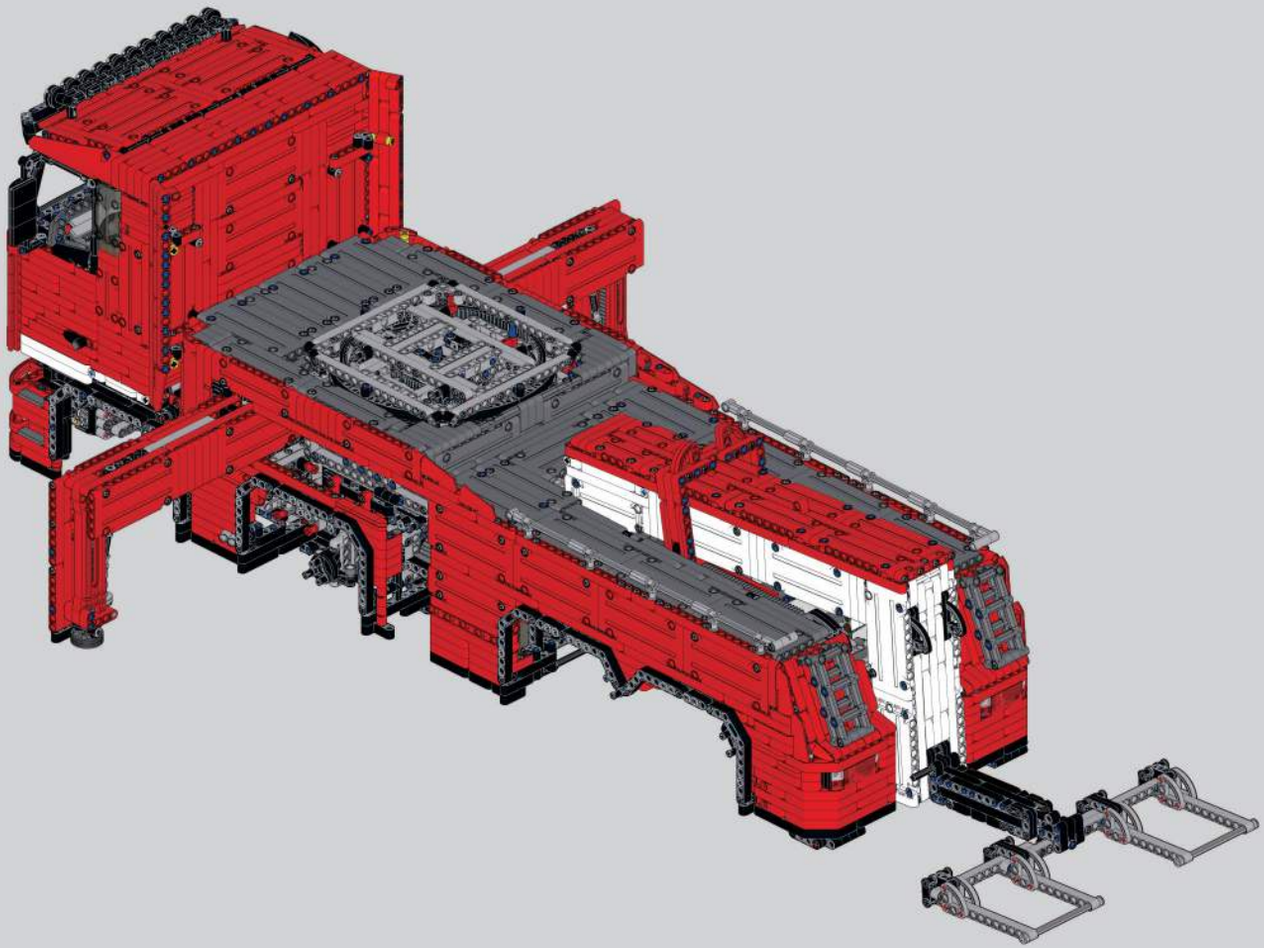

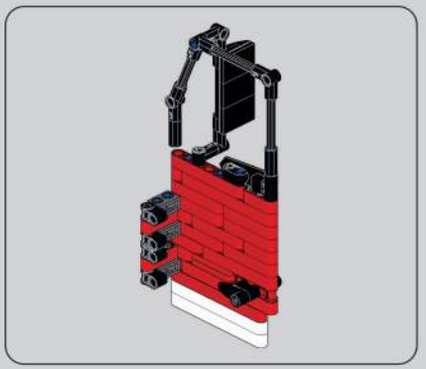

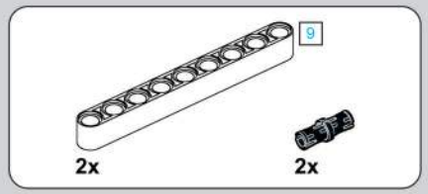

1694

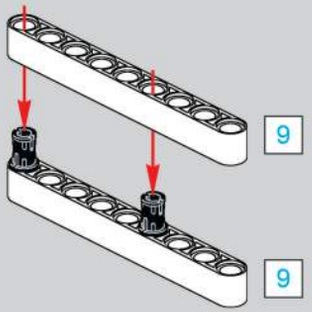

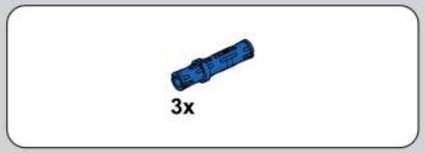

1695

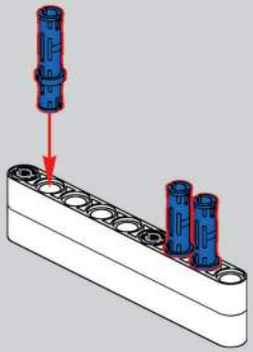

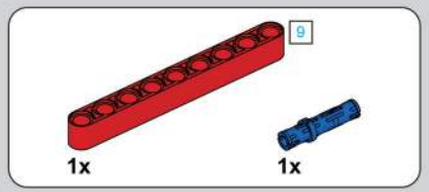

1696

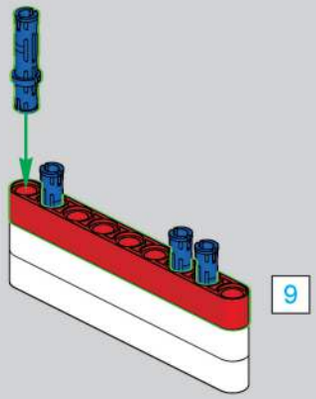

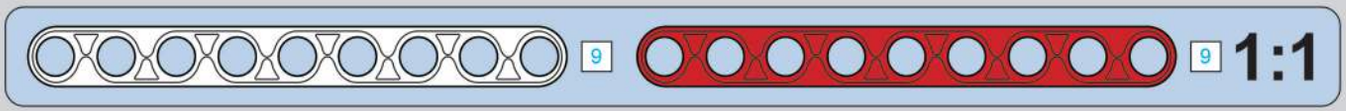

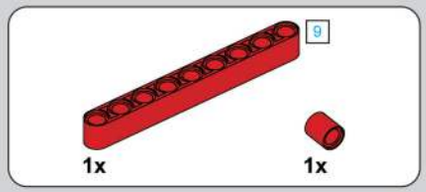

1697

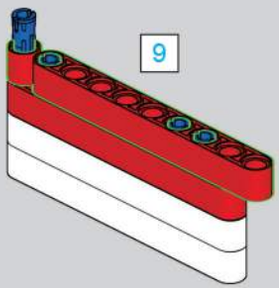

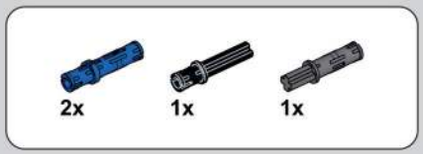

1698

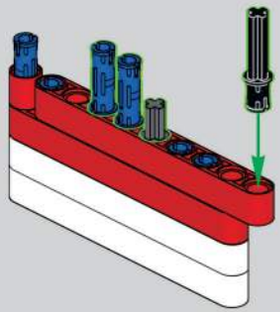

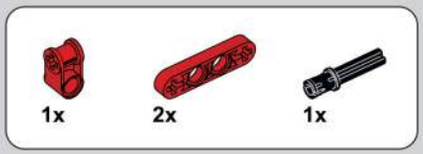

1699

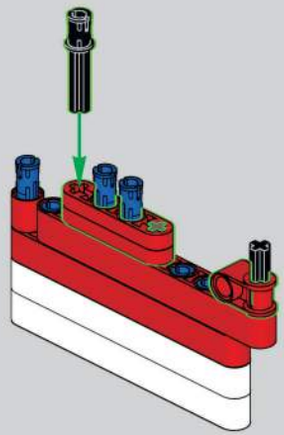

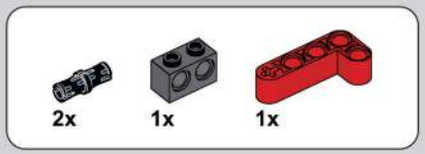

1700

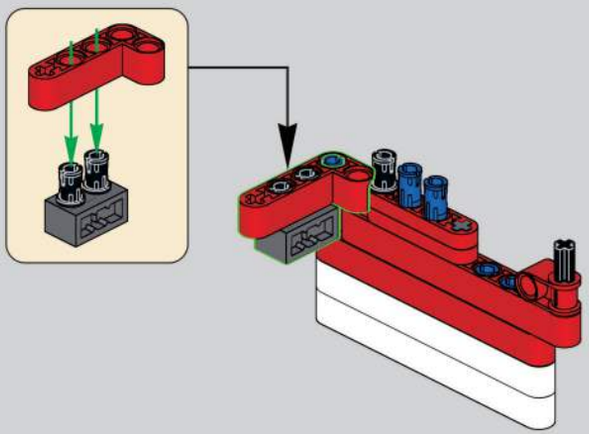

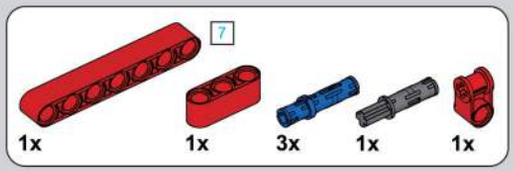

1701

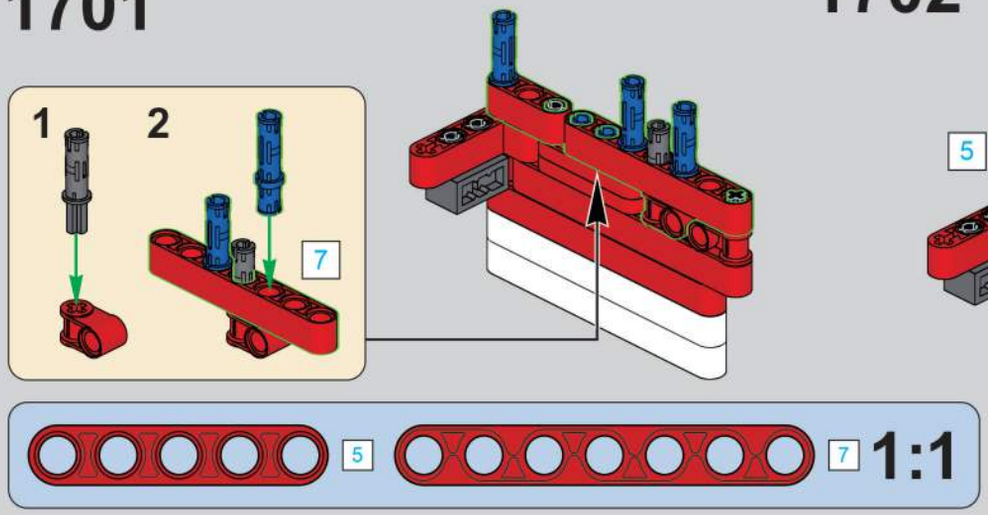

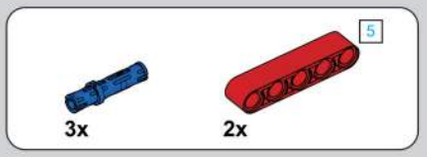

1702

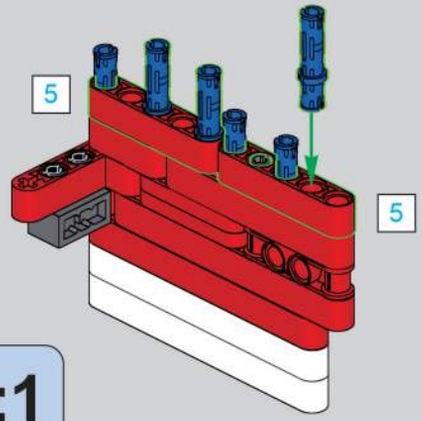

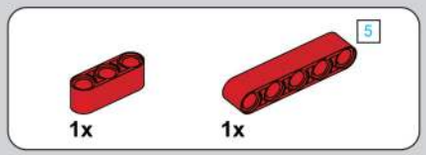

1703

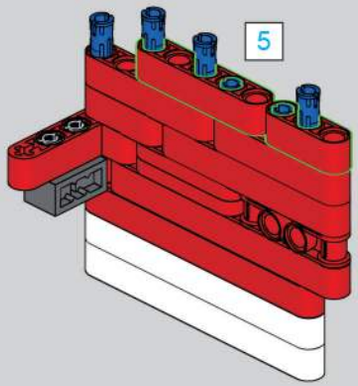

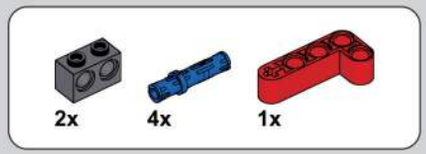

1704

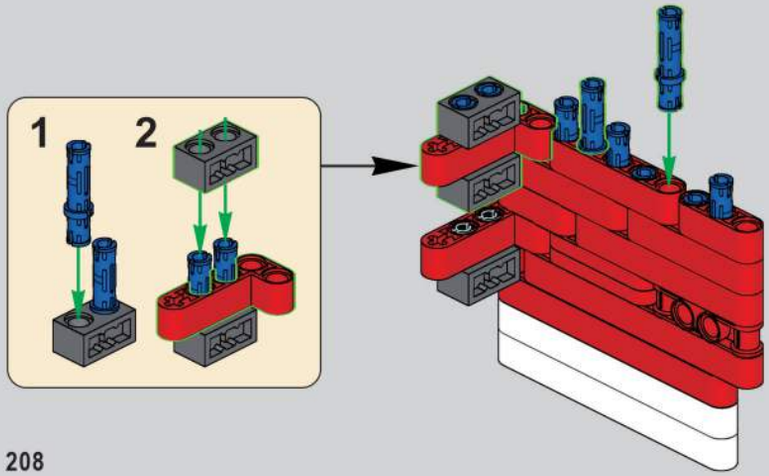

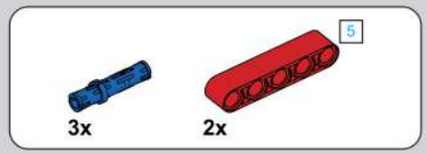

1705

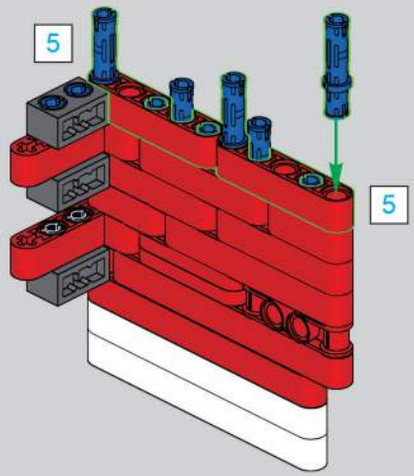

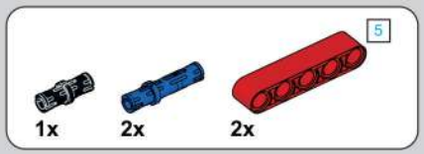

1706

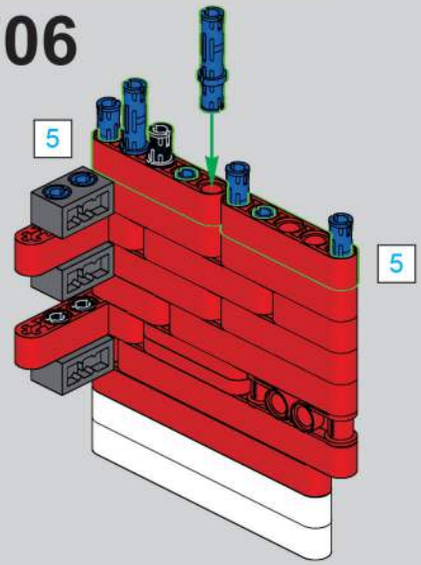

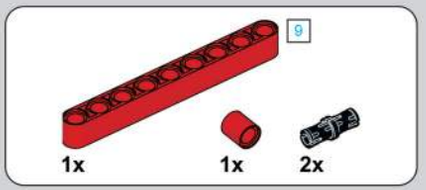

1707

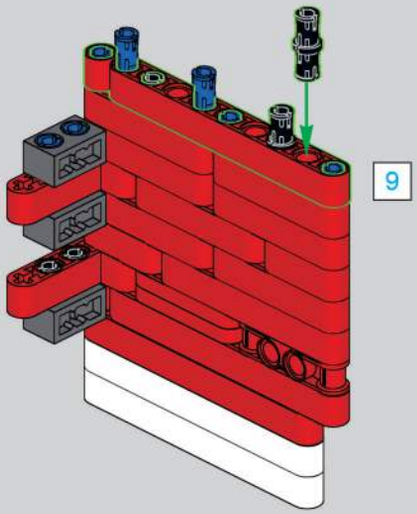

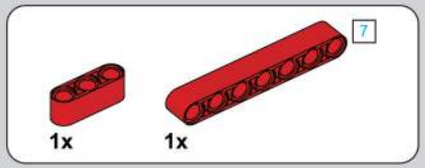

1708

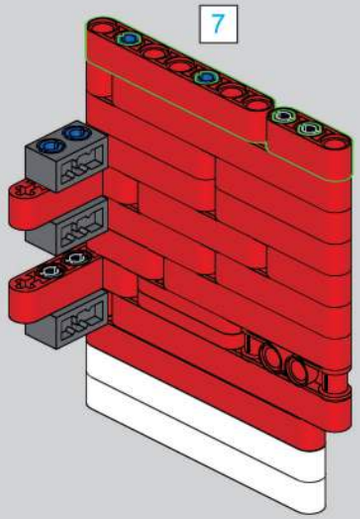

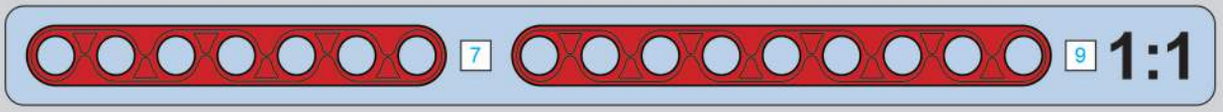

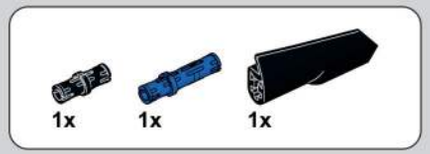

1709

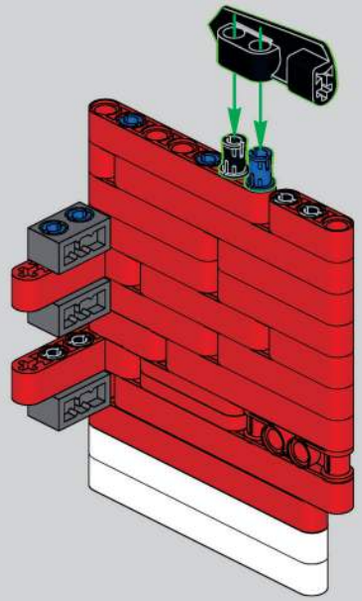

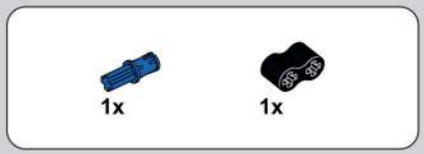

1710

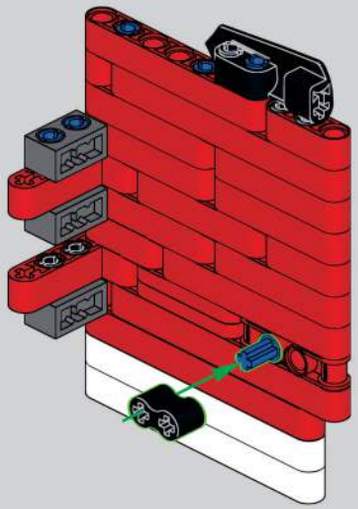

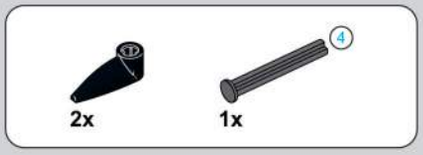

1711

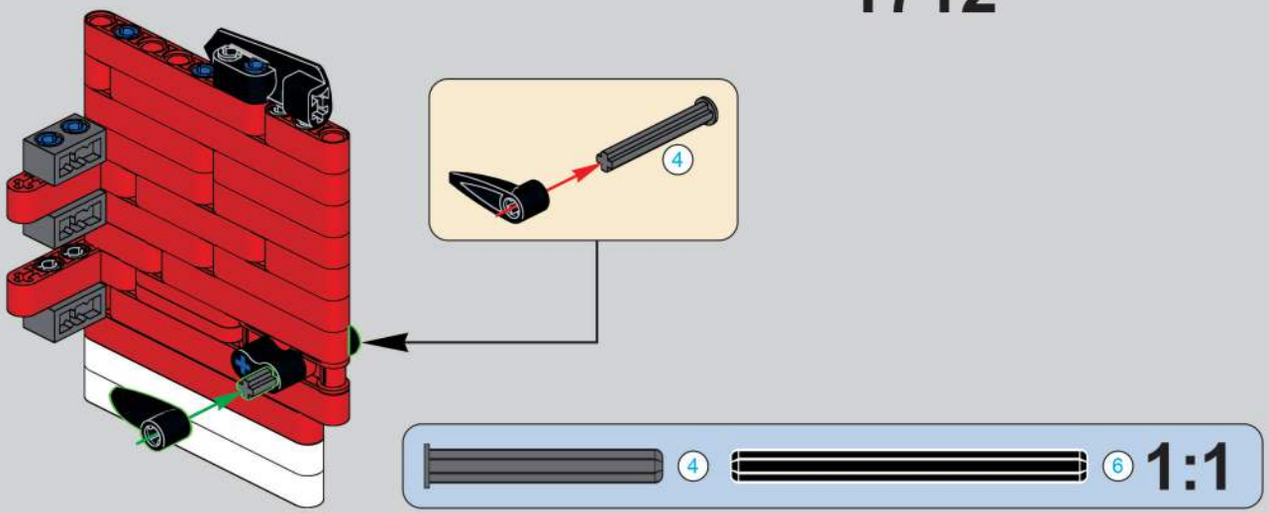

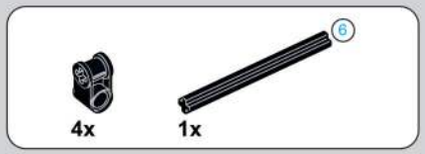

1712

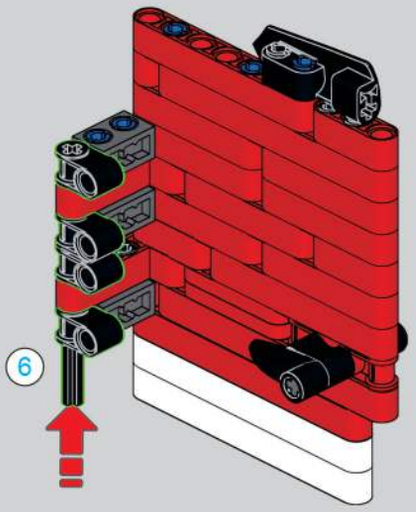

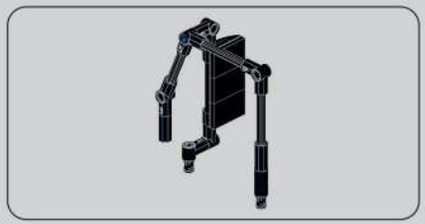

1714

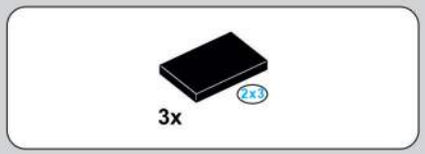

1715

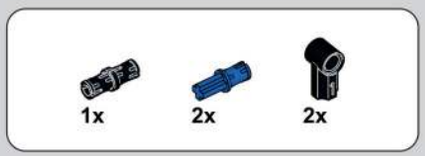

1716

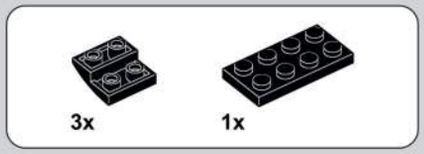

1713

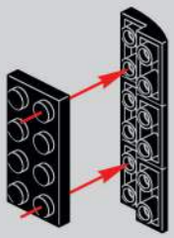

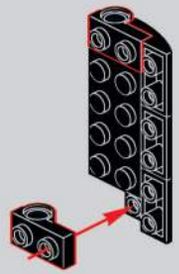

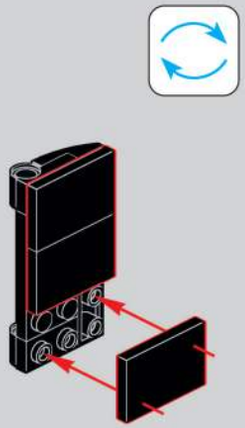

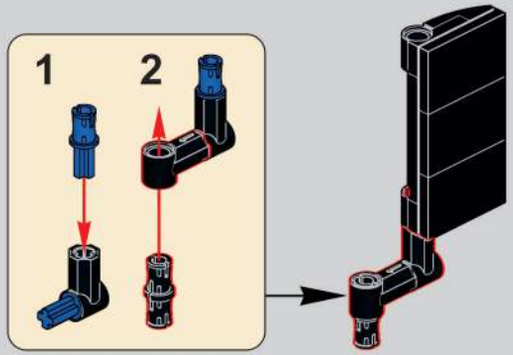

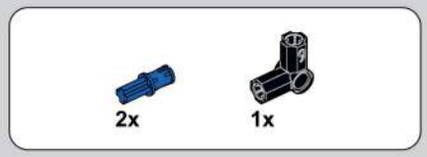

1717

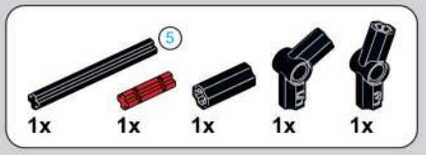

1718

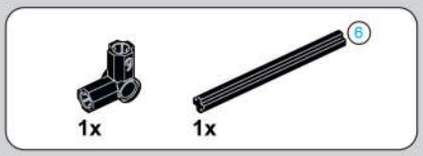

1719

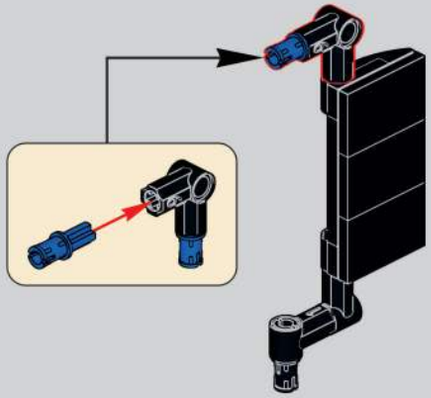

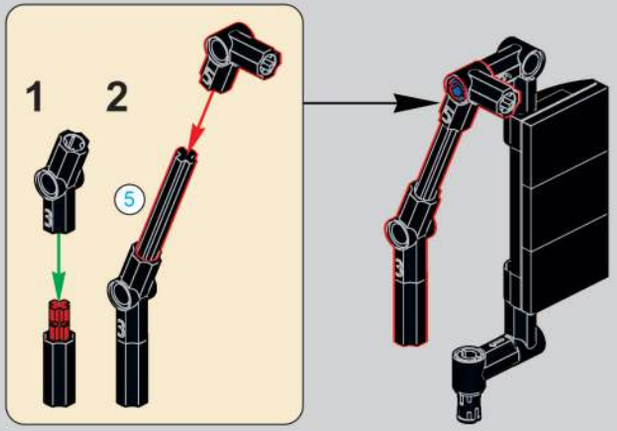

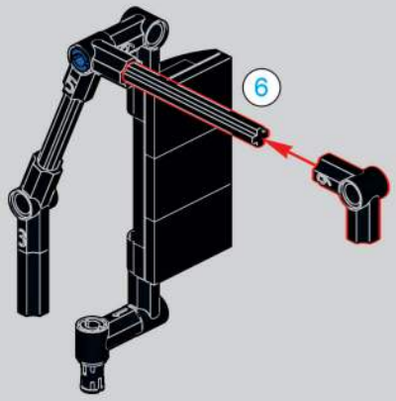

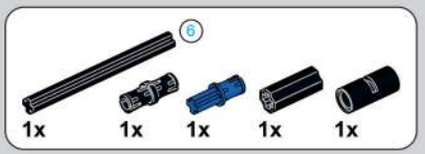

1720

1721

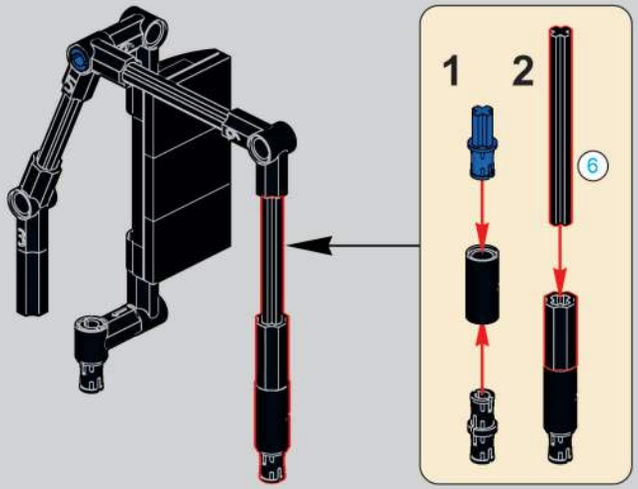

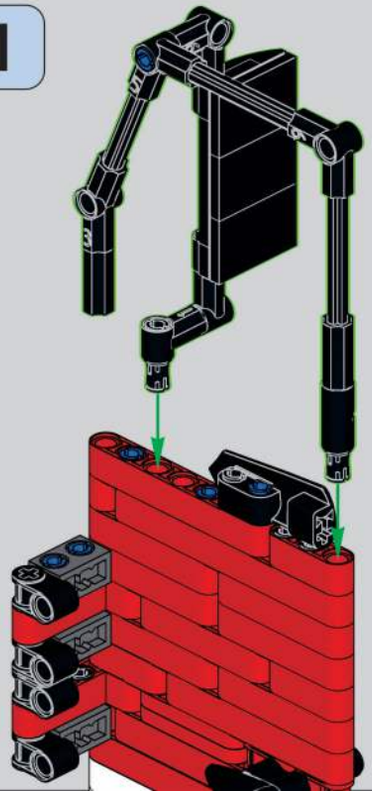

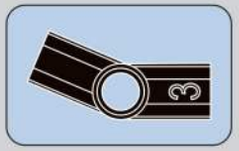

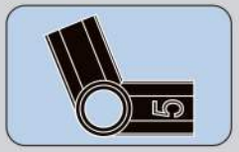

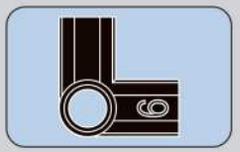

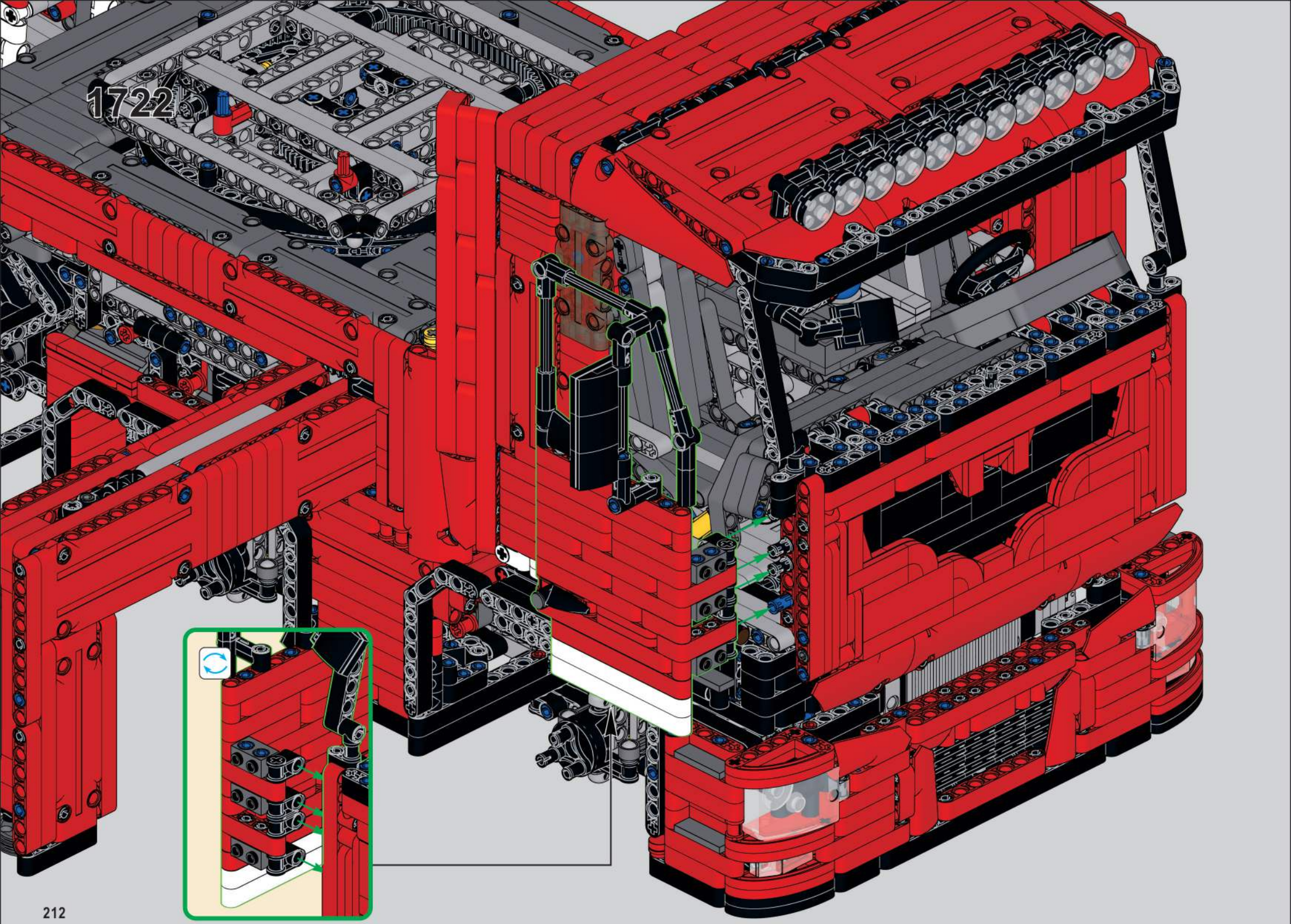
1722

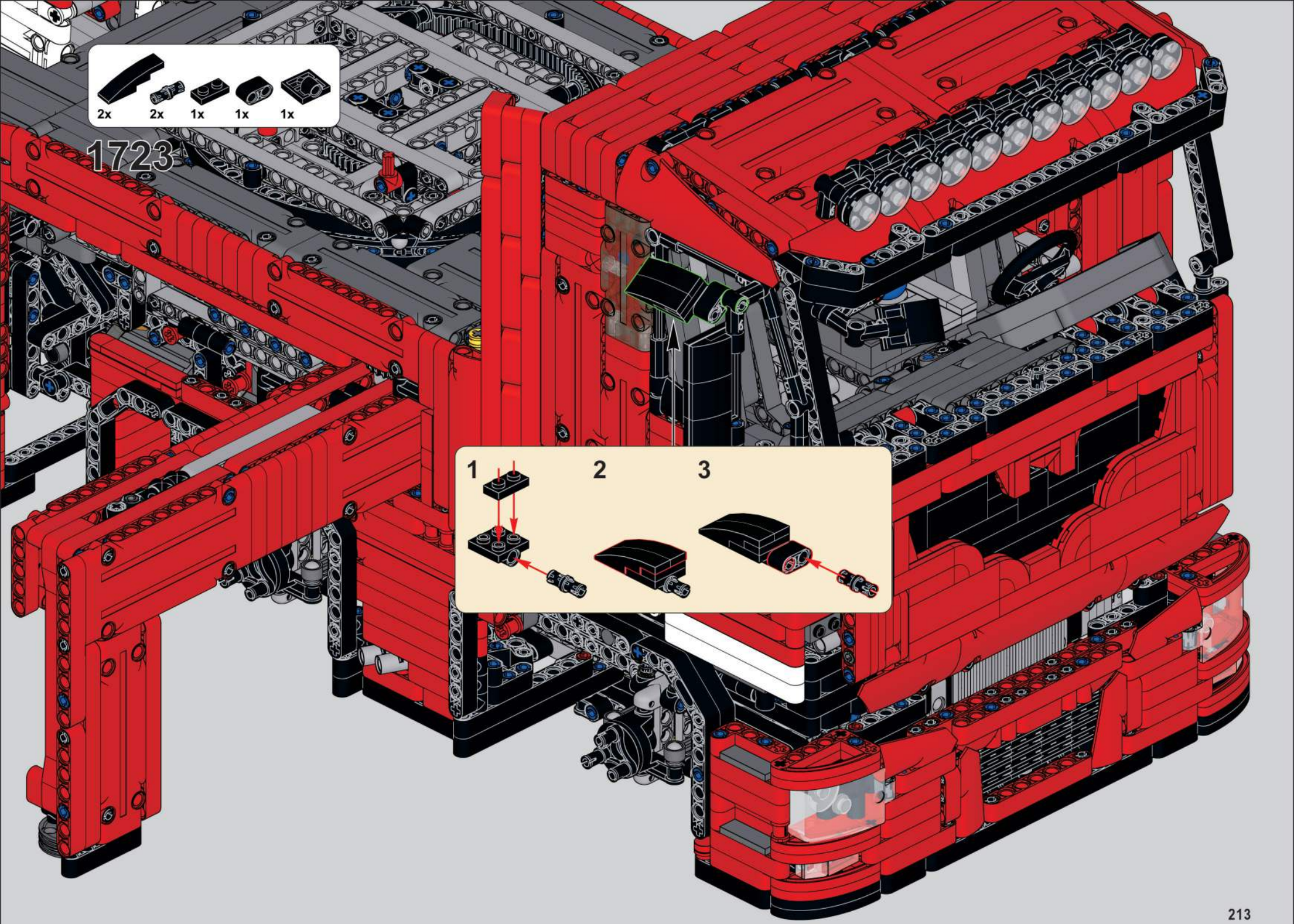
2x
2x
1x
1x
1x
1723
1
2
3

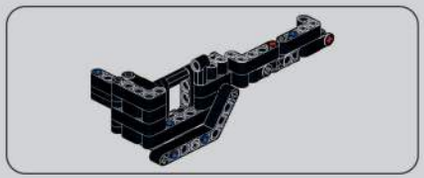

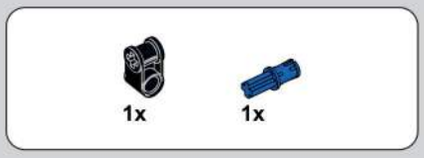

1725

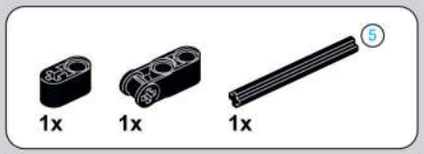

1726

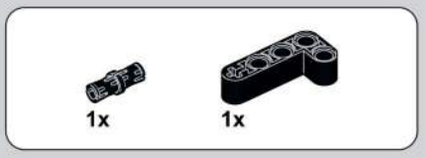

1727

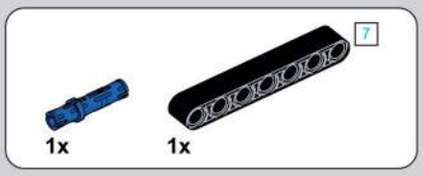

1724

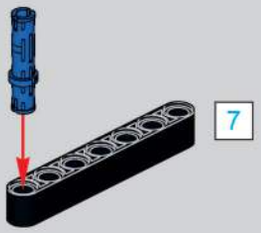

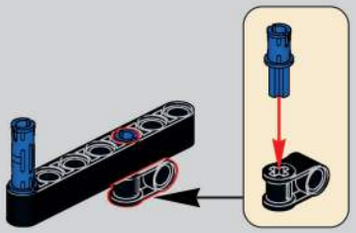

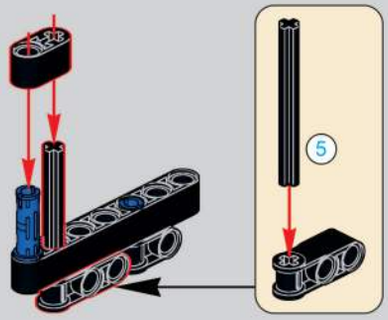

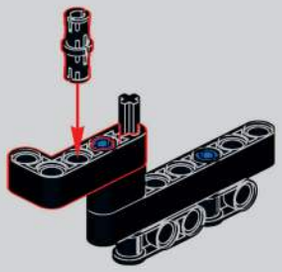

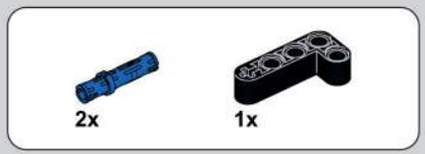

1728

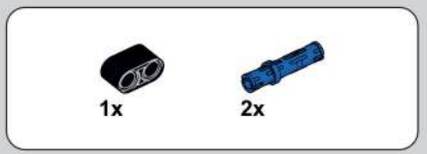

1729

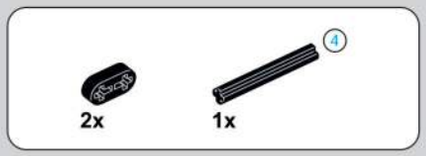

1730

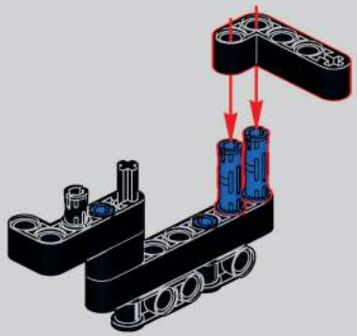

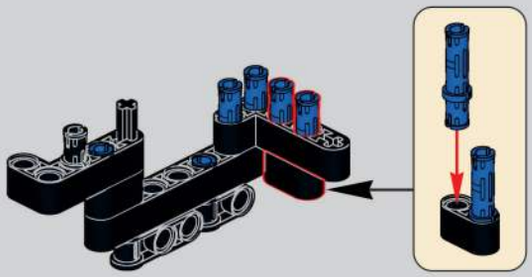

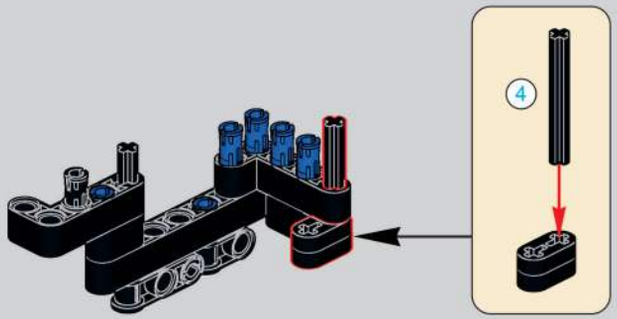

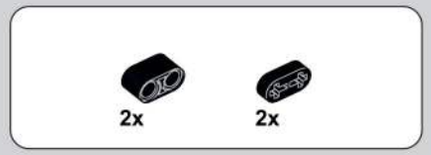

1731

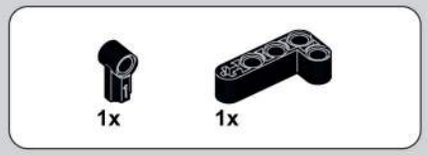

1732

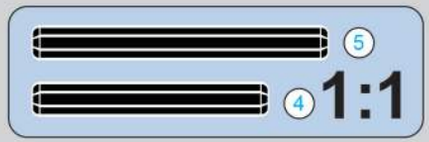

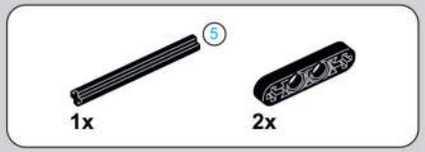

1733

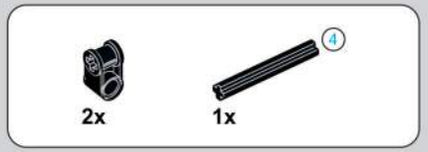

1734

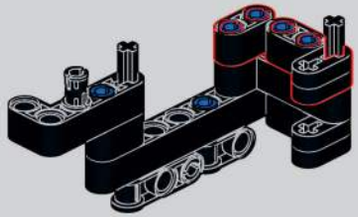

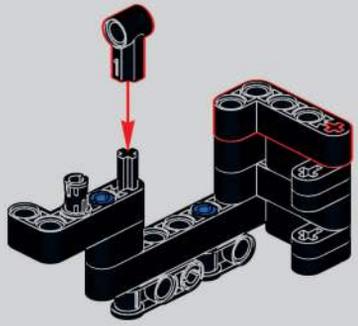

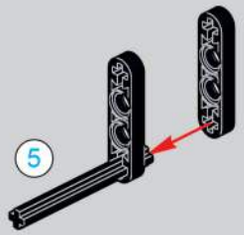

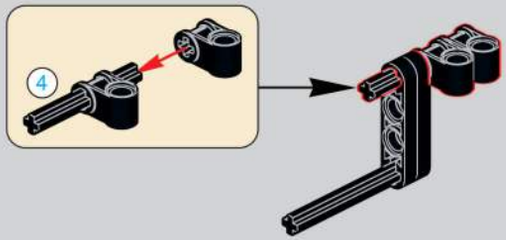

1735

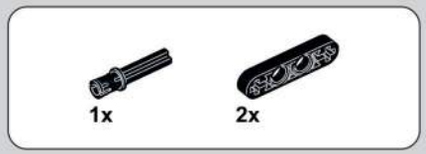

1736

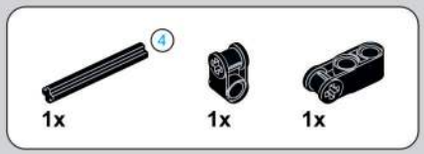

1737

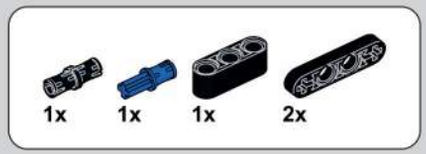

1738

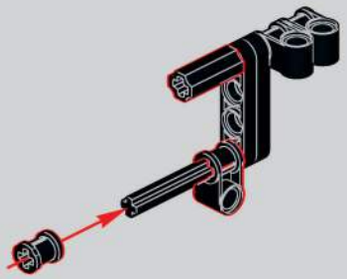

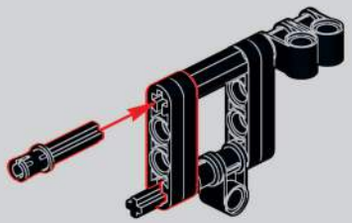

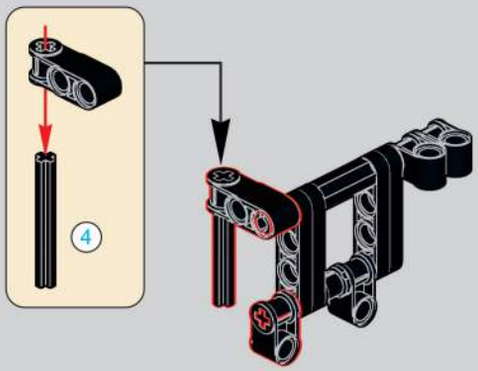

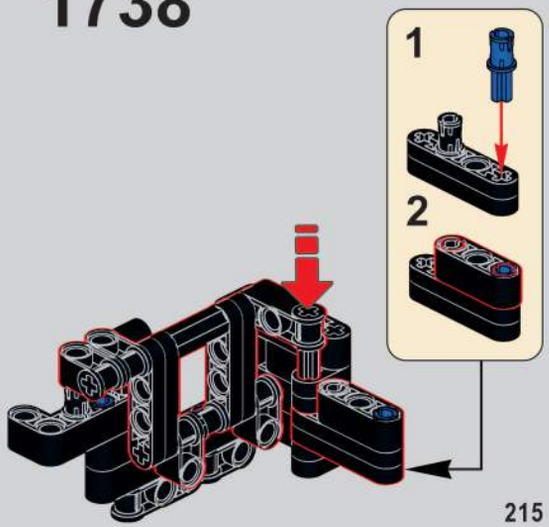

1739

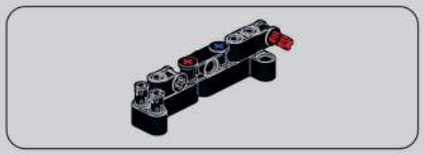

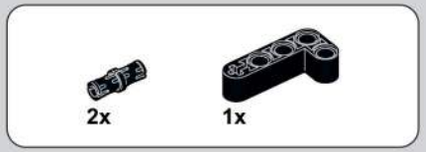

1740

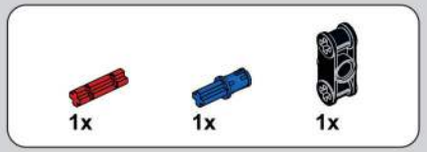

1741

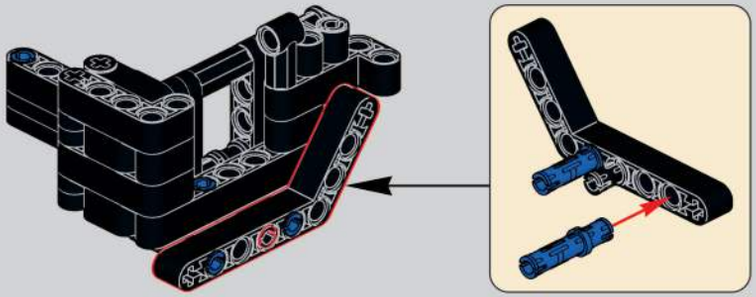

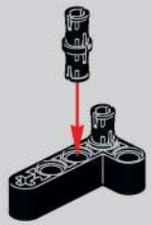

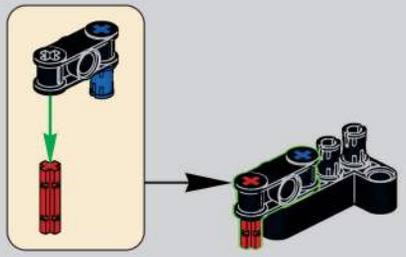

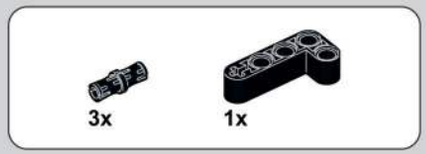

1742

1743

1744

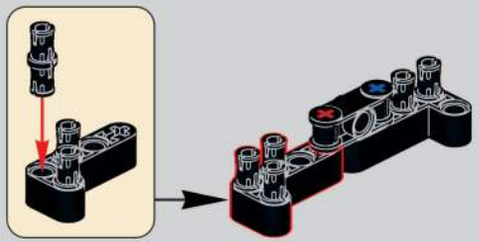

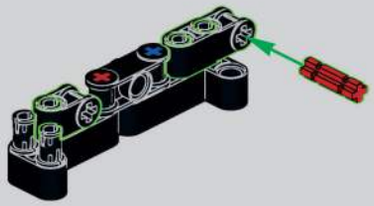

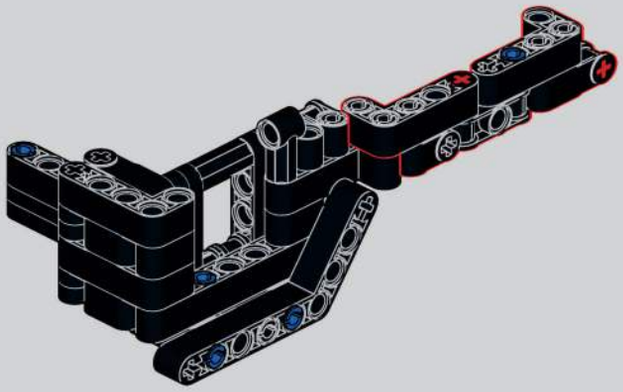

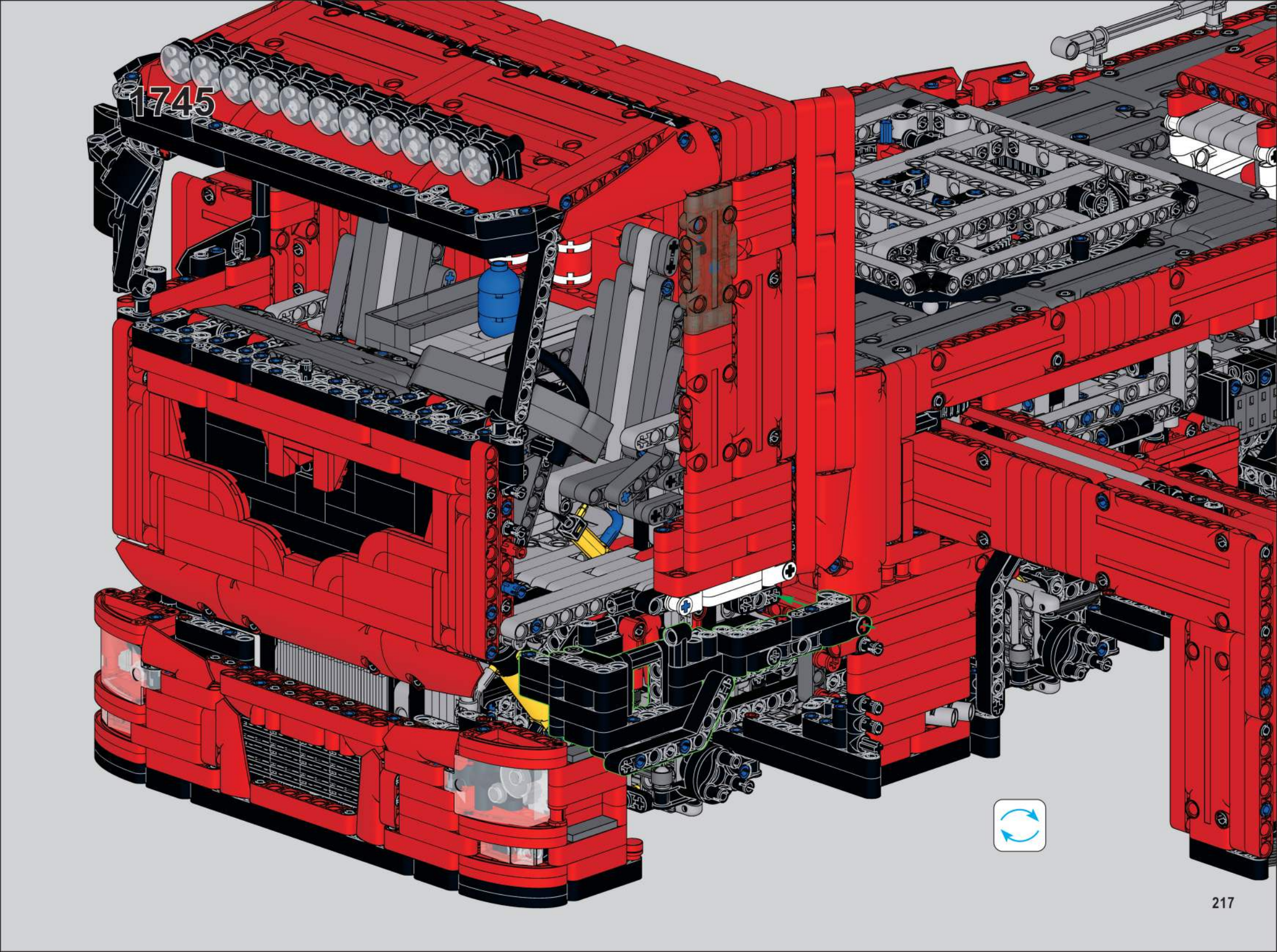
1745

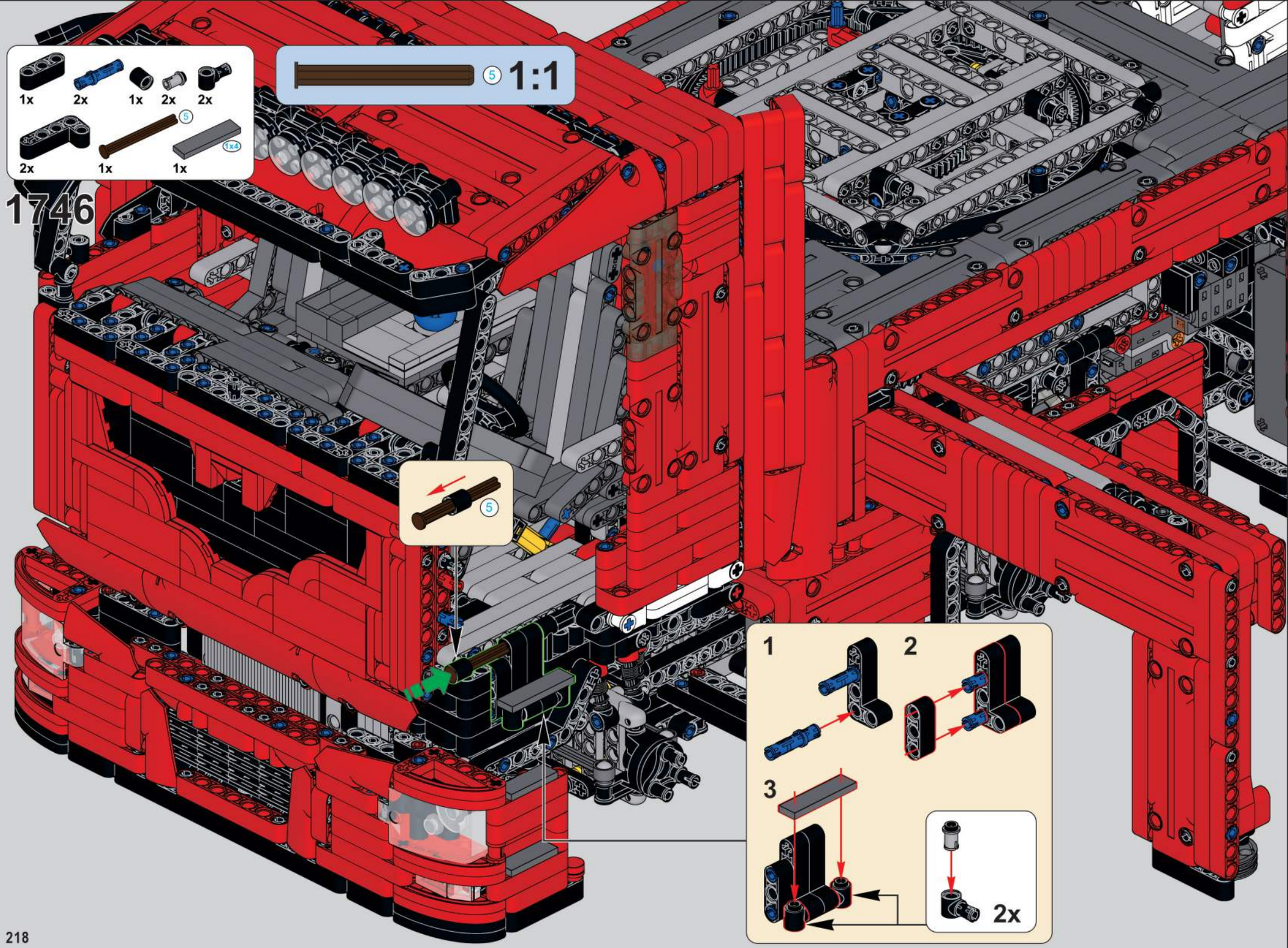
1x
2x
1x
2x
2x
5
2x
1x
1x
1x4
5 1:1
1746
5
1
2
3
2x

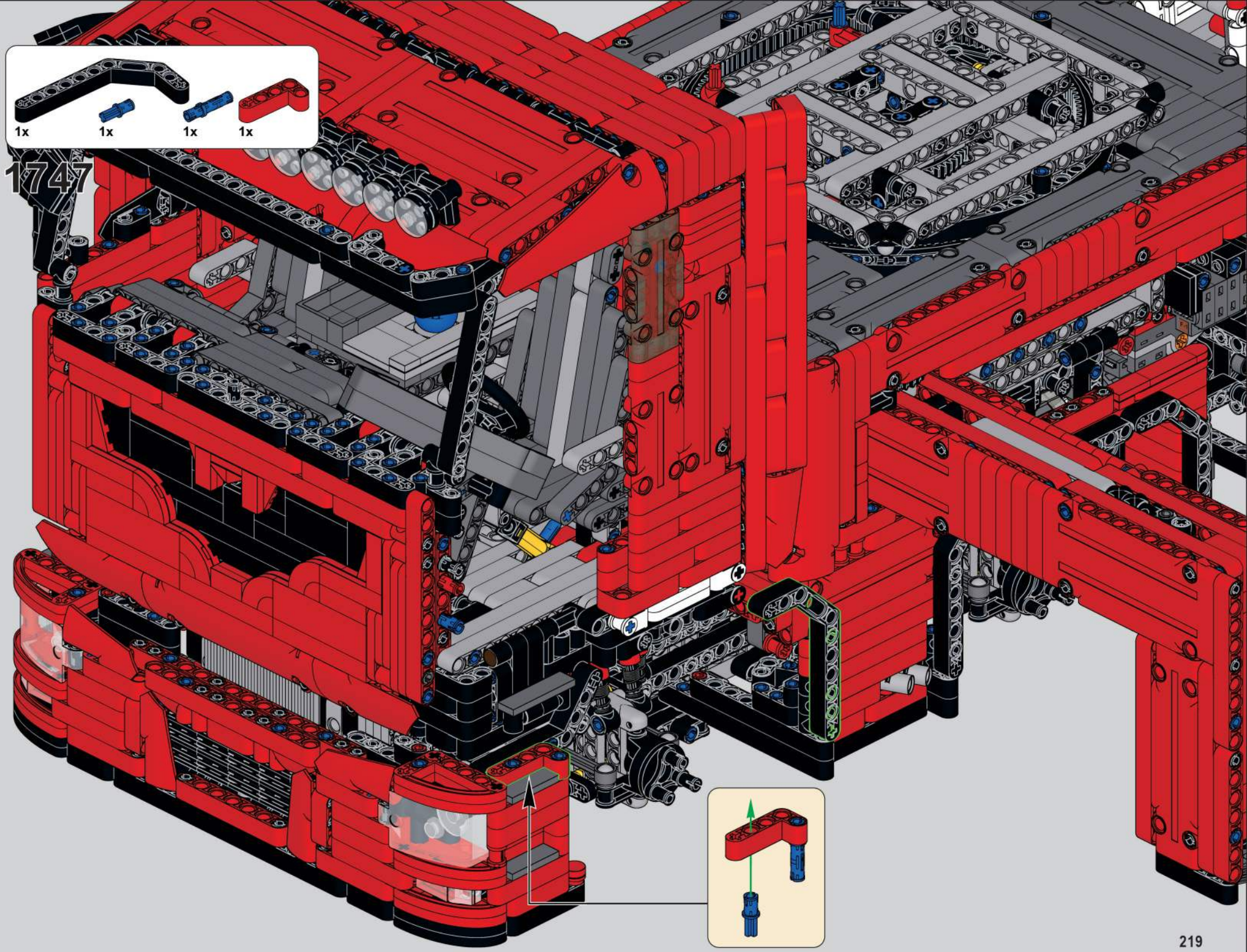
1x
1x
1x
1x
1747

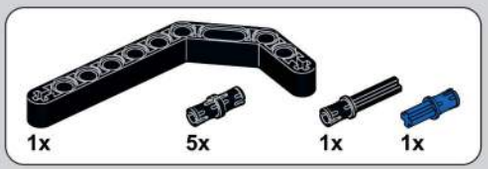

1748

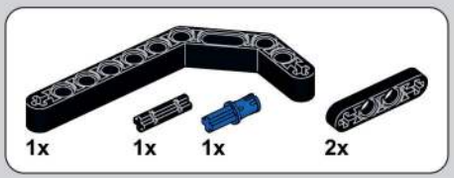

1749

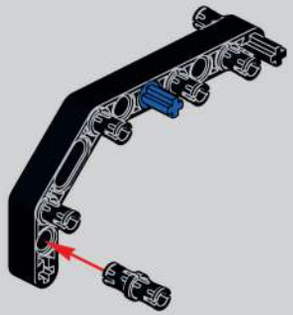

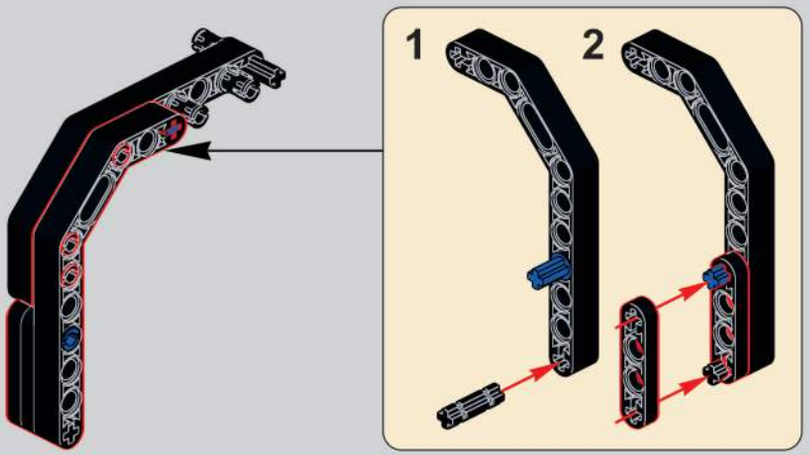

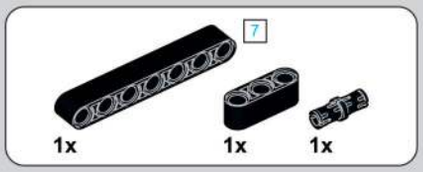

1750

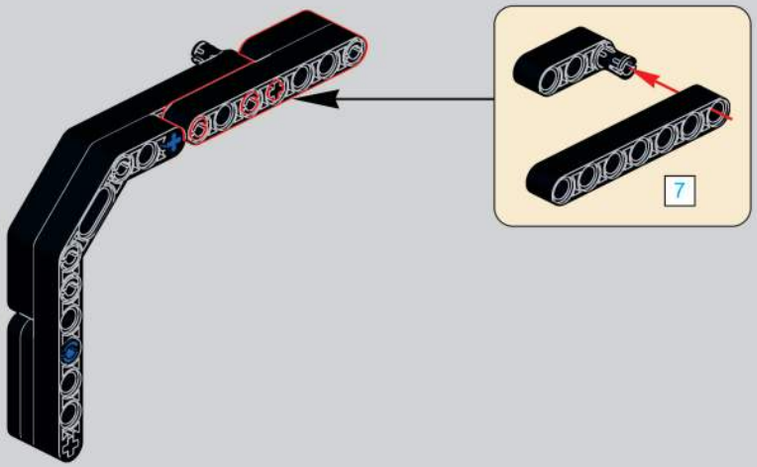

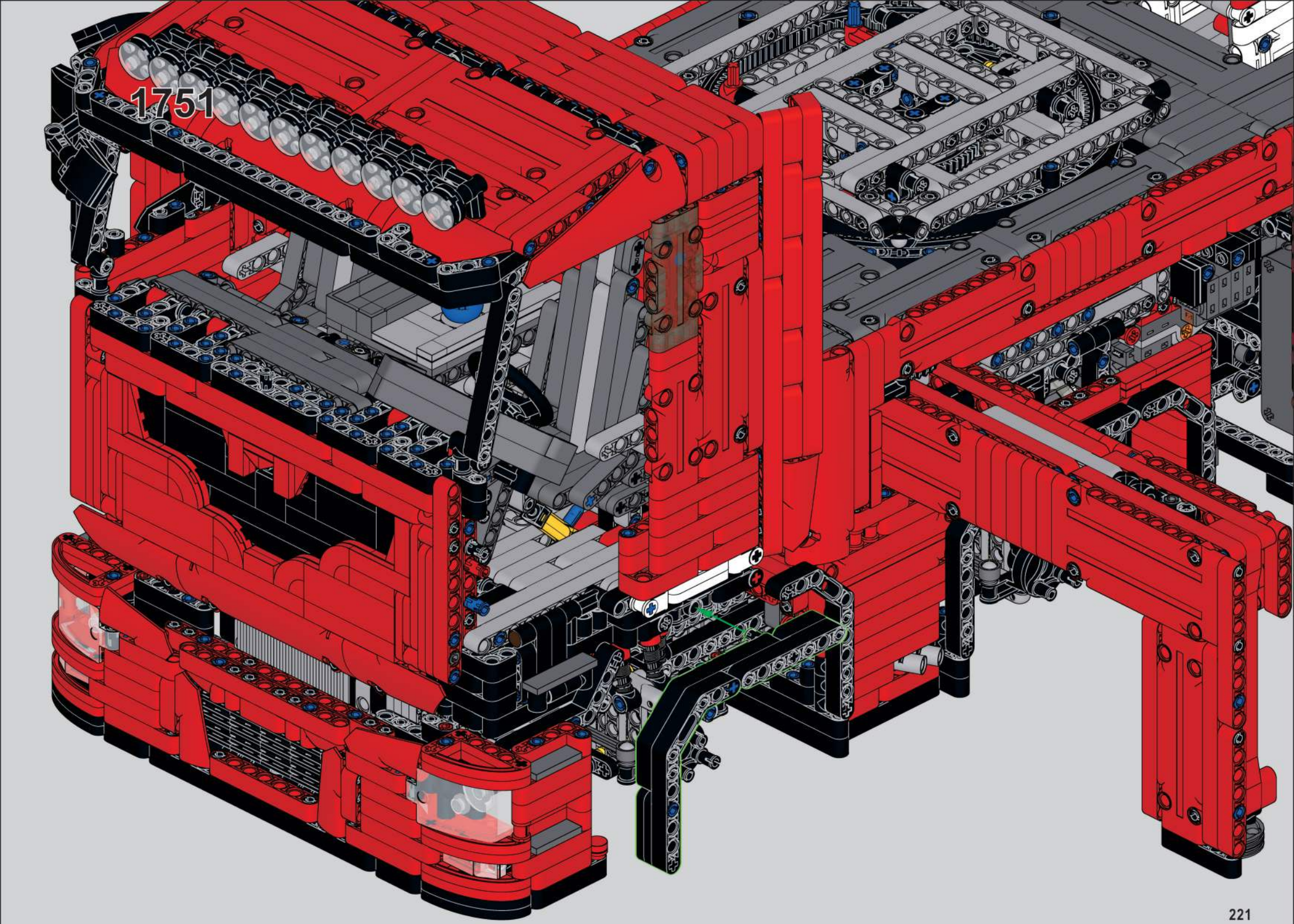
1751

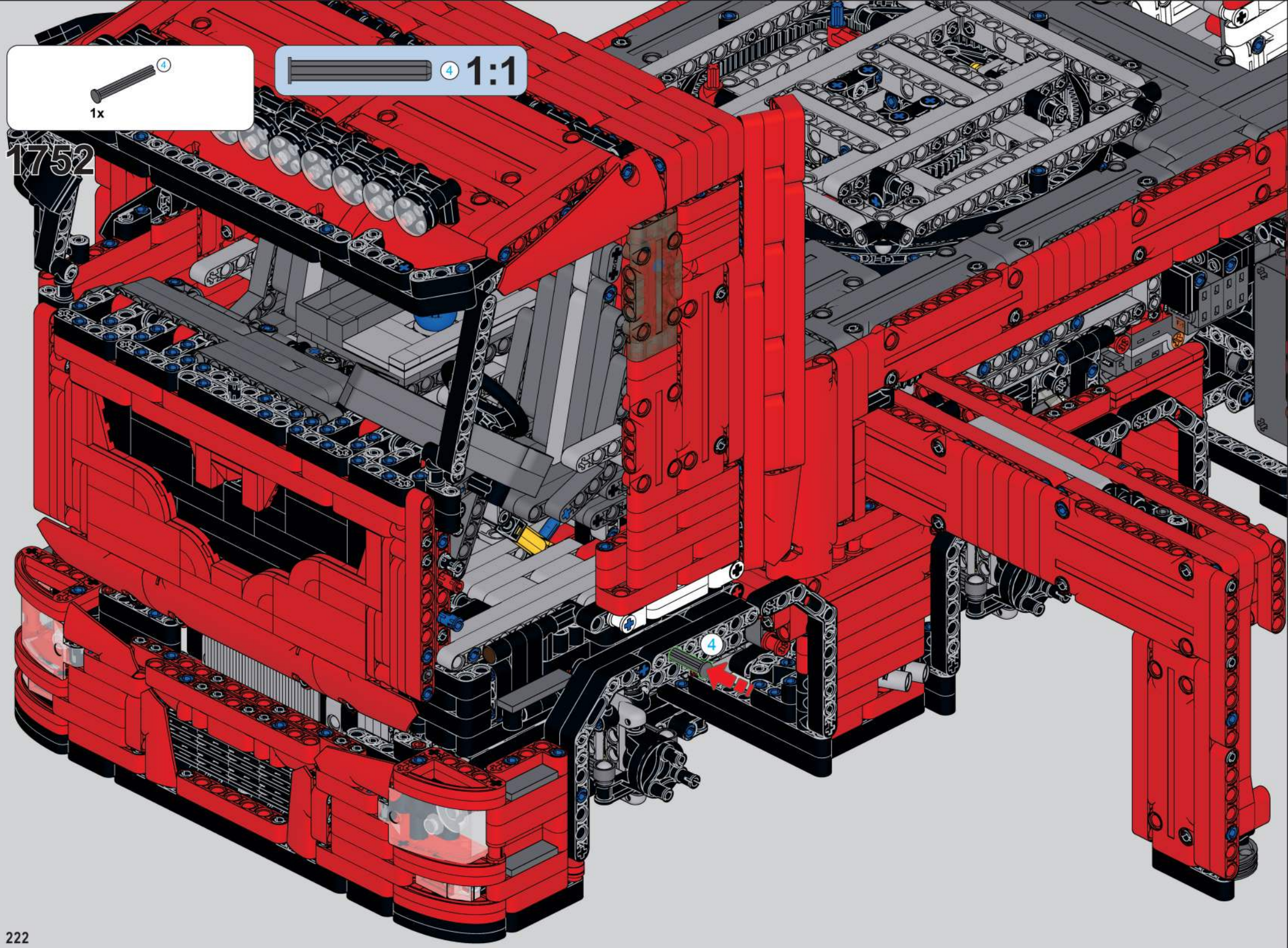
4
1x
4 1:1
1752
4

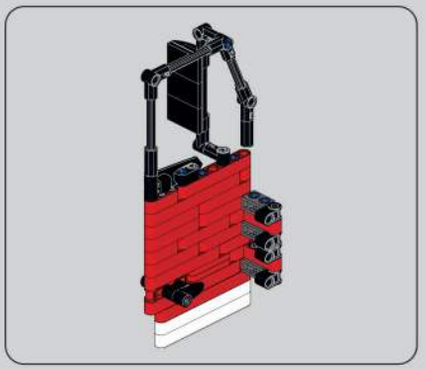

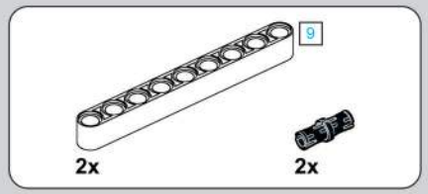

1753

1754

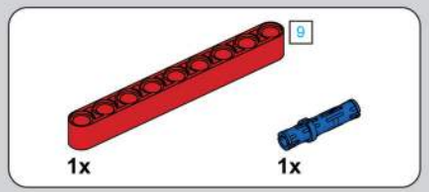

1755

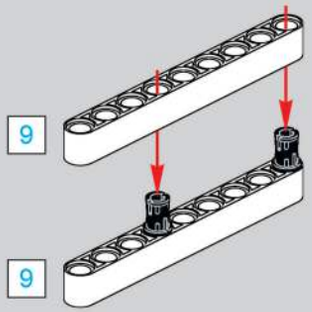

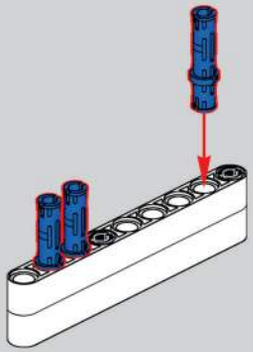

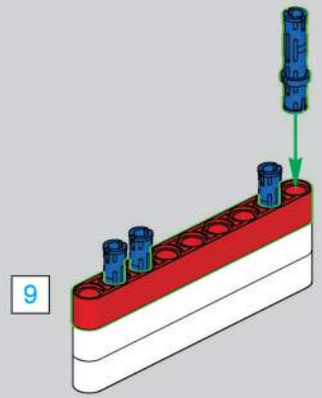

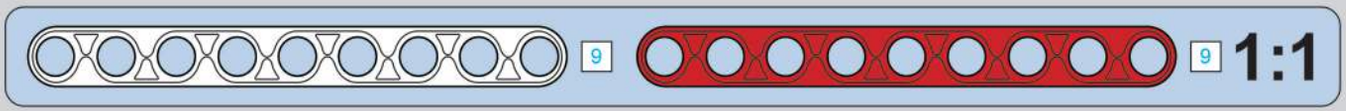

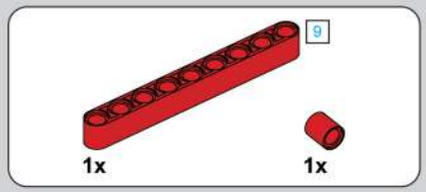

1756

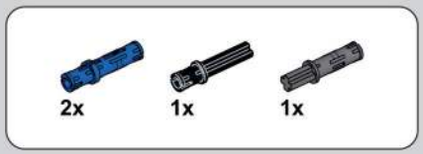

1757

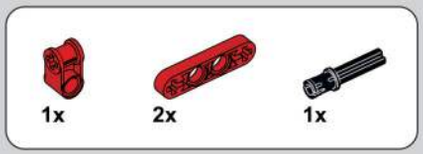

1758

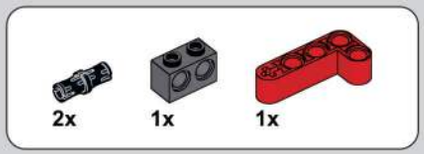

1759

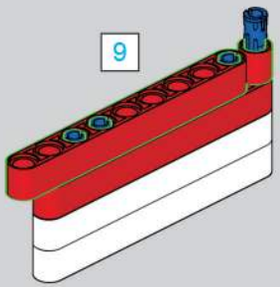

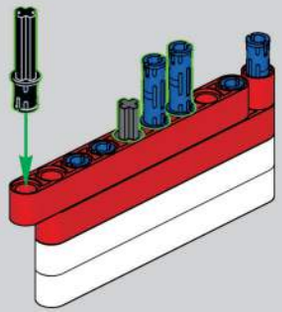

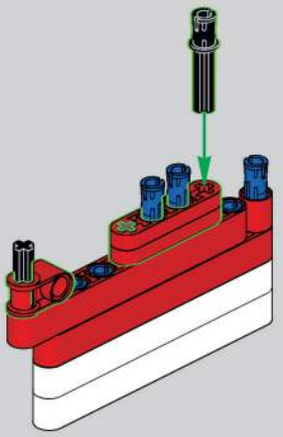

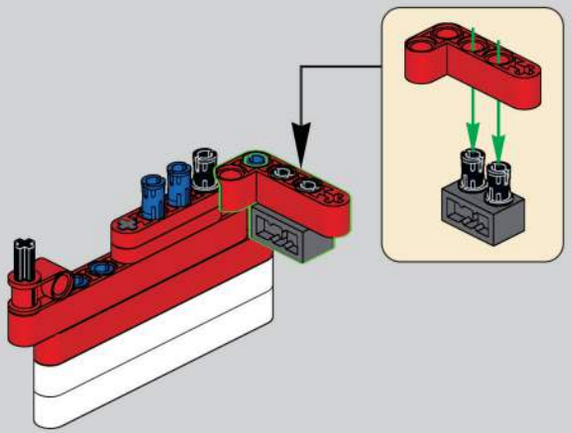

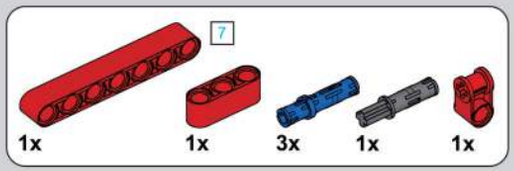

1760

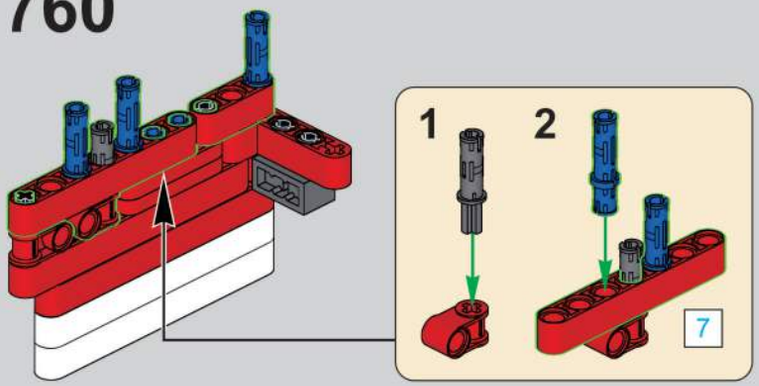

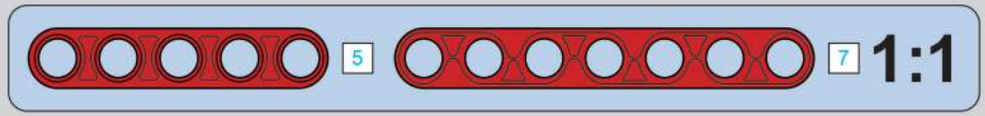

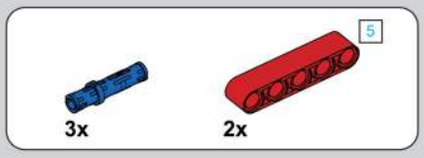

1761

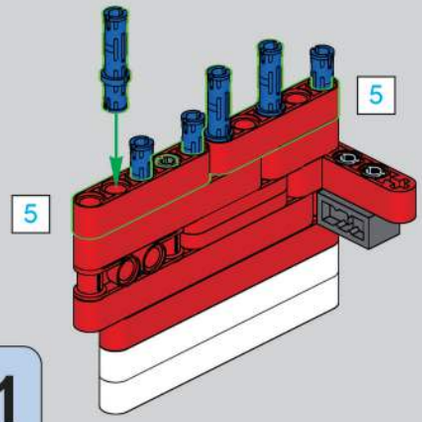

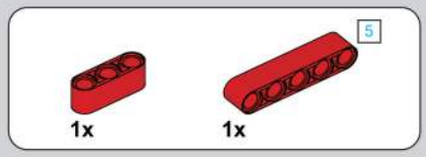

1762

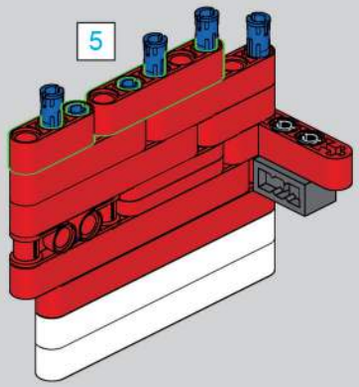

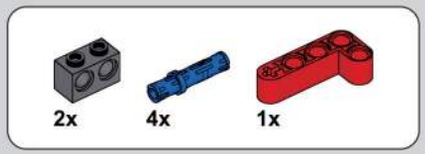

1763

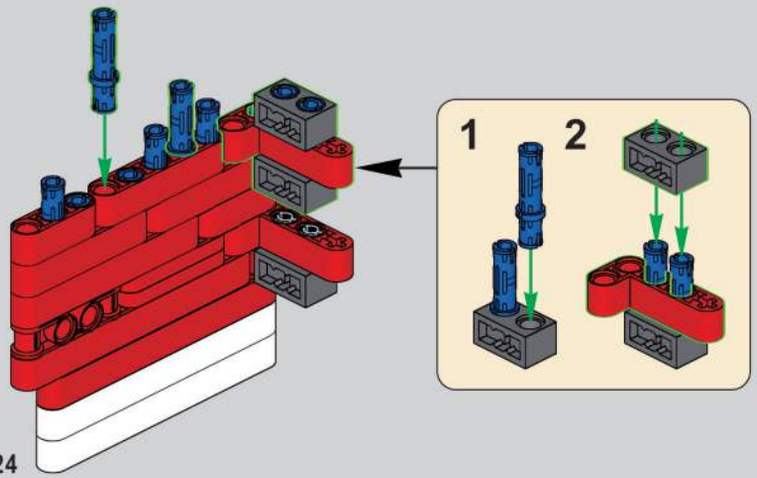

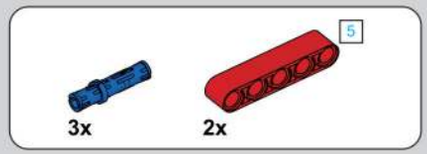

1764

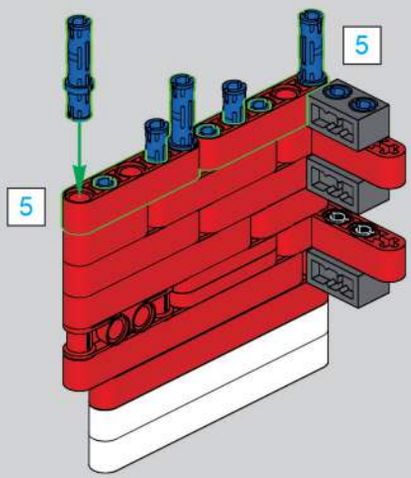

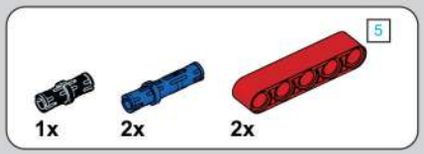

1765

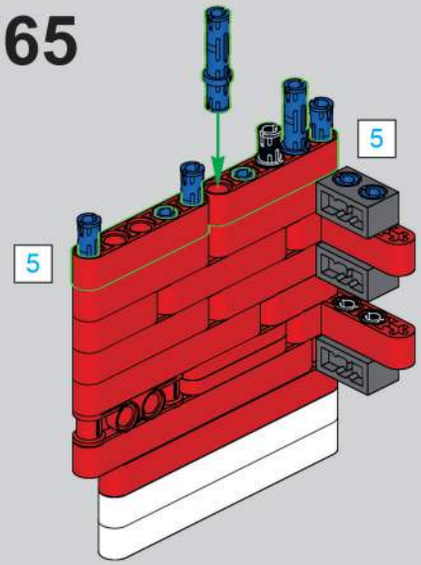

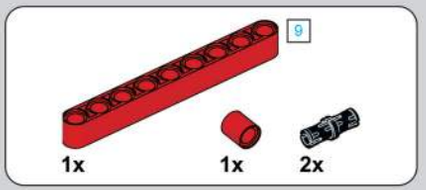

1766

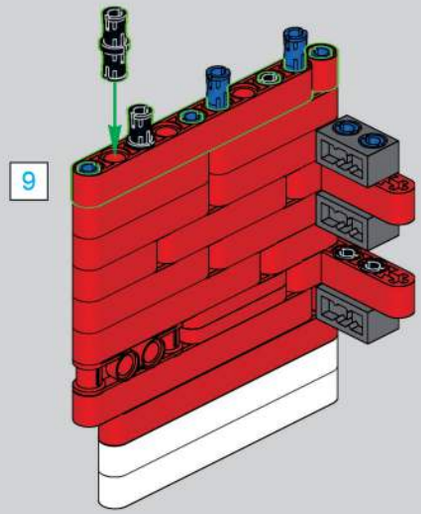

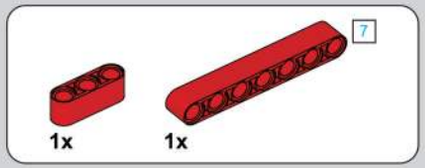

1767

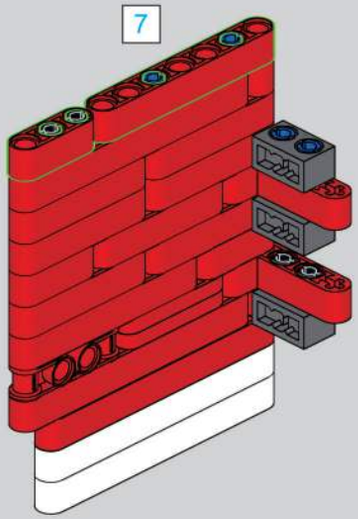

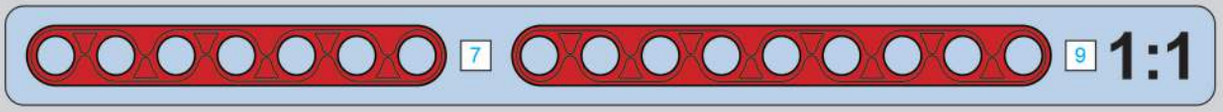

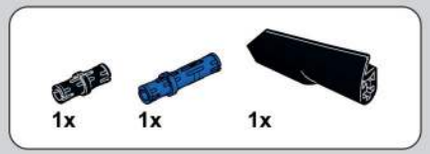

1768

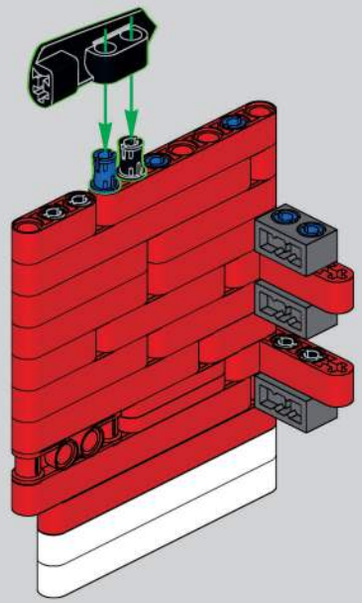

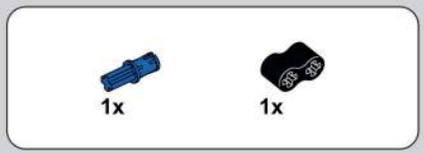

1769

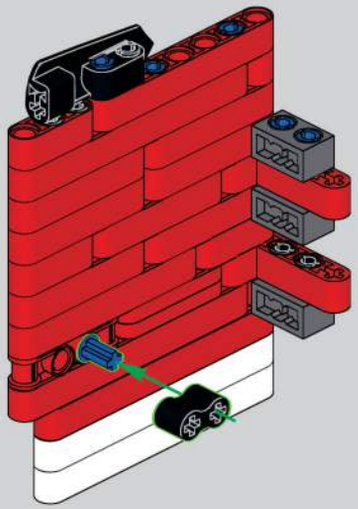

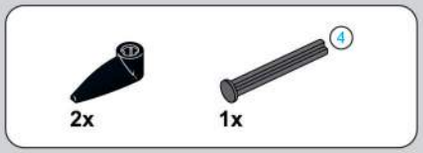

1770

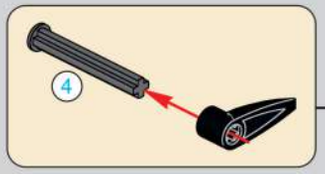

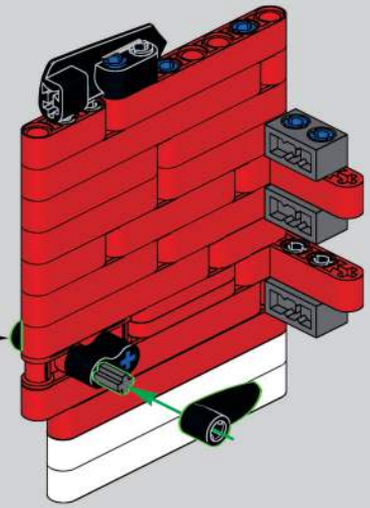

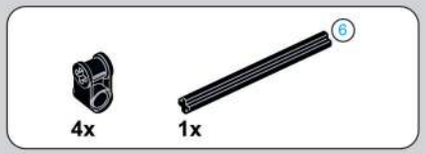

1771

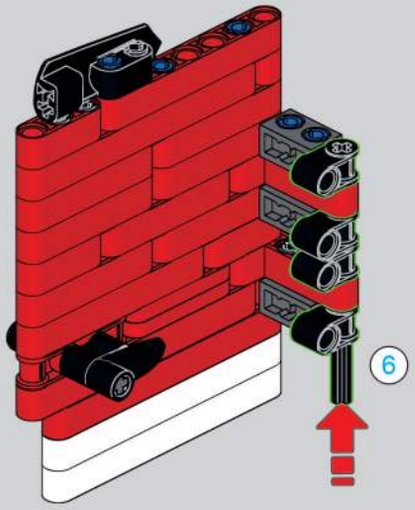

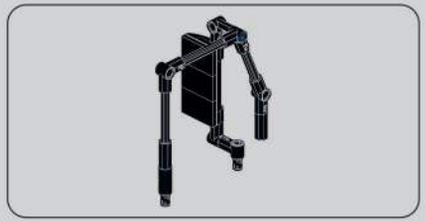

1773

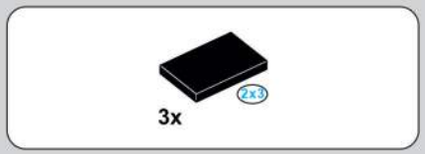

1774

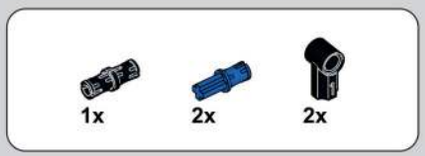

1775

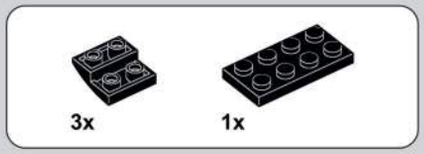

1772

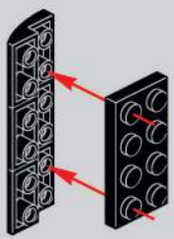

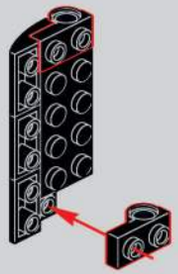

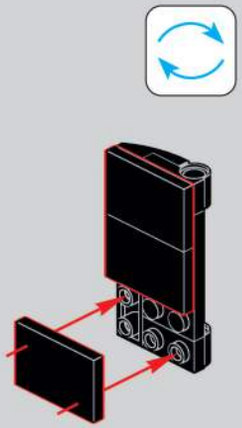

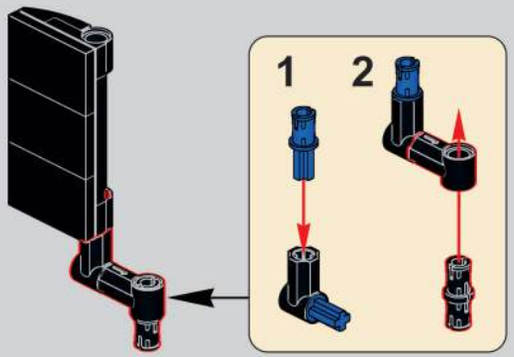

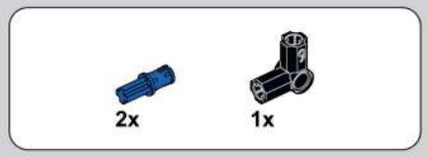

1776

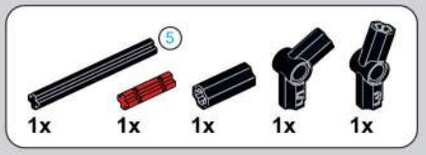

1777

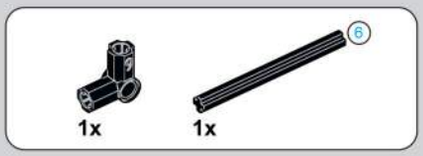

1778

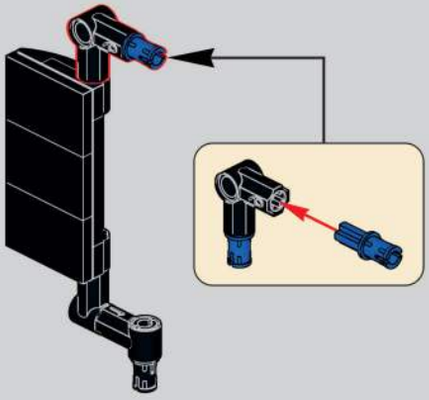

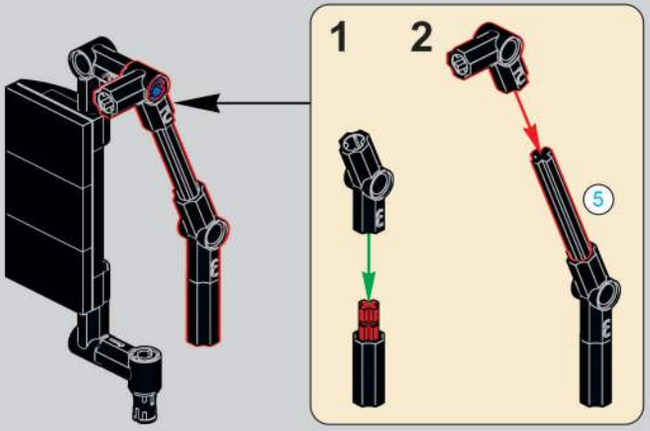

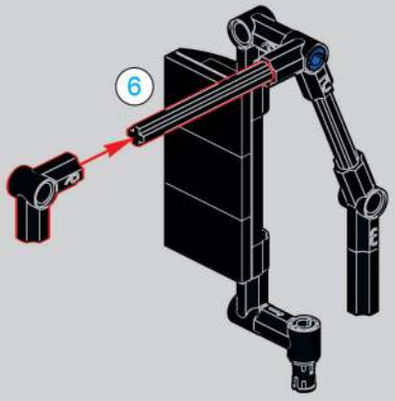

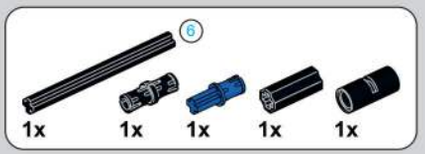

1779

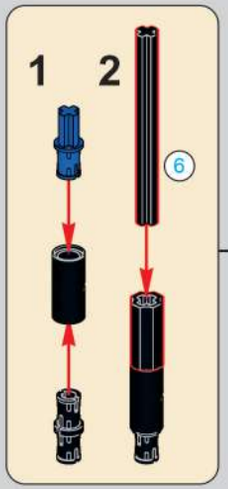

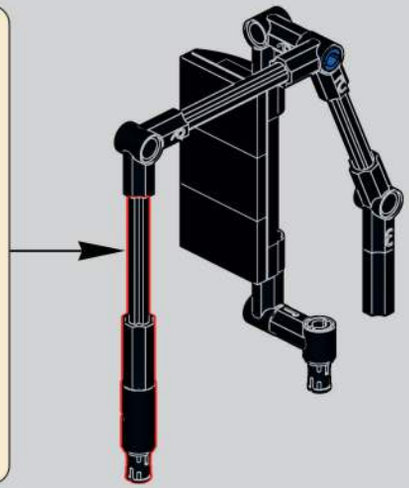

1780

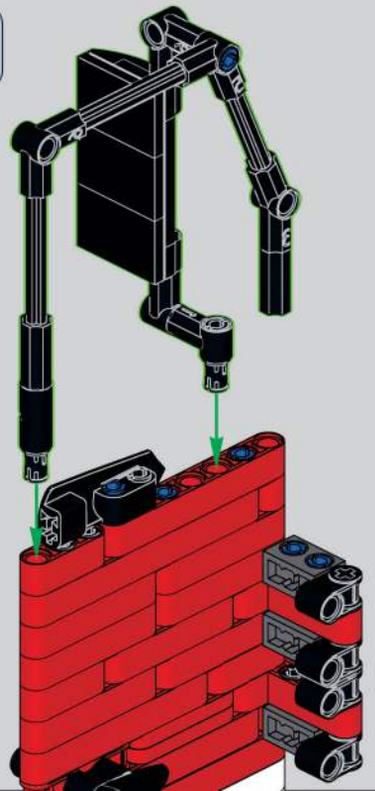

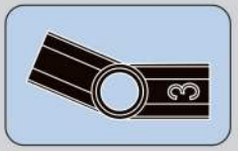

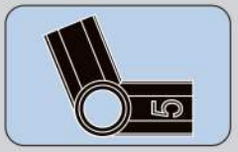

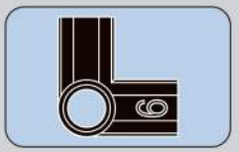

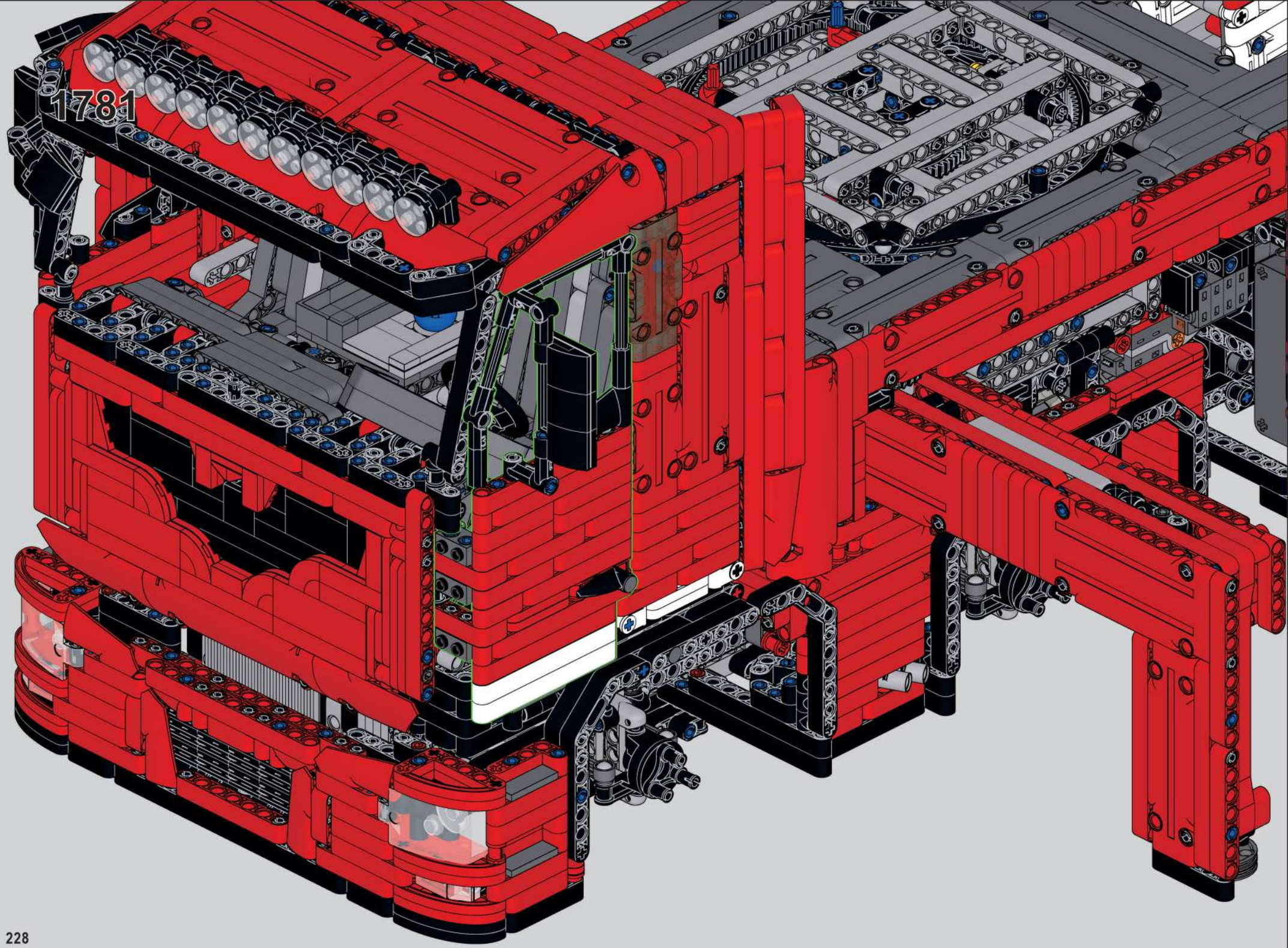
1781

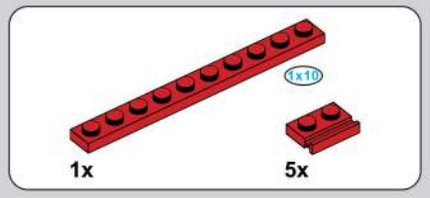

1782

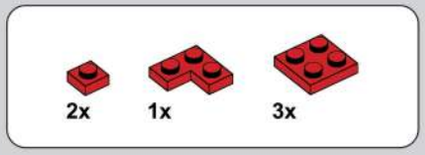

1783

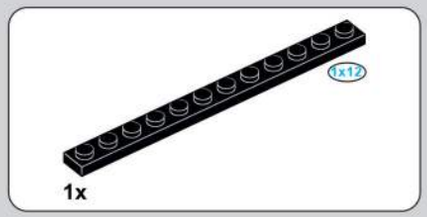

1784

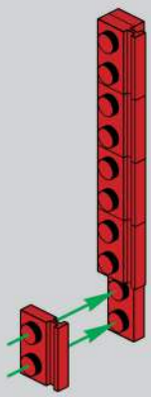

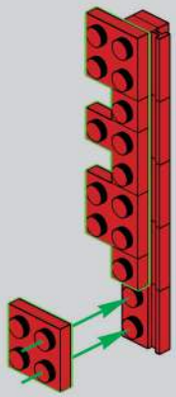

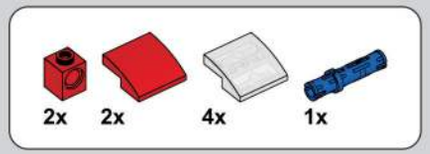

1785

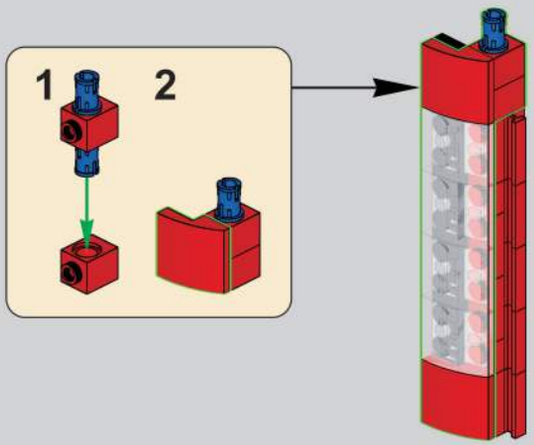

1786

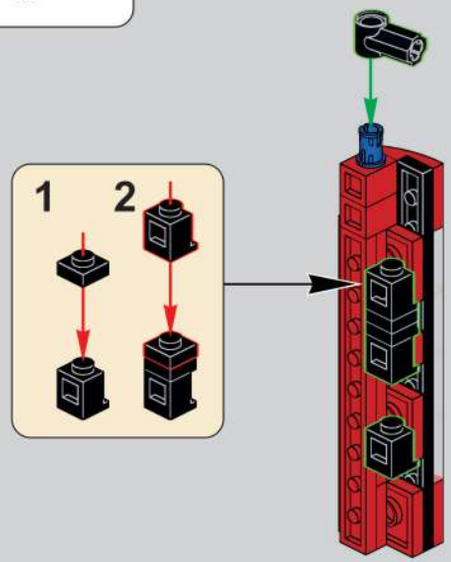

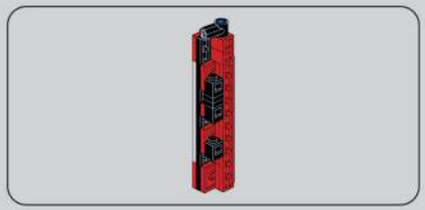

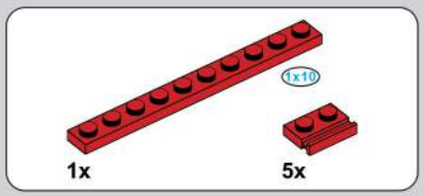

1787

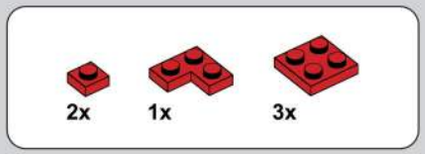

1788

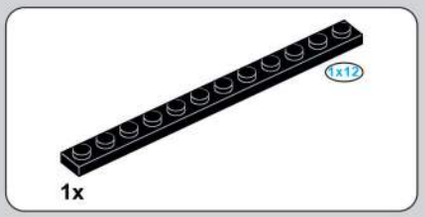

1789

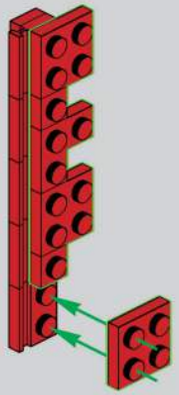

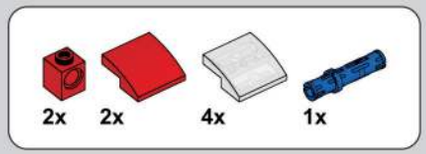

1790

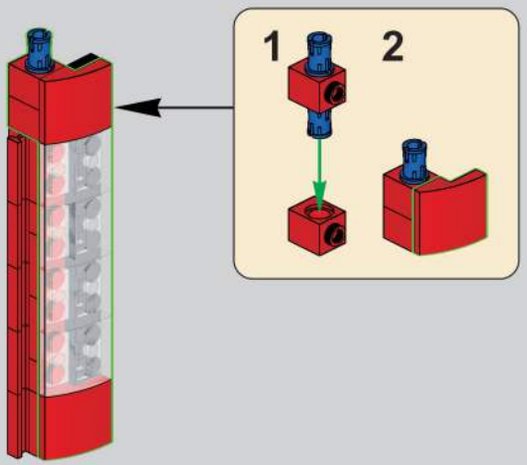

1791

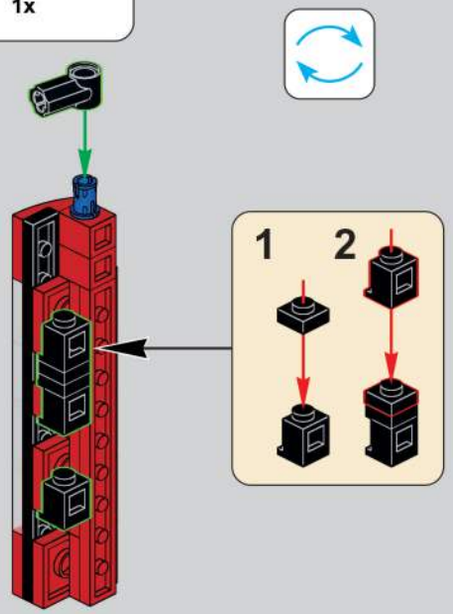

1792

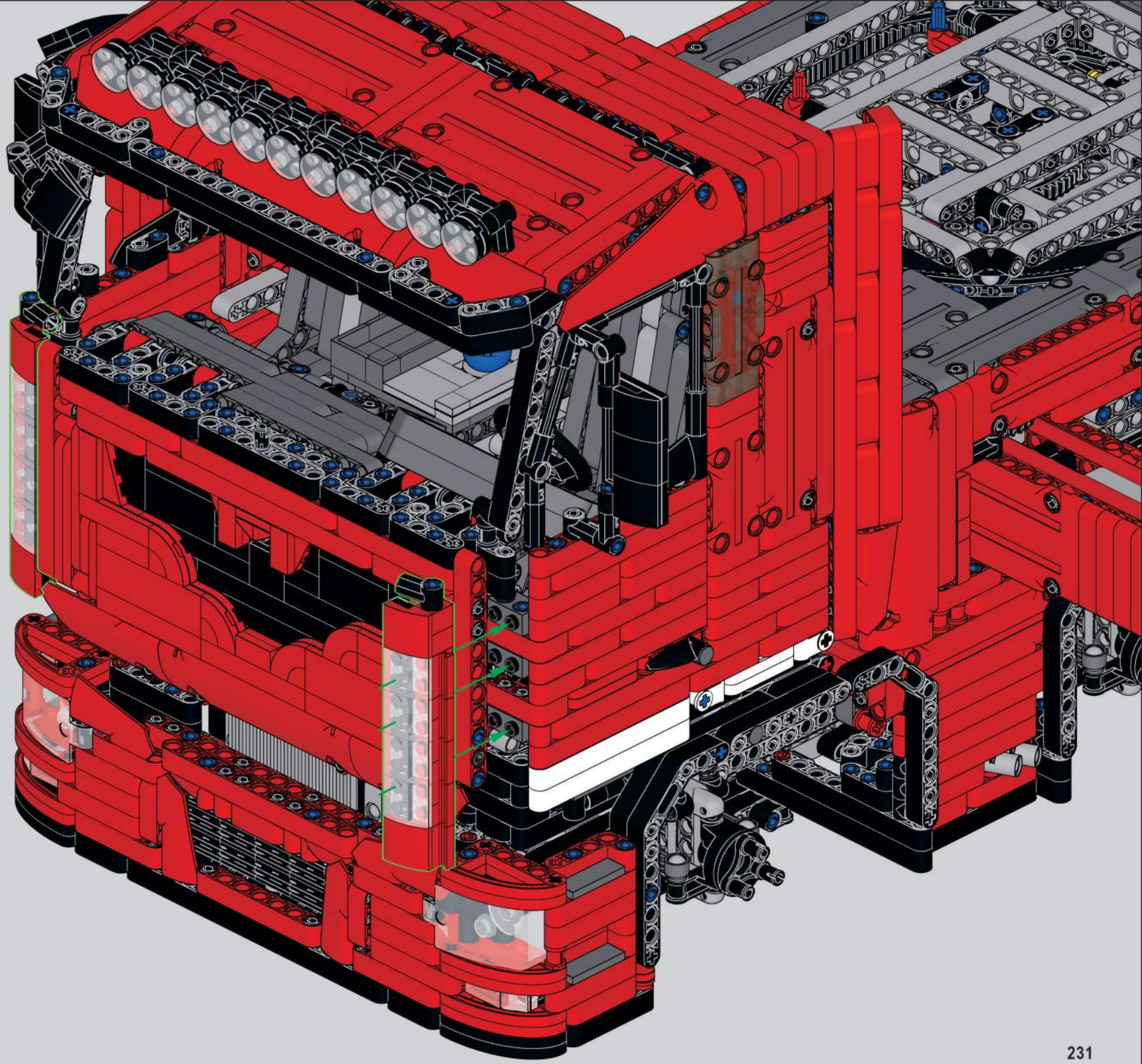

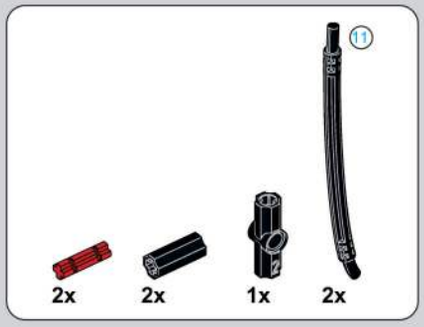

1793

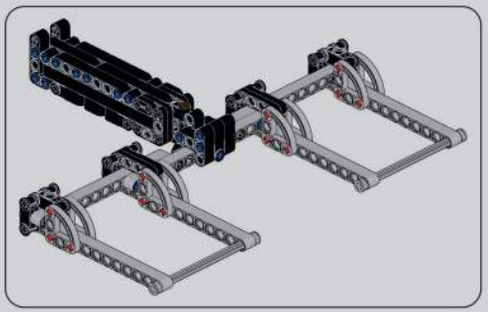

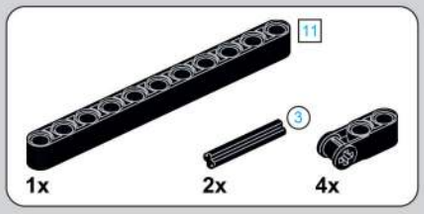

1794

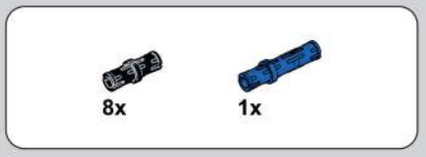

1795

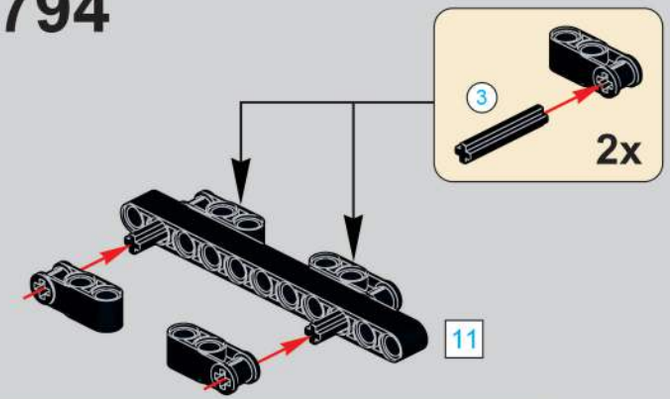

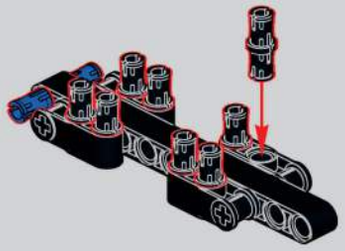

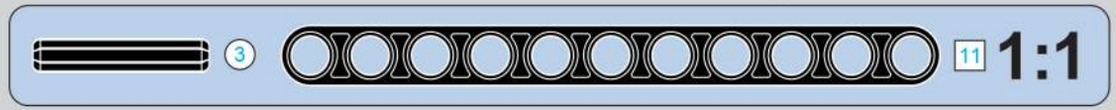

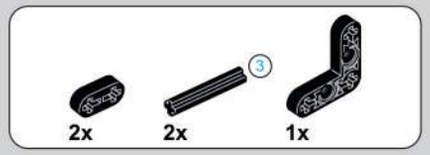

1796

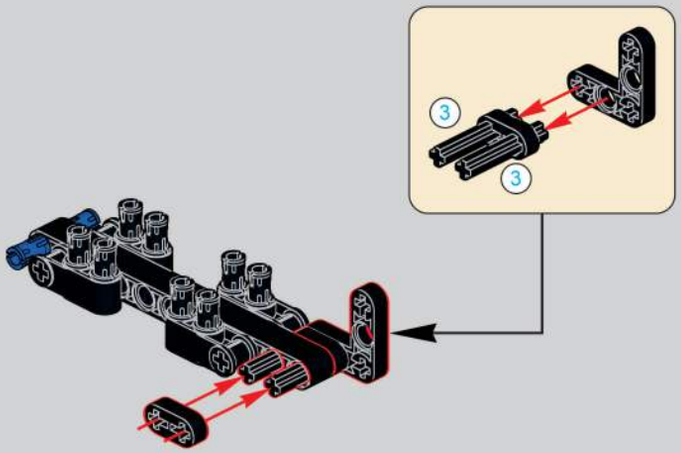

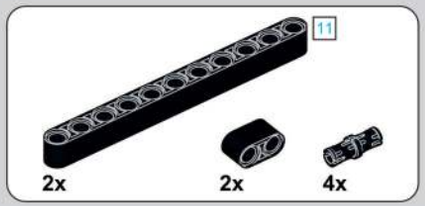

1797

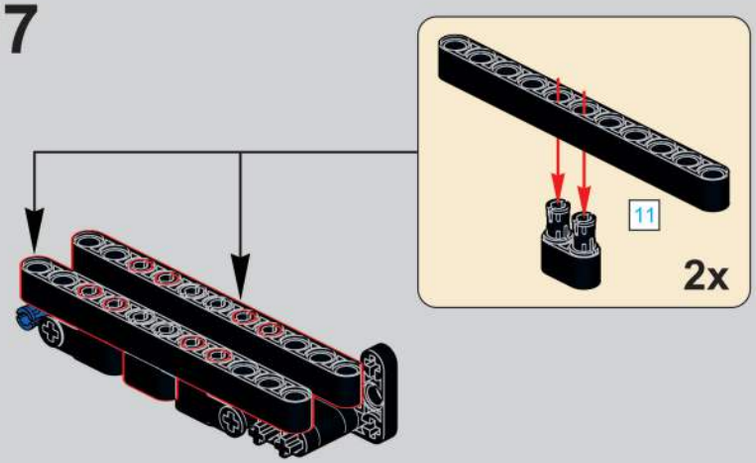

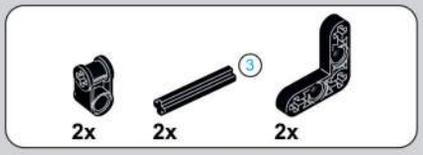

1798

1799

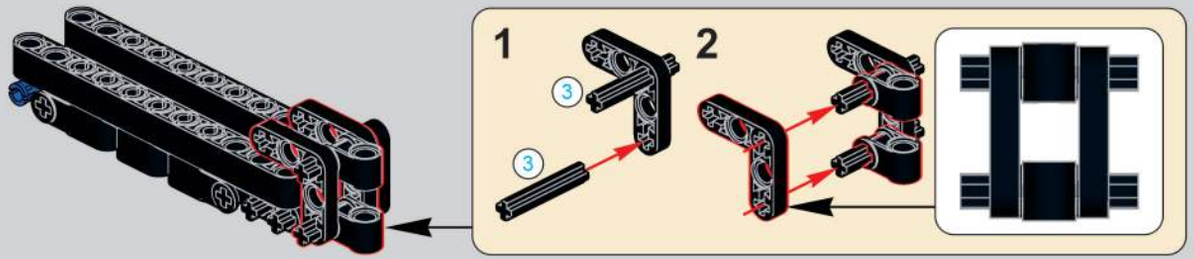

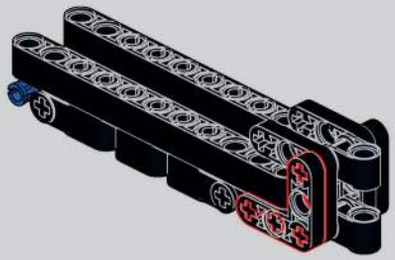

1800

1801

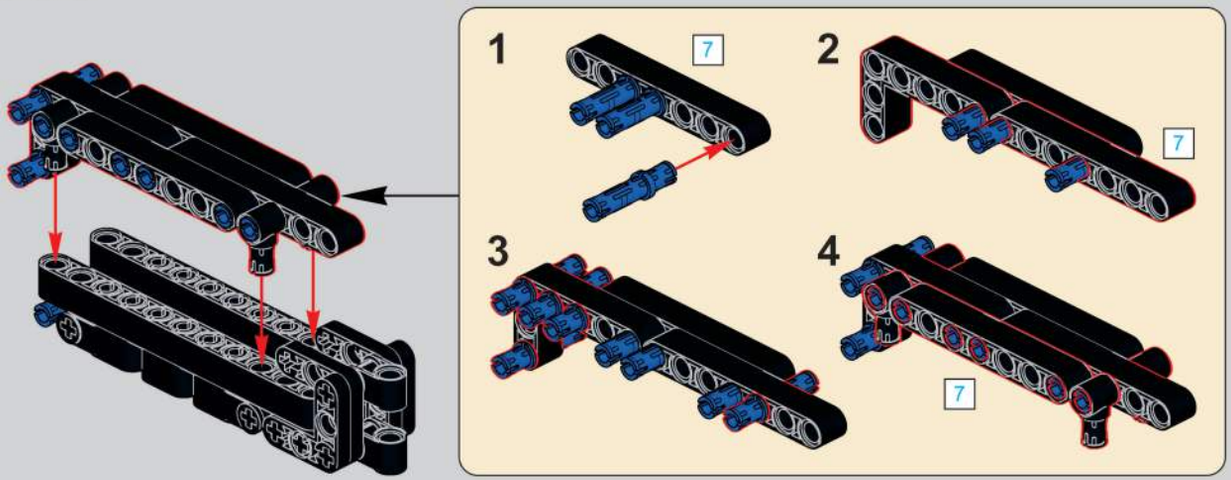

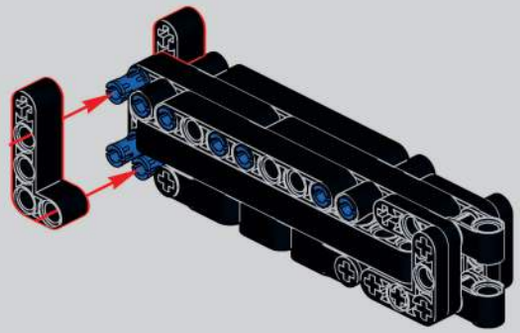

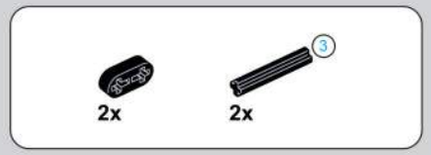

1802

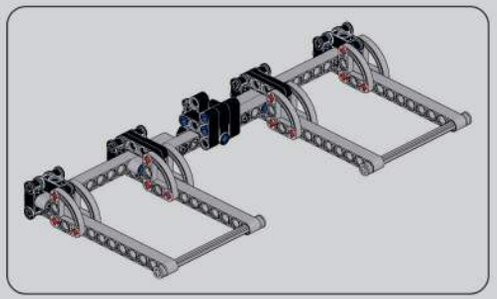

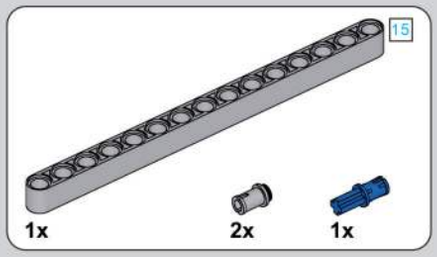

1803

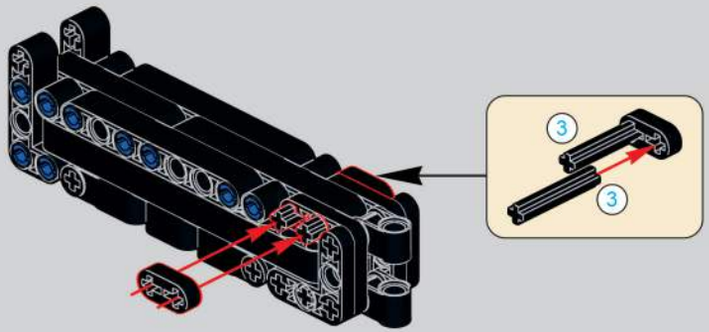

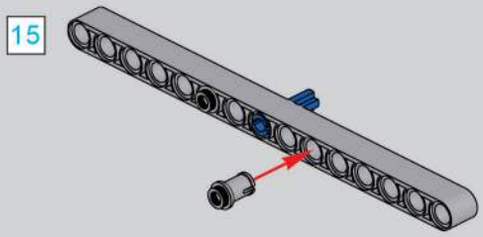

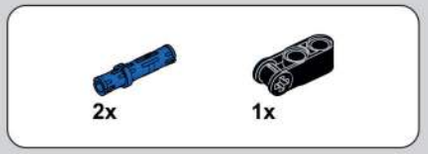

1804

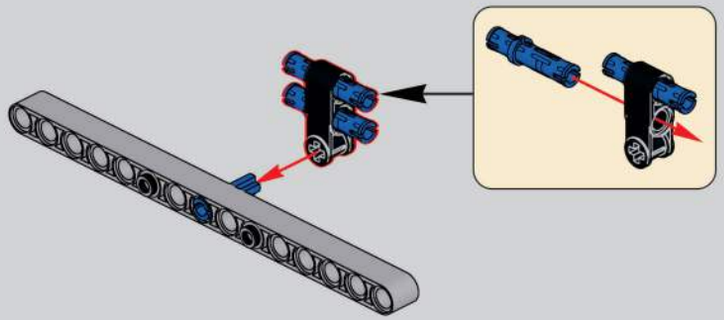

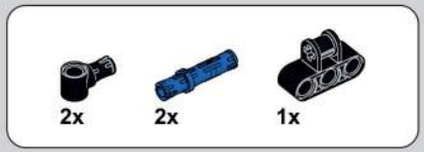

1805

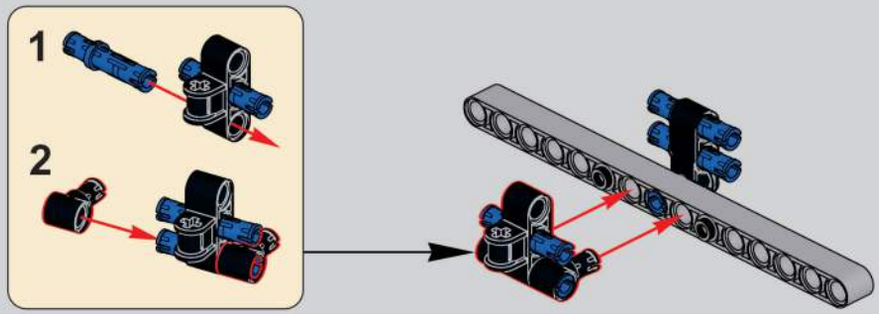

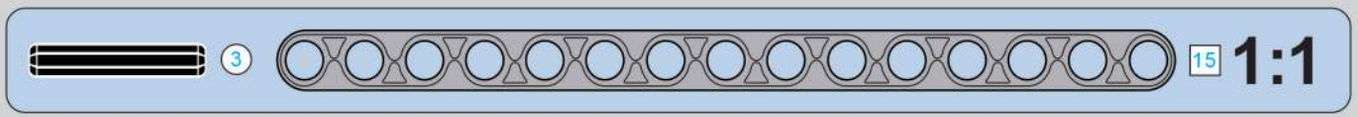

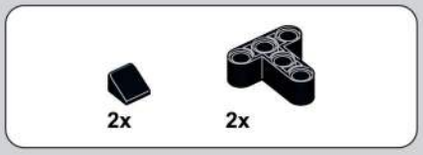

1806

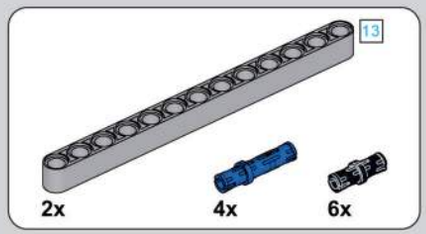

1807

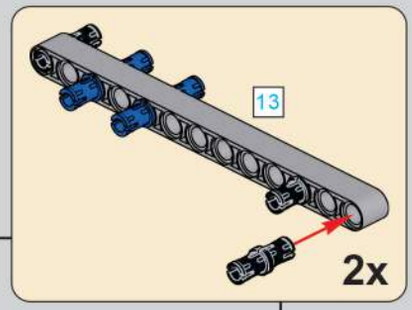

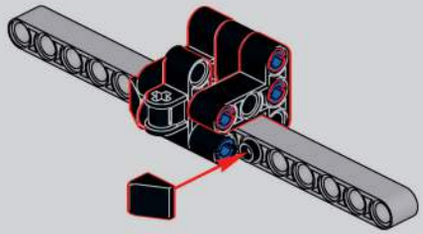

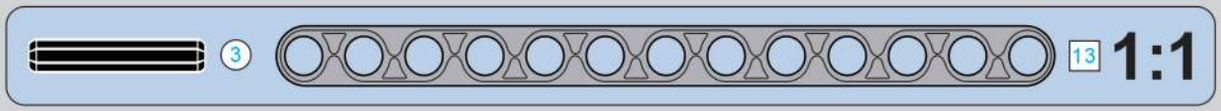

1808

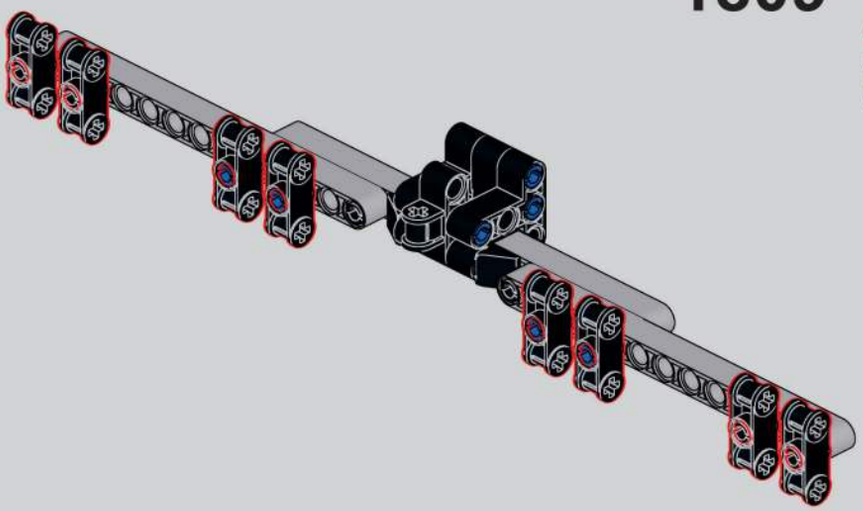

1809

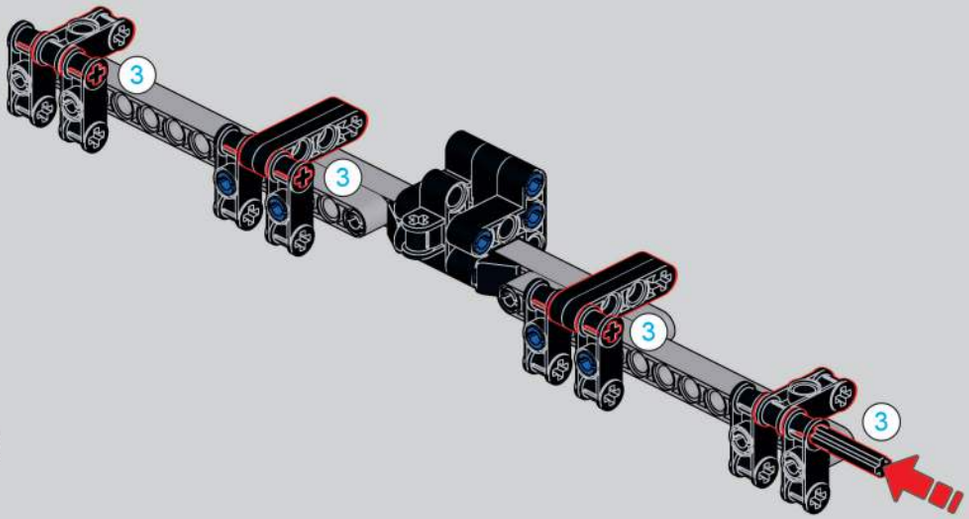

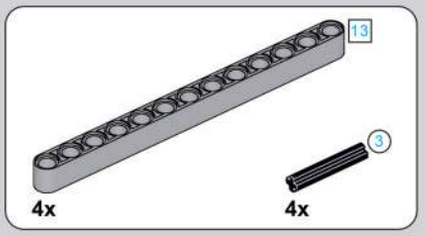

1810

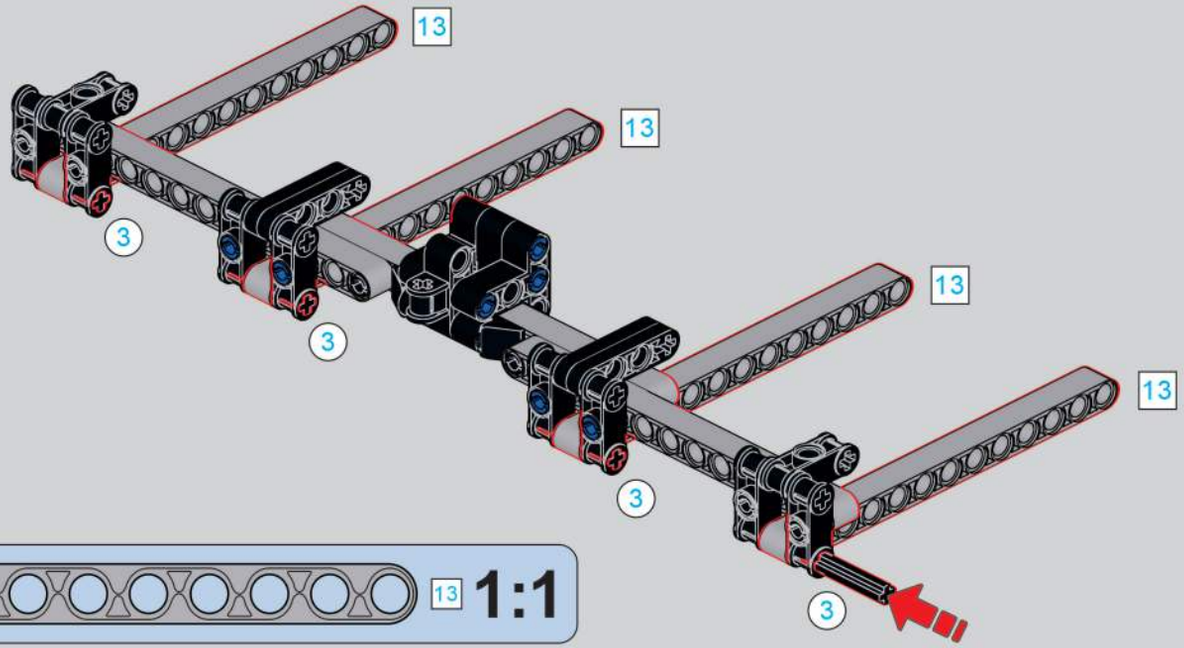

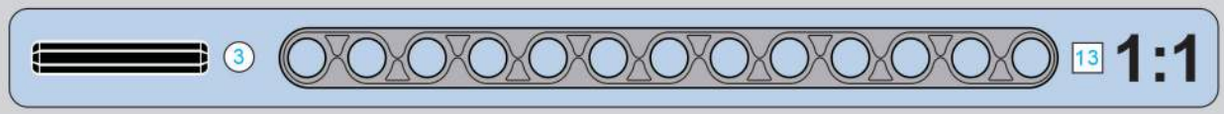

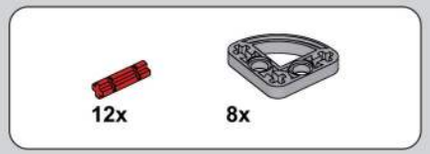

1811

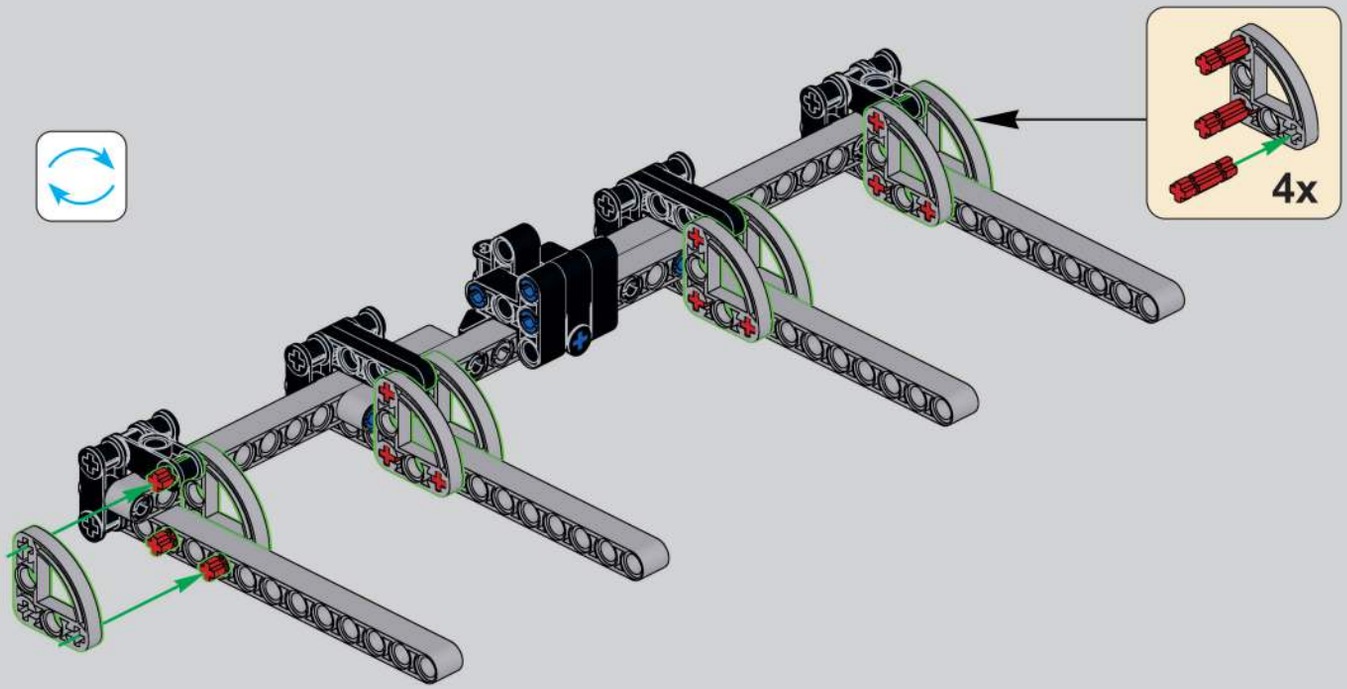

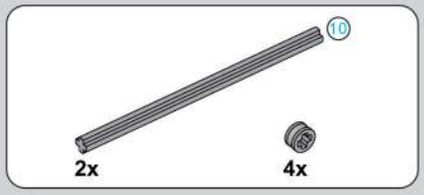

1812

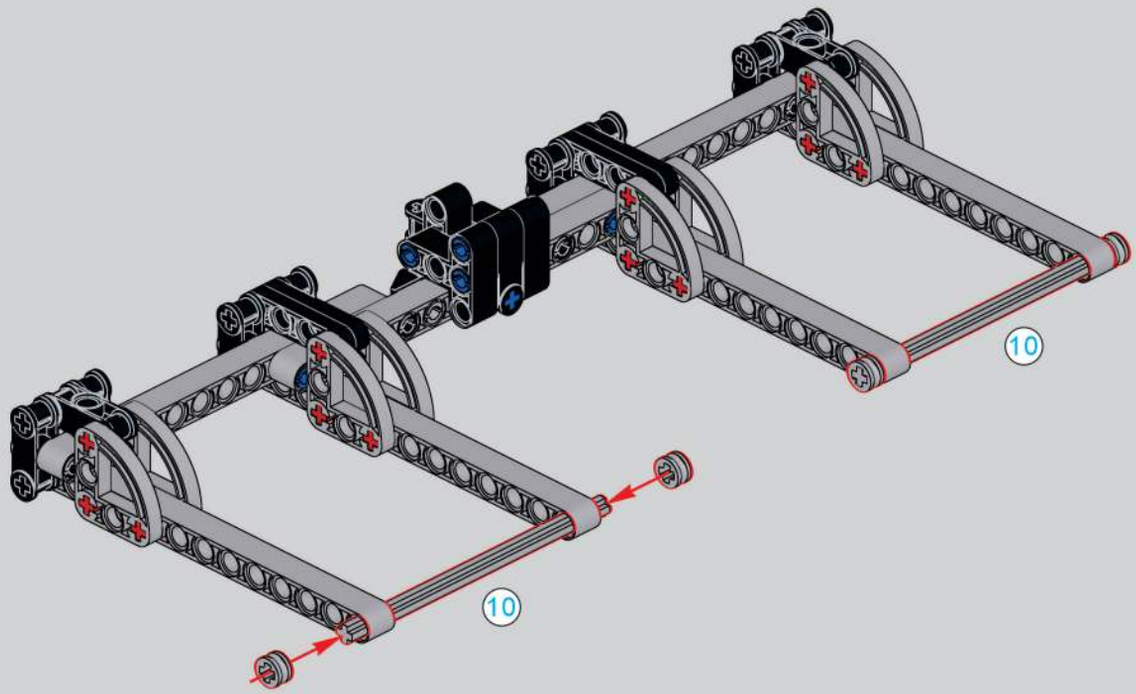

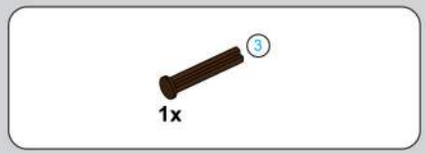

1813

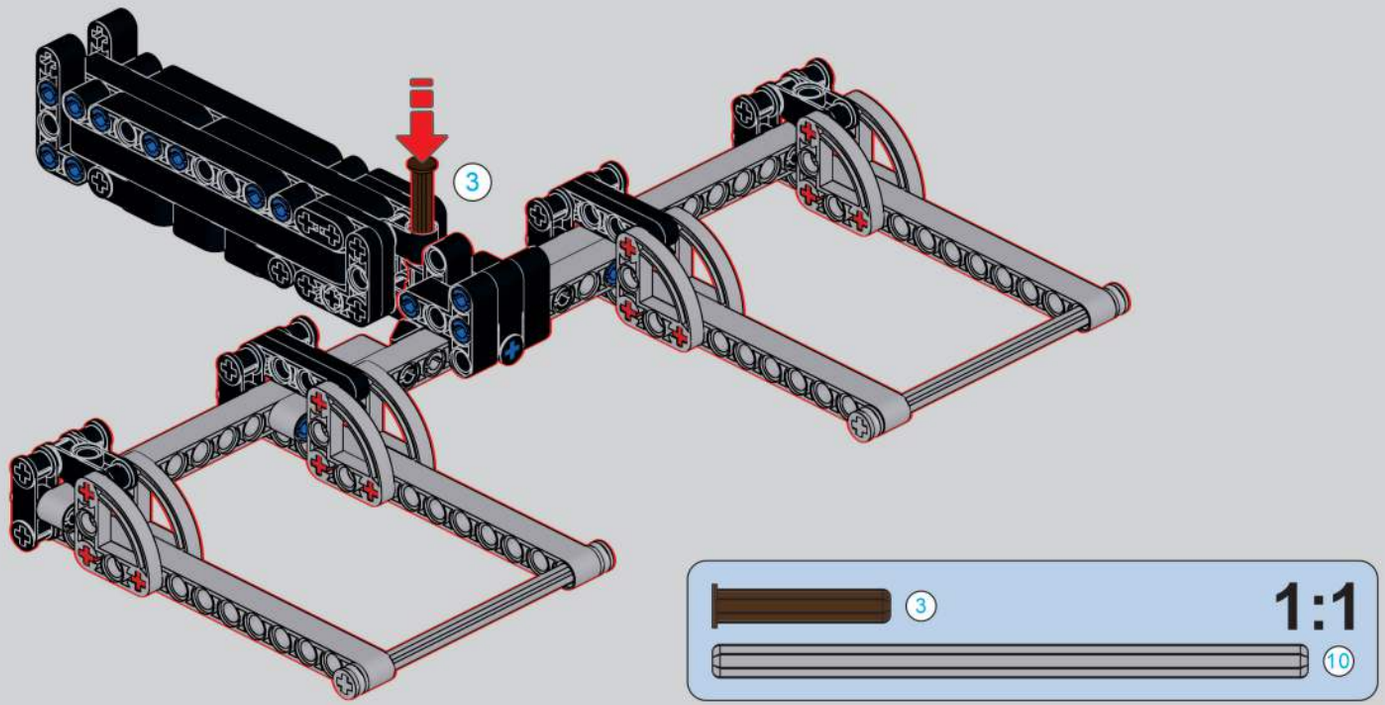

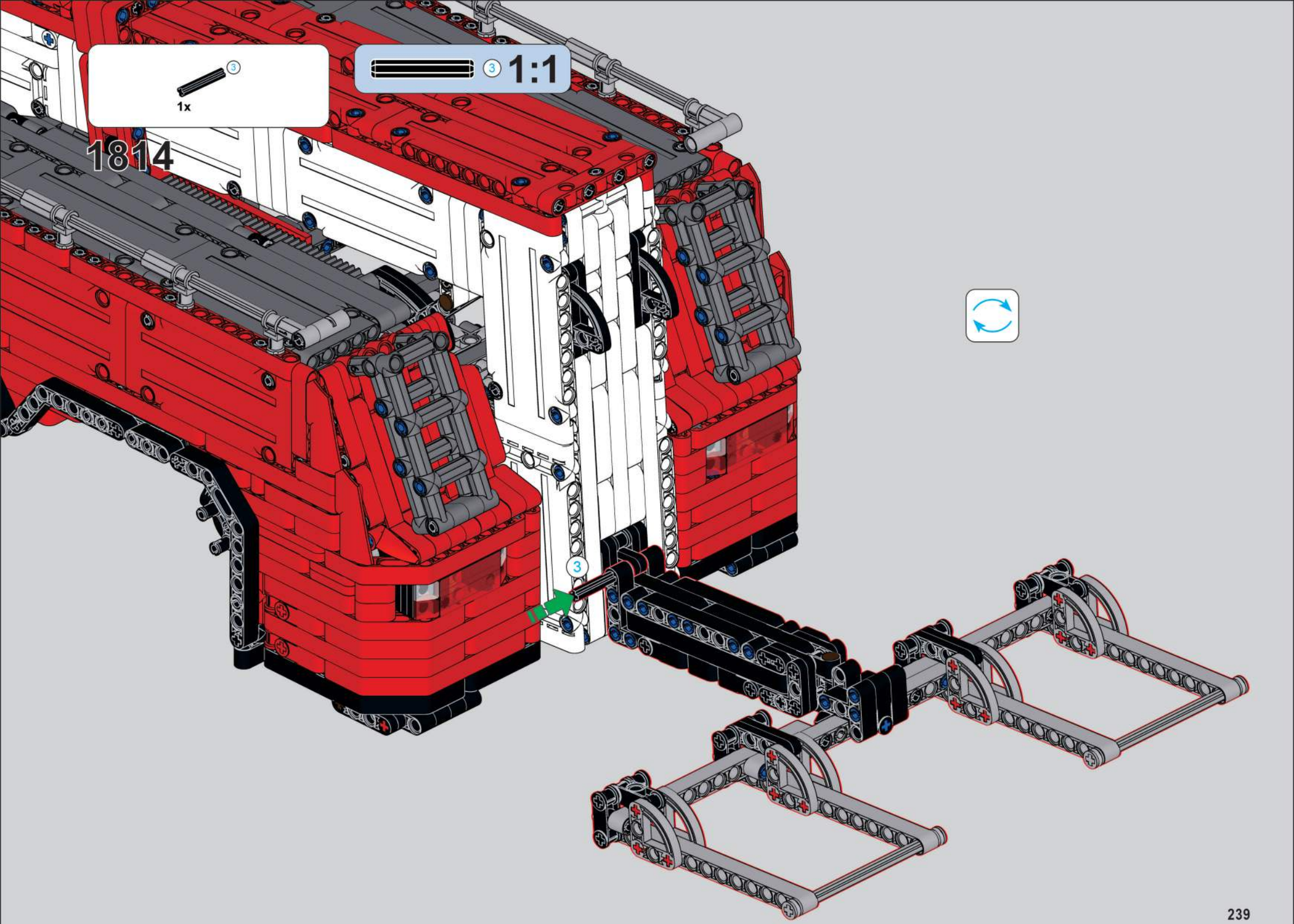
3
1x
3 1:1
1814
3

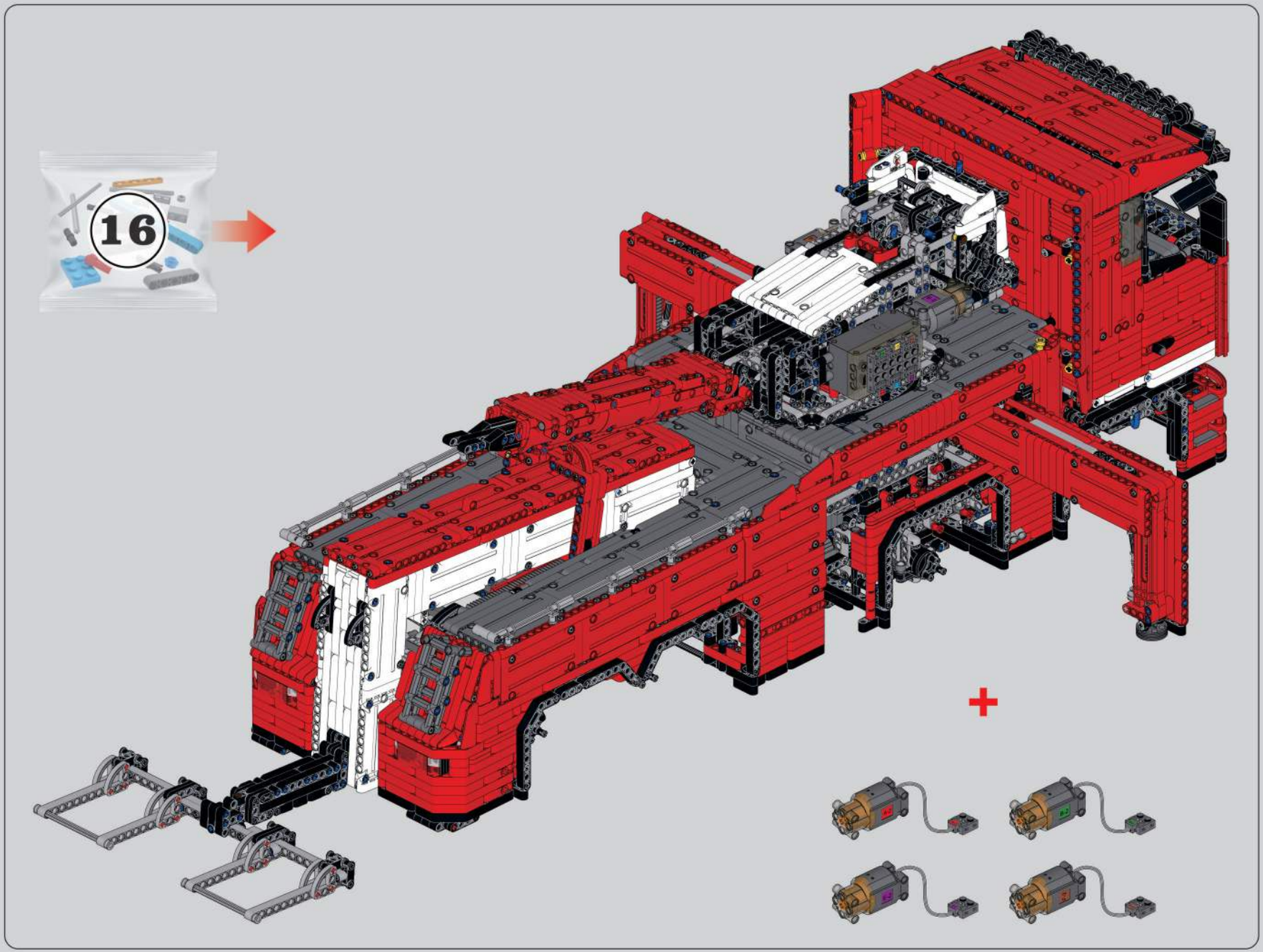
16

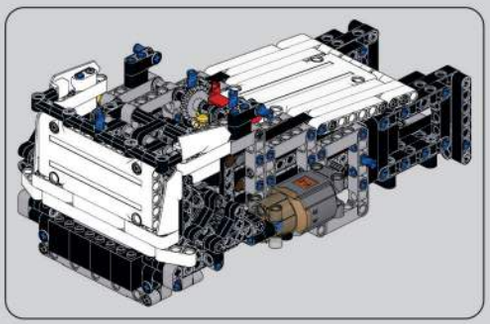

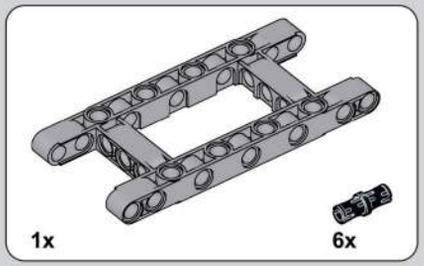

1815

1816

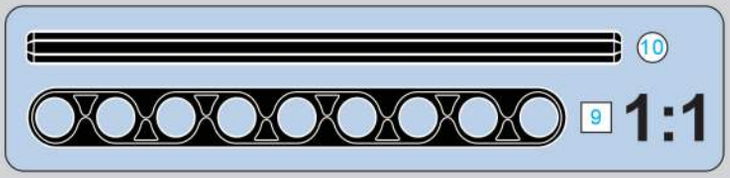

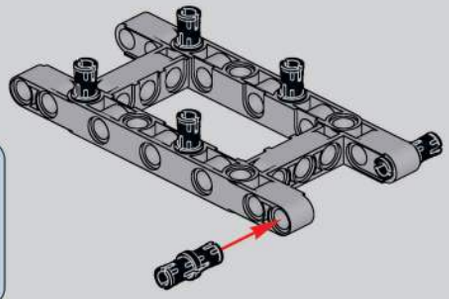

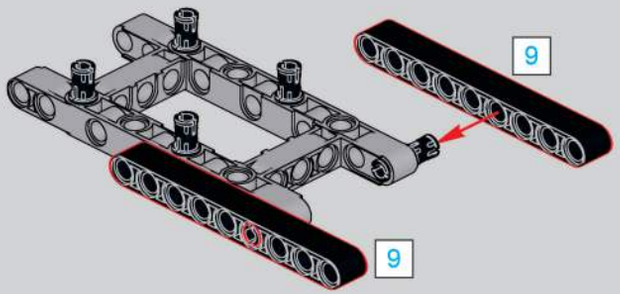

1817

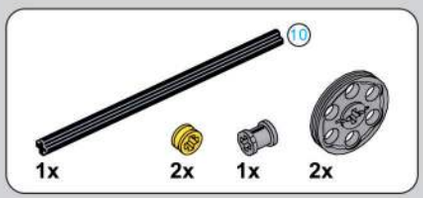

1818

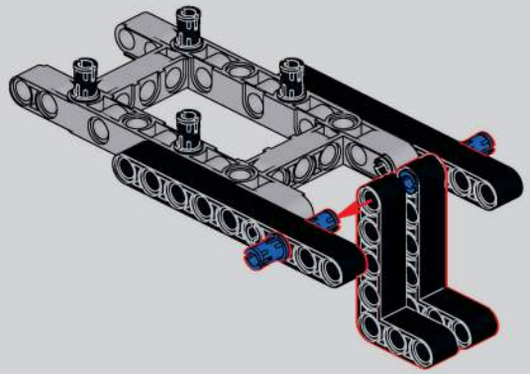

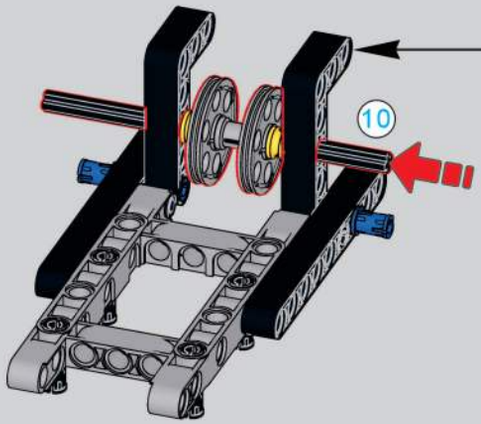

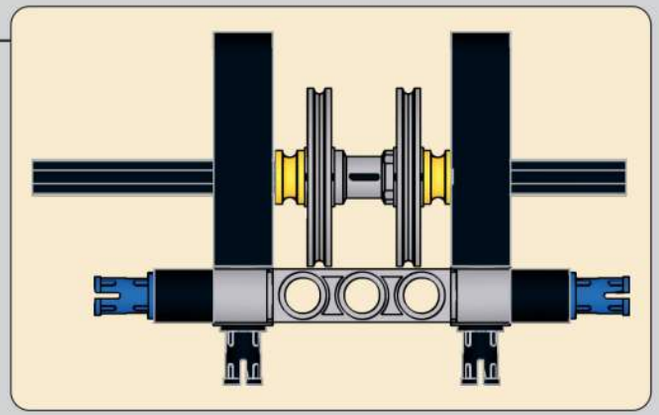

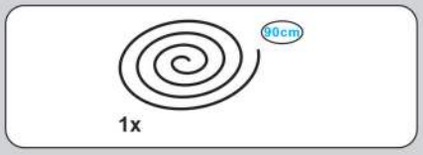

1819

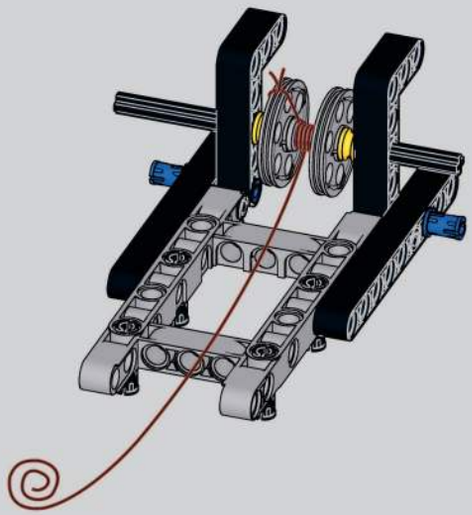

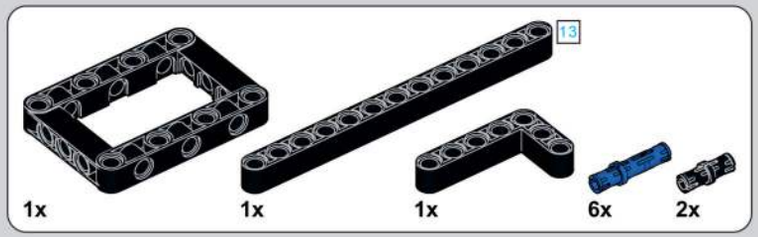

1820

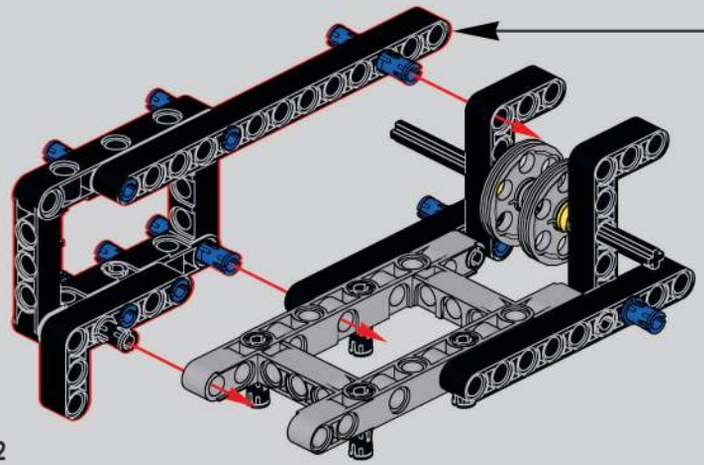

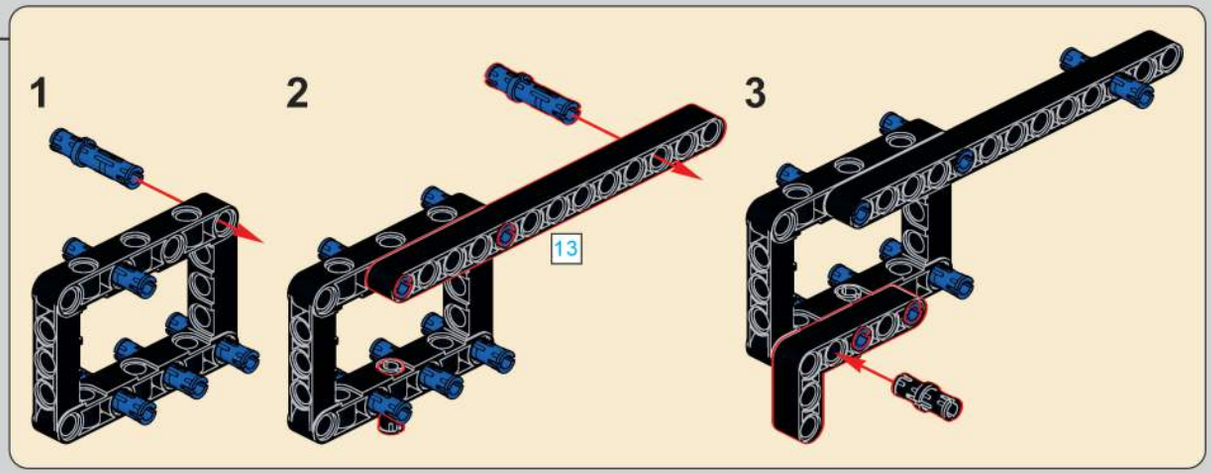

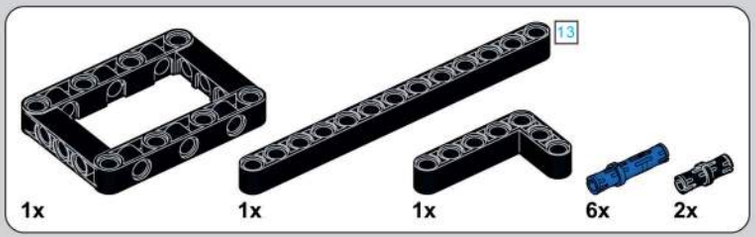

1821

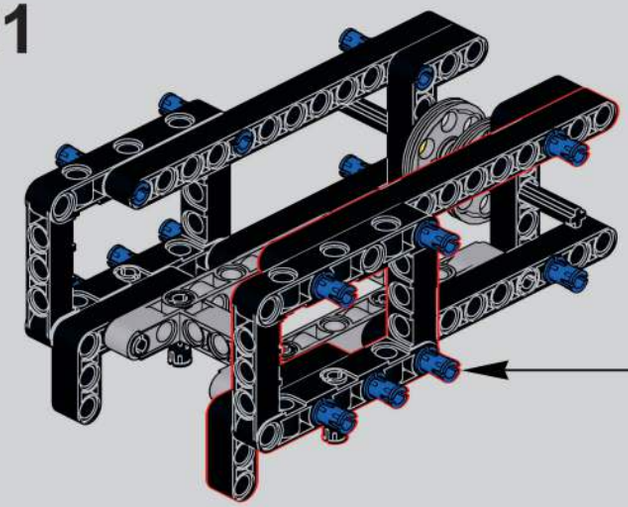

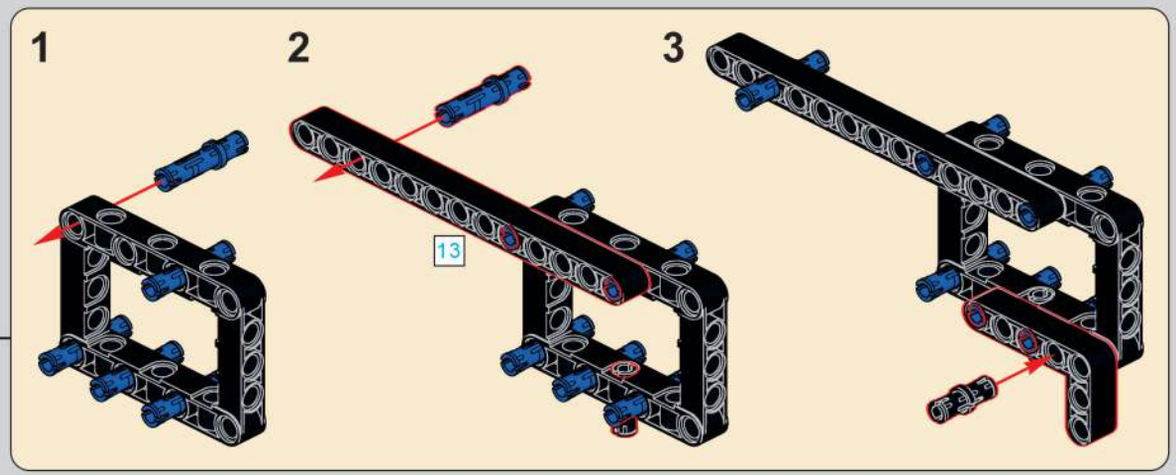

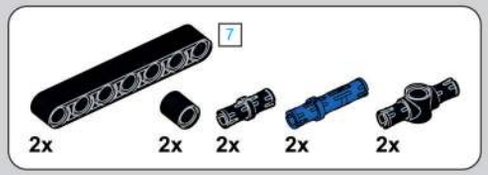

1822

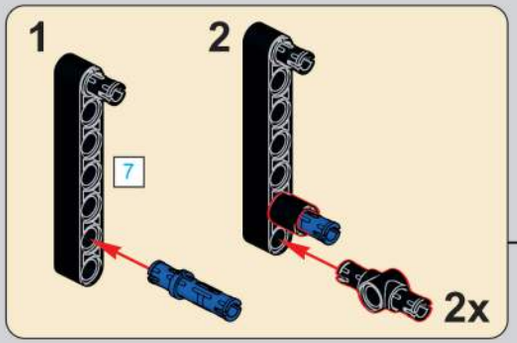

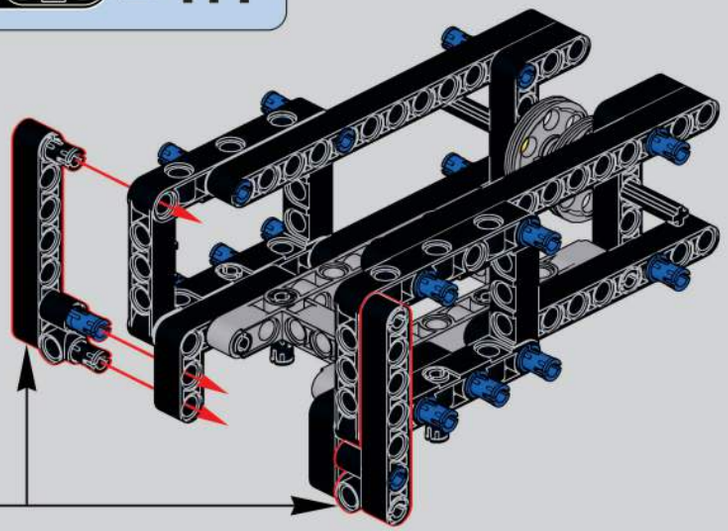

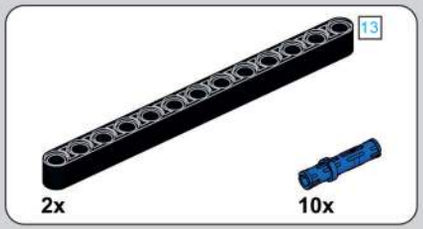

1823

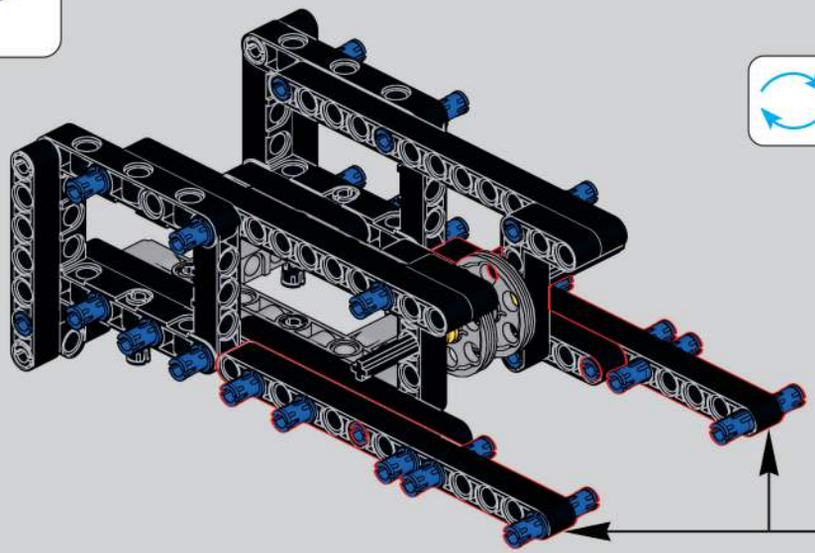

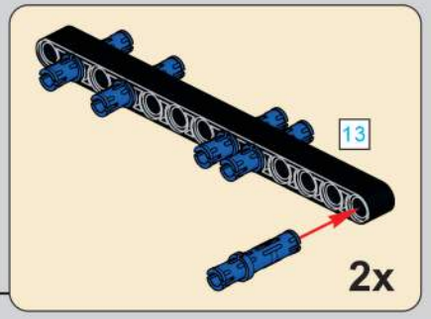

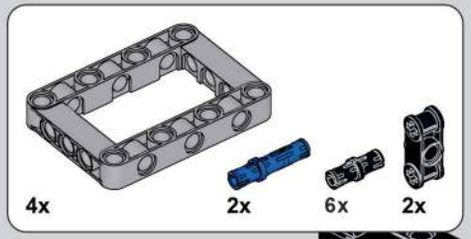

1824

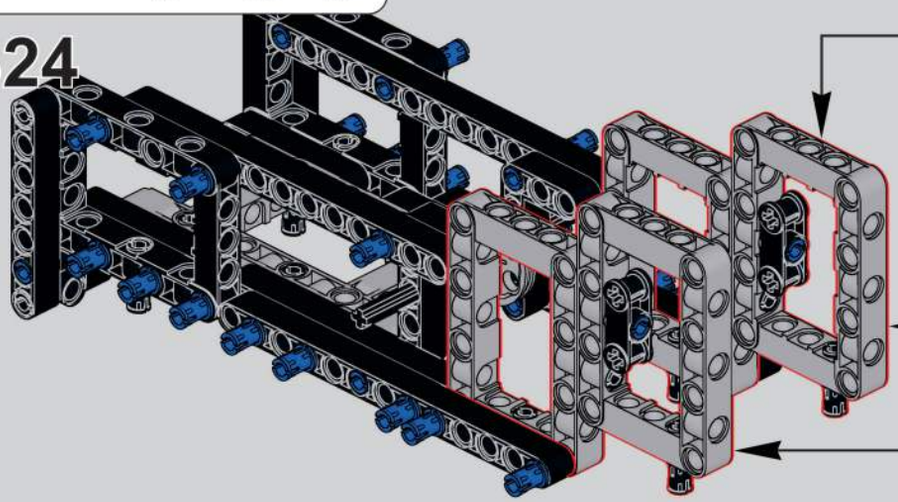

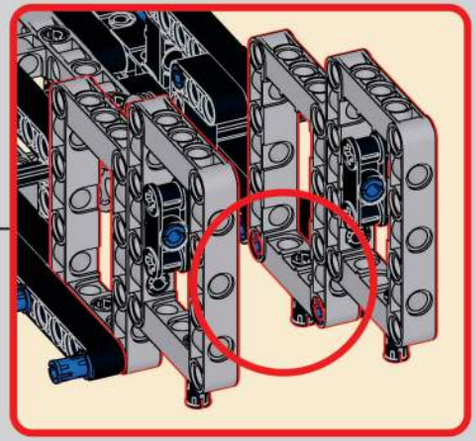

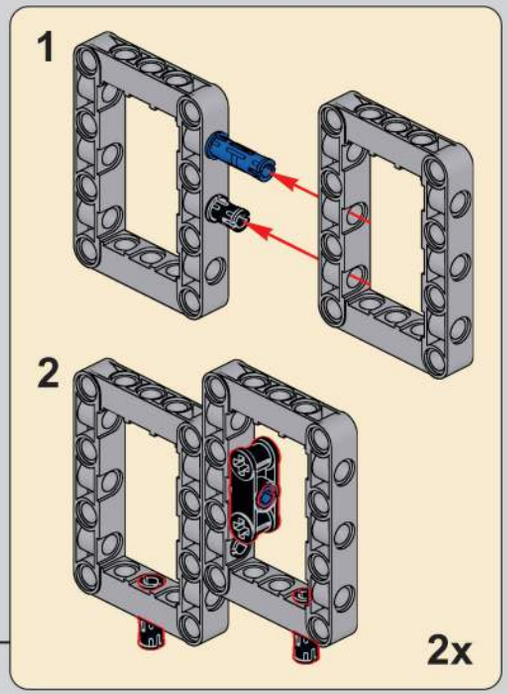

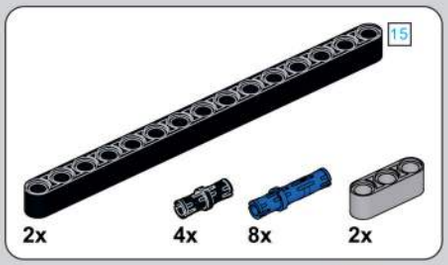

1825

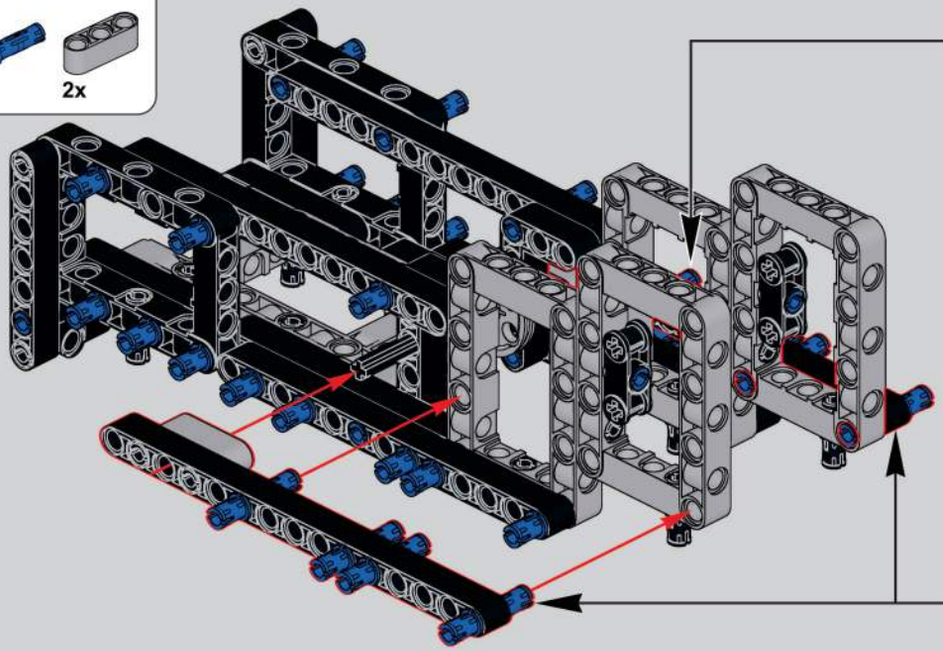

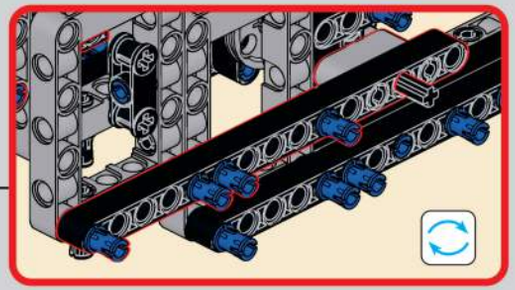

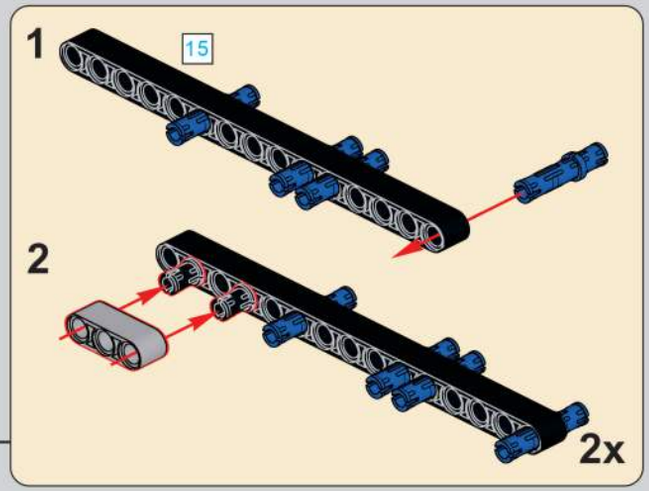

1826

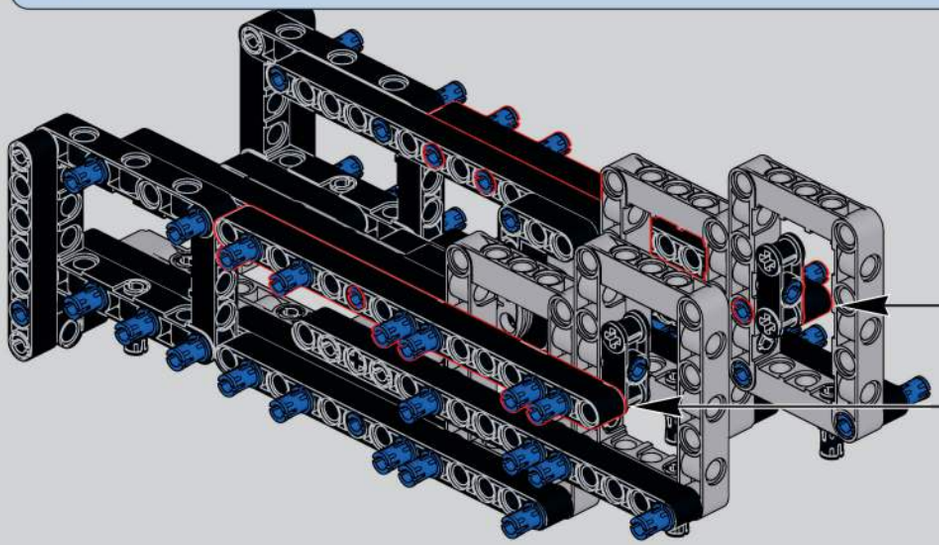

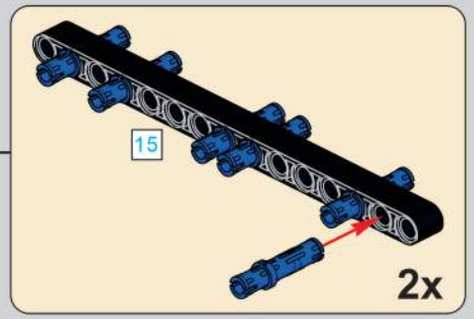

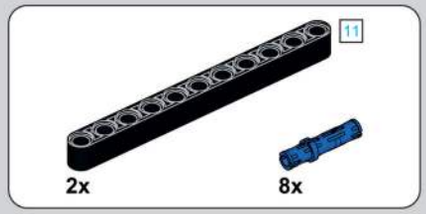

1827

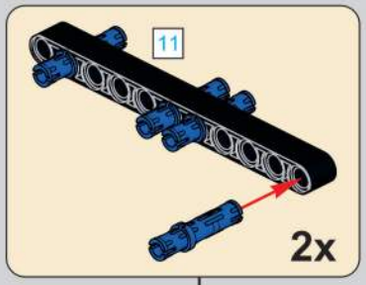

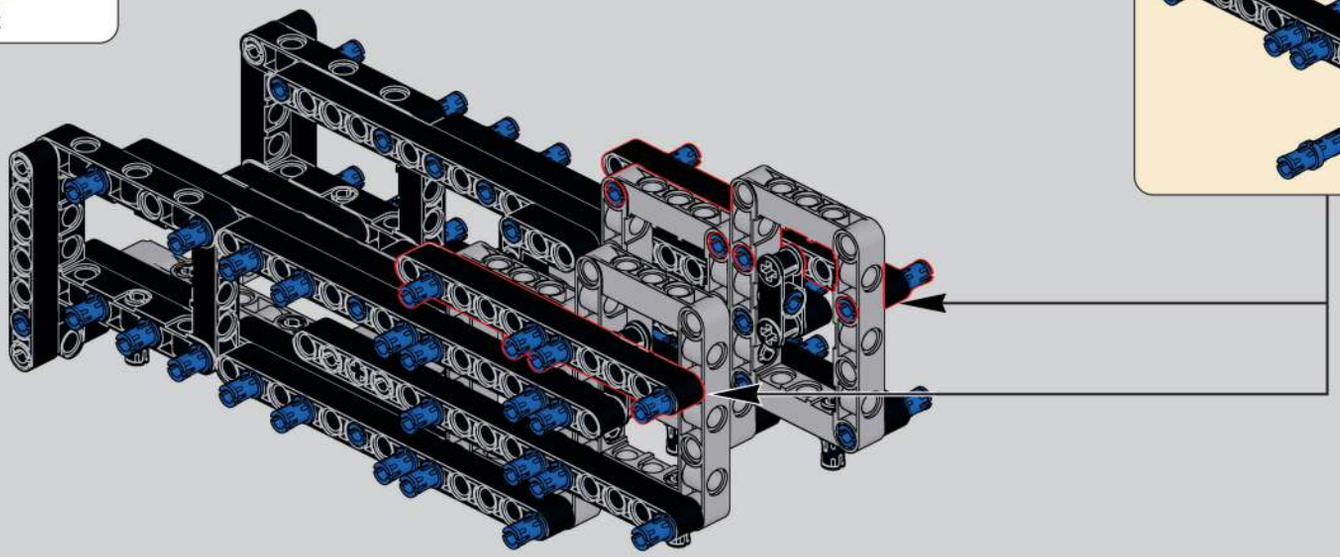

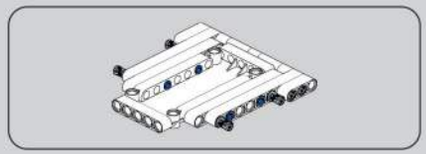

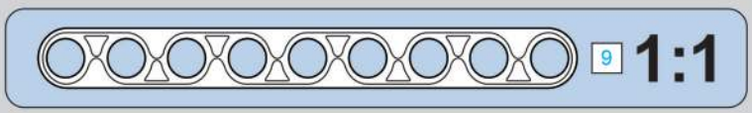

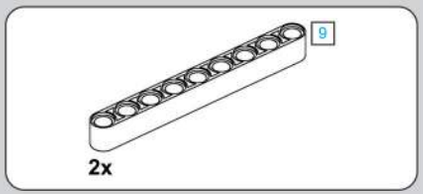

1829

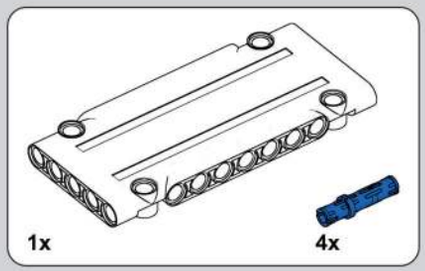

1828

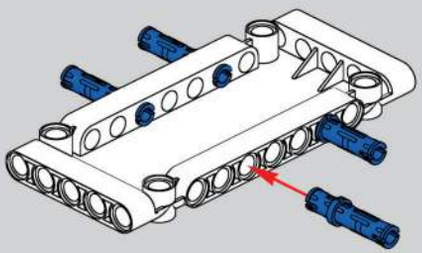

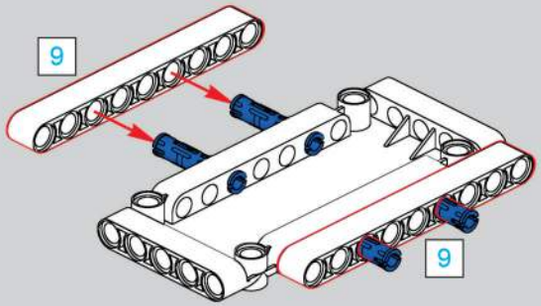

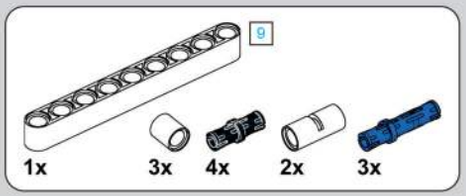

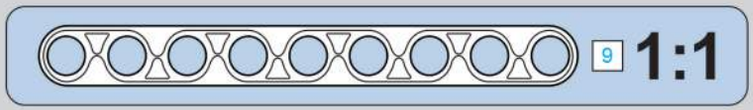

1830

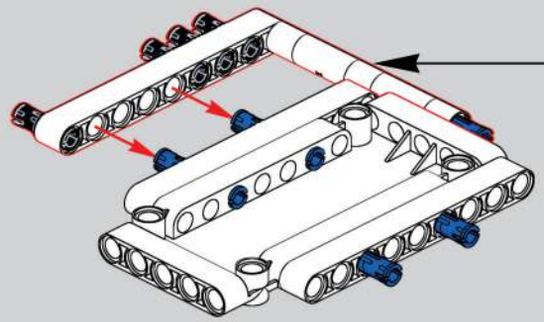

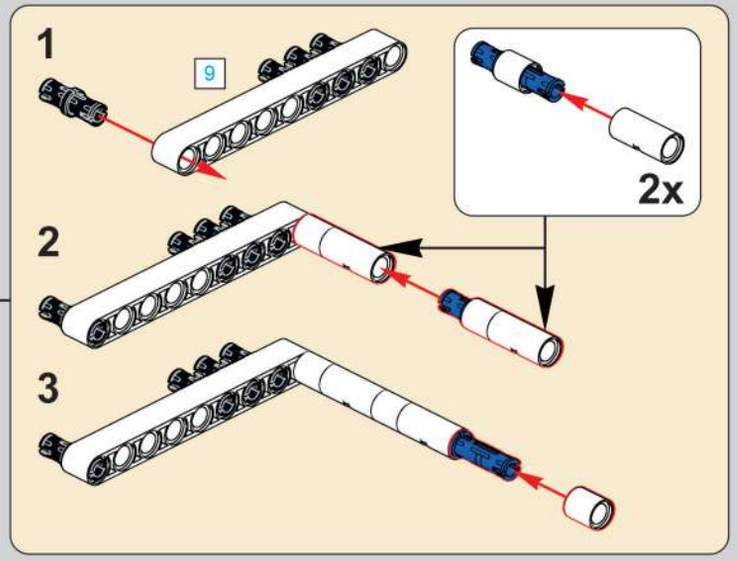

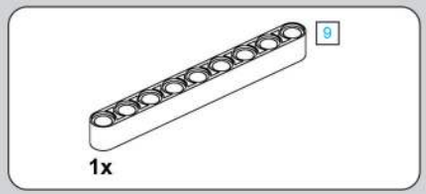

1831

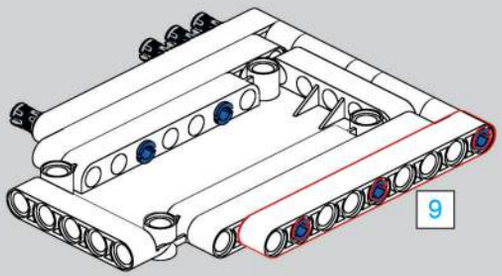

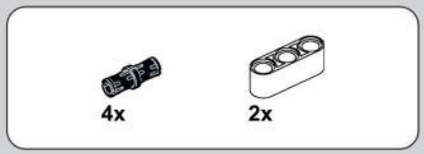

1832

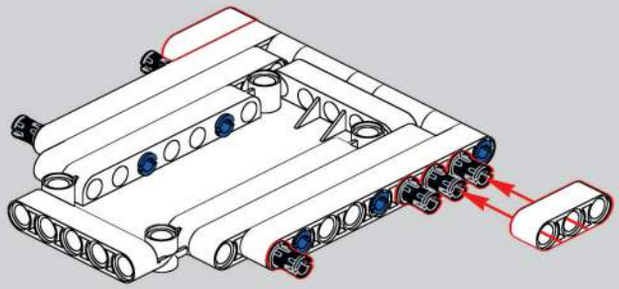

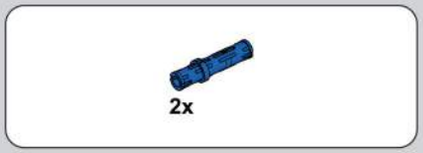

1833

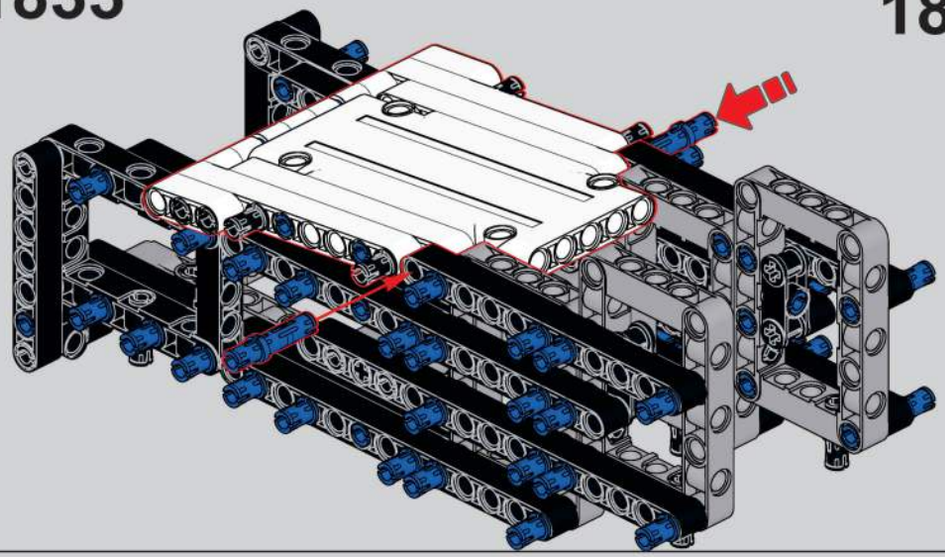

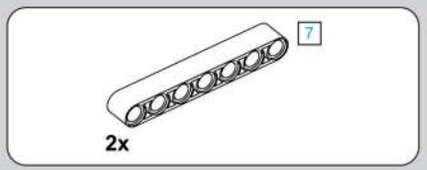

1834

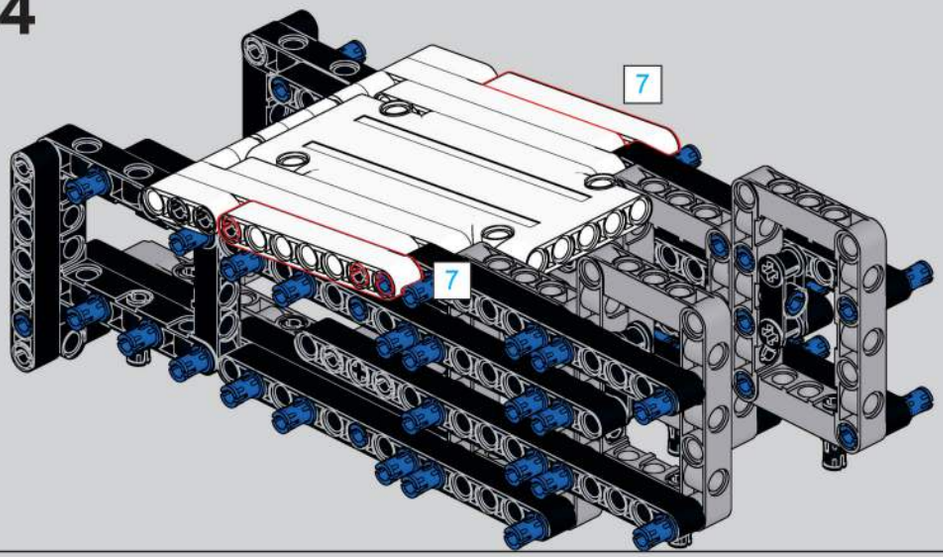

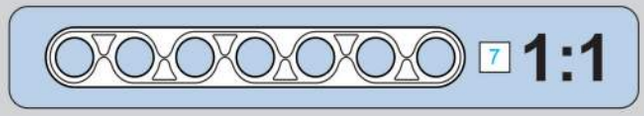

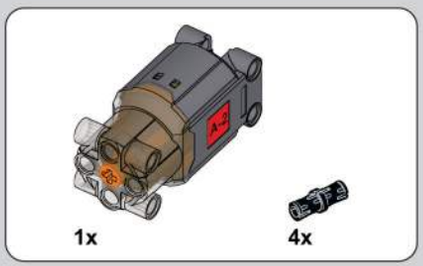

1835

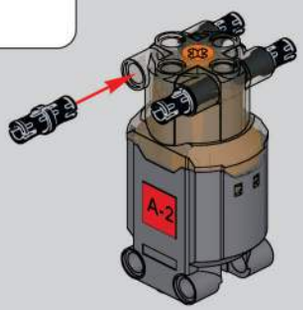

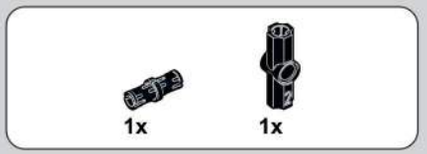

1836

1837

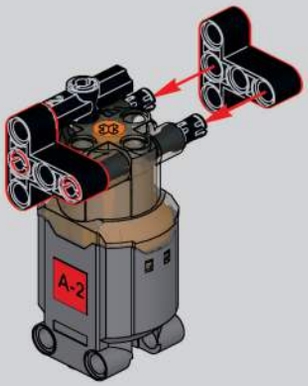

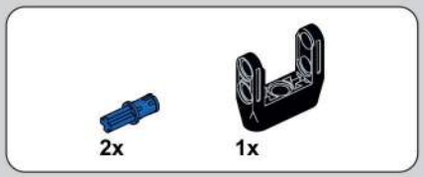

1838

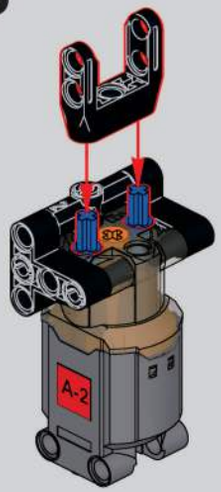

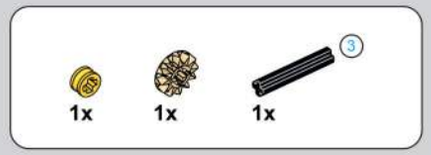

1839

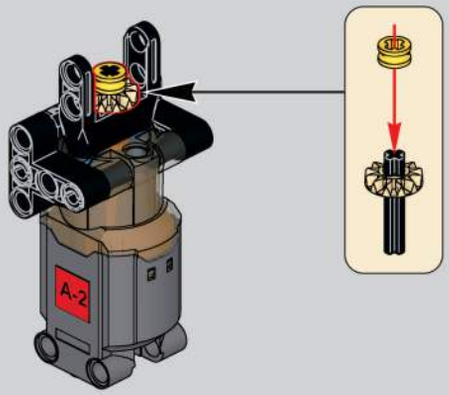

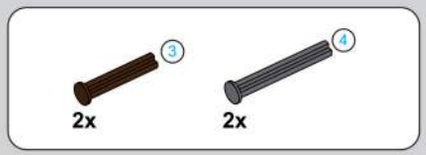

1840

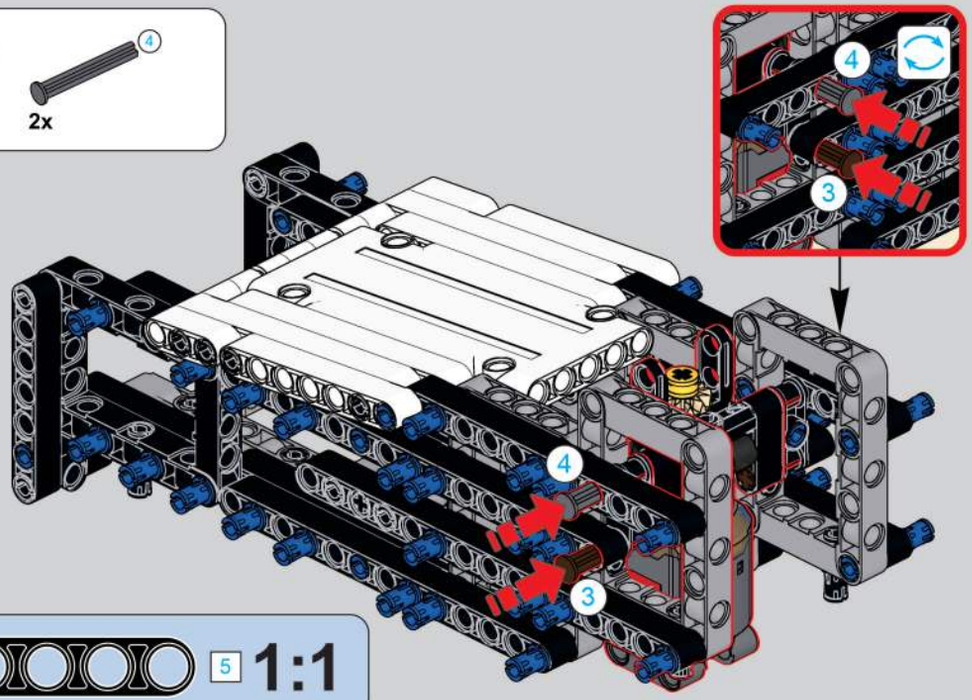

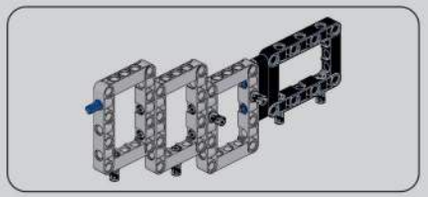

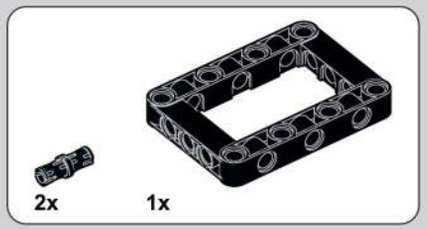

1841

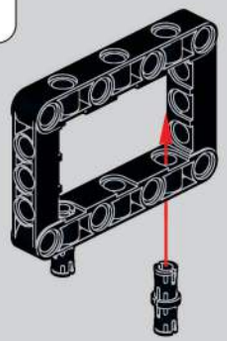

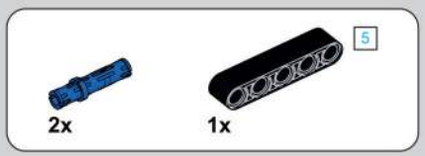

1842

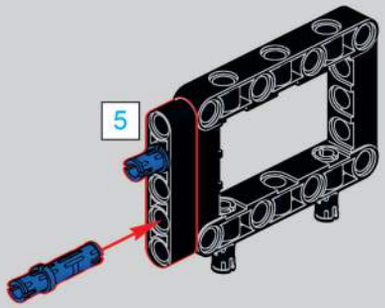

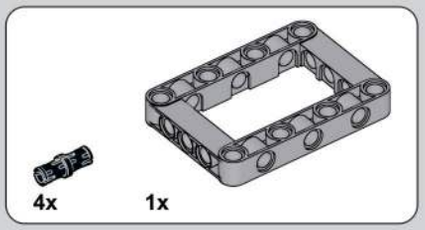

1843

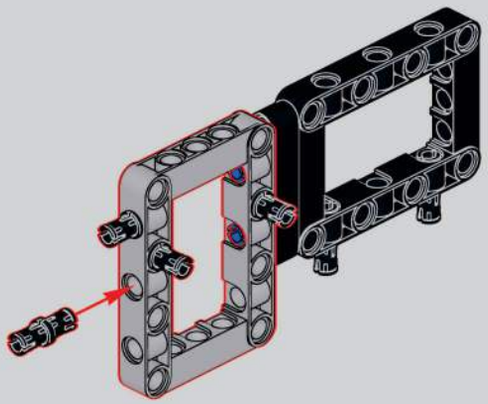

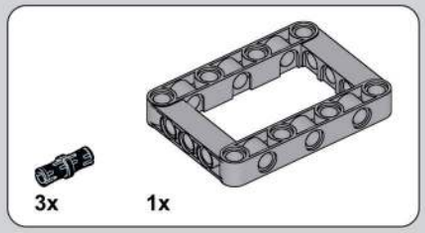

1844

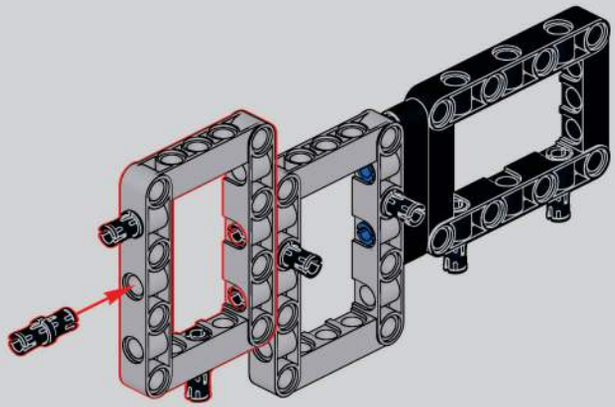

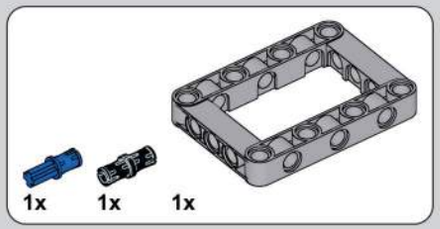

1845

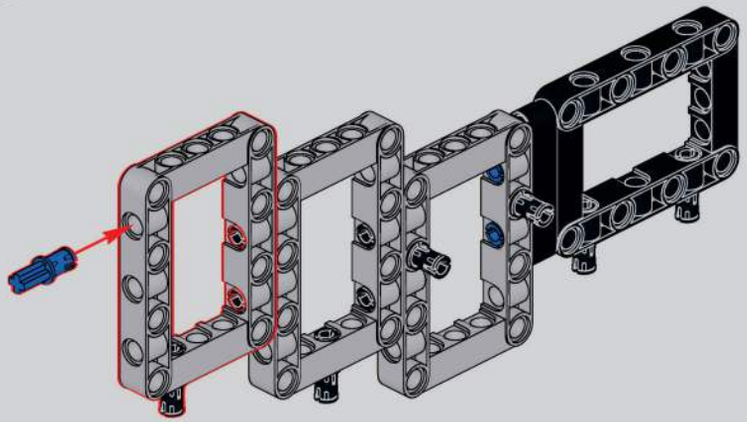

1846

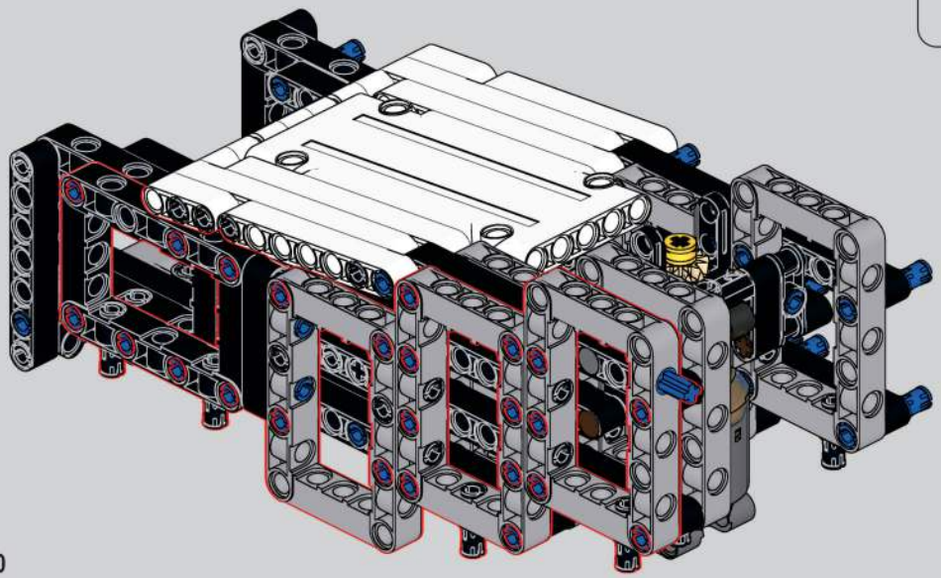

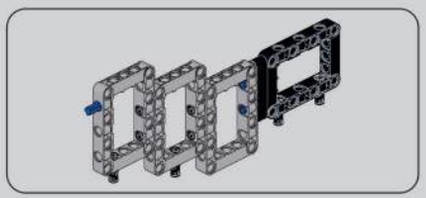

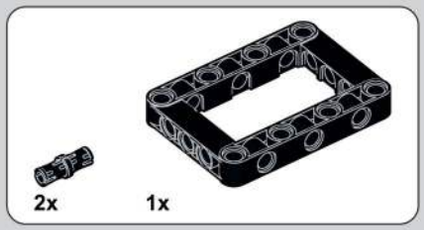

1847

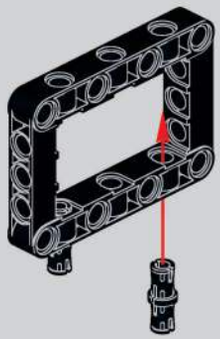

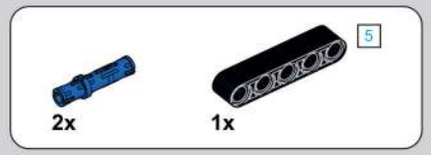

1848

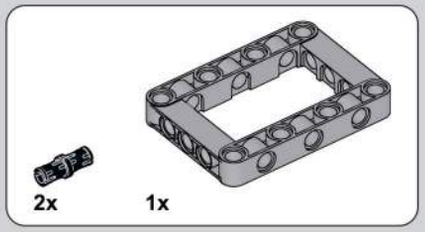

1849

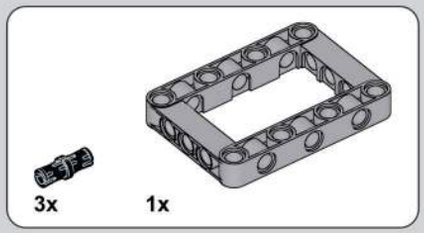

1850

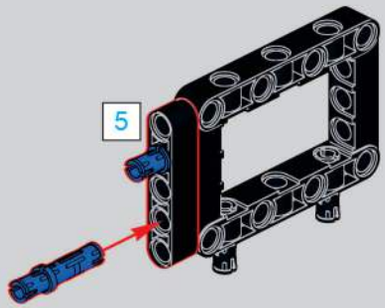

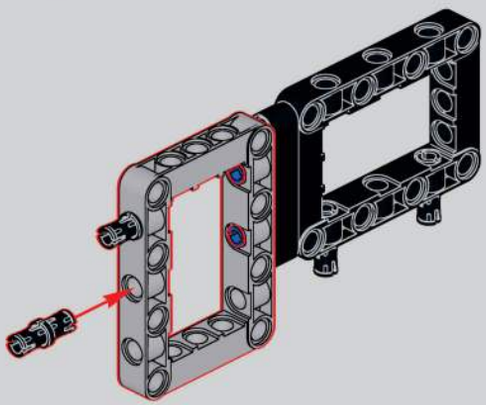

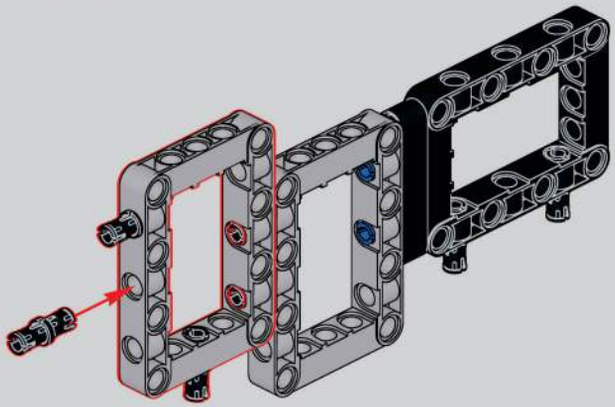

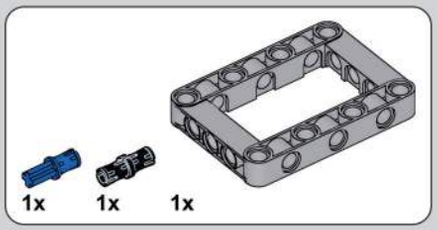

1851

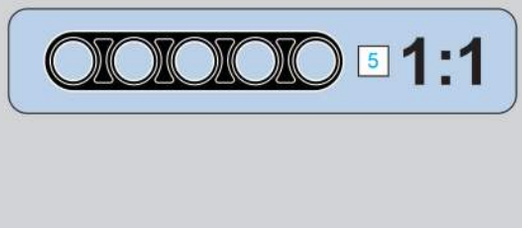

1852

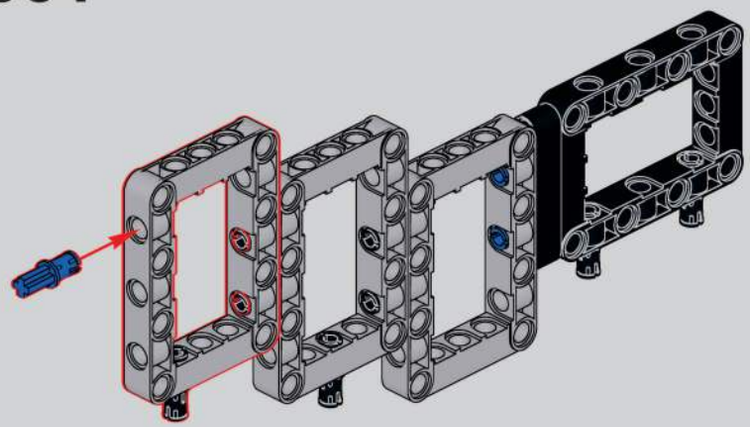

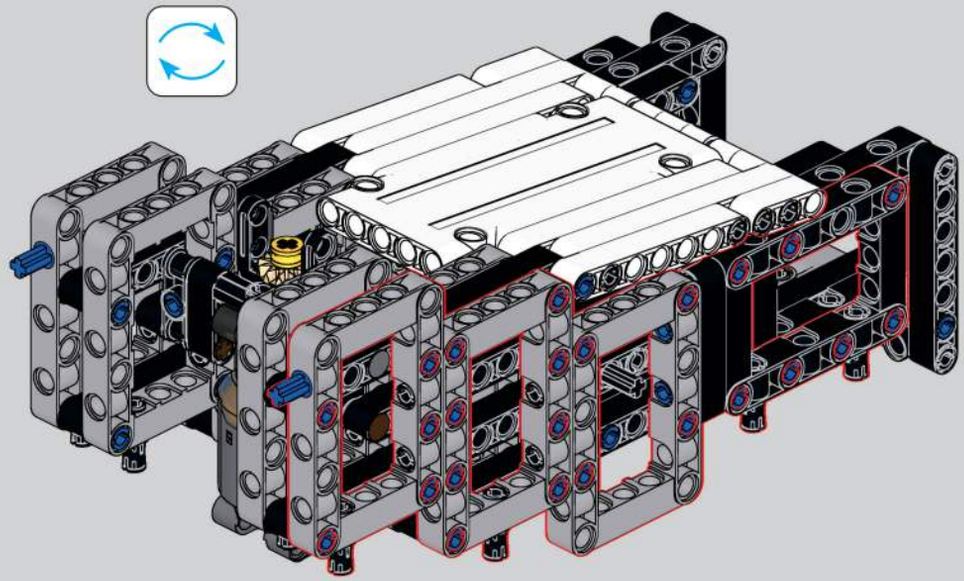

1853

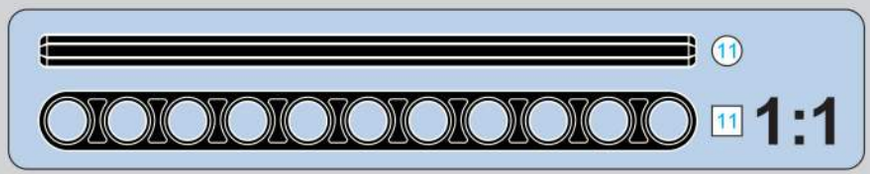

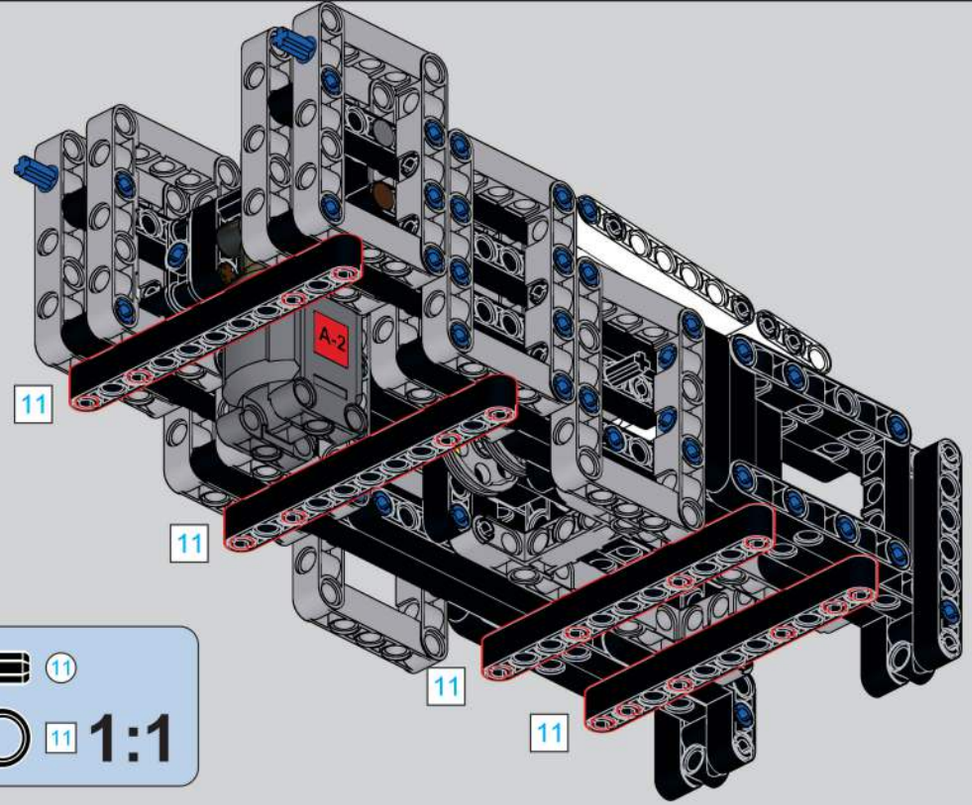

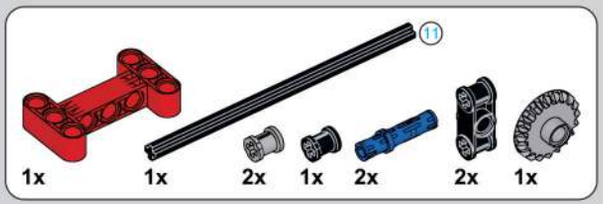

1854

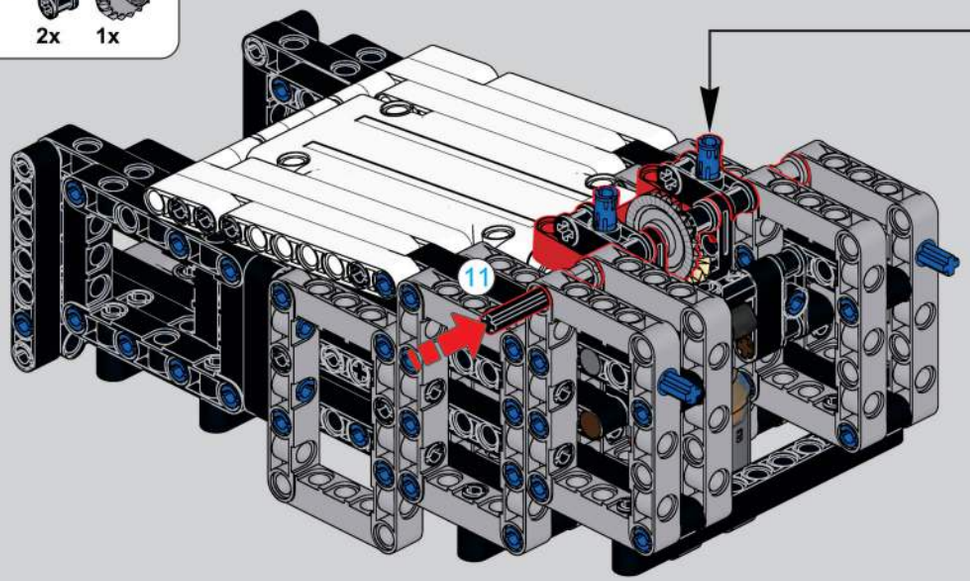

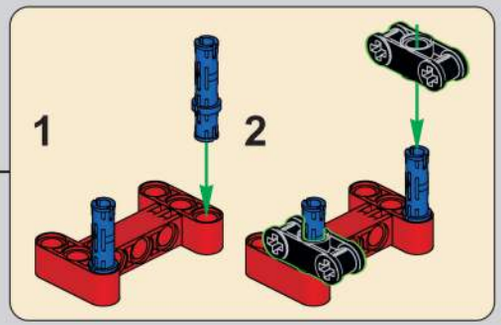

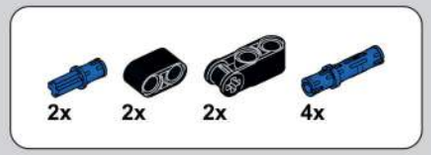

1855

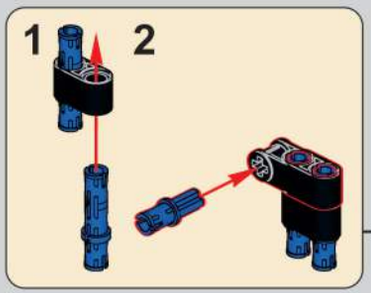

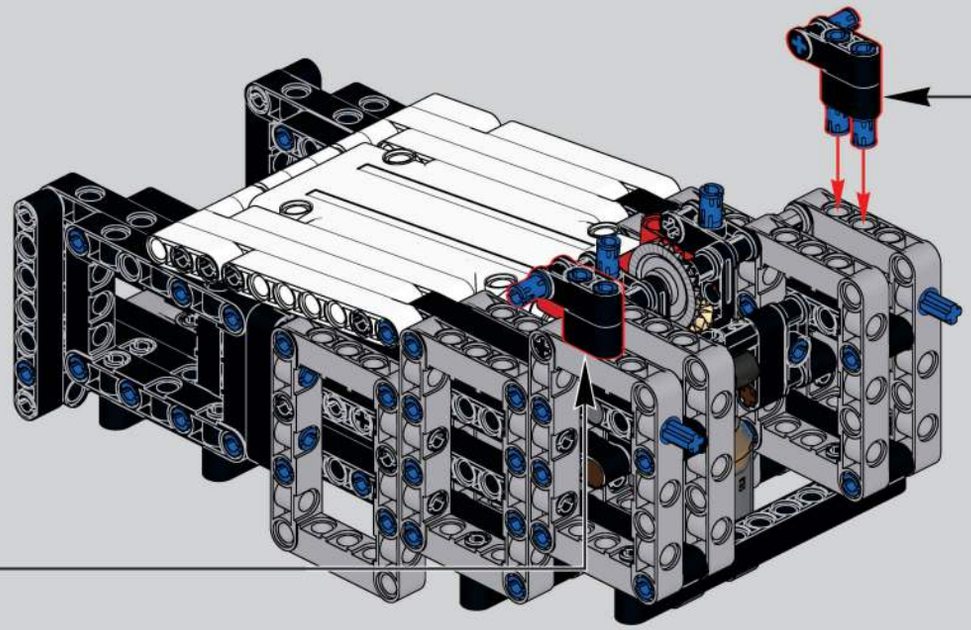

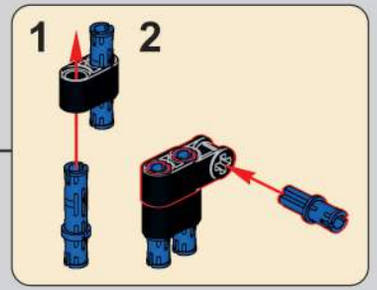

1856

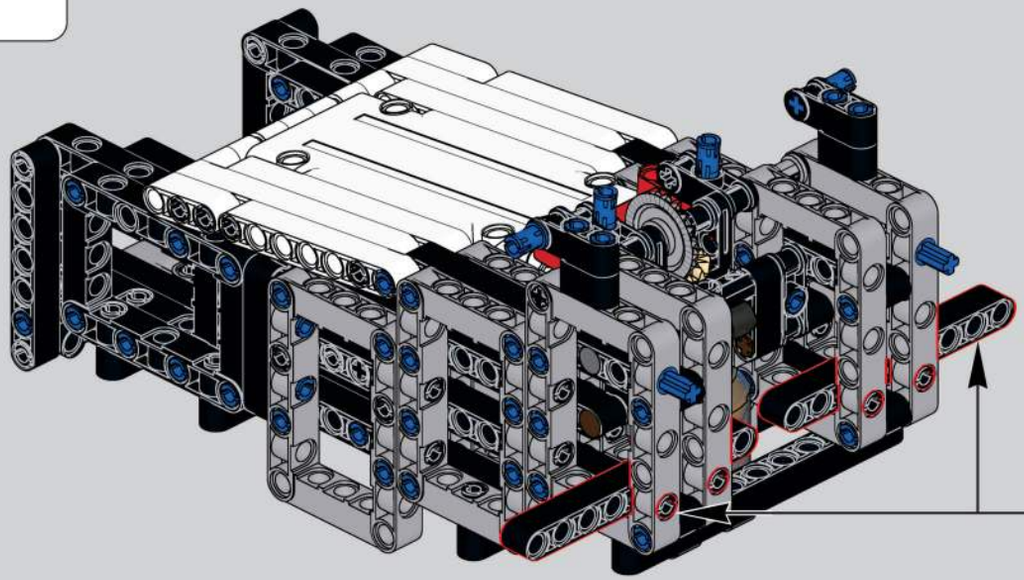

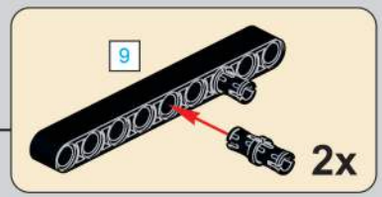

1857

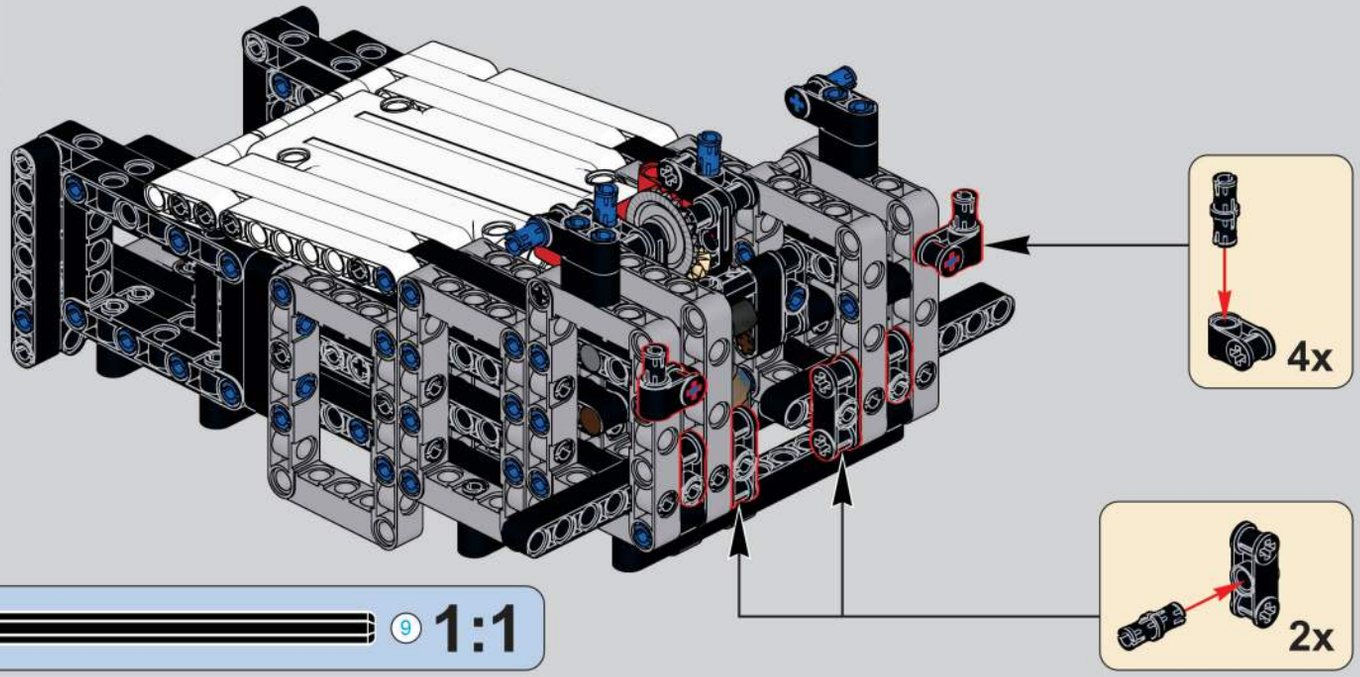

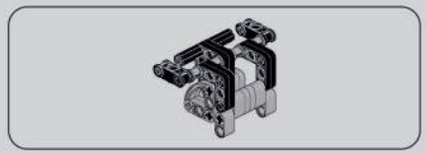

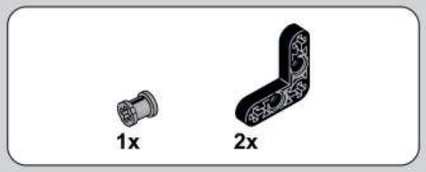

1859

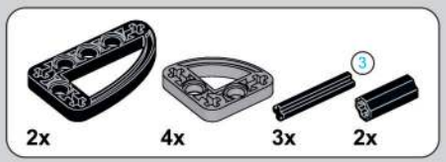

1860

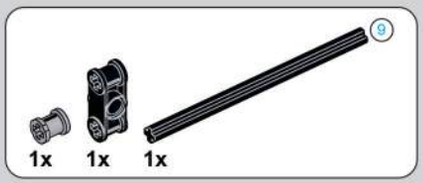

1858

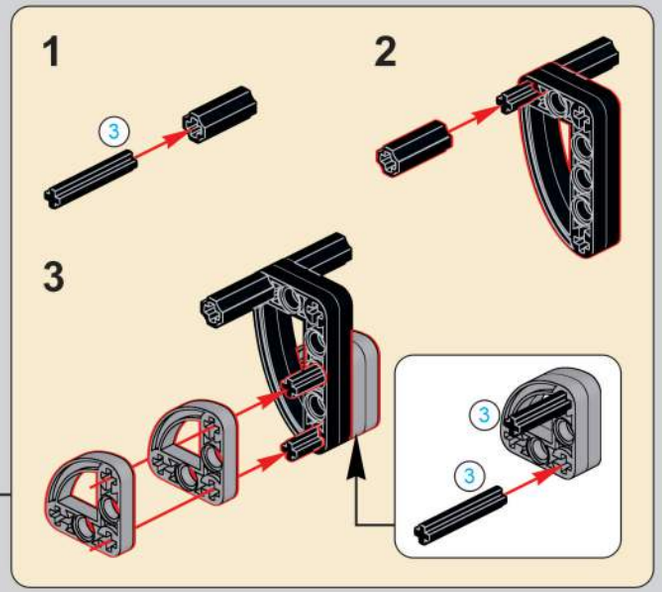

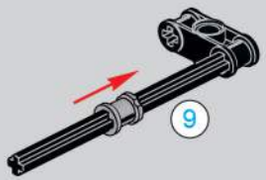

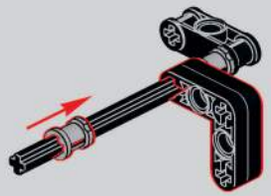

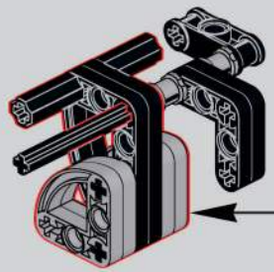

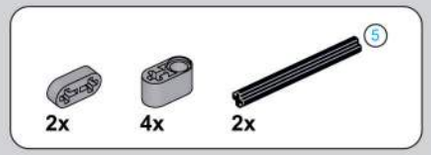

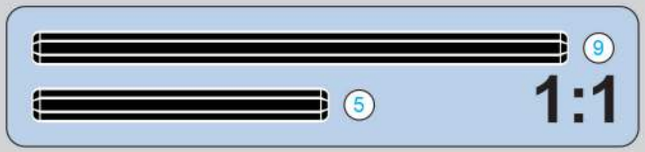

1861

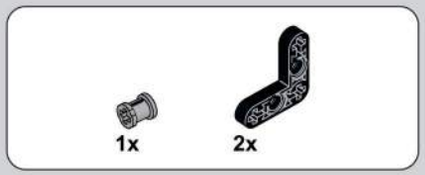

1862

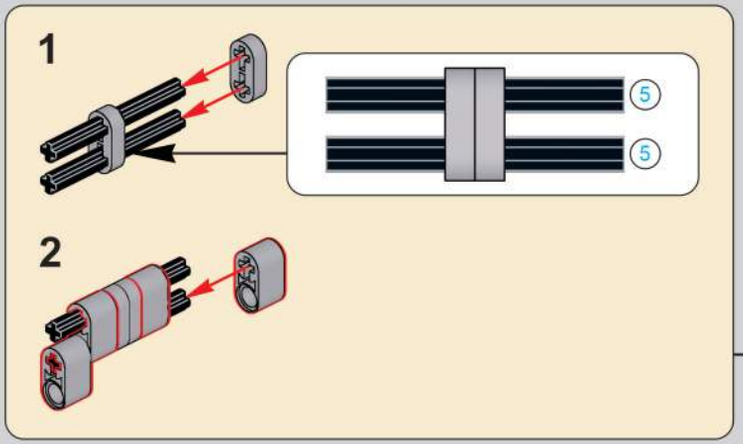

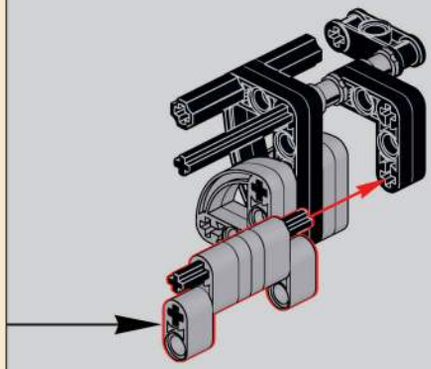

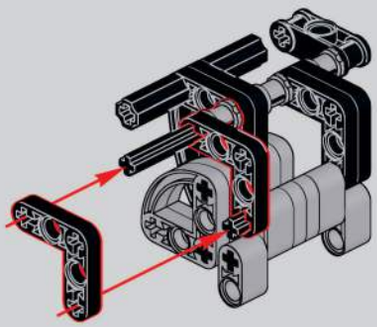

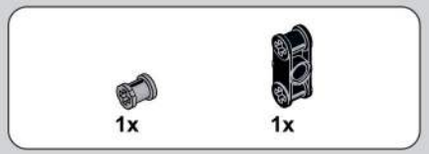

1863

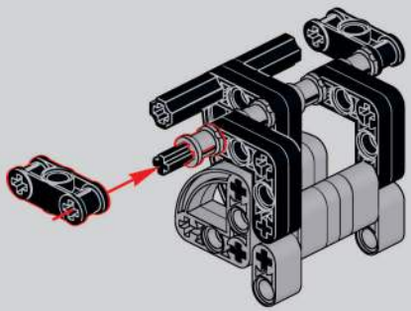

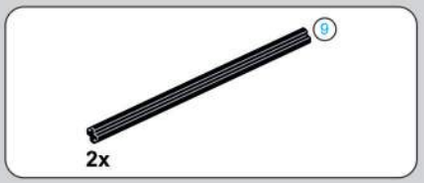

1864

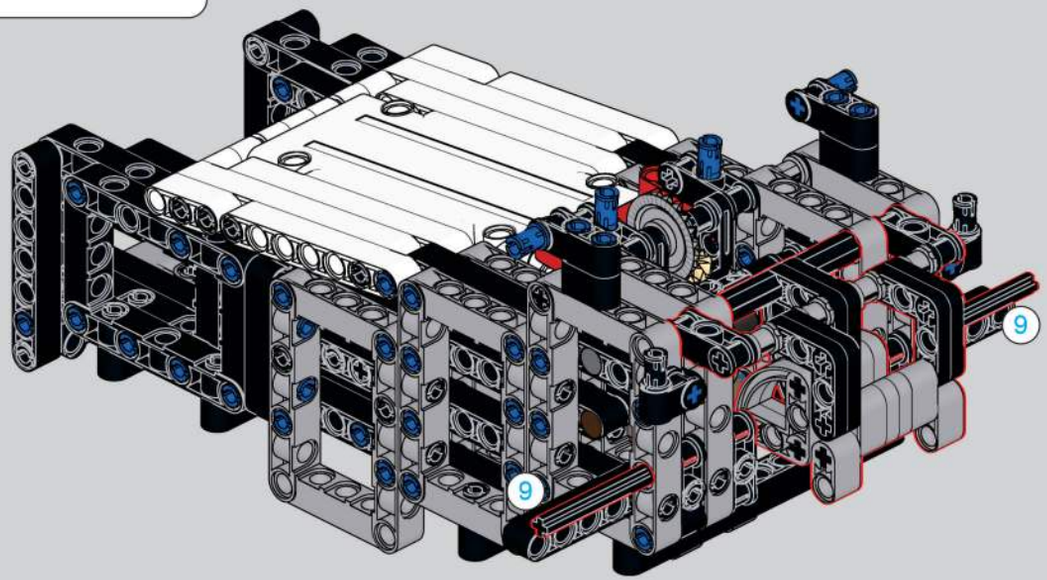

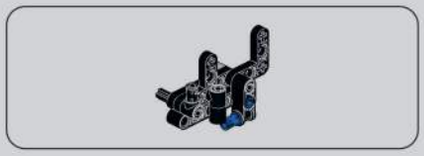

1865

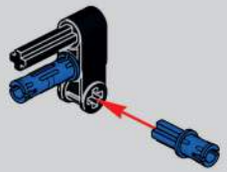

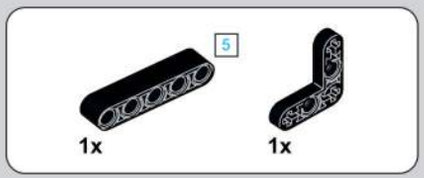

1866

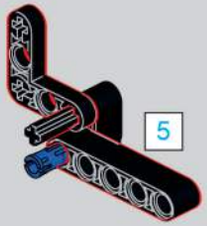

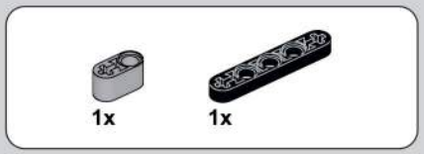

1867

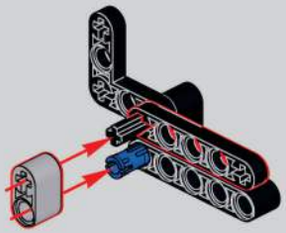

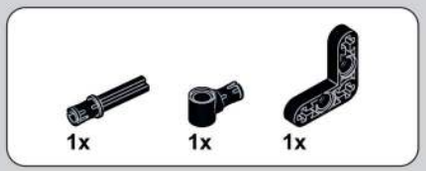

1868

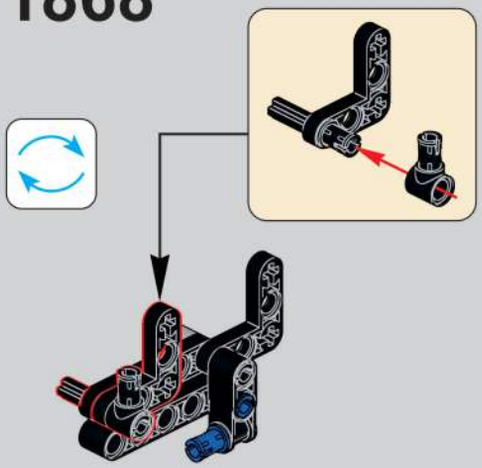

1869

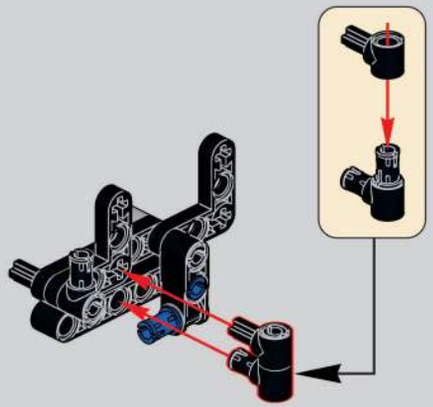

1870

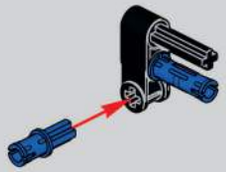

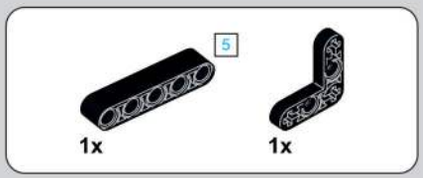

1871

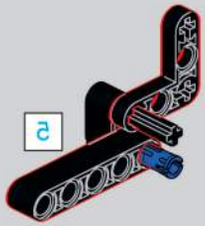

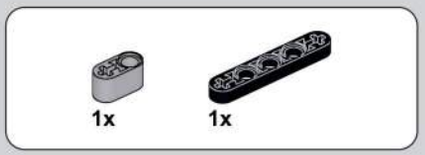

1872

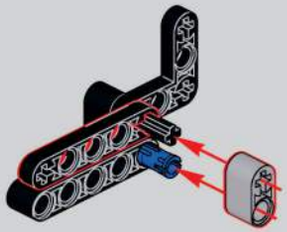

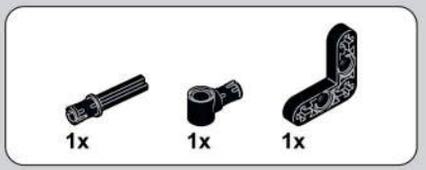

1873

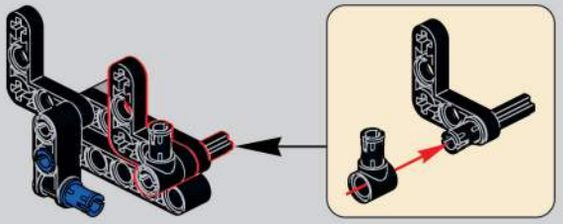

1874

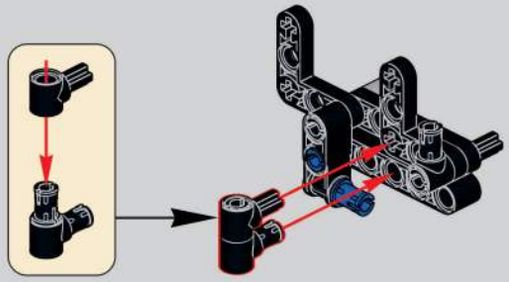

1875

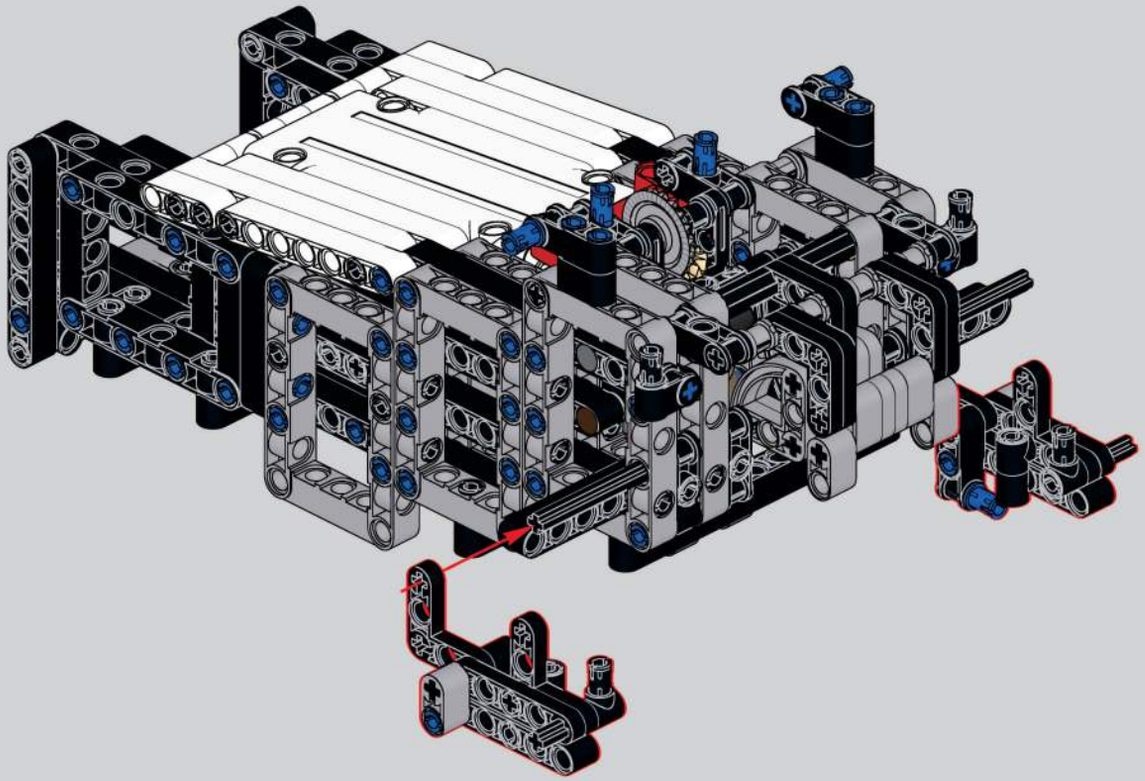

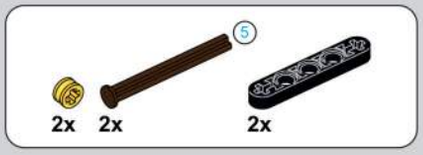

1876

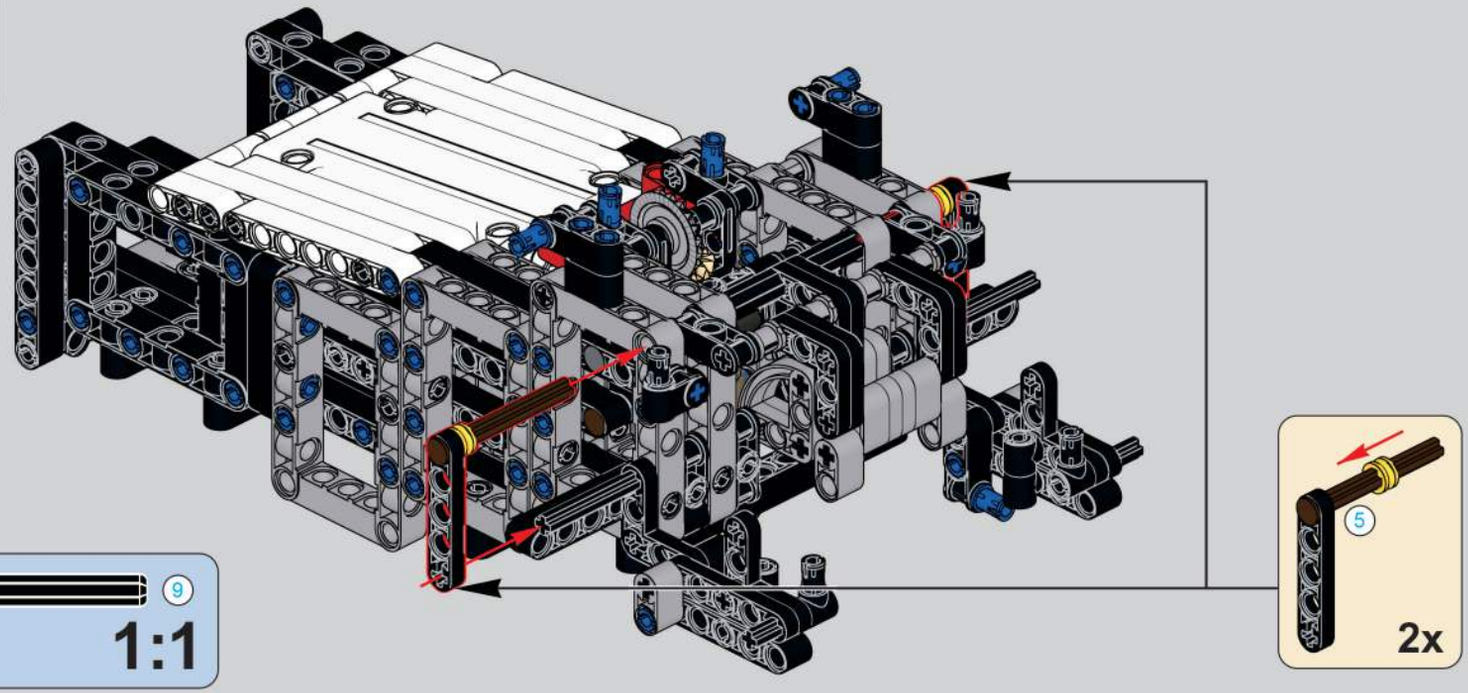

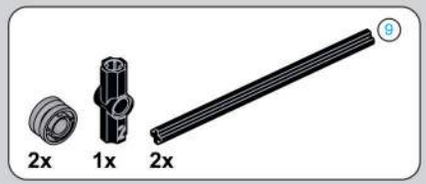

1877

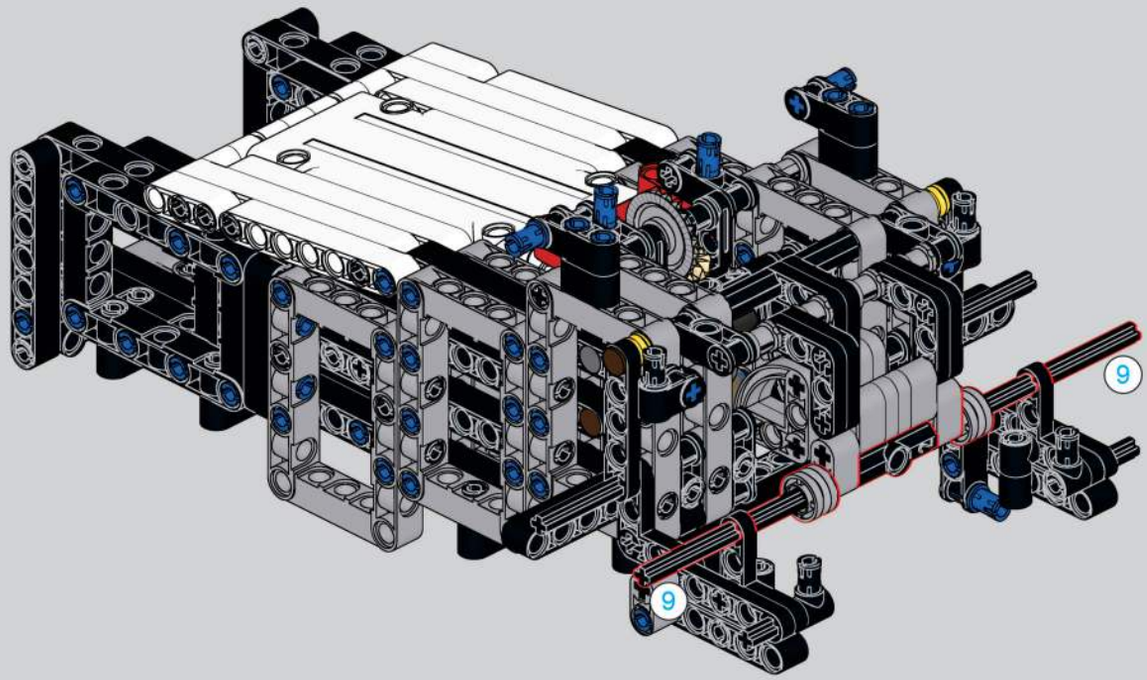

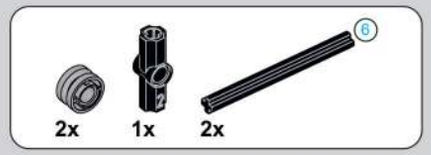

1878

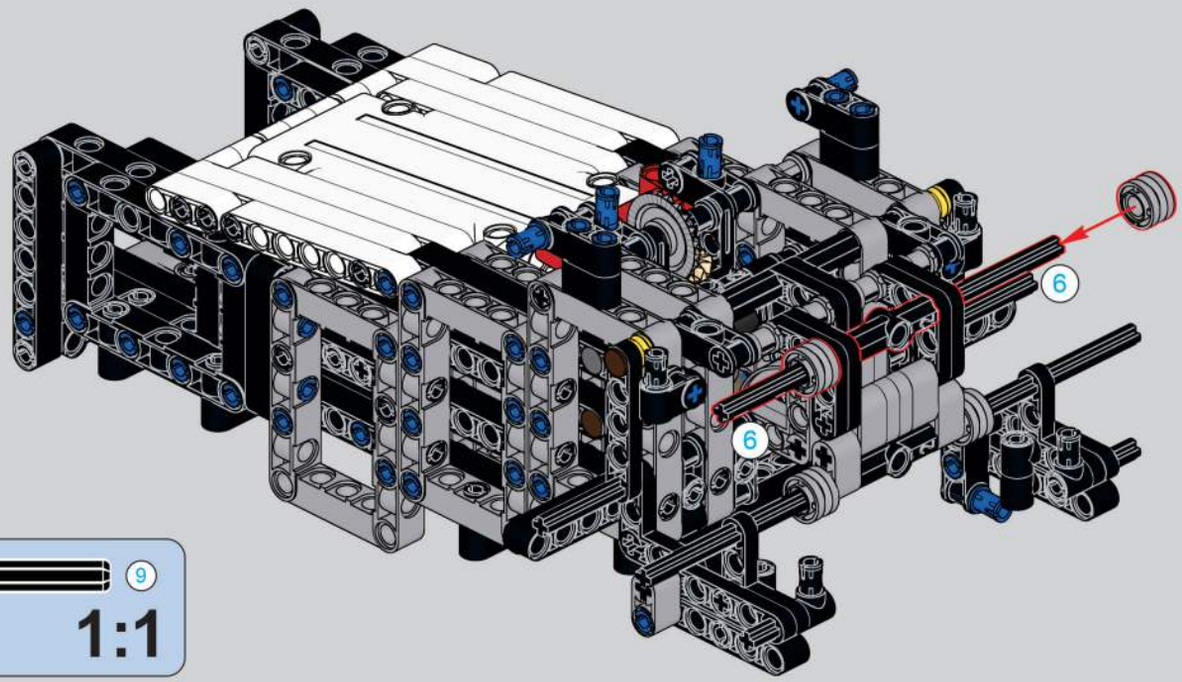

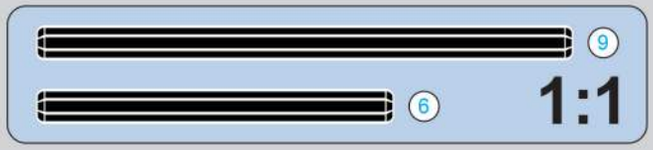

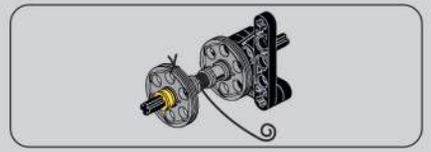

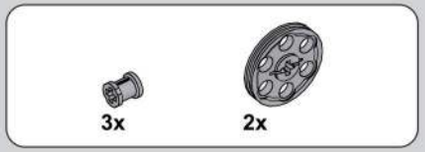

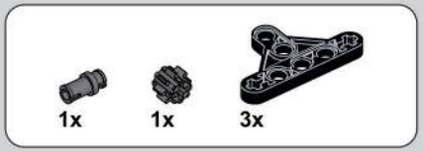

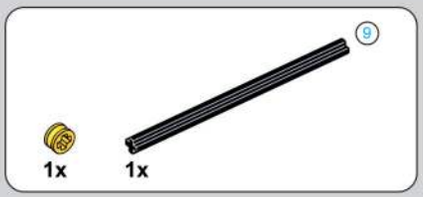

1879

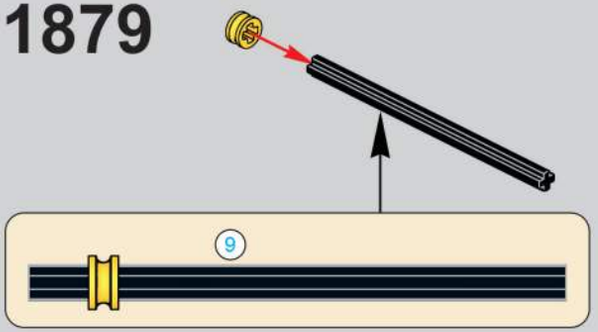

1880

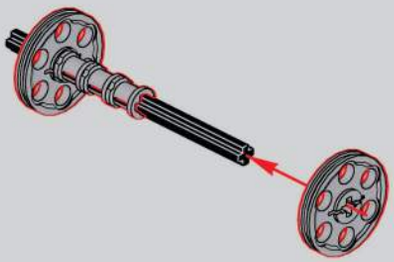

1881

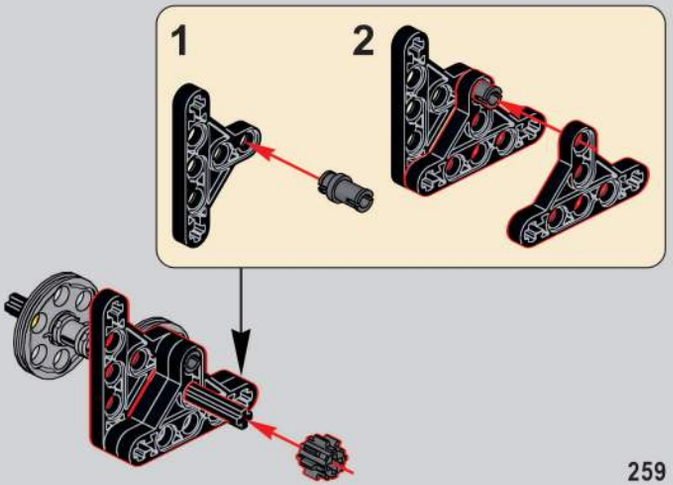

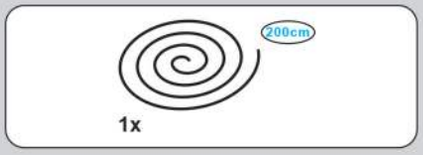

1882

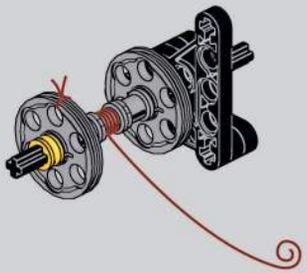

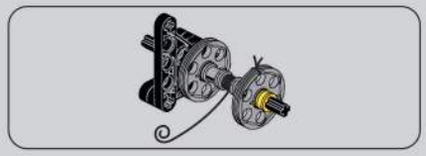

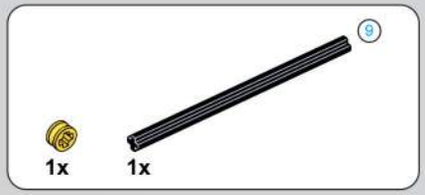

1883

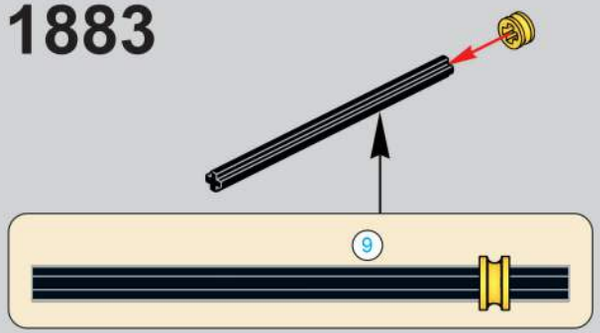

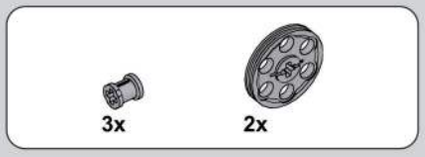

1884

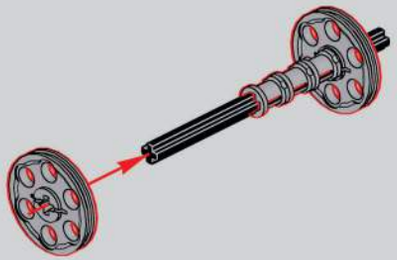

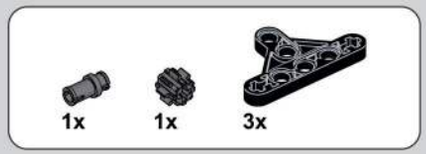

1885

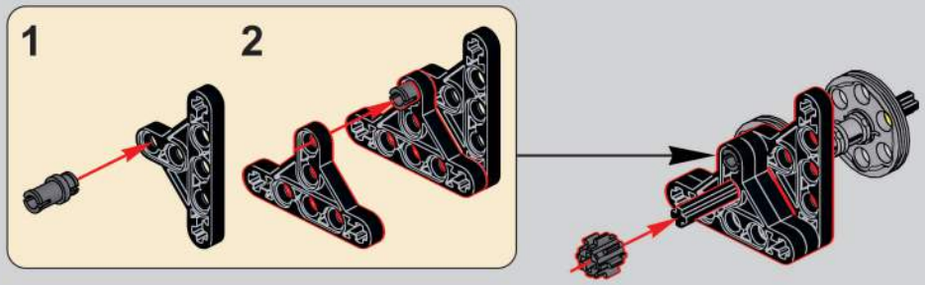

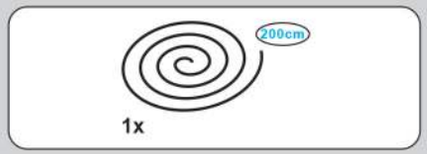

1886

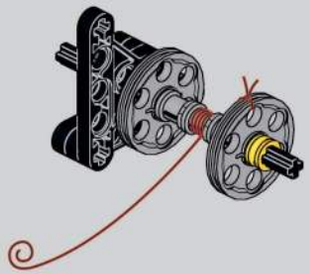

1887

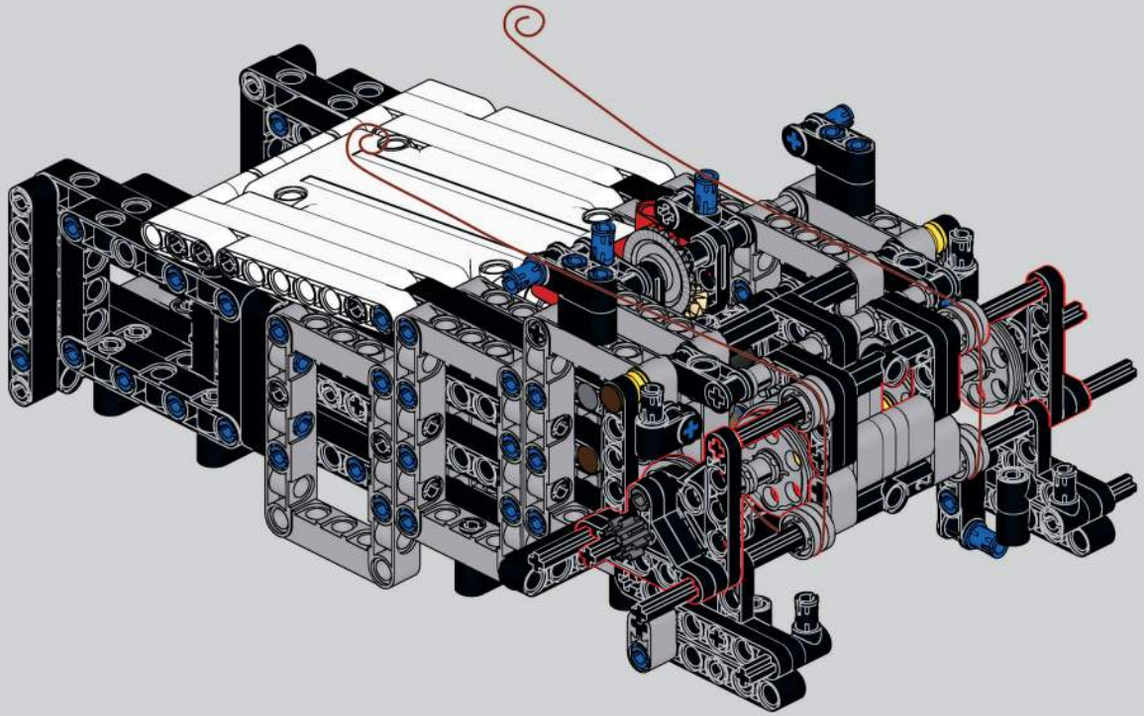

1:1

3 1:1

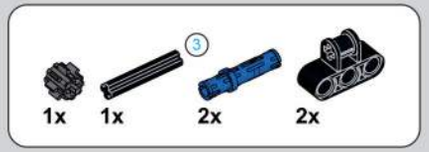

1888

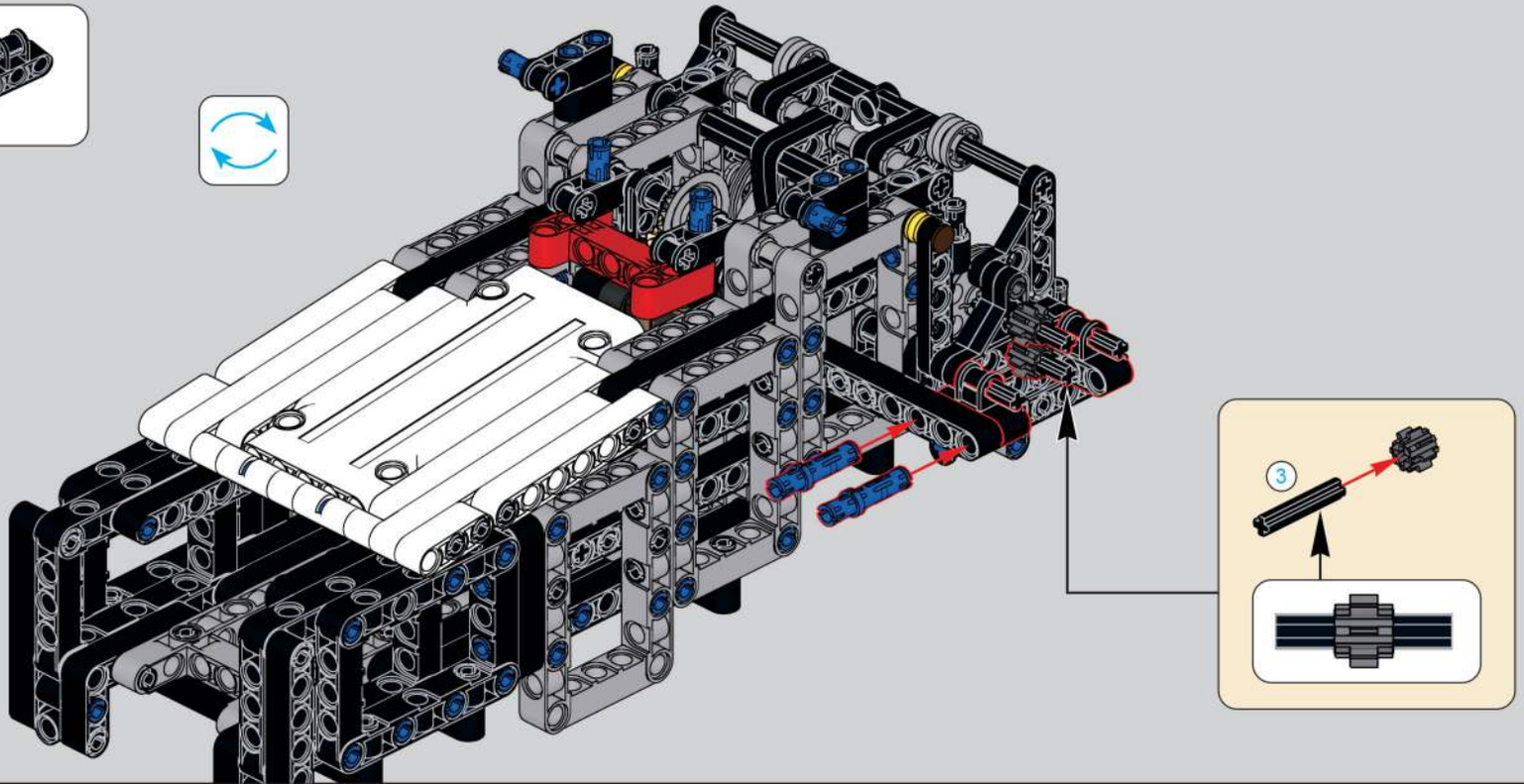

2x

1889

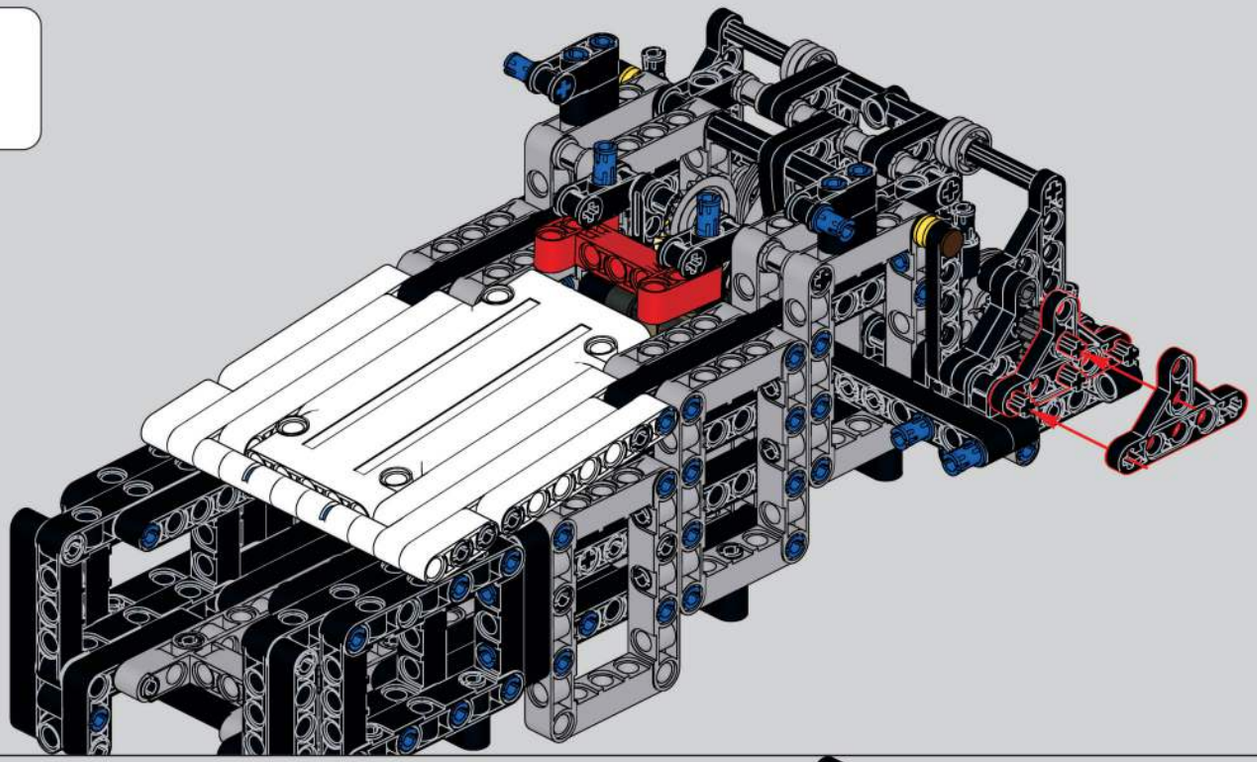

1x

1890

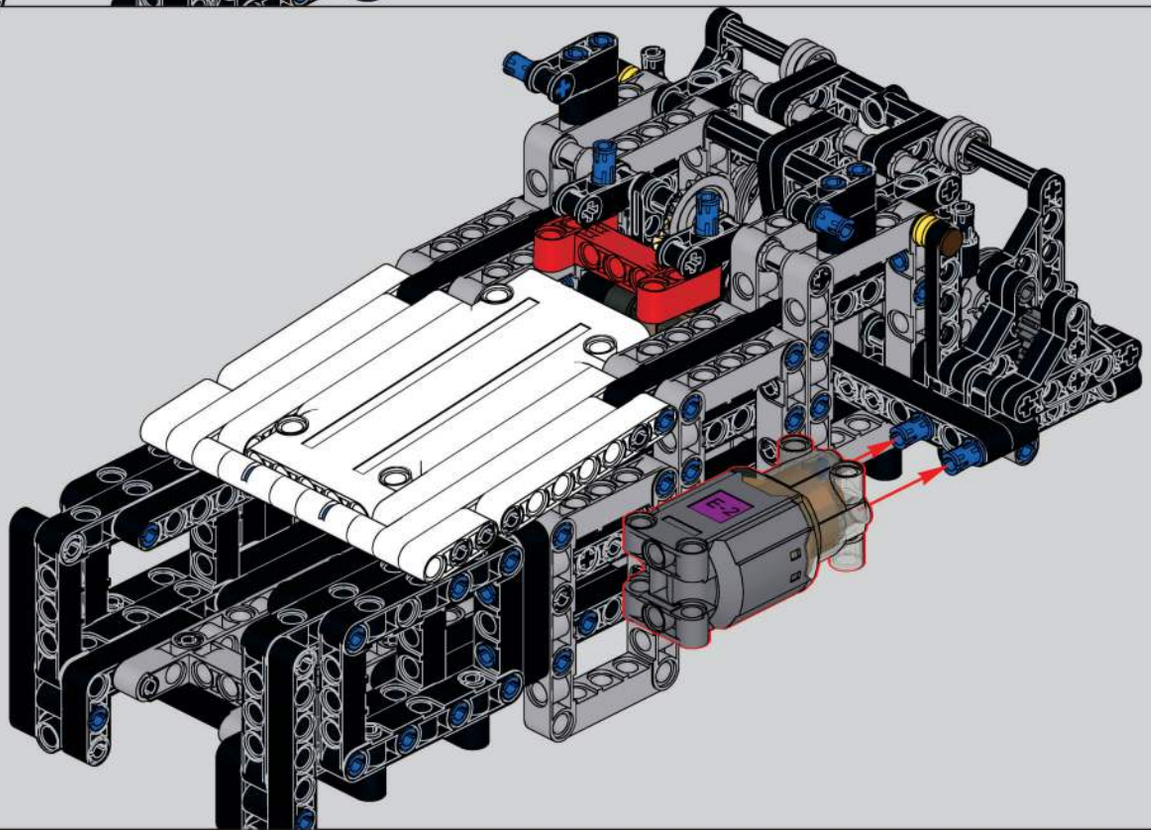

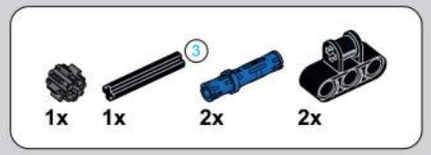

1891

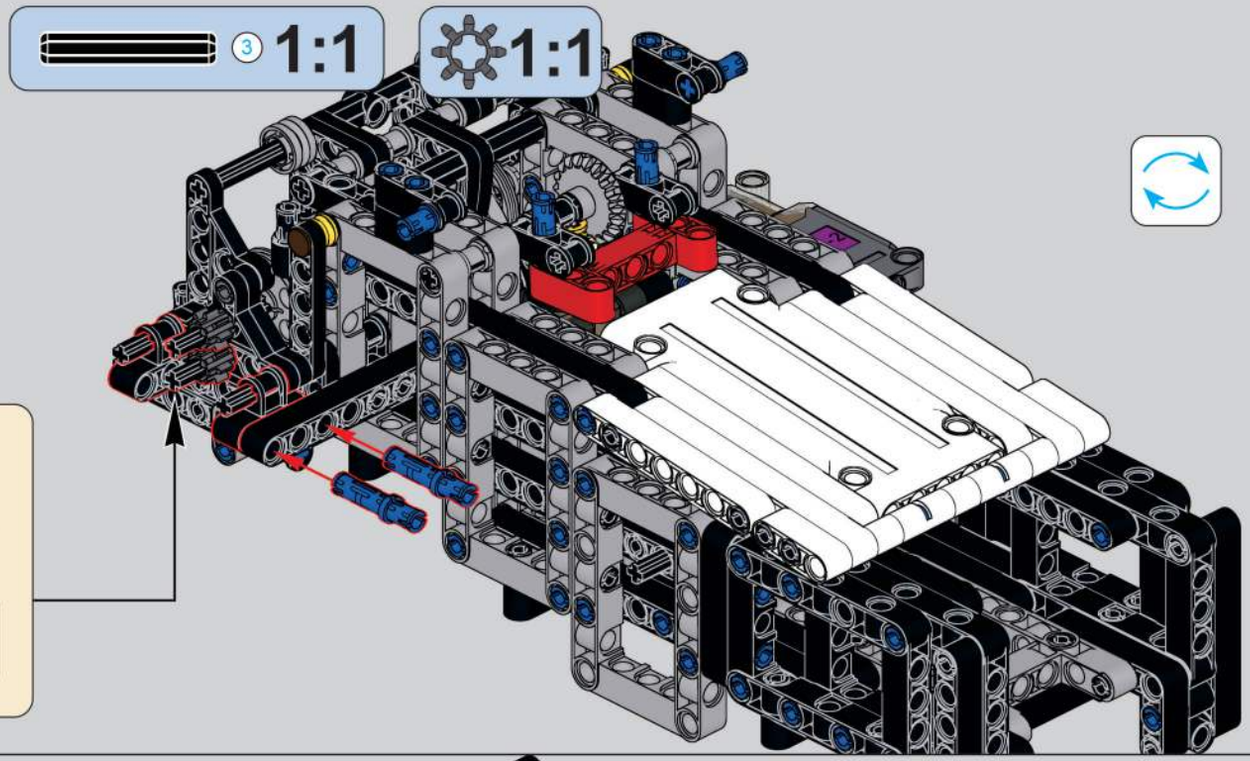

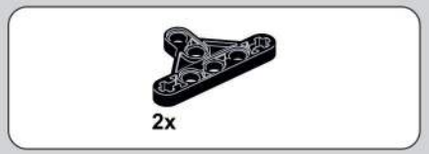

1892

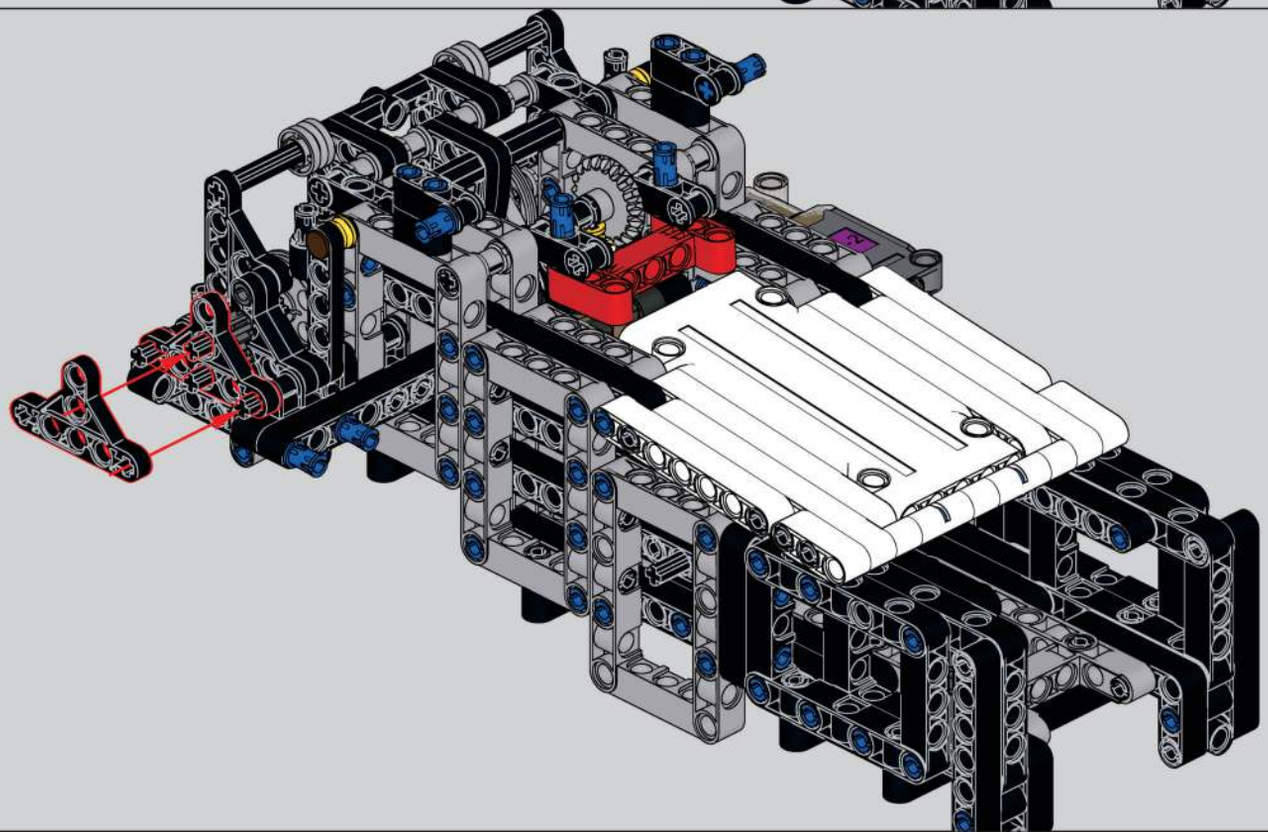

1x

1893

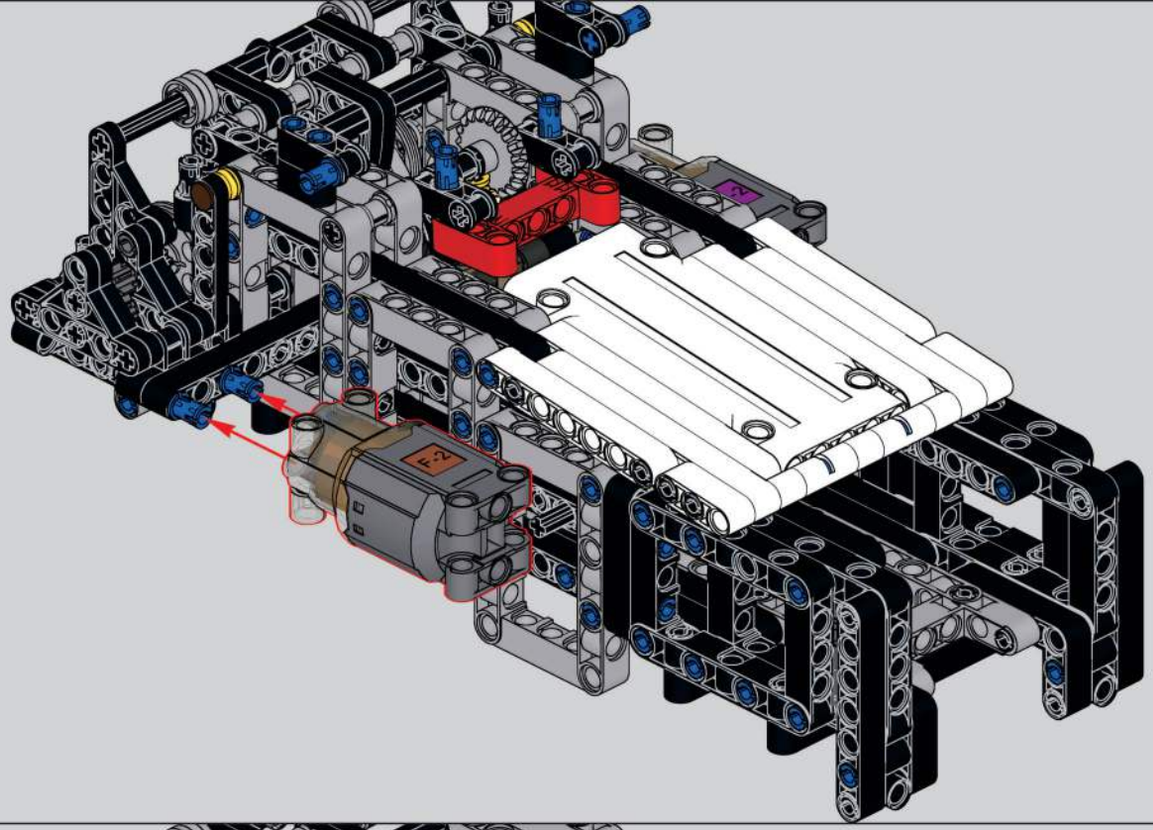

2x

1894

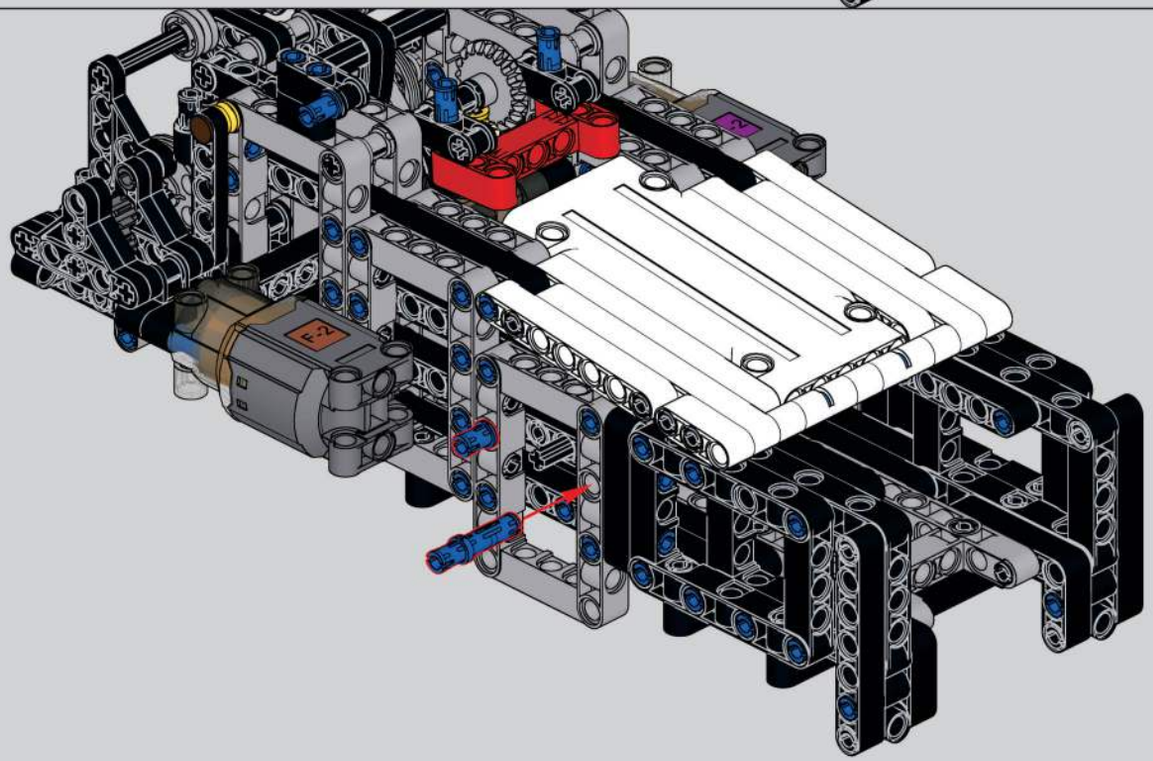

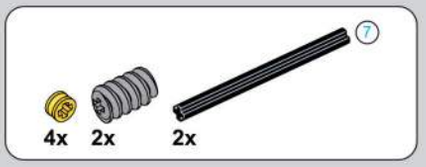

1895

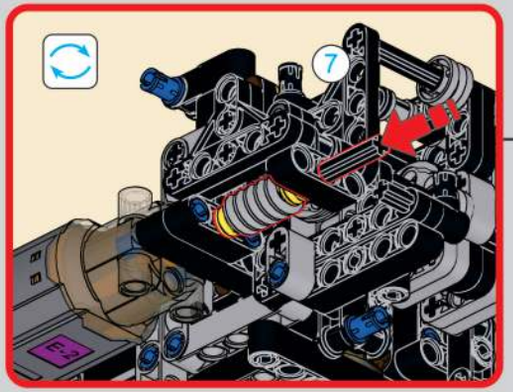

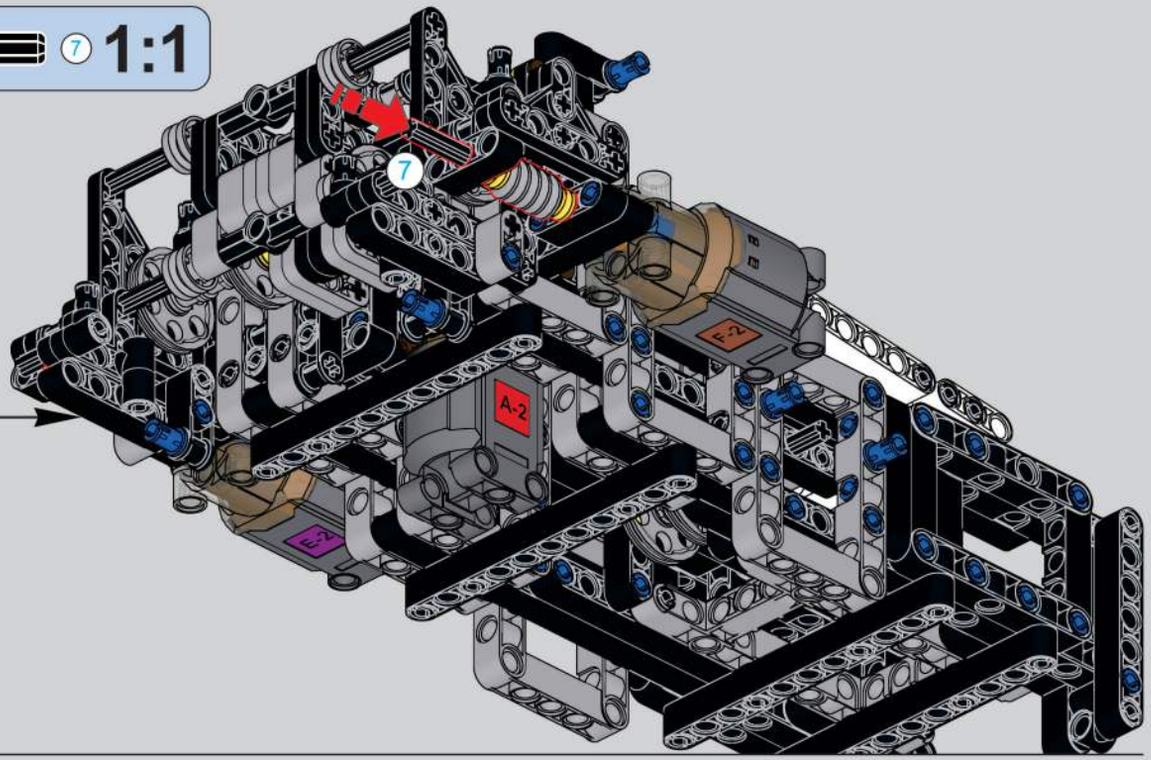

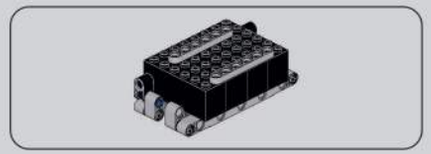

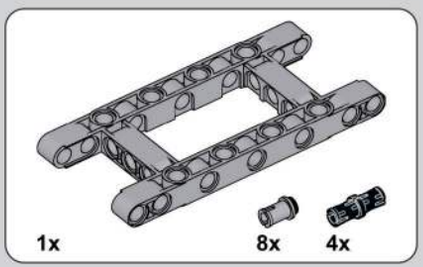

1896

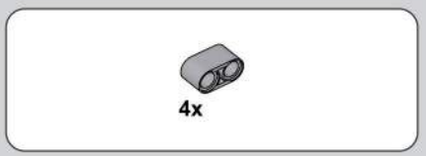

1897

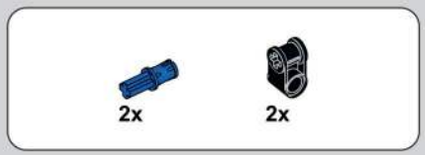

1898

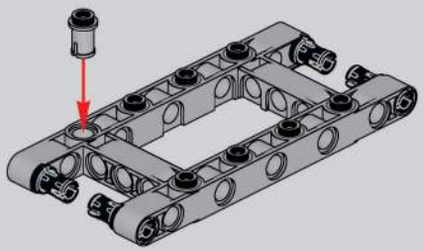

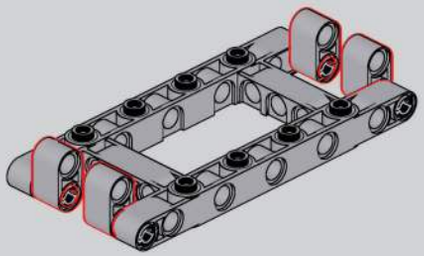

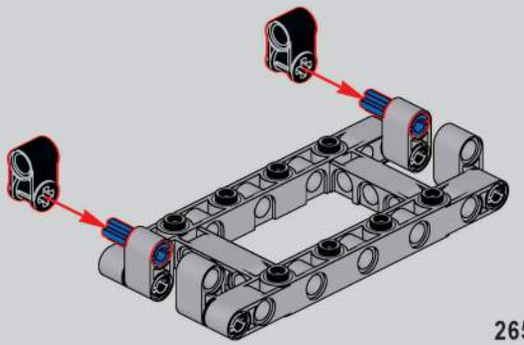

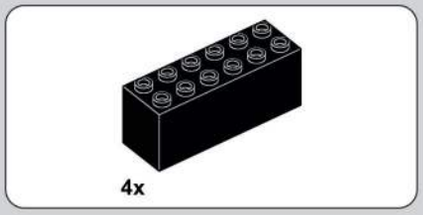

1899

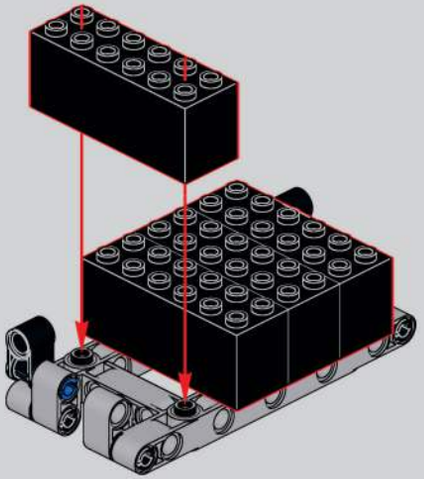

1900

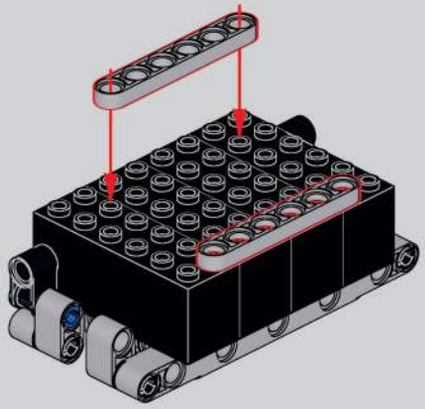

1901

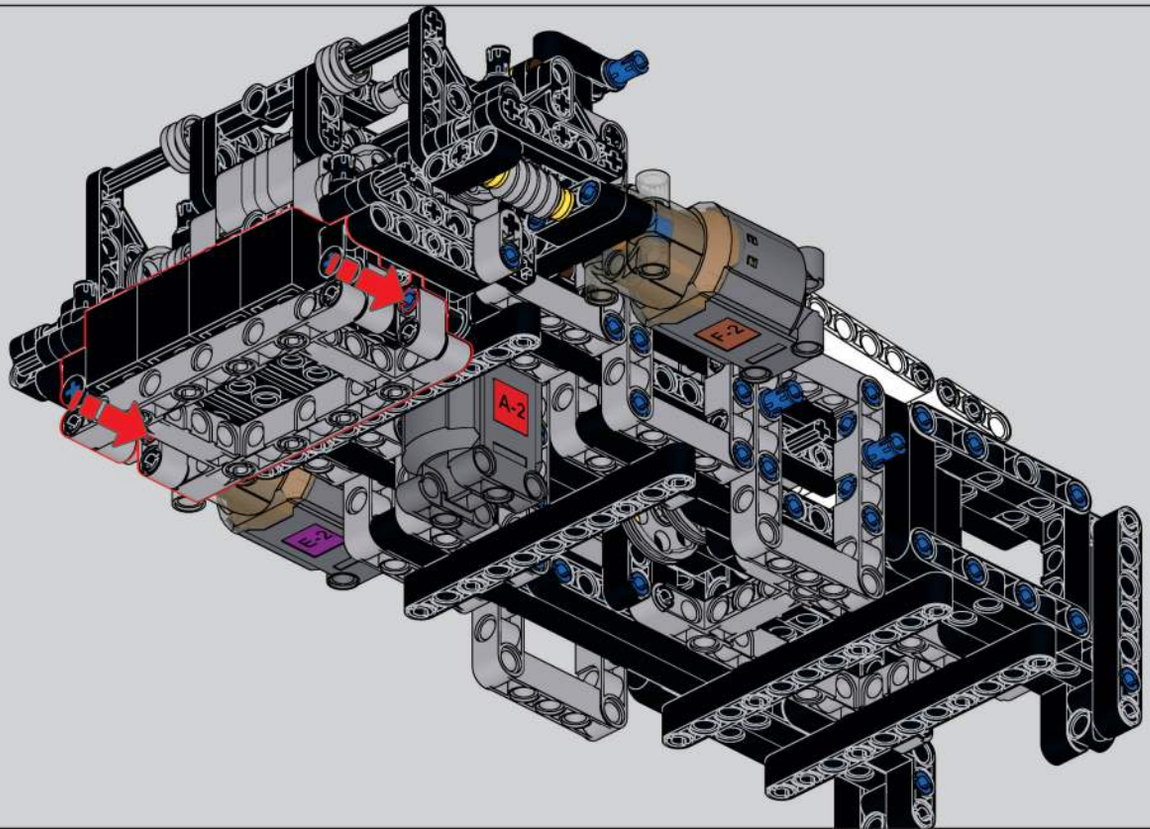

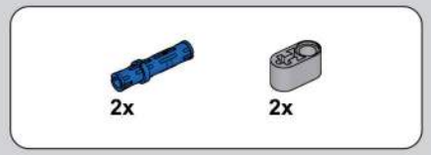

1902

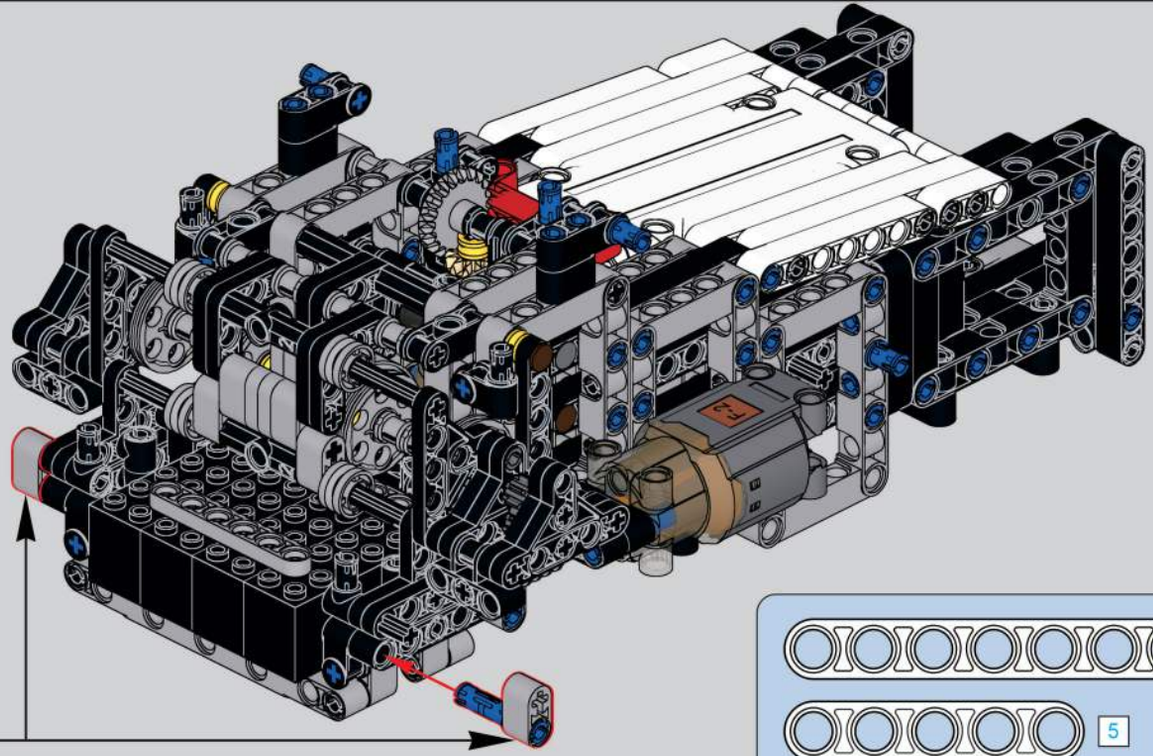

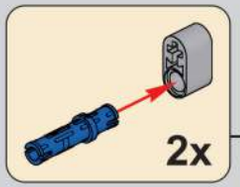

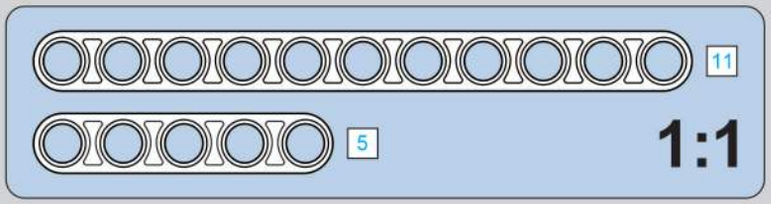

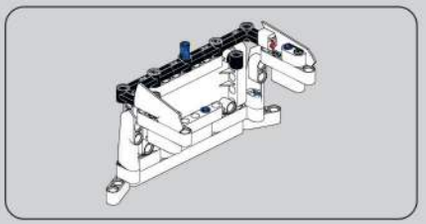

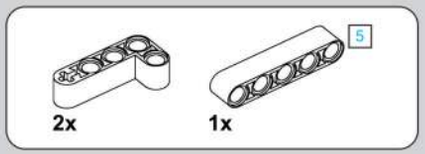

1904

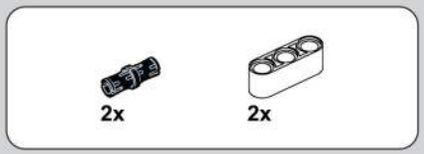

1905

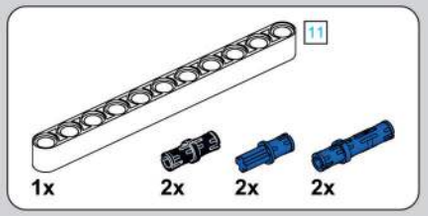

1903

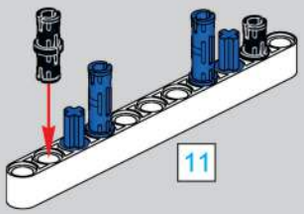

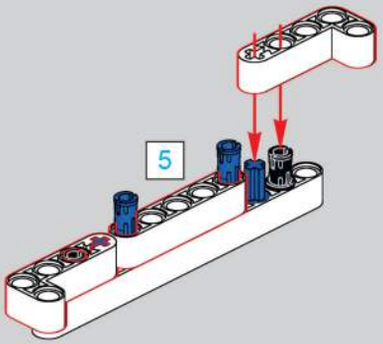

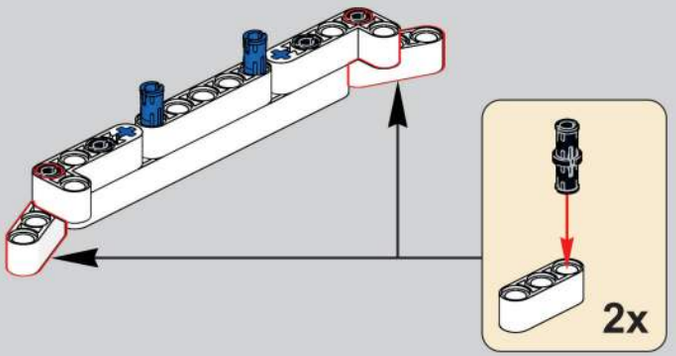

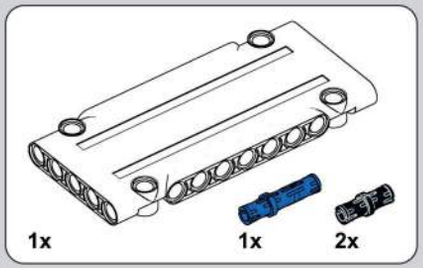

1906

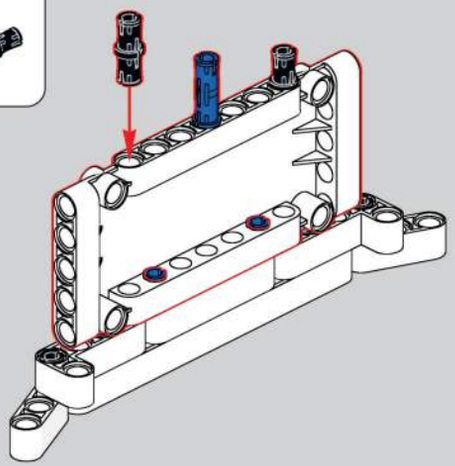

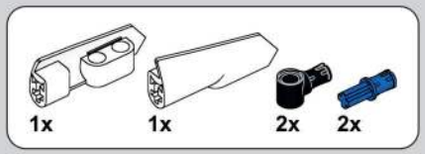

1907

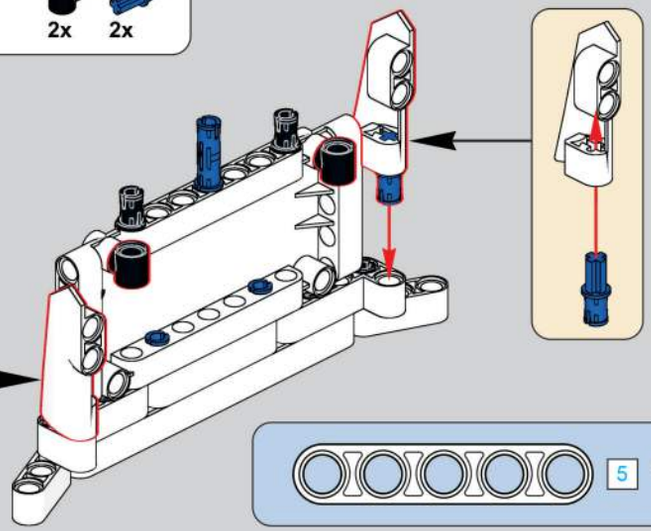

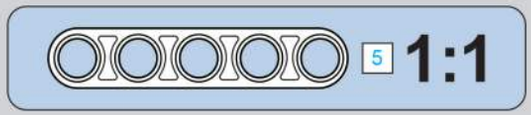

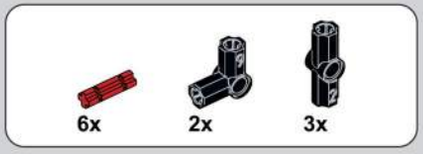

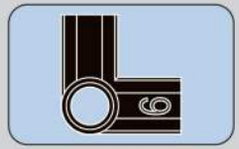

1908

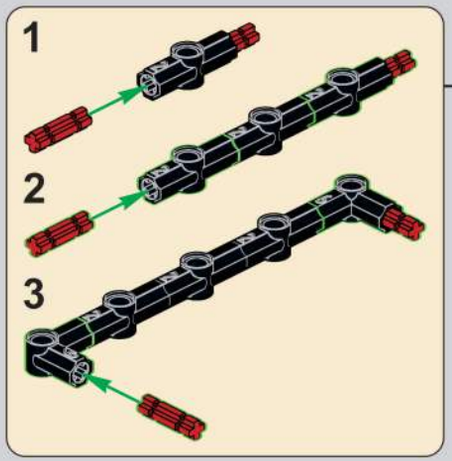

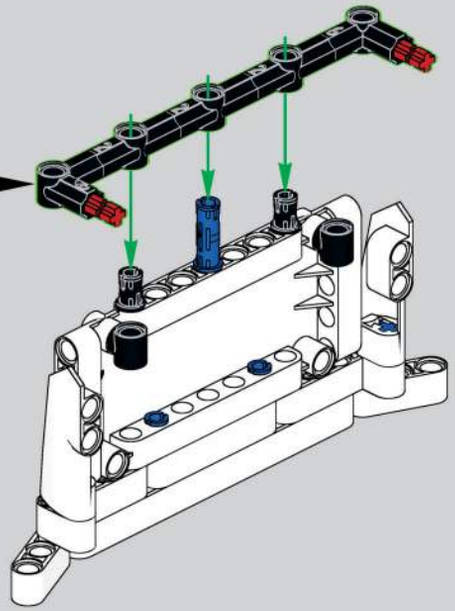

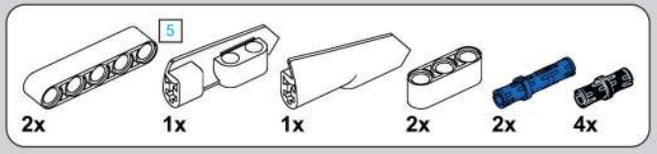

1909

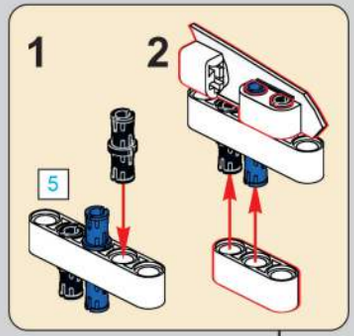

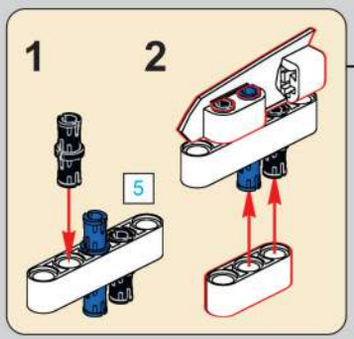

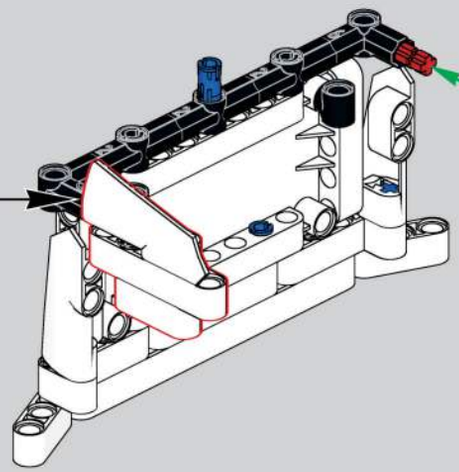

1910

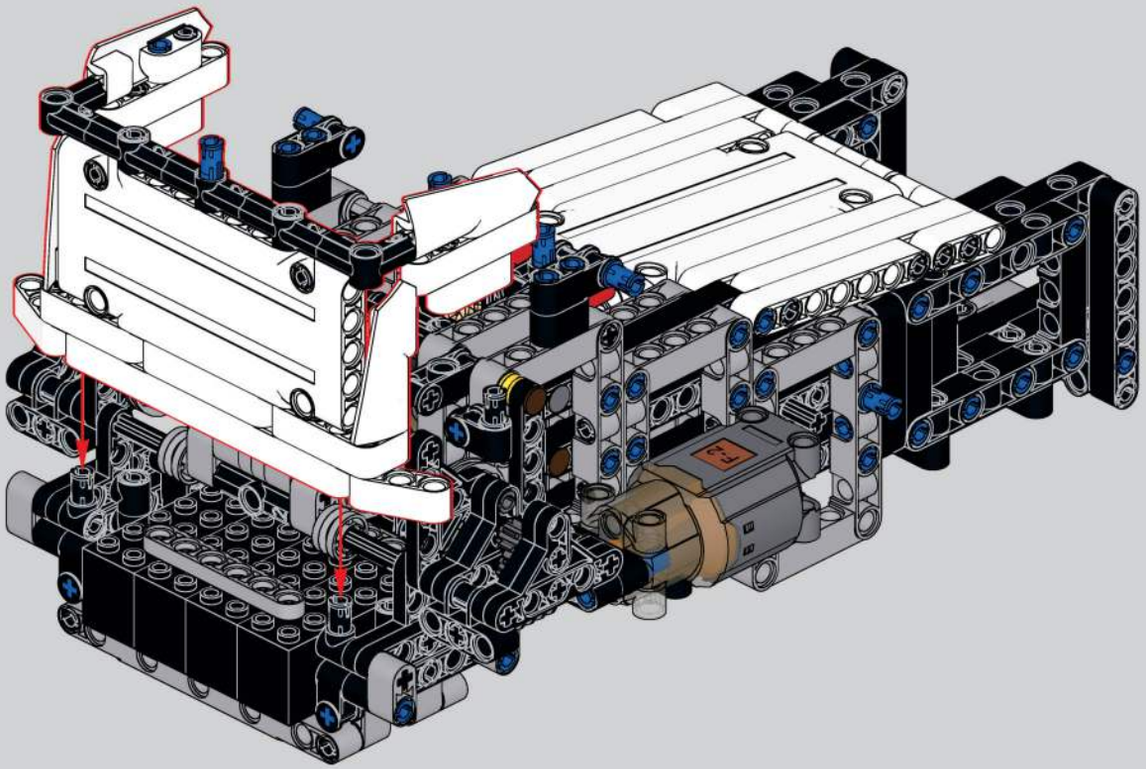

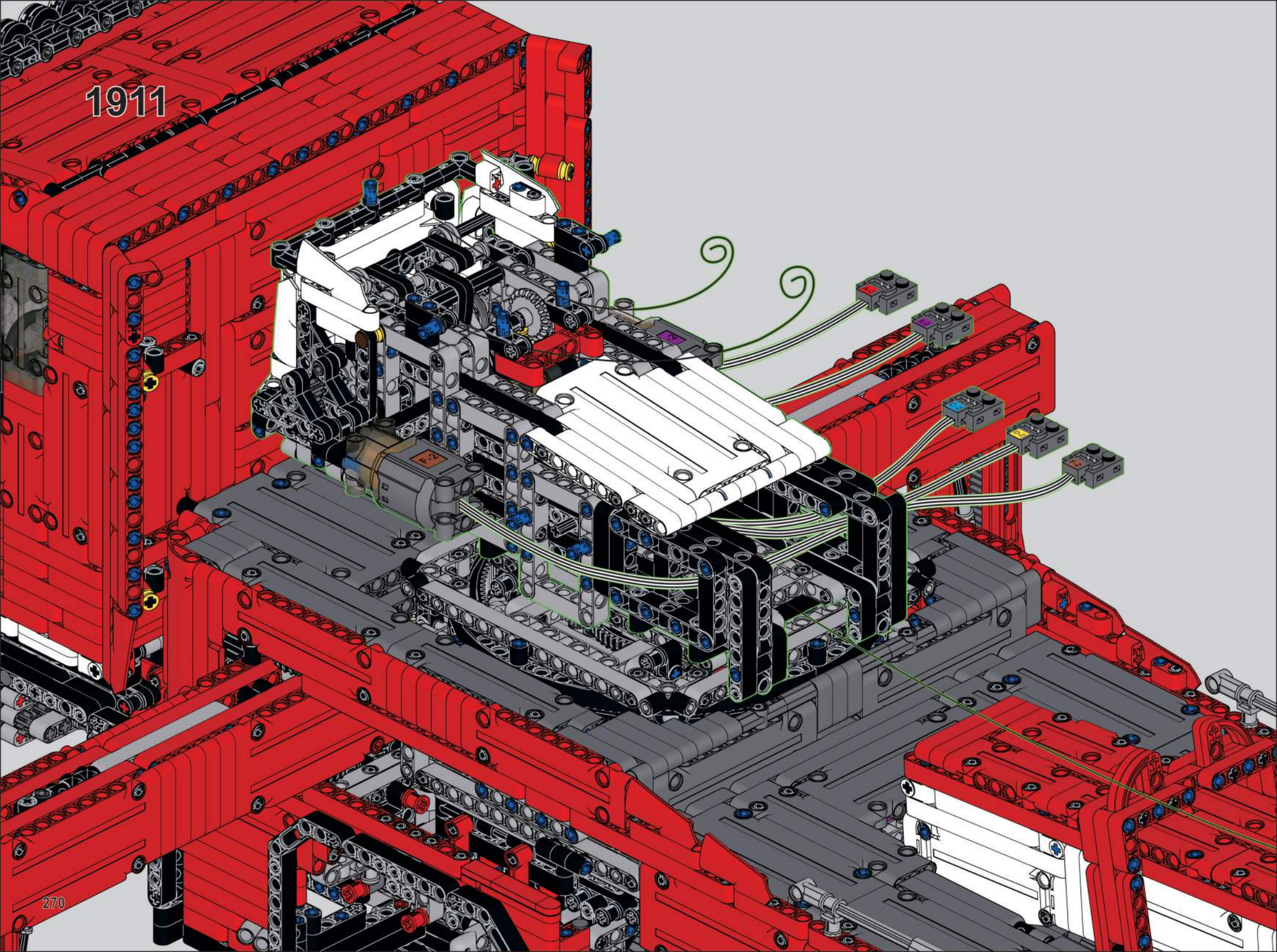
1911
270

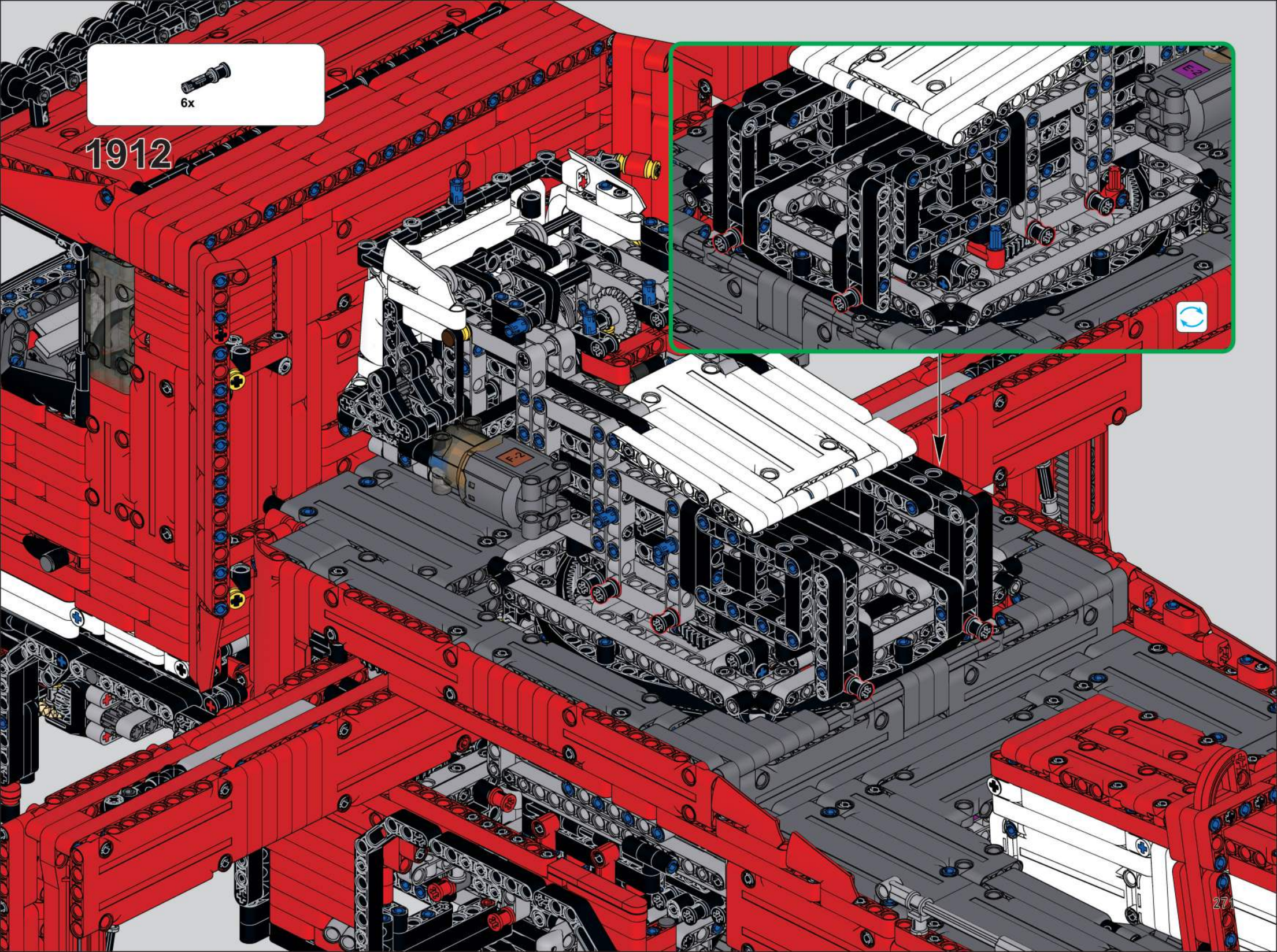
6x
1912

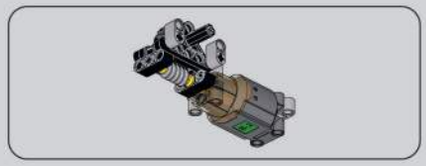

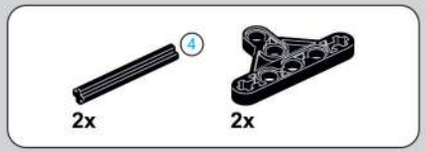

1913

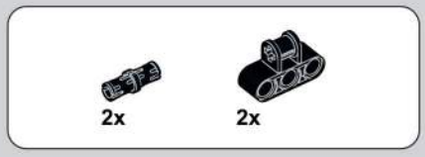

1914

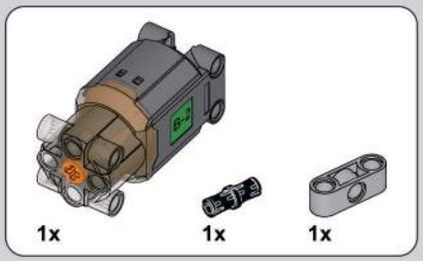

1915

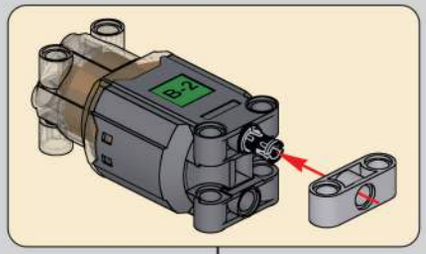

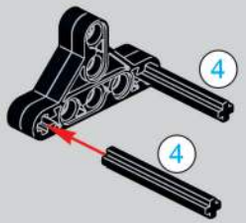

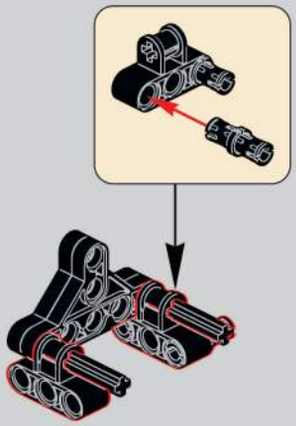

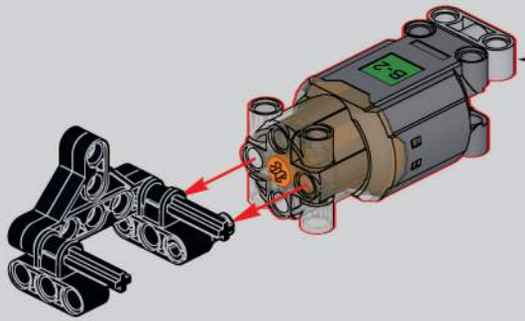

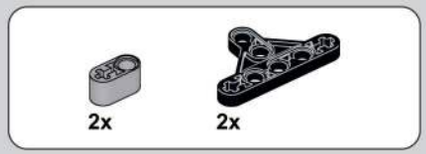

1916

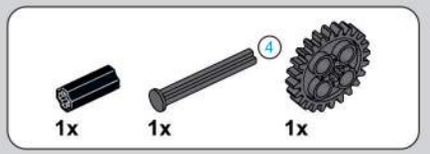

1917

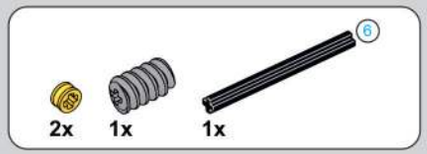

1918

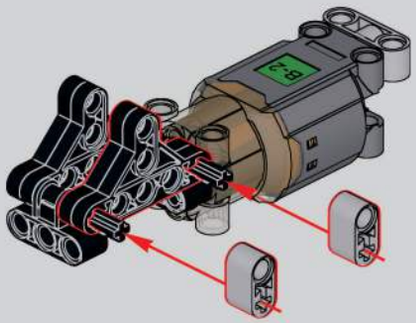

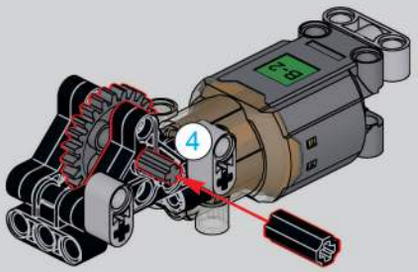

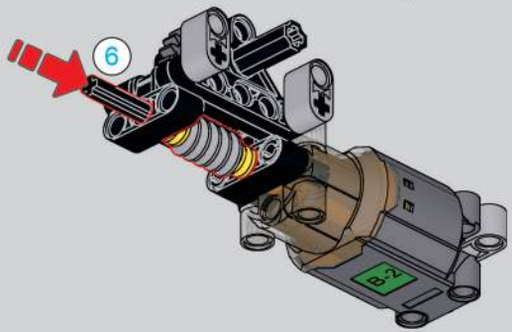

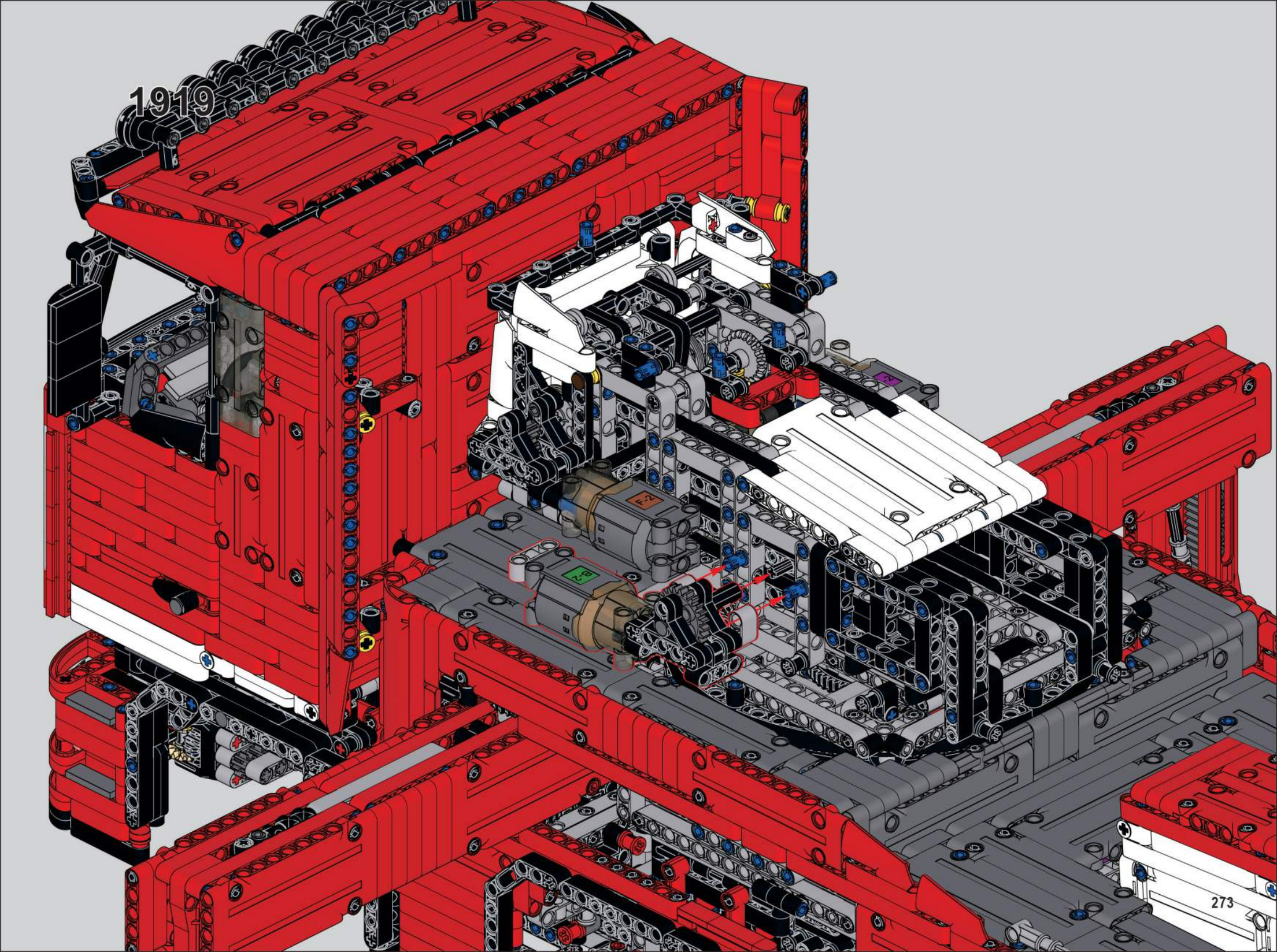
1919
F-2
P-2
273

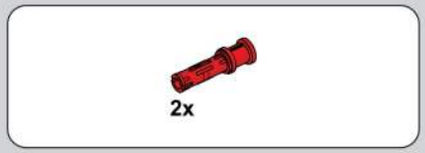

1920

1921

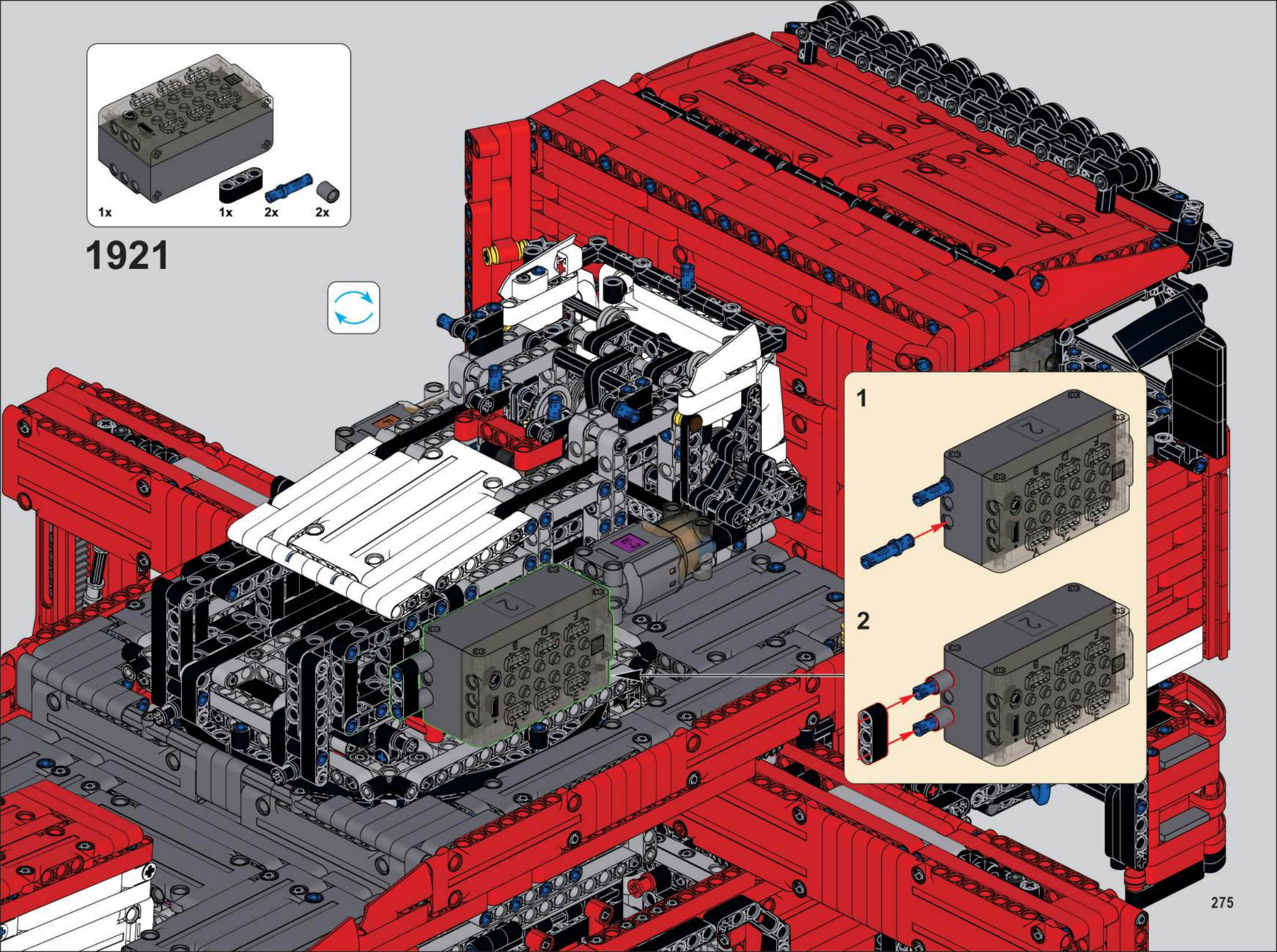

1922

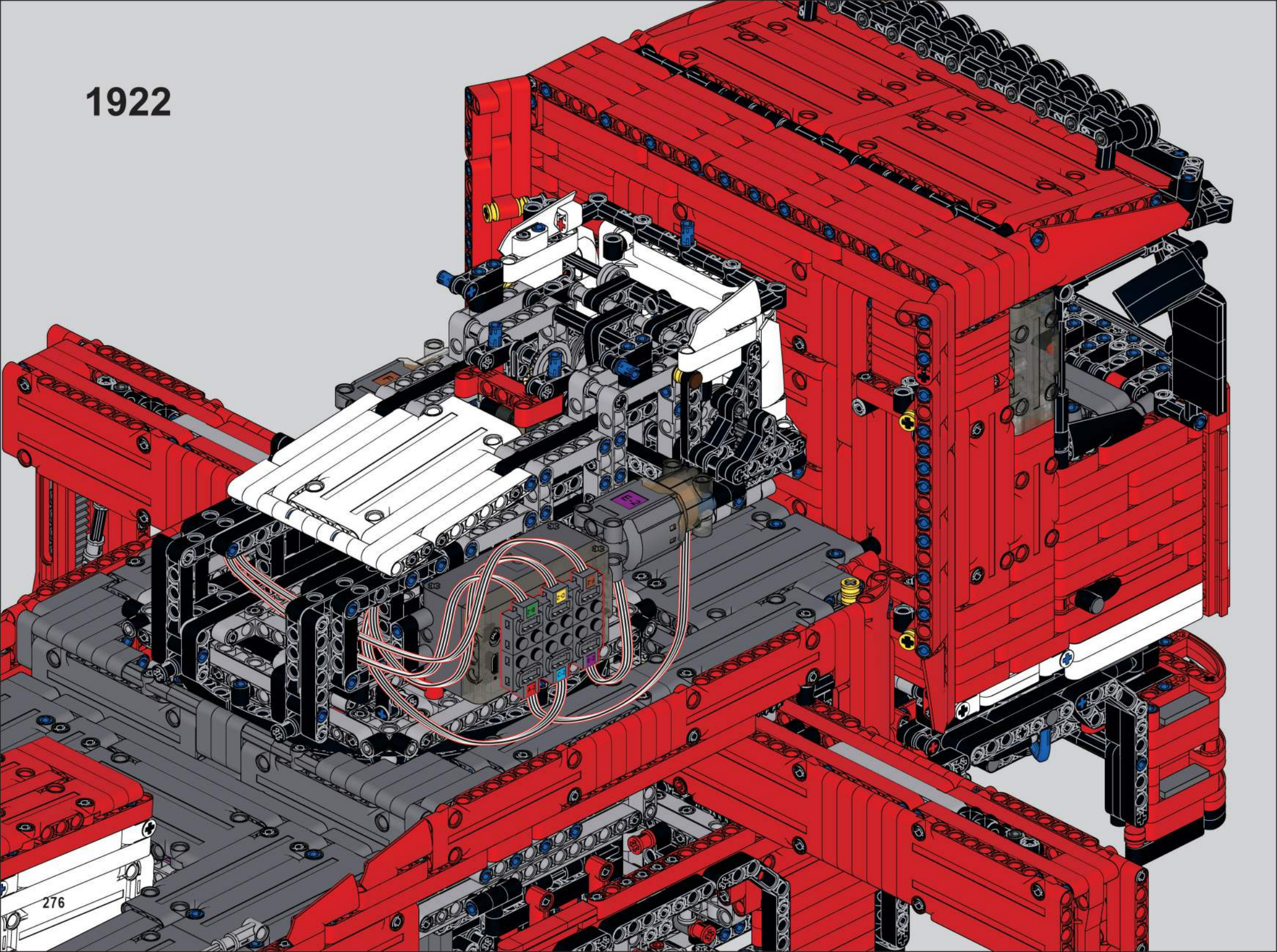

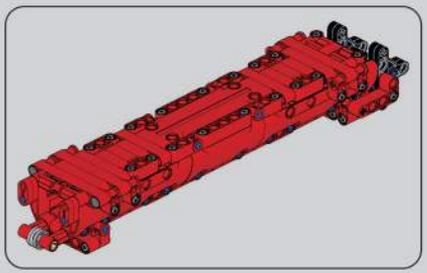

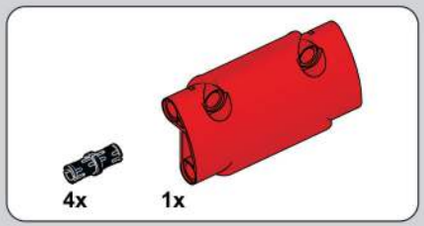

1923

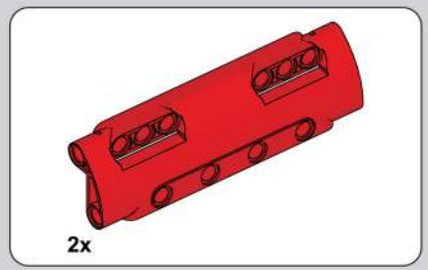

1924

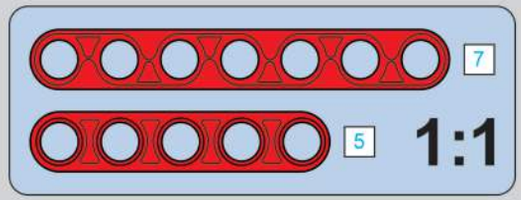

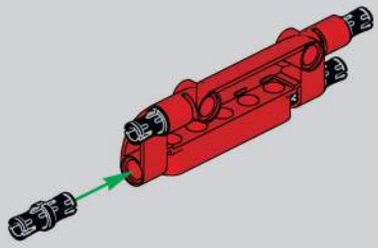

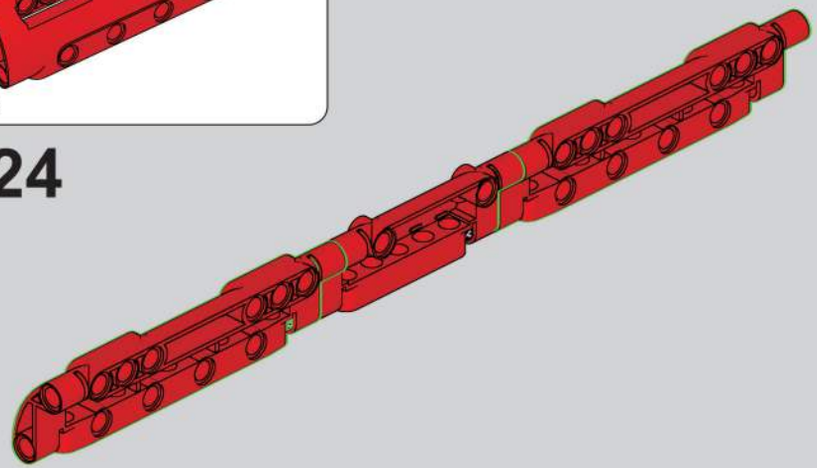

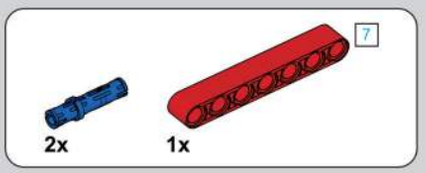

1925

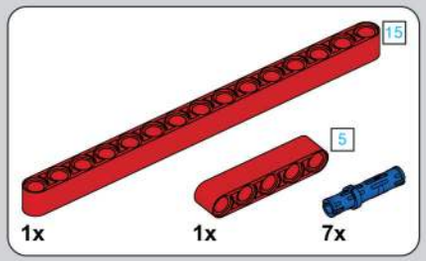

1926

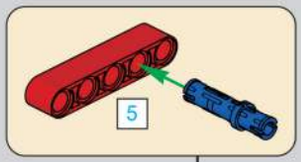

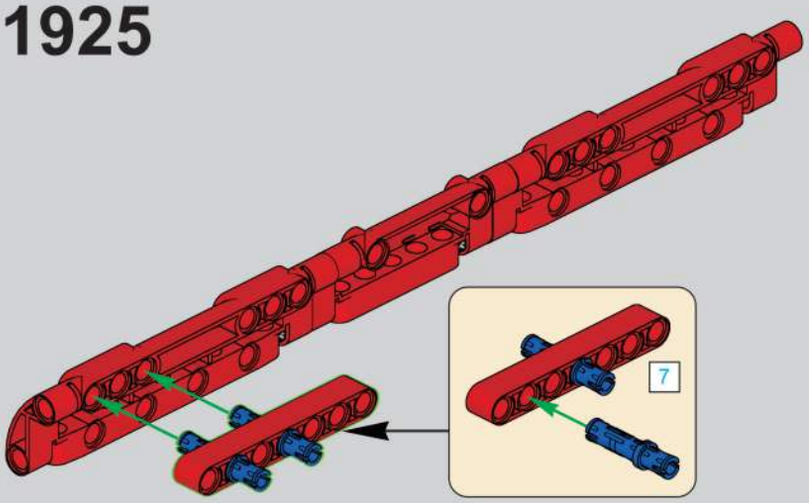

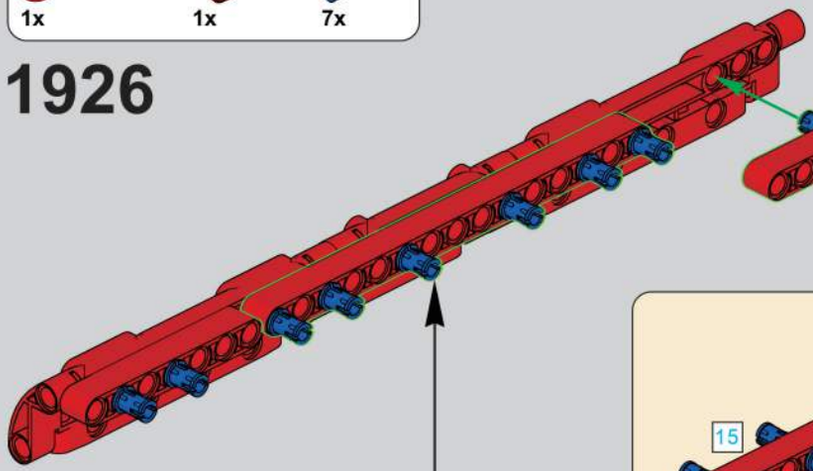

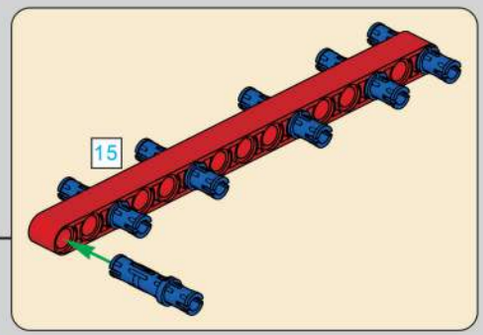

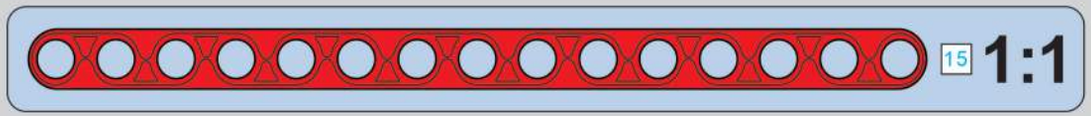

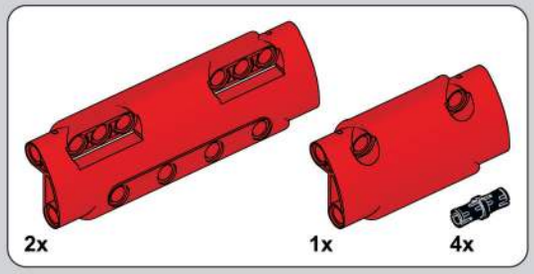

1927

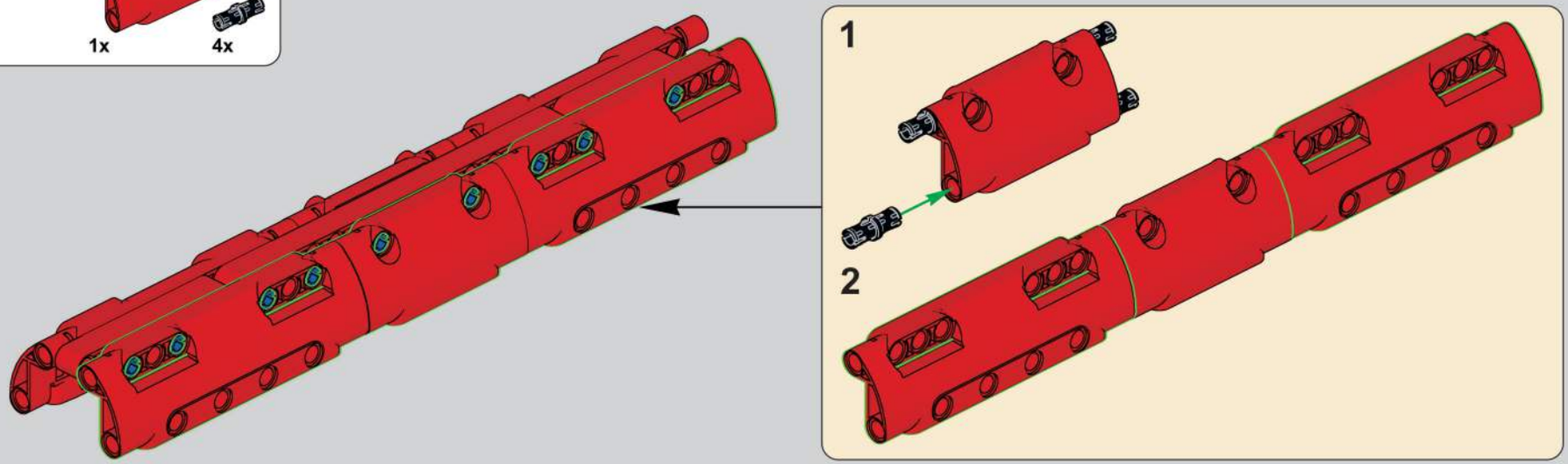

1928

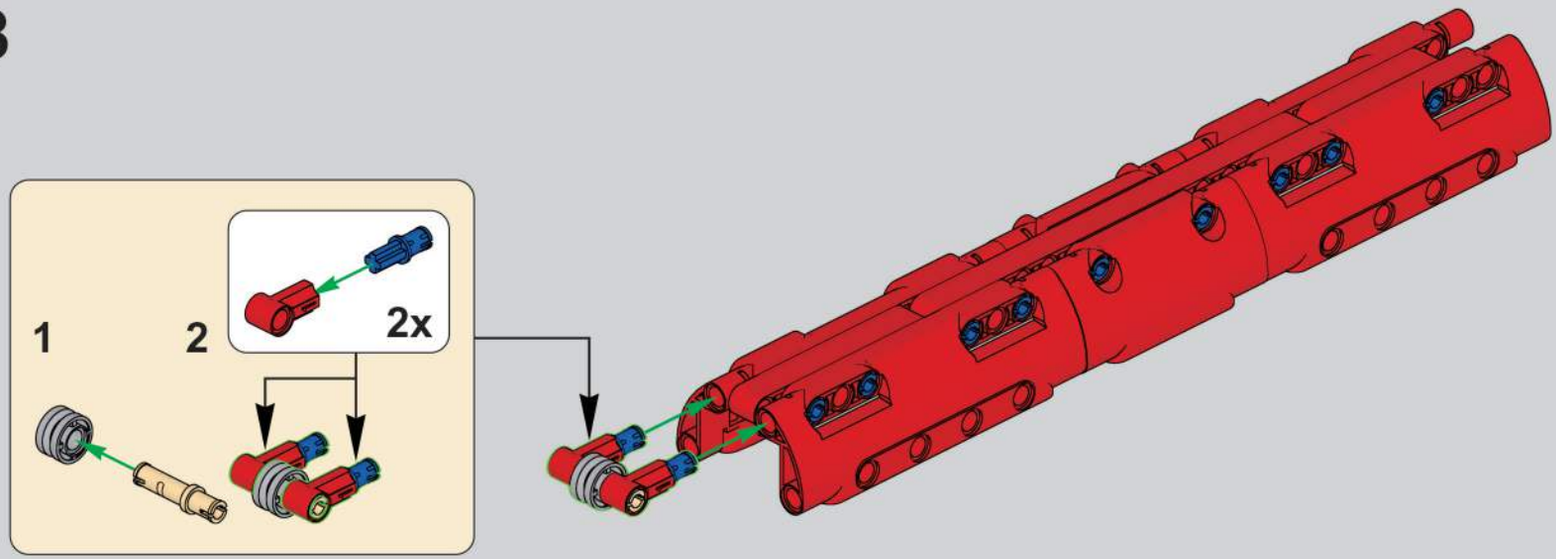

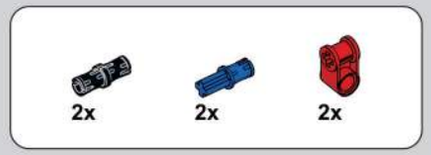

1929

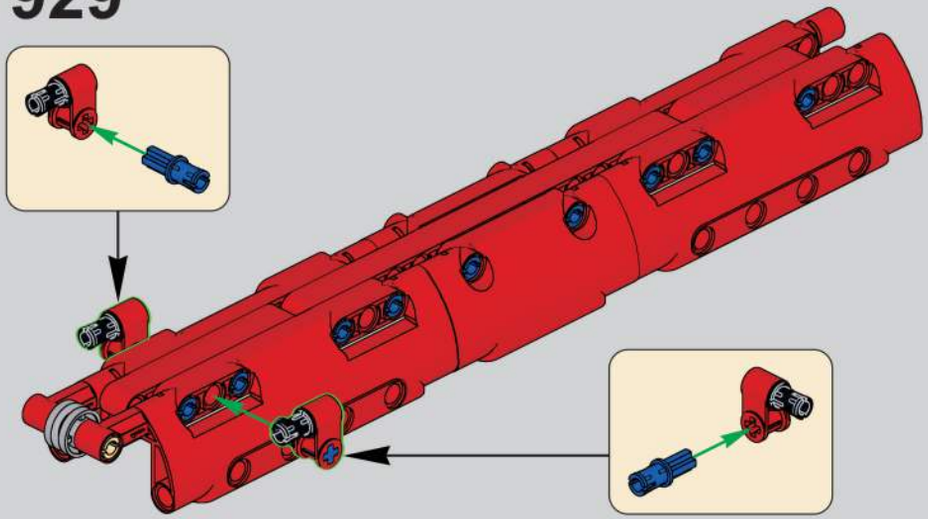

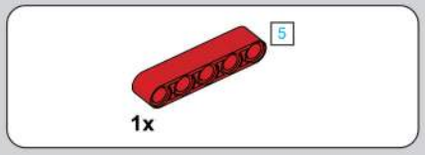

1930

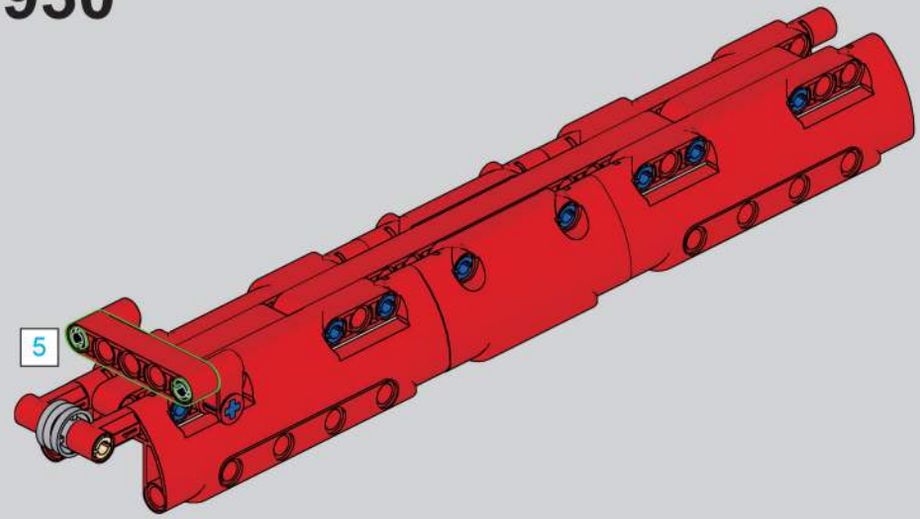

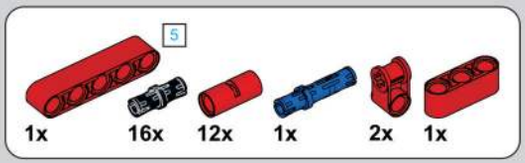

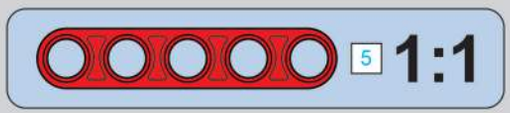

1931

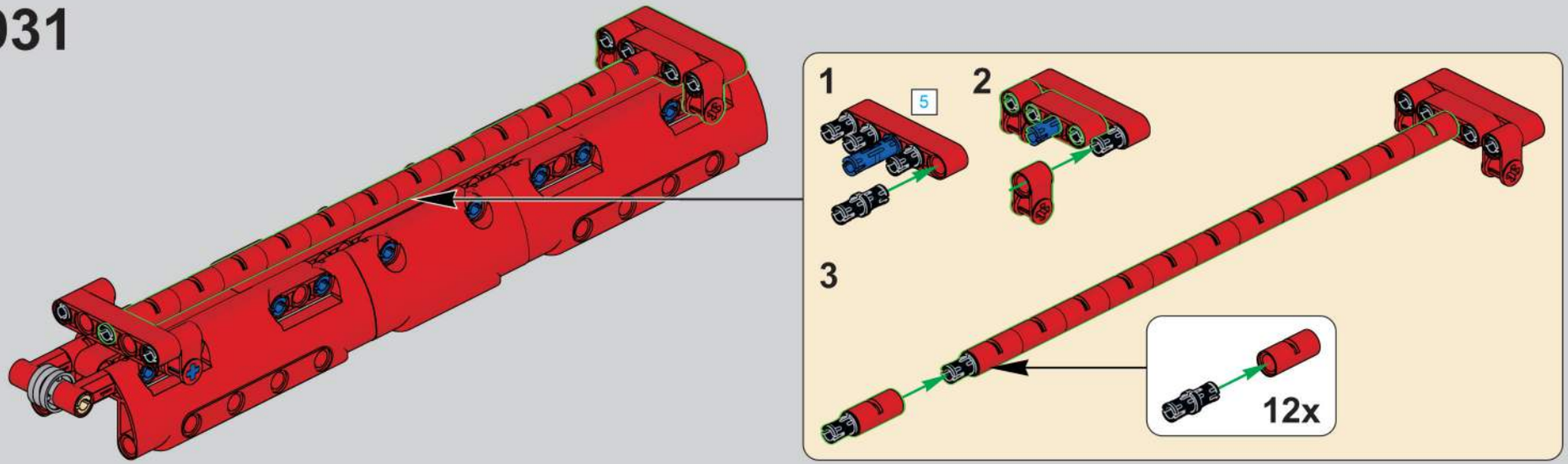

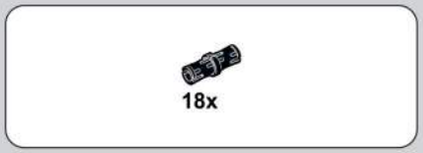

1932

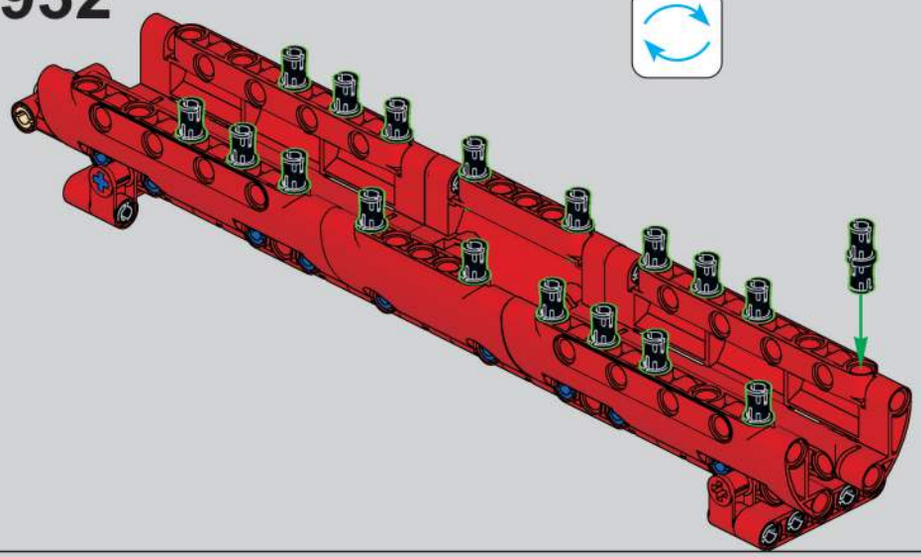

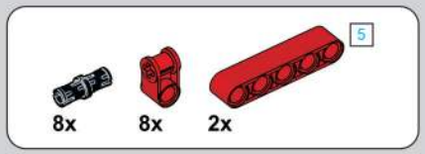

1933

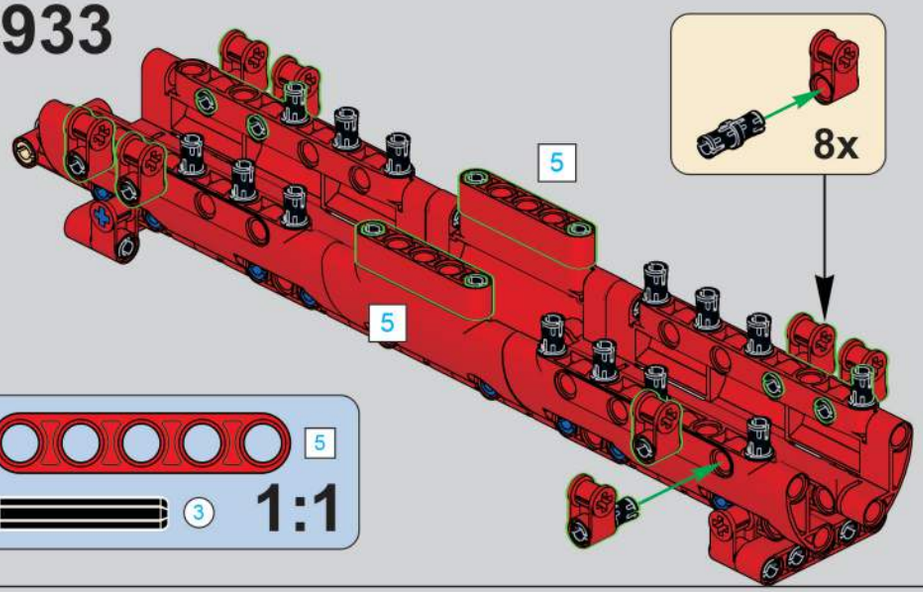

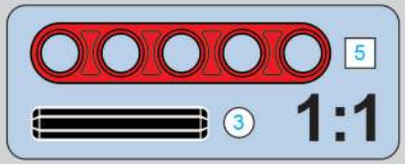

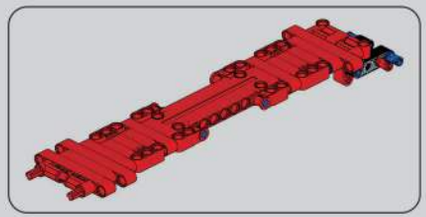

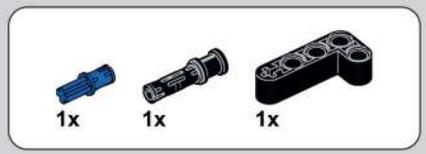

1934

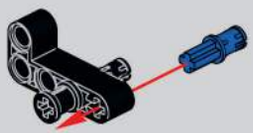

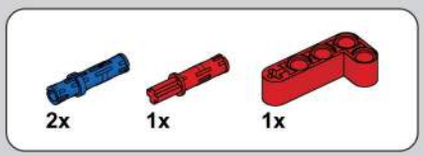

1935

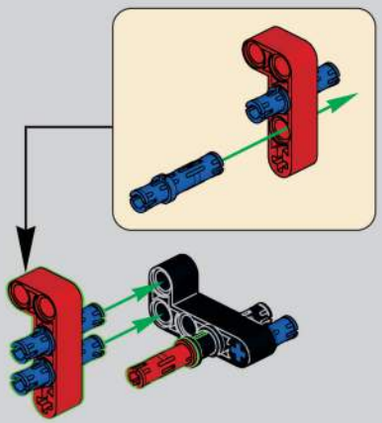

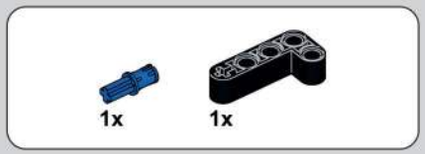

1936

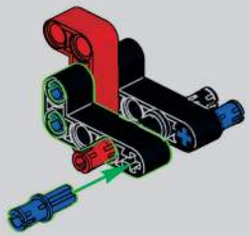

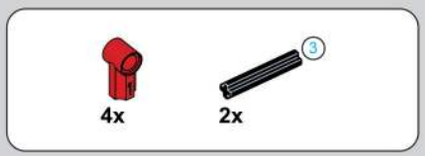

1937

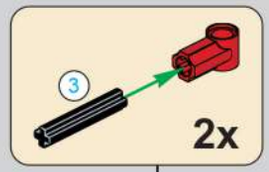

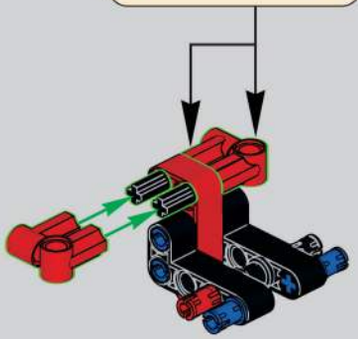

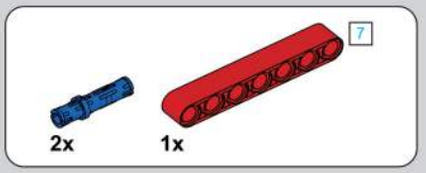

1938

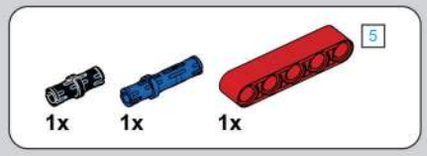

1939

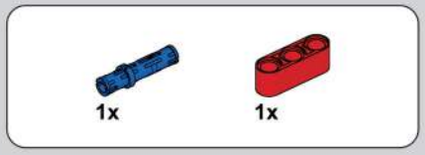

1940

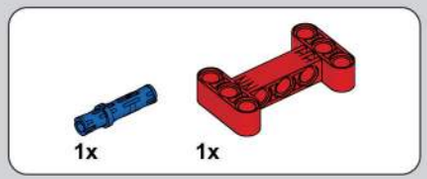

1941

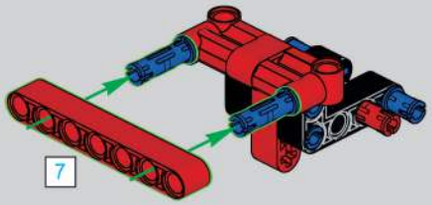

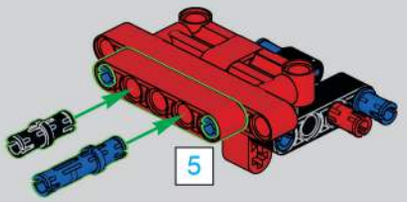

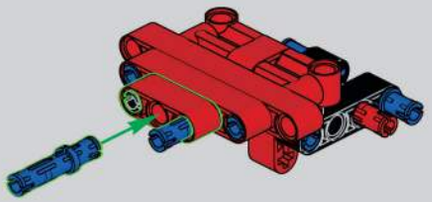

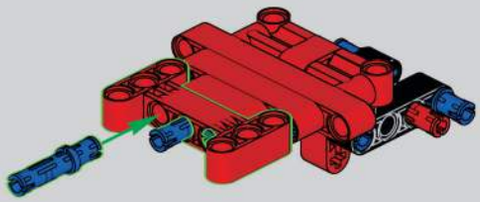

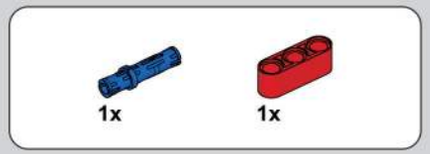

1942

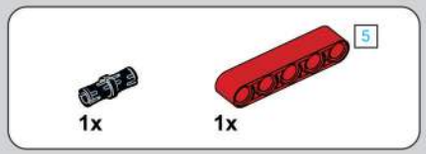

1943

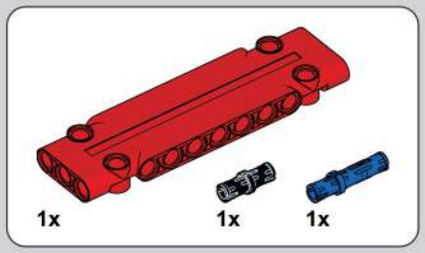

1944

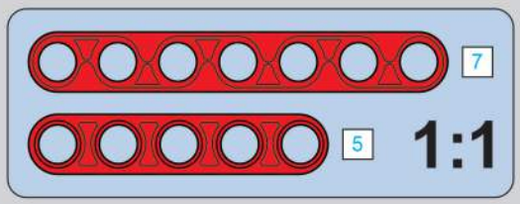

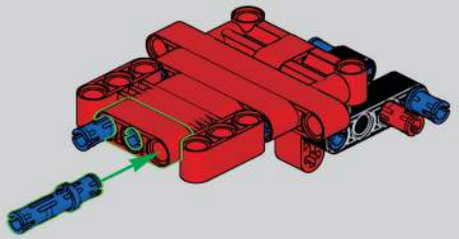

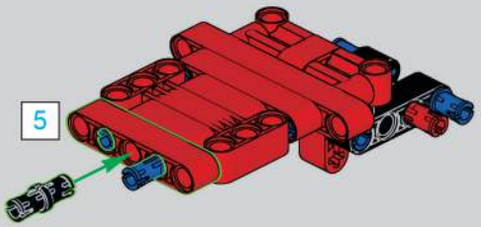

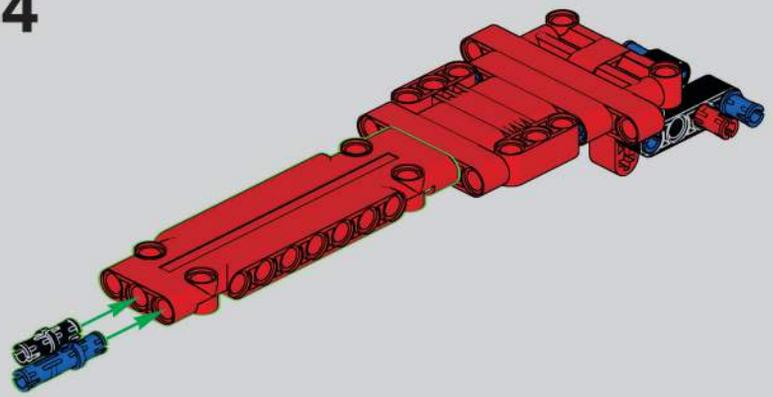

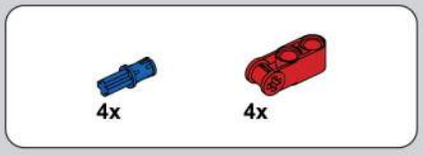

1945

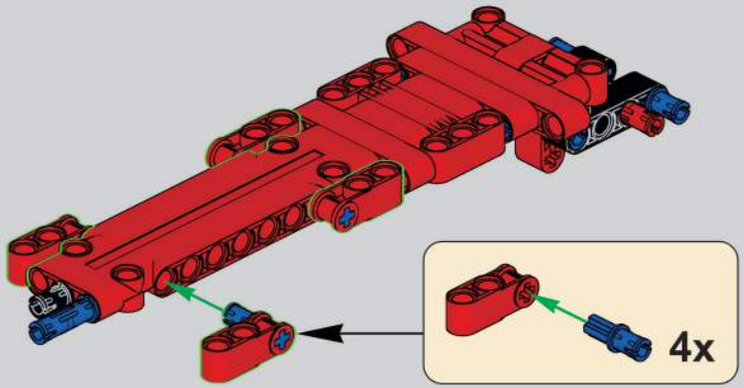

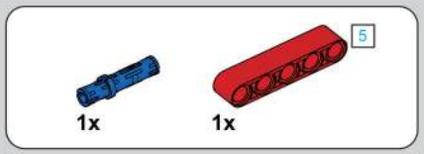

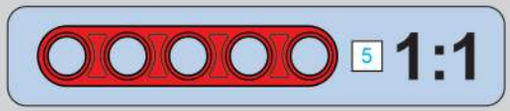

1946

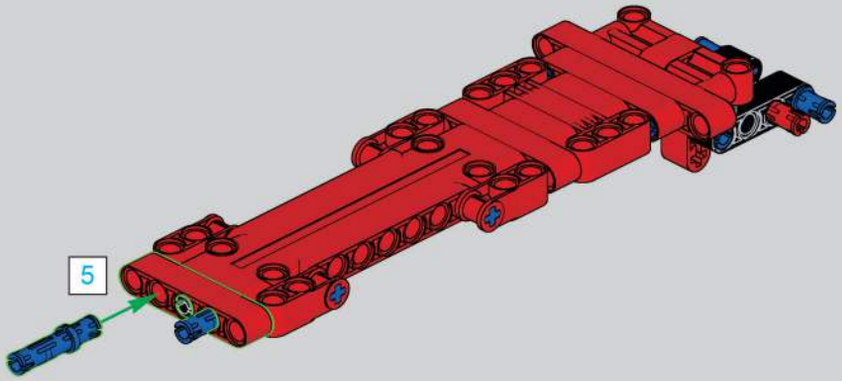

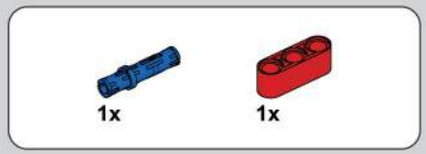

1947

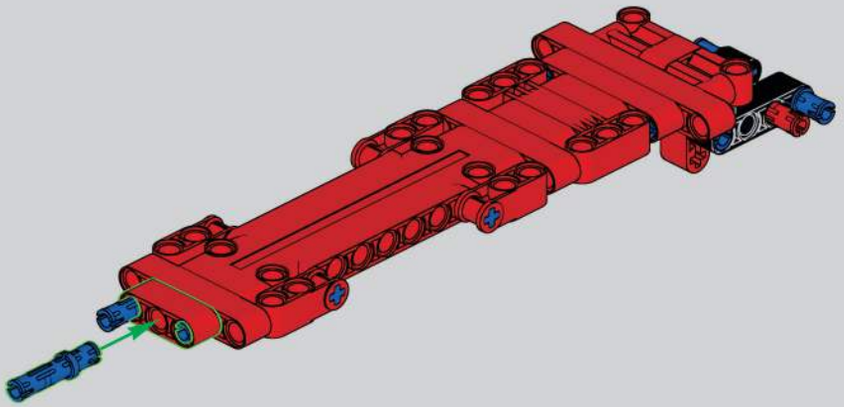

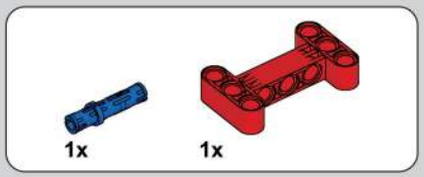

1948

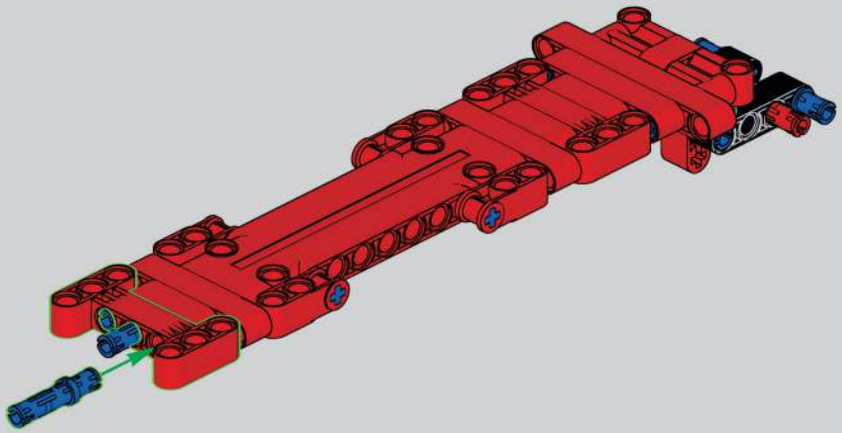

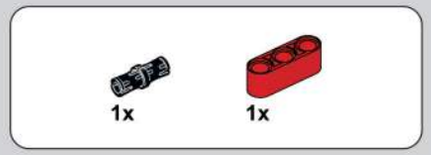

1949

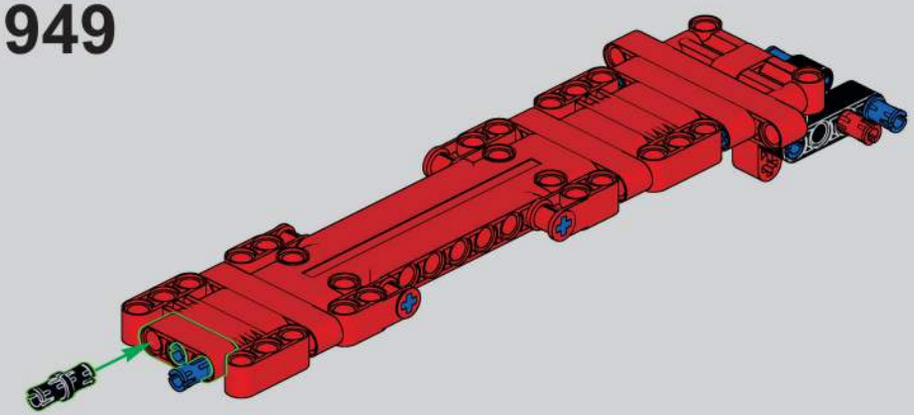

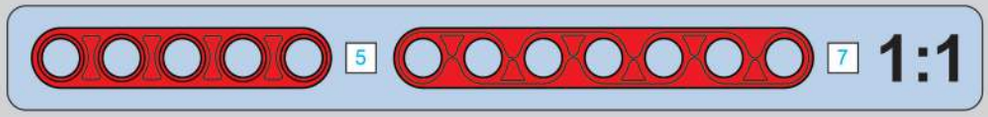

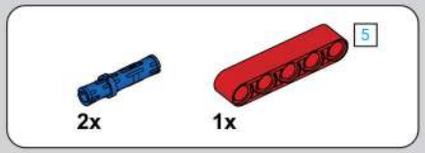

1950

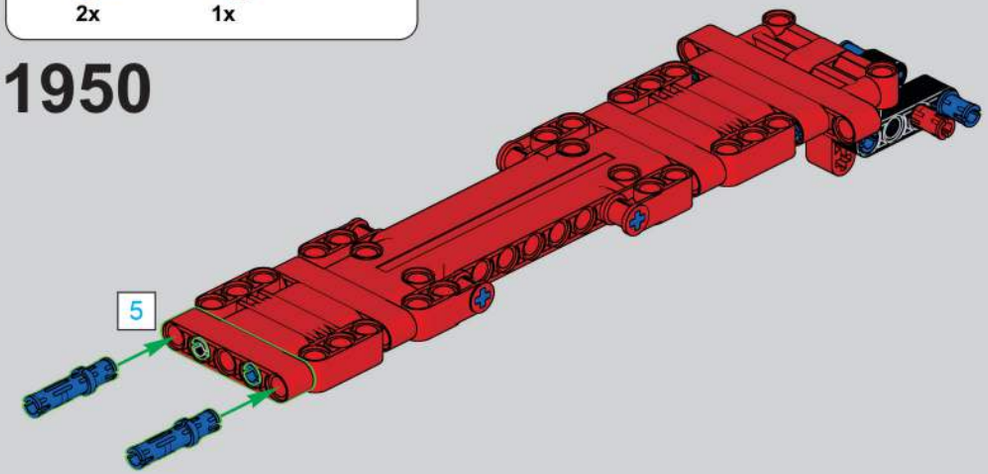

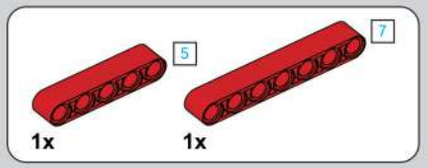

1951

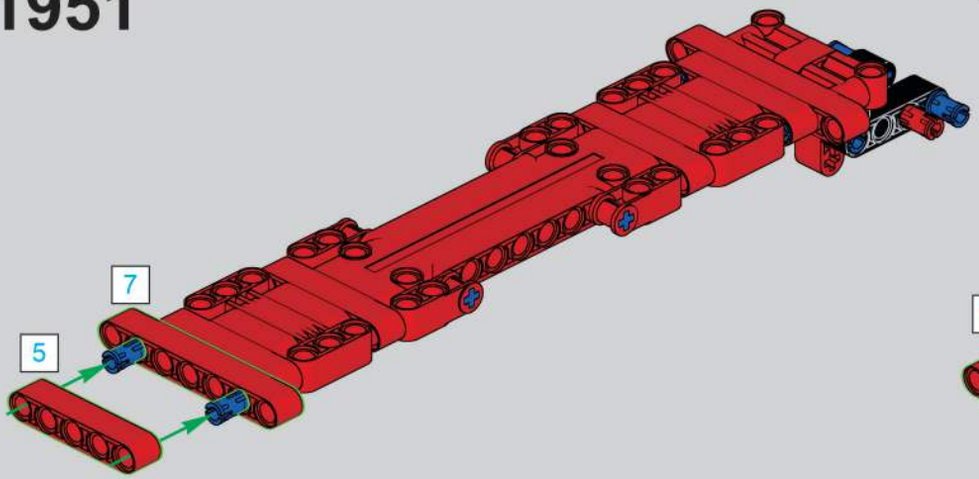

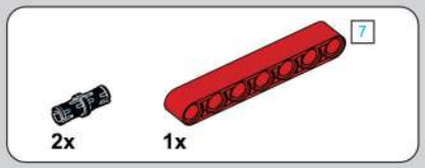

1952

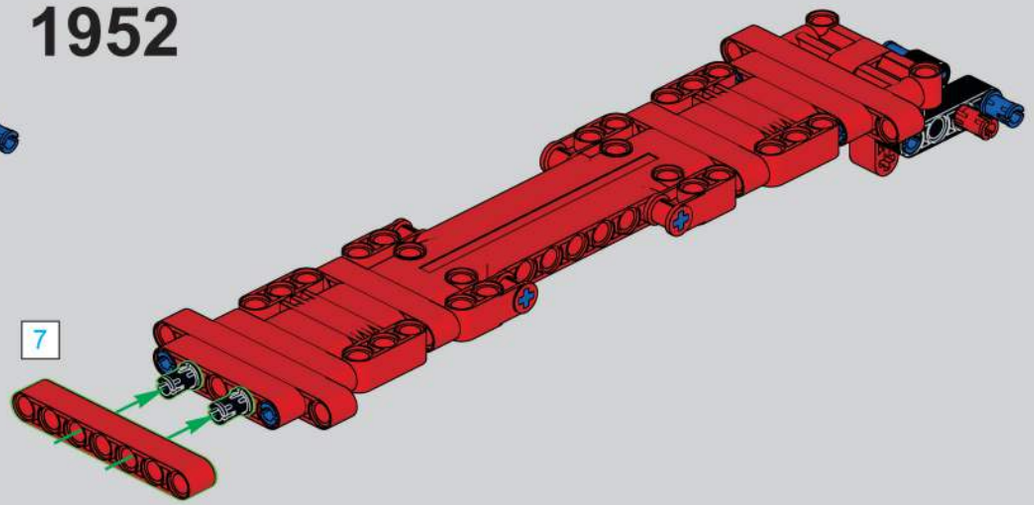

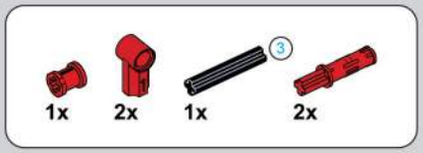

1953

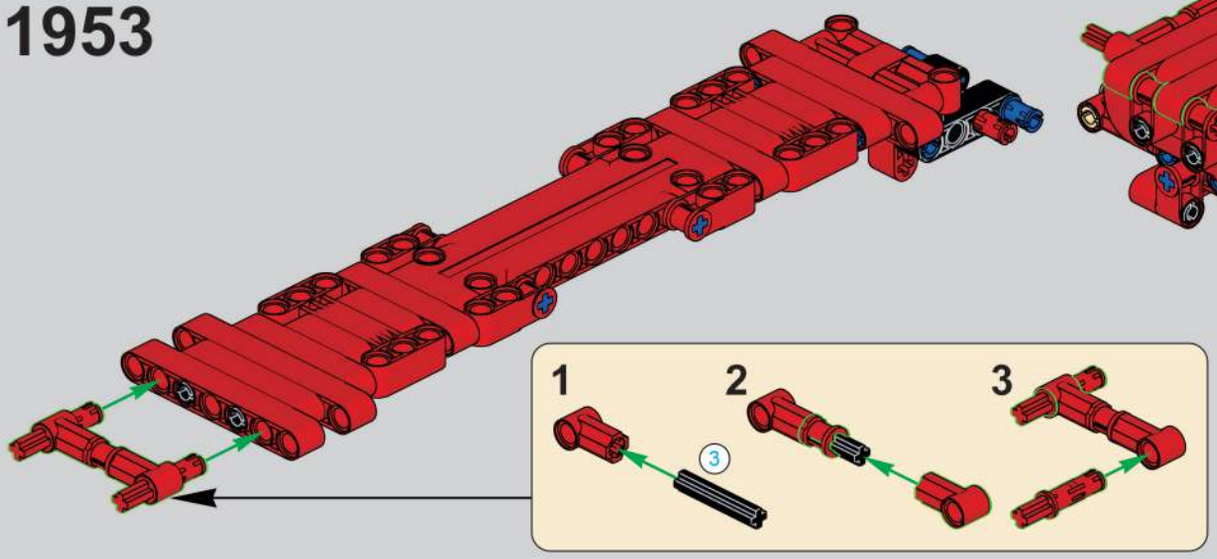

1954

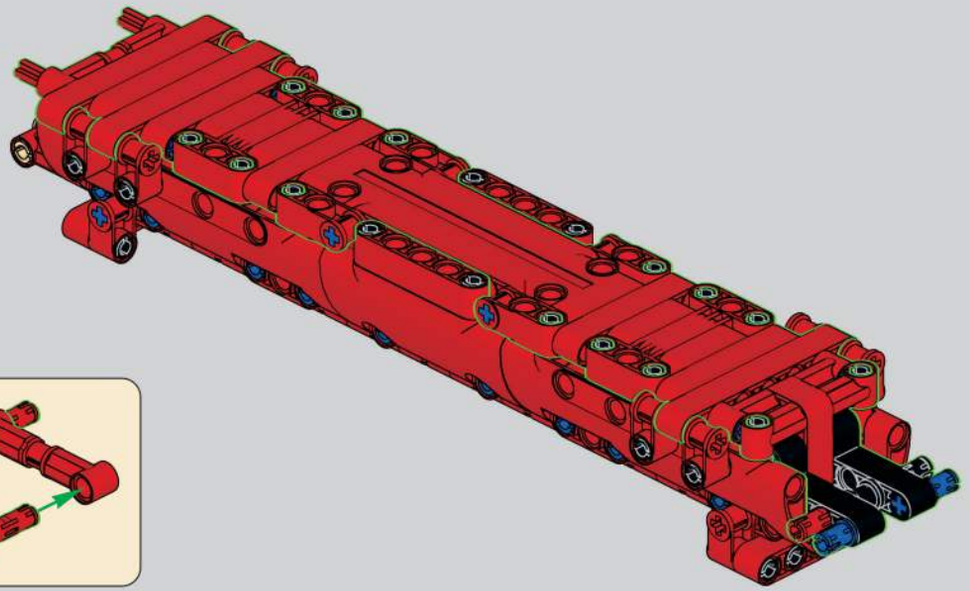

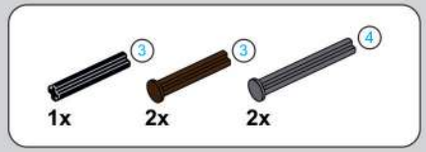

1955

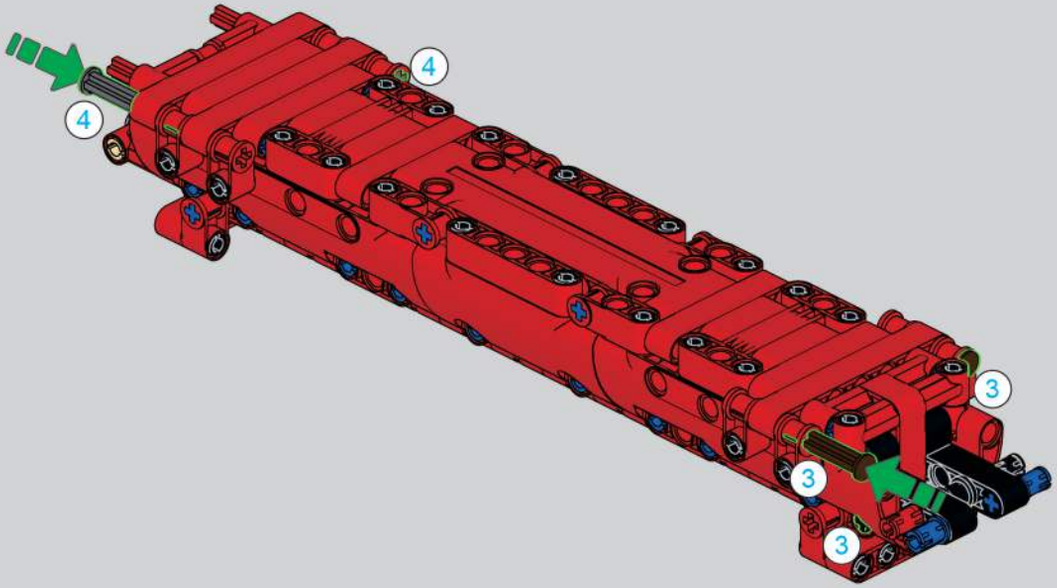

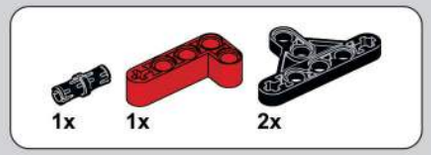

1956

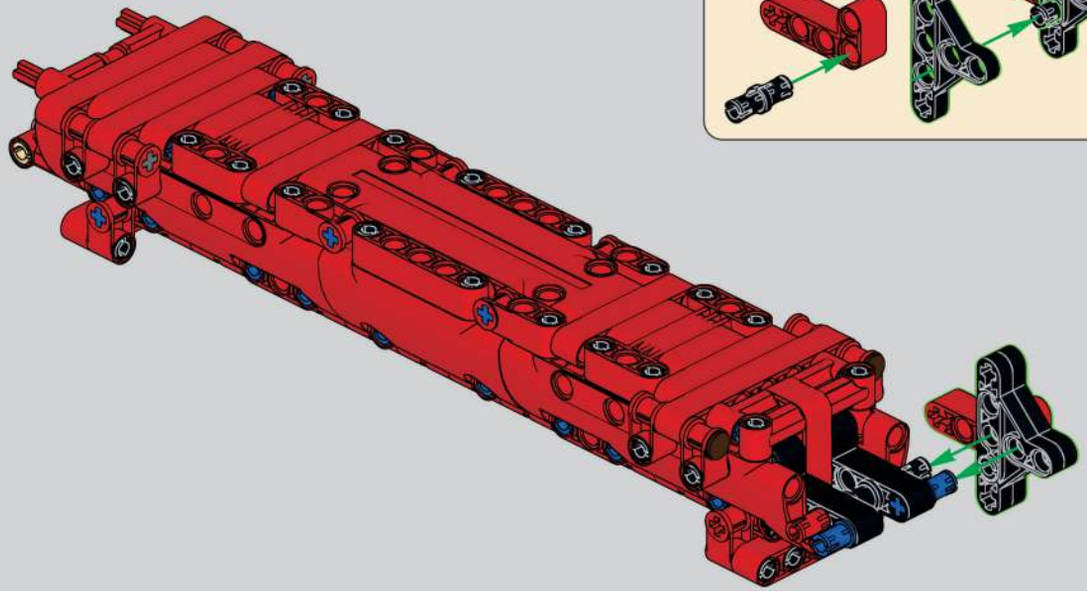

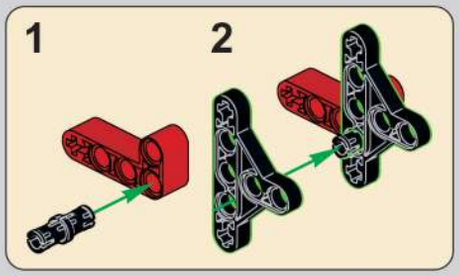

1957

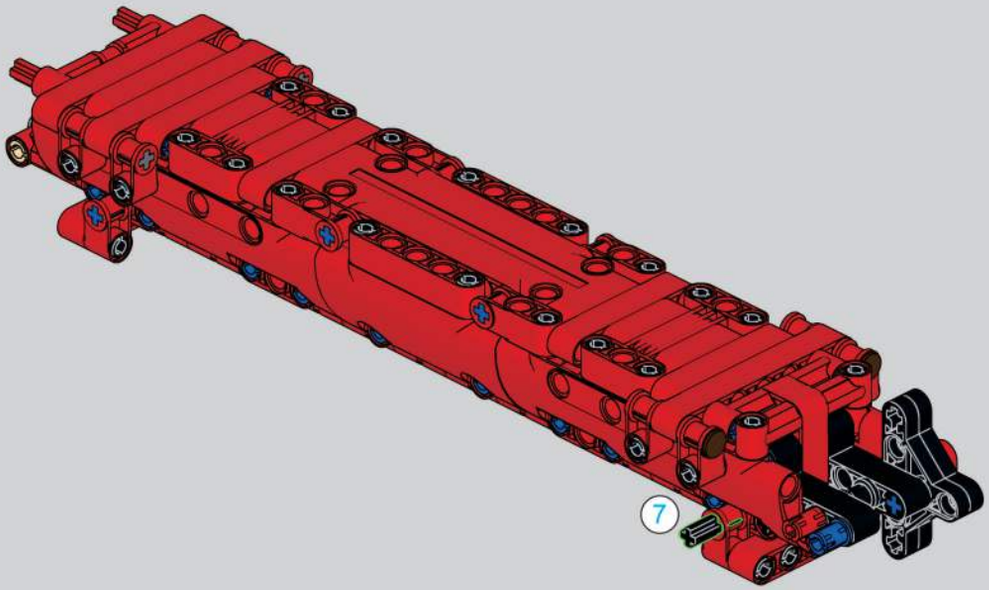

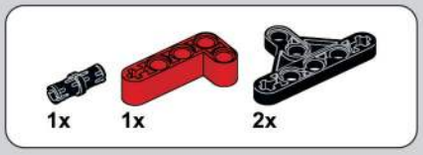

1958

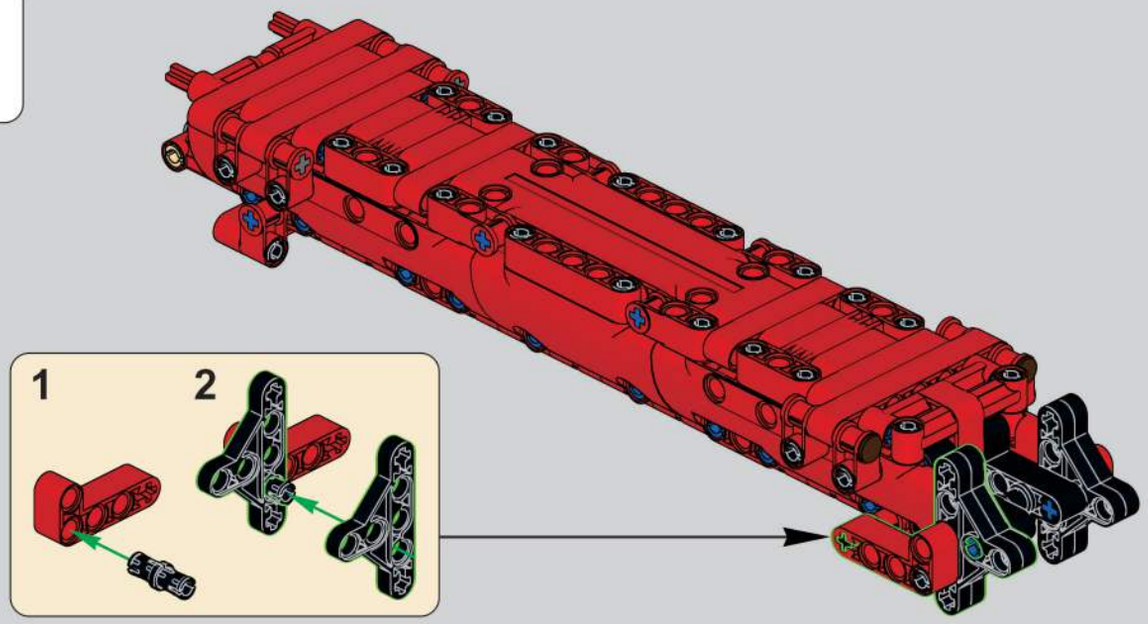

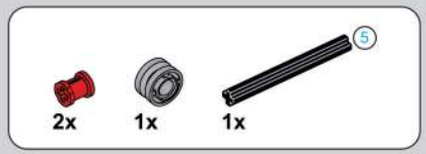

1959

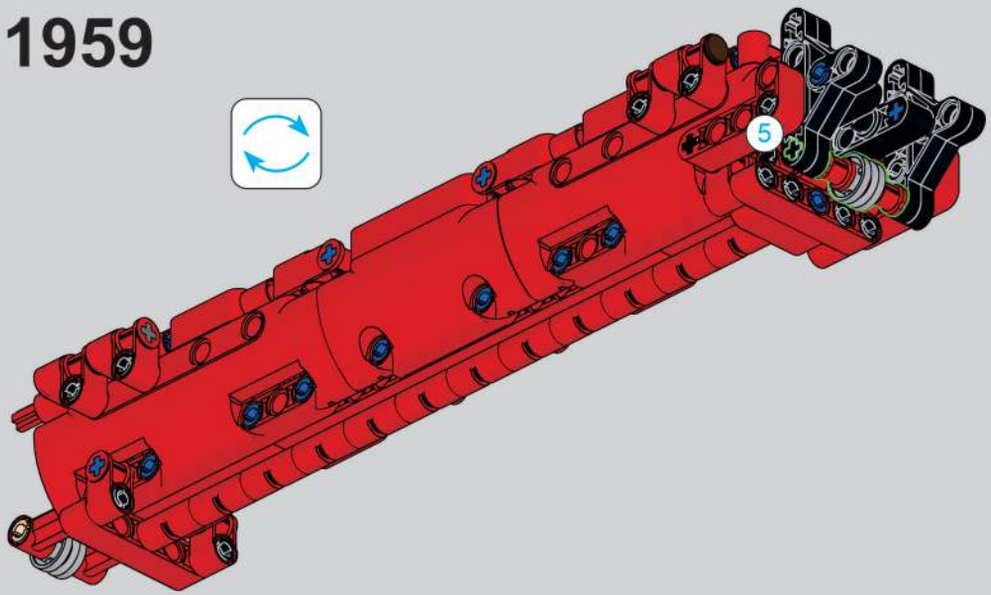

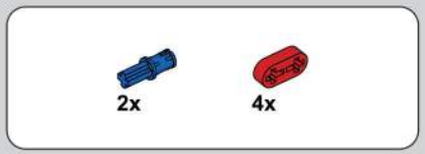

1960

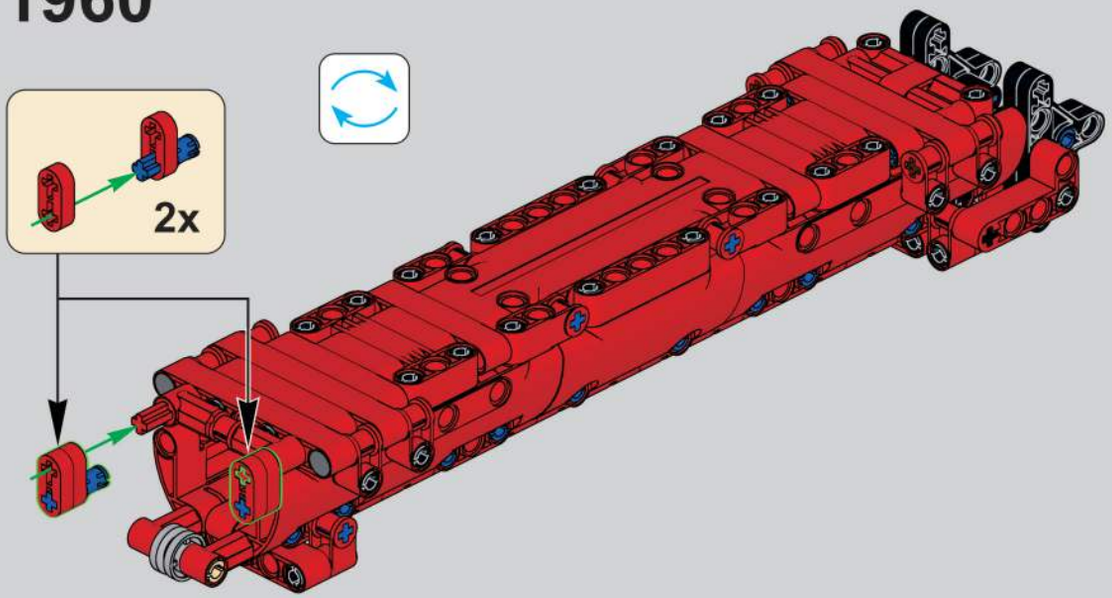

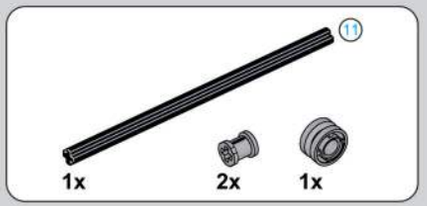

11 1:1

1961

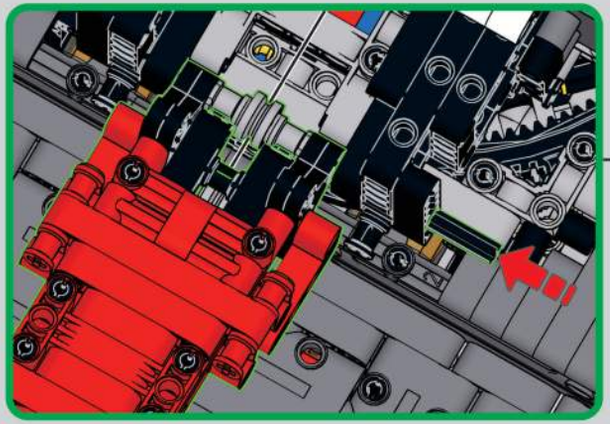

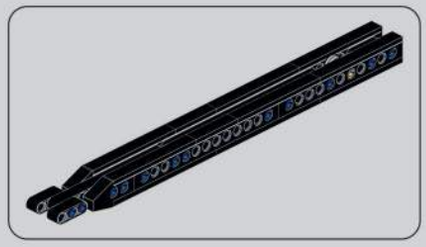

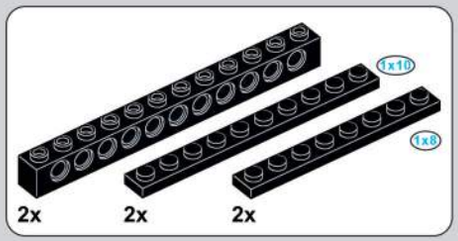

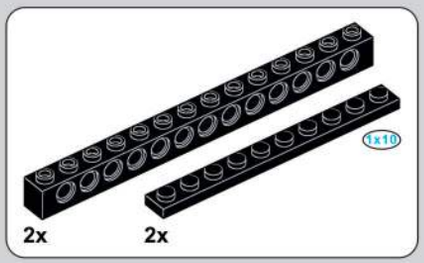

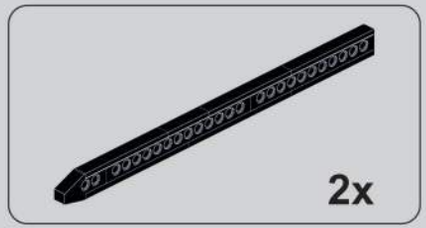

1962

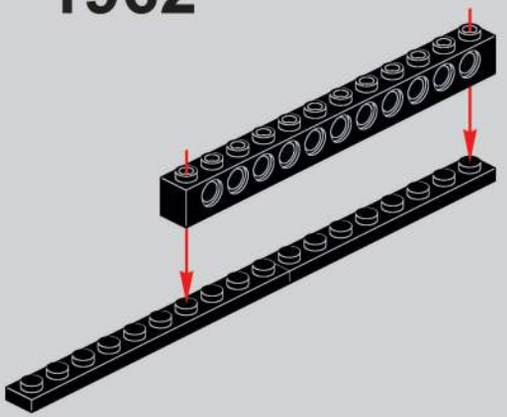

1963

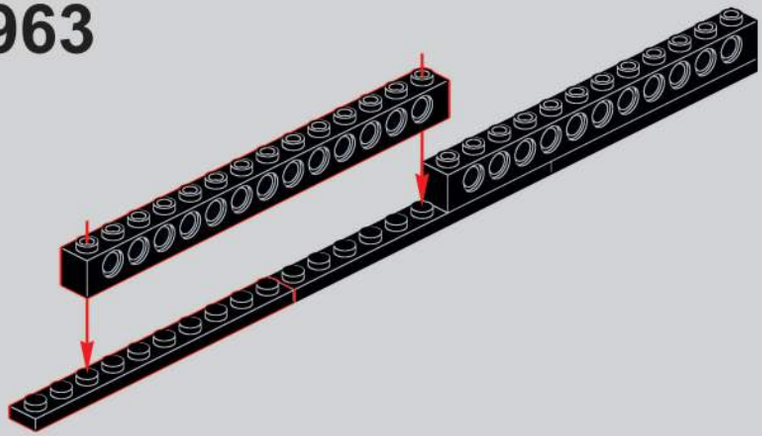

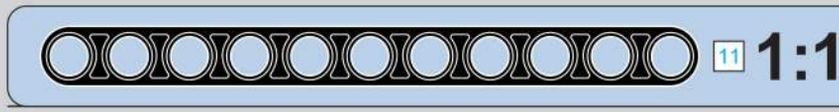

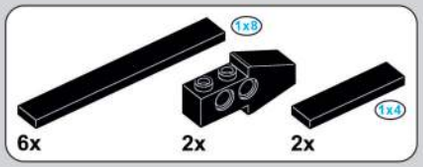

1964

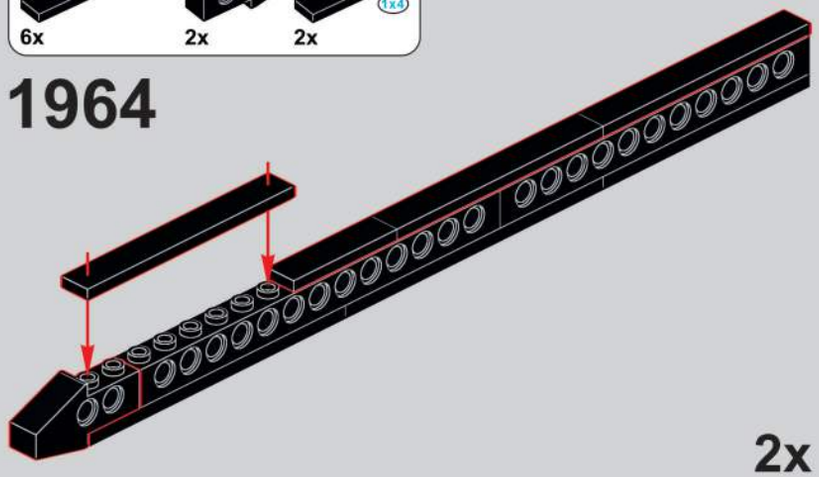

1965

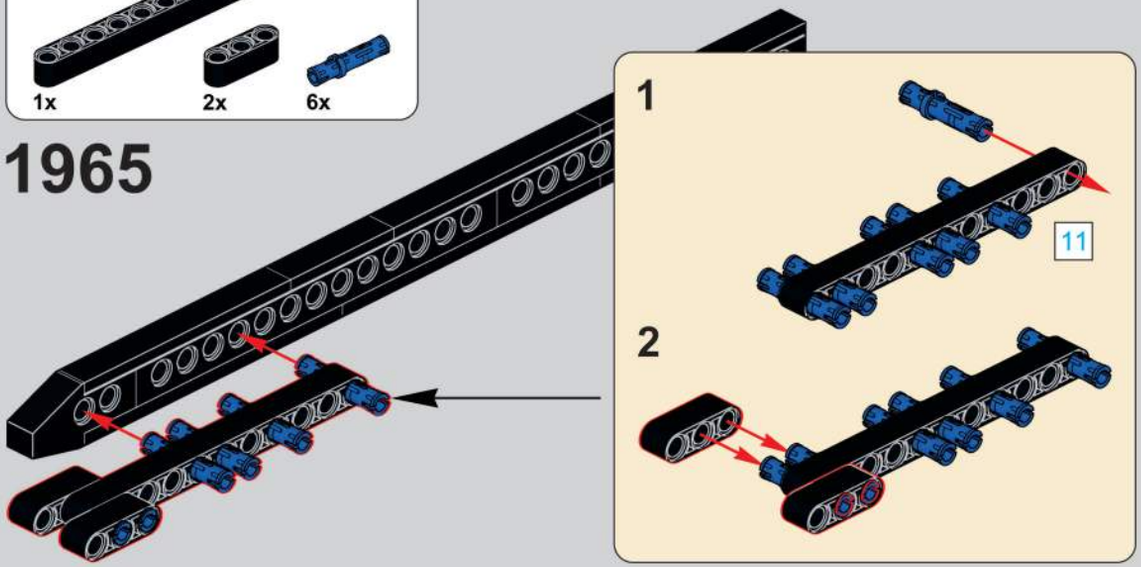

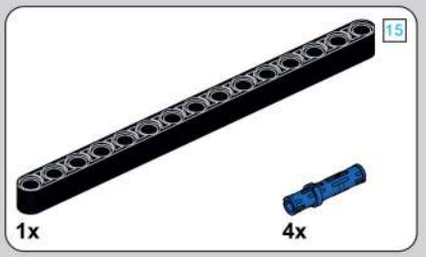

1966

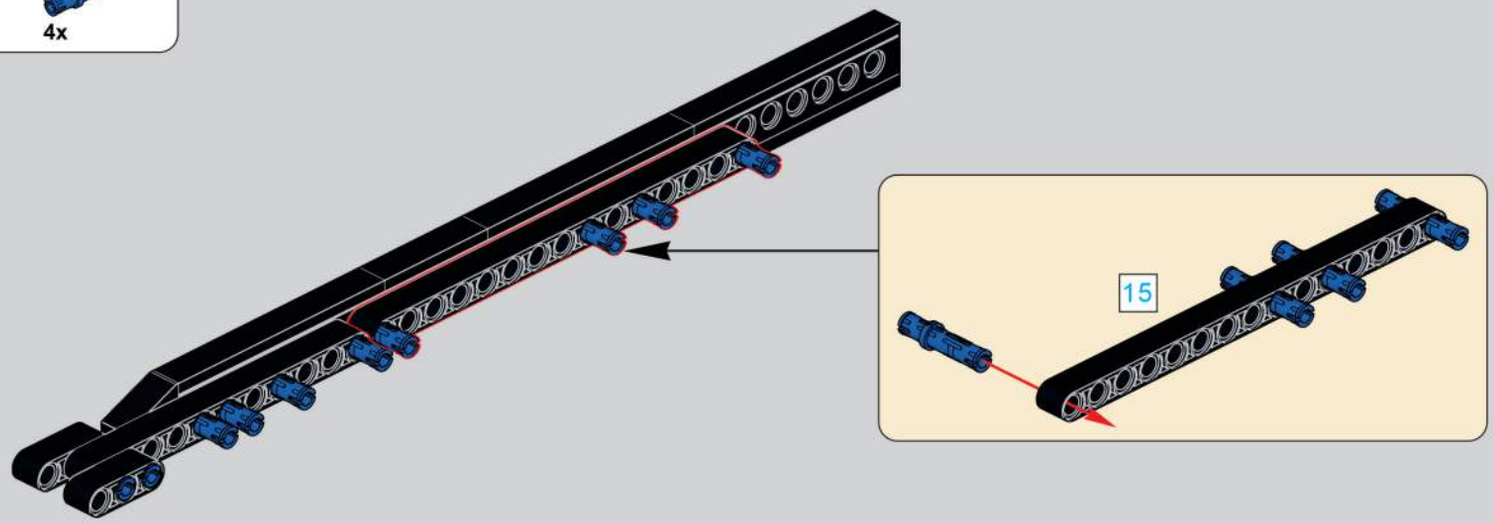

1967

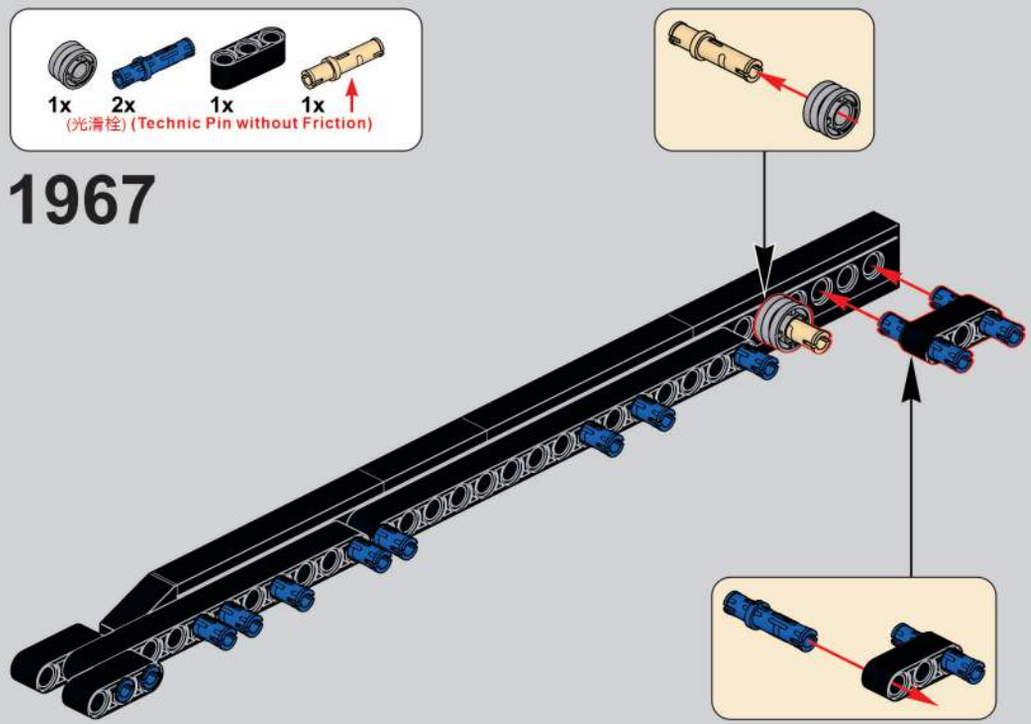

1968

1969

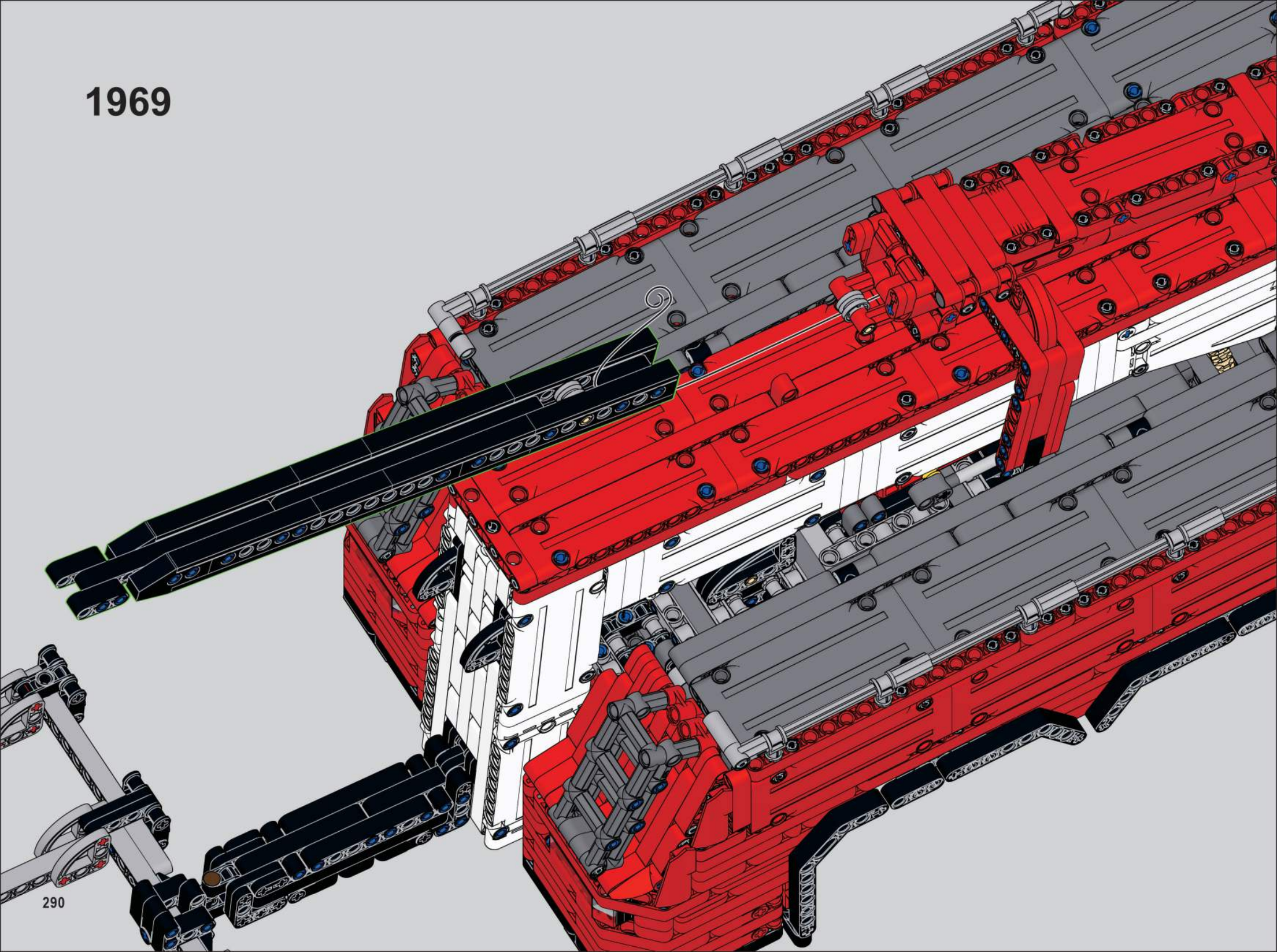

1970

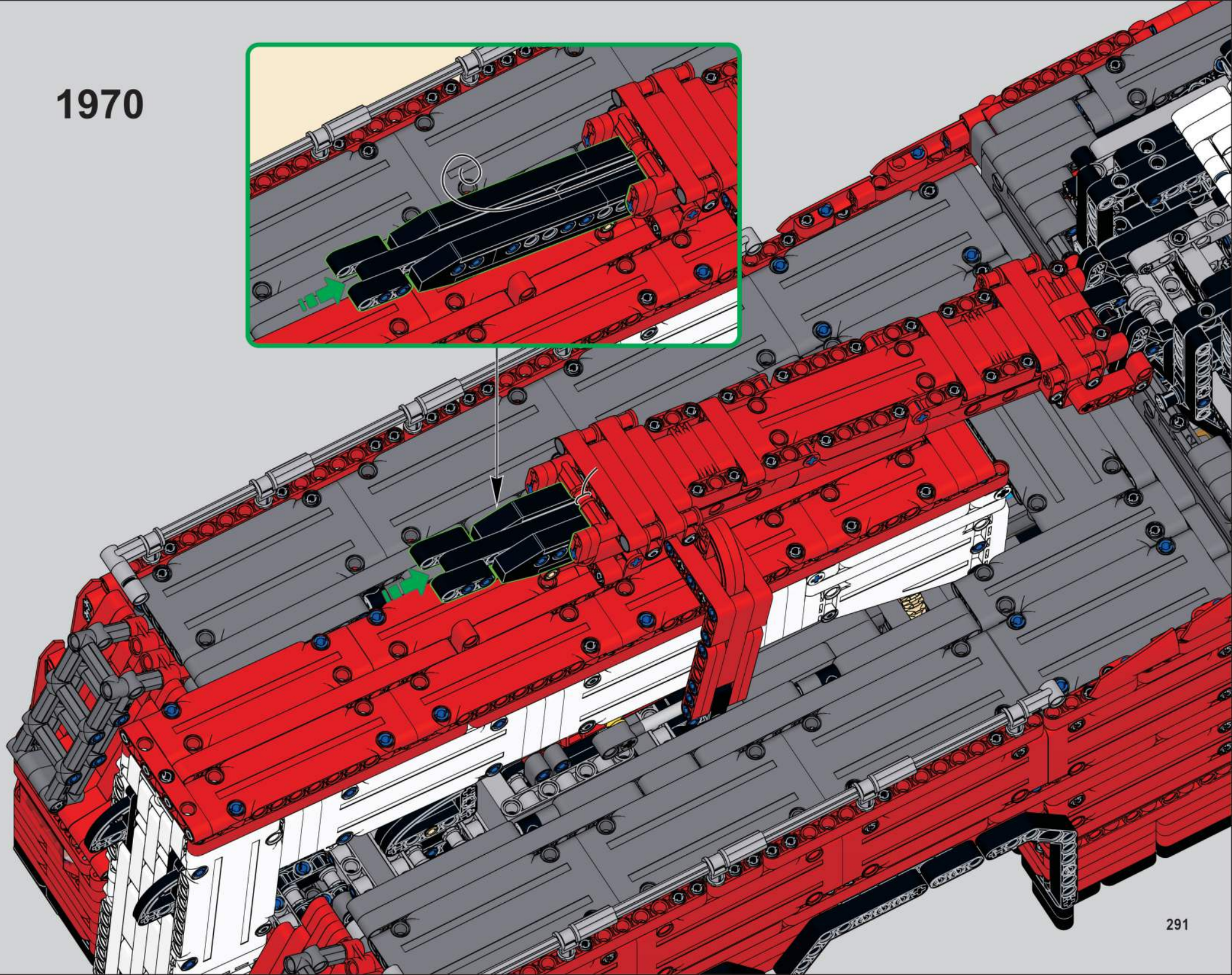

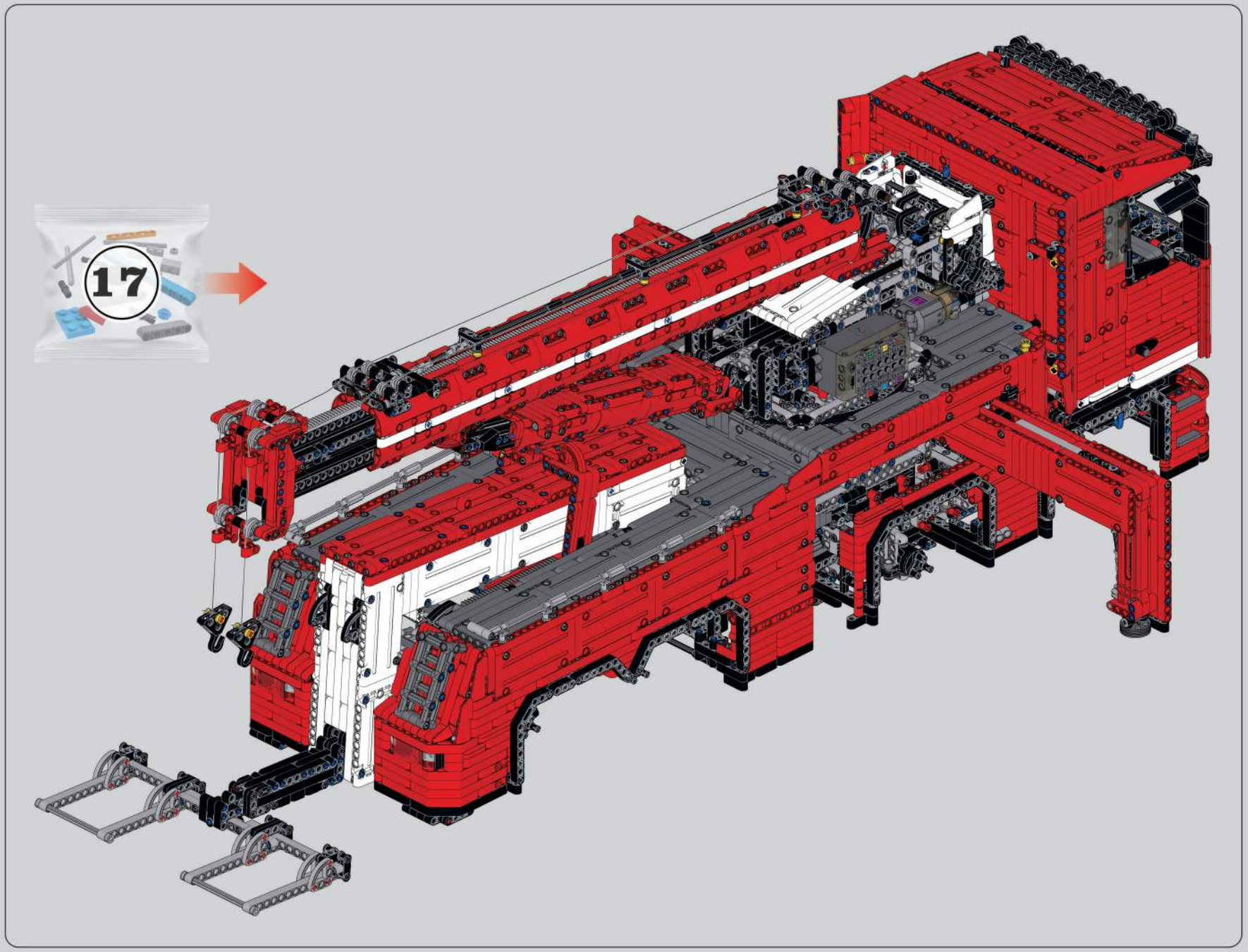
17

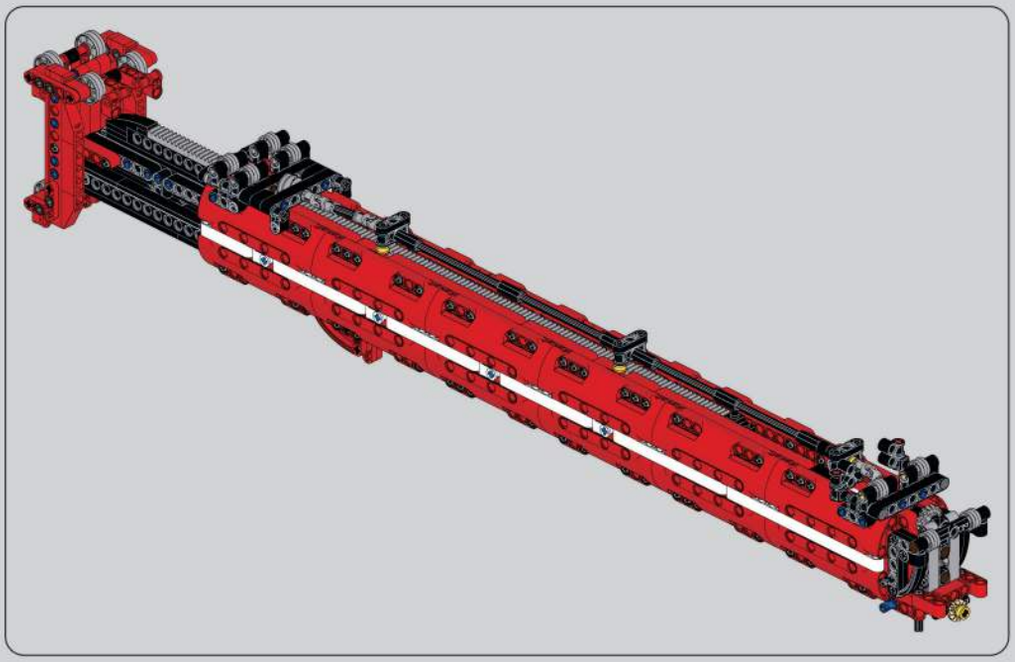

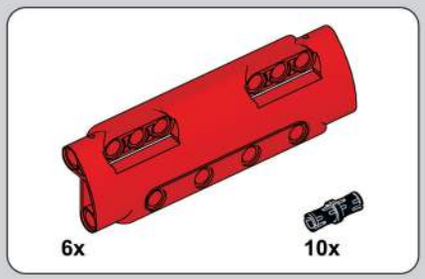

1971

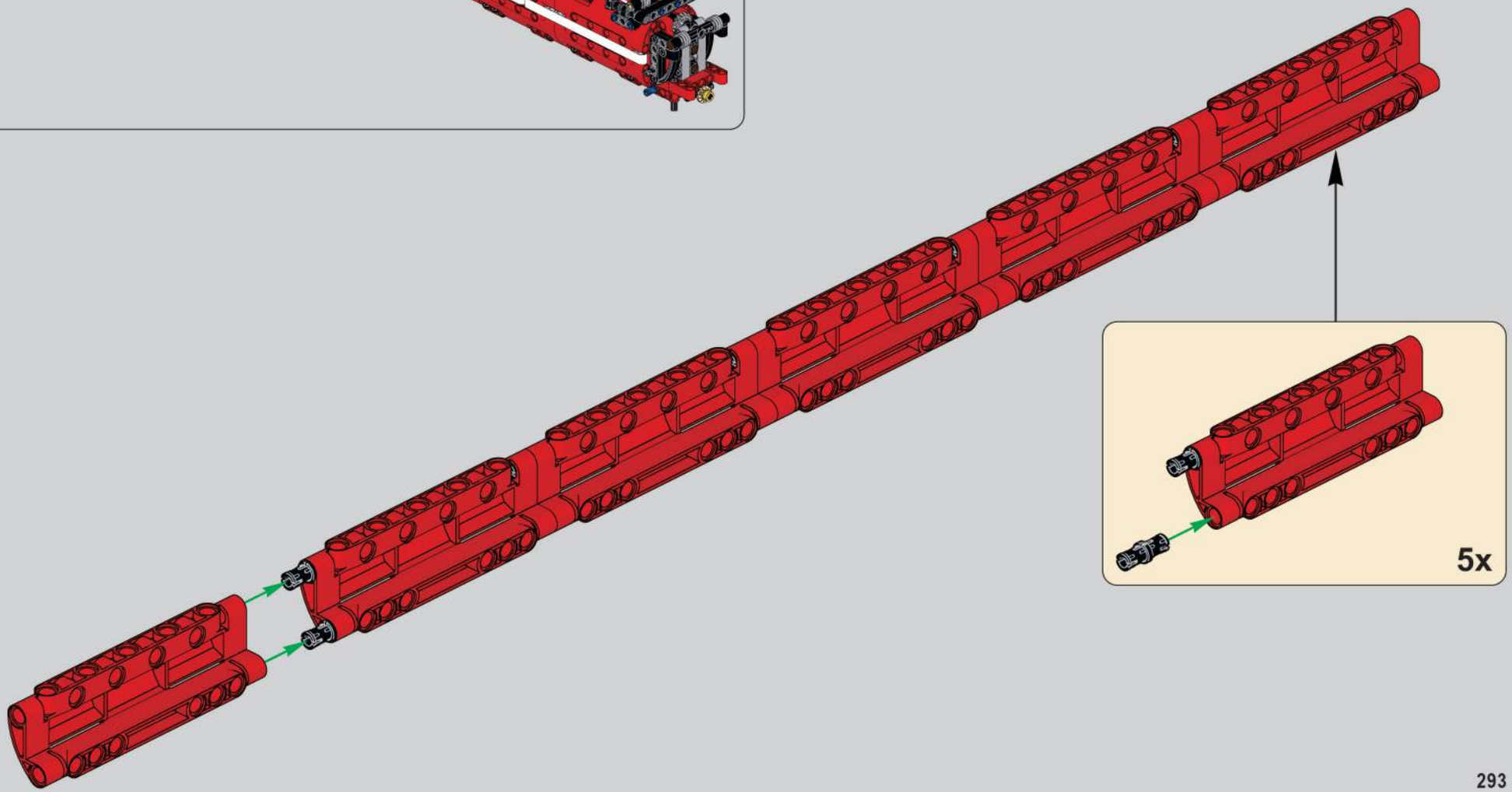

26x

1972

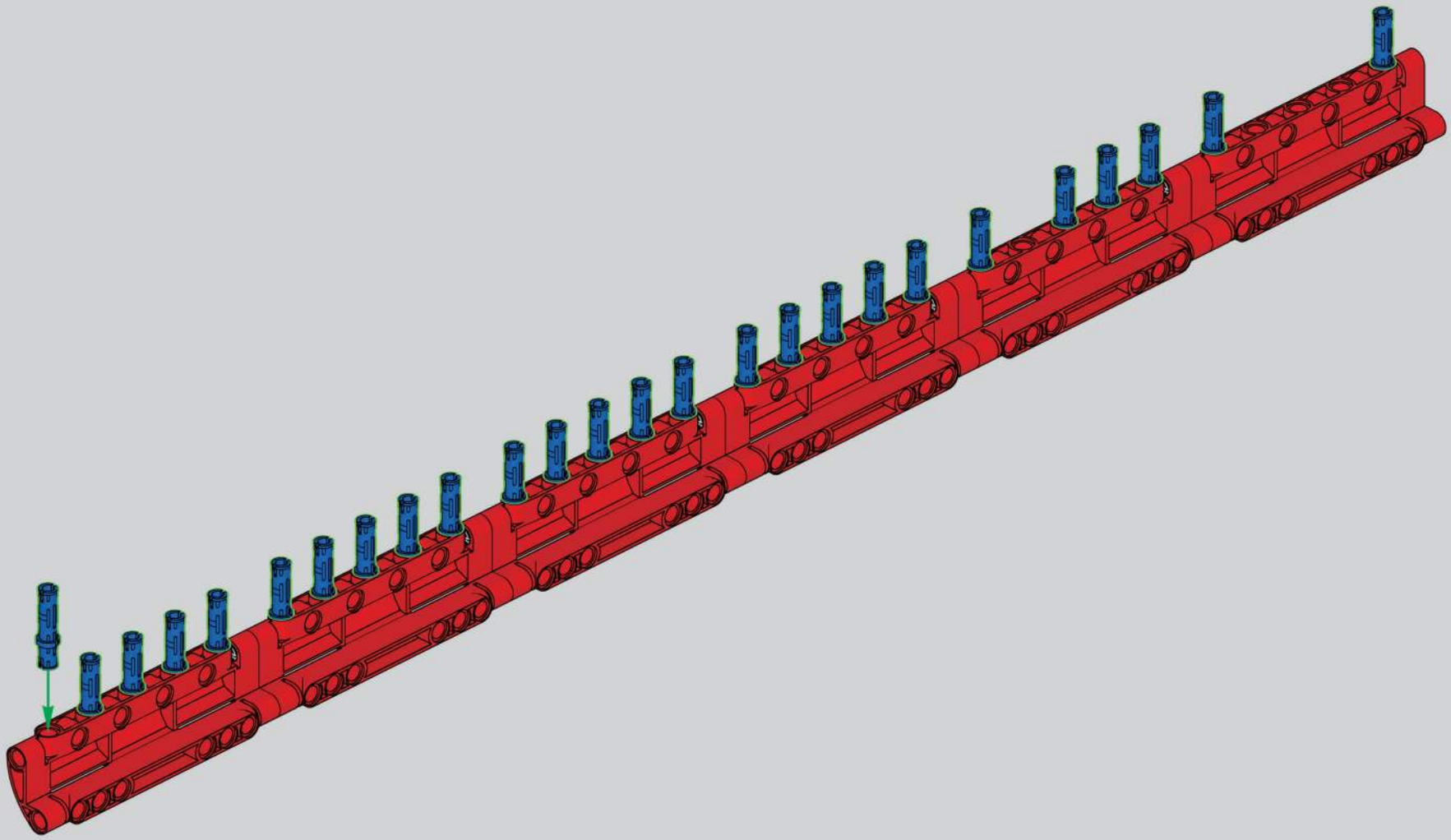

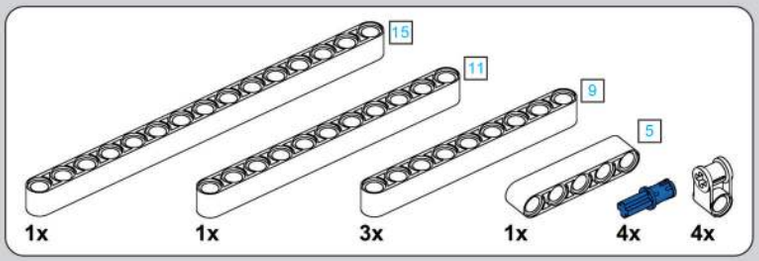

1973

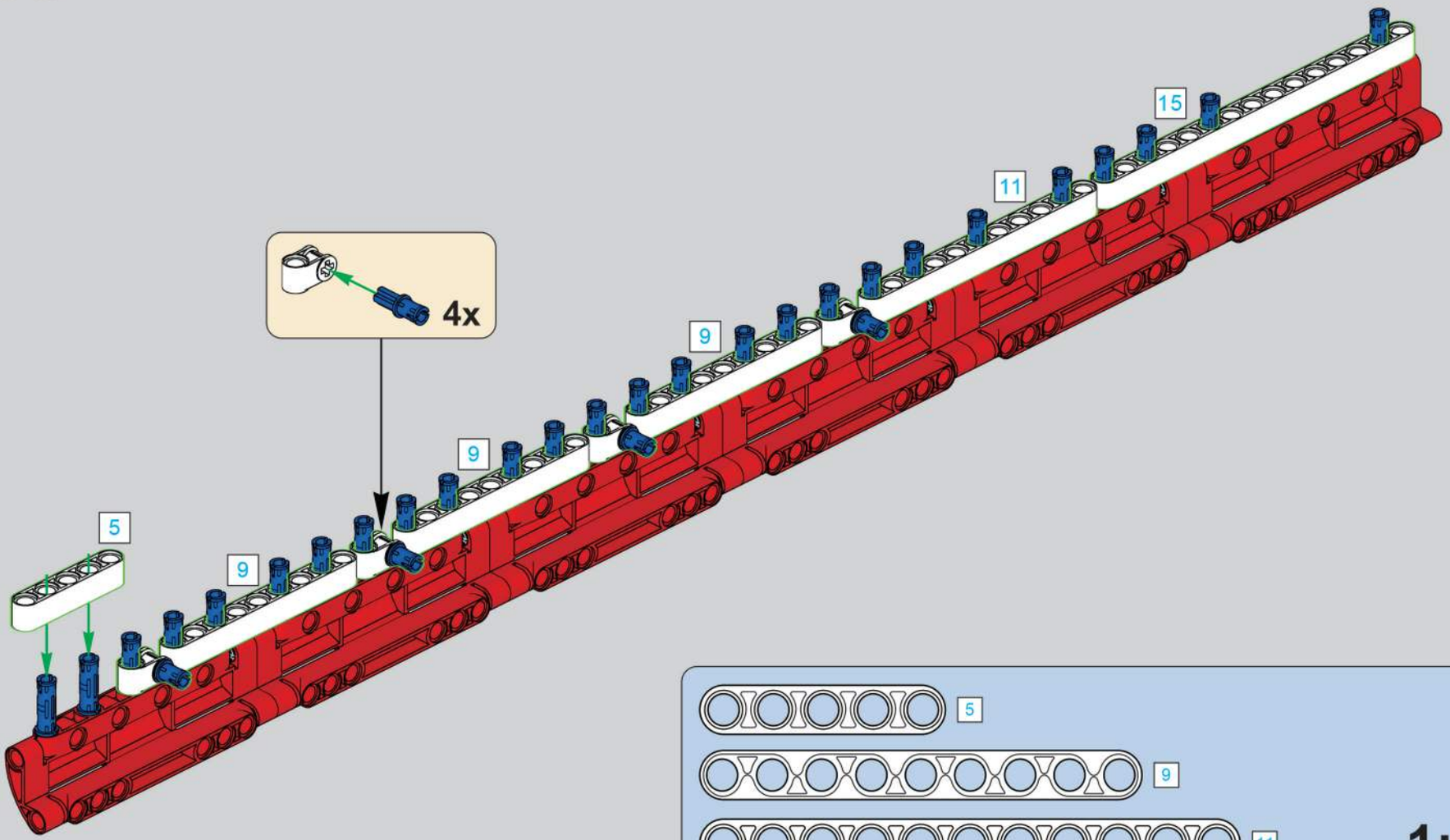

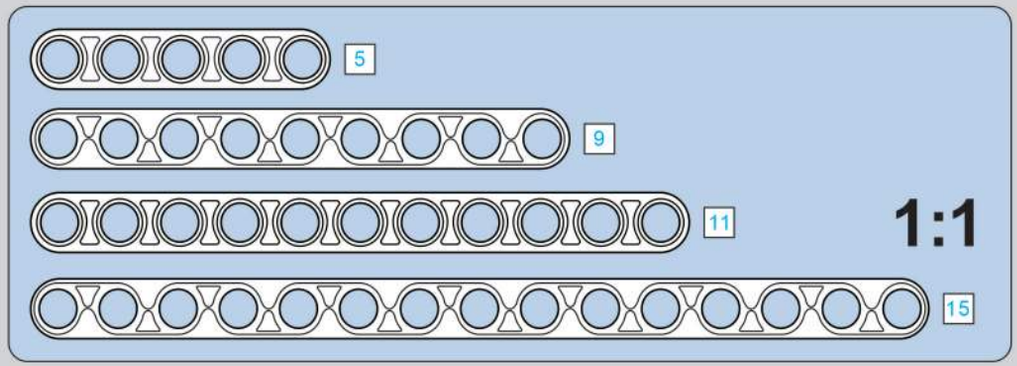

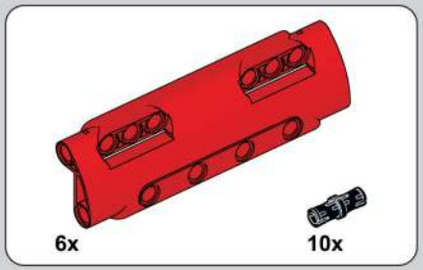

1974

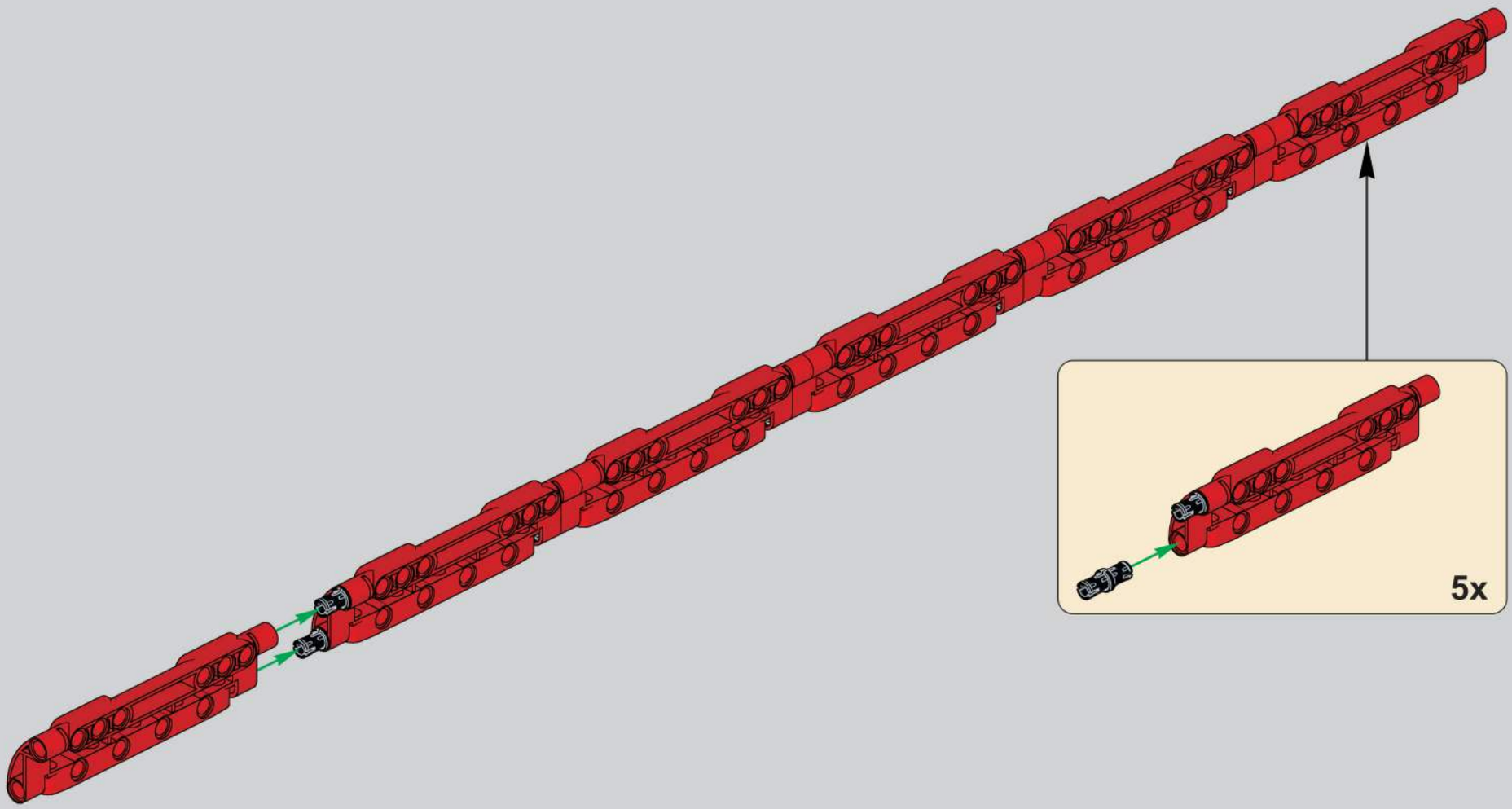

1975

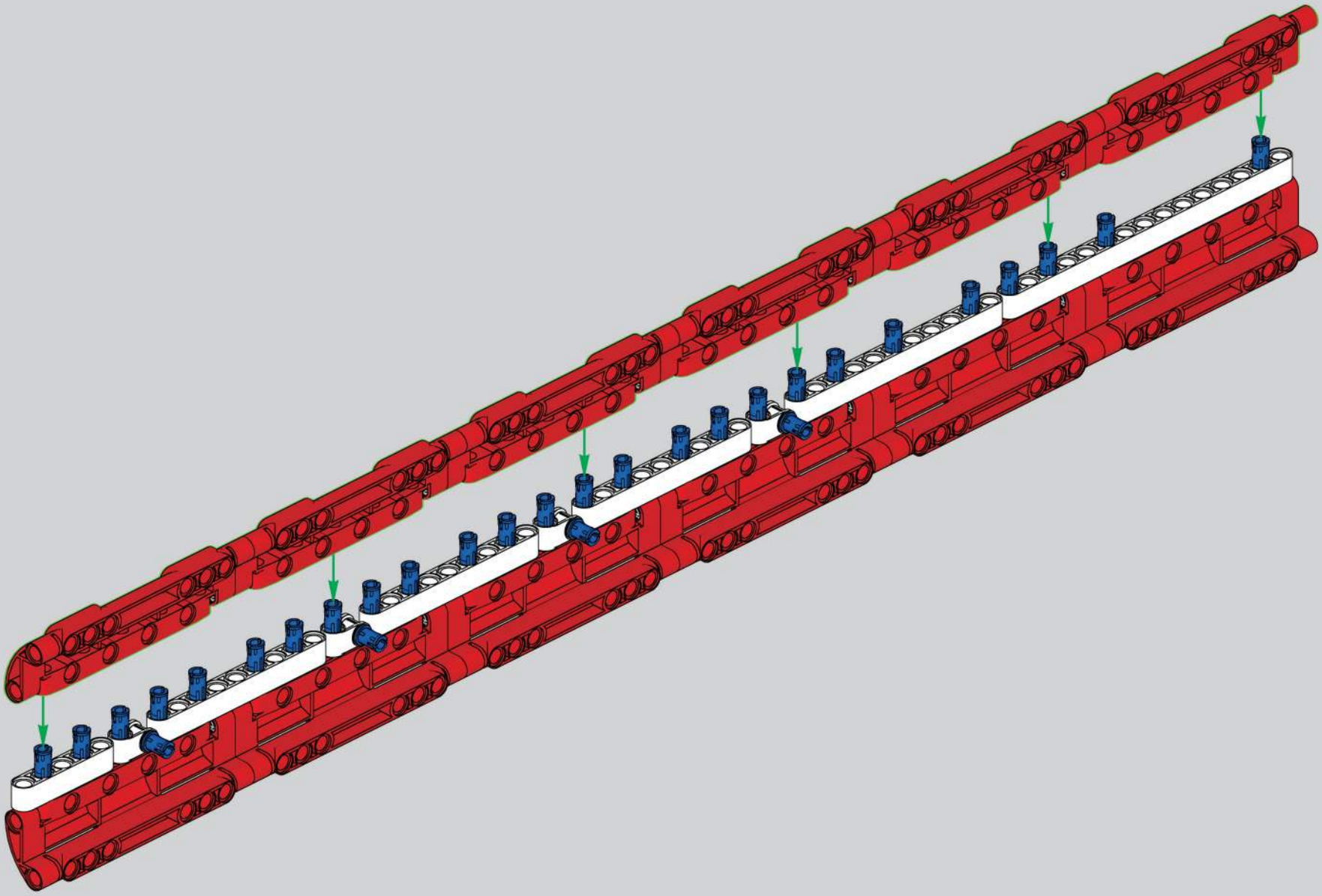

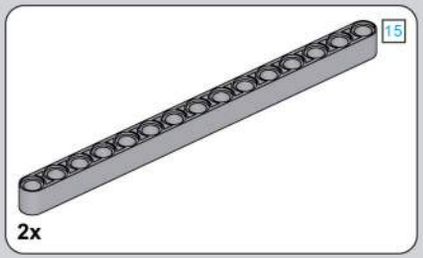

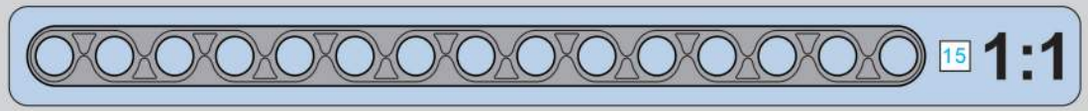

1976

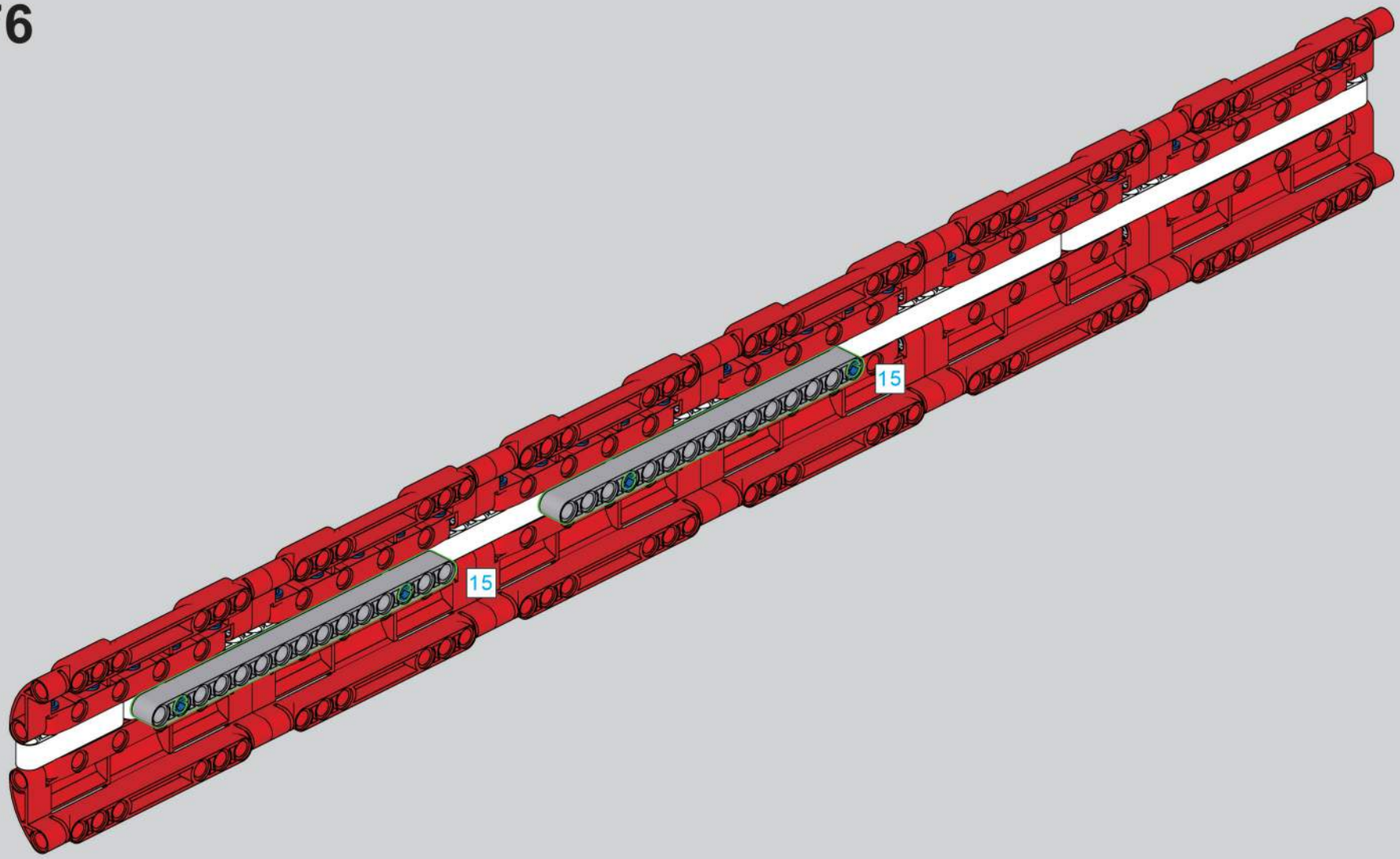

1977

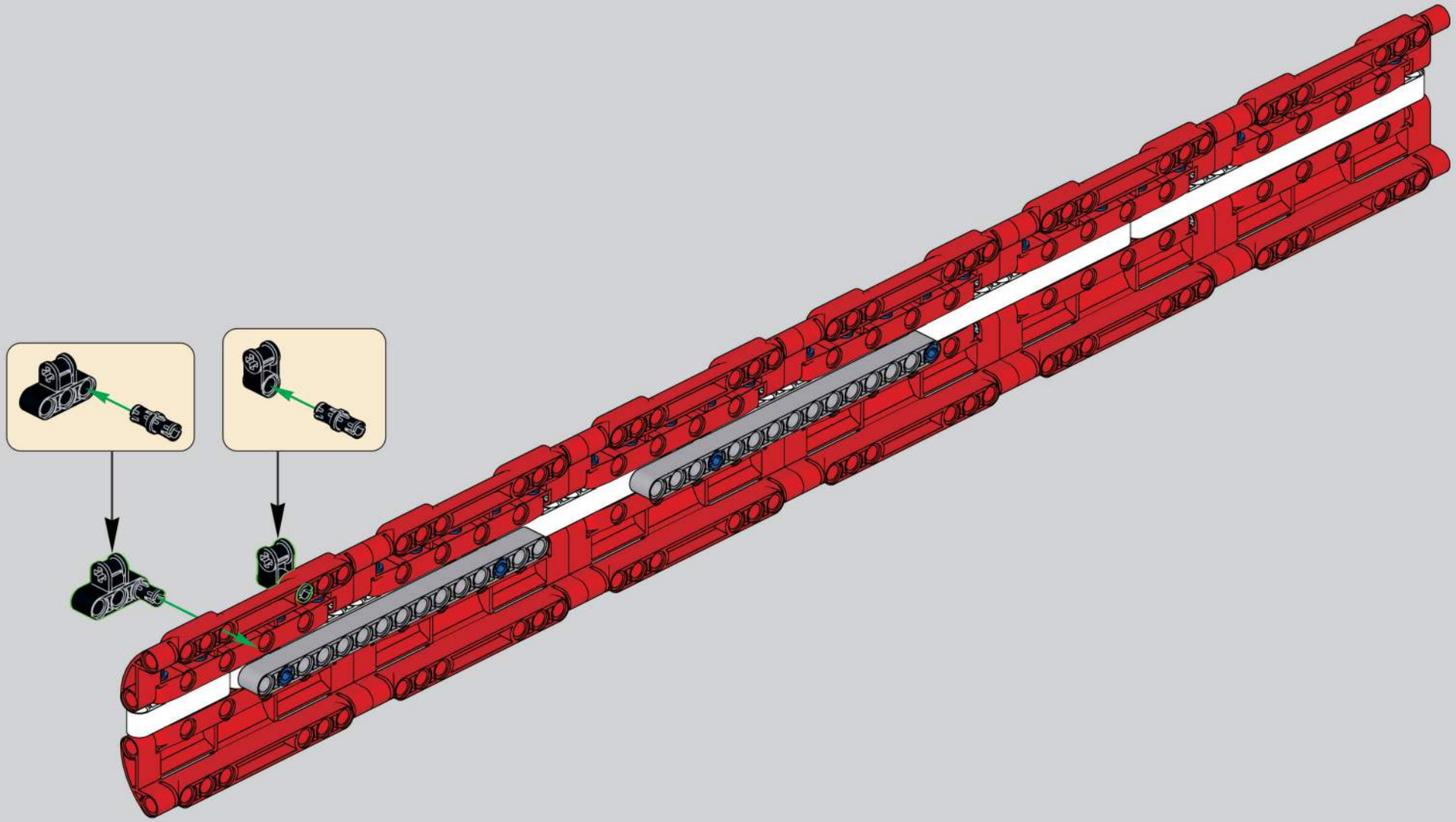

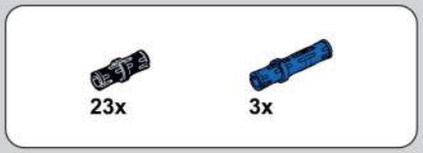

1978

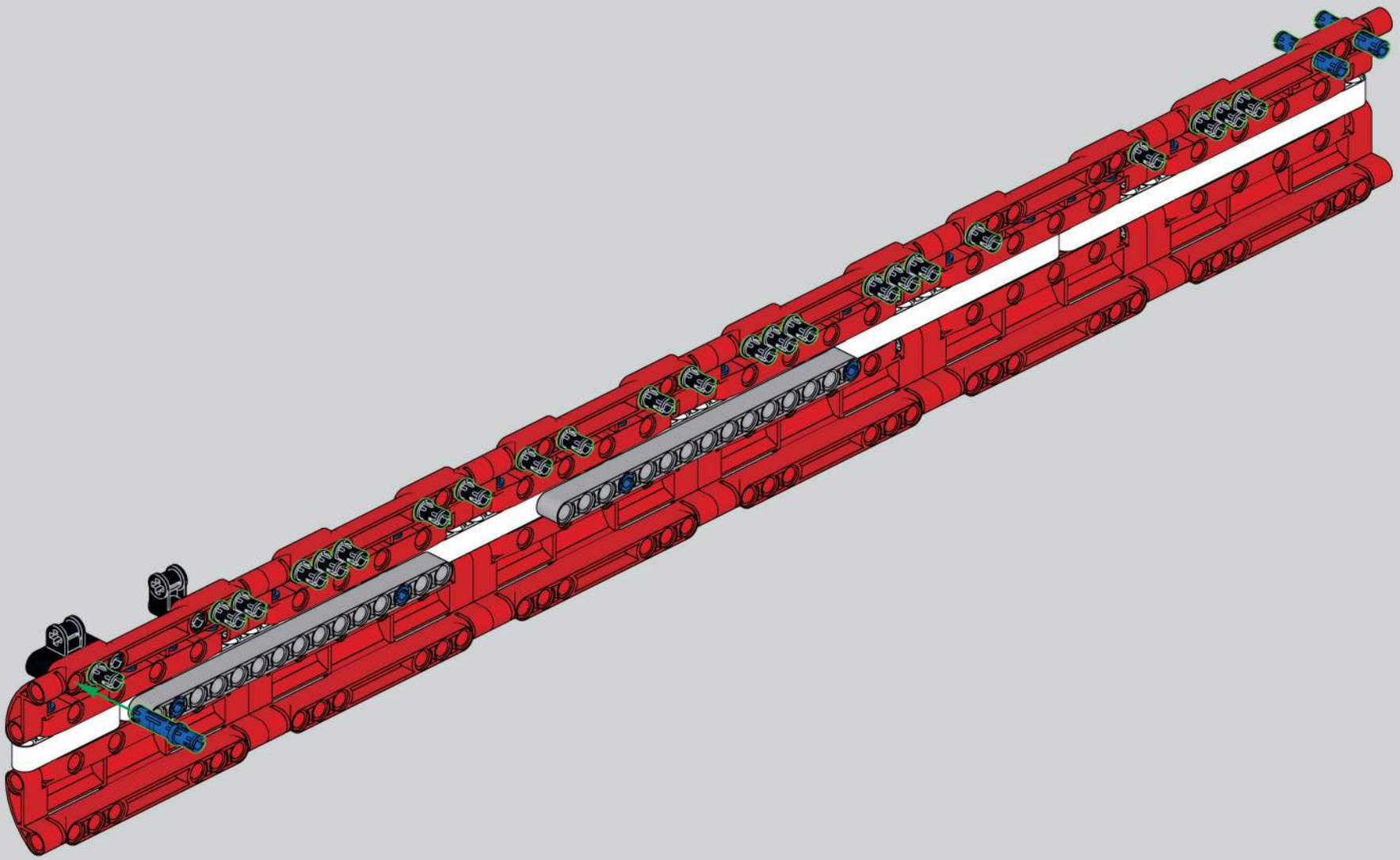

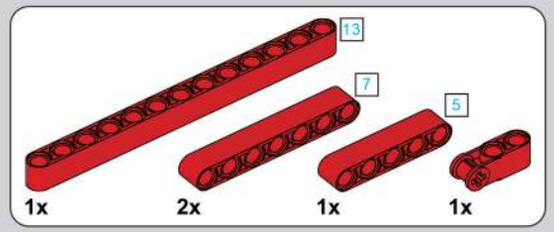

1979

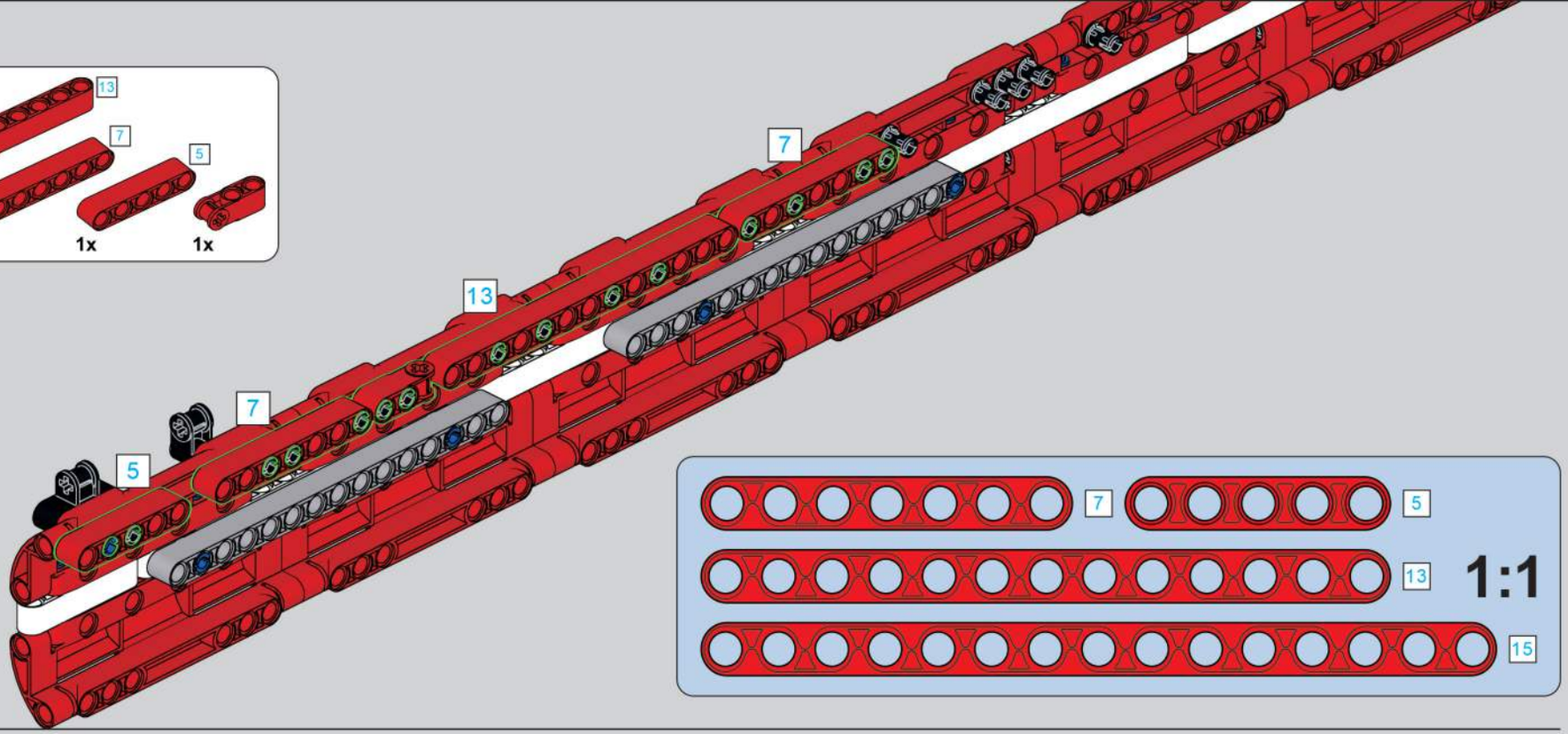

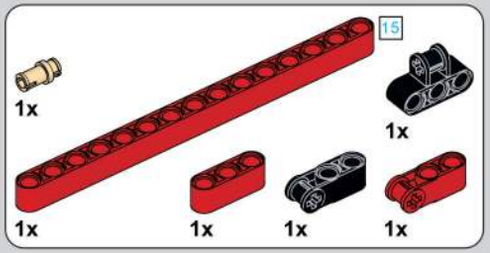

1980

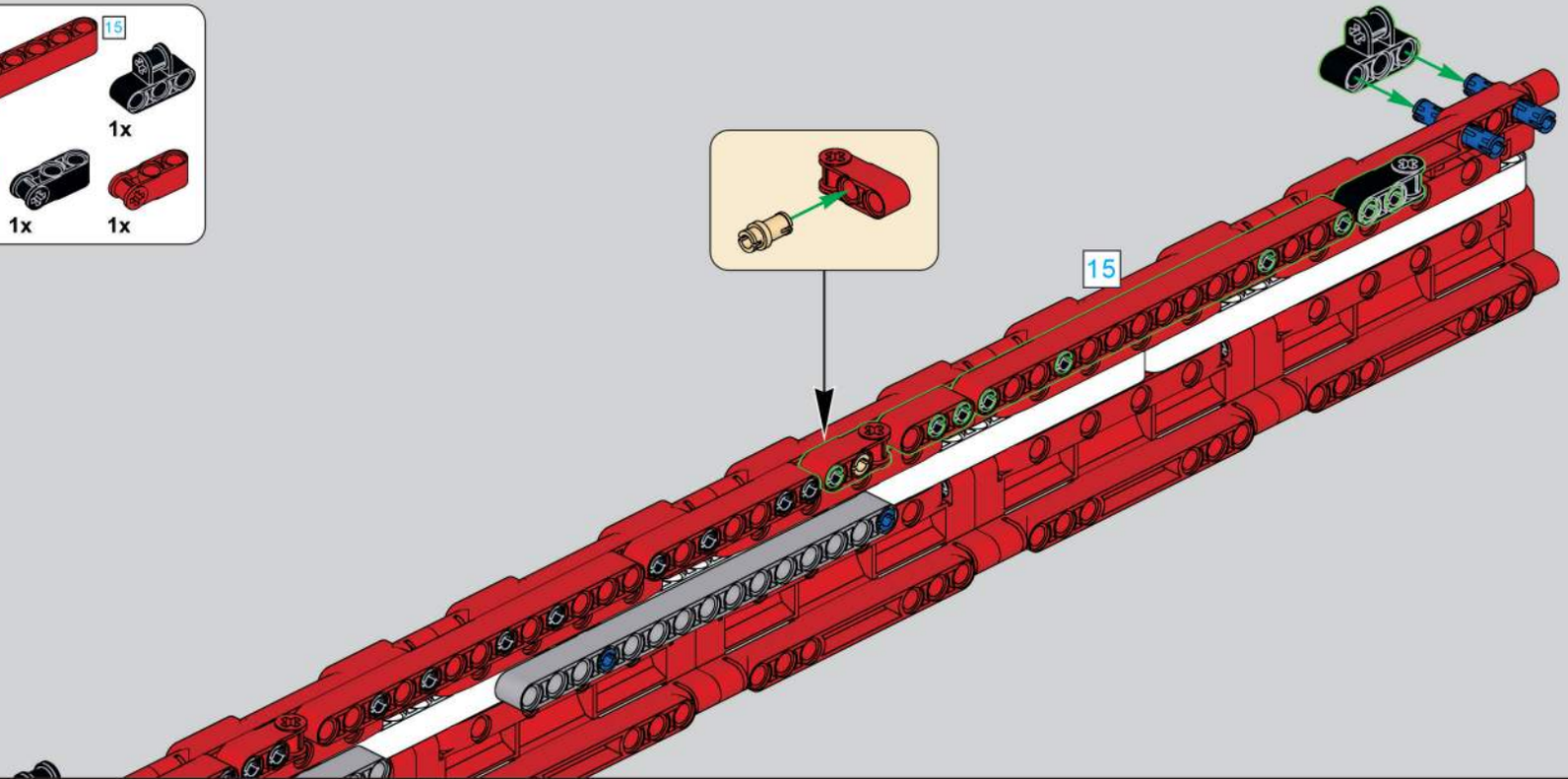

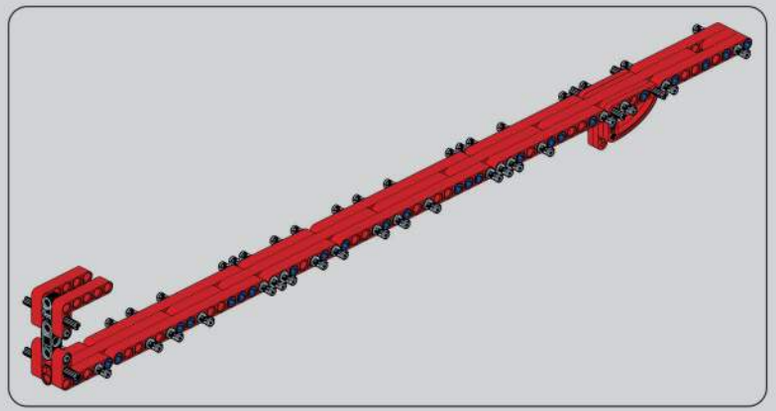

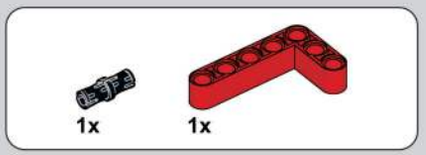

1981

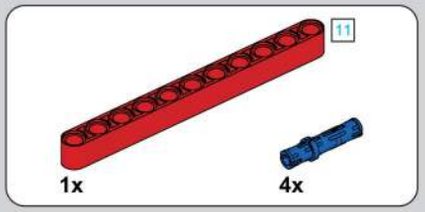

1982

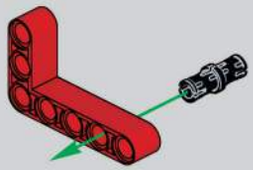

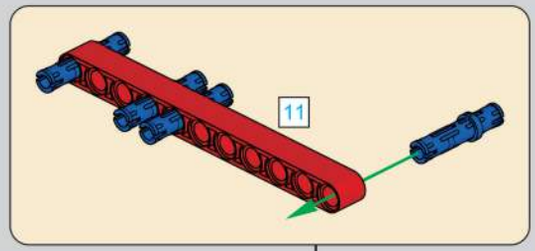

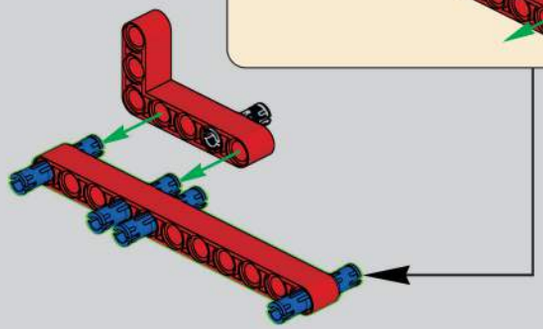

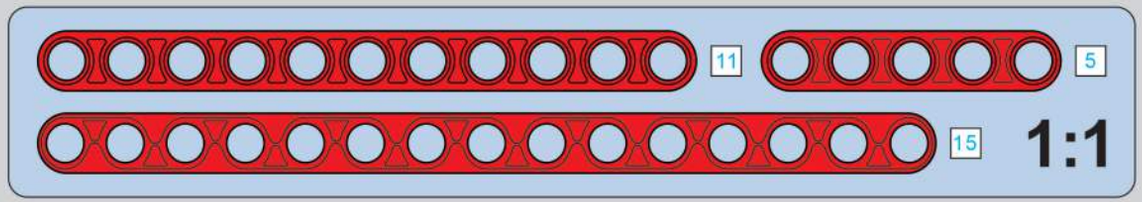

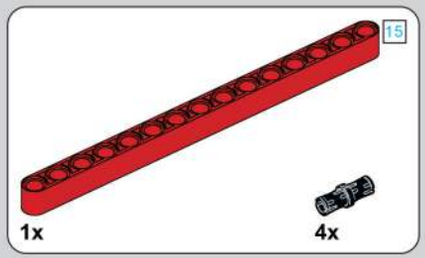

1983

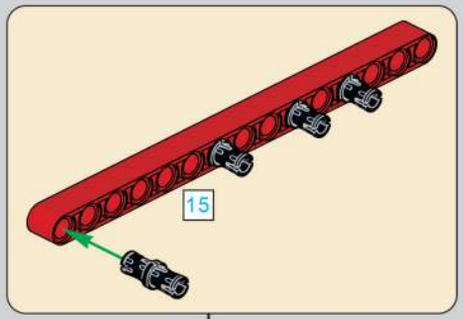

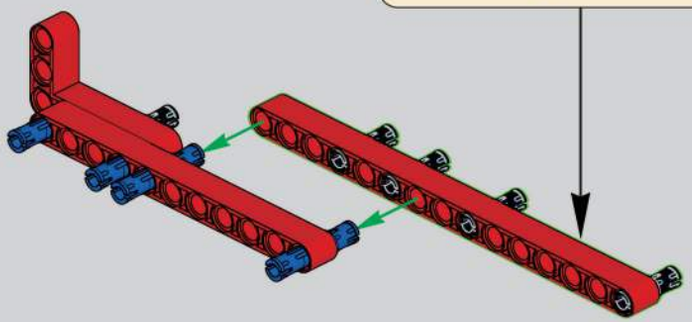

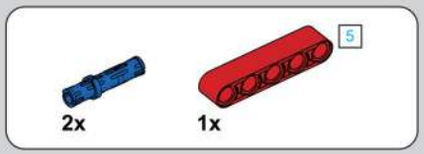

1984

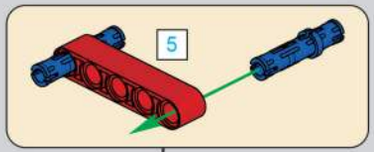

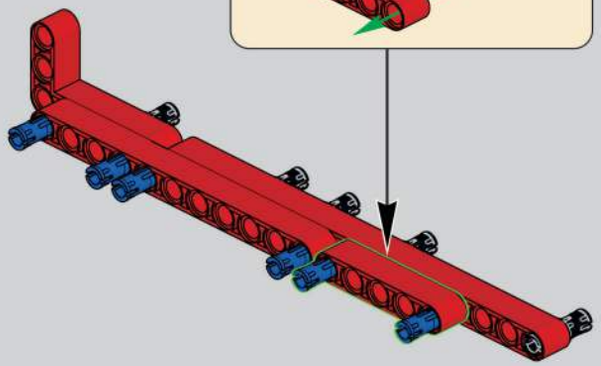

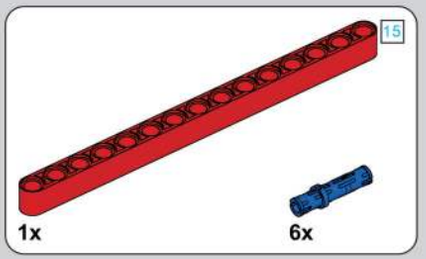

1985

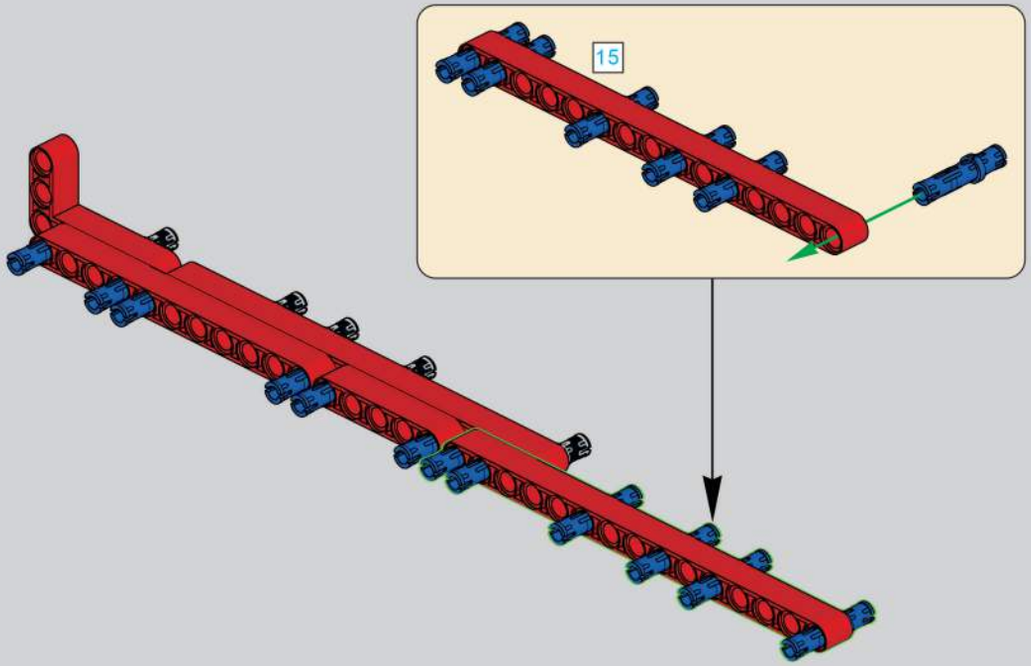

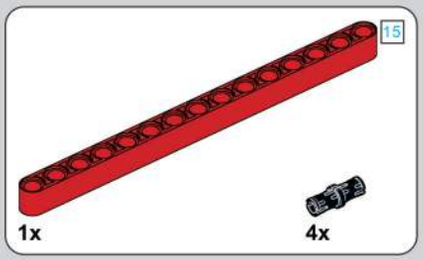

1986

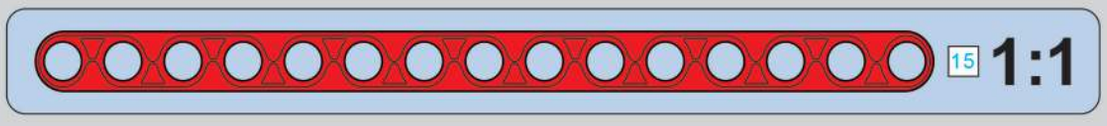

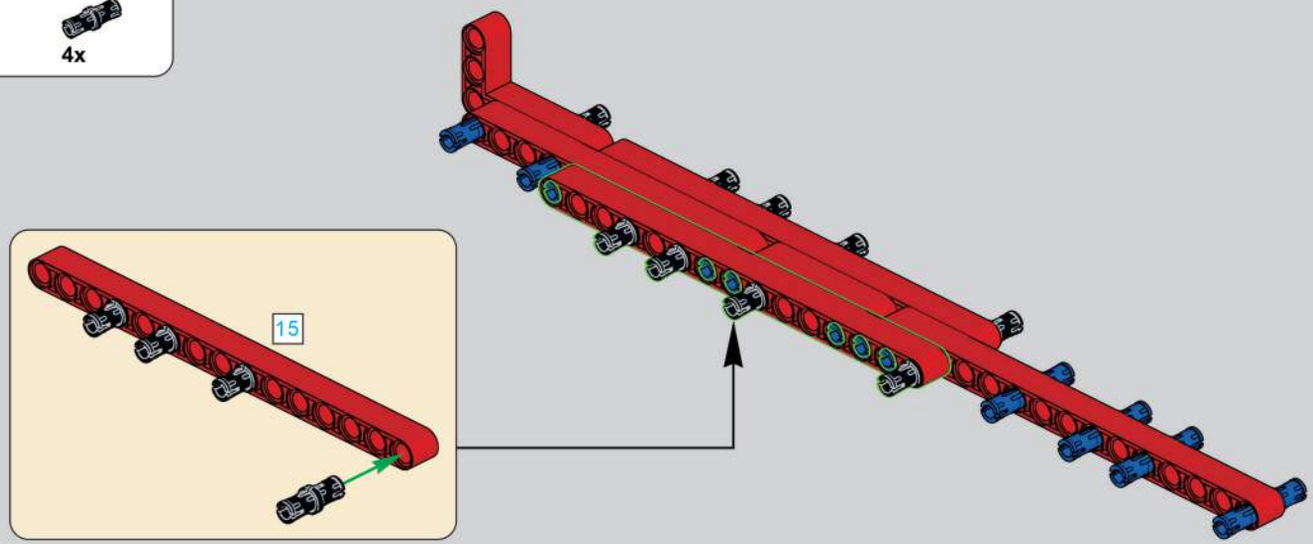

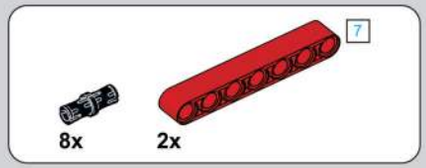

1987

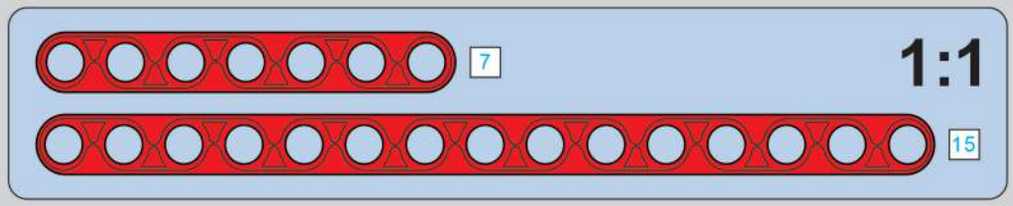

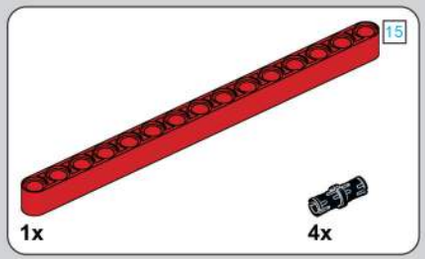

1988

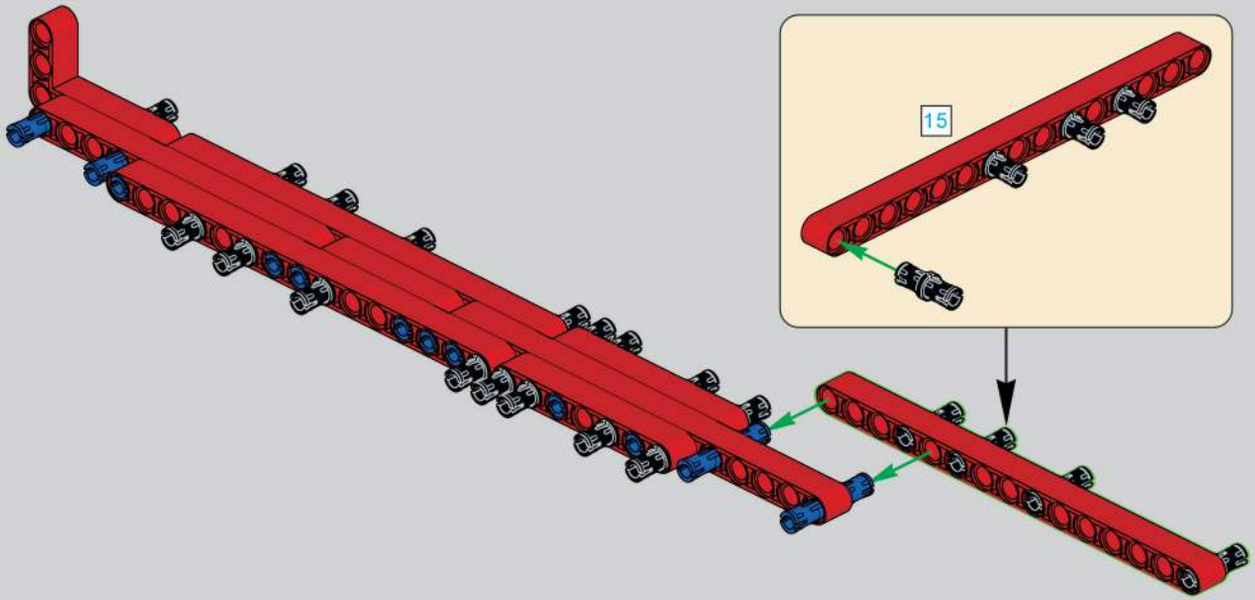

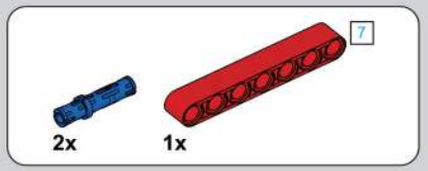

1989

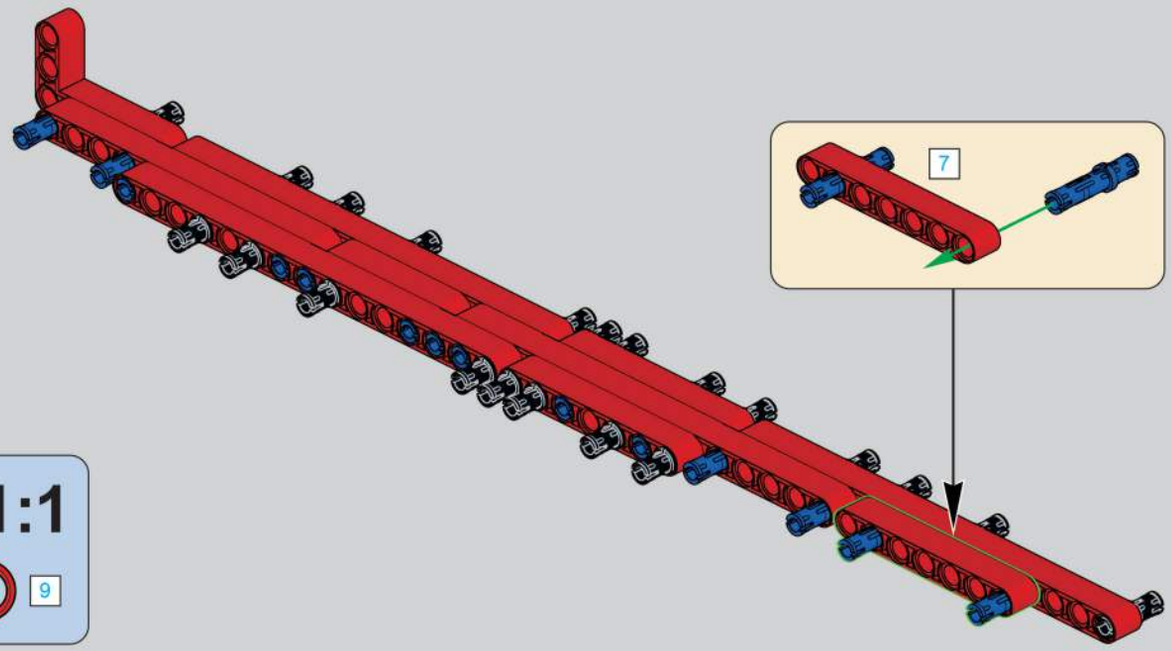

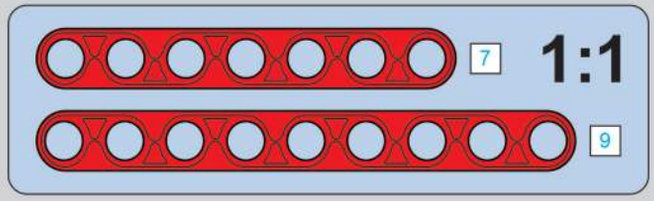

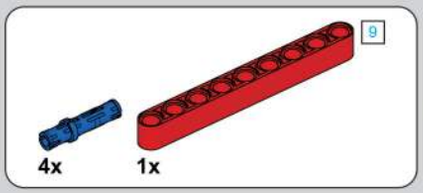

1990

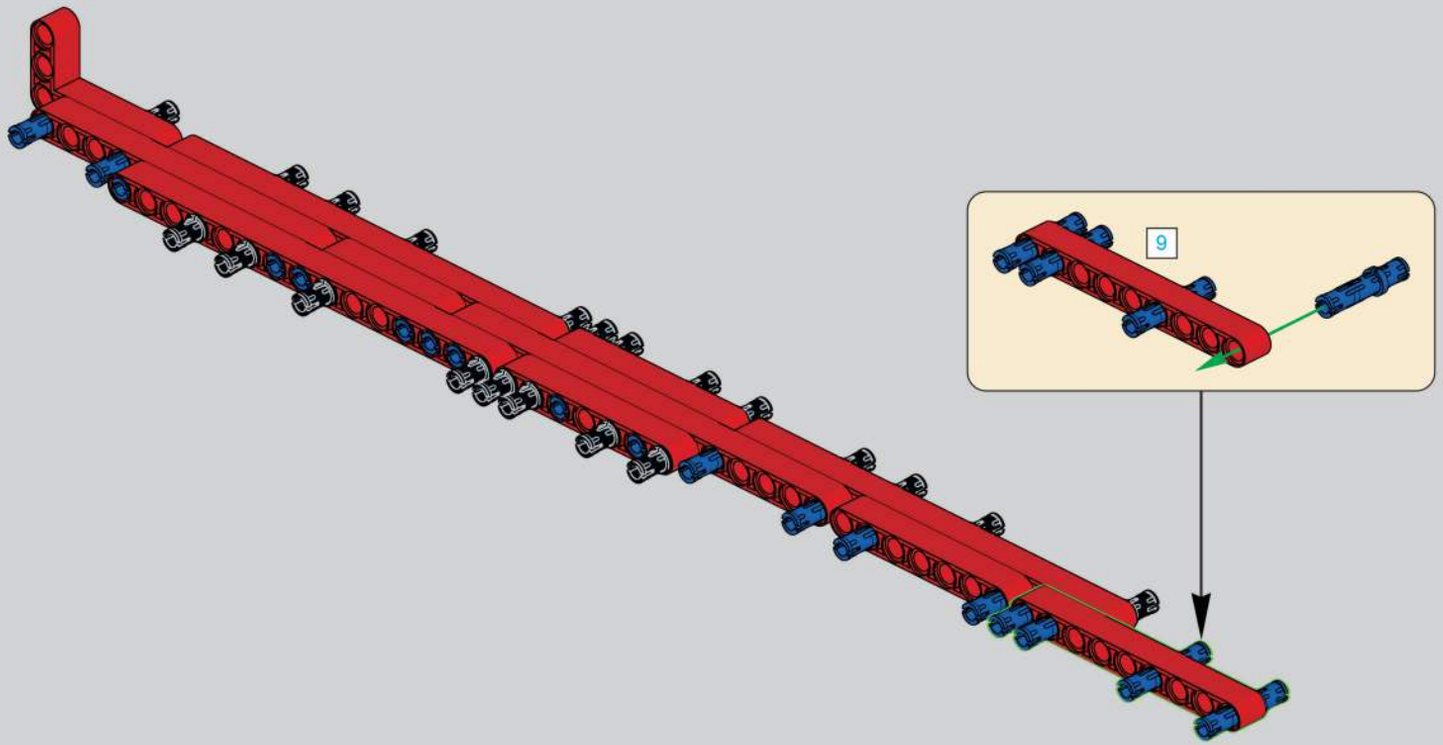

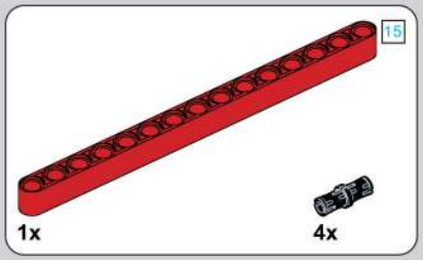

1991

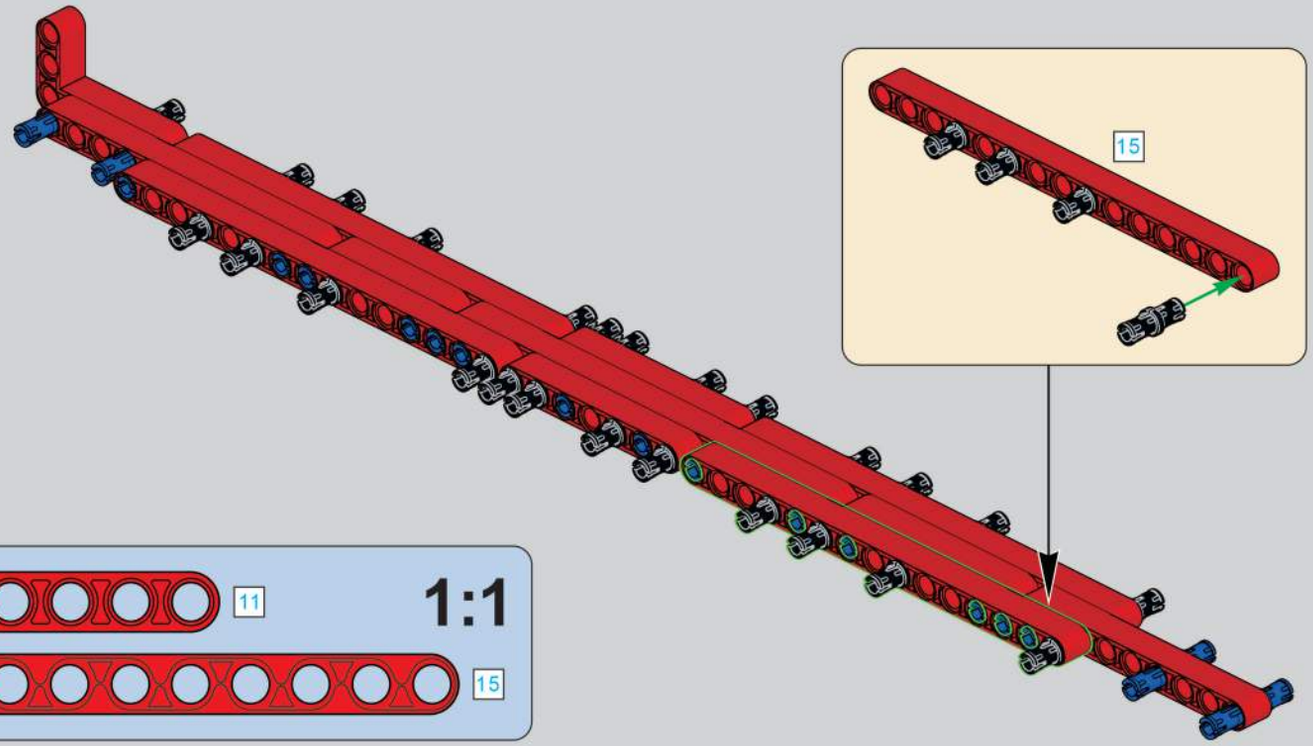

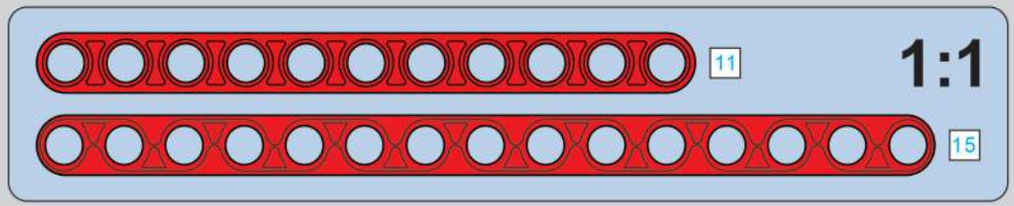

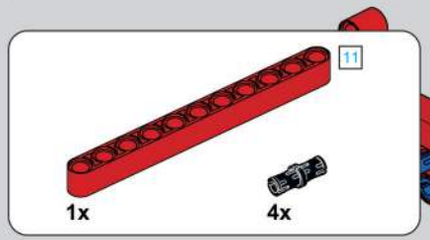

1992

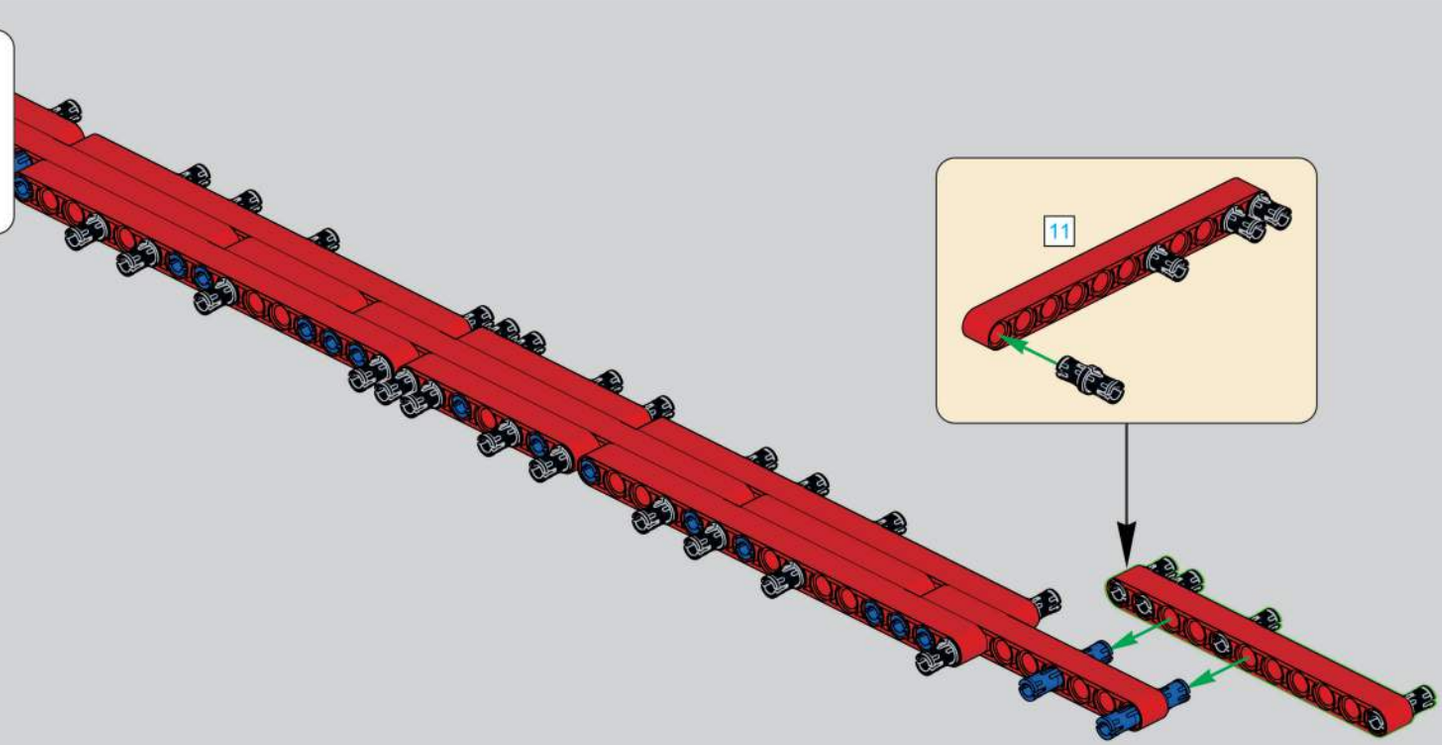

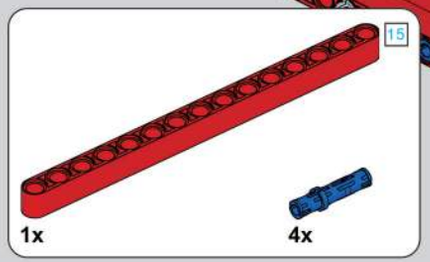

1993

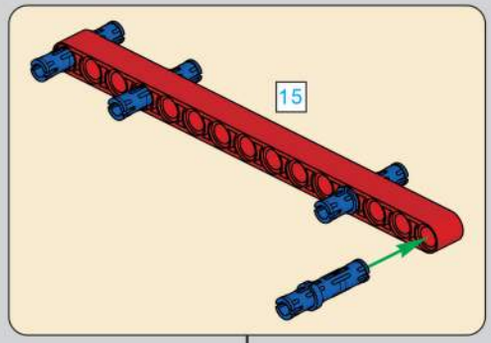

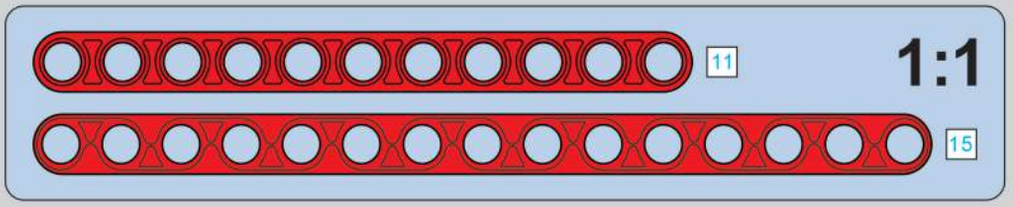

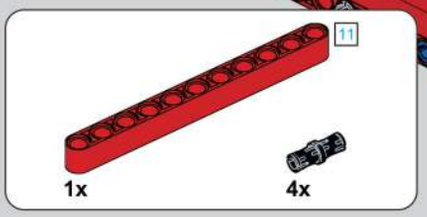

1994

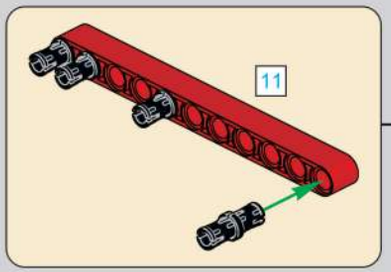

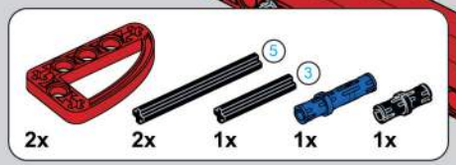

1995

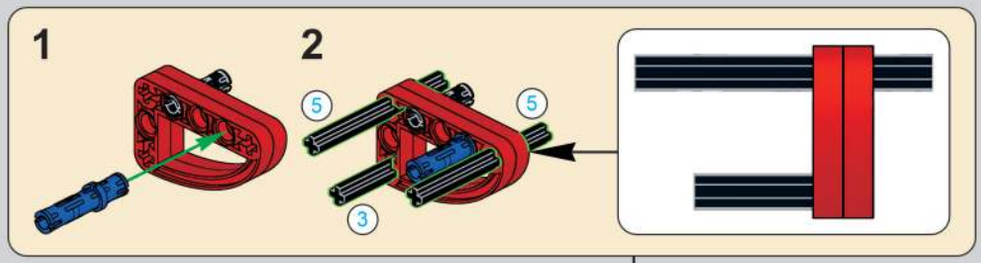

1996

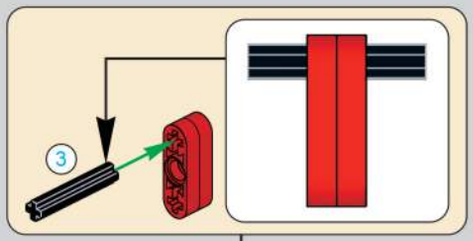

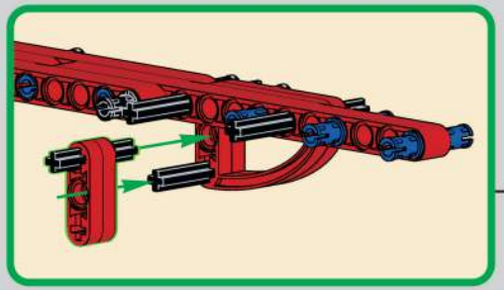

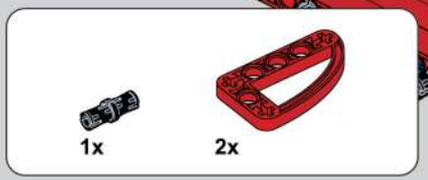

1997

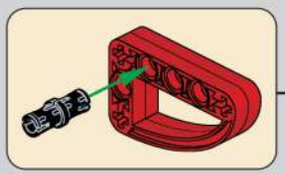

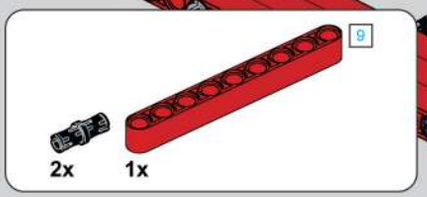

1998

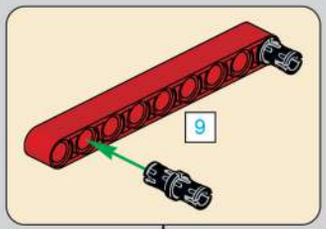

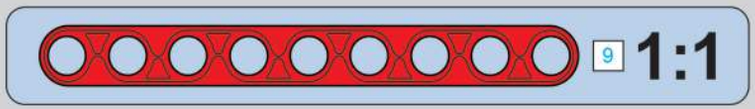

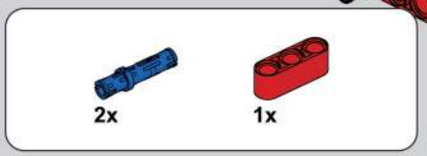

1999

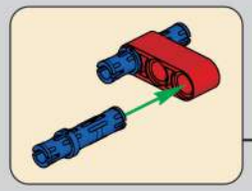

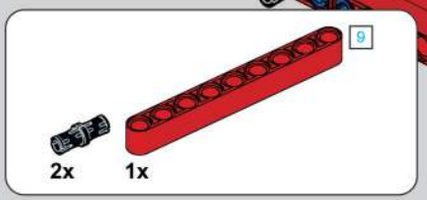

2000

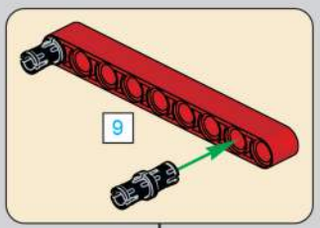

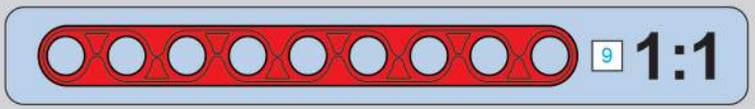

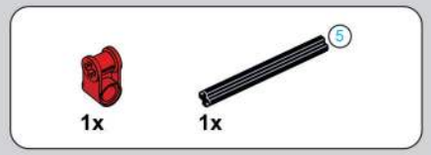

2001

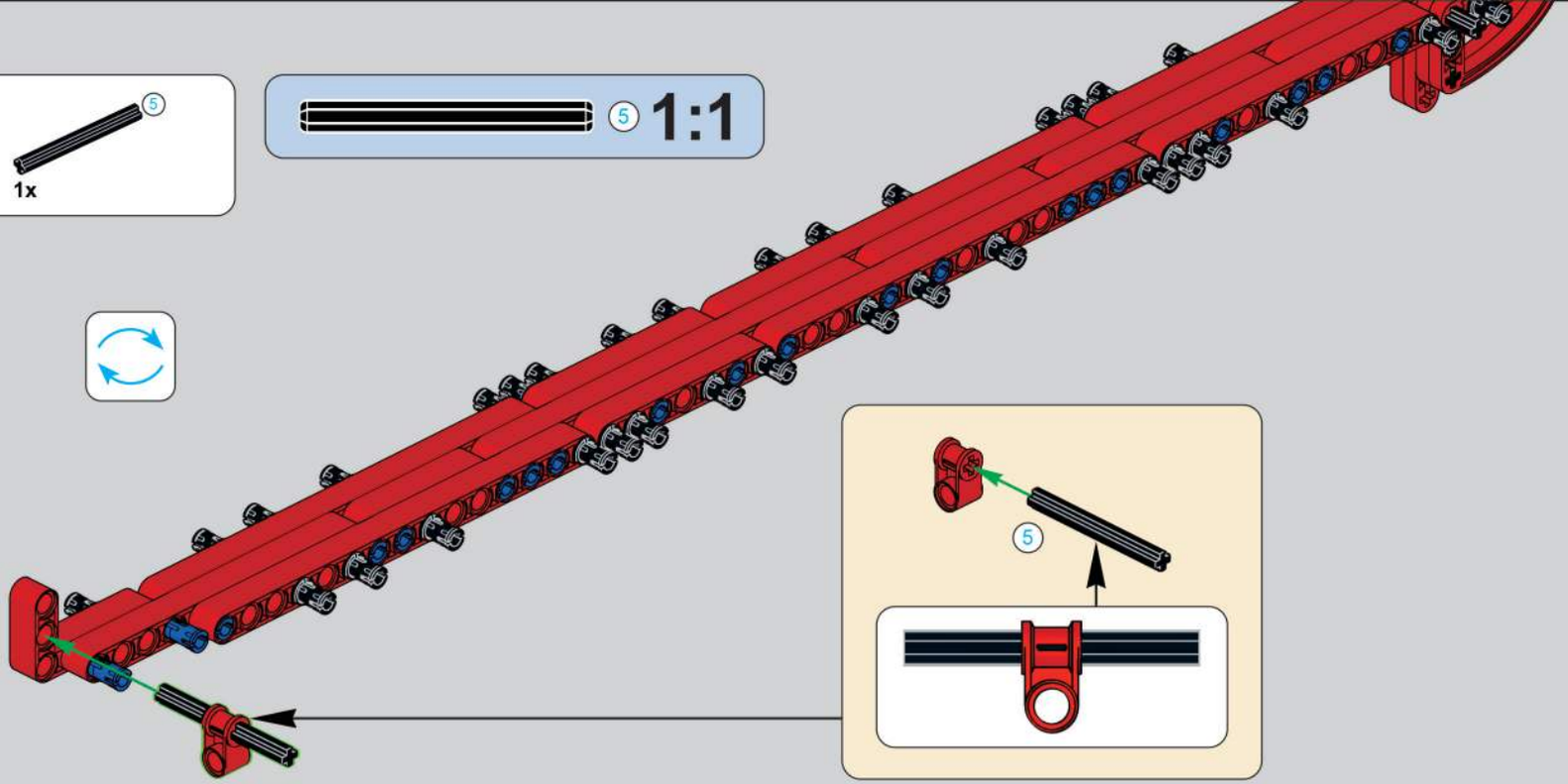

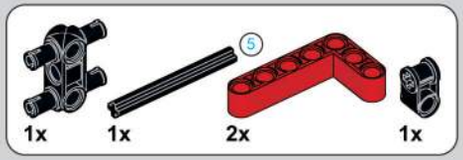

2002

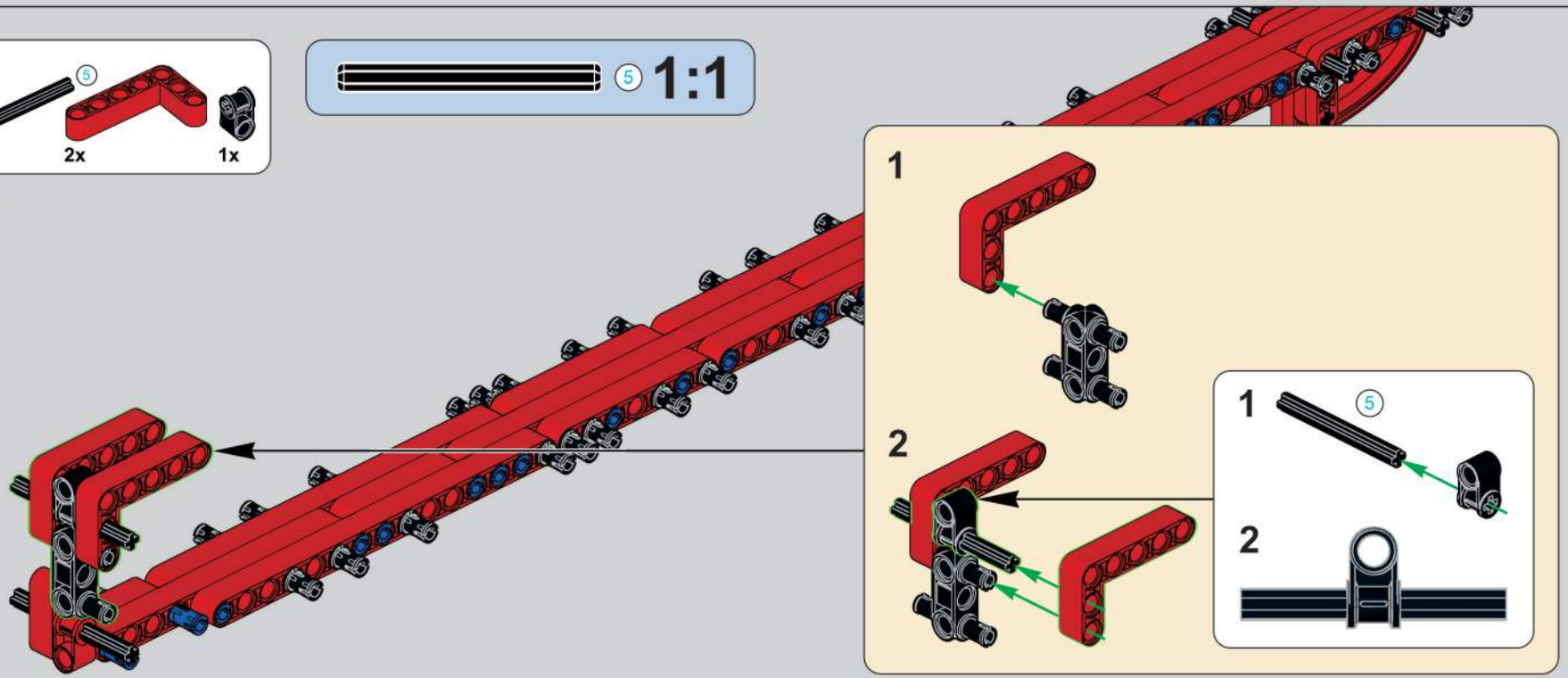

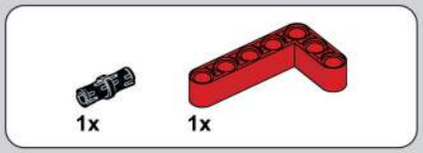

2003

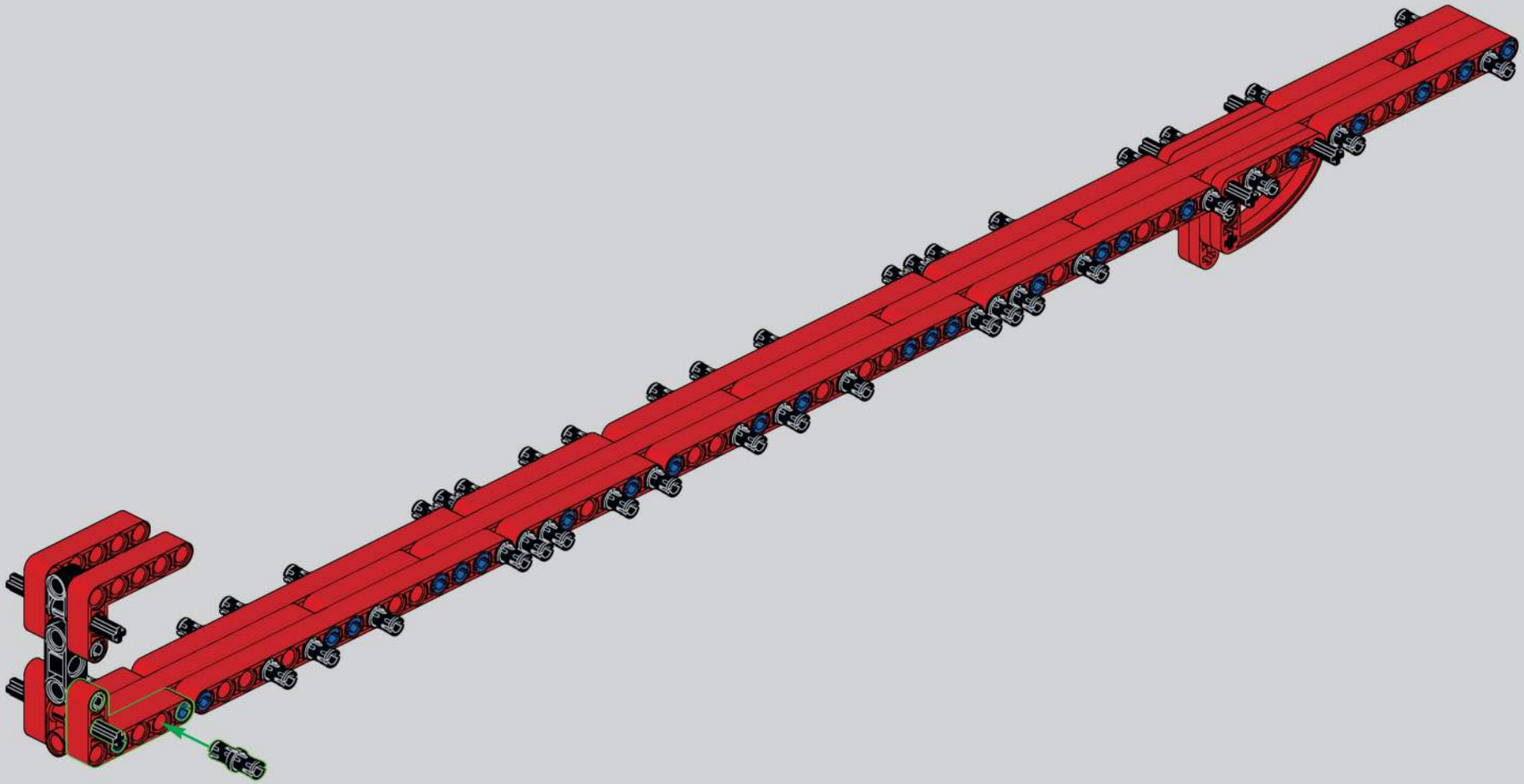

2004

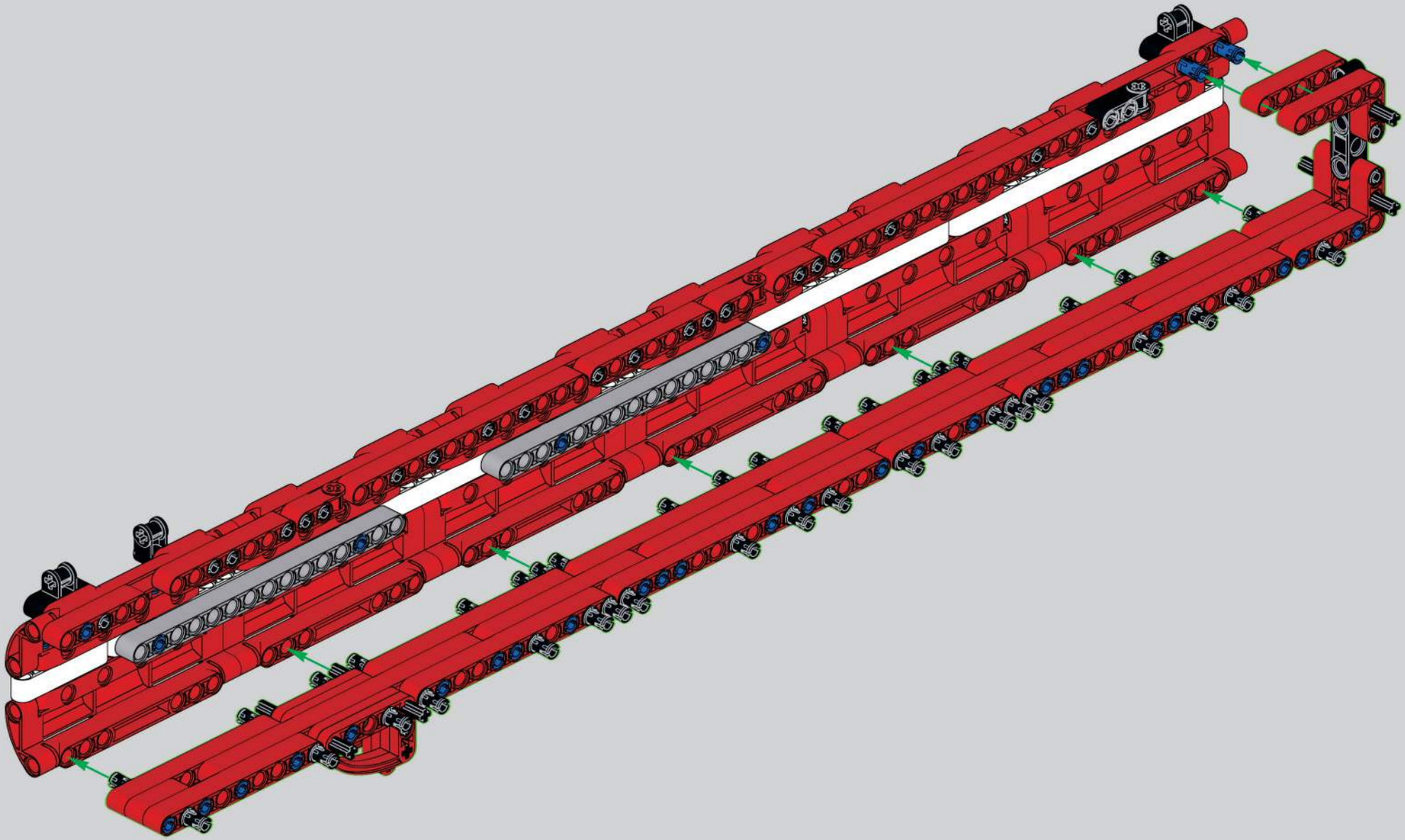

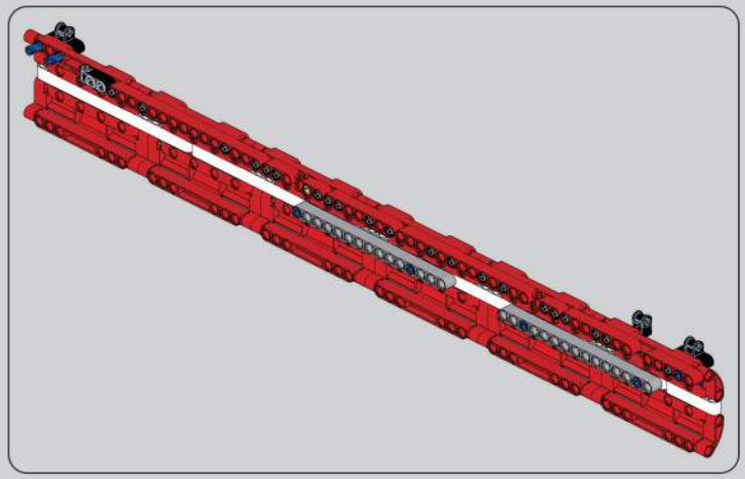

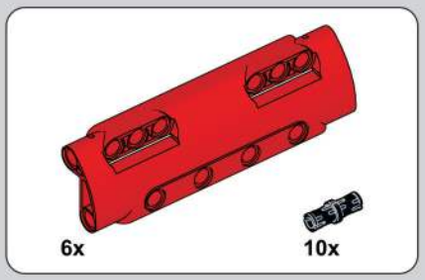

2005

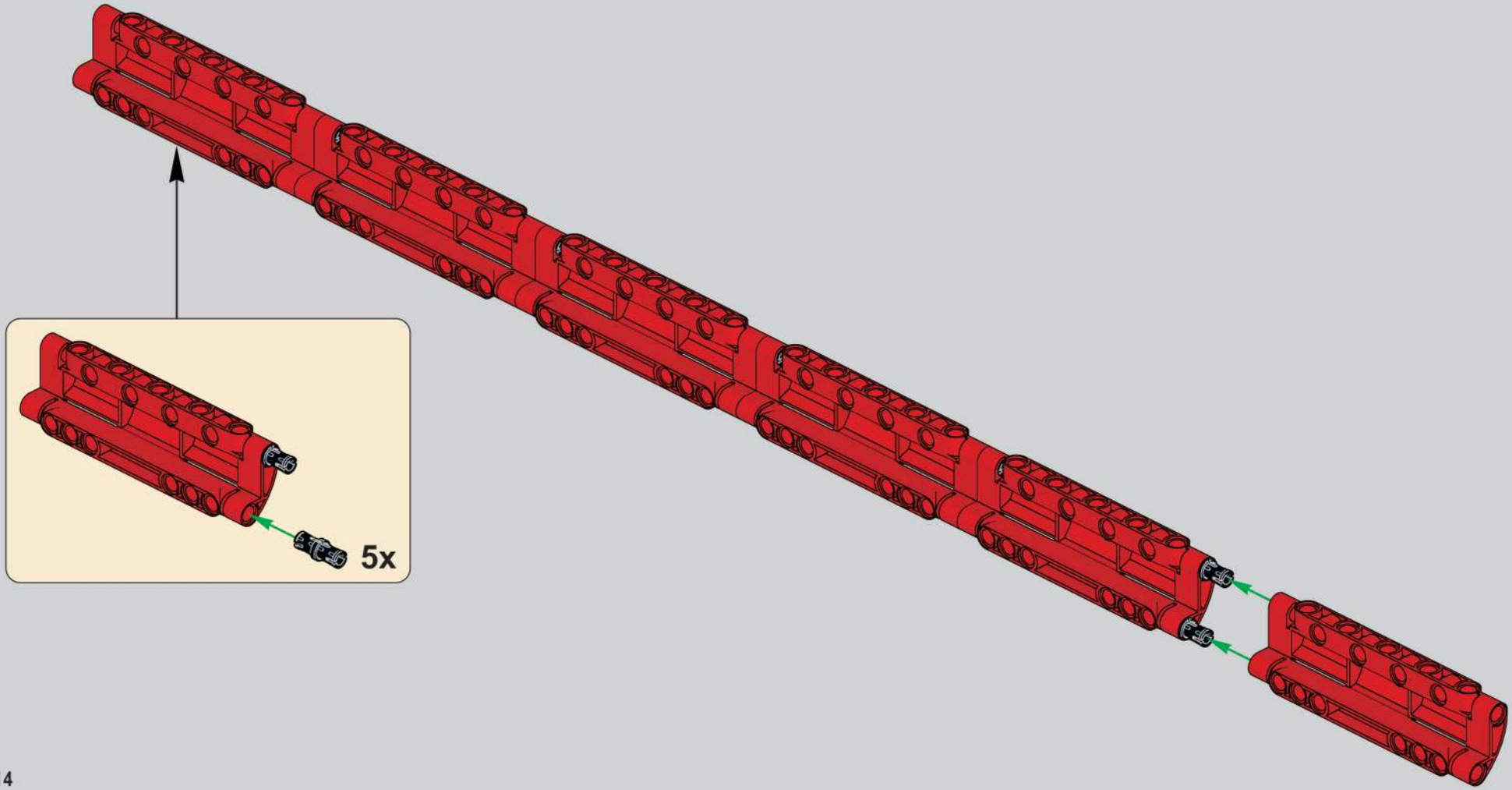

26x

2006

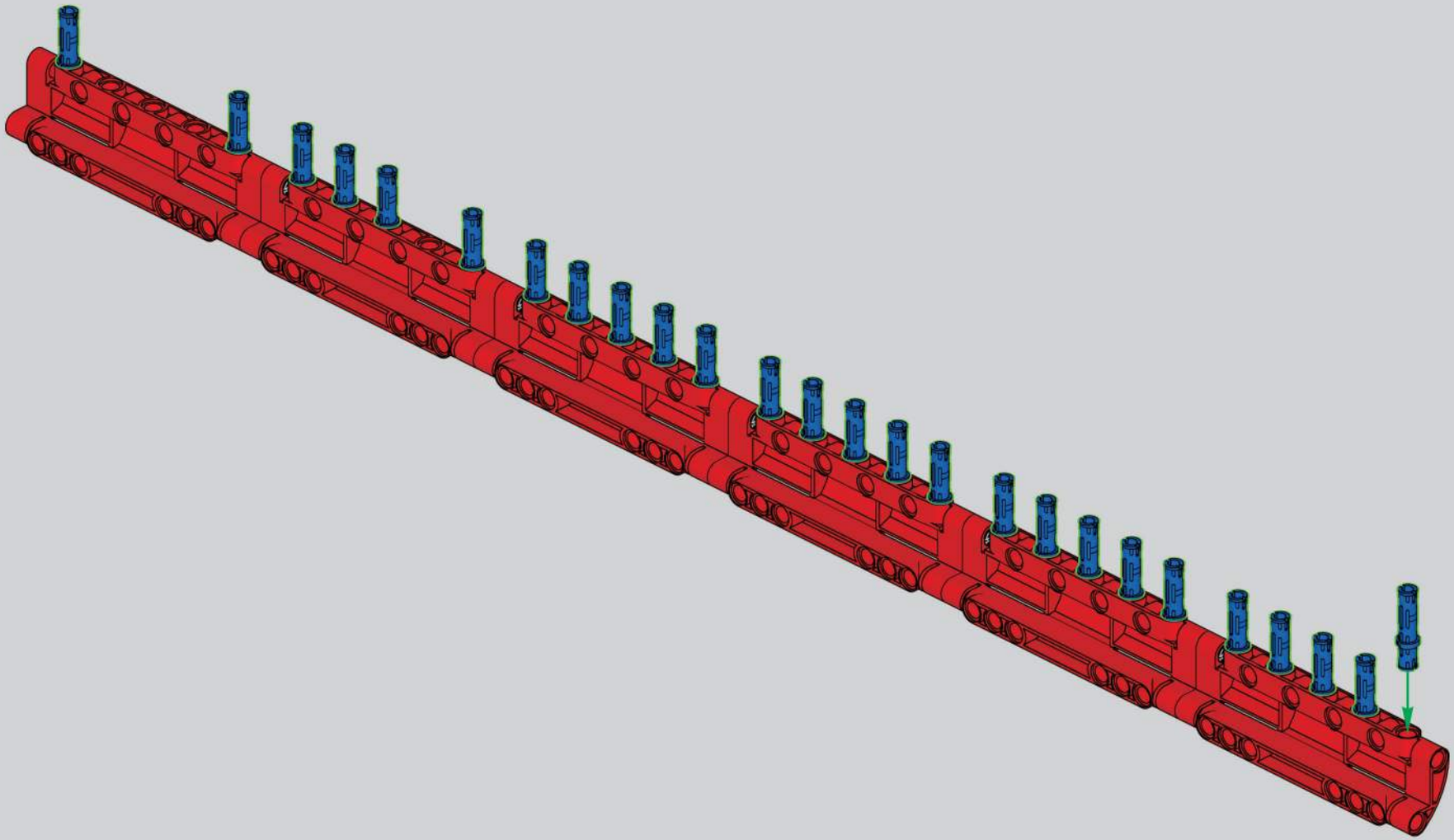

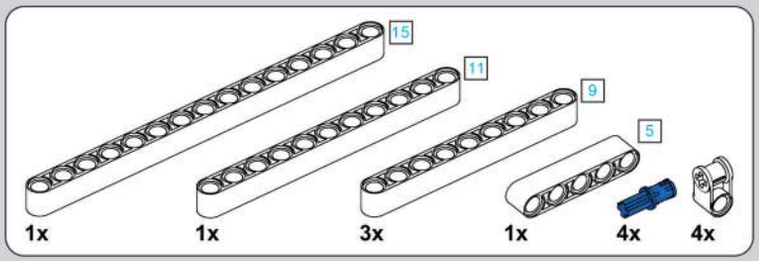

2007

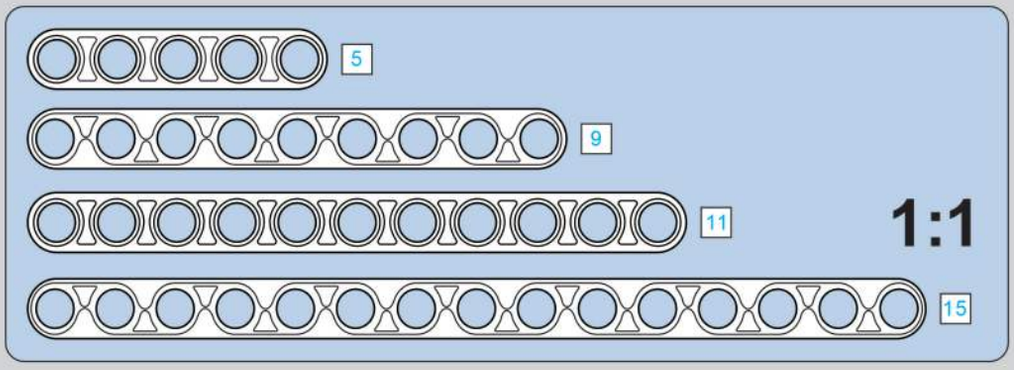

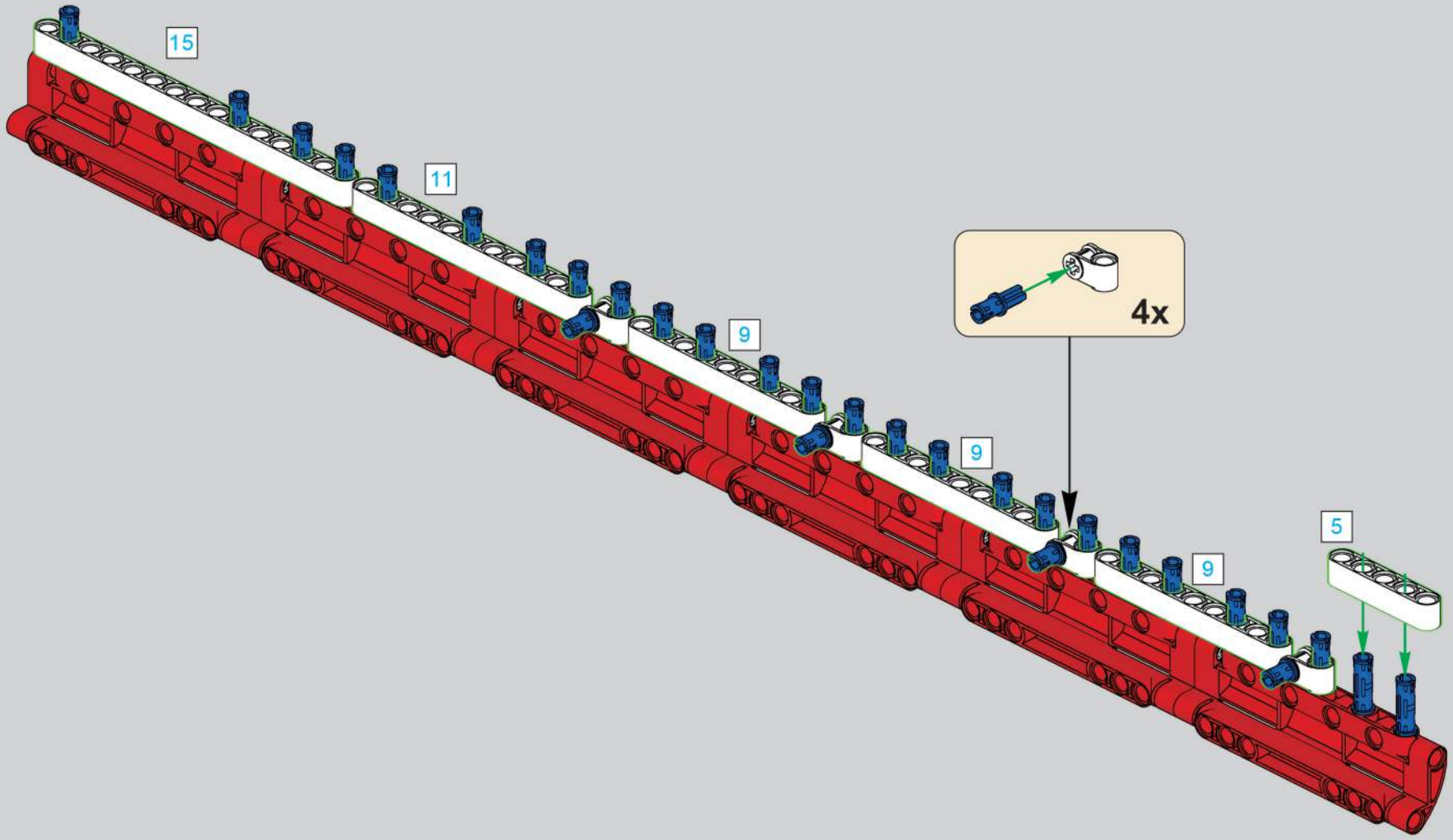

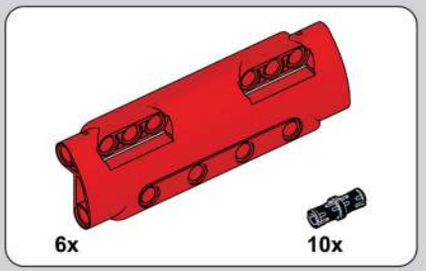

2008

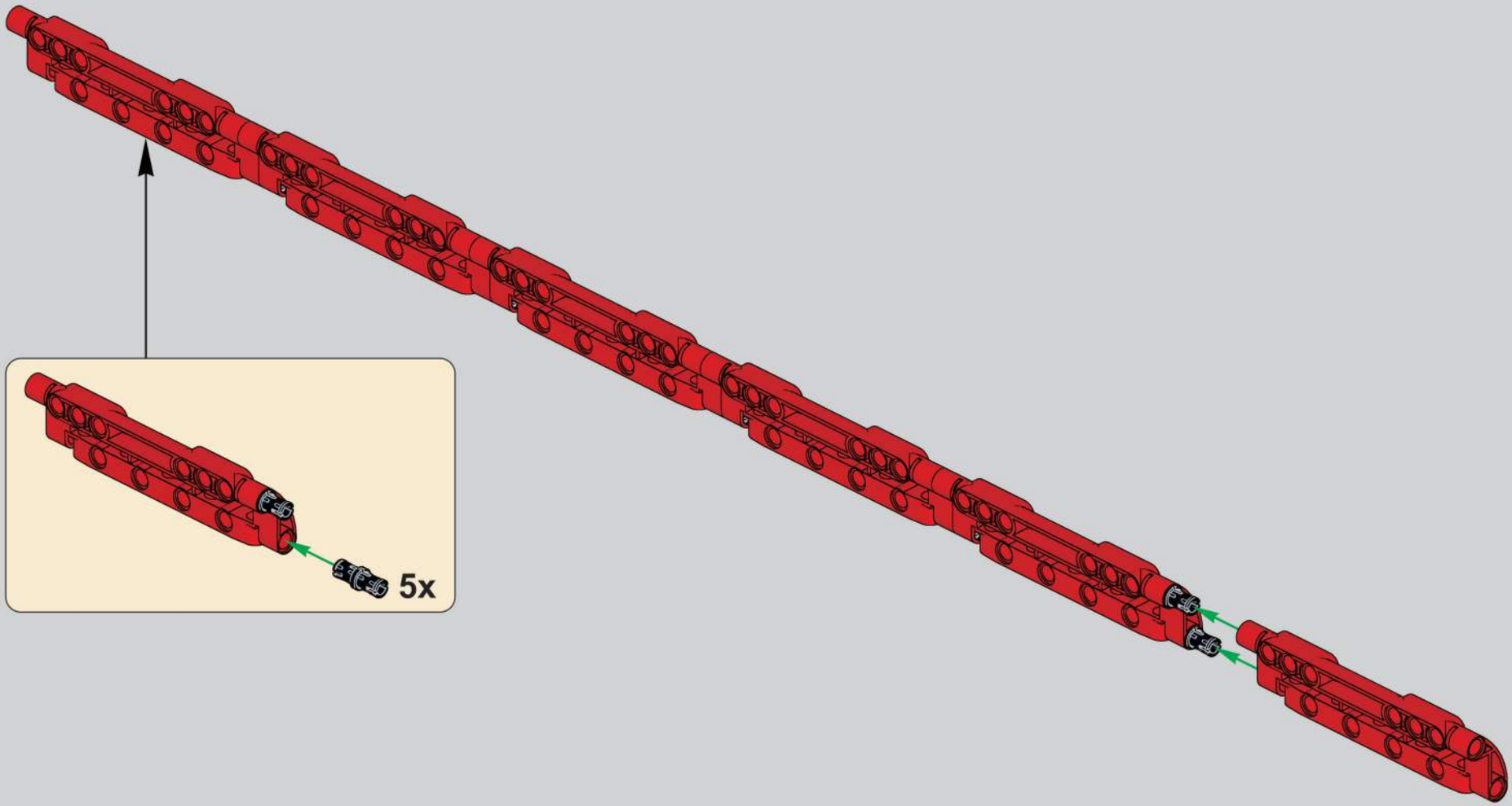

2009

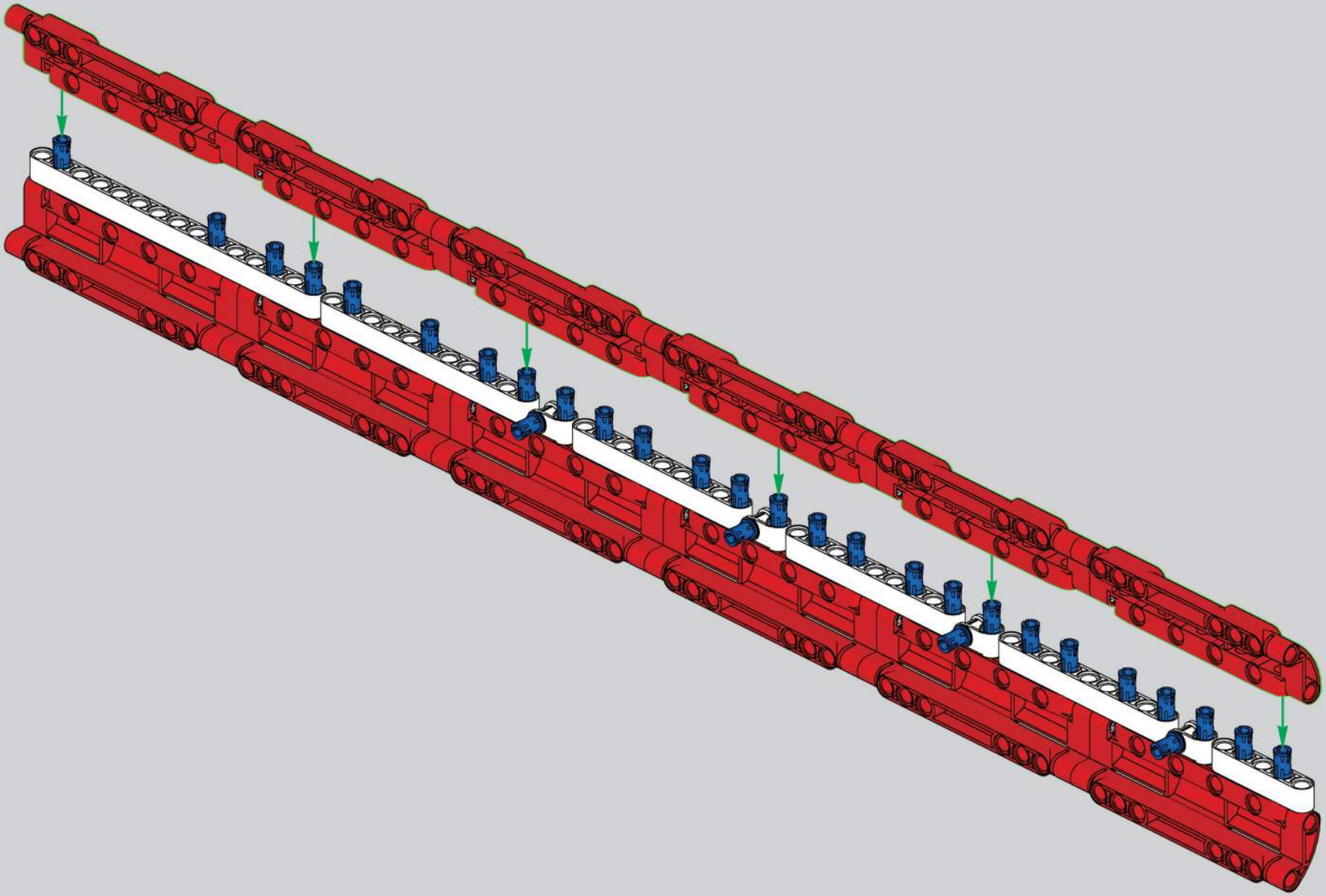

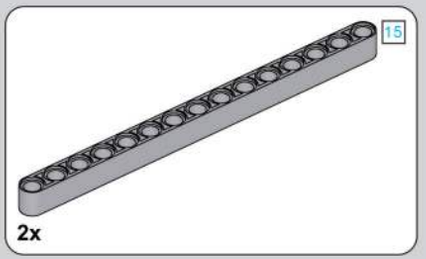

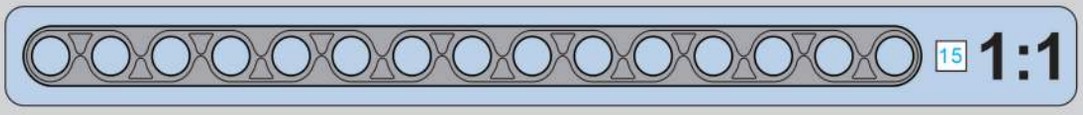

2010

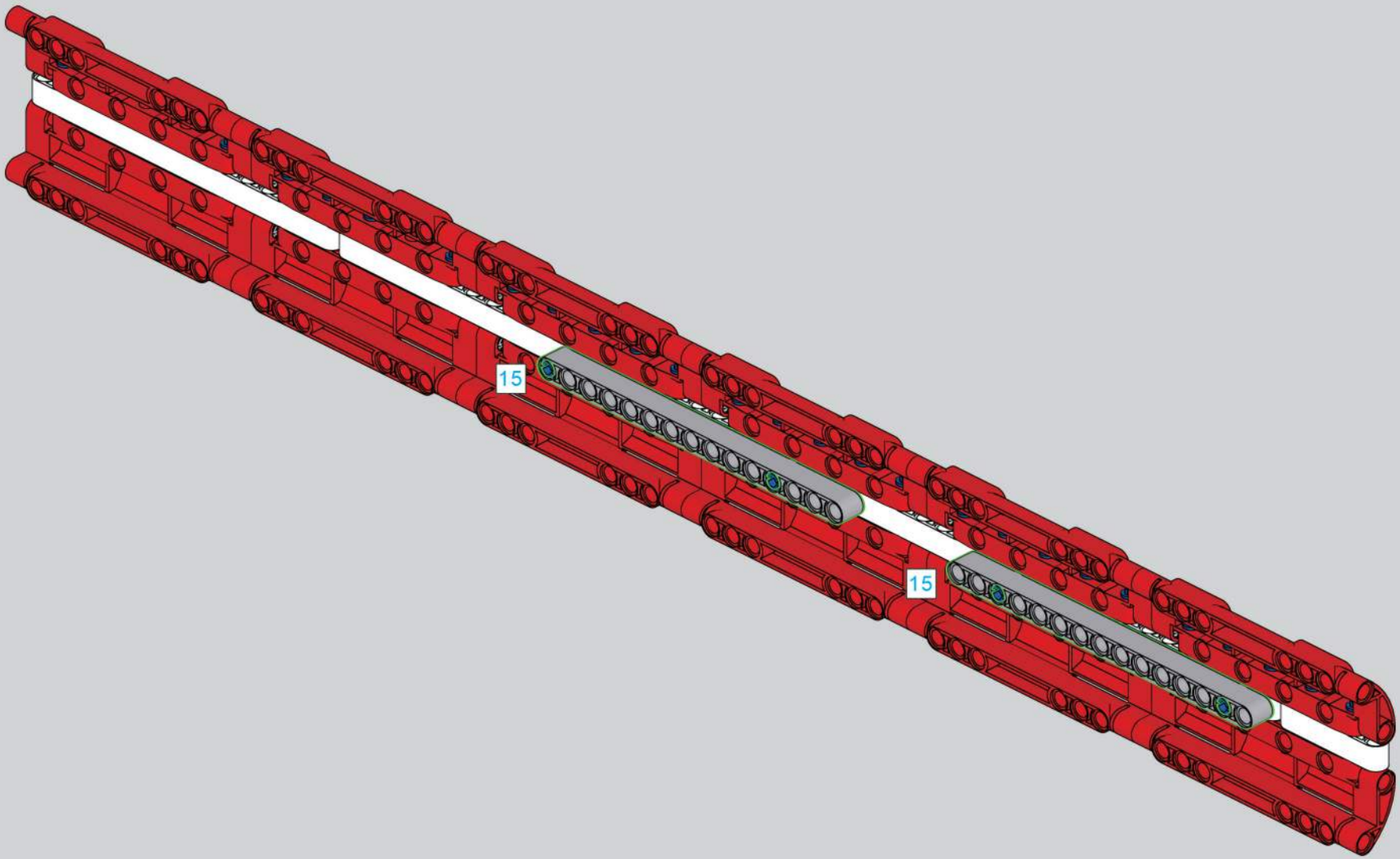

2011

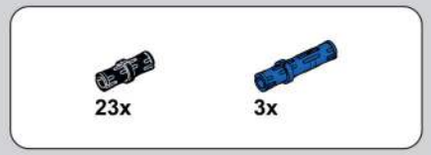

2012

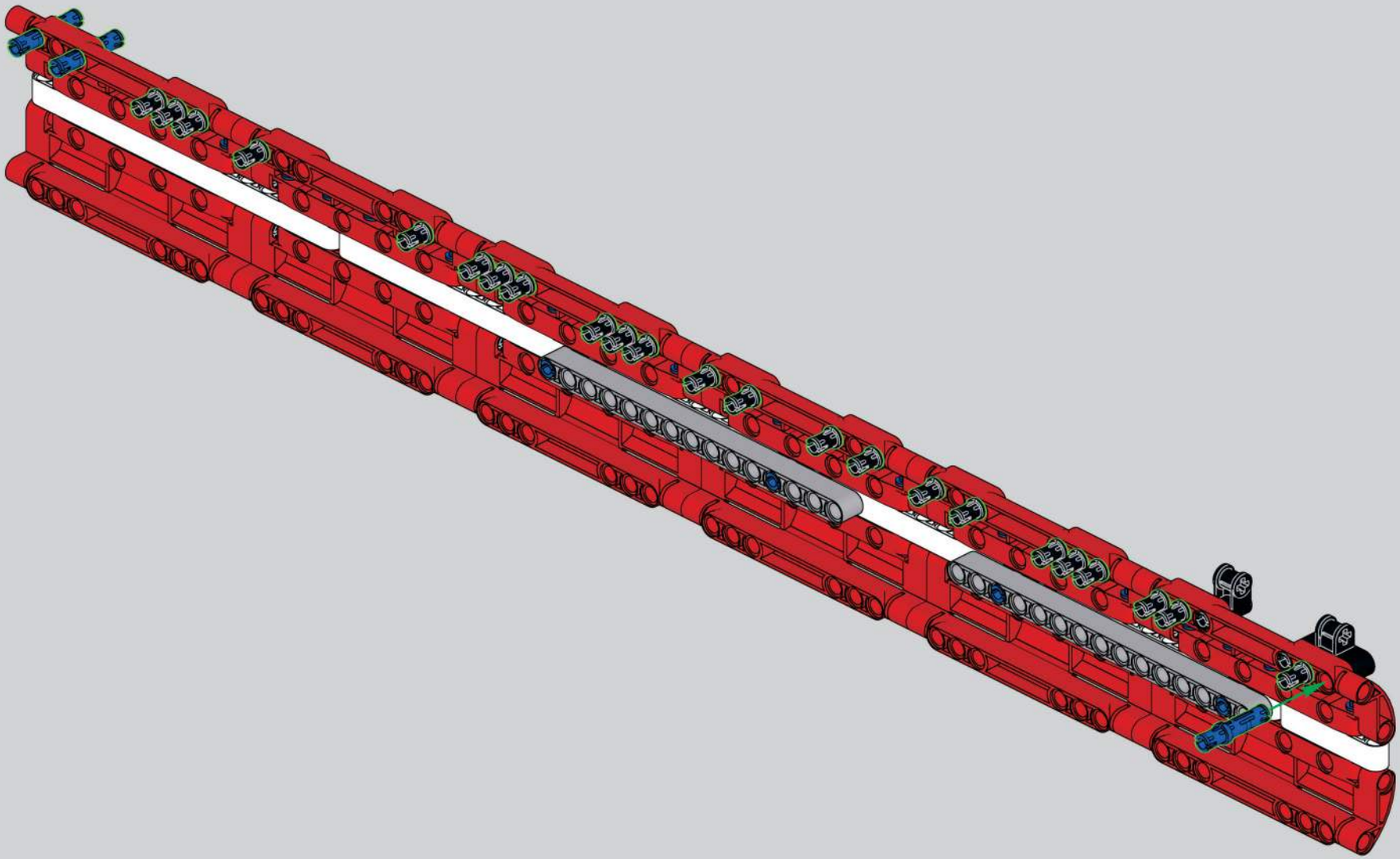

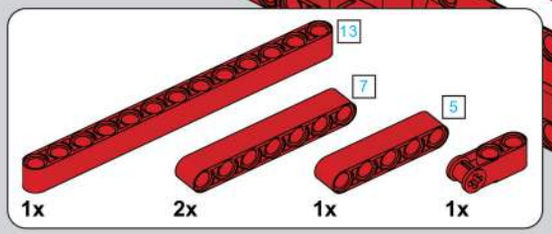

2013

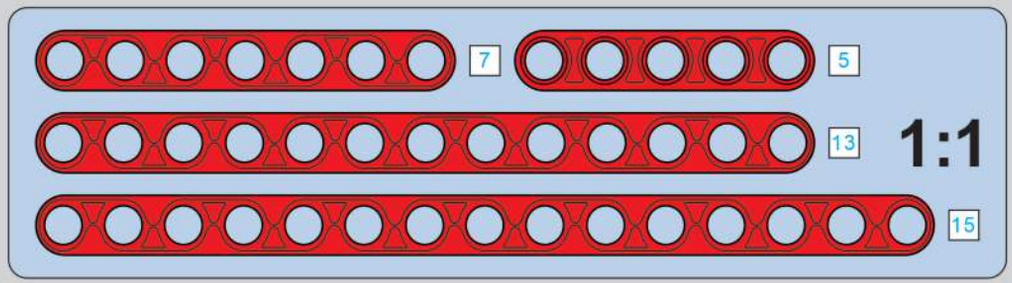

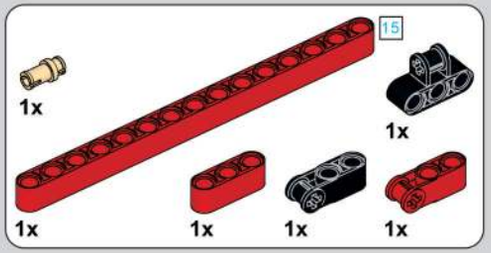

2014

2015

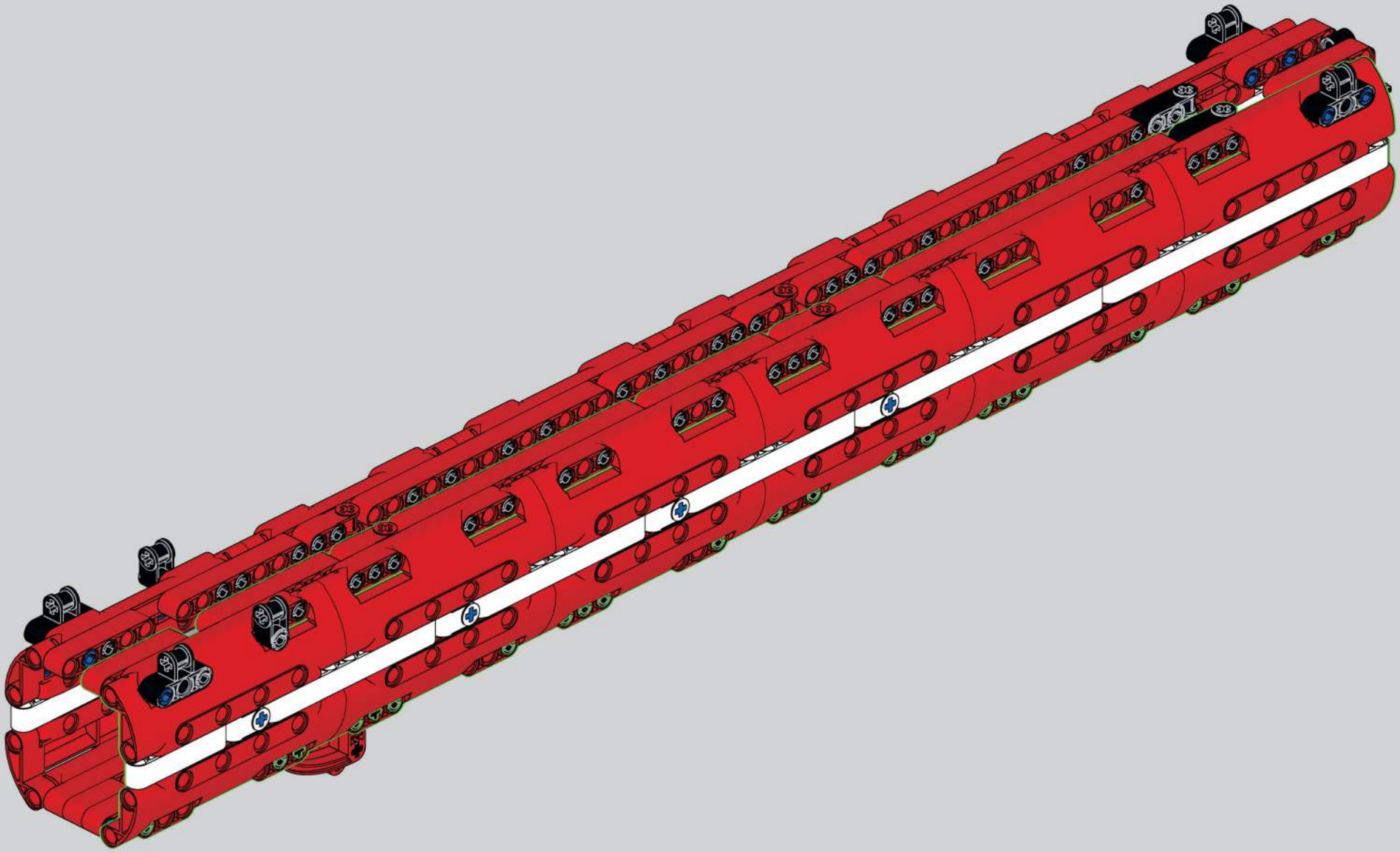

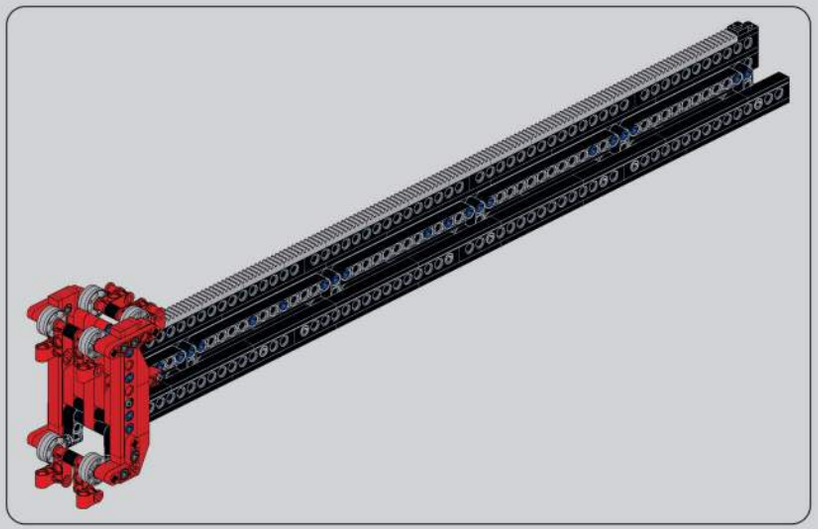

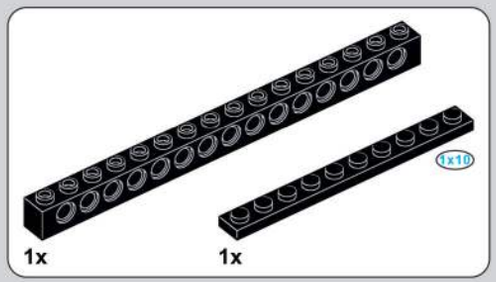

2016

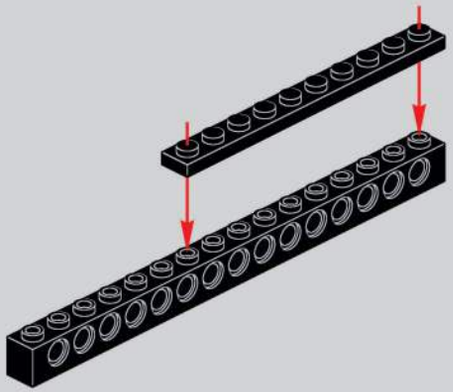

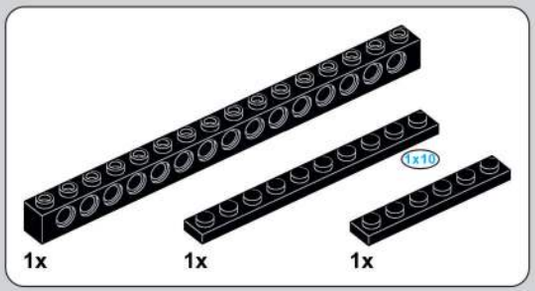

2017

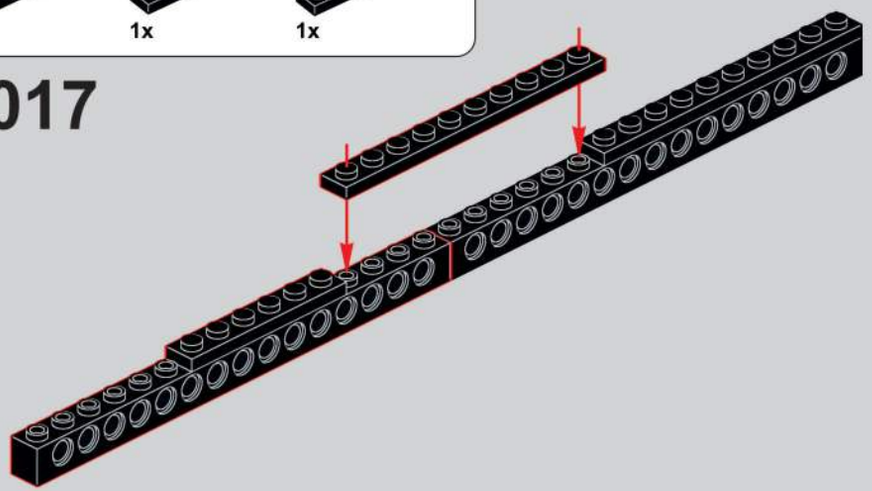

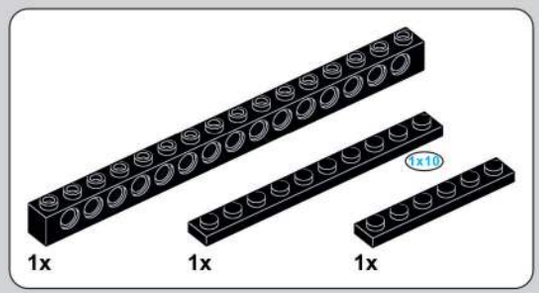

2018

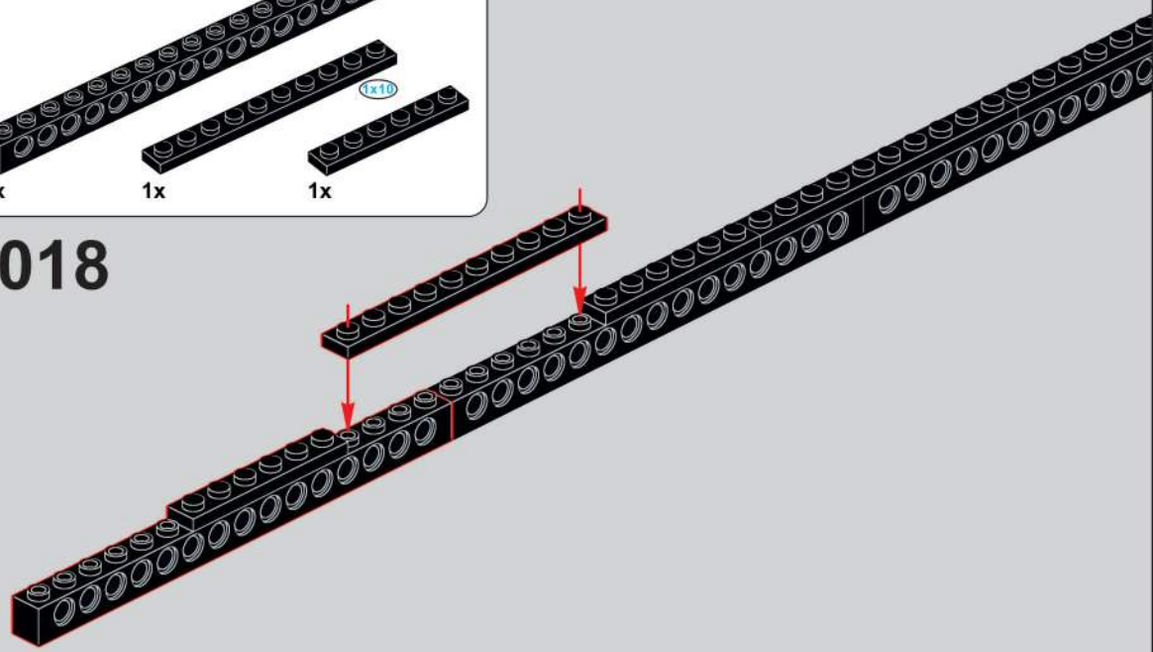

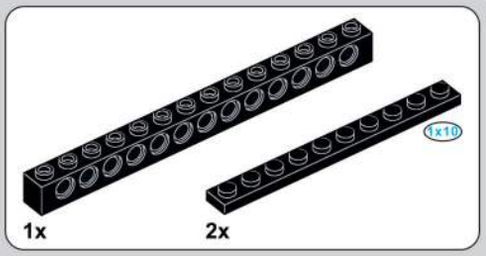

2019

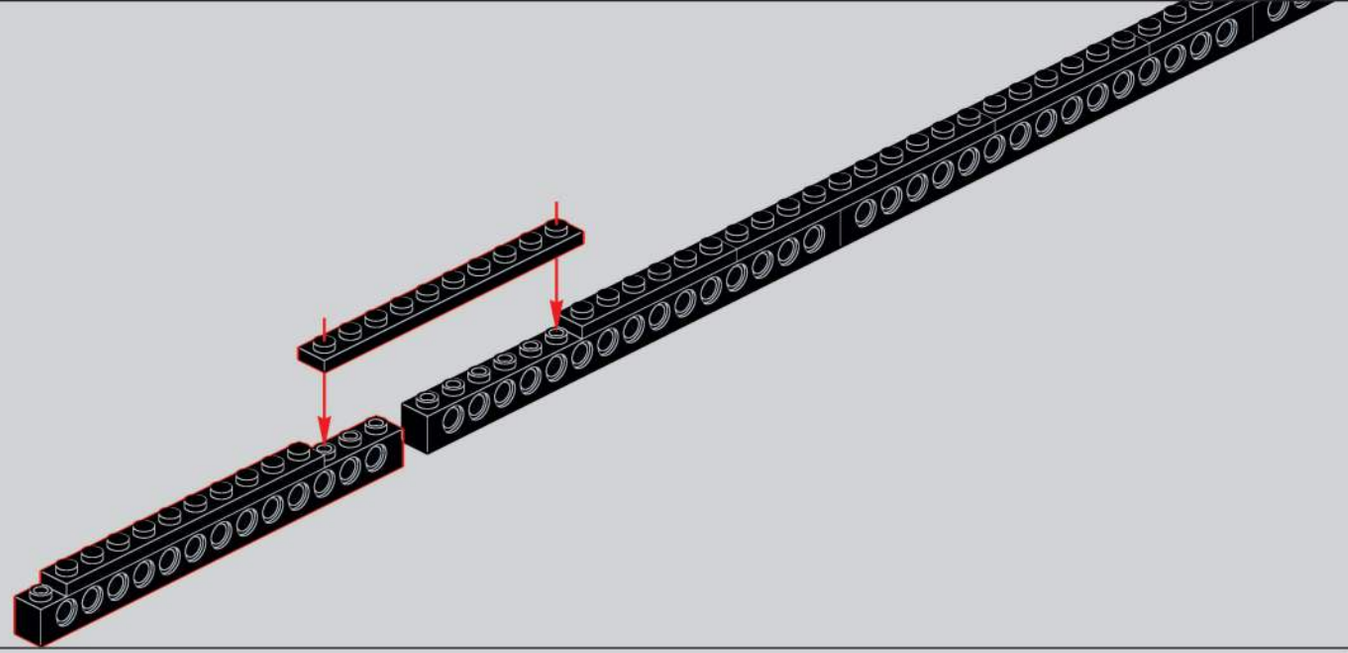

2020

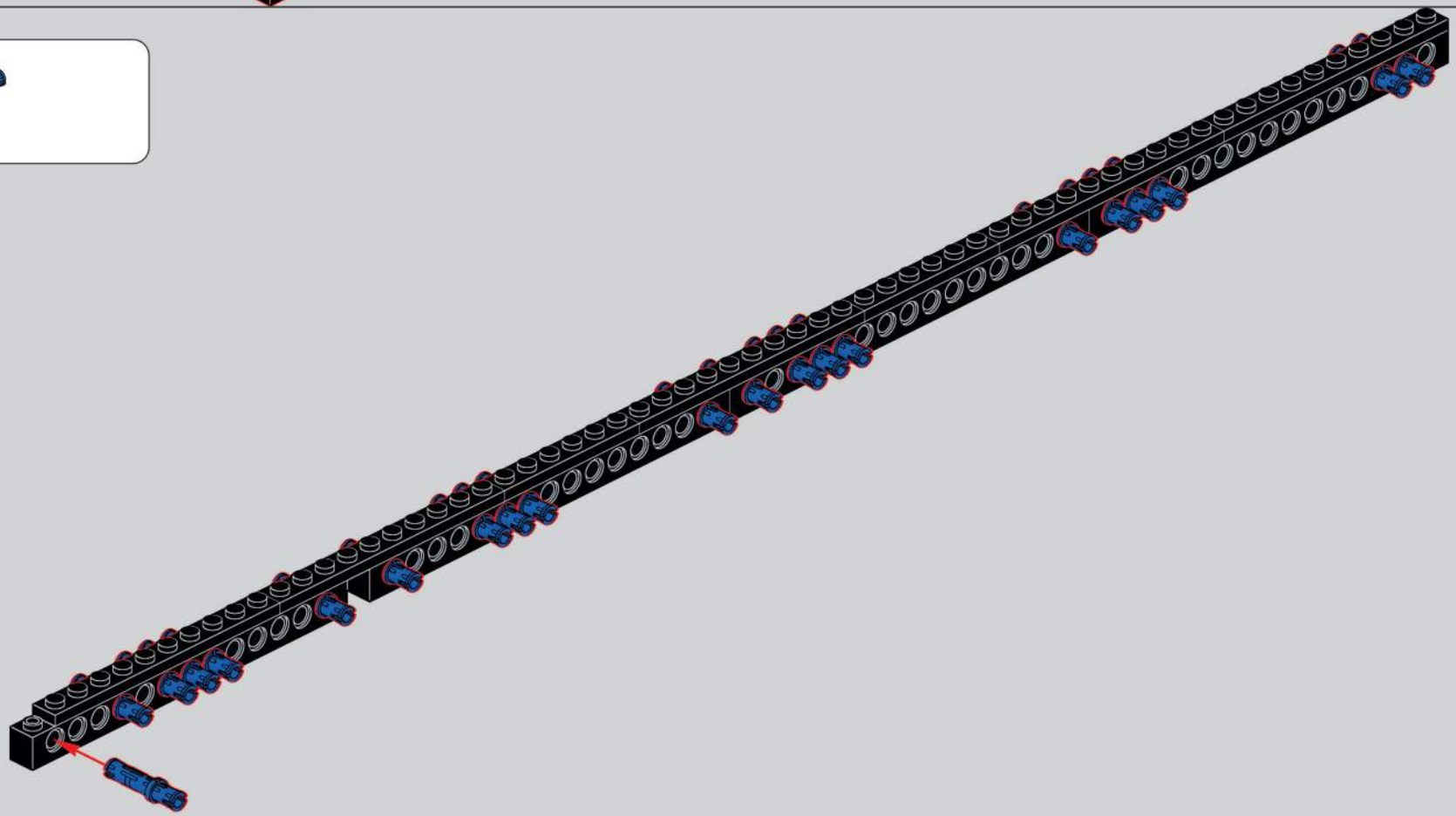

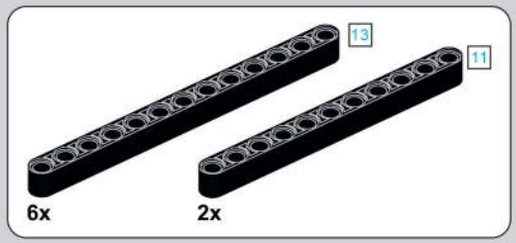

2021

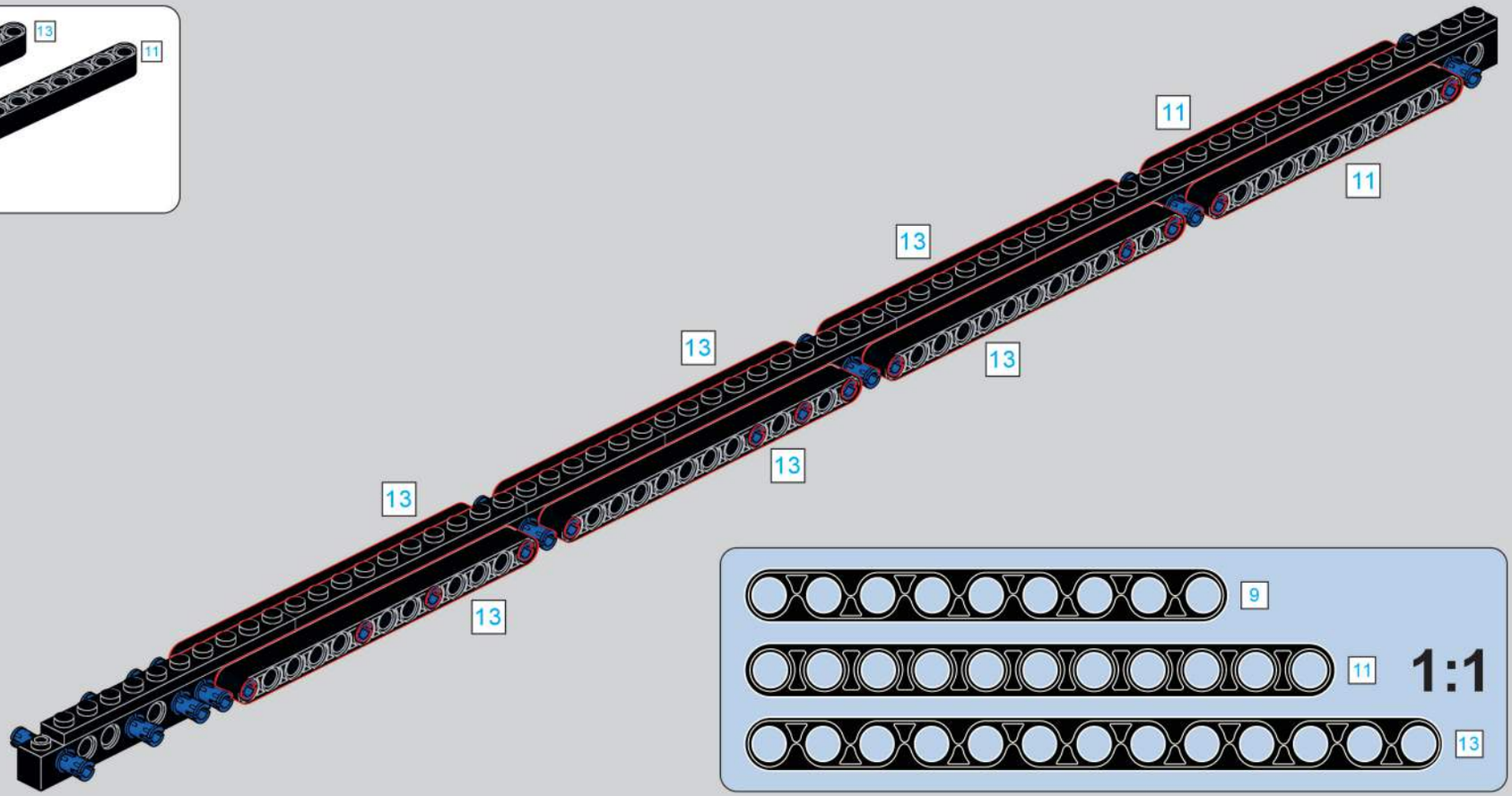

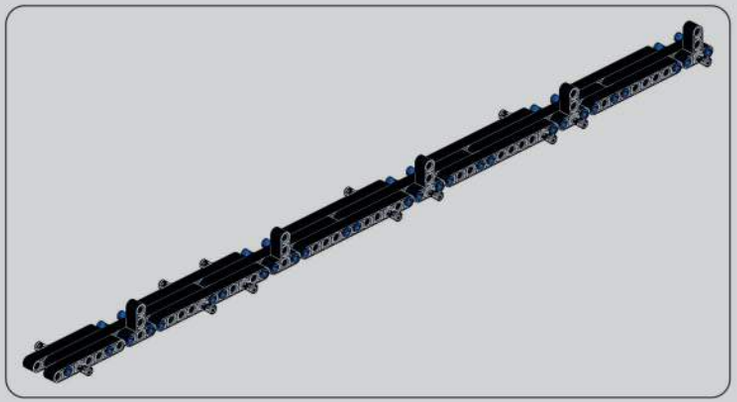

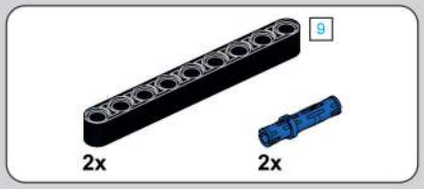

2022

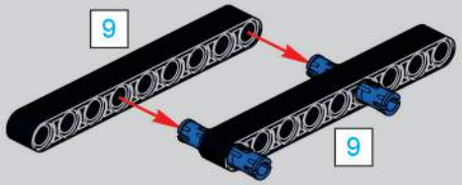

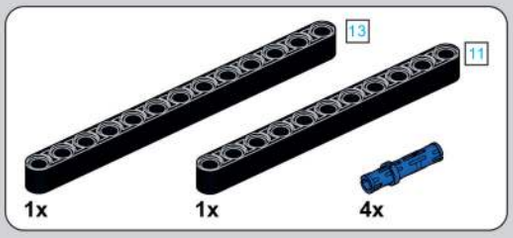

2023

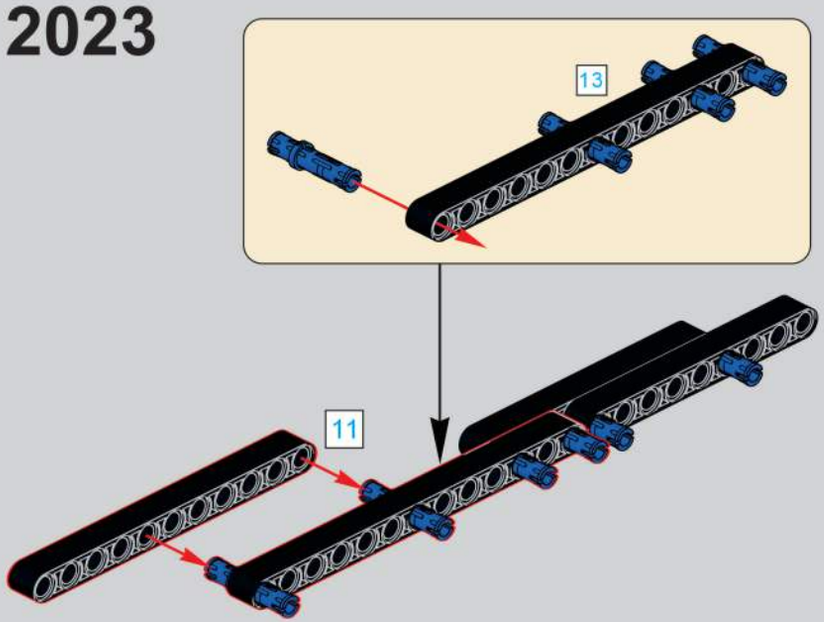

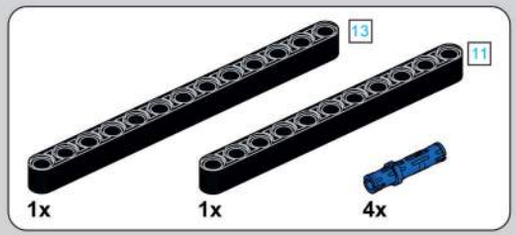

2024

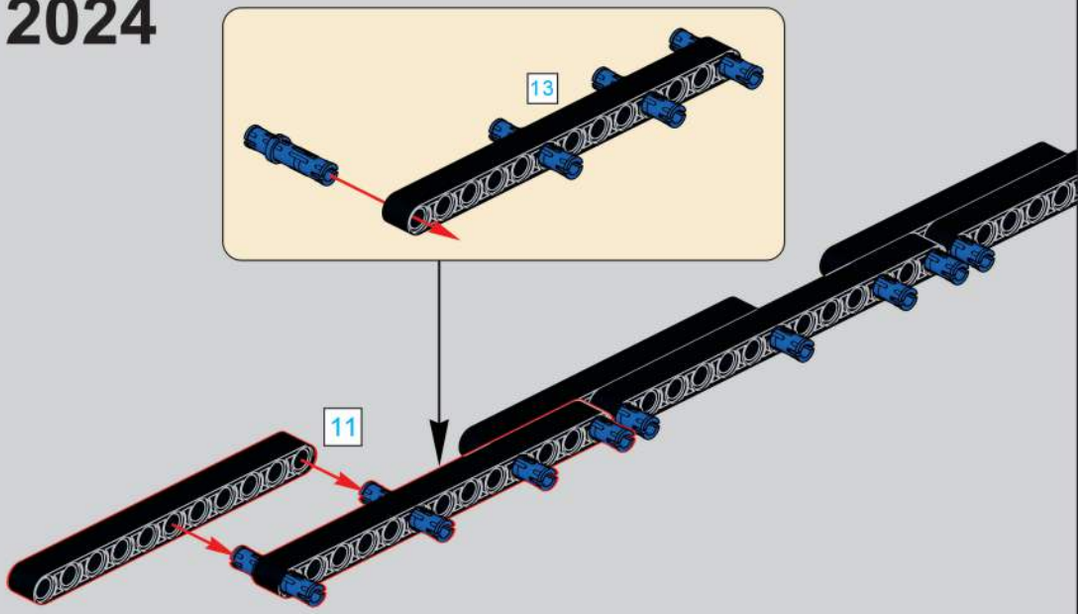

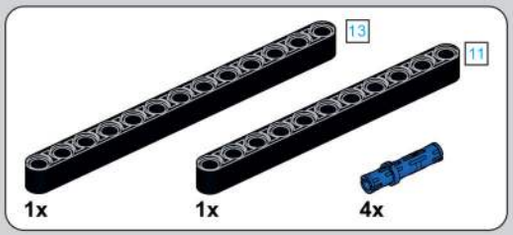

2025

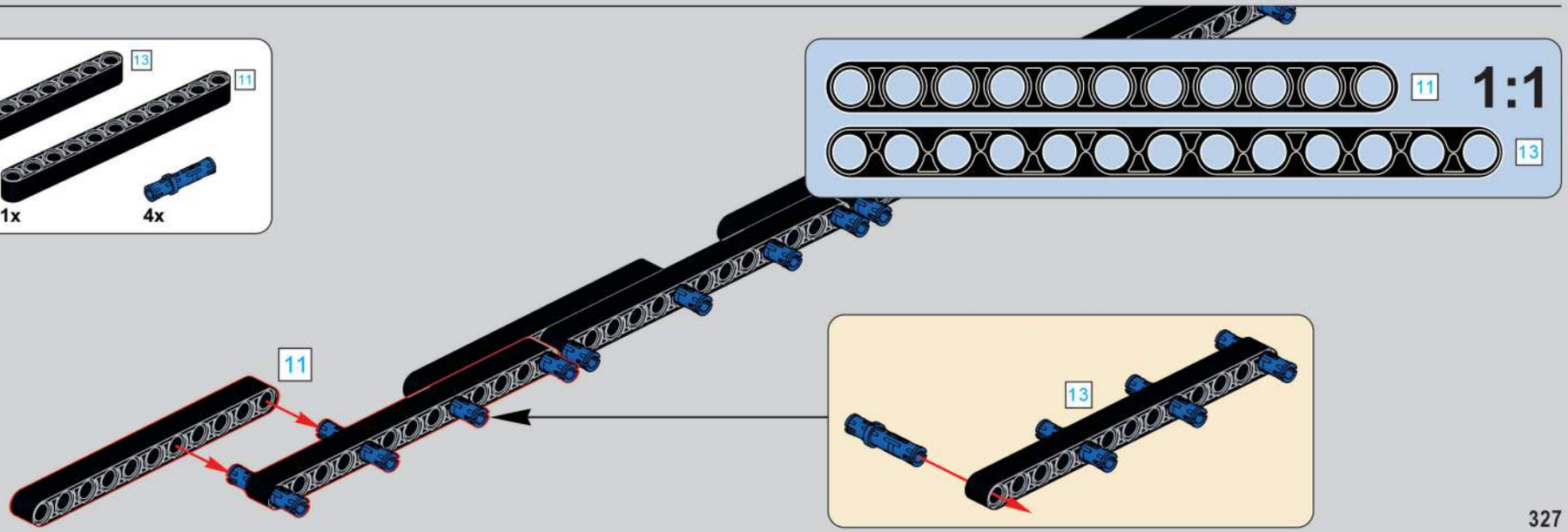

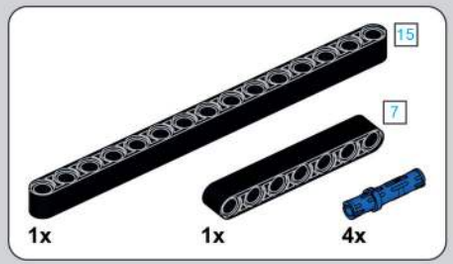

2026

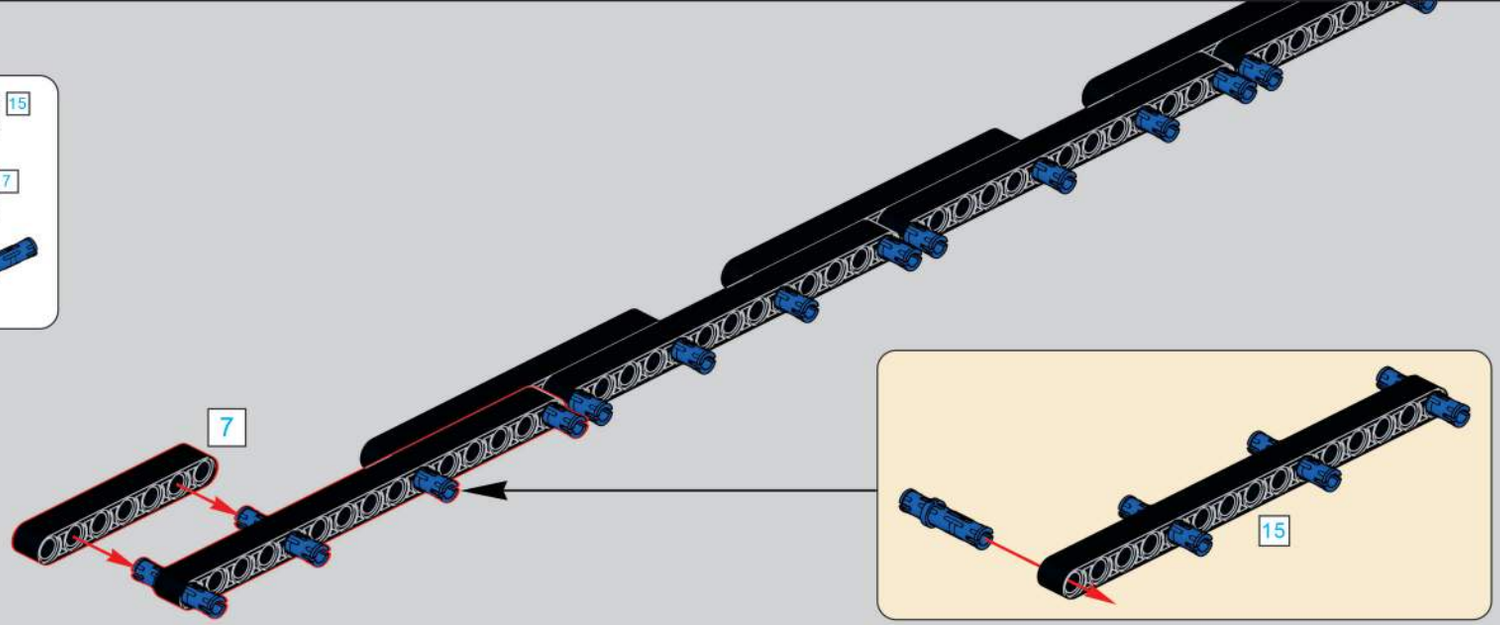

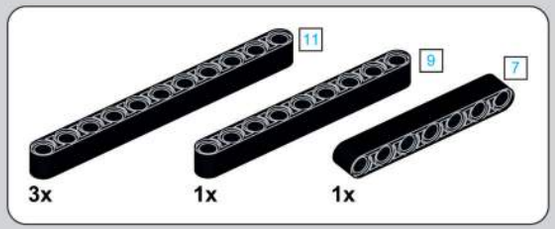

2027

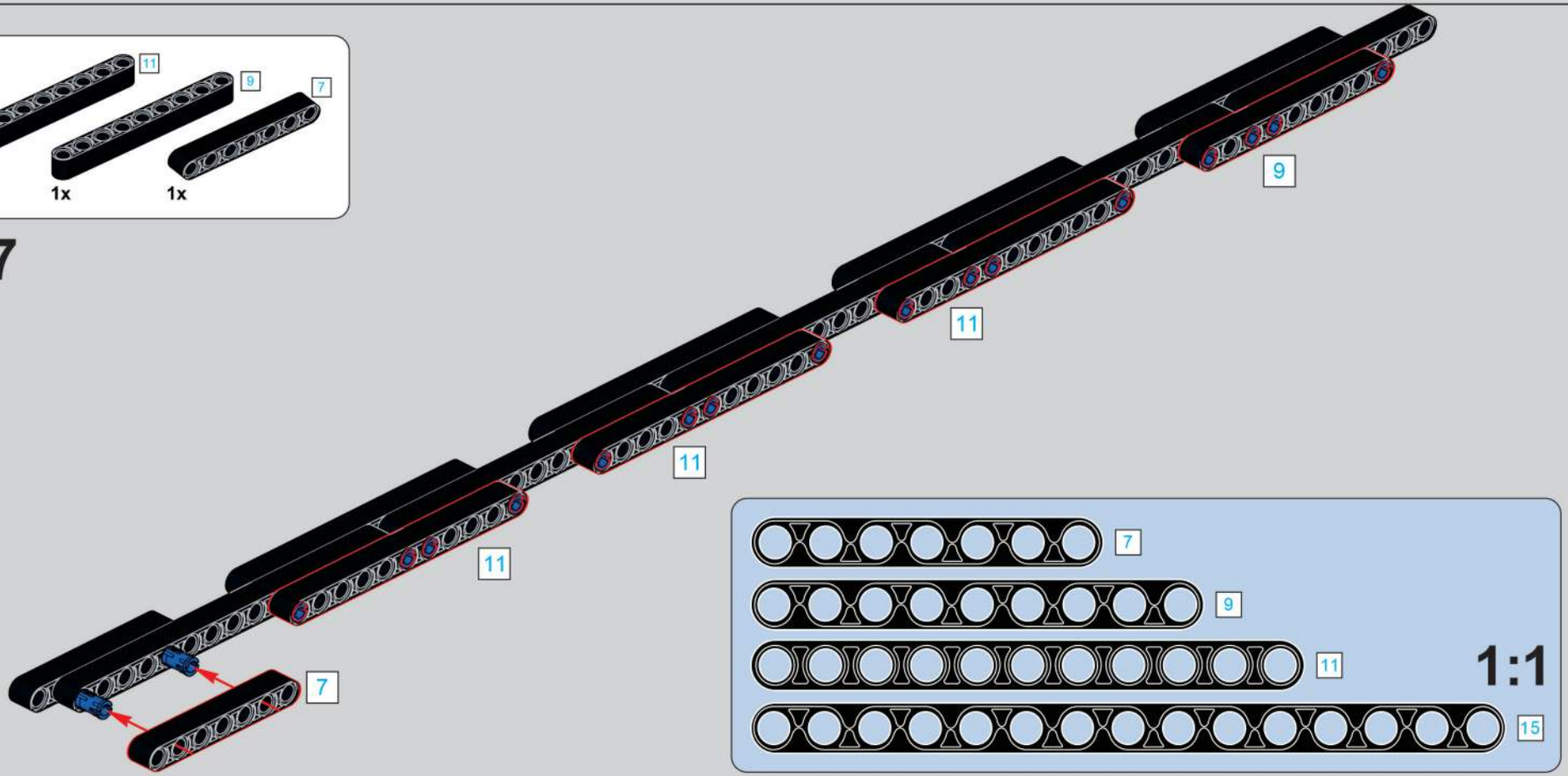

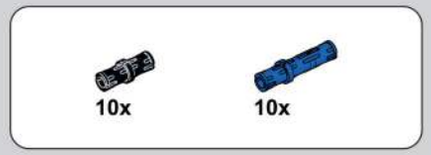

2028

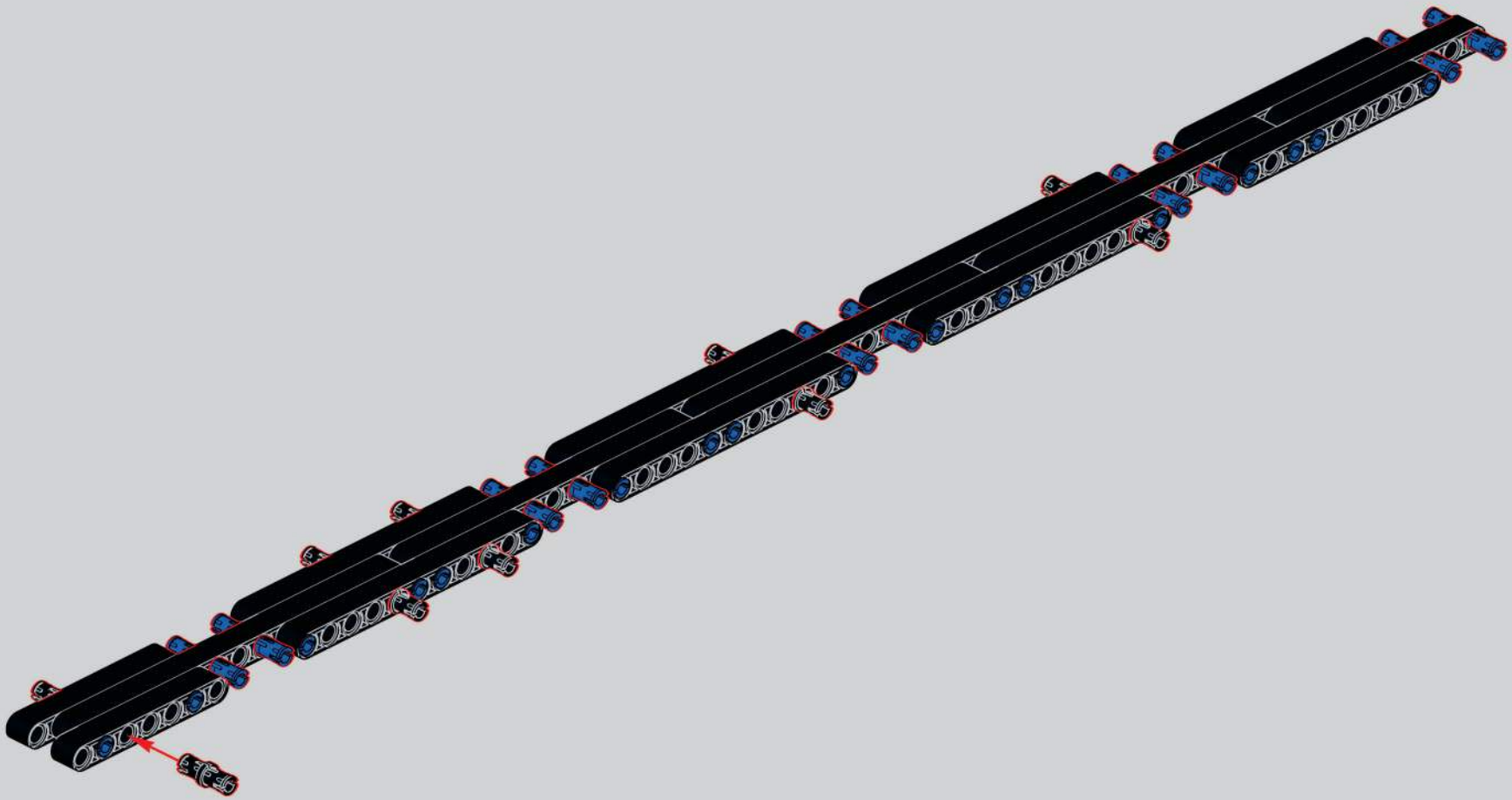

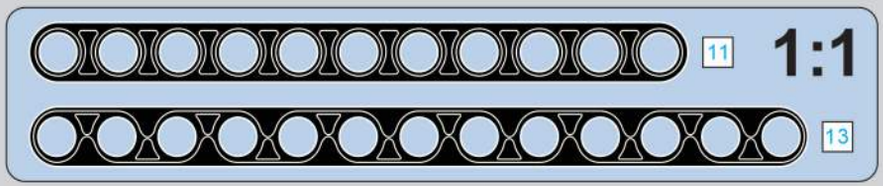

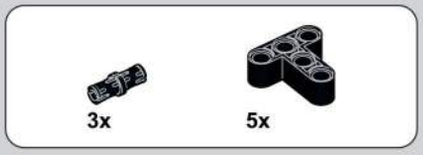

2029

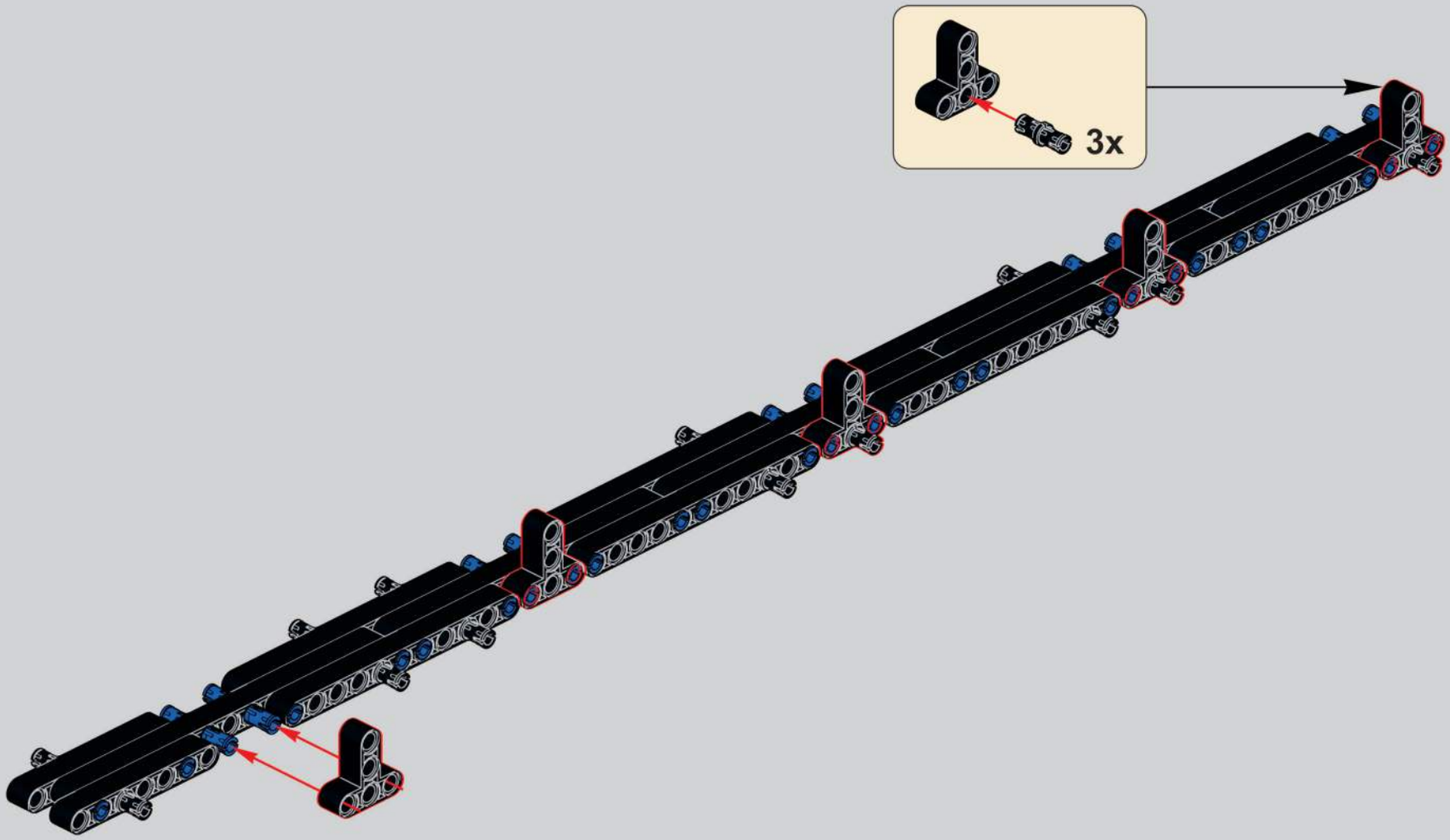

2030

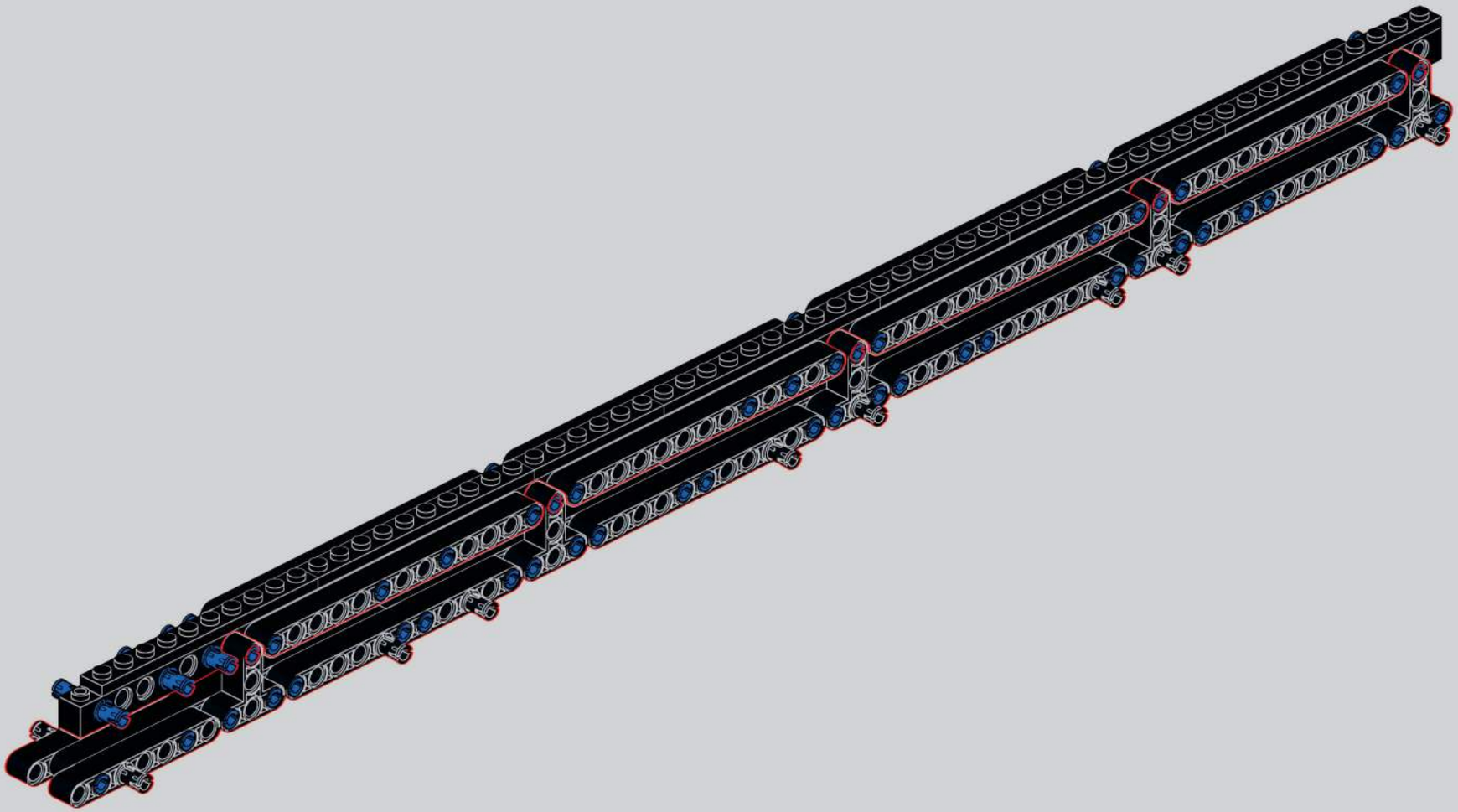

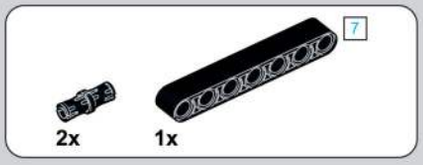

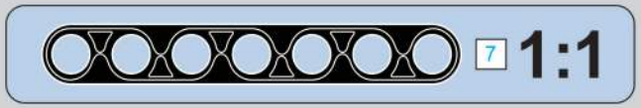

2031

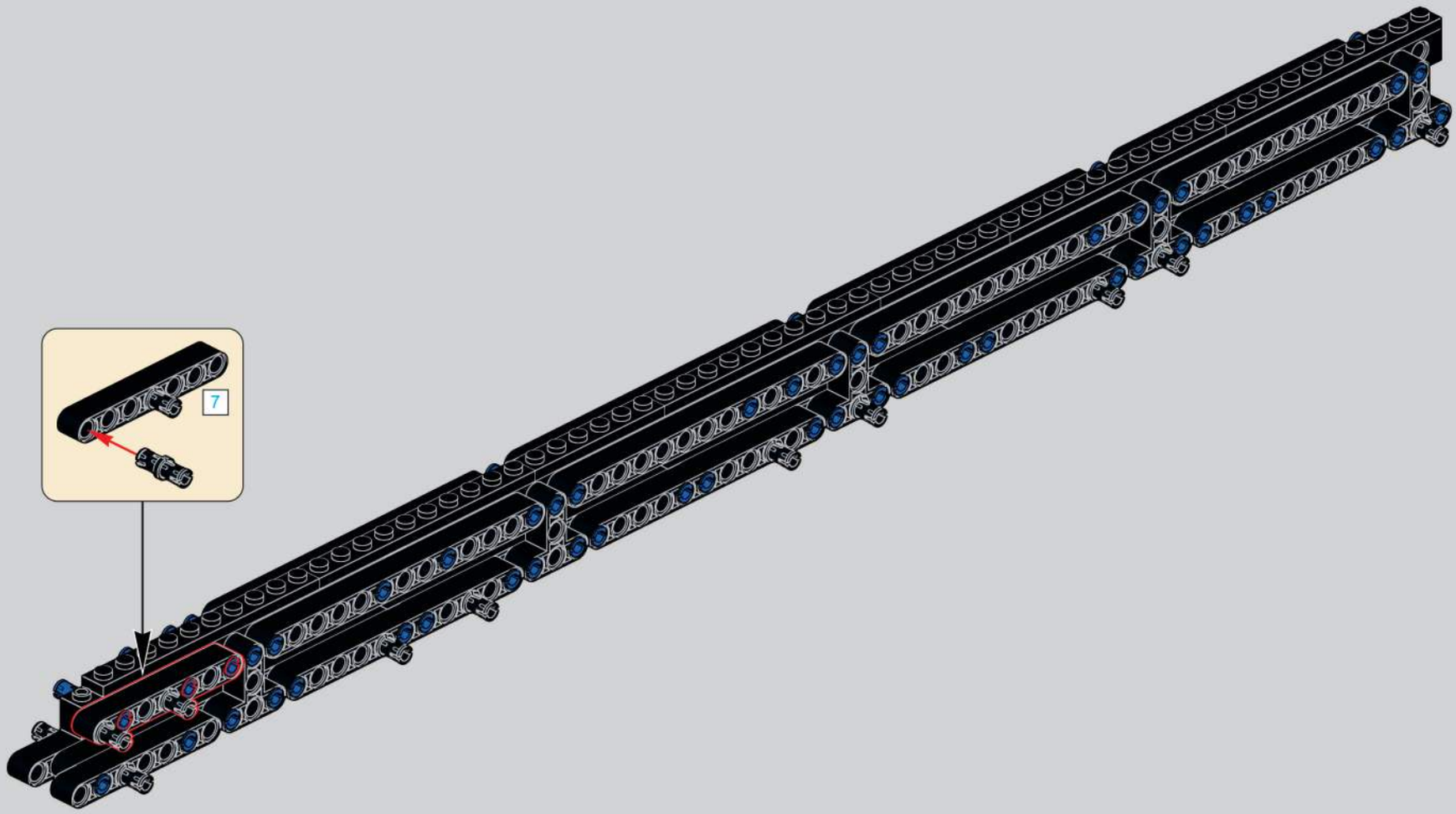

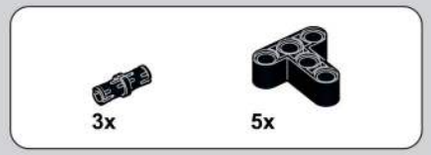

2032

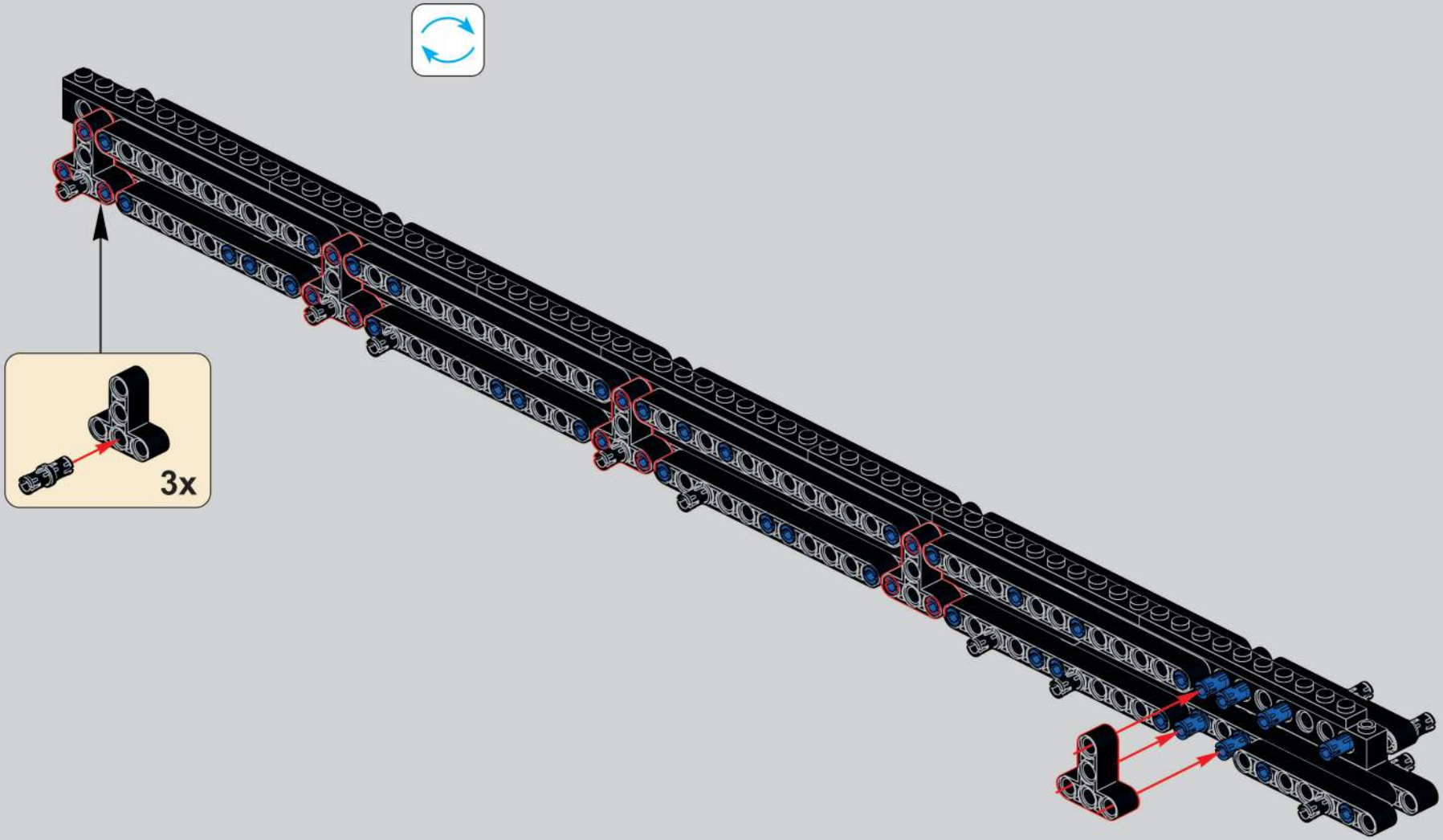

2033

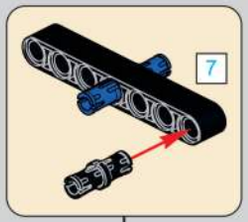

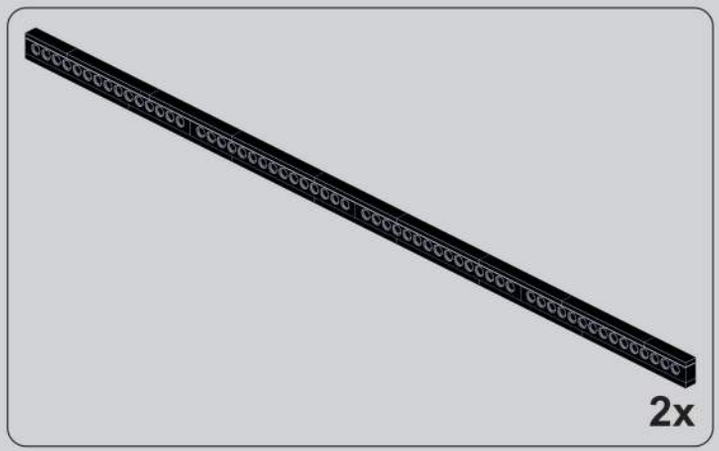

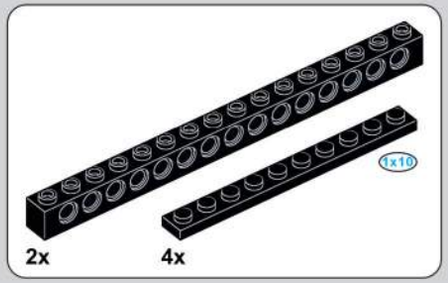

2034

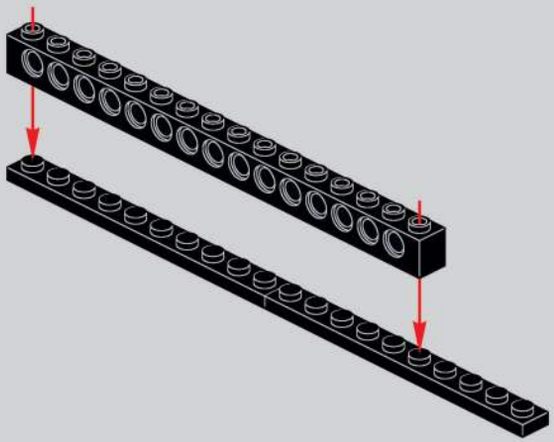

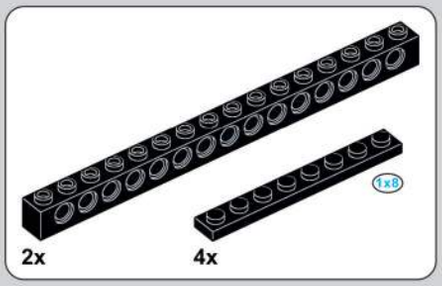

2035

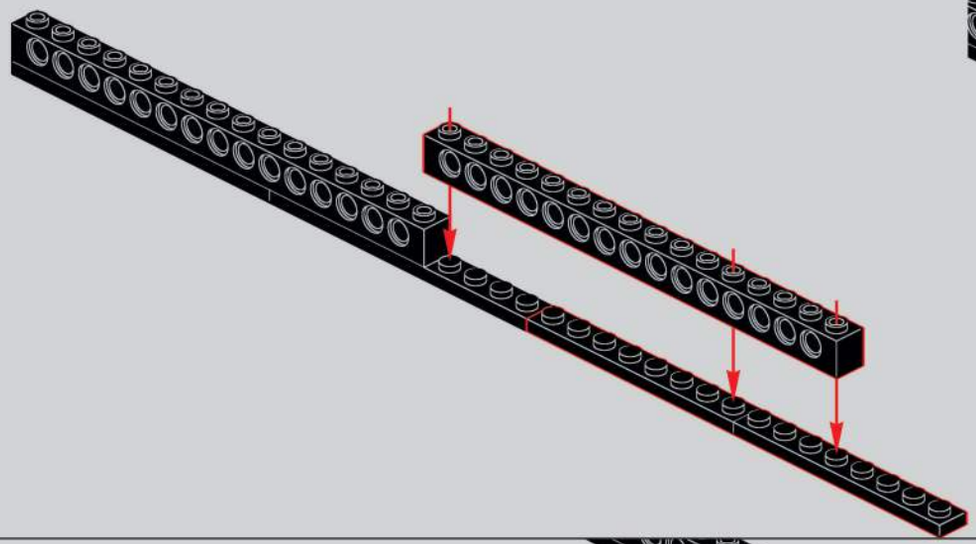

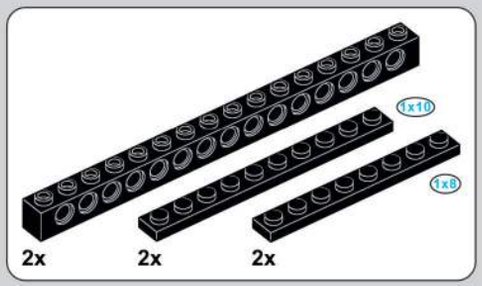

2036

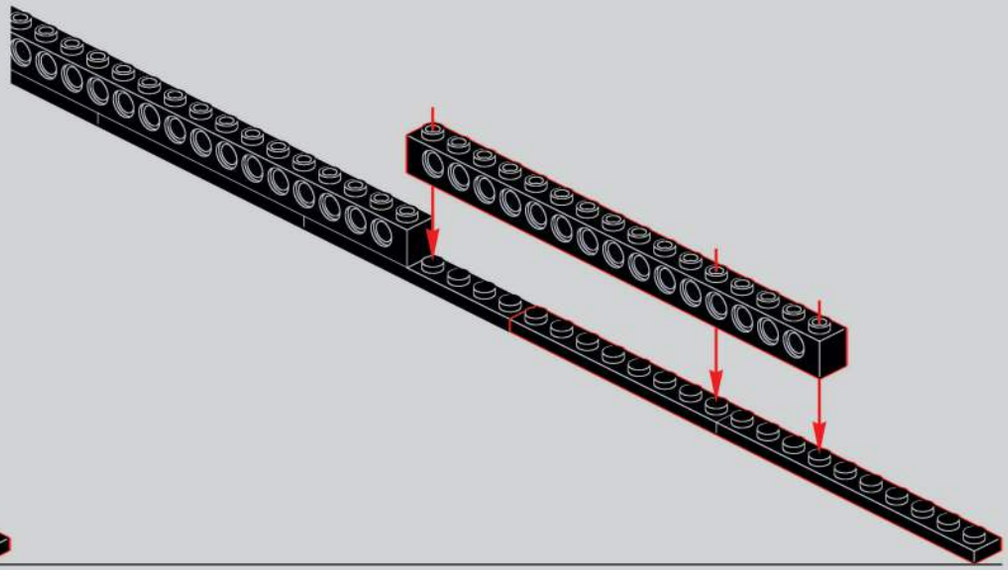

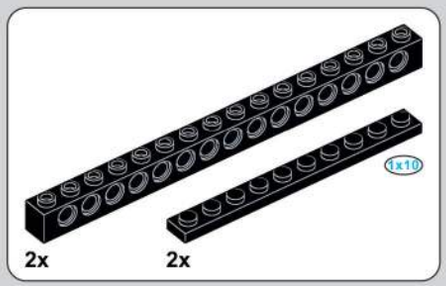

2037

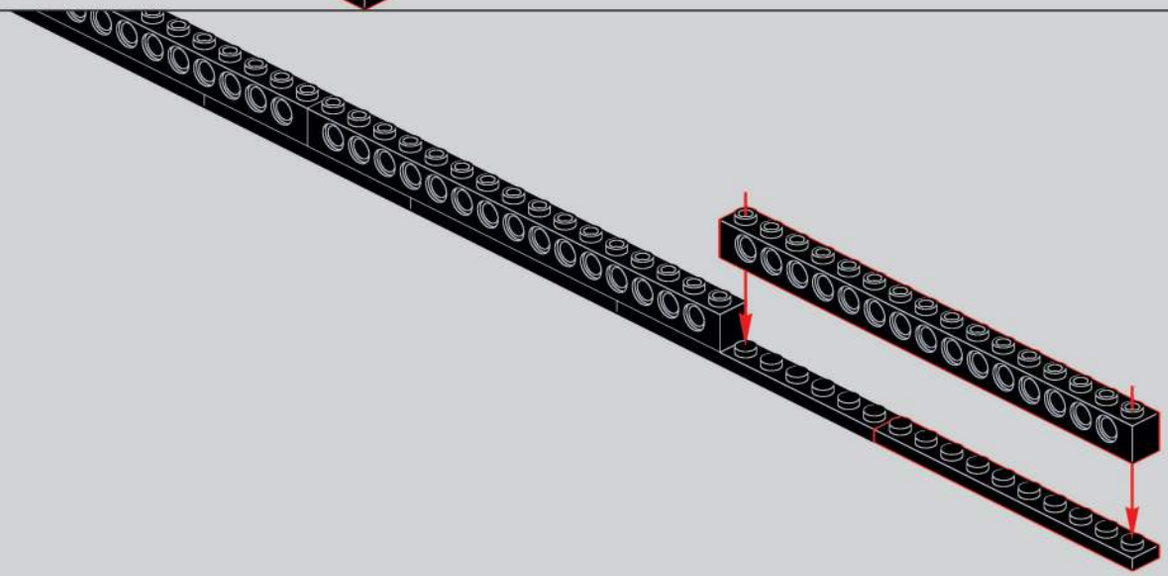

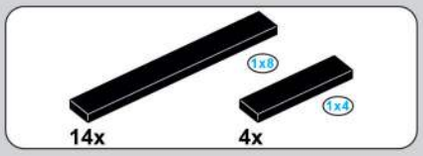

2038

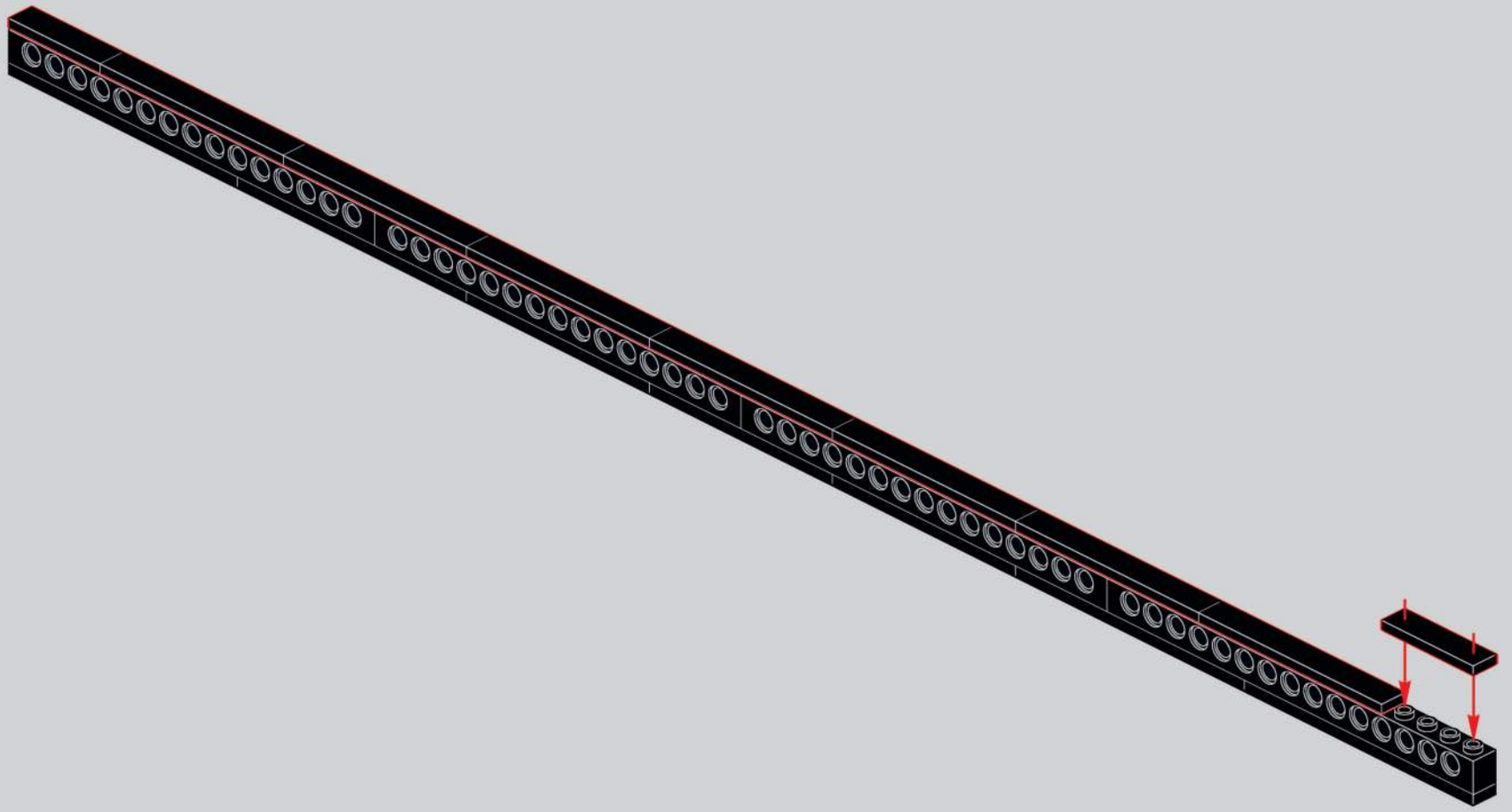

2x

2039

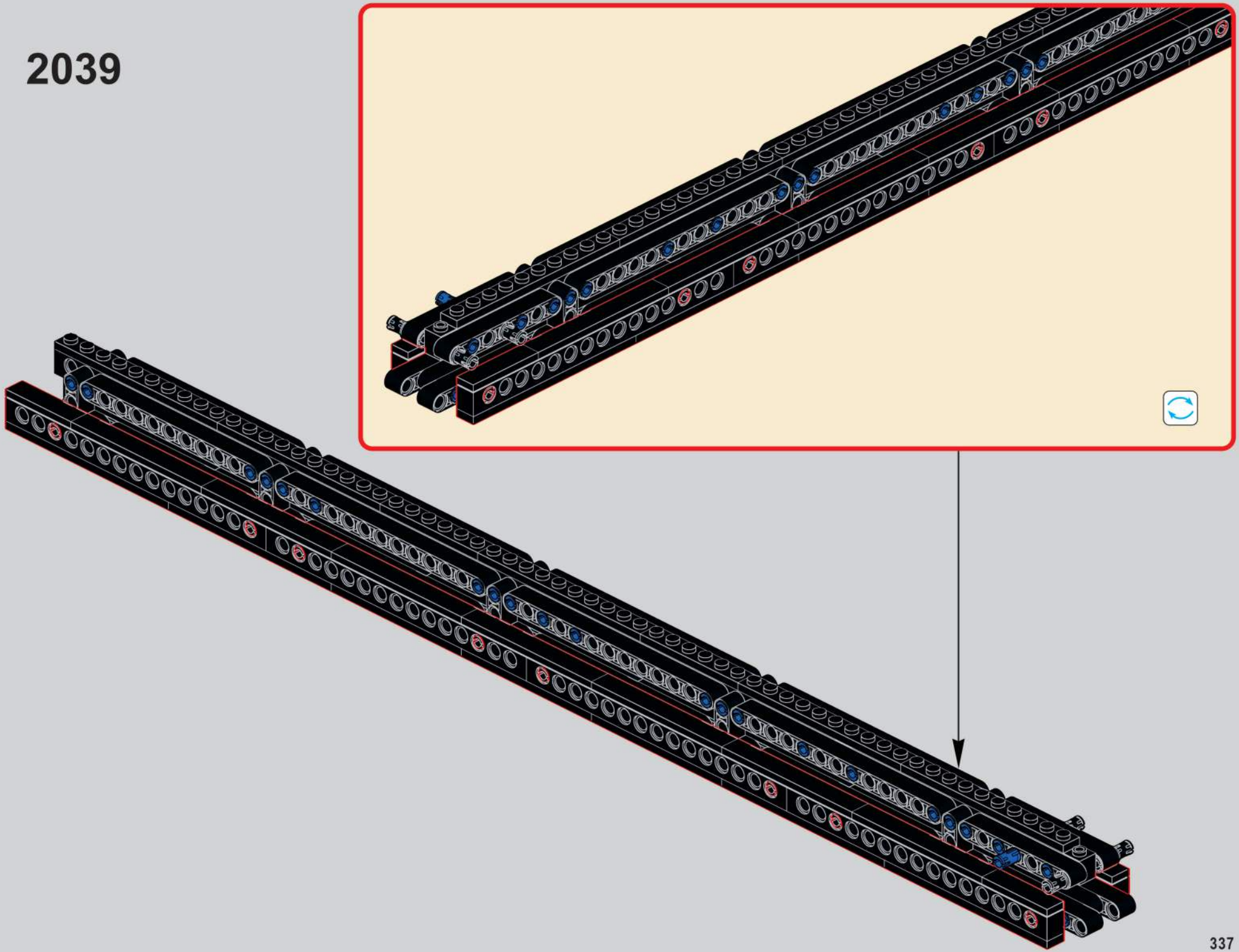

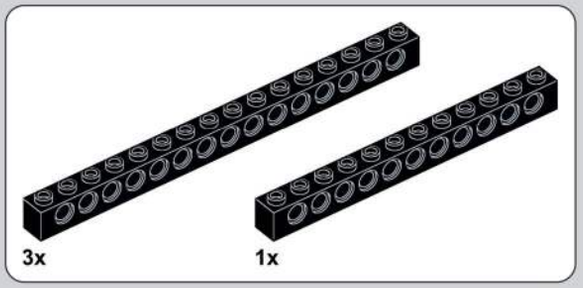

2040

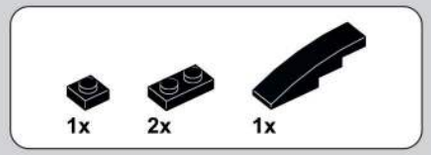

2041

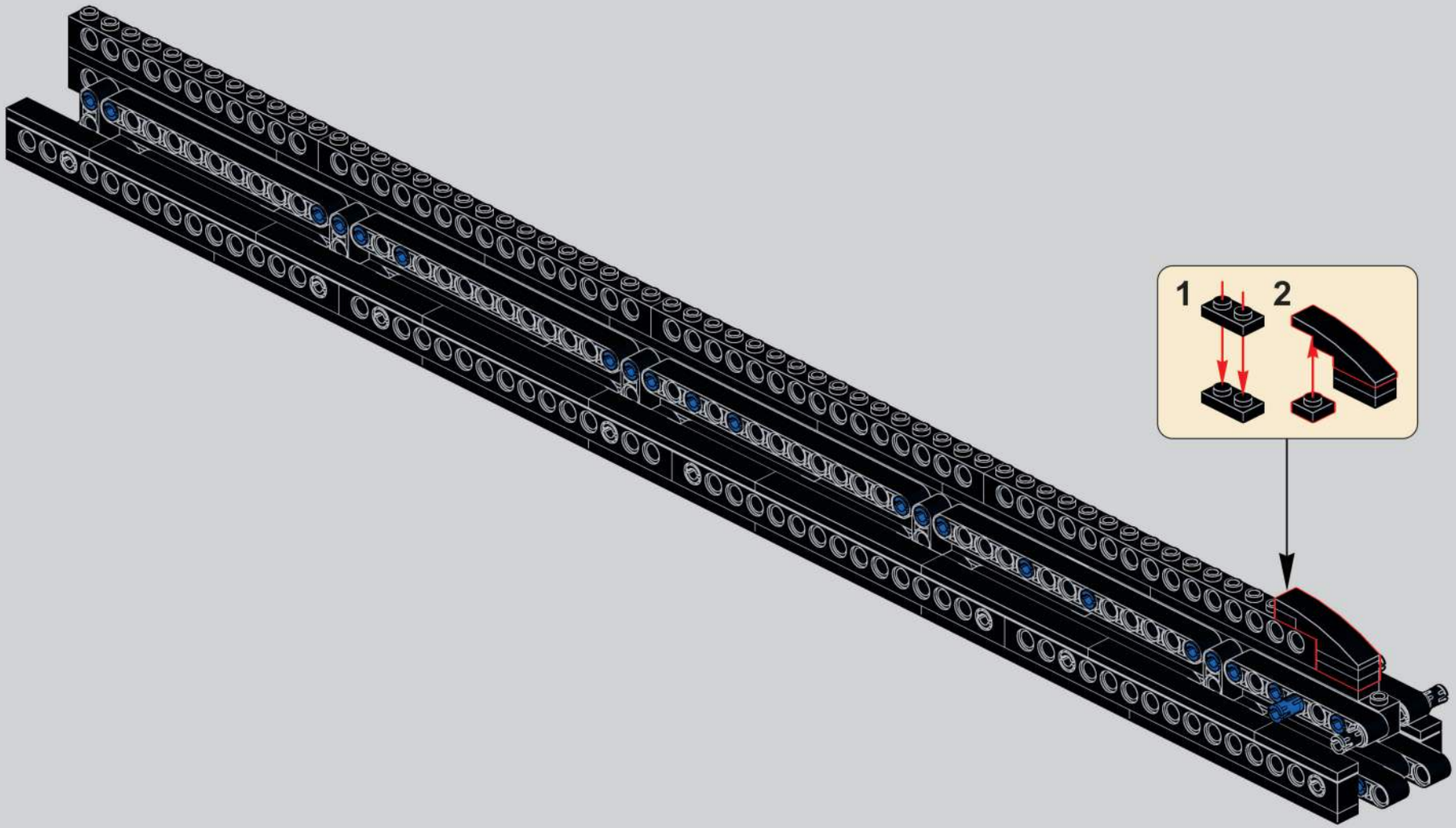

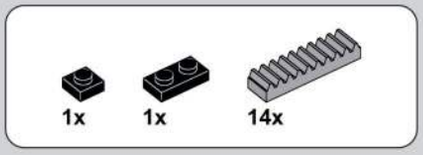

2042

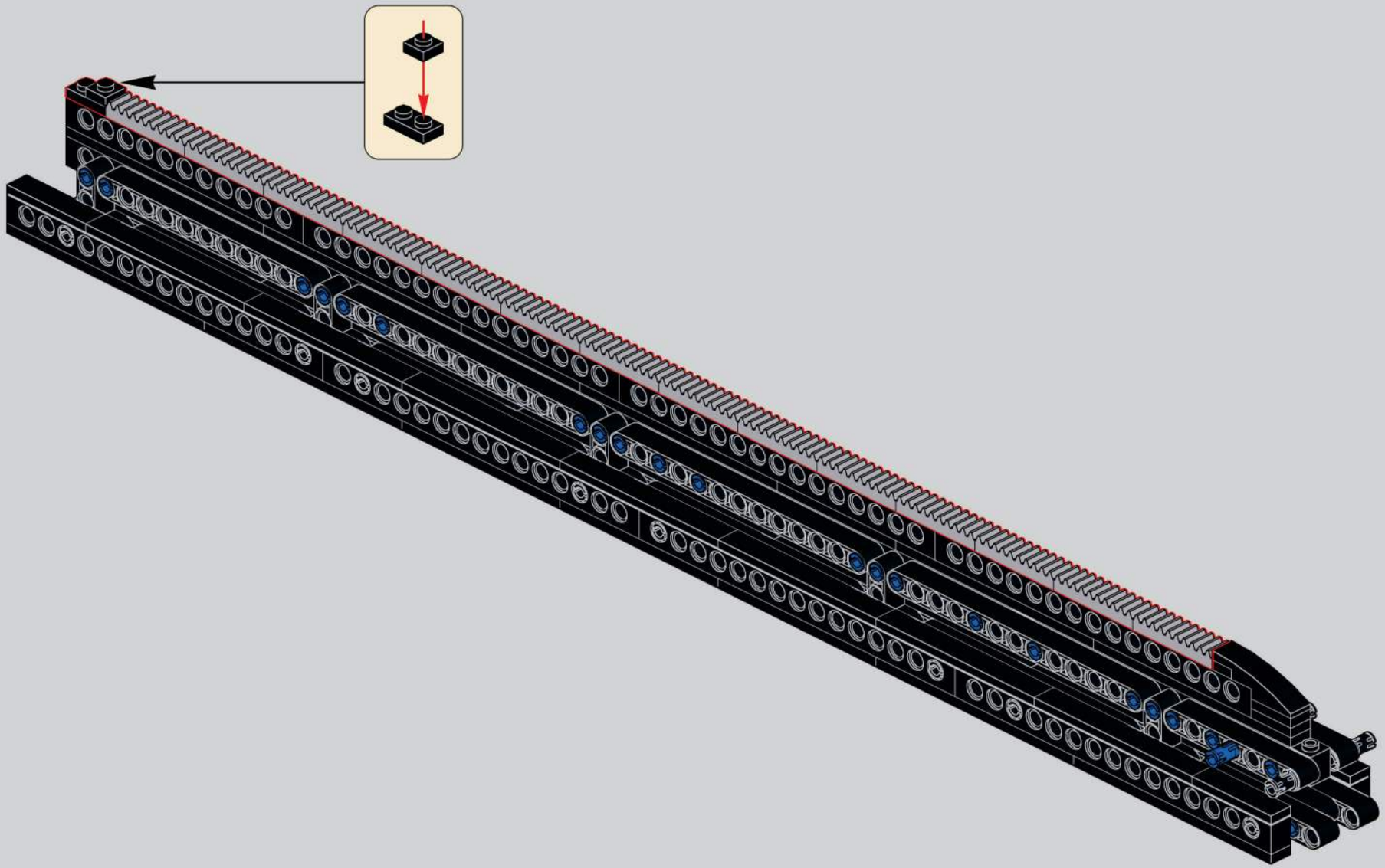

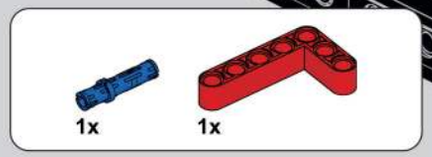

2043

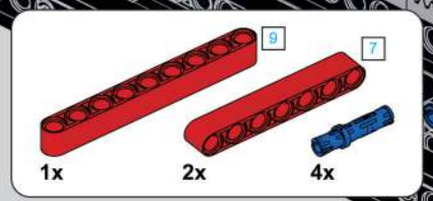

2044

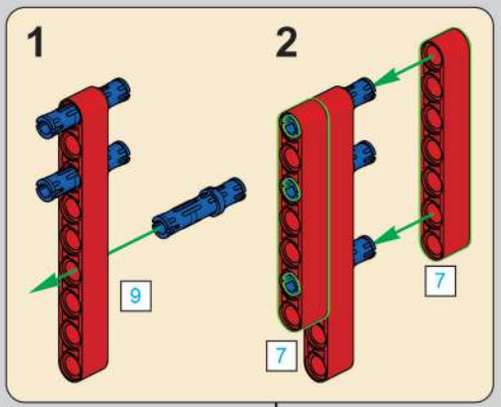

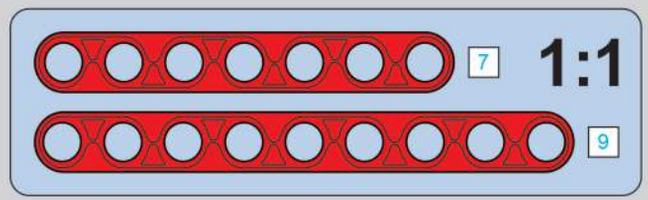

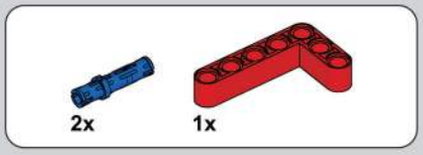

2045

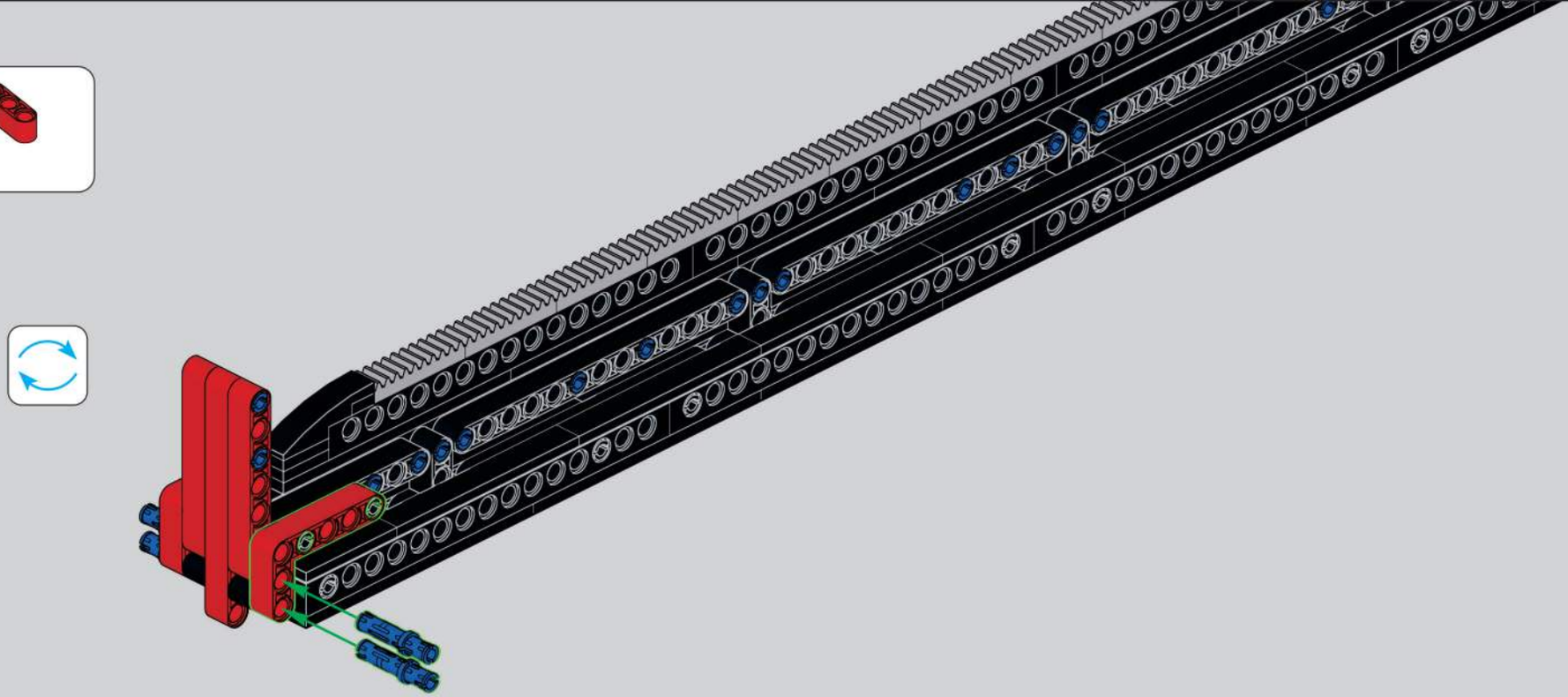

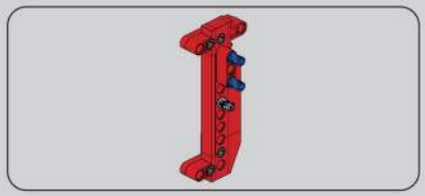

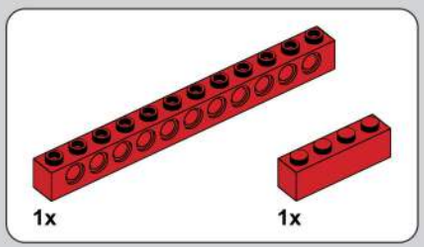

2046

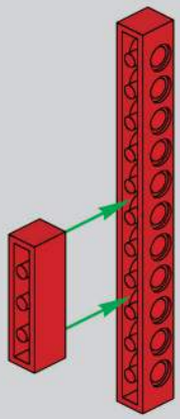

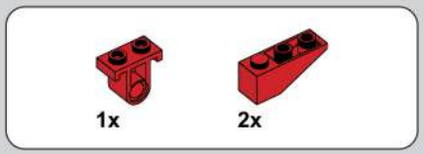

2047

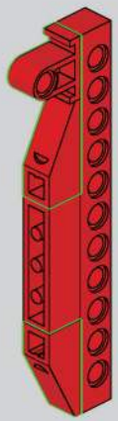

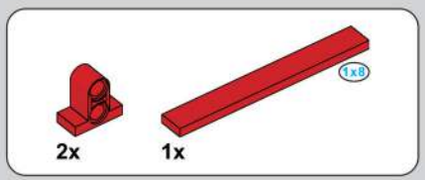

2048

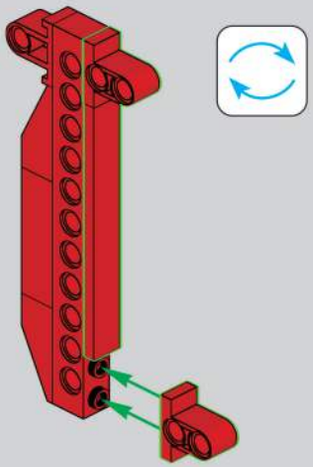

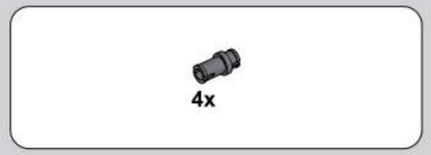

2049

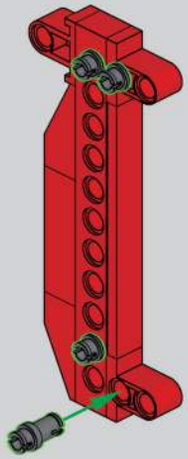

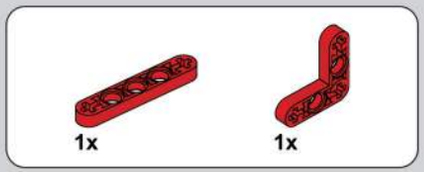

2050

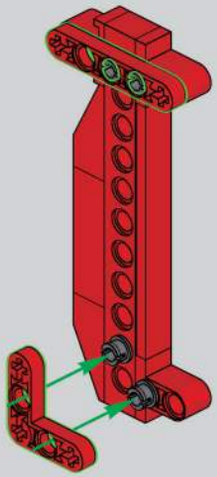

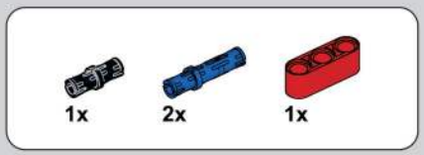

2051

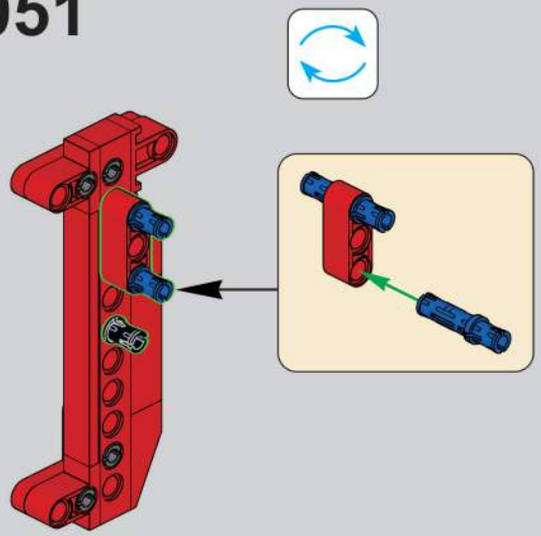

2052

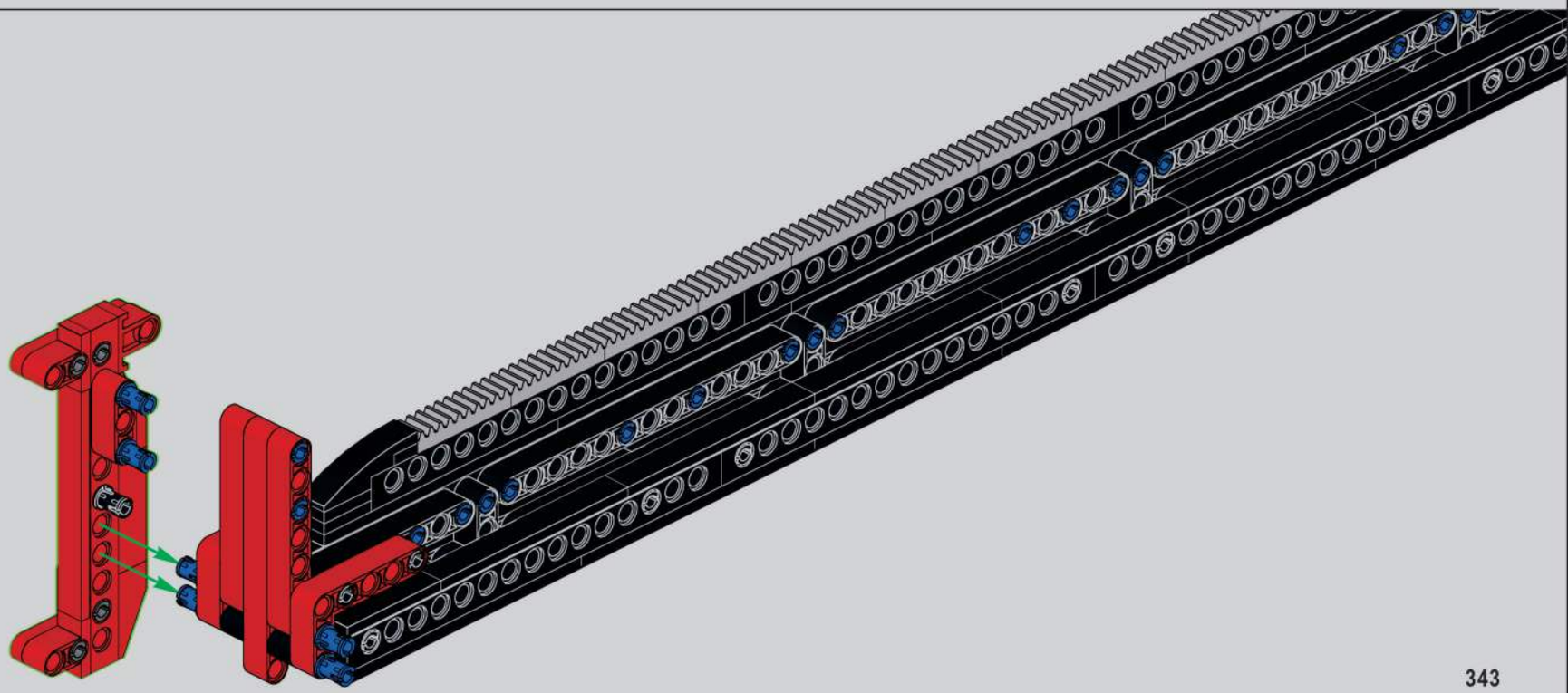

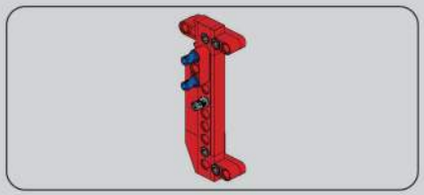

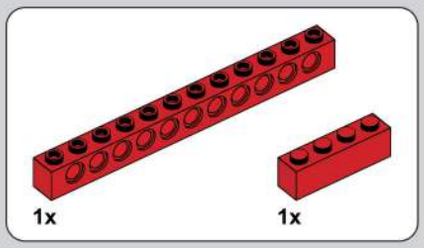

2053

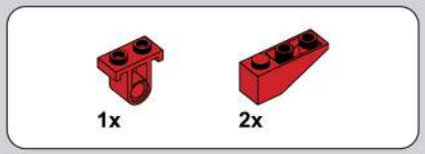

2054

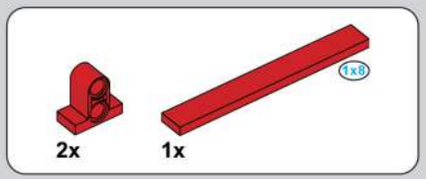

2055

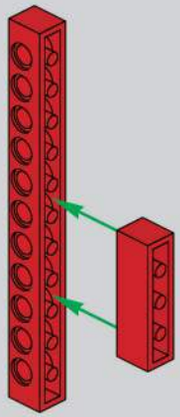

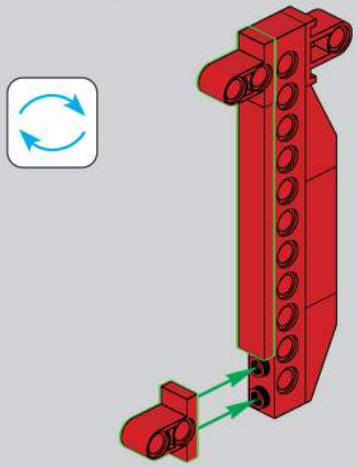

2056

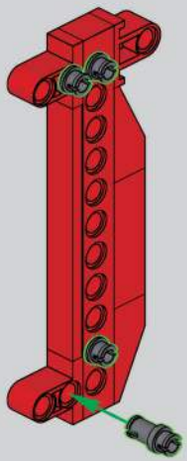

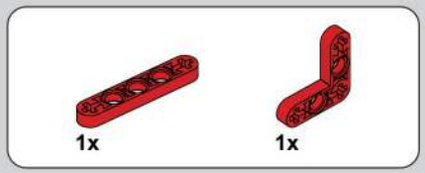

2057

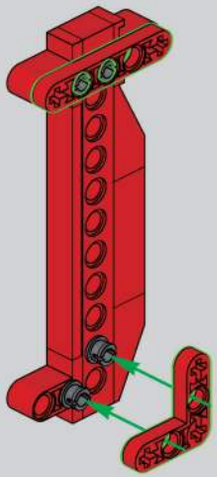

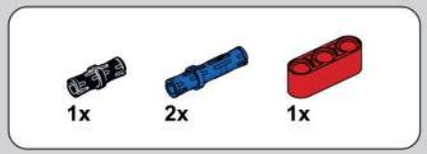

2058

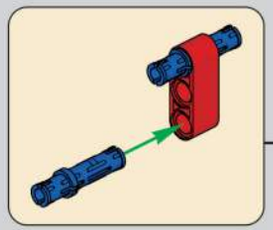

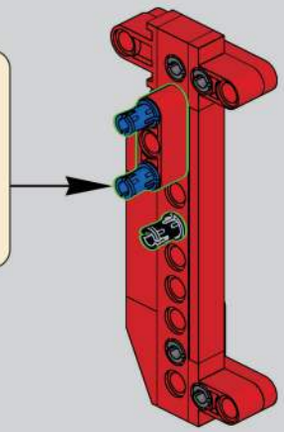

2059

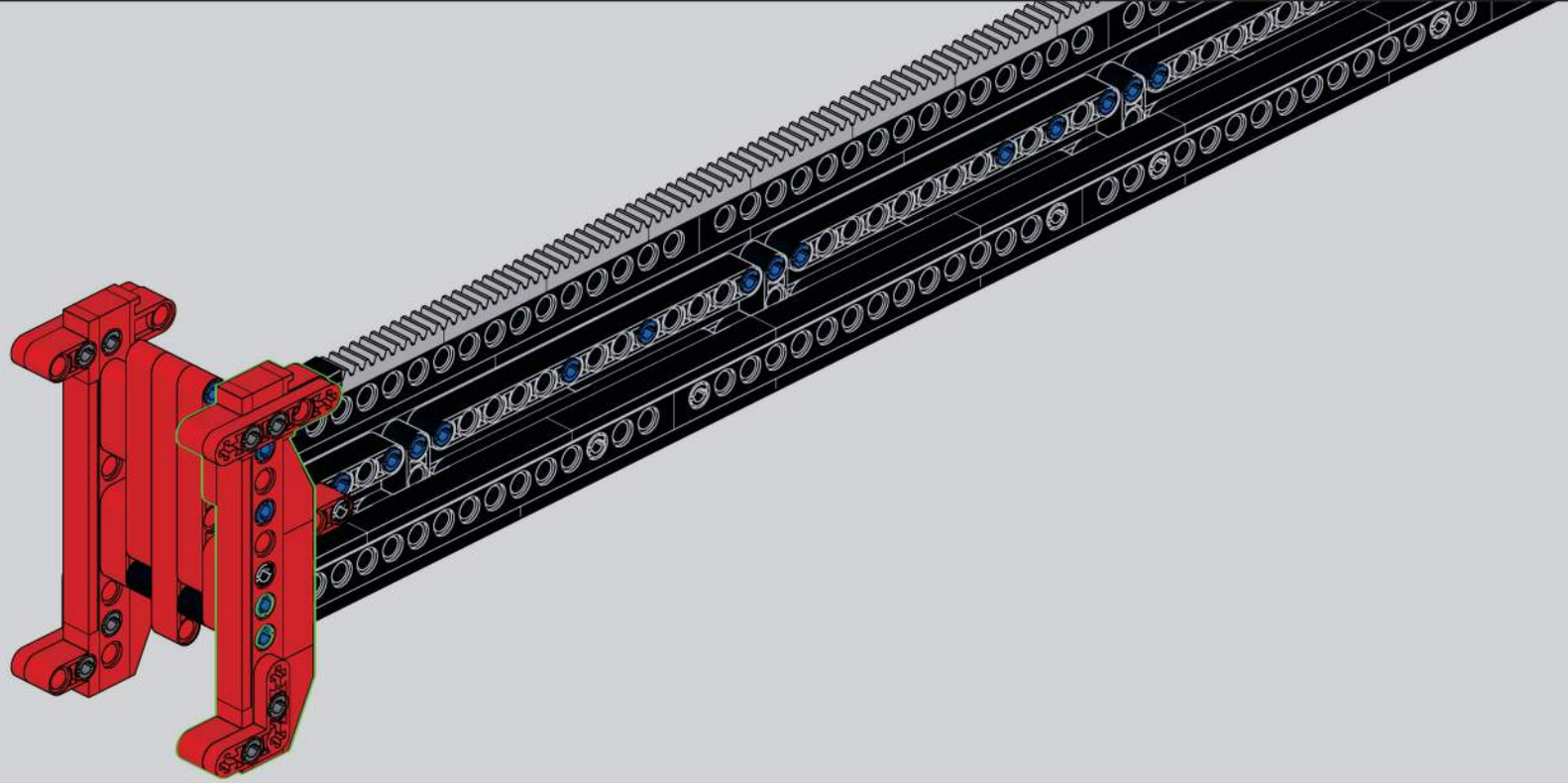

2060

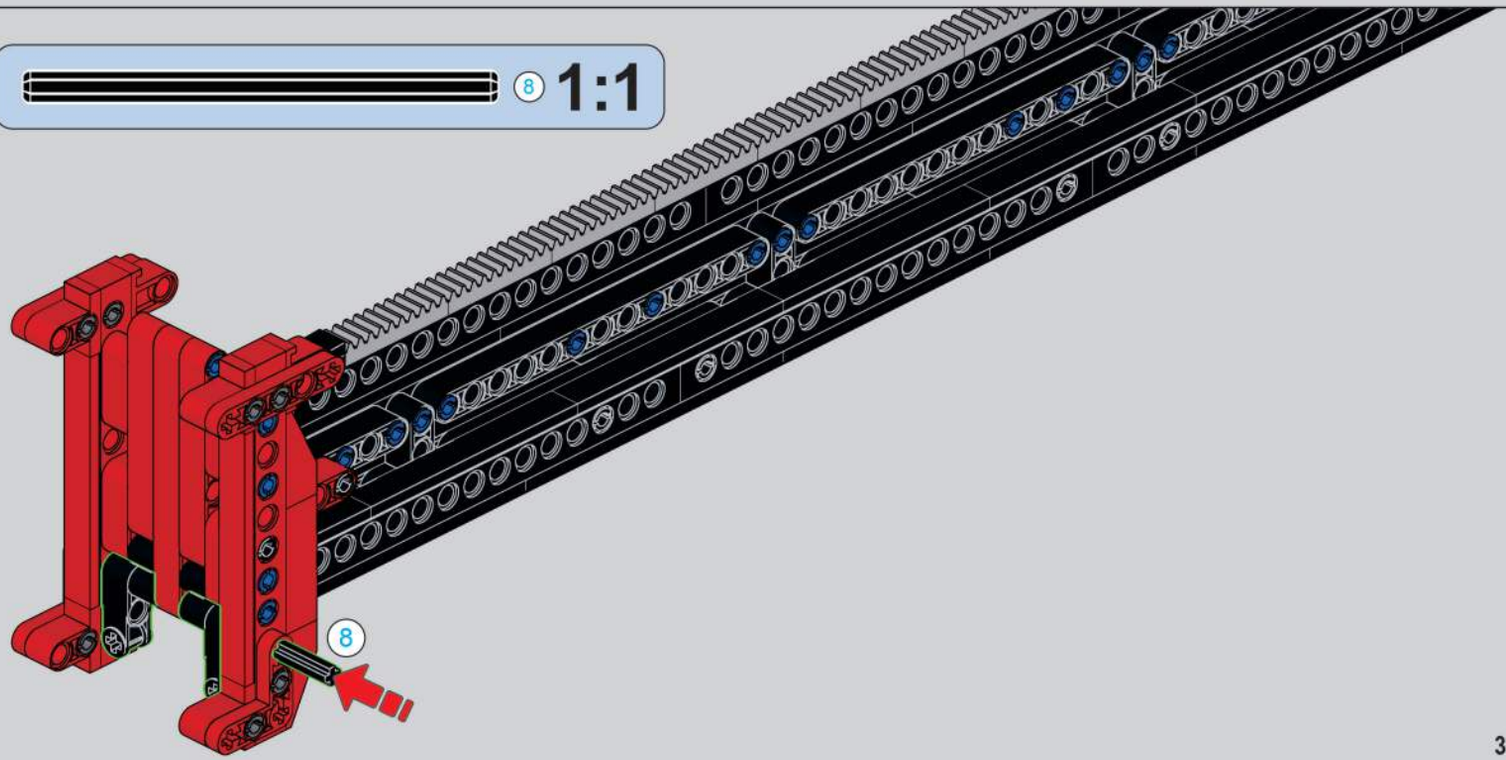

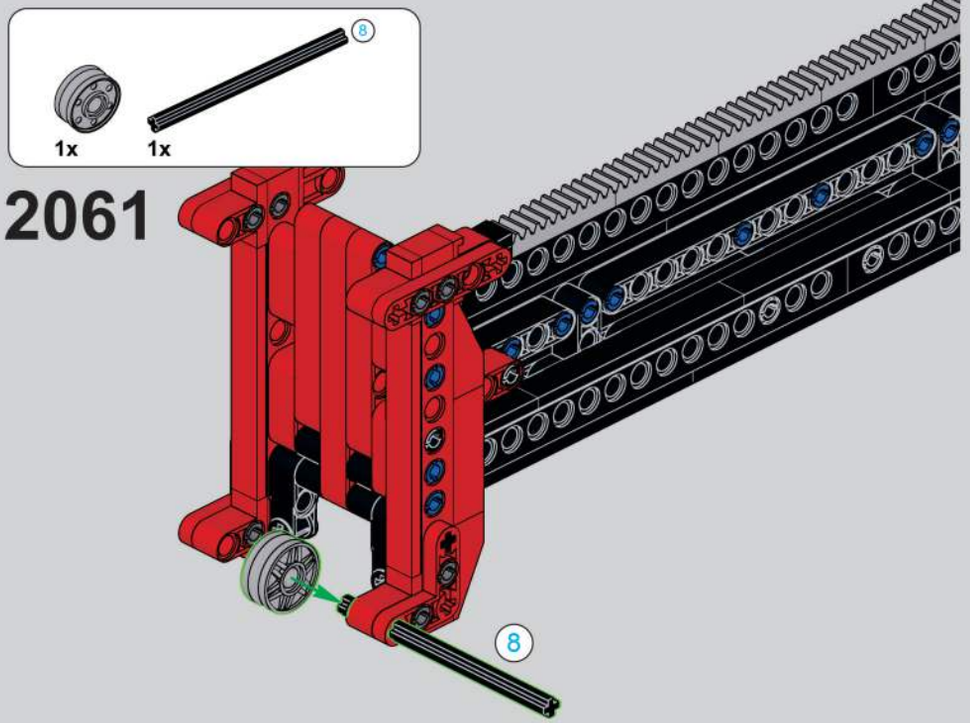
8
1x
1x
2061
8

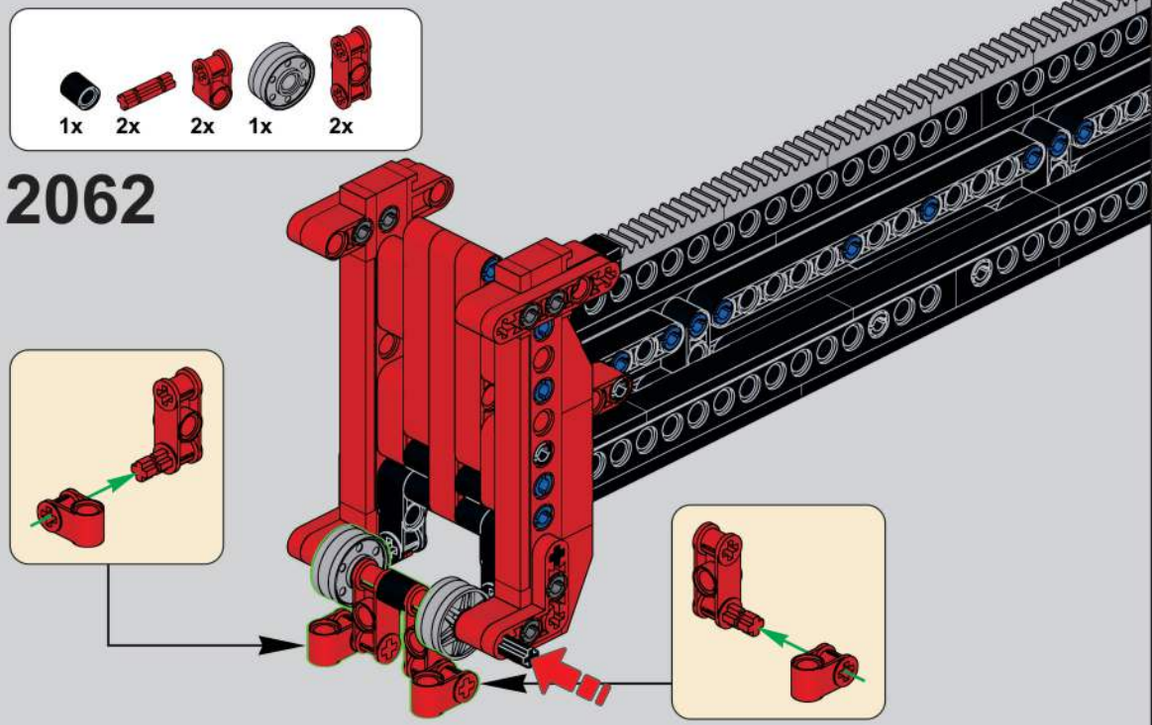
1x
2x
2x
1x
2x
2062

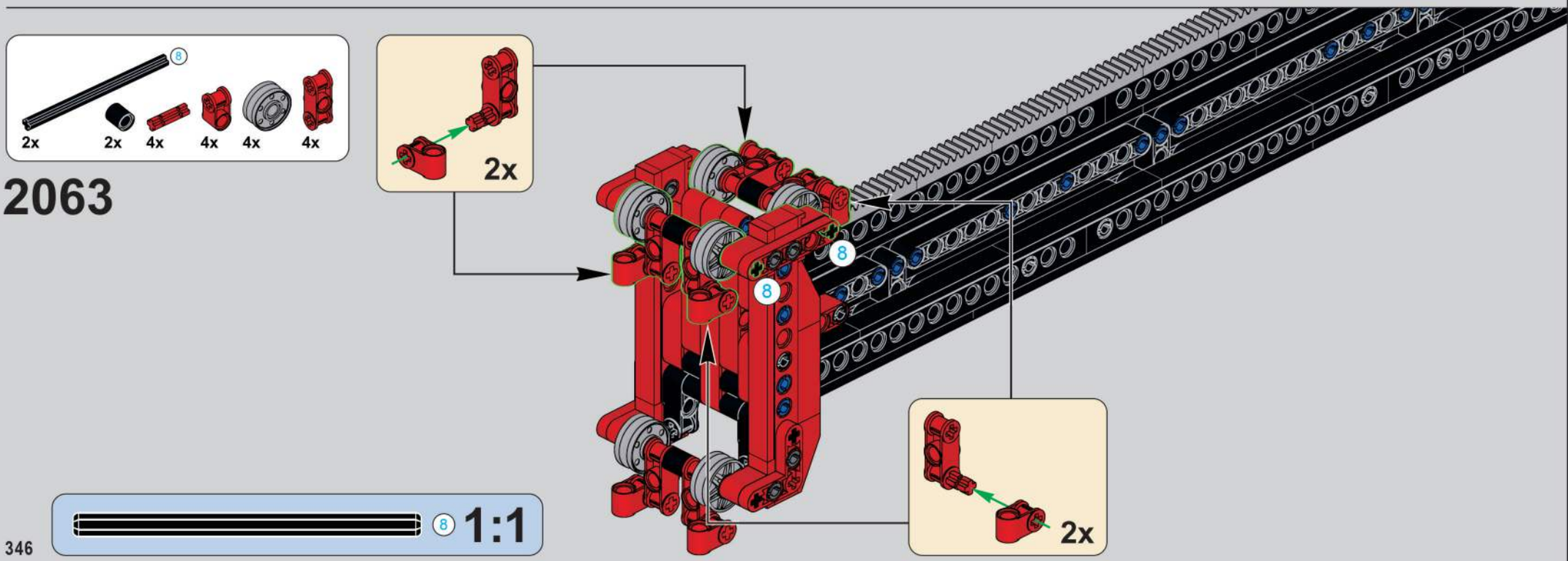
8
2x
2x
4x
4x
4x
4x
2063
2x
8
8
2x
8
1:1

2064

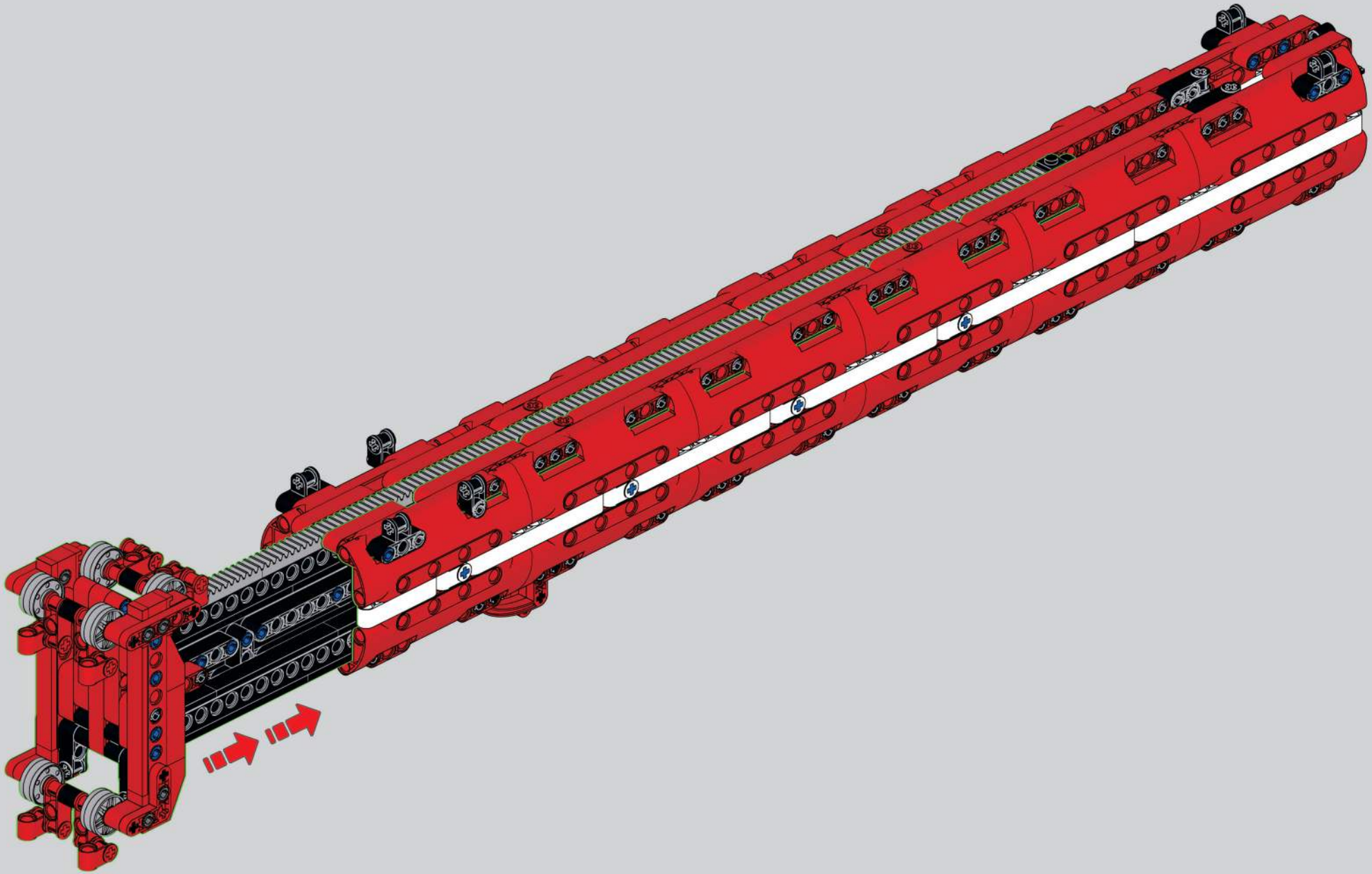

2065

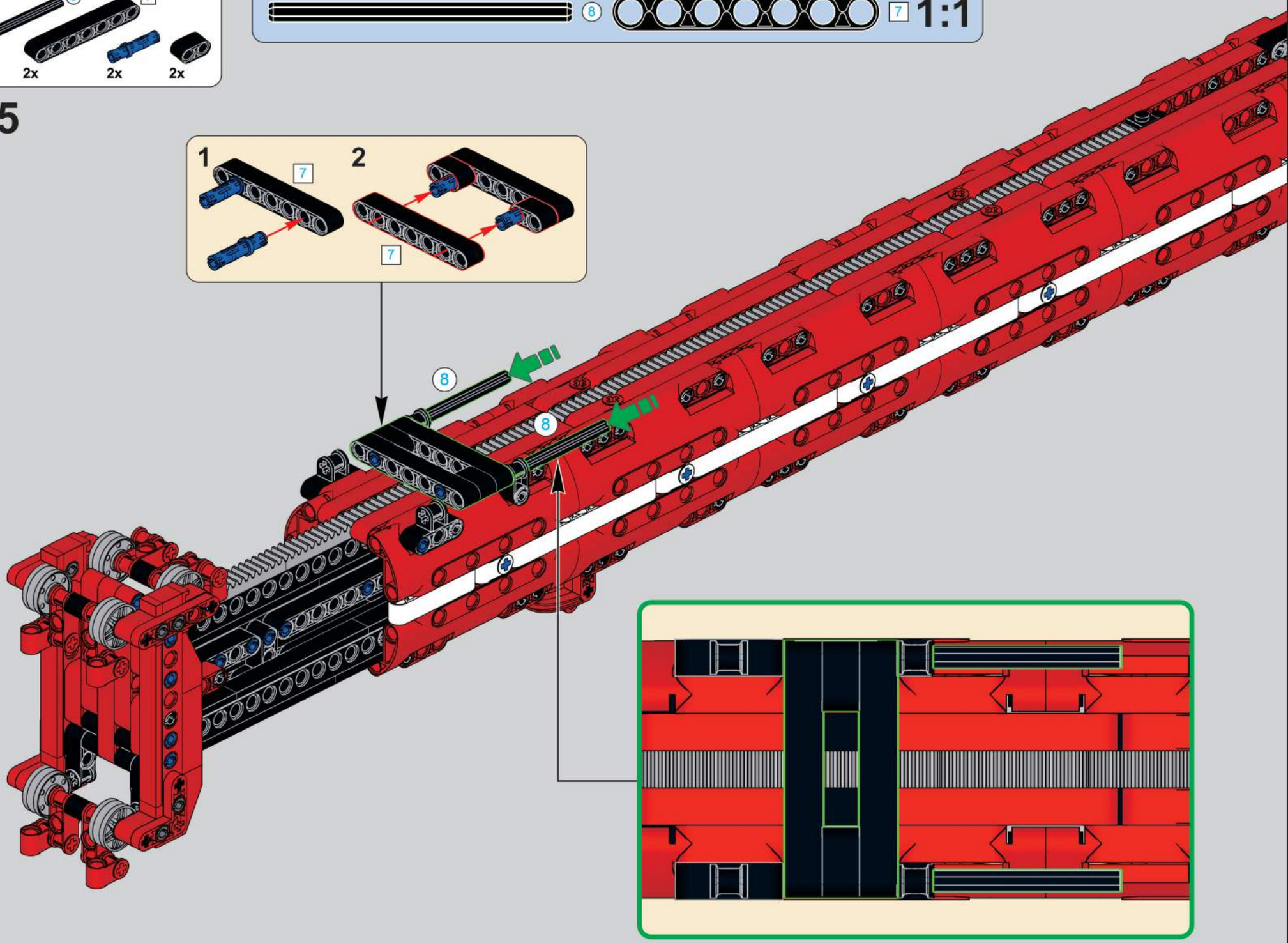

2x
4x
4x
(光滑栓)
(Technic Pin without Friction)
8x

2066

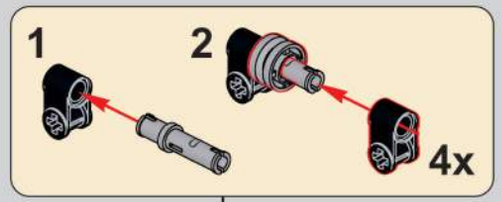
1
2
4x

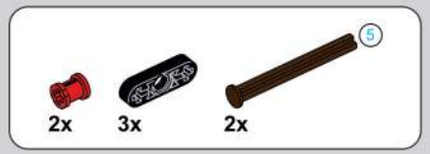
2x
3x
2x
5

2067

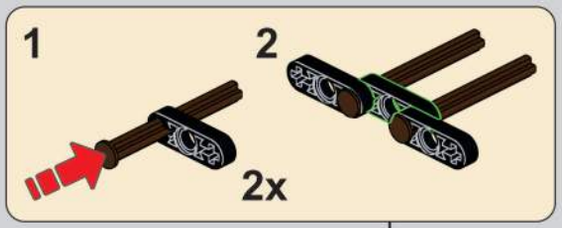
1
2
2x

5
1:1

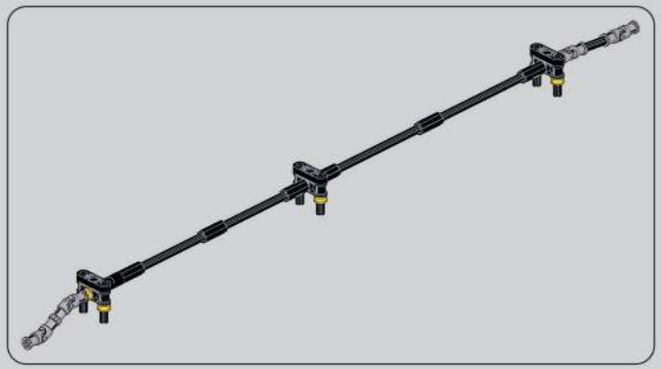

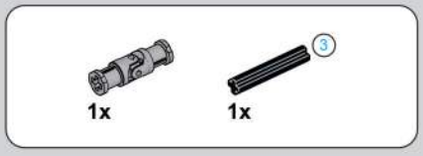

2069

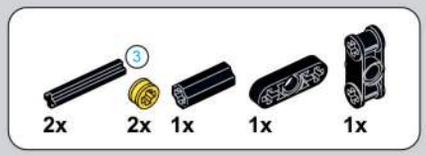

2070

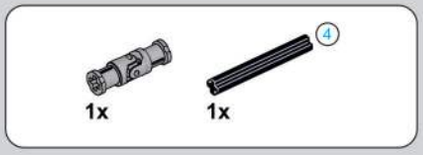

2068

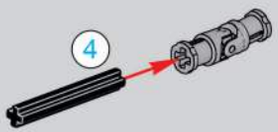

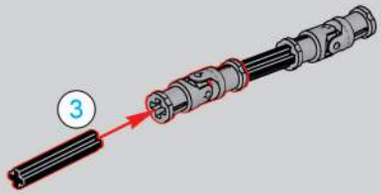

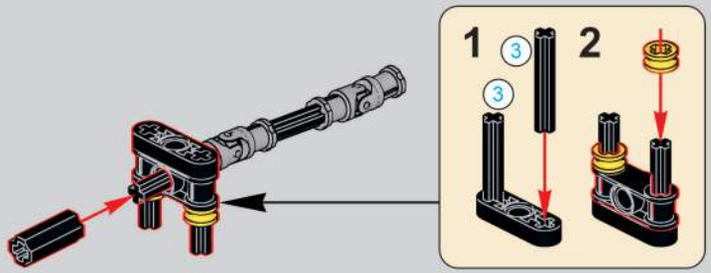

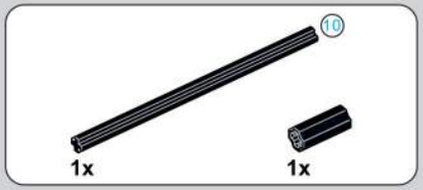

2071

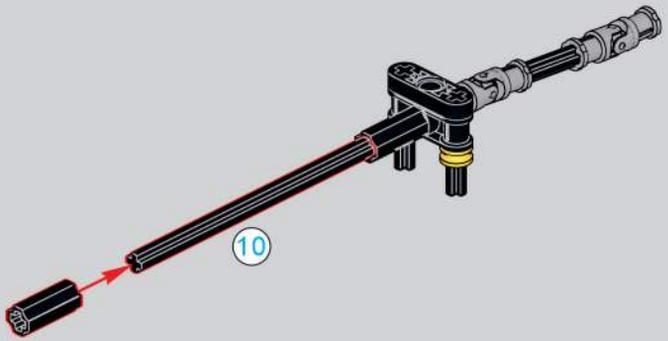

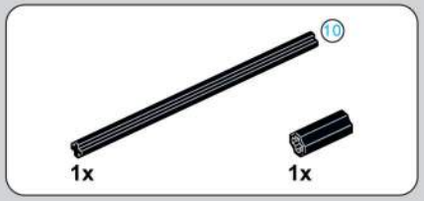

2072

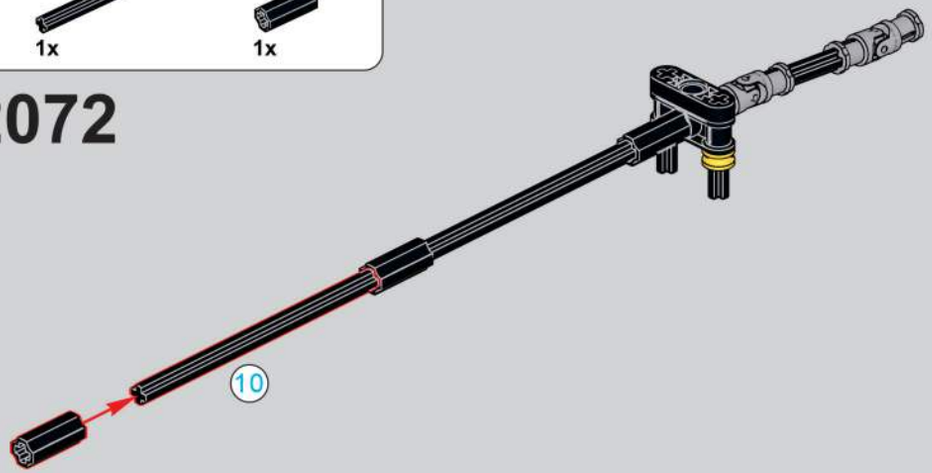

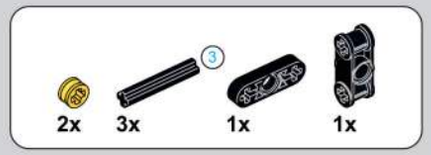

2073

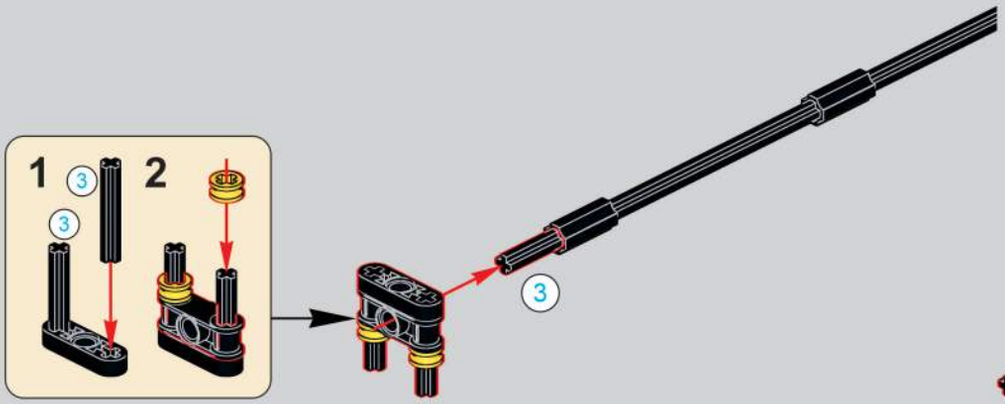

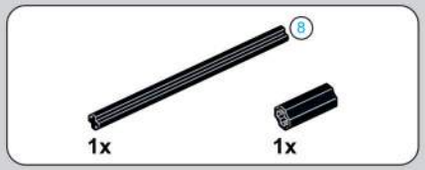

2074

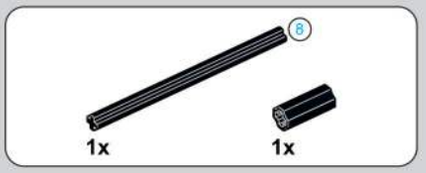

2075

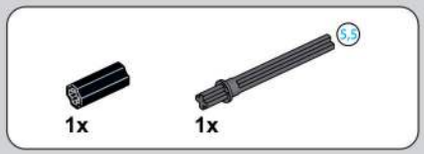

2076

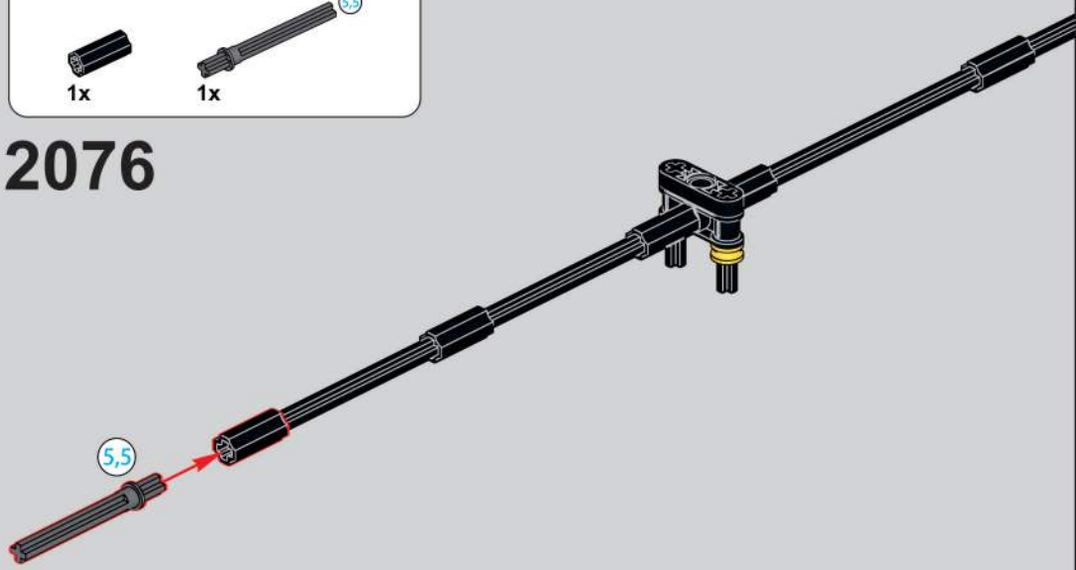

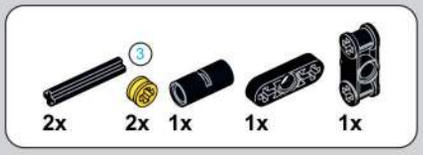

2077

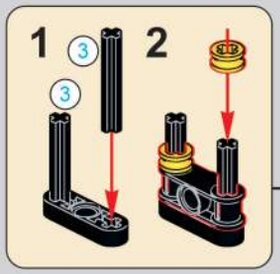

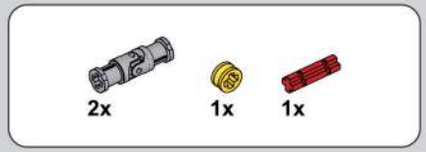

2078

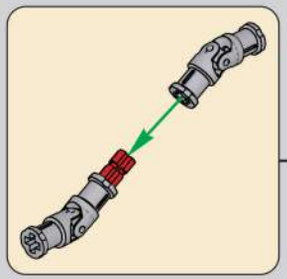

2079

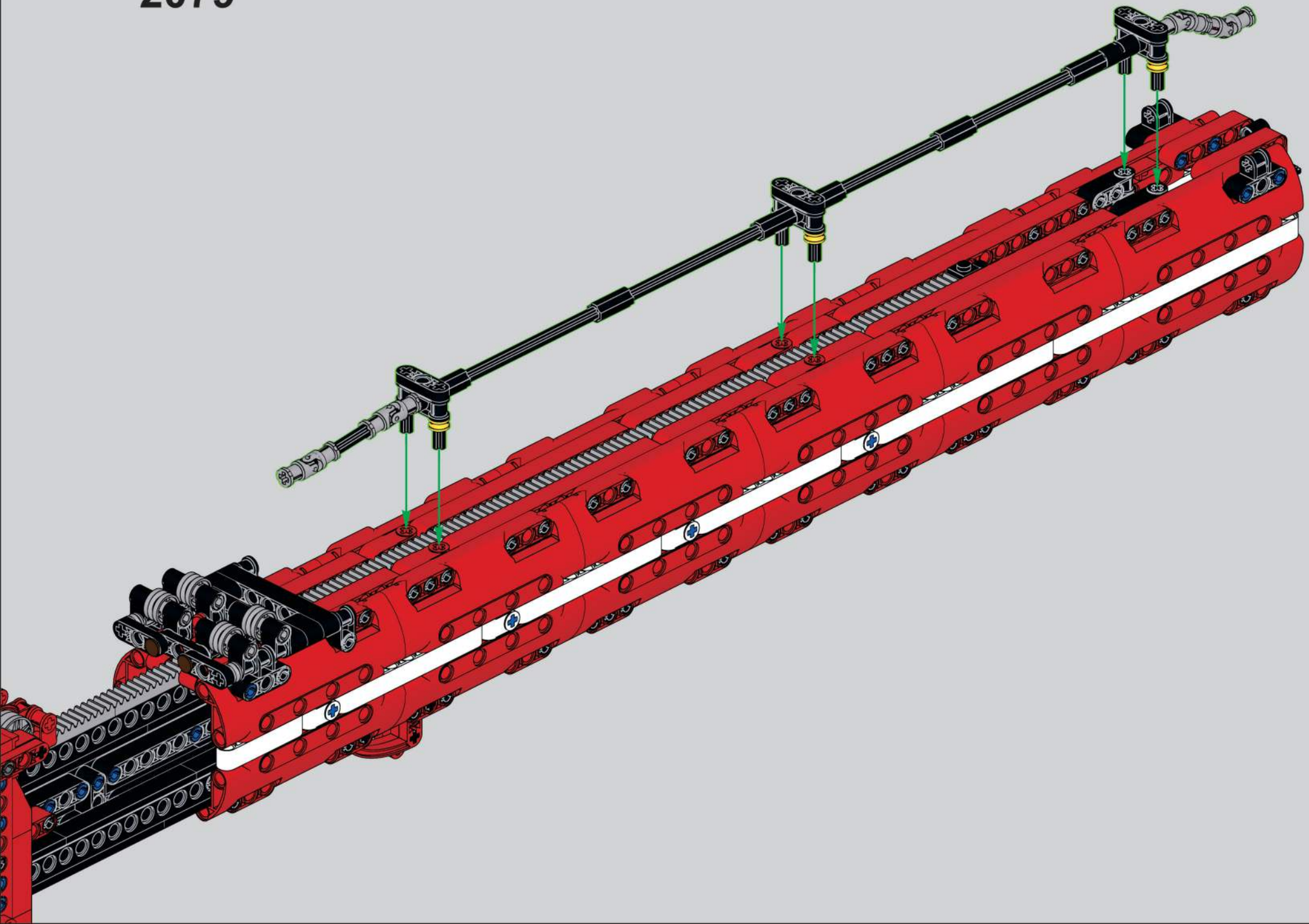

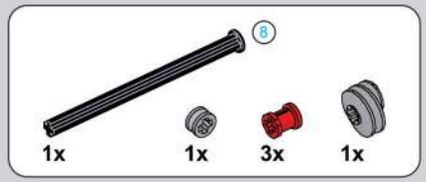

2080

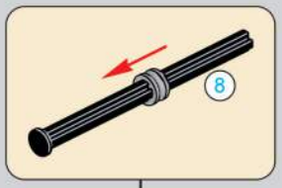

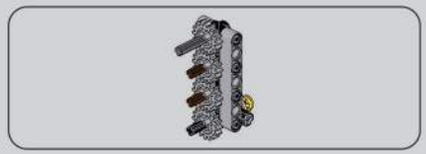

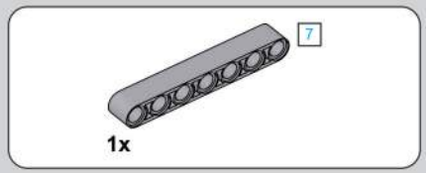

2082

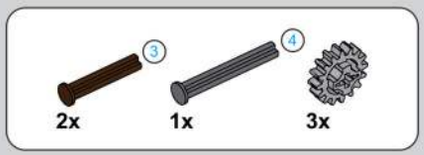

2083

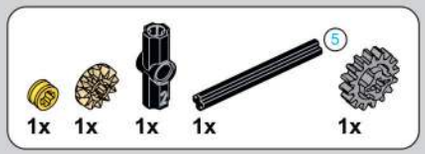

2084

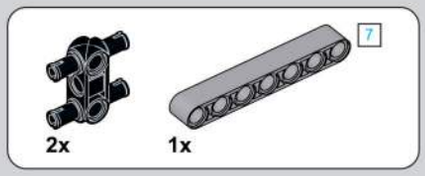

2081

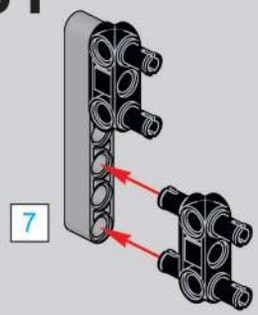

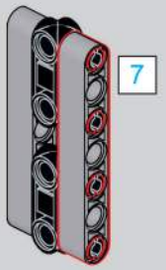

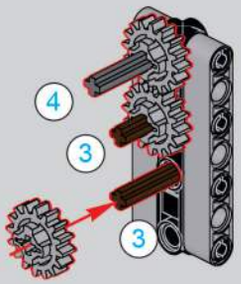

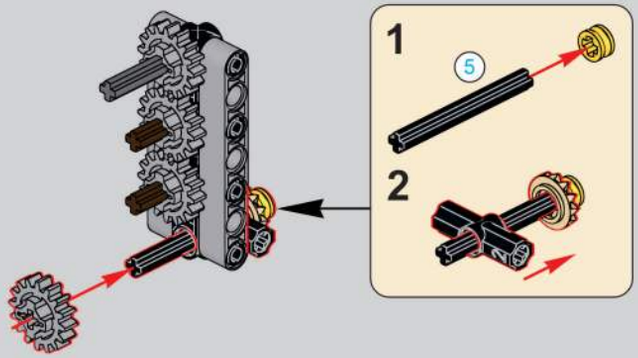

2085

7
4
1x
2x
2x
2x
2x
4x
(Technic Pin without Friction) (光滑栓)

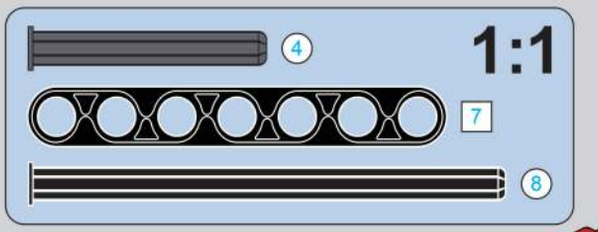
4
1:1
7
8

2086

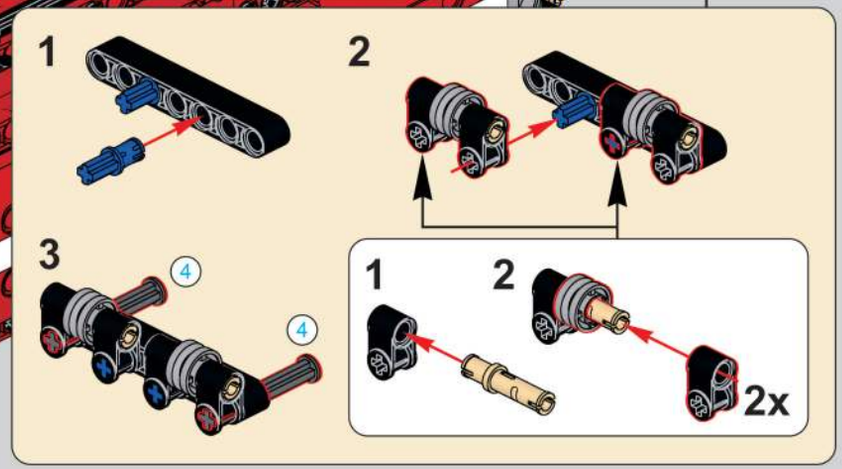
1
2
3
4
4
1
2
2x

2087

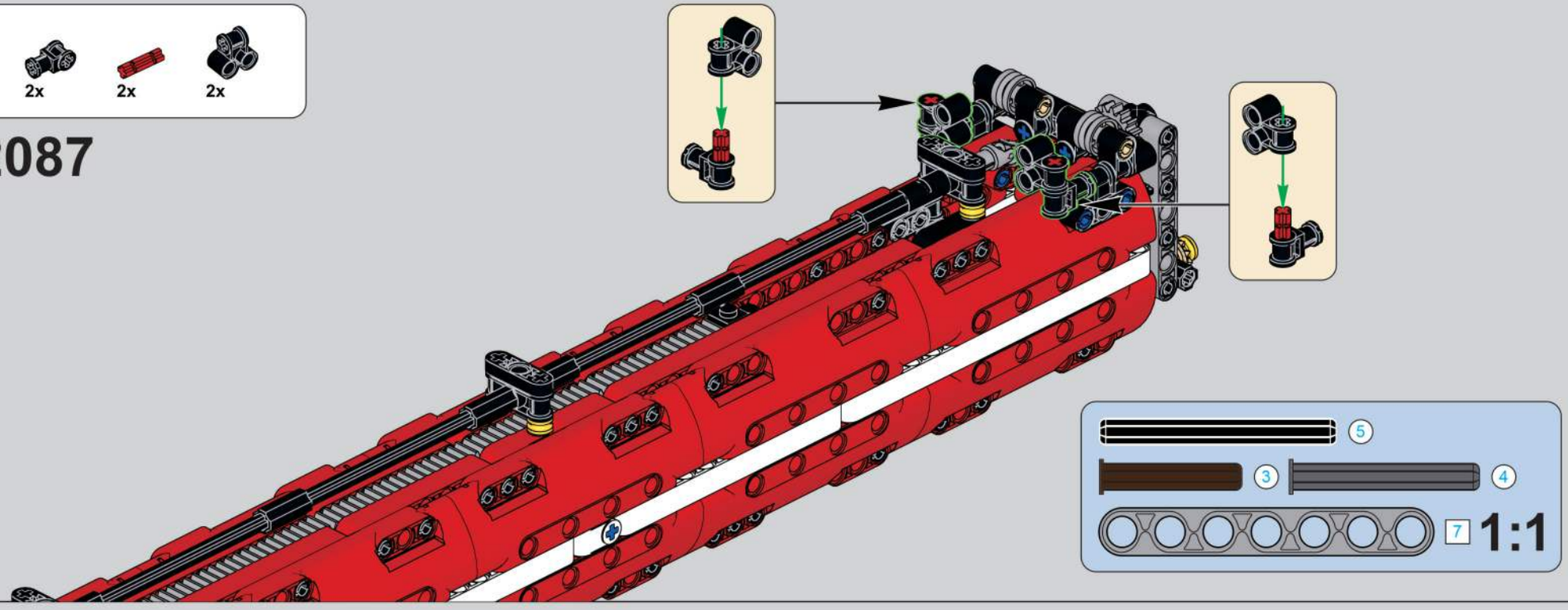

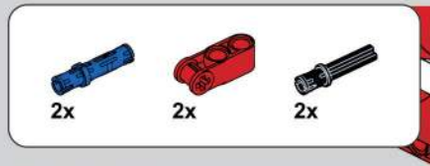

2088

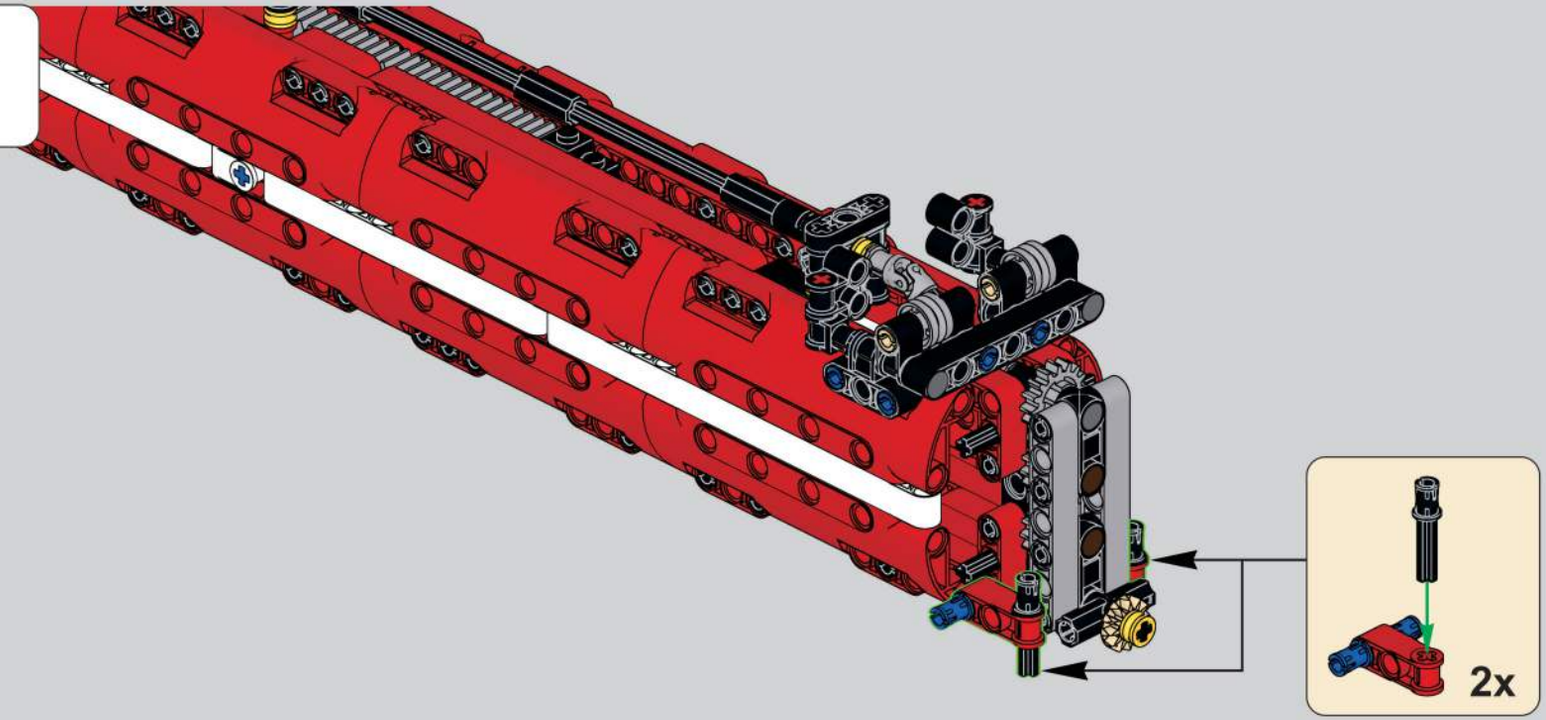

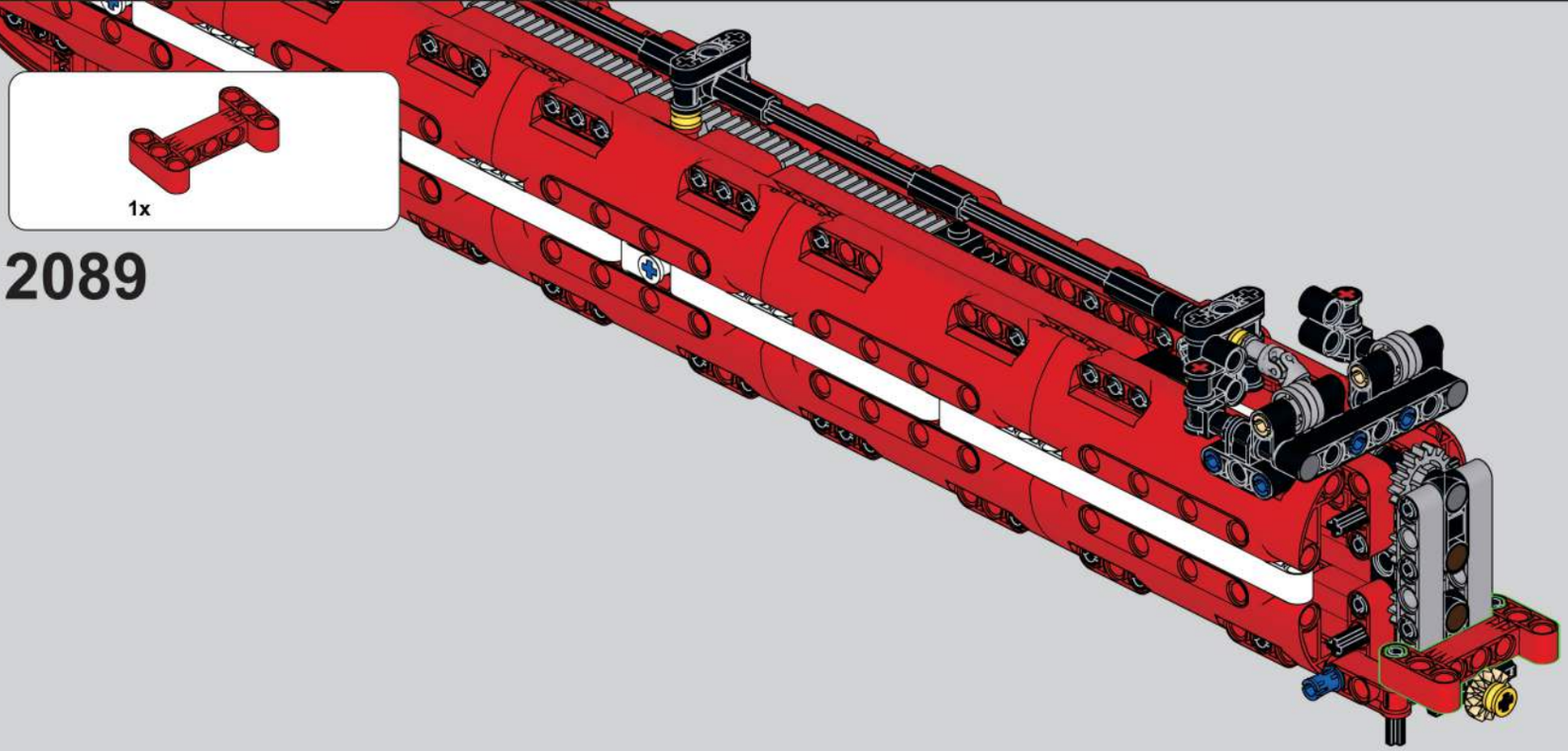

2089

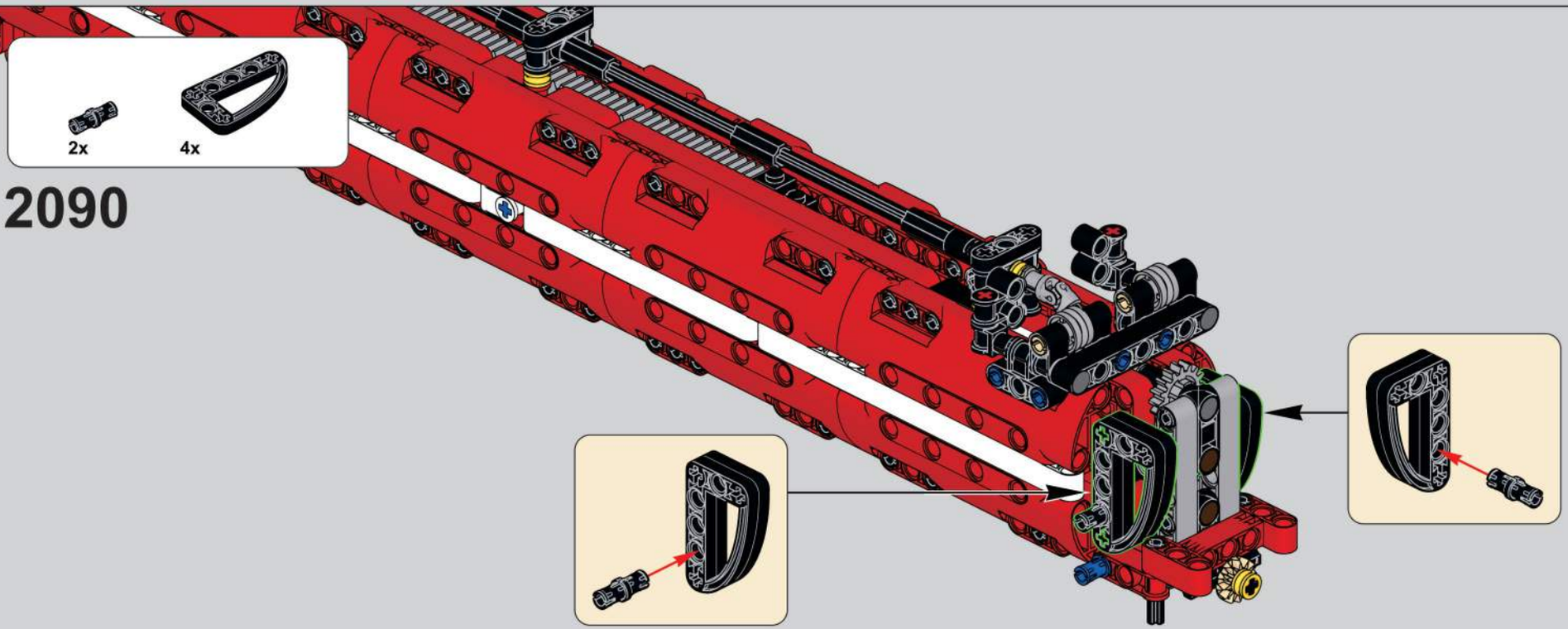

2090

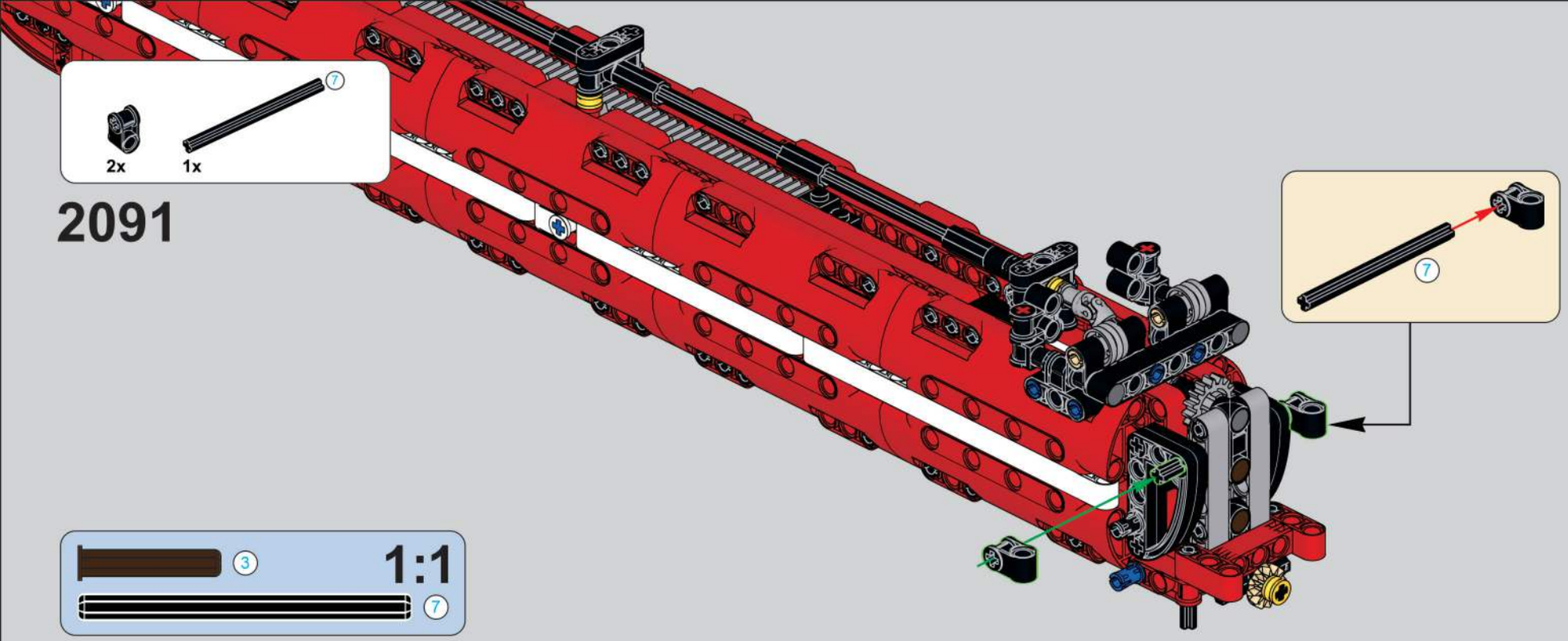
7
2x
1x
2091
7
3
1:1
7

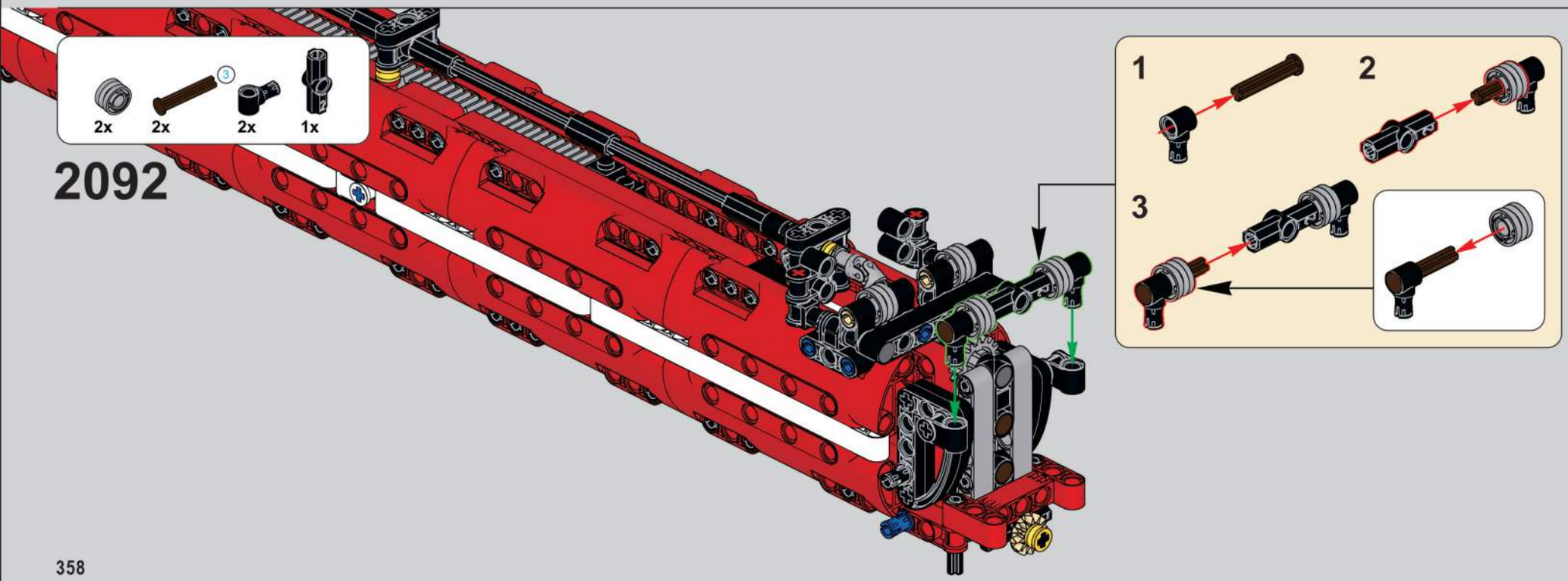
3
2x
2x
2x
1x
2092
1
2
3

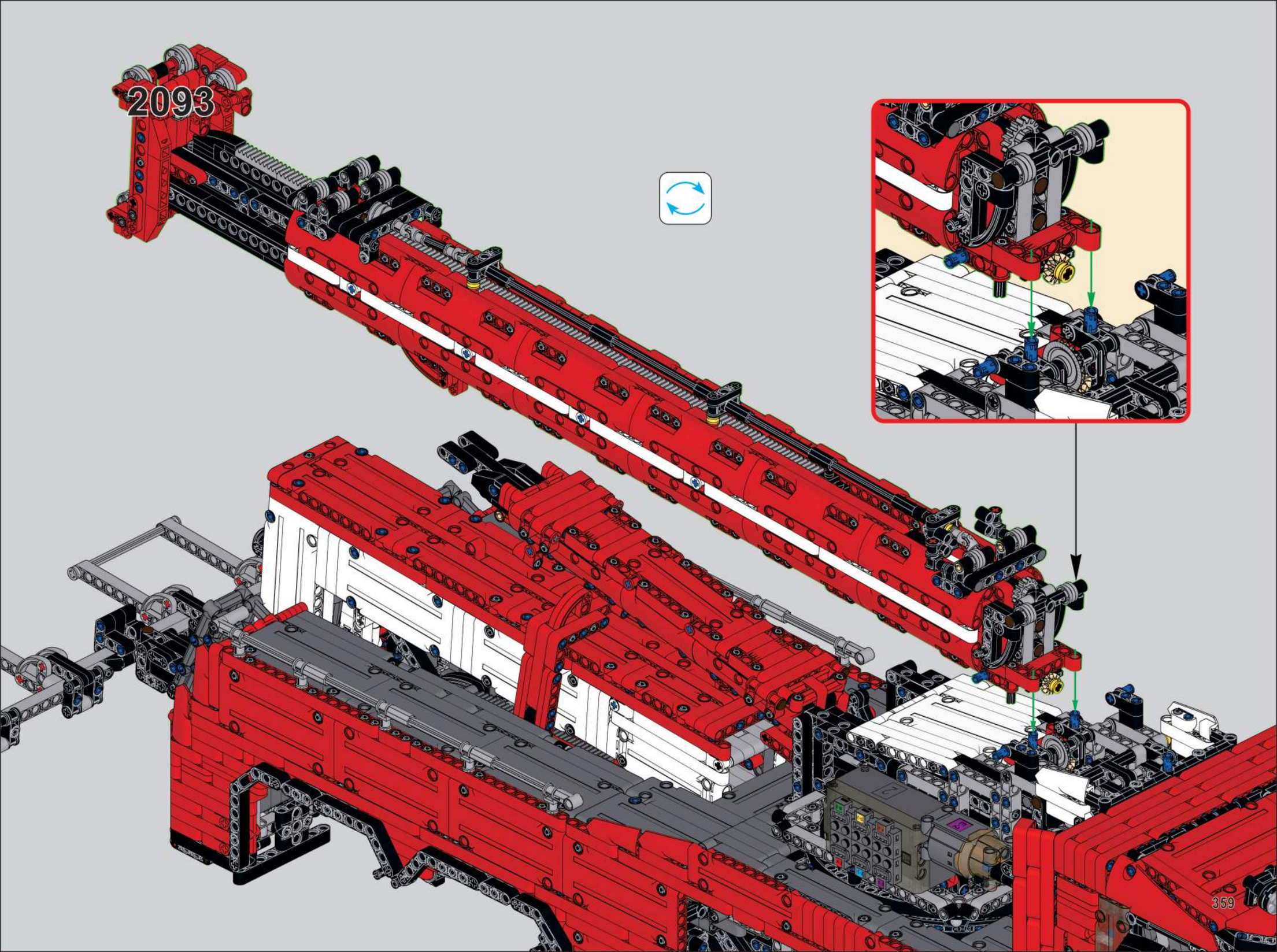
2093

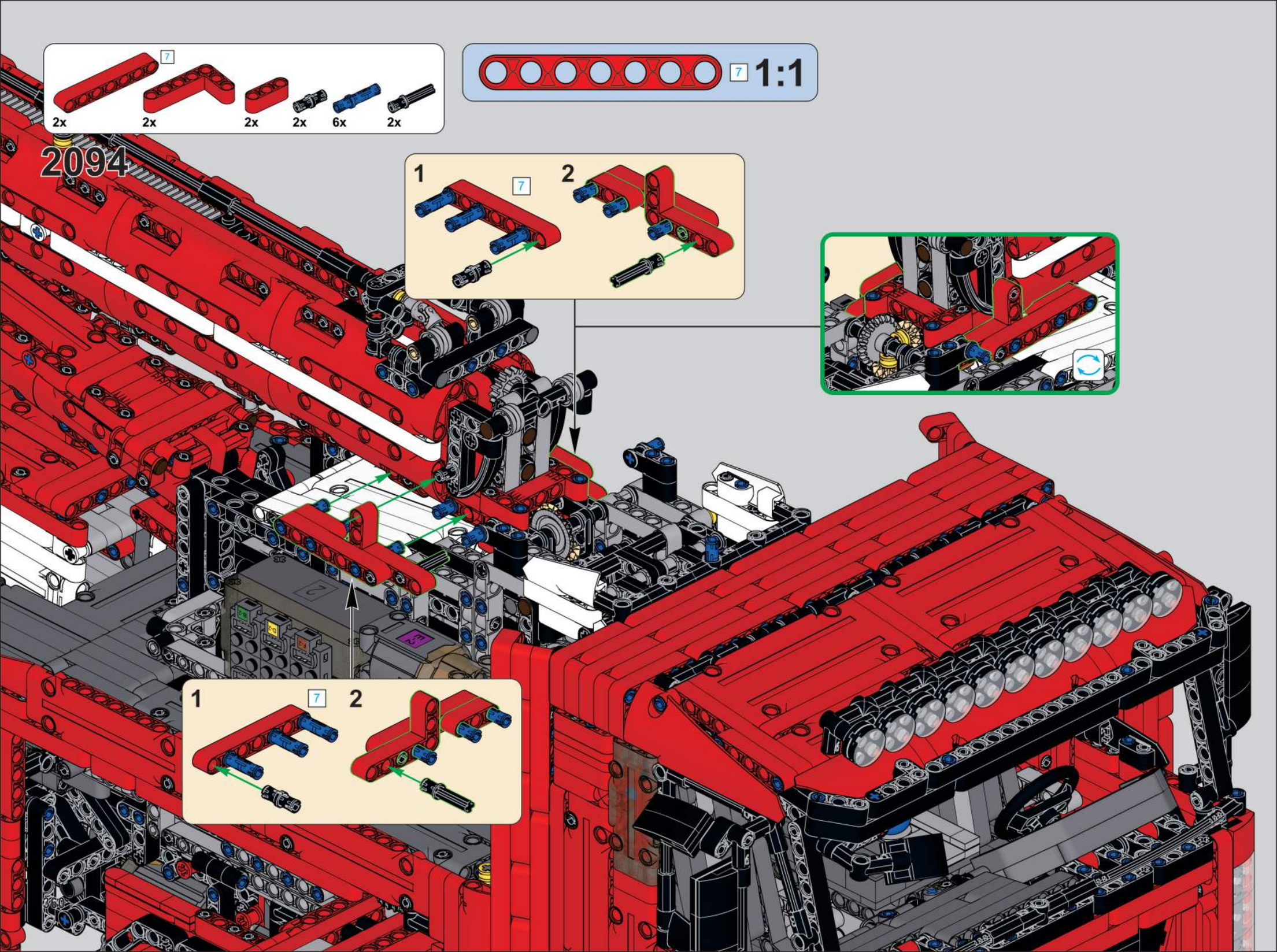
7
2x
2x
2x
2x
6x
2x
7
1:1
2094
1
7
2
1
7
2

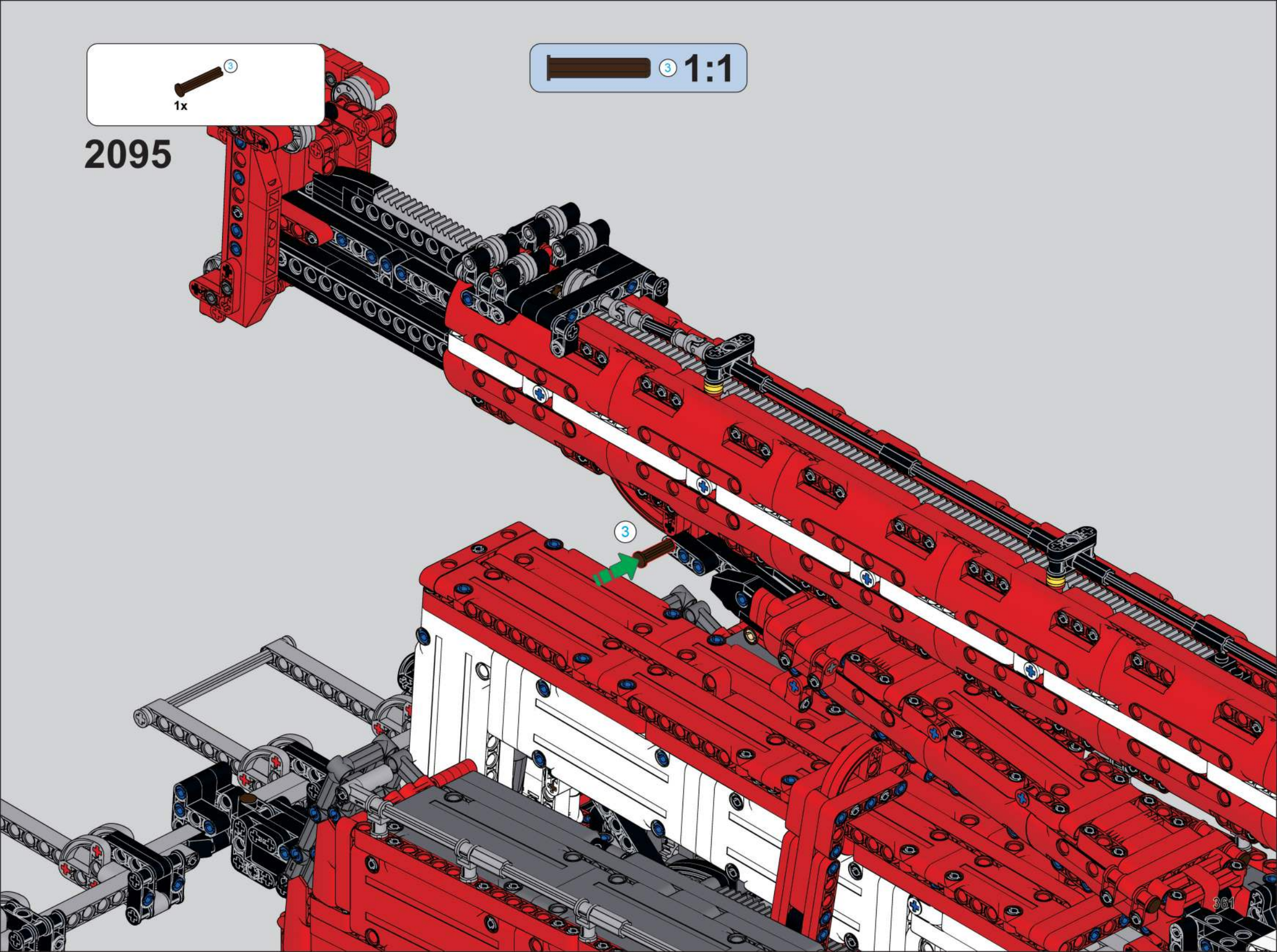
3
1x
2095
3
1:1
3
361

2096

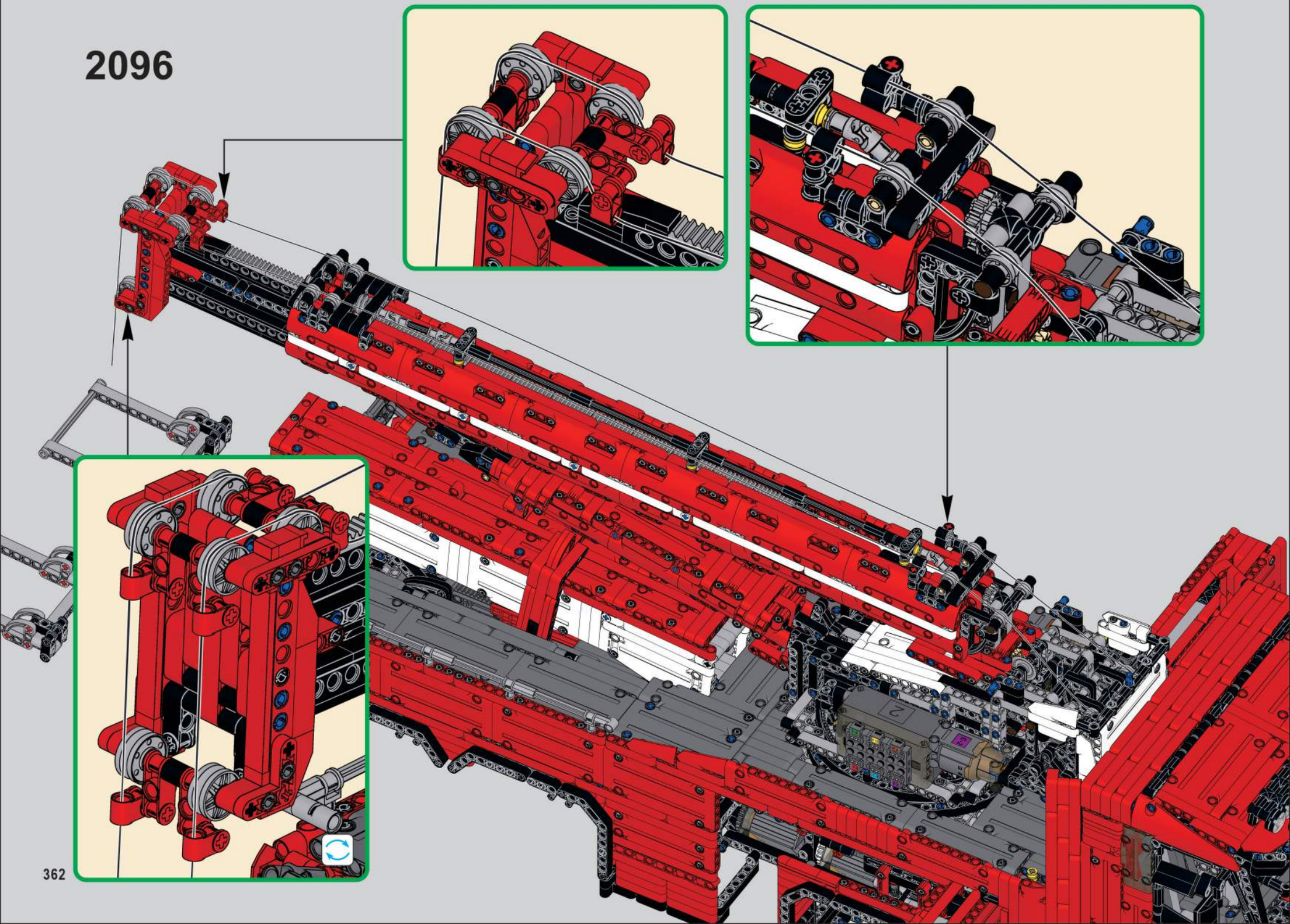

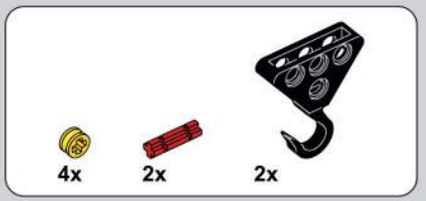

2097

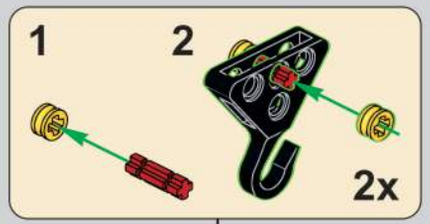

18

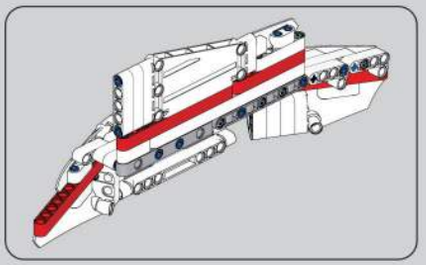

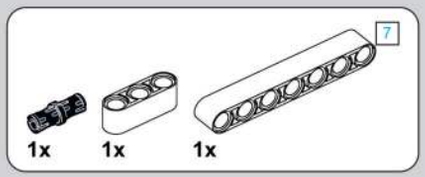

2099

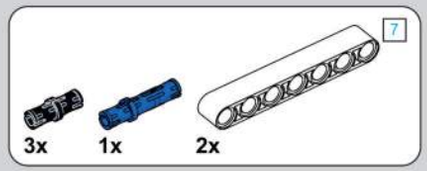

2100

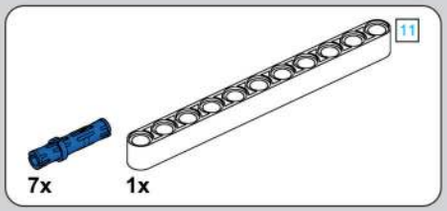

2098

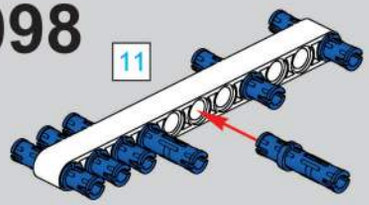

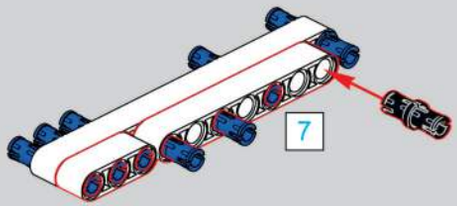

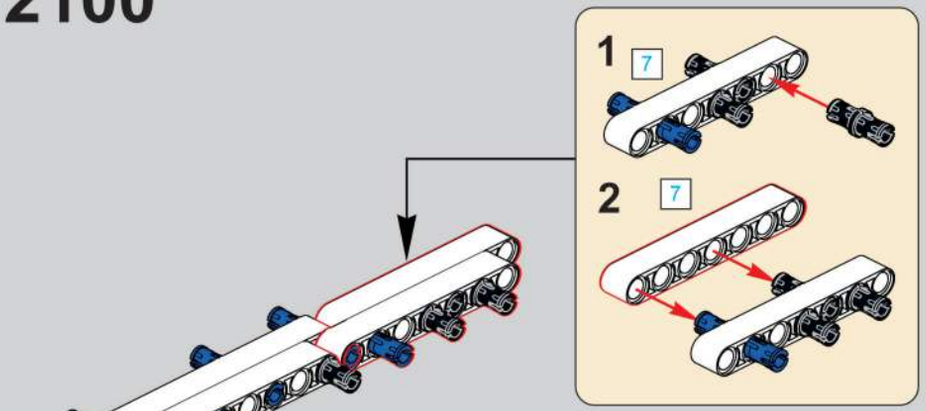

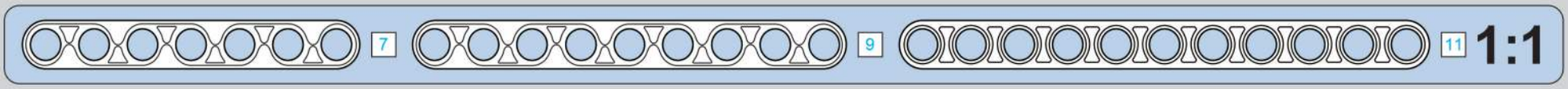

2101

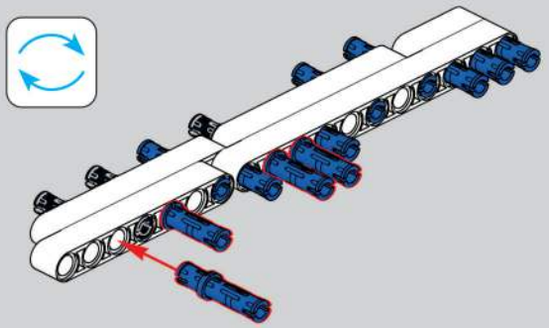

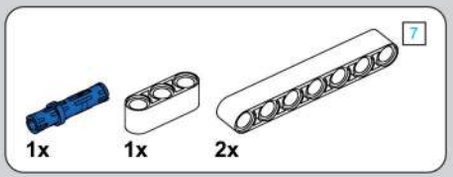

2102

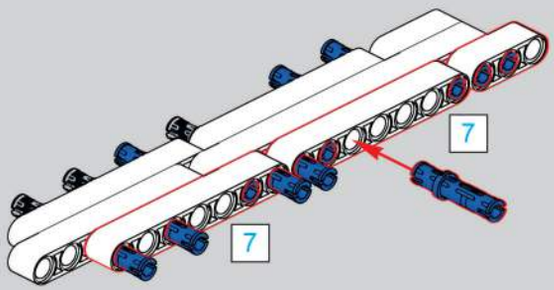

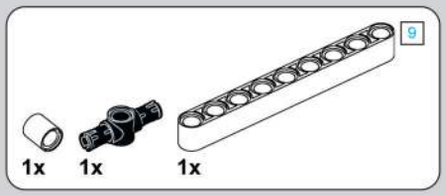

2103

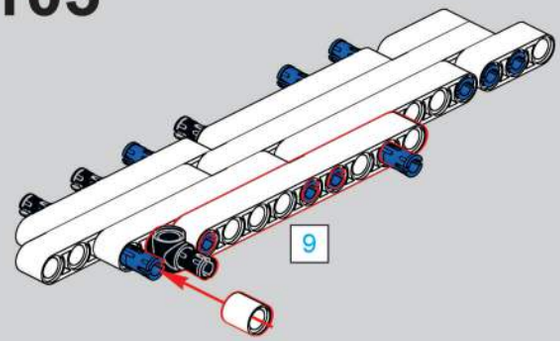

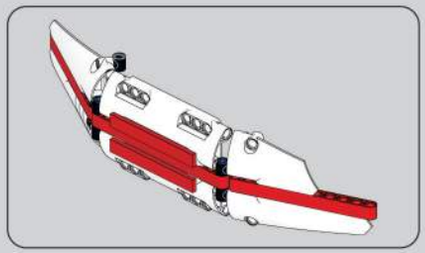

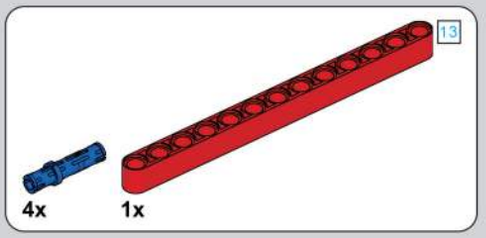

2104

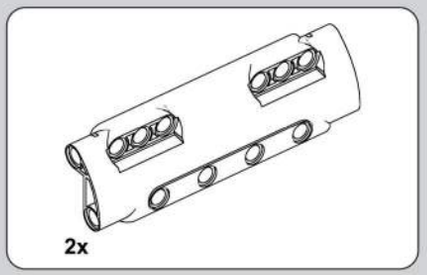

2105

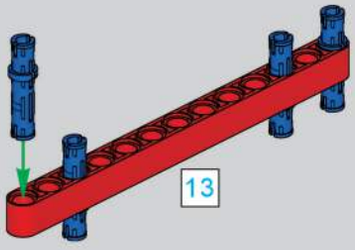

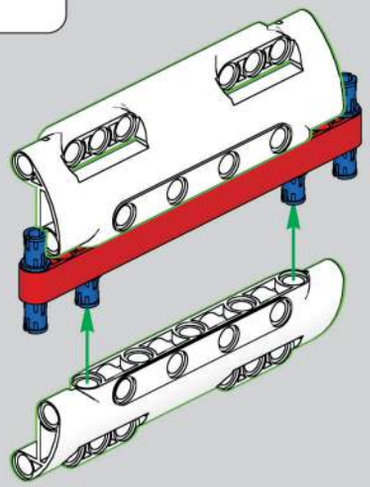

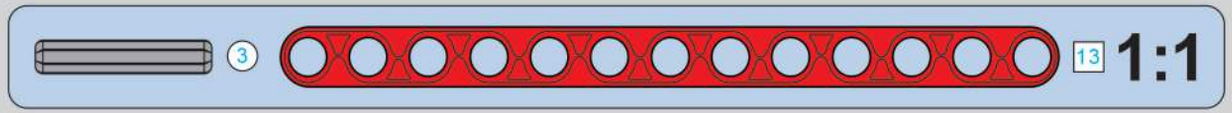

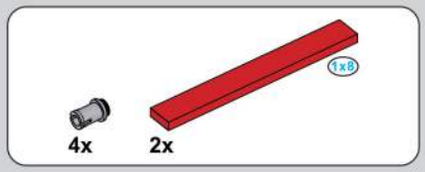

2106

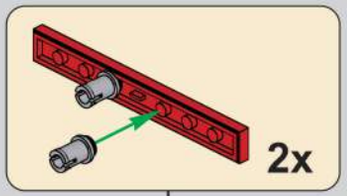

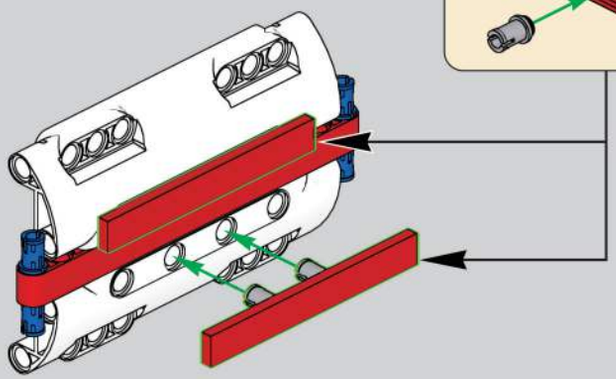

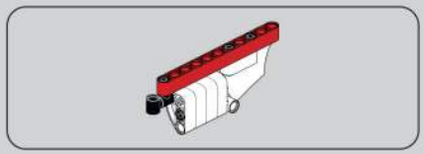

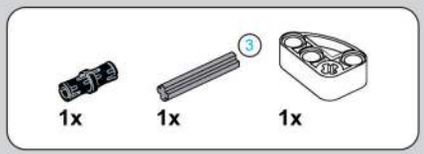

2107

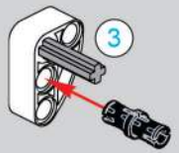

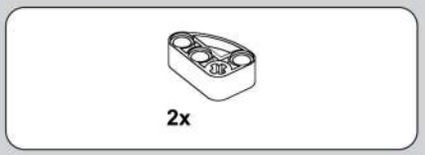

2108

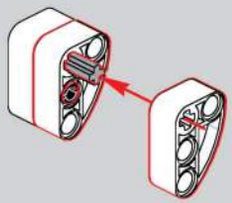

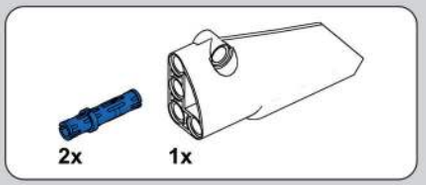

2109

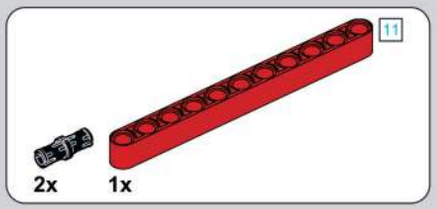

2110

2111

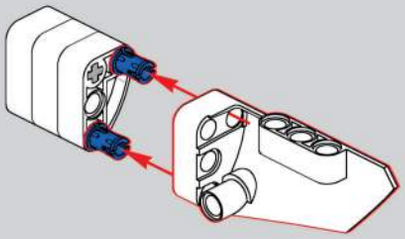

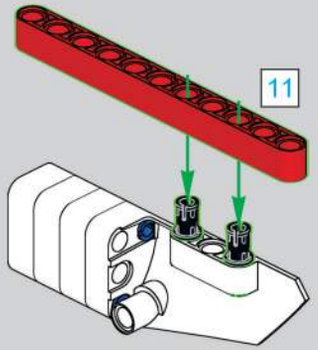

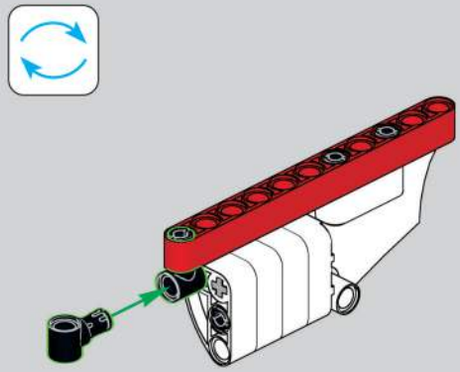

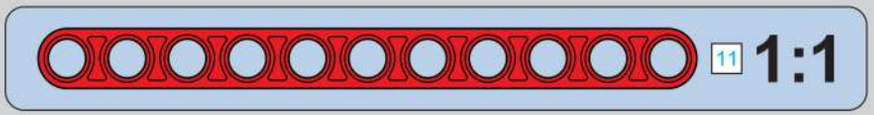

2112

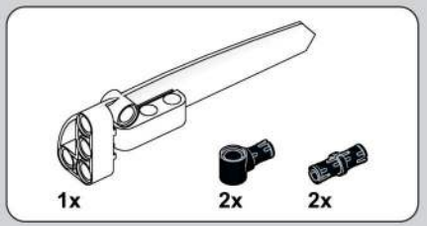

2113

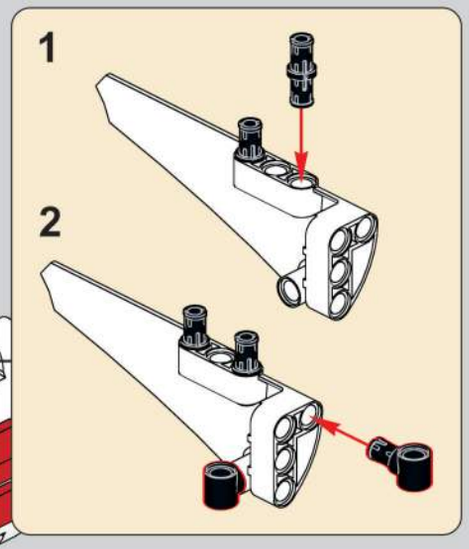

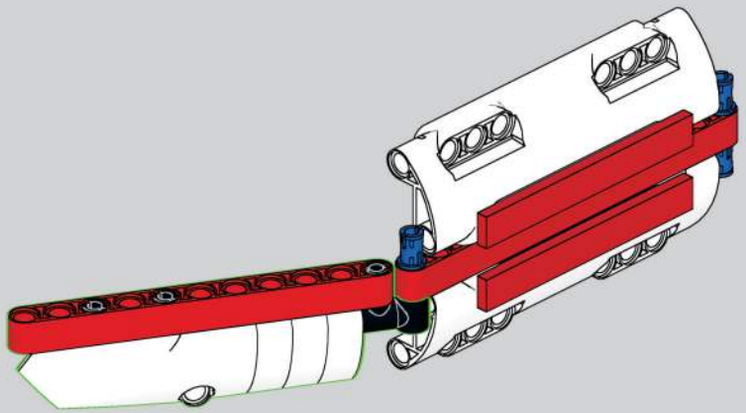

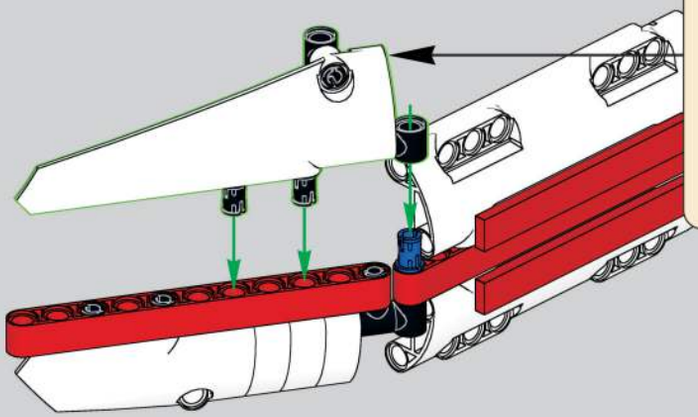

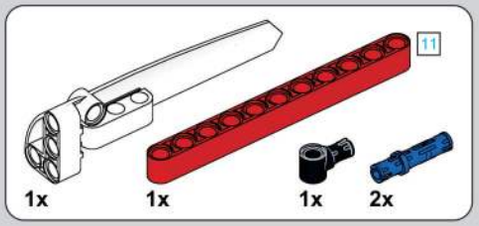

2114

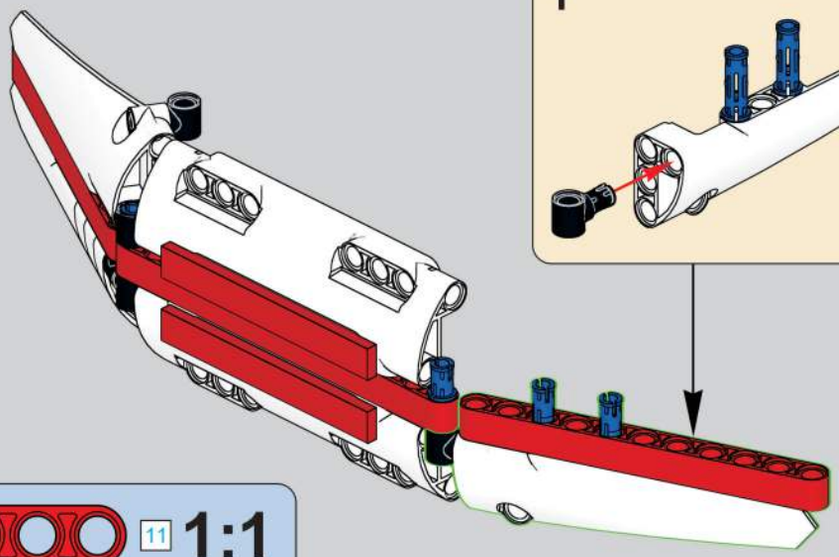

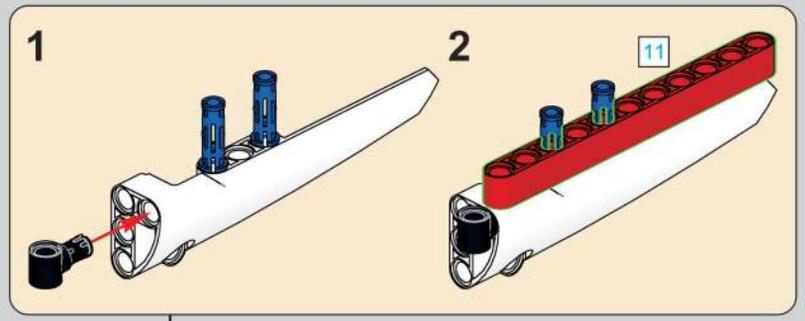

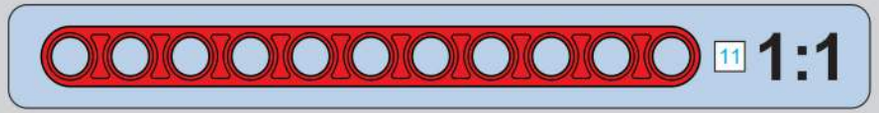

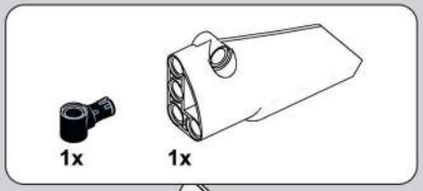

2115

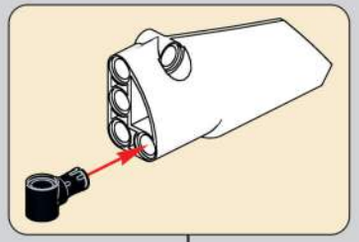

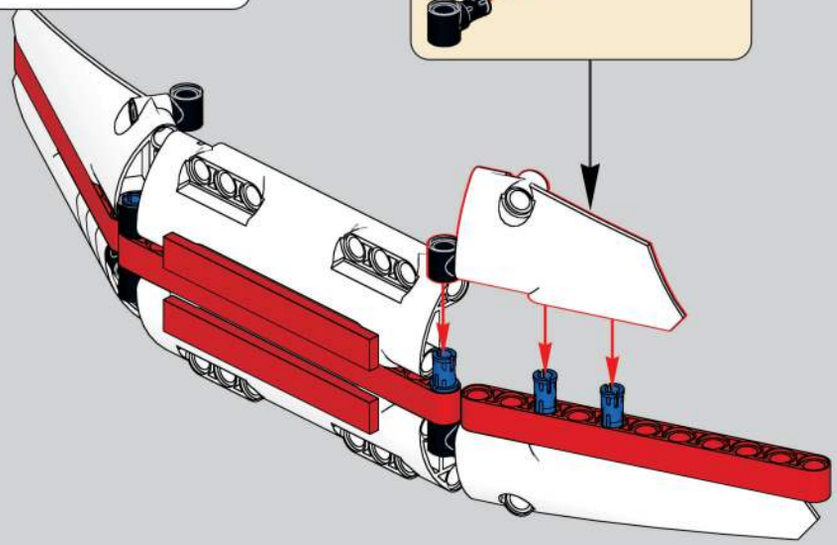

2116

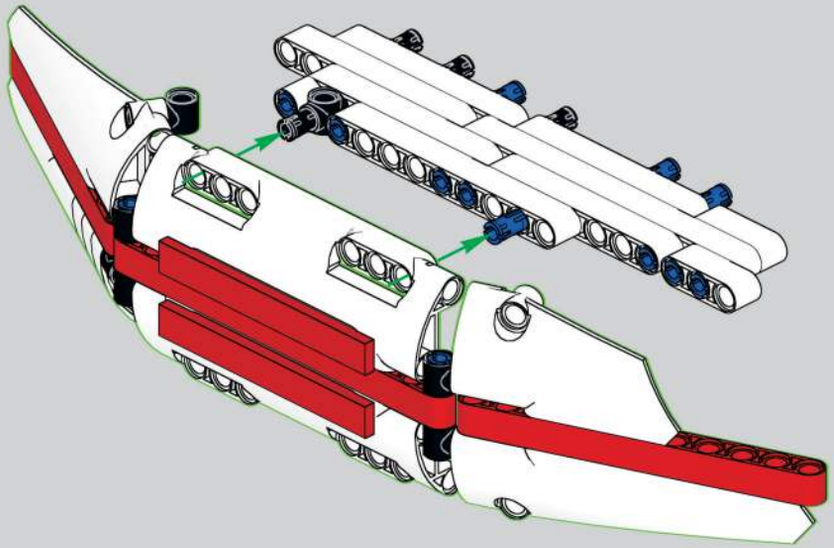

2117

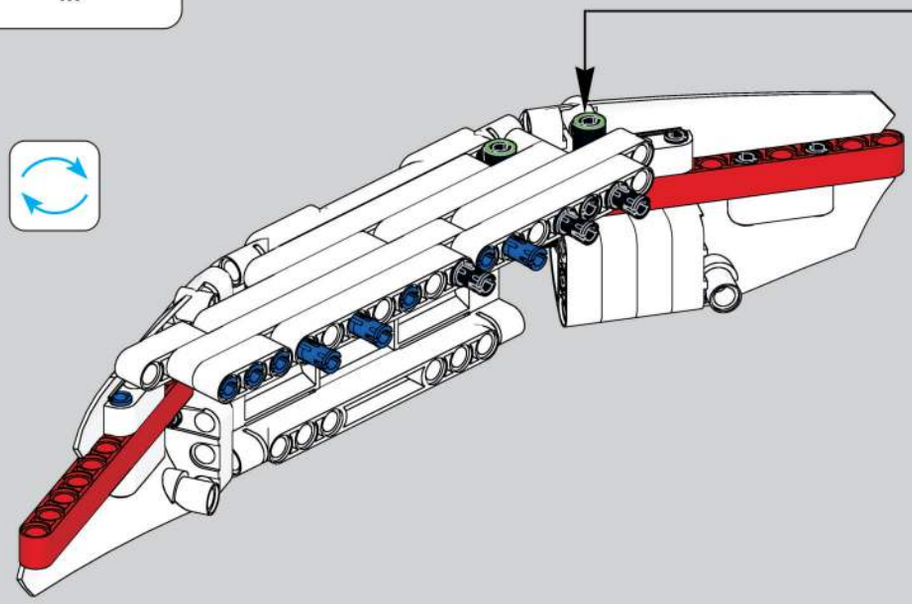

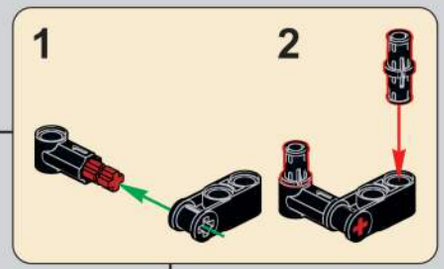

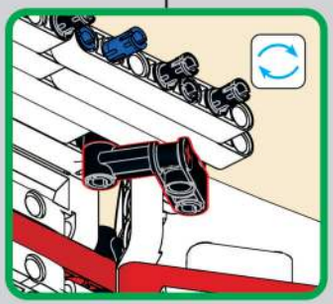

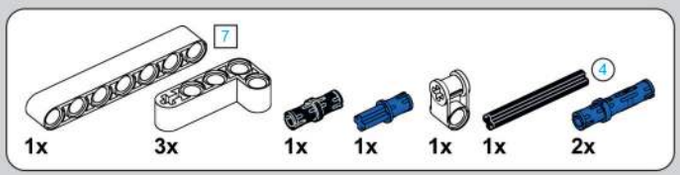

2118

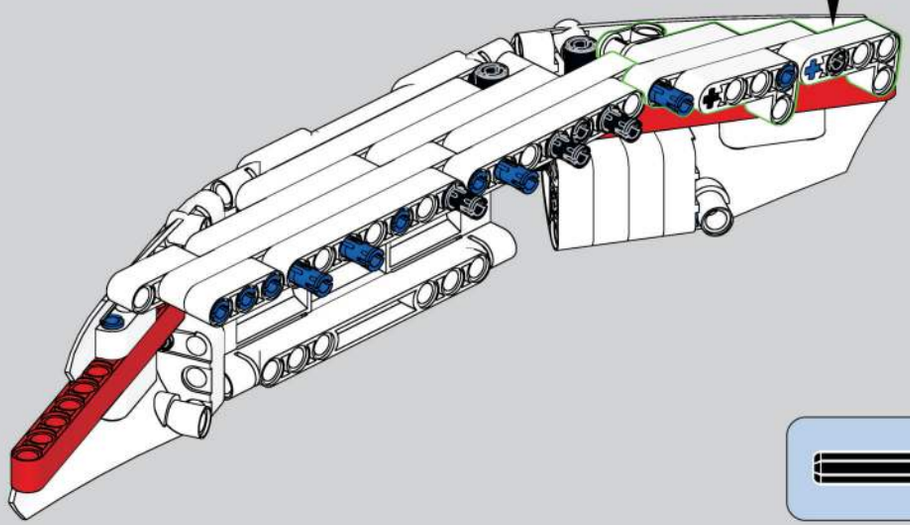

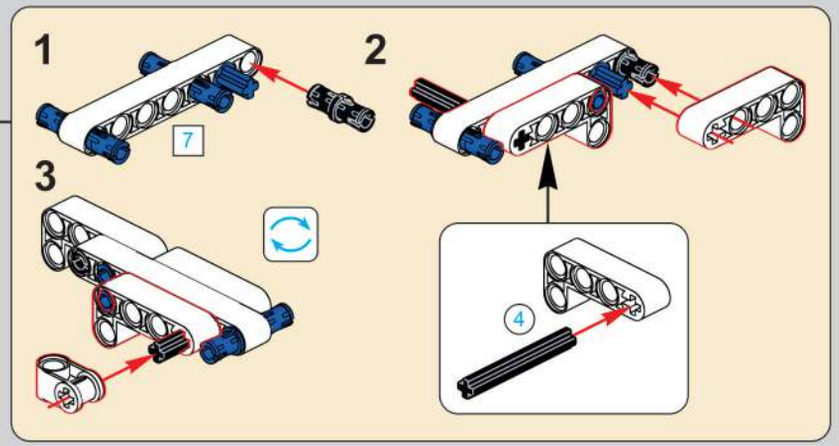

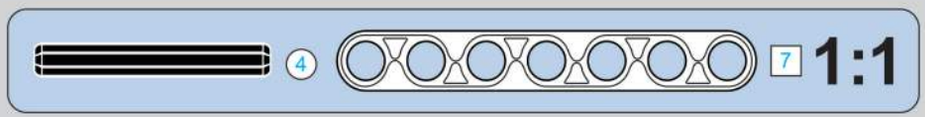

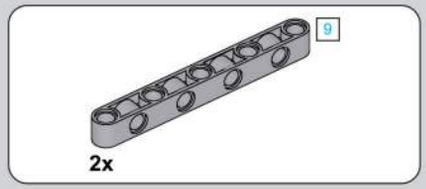

2119

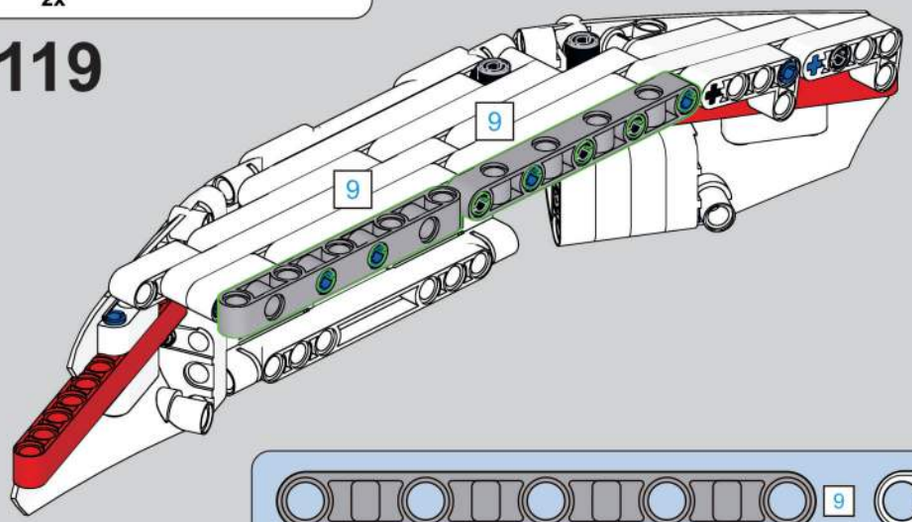

2120

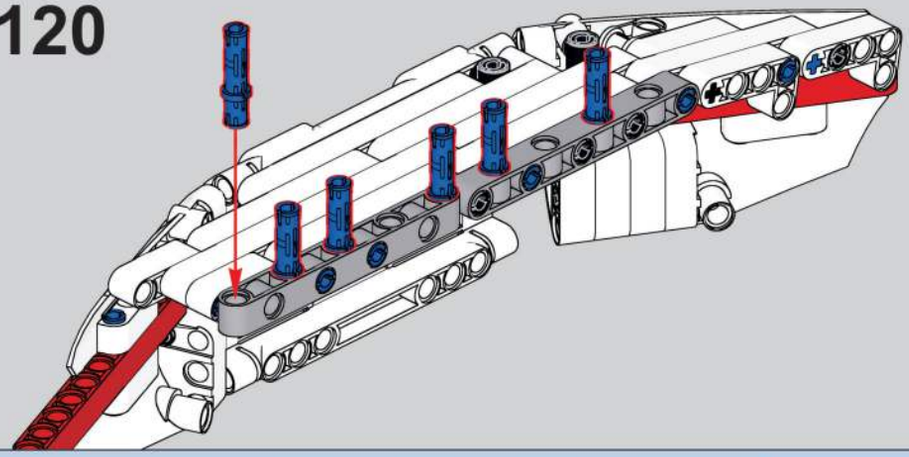

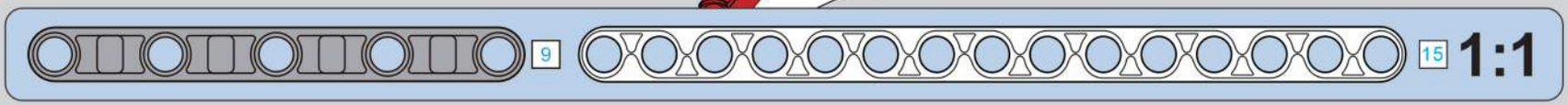

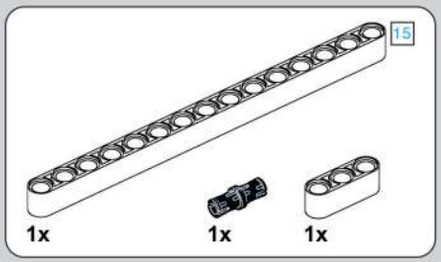

2121

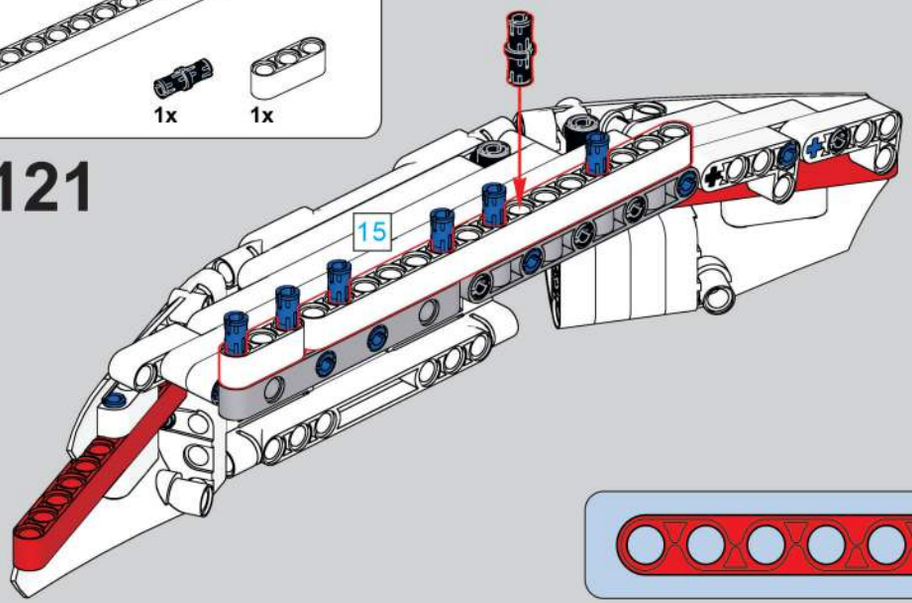

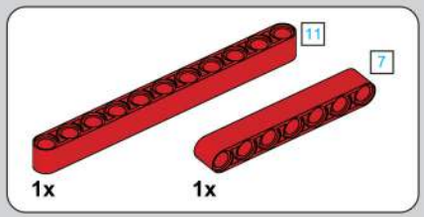

2122

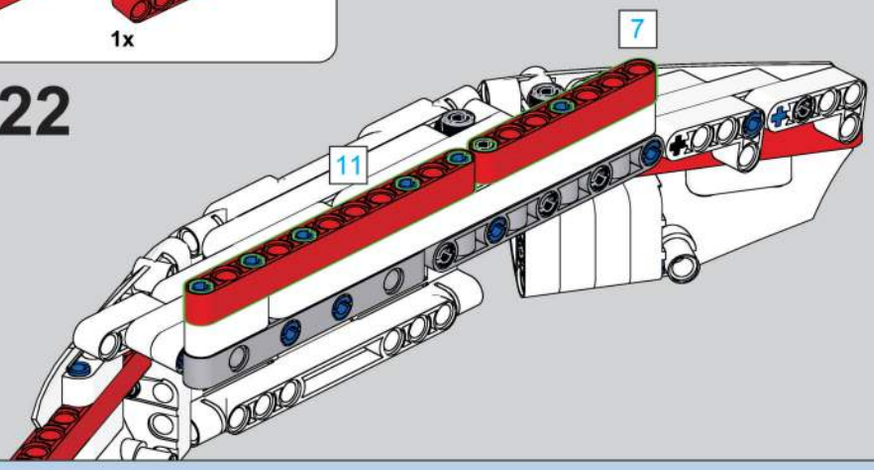

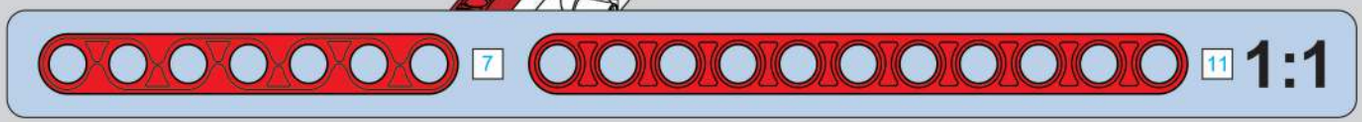

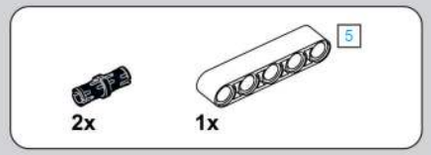

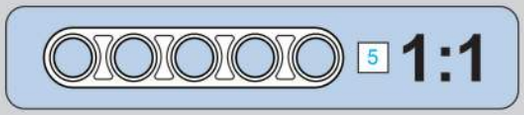

2123

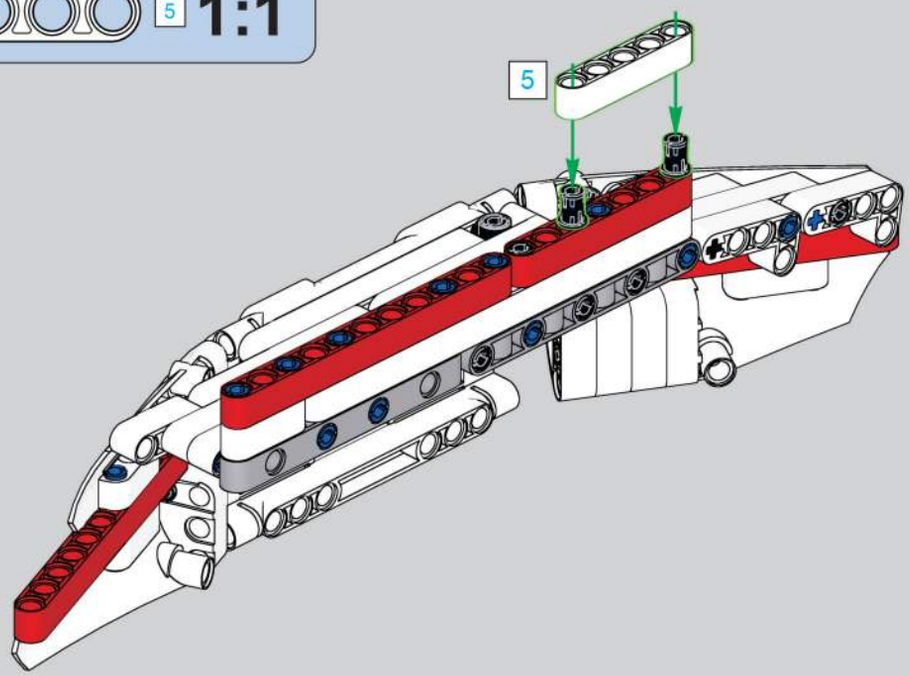

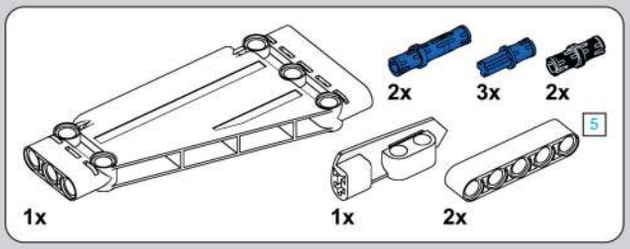

2124

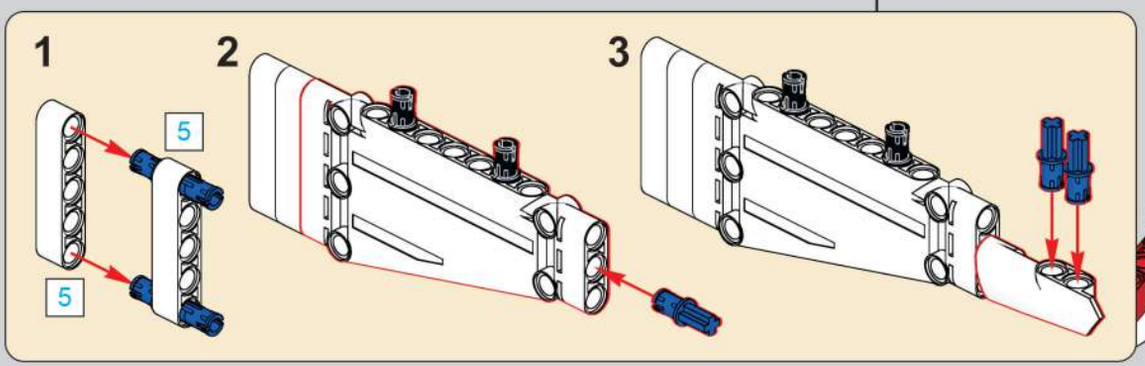

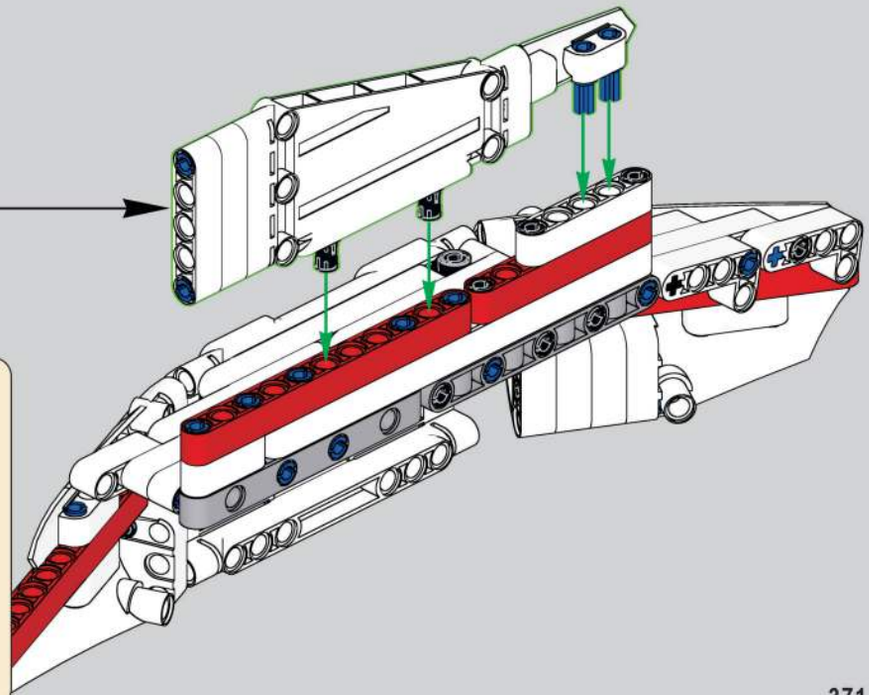

2125

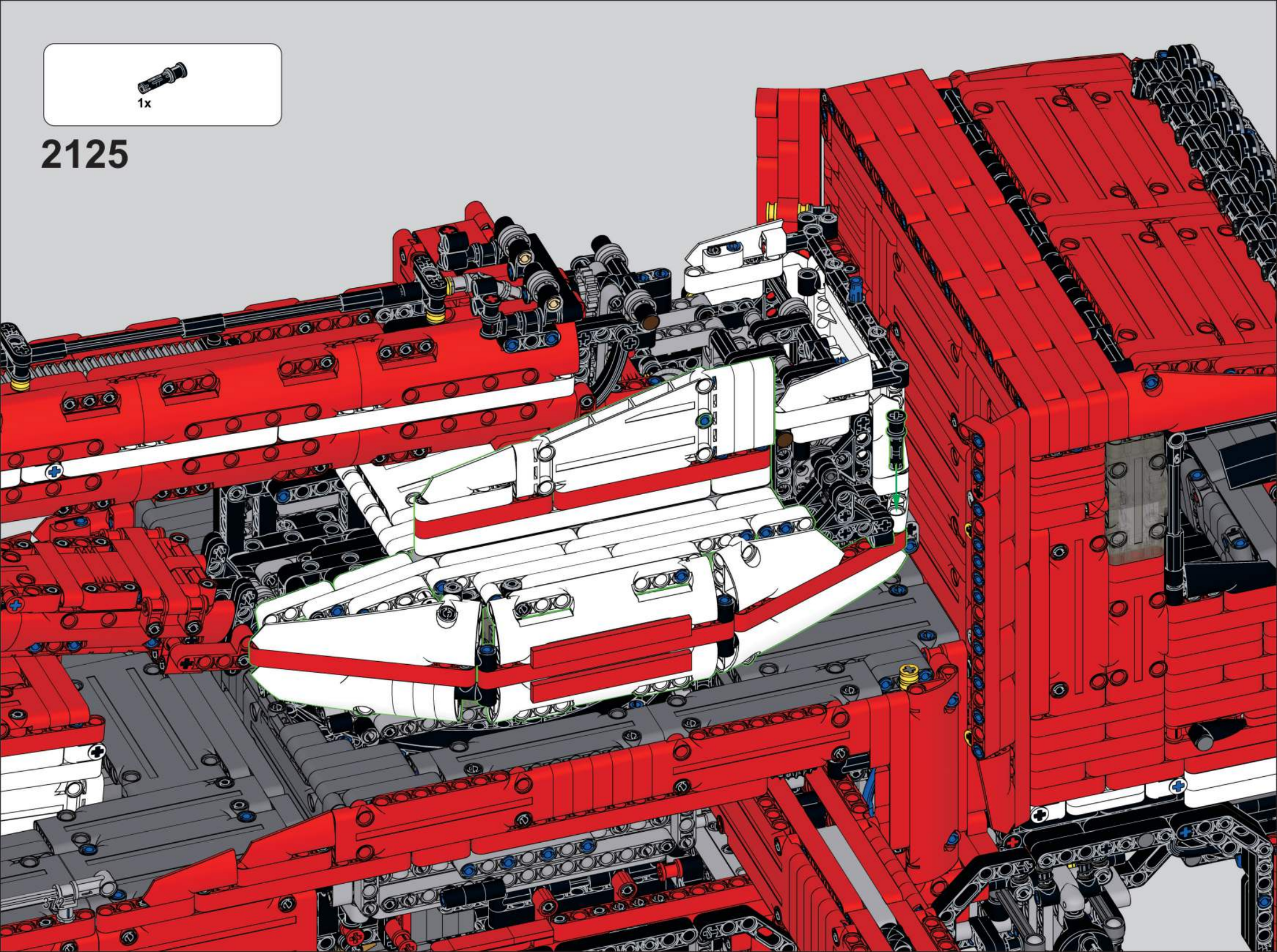

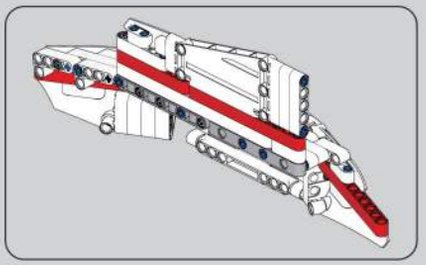

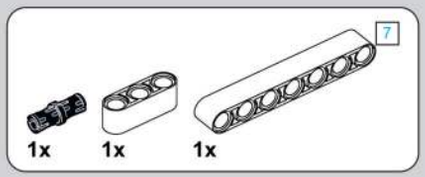

2127

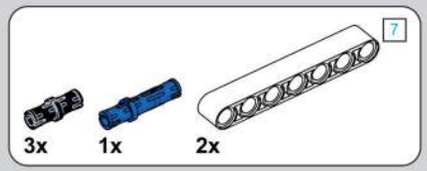

2128

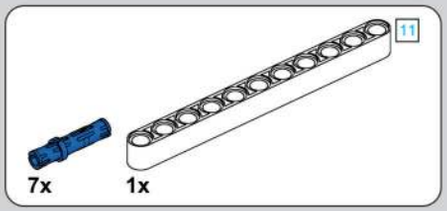

2126

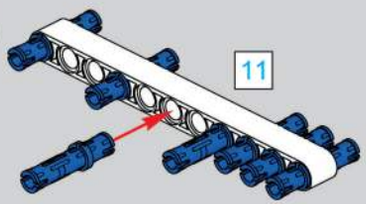

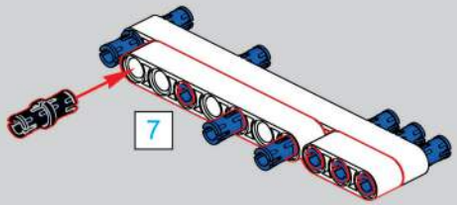

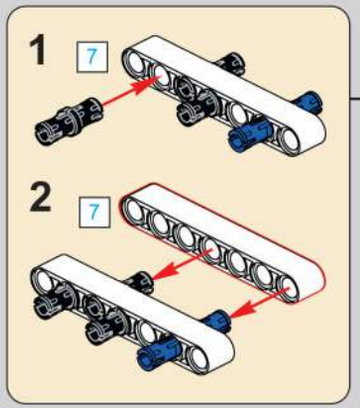

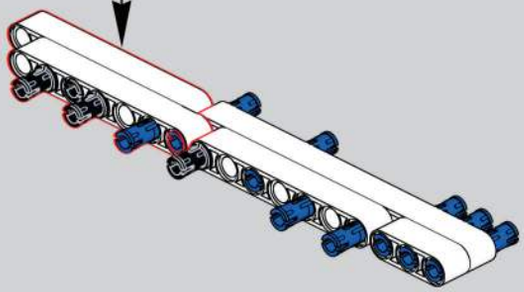

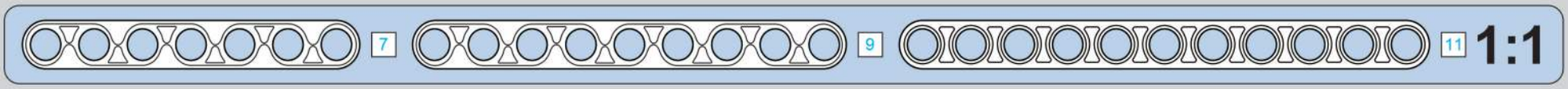

2129

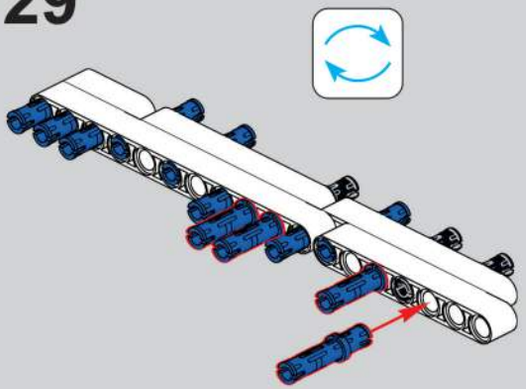

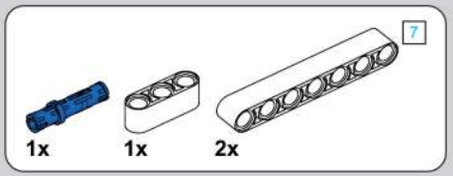

2130

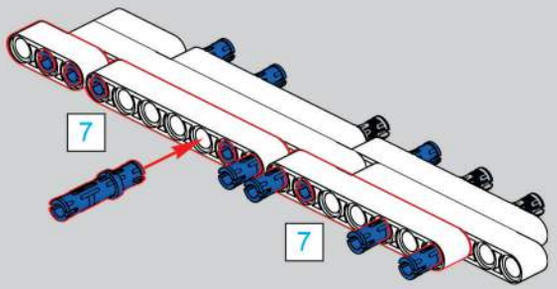

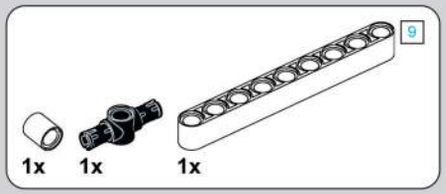

2131

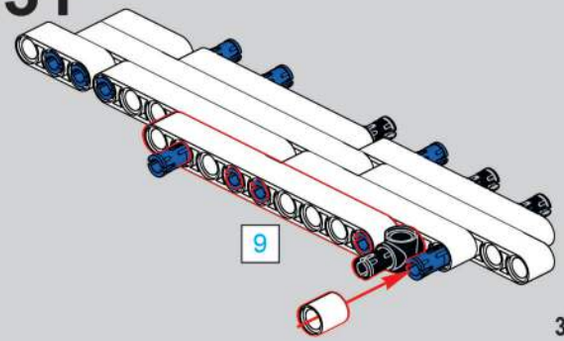

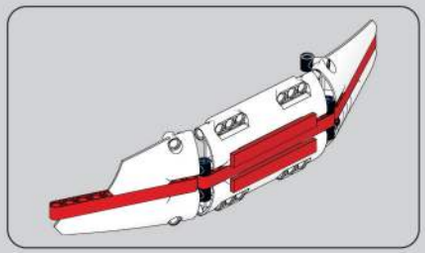

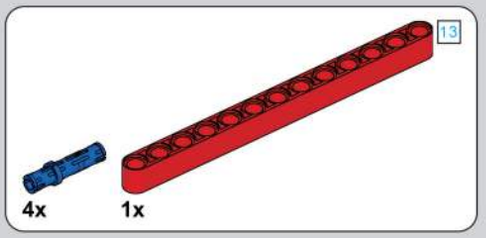

2132

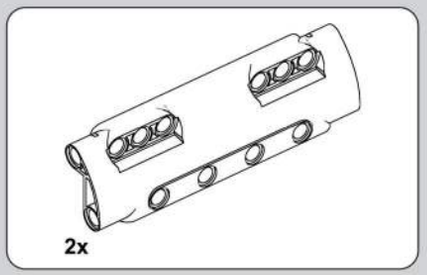

2133

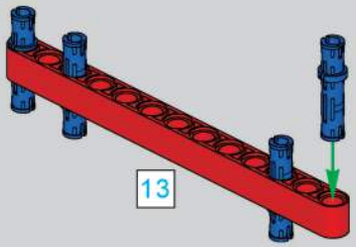

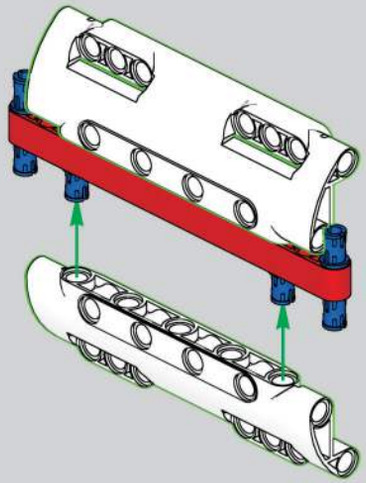

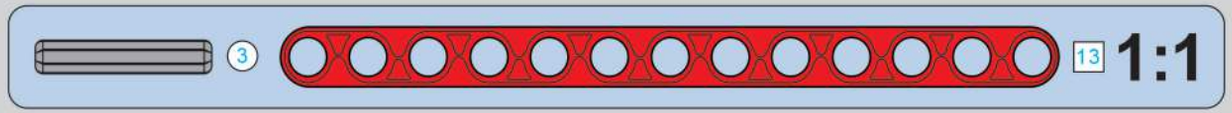

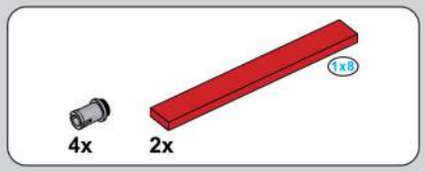

2134

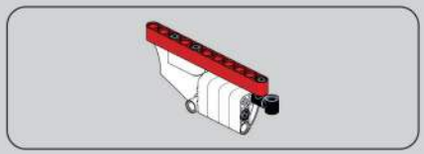

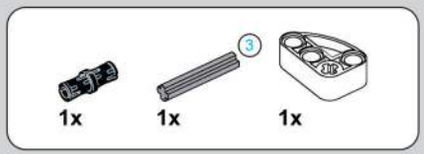

2135

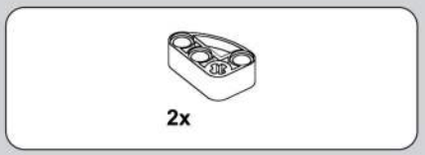

2136

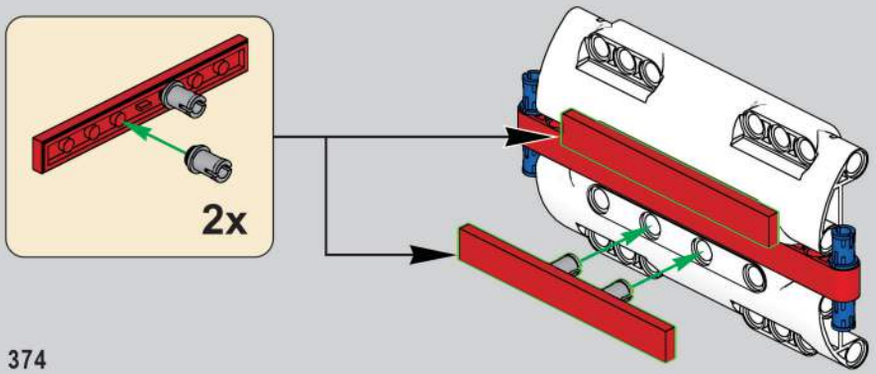

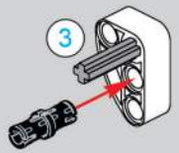

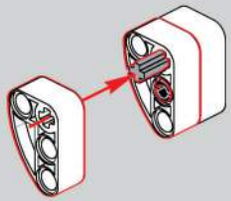

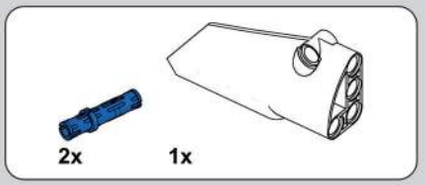

2137

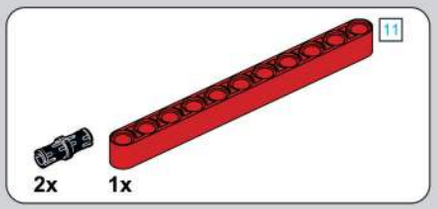

2138

2139

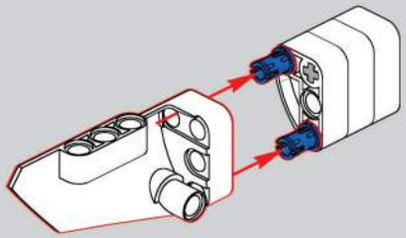

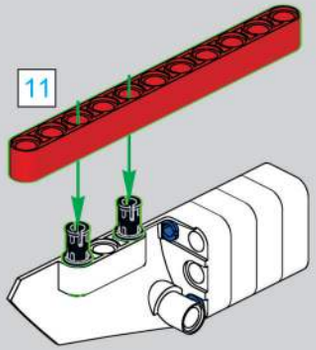

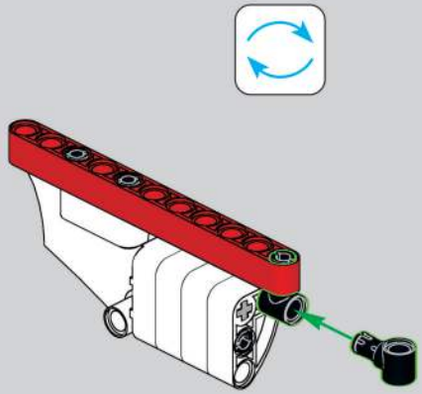

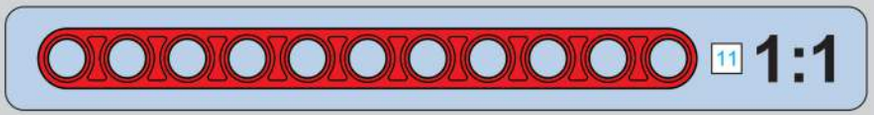

2140

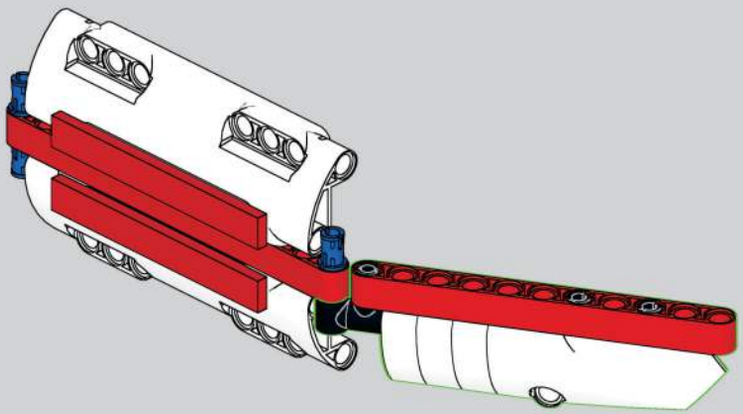

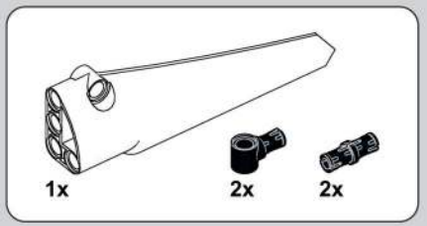

2141

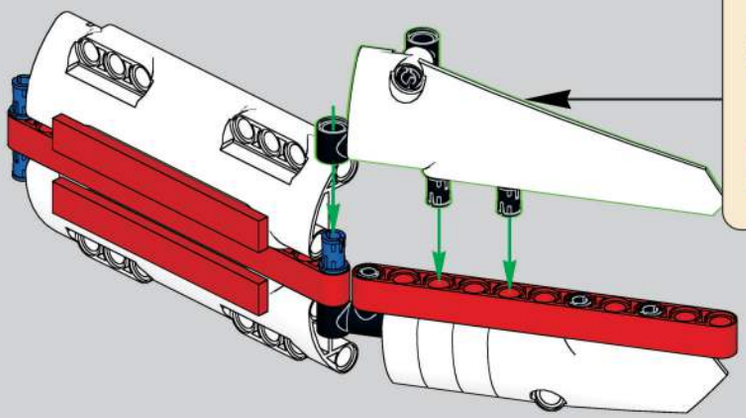

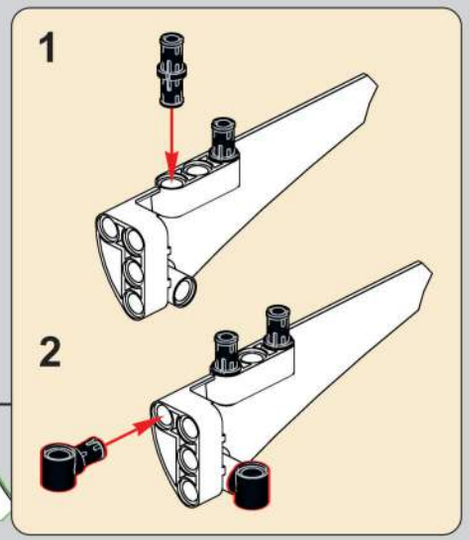

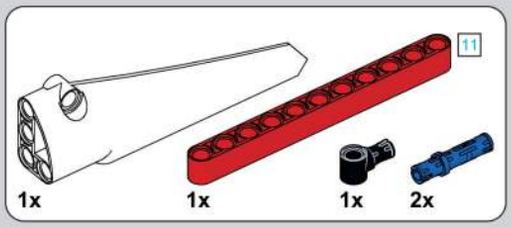

2142

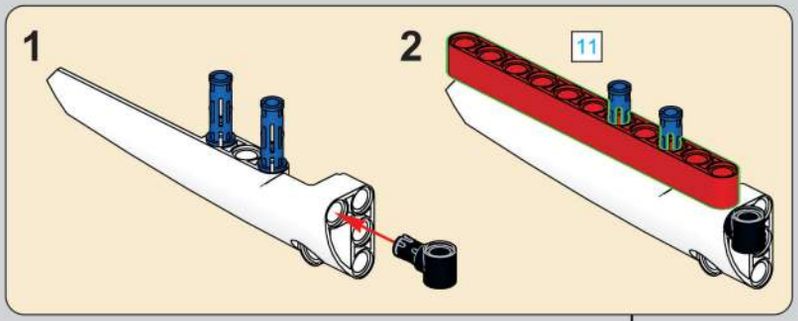

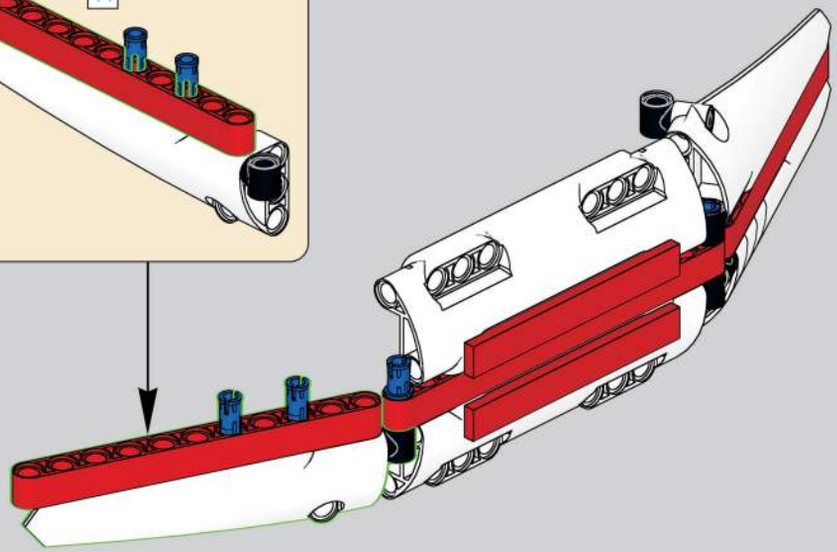

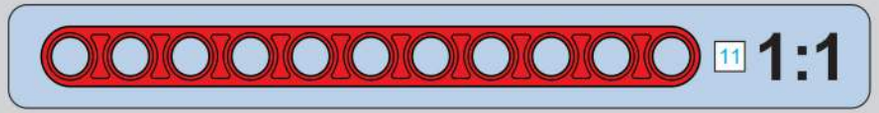

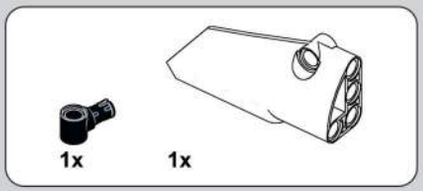

2143

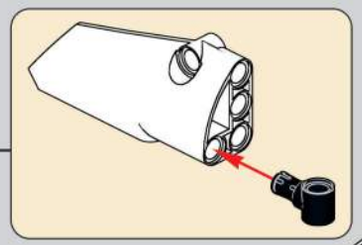

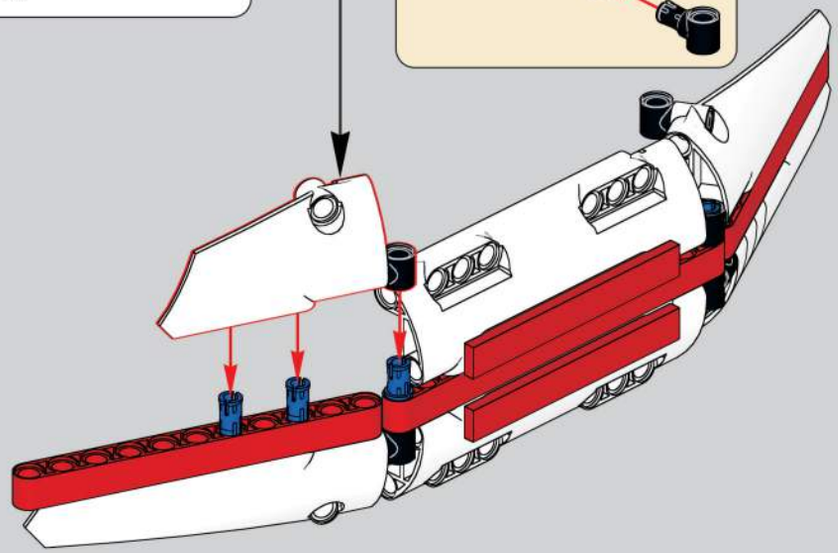

2144

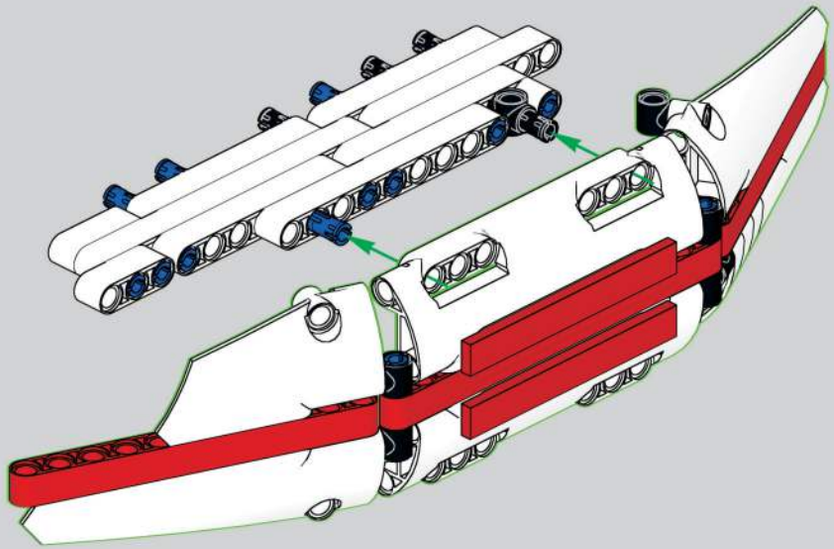

2145

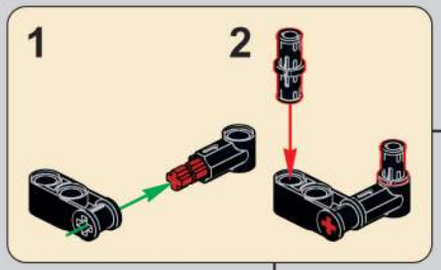

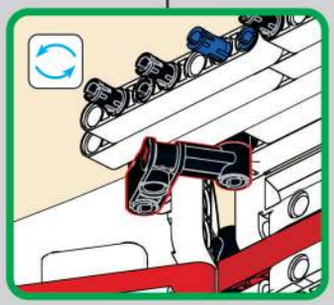

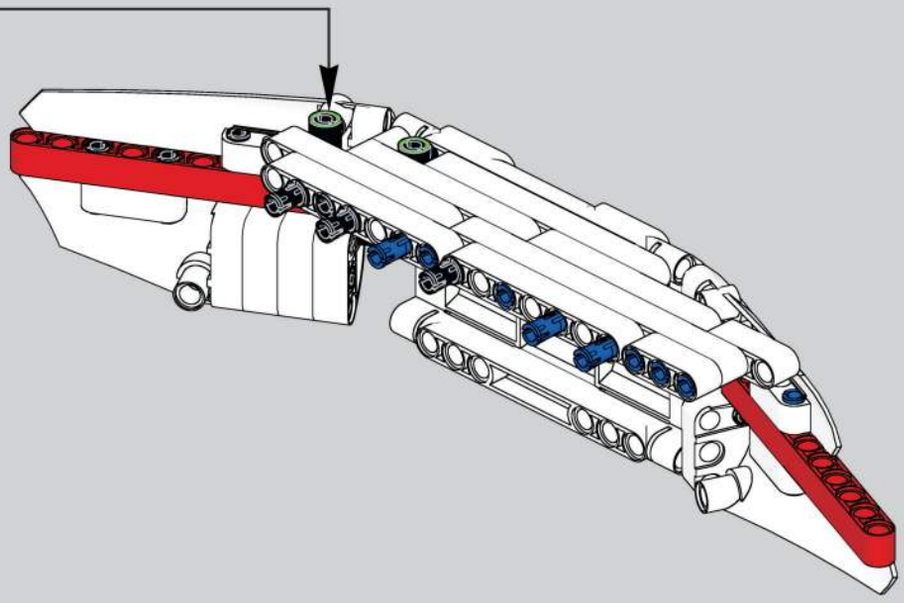

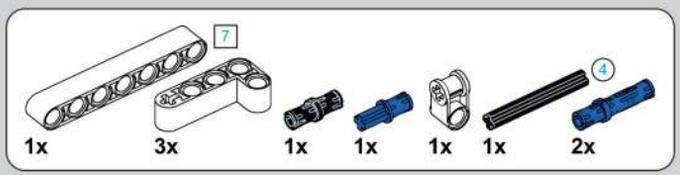

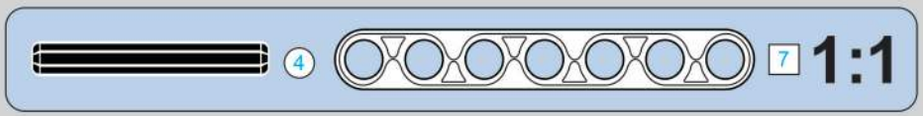

2146

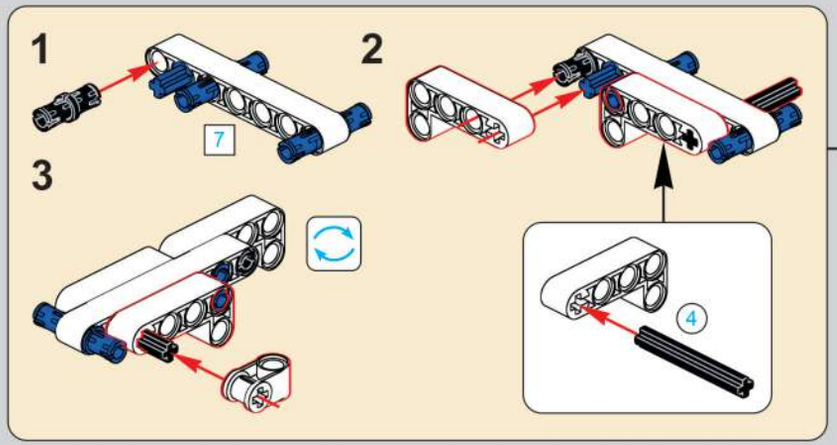

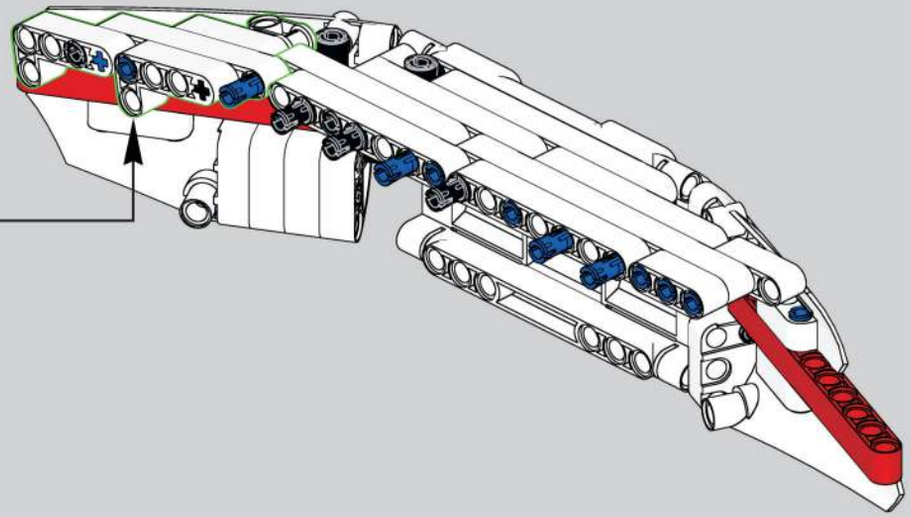

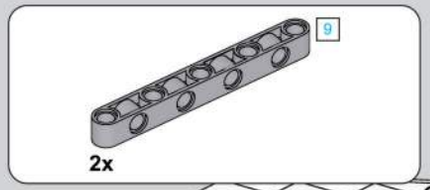

2147

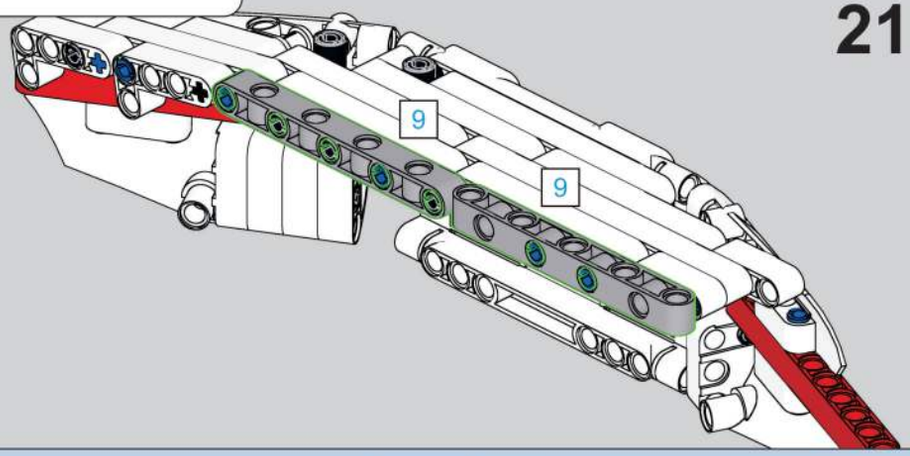

2148

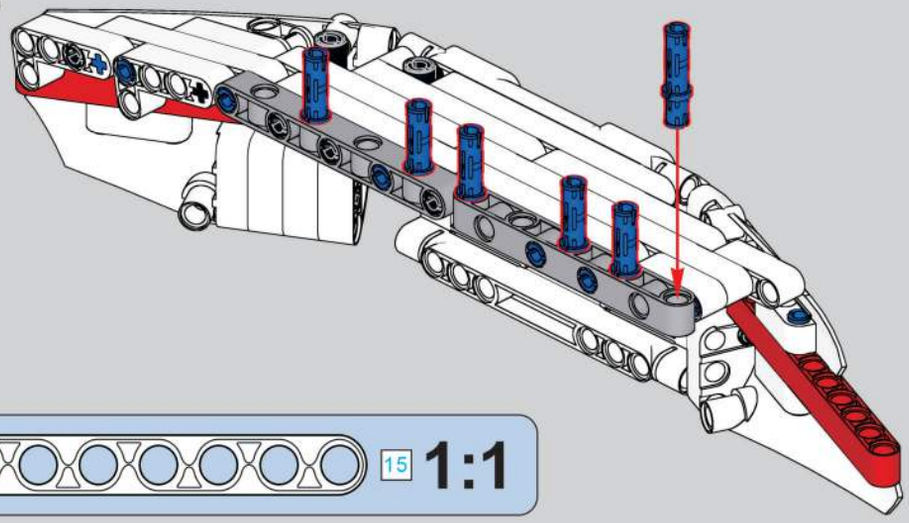

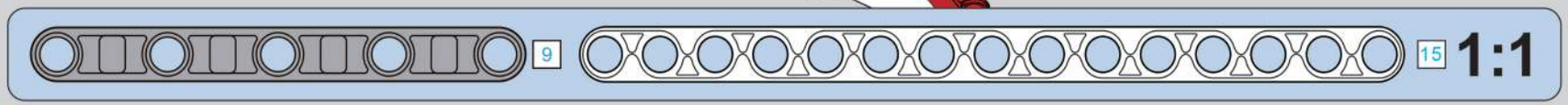

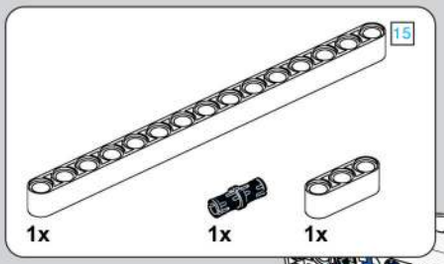

2149

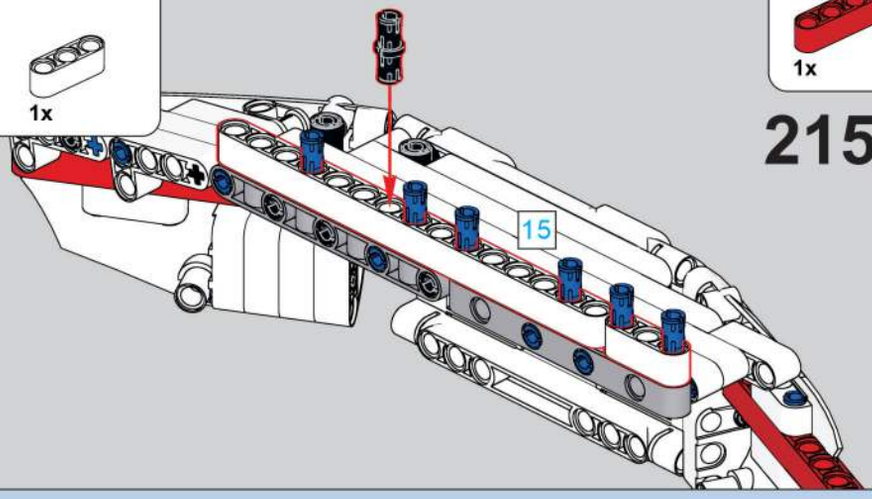

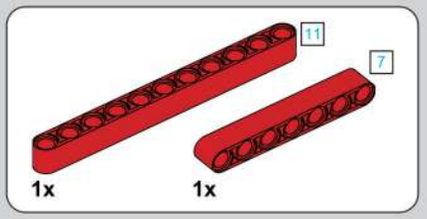

2150

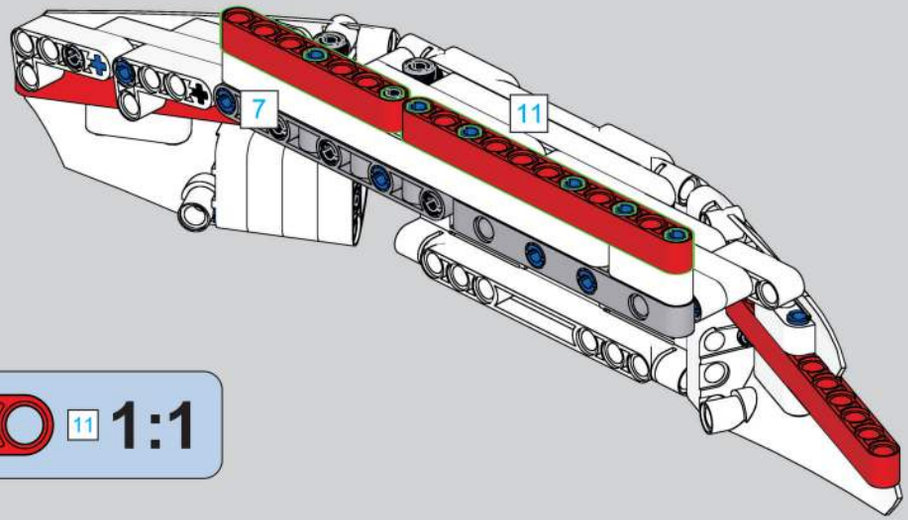

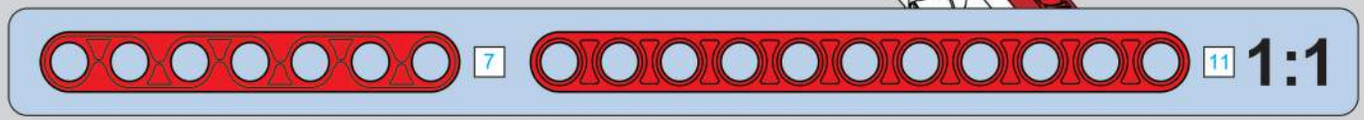

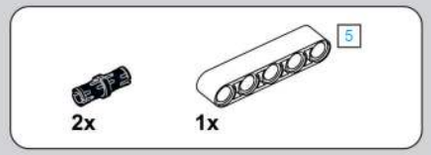

2151

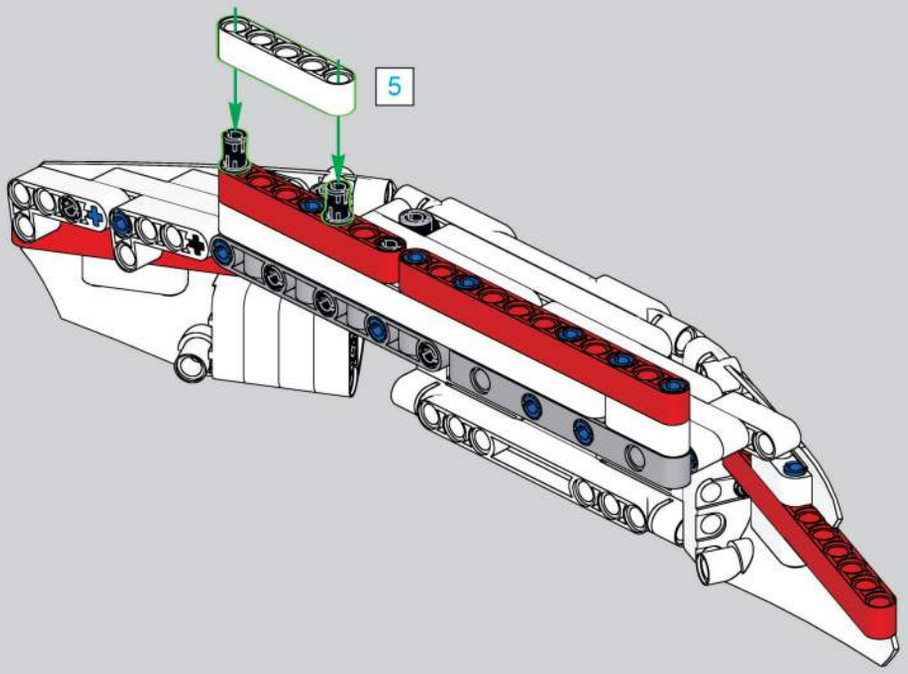

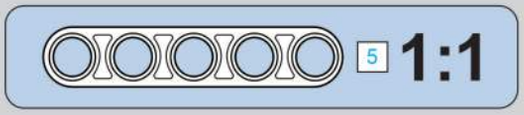

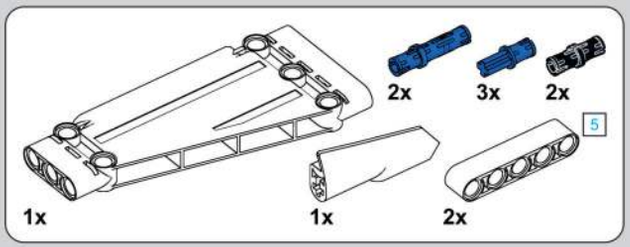

2152

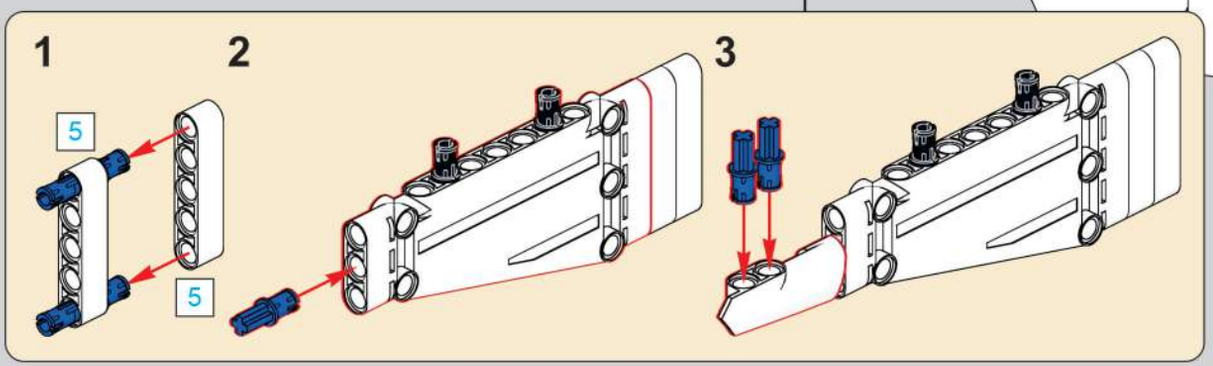

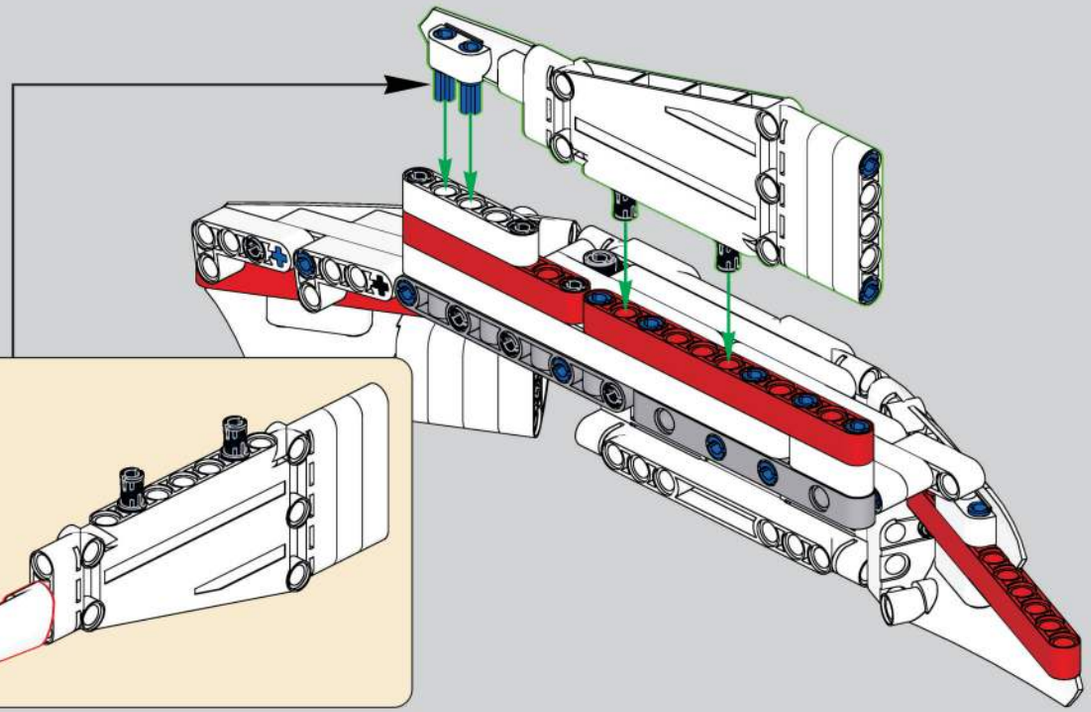

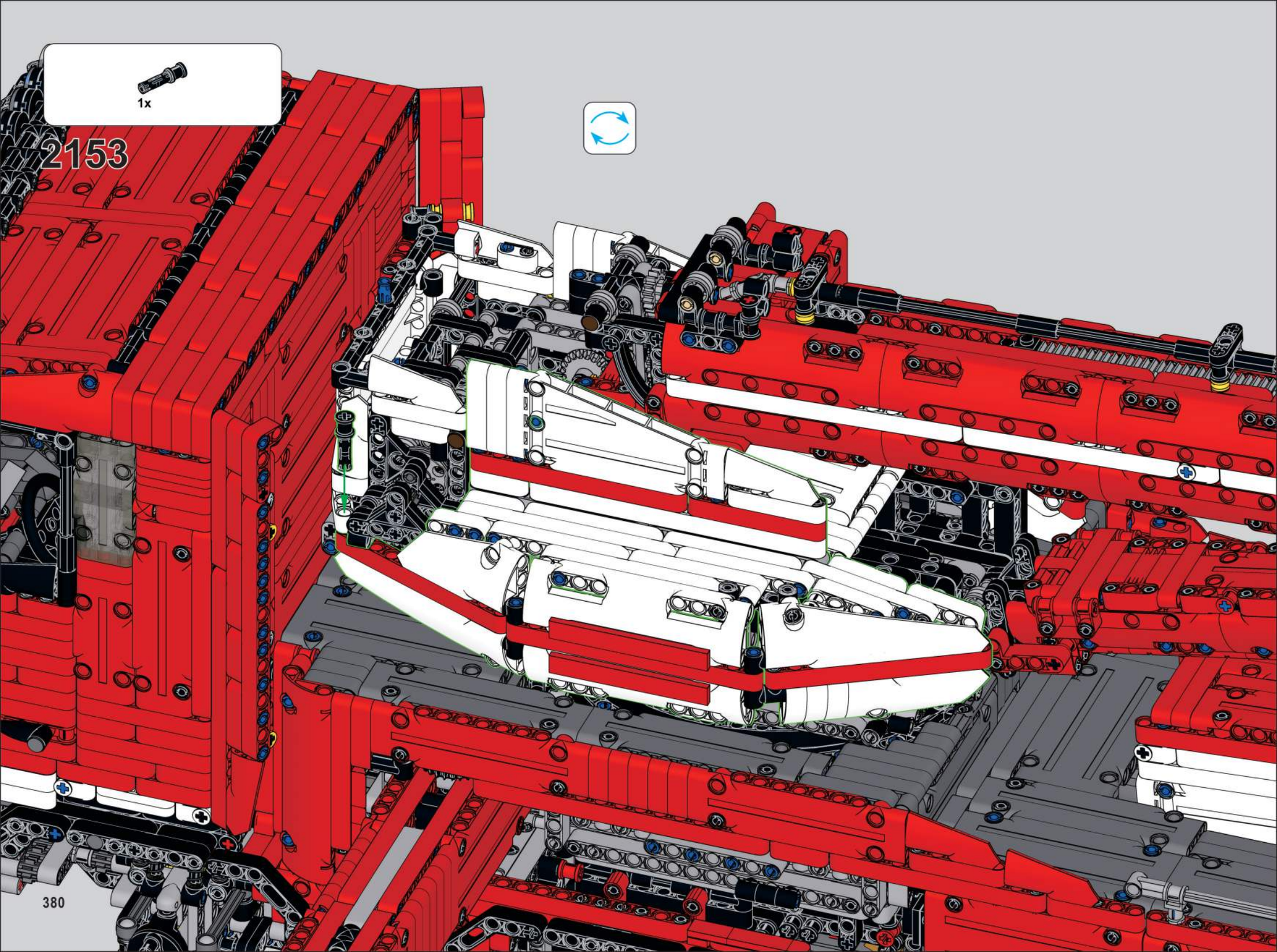
1x
2153

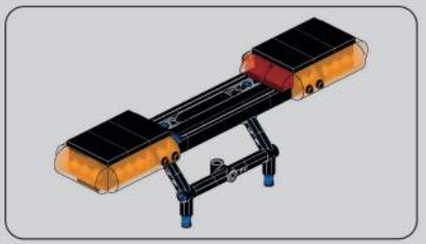

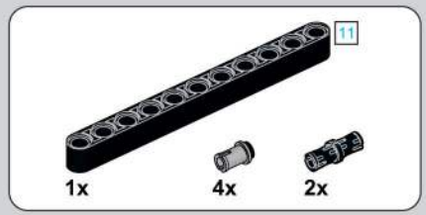

2154

2155

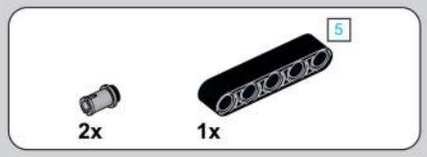

2156

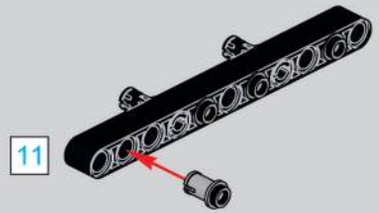

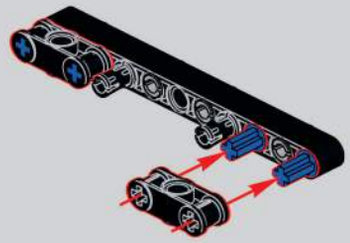

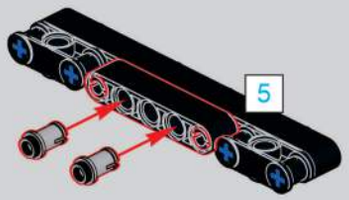

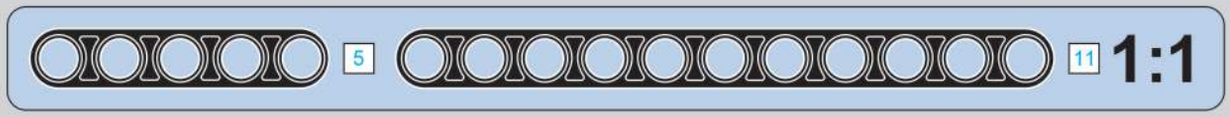

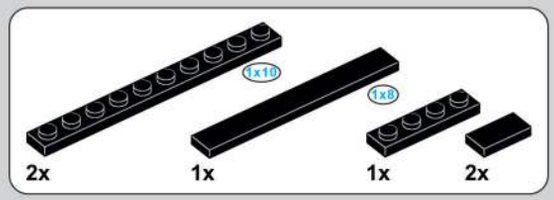

2157

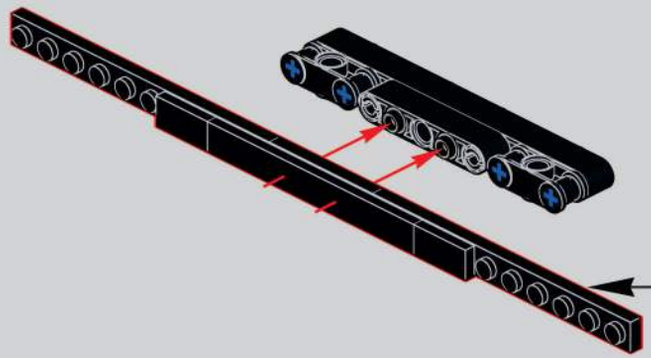

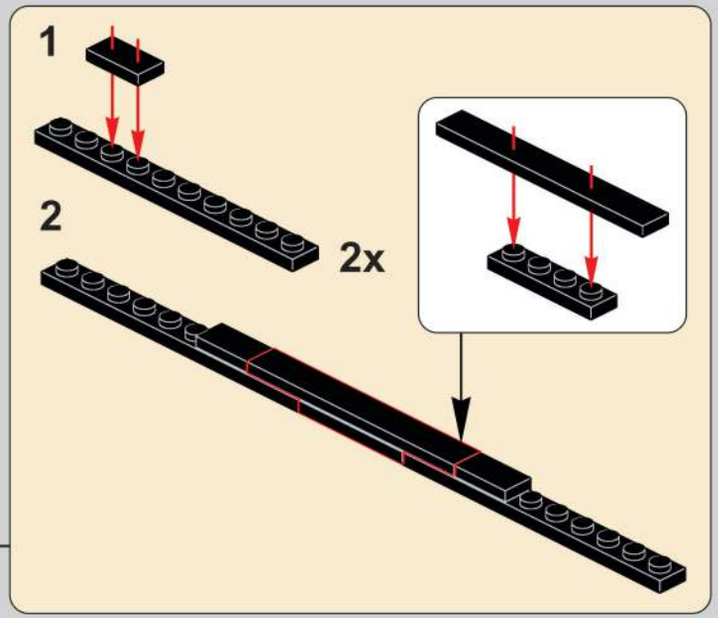

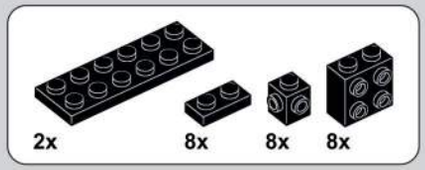

2158

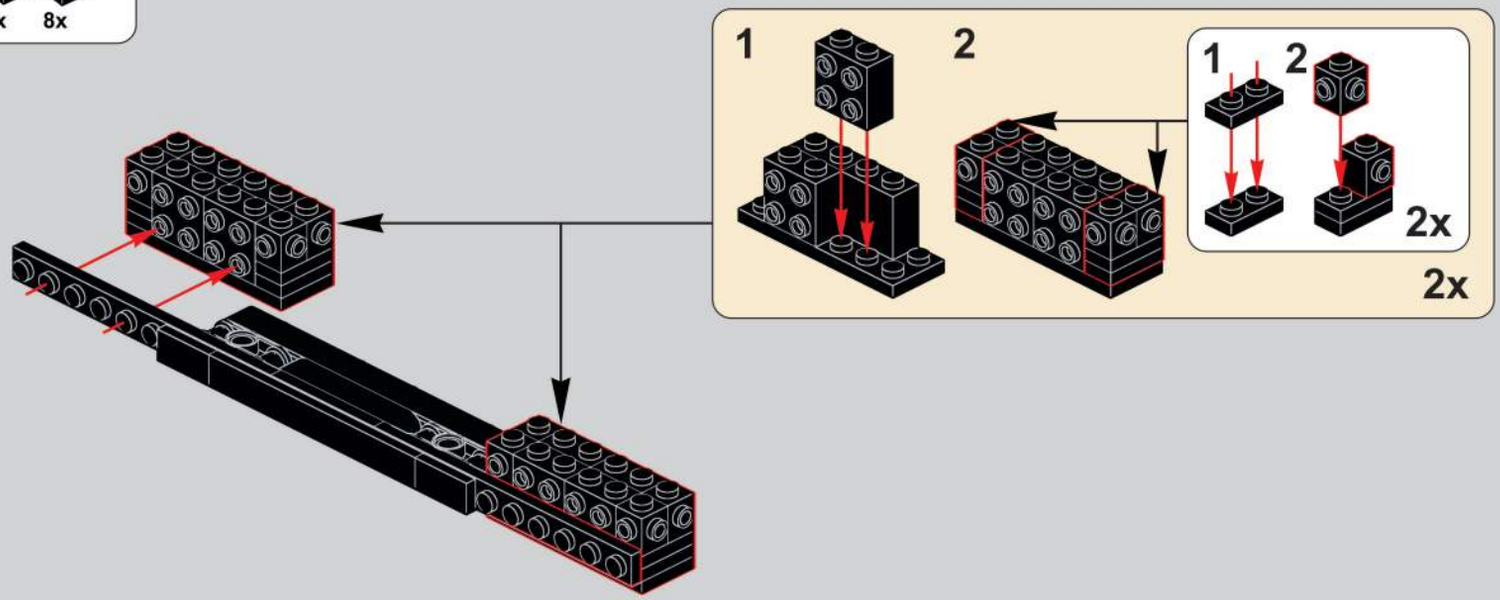

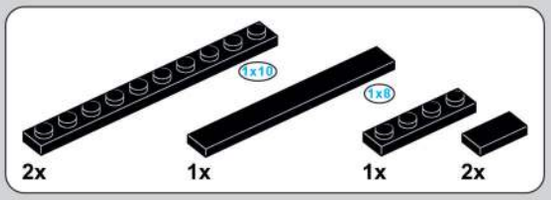

2159

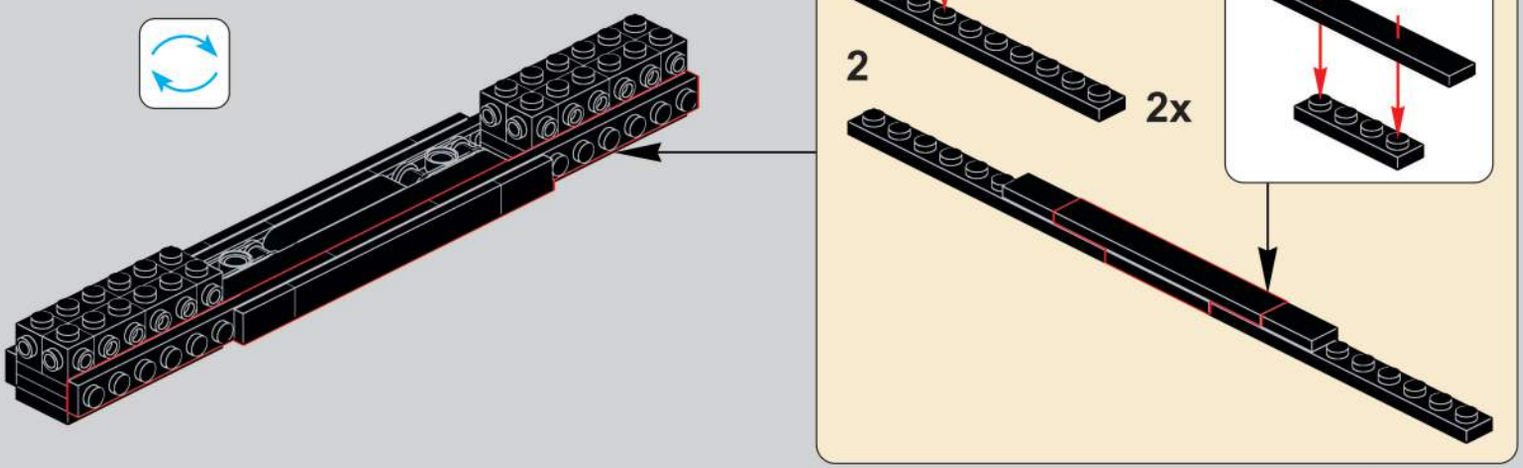

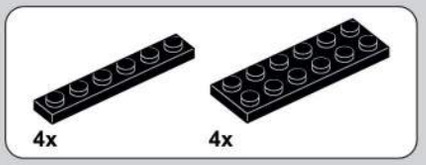

2160

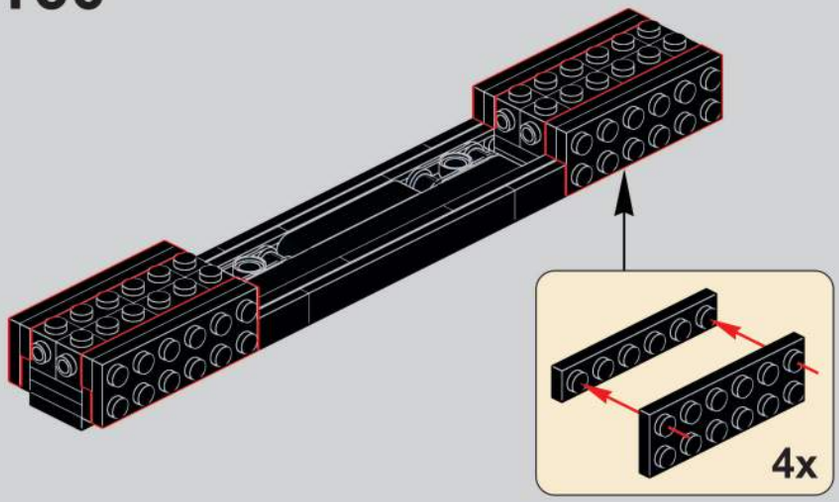

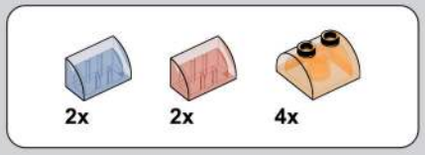

2161

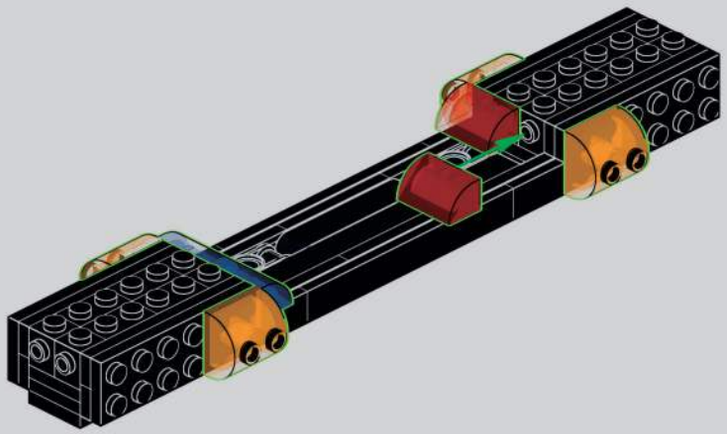

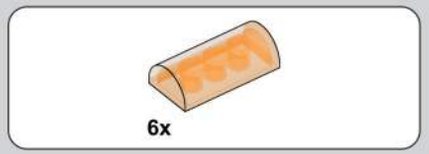

2162

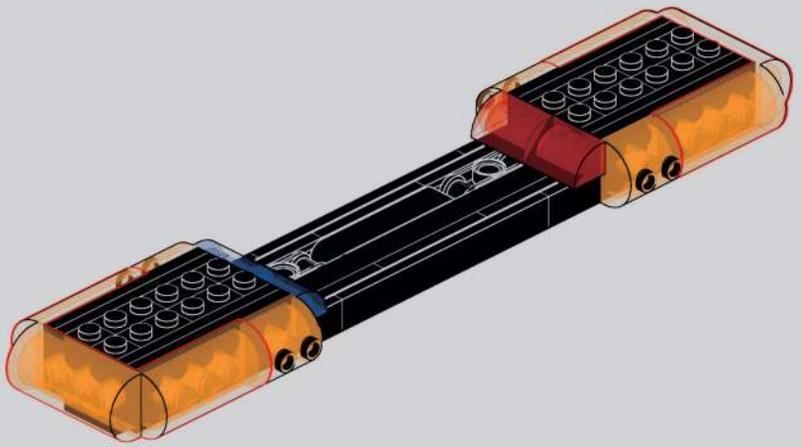

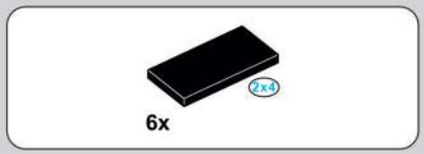

2163

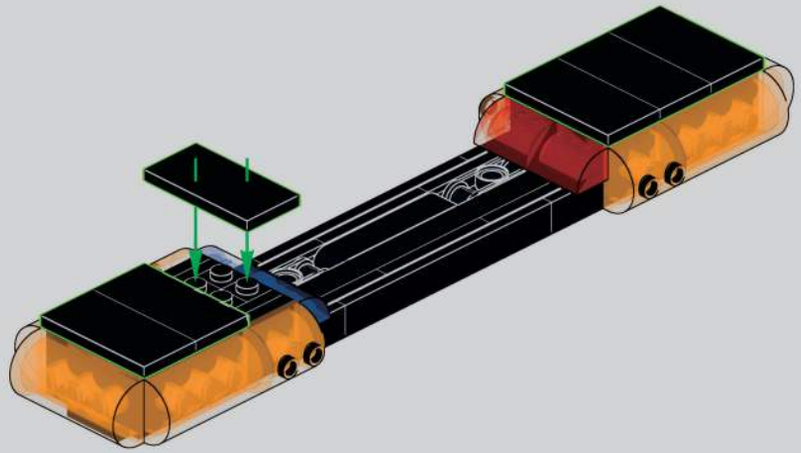

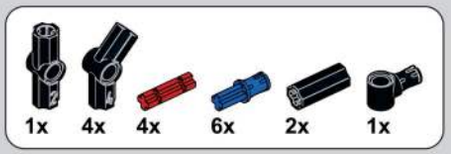

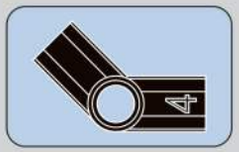

2164

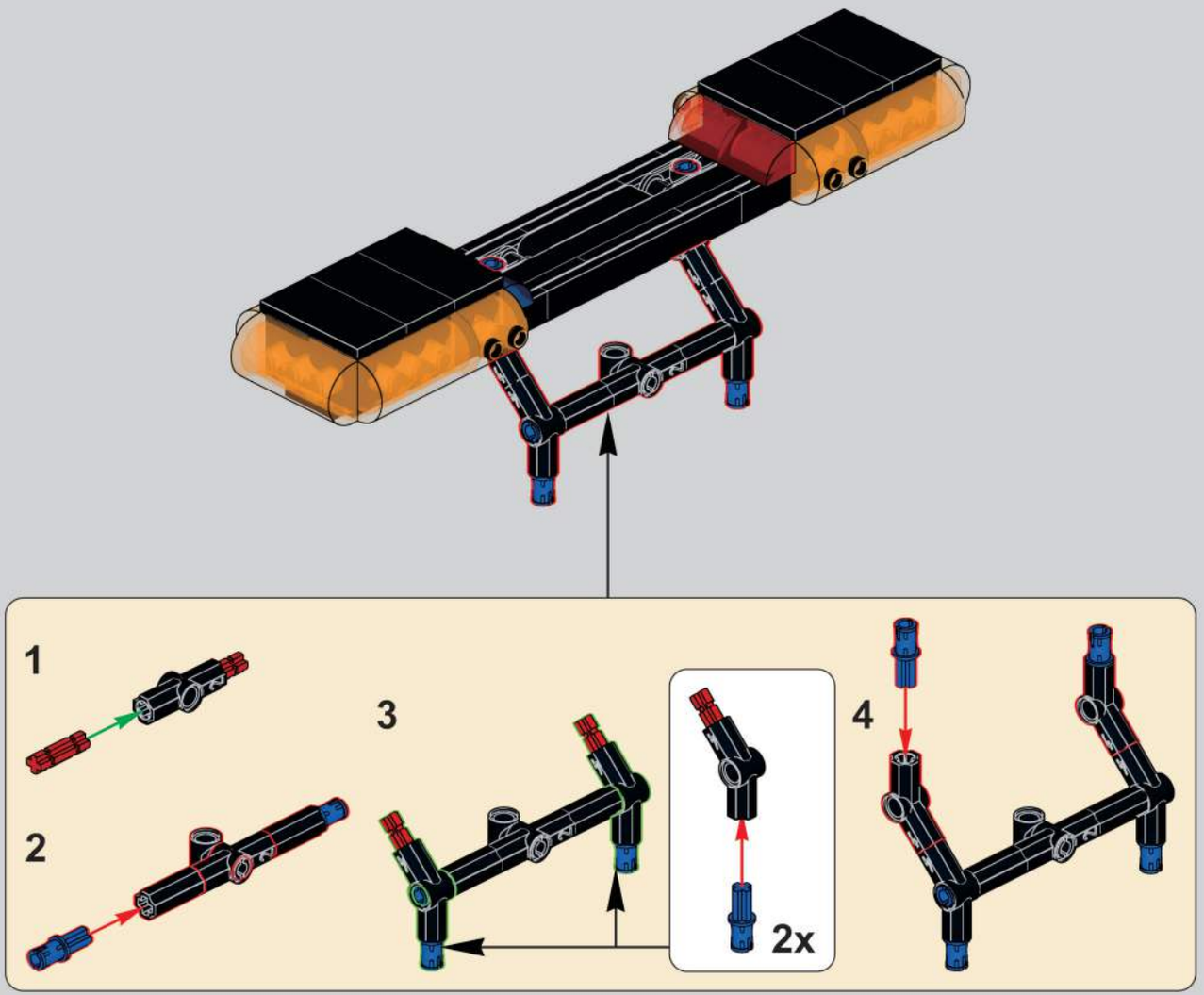

2165

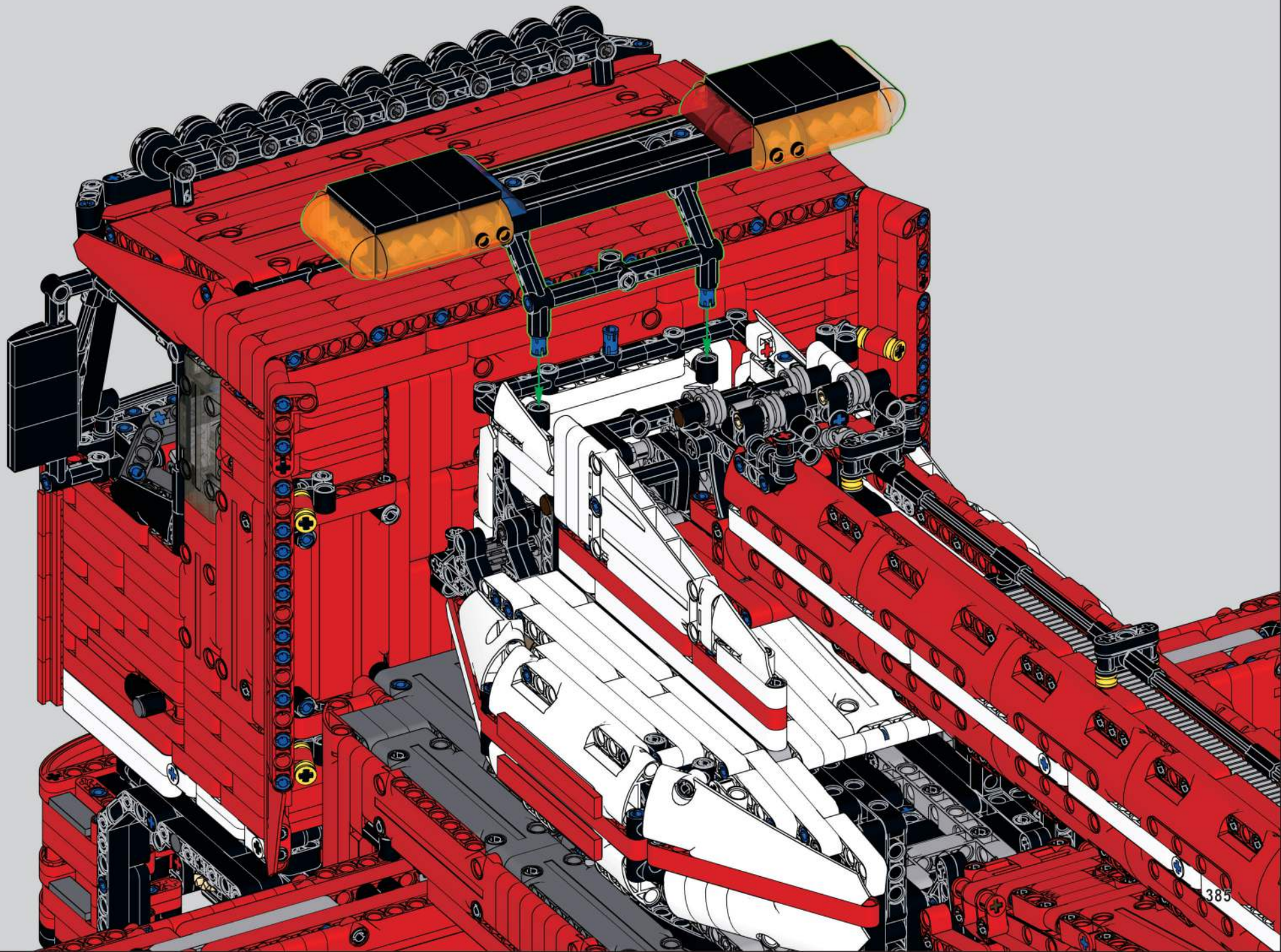

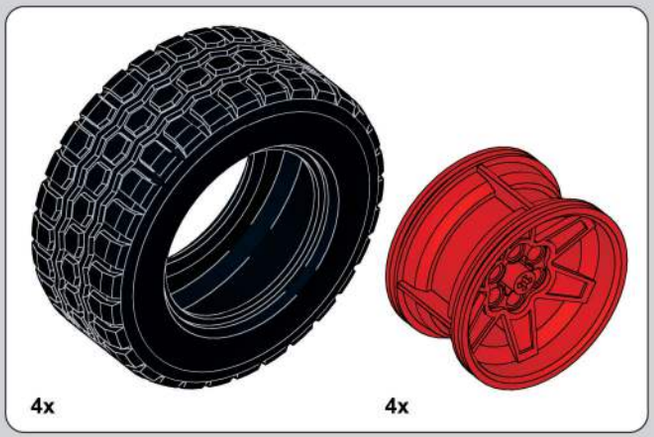

2166

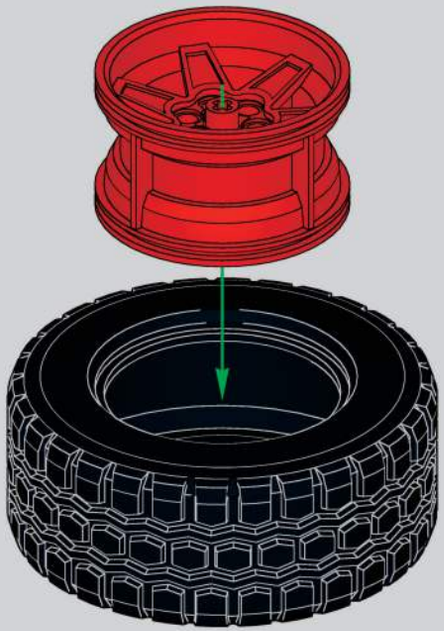

4x

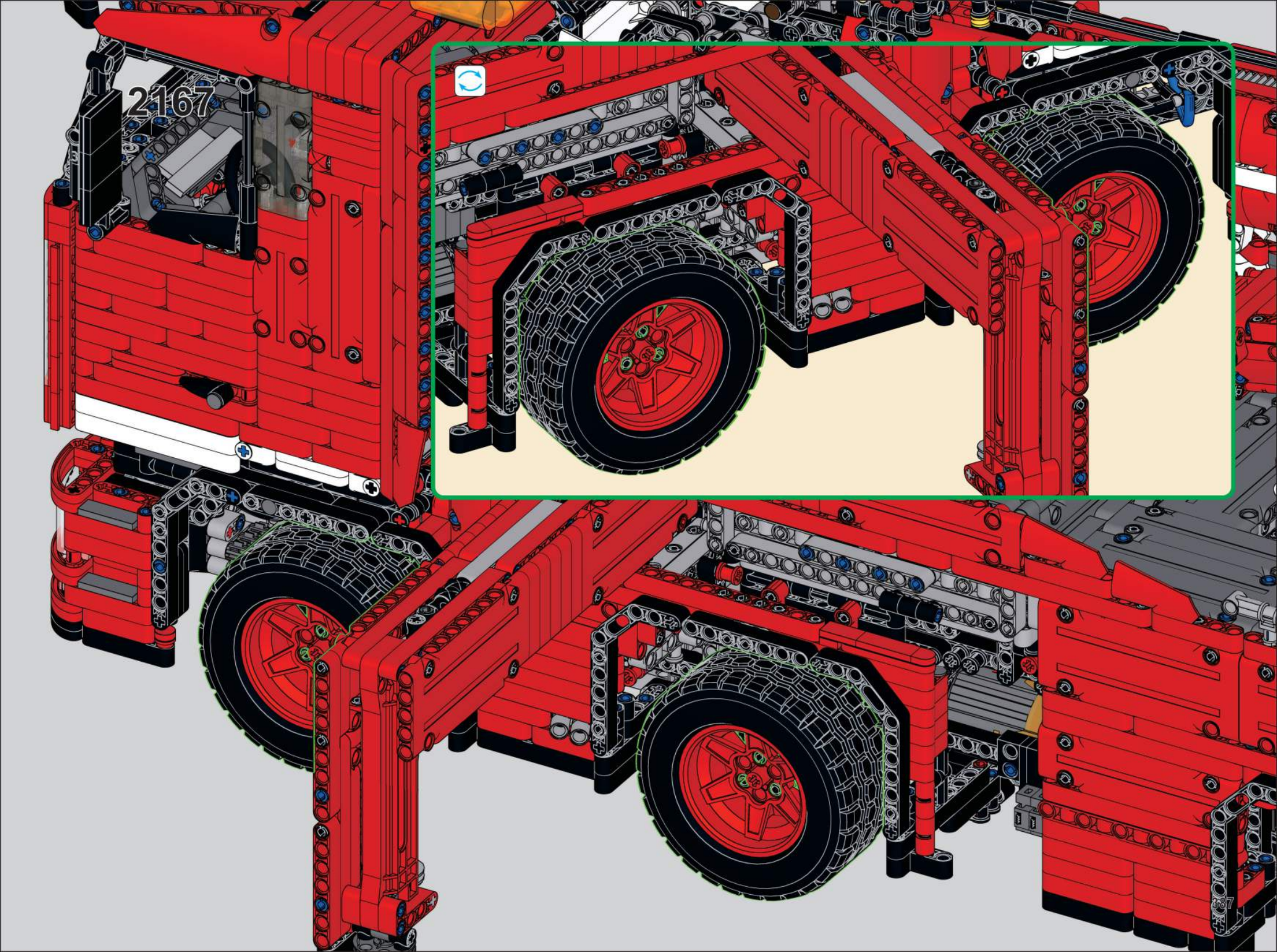
2167

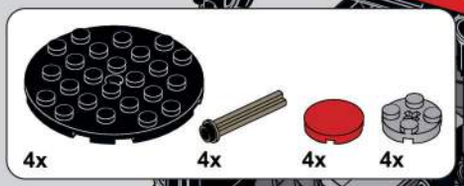

2168

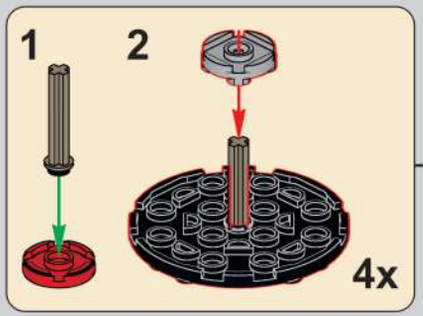

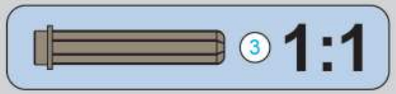

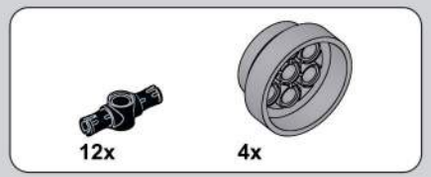

2169

2170

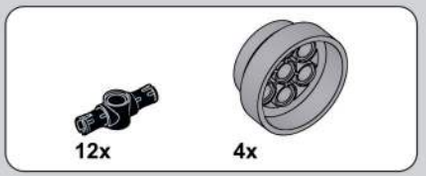

2171

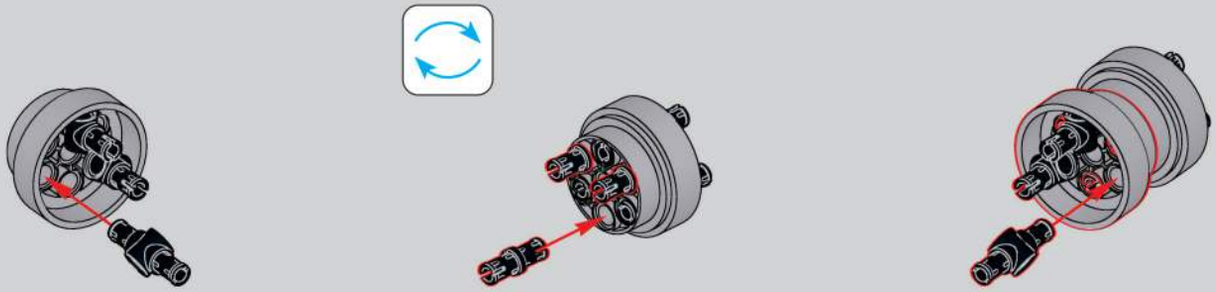

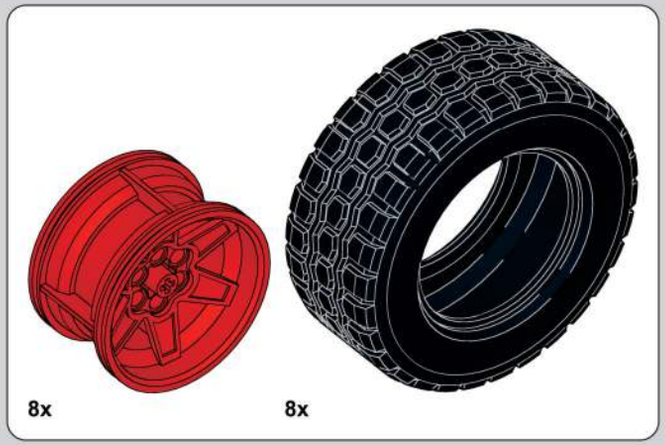

2172

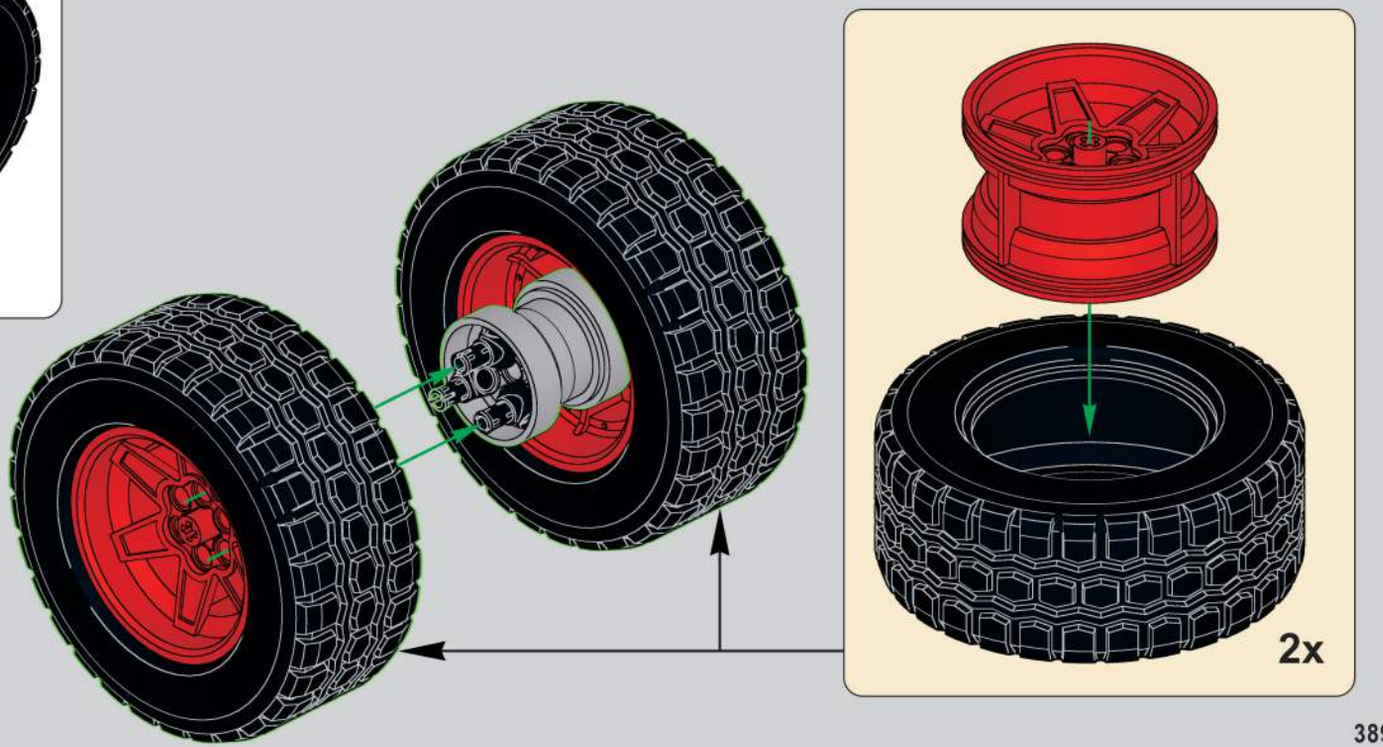

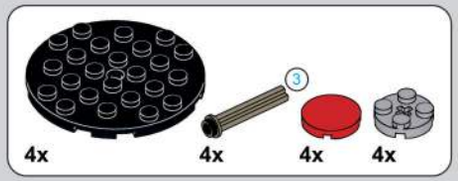

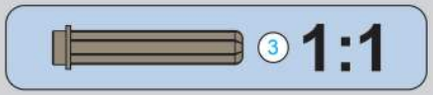

2173

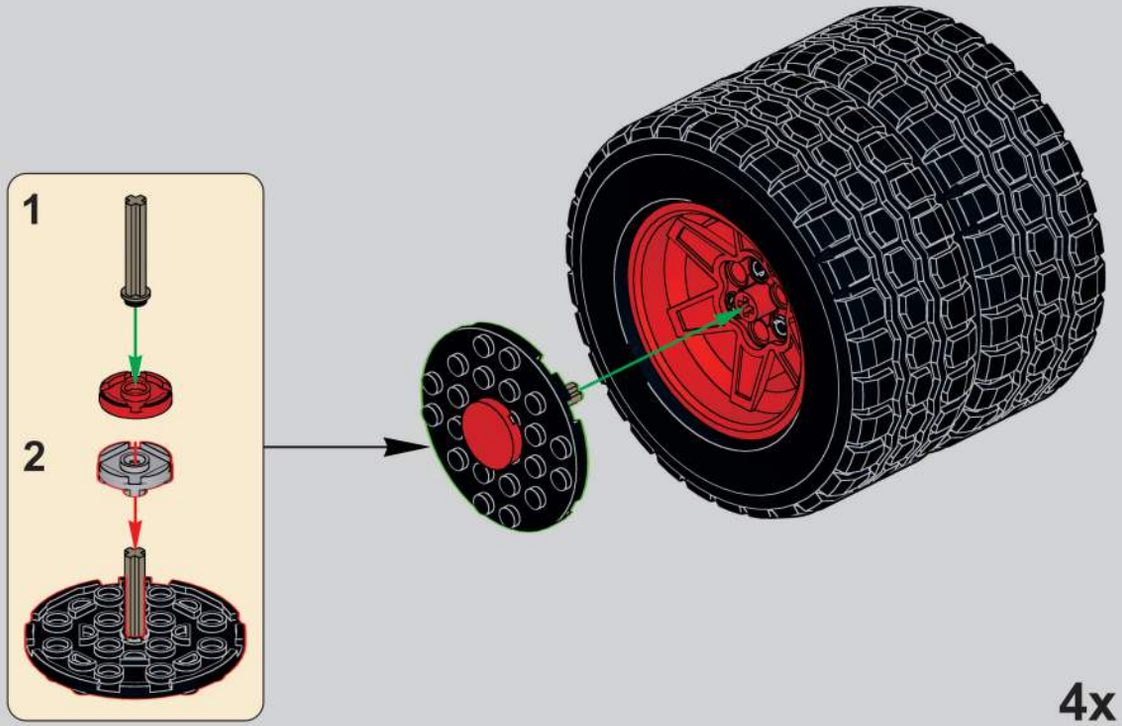

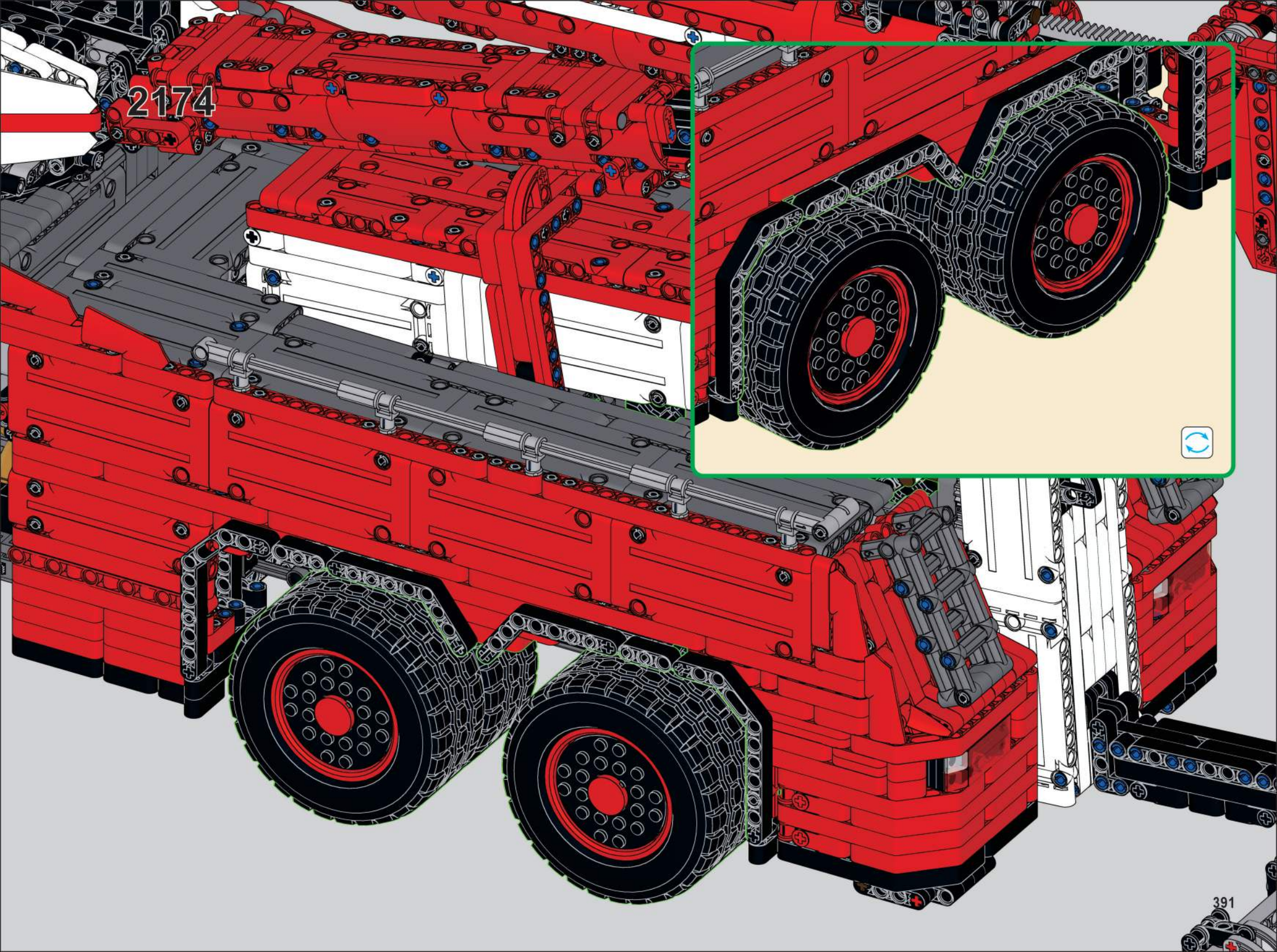
2174

2175

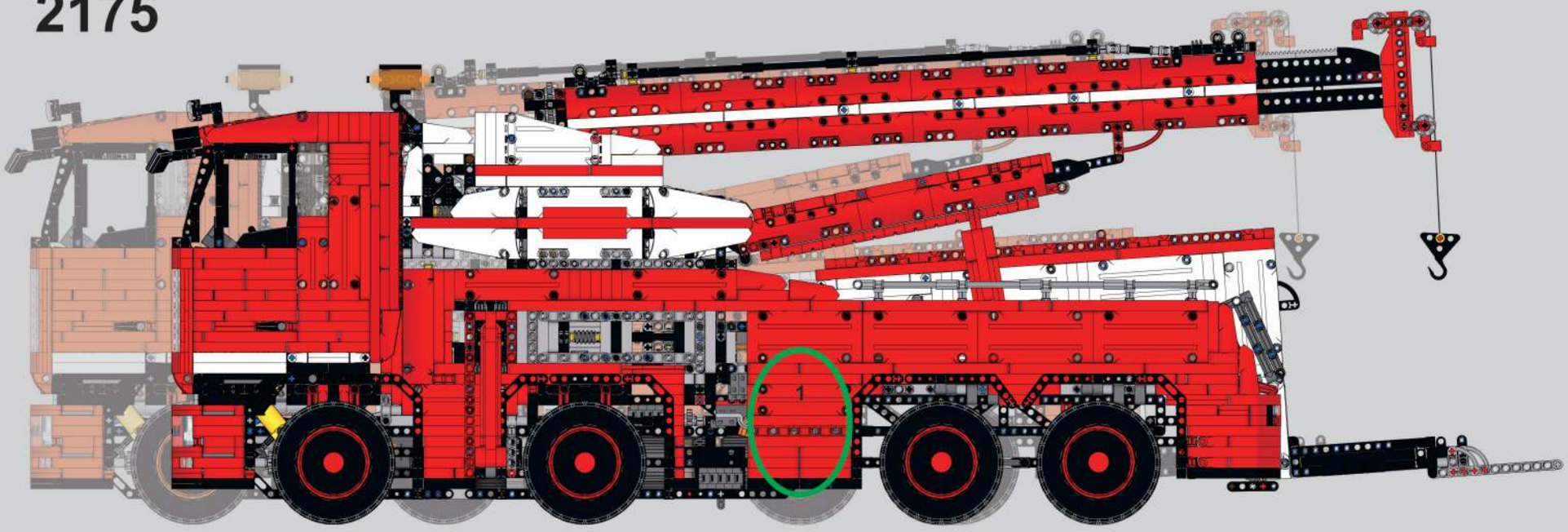

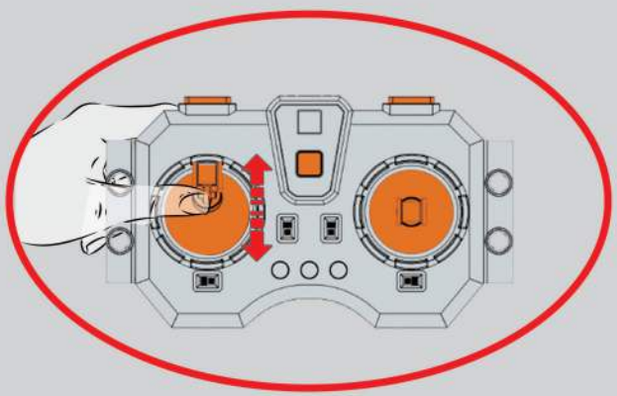

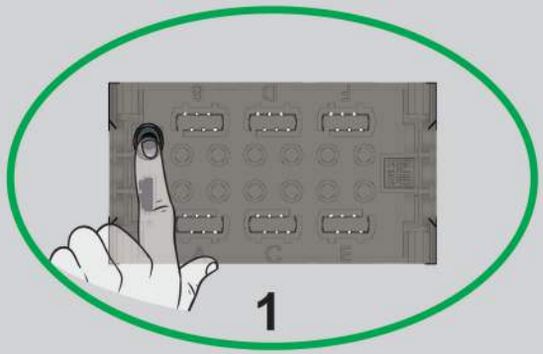

打开1号模块电源,打开遥控器电源,使其配对成功。遥控器左边摇杆上下移动(A通道),控制前进、后退。
Turn on the power supply of module 1, turn on the power supply of the remote control, and make it successfully paired. The left rocker of the remote control moves up and down (channel A) to control forward and backward.

2176

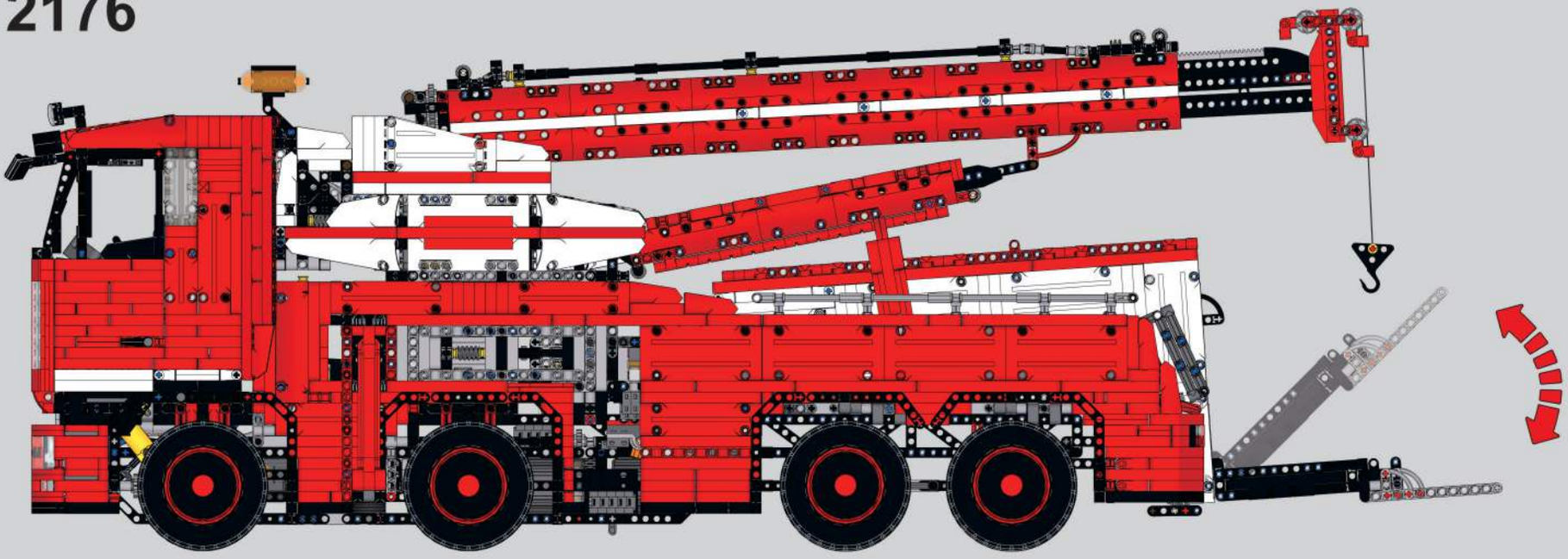

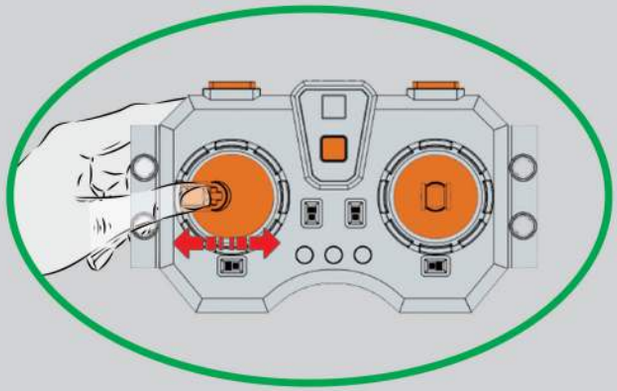

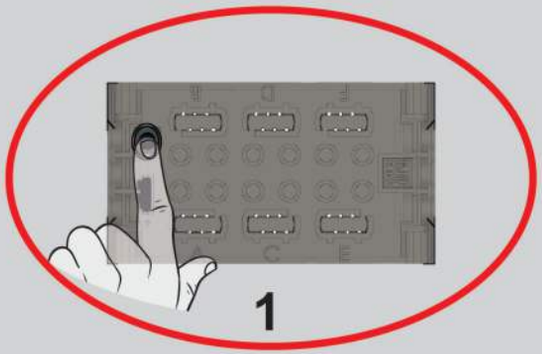

遥控器左边摇杆左右移动(B通道)，控制拖车后挂收、放。

The left rocker of the remote control moves left and right (B channel) to control the collection and release of the trailer.

2177

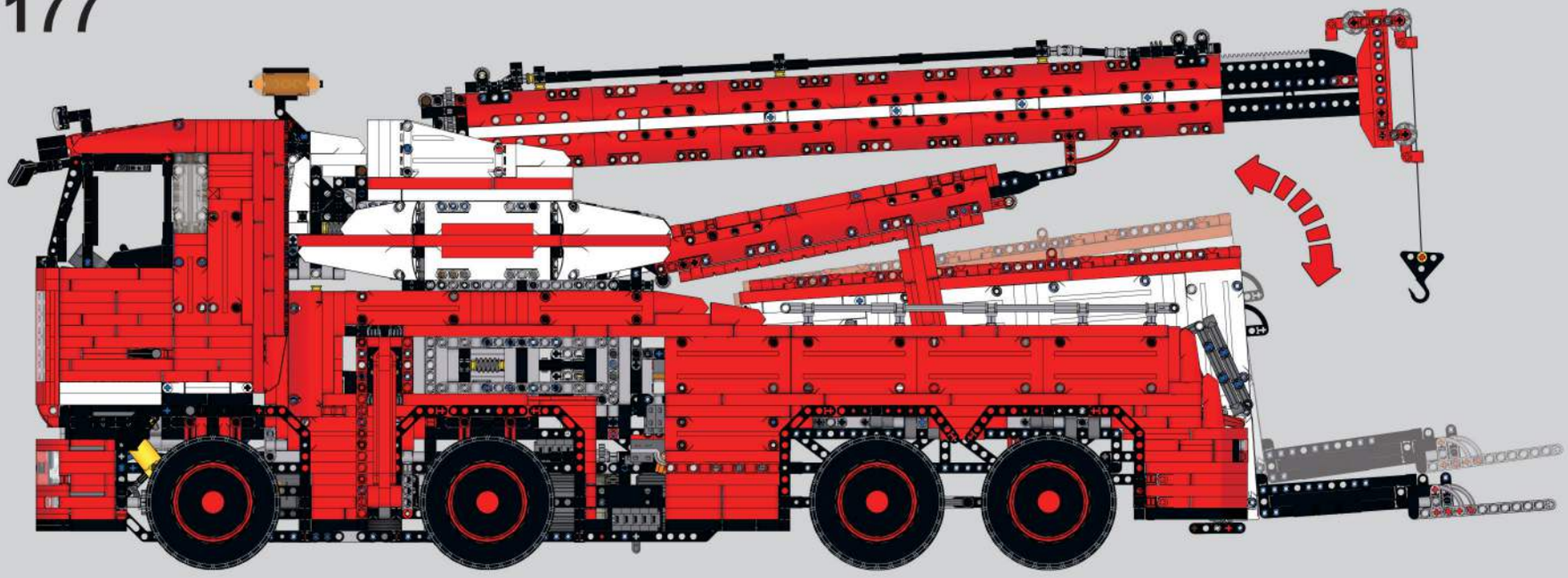

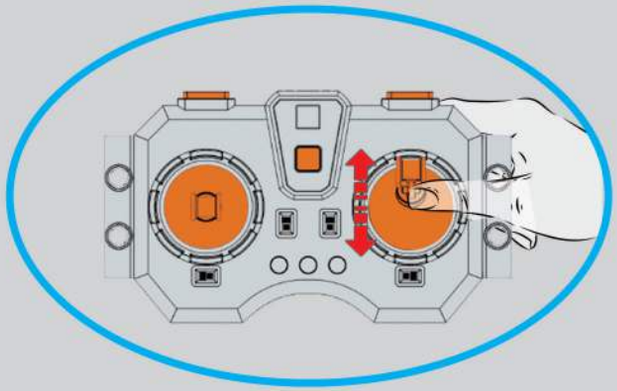

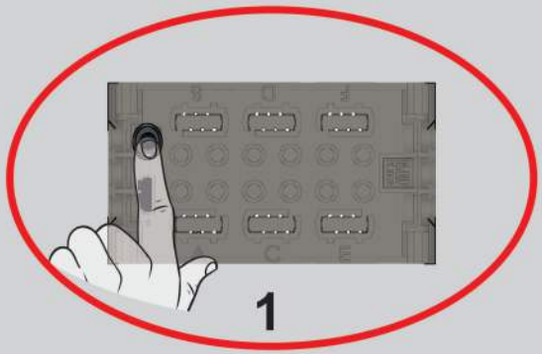

遥控器右边摇杆上下移动(C通道),控制图示升降臂升、降。

The right rocker of the remote control moves up and down (C channel) to control the elevation and descent of the lifting arm.

2178

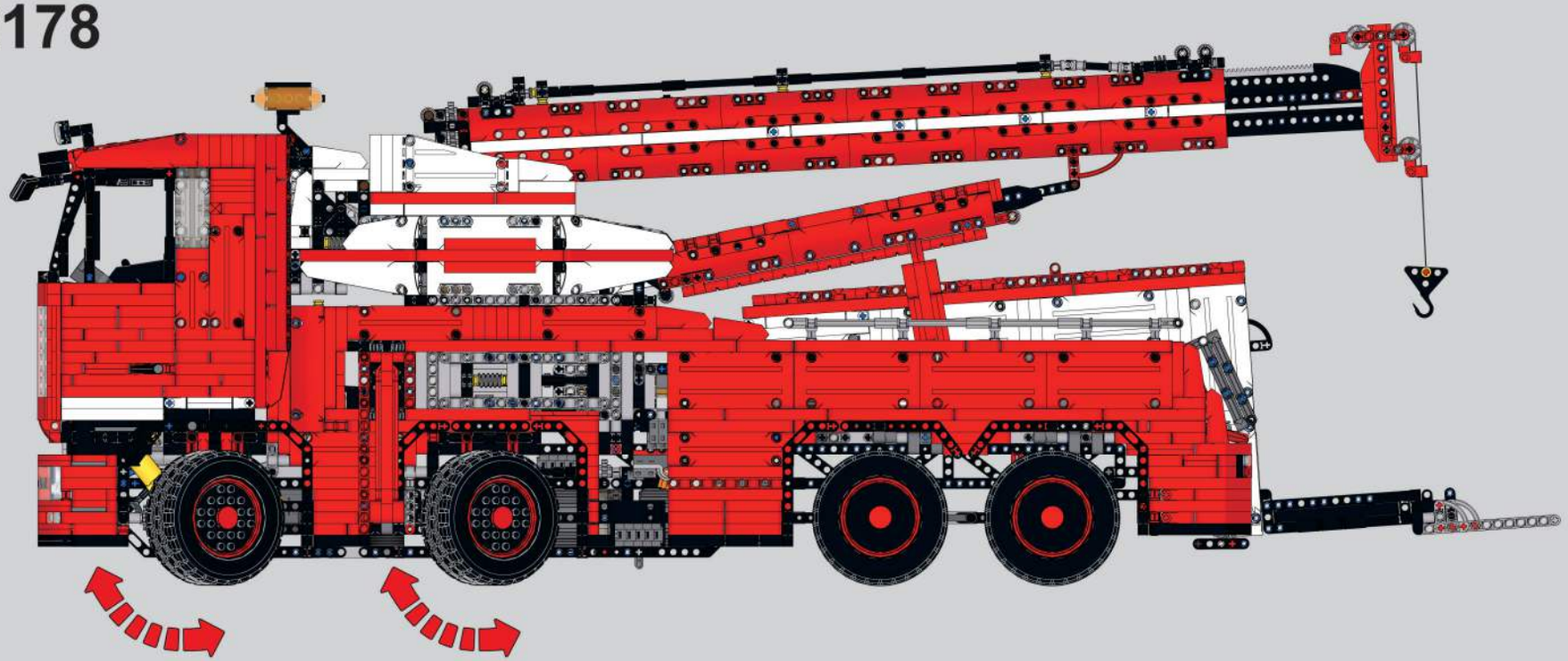

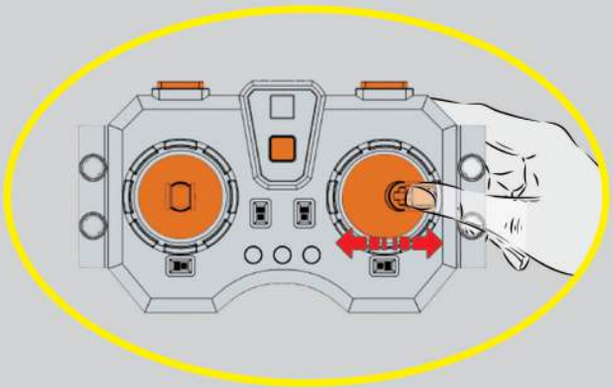

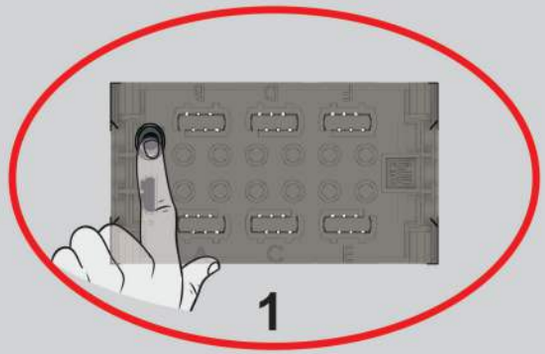

遥控器右边摇杆左右移动(D通道)，控制前排轮子左、右转向。

The right rocker of the remote control moves left and right (D channel) to control the left and right steering of the front wheels.

2179

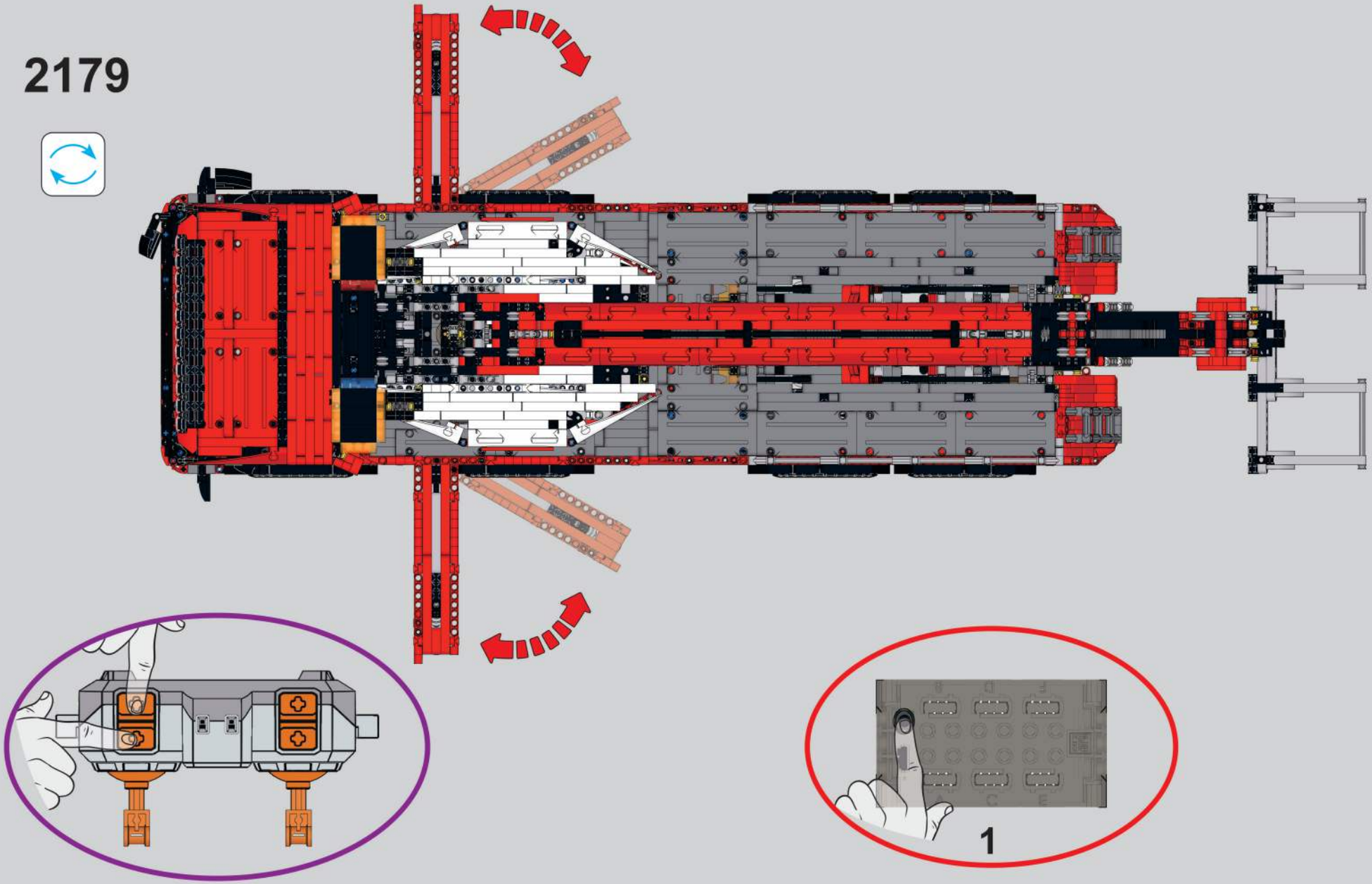

遥控器左边按键上下按动(E通道),控制驻锄臂展开、收起。

Press the button on the left side of the remote control up and down (E channel) to control the expansion and retraction of the hoe.

2180

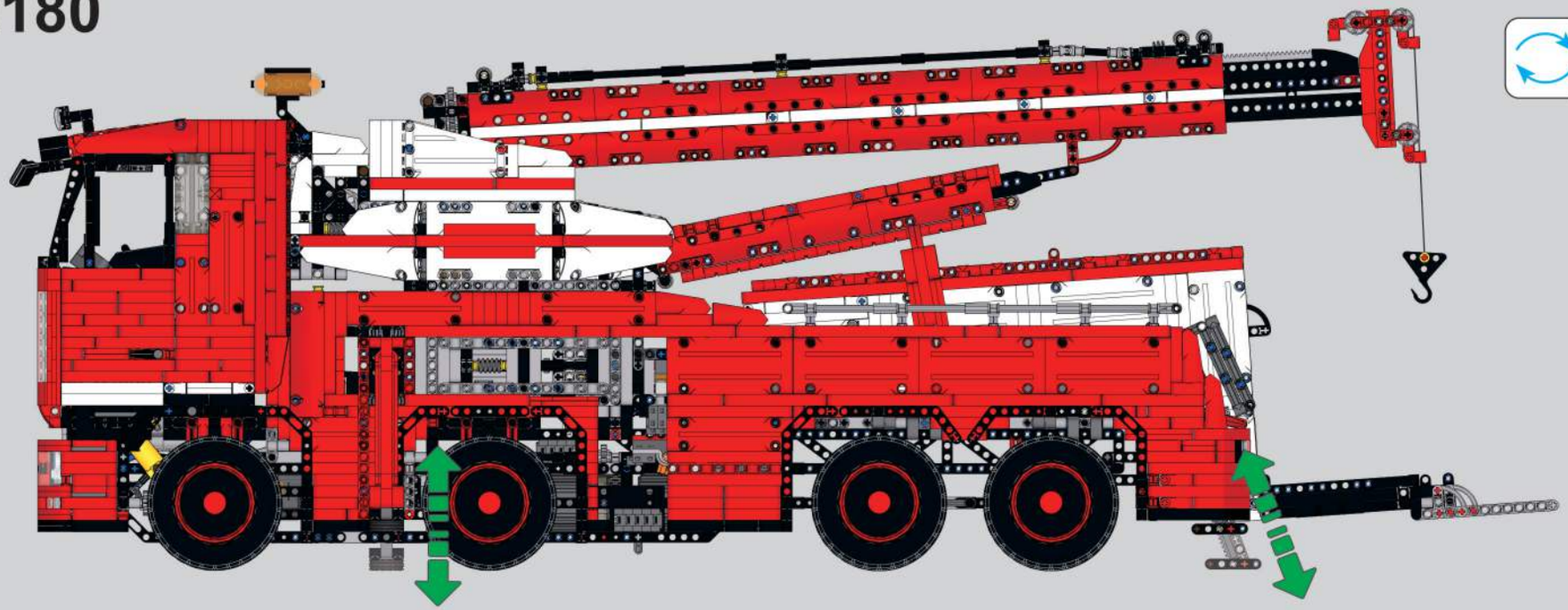

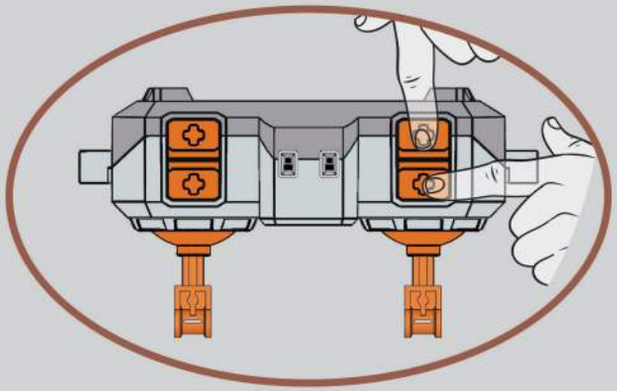

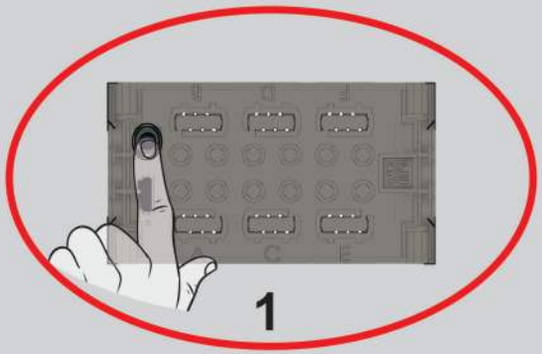

遥控器右边按键上下按动(F通道),控制驻锄臂升、降。

Press the button on the right side of the remote control up and down (F channel) to control the rise and fall of the hoe arm.

2181

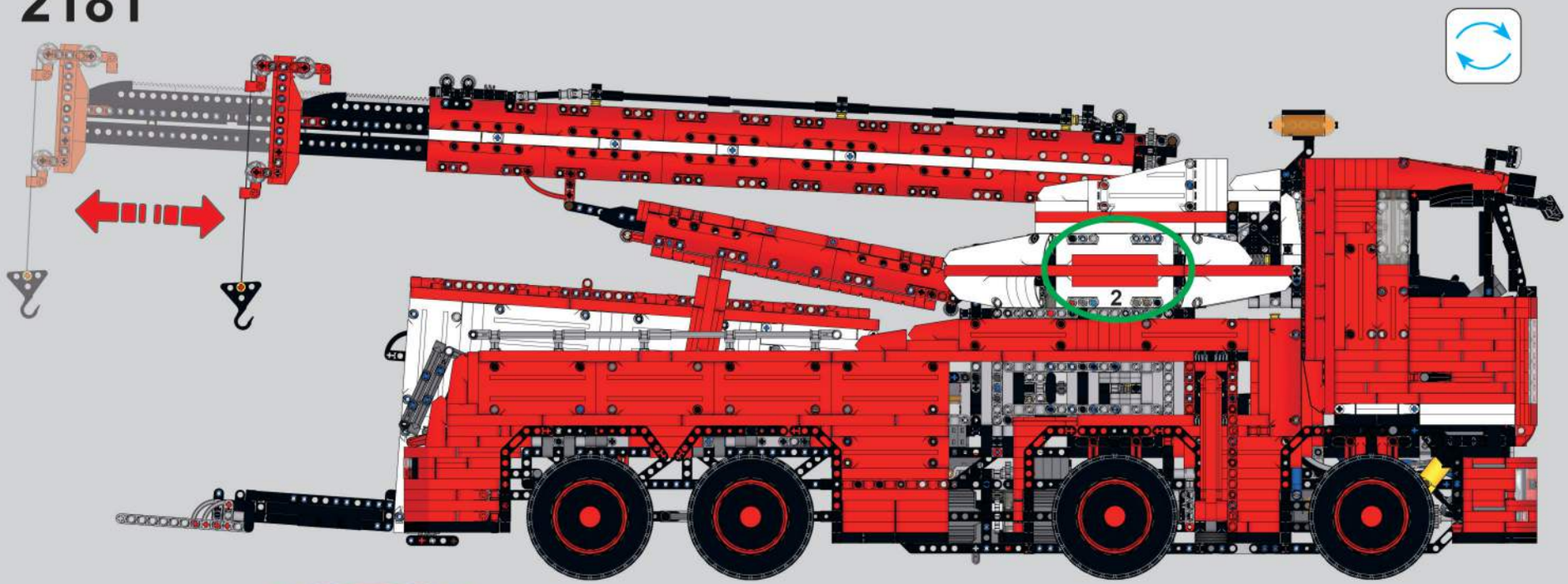

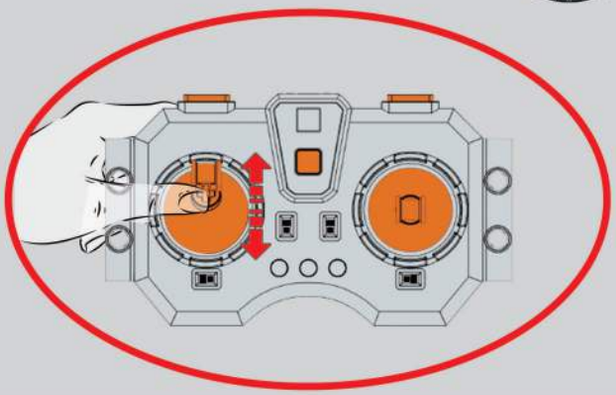

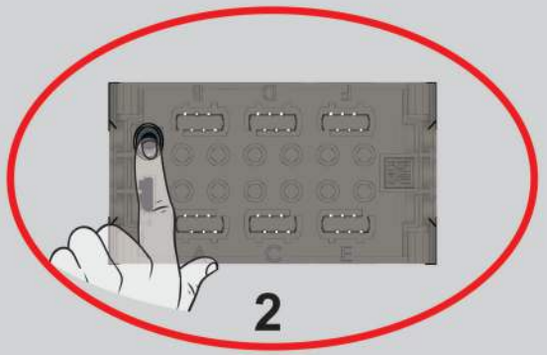

关闭模块1电源和遥控器，打开模块2电源并再次打开遥控器，使其配对成功。一个遥控器仅可以控制一个模块。
遥控器左边摇杆上下移动(A通道)，控制大臂伸、缩。
Turn off the power supply and remote control of module 1, turn on the power supply of module 2 and turn on the remote control again to make it successfully paired. One remote control can control only one module. The left rocker of the remote control moves up and down (channel A) to control the extension and contraction of the big arm.

2182

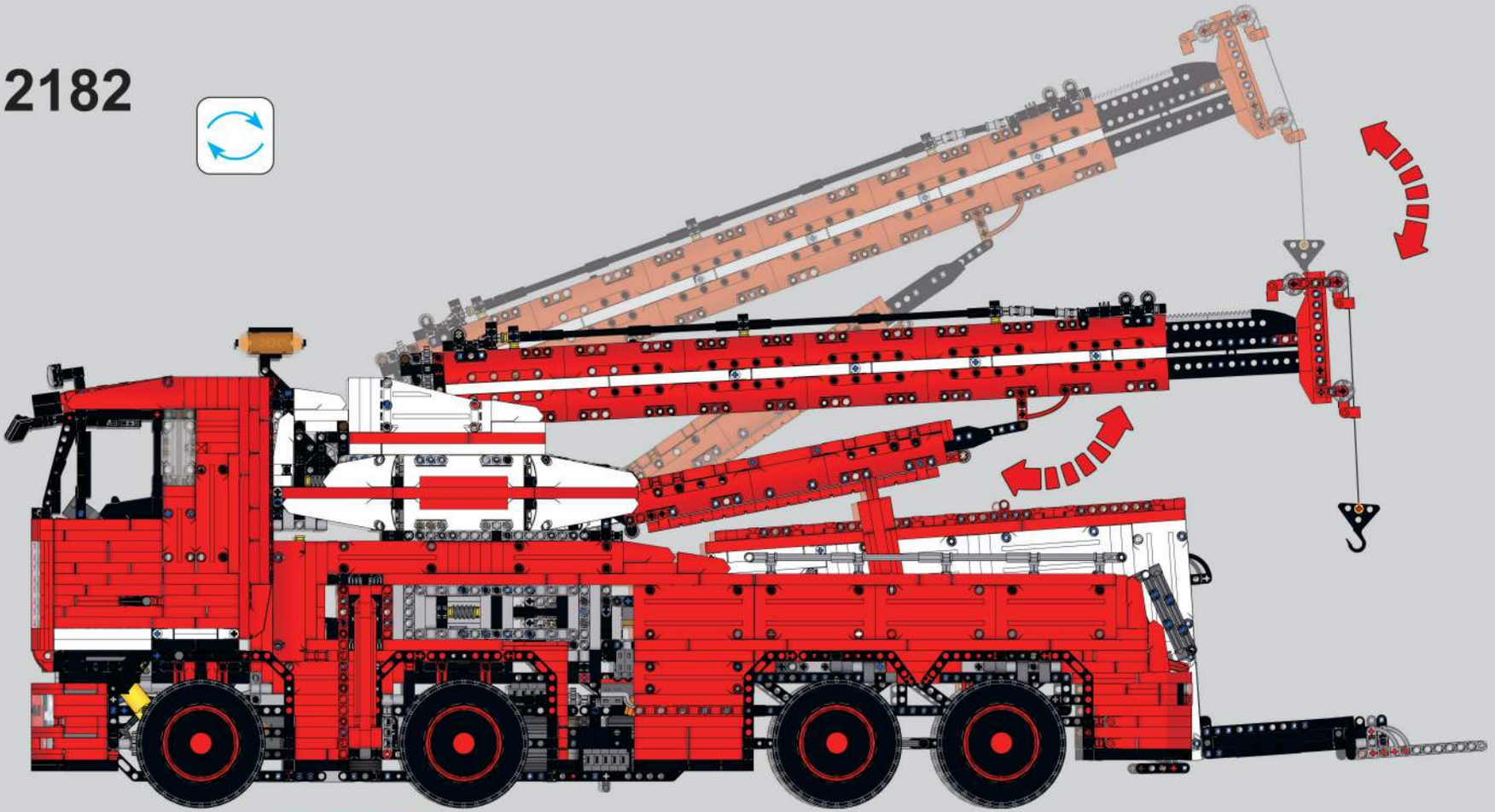

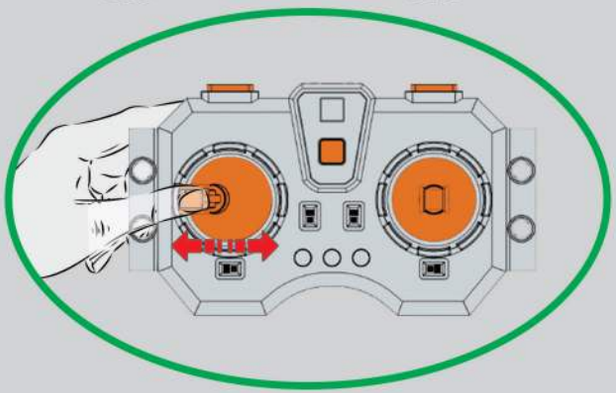

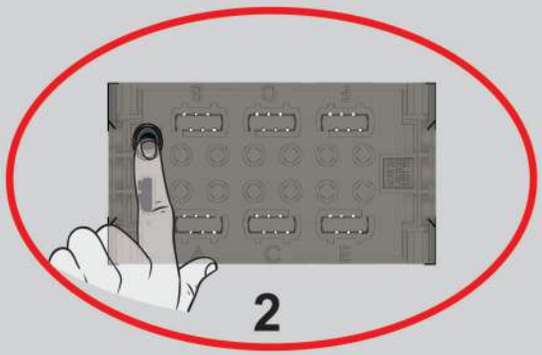

遥控器左边摇杆左右移动(B通道)，控制大臂升、降。

The left rocker of the remote control moves left and right (B channel) to control the rise and fall of the big arm.

2183

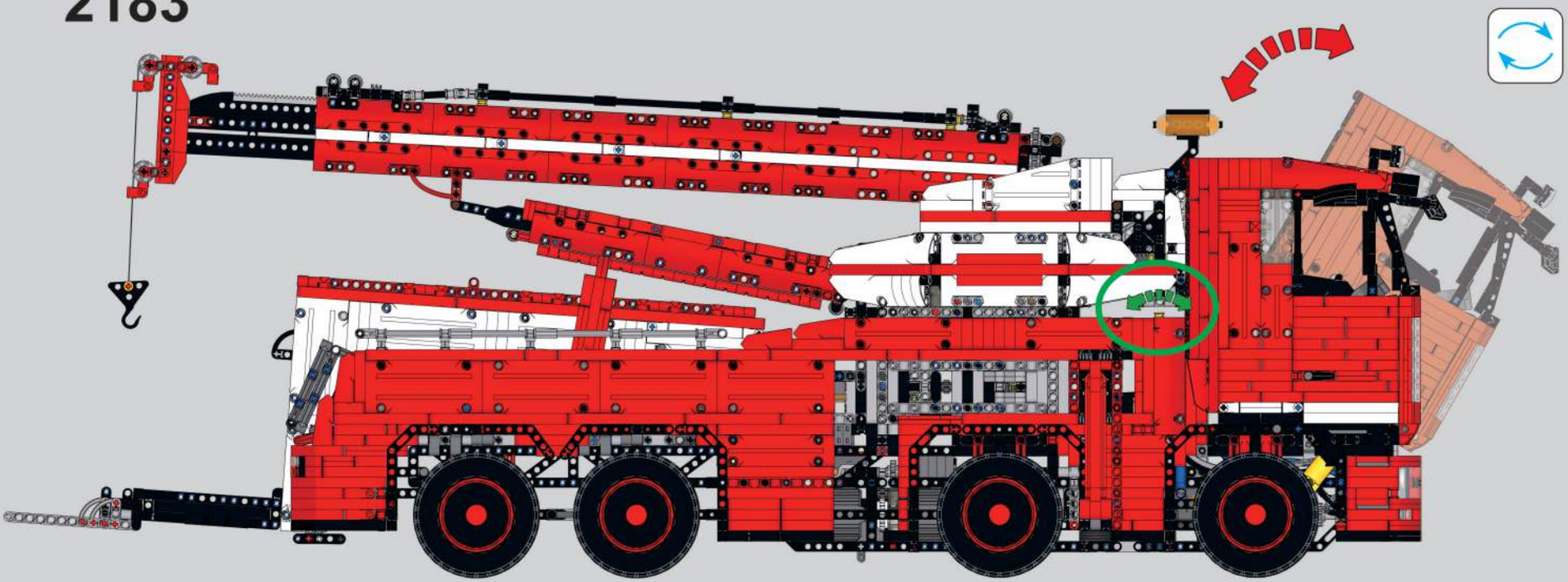

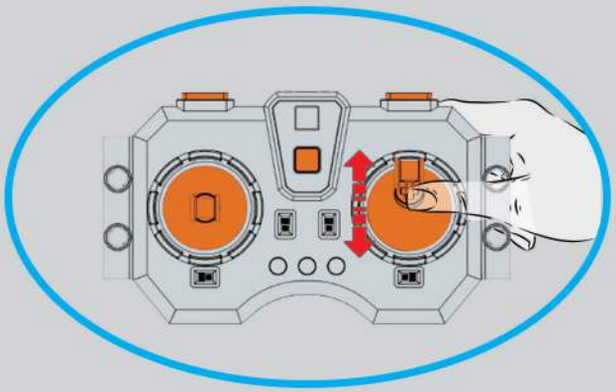

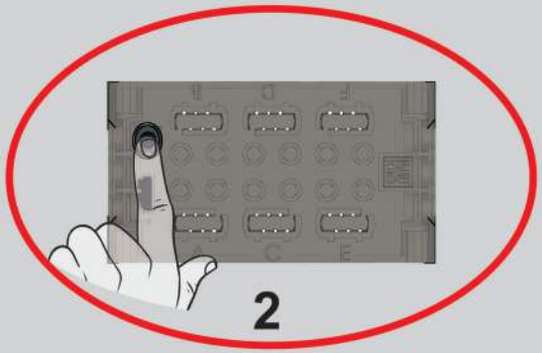

遥控器右边摇杆上下移动(C通道),控制“打气泵”打气,大约10秒后,左右拨动图示绿圈位置的开关,控制车头抬、放,如果无法则需继续打气。

The right rocker of the remote control moves up and down (channel C) to control the "pump pump". After about 10 seconds, flip the switch of the position of the green circle on the left and right to control the front lift and release. If it is not possible, it needs to continue pumping.

2184

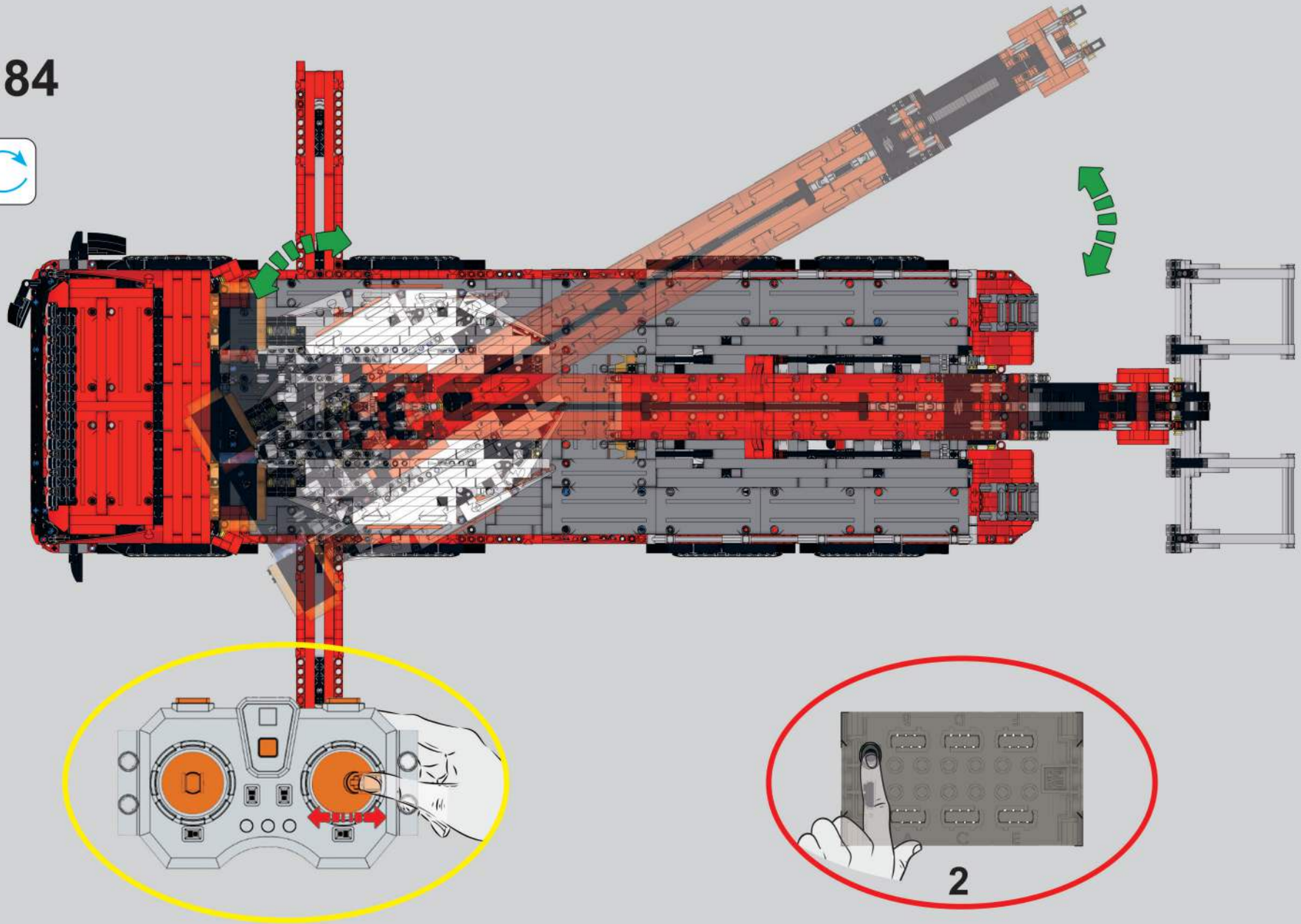

遥控器右边摇杆左右移动(D通道)，控制吊臂旋转。

The right rocker of the remote control moves left and right (D channel) to control the rotation of the lifting arm.

2185

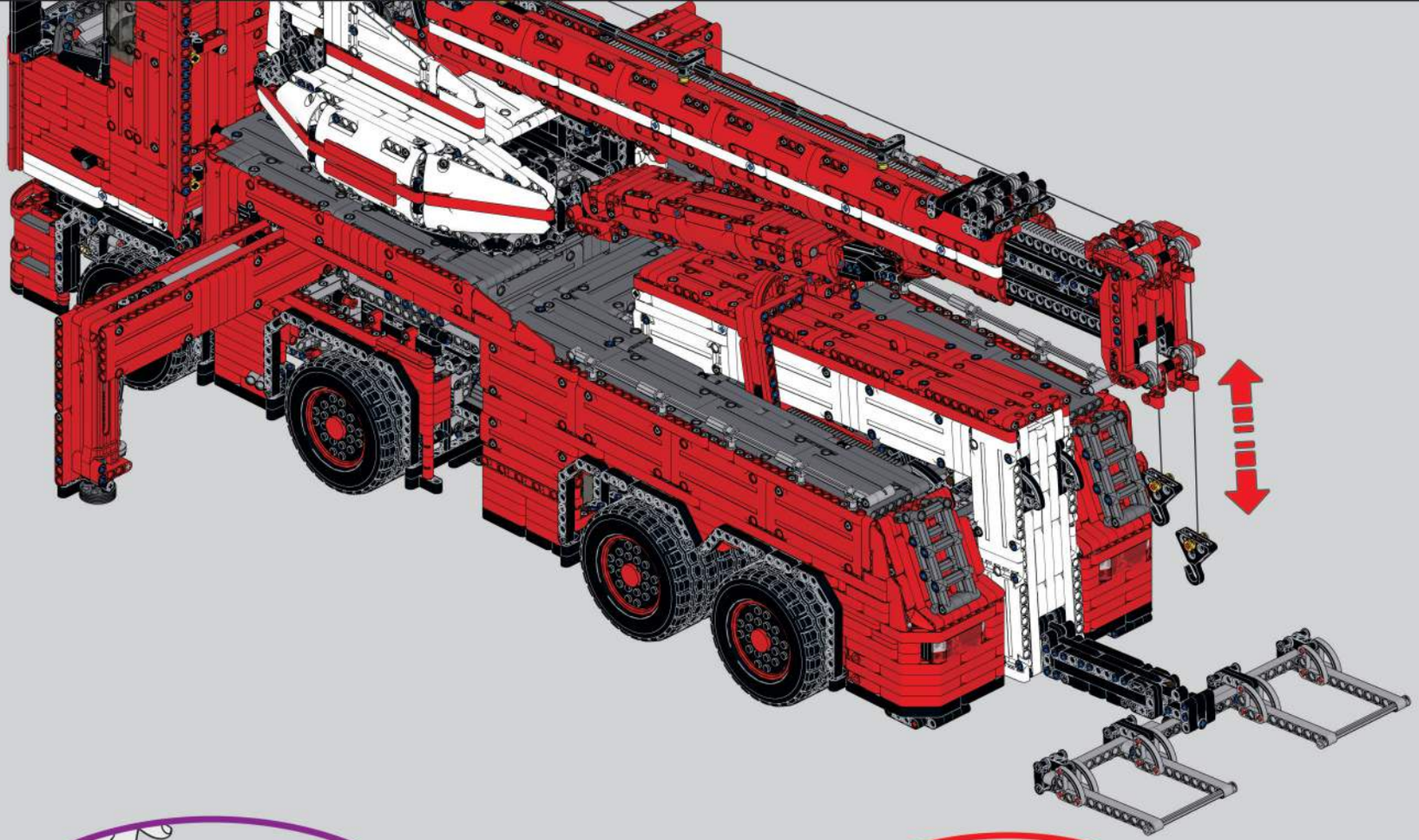

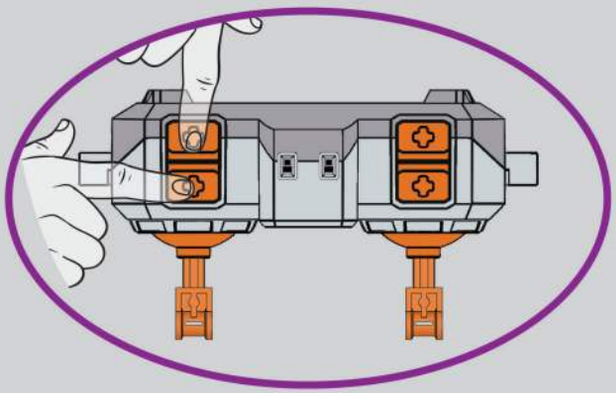

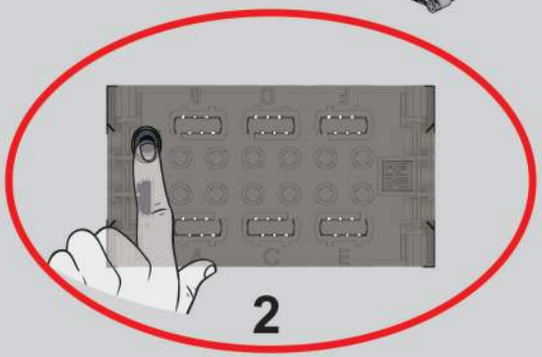

遥控器左边按键上下按动(E通道),控制右吊钩升、降。

Press the button on the left side of the remote control up and down (E channel) to control the lifting and lowering of the right hook.

2186

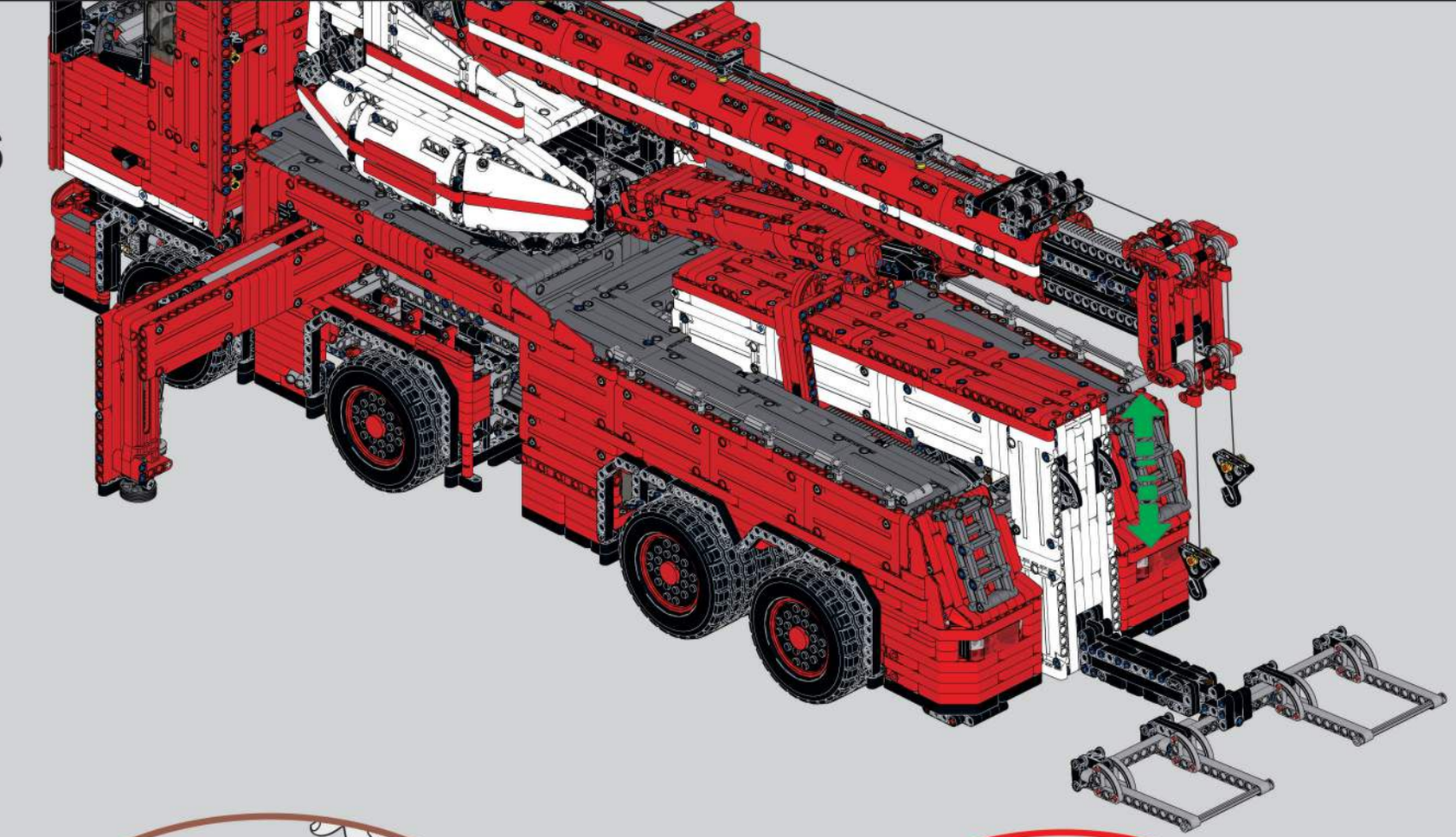

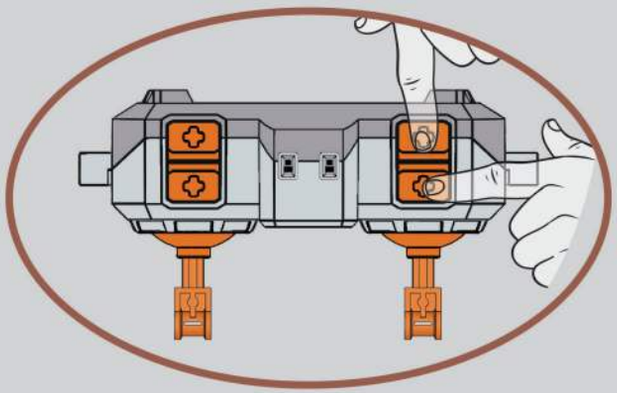

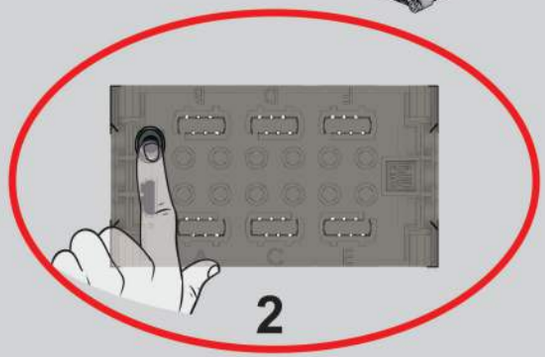

遥控器右边按键上下按动(F通道),控制左吊钩升、降。
Press the button on the right of the remote control up and down (F channel) to control the lifting and lowering of the left hook.

2187

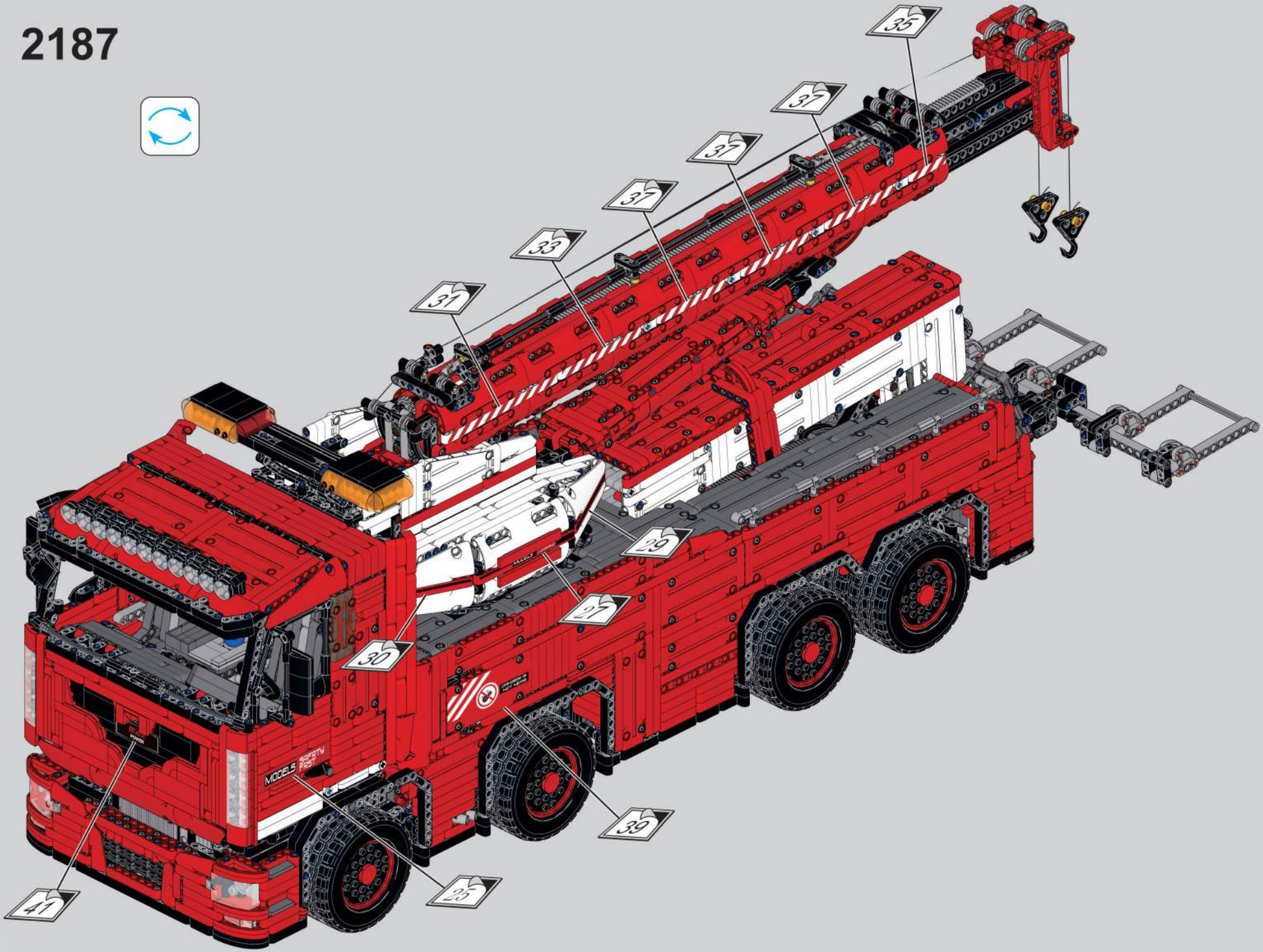

2188

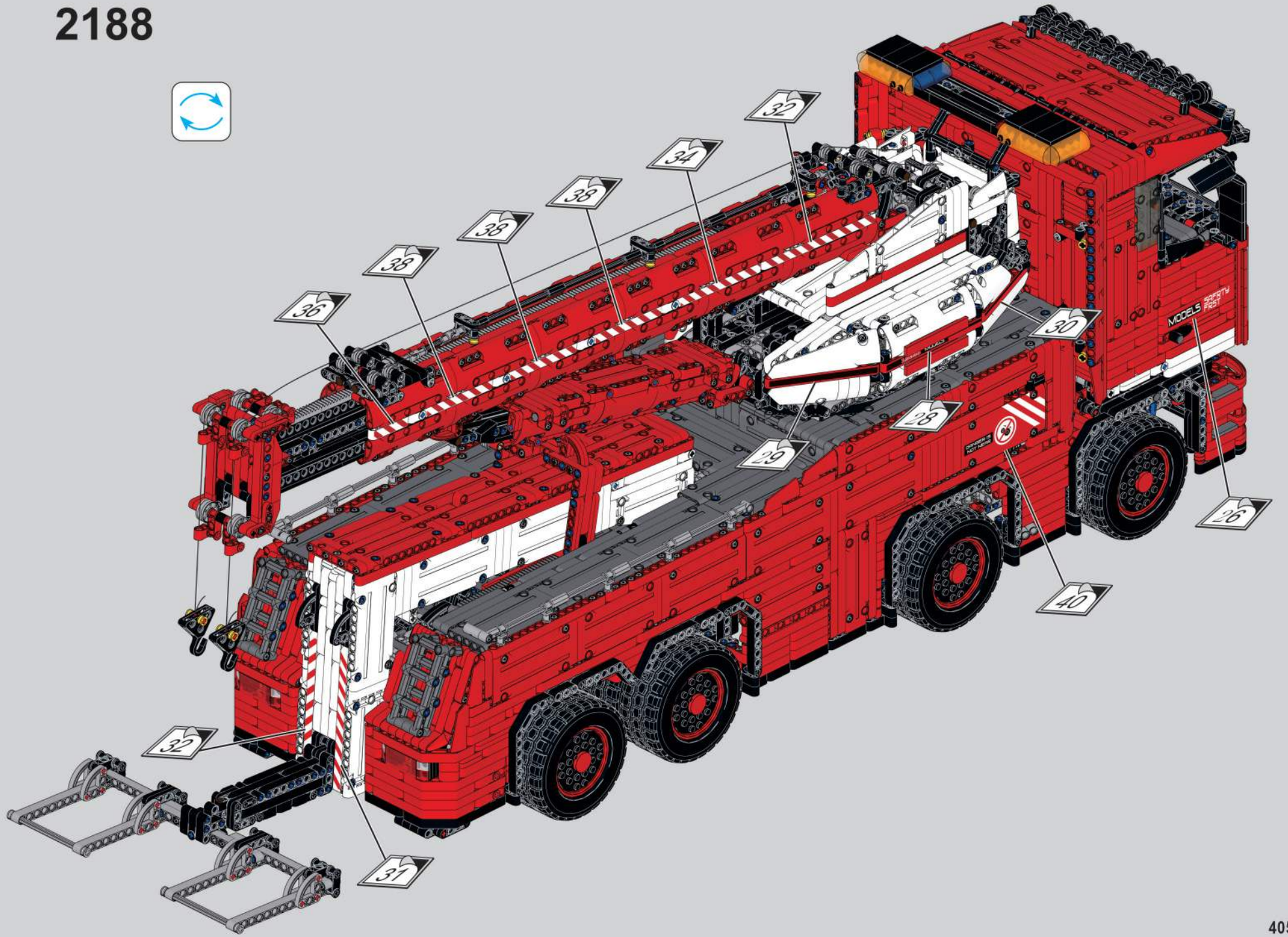

MOULD KING®

宇 星 模 王