WANGE
SUPERCAR
2887
87
87
SUPER
CHAMPIONS
6+ | 106 PCS

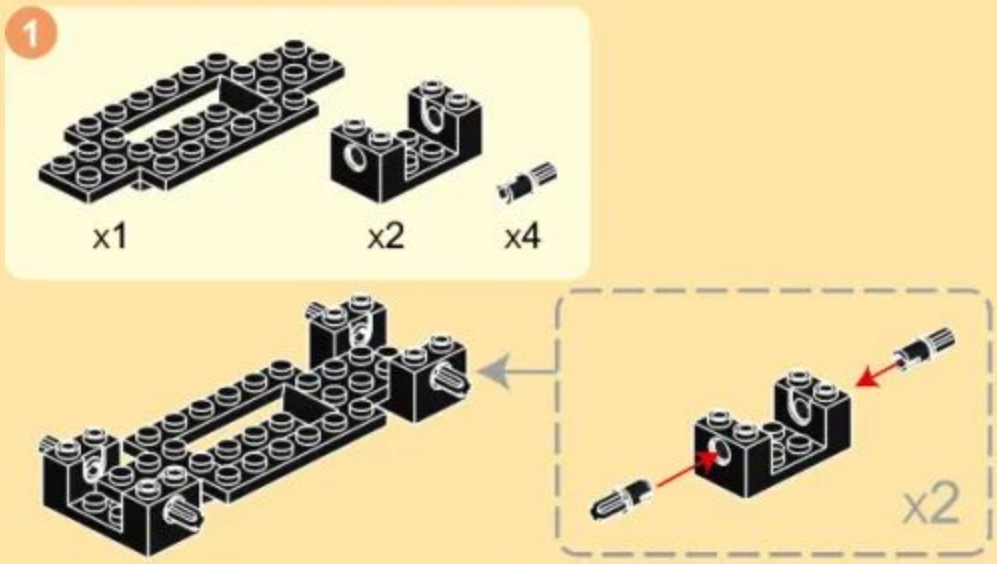
1
x1
x2
x4
x2

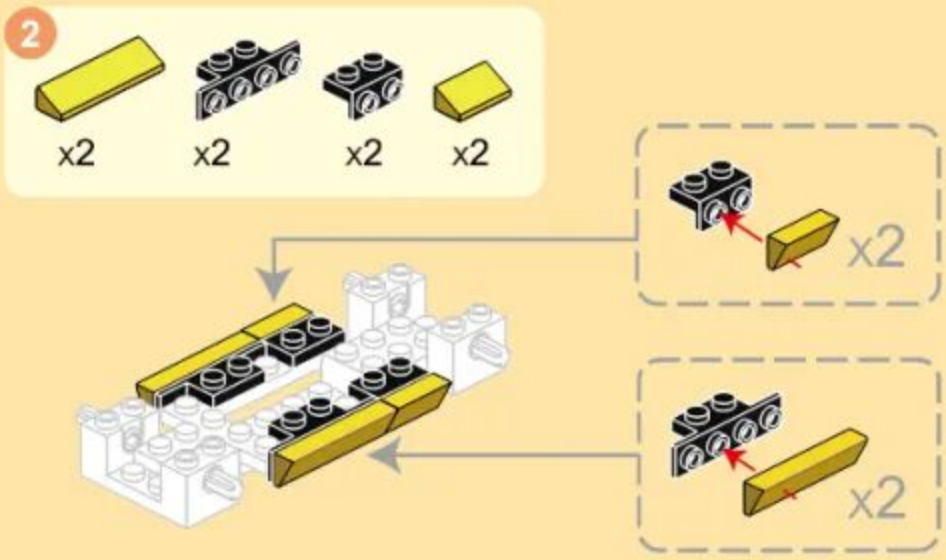
2
x2
x2
x2
x2
x2
x2

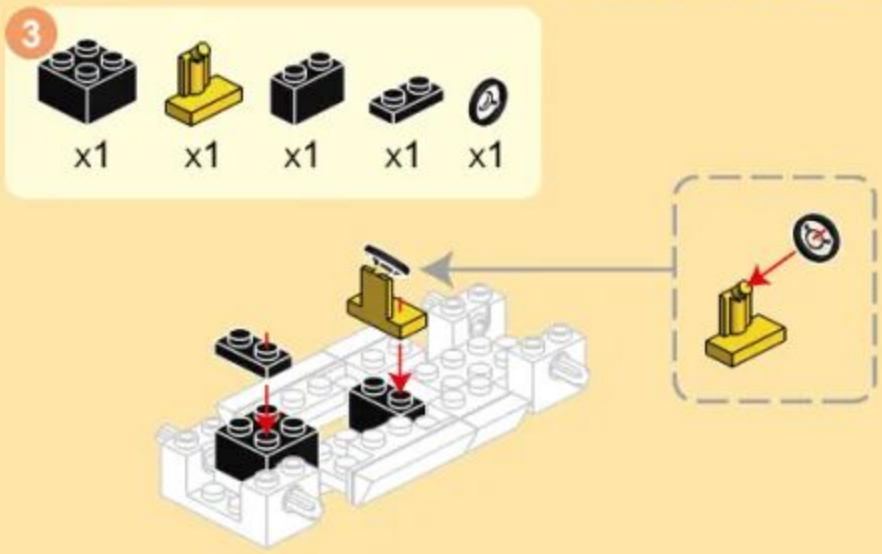
3
x1
x1
x1
x1
x1

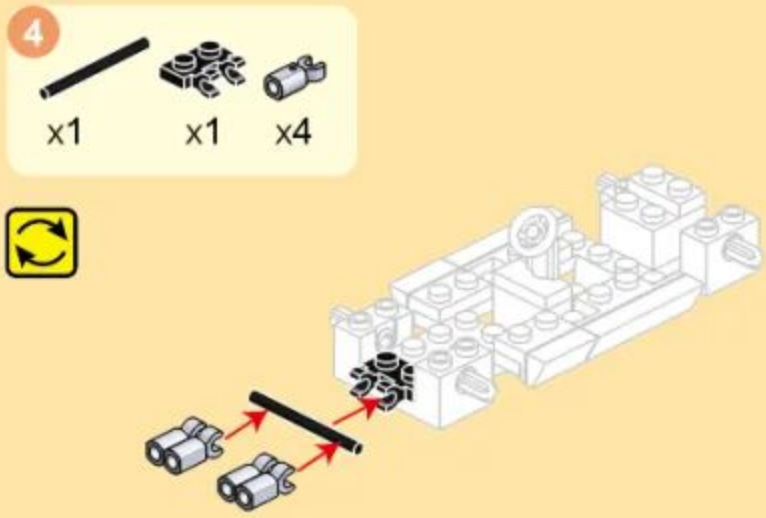
4
x1
x1
x4

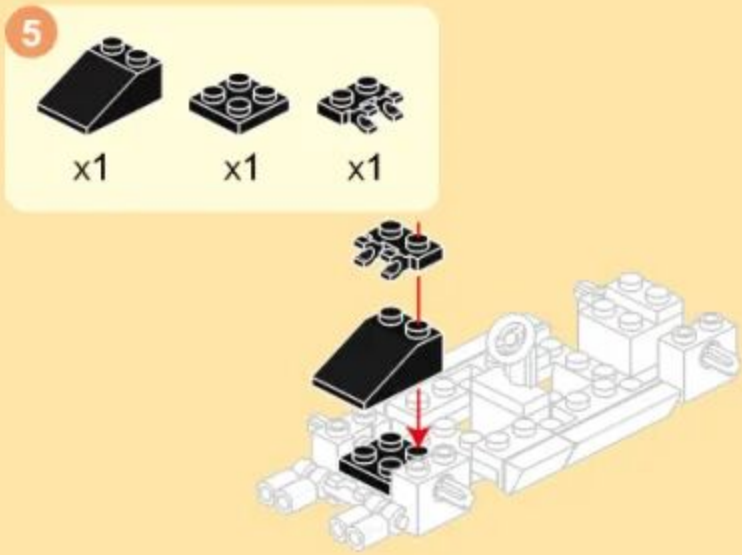
5
x1
x1
x1

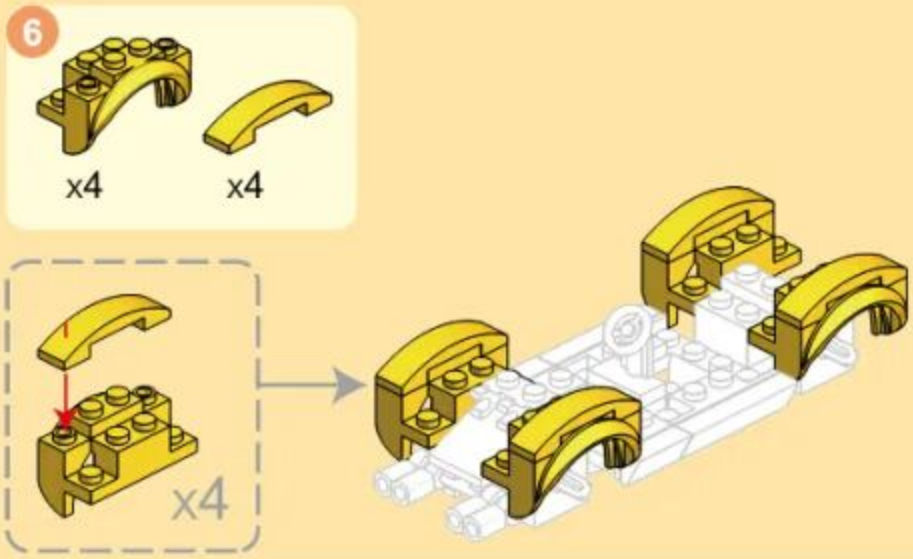
6
x4
x4
x4

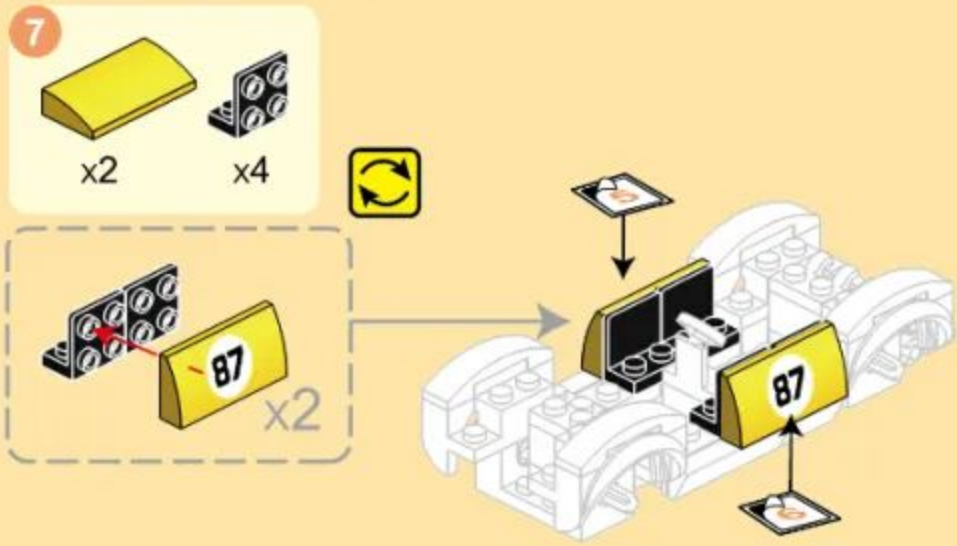
7
x2
x4
87
x2
87

8
2x2
x1
x1
x1
x1
x1
x1
x1
x1
x1
x2
x2
x1
x1
x2
x2

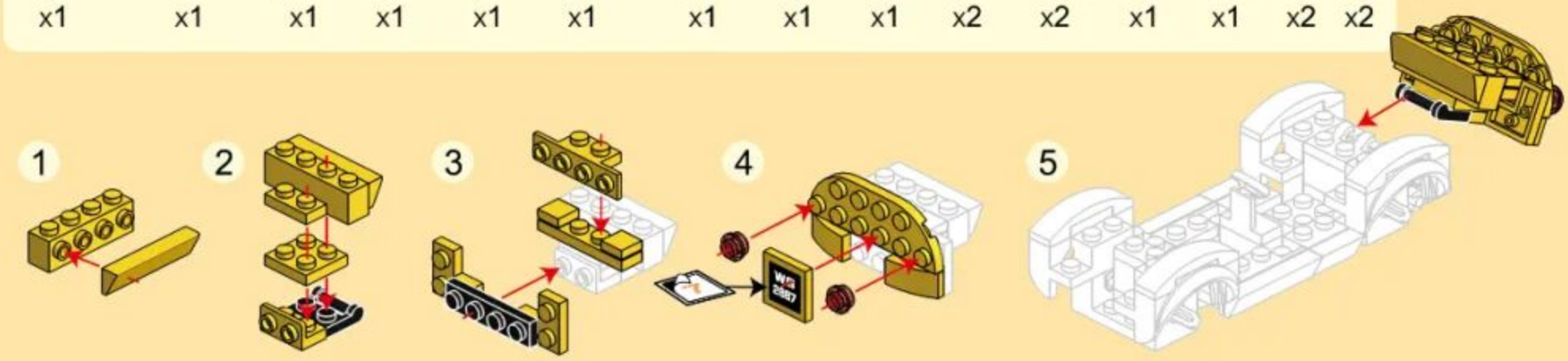
1
2
3
4
5

9

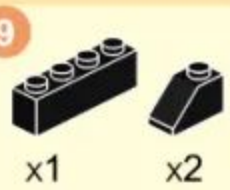

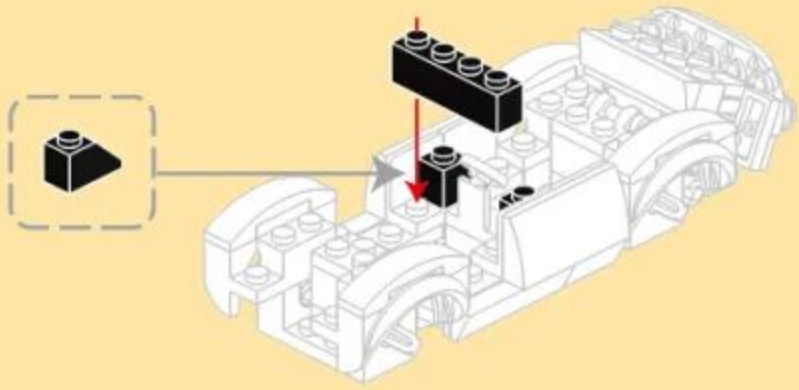

10

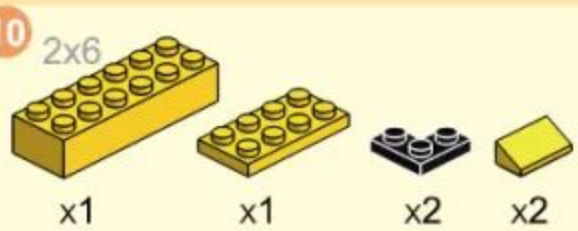

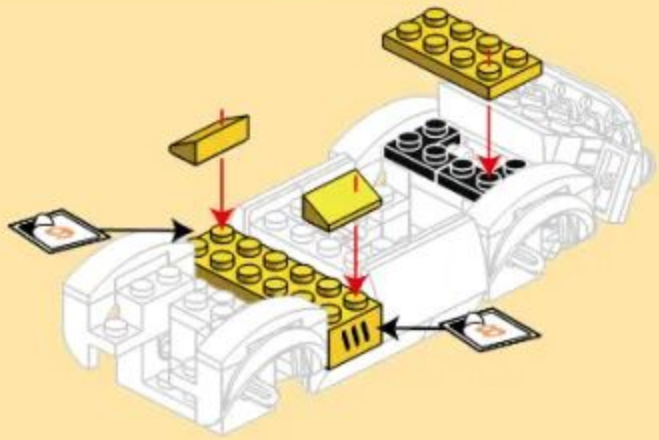

11

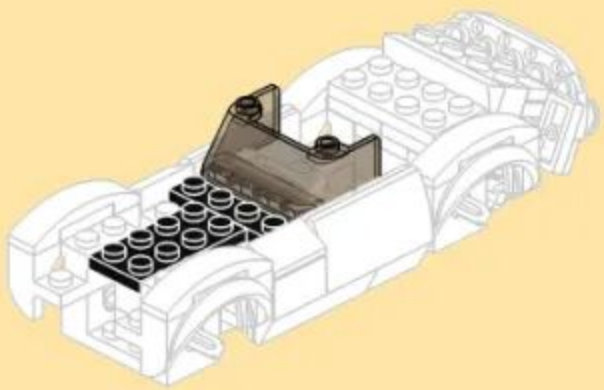

12

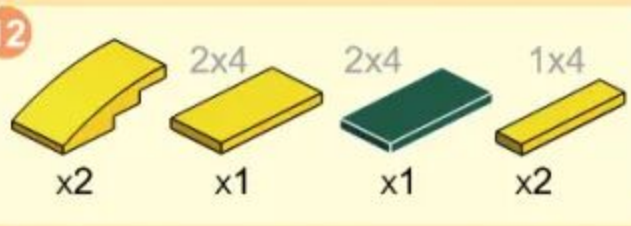

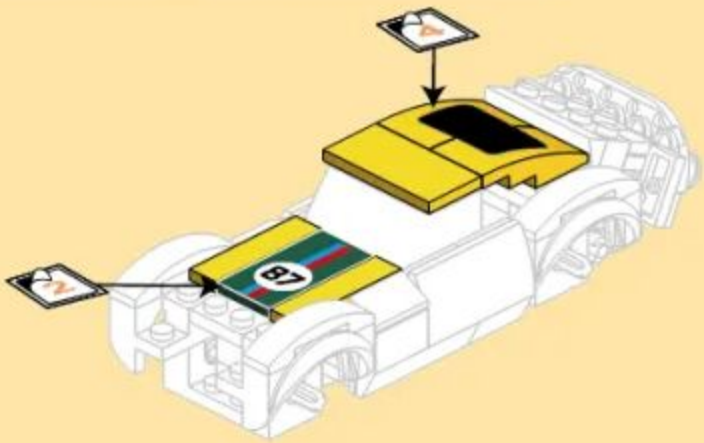

13

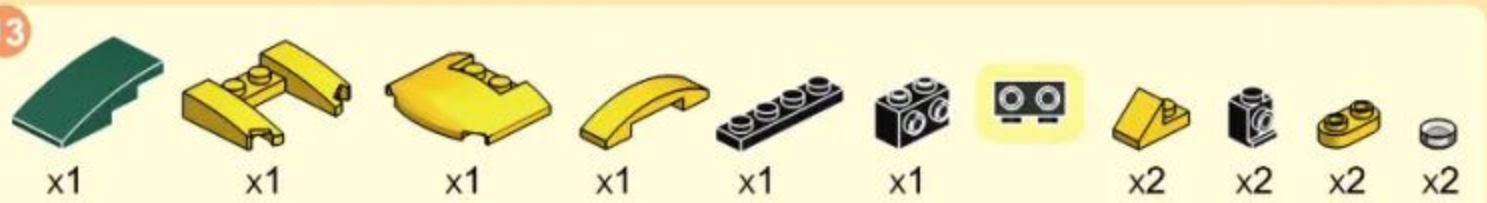

1

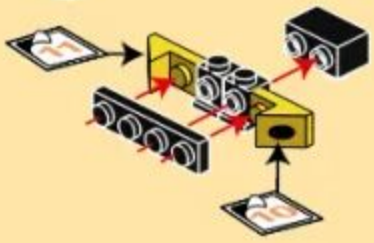

2

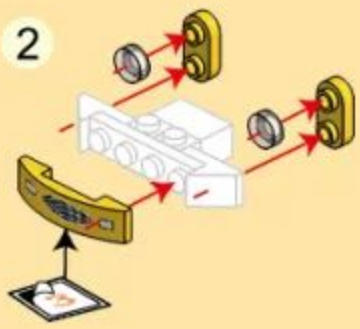

3

4

5

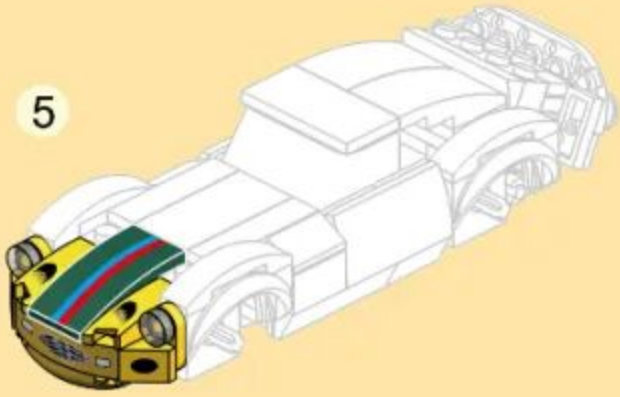
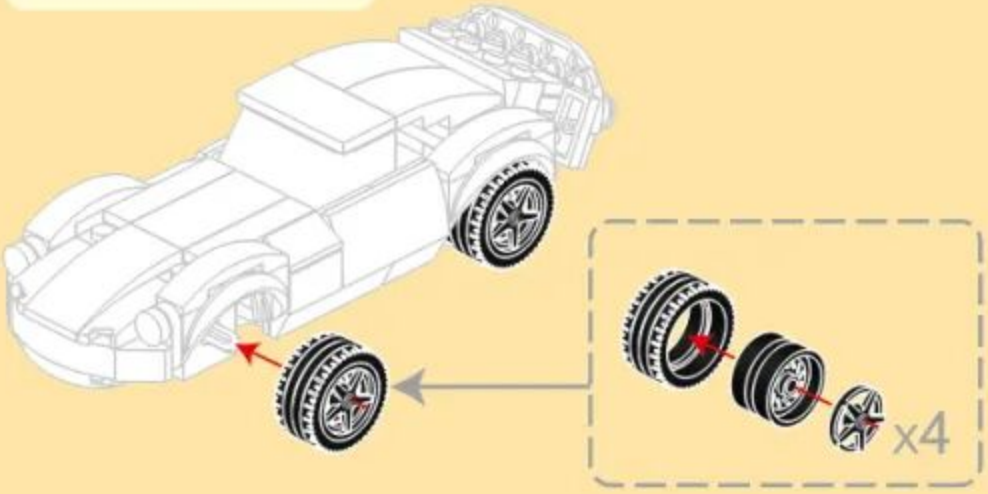
14