CaDA®

Mercedes-AMG ONE
THE ONE AND ONLY

AMG

AMG's foundation was laid on June 1st, 1967.

To mark the 55th anniversary of this brand of performance and sports cars, the production version of the Mercedes-AMG ONE is celebrating its world premiere.

CaDA® MASTER

AMG

Designed by: Bruno J

design by B. J

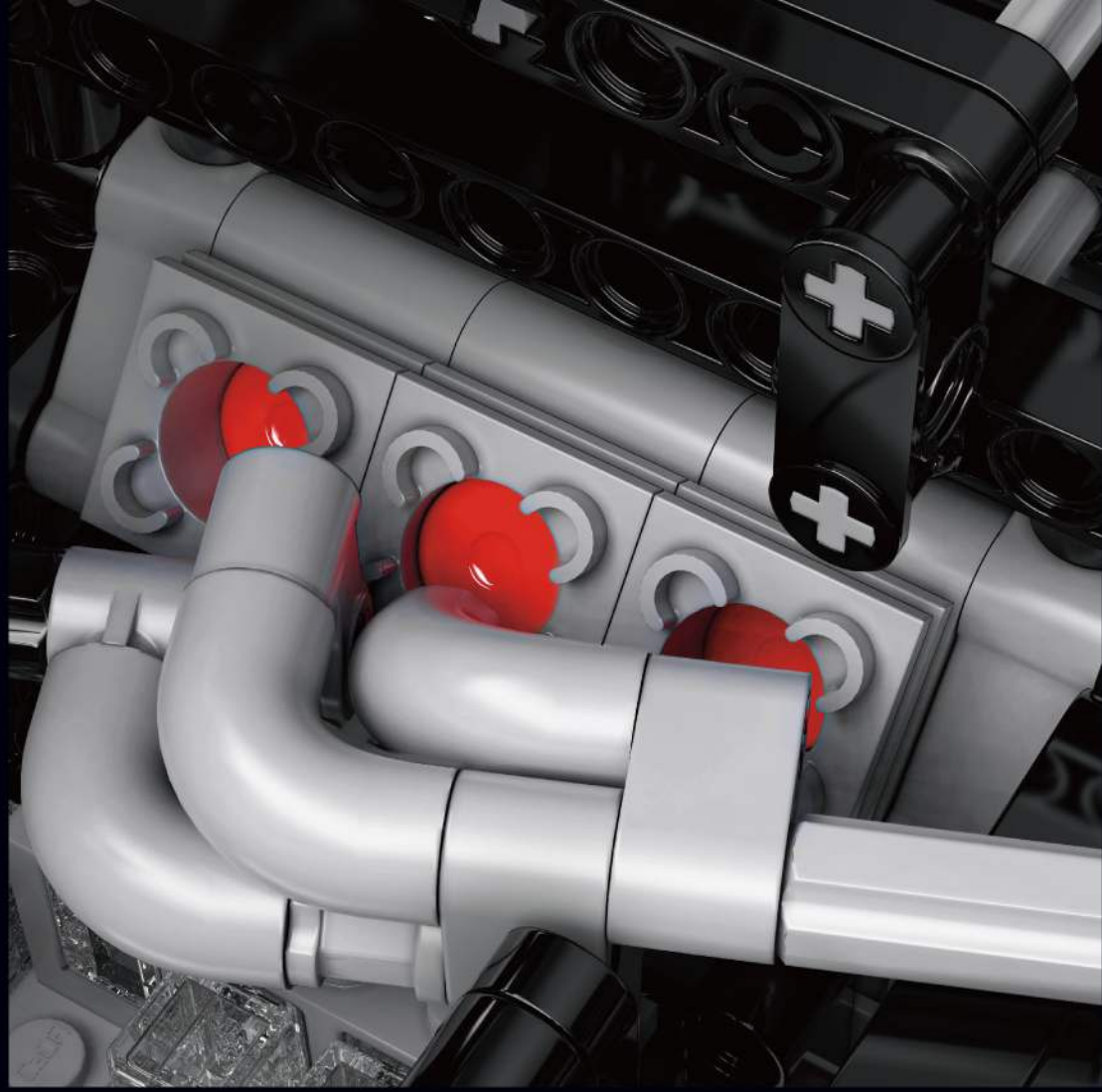

PNEUMATIC VALVE TRAIN

The only street-legal vehicle to use this valve construction
for improved combustion efficiency and power at high engine speeds.

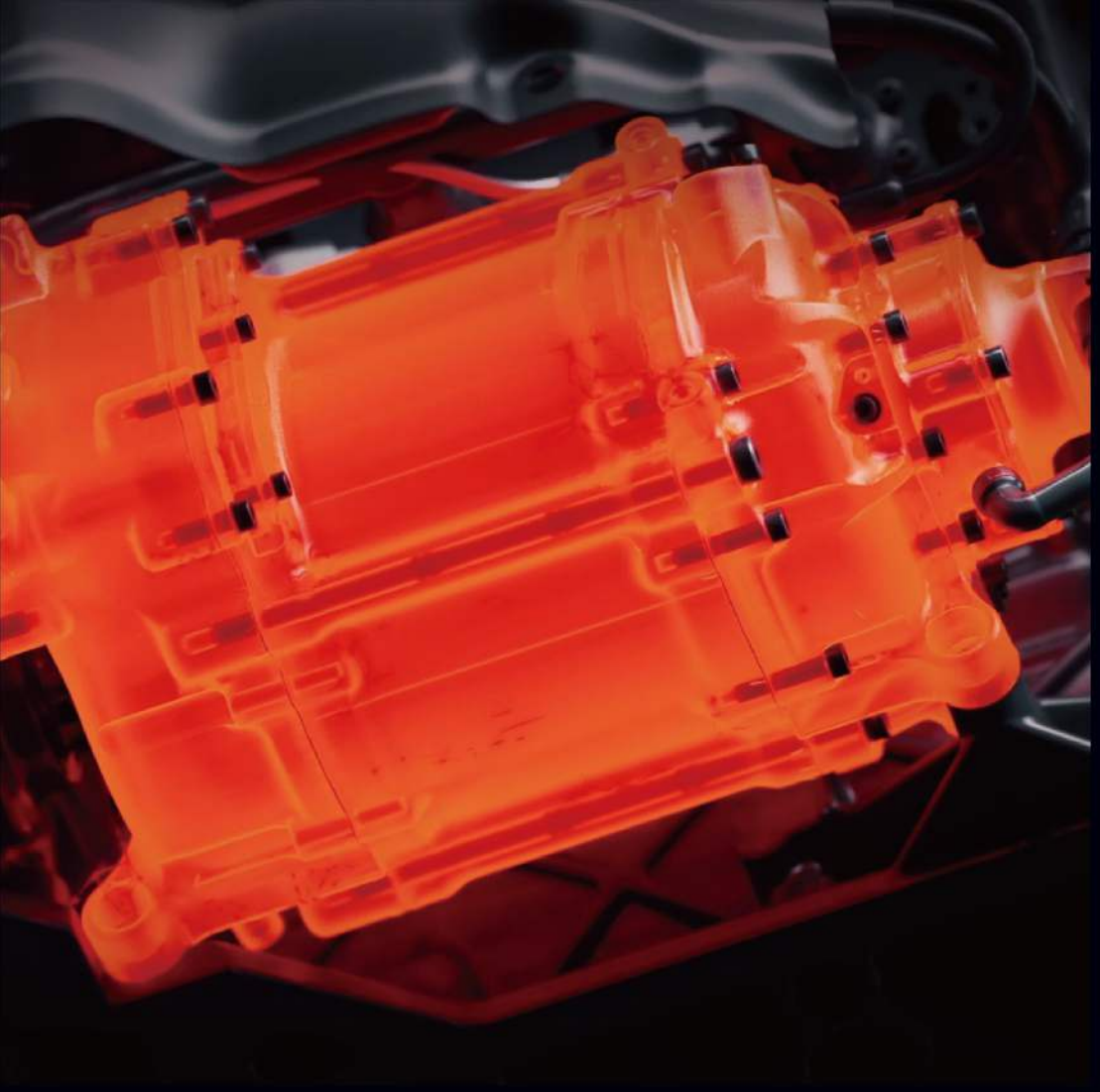

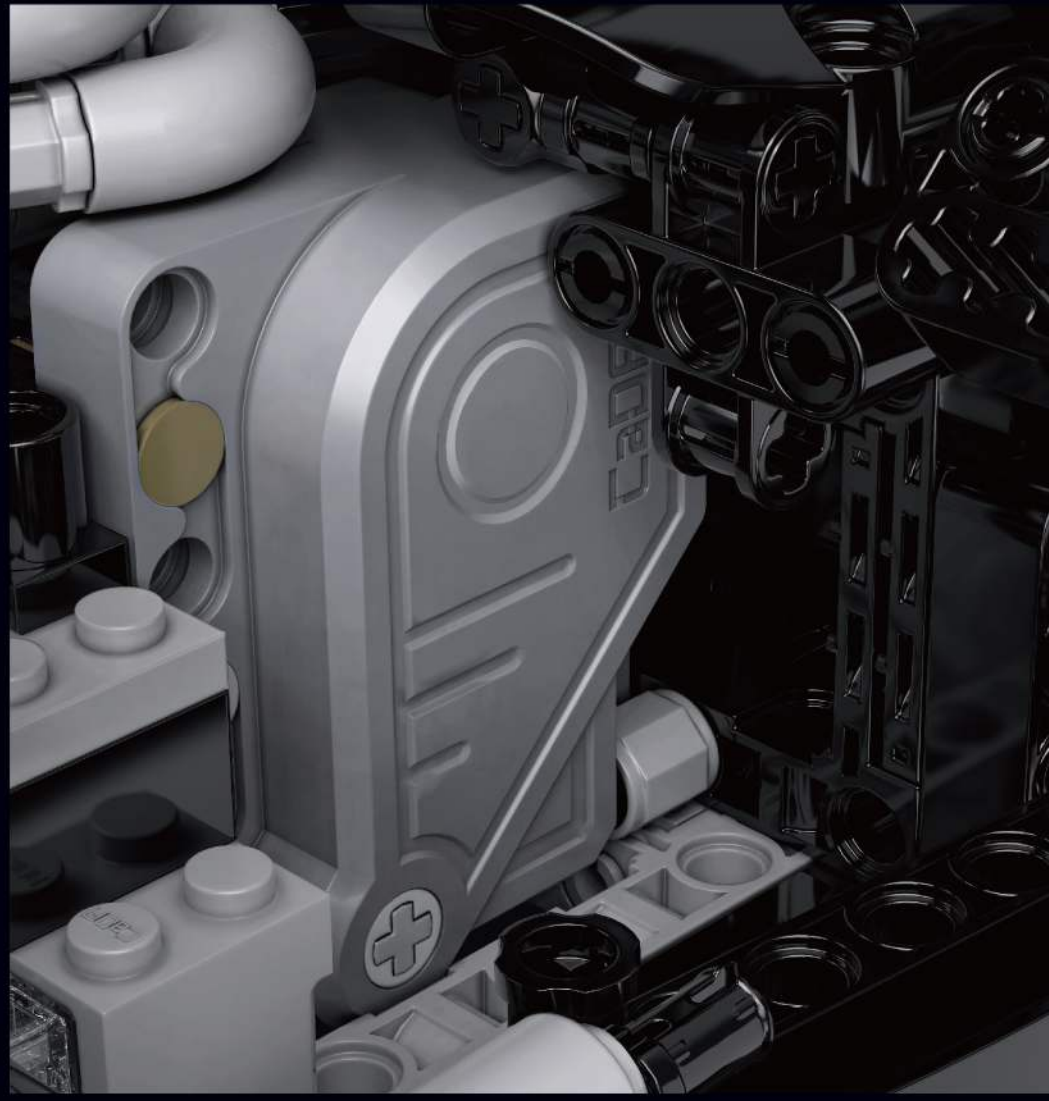

(MGUK: motor generator unit kinetic)

MGUK/ELECTRIC MOTOR

Deploys 120 kilowatts of power to rear axle.
Harvests energy from braking to charge the battery.

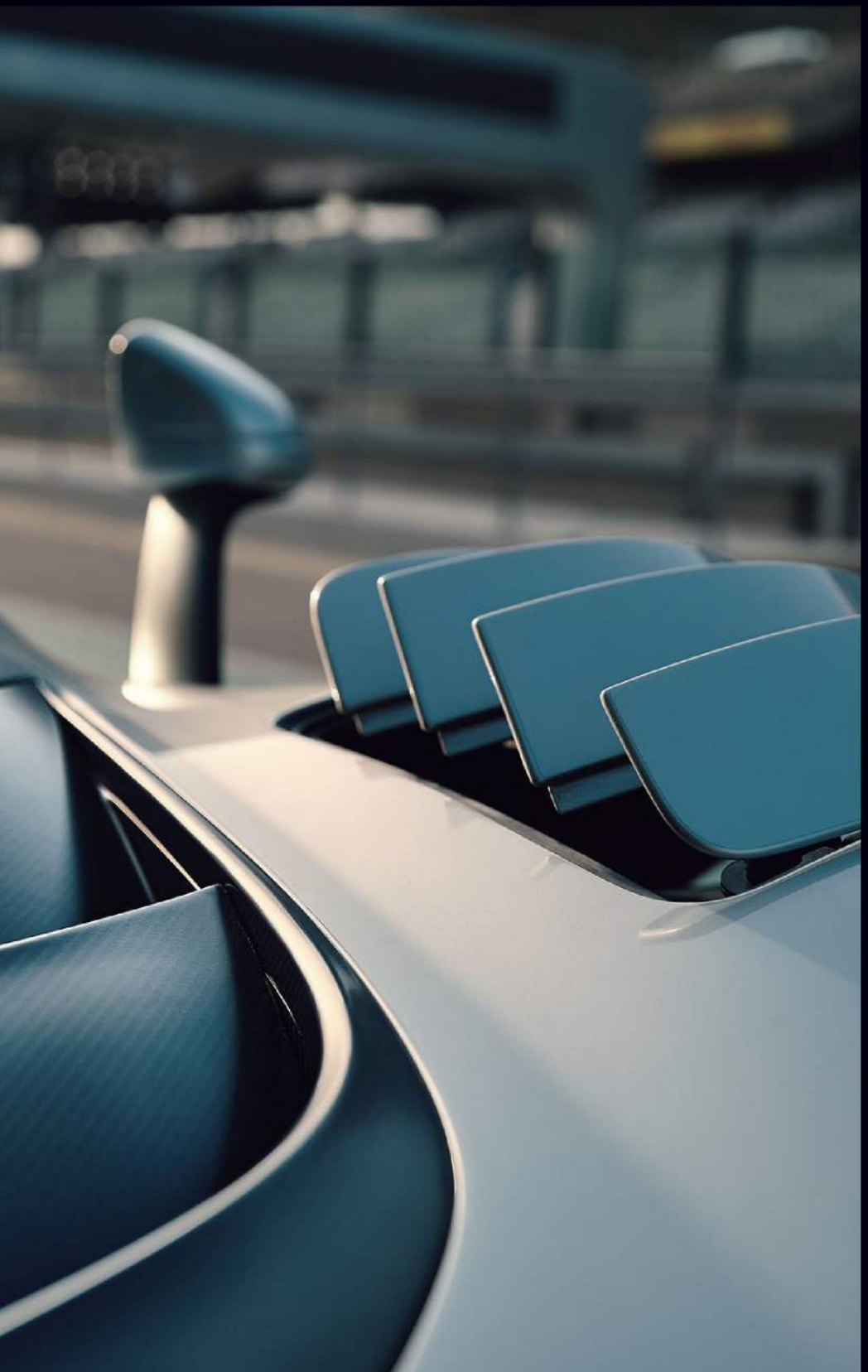

AMG
N 267

AMG

Exceptional attention

Built not just for display

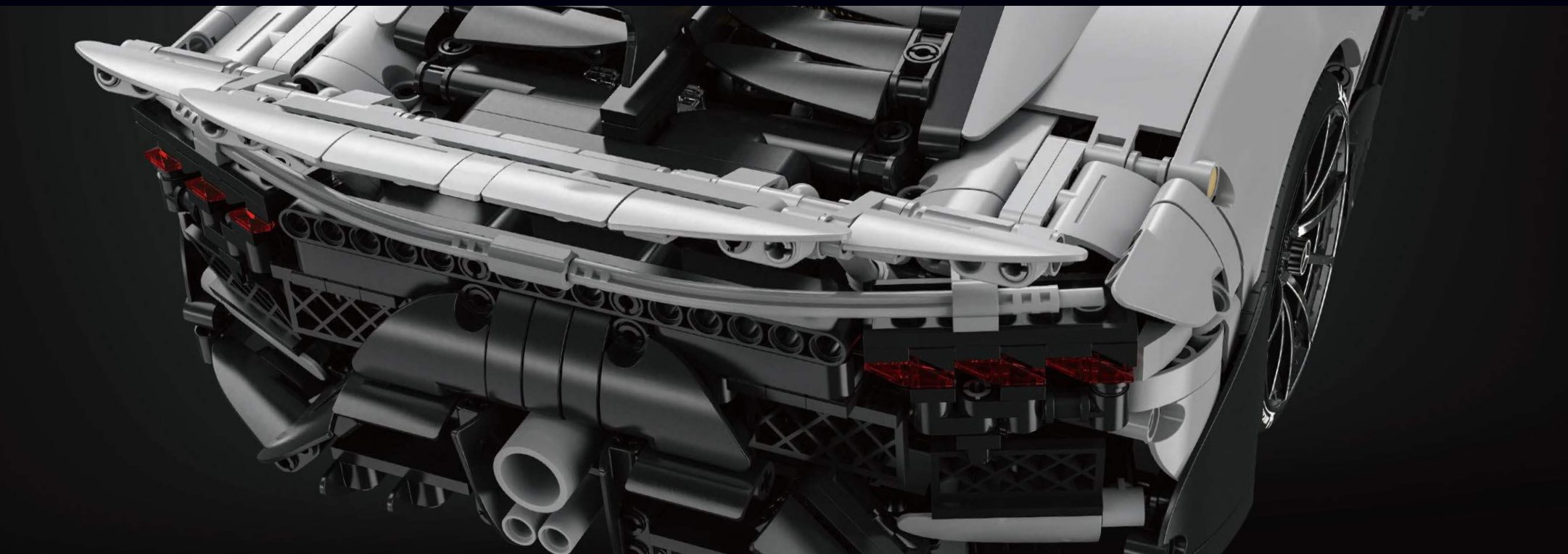

PERFORMANCE

Imagine new possibilities

Almost identical

Being German myself and very familiar with the automotive world, the tremendous respect I hold for the AMG brand has only grown during the "Mercedes-AMG ONE" project. The aura exuded by the AMG brand represents a century of honorable Silberpfeil motorsport tradition.

The unmistakable, uncompromising shape of the Mercedes-AMG ONE hypercar represents the principal Mercedes-AMG design DNA in modern form.

When studying the construction of the actual vehicle, you realize how the chassis, the drivetrain, the suspension are incredibly sophisticated and well thought-out. Straightforward, but complex at the same time.

How to do justice to this car and draft a faithful 1:8 interpretation out of plastic beams and gears in a functional RC toy? The compulsion to bring something new to the table in terms of building techniques and mechanisms becomes stronger over time, until nothing new remains. Puzzling 3000+ parts into a working machine behind a flowing aerodynamic sculpture is quite a challenge.

The sleek car bodywork introduces many constraints, so you have to keep all the mechanisms as compact and close to the ground as possible.

Unique details, such as the exhaust, front and rear lights, and cockpit elements, have to be in the right locations and look completely natural.

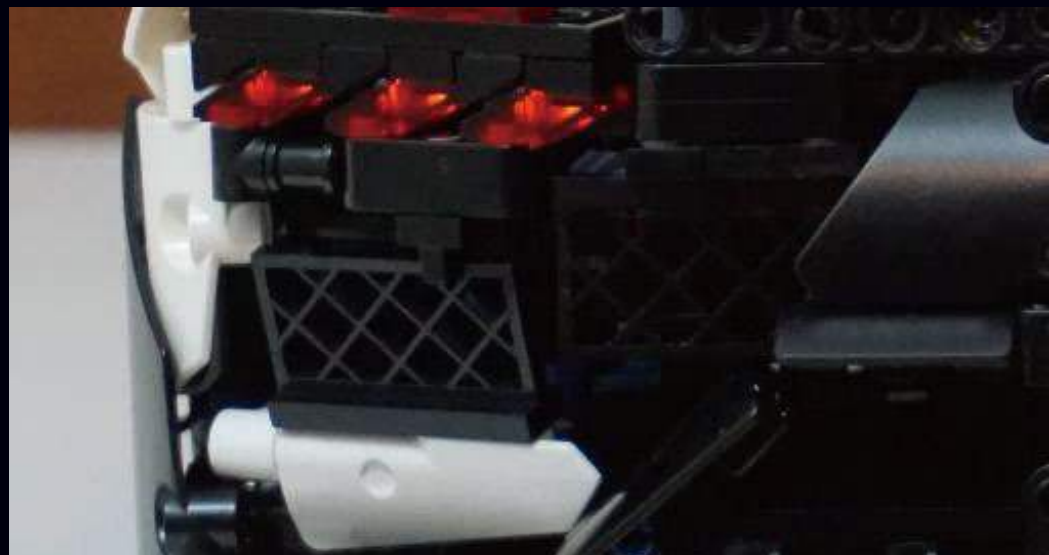

My involvement in these processes definitely has been an exciting and rewarding experience. And I really think our work resulted in a fun indoor tracktoy and worthy collector's item. The kit is far from average and definitely not for beginners. I was kindly allowed to leave my individual note and sign the box – a big thanks to all!

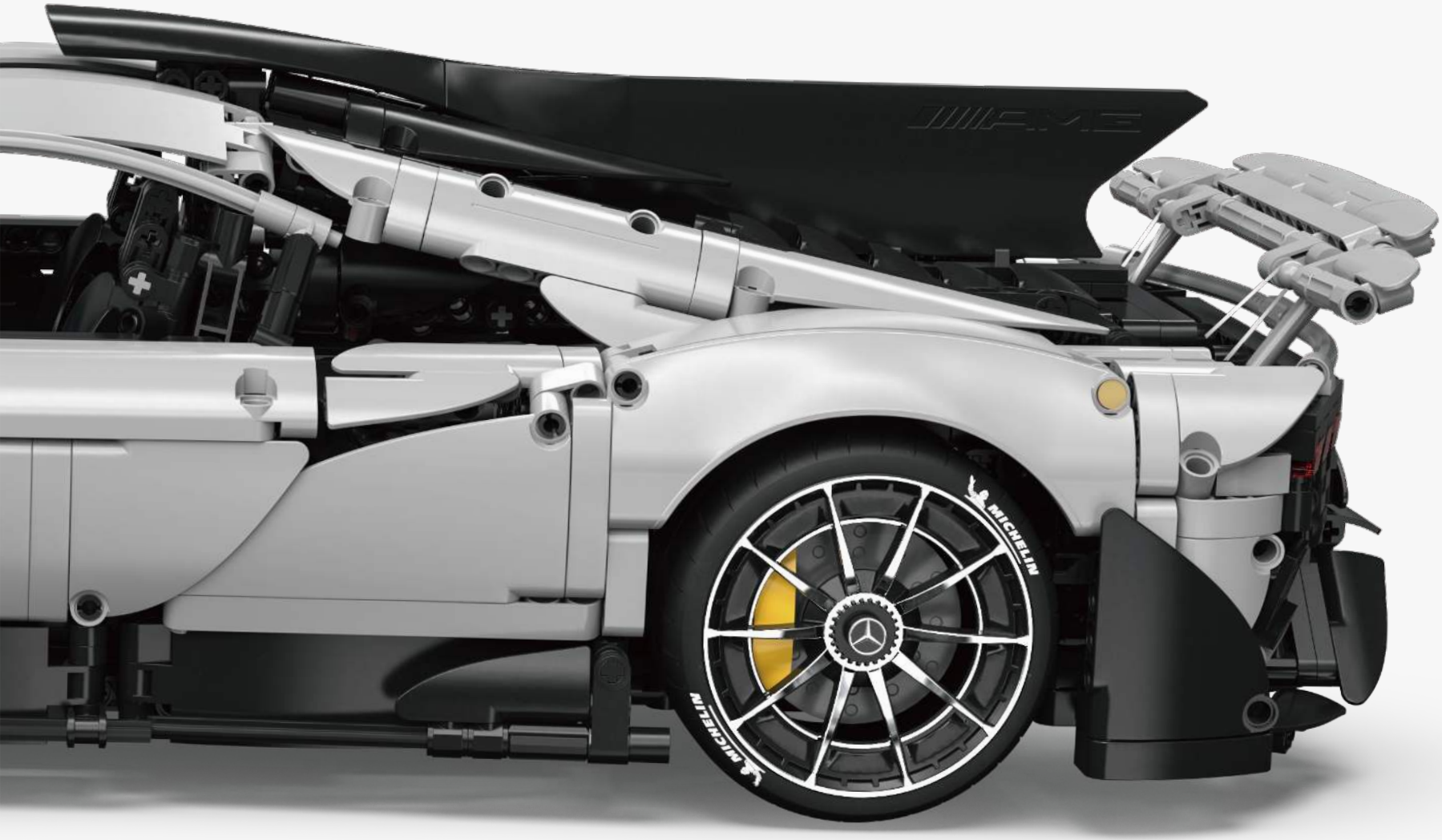
AMG
MICHELIN
MICHELIN

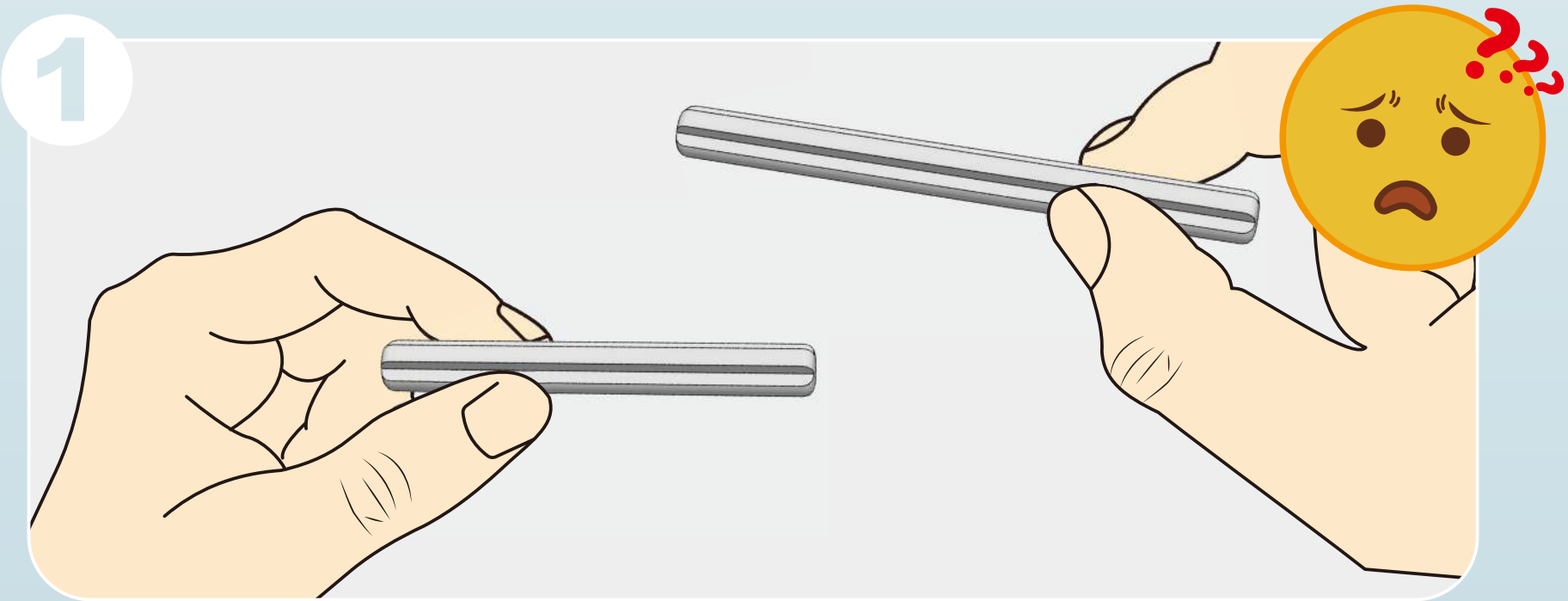
1

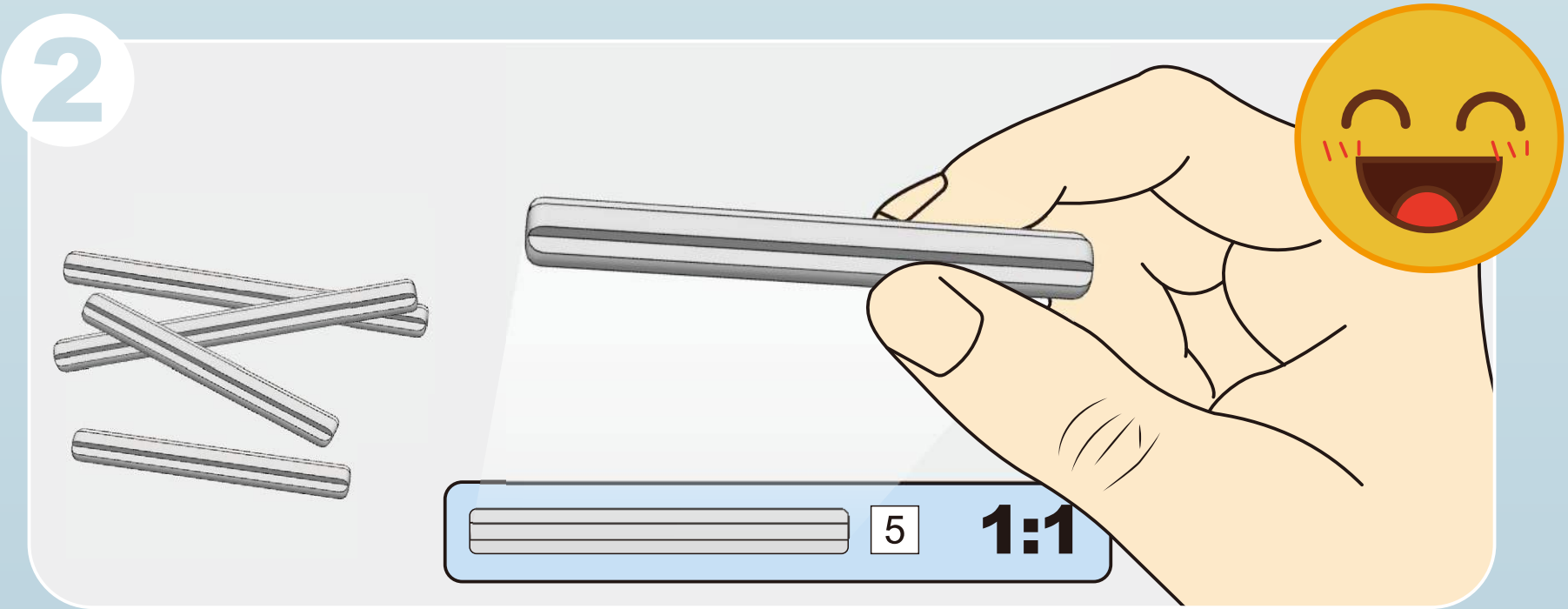
2
5
1:1

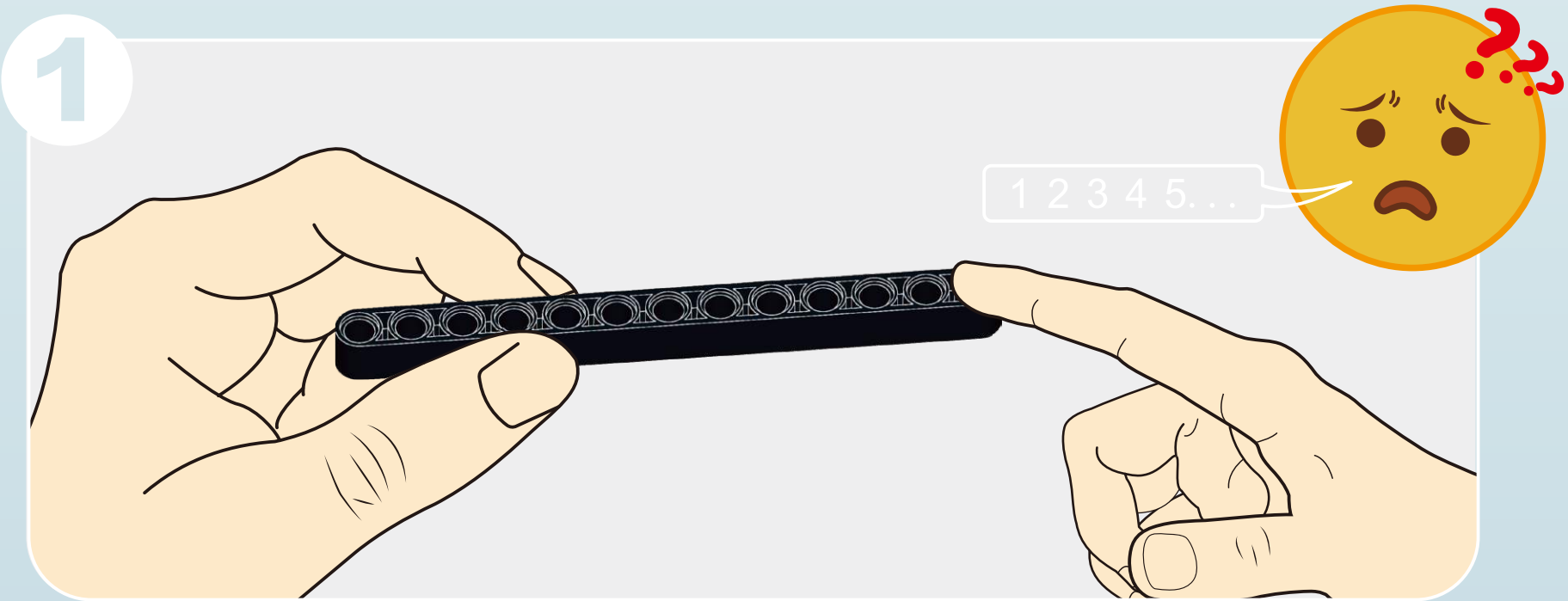
1
1 2 3 4 5. . .

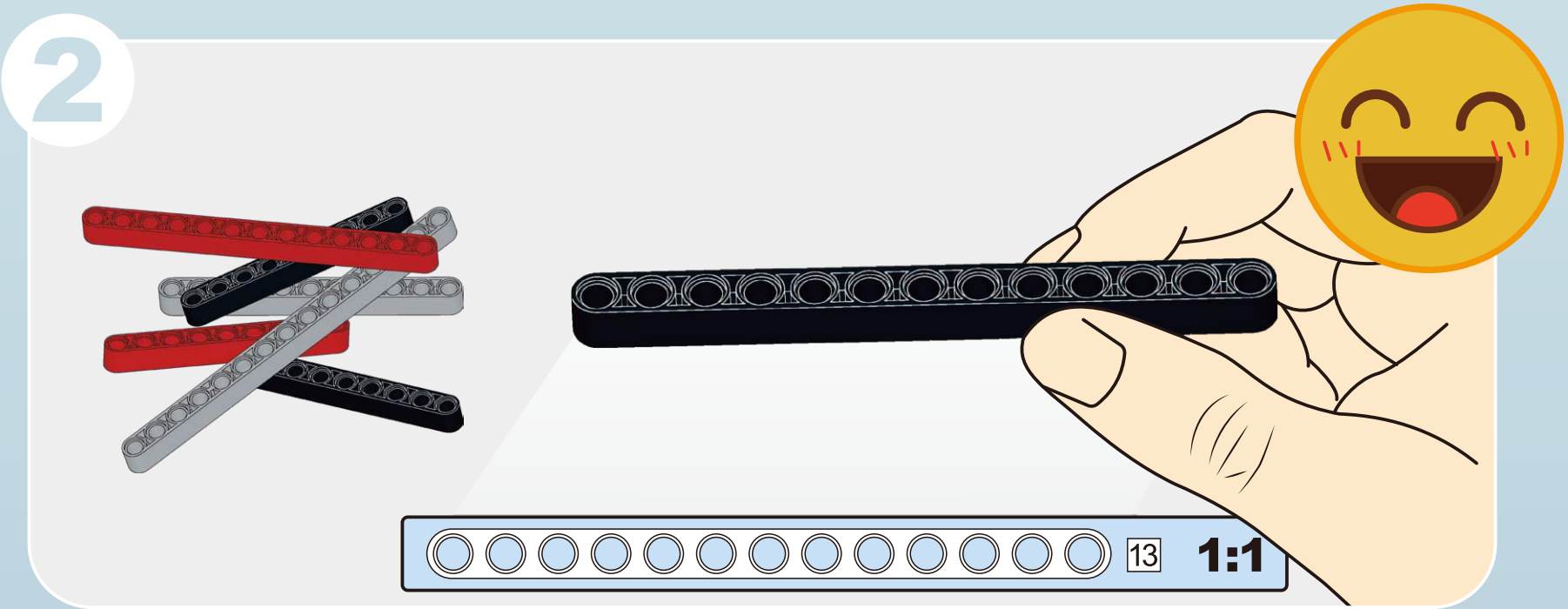
2
13
1:1

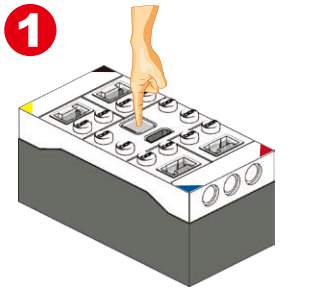
1

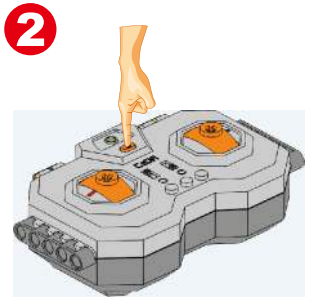
2

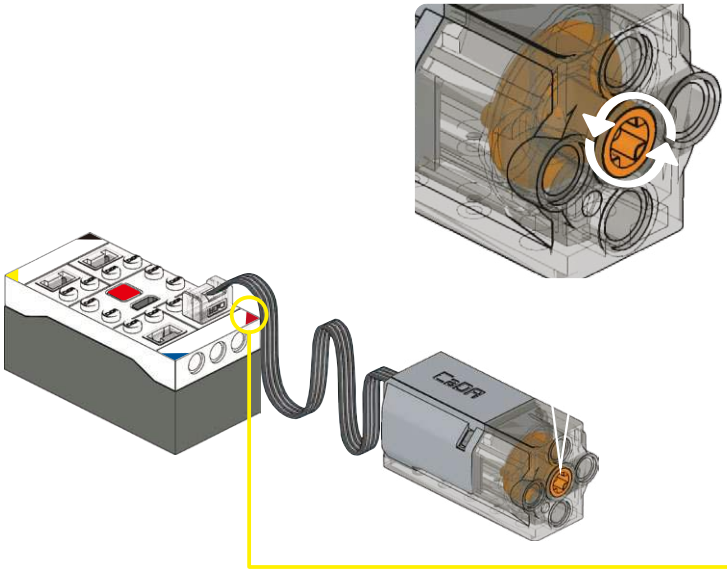

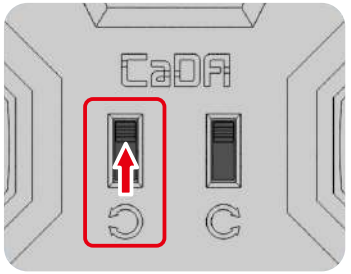
CaDA

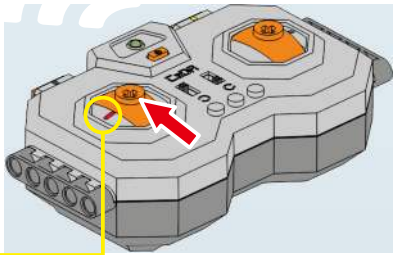

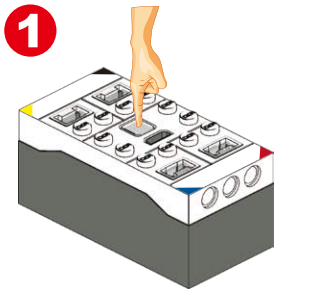
1

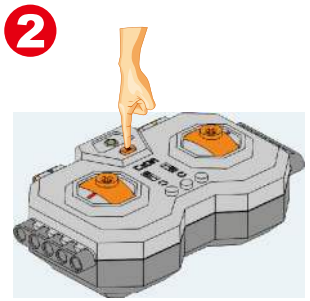
2

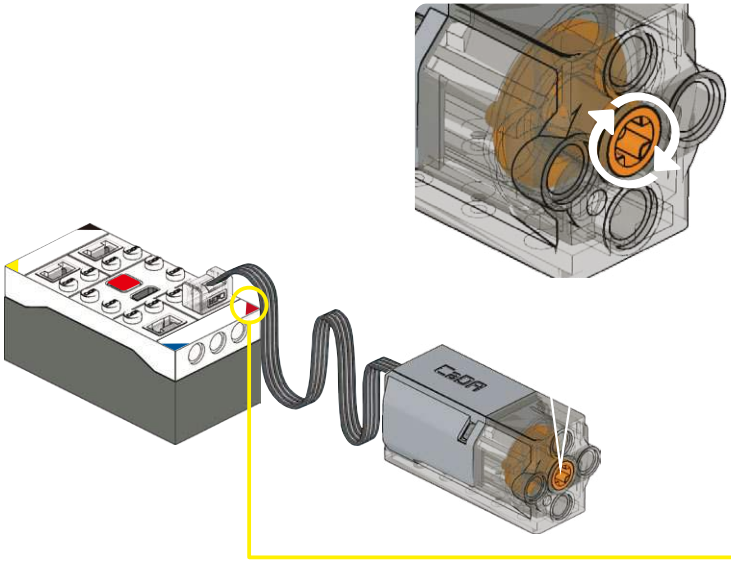

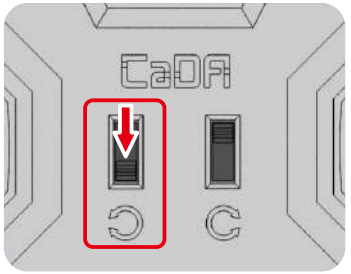
CaDA

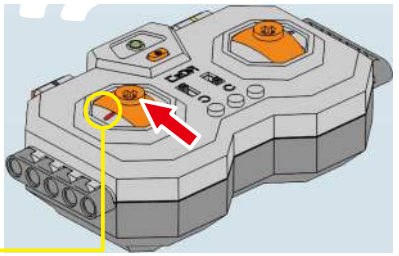

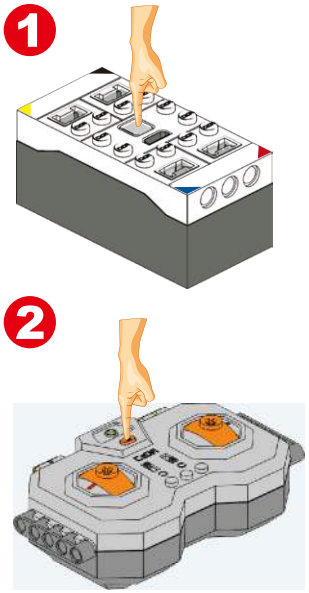
1
2

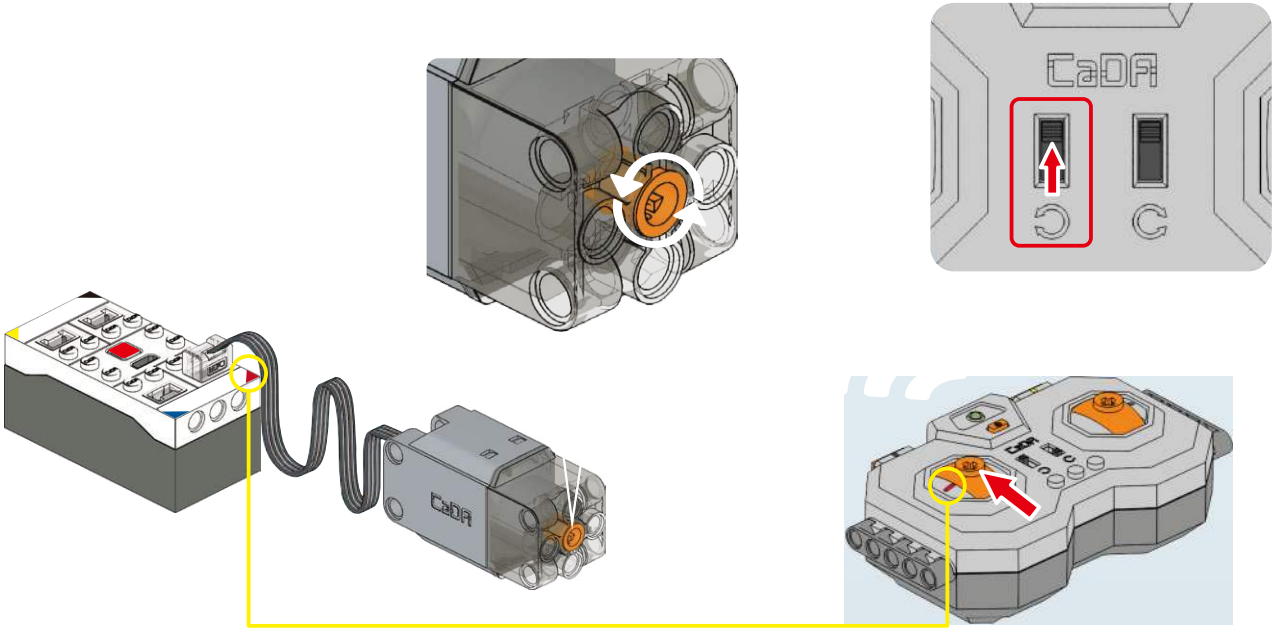
CaDA
CaDA

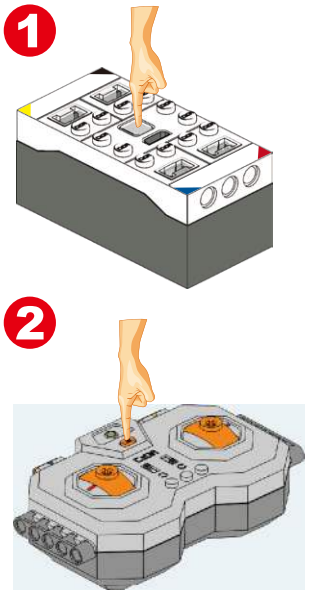
1
2

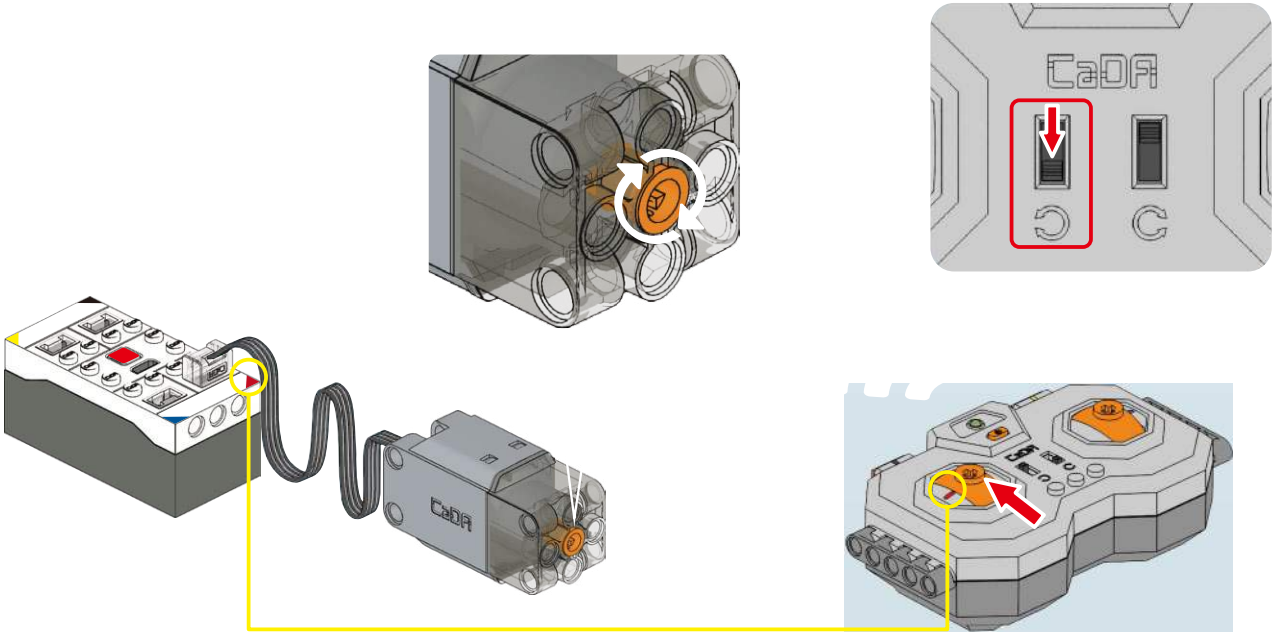
CaDA
CaDA

1

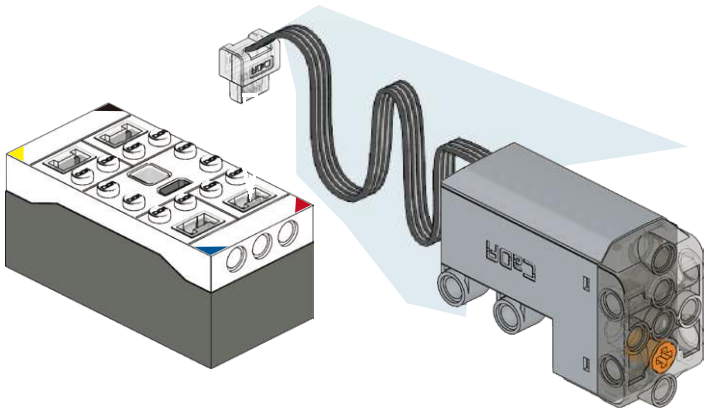

2

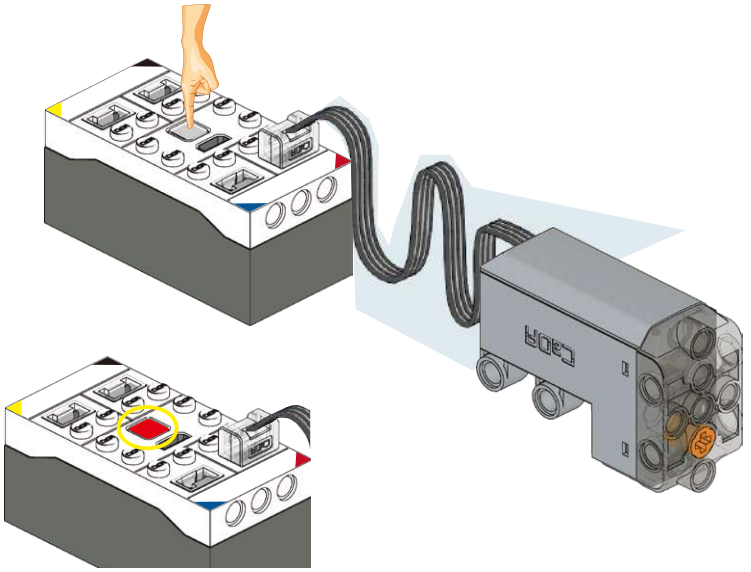

3

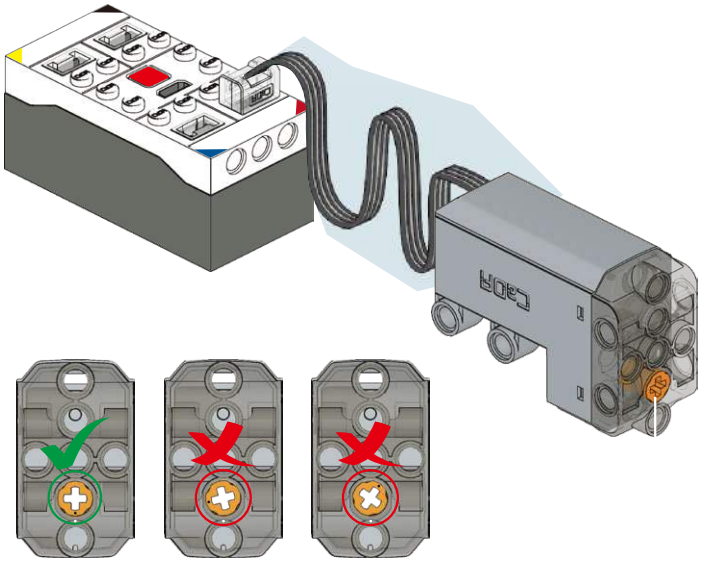

4

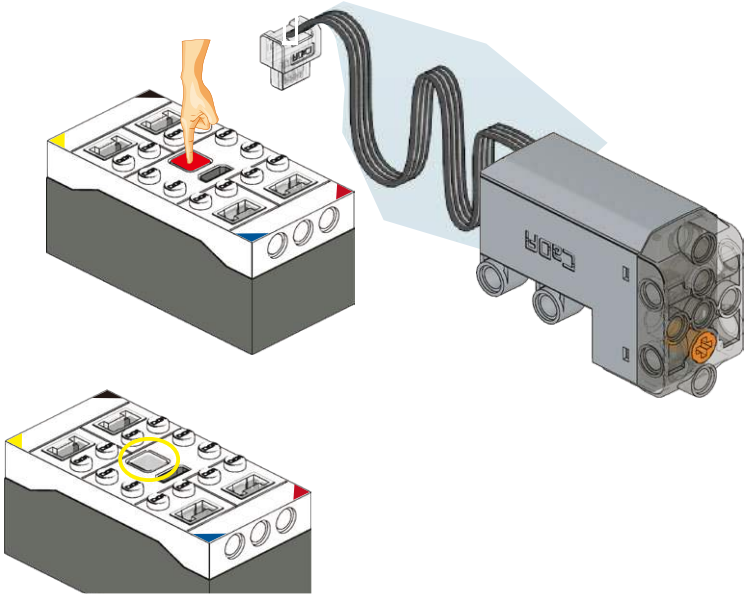

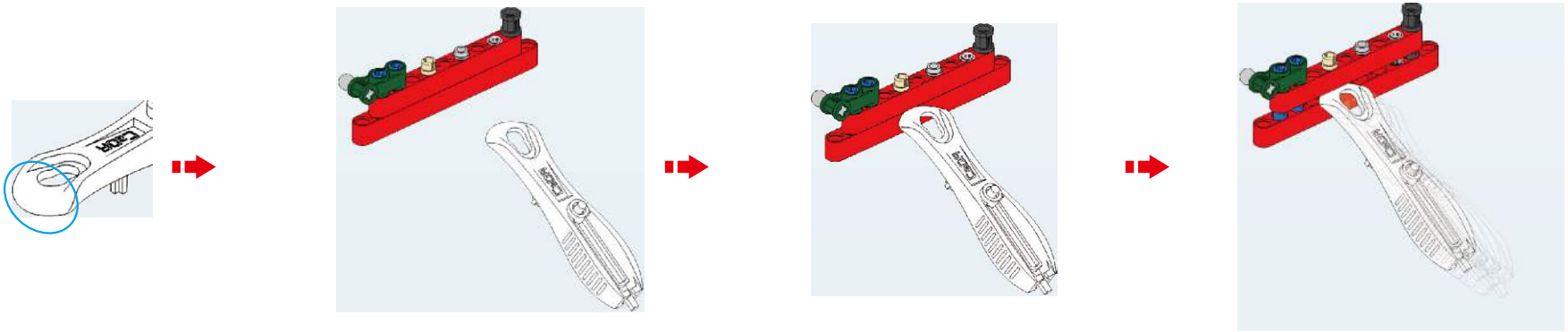

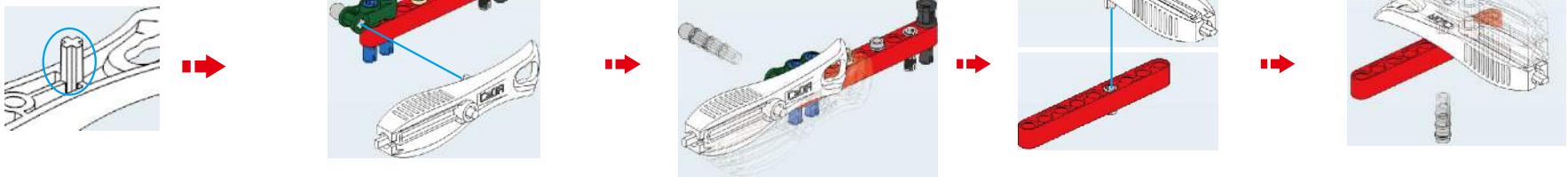

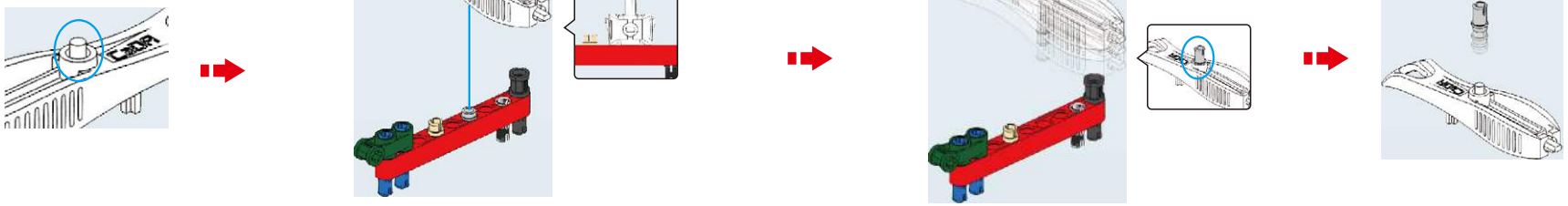

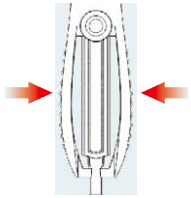

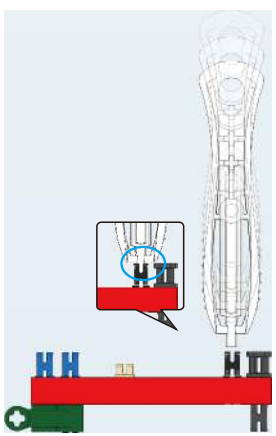

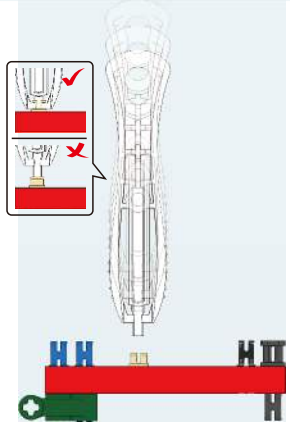

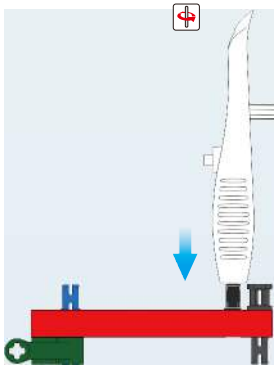

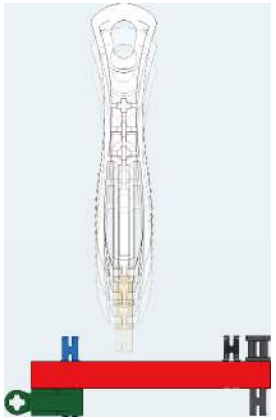

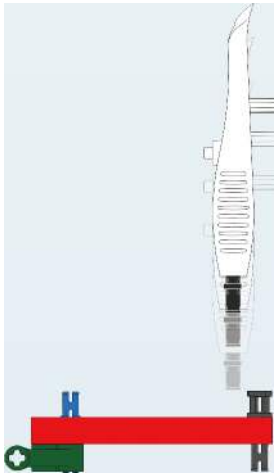

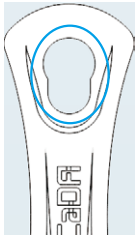

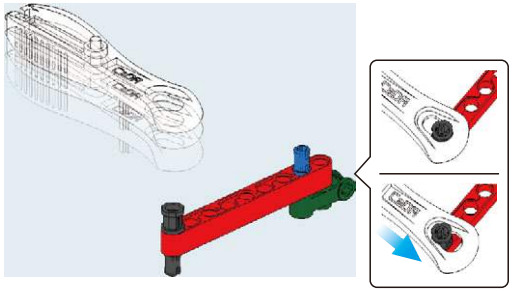

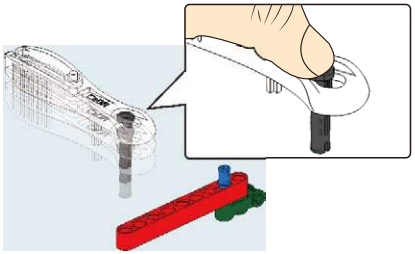

A

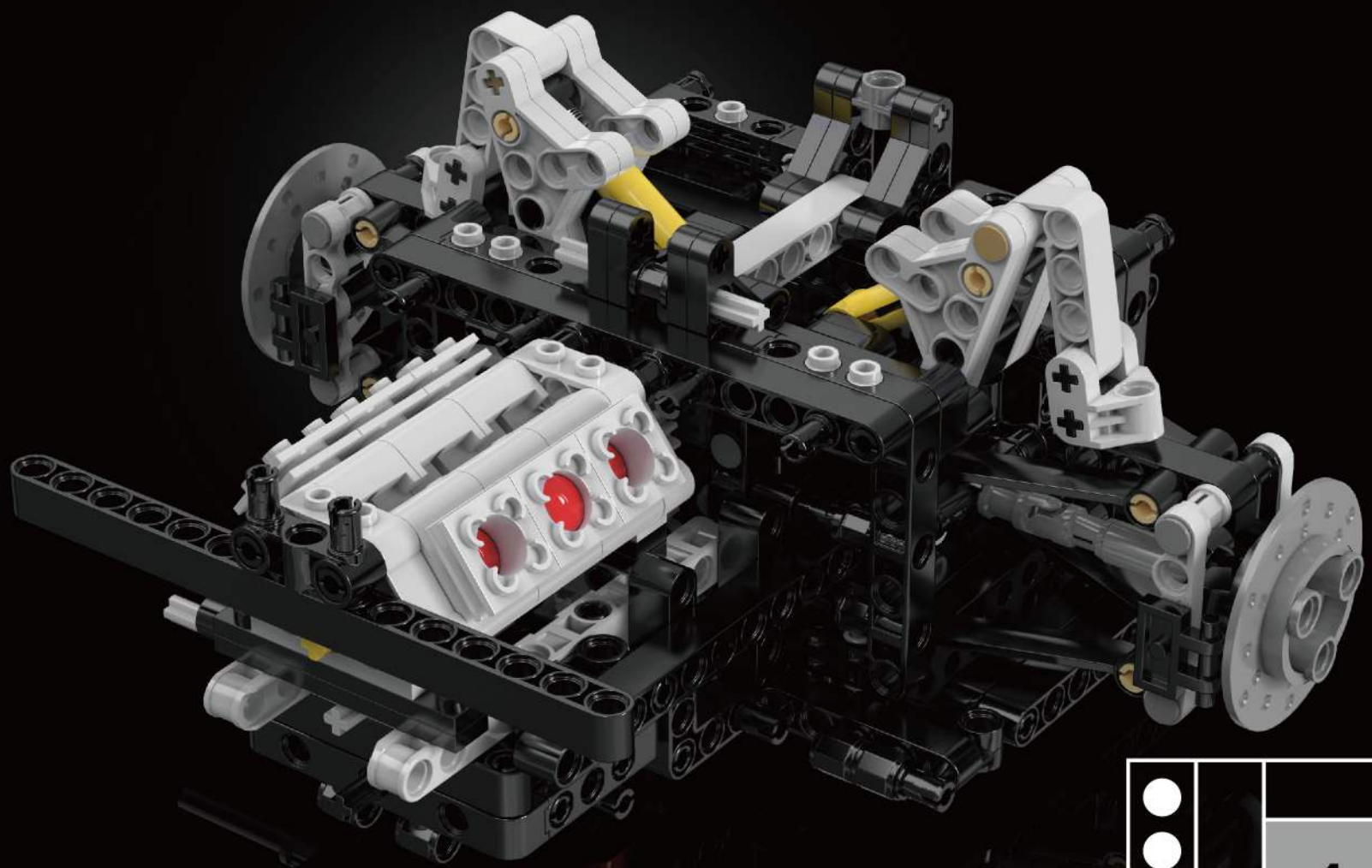

BAG 1

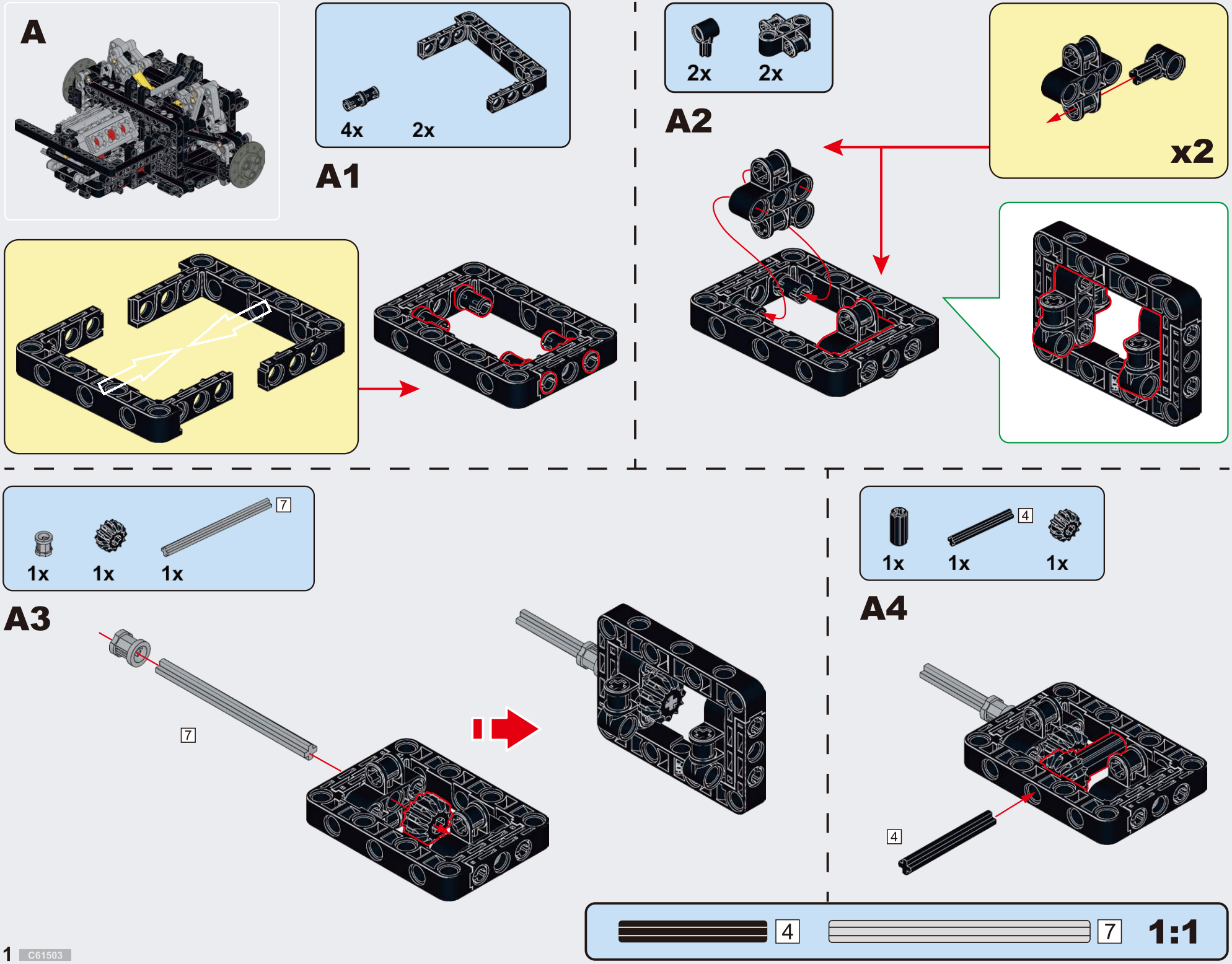
A
4x
2x
A1
2x
2x
A2
x2
1x
1x
1x
7
A3
7
1x
1x
1x
4
A4
4
4
7
1:1

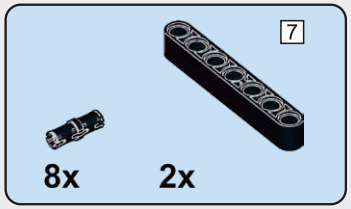

A5

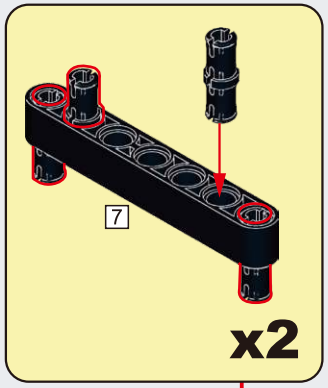

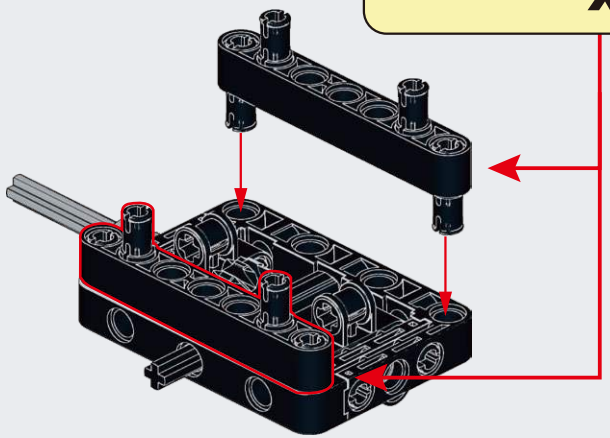

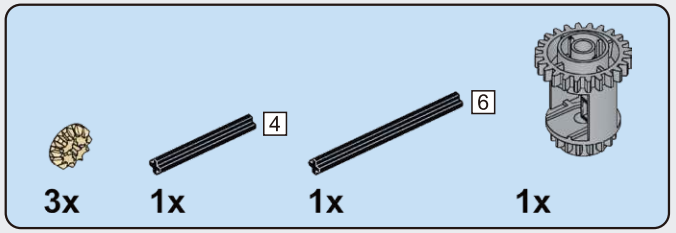

A6

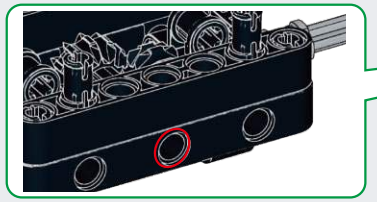

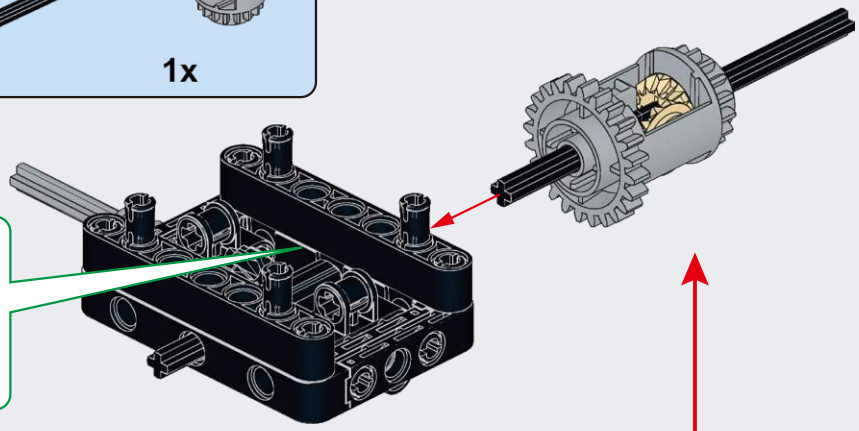

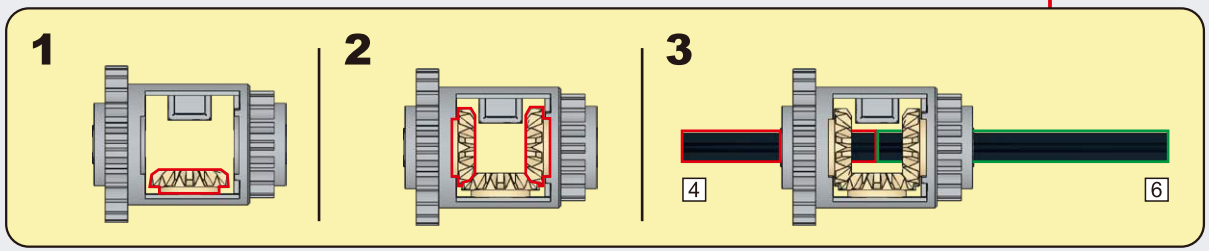

A7

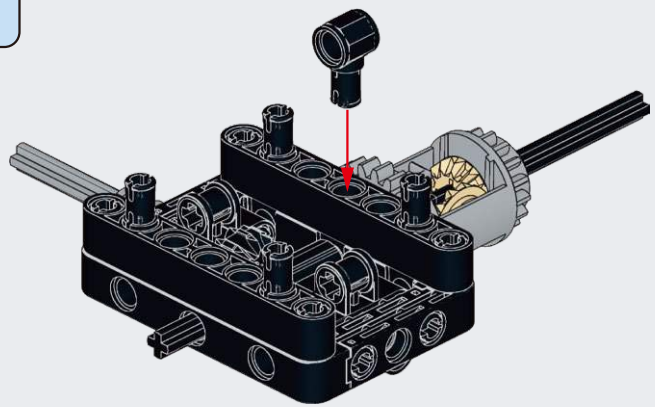

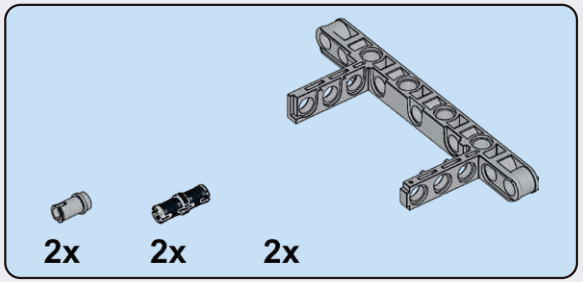

A8

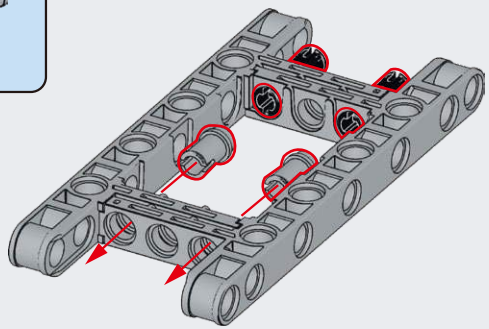

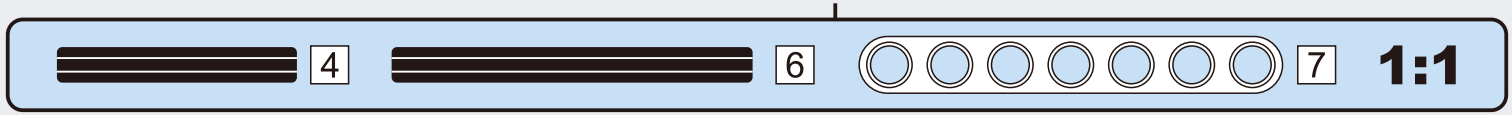

A9

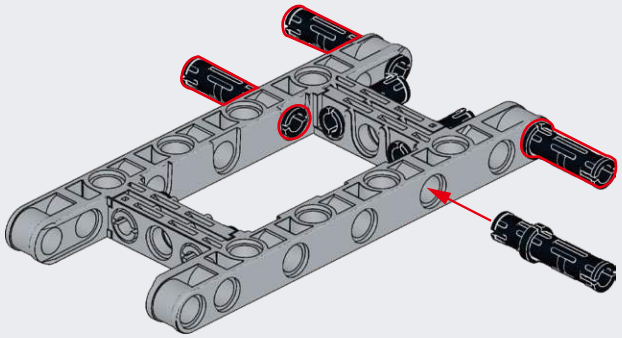

A10

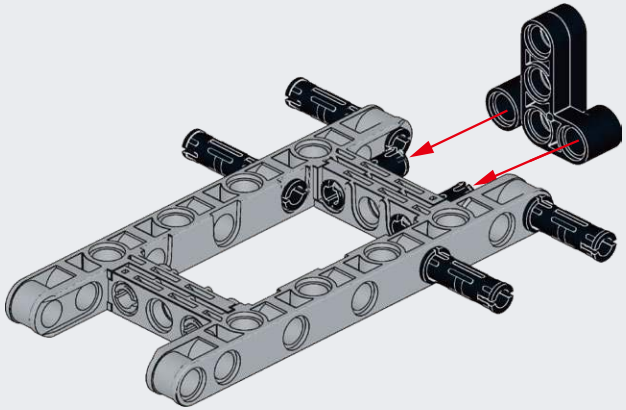

A11

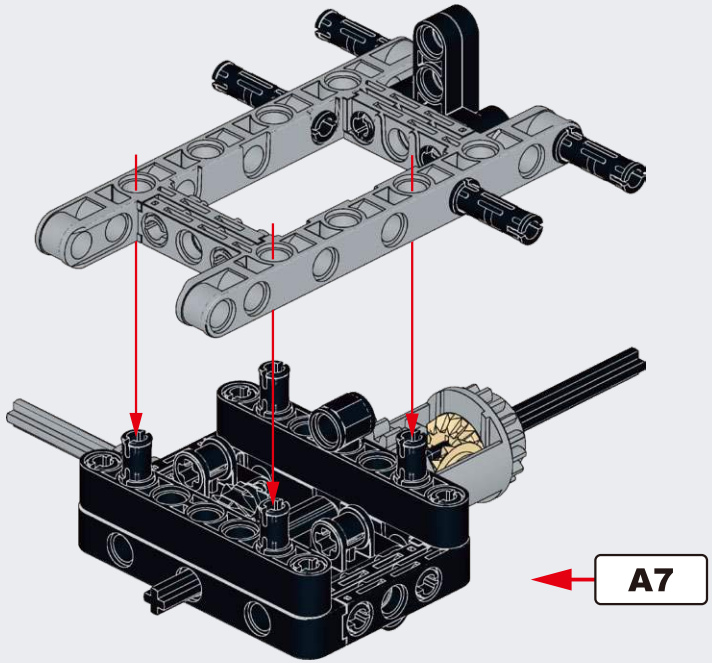

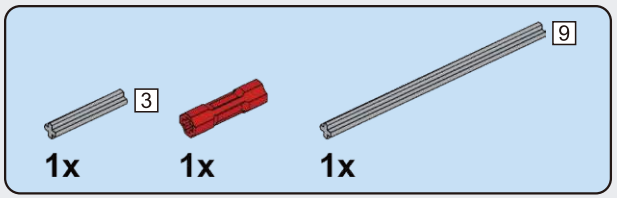

A12

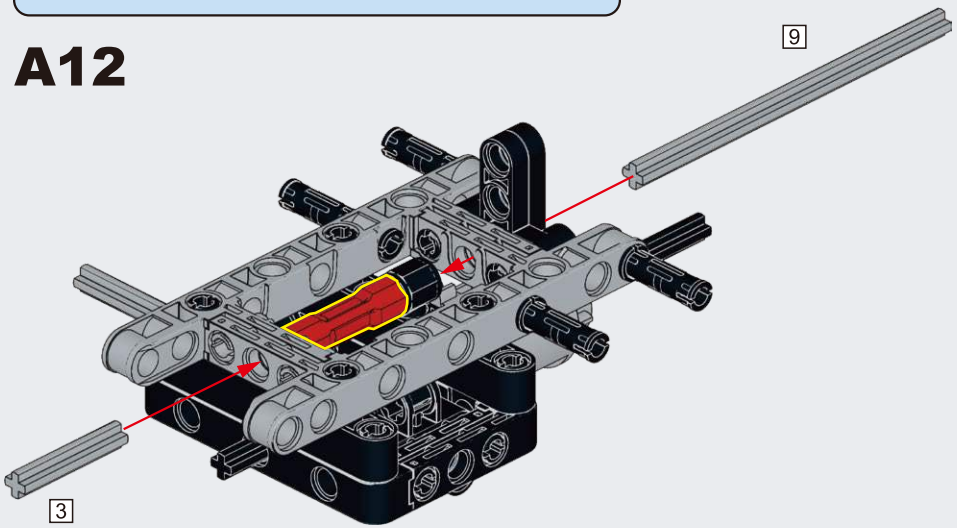

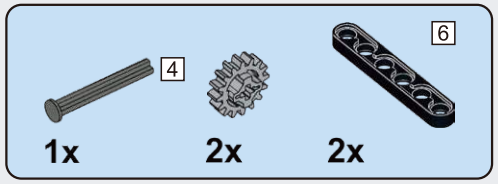

A13

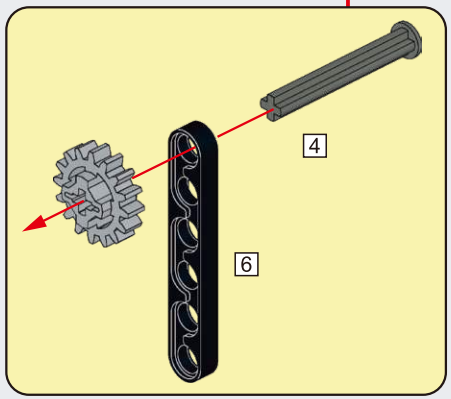

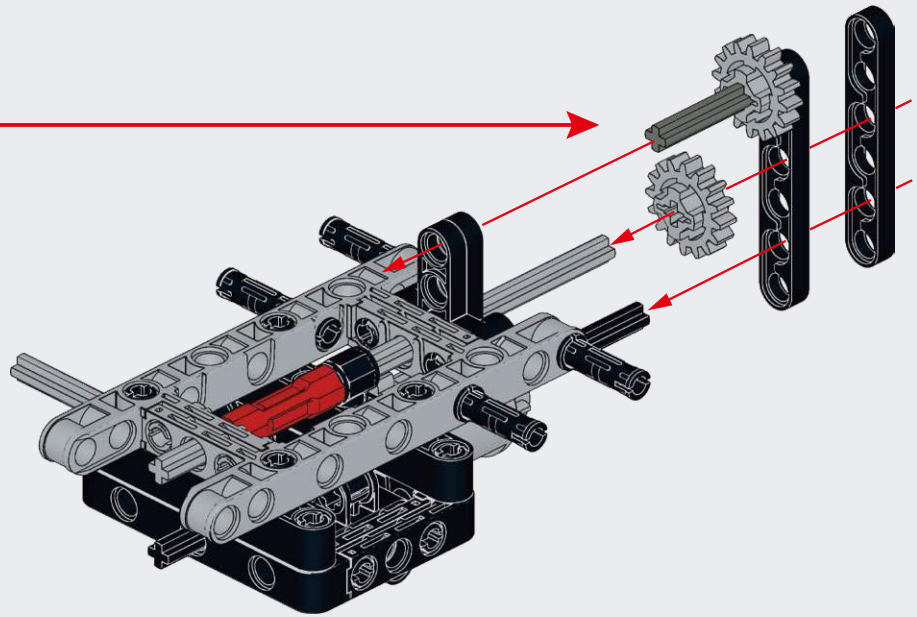

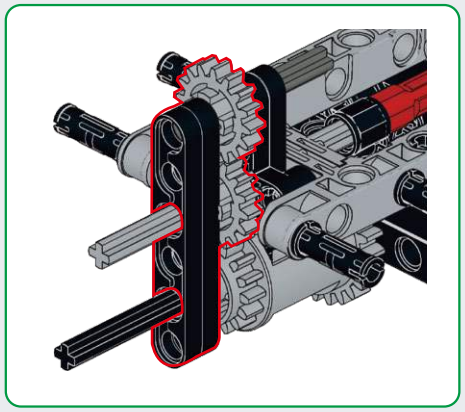

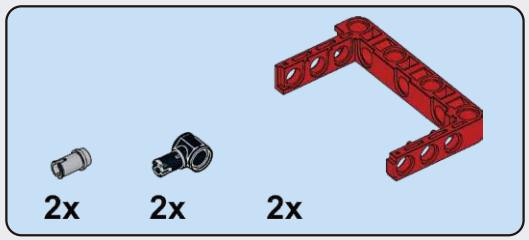

A14

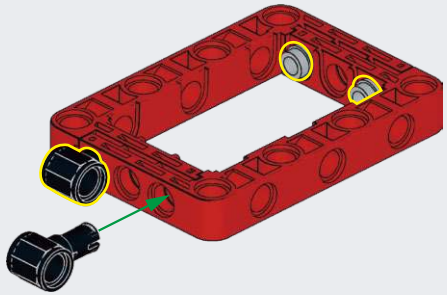

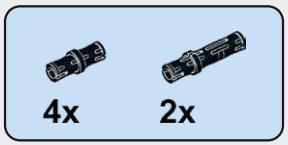

A15

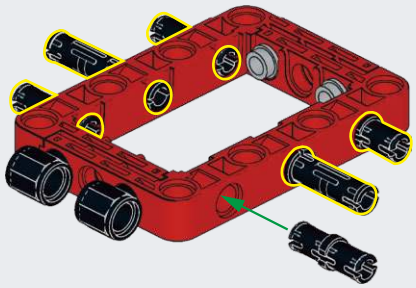

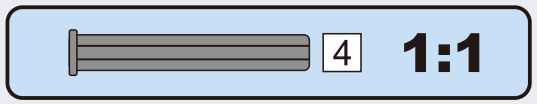

A16

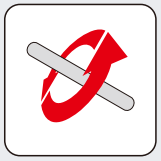

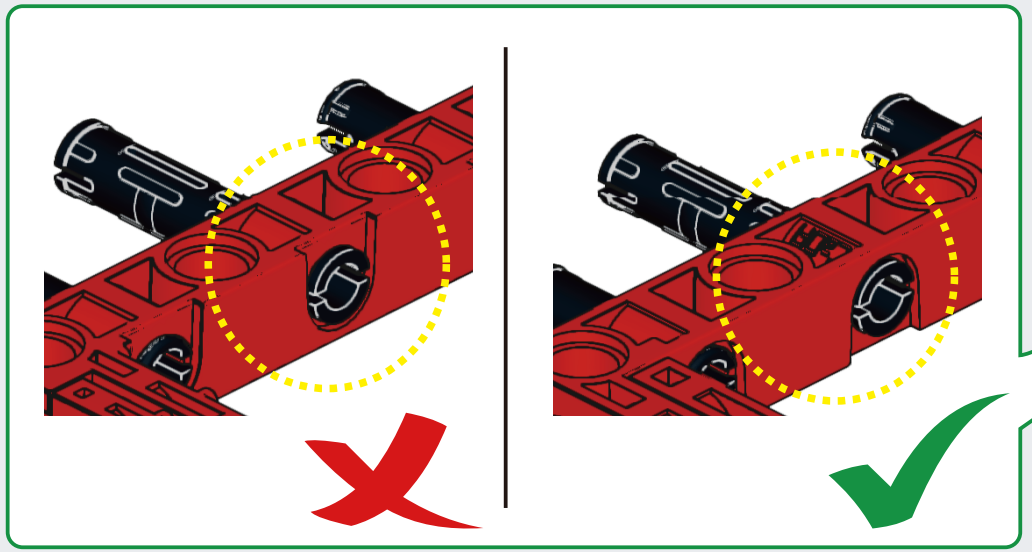

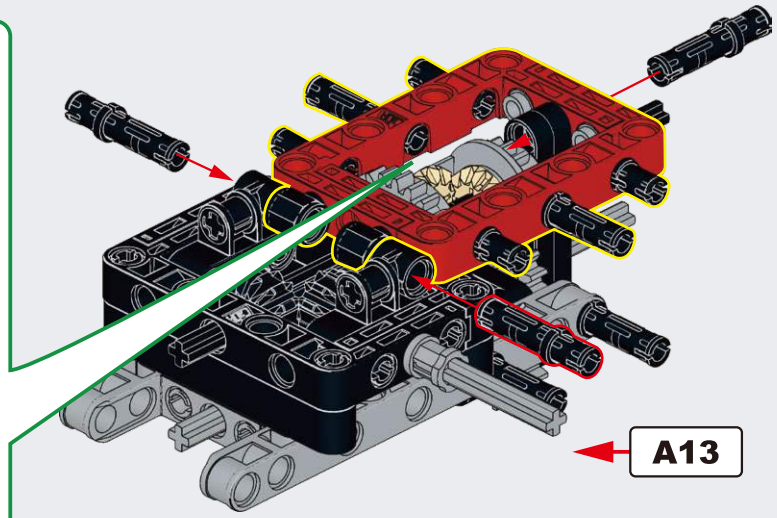

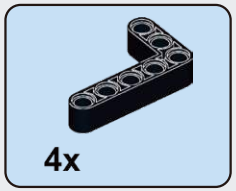

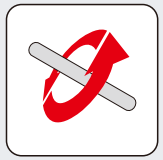

A17

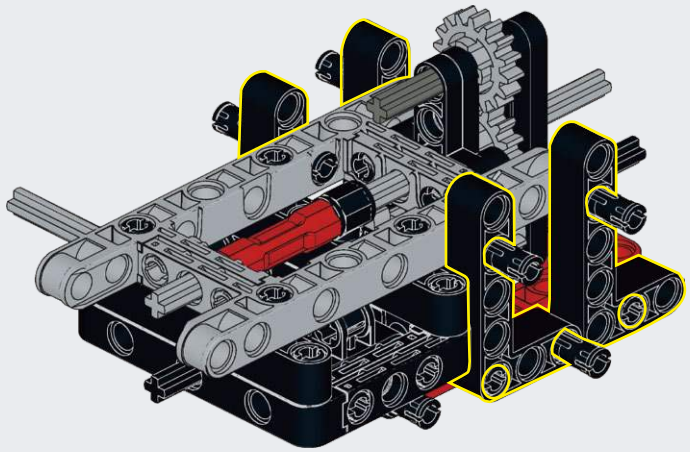

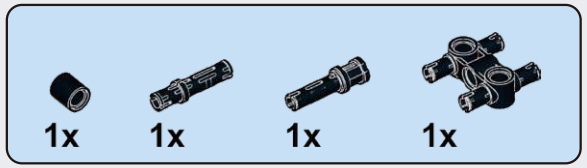

A18

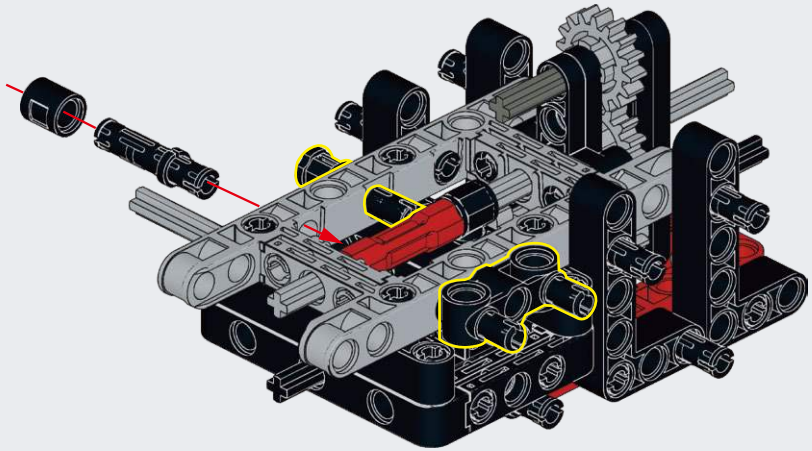

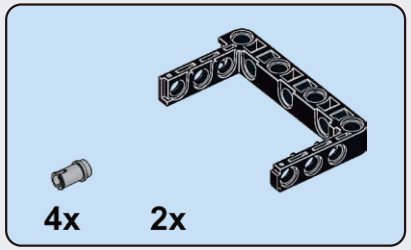

A19

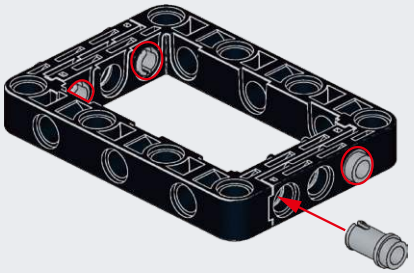

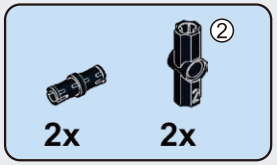

A20

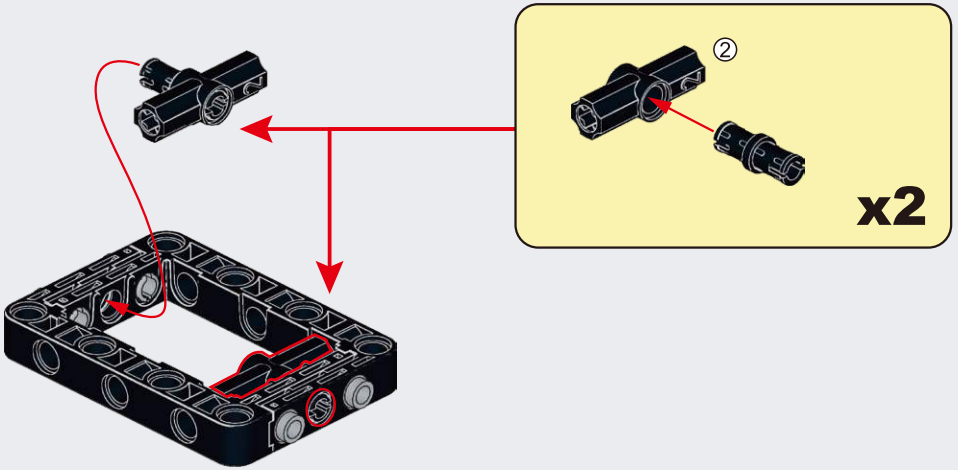

A21

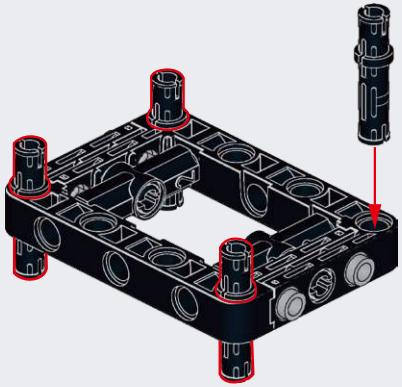

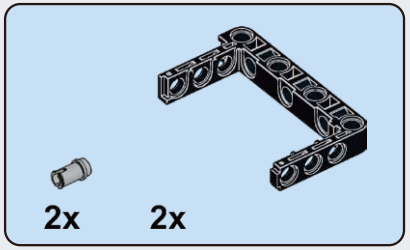

A22

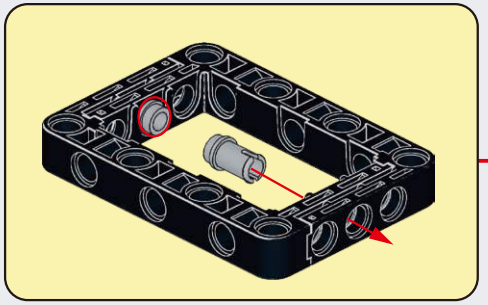

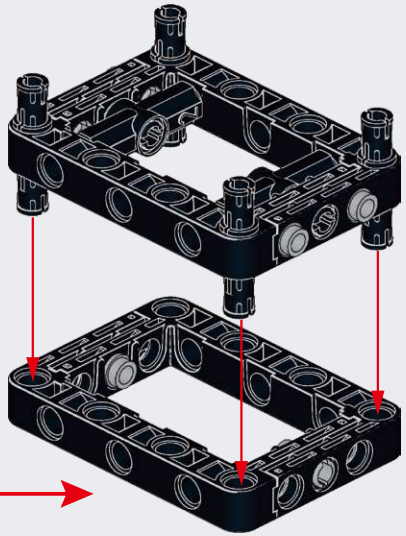

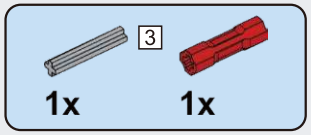

A23

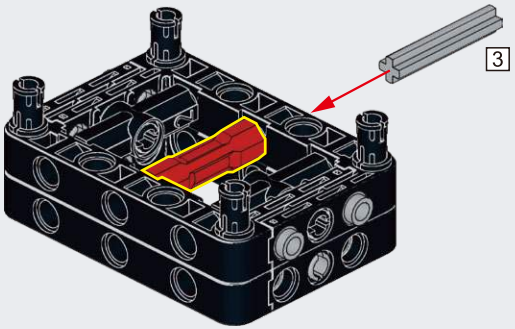

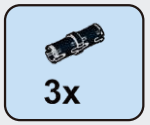

A25

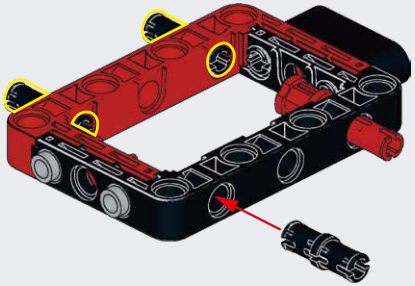

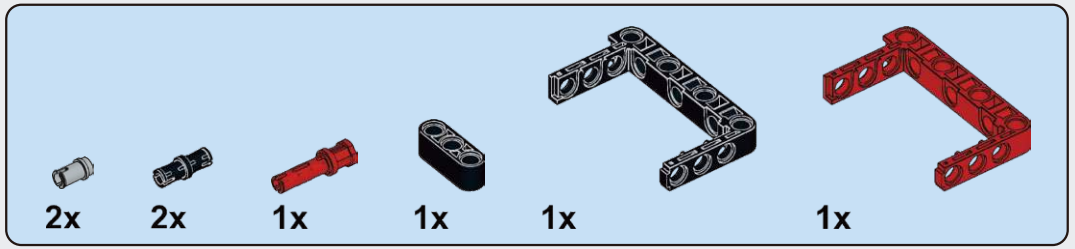

A24

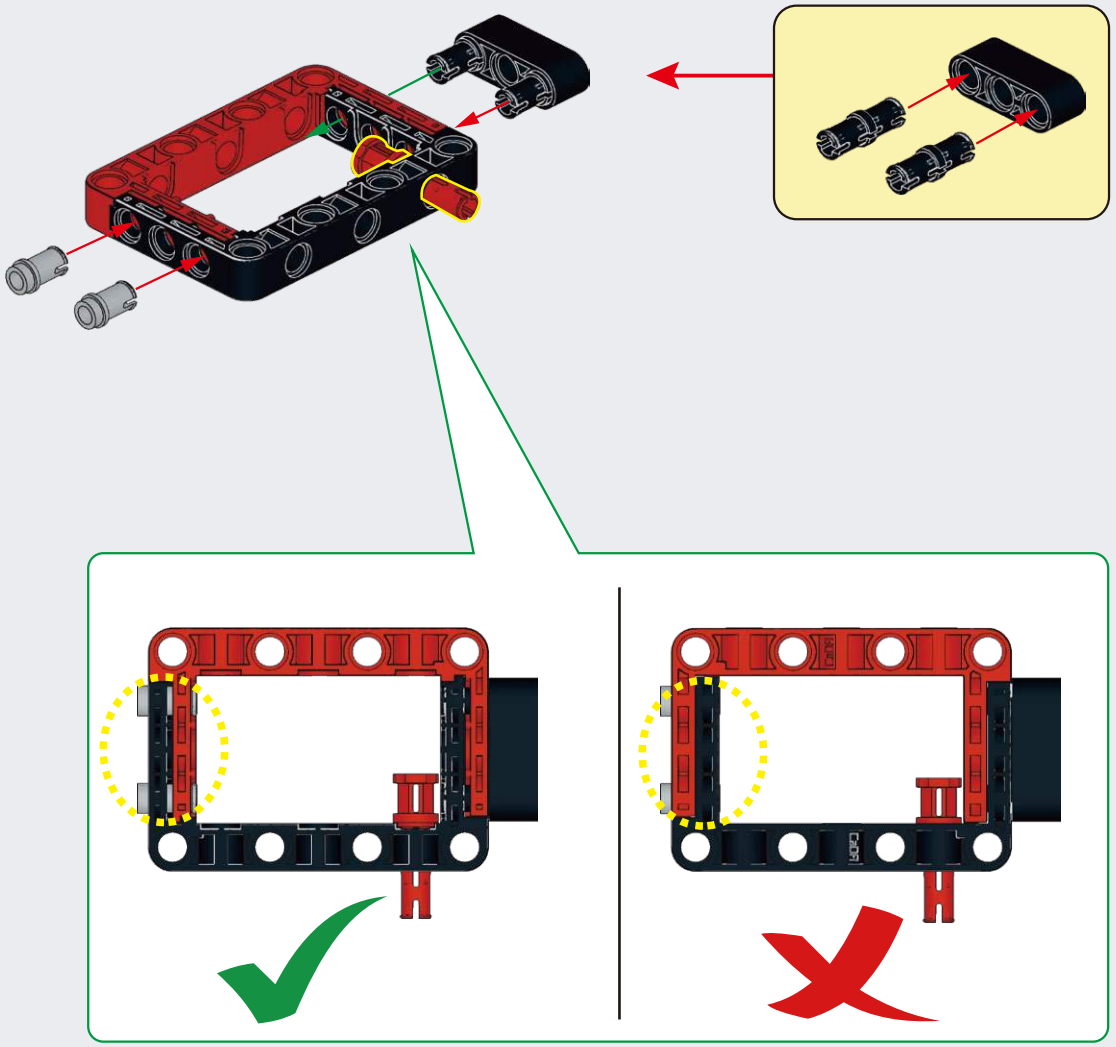

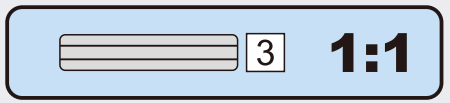

A26

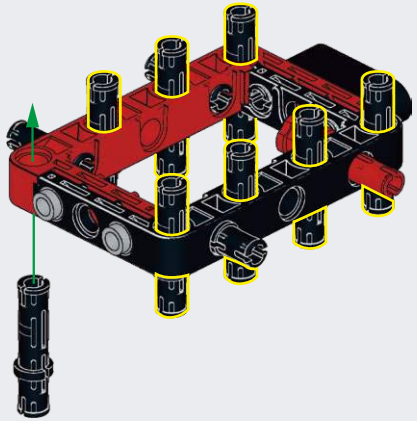

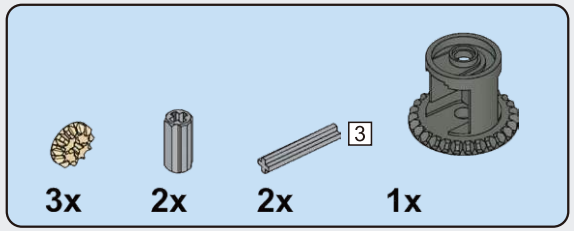

A27

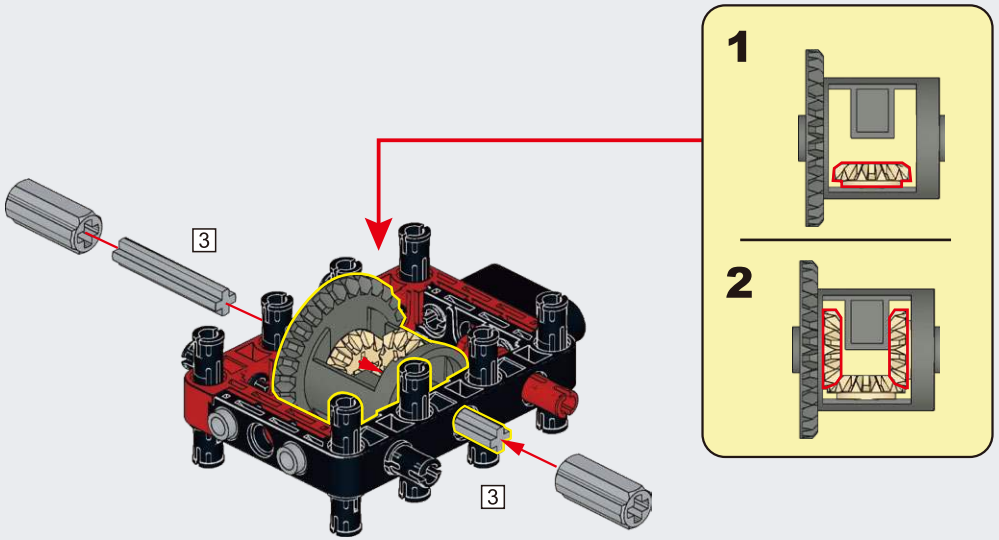

A28

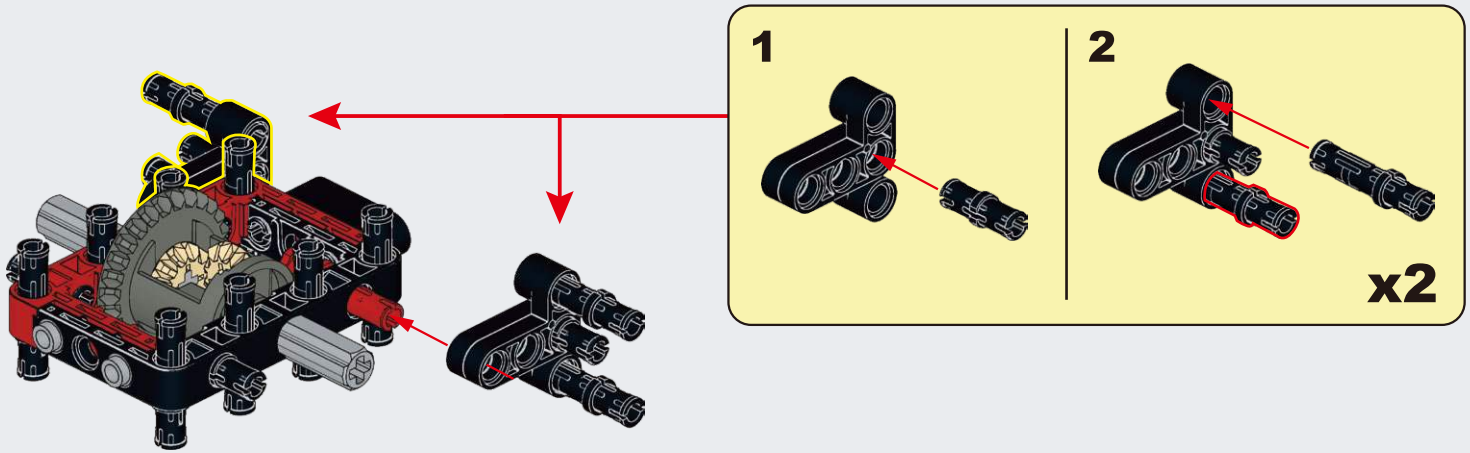

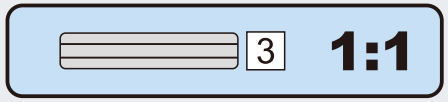

A29

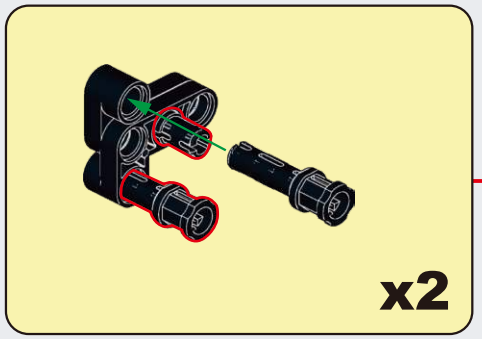

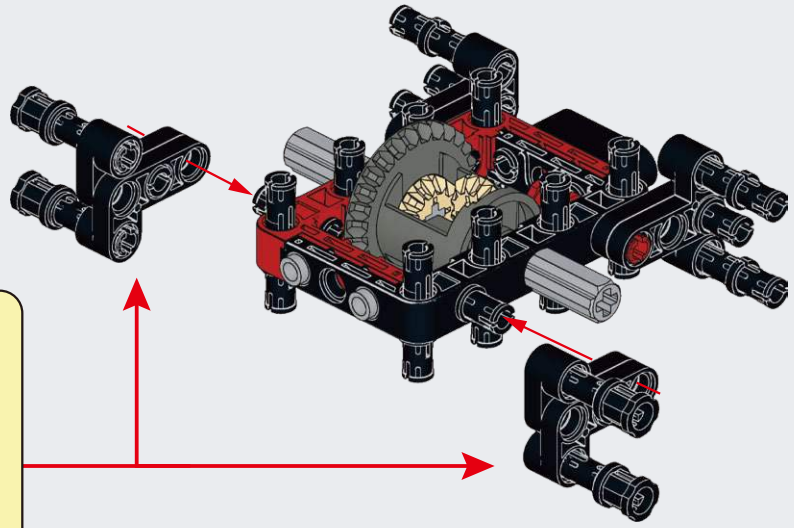

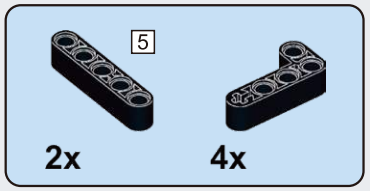

A30

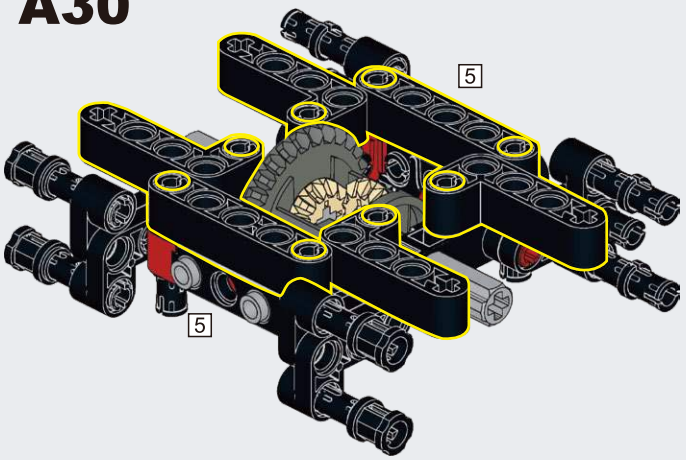

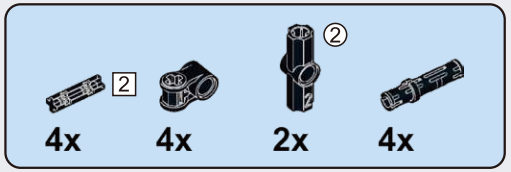

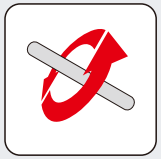

A31

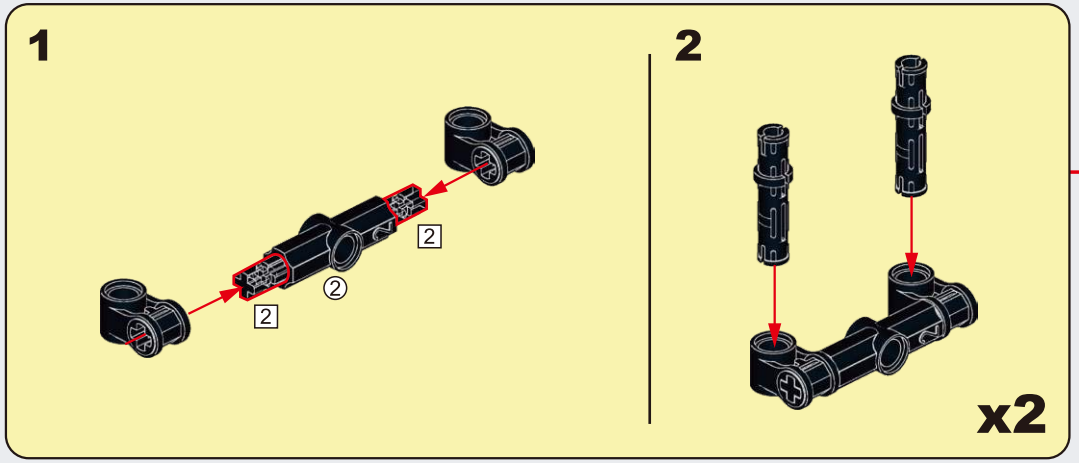

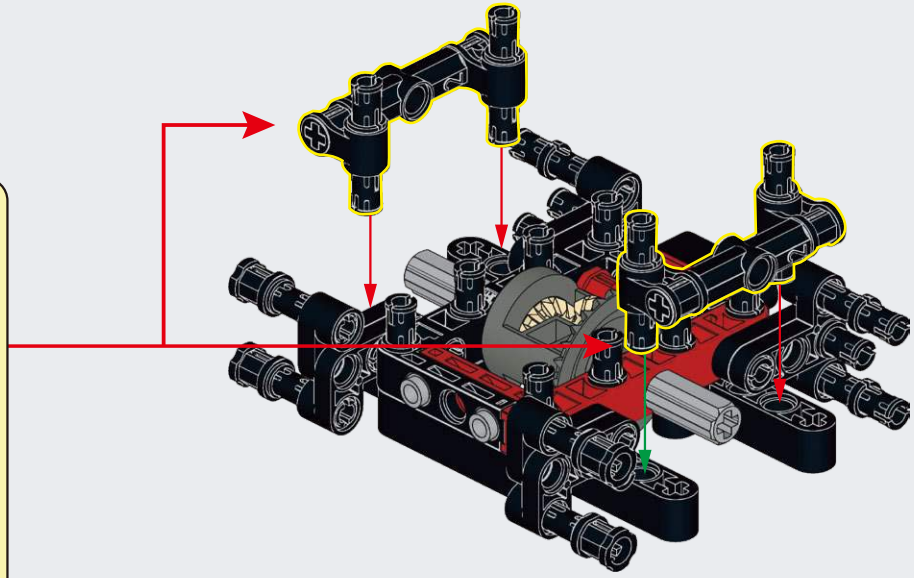

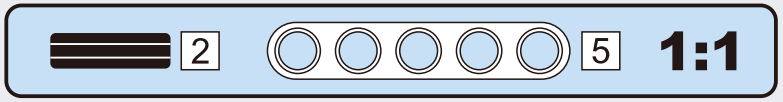

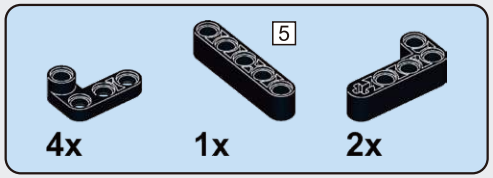

A32

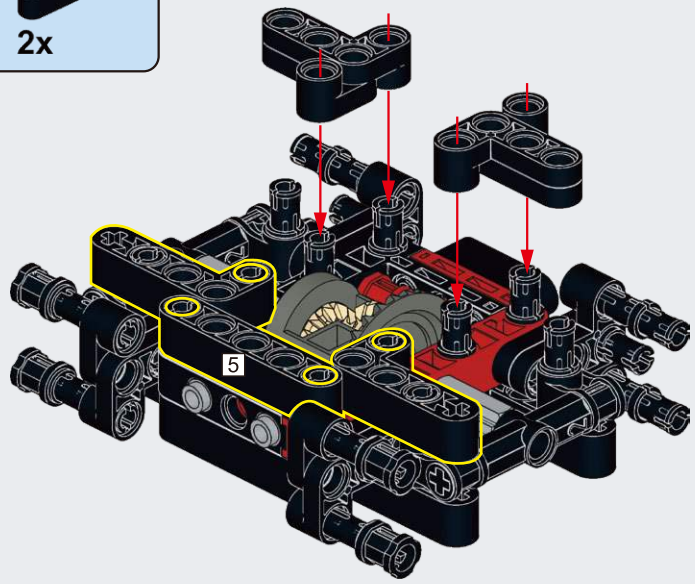

A33

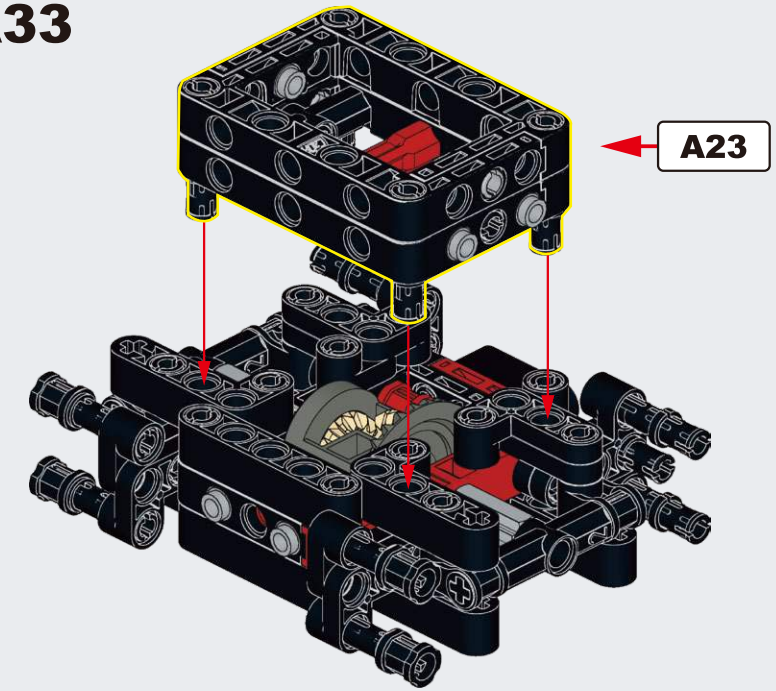

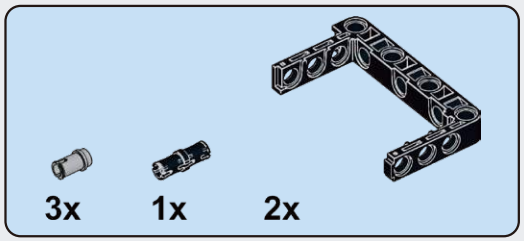

A34

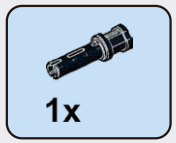

A35

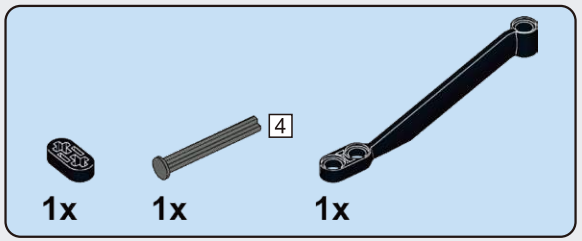

A36

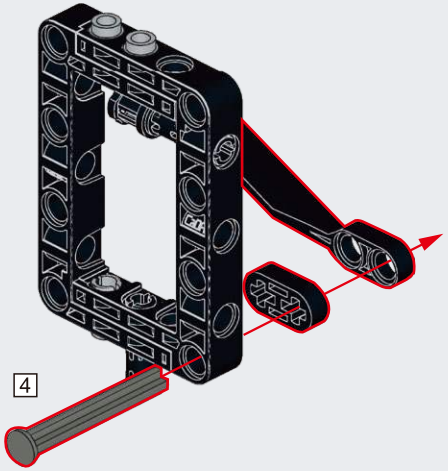

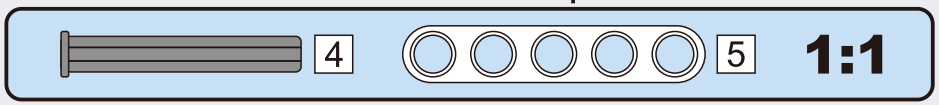

A37

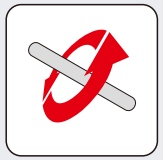

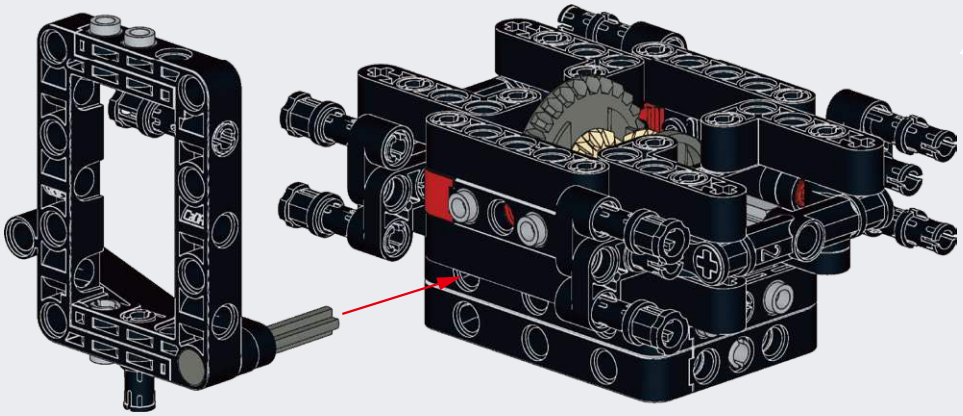

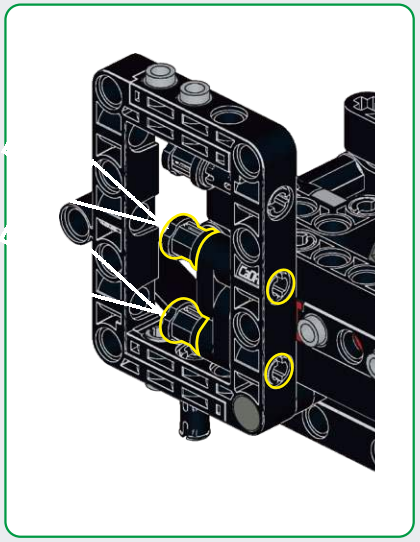

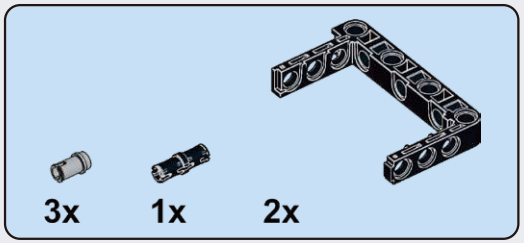

A38

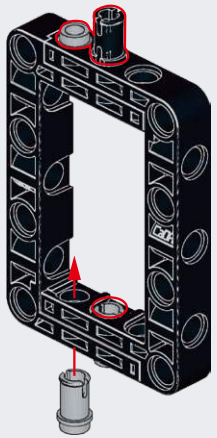

A39

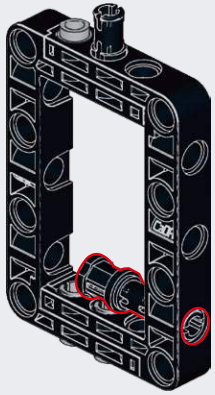

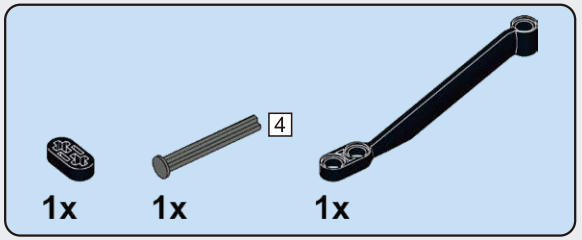

A40

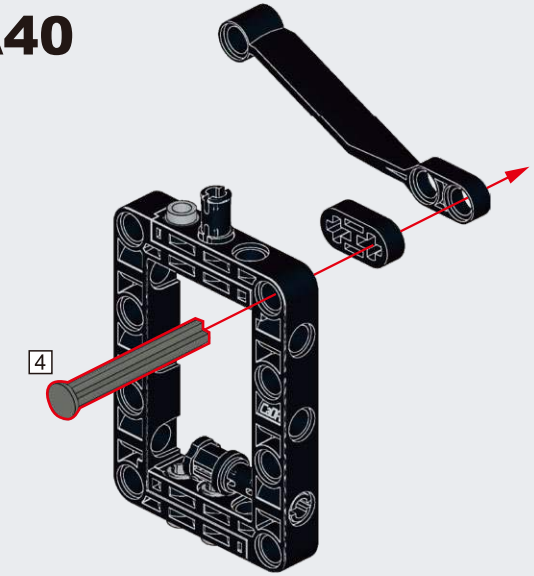

A41

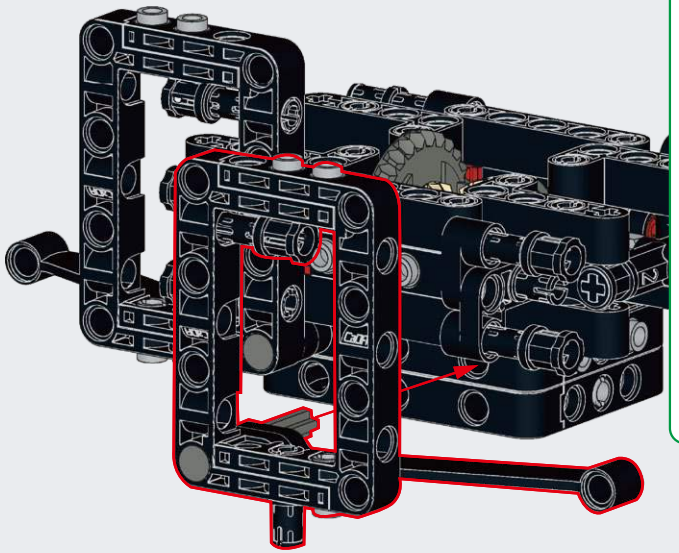

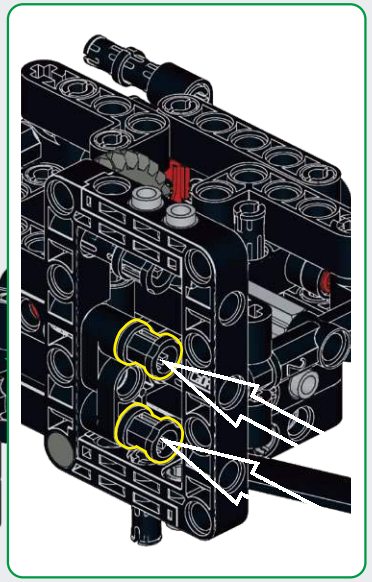

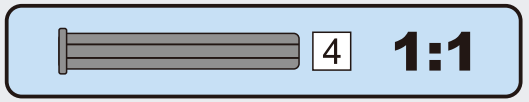

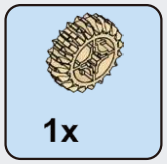

A42

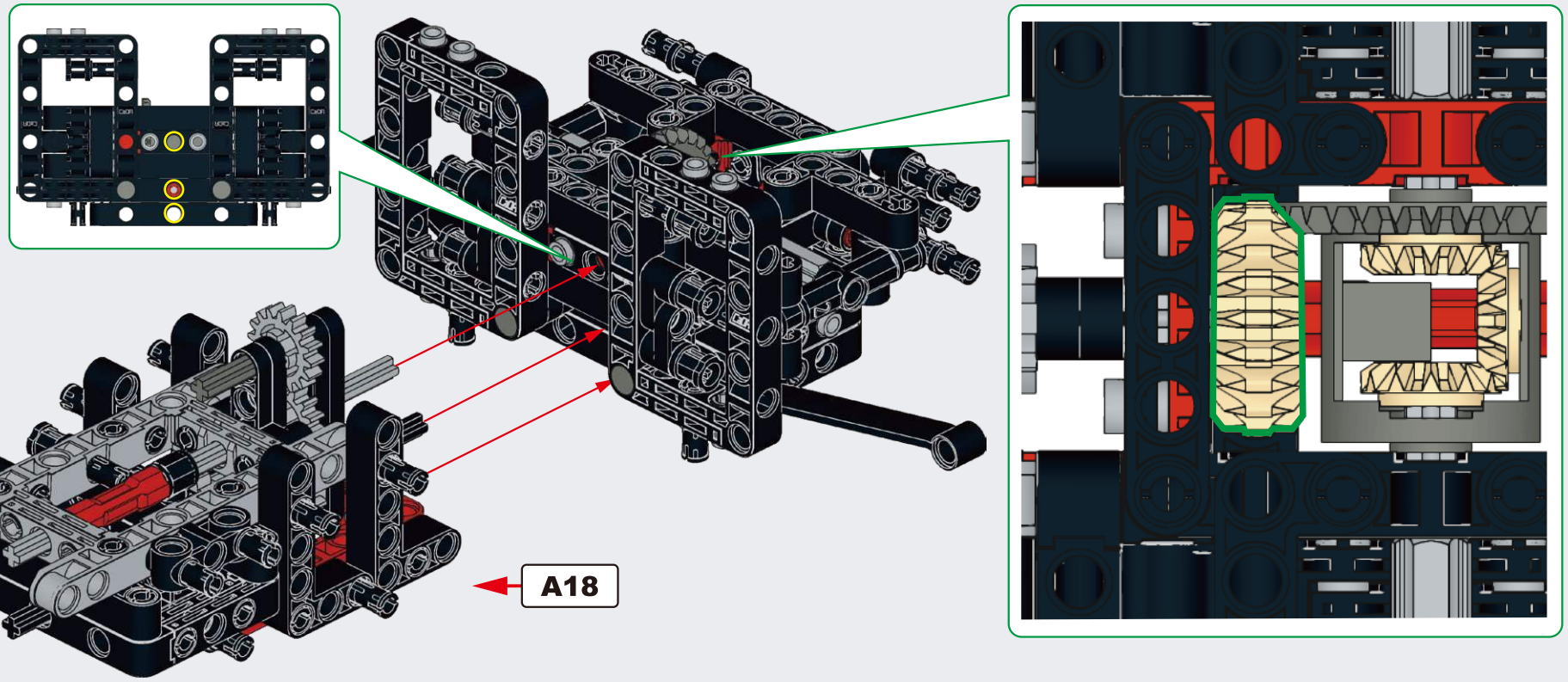

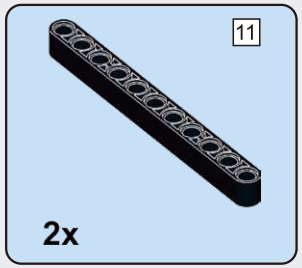

A43

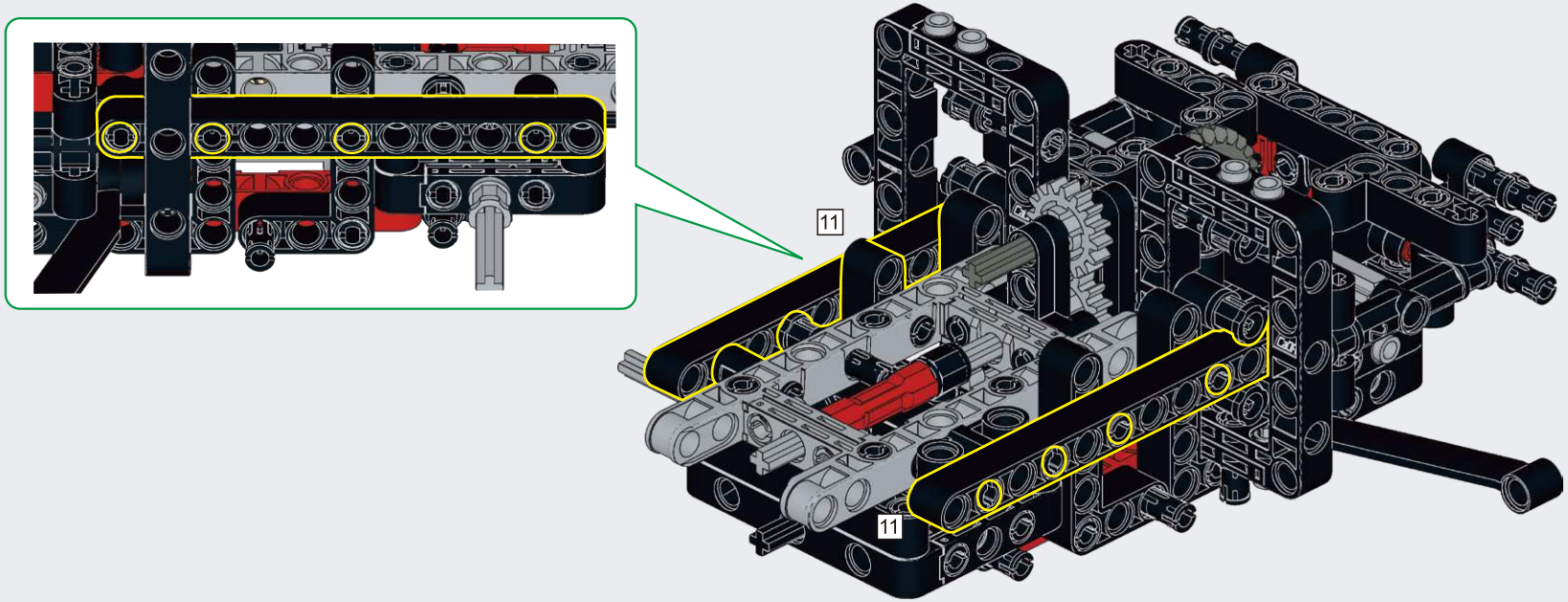

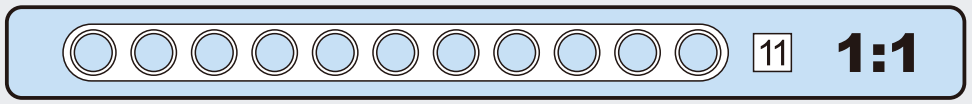

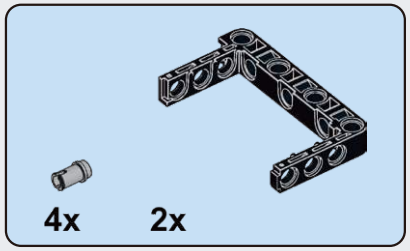

A44

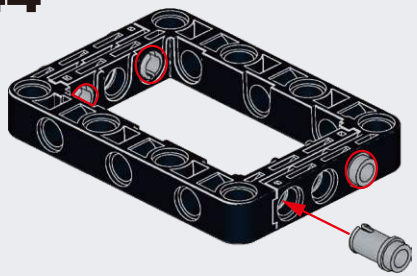

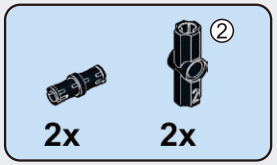

A45

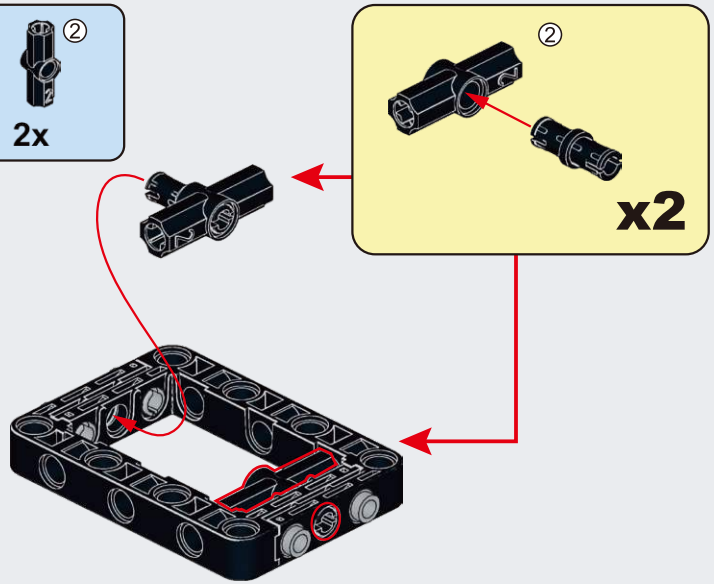

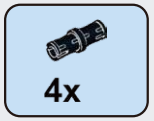

A46

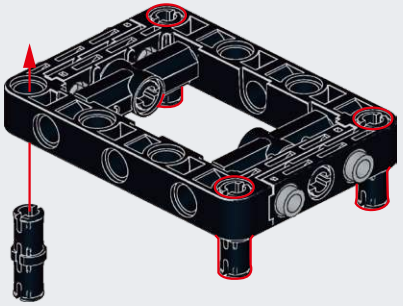

A47

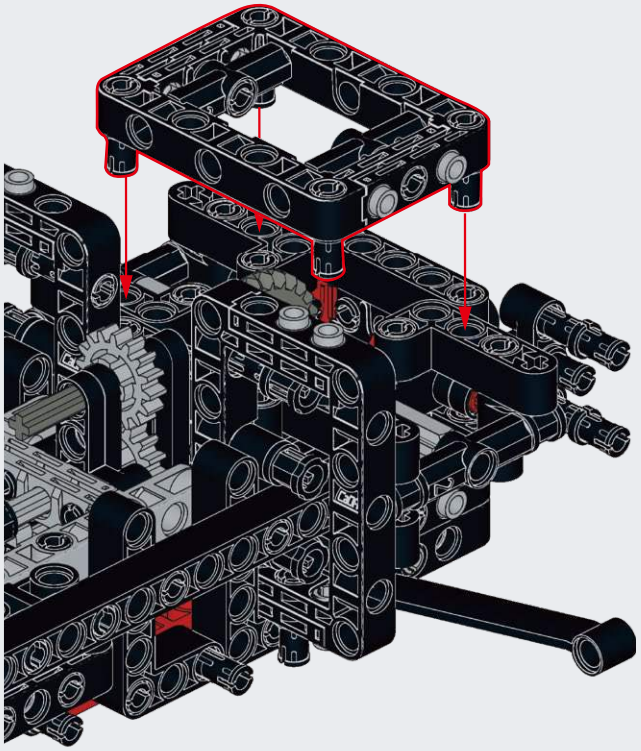

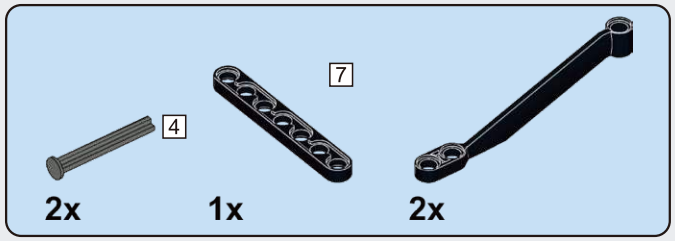

A48

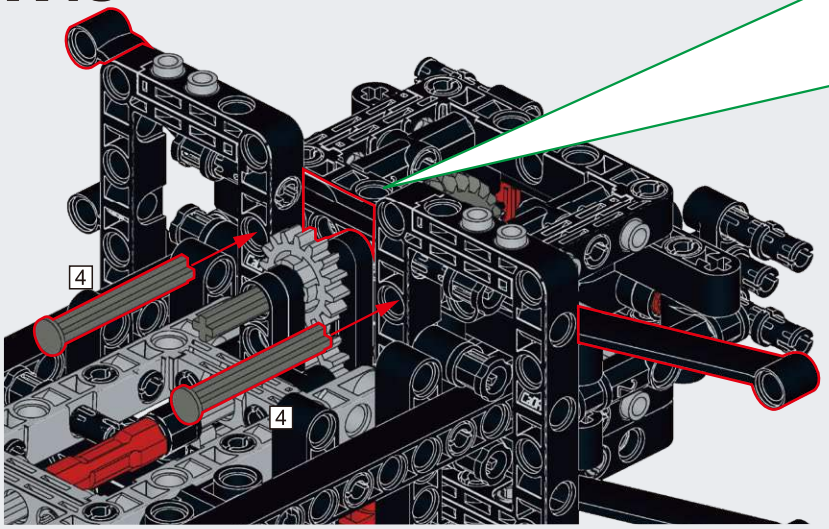

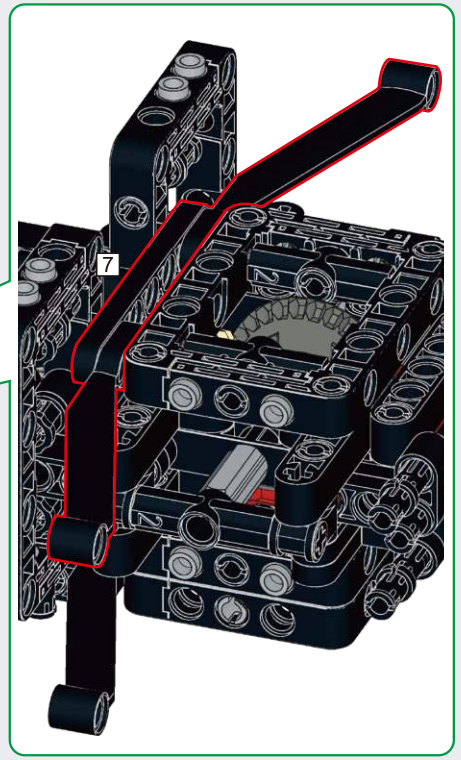

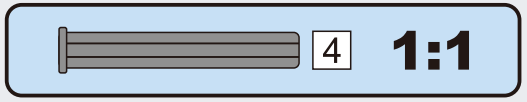

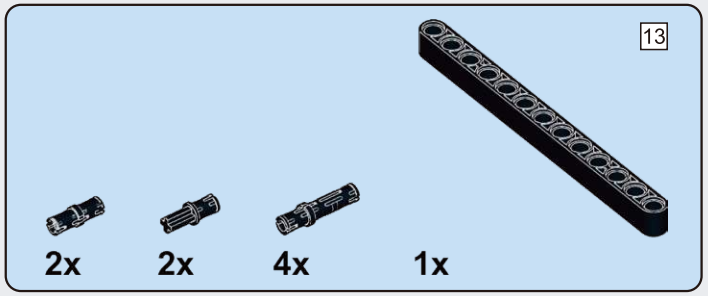

A49

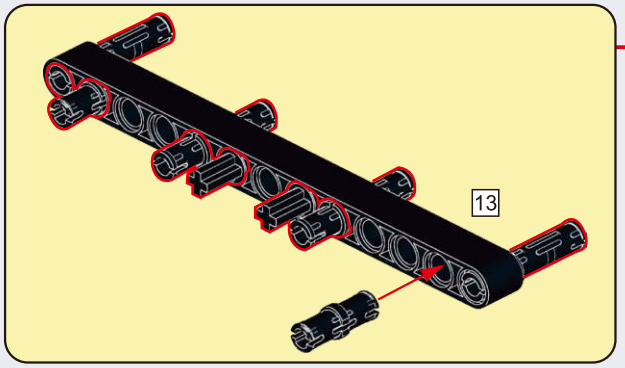

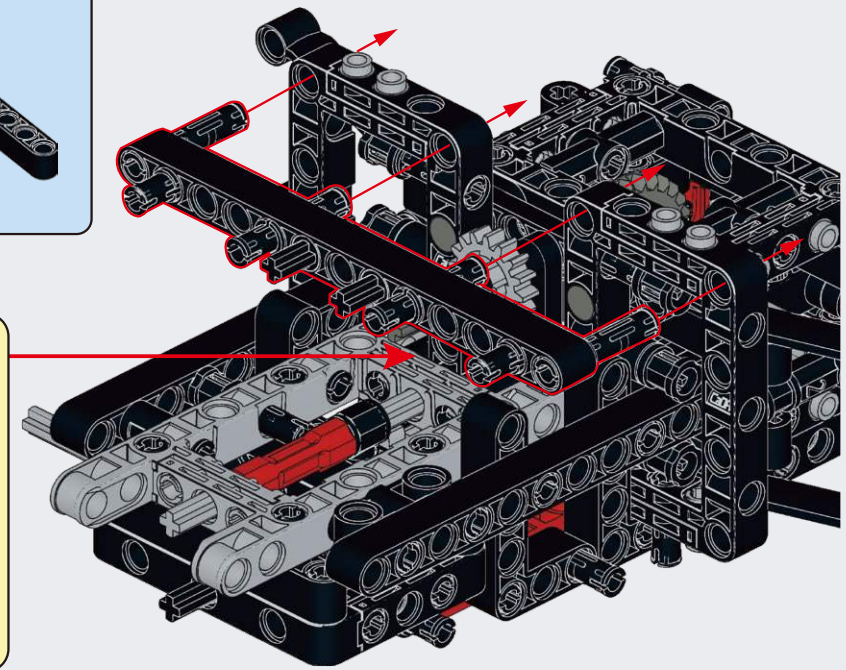

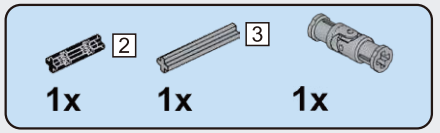

A50

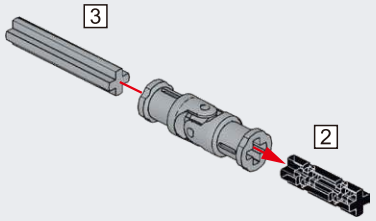

A51

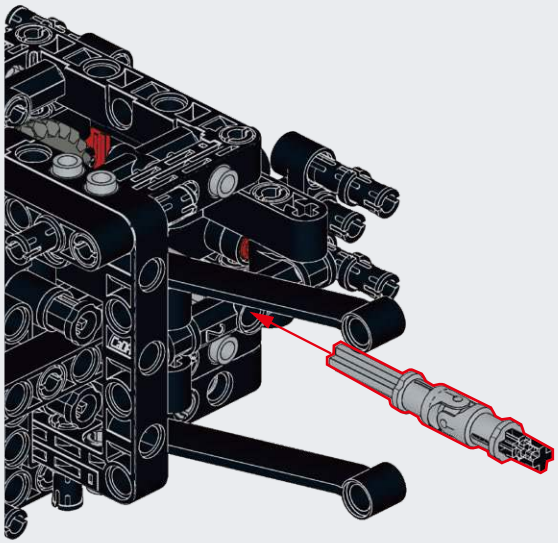

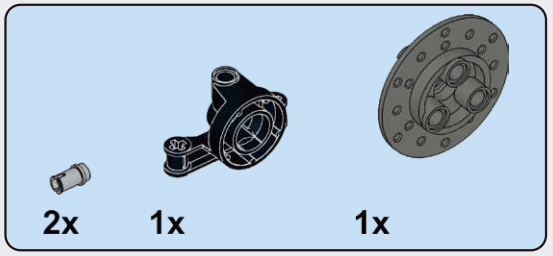

A52

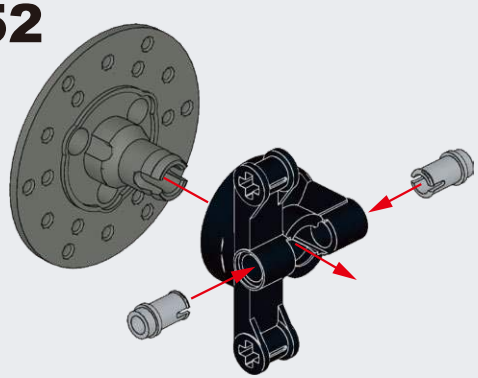

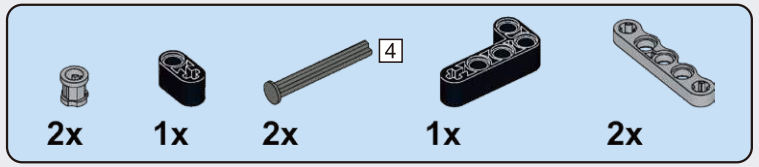

A53

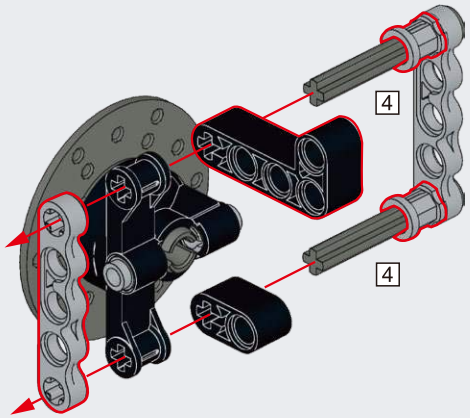

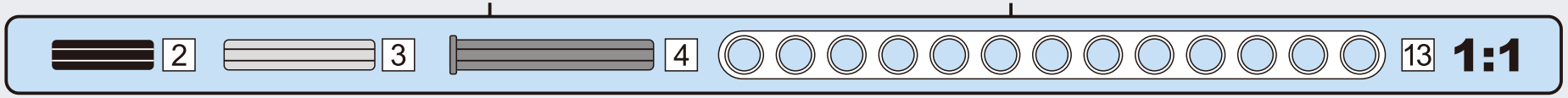

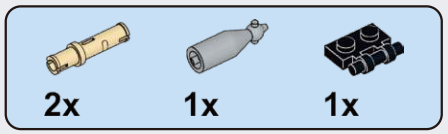

A54

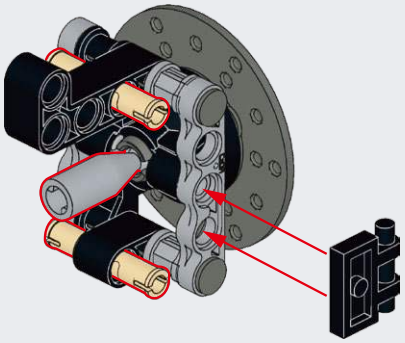

A55

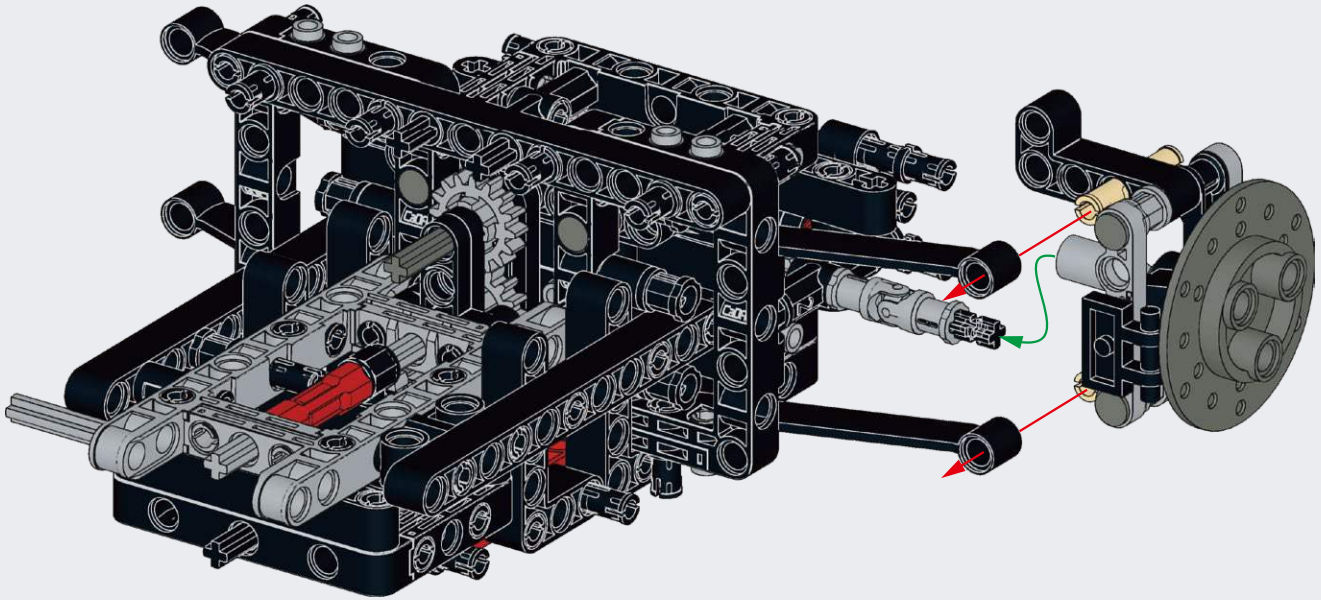

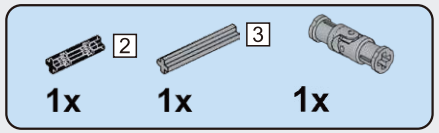

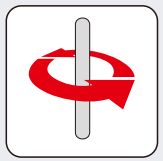

A56

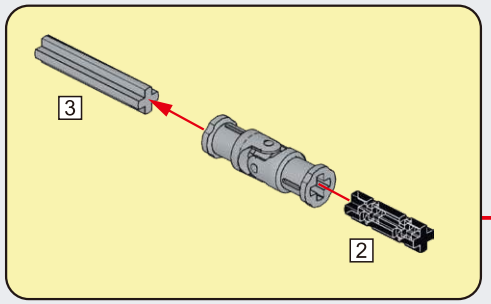

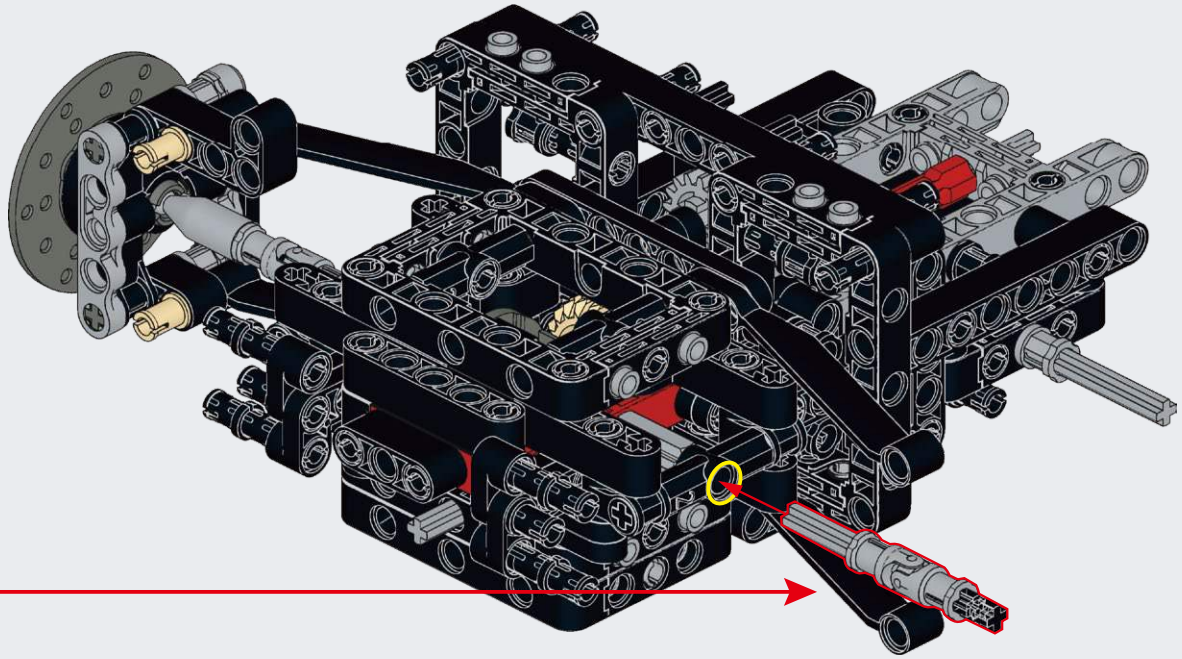

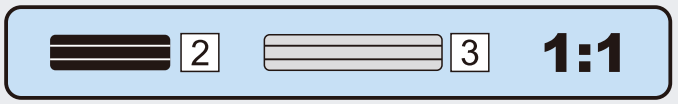

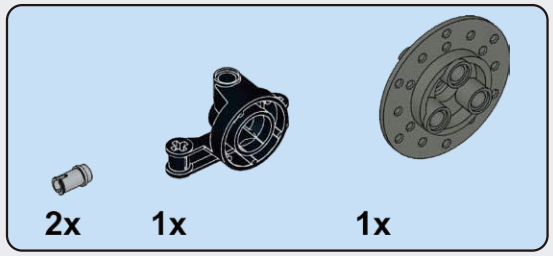

A57

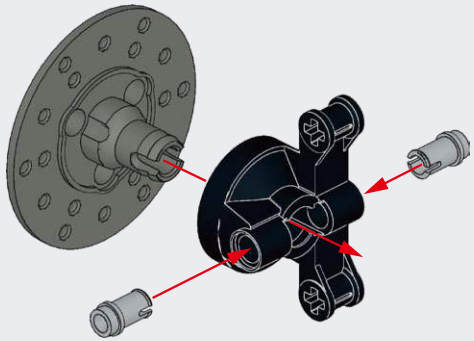

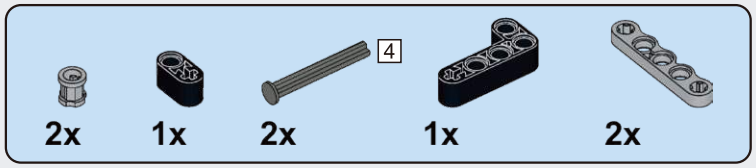

A58

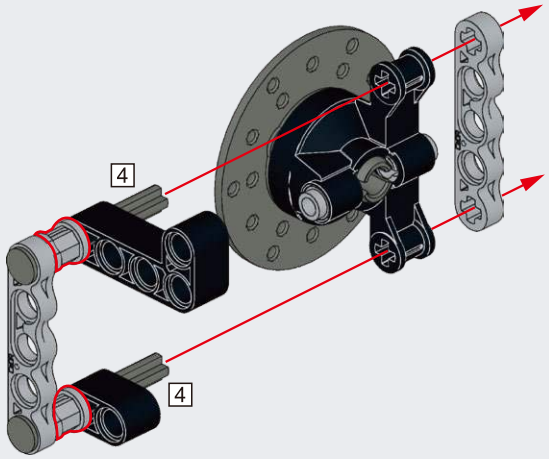

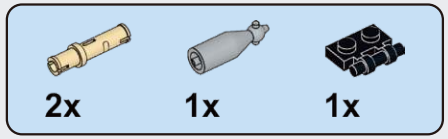

A59

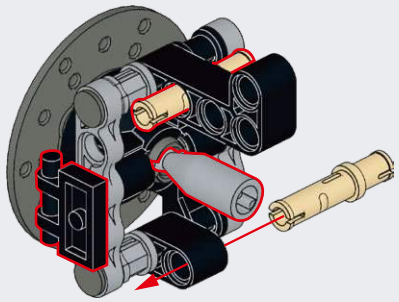

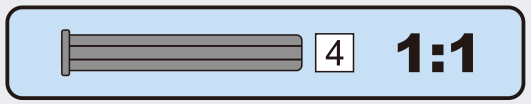

A60

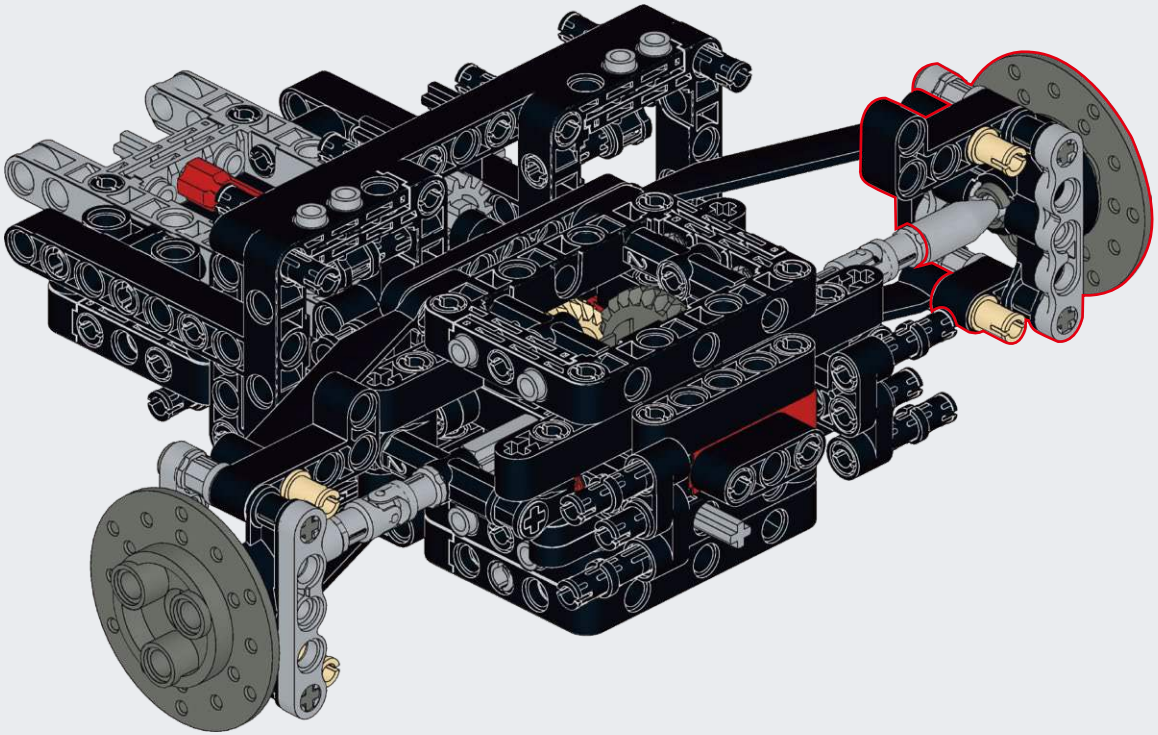

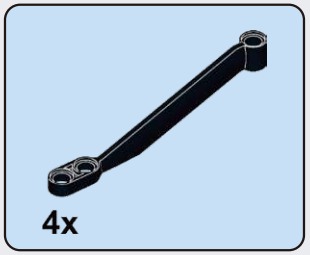

A61

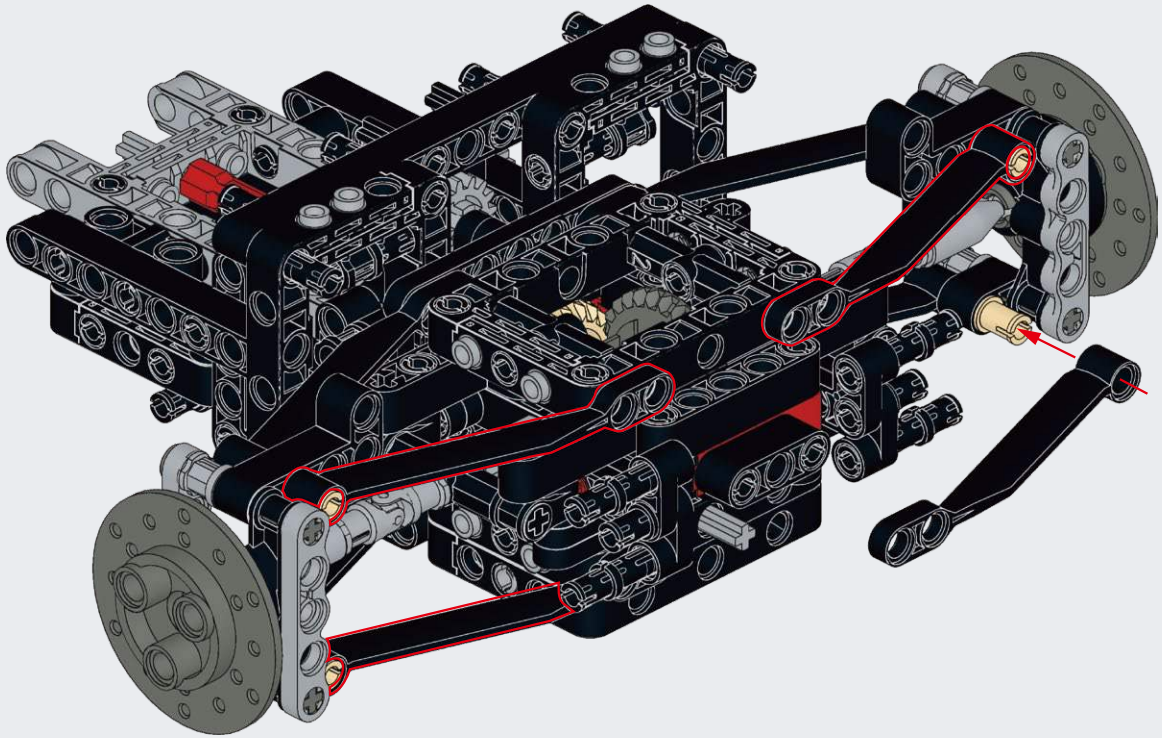

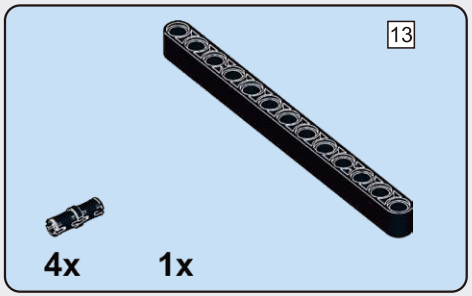

A62

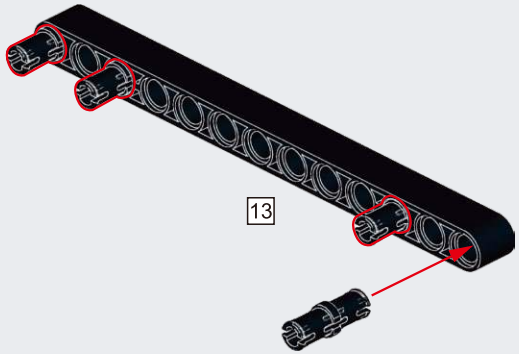

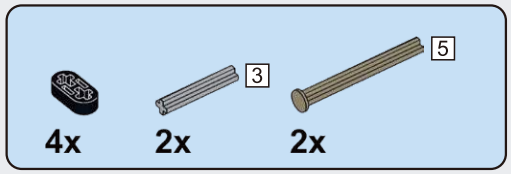

A63

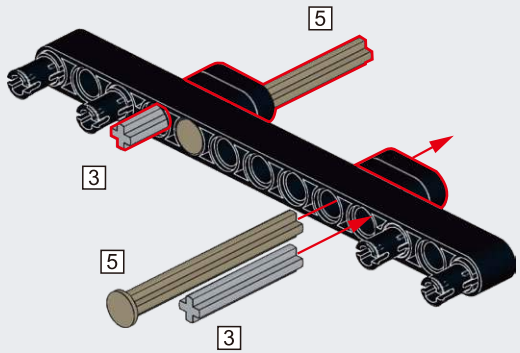

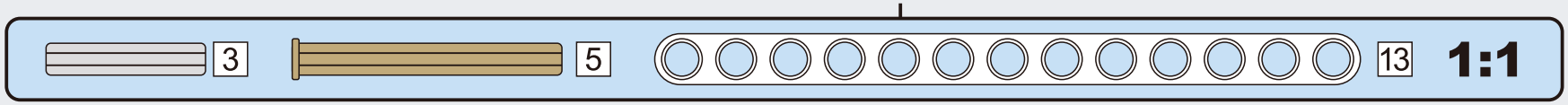

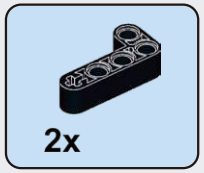

A64

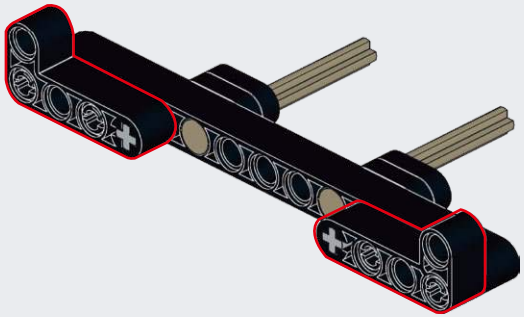

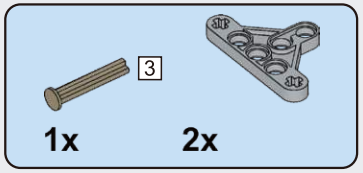

A65

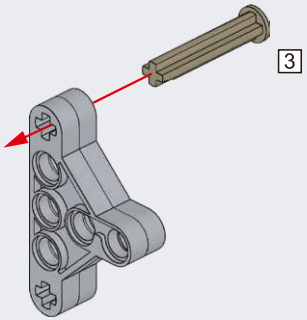

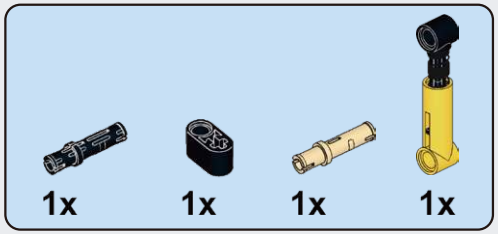

A66

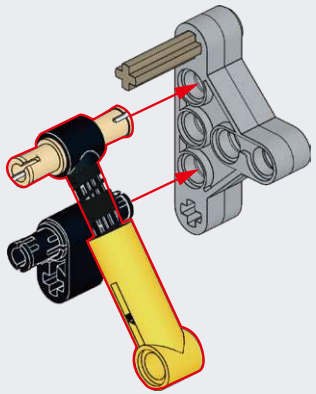

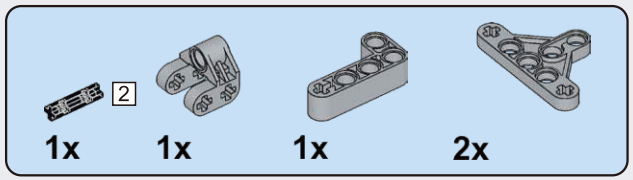

A67

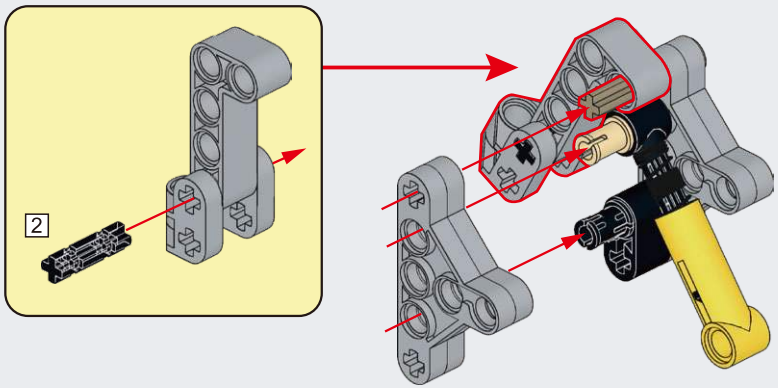

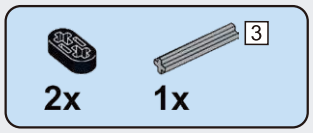

A68

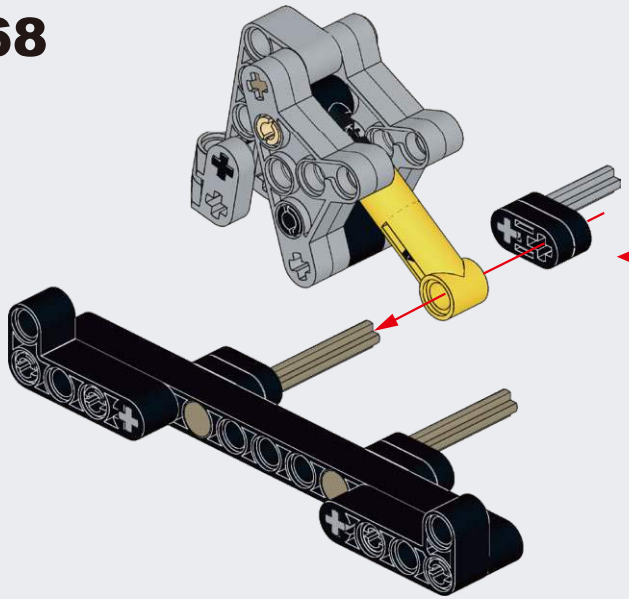

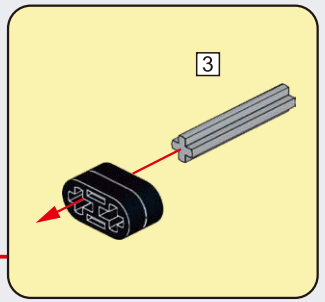

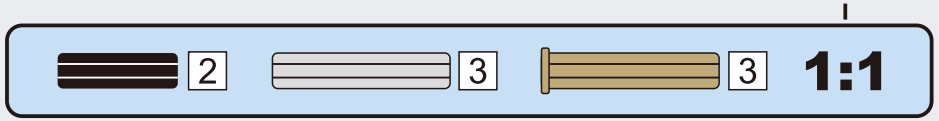

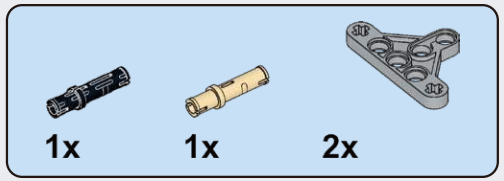

A69

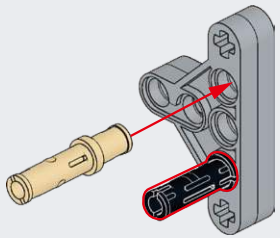

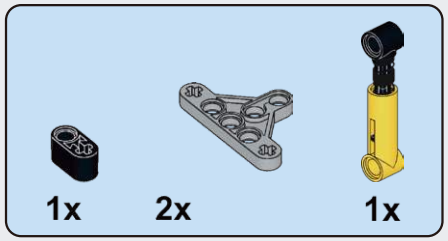

A70

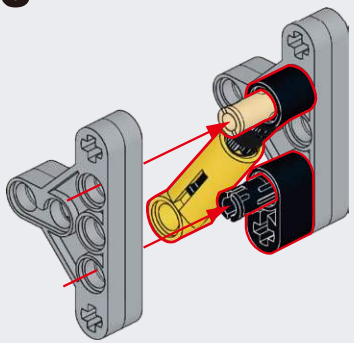

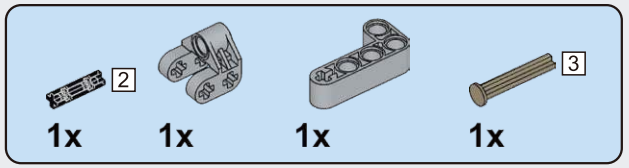

A71

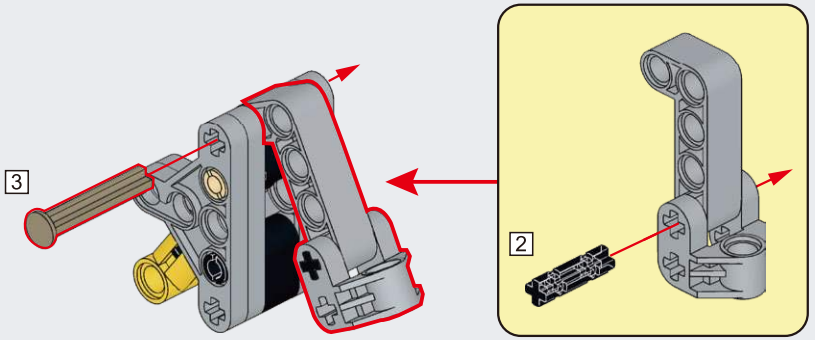

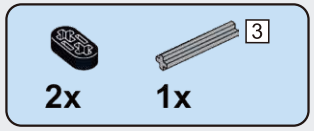

A72

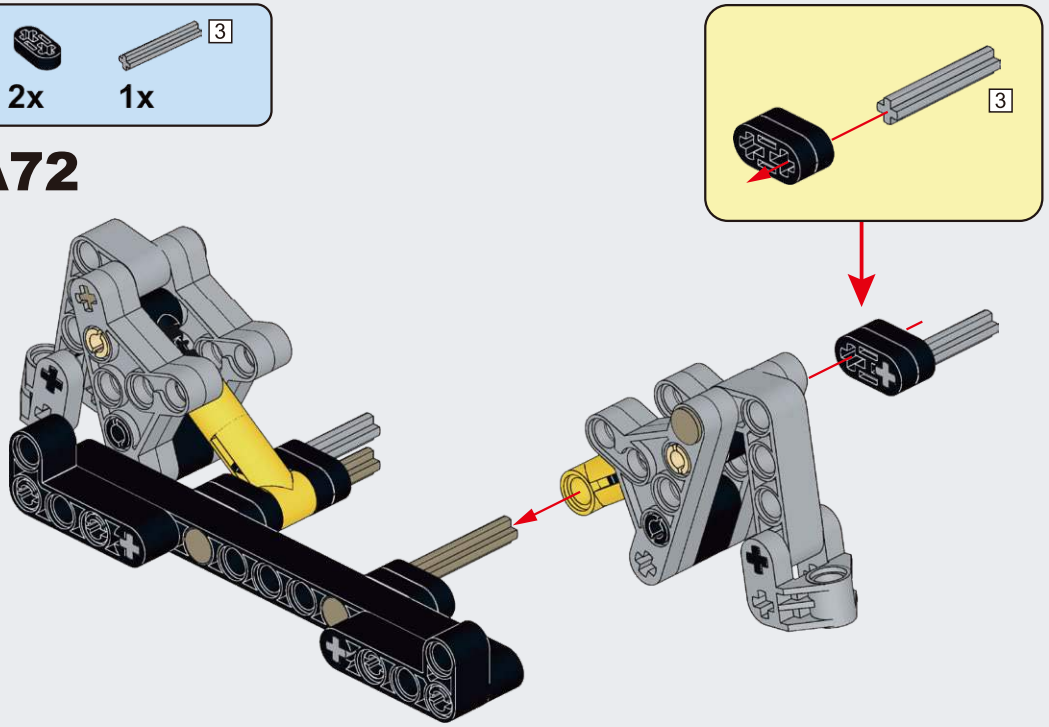

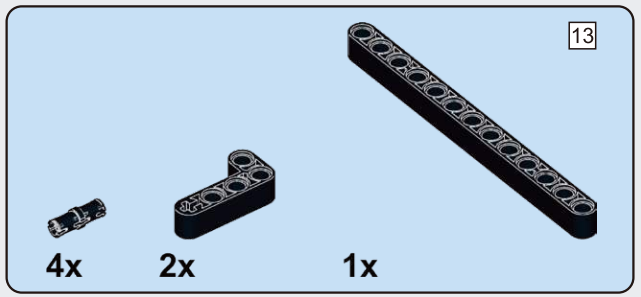

A73

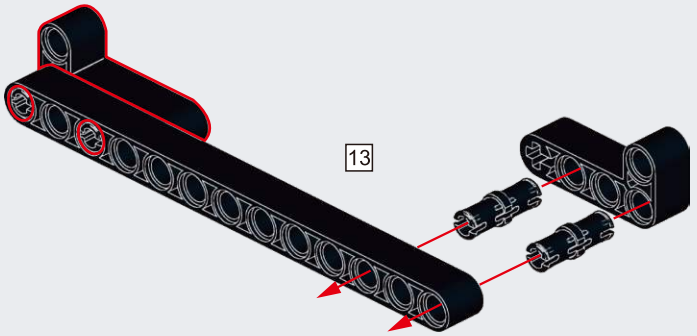

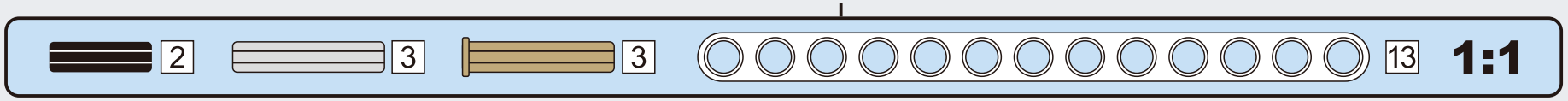

A74

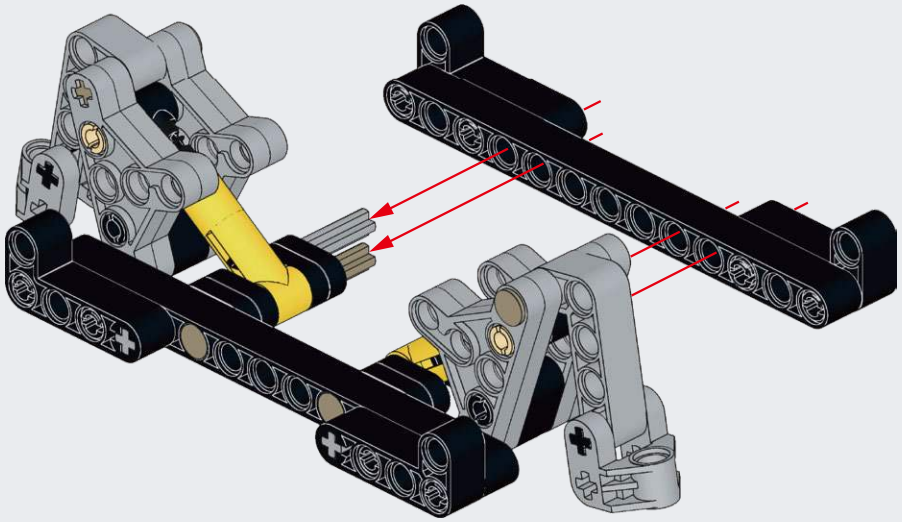

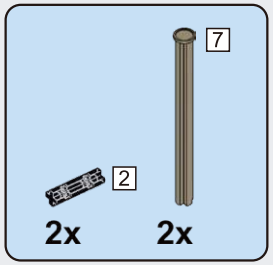

A75

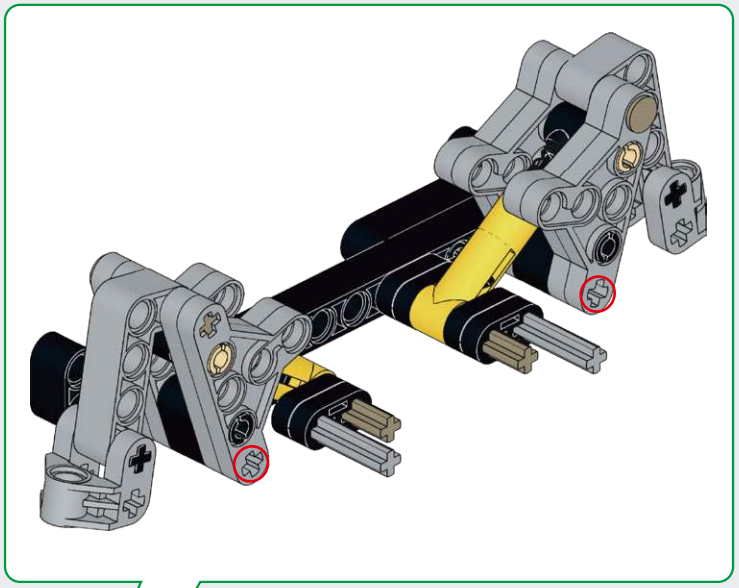

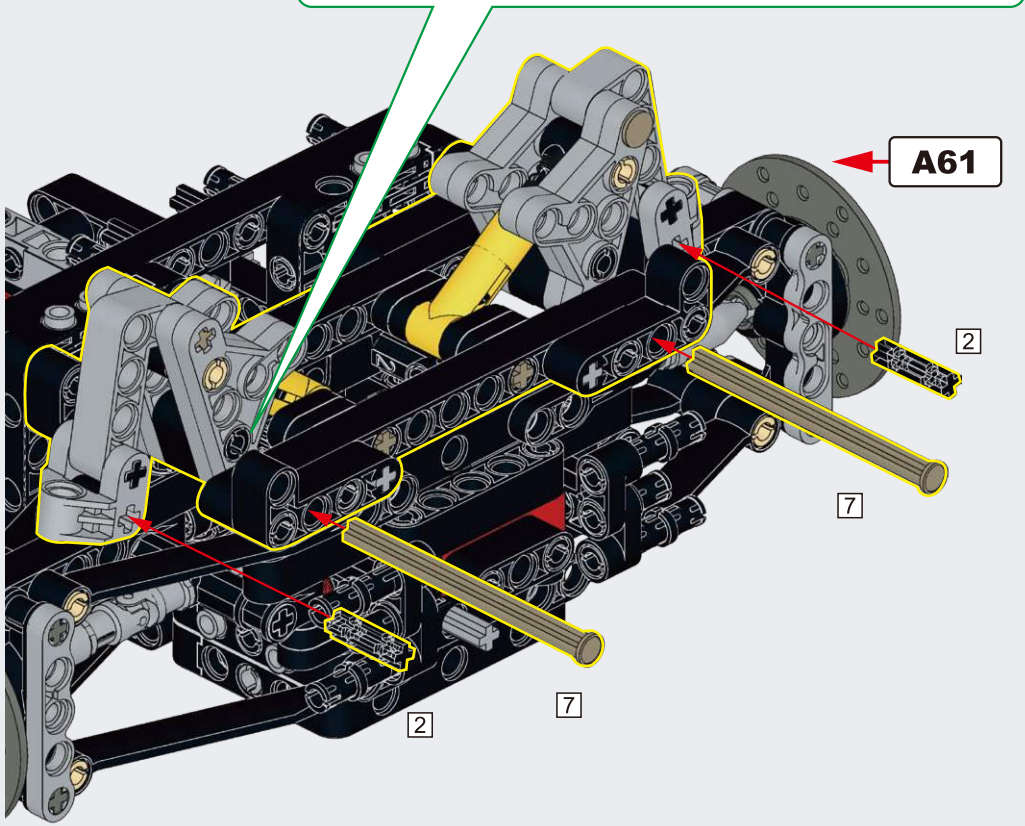

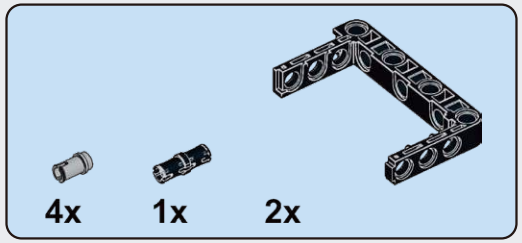

A76

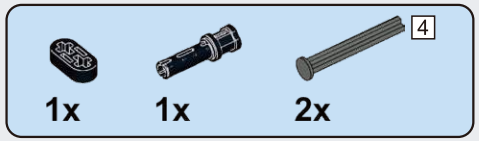

A77

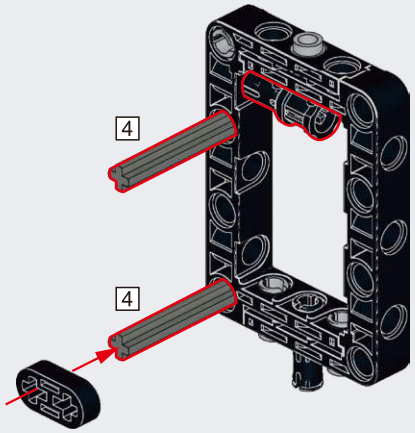

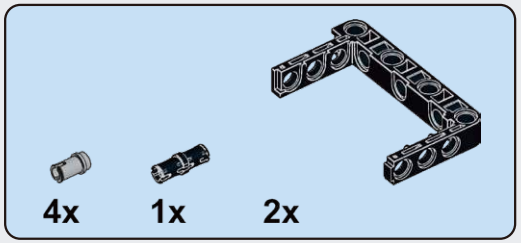

A78

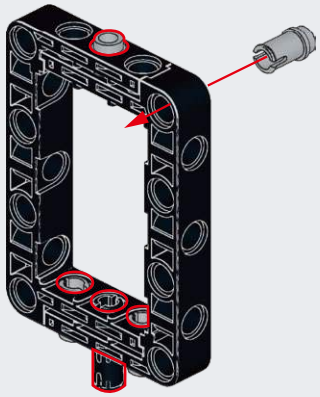

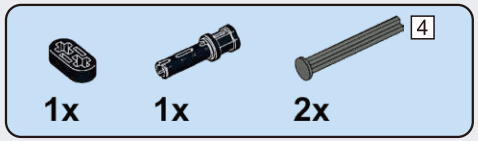

A79

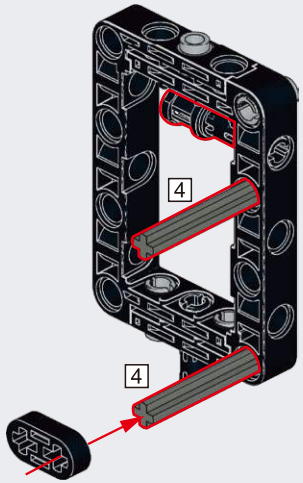

A80

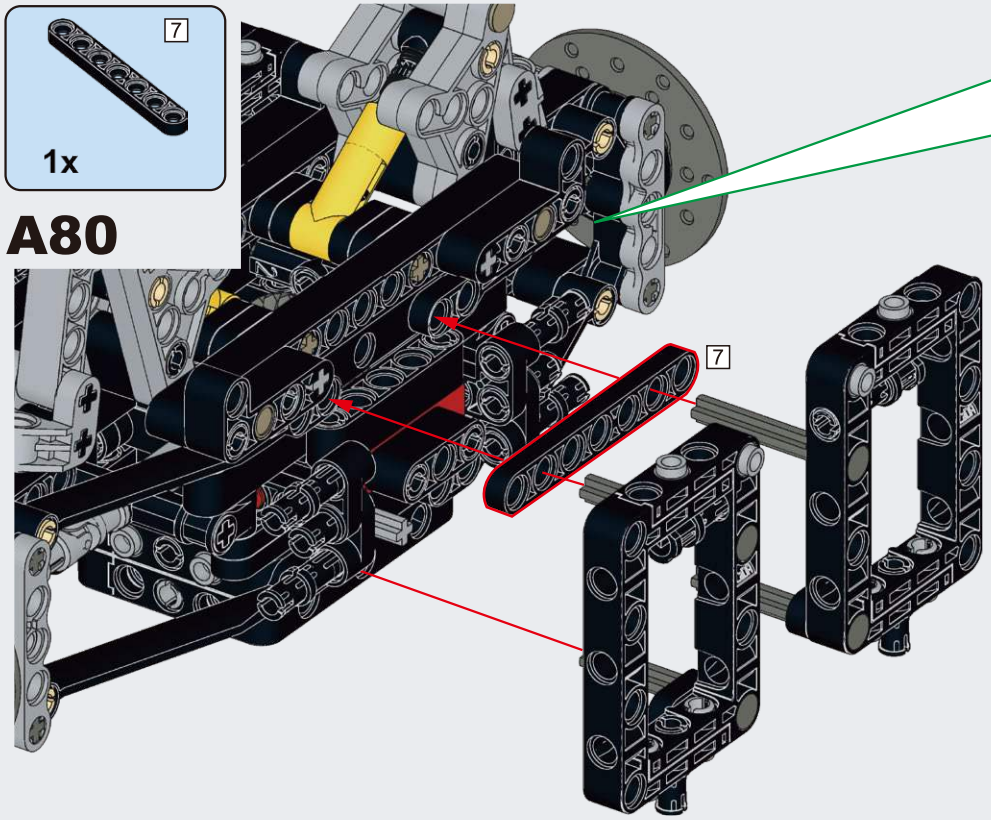

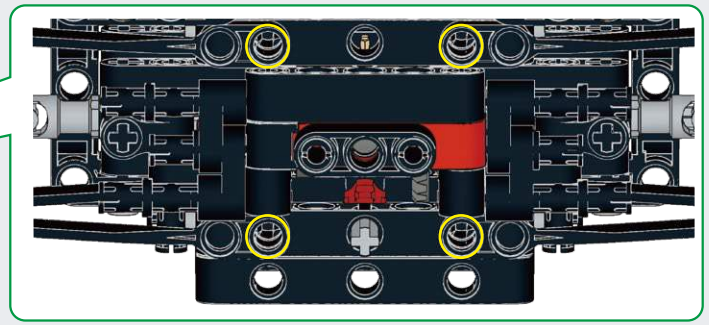

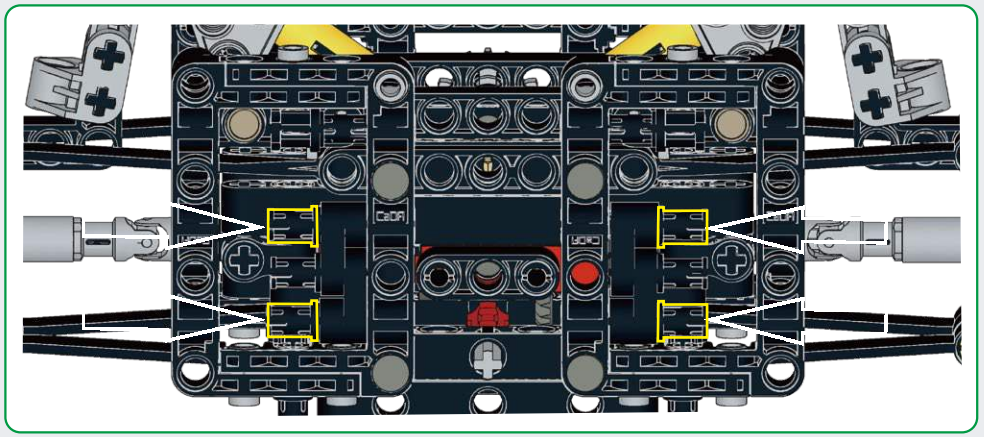

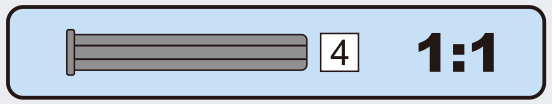

A81

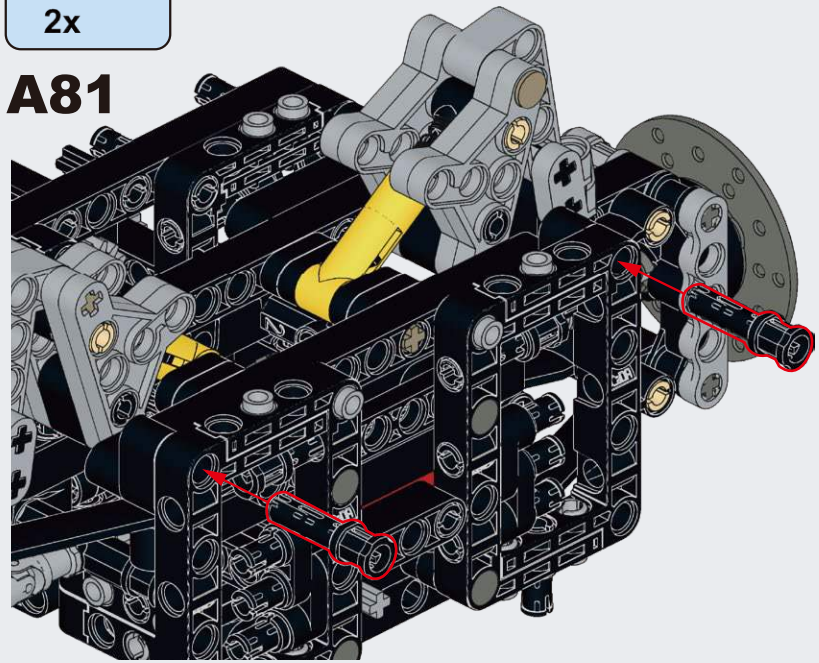

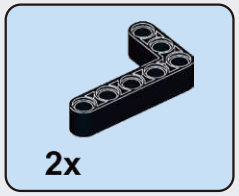

A82

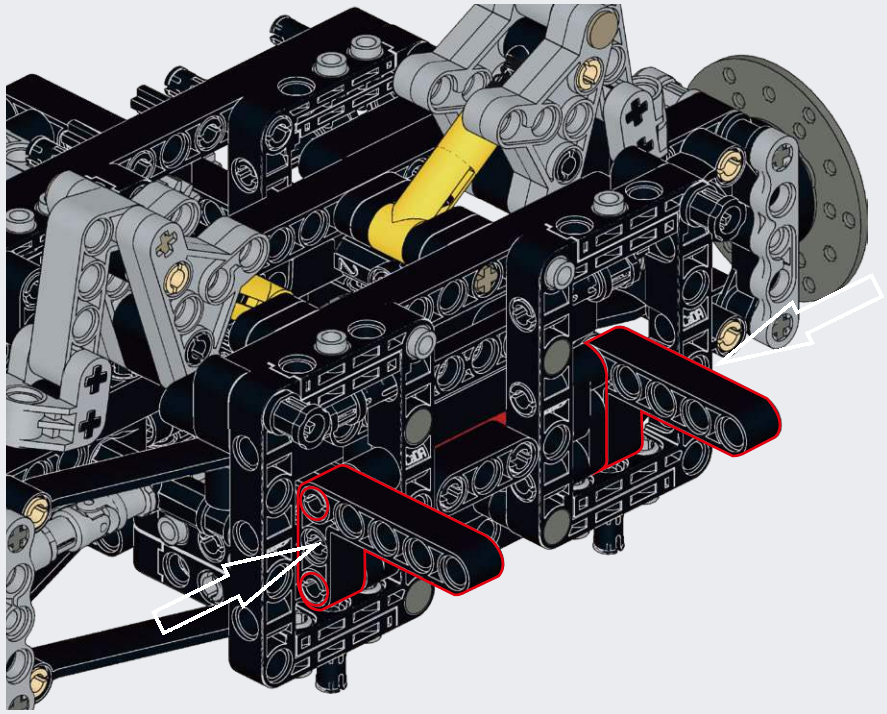

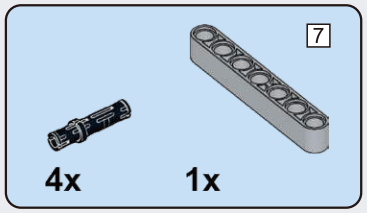

A83

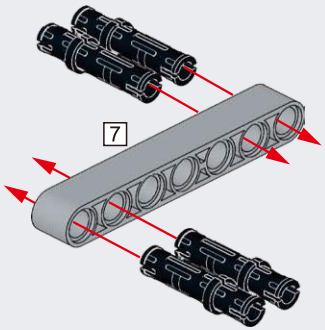

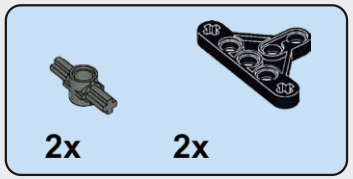

A84

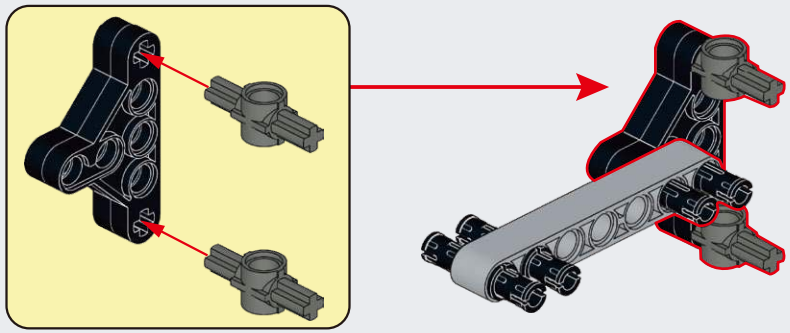

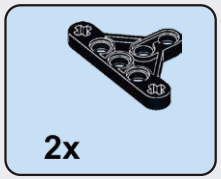

A85

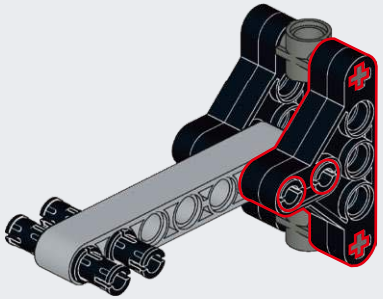

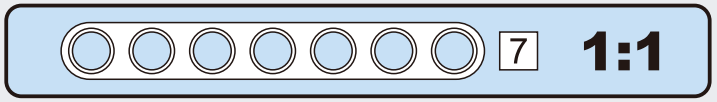

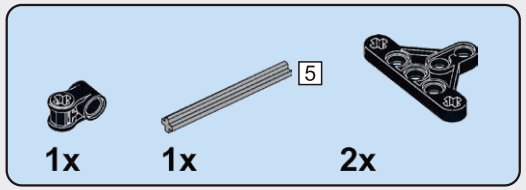

A86

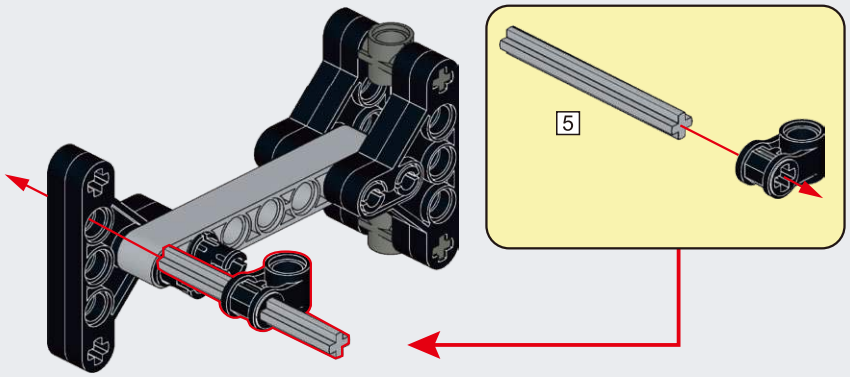

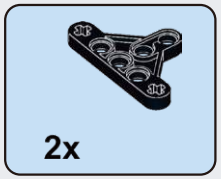

A87

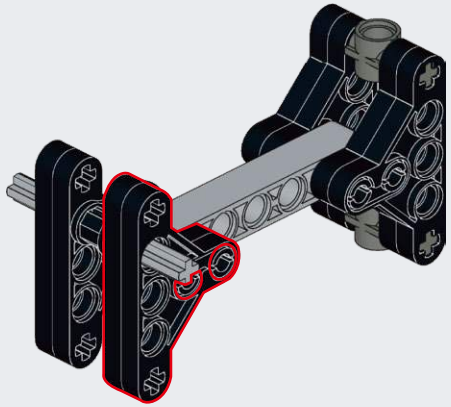

A88

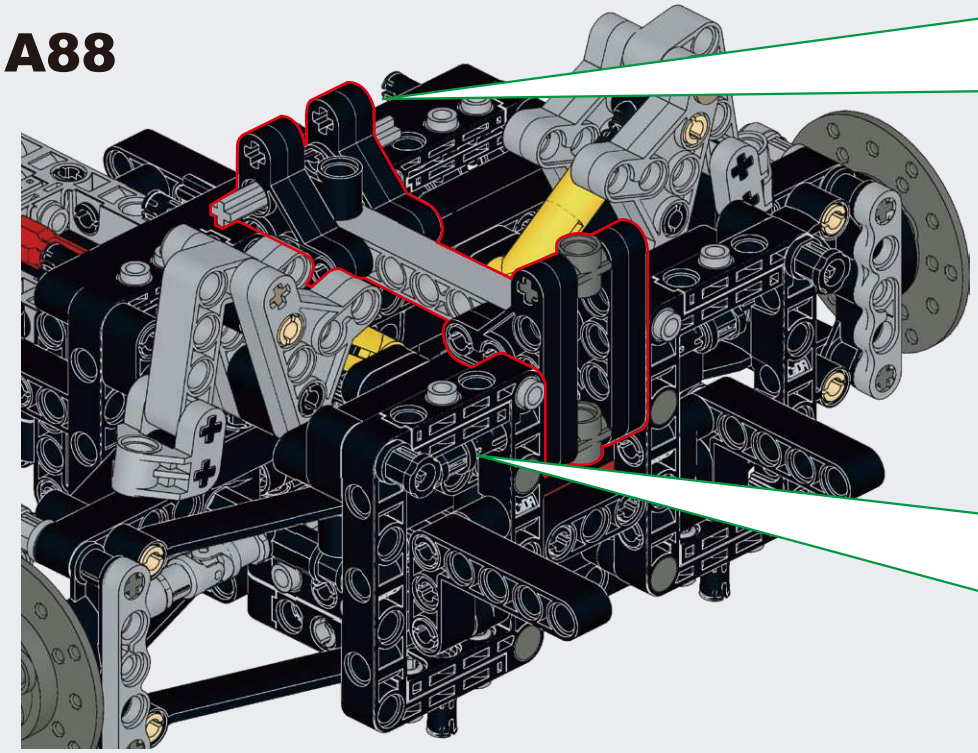

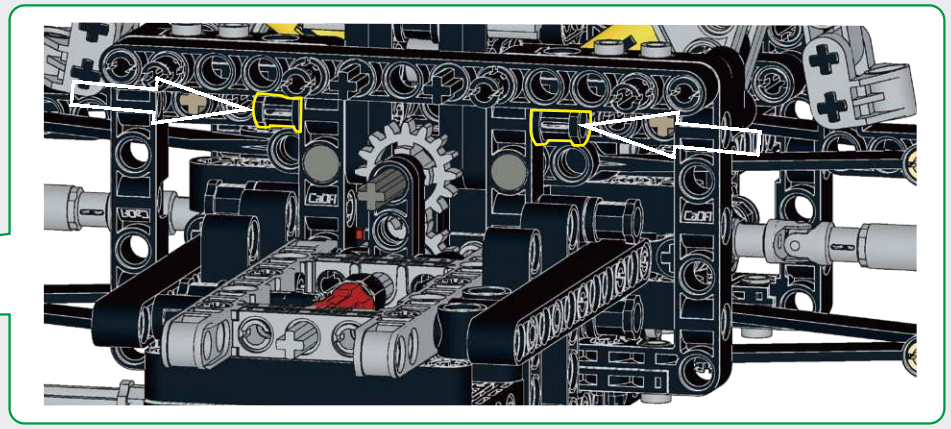

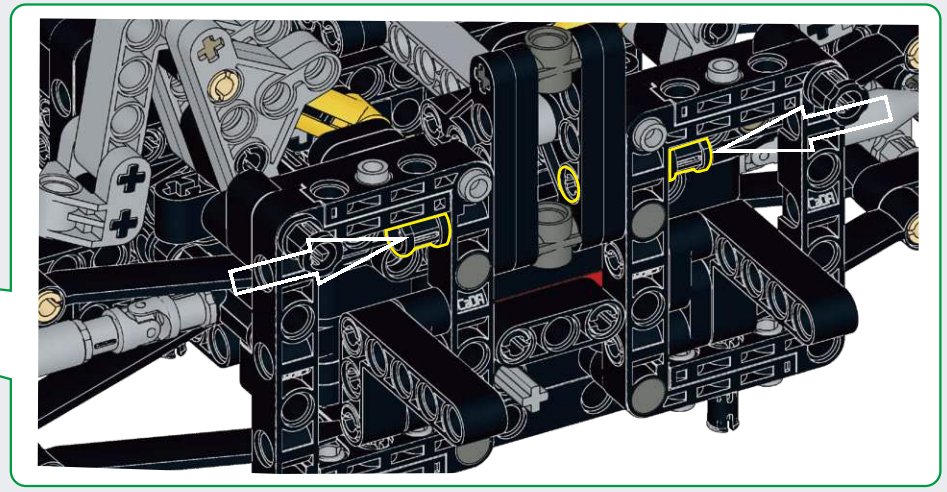

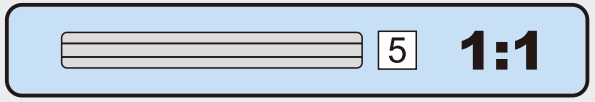

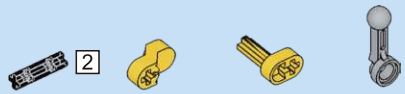

A89

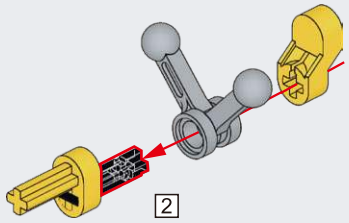

A90

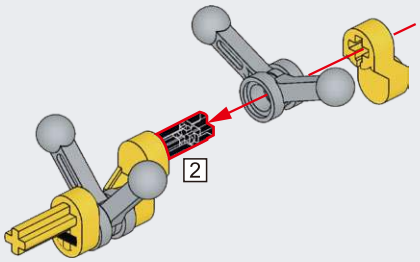

A91

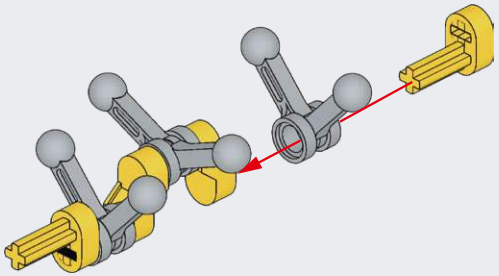

A92

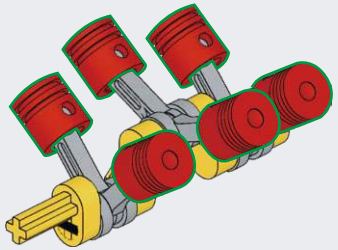

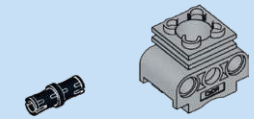

A93

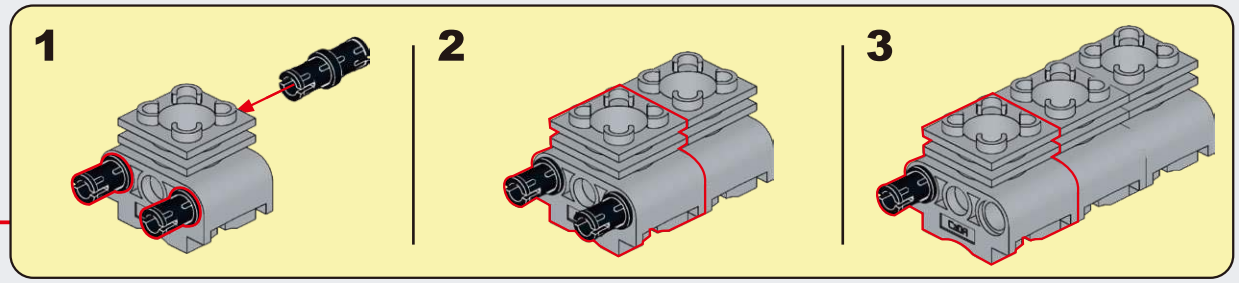

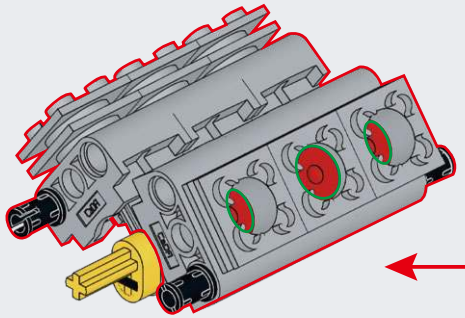

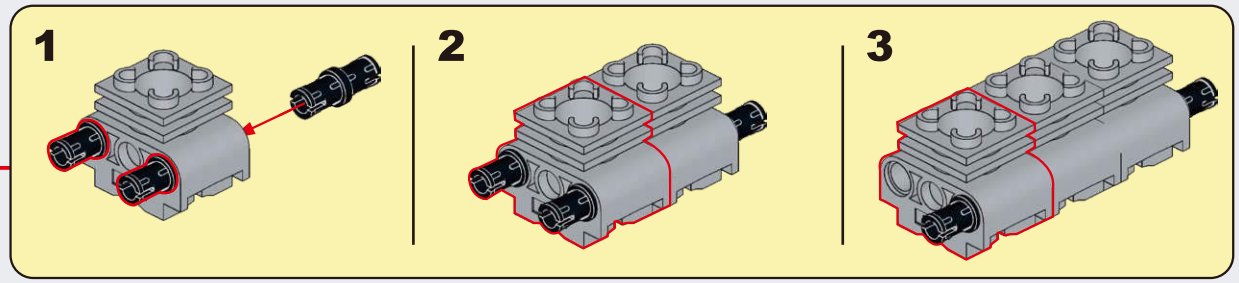

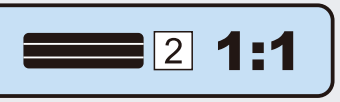

A94

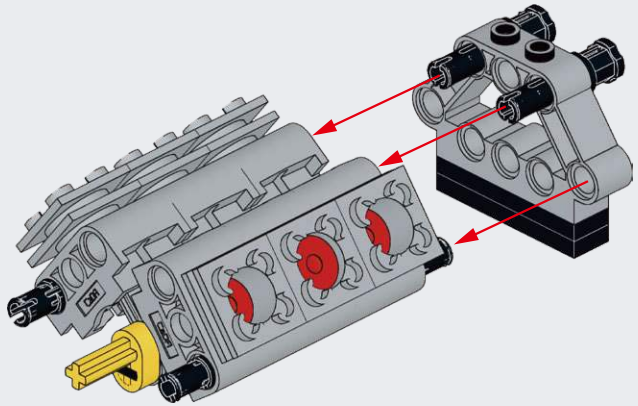

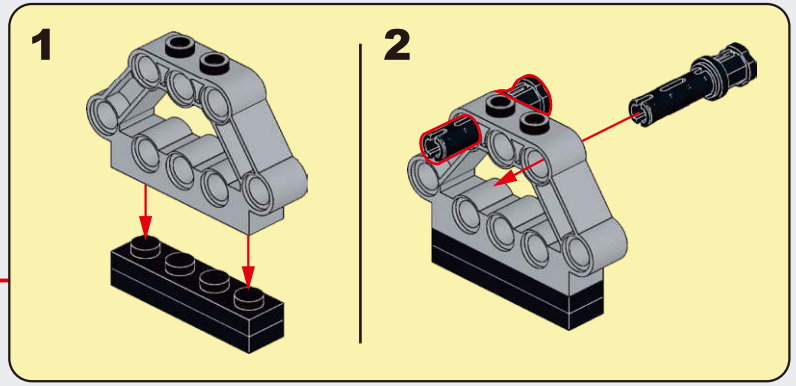

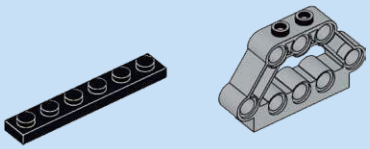

A95

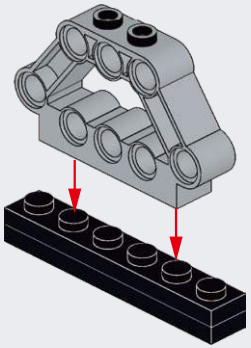

A96

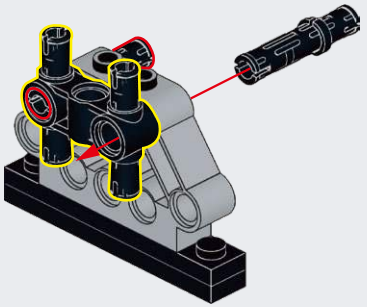

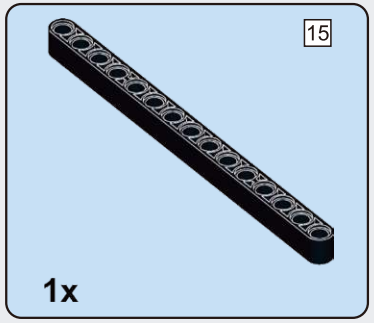

A97

15

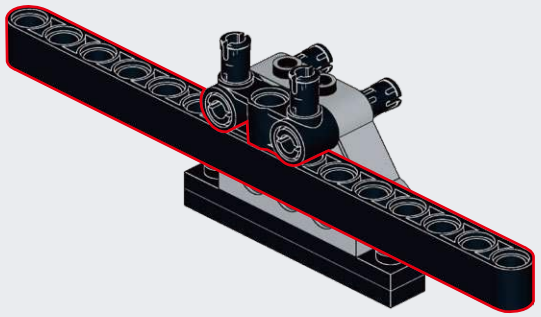

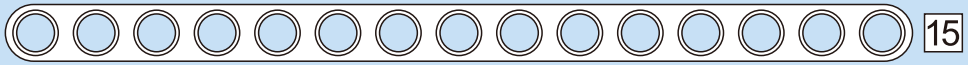

1:1

A98

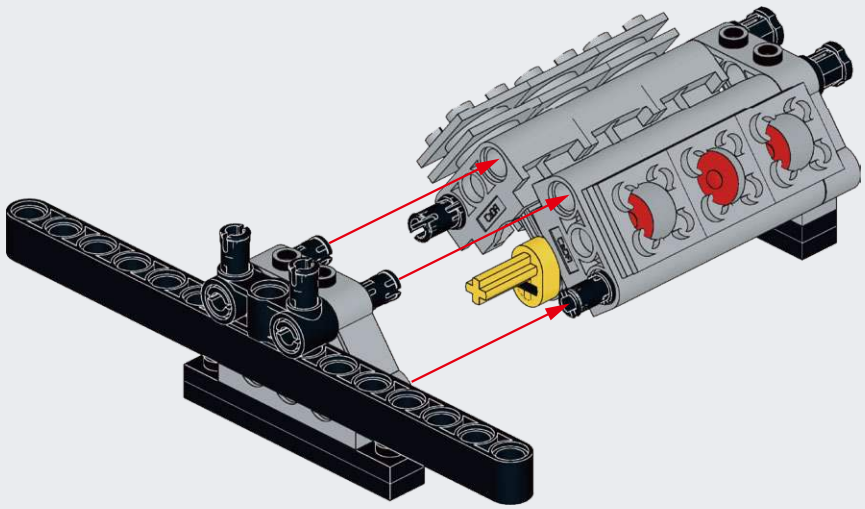

A99

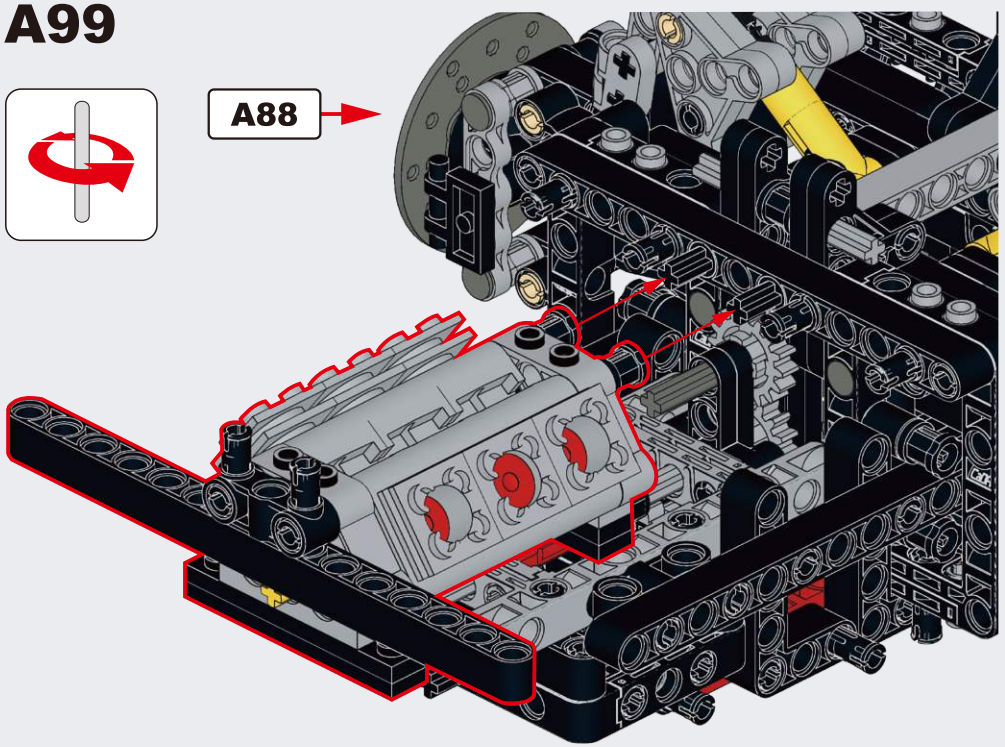

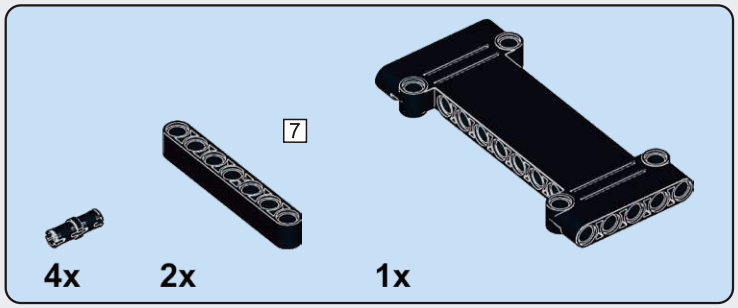

A100

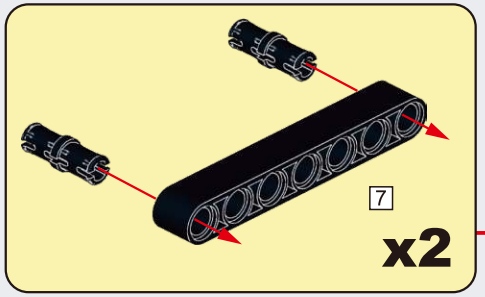

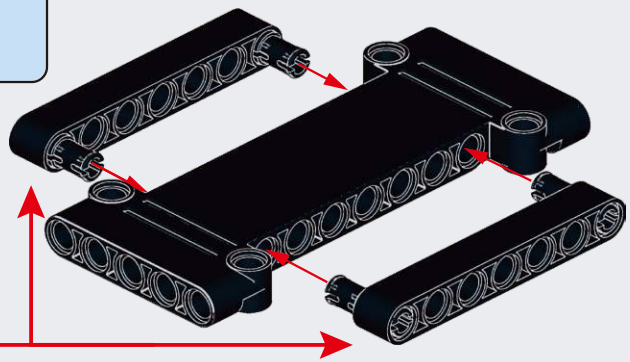

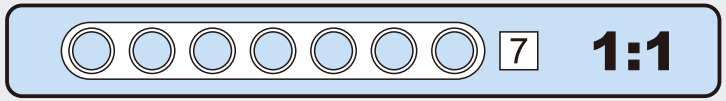

A101

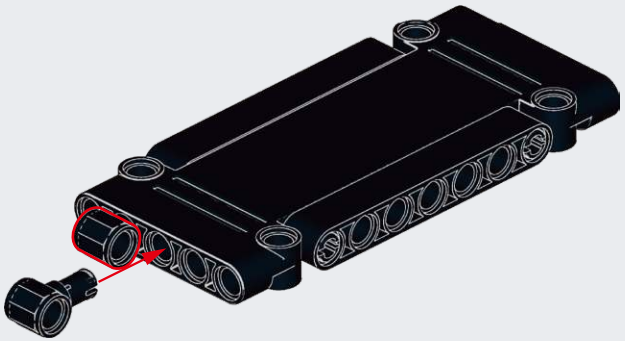

A102

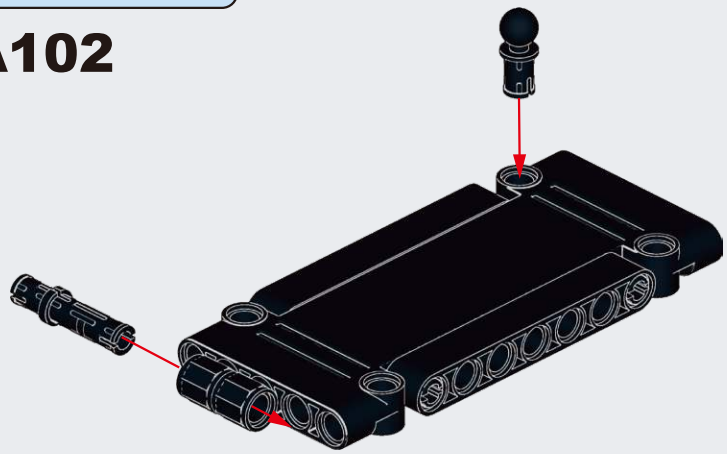

A103

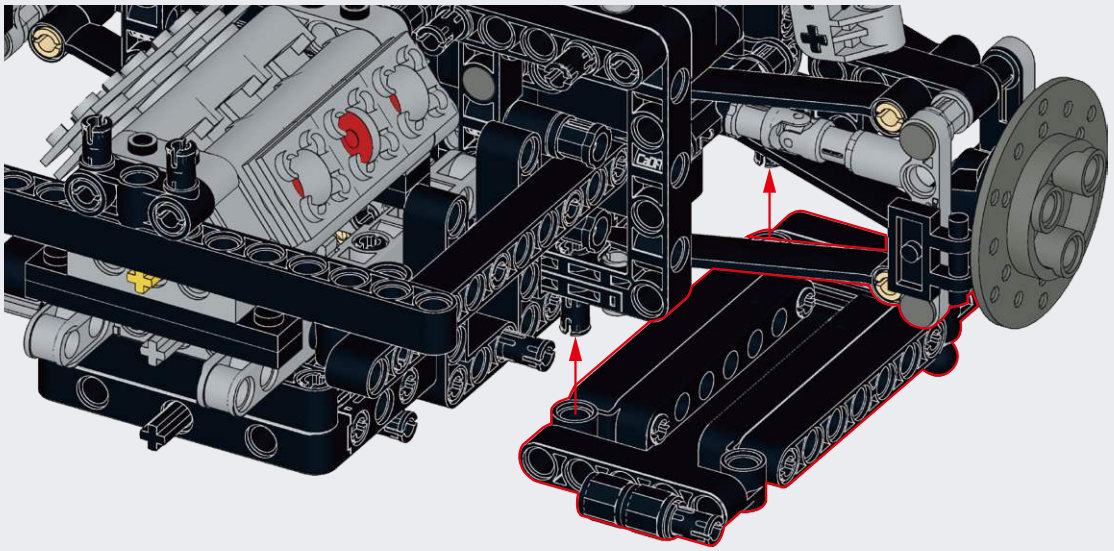

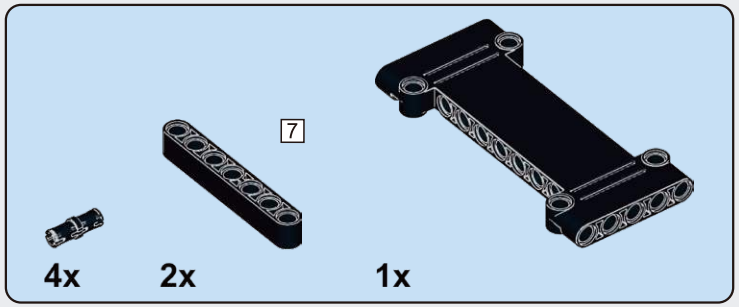

A104

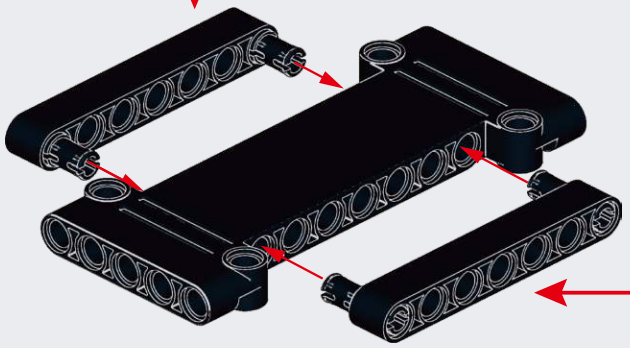

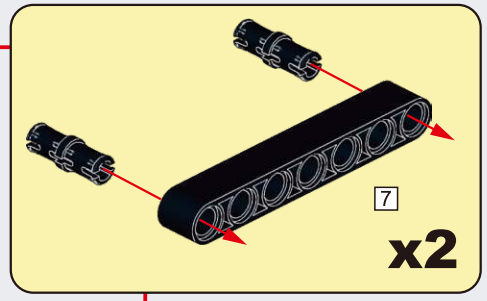

A105

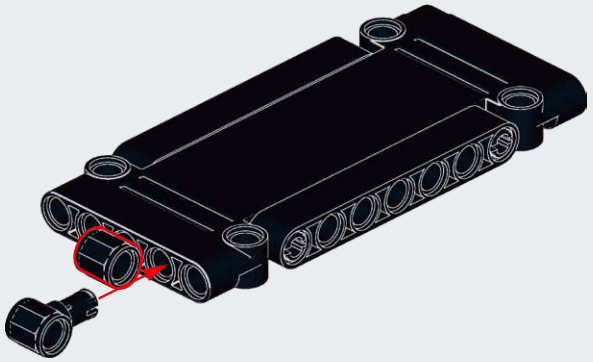

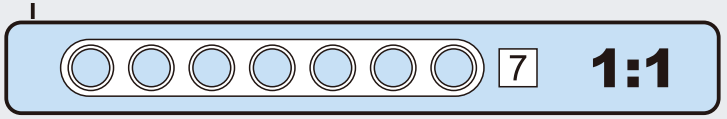

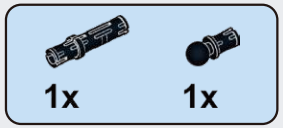

A106

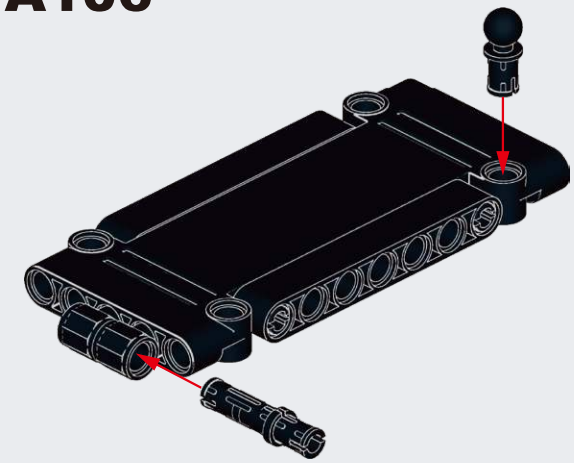

A107

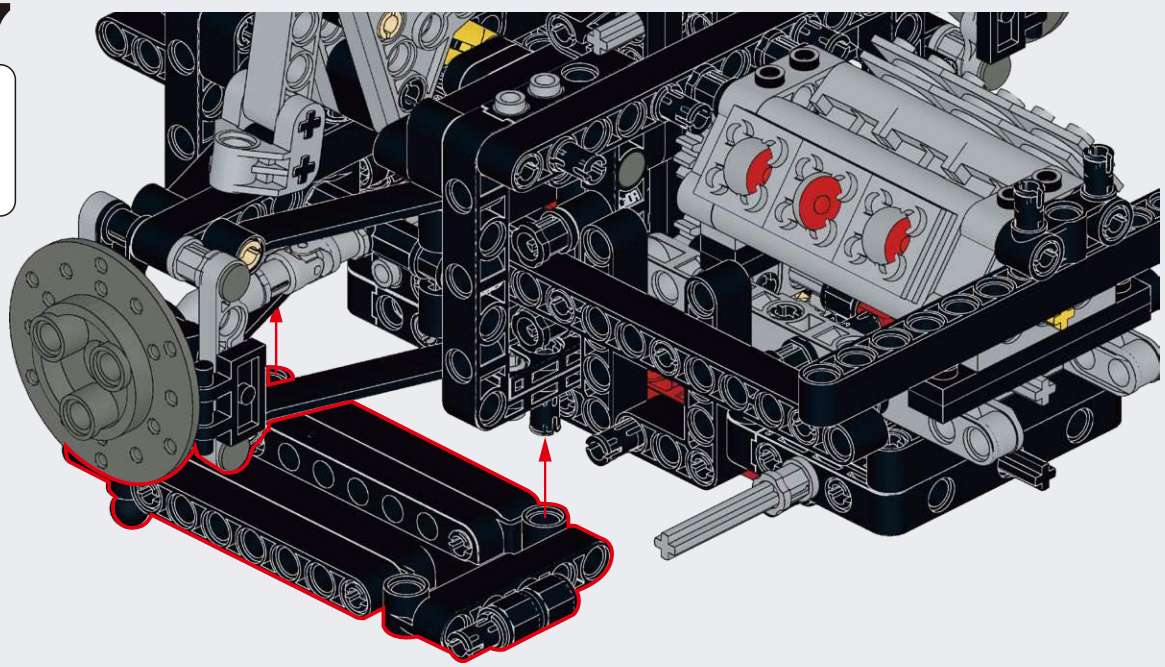

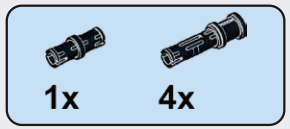

A108

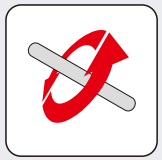

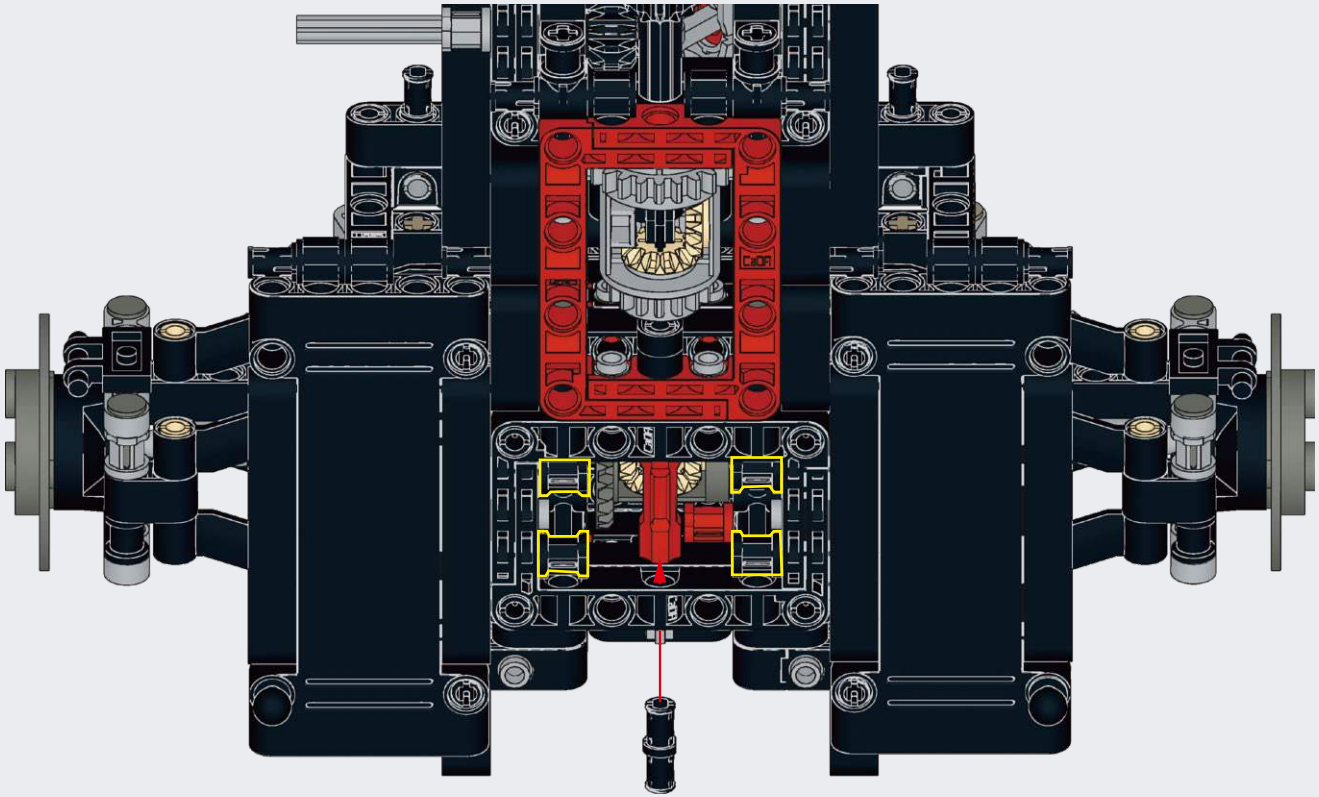

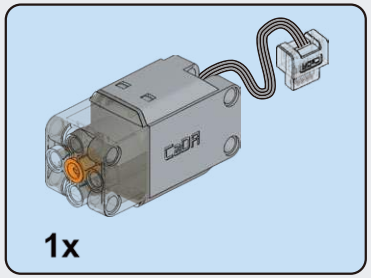

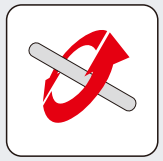

A109

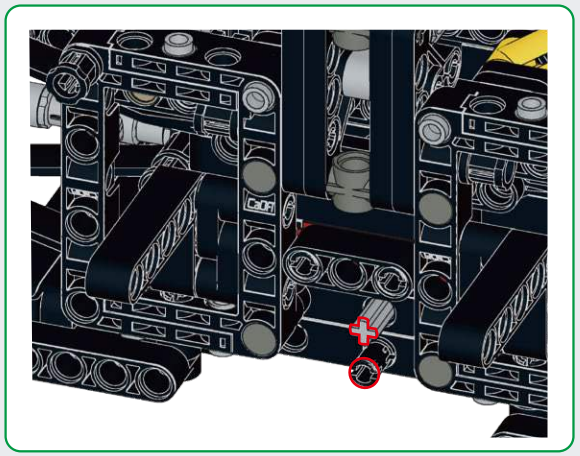

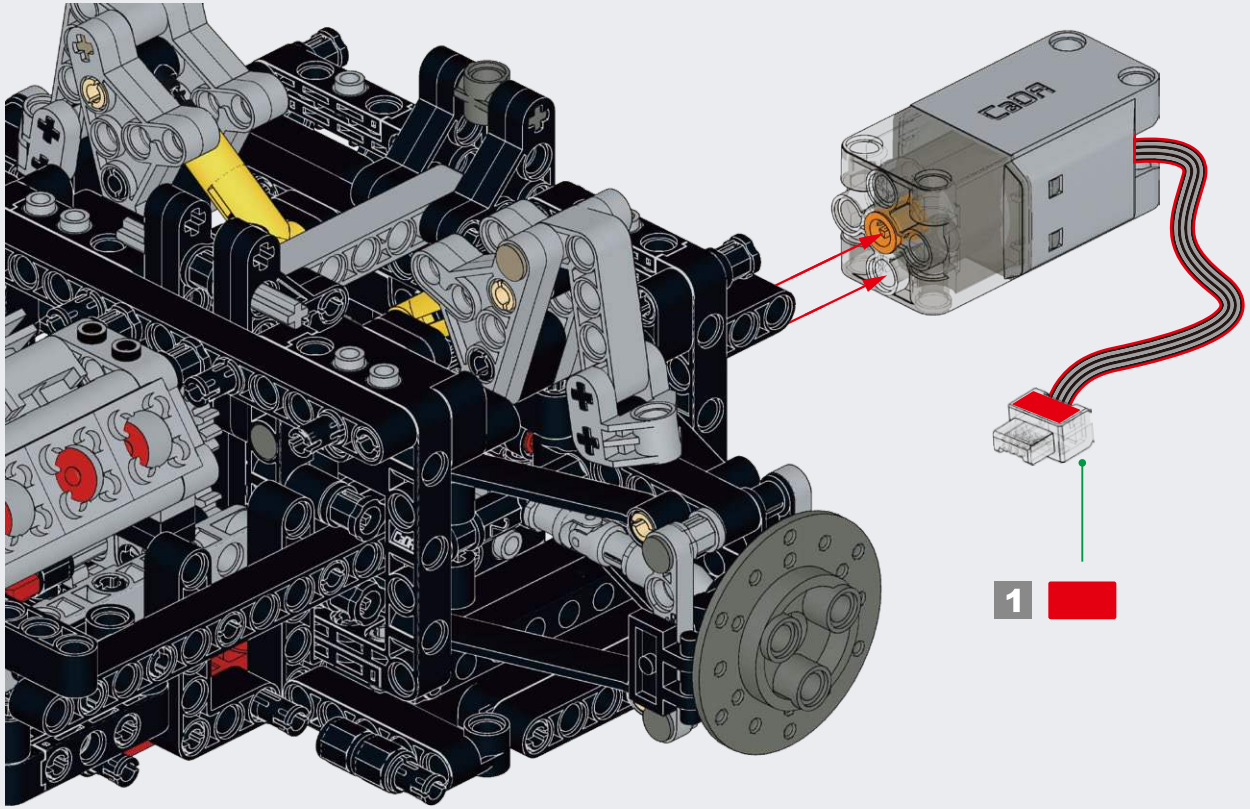

A110

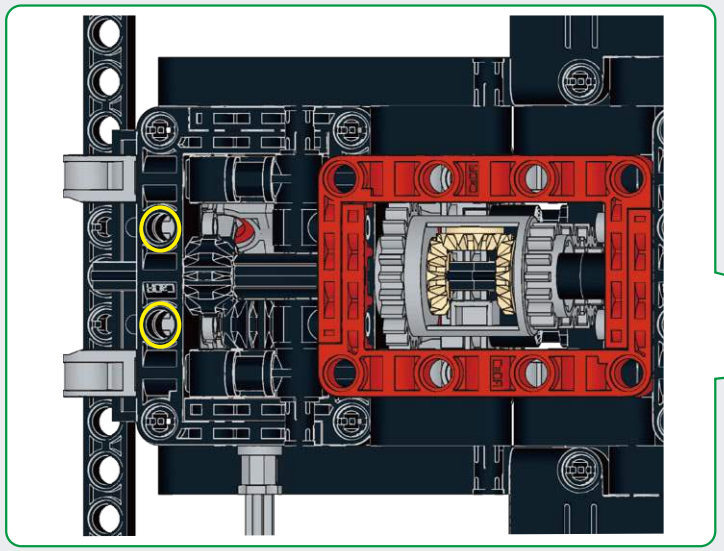

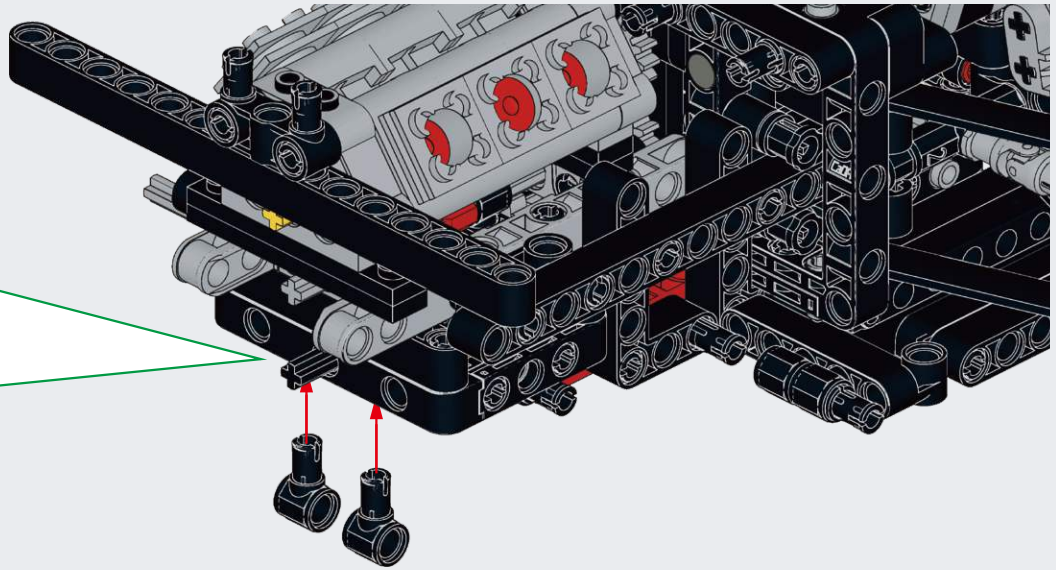

B

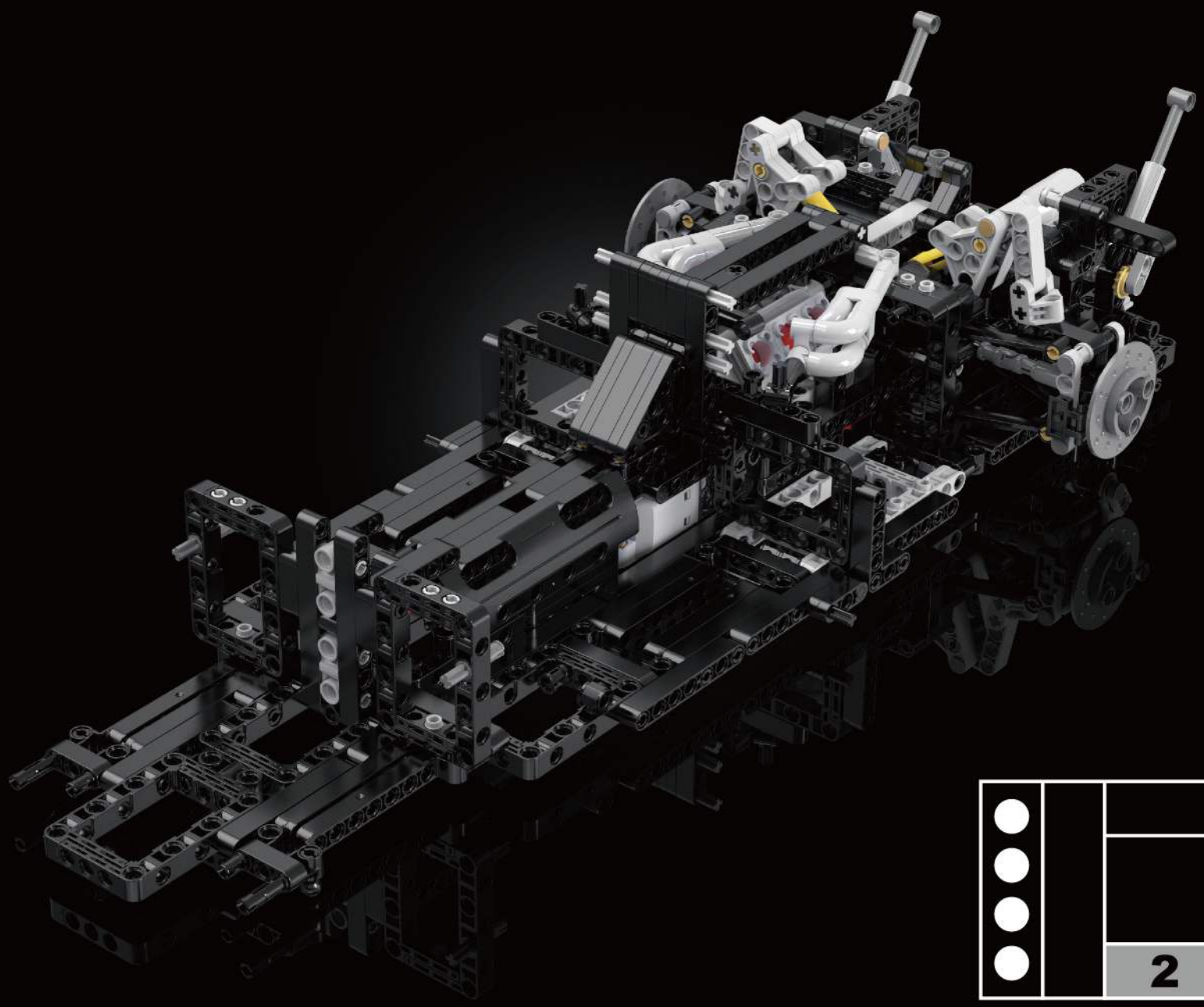

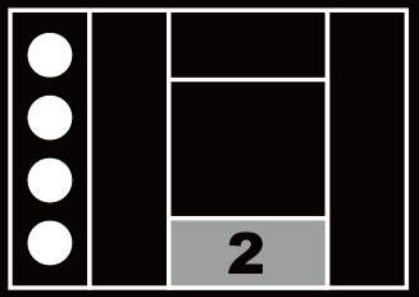

BAG 2

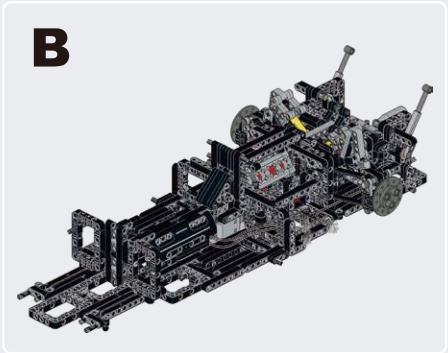

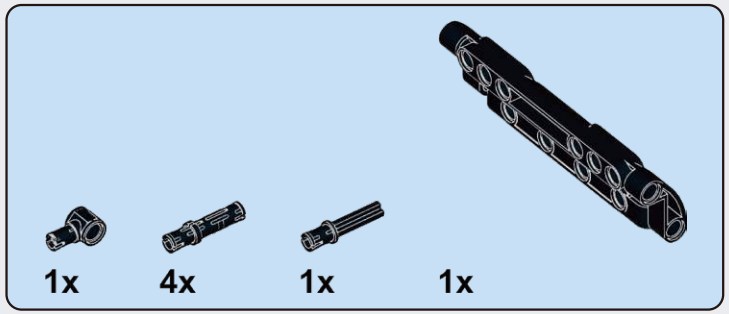

B1

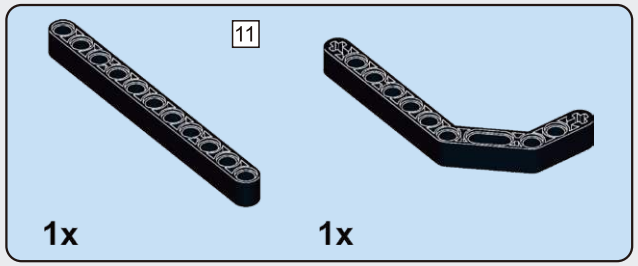

B2

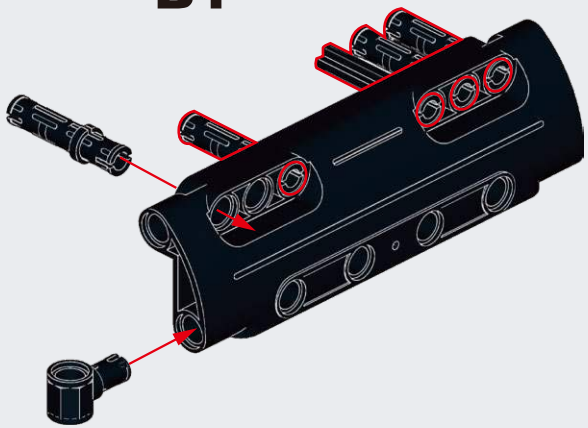

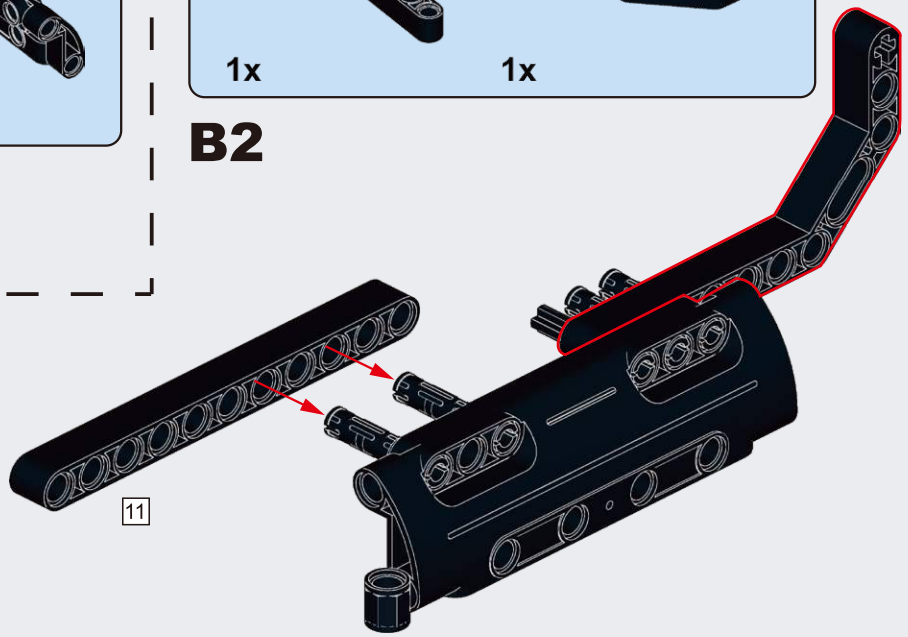

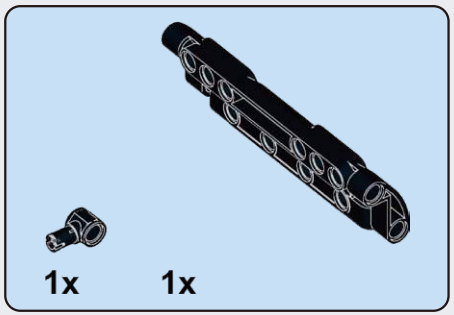

B3

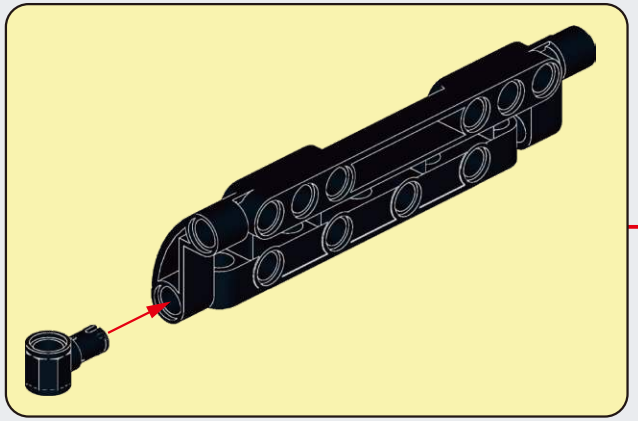

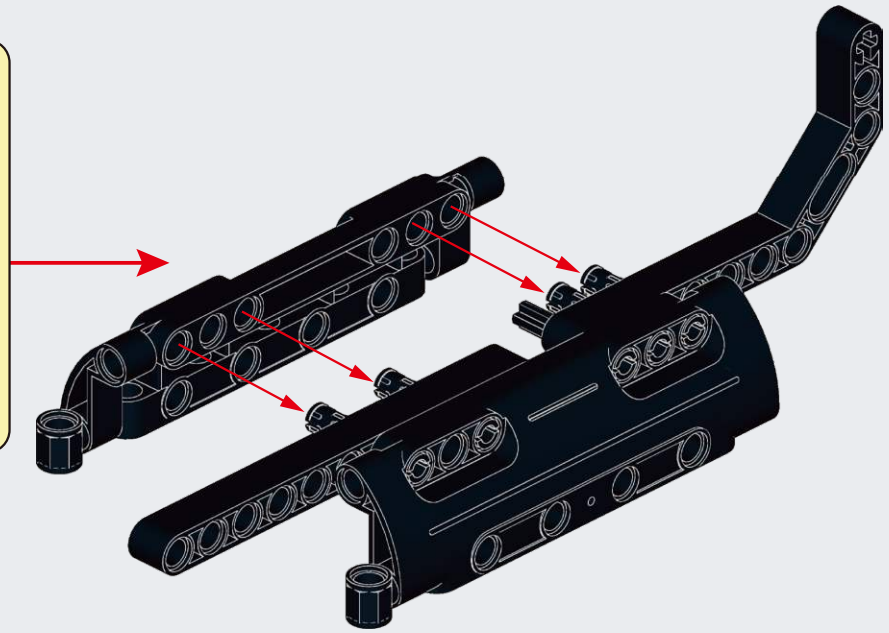

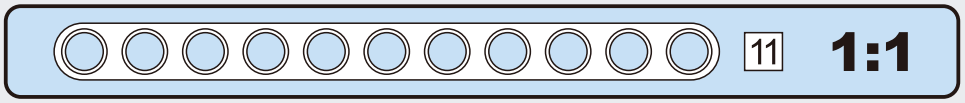

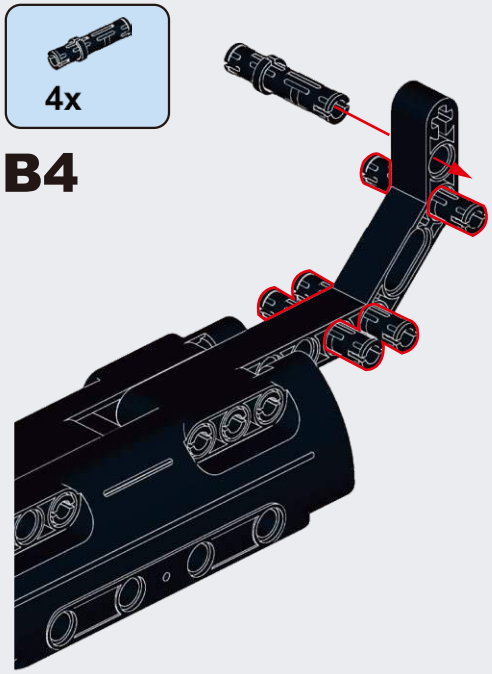
4x
B4

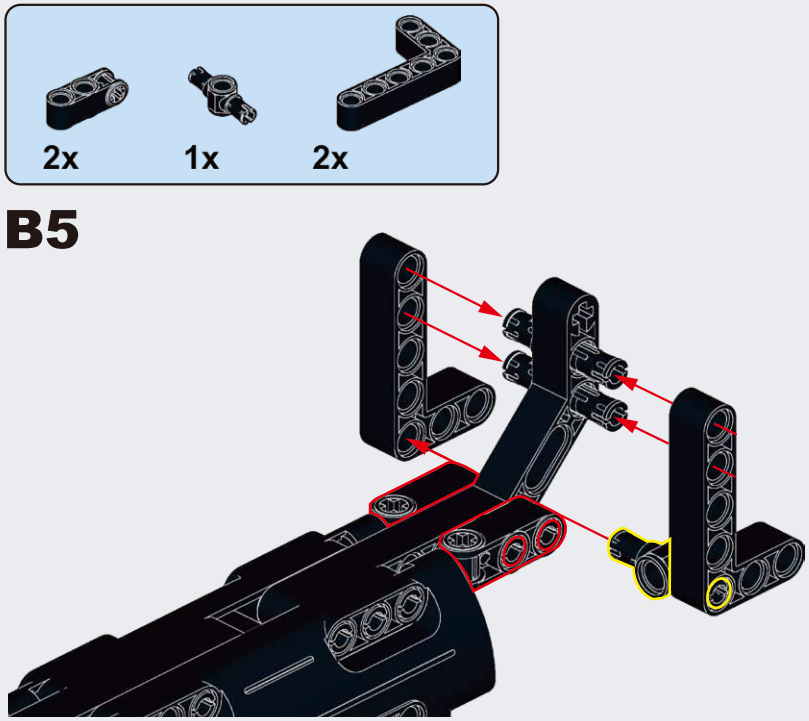
2x
1x
2x
B5

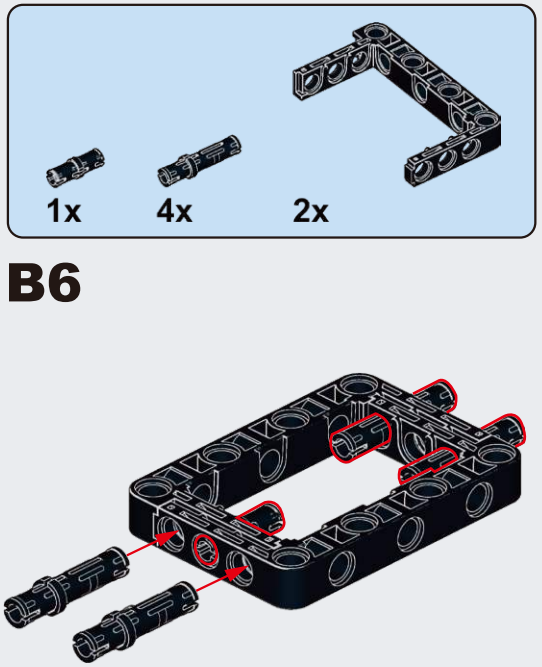
1x
4x
2x
B6

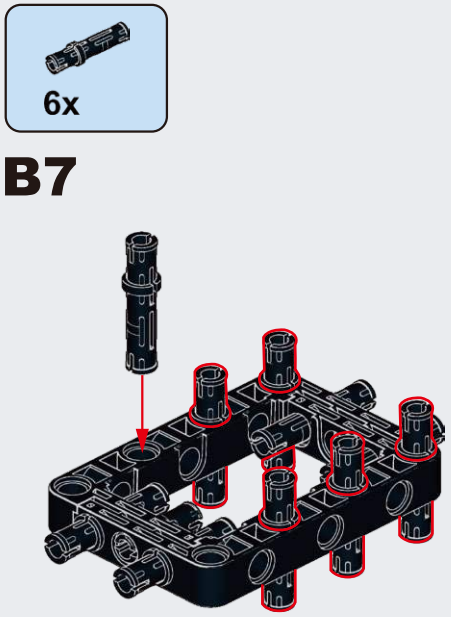
6x
B7

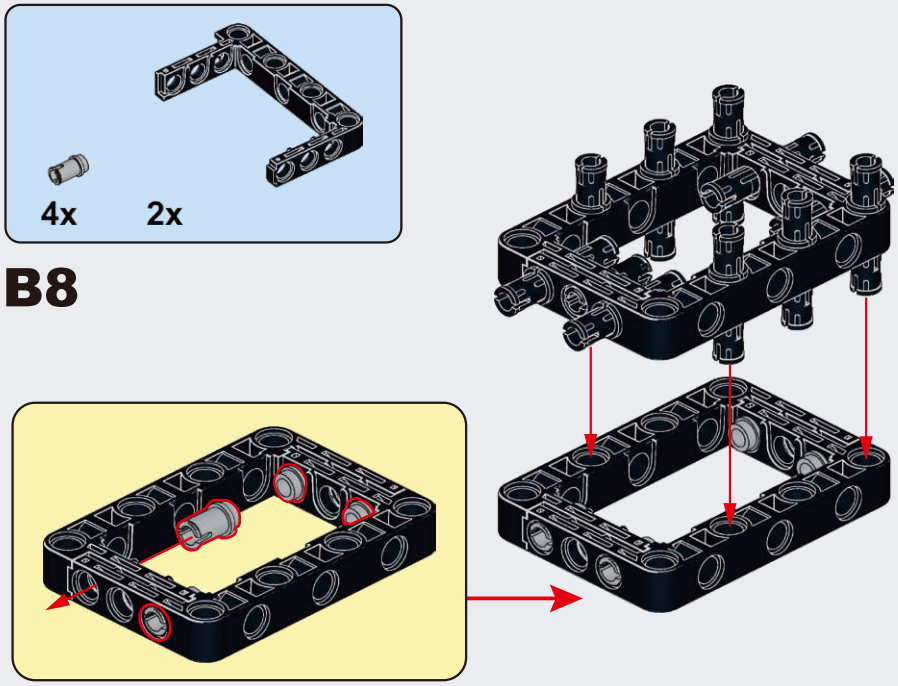
4x
2x
B8

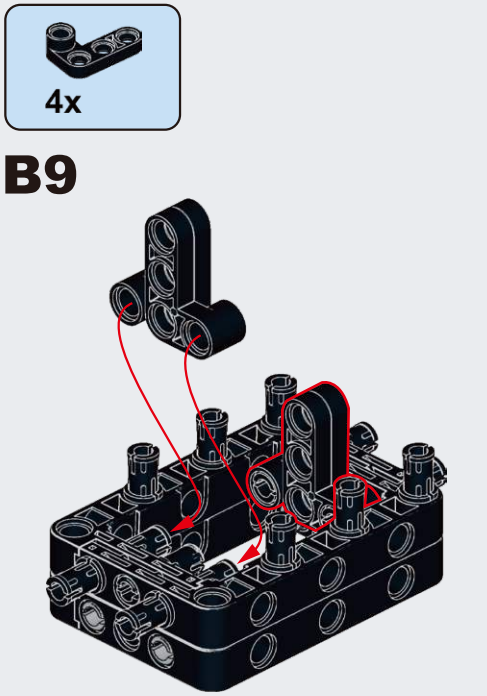
4x
B9

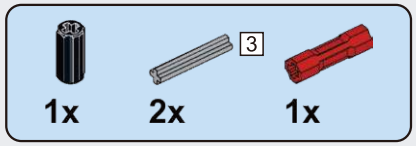

B10

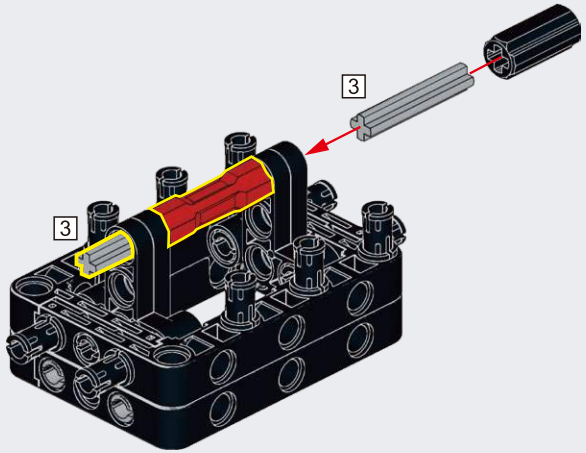

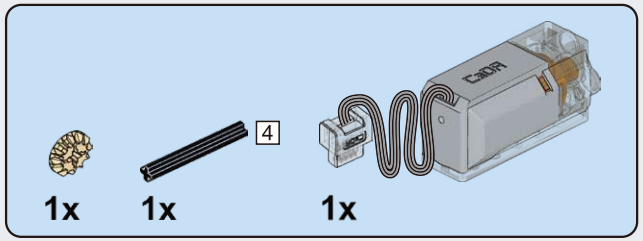

B11

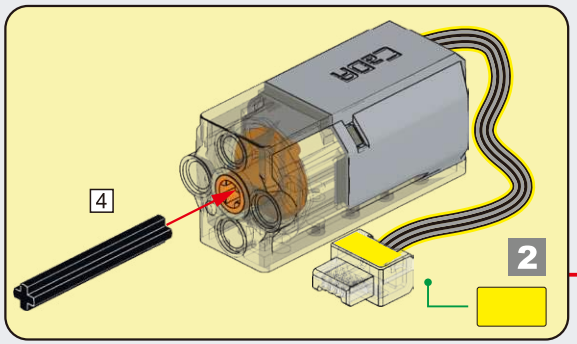

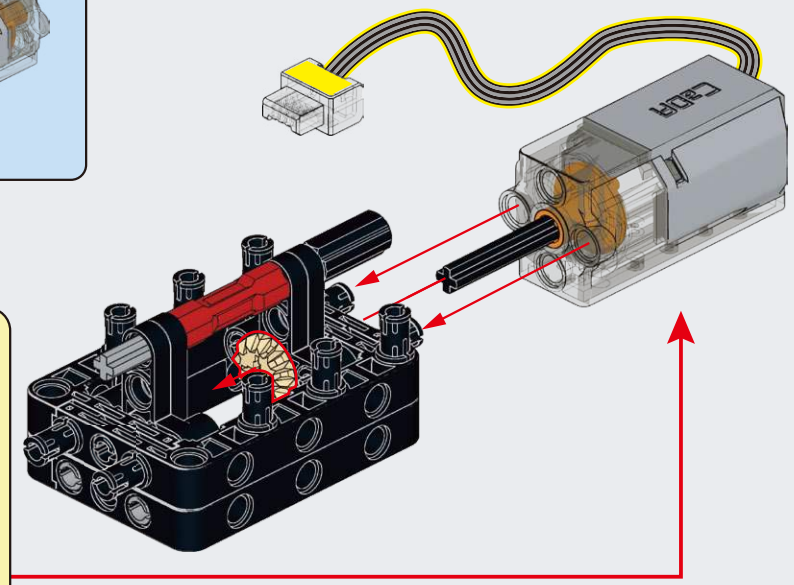

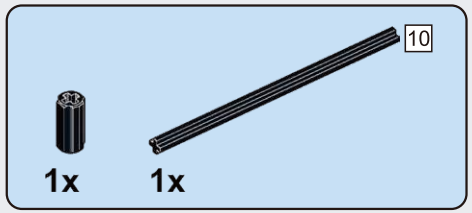

B12

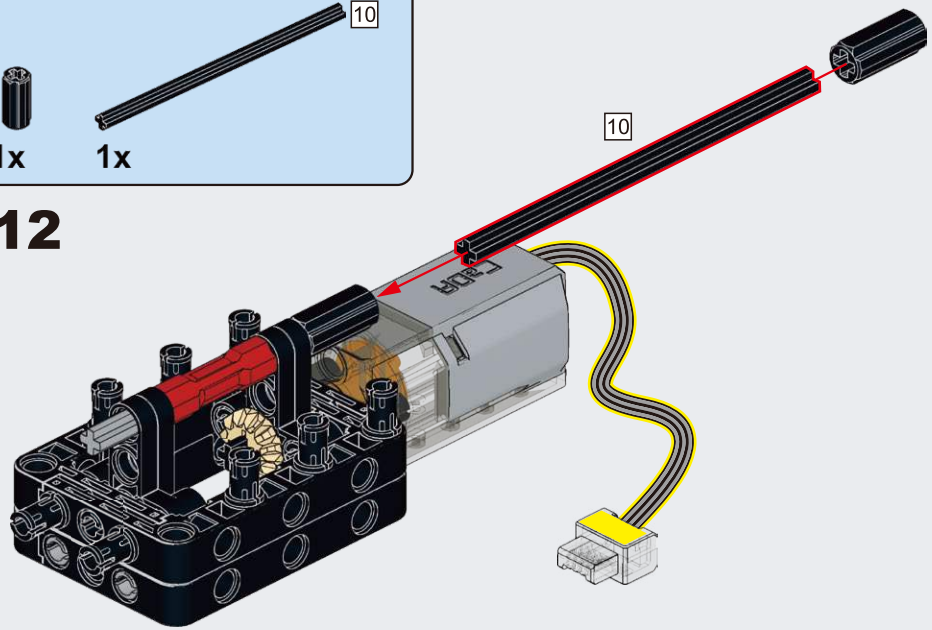

B13

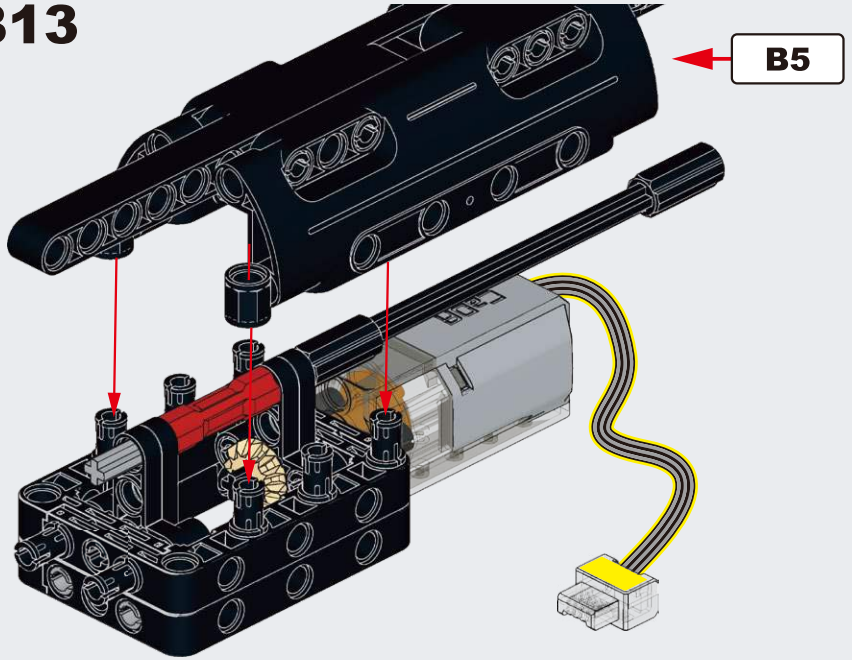

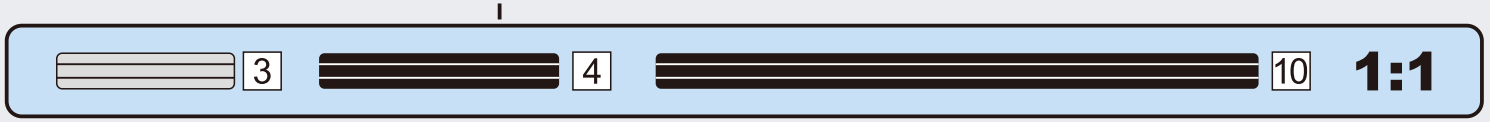

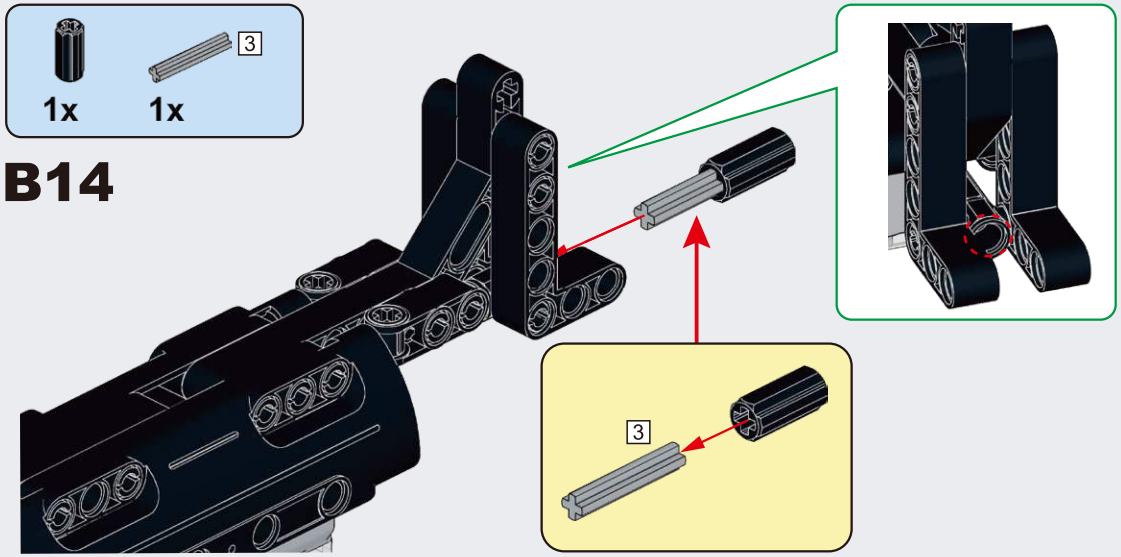

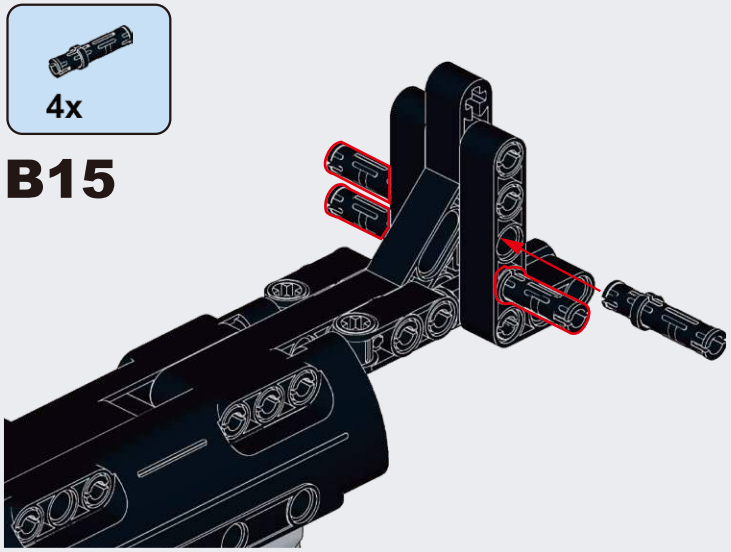

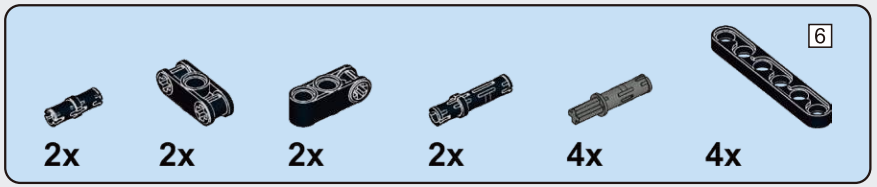

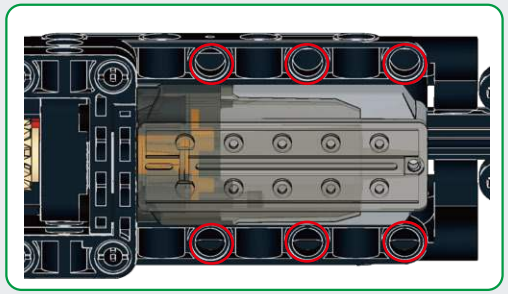

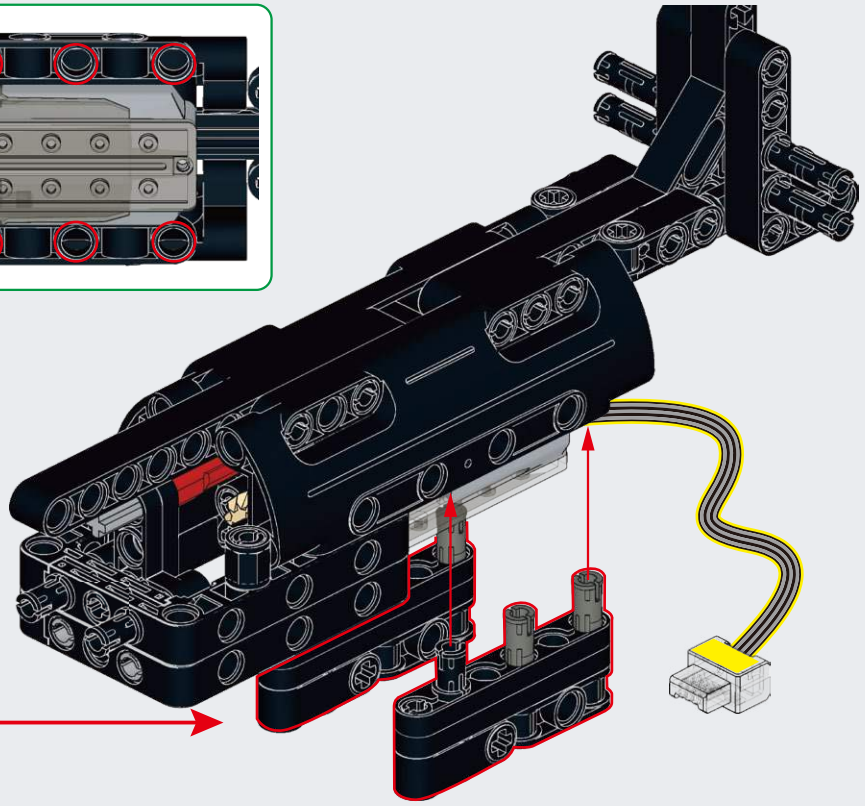

B16

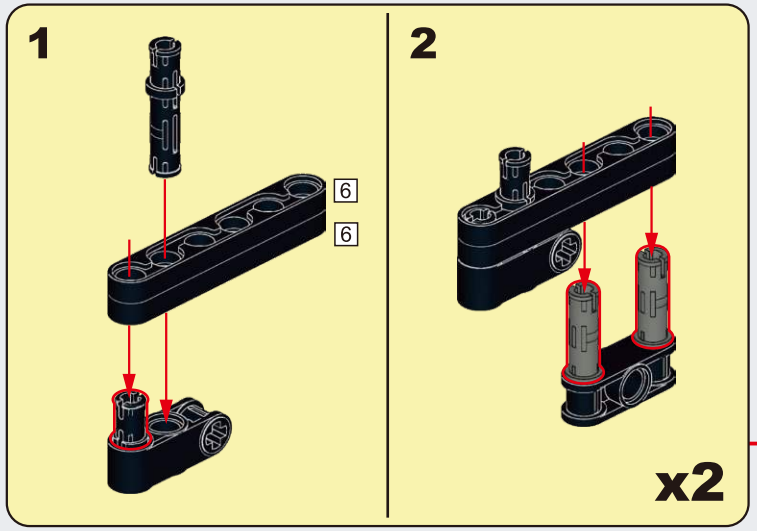

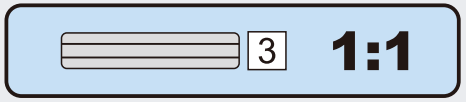

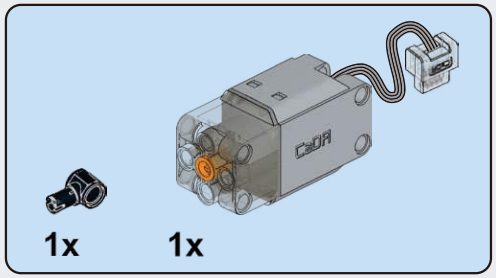

B17

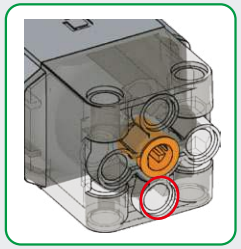

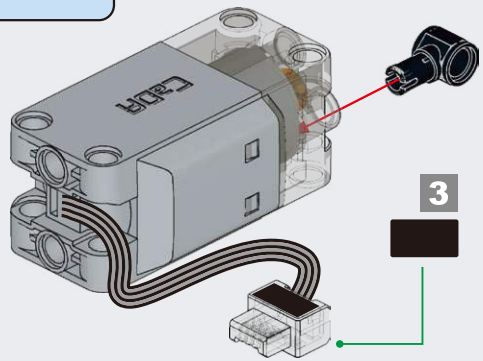

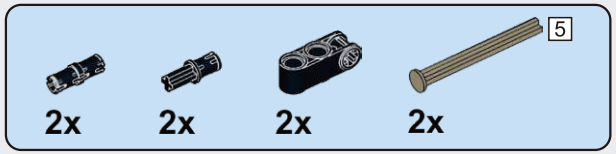

B18

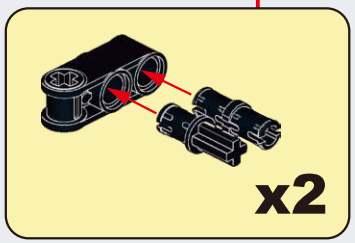

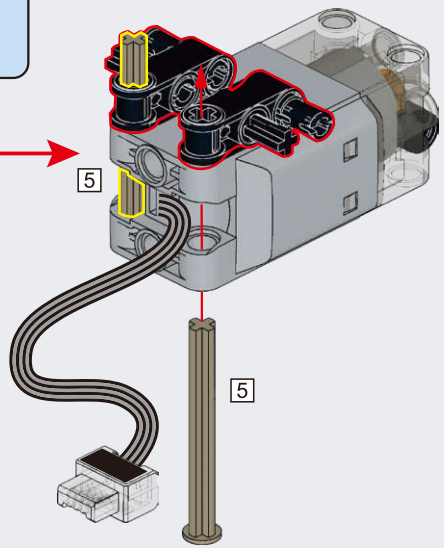

B19

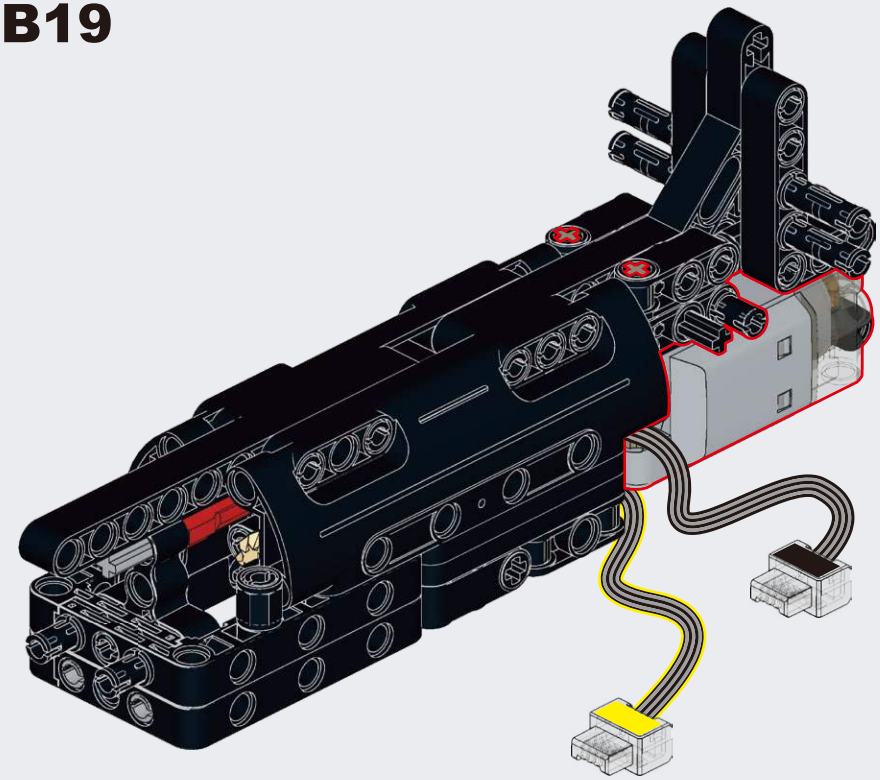

B20

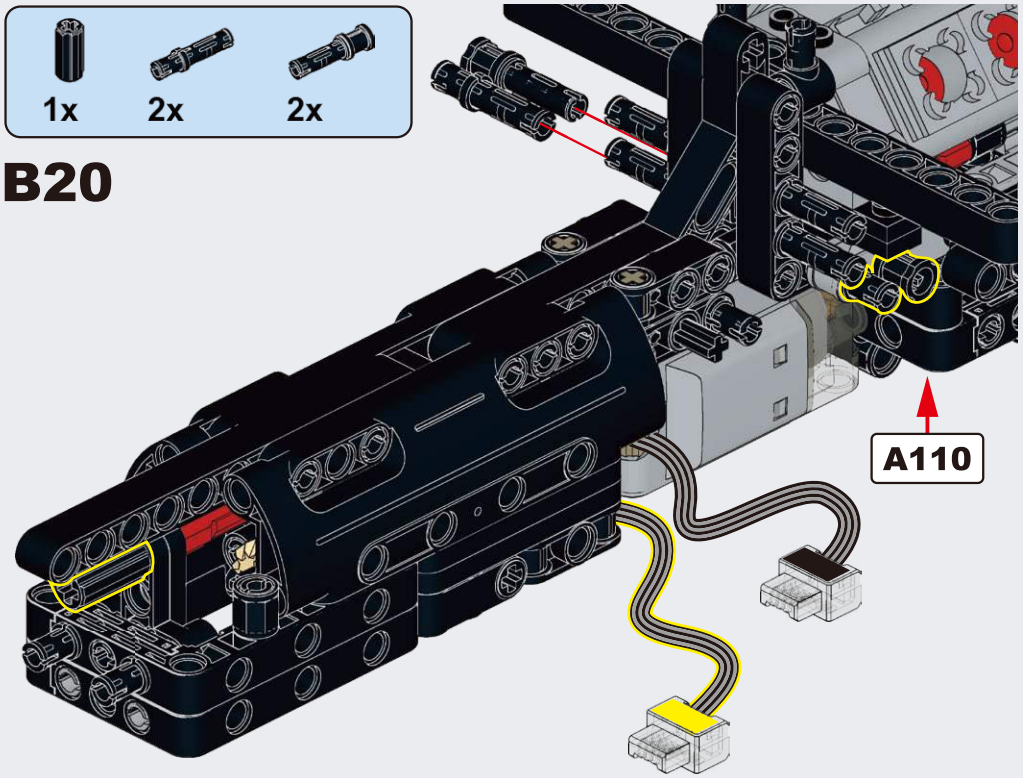

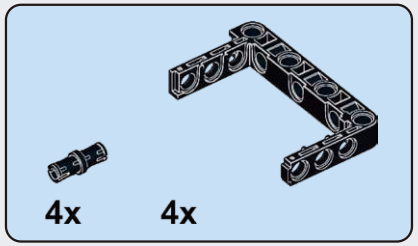

B21

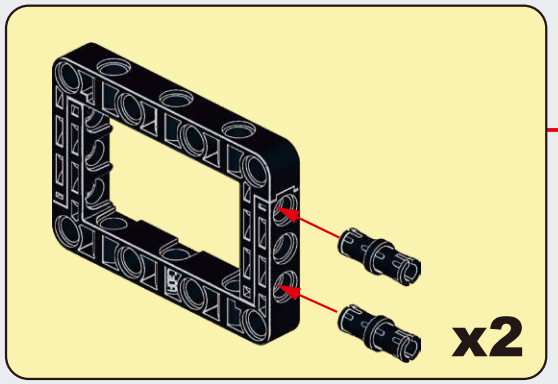

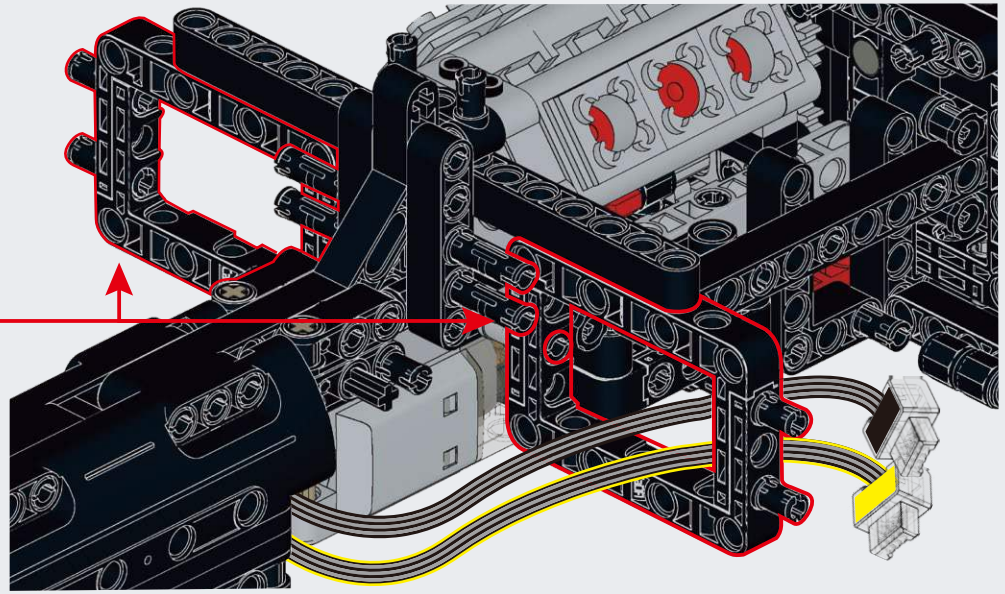

B22

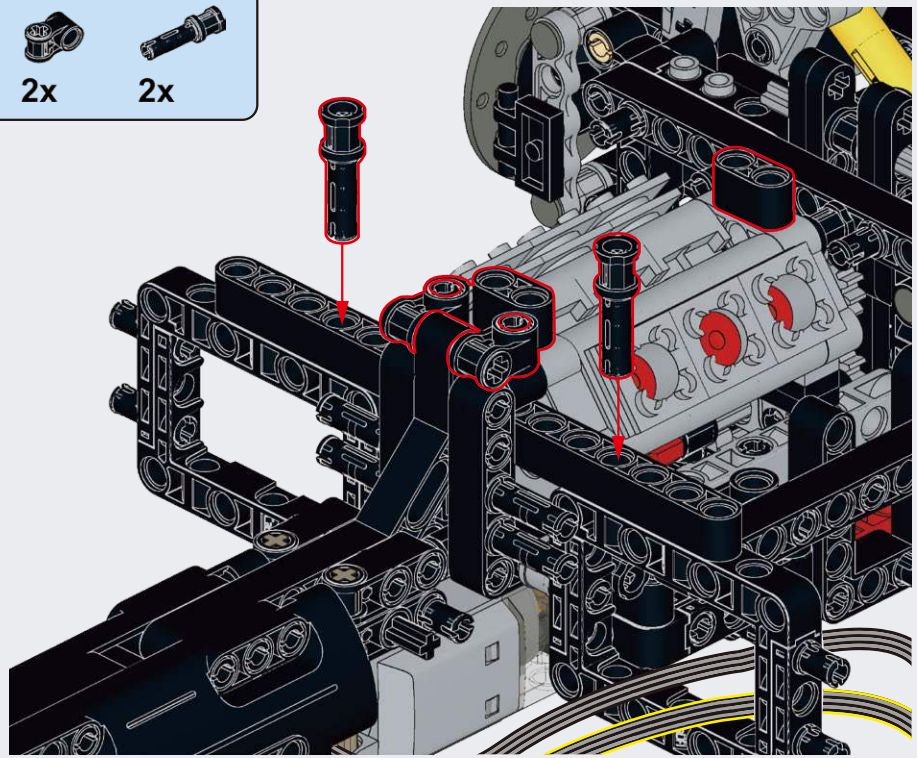

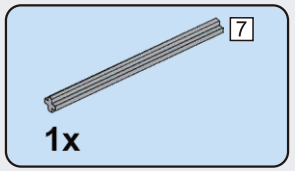

B23

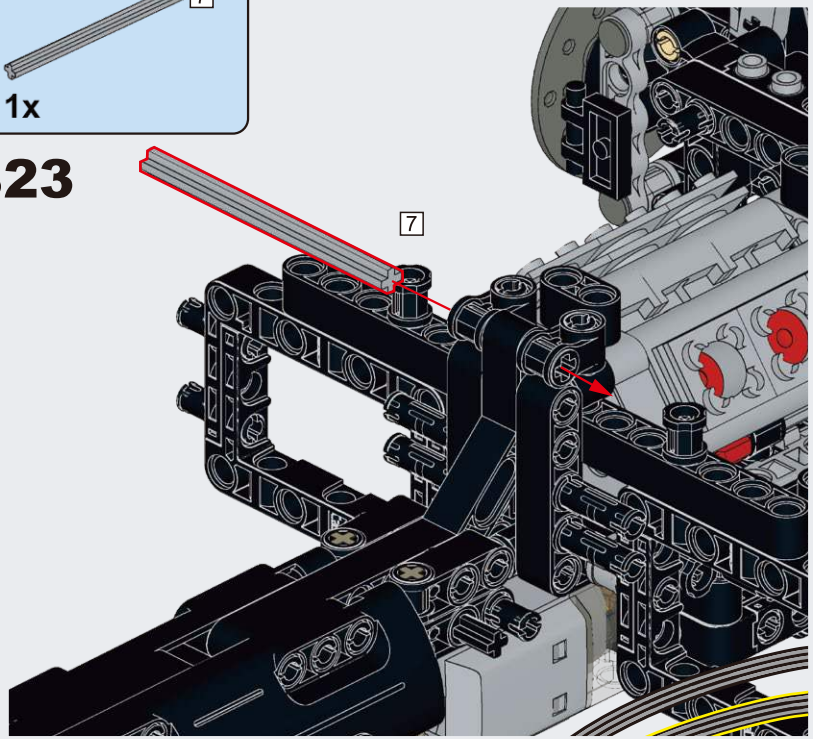

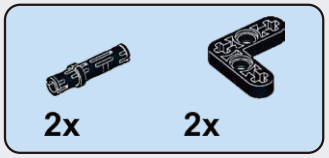

B24

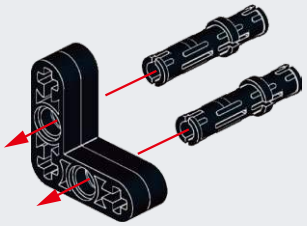

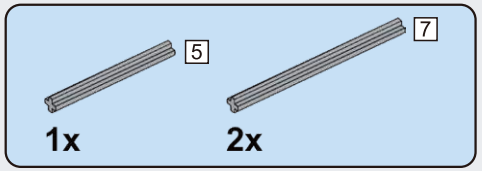

B25

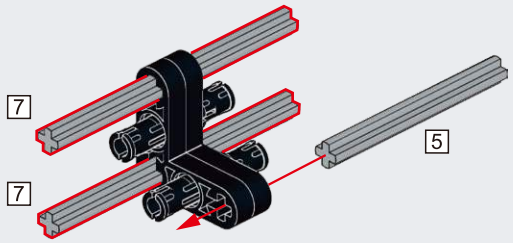

B26

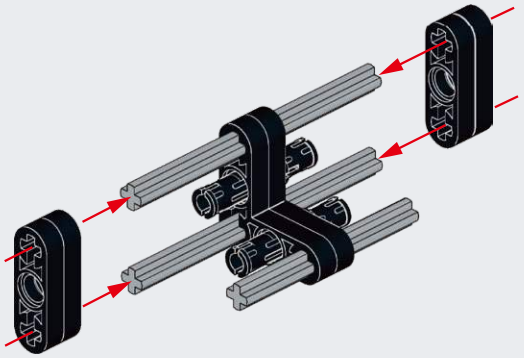

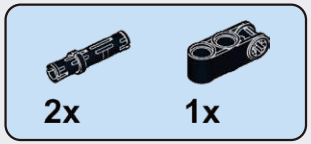

B27

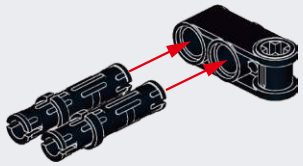

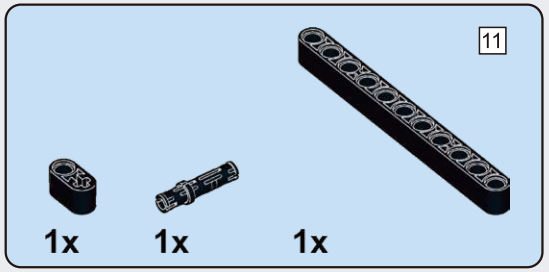

B28

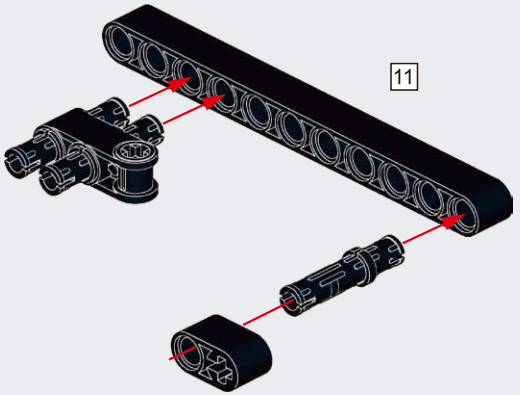

B29

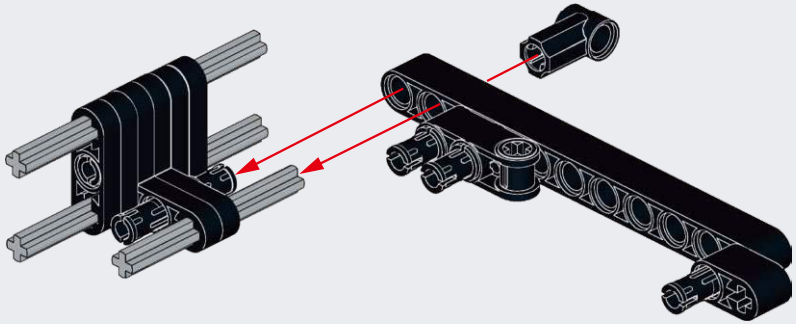

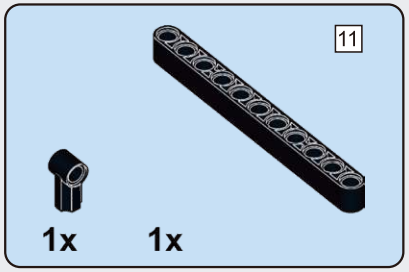

B30

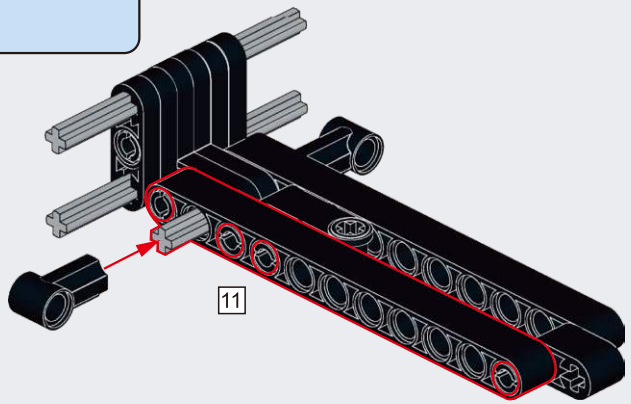

B31

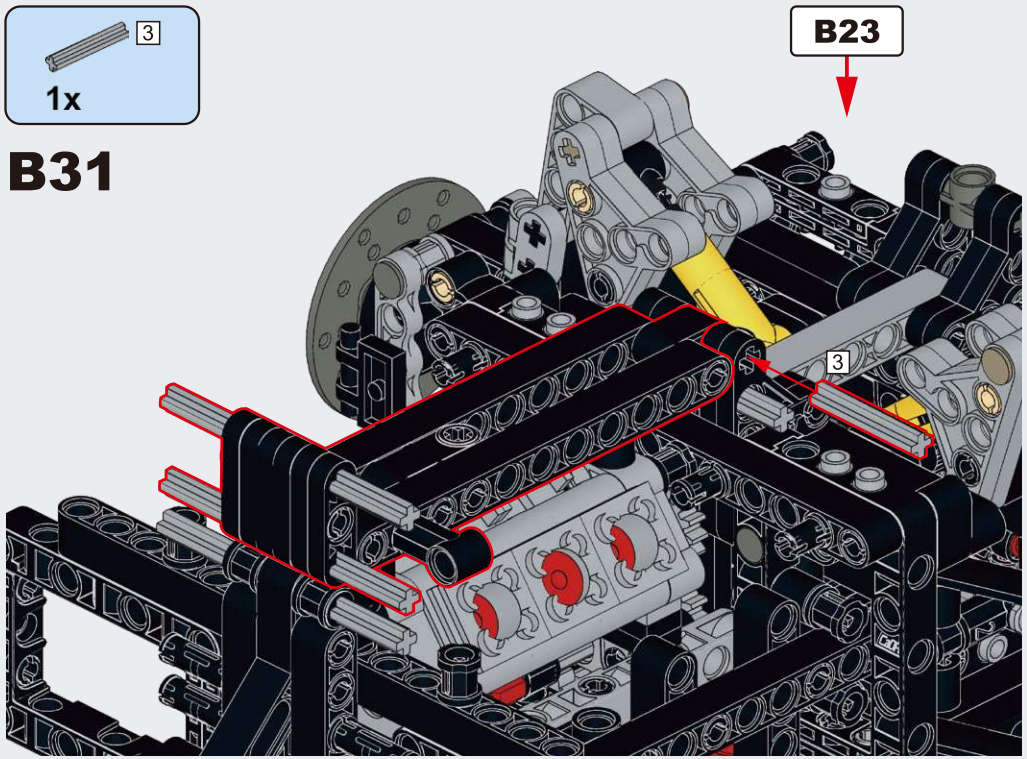

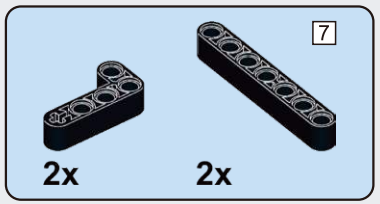

B32

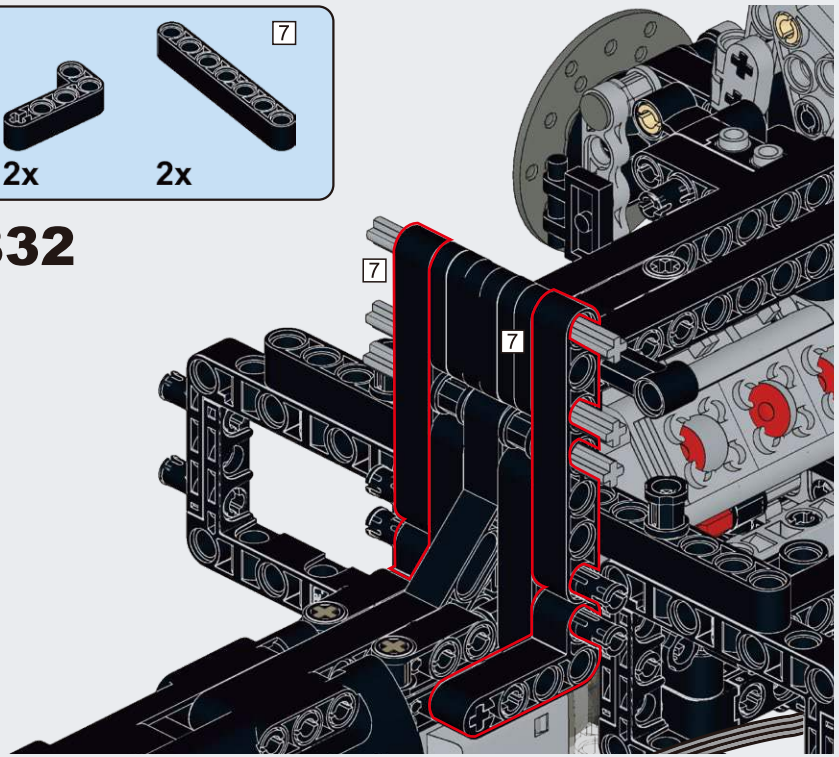

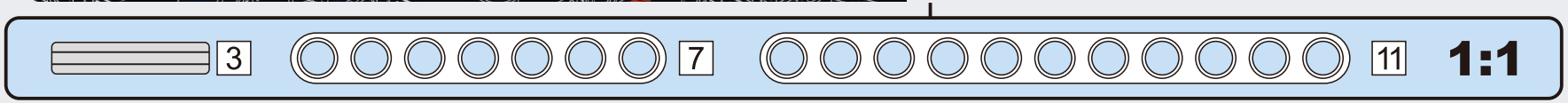

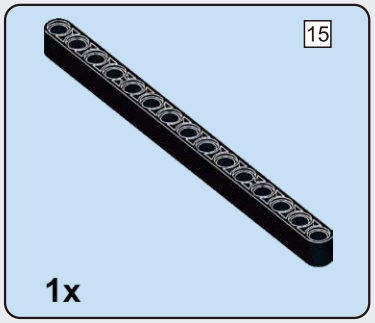

B33

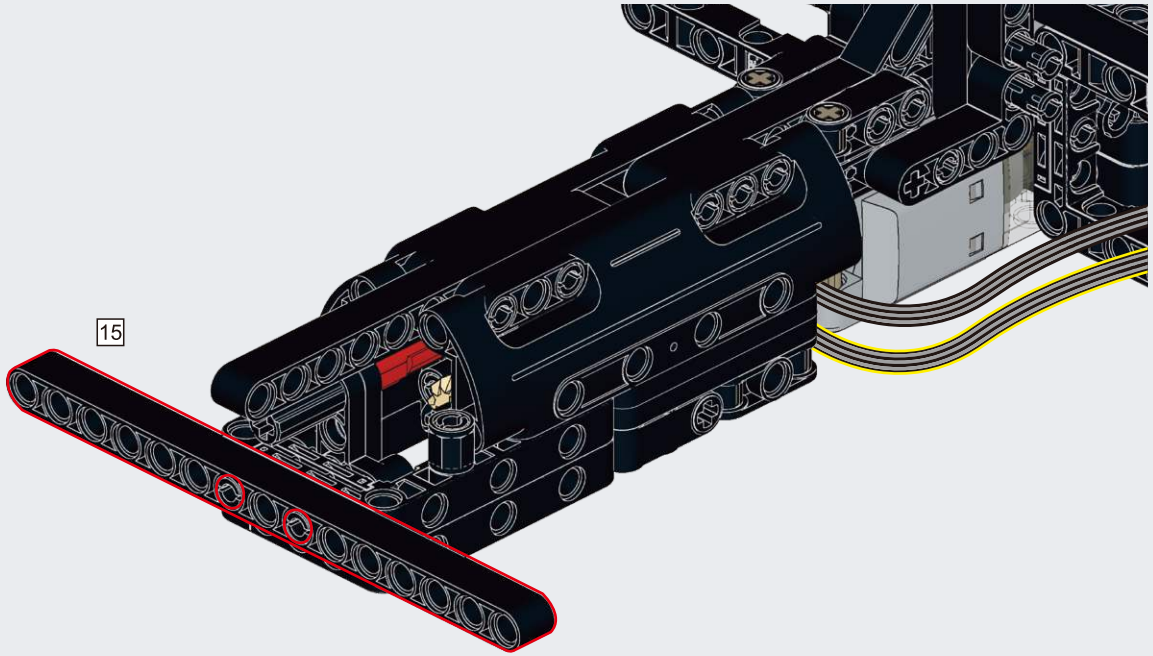

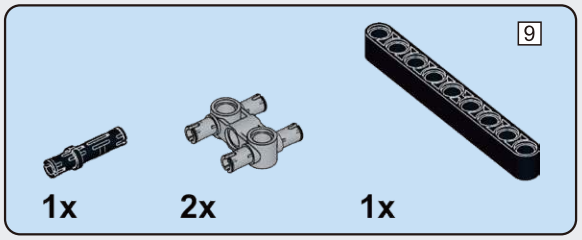

B34

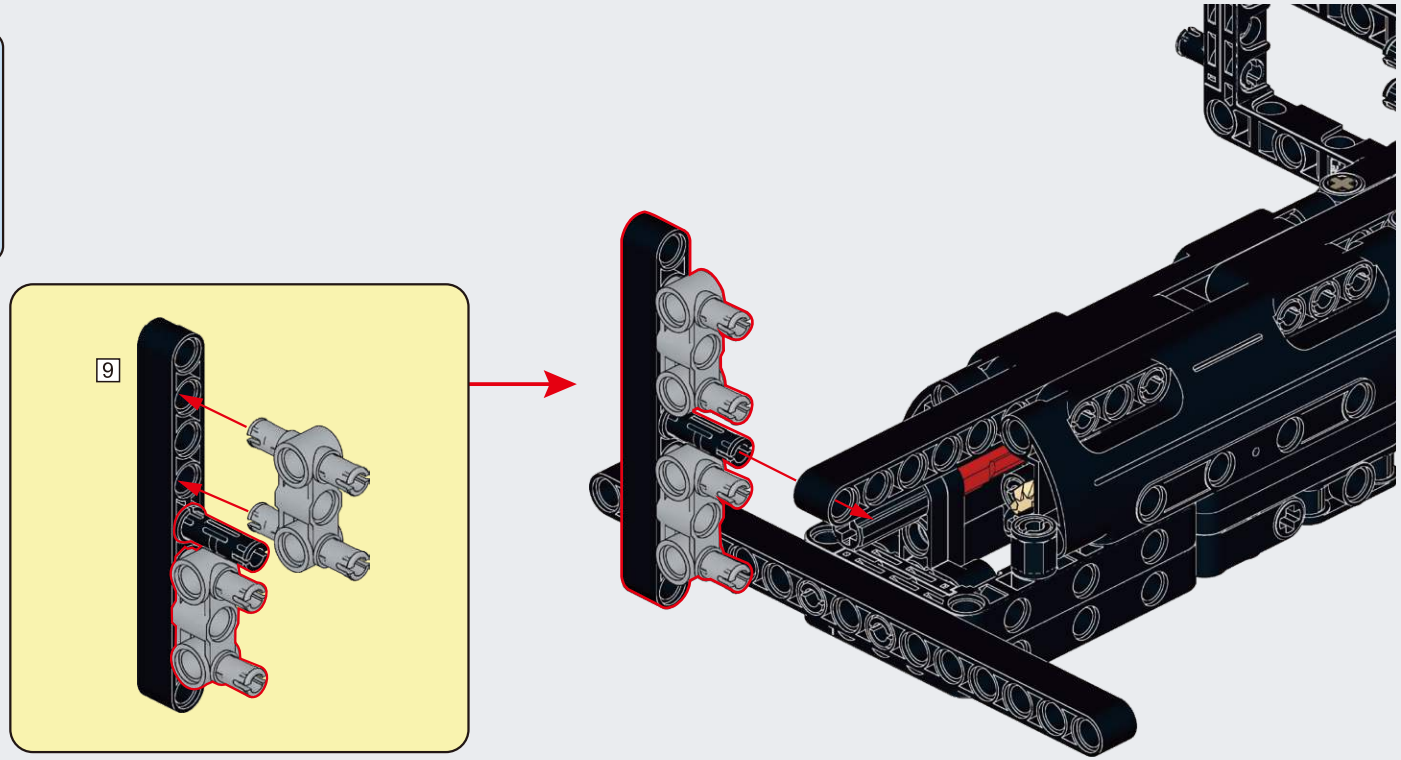

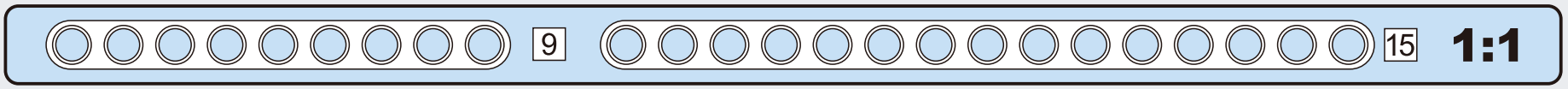

B35

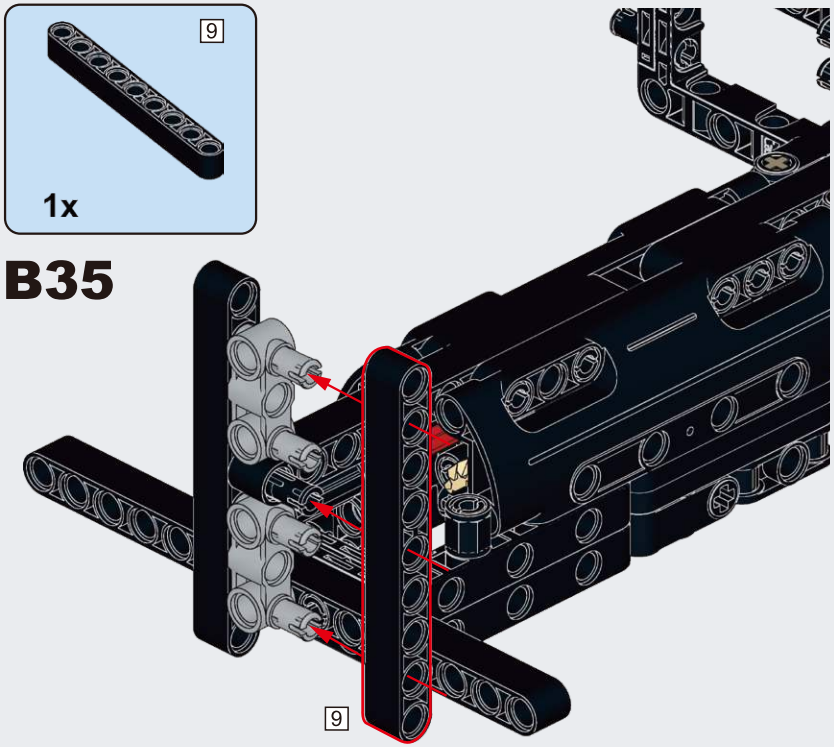

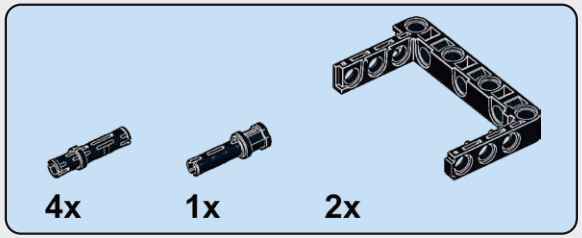

B36

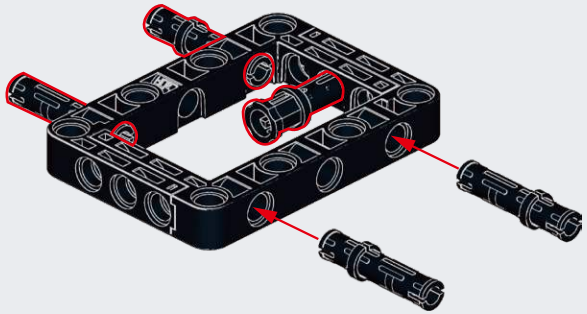

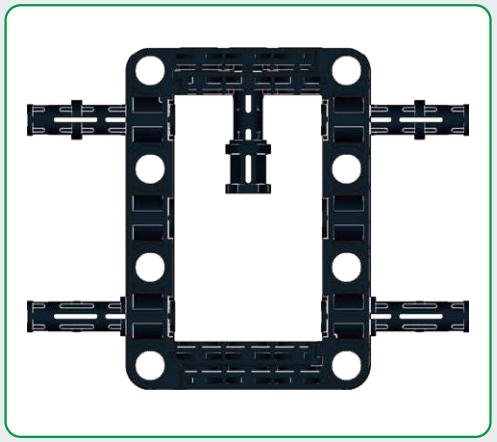

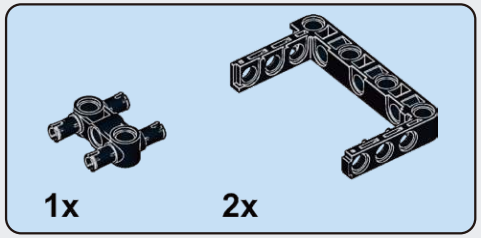

B37

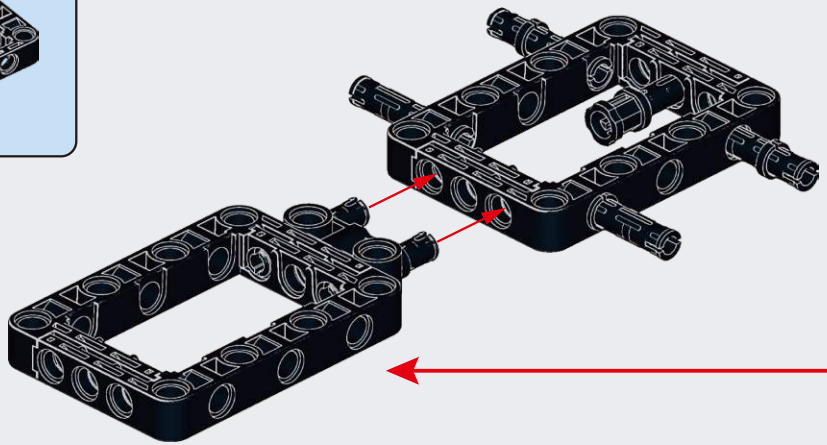

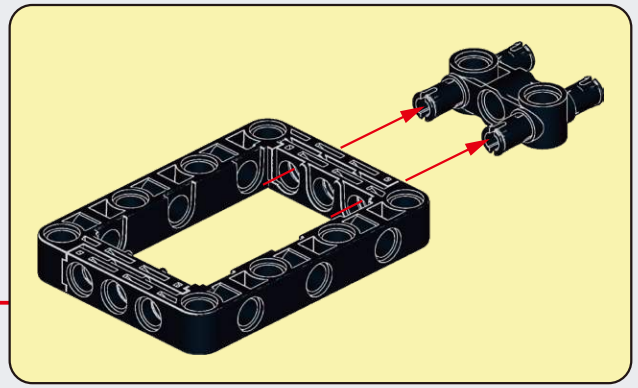

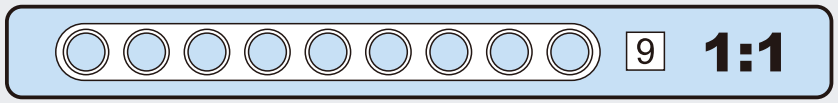

B38

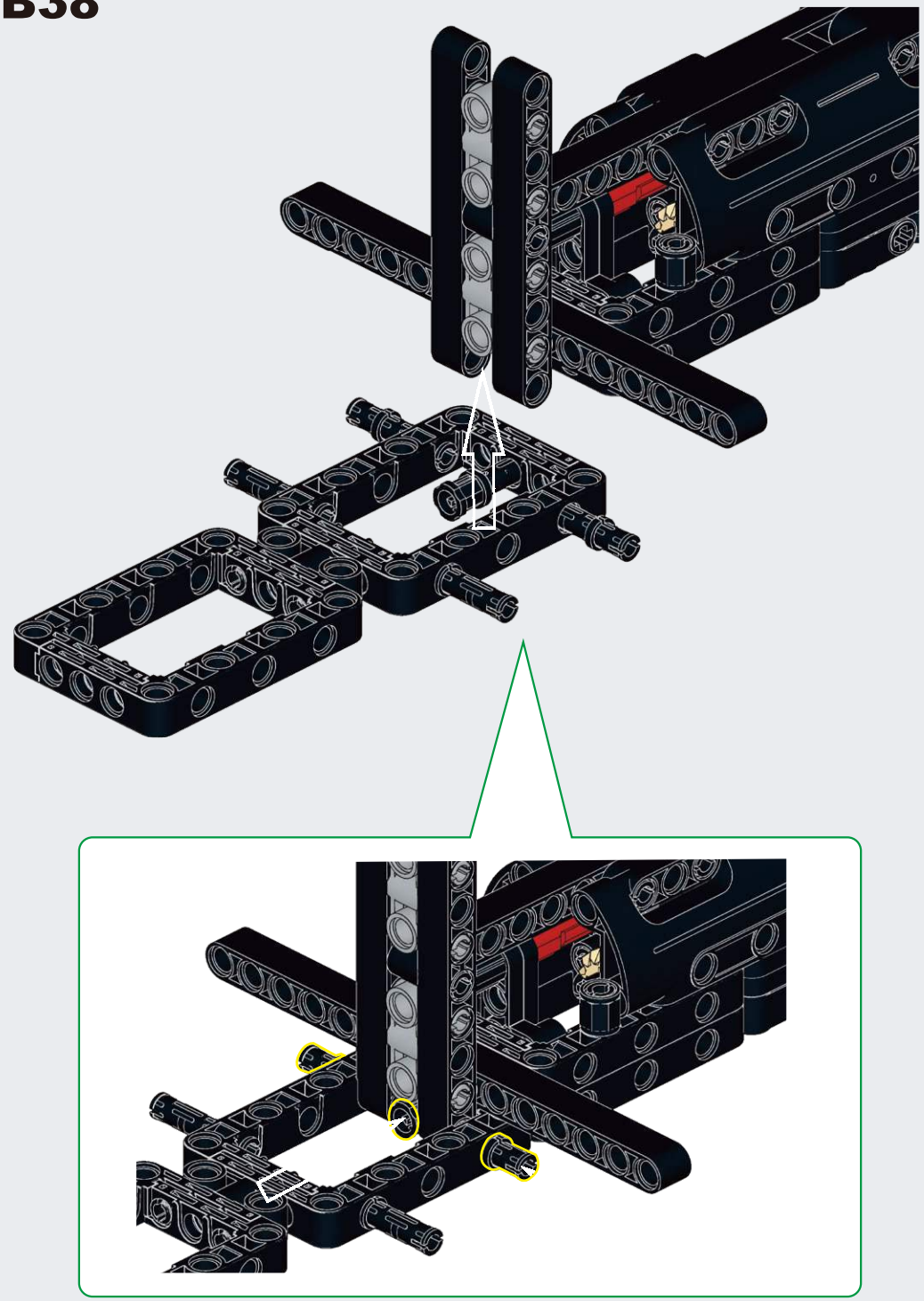

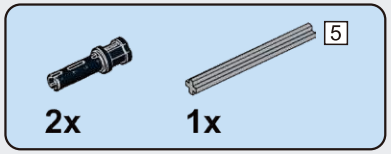

B39

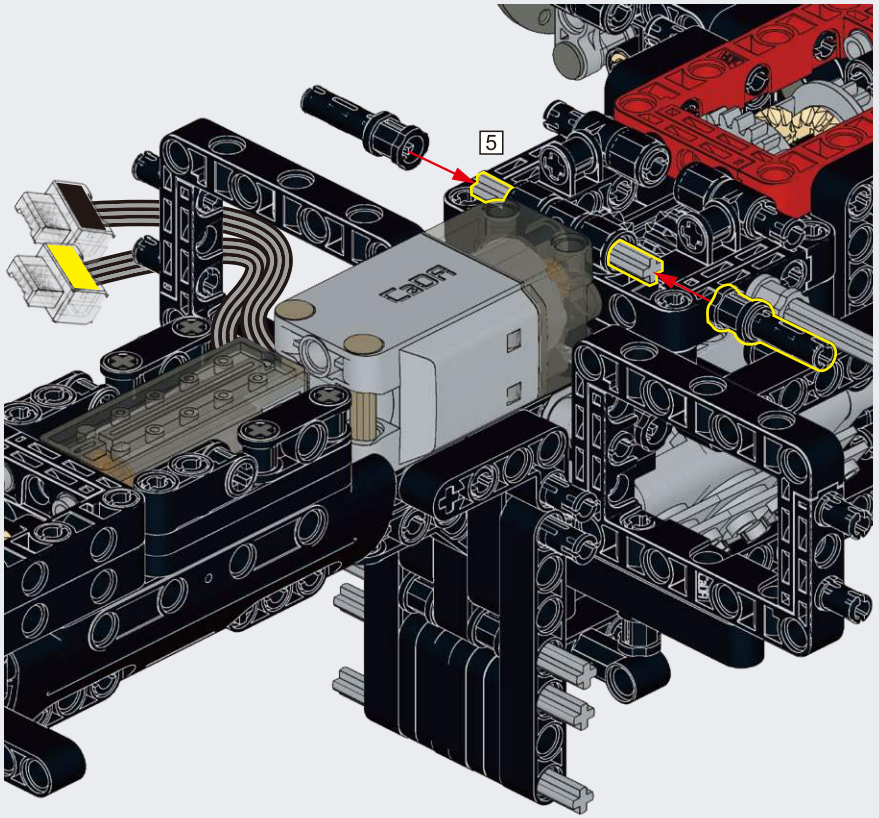

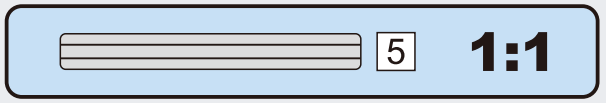

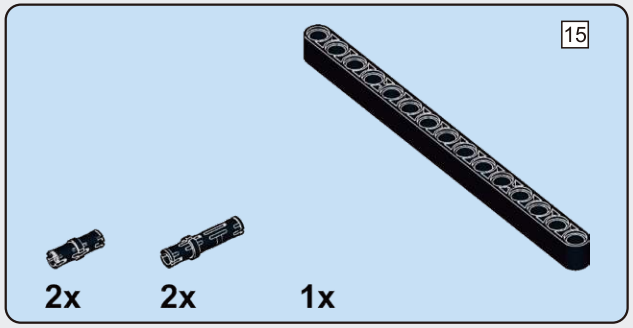

B40

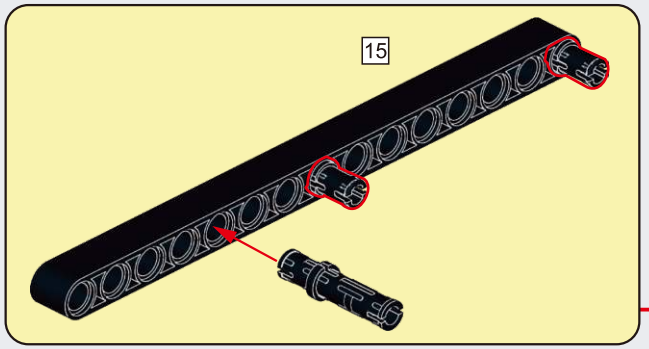

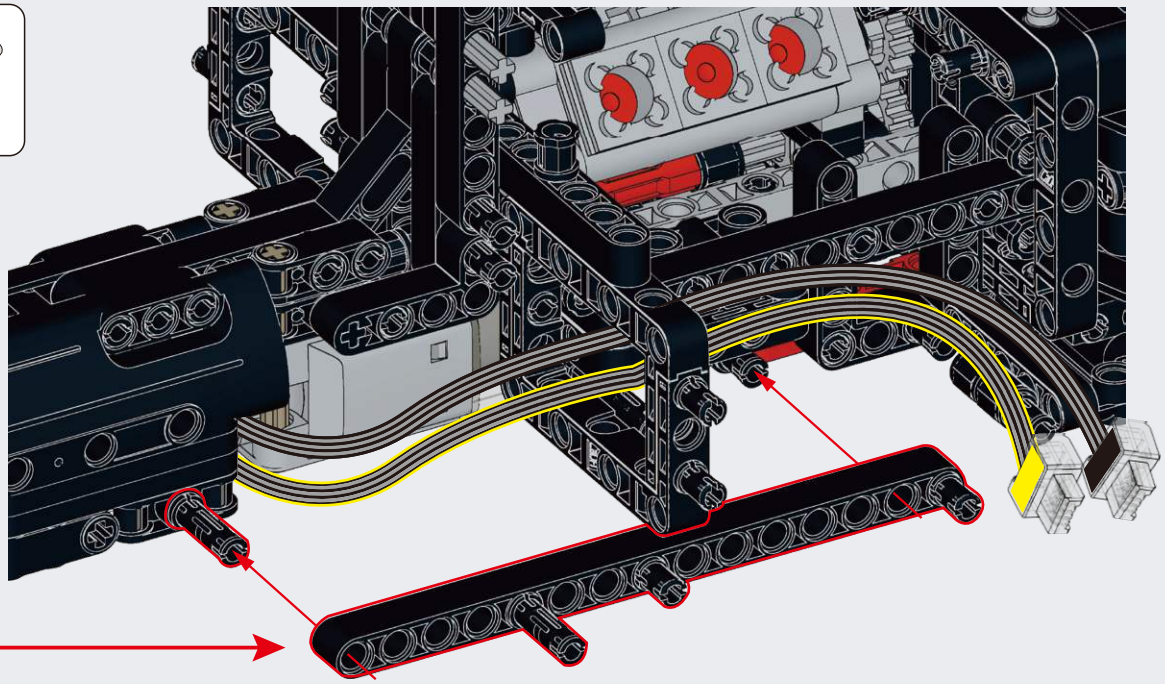

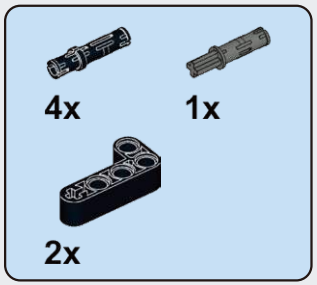

B41

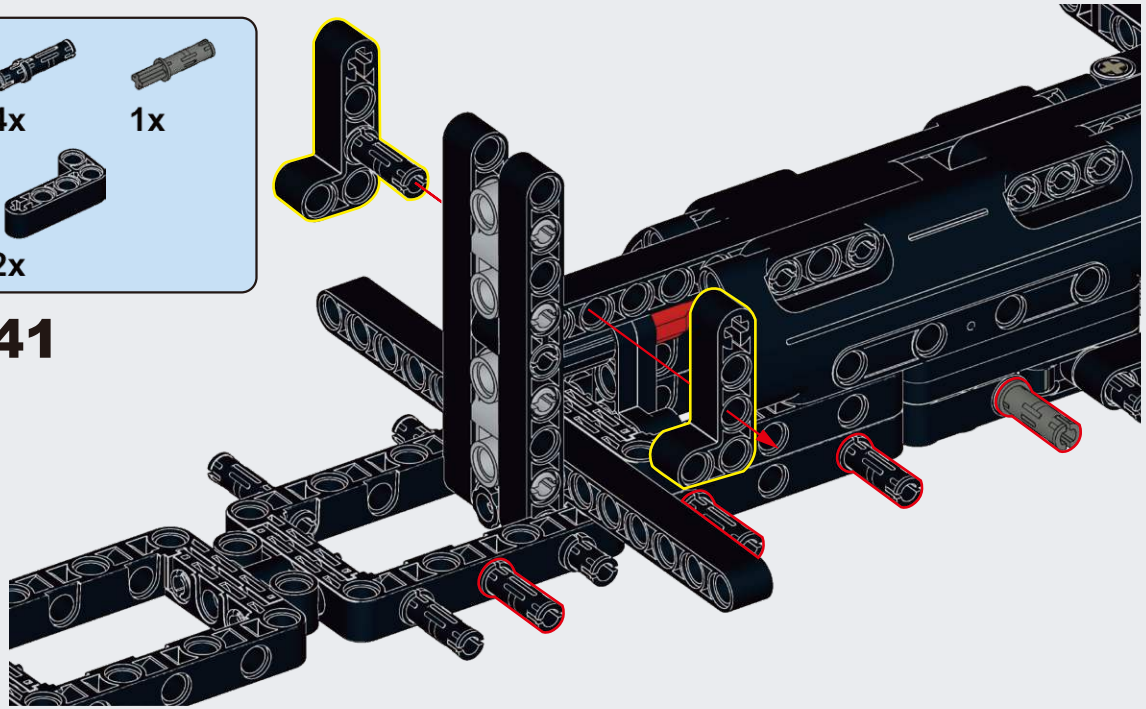

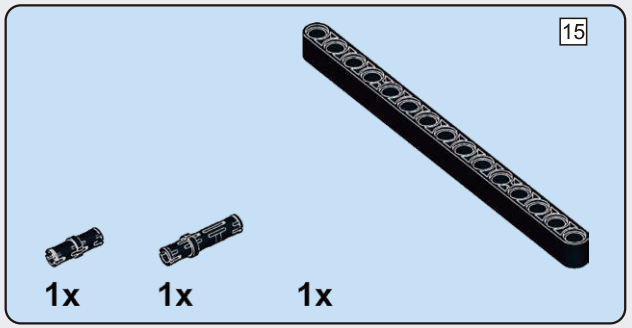

B42

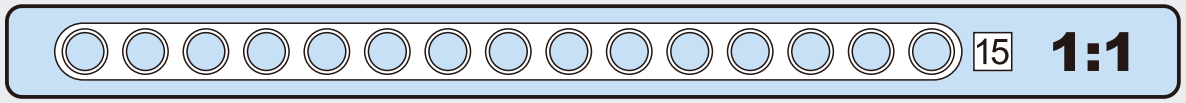

B43

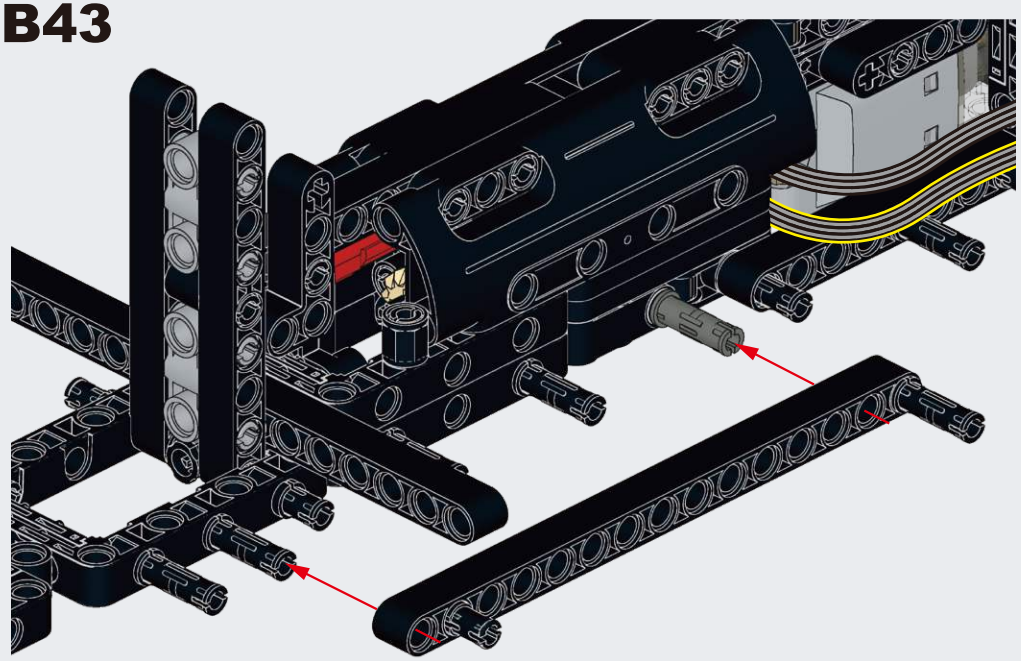

B44

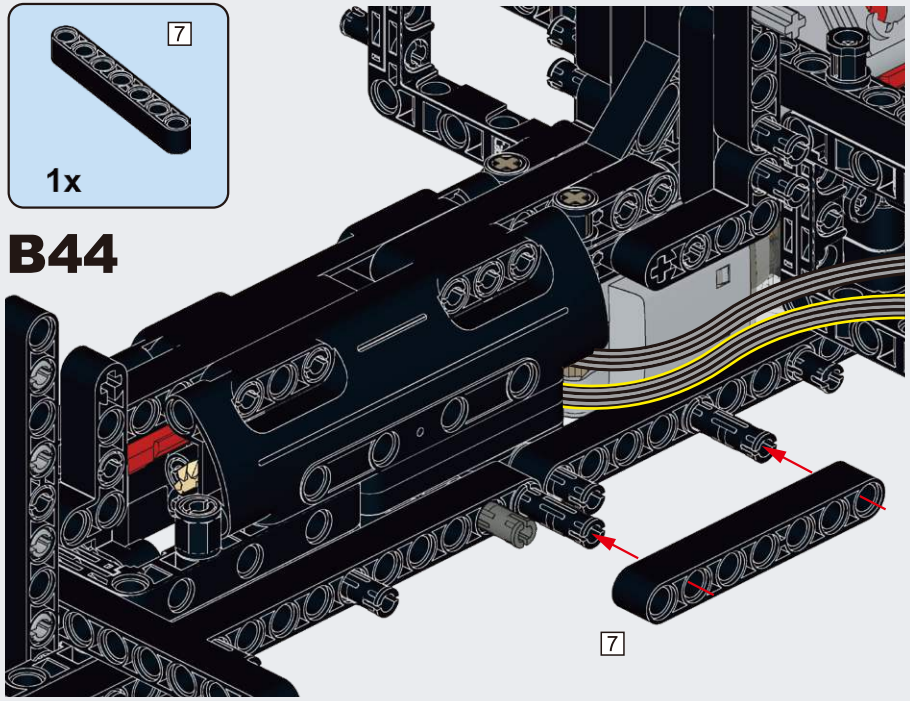

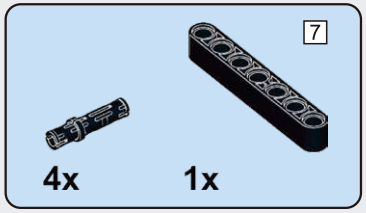

B45

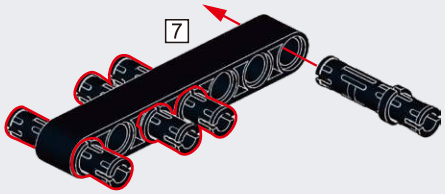

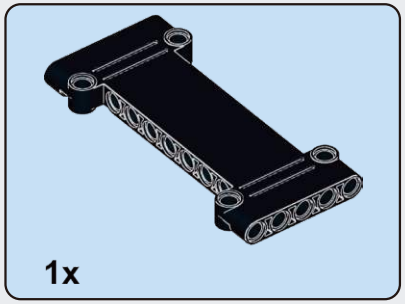

B46

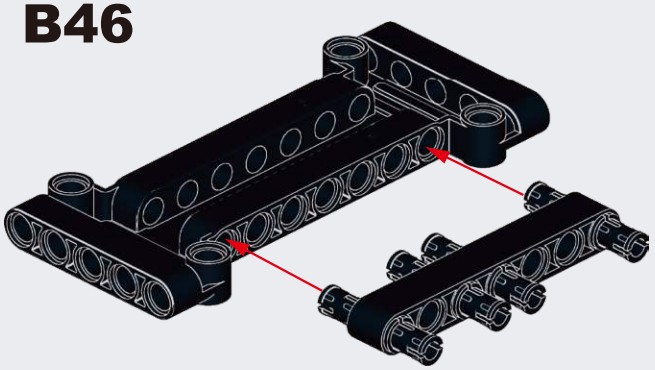

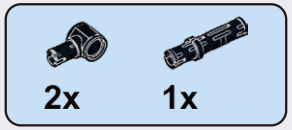

B47

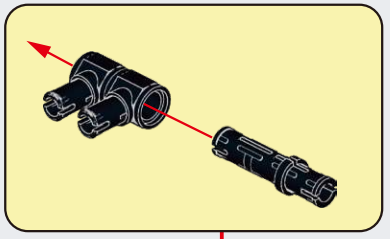

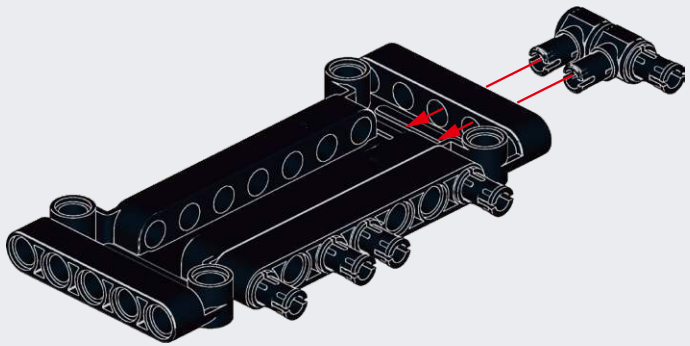

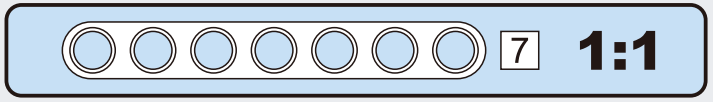

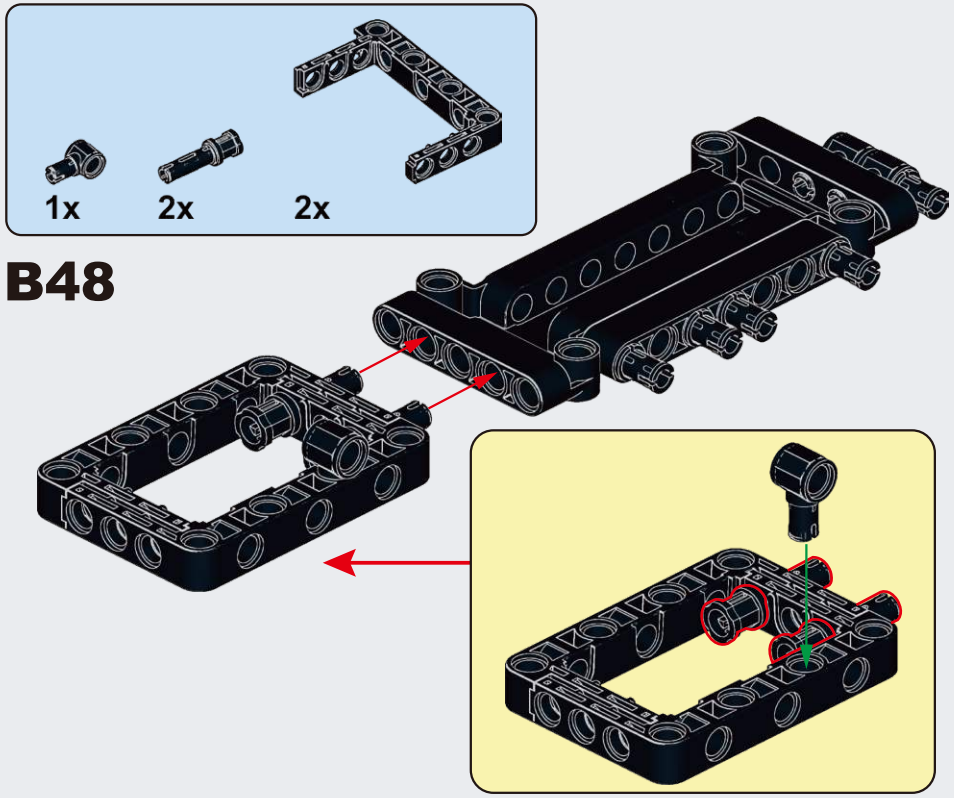

B48

B49

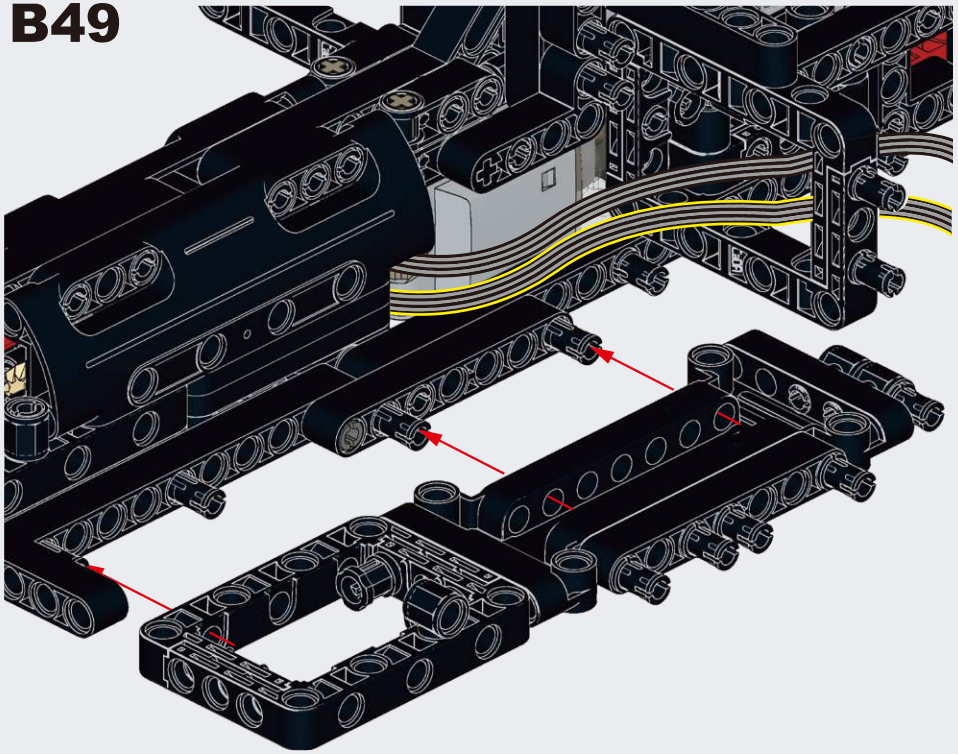

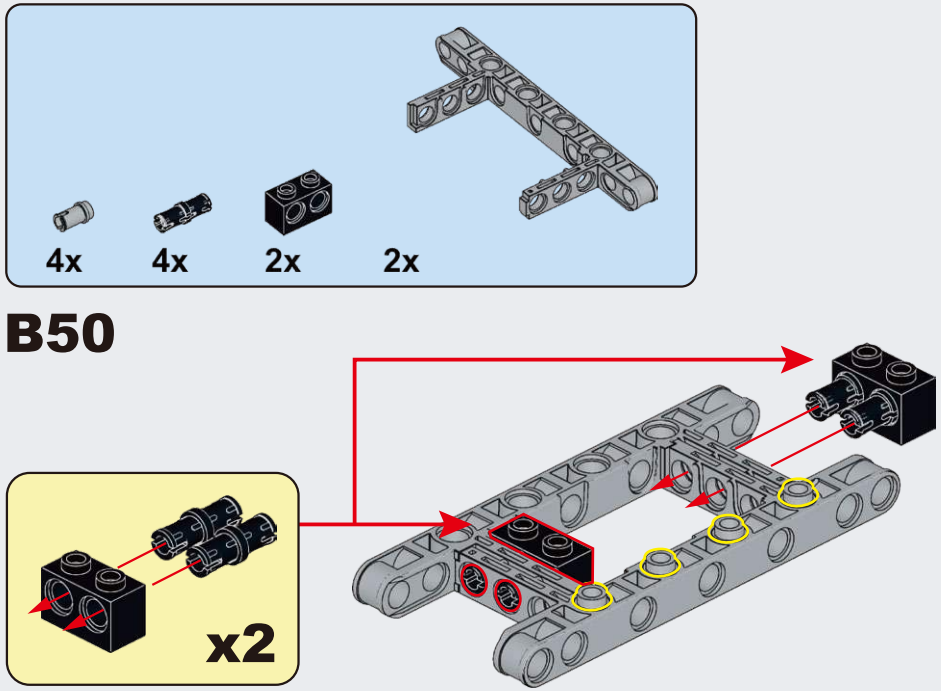

B50

B51

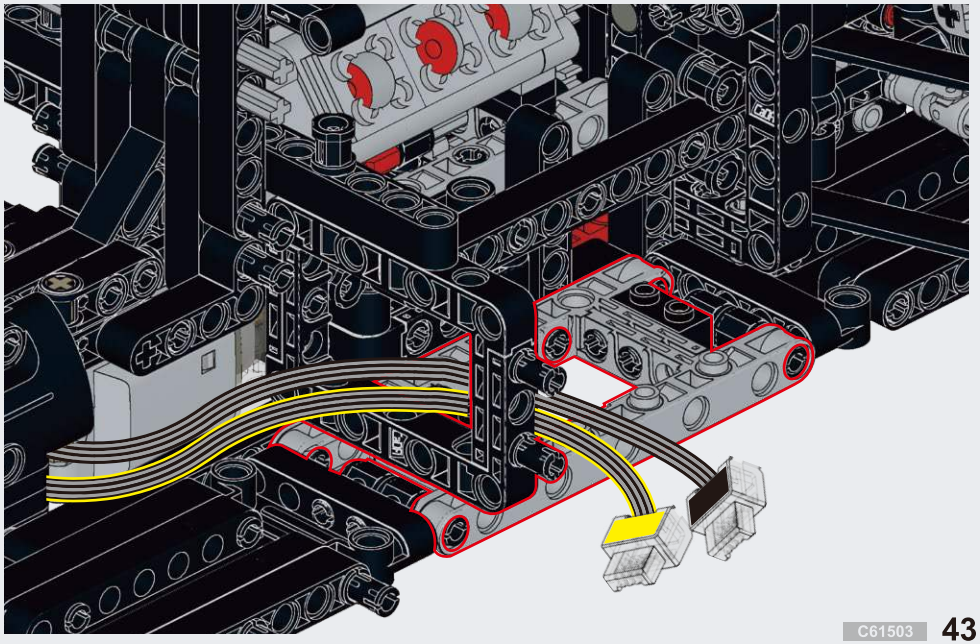

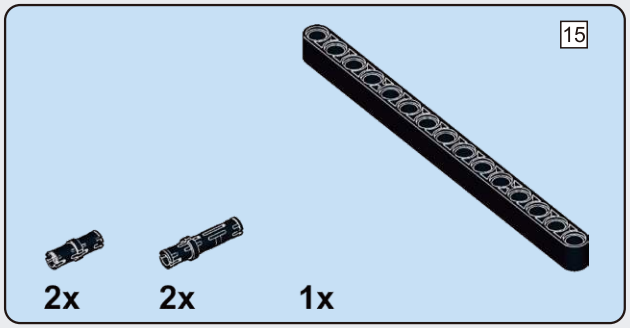

B52

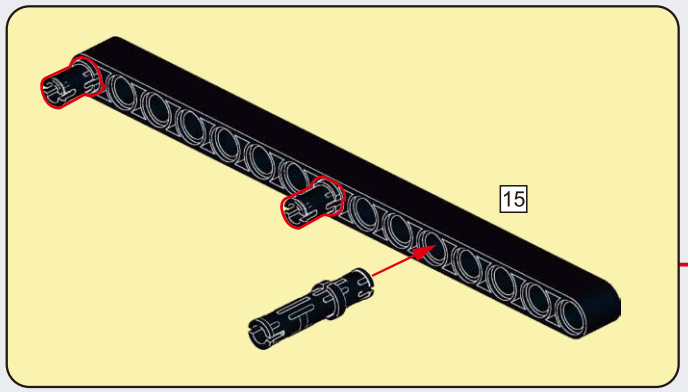

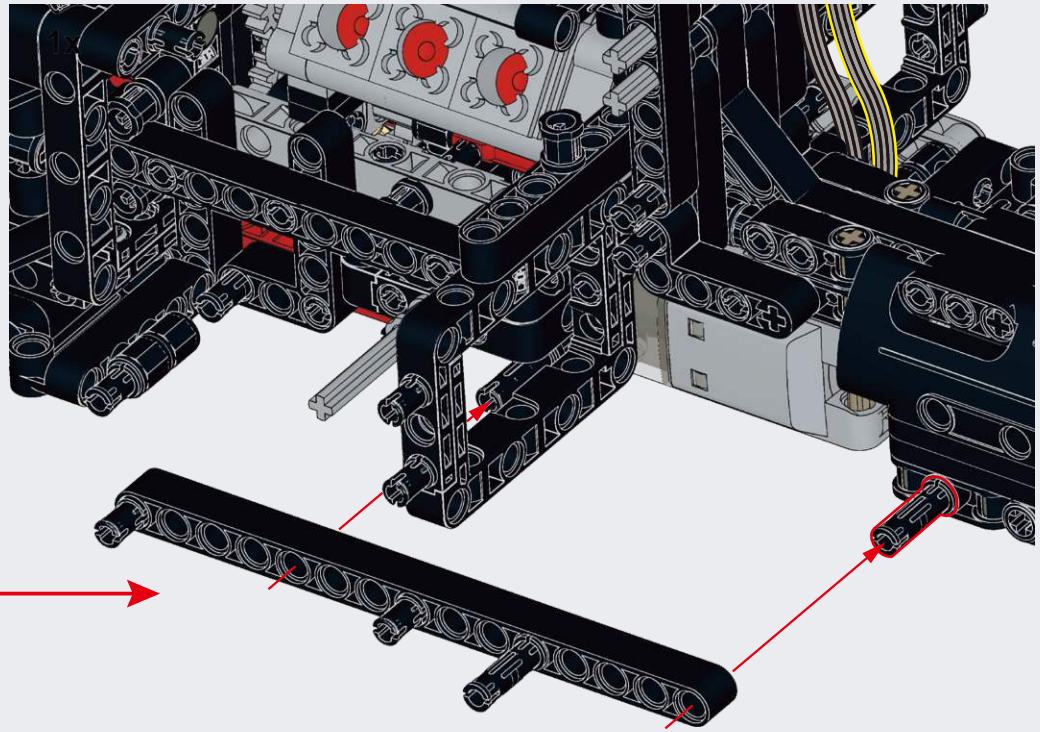

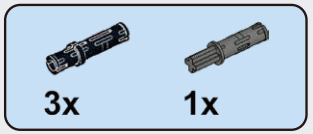

B53

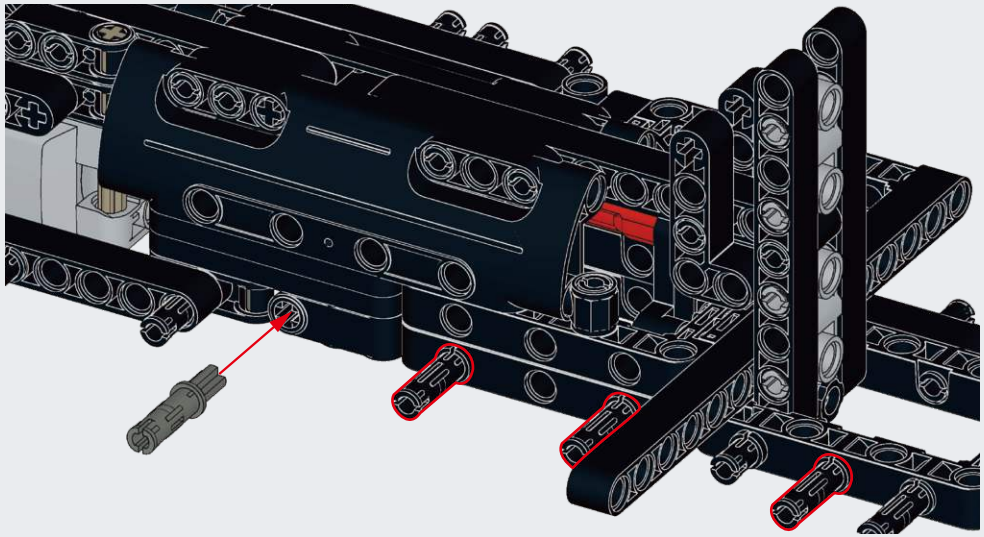

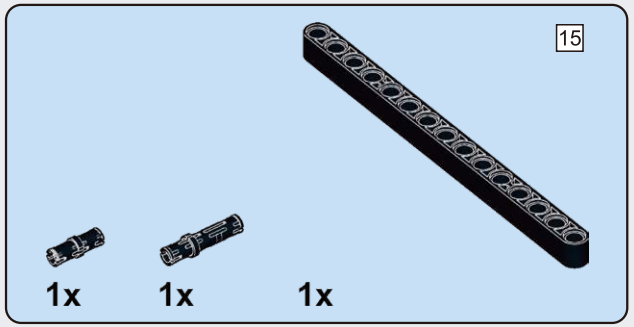

B54

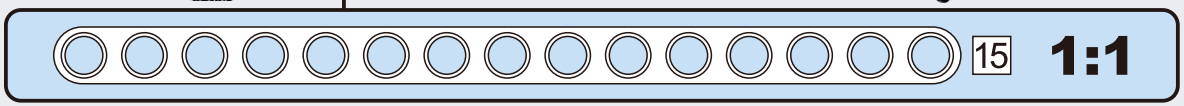

B55

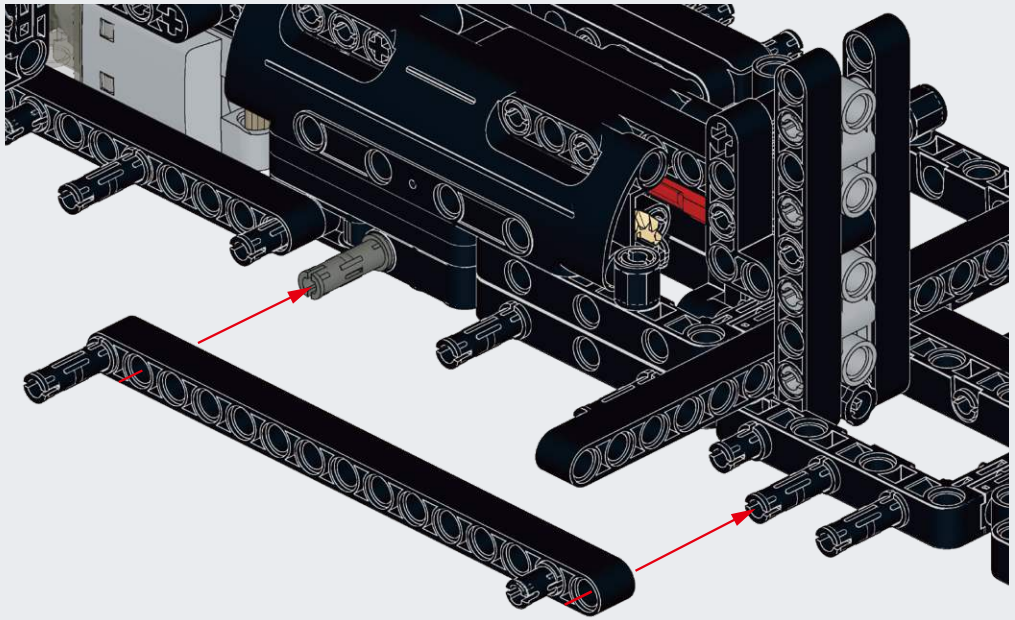

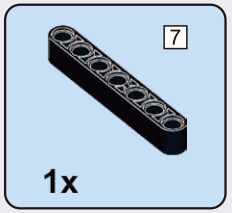

B56

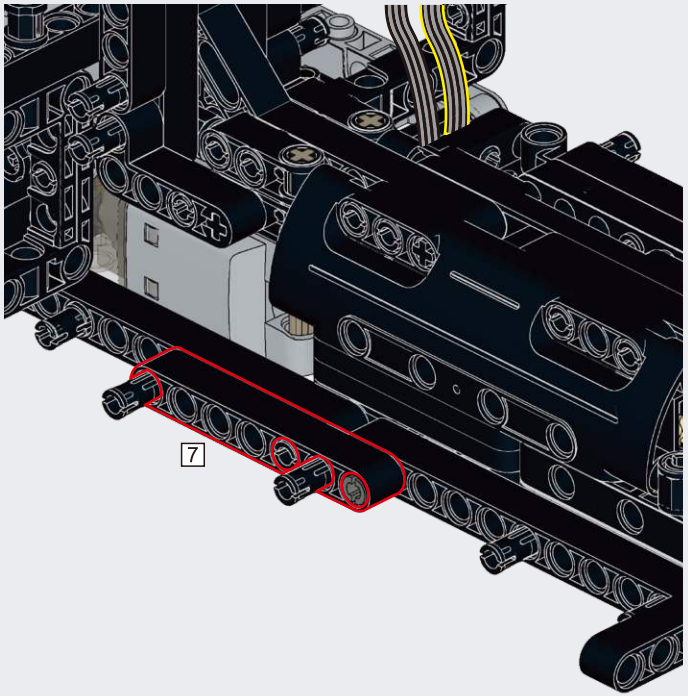

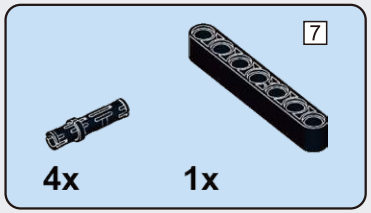

B57

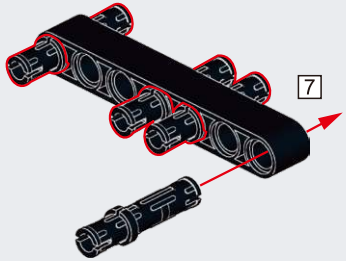

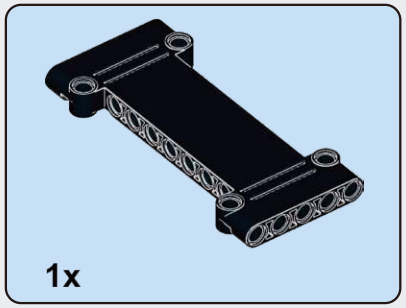

B58

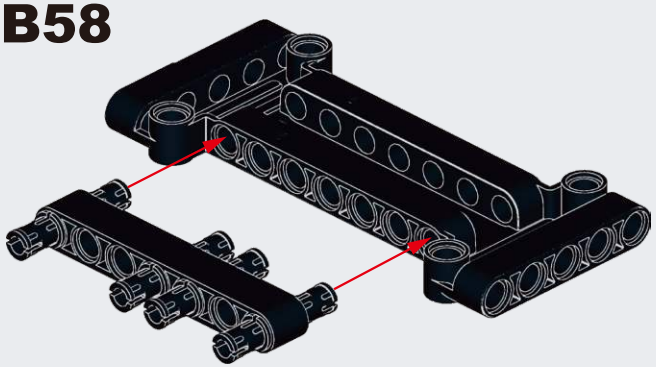

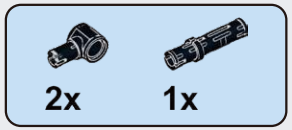

B59

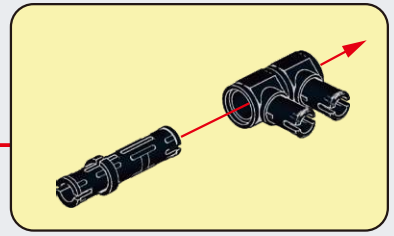

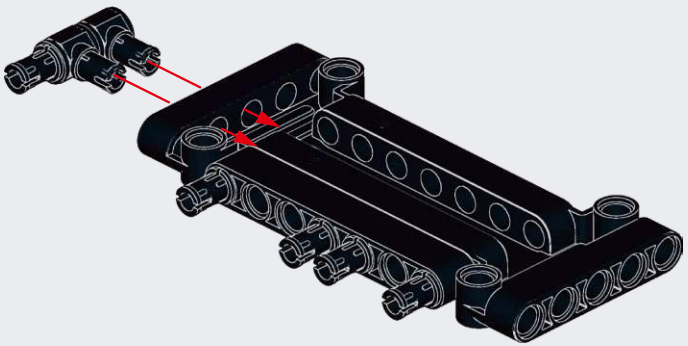

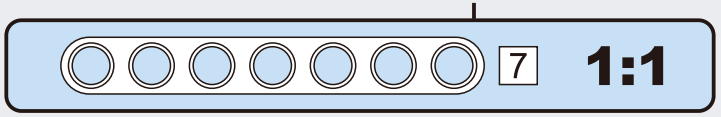

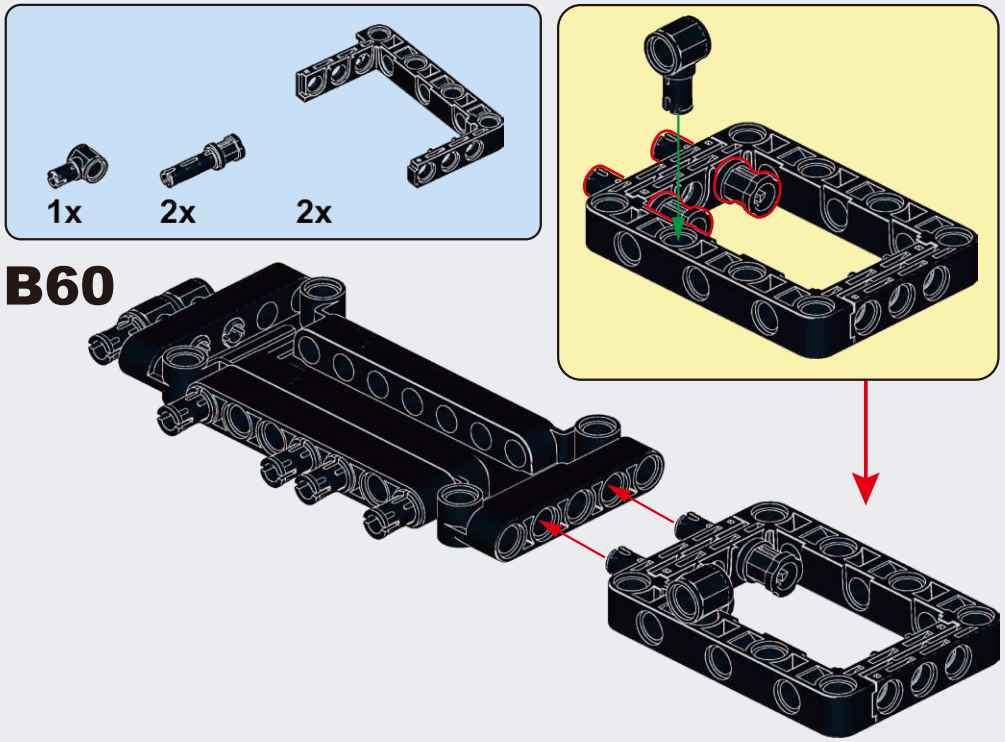

B60

B61

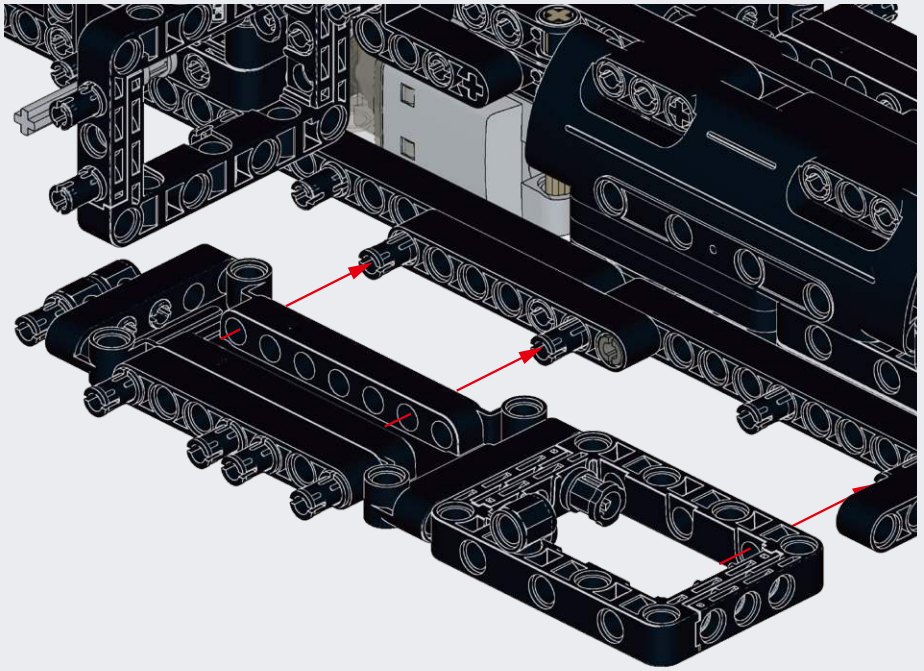

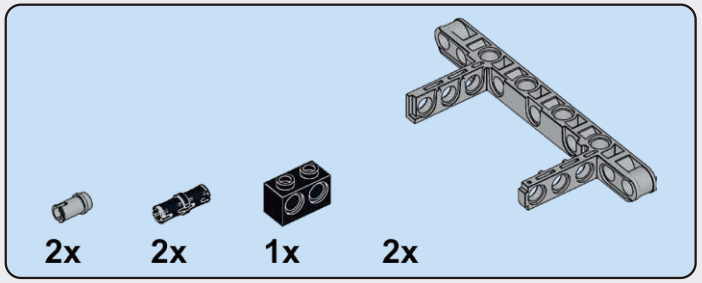

B62

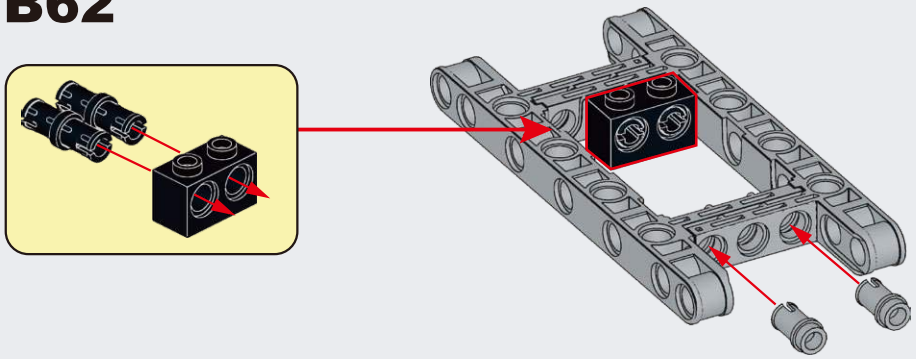

B63

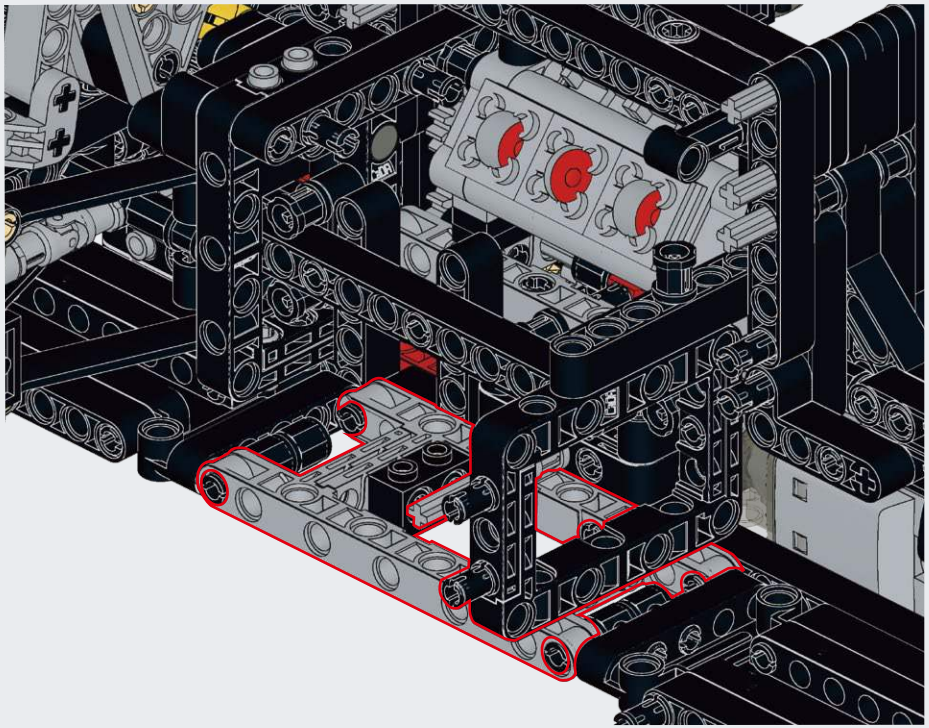

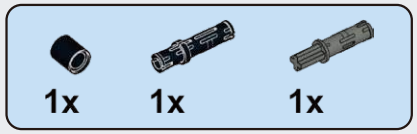

B64

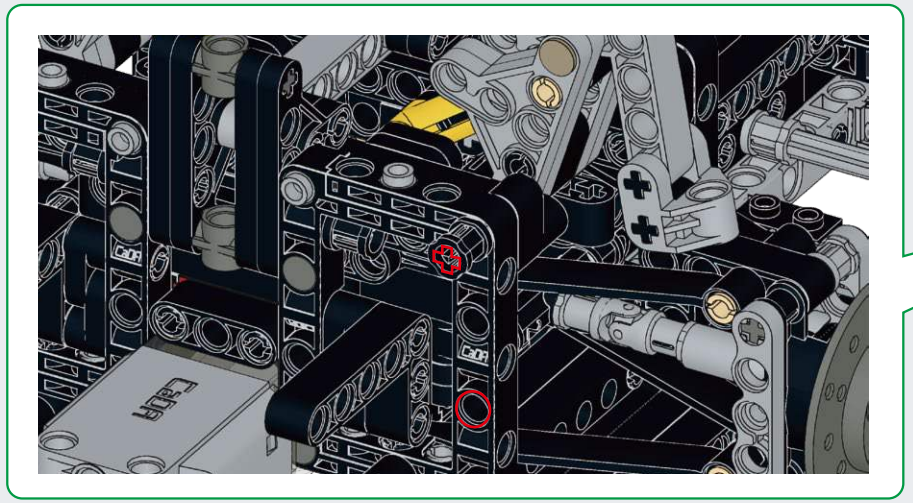

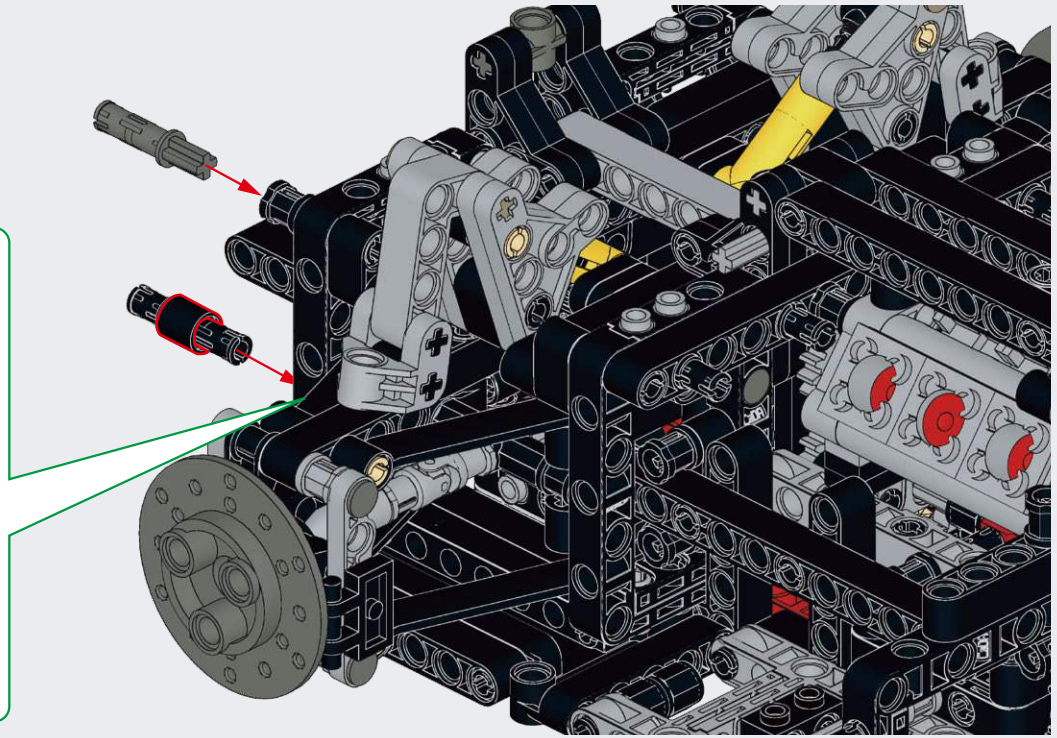

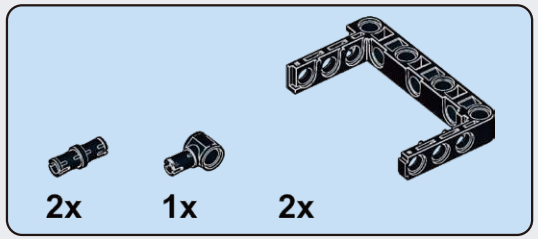

B65

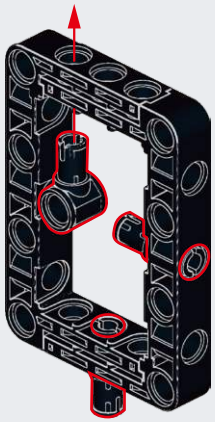

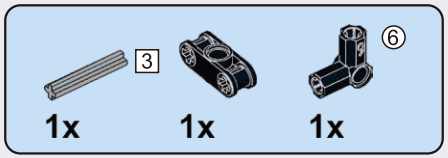

B66

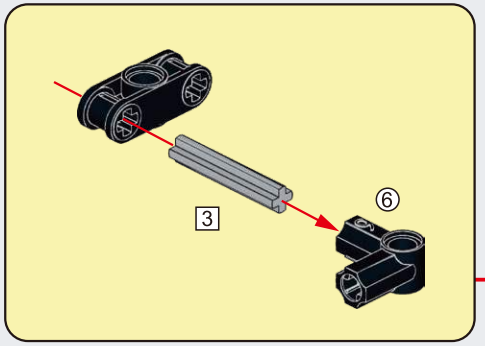

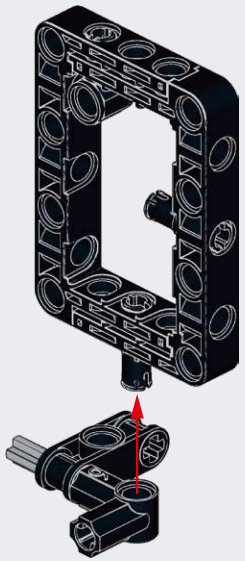

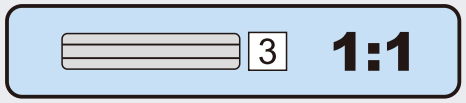

B67

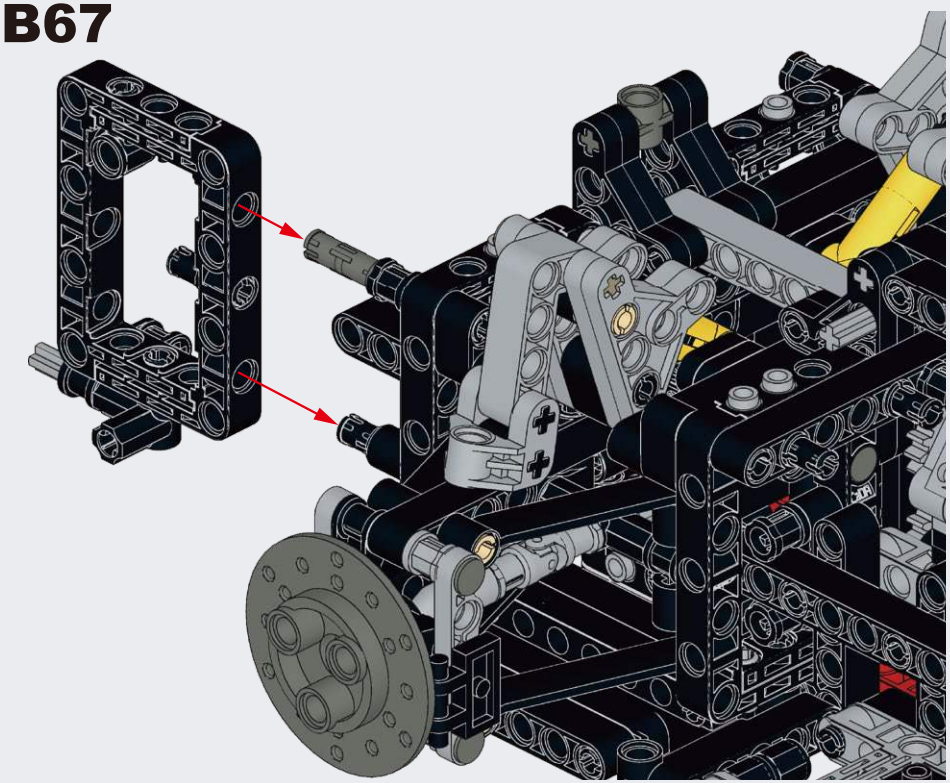

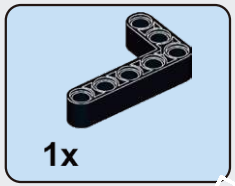

B68

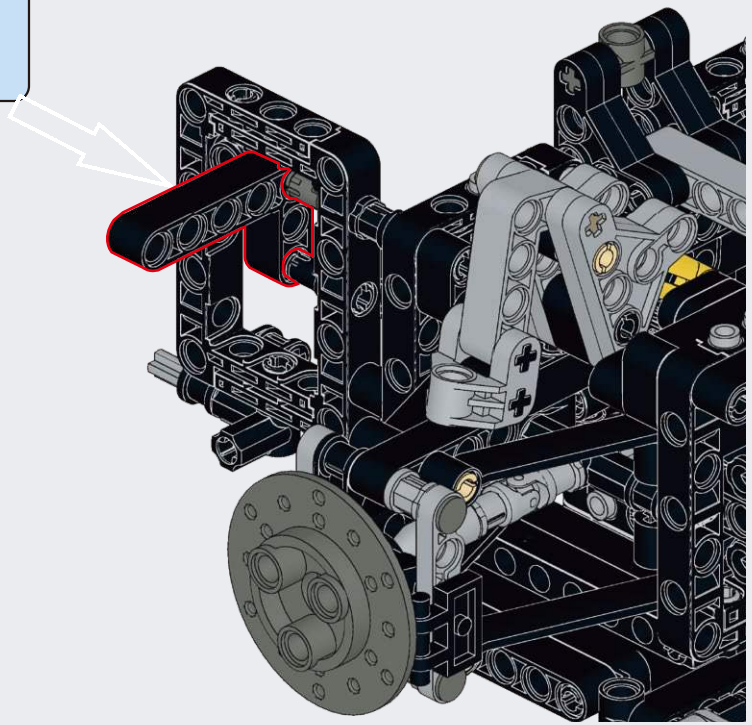

B69

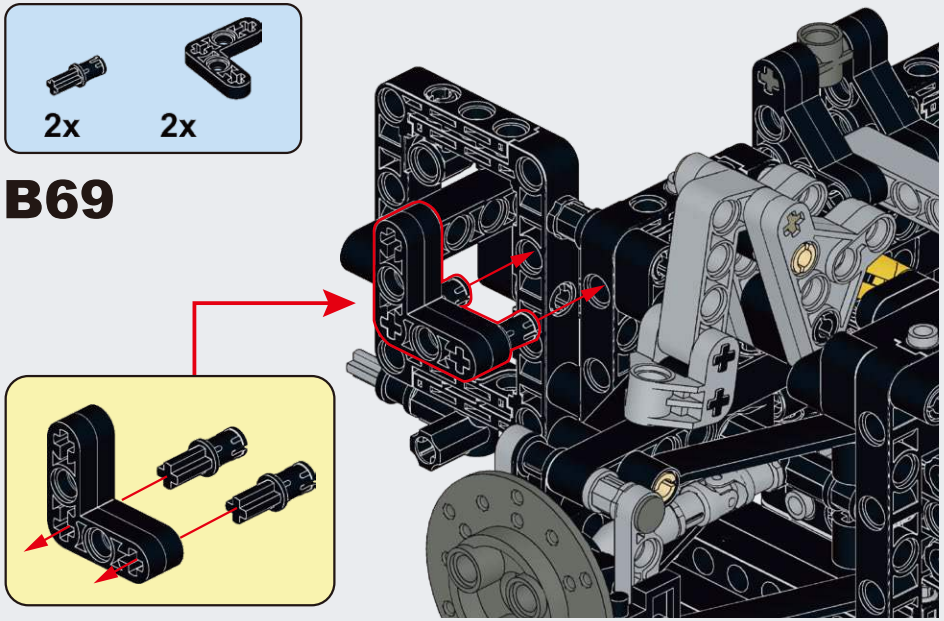

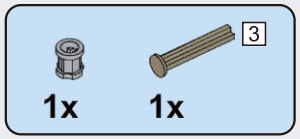

B70

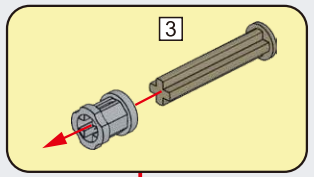

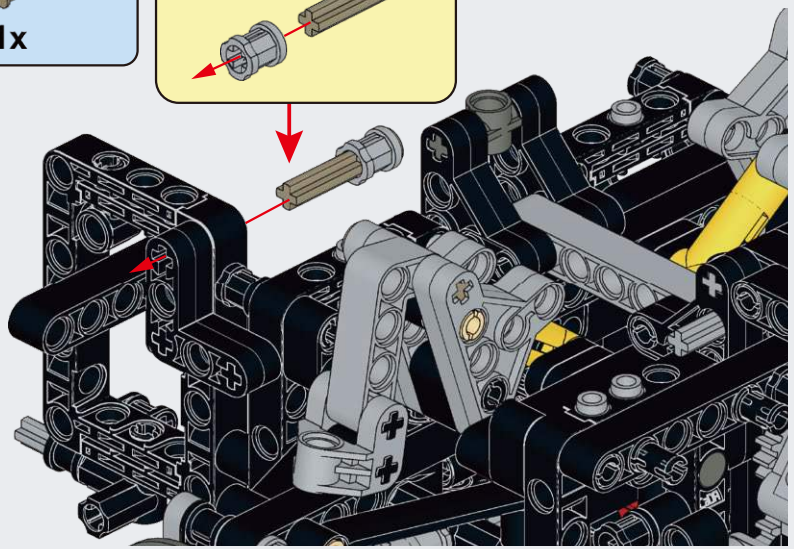

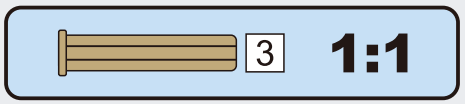

B71

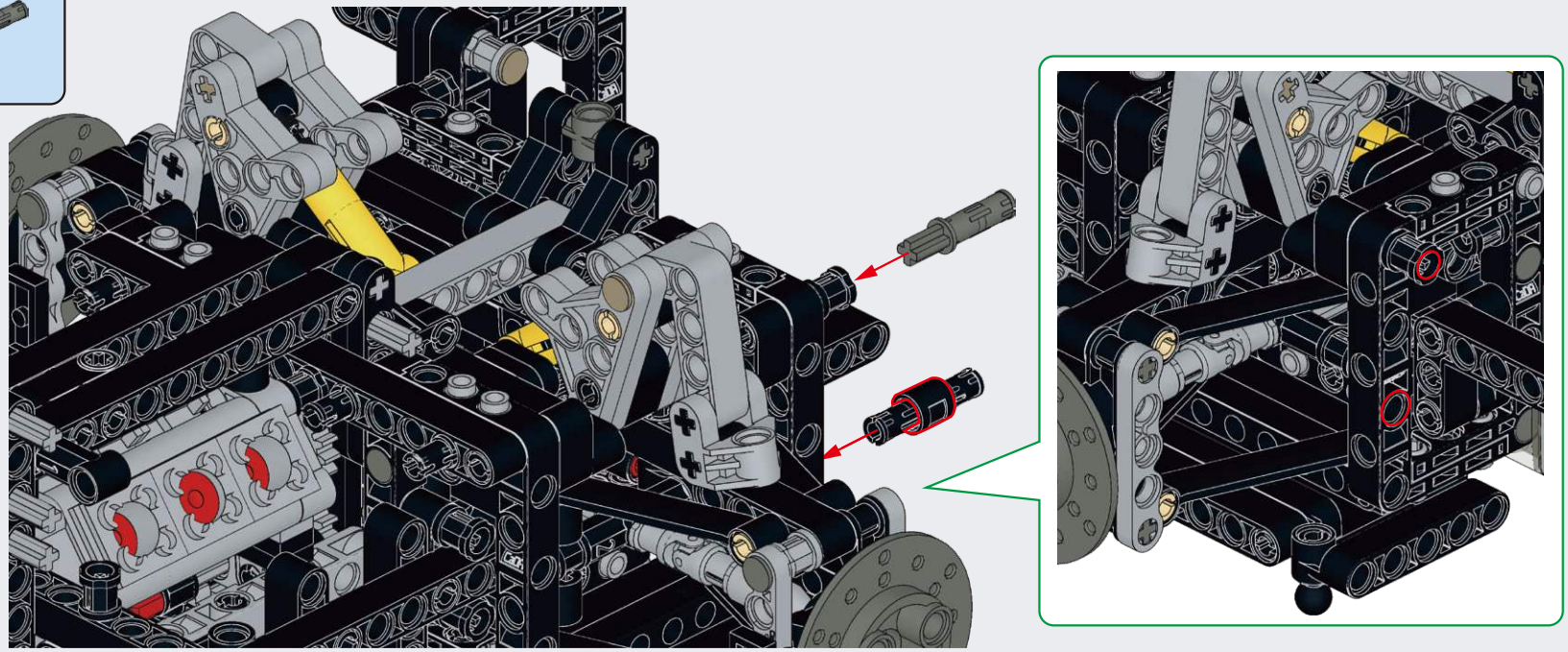

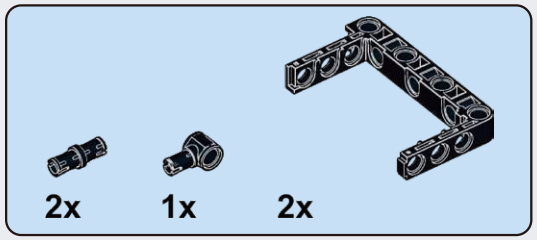

B72

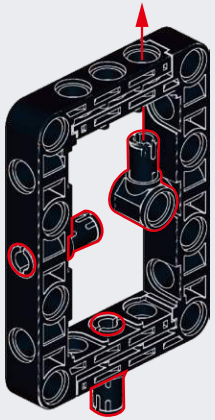

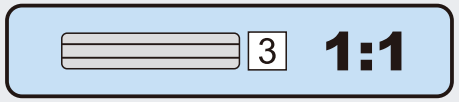

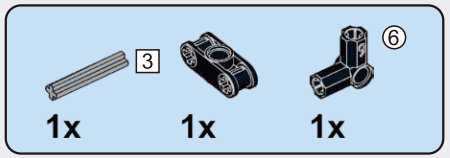

B73

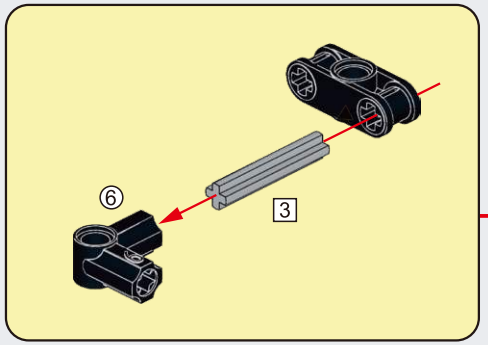

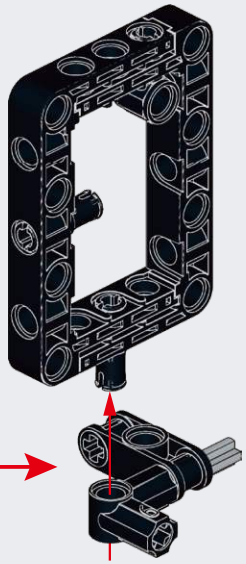

B74

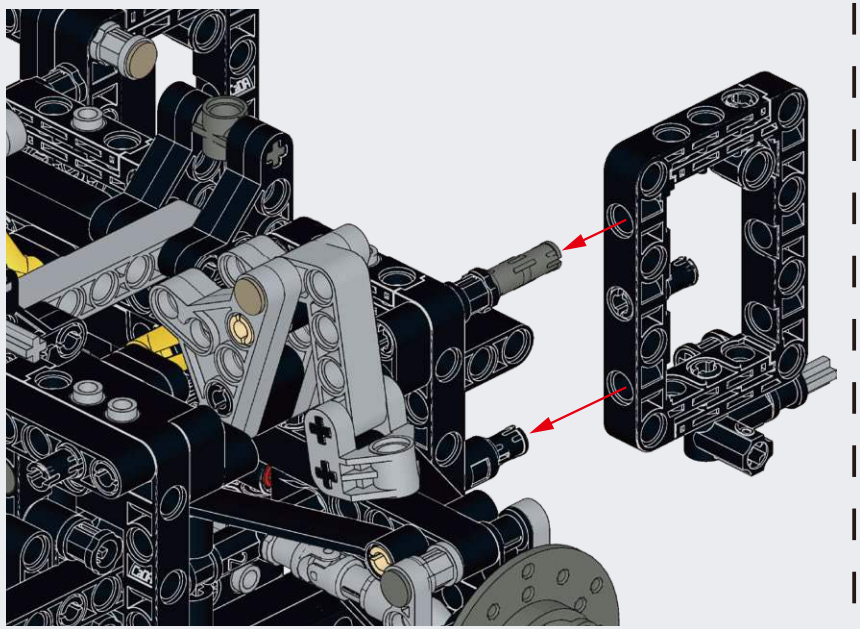

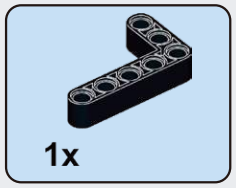

B75

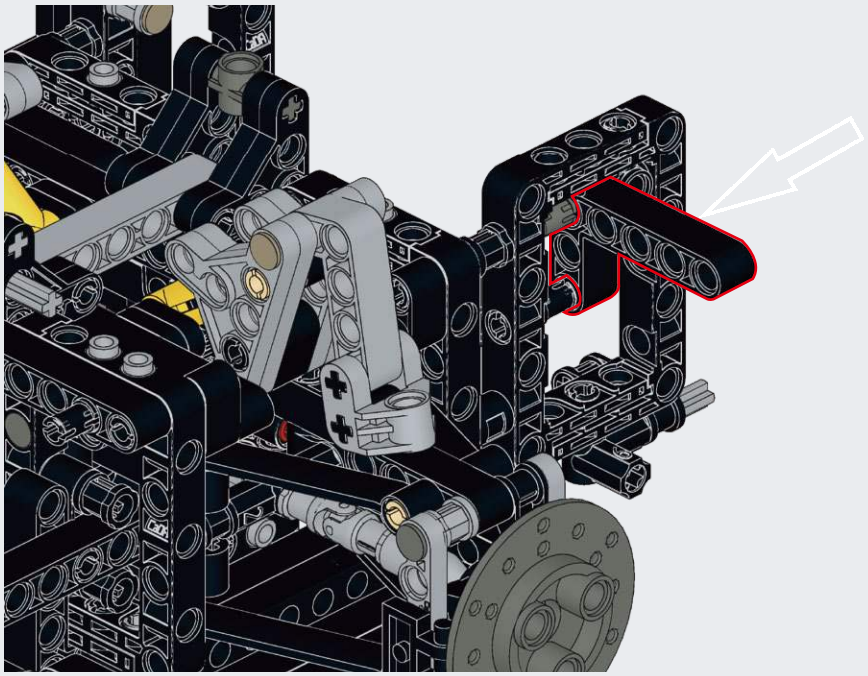

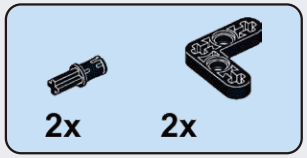

B76

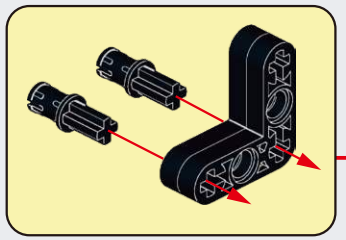

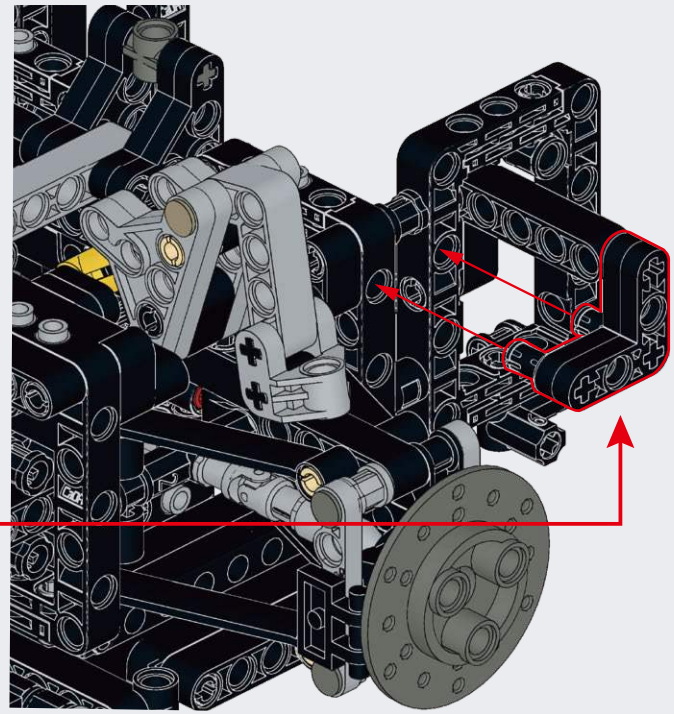

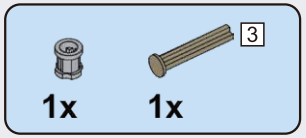

B77

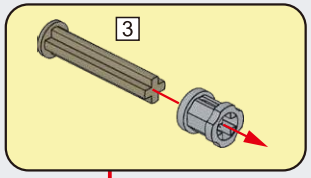

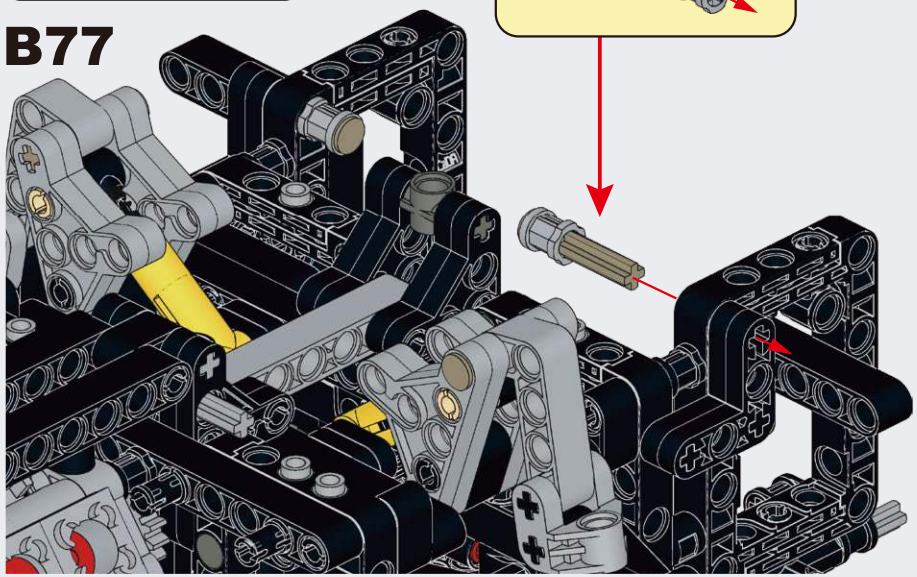

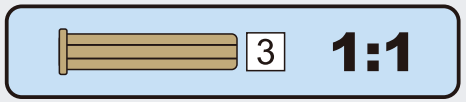

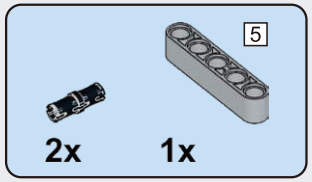

B78

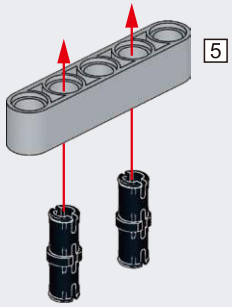

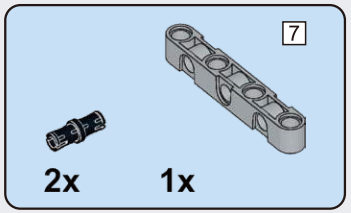

B79

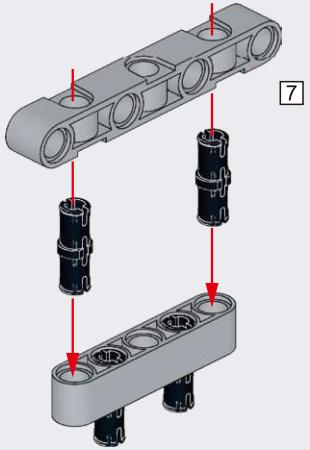

B80

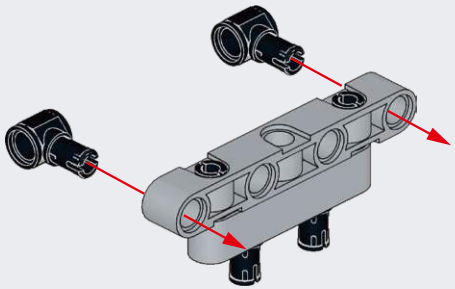

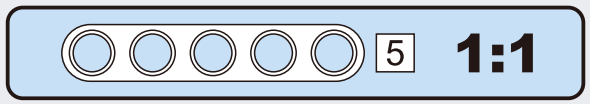

B81

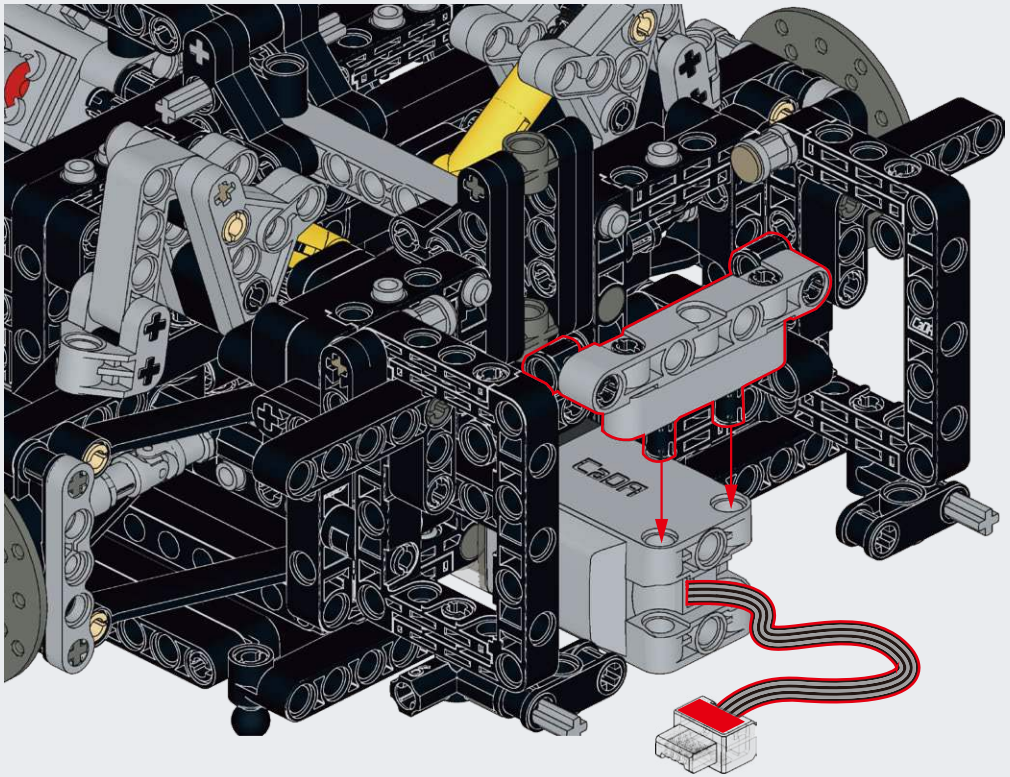

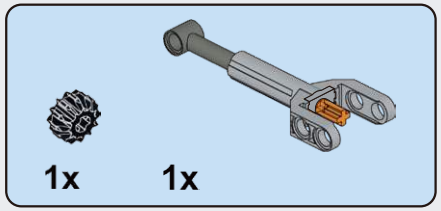

B82

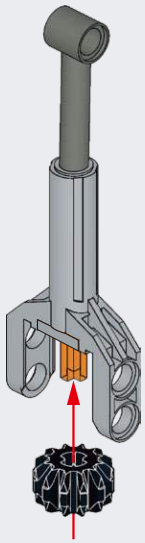

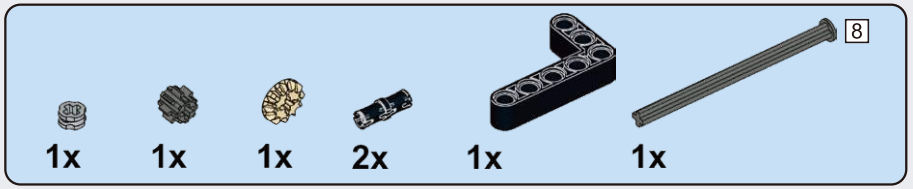

B83

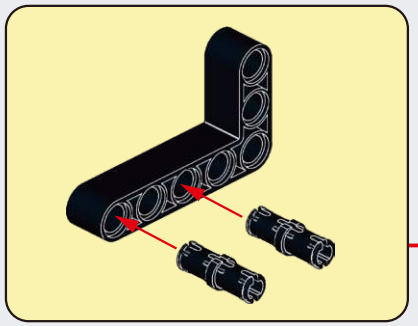

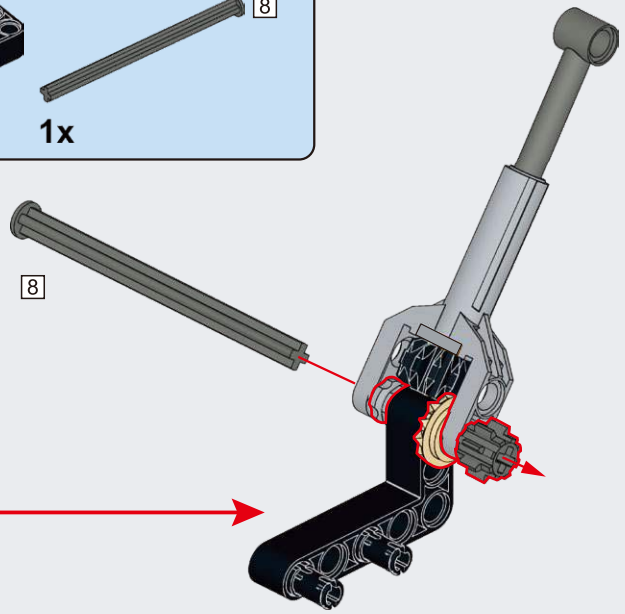

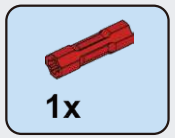

B84

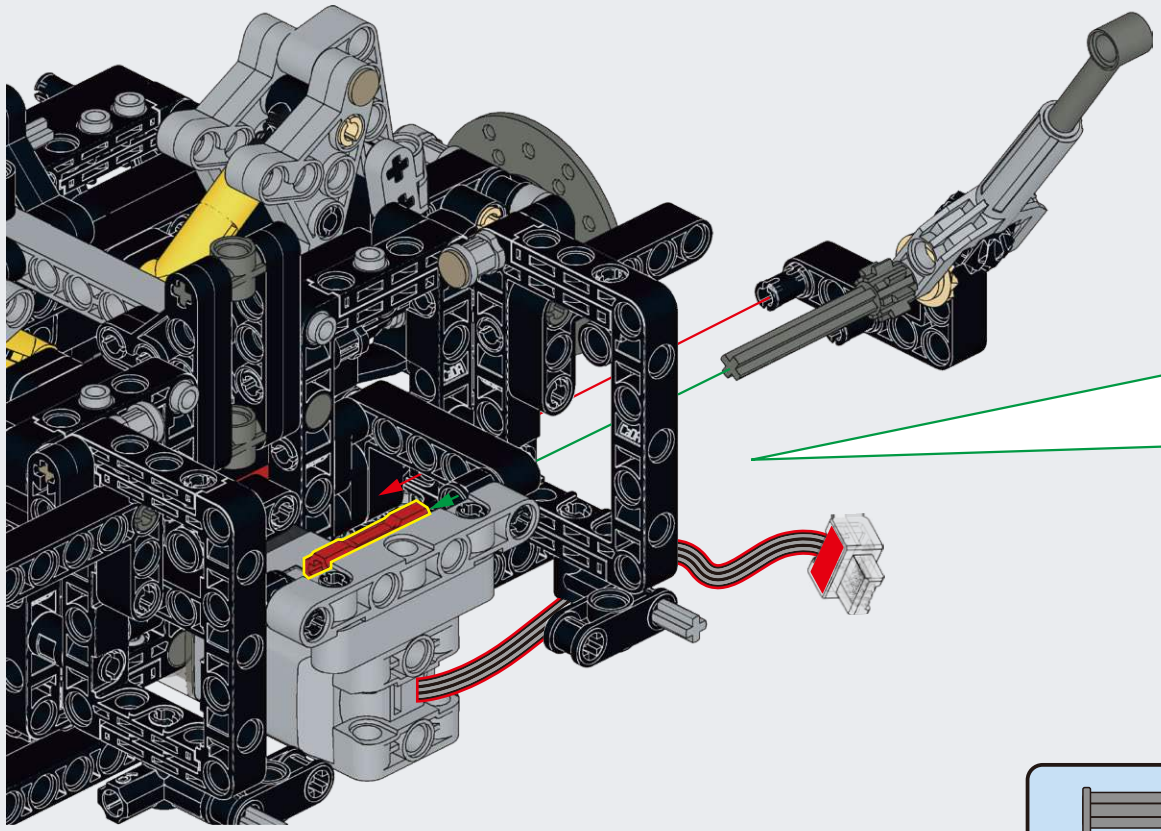

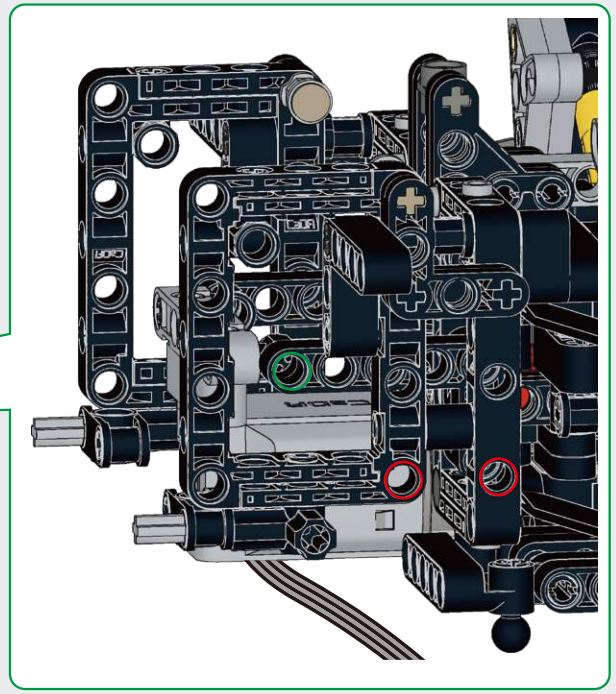

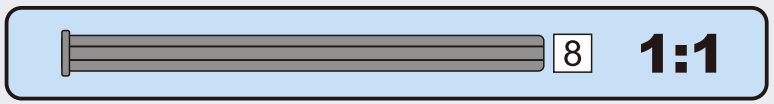

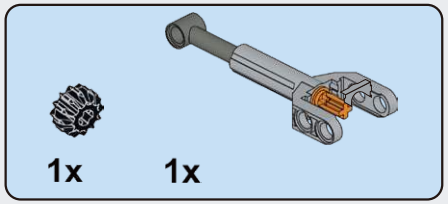

B85

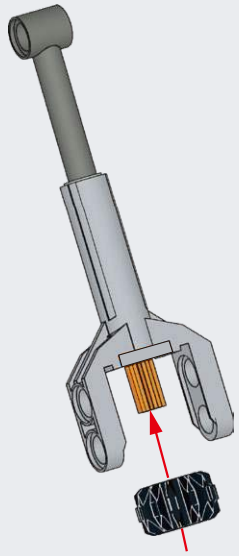

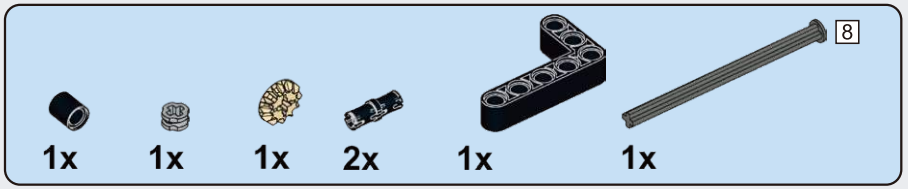

B86

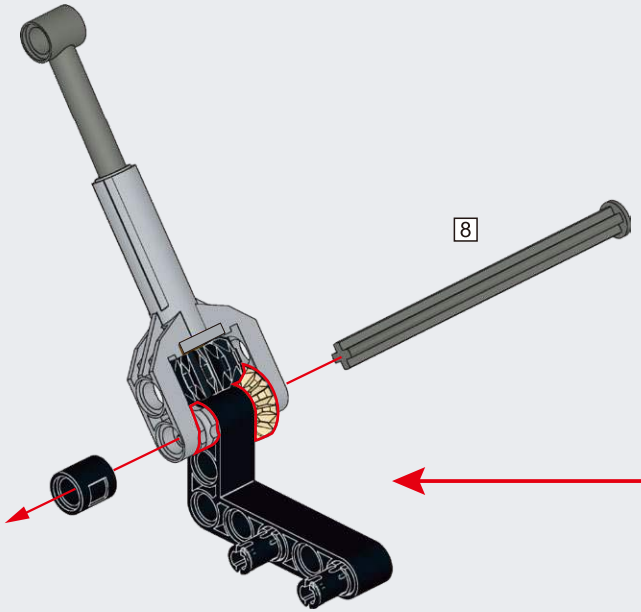

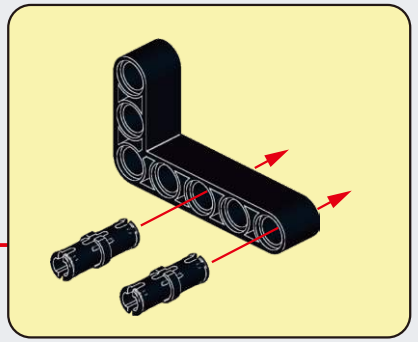

B87

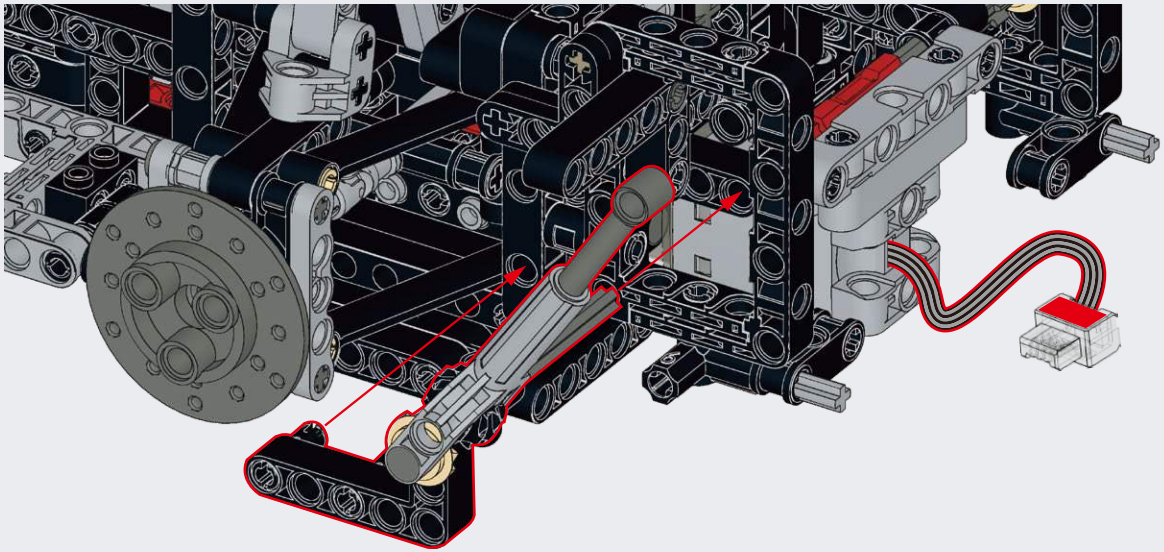

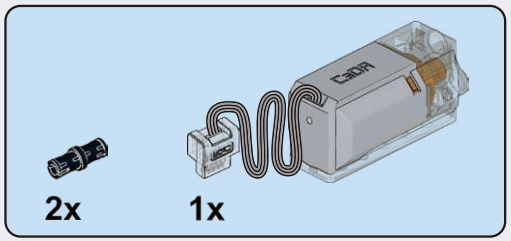

B88

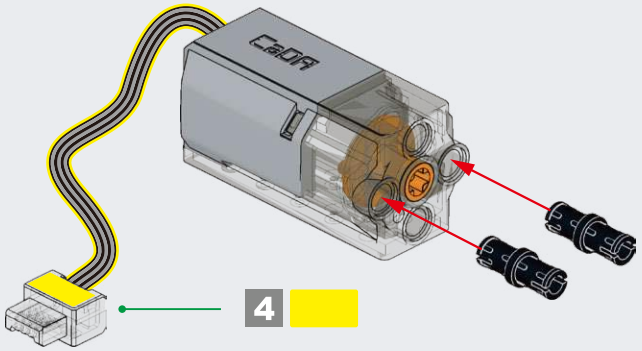

B89

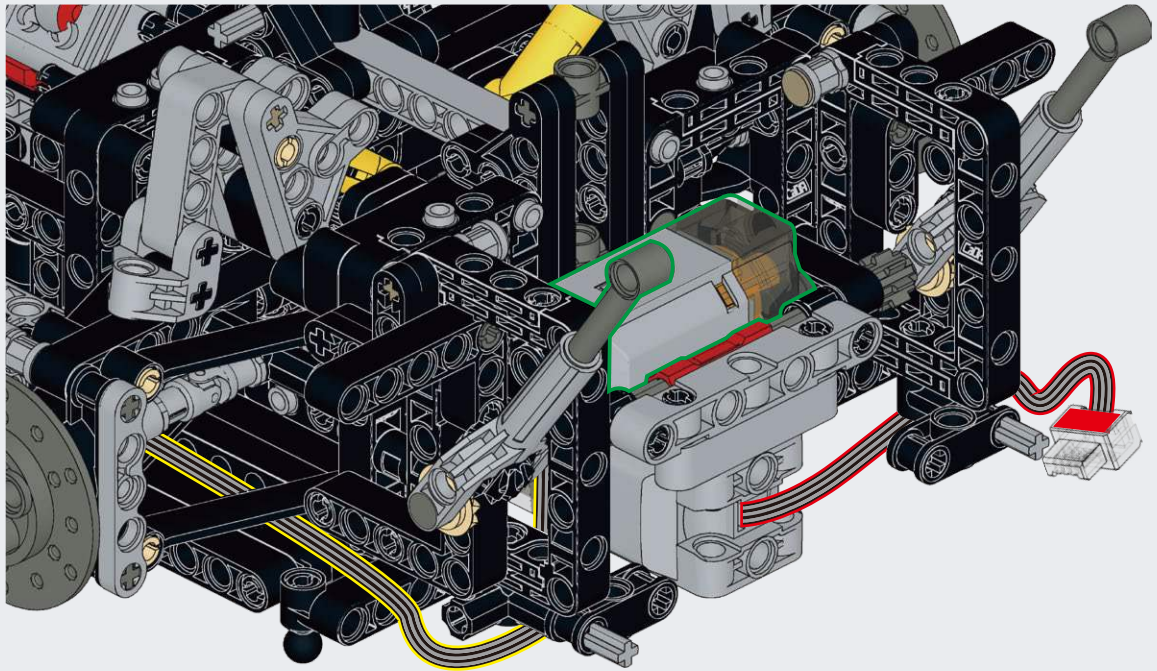

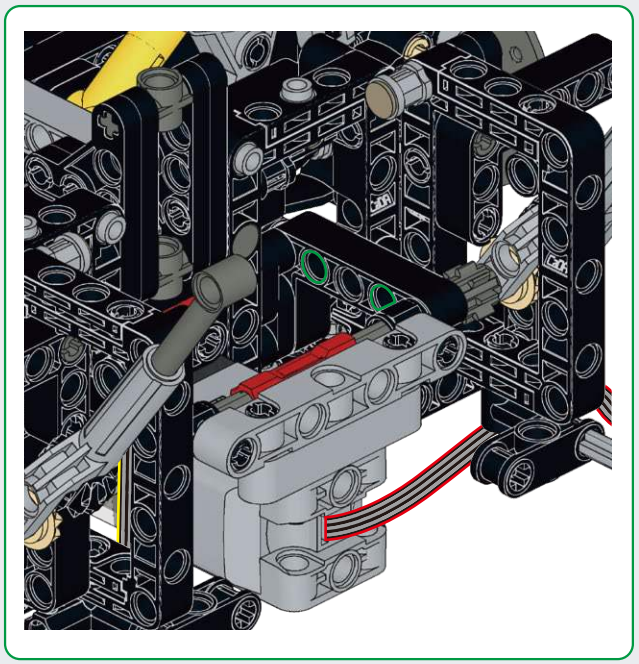

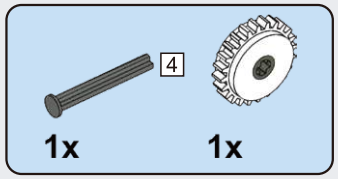

B90

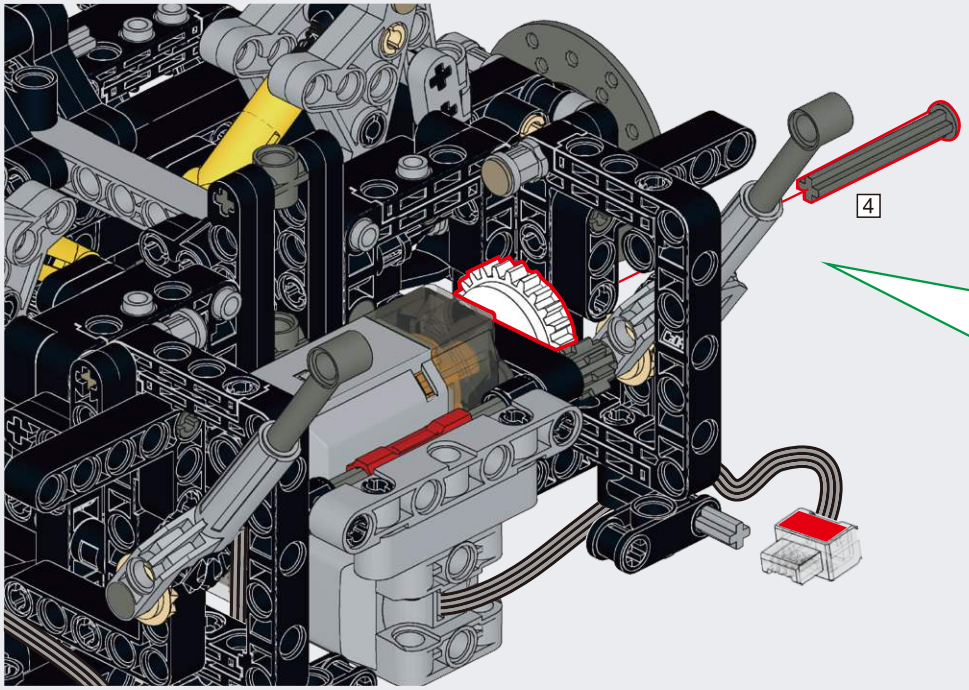

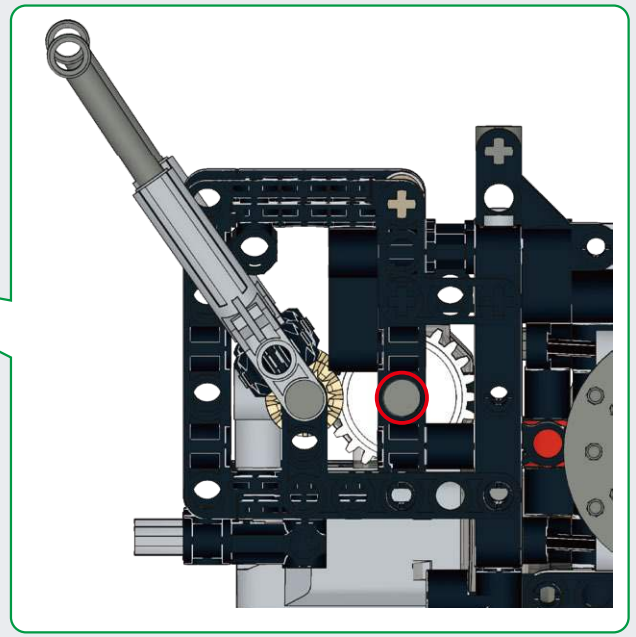

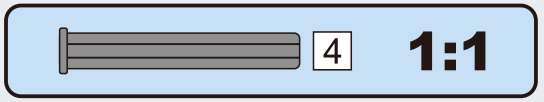

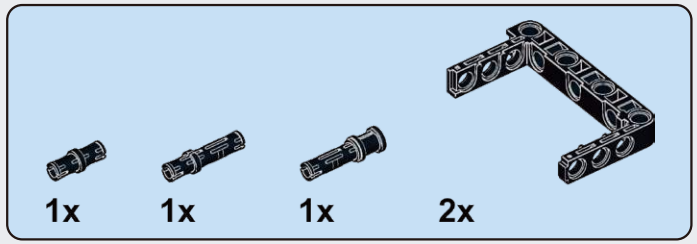

B91

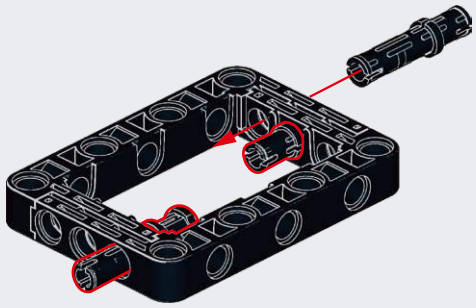

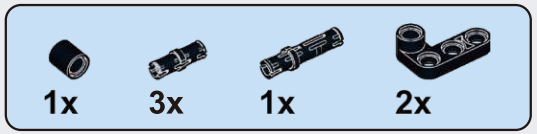

B92

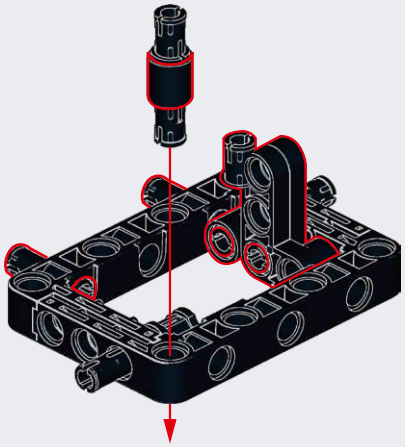

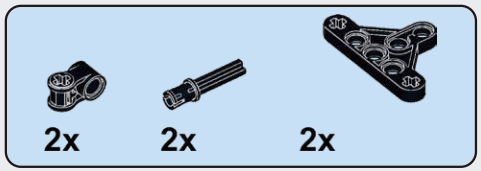

B93

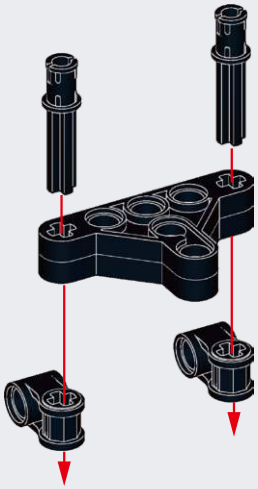

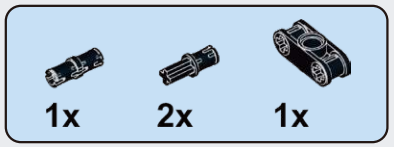

B94

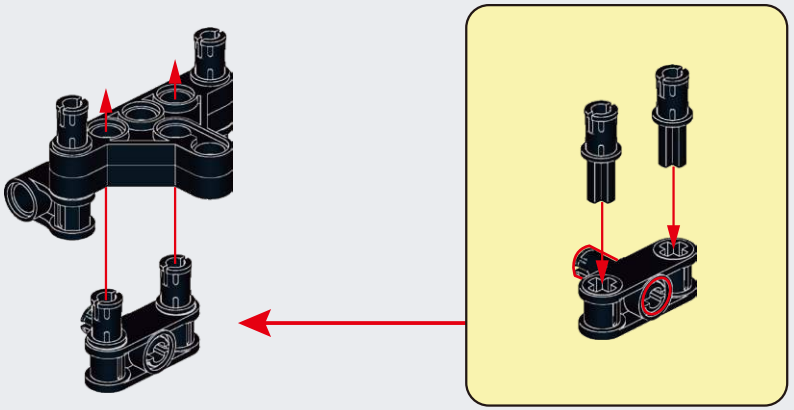

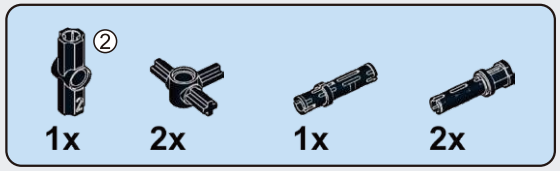

B95

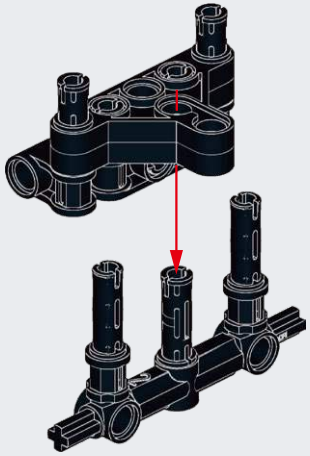

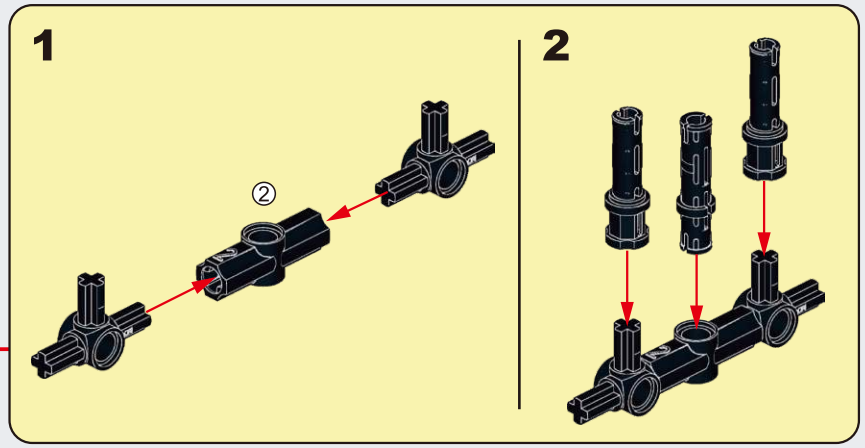

B96

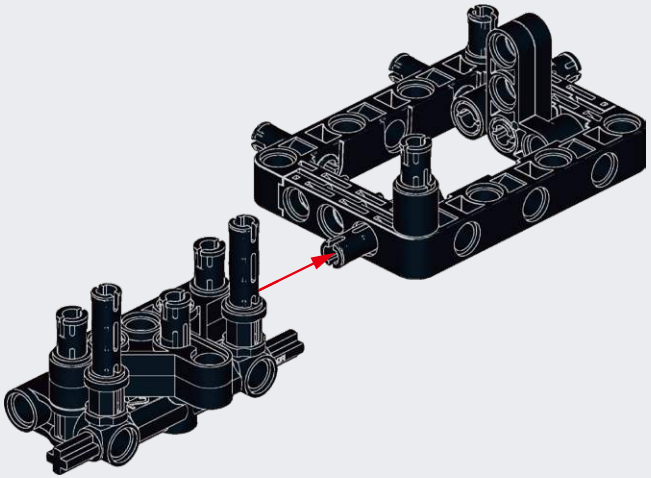

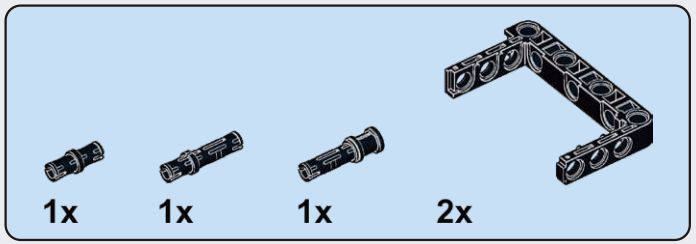

B97

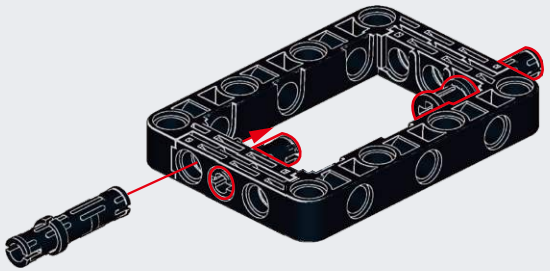

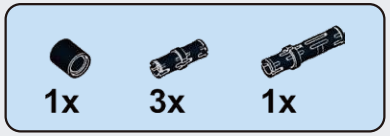

B98

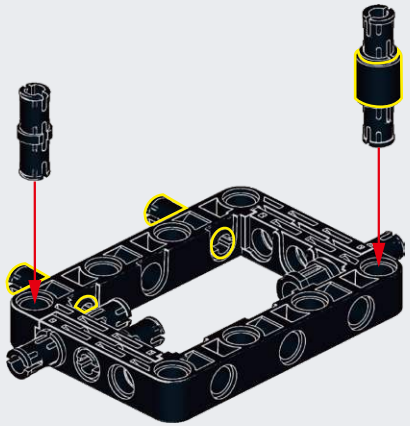

B99

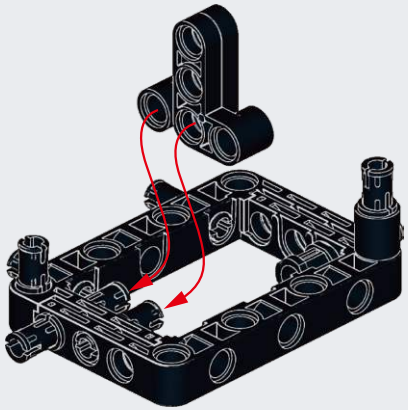

B100

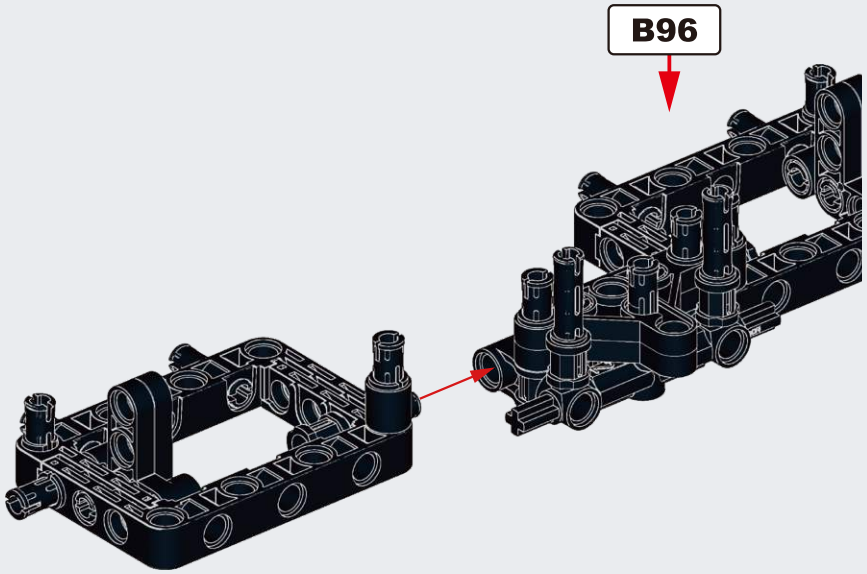

B101

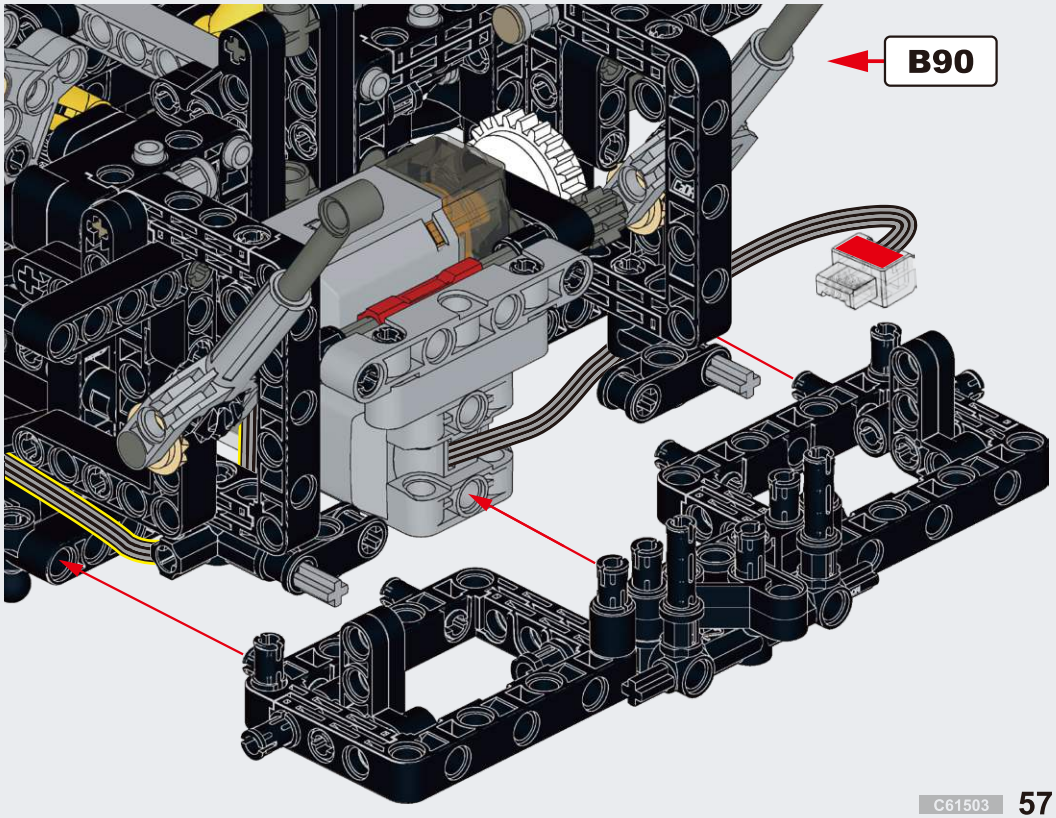

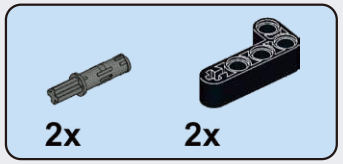

B102

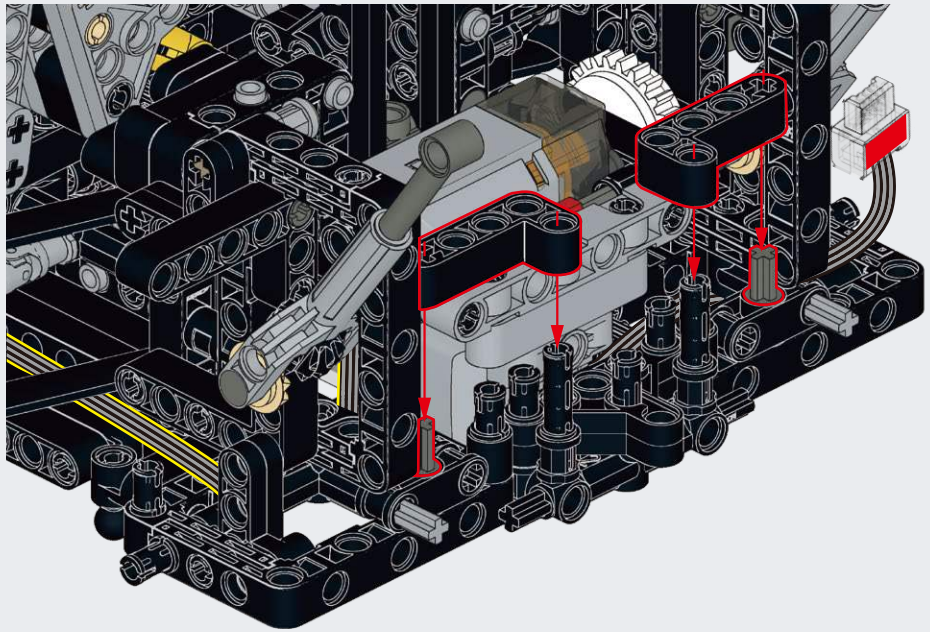

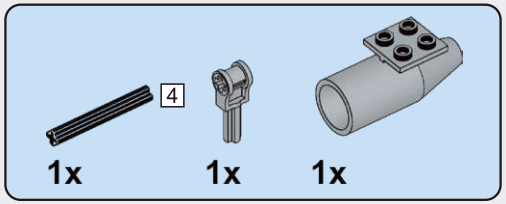

B103

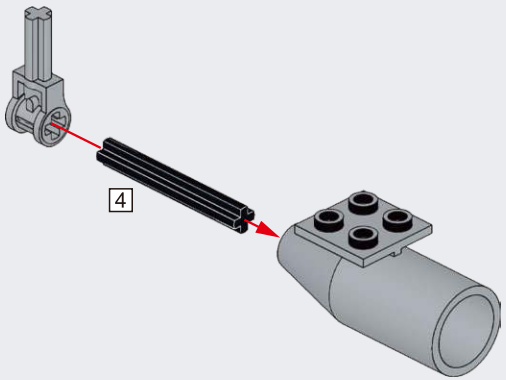

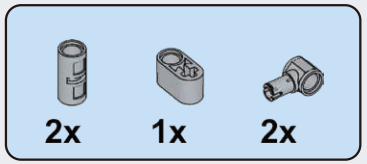

B104

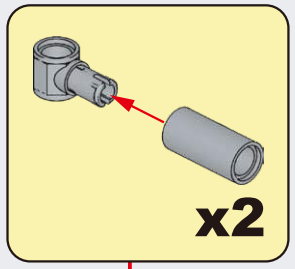

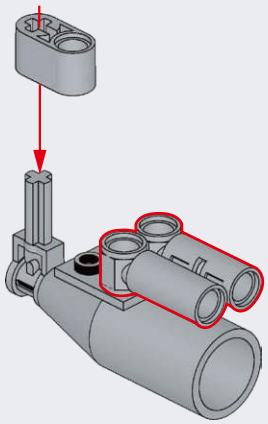

B105

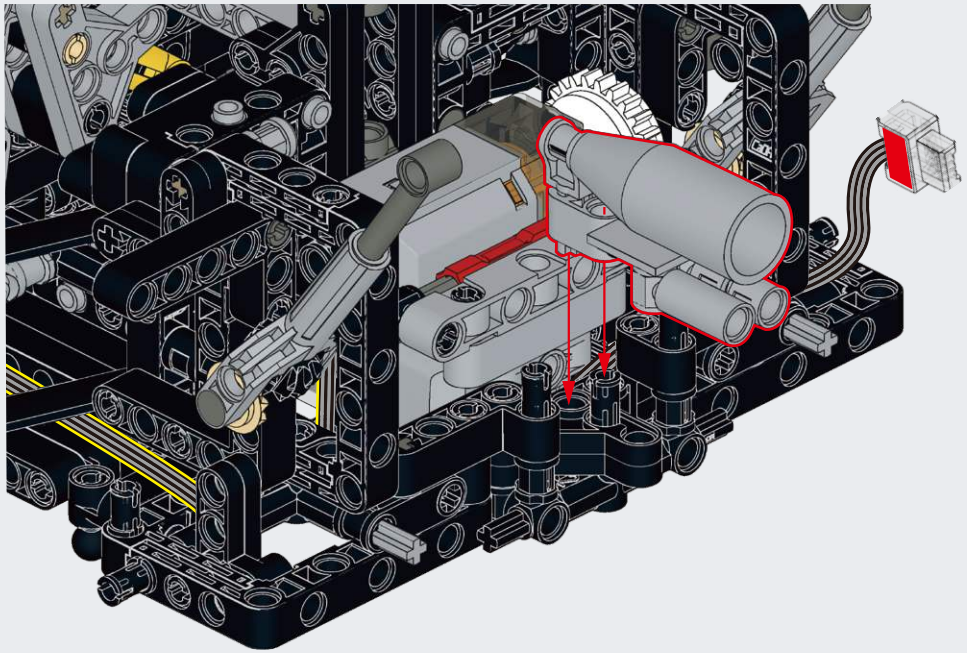

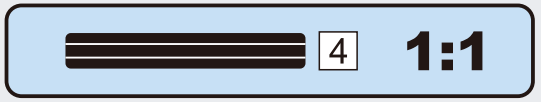

B106

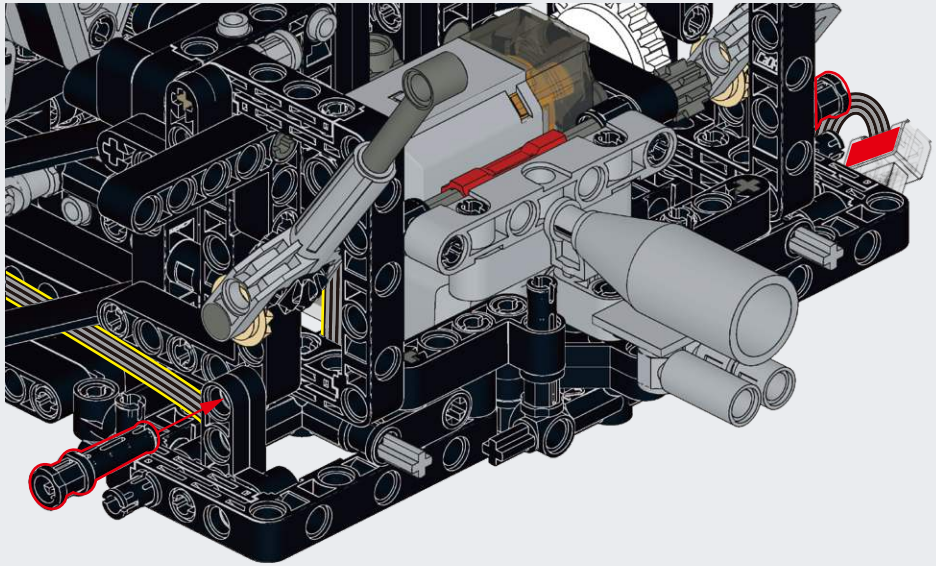

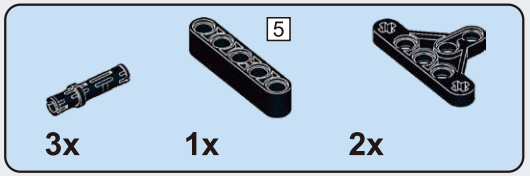

B107

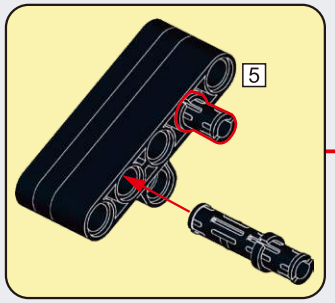

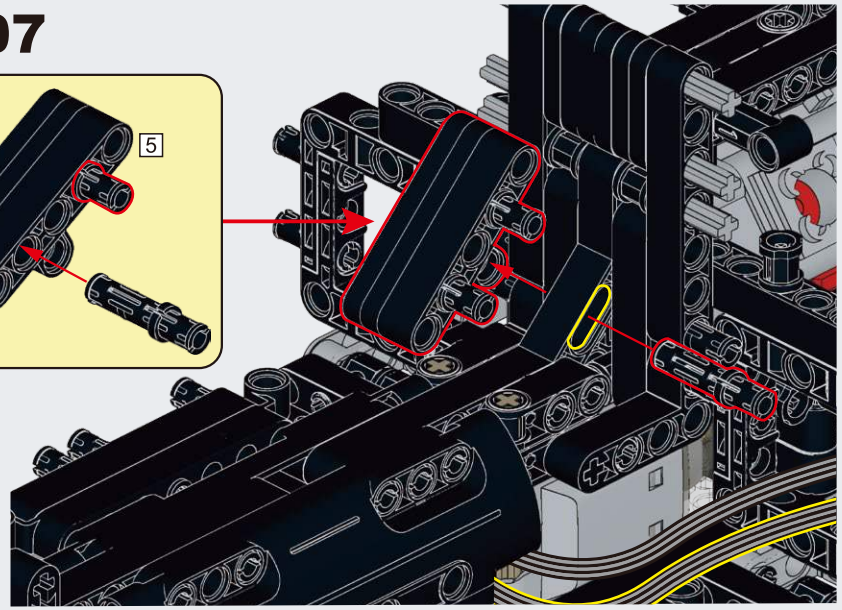

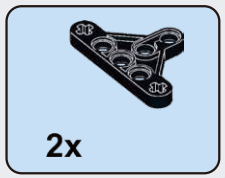

B108

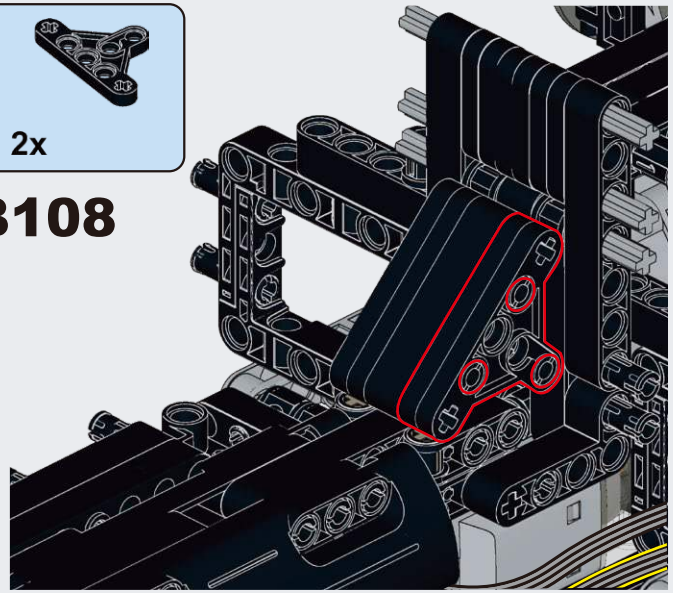

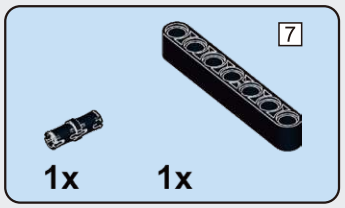

B109

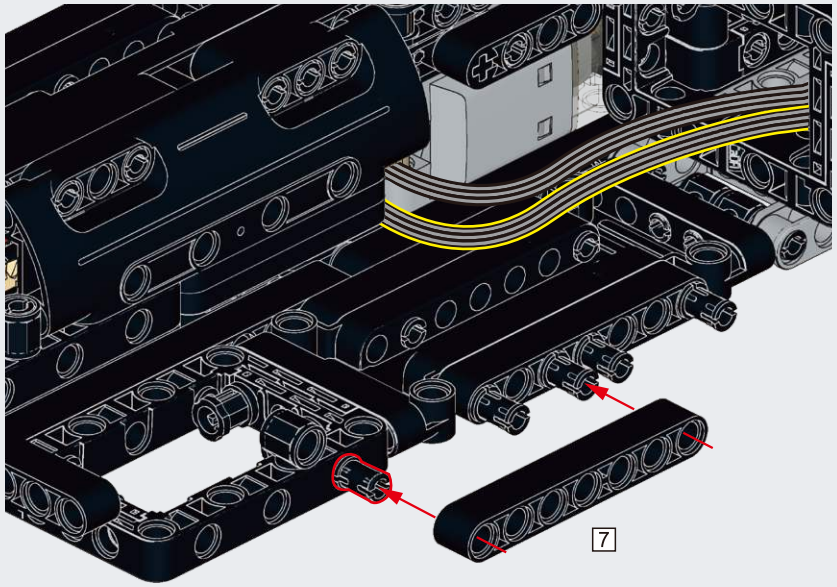

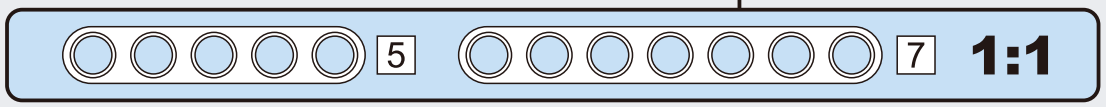

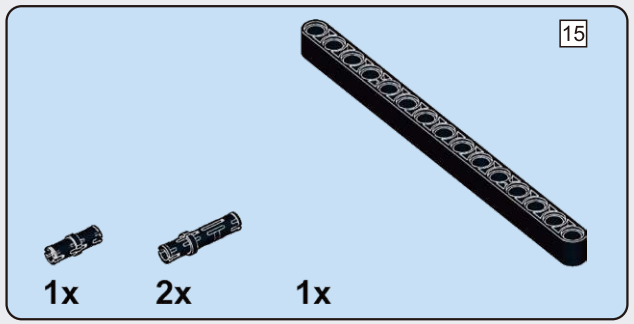

B110

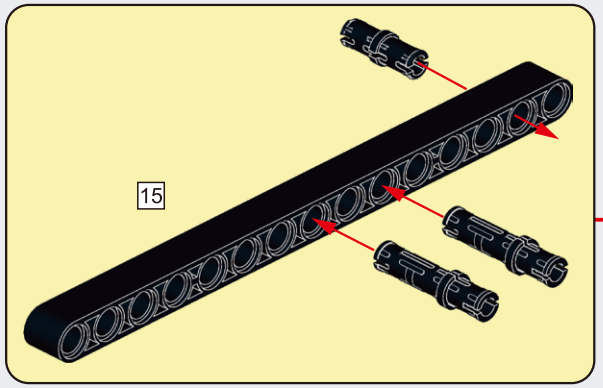

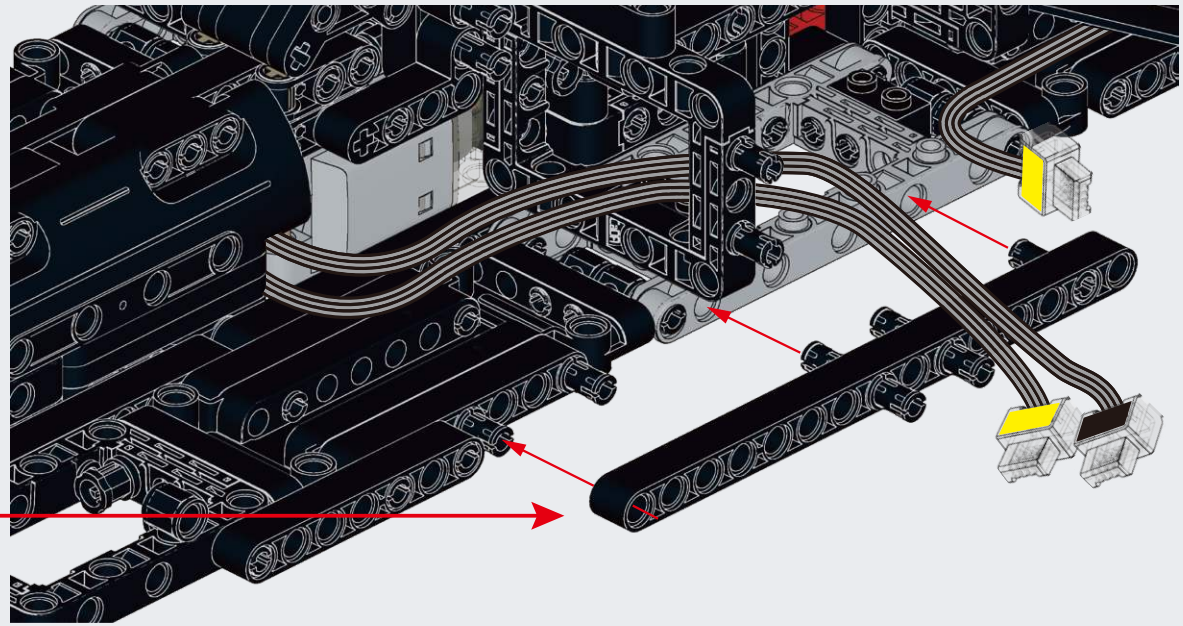

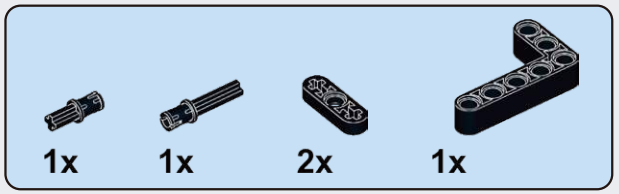

B111

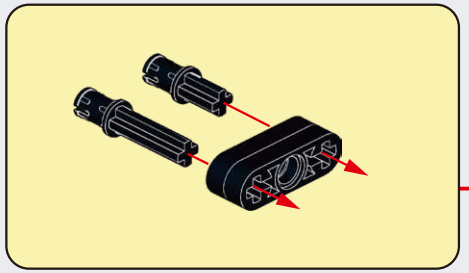

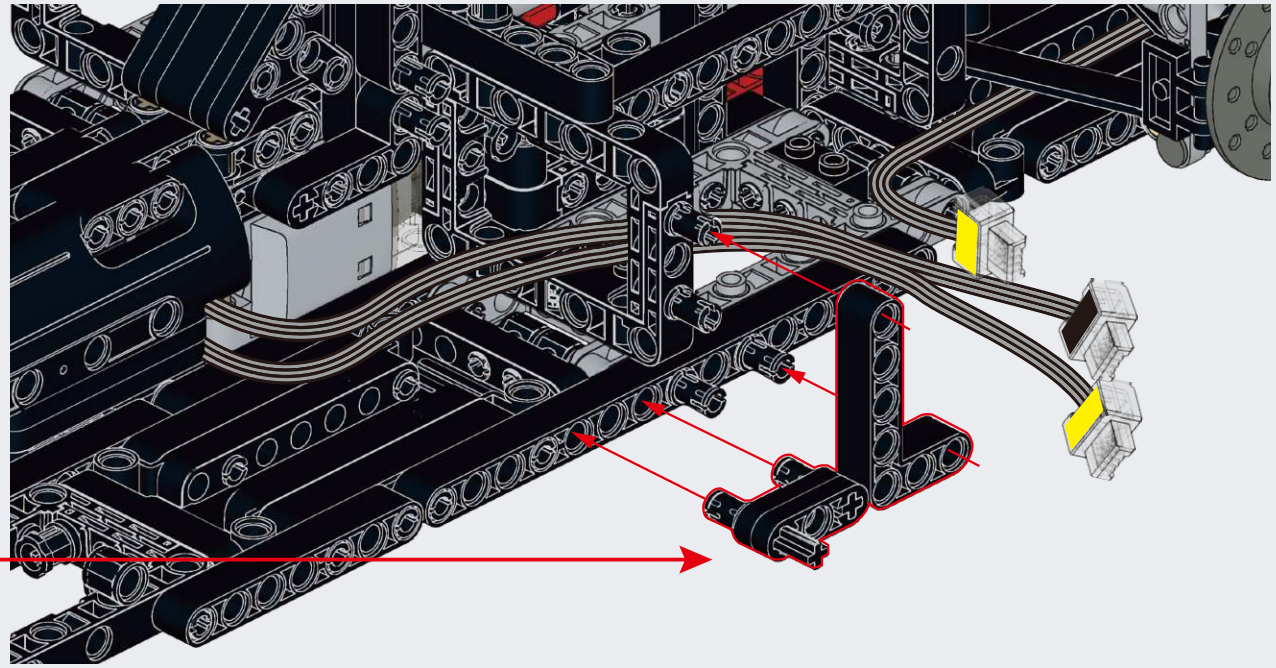

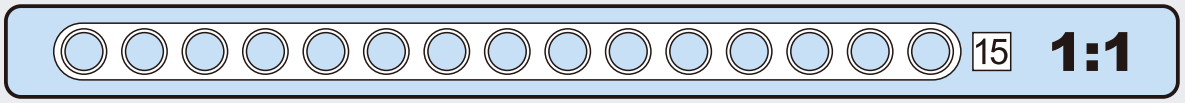

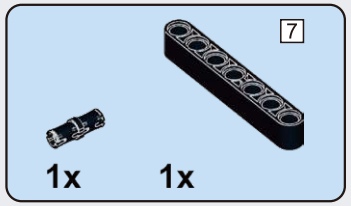

B112

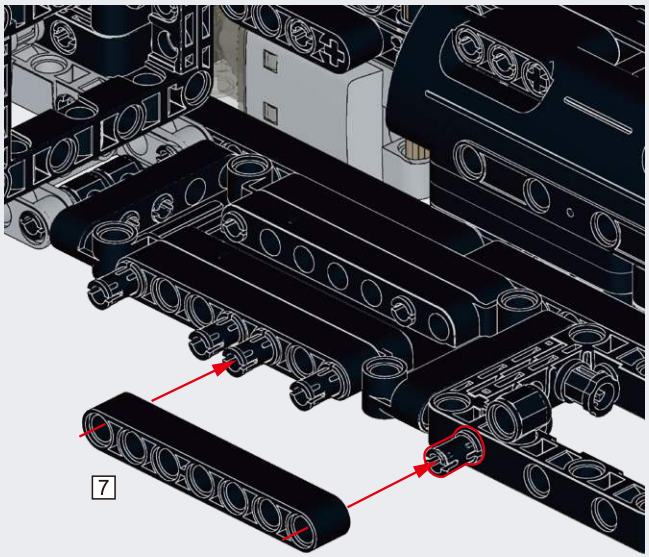

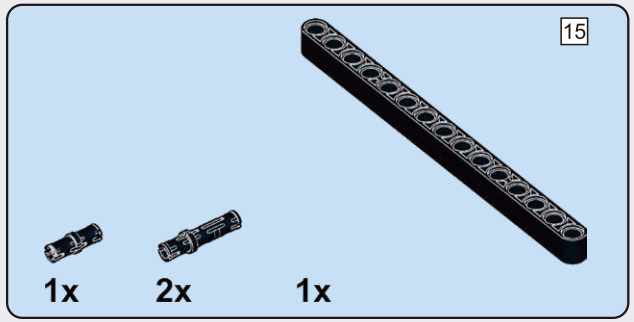

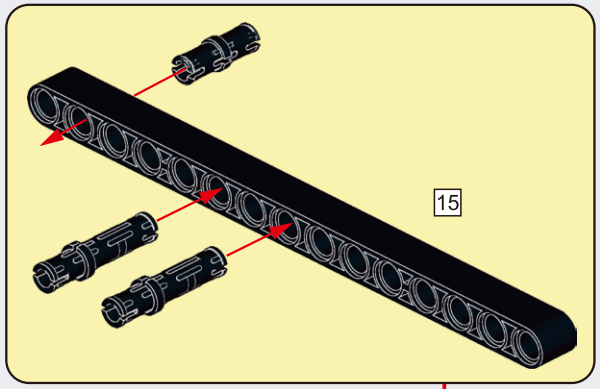

B113

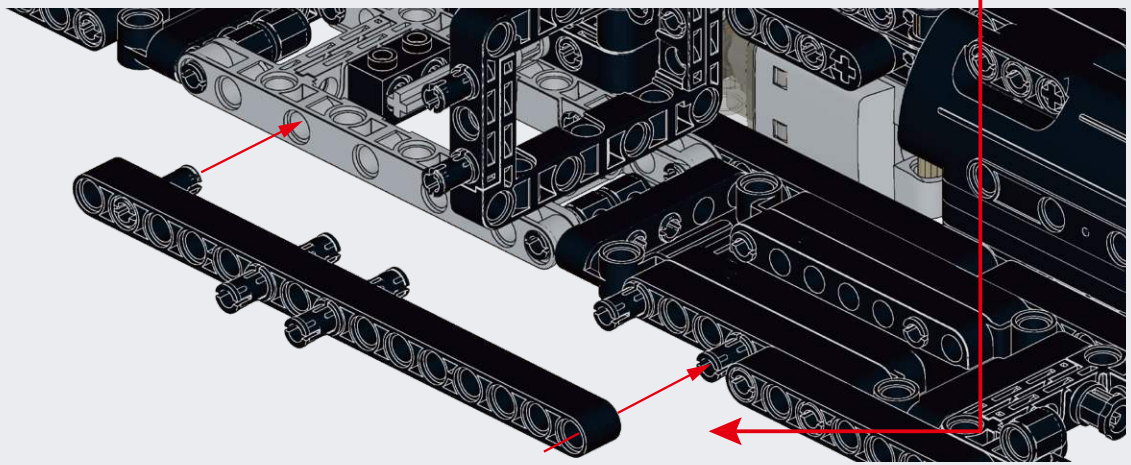

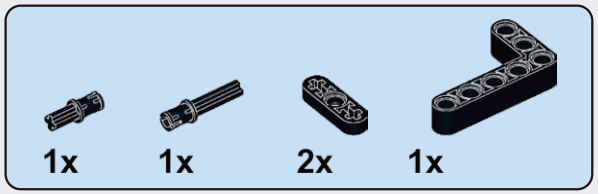

B114

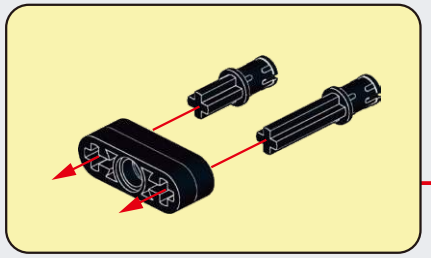

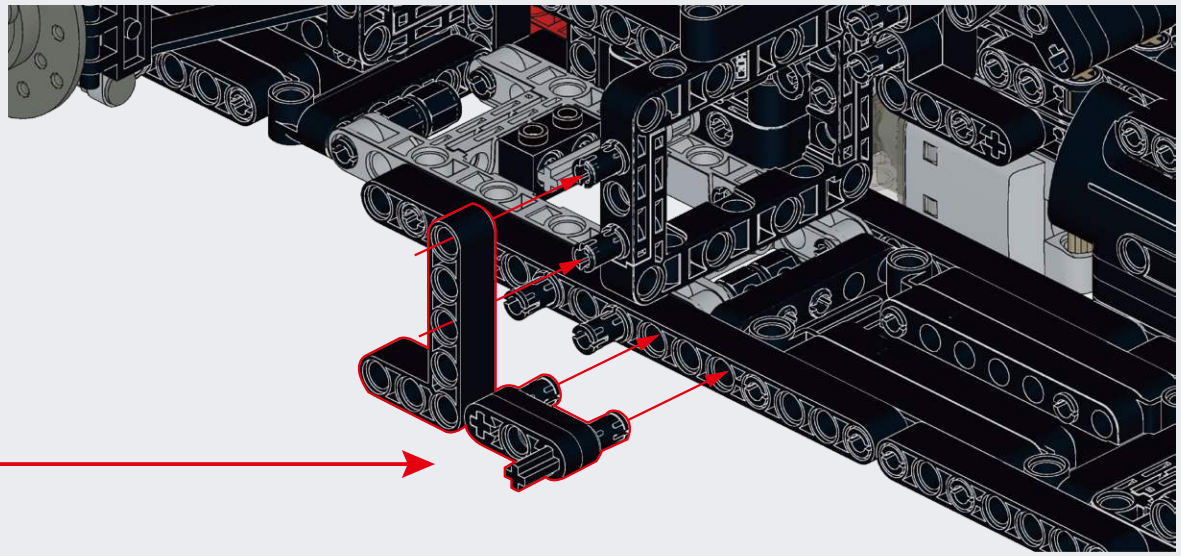

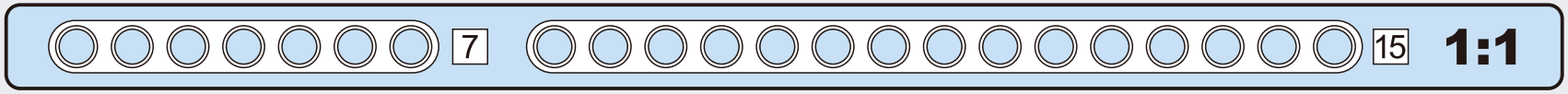

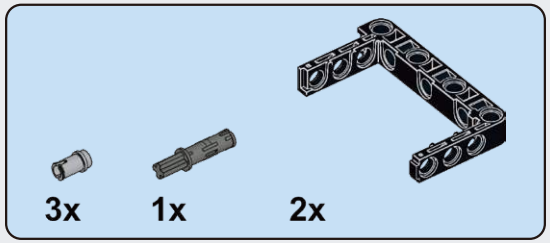

B115

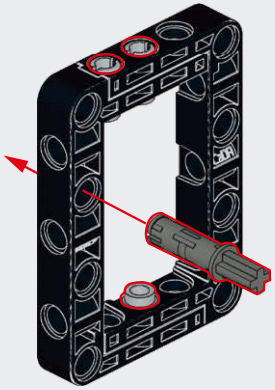

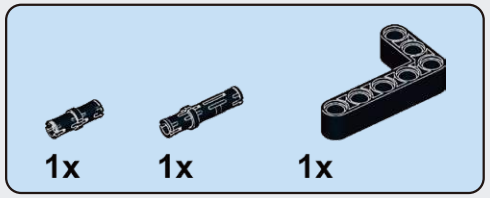

B116

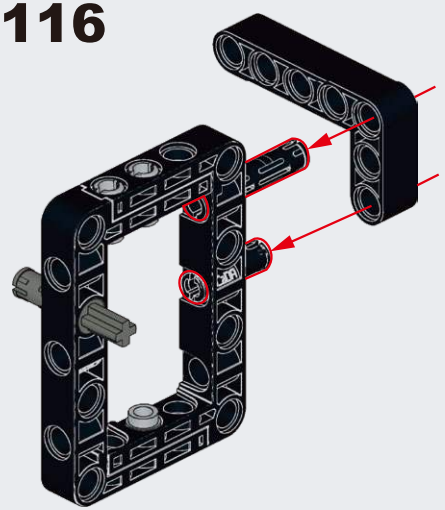

B117

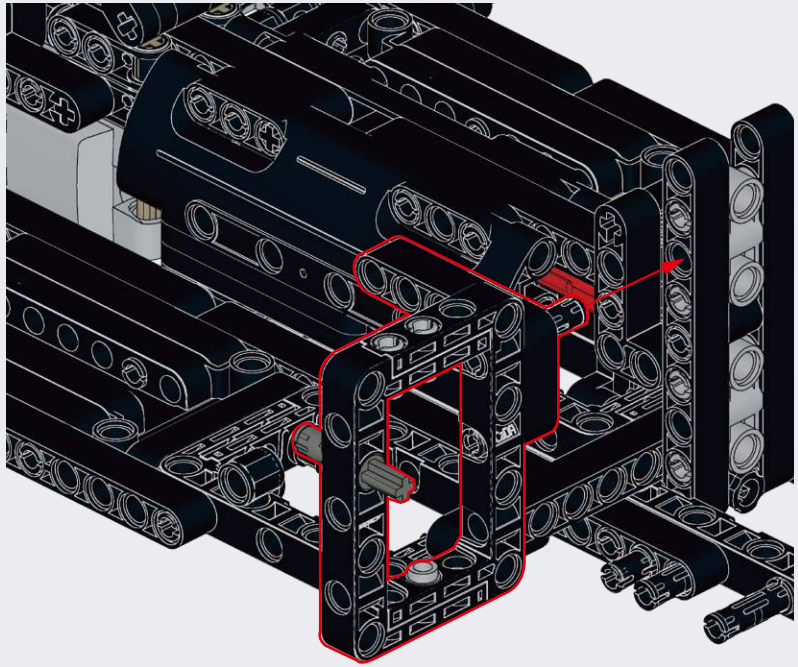

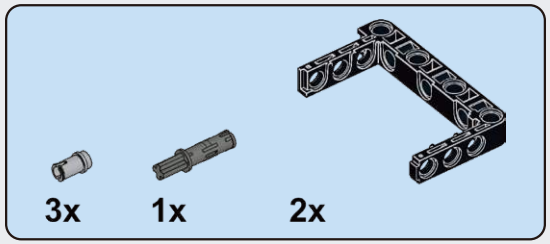

B118

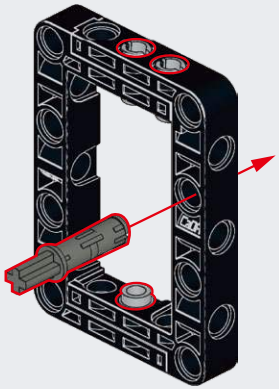

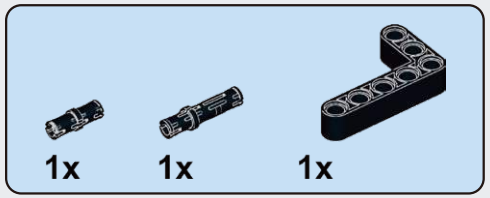

B119

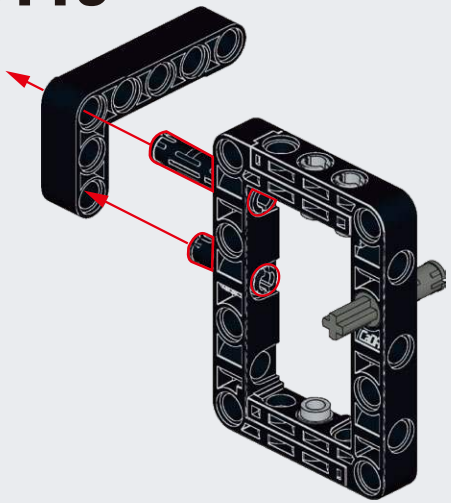

B120

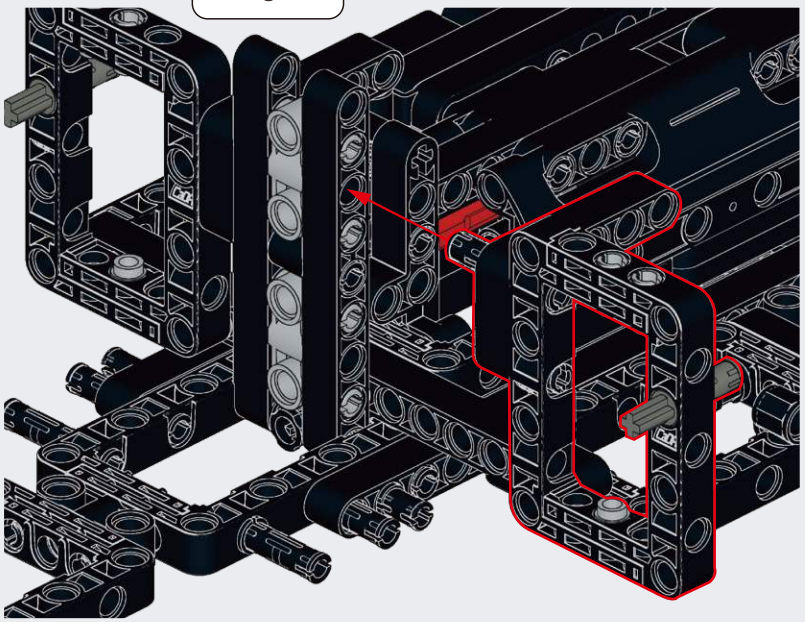

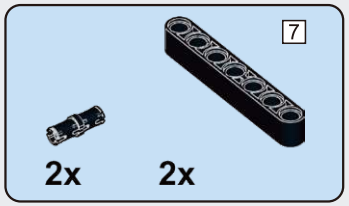

B121

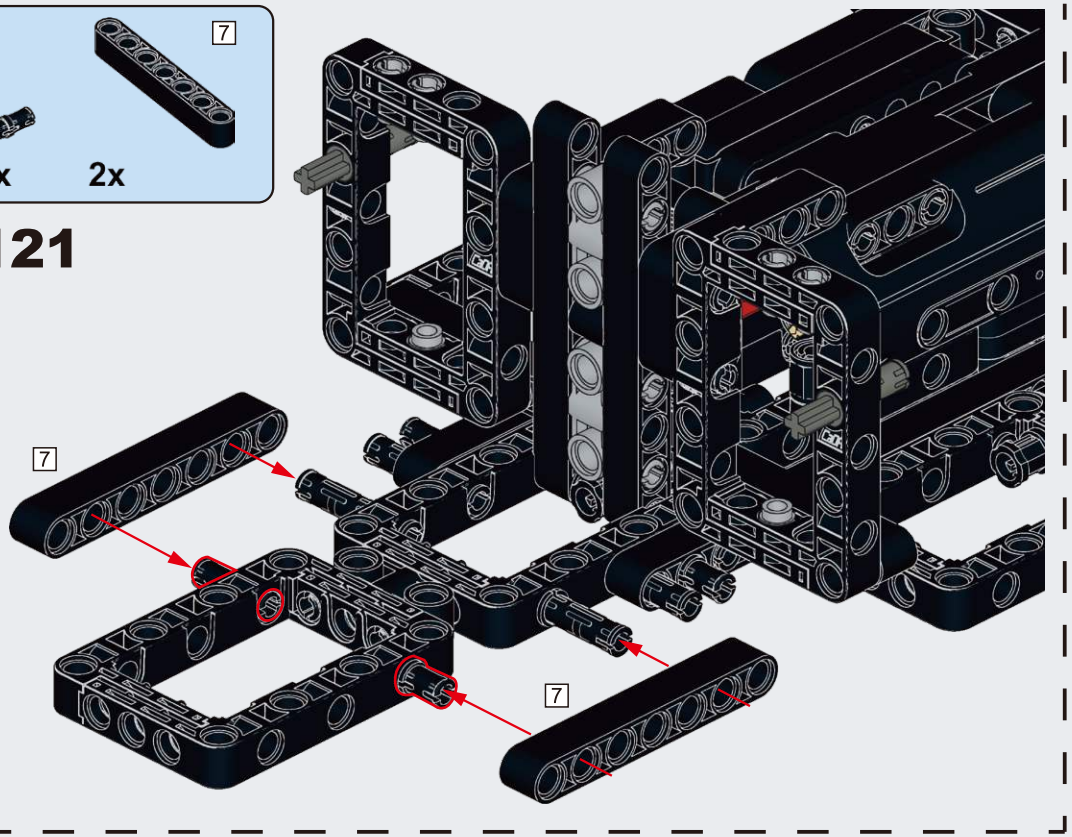

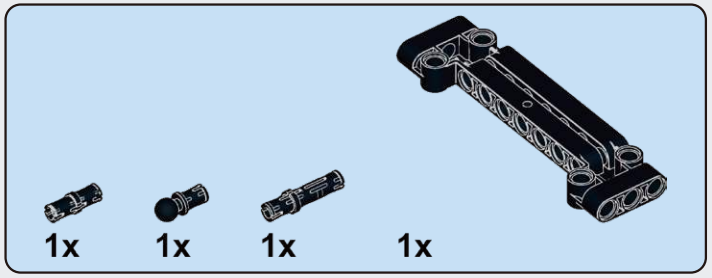

B122

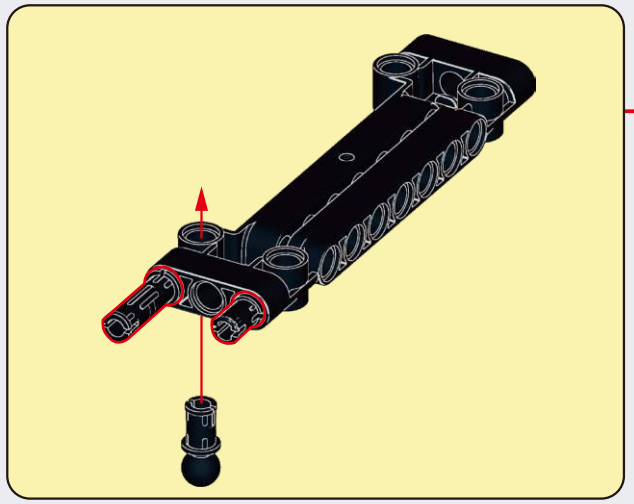

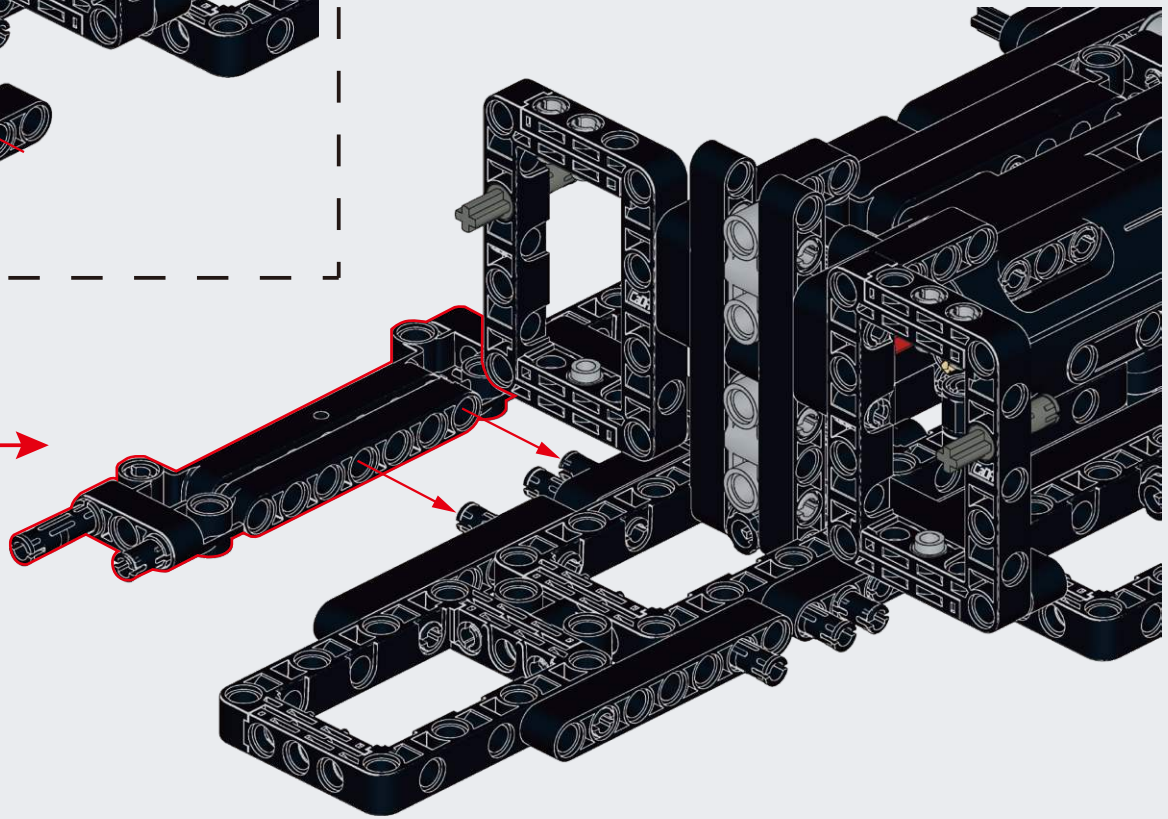

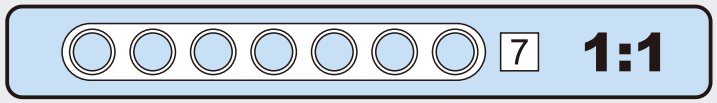

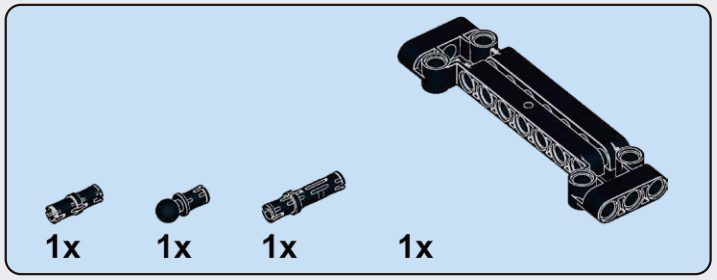

B123

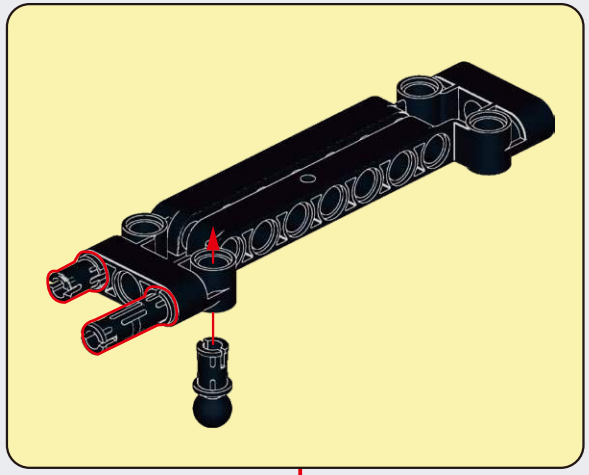

C

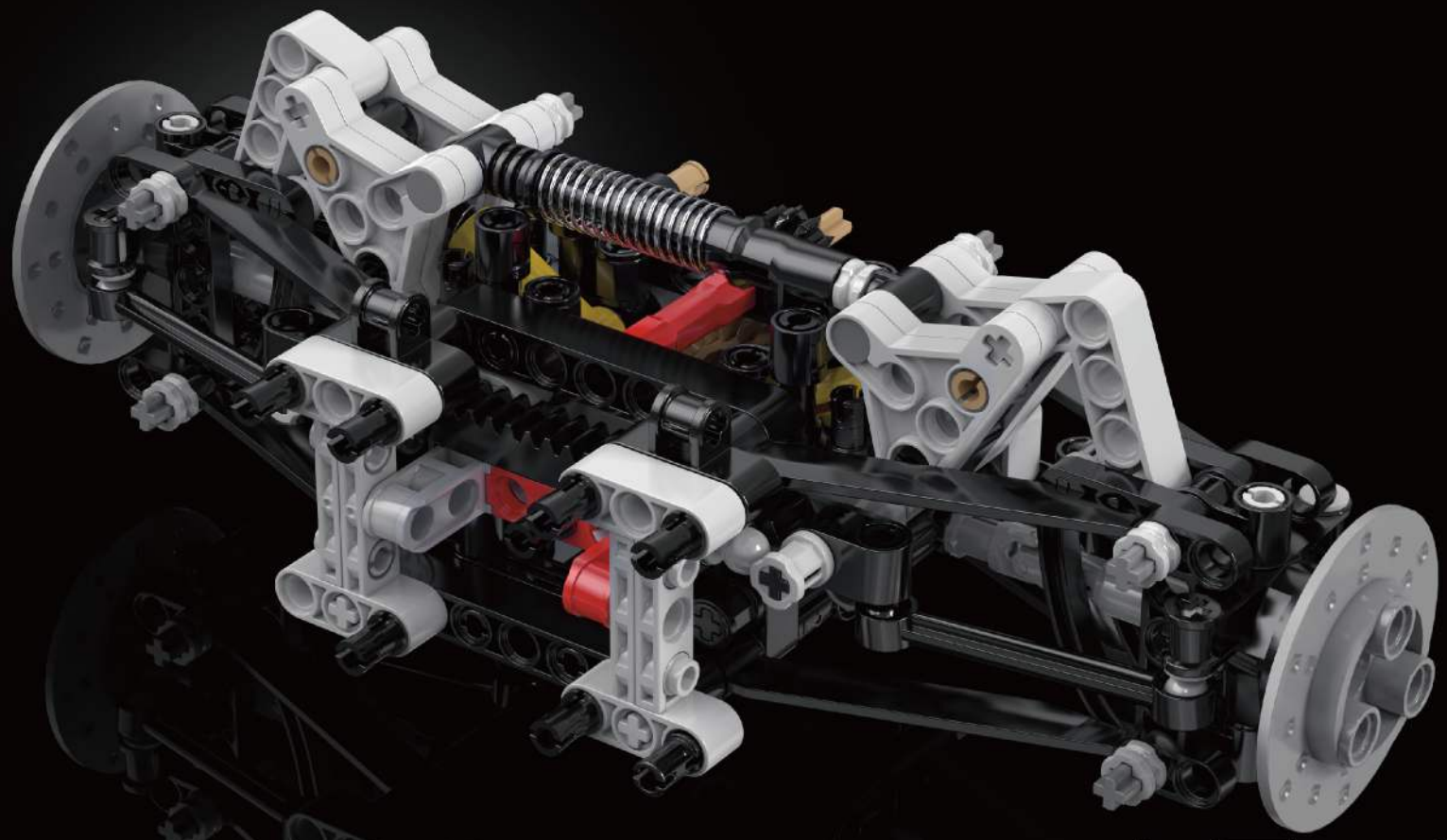

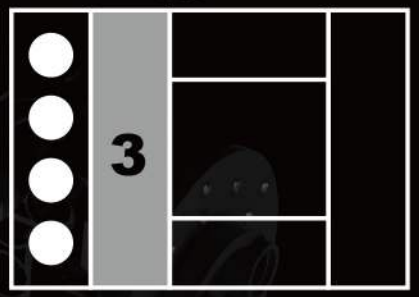

BAG 3

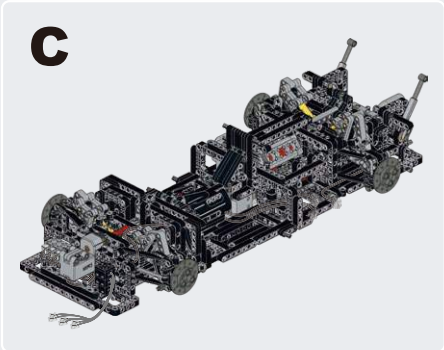

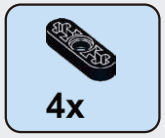

C1

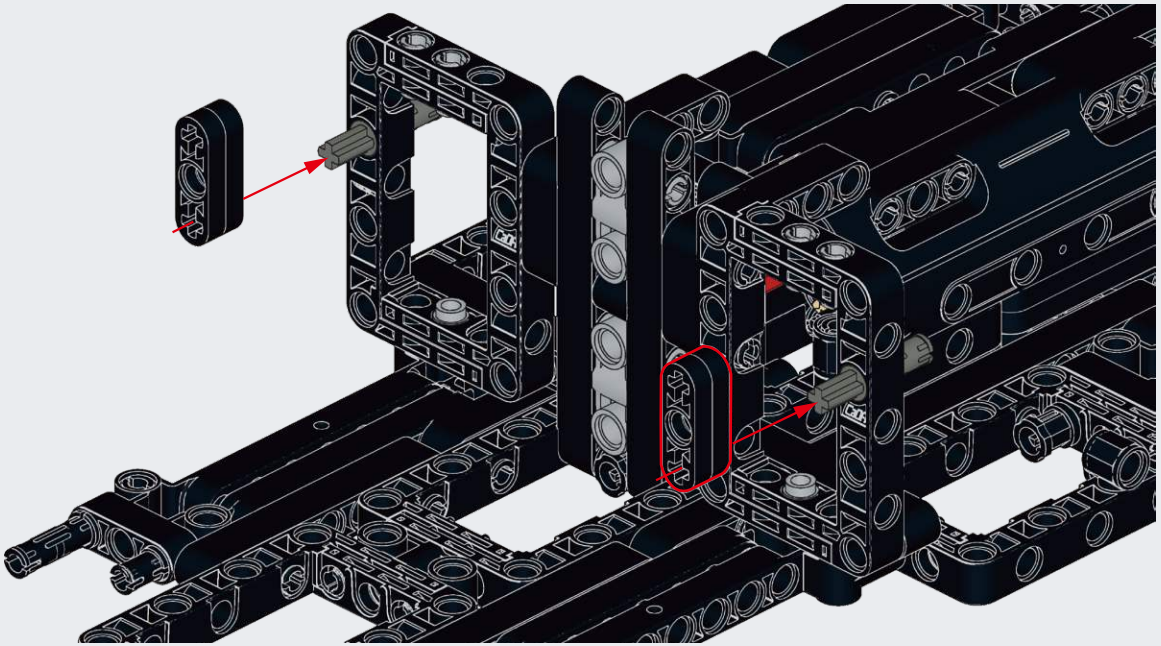

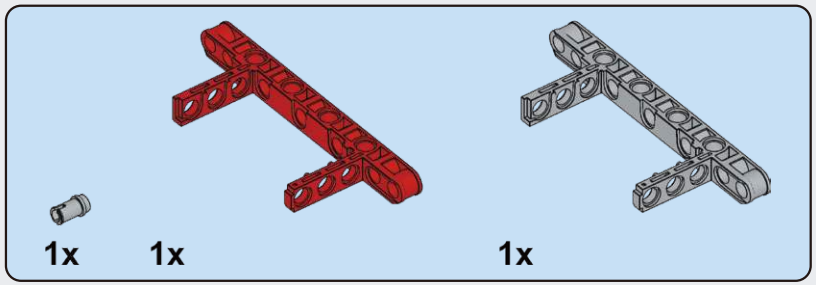

C2

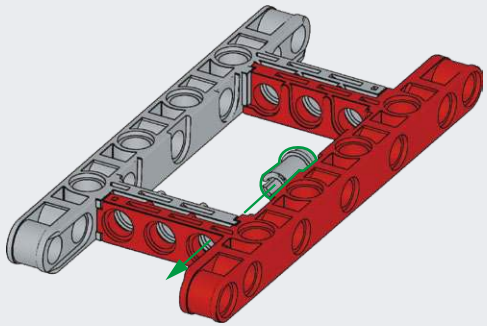

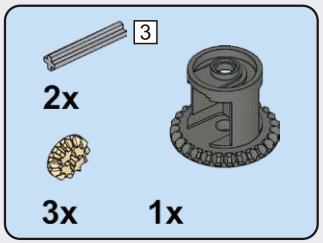

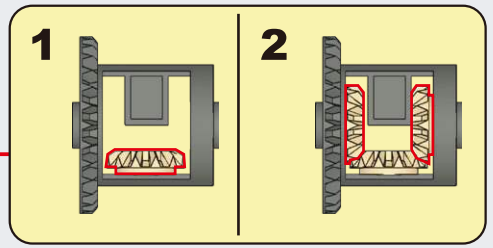

C3

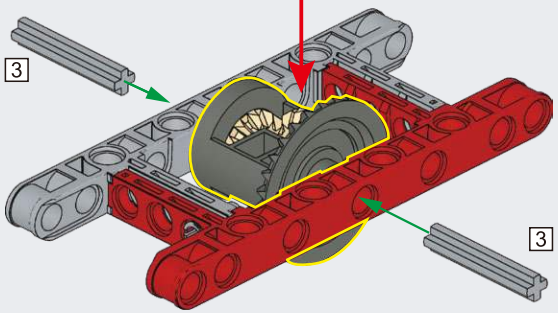

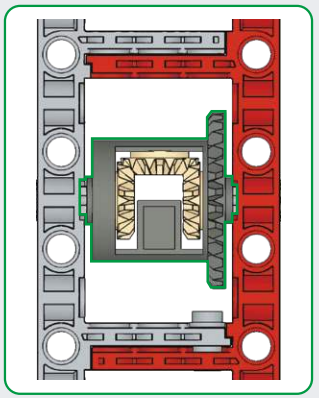

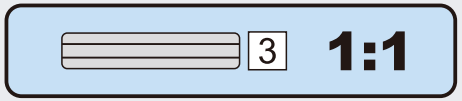

C4

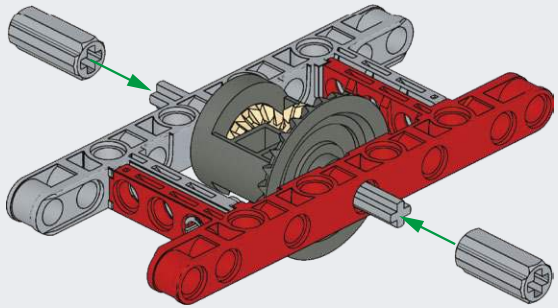

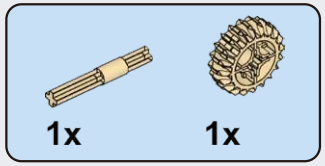

C5

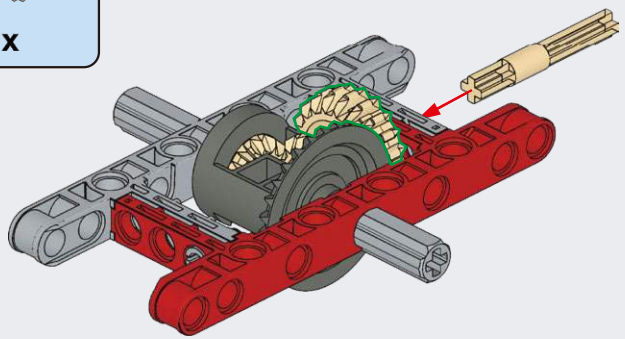

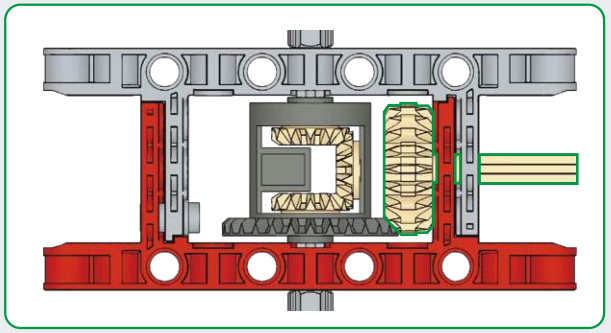

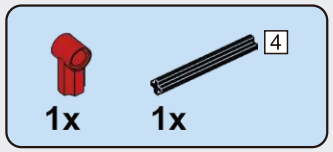

C6

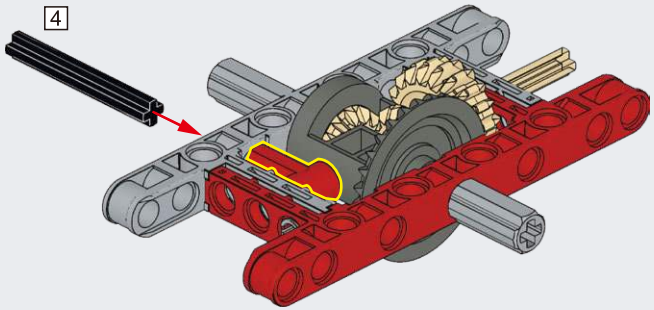

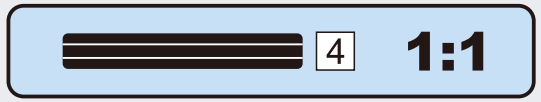

C7

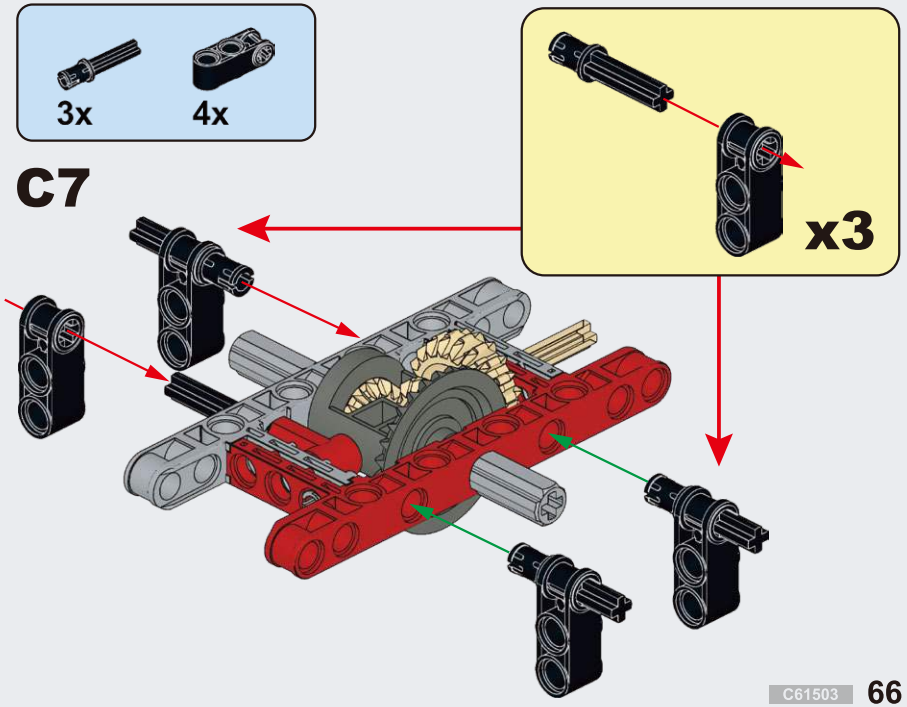

C8

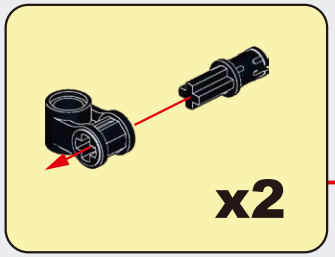

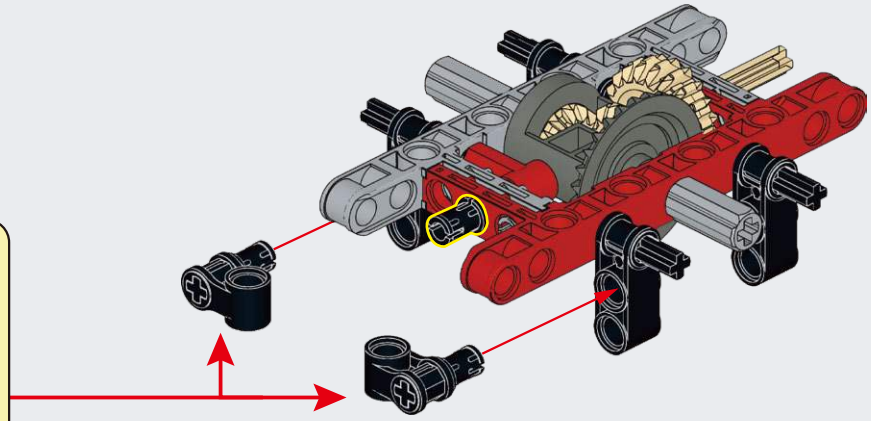

C9

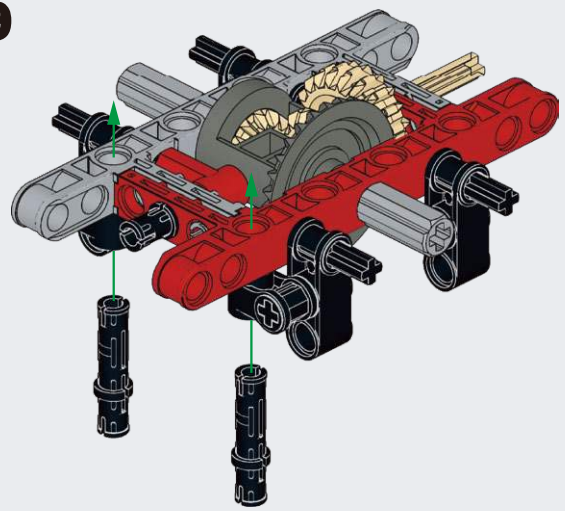

C10

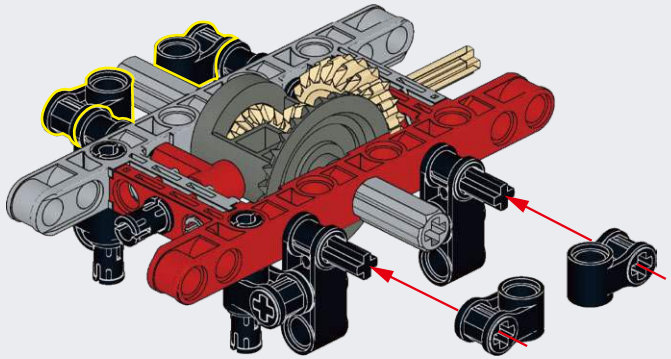

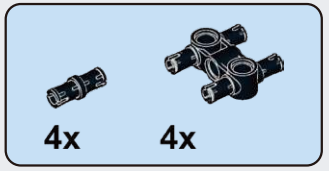

C11

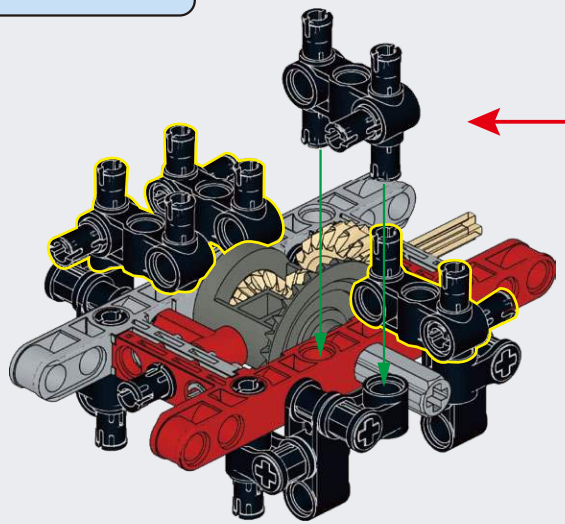

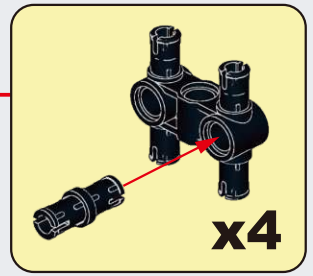

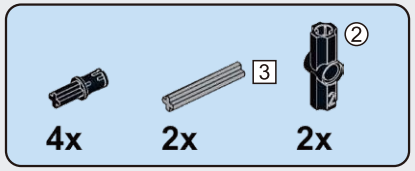

C12

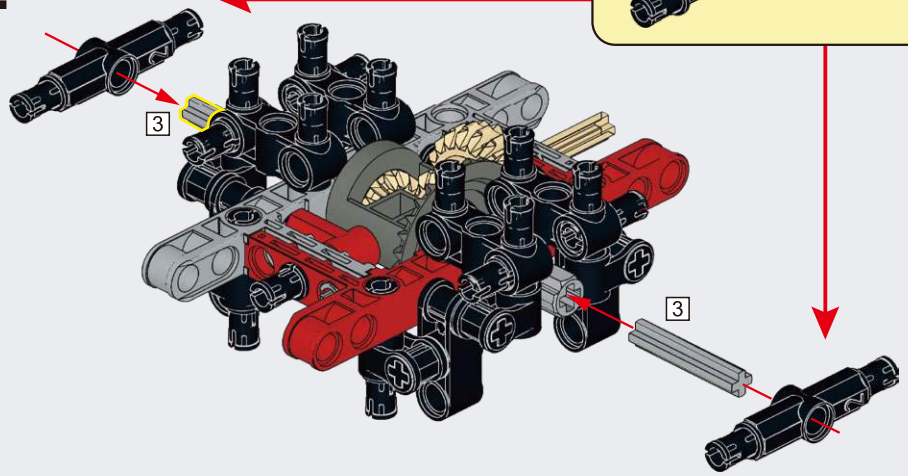

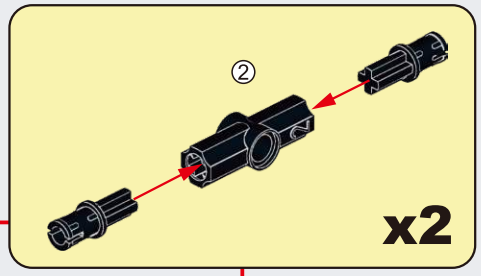

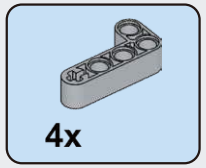

C13

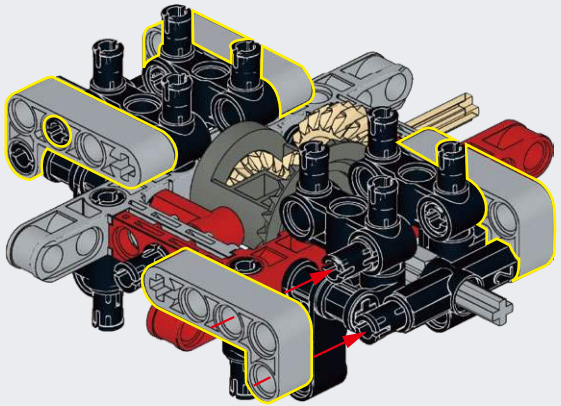

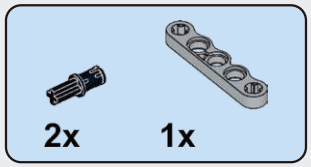

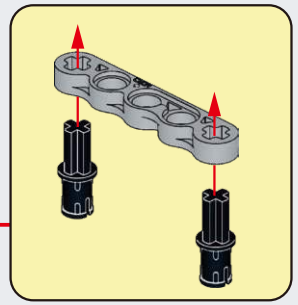

C14

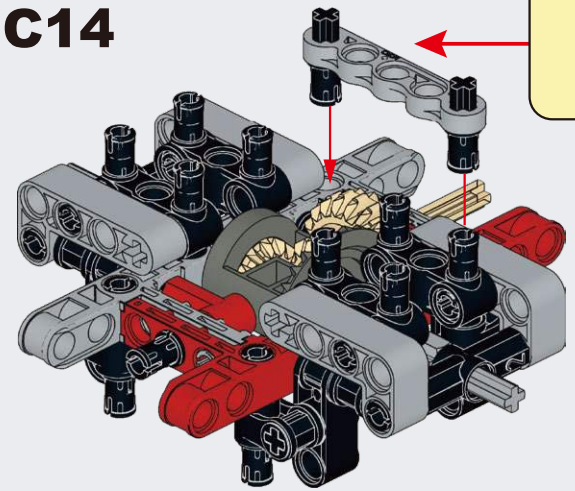

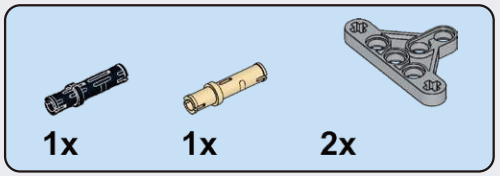

C15

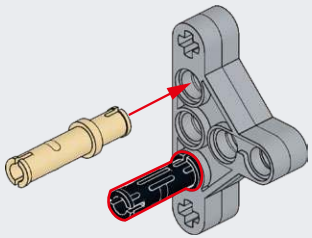

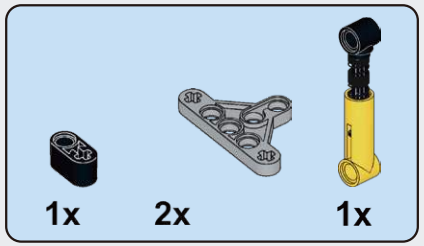

C16

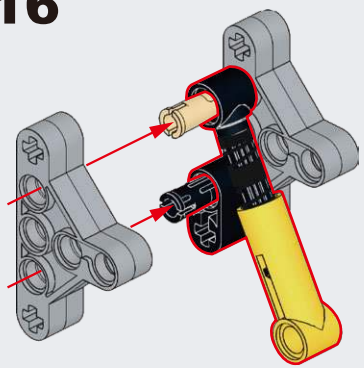

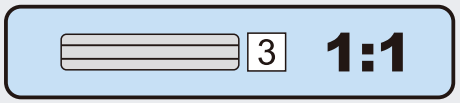

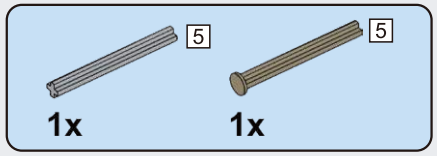

C17

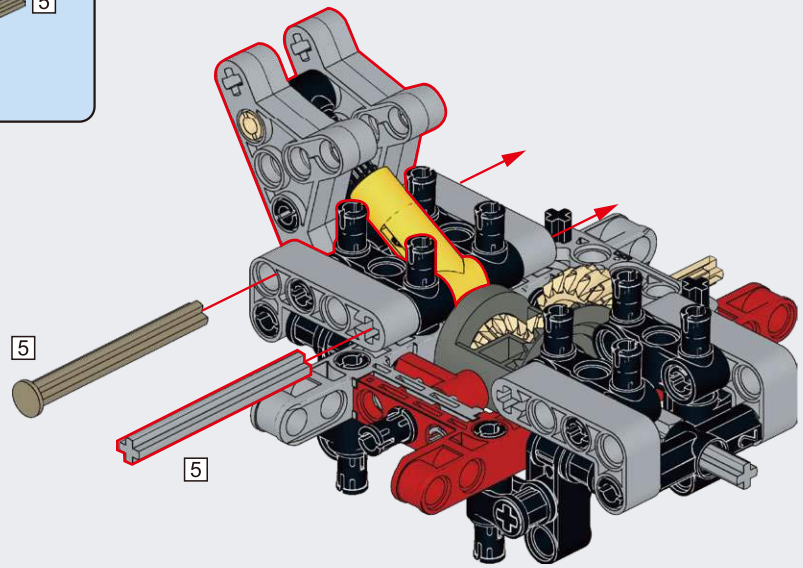

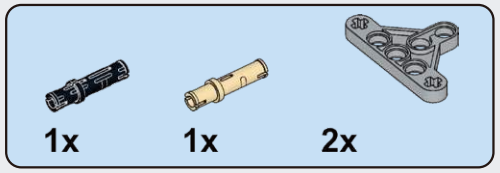

C18

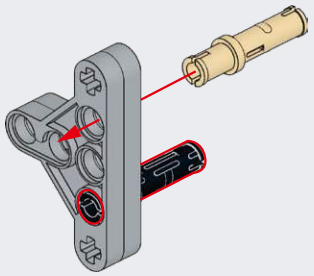

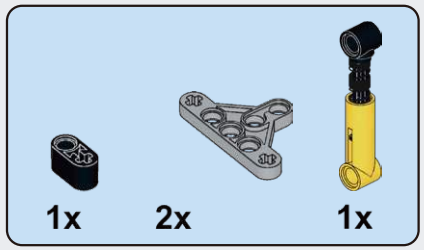

C19

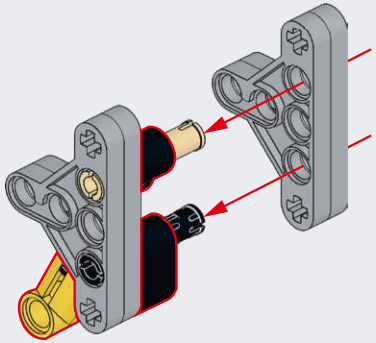

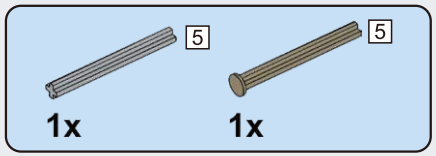

C20

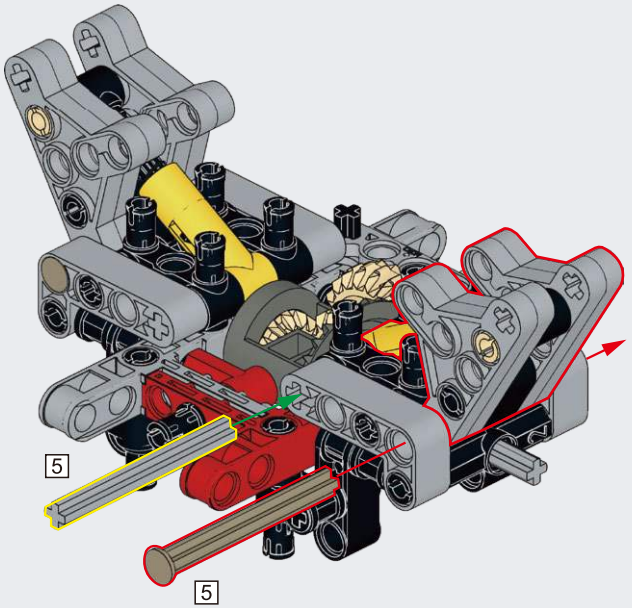

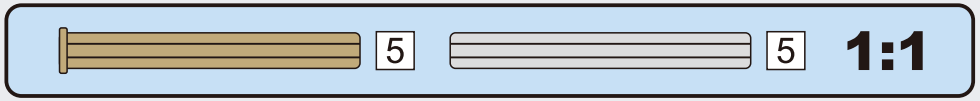

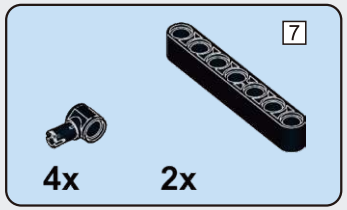

C21

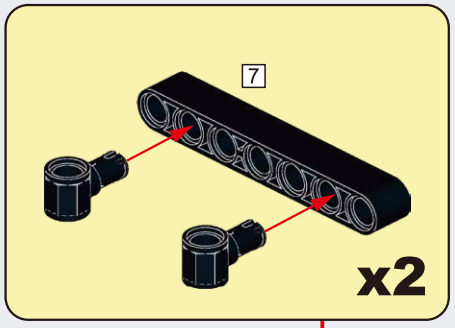

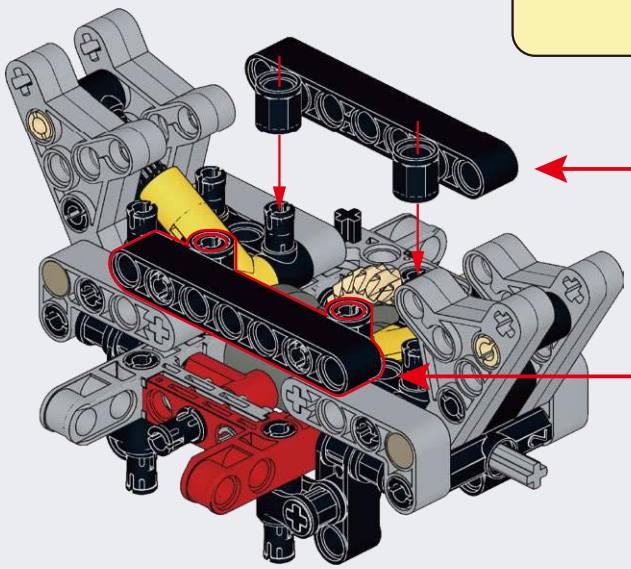

C22

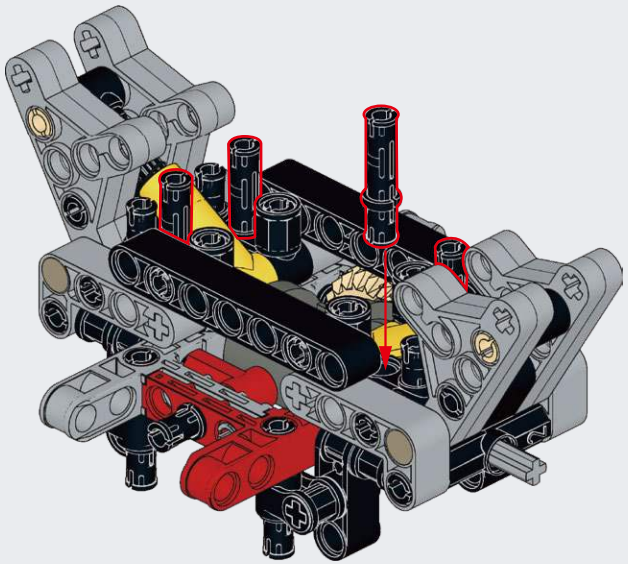

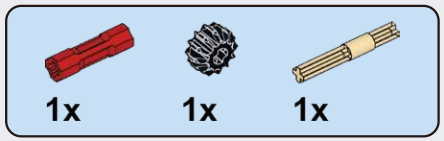

C23

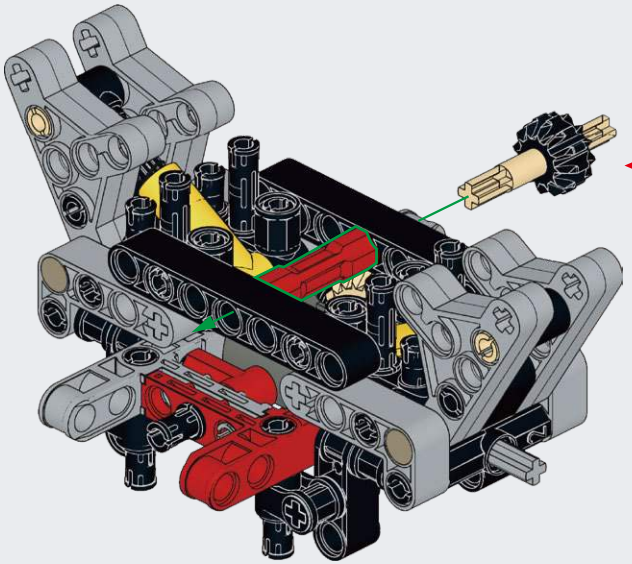

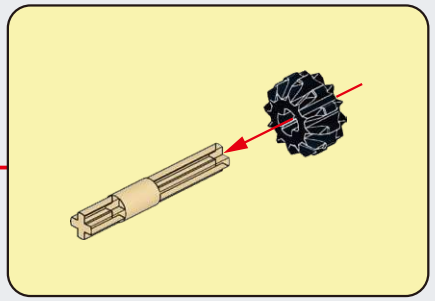

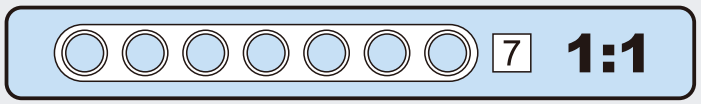

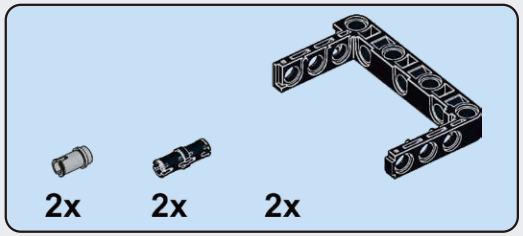

C24

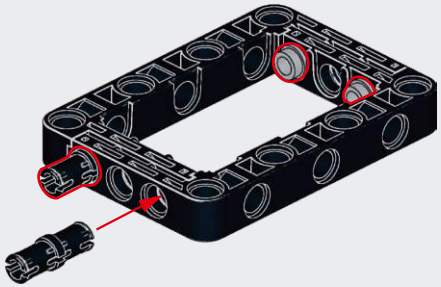

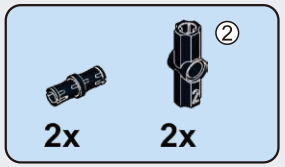

C25

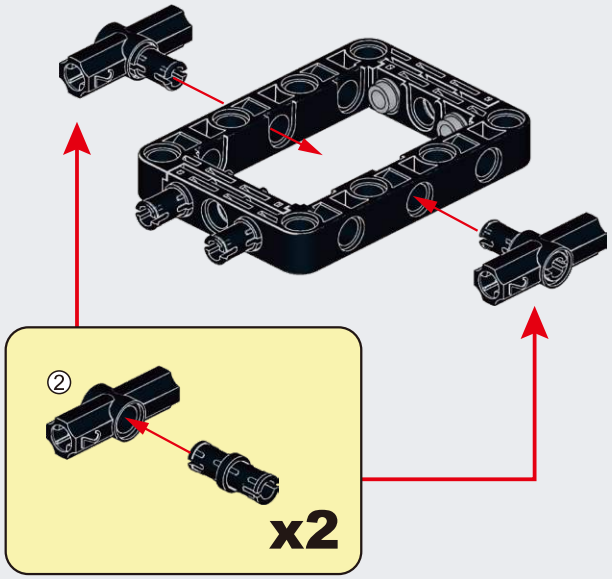

C26

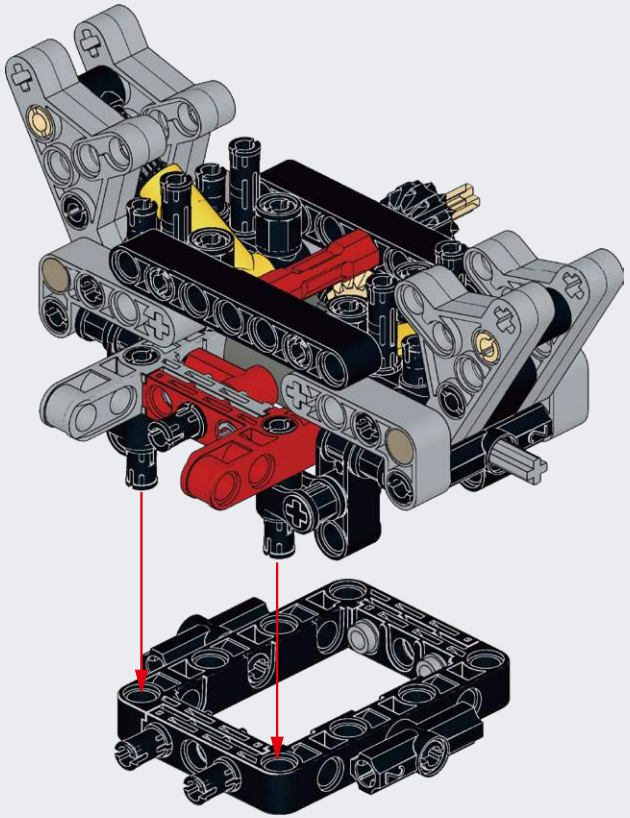

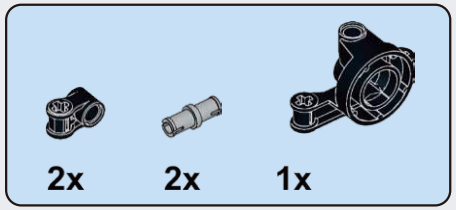

C27

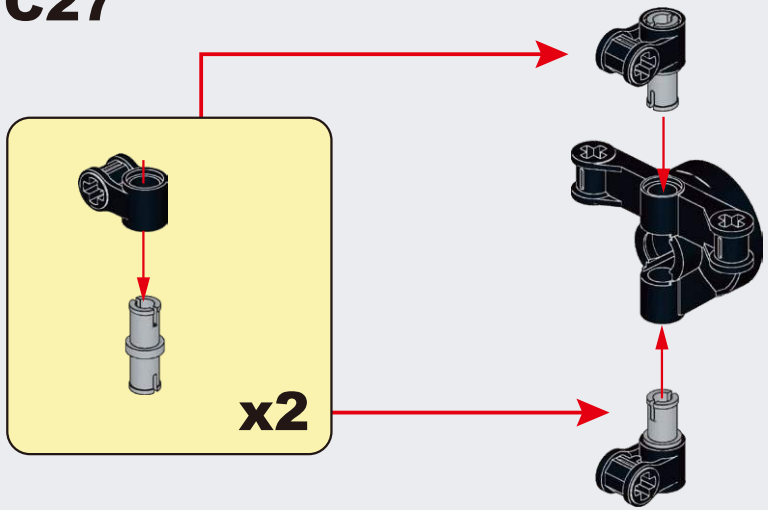

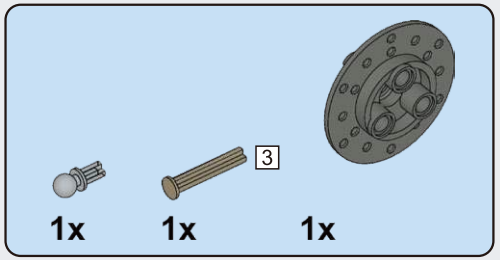

C28

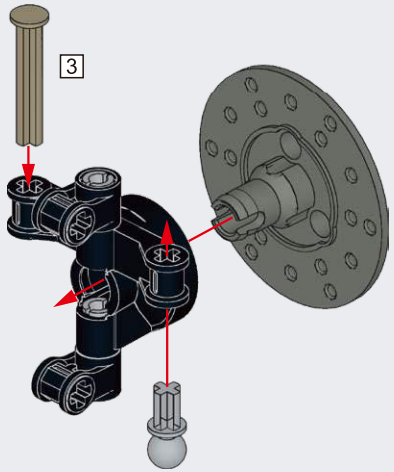

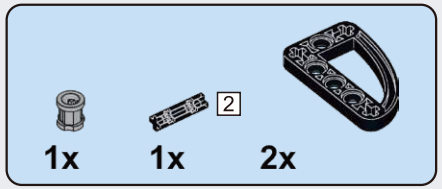

C29

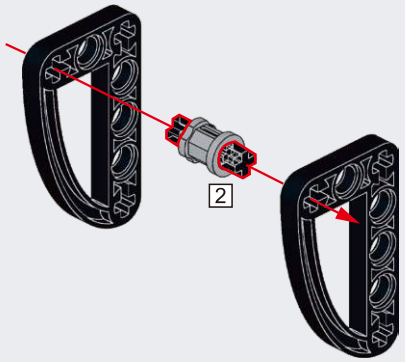

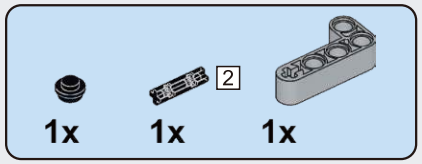

C30

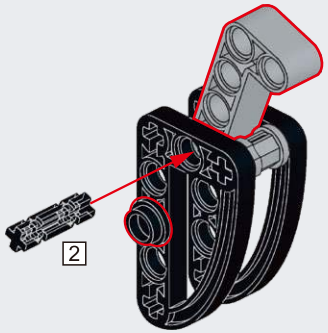

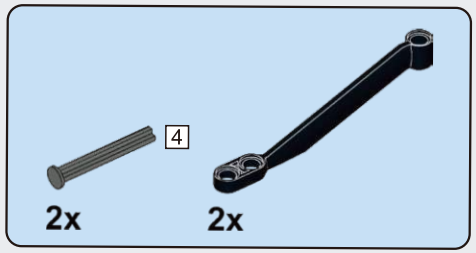

C31

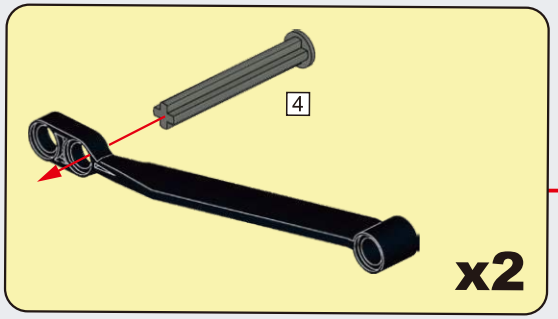

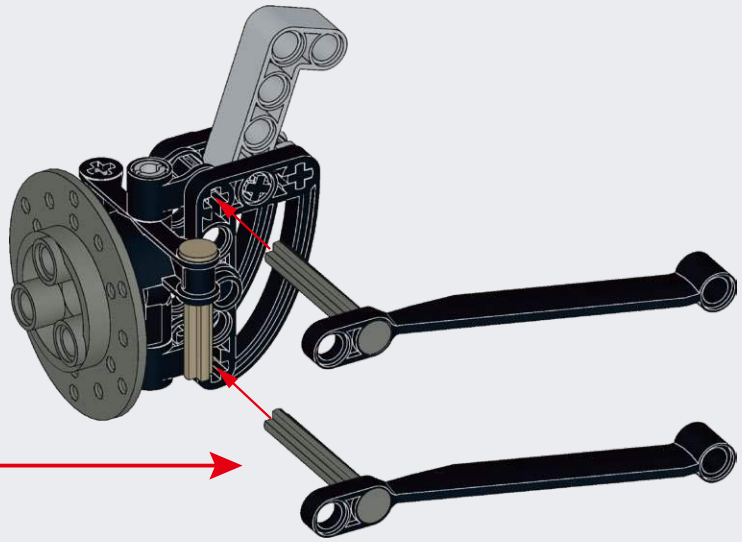

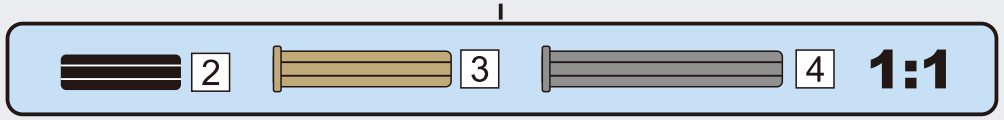

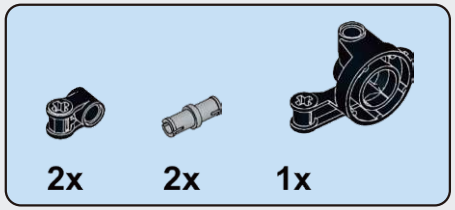

C32

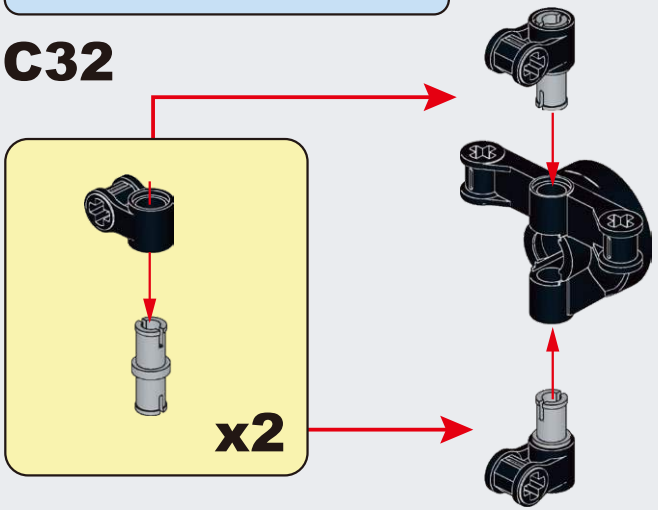

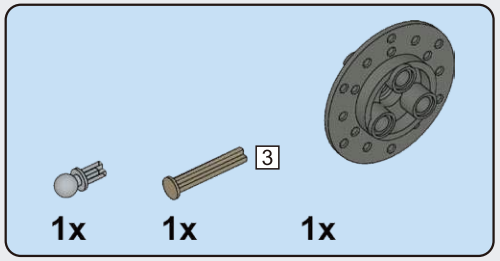

C33

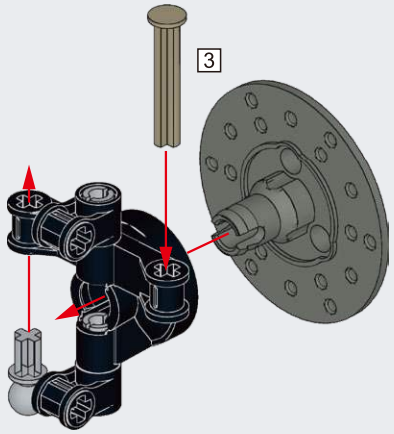

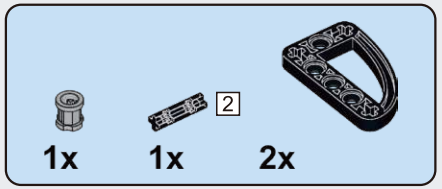

C34

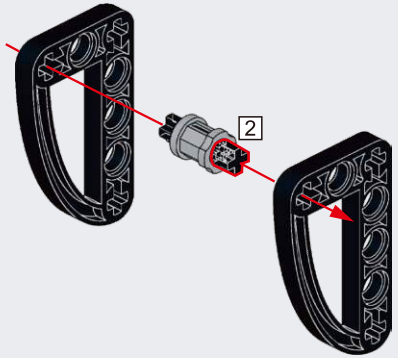

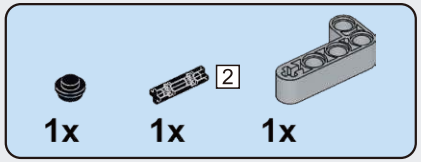

C35

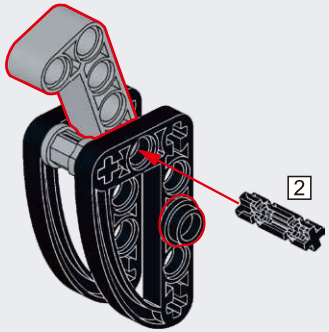

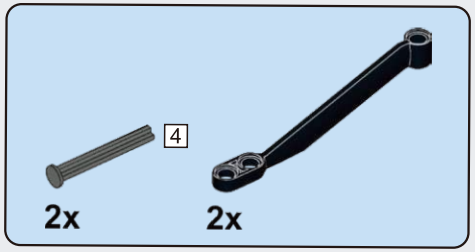

C36

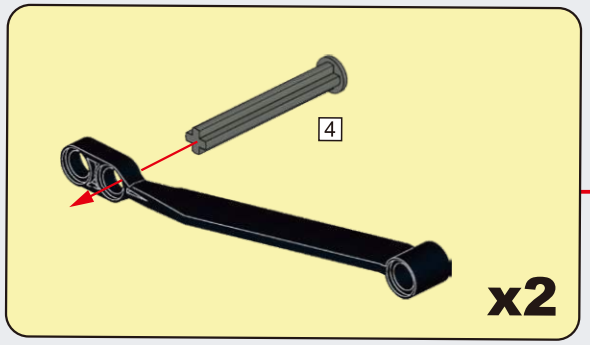

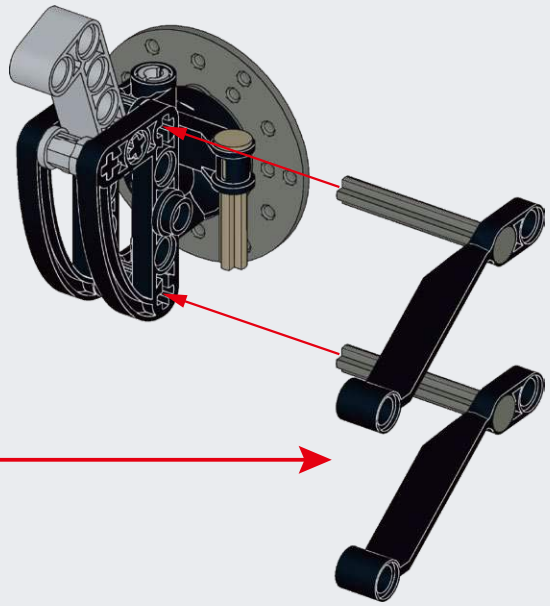

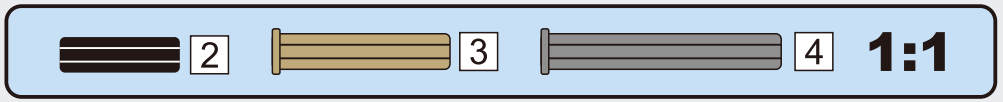

C37

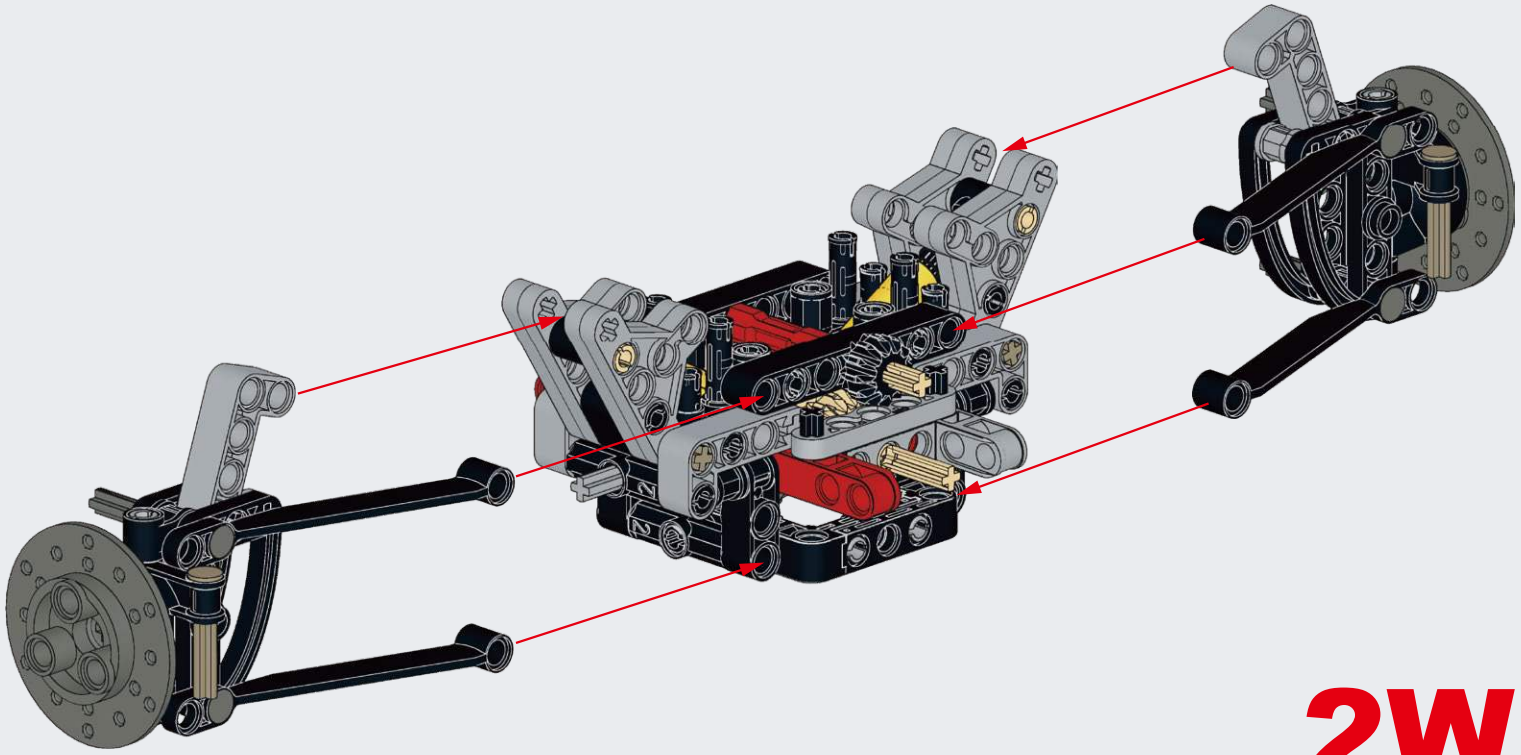

2WD

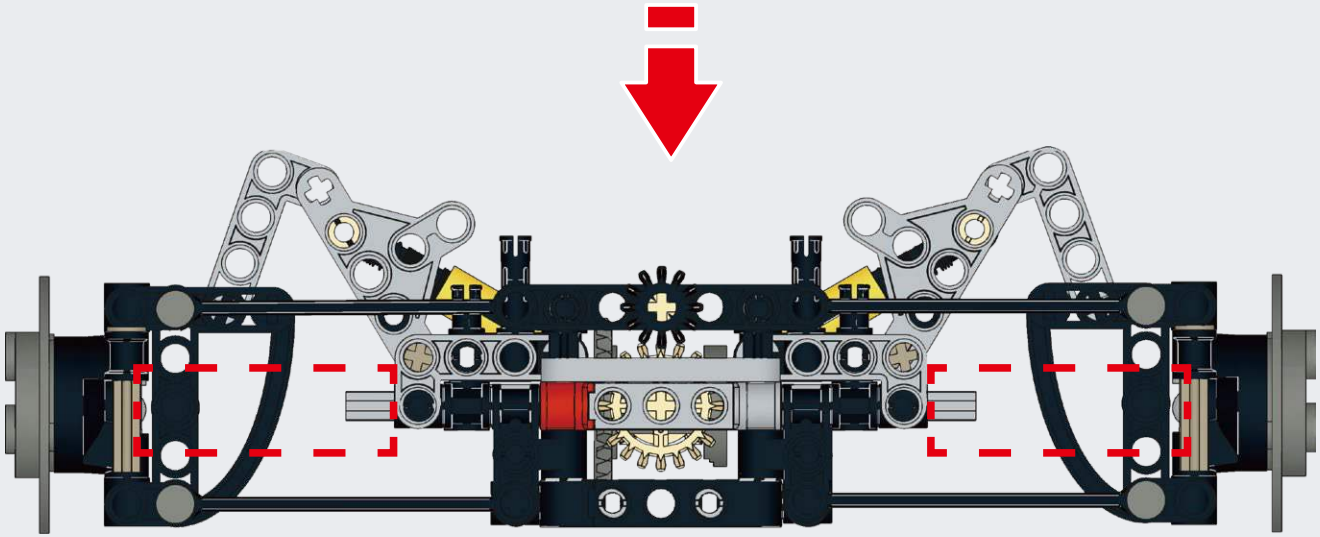

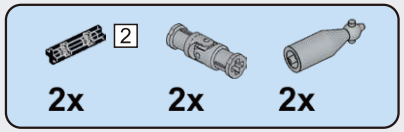

C37

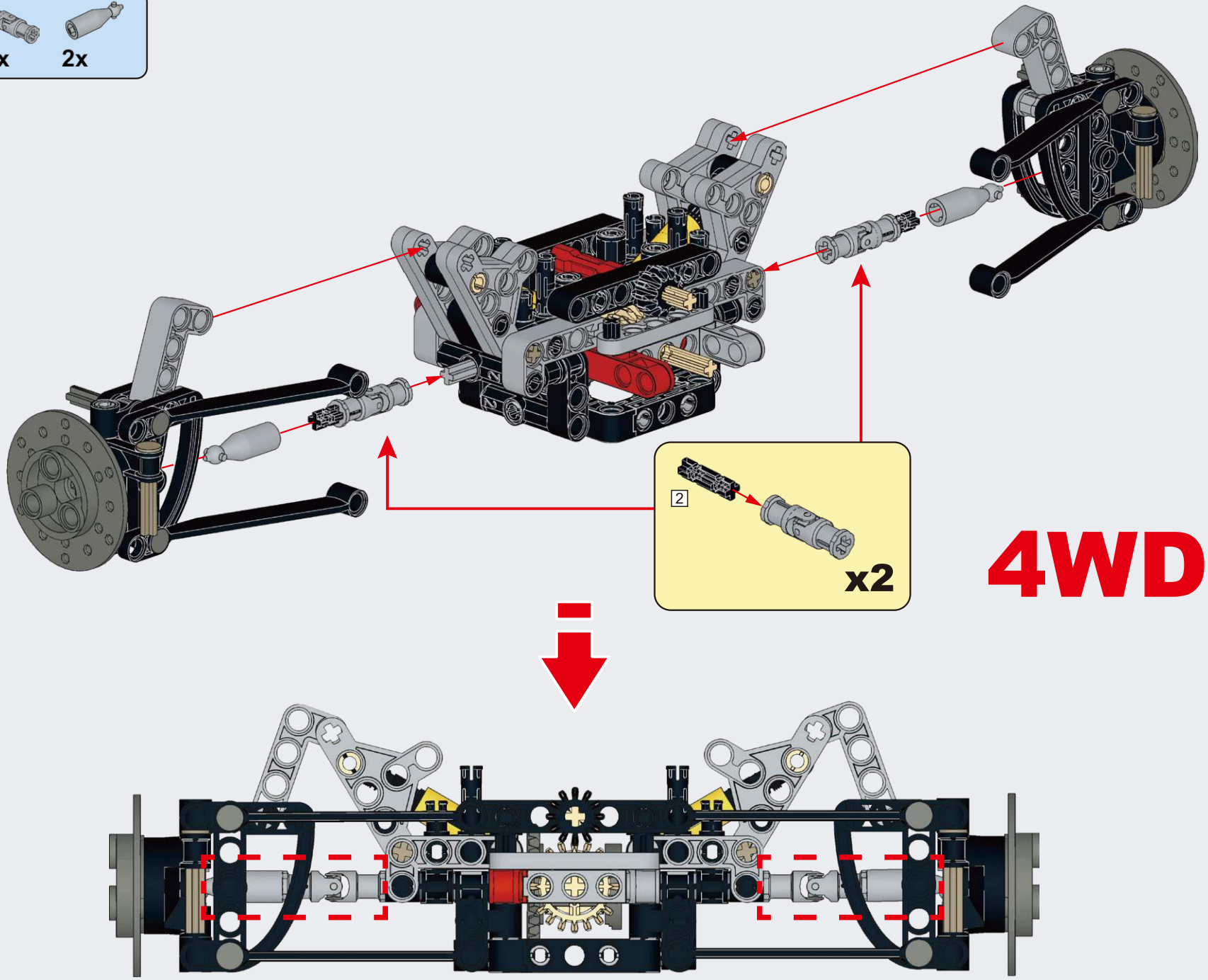

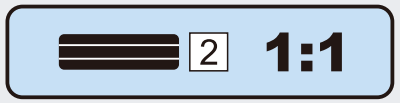

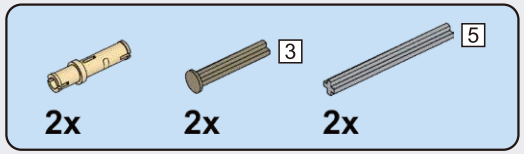

C38

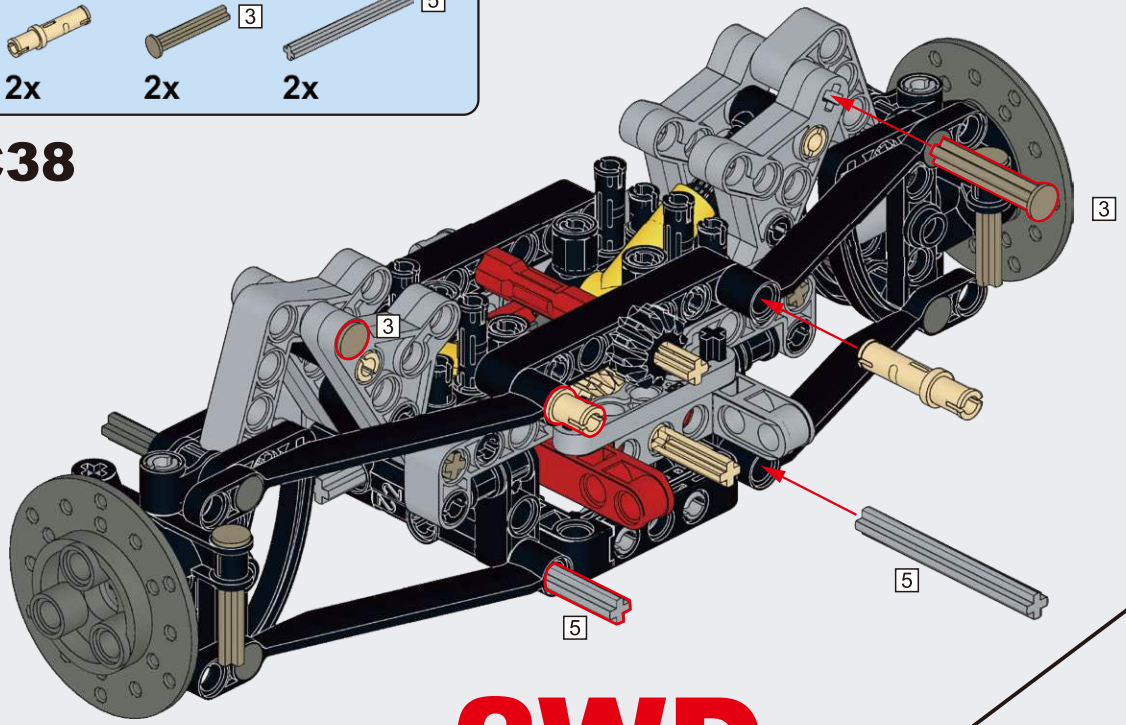

2WD

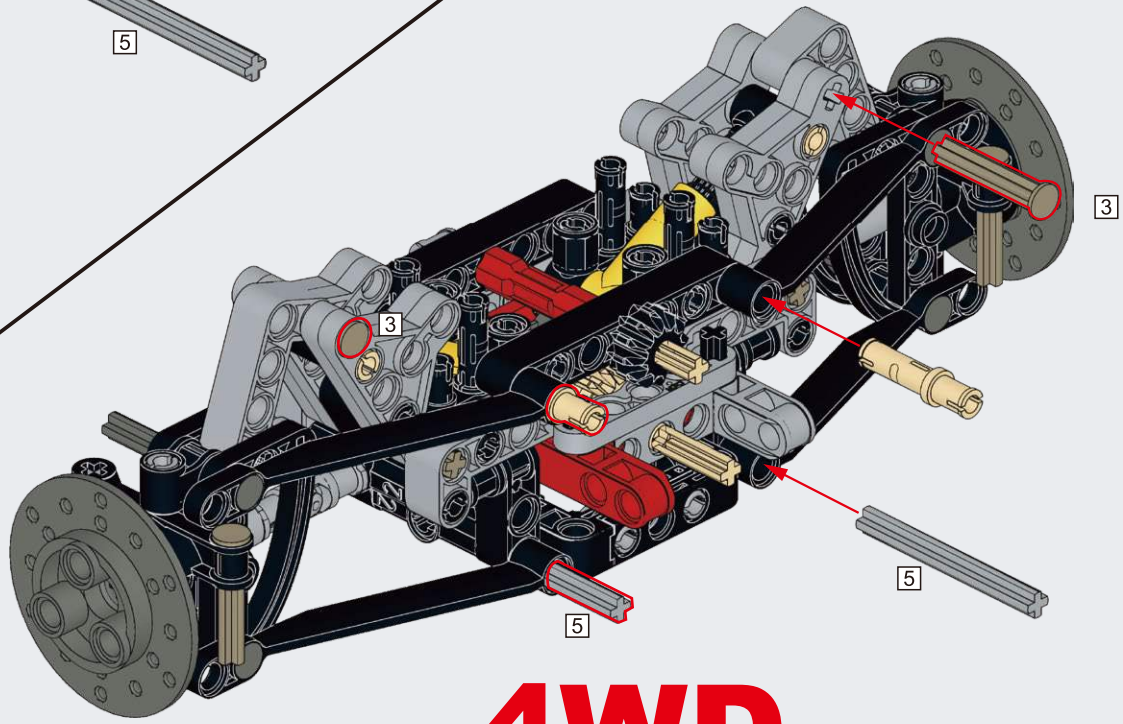

4WD

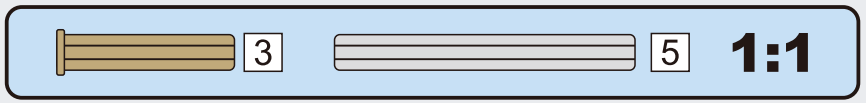

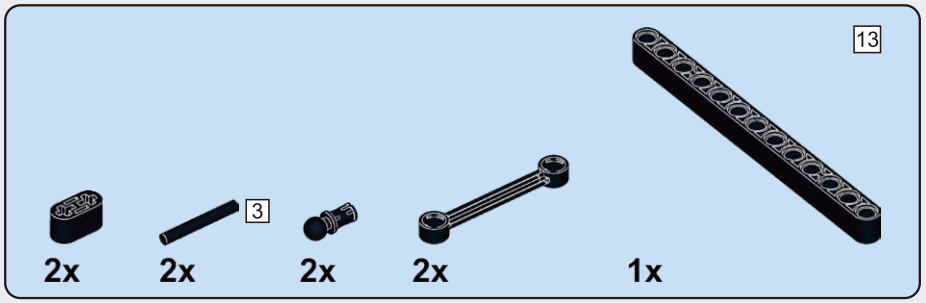

C39

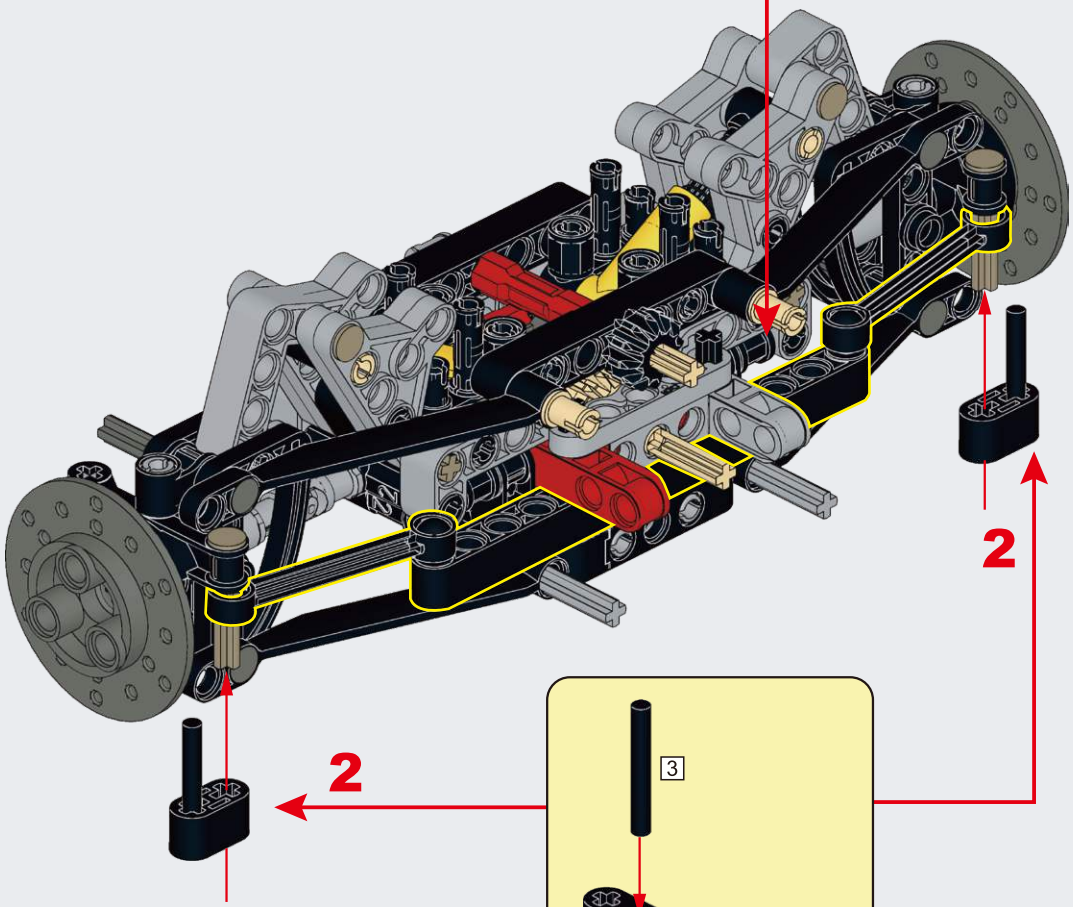

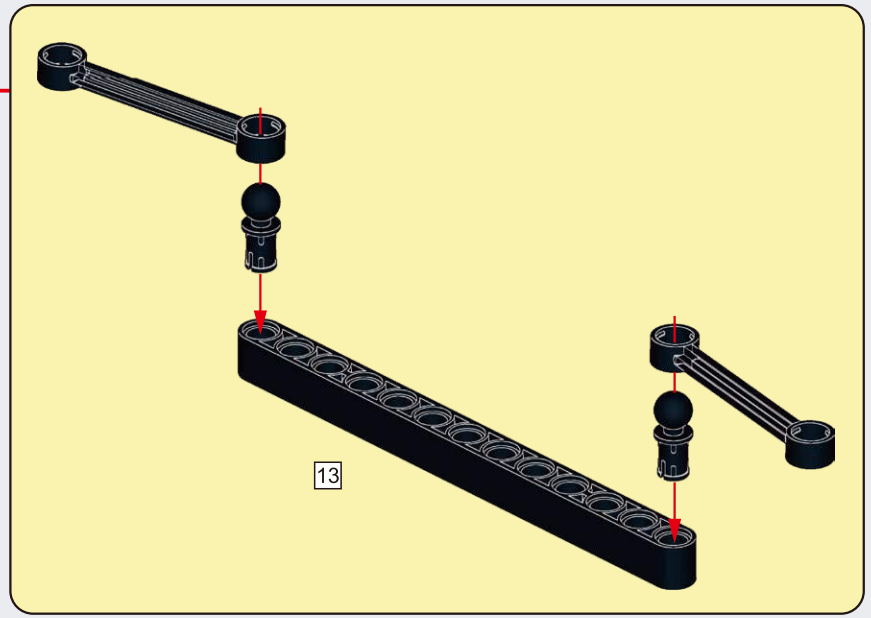

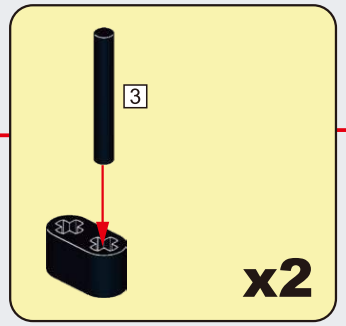

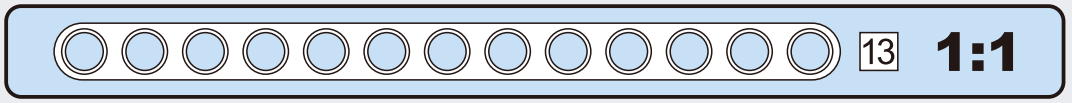

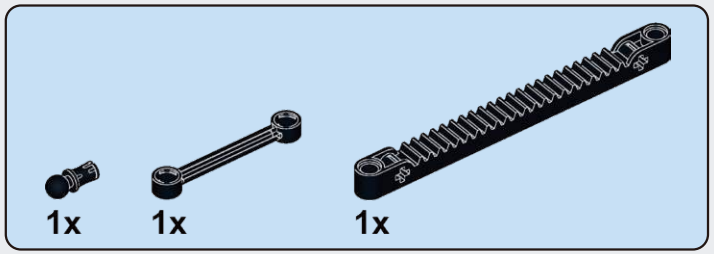

C40

2WD

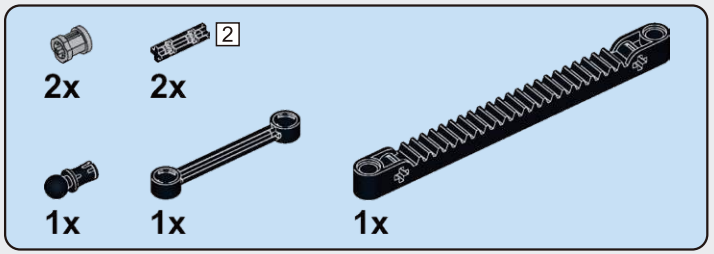

C40

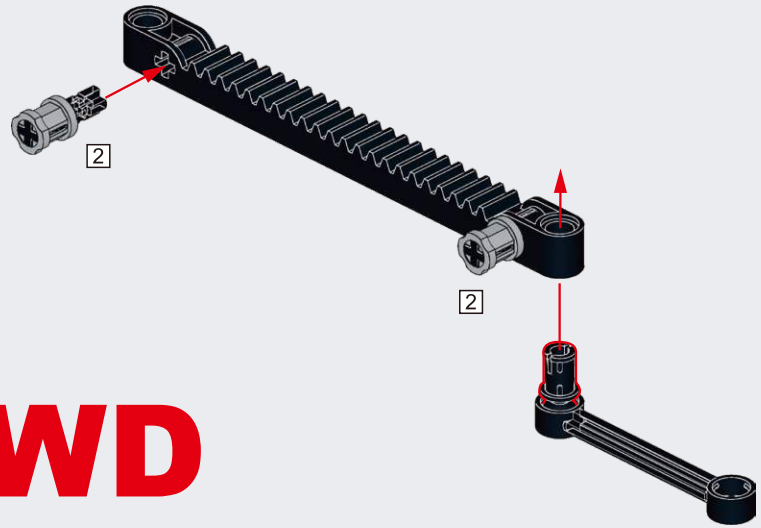

4WD

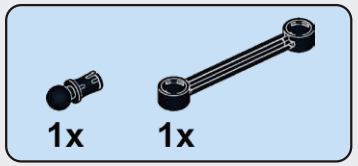

C41

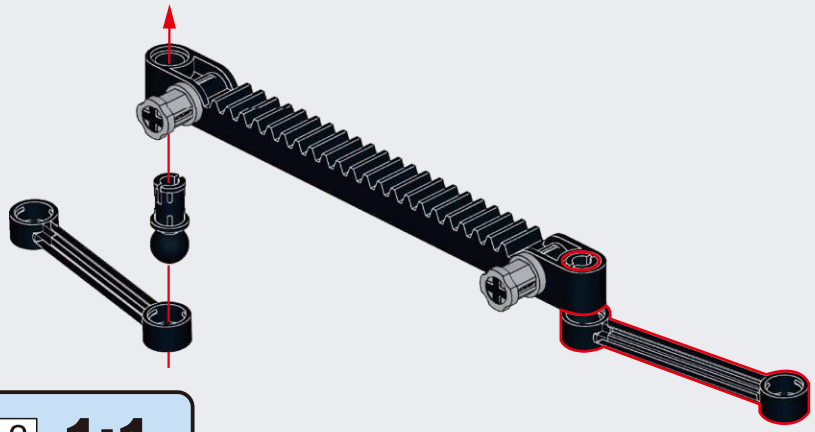

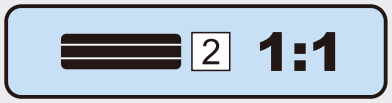

C42

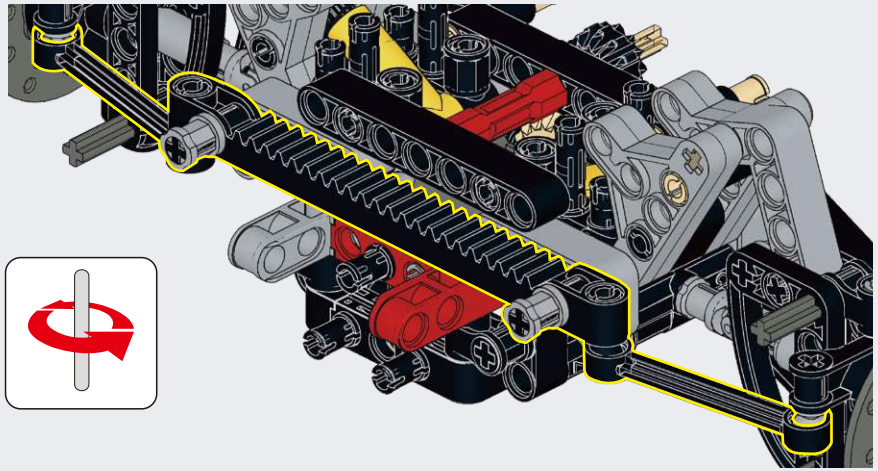

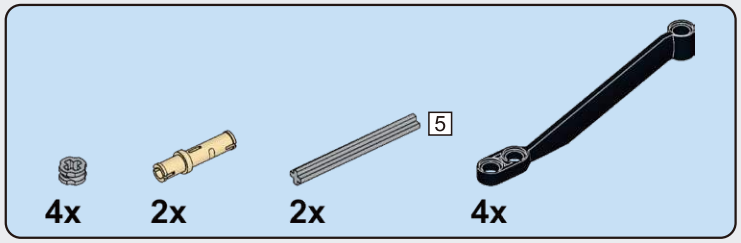

C43

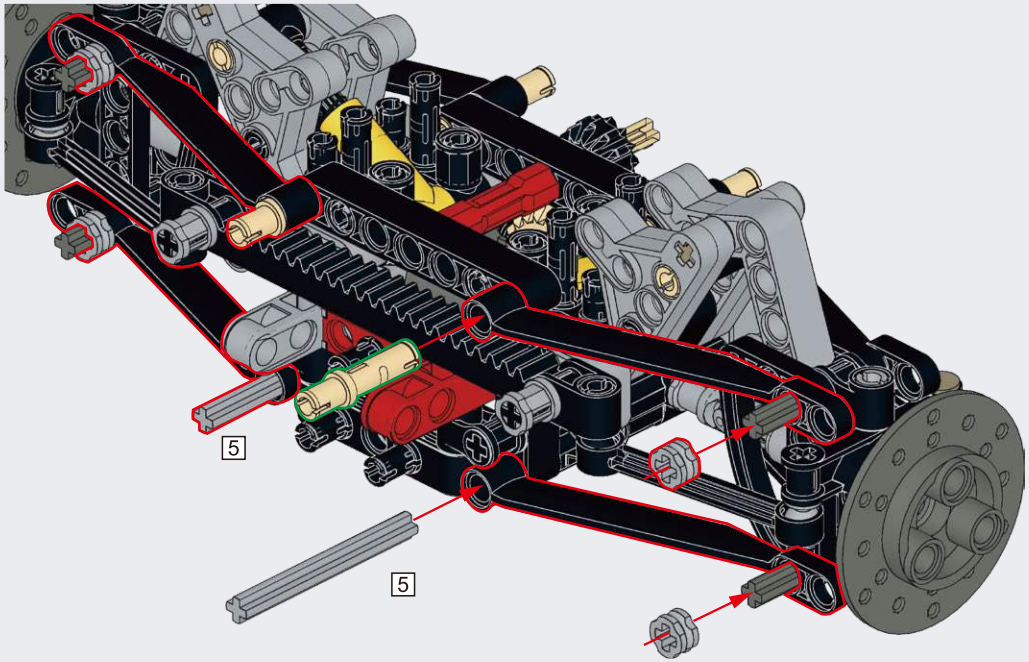

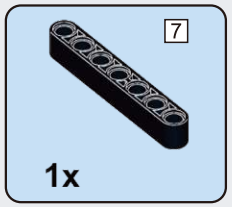

C44

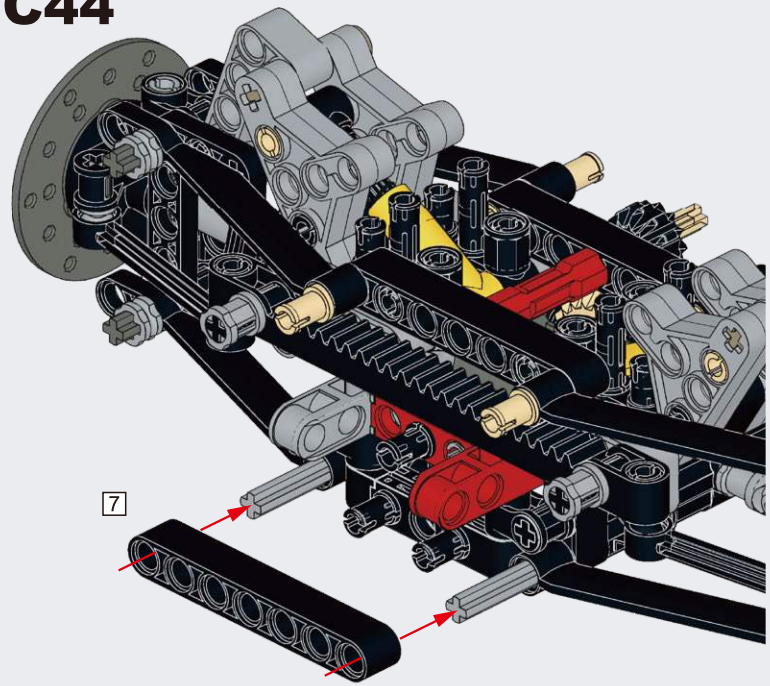

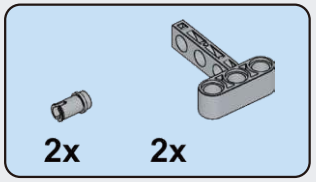

C45

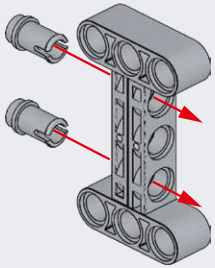

C46

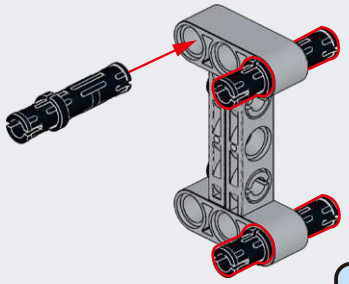

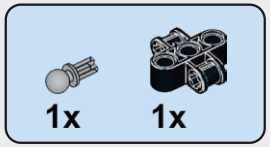

C47

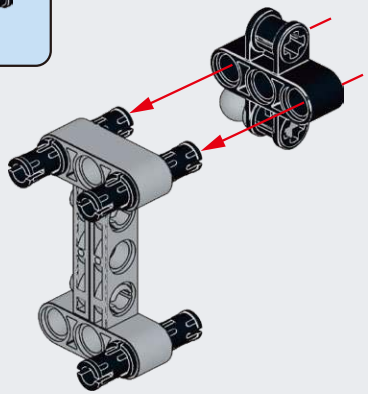

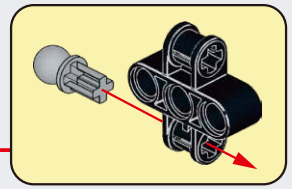

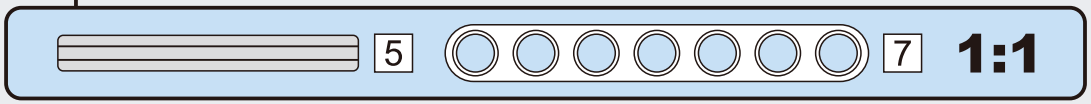

C48

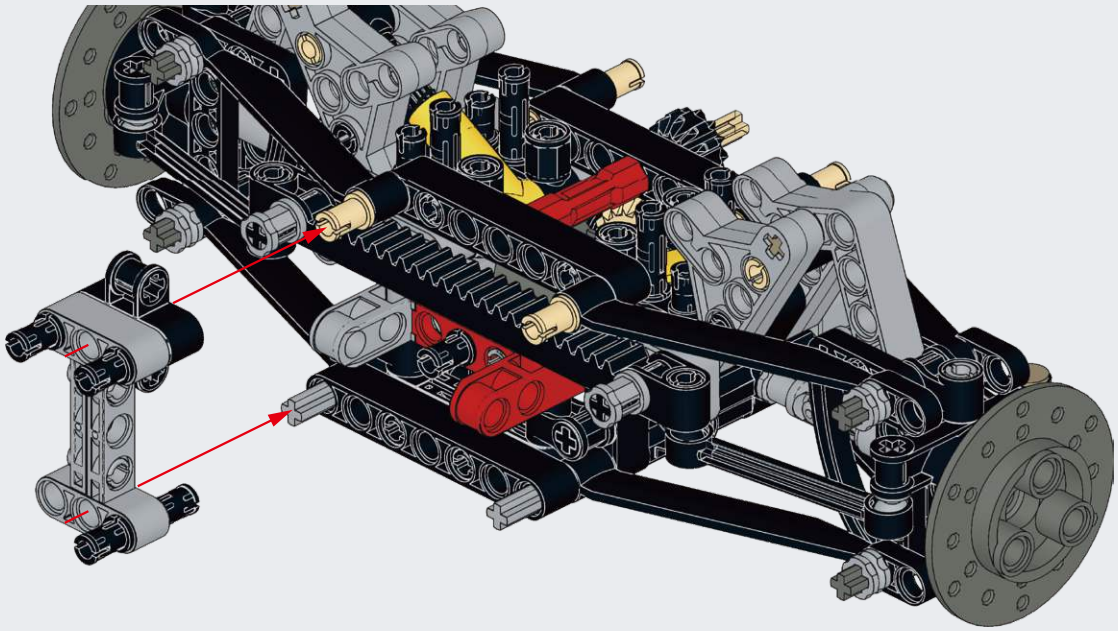

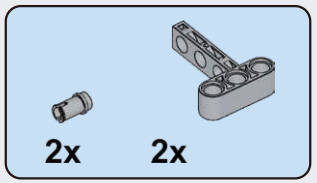

C49

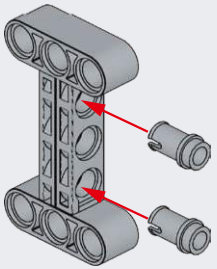

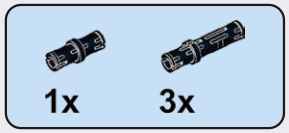

C50

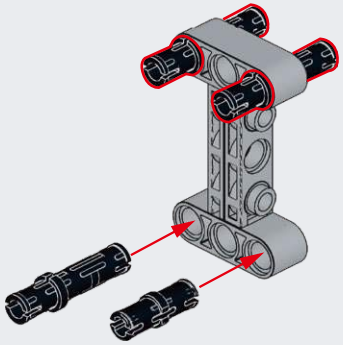

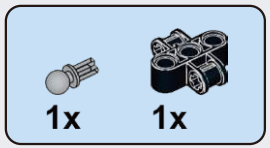

C51

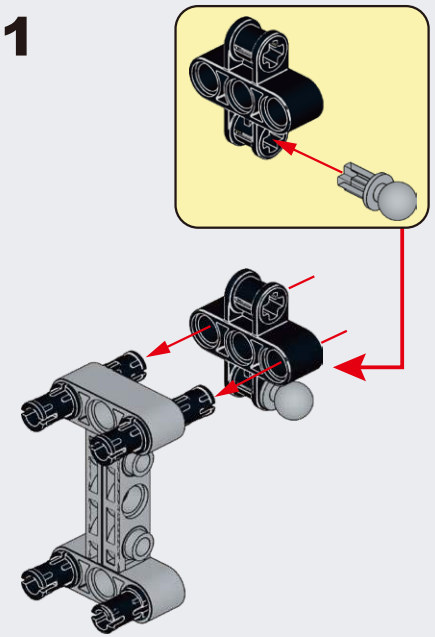

C52

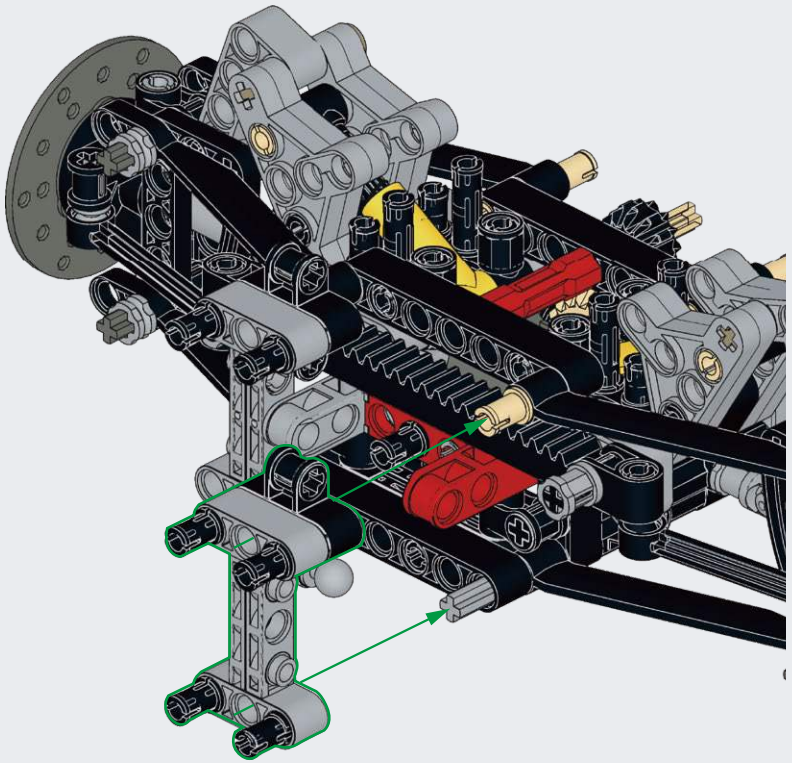

C53

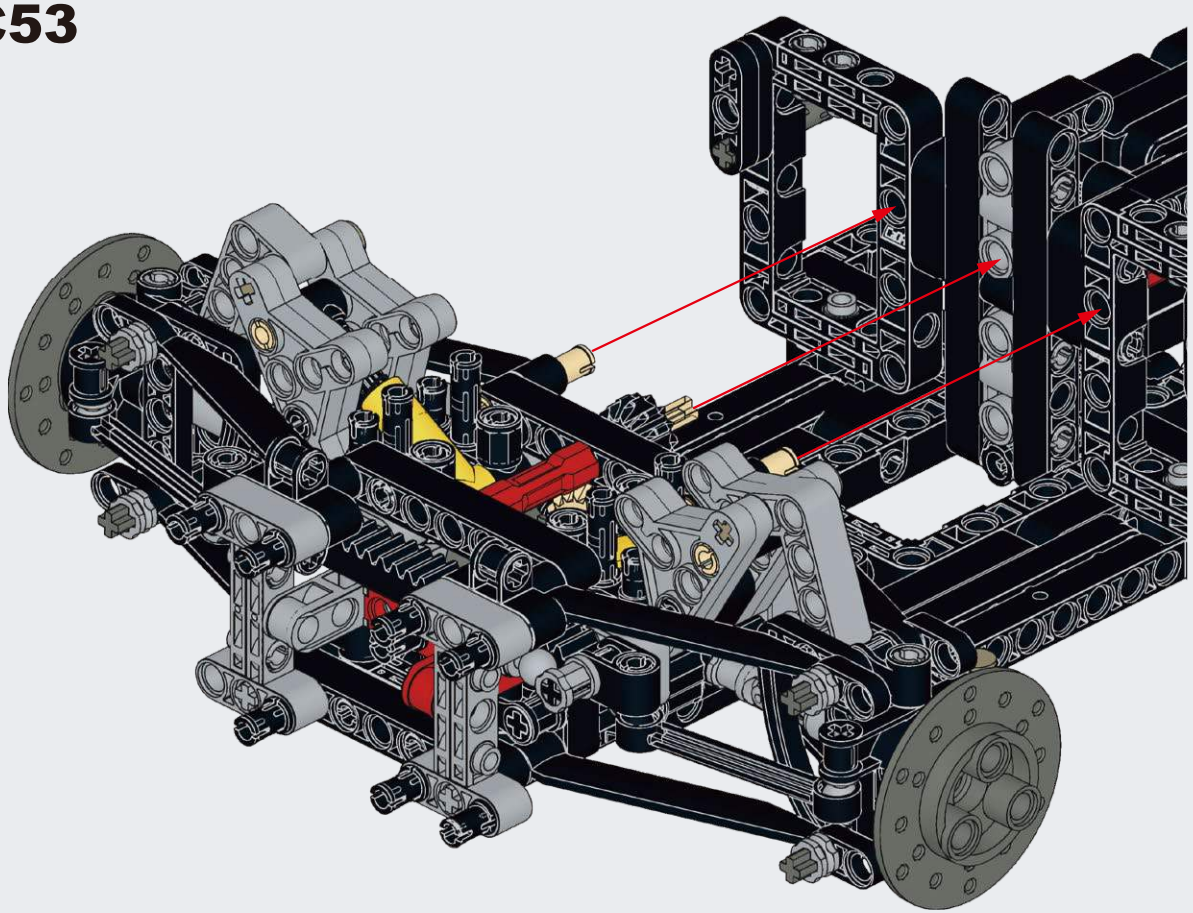

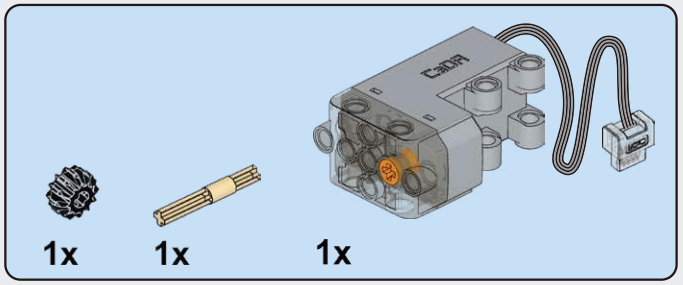

C54

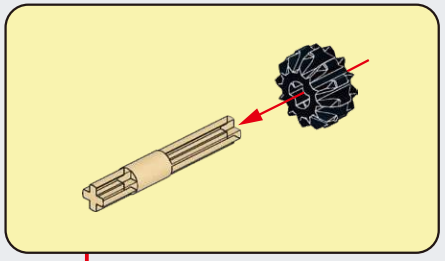

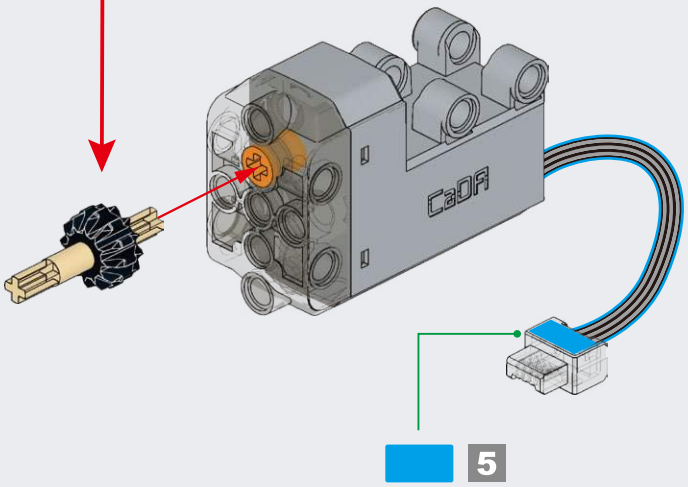

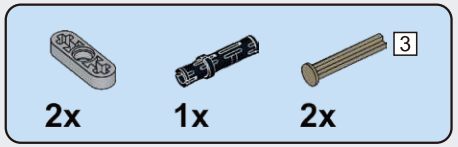

C55

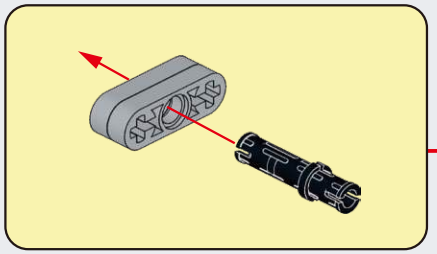

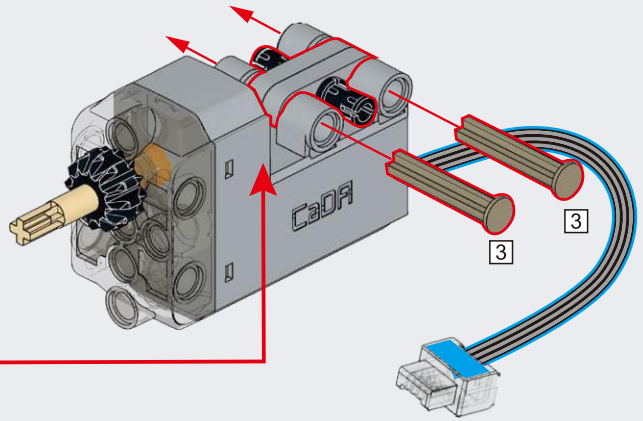

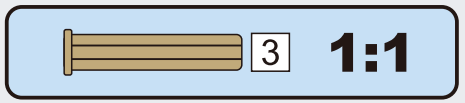

C56

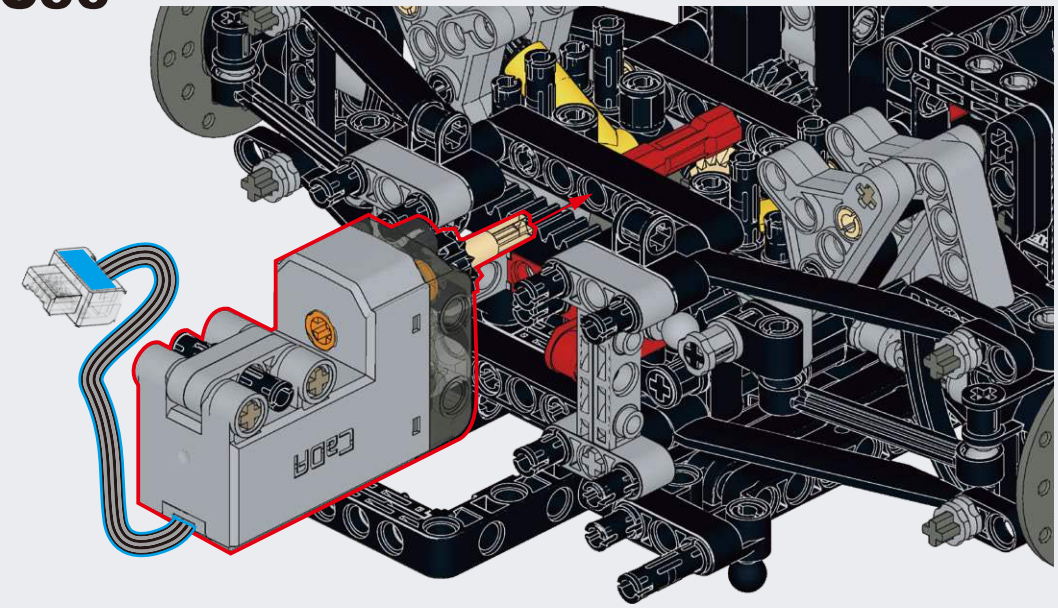

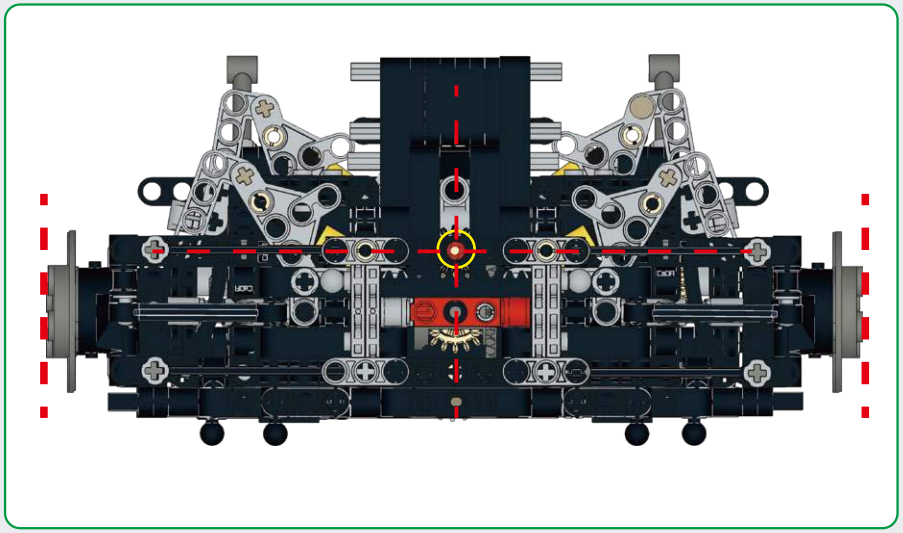

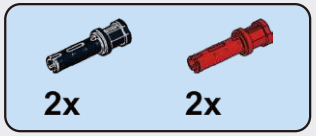

C57

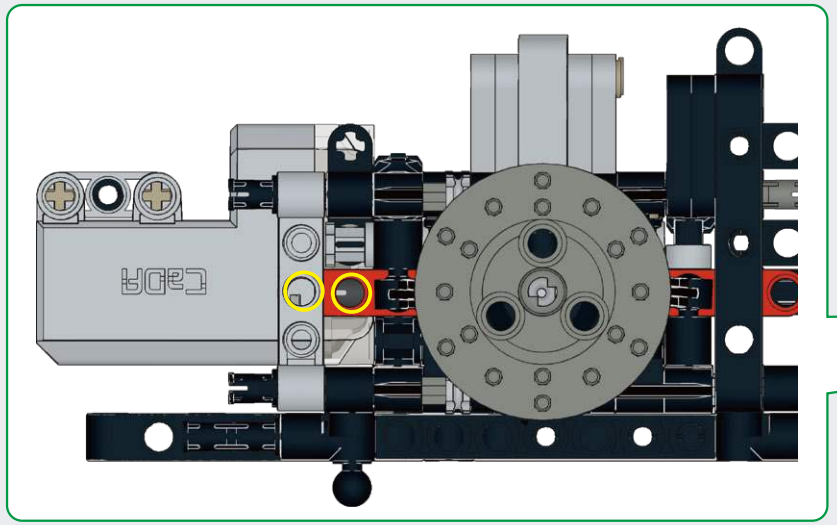

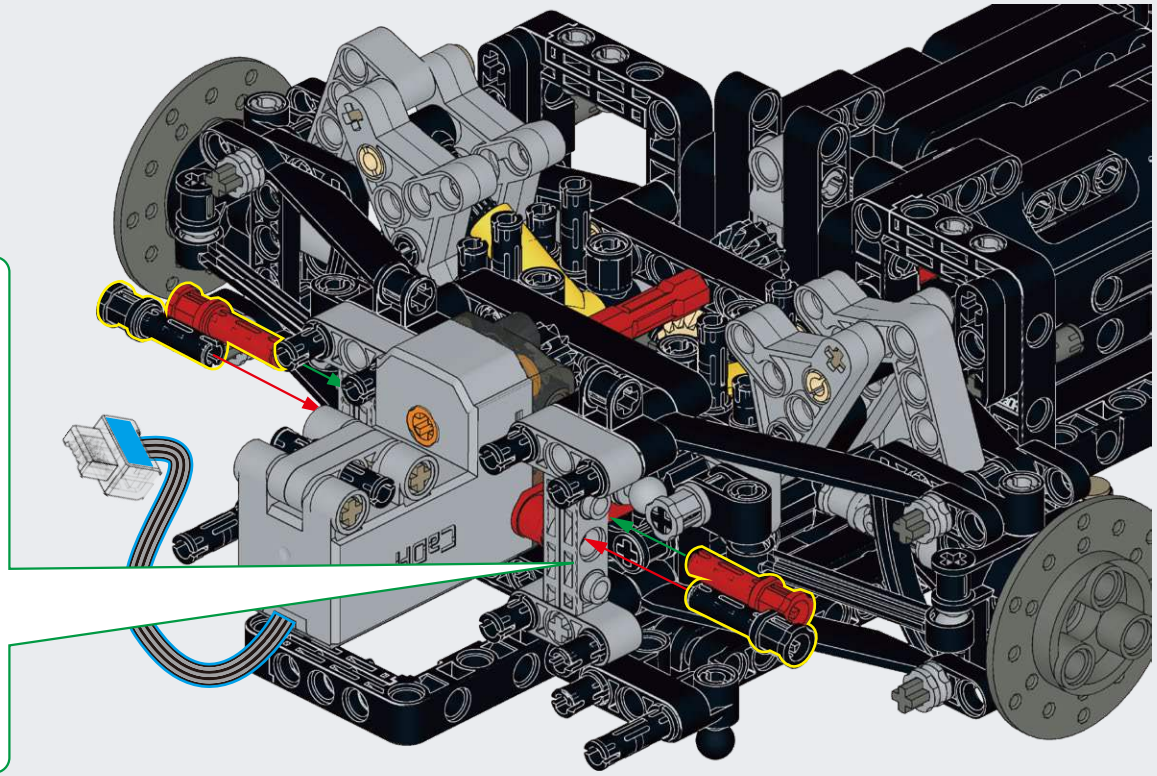

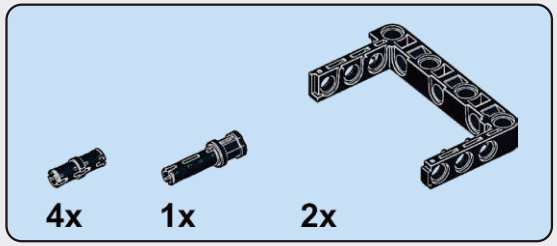

C58

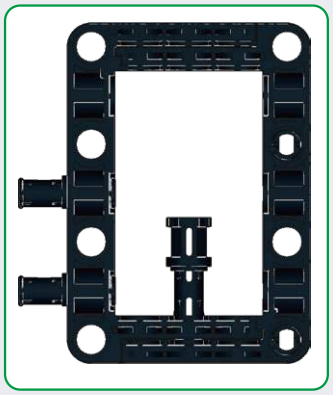

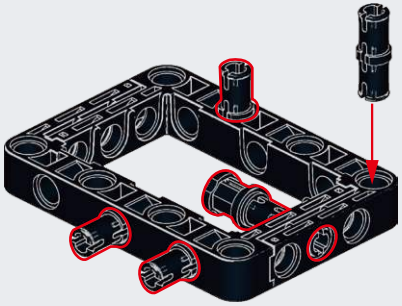

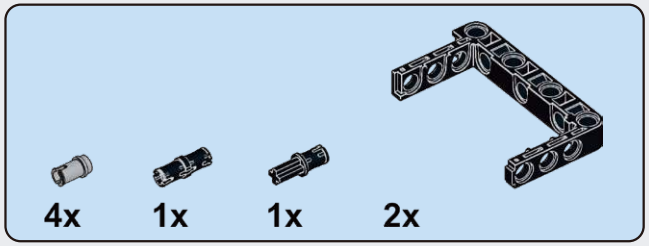

C59

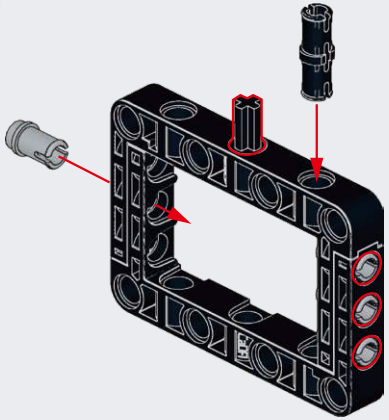

C60

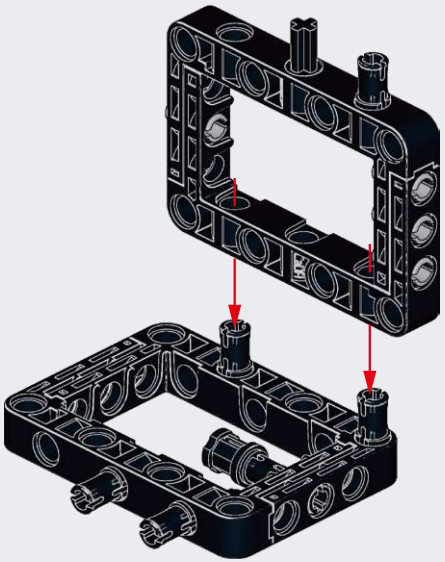

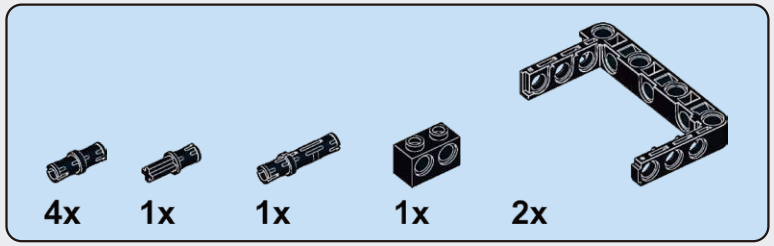

C61

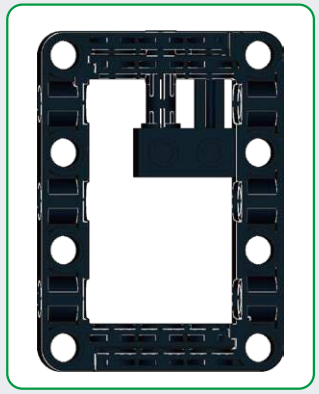

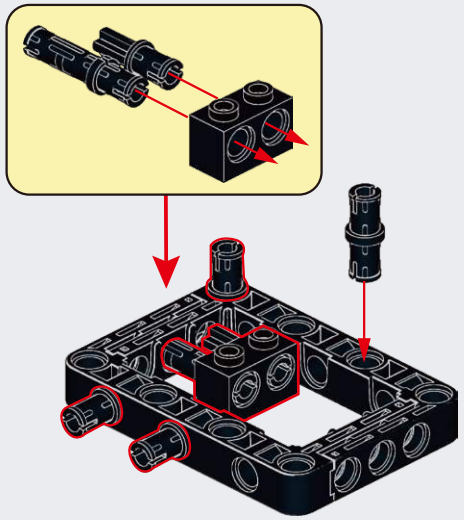

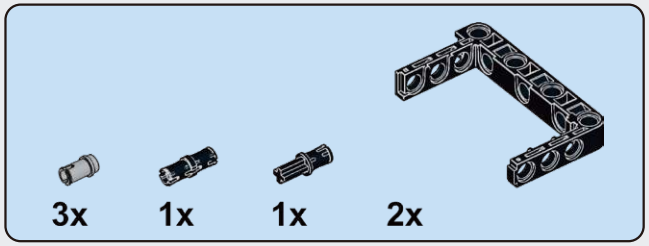

C62

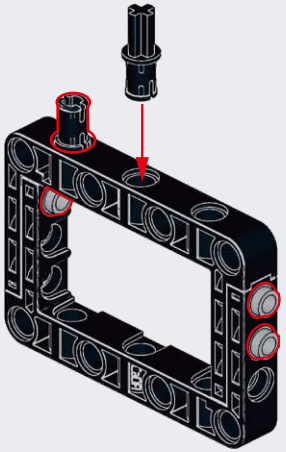

C63

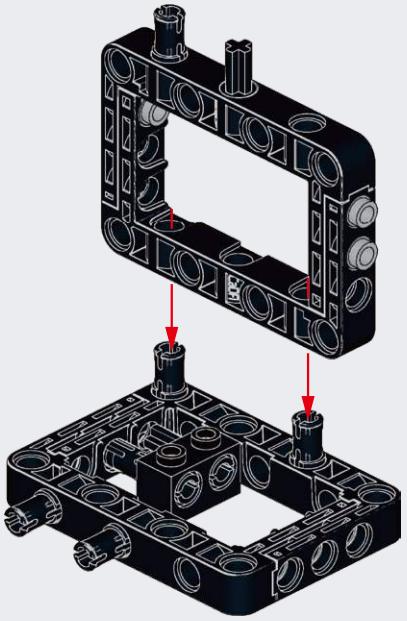

C64

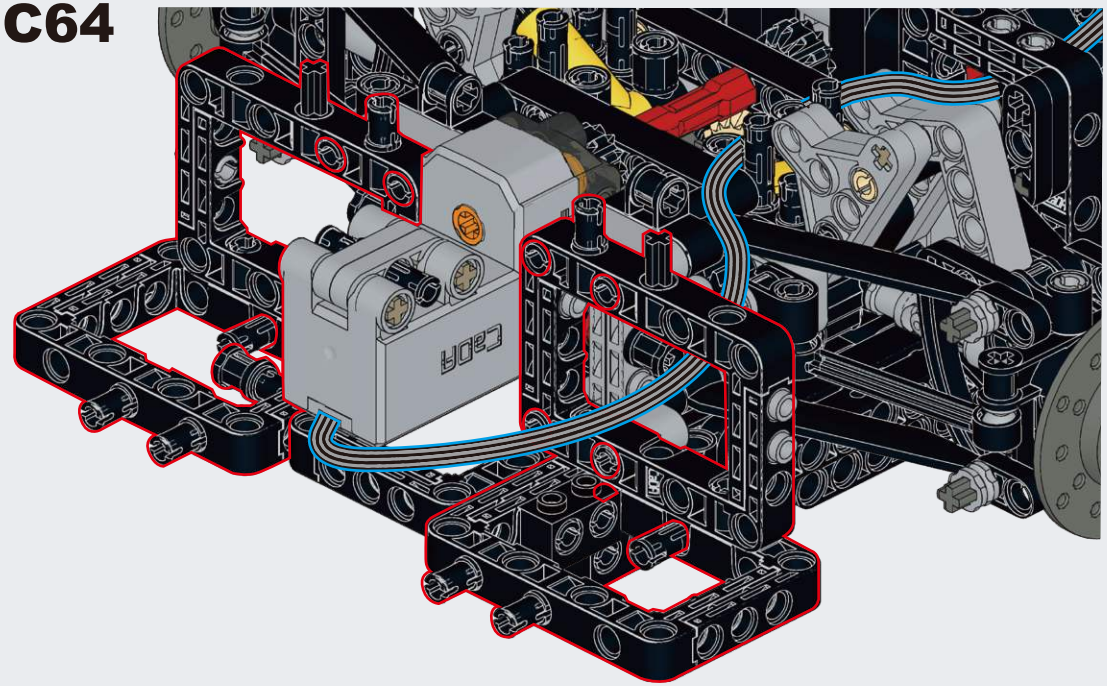

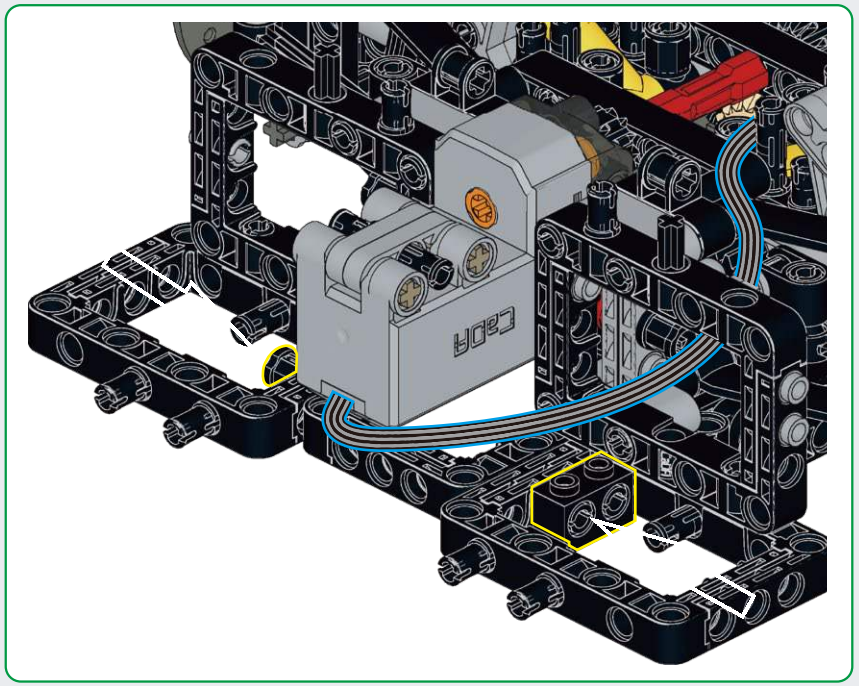

C65

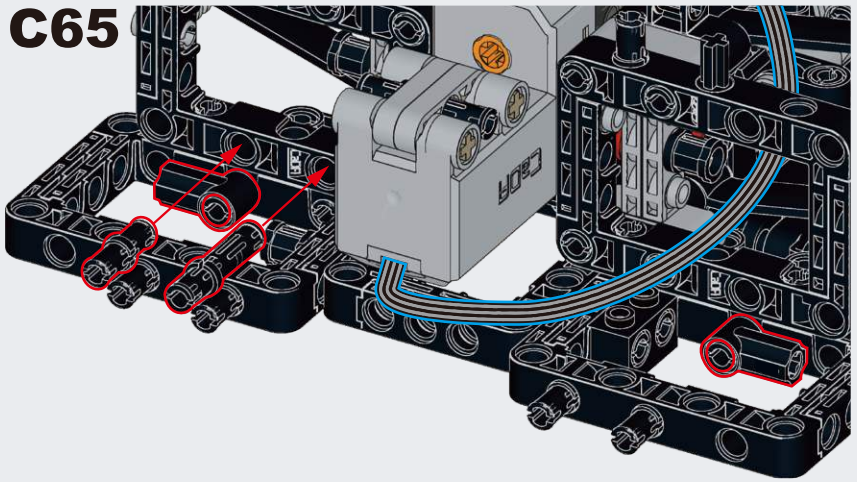

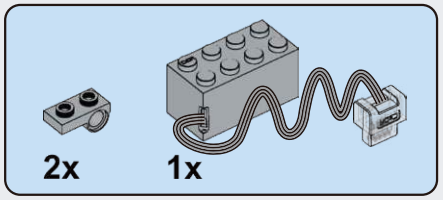

C66

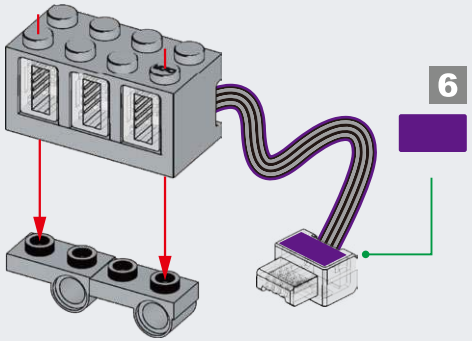

C67

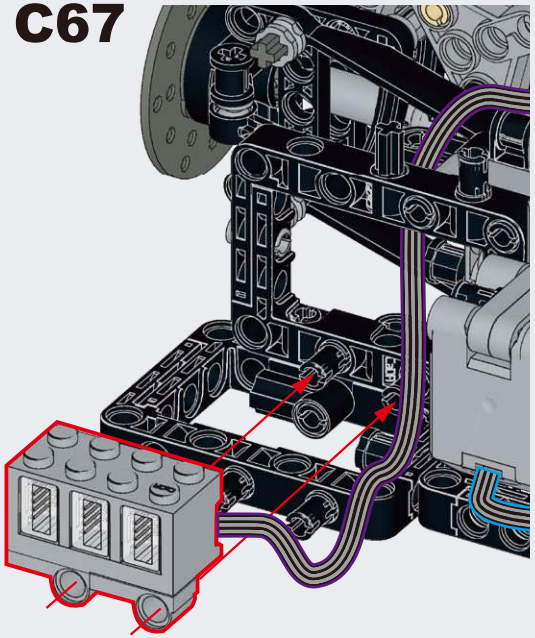

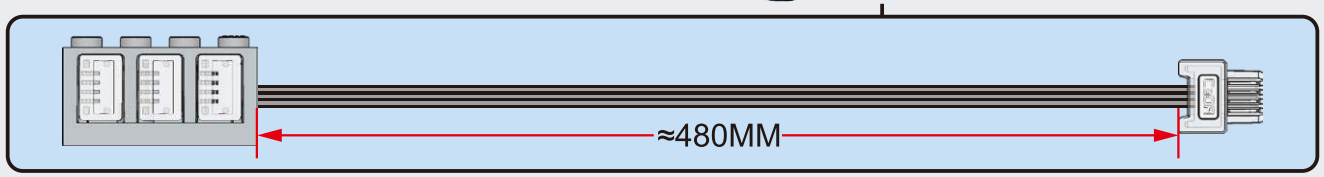

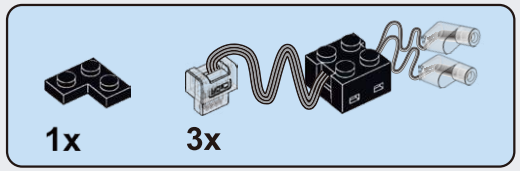

C68

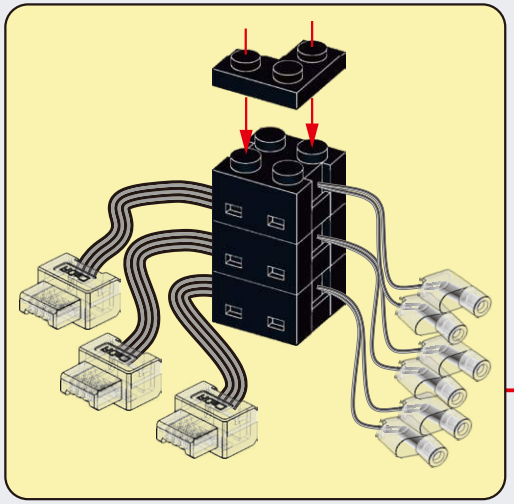

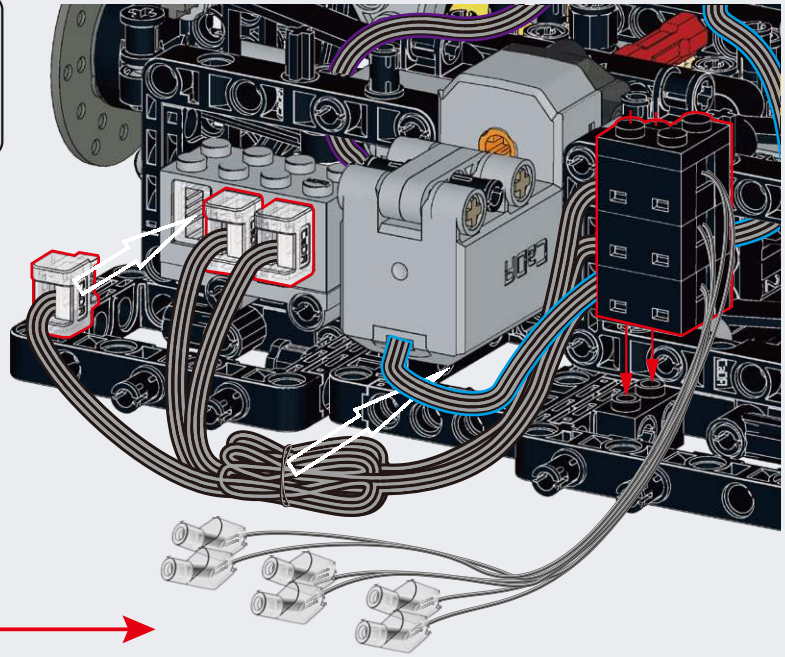

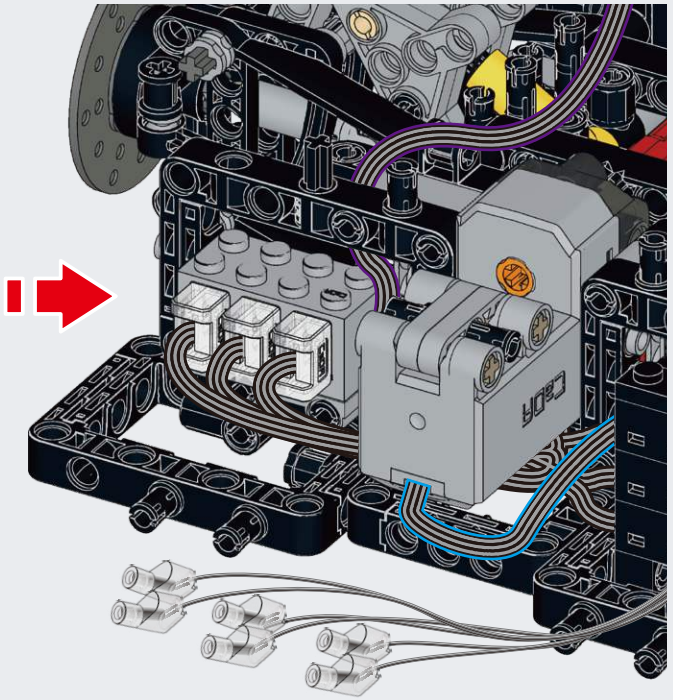

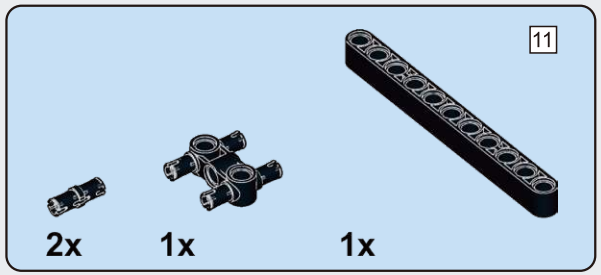

C69

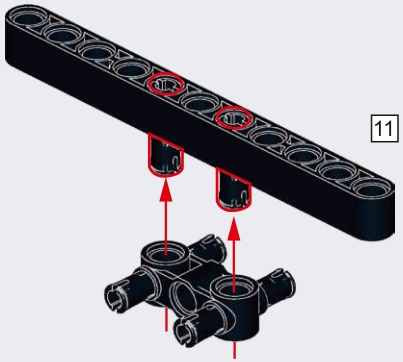

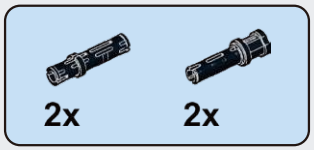

C70

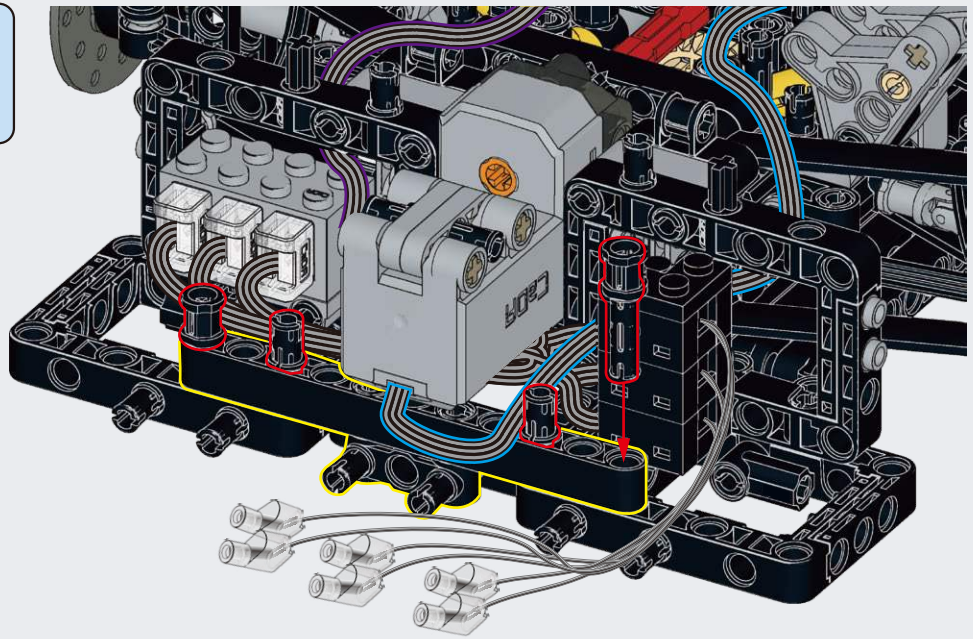

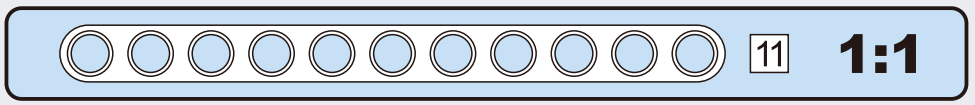

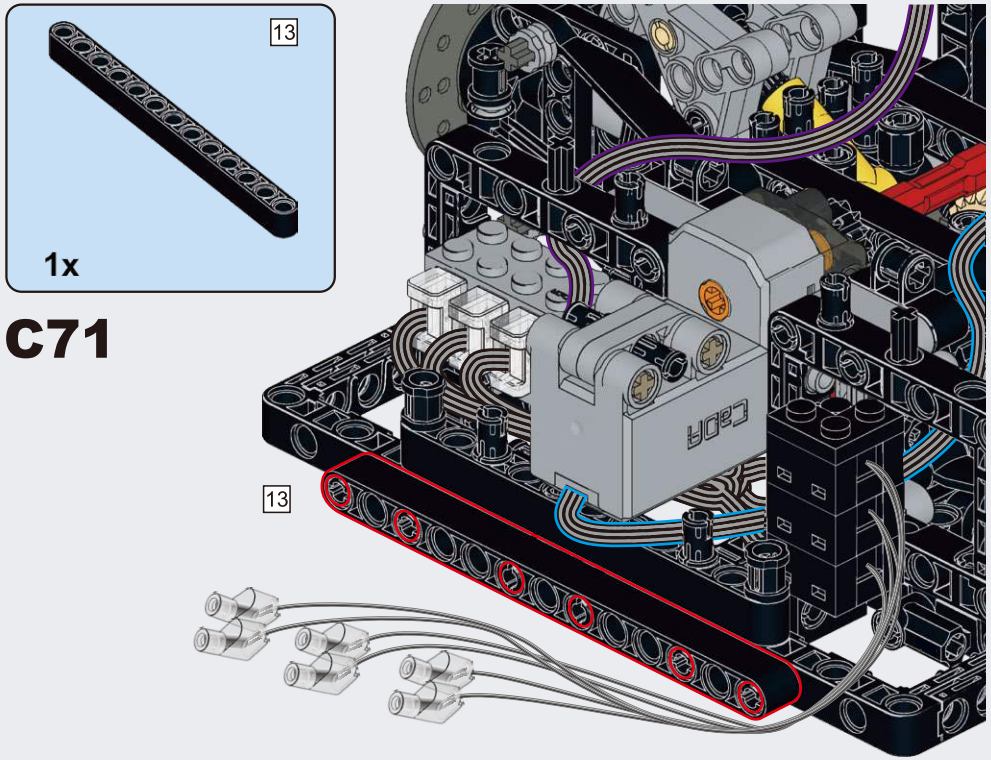
13
1x
C71
13

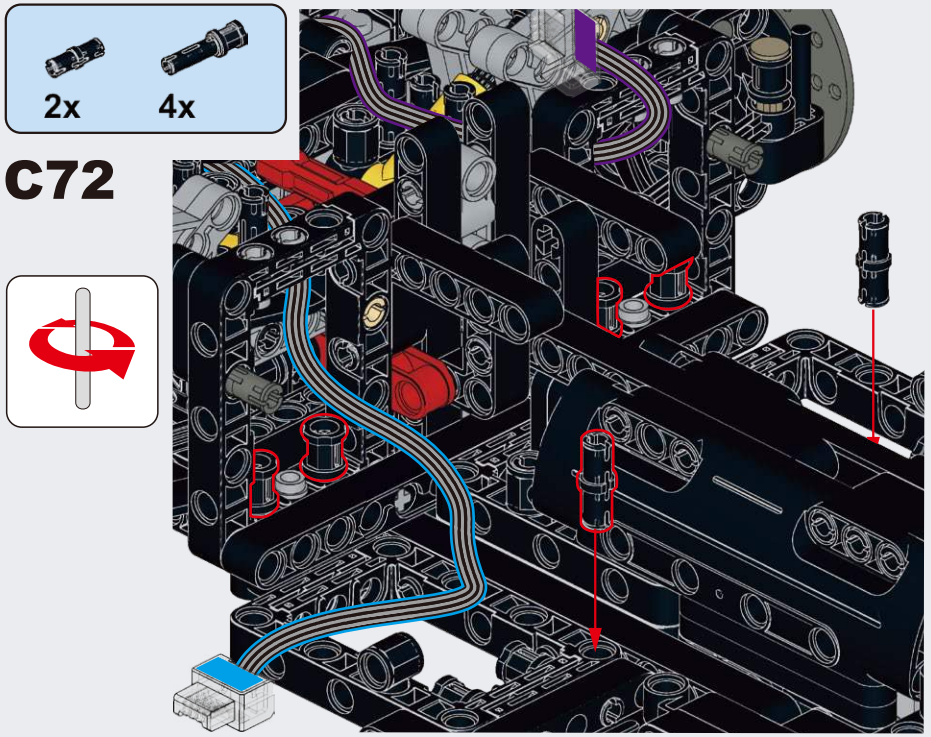
2x
4x
C72

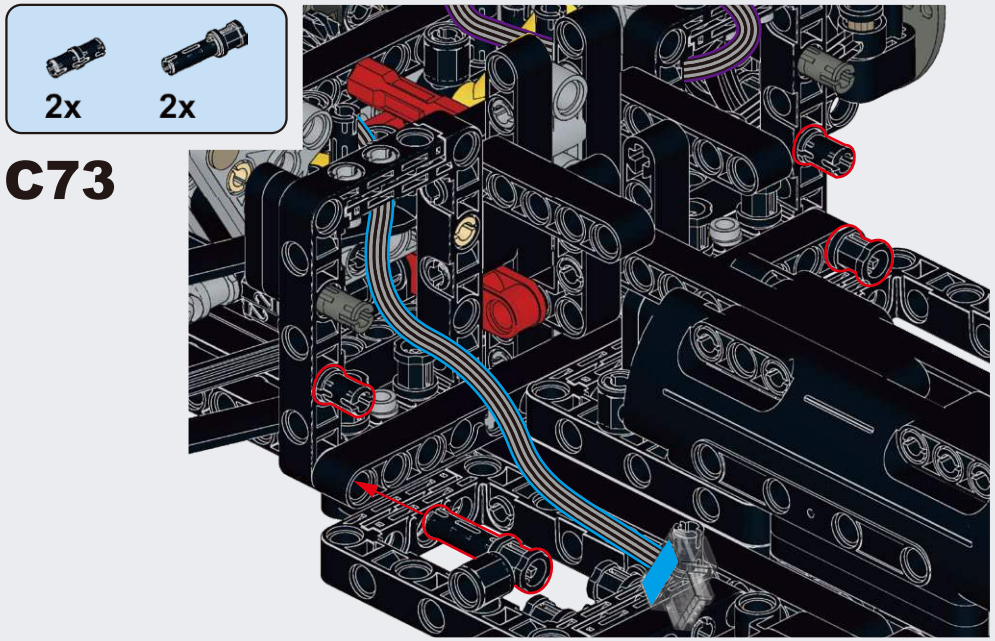
2x
2x
C73

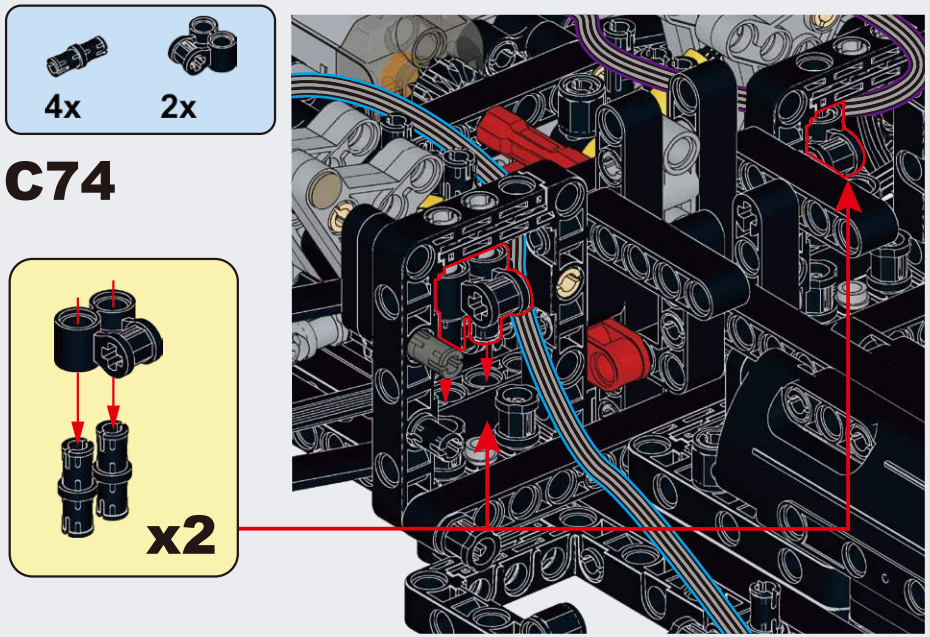
4x
2x
C74
x2

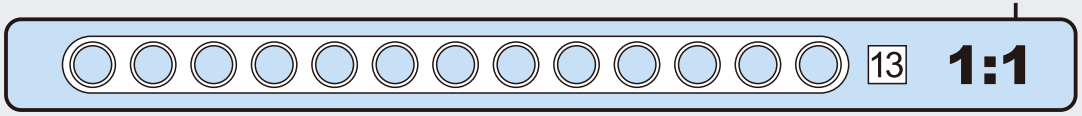
13
1:1

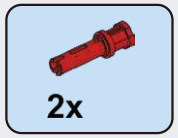

C75

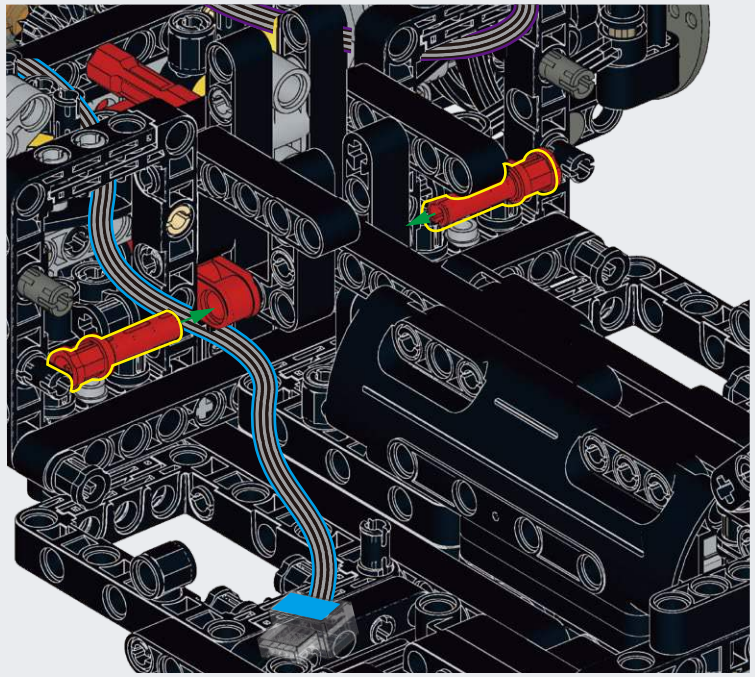

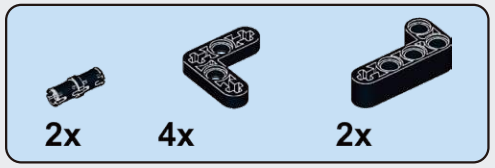

C76

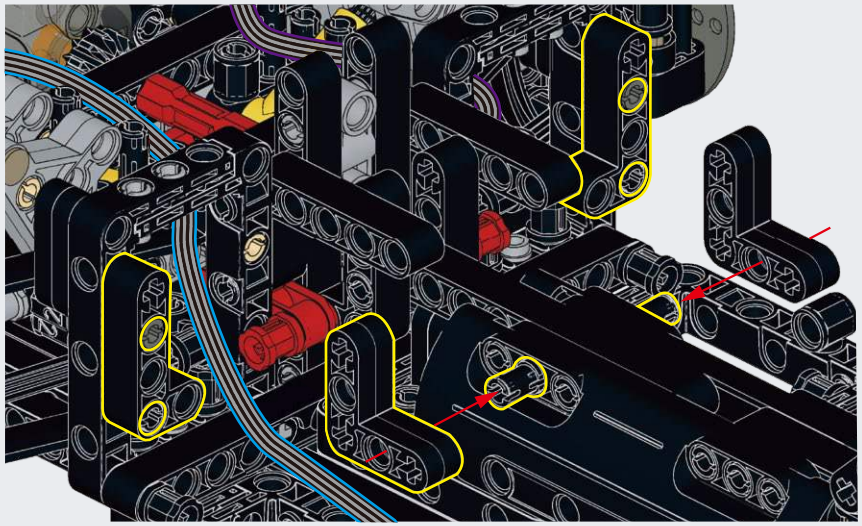

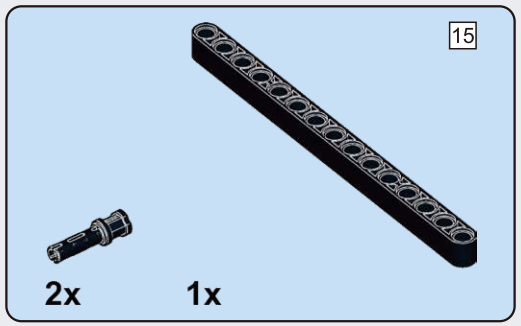

C77

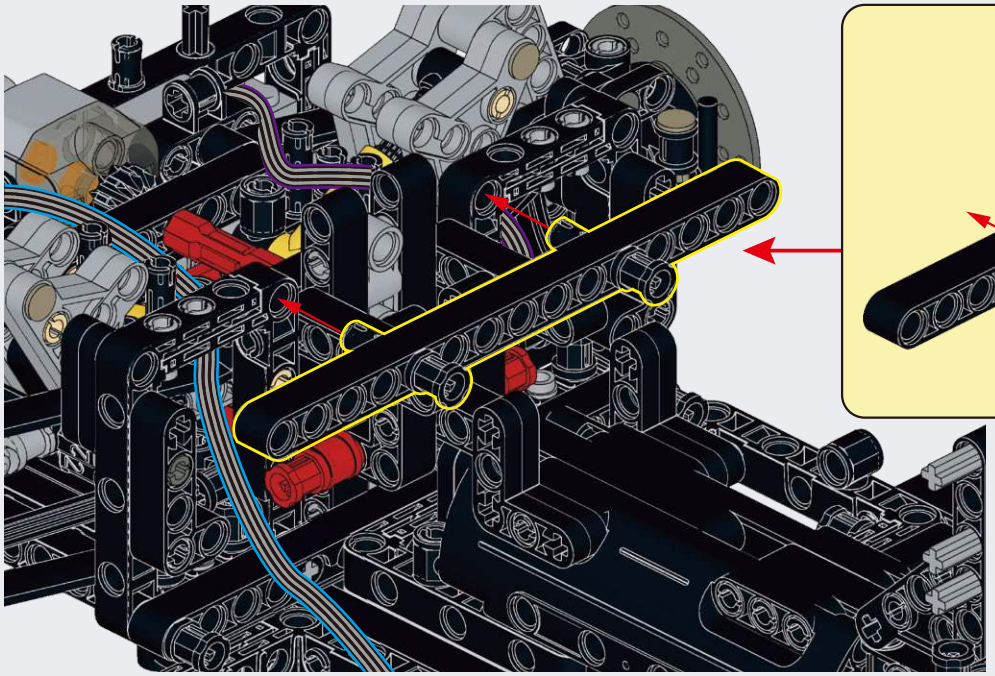

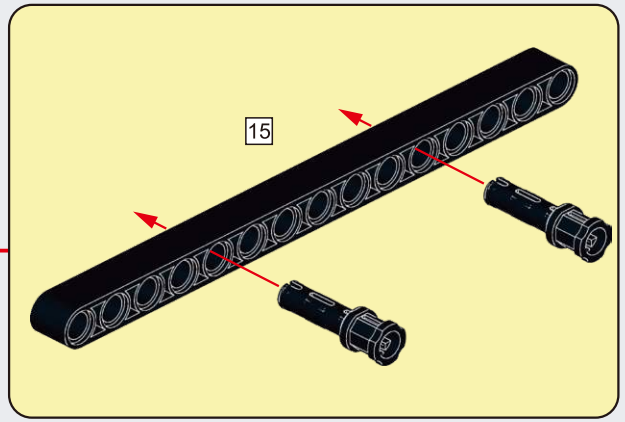

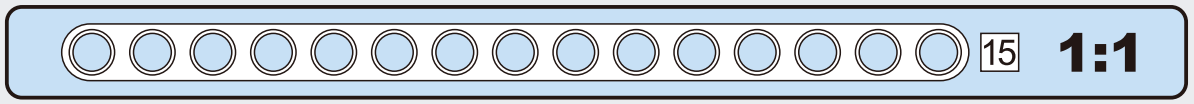

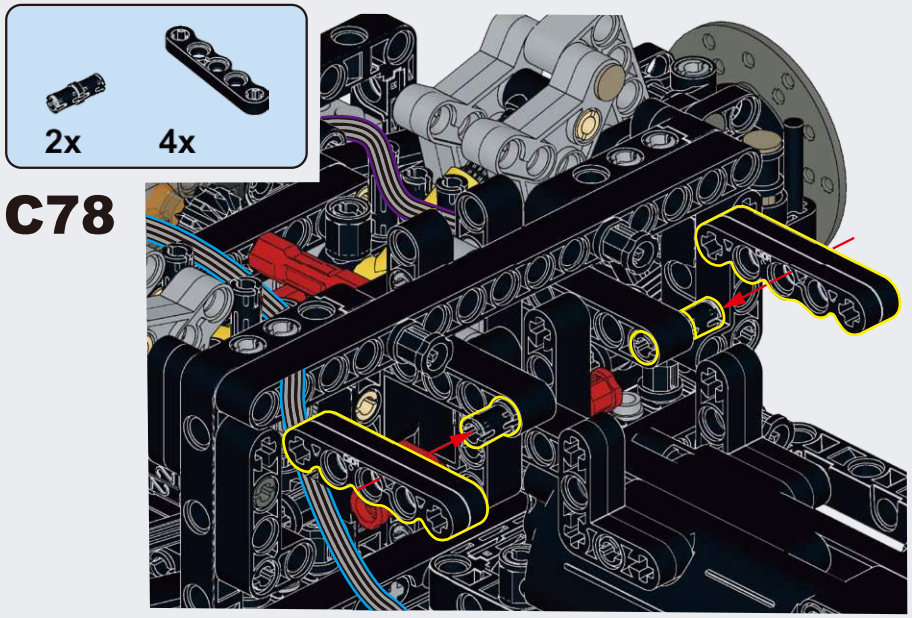
2x
4x
C78

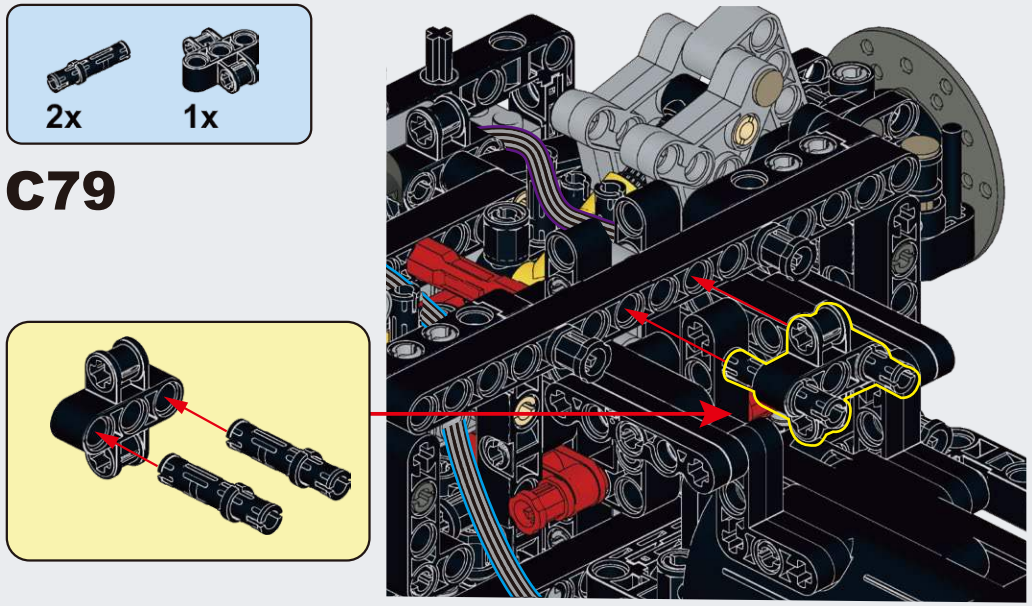
2x
1x
C79

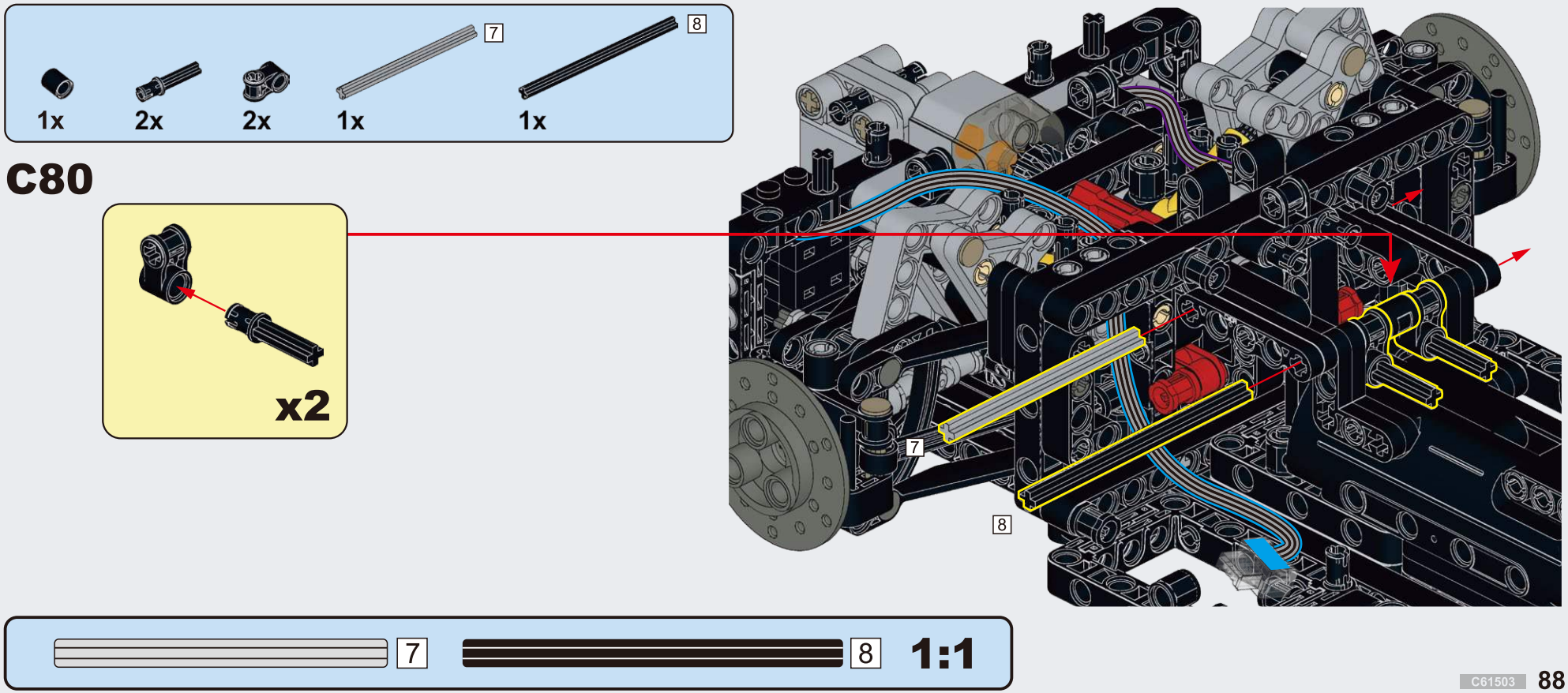
7
8
1x
2x
2x
1x
1x
C80
x2
7
8
7
8
1:1

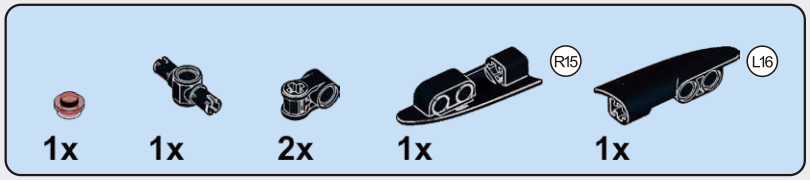

C81

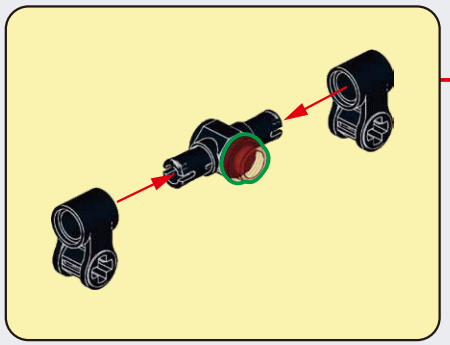

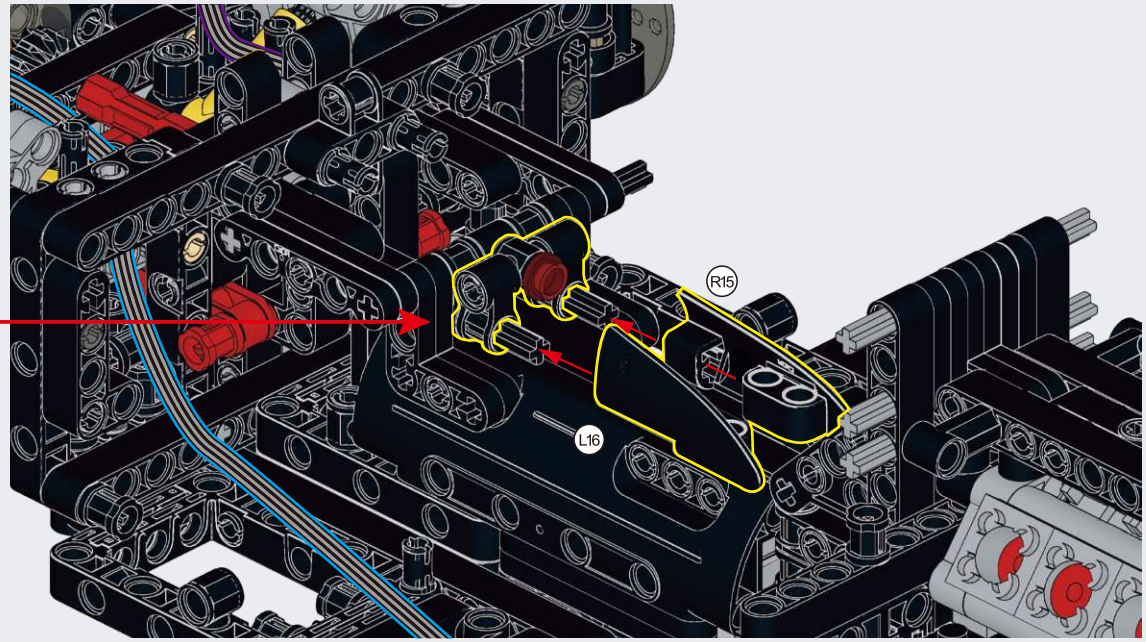

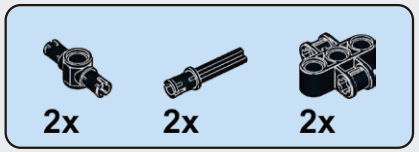

C82

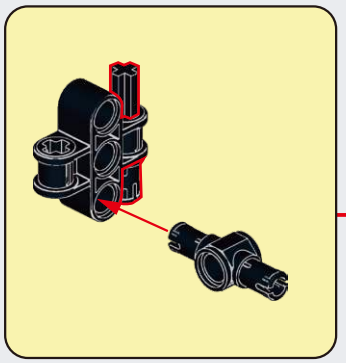

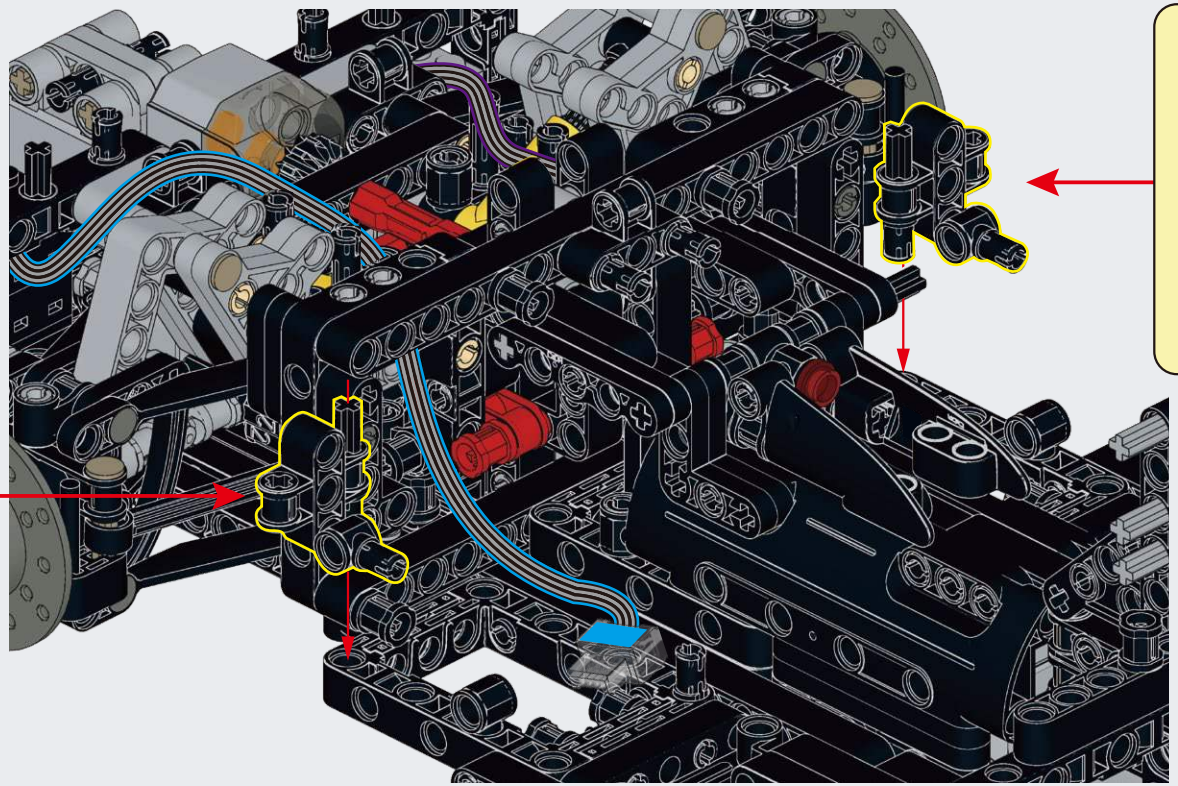

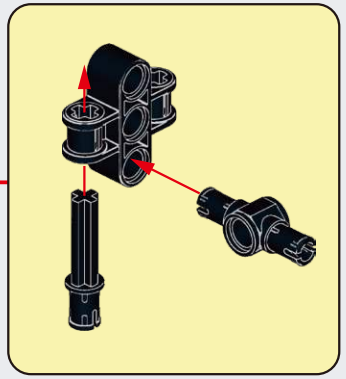

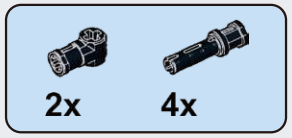

C83

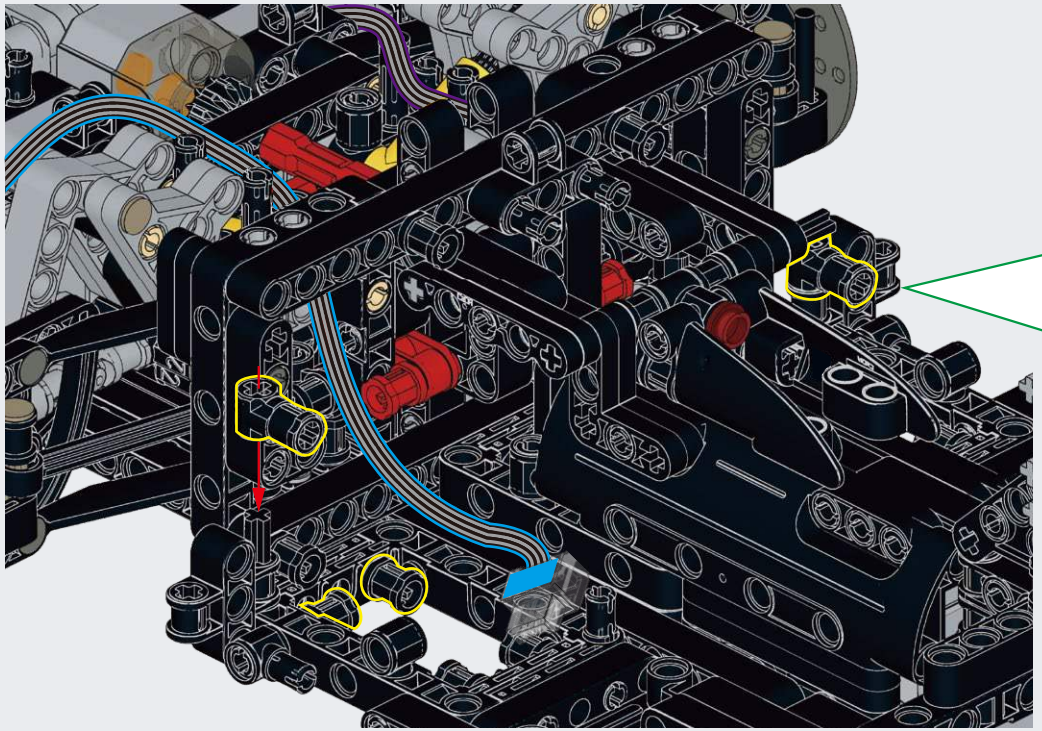

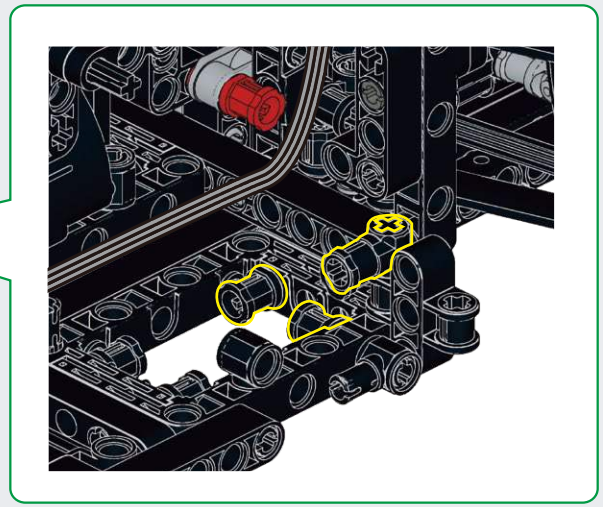

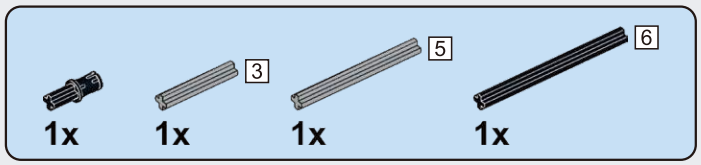

C84

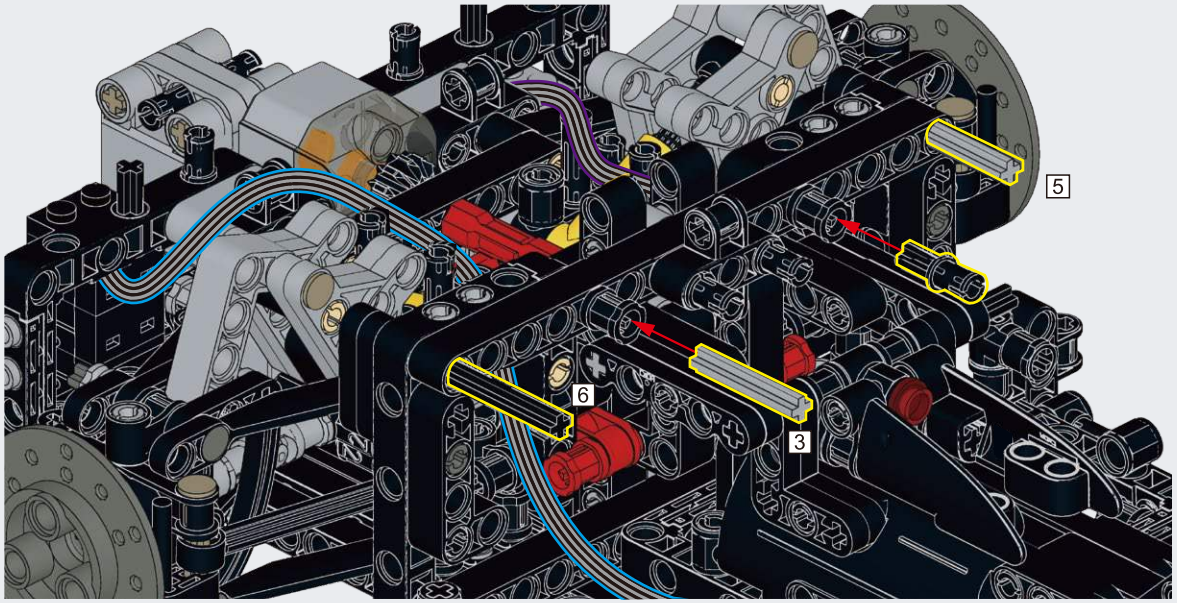

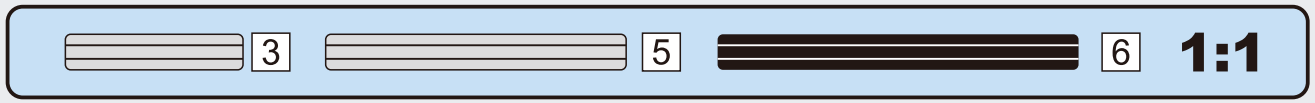

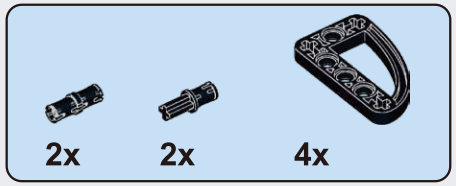

C85

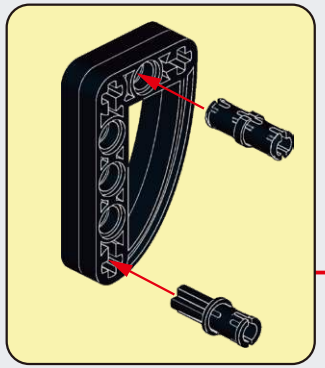

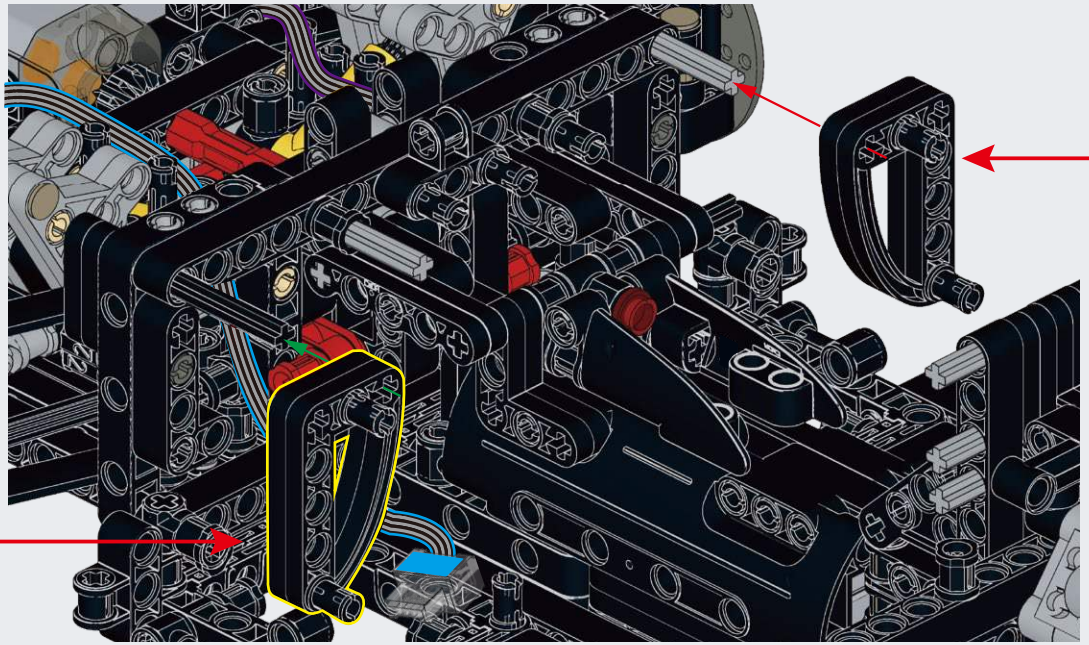

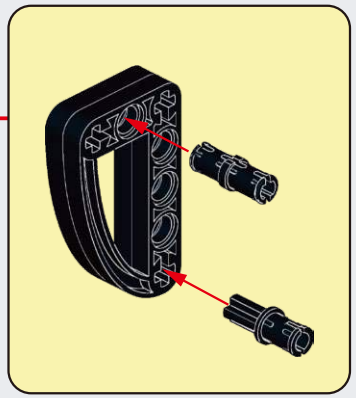

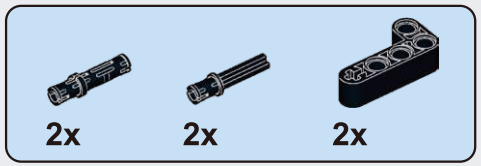

C86

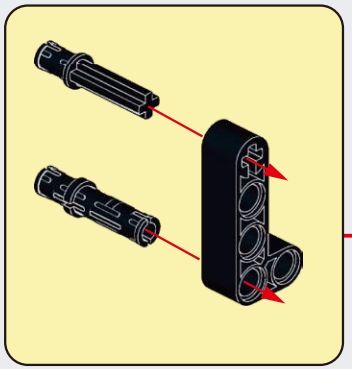

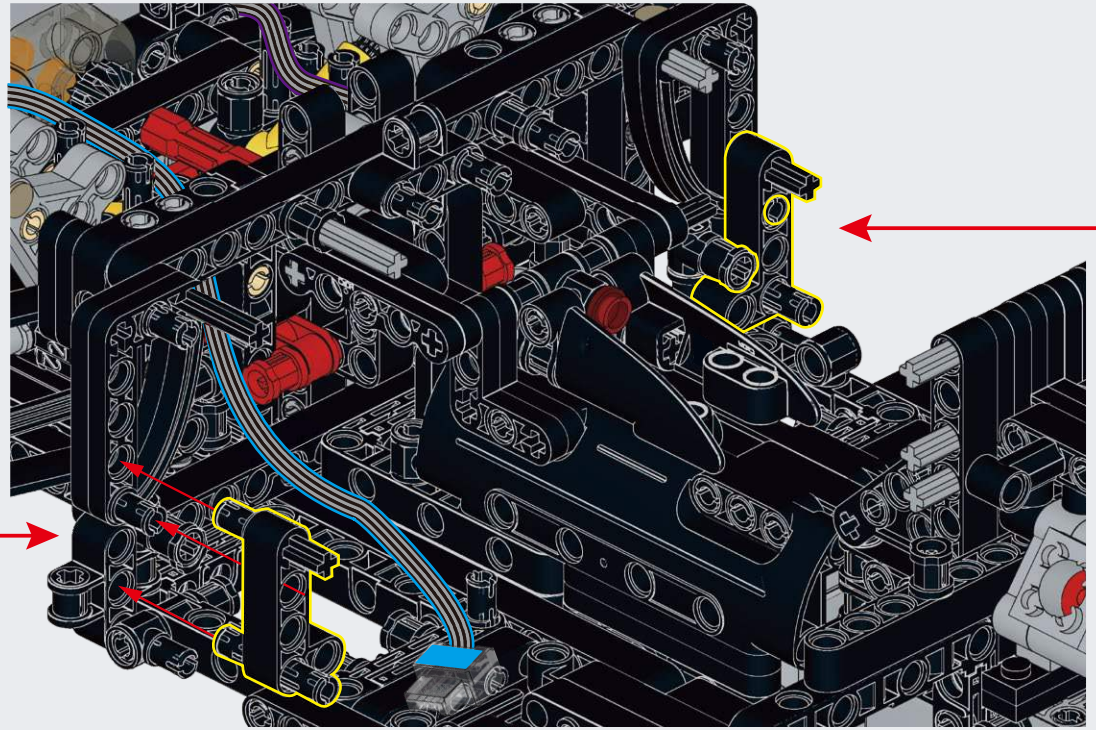

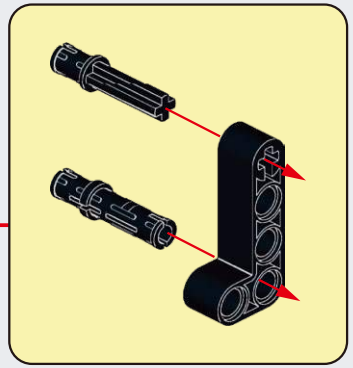

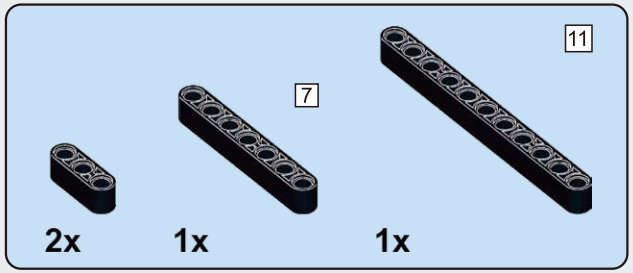

C87

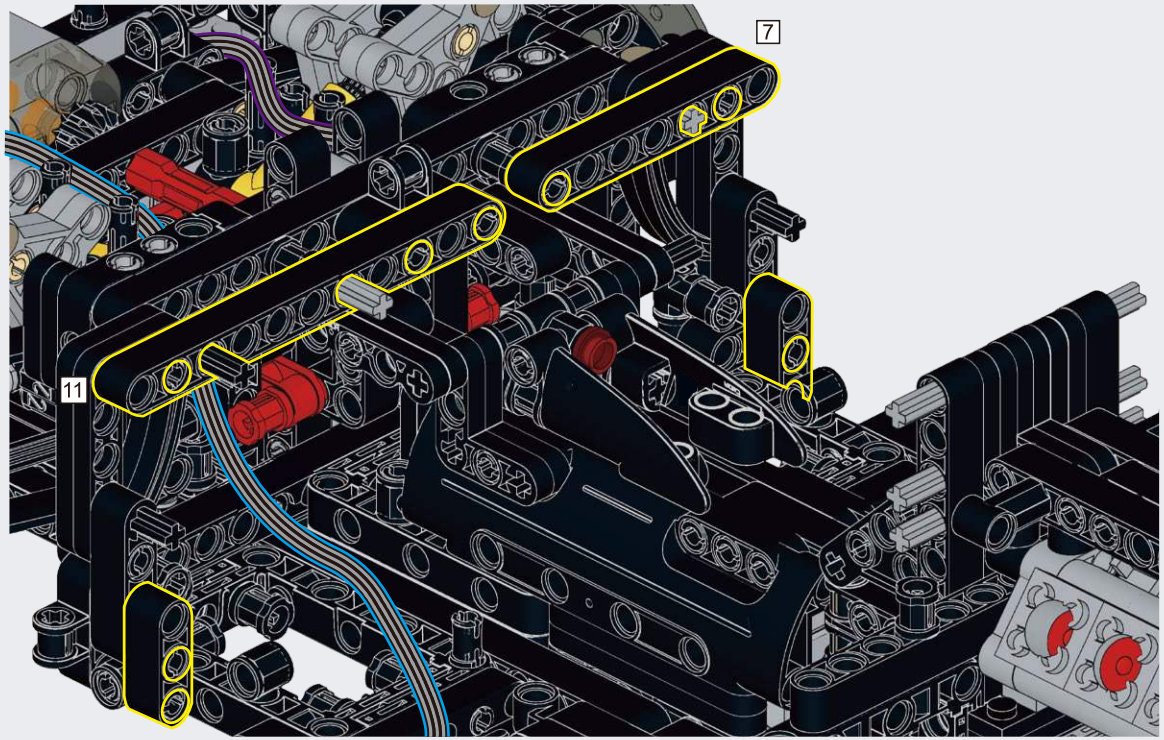

C88

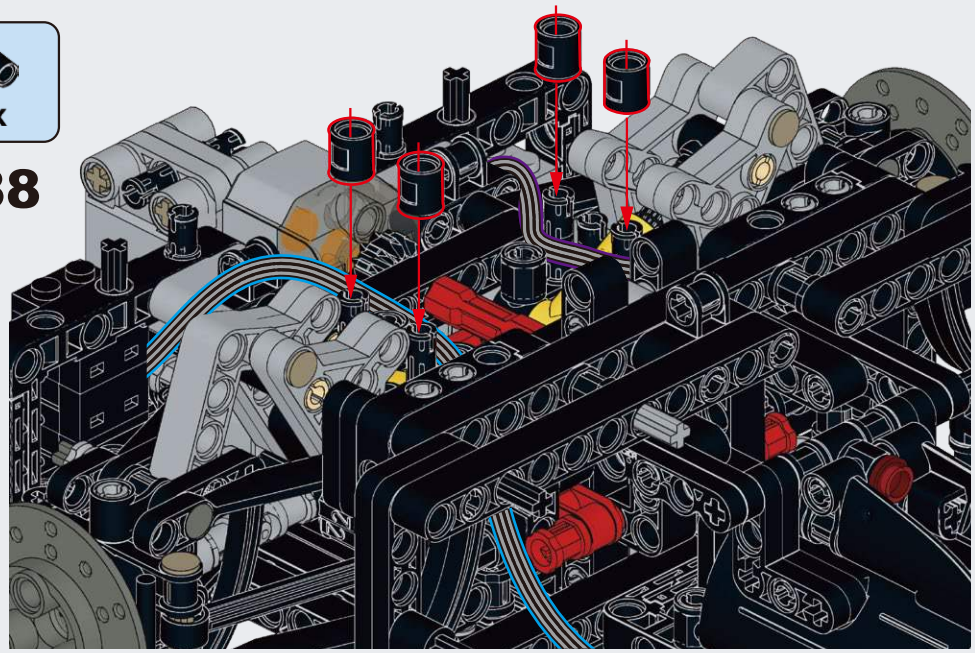

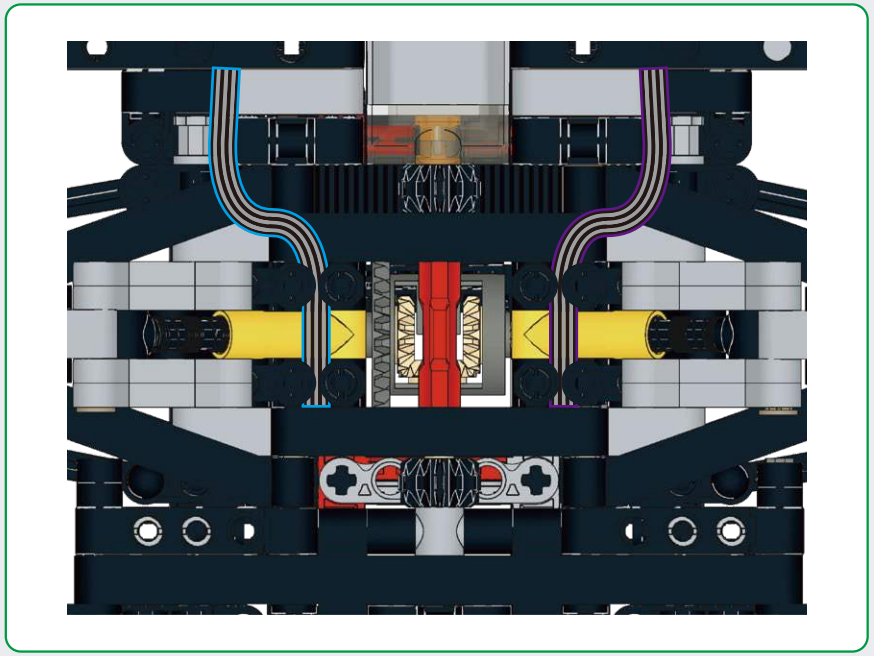

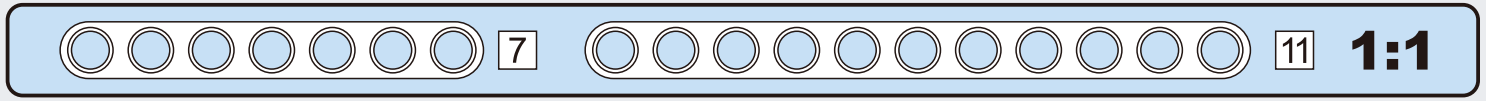

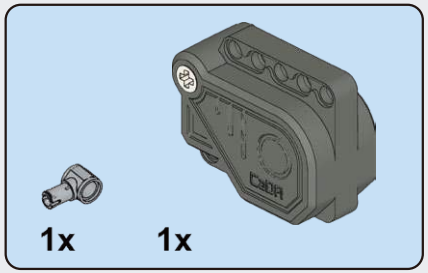

C89

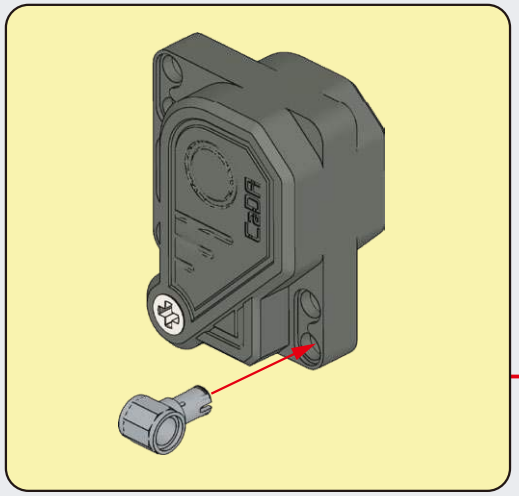

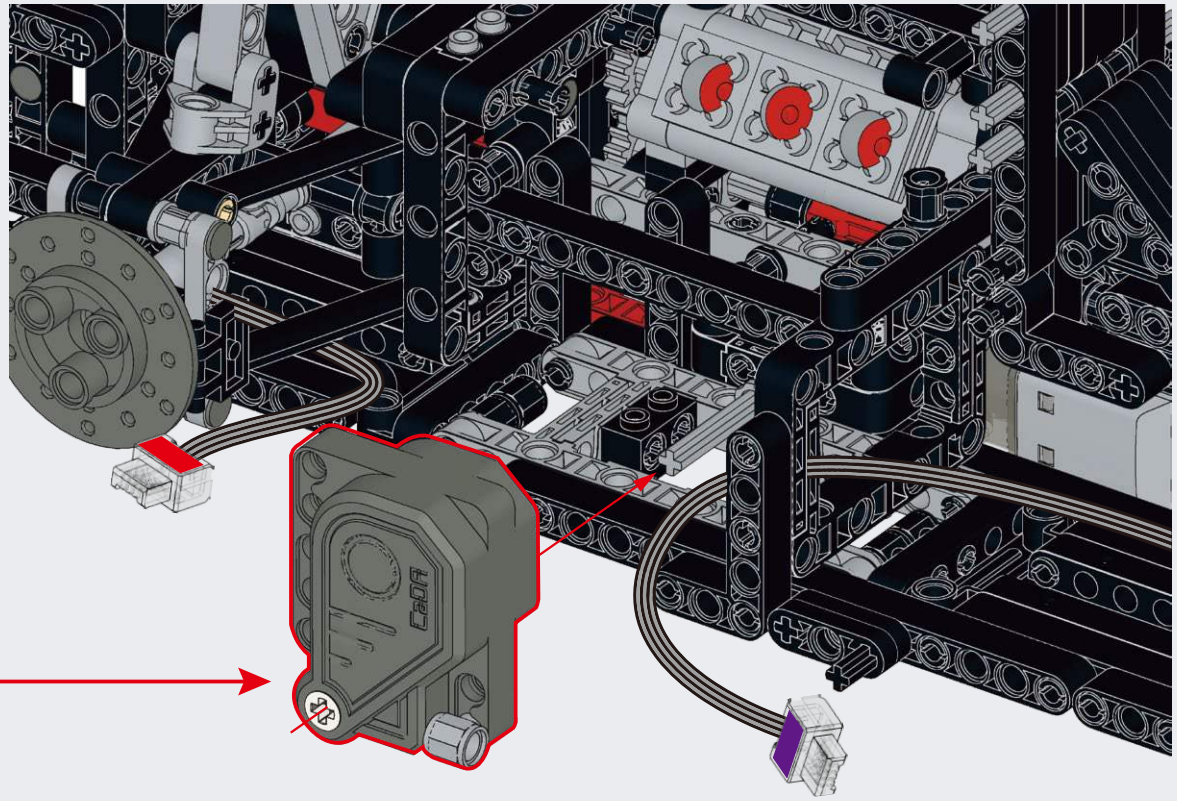

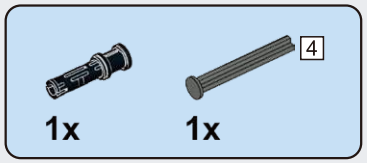

C90

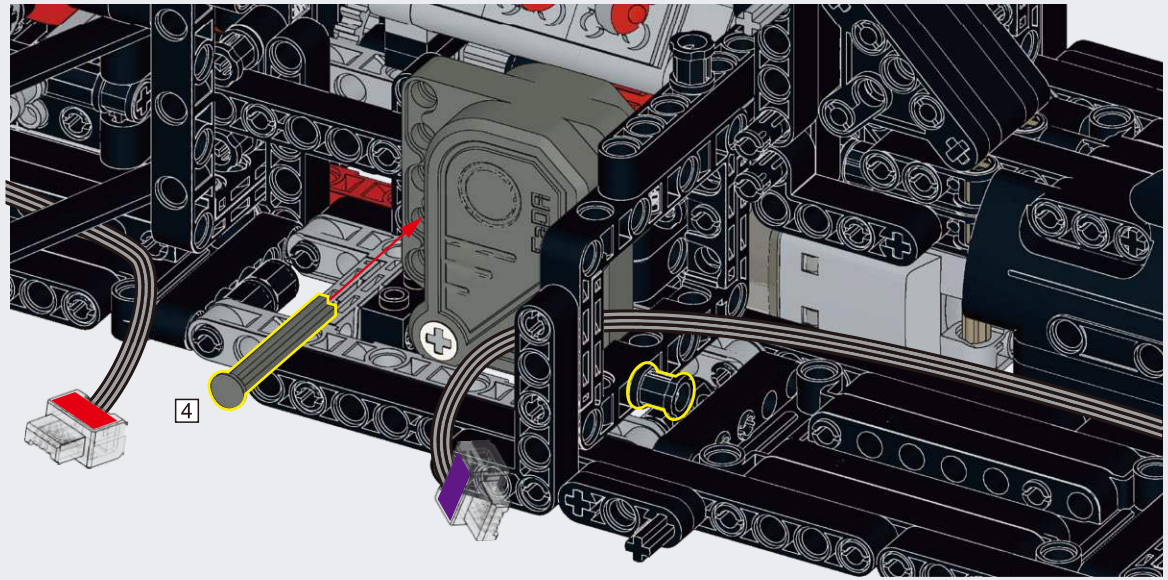

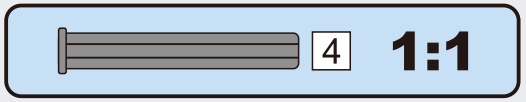

D

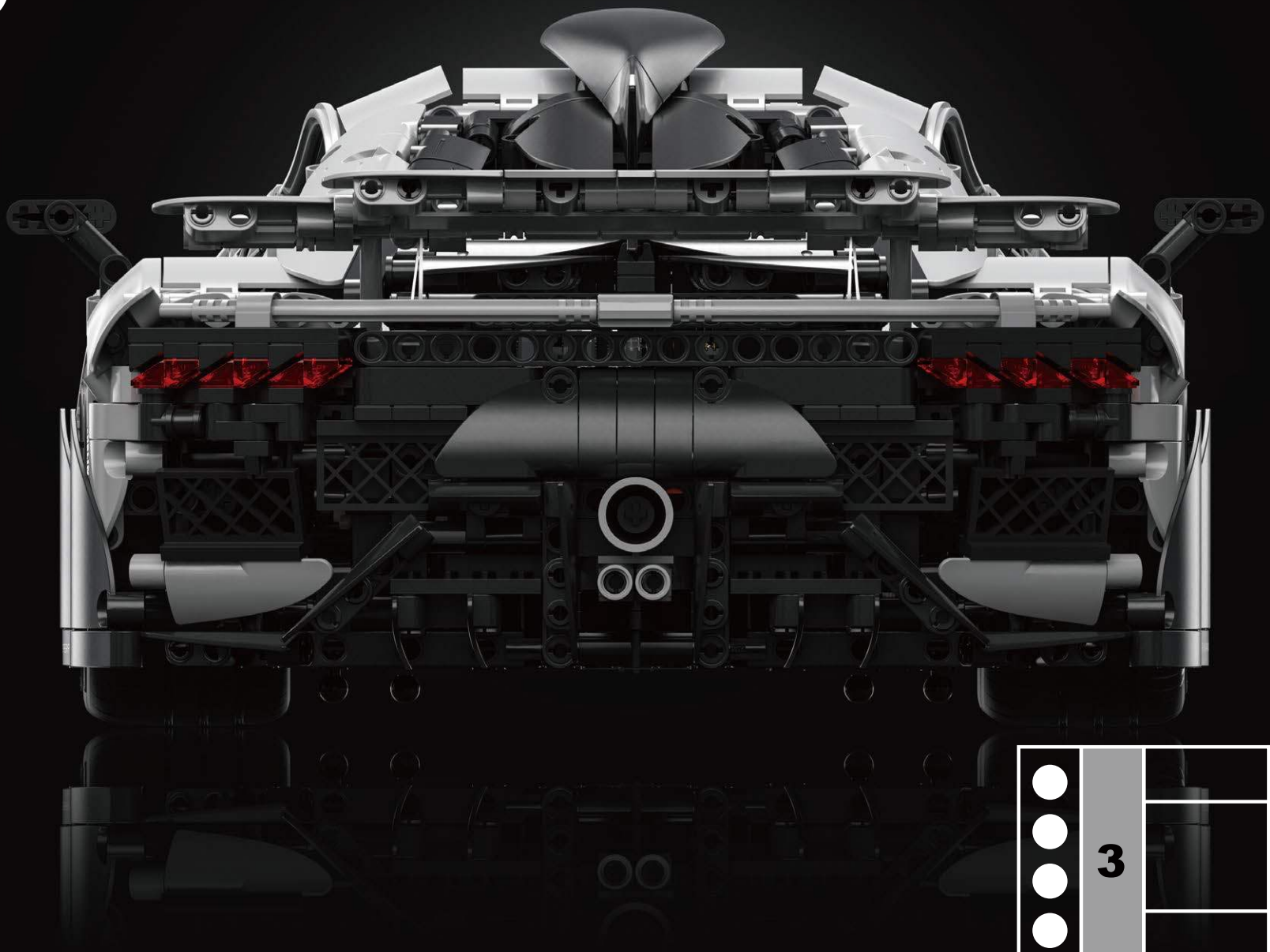

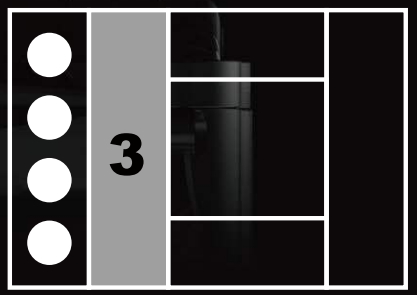

BAG 4

D

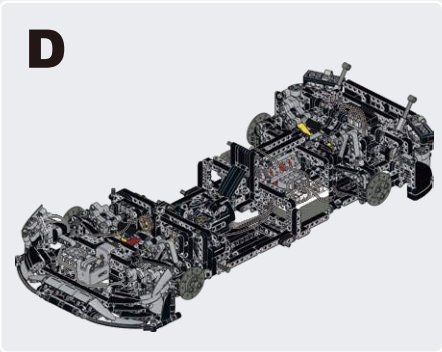

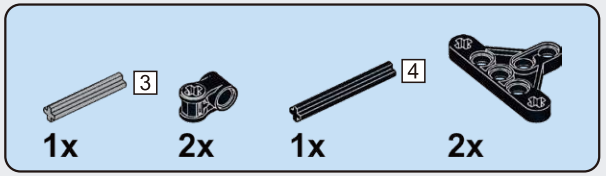

D1

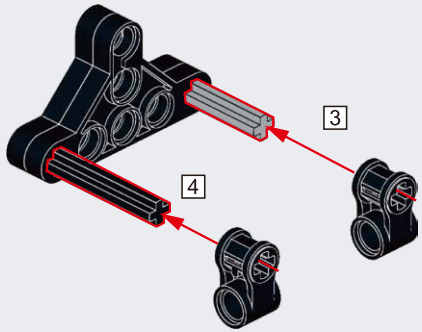

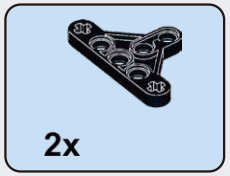

D2

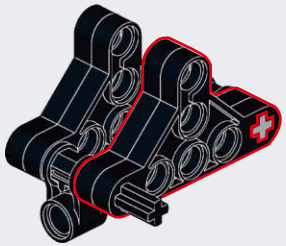

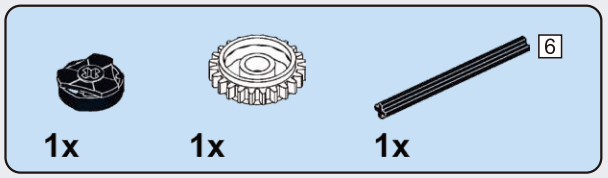

D3

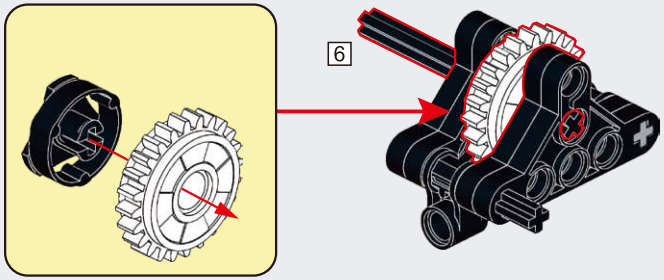

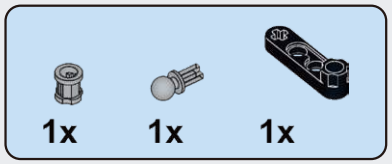

D4

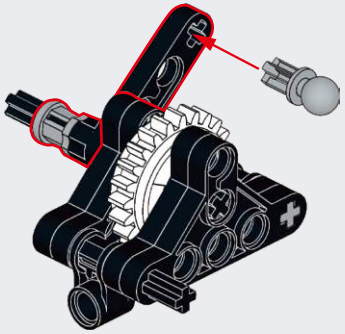

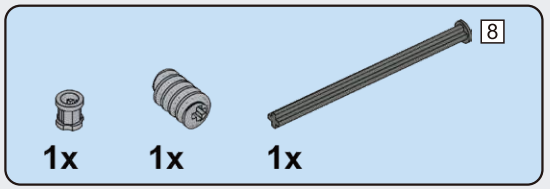

D5

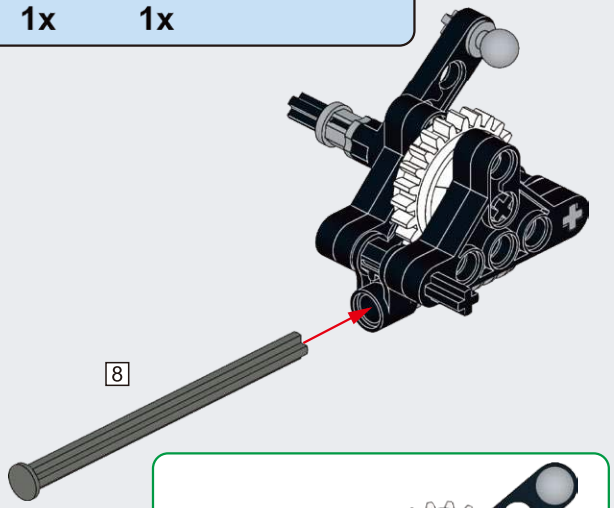

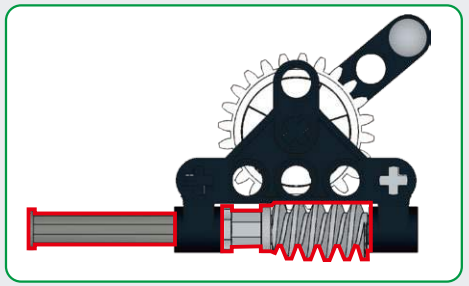

D6

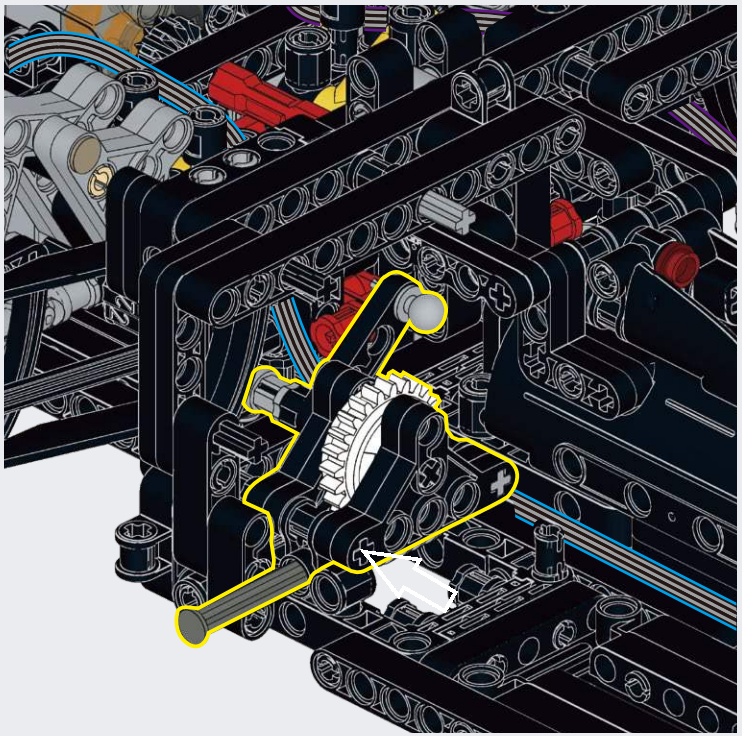

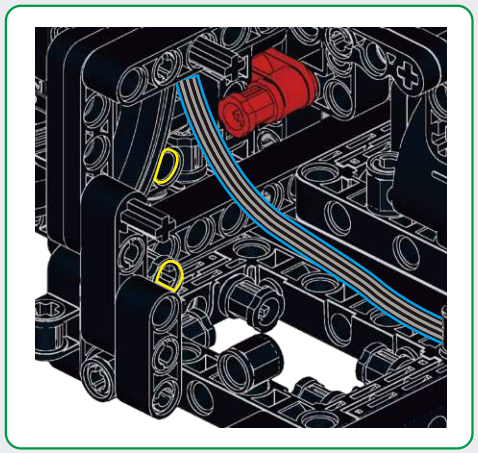

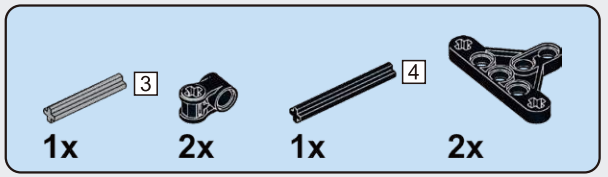

D7

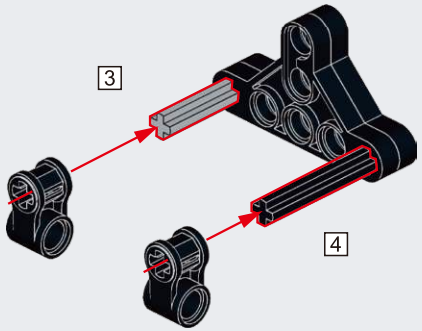

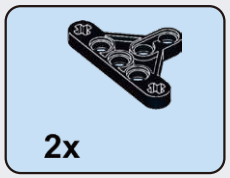

D8

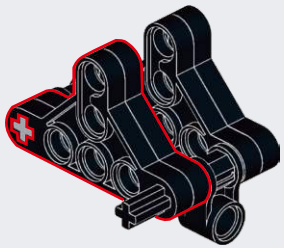

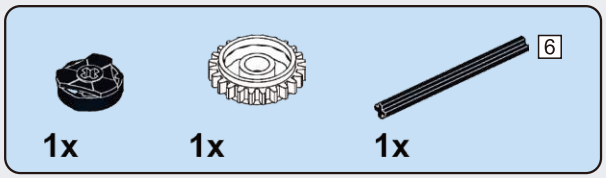

D9

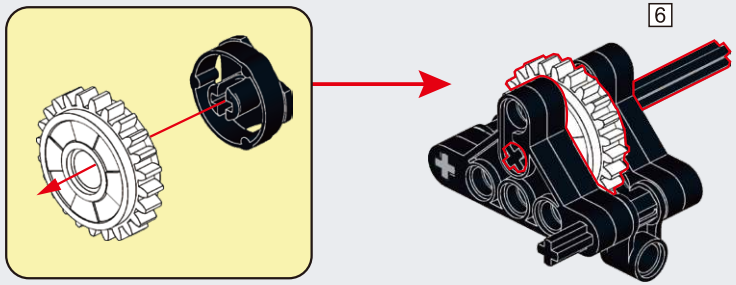

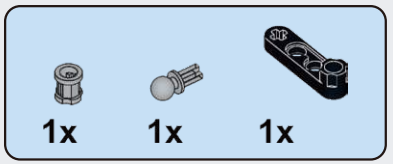

D10

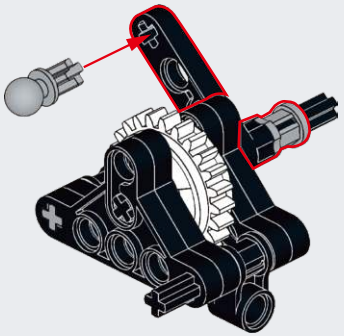

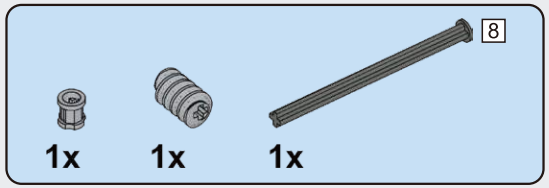

D11

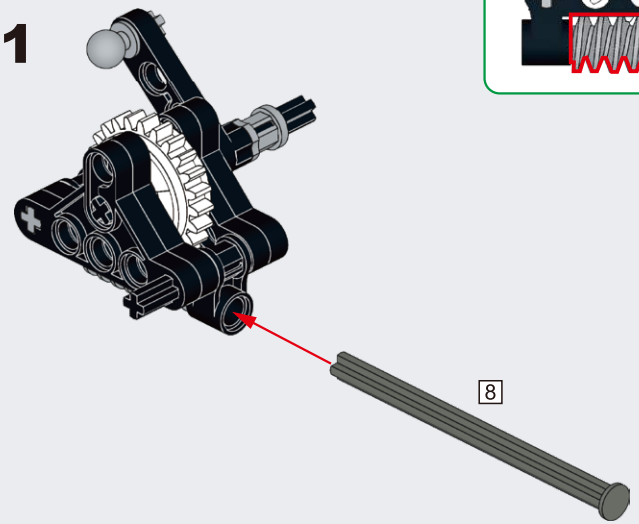

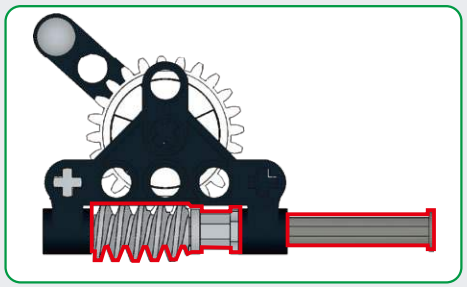

D12

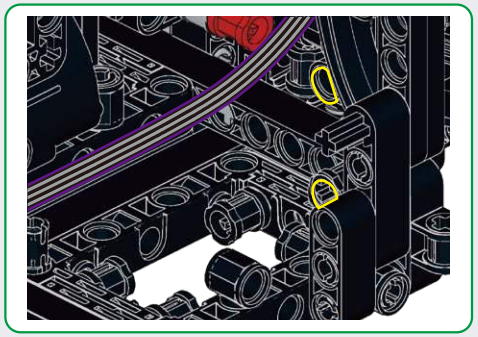

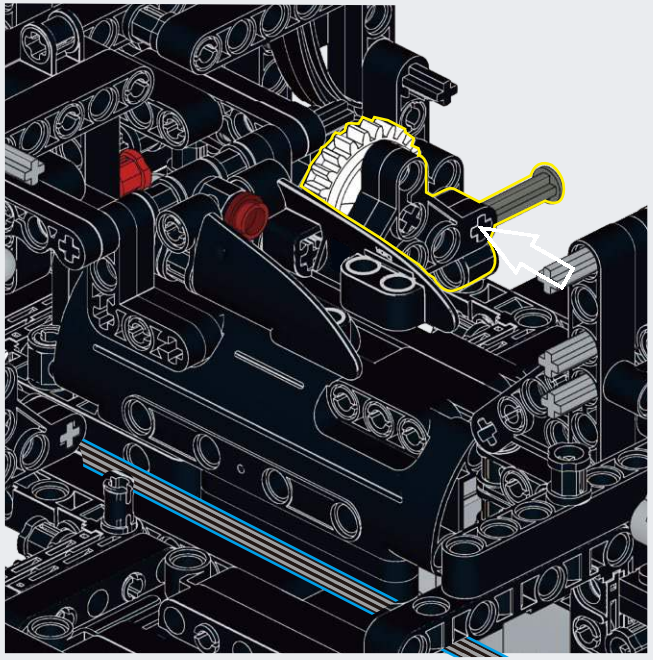

D13

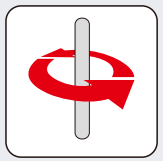

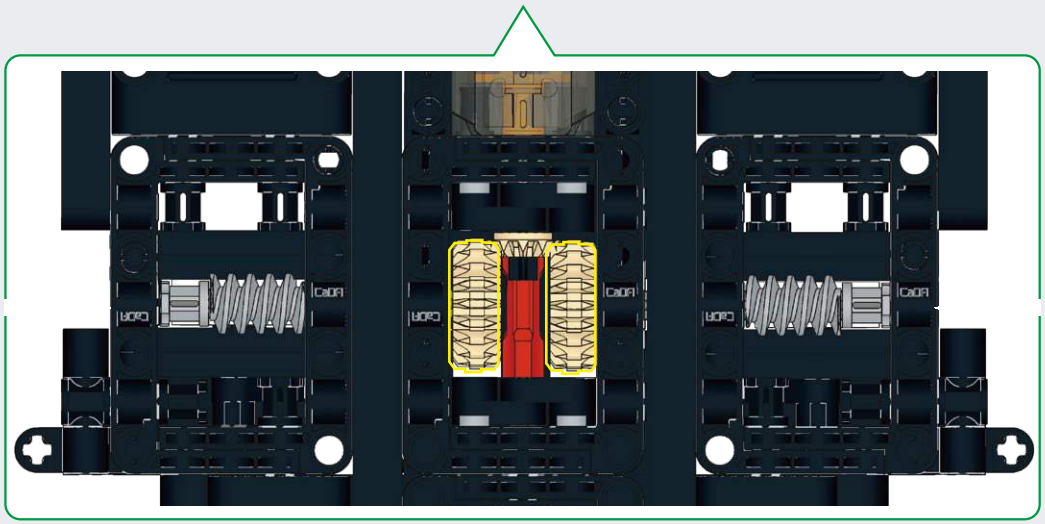

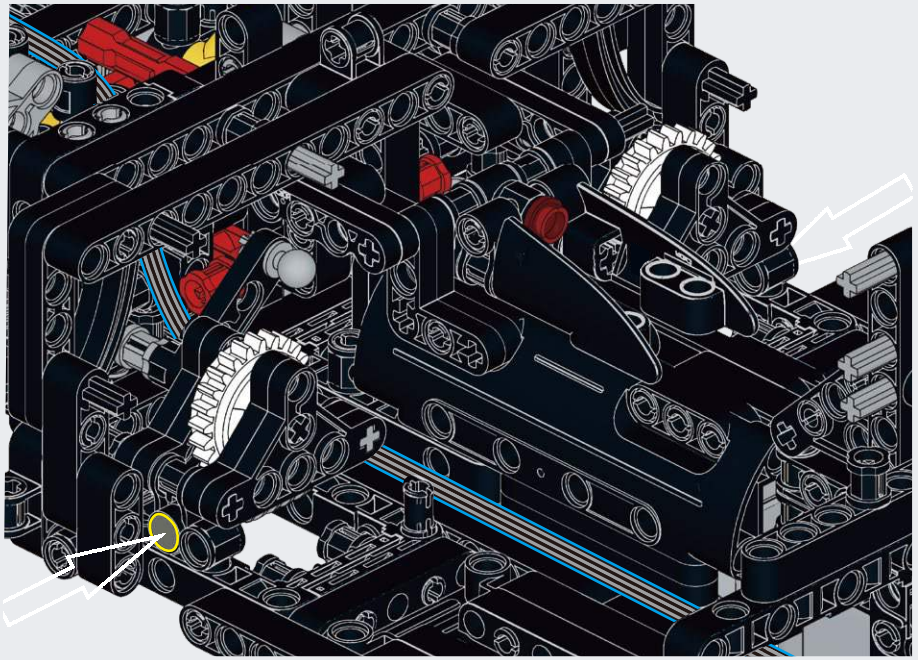

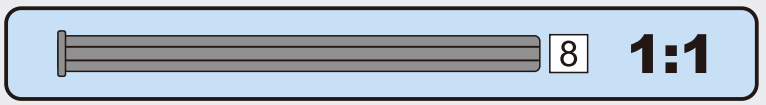

D14

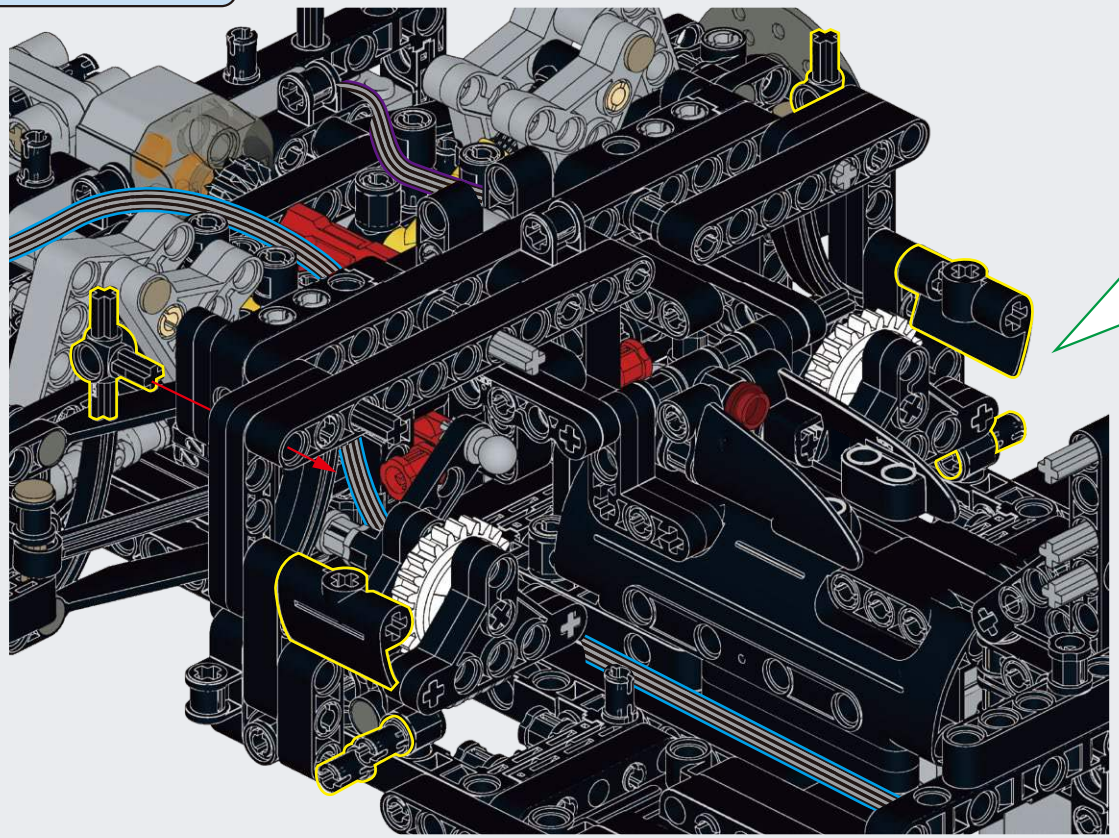

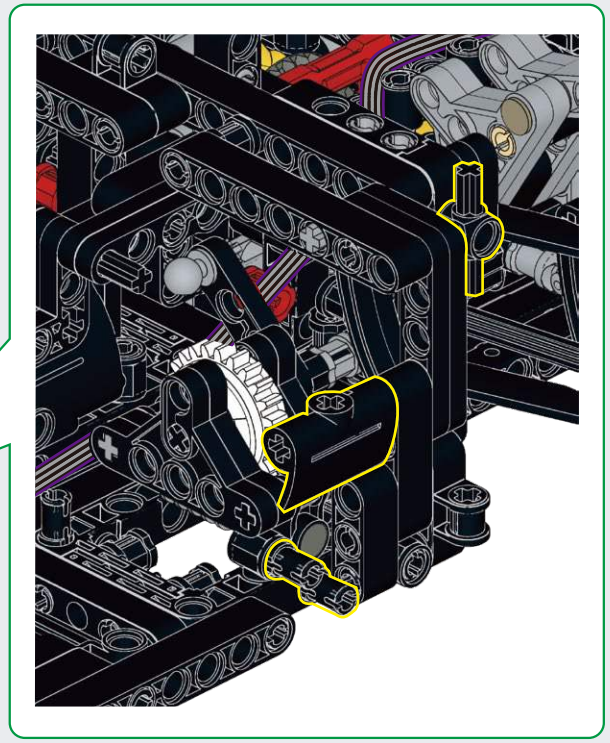

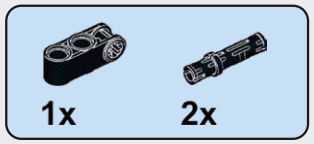

D15

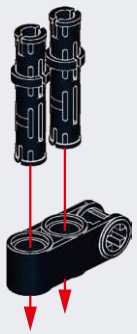

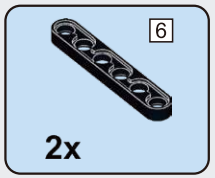

D16

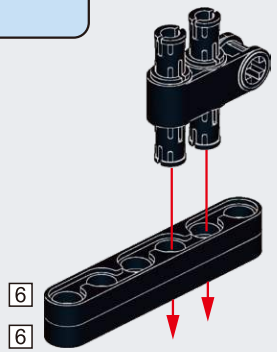

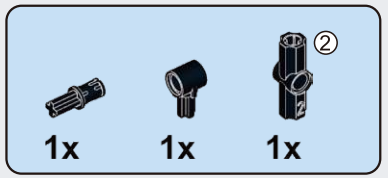

D17

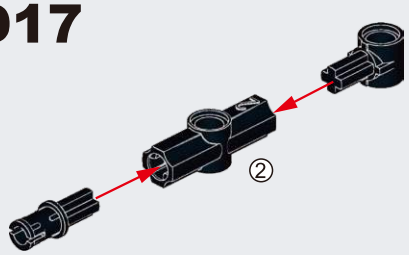

D18

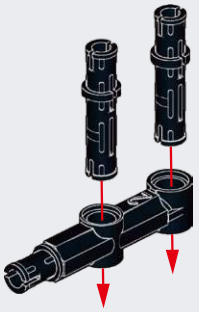

D19

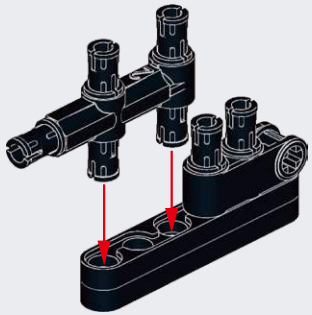

D20

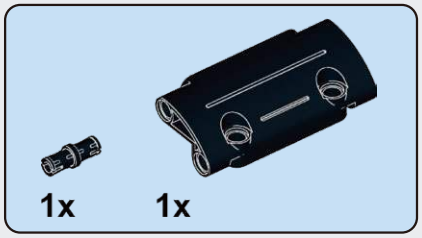

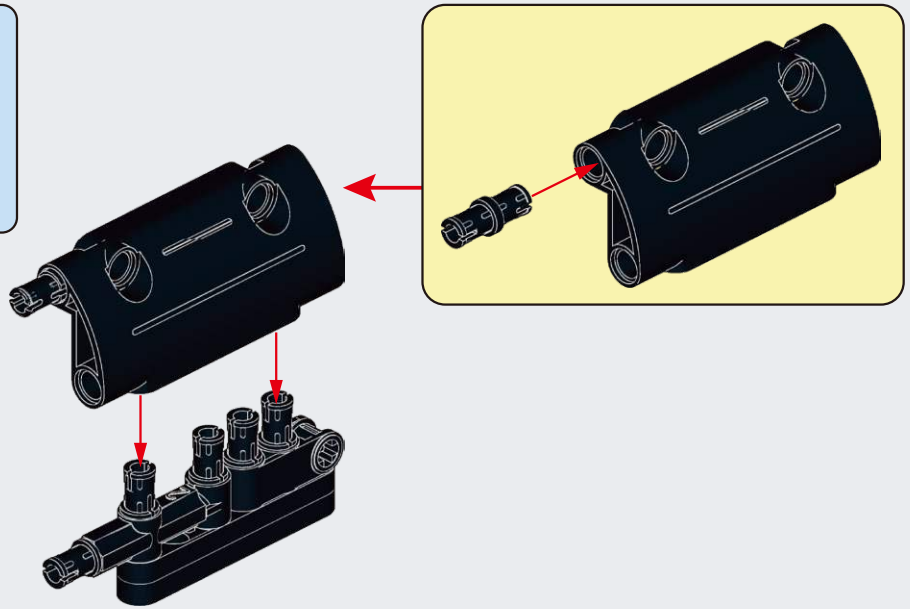

D21

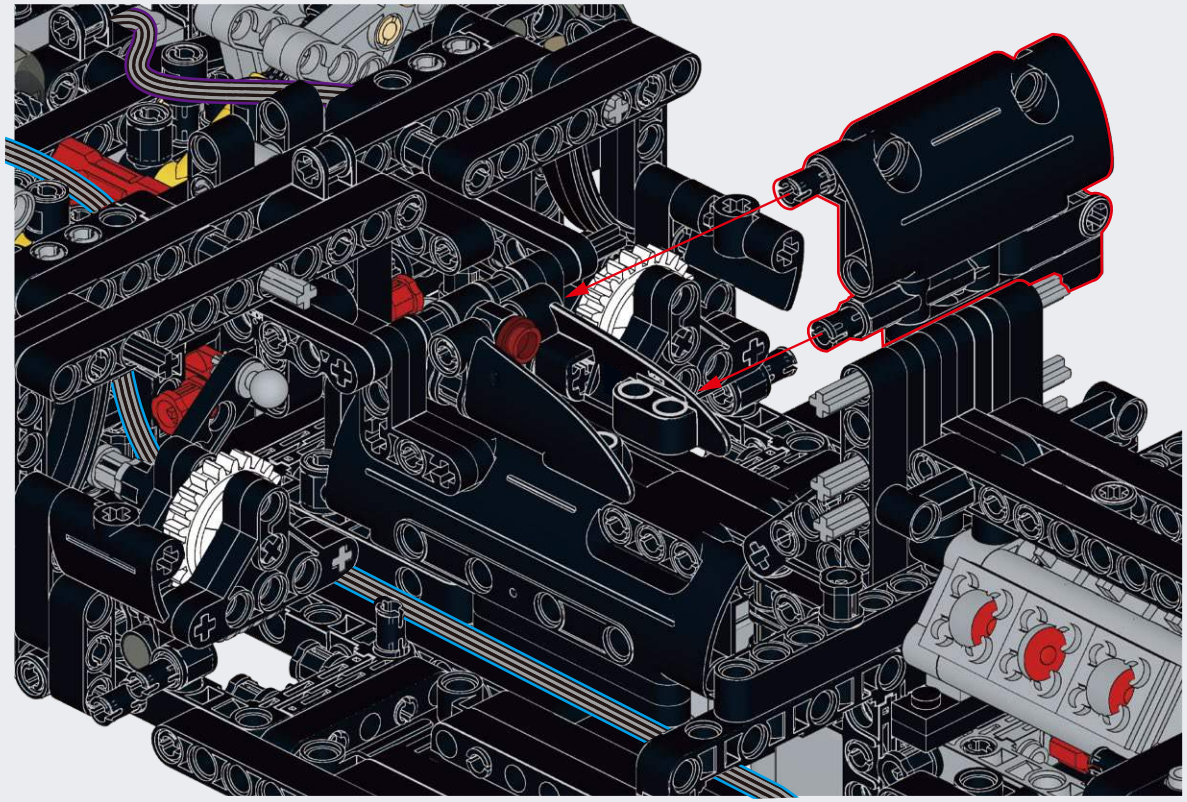

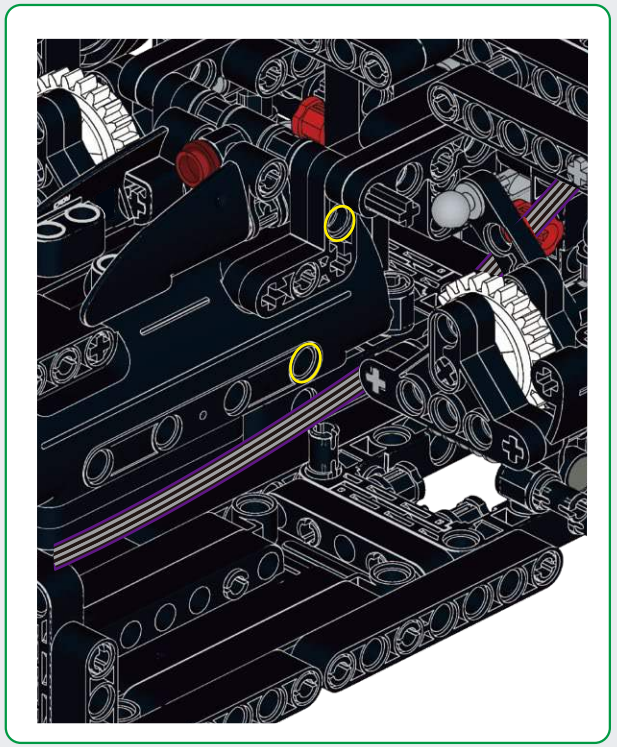

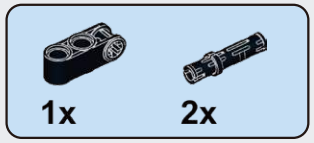

D22

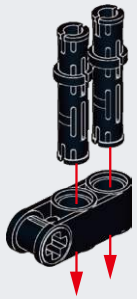

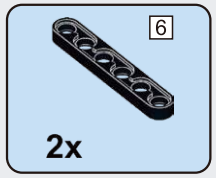

D23

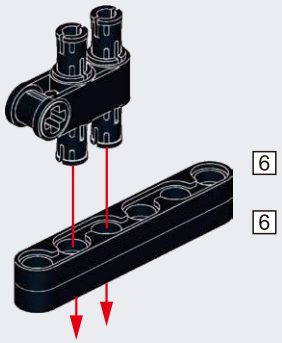

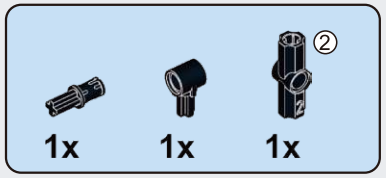

D24

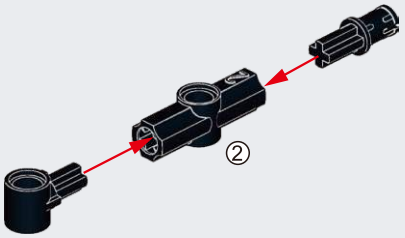

D25

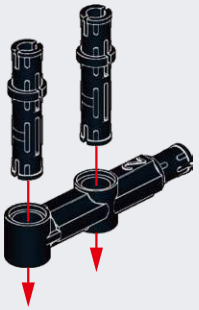

D26

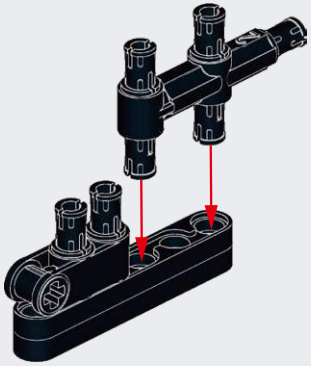

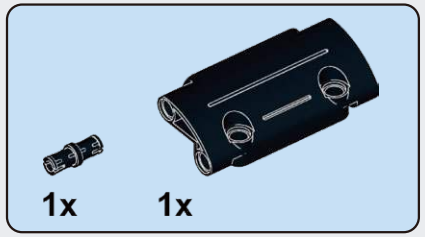

D27

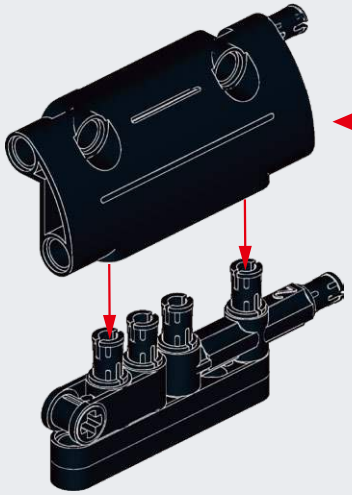

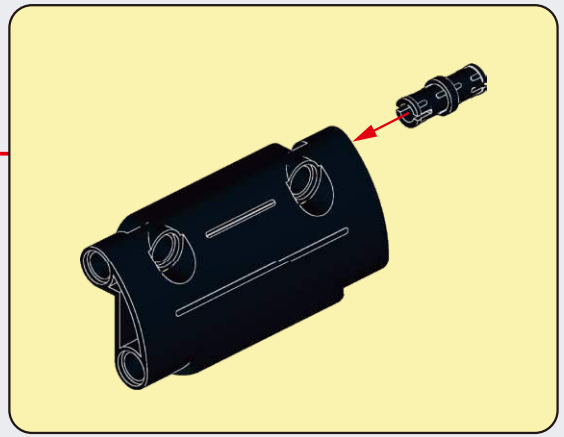

D28

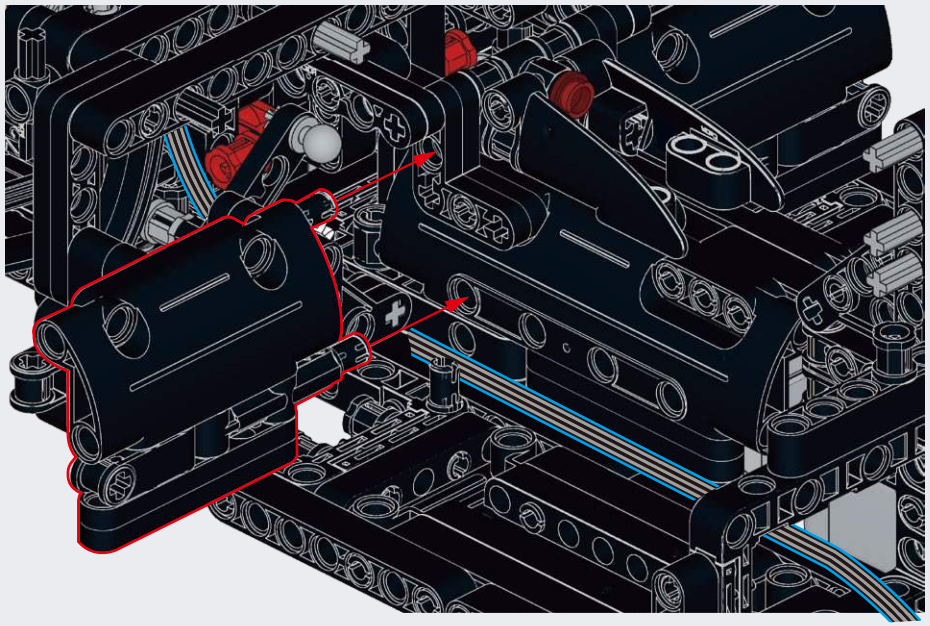

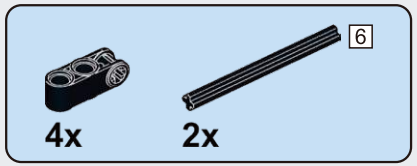

D29

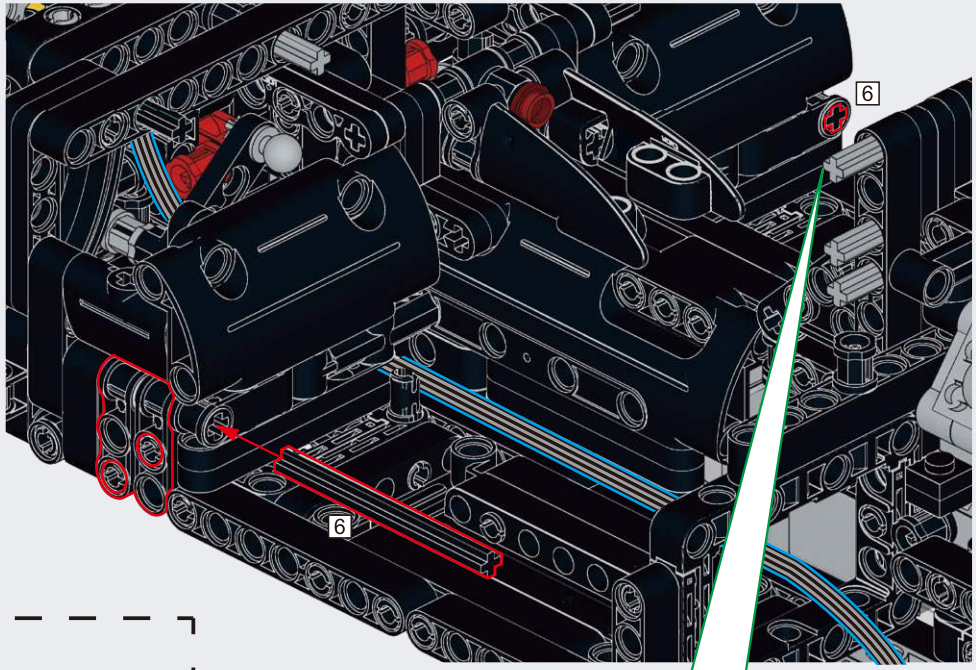

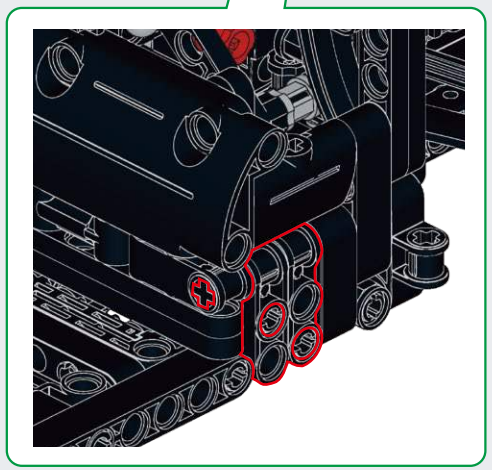

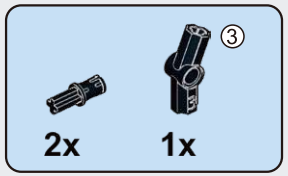

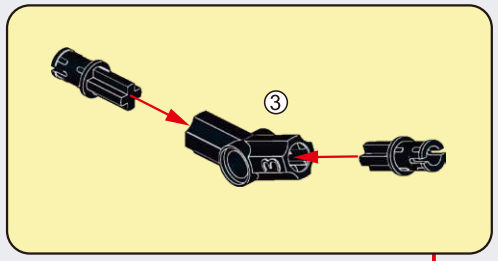

D30

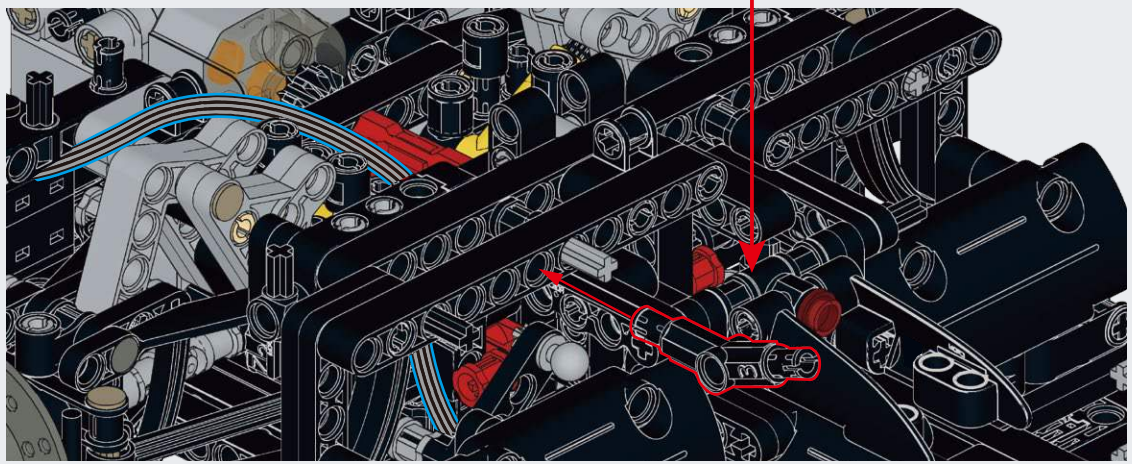

D31

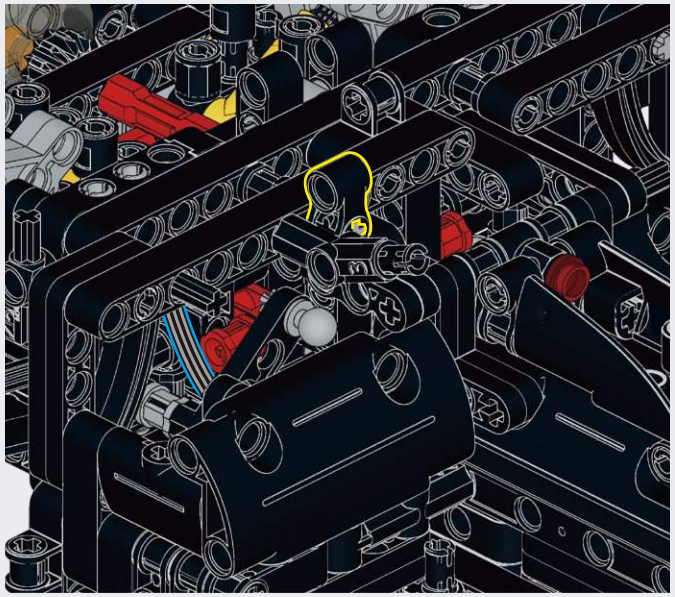

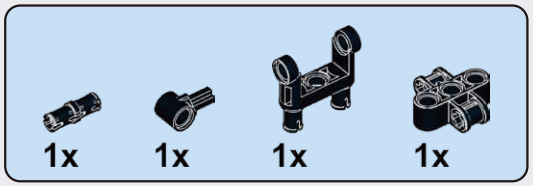

D32

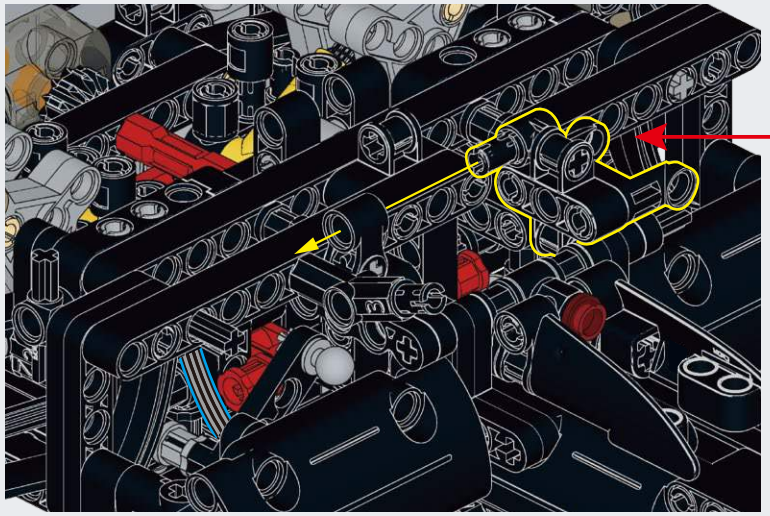

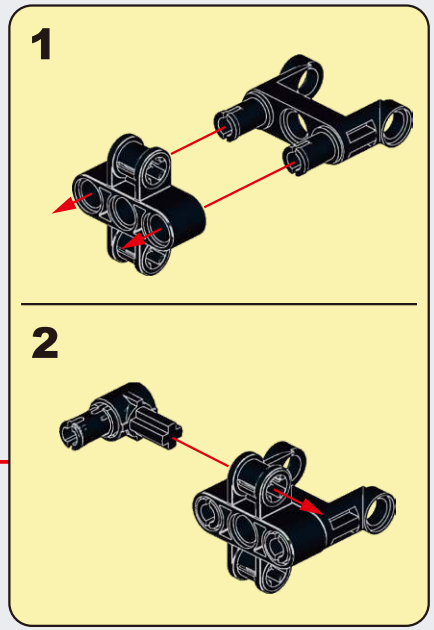

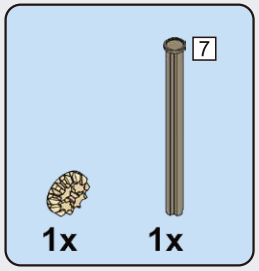

D33

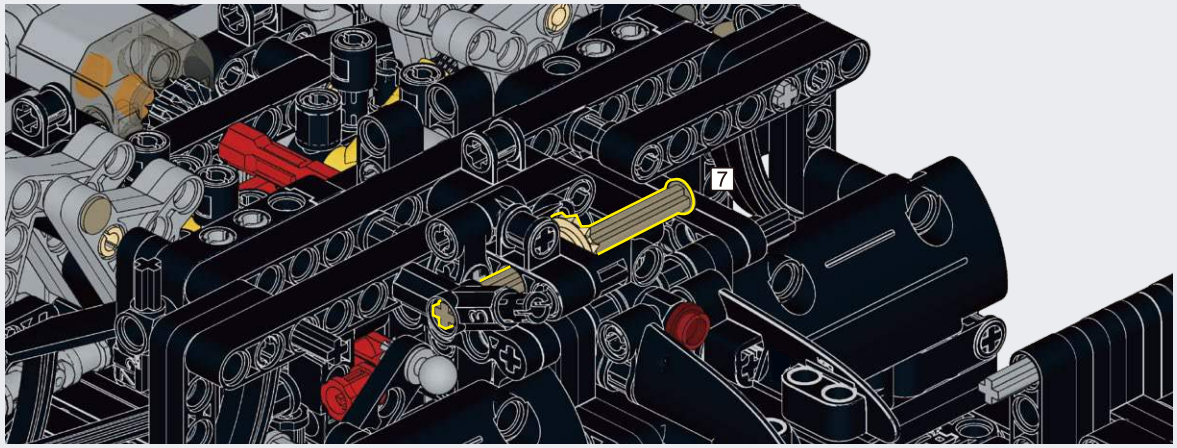

D34

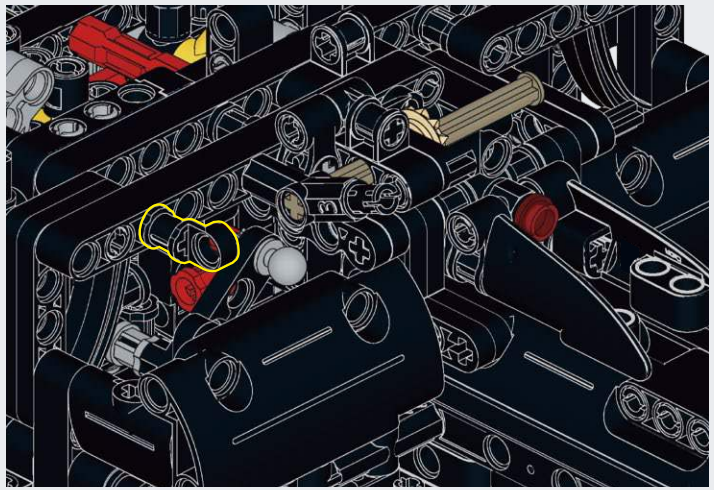

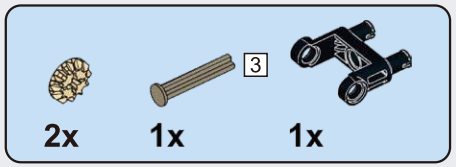

D35

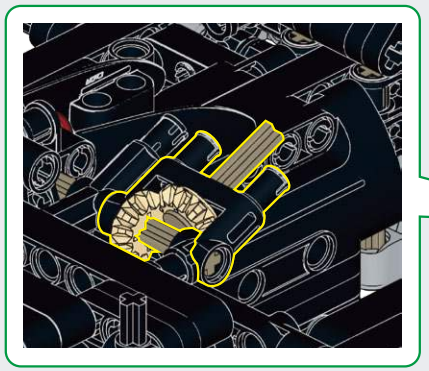

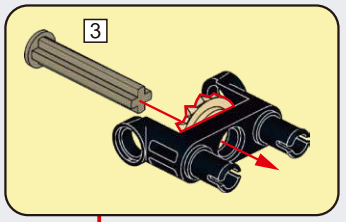

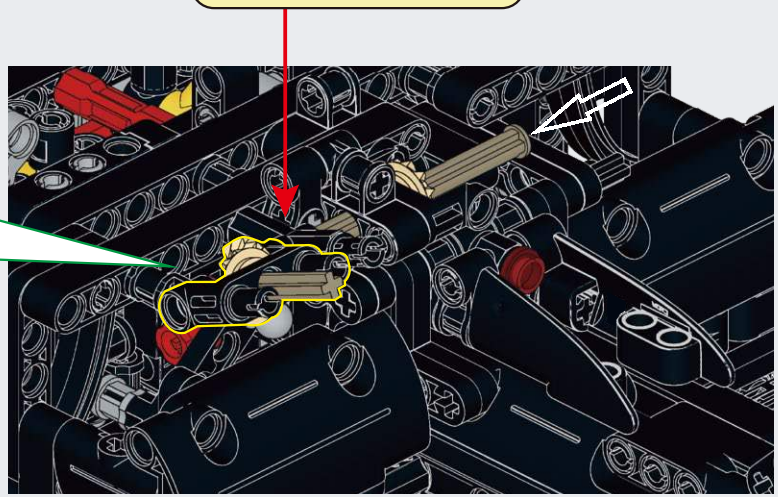

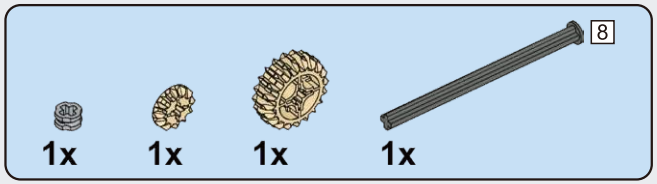

D36

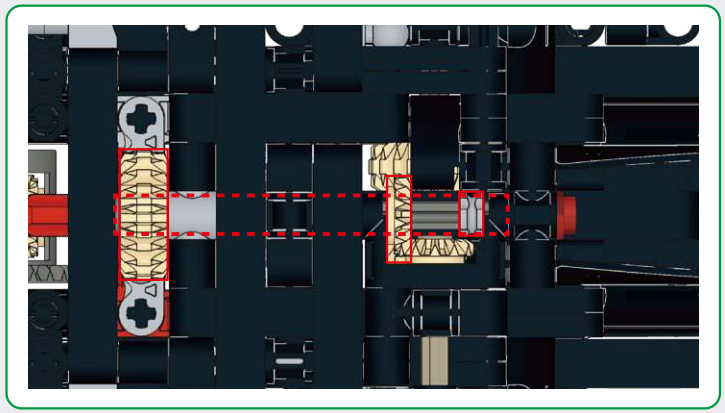

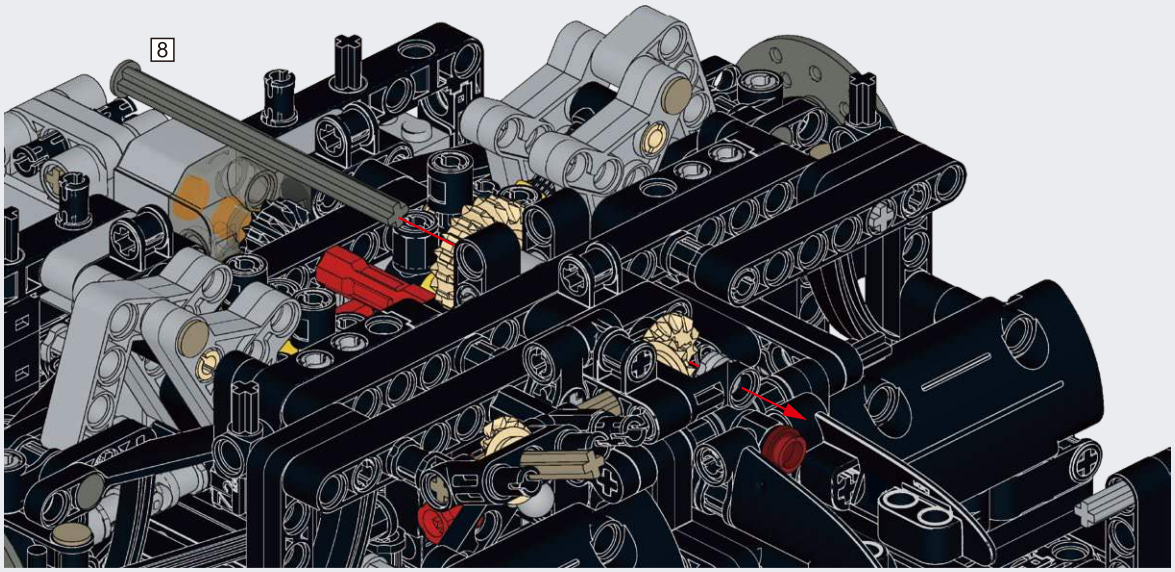

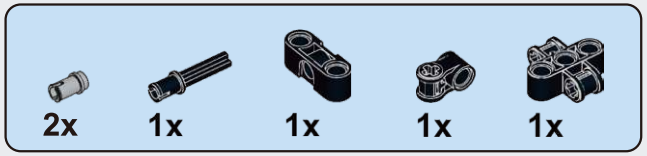

D37

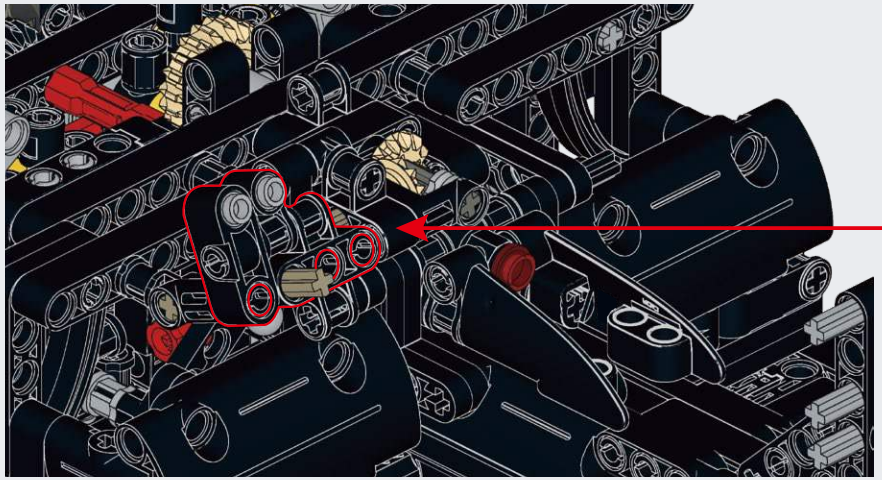

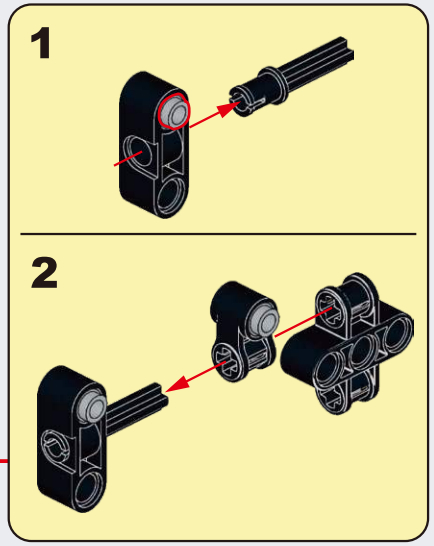

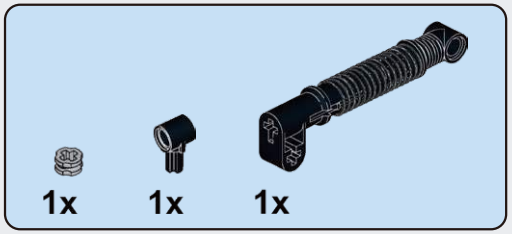

D38

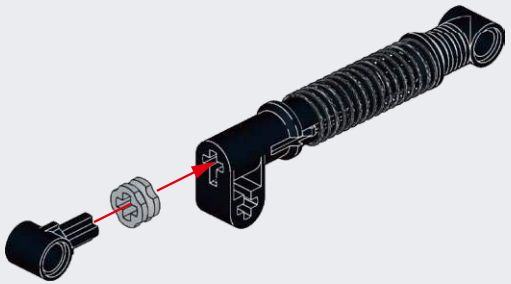

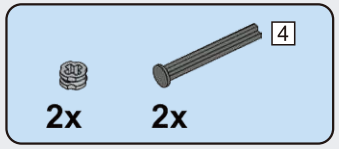

D39

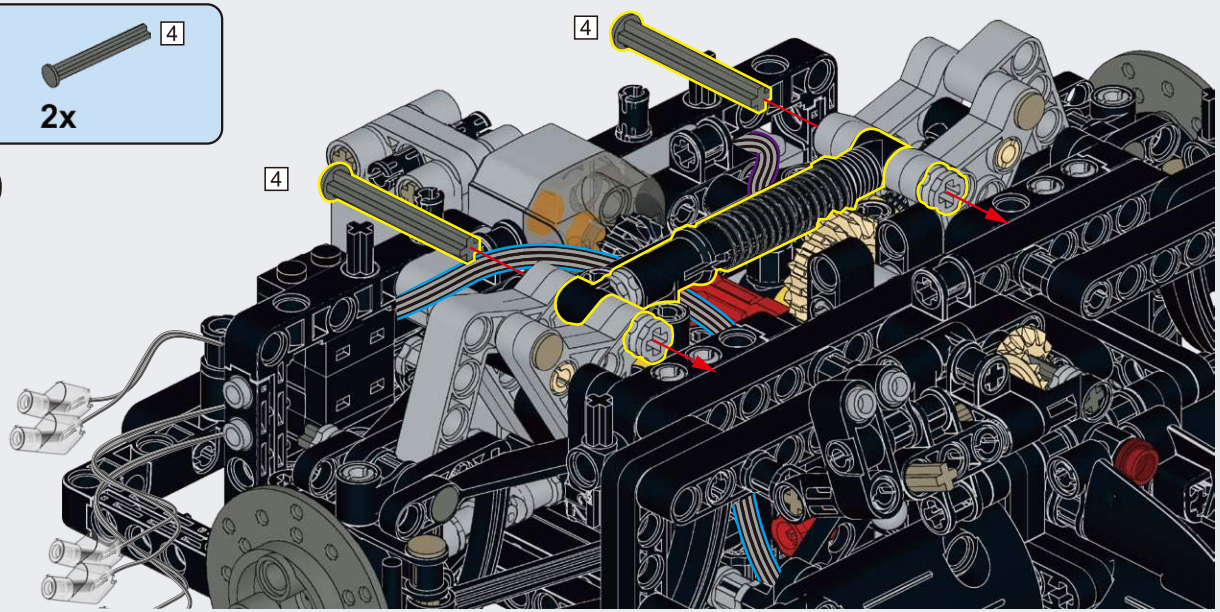

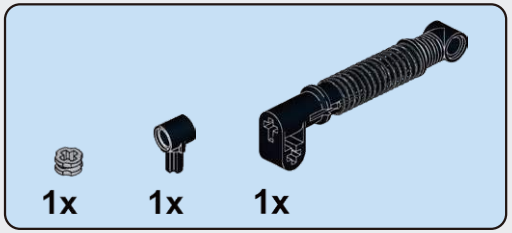

D40

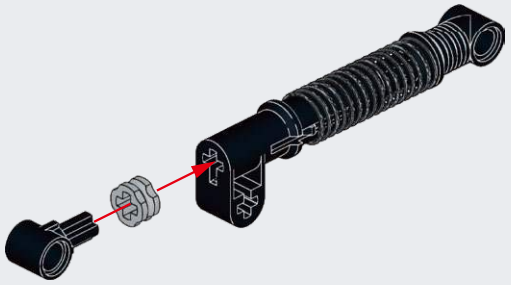

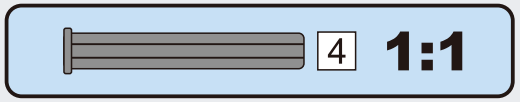

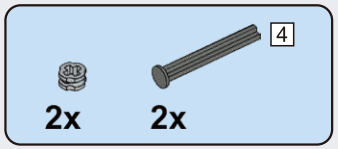

D41

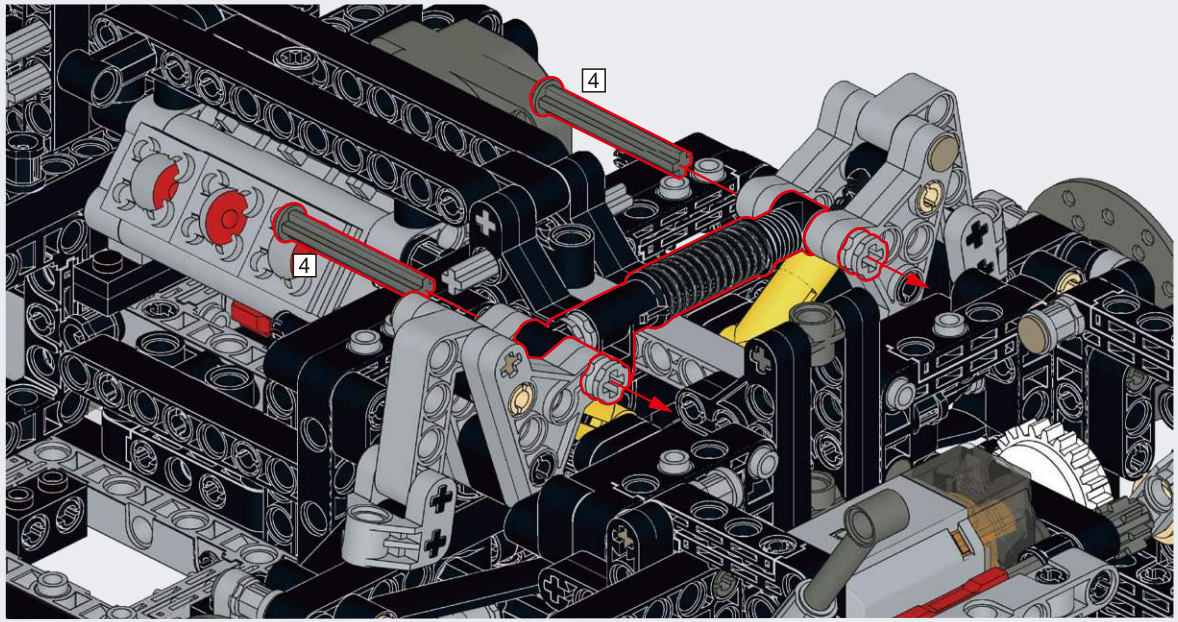

D42

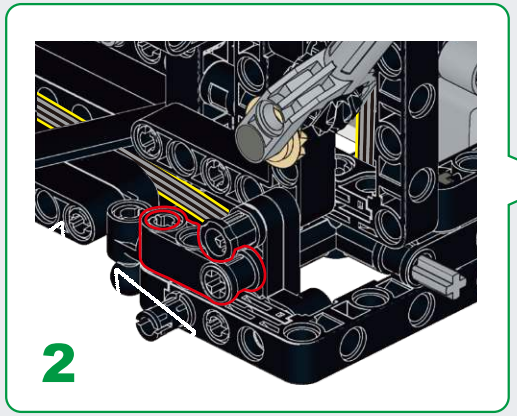

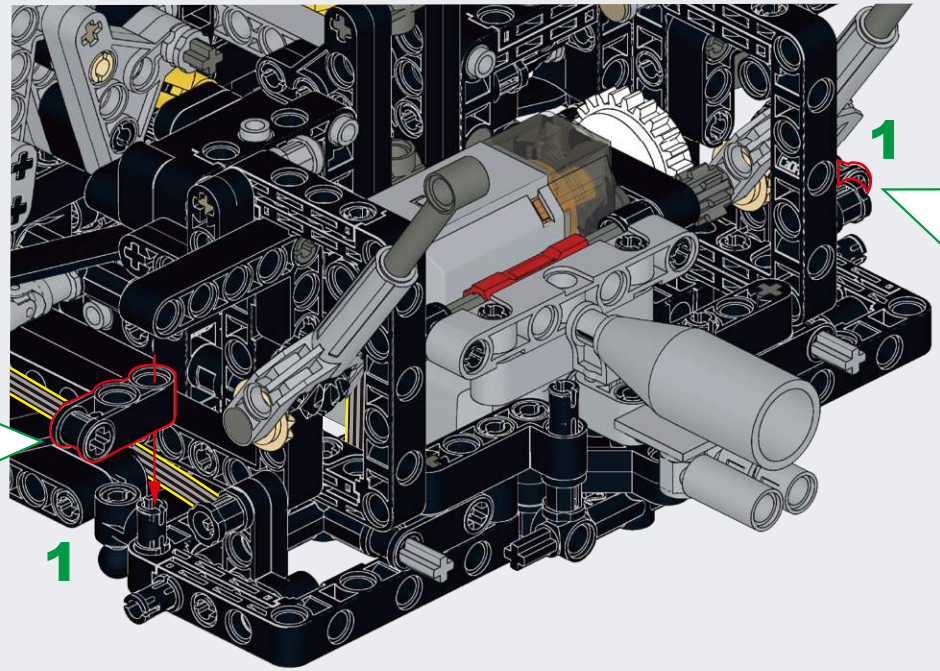

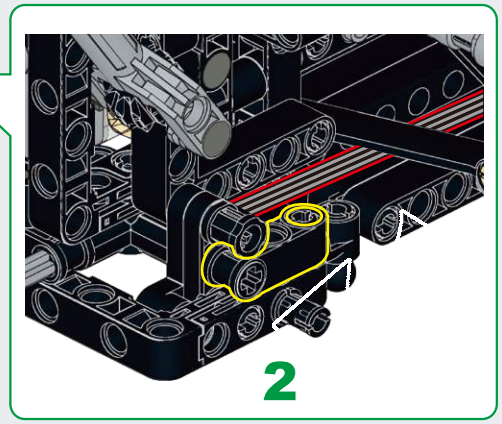

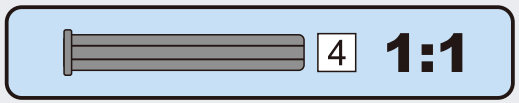

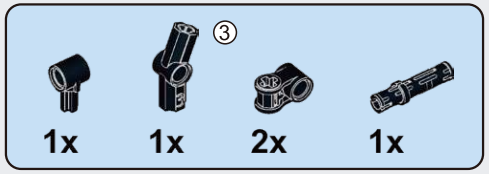

D43

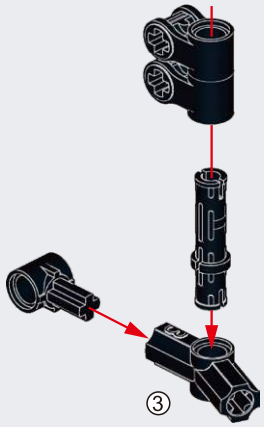

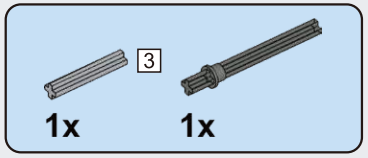

D44

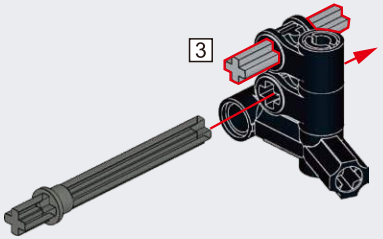

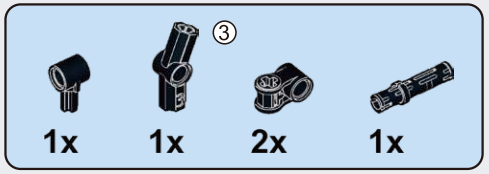

D45

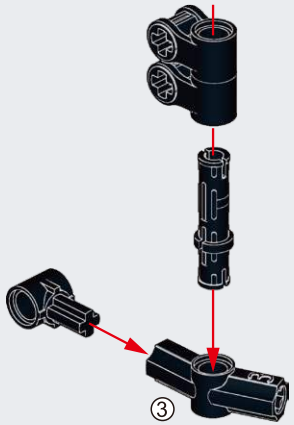

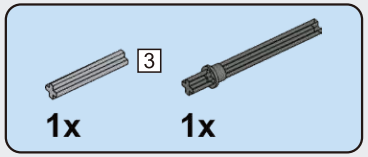

D46

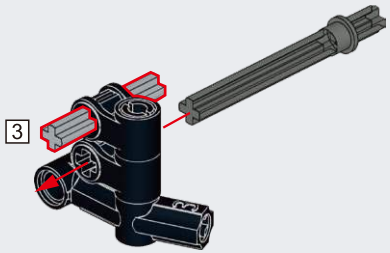

D47

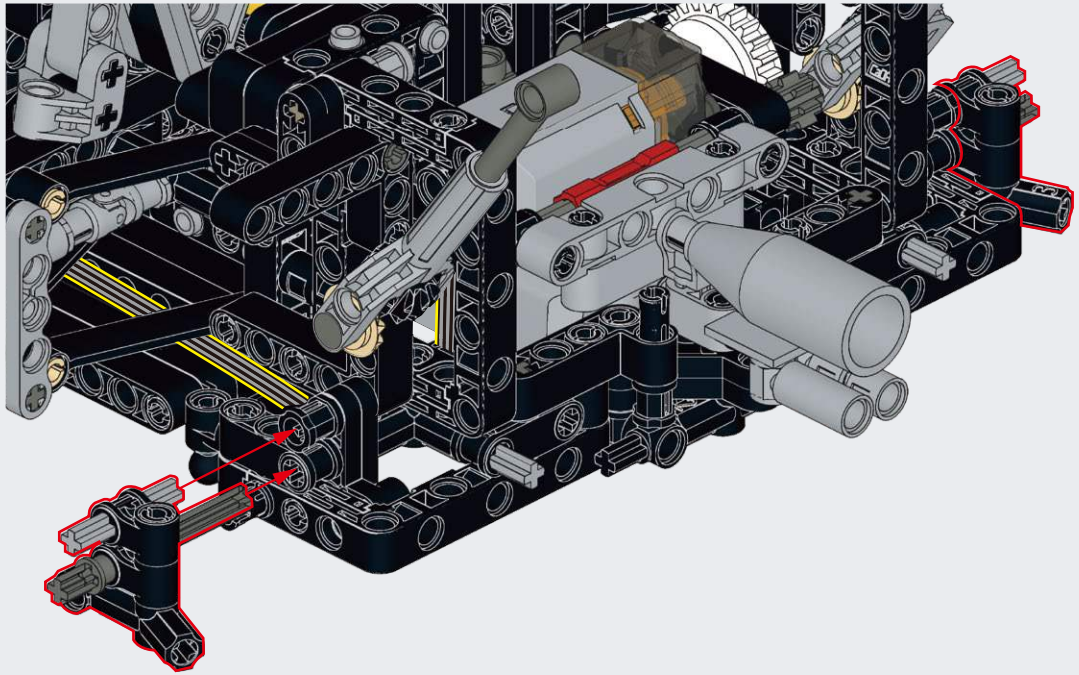

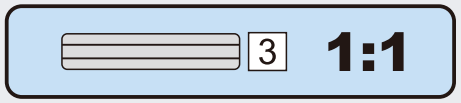

D48

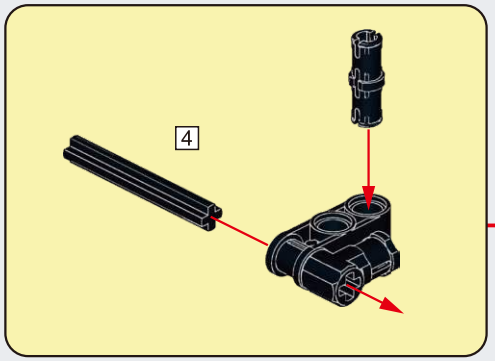

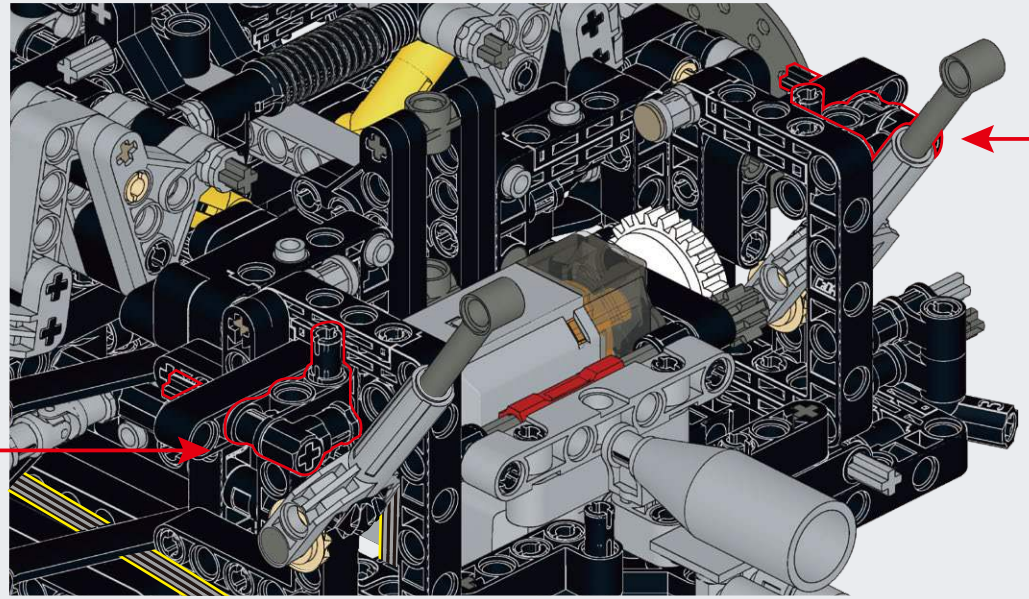

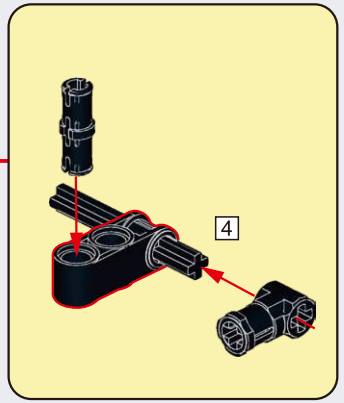

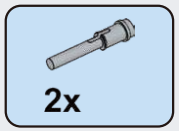

D49

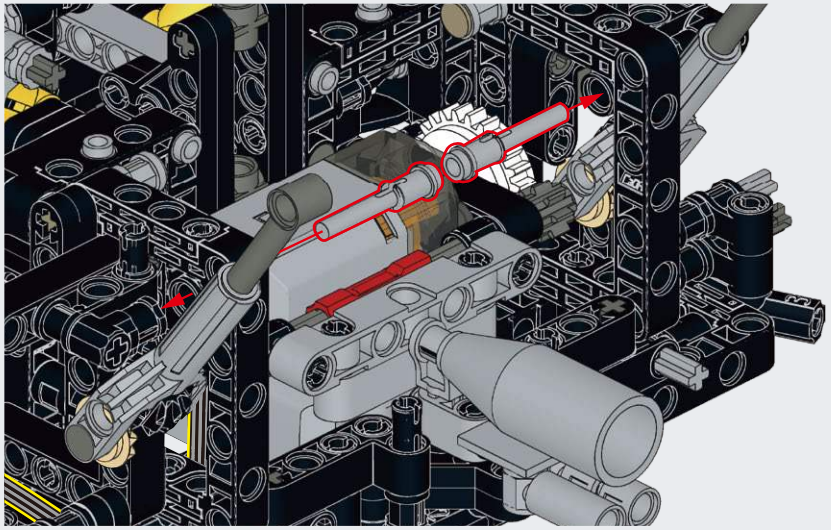

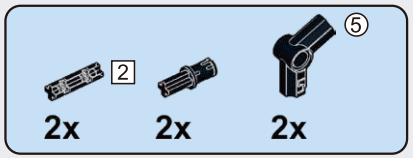

D50

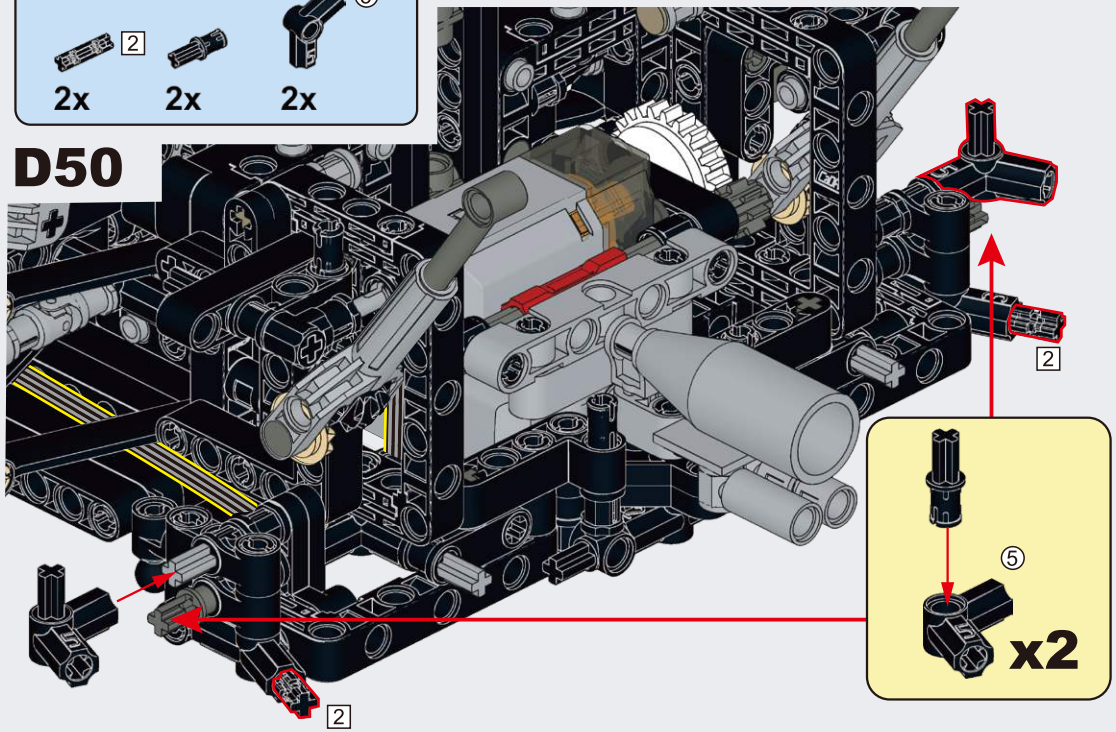

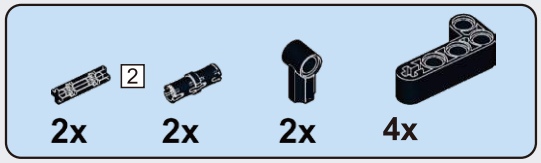

D51

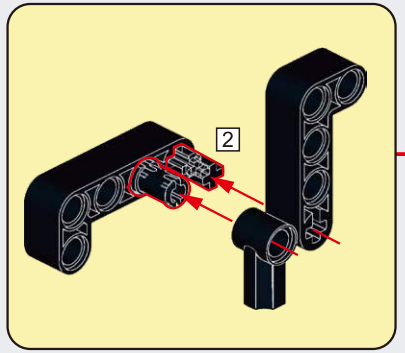

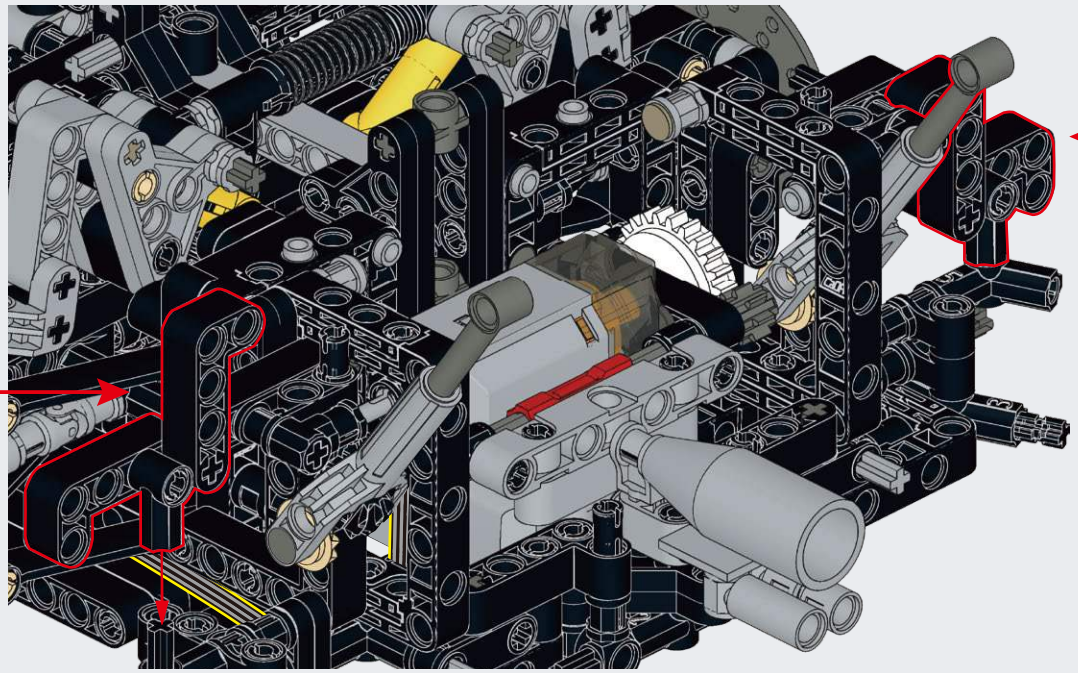

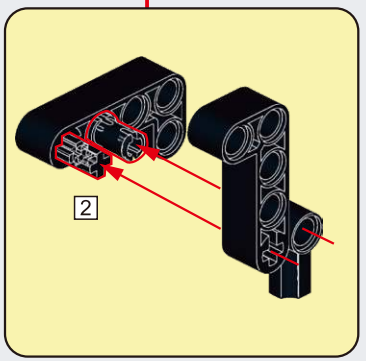

D52

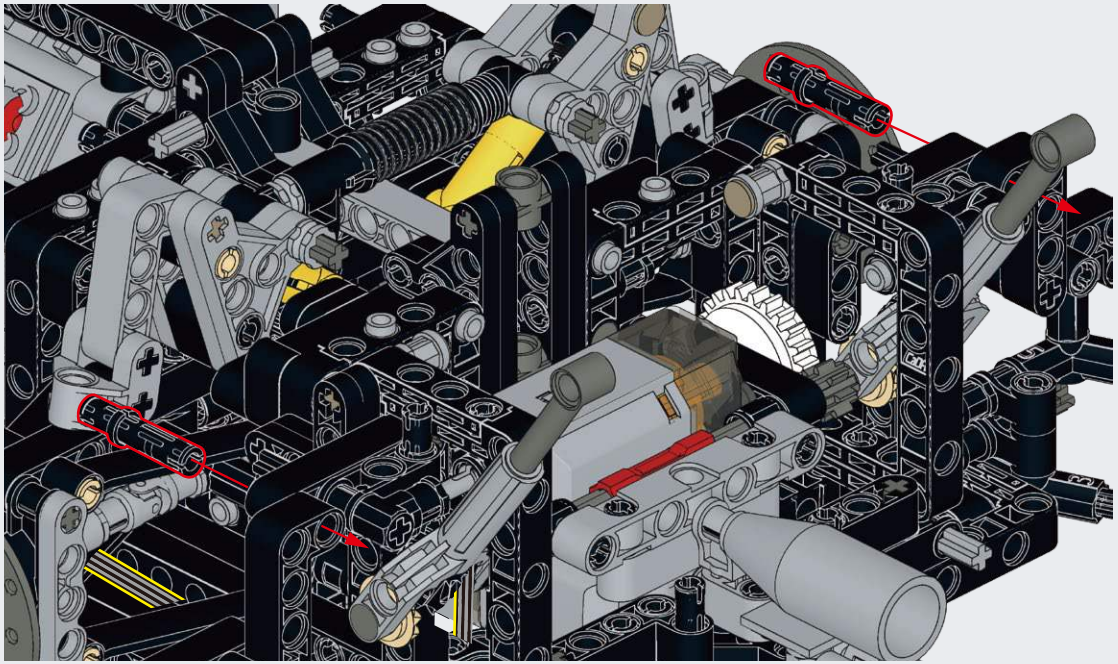

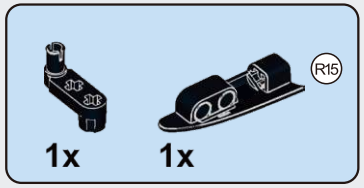

D53

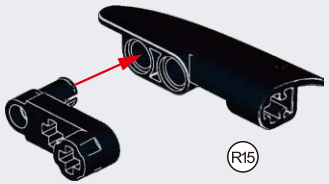

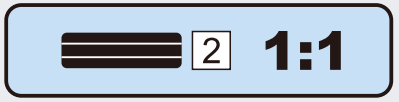

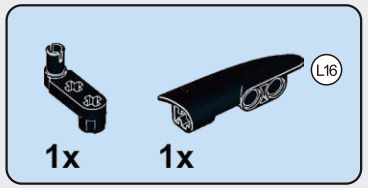
L16
1x
1x

D54

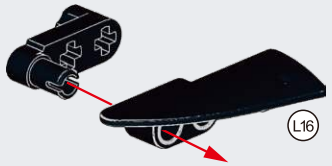
L16

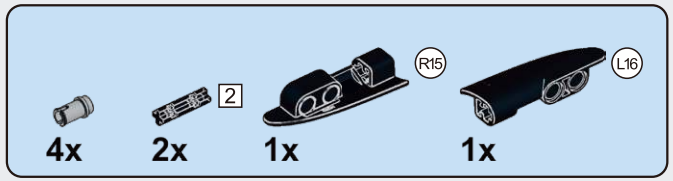
2
R15
L16
4x
2x
1x
1x

D55

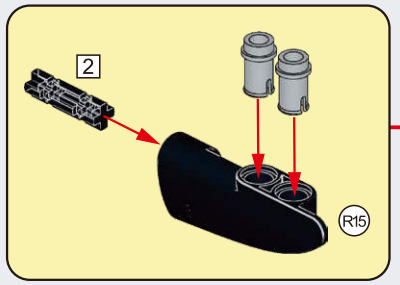
2
R15

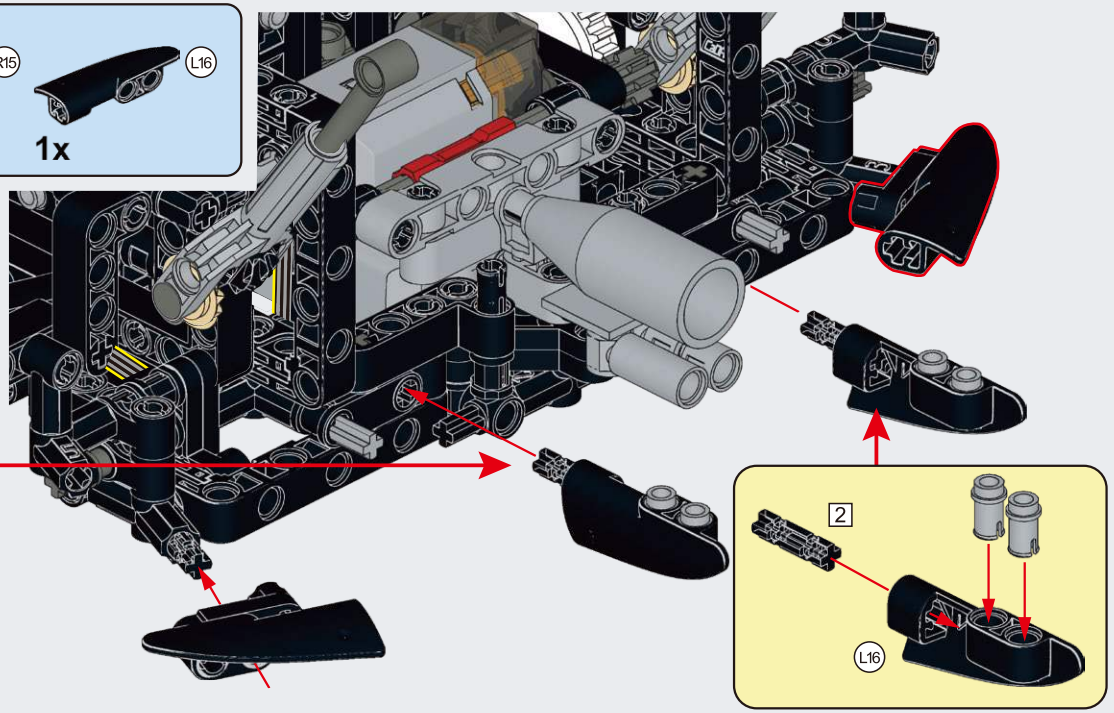
2
L16

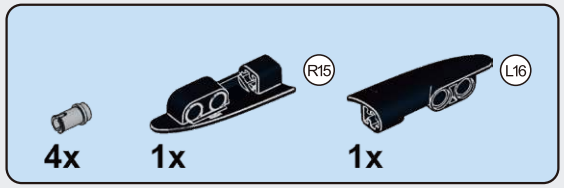
R15
L16
4x
1x
1x

D56

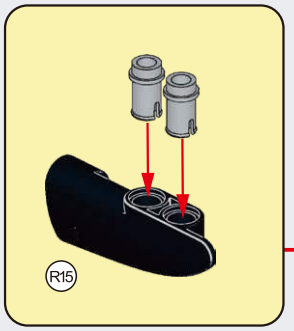
R15

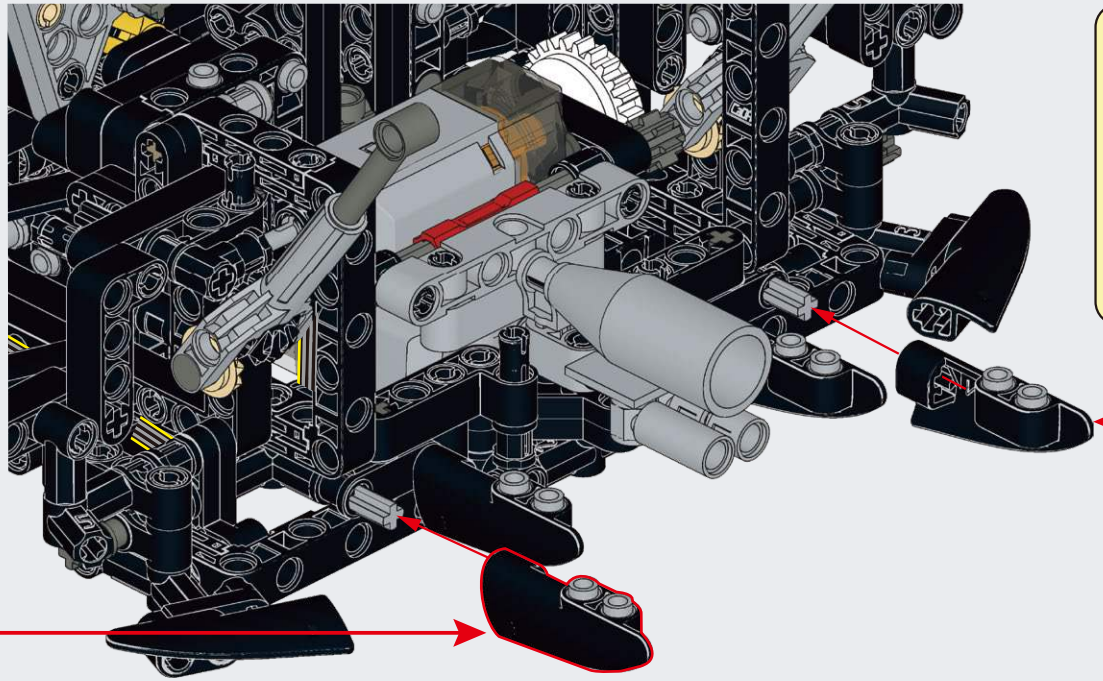

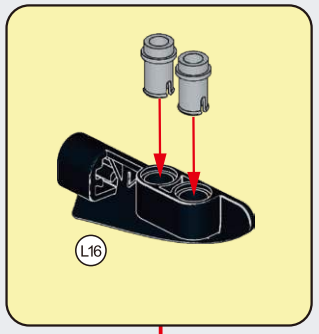
L16

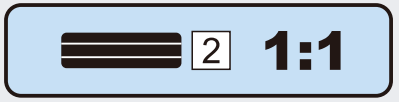
2
1:1

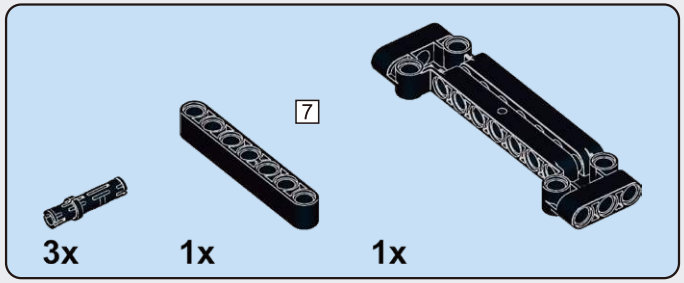

D57

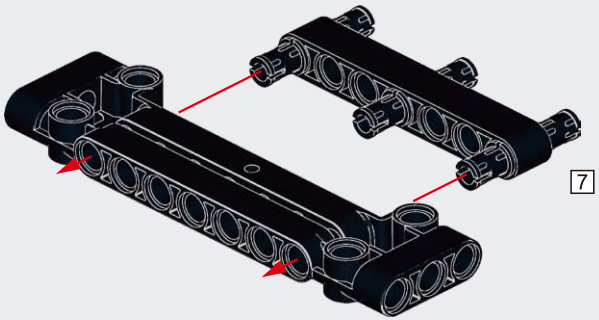

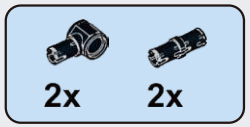

D58

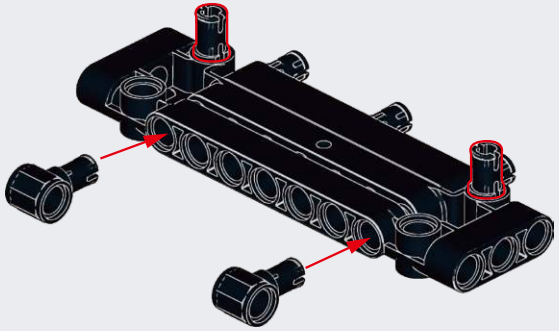

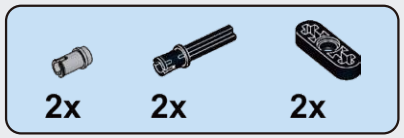

D59

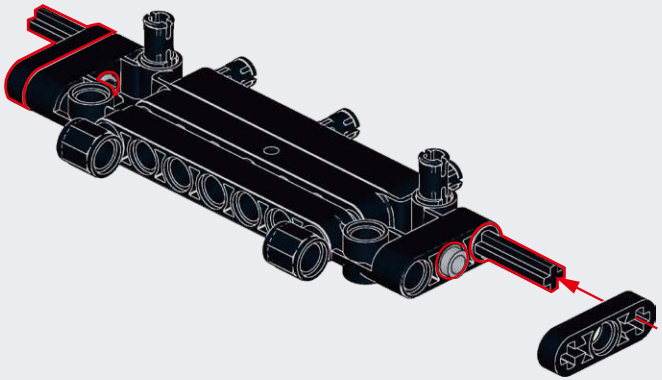

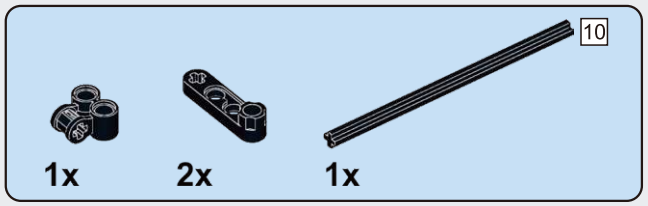

D60

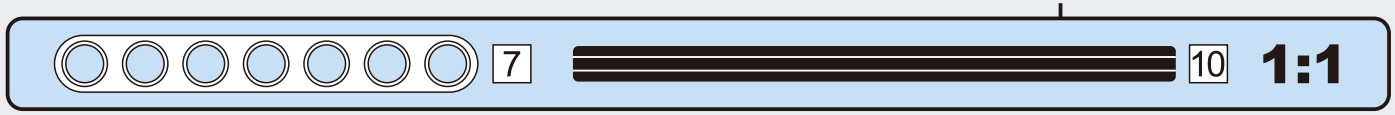

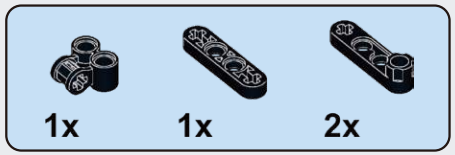

D61

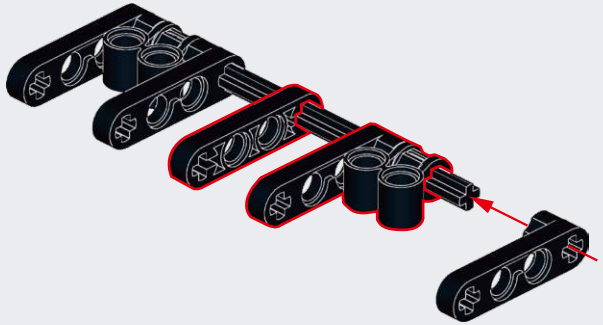

D62

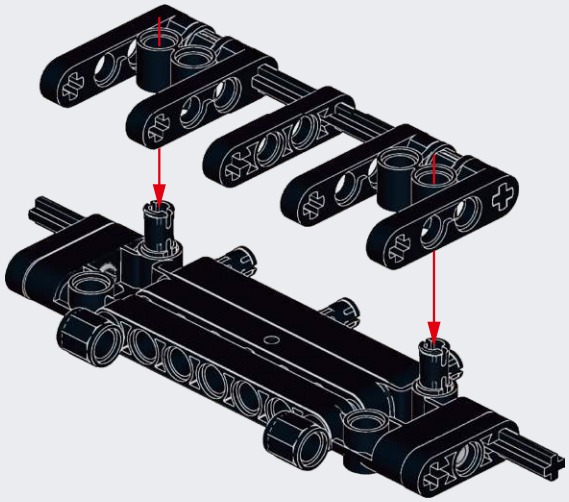

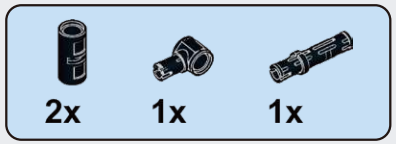

D63

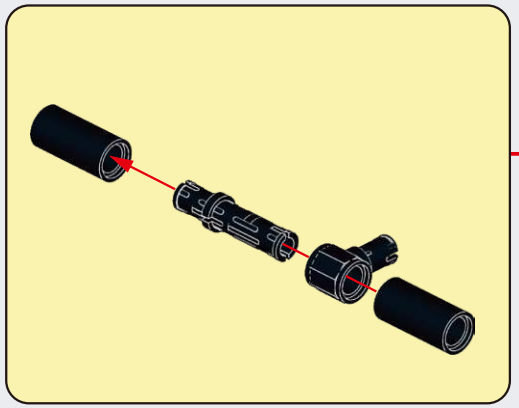

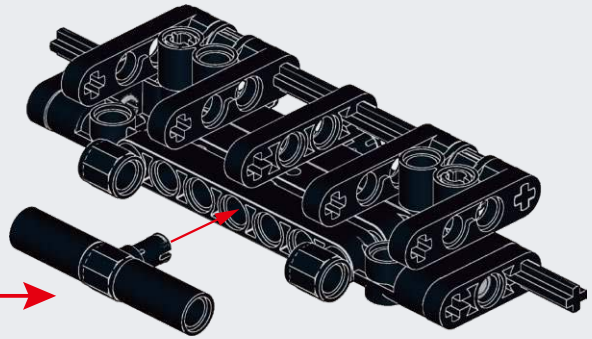

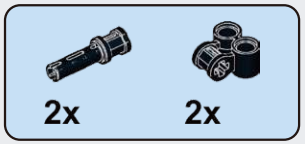

D64

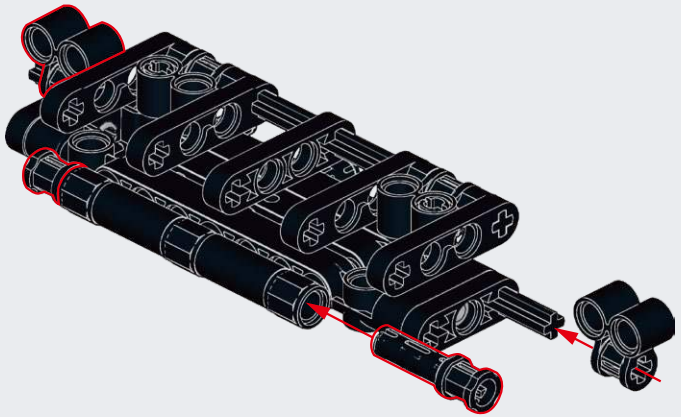

D65

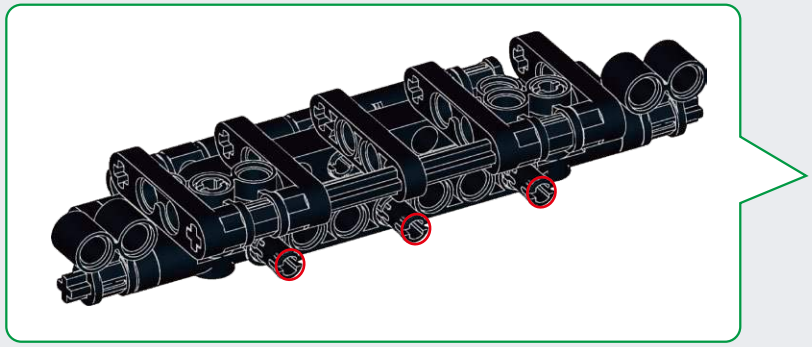

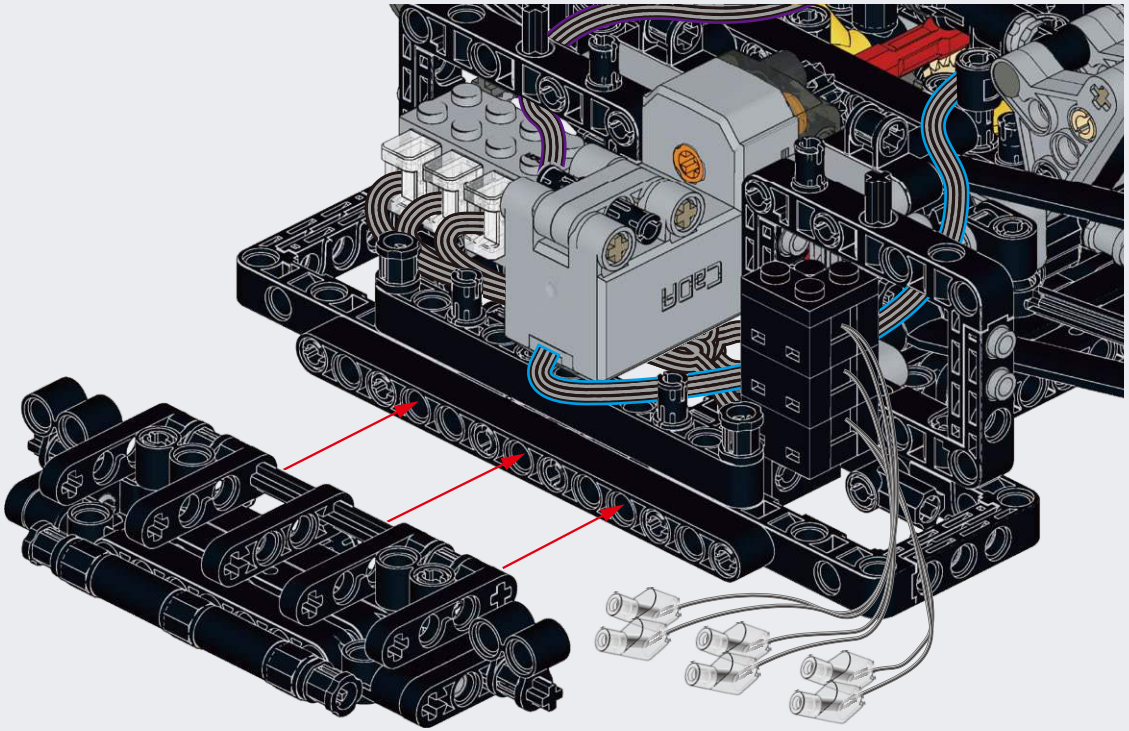

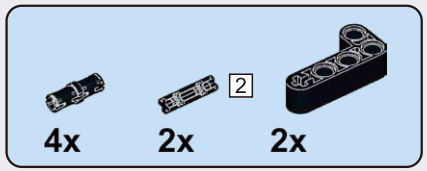

D66

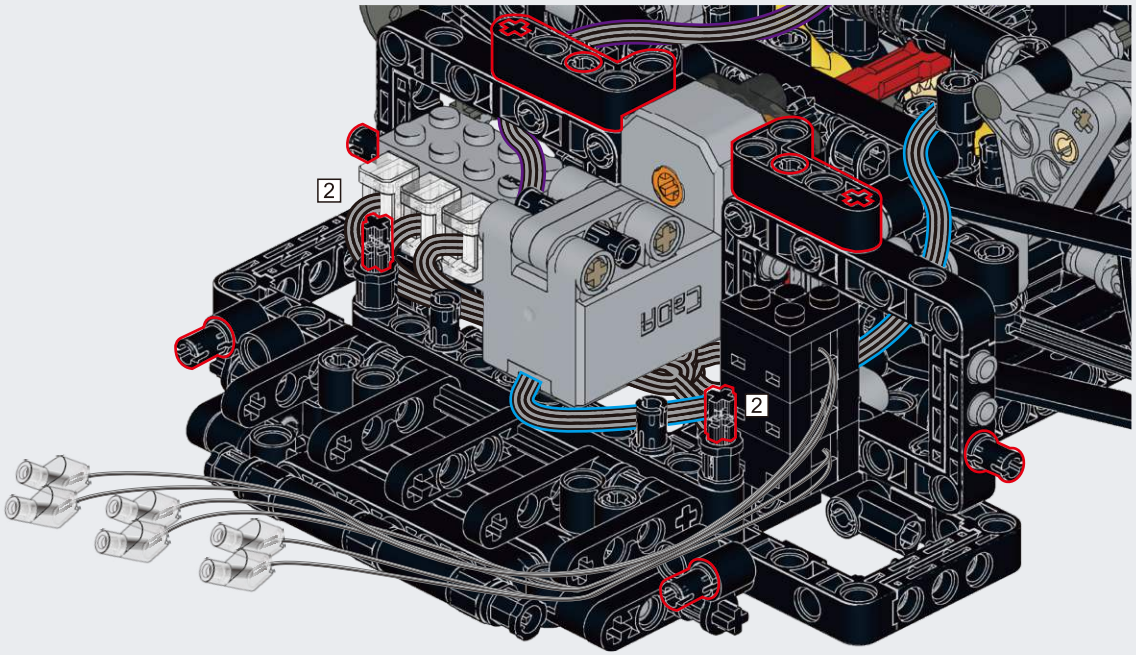

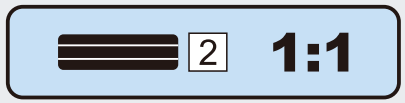

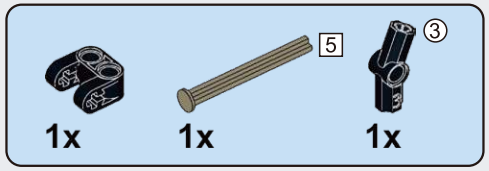

D67

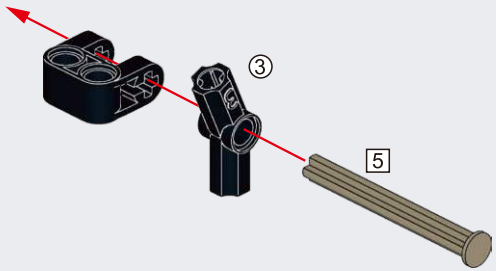

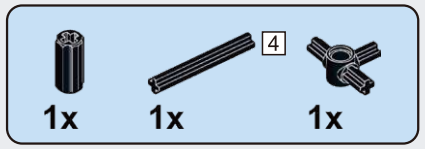

D68

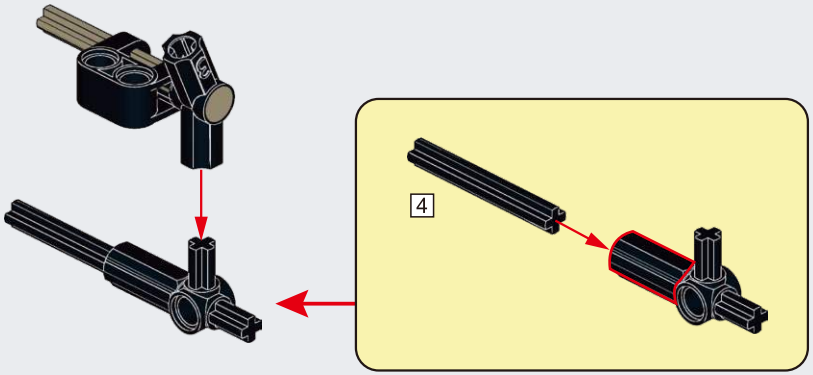

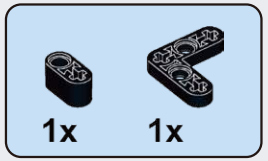

D69

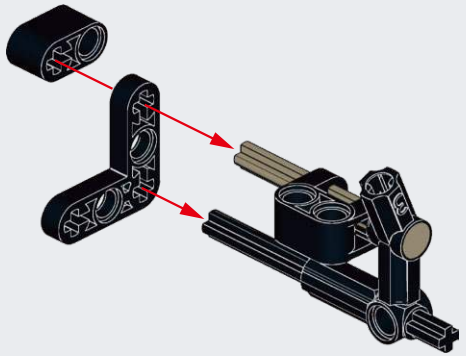

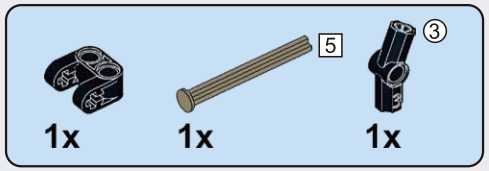

D70

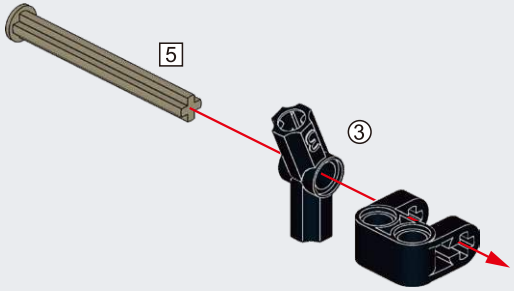

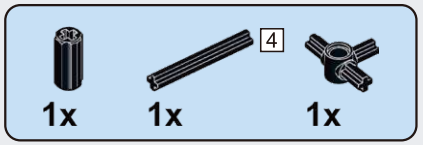

D71

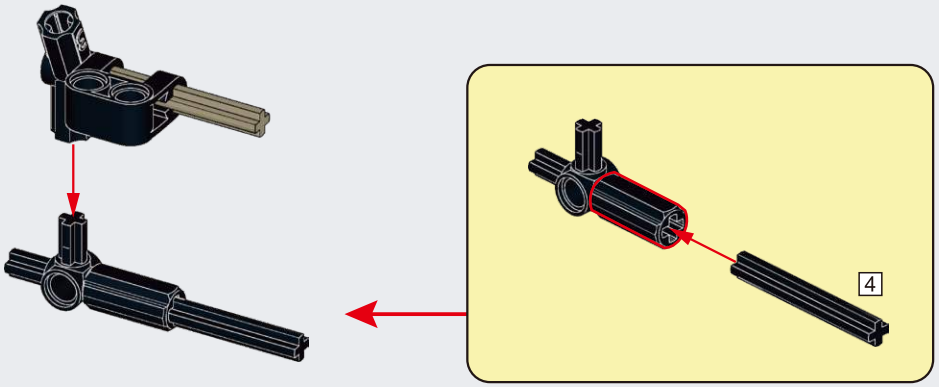

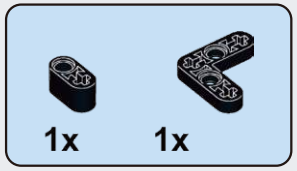

D72

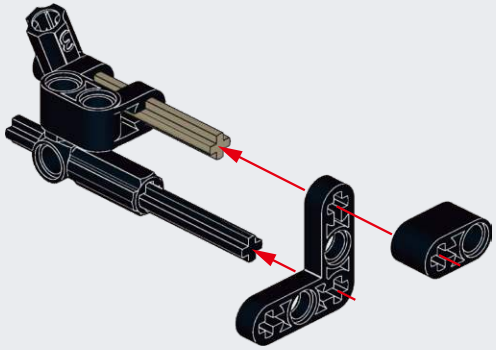

D73

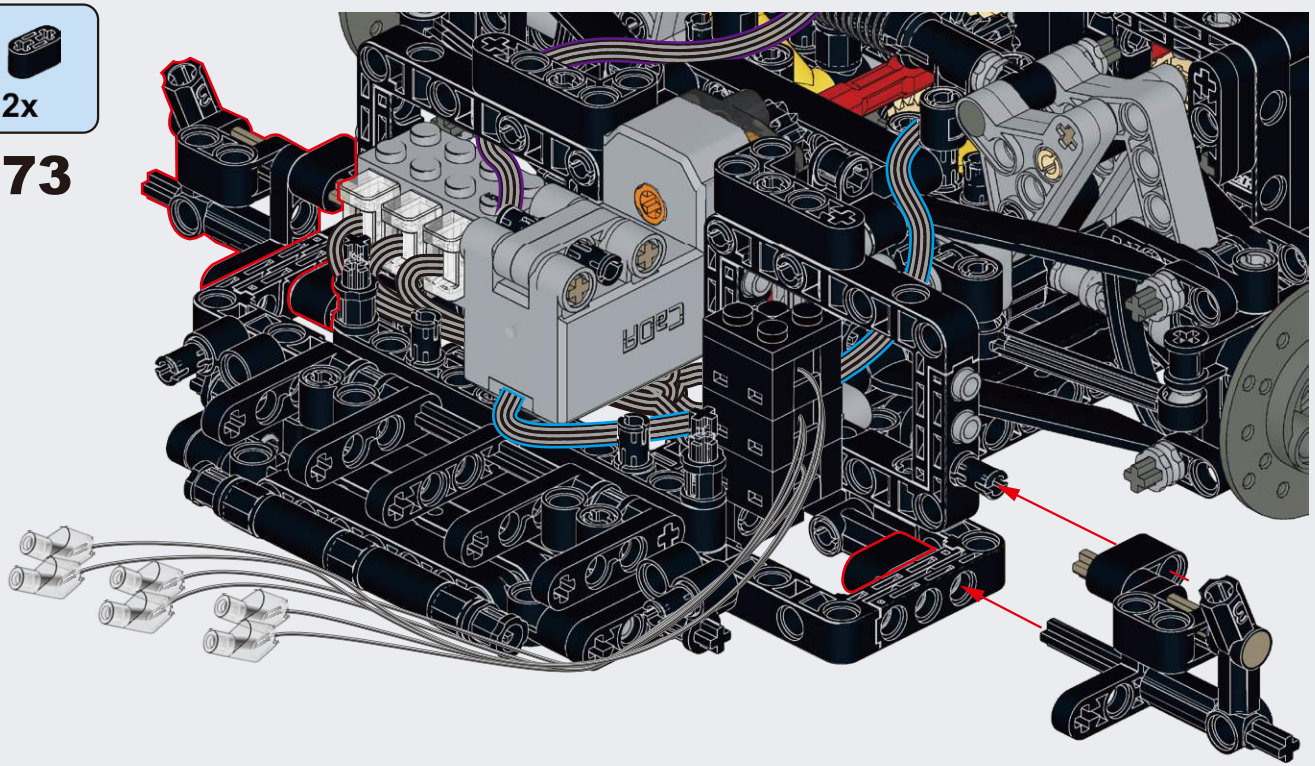

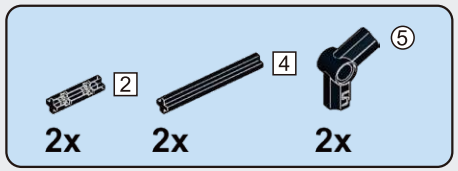

D74

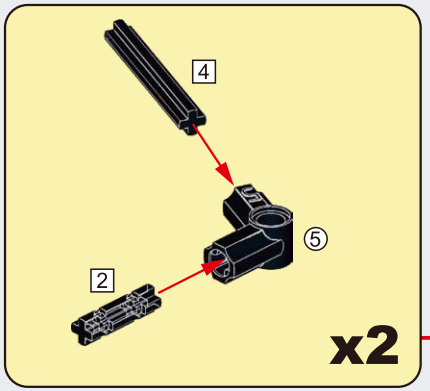

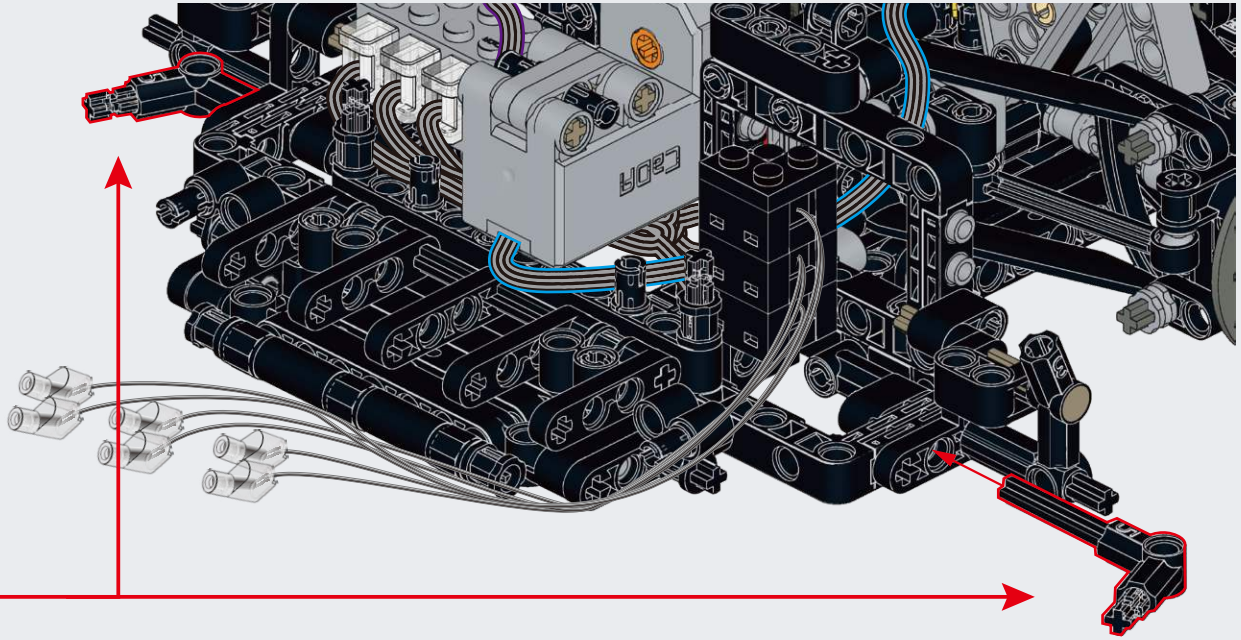

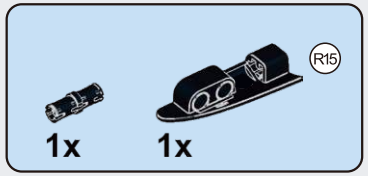

D75

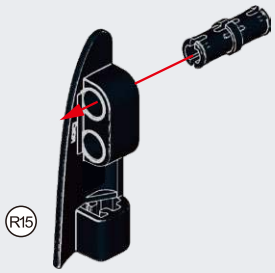

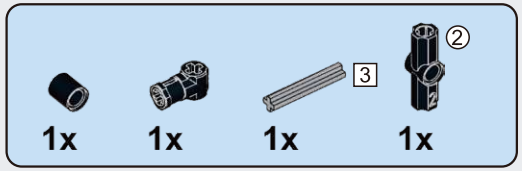

D76

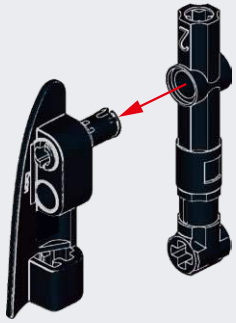

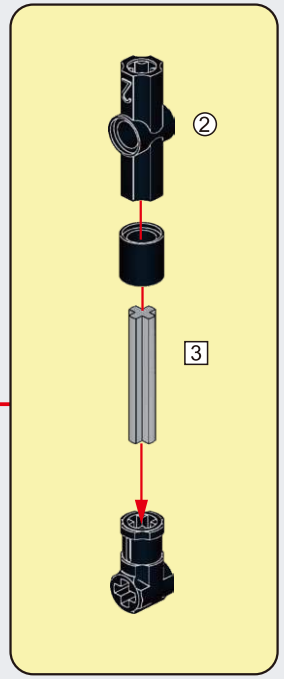

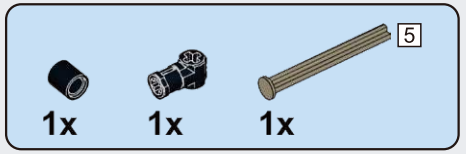

D77

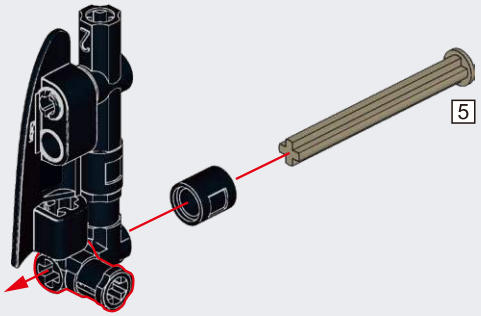

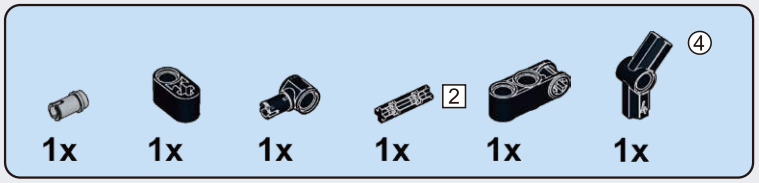

D78

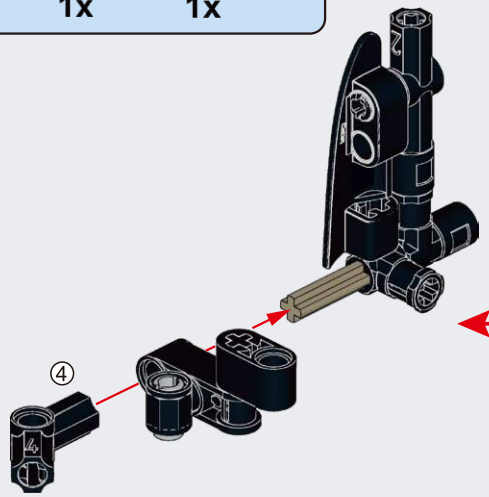

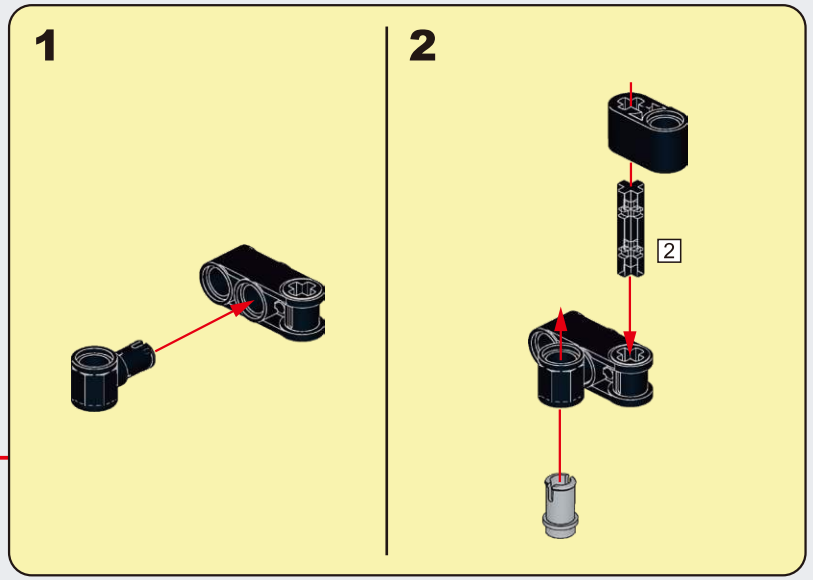

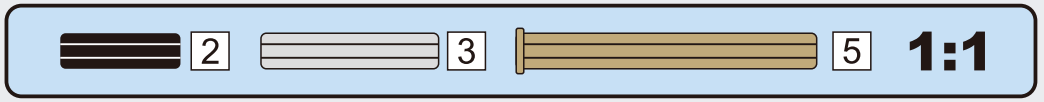

D79

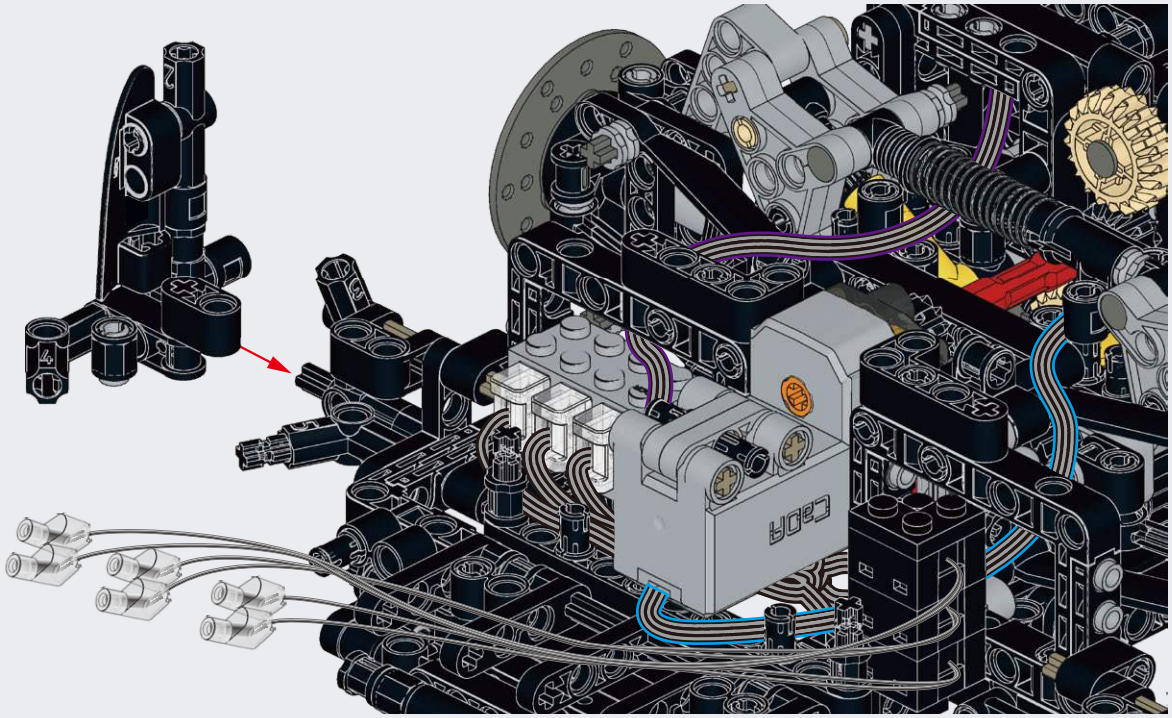

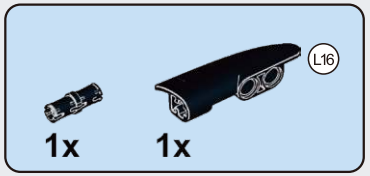

D80

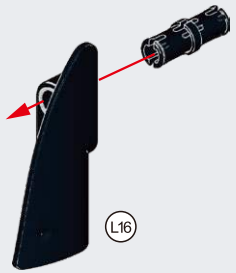

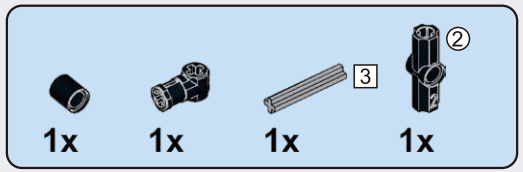

D81

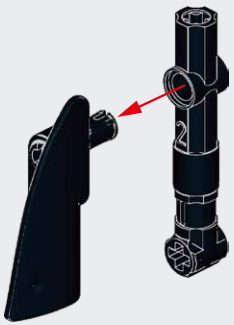

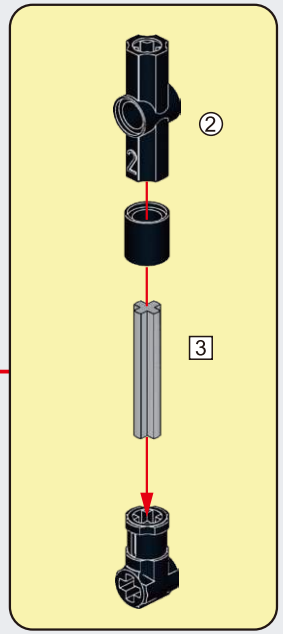

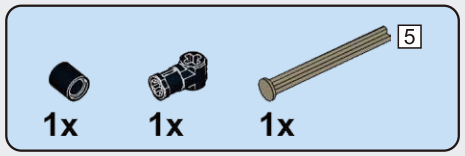

D82

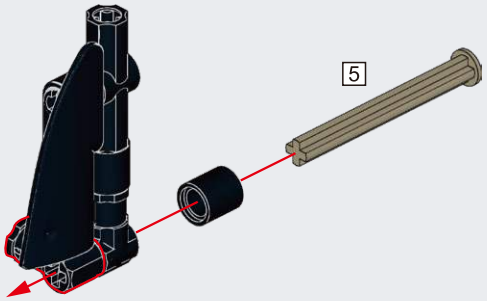

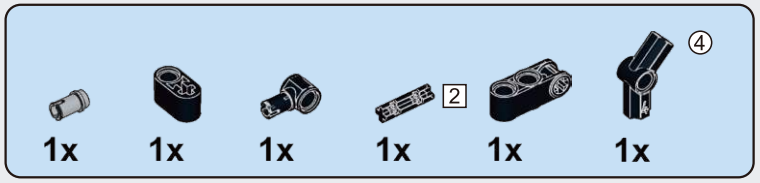

D83

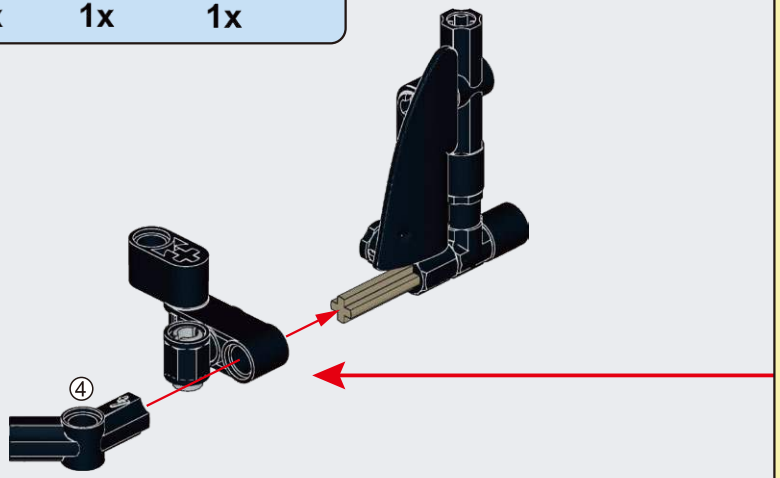

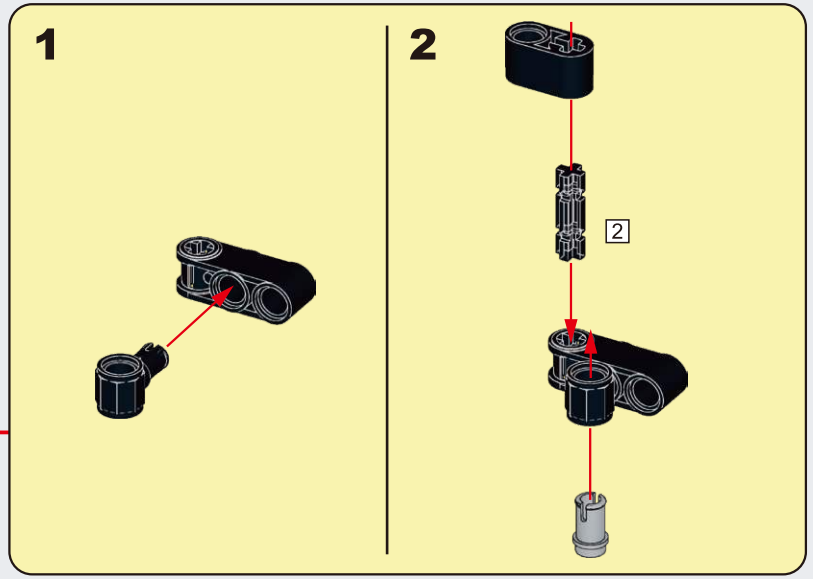

D84

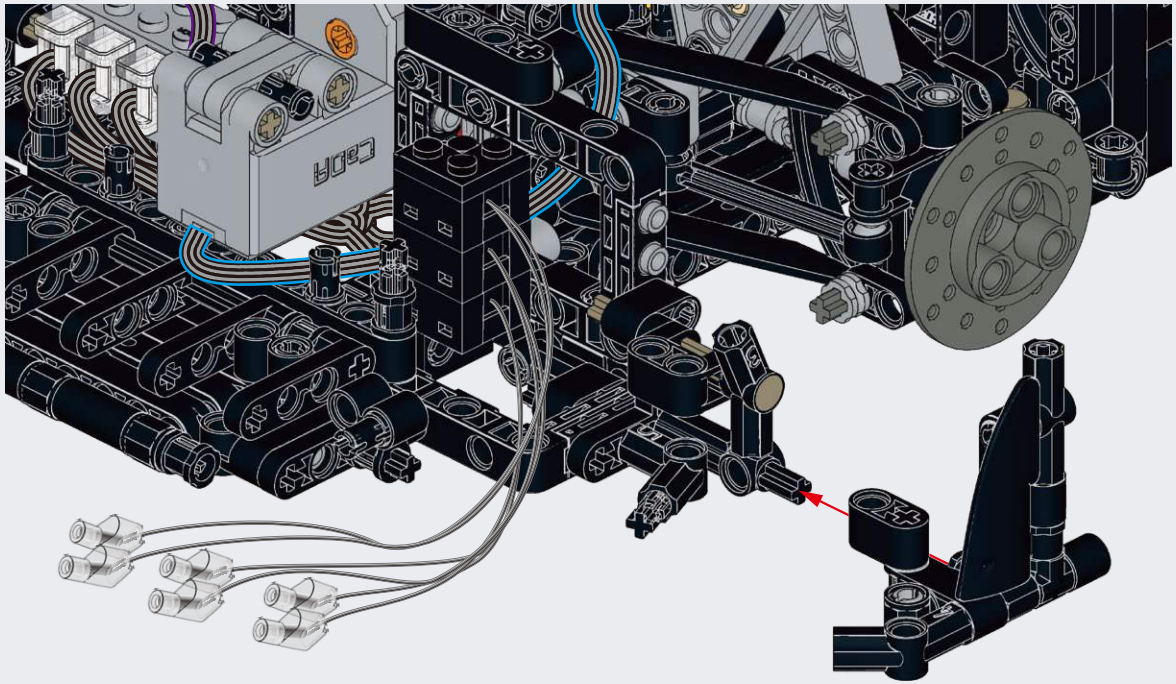

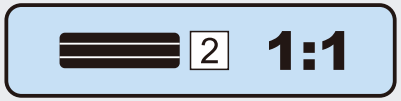

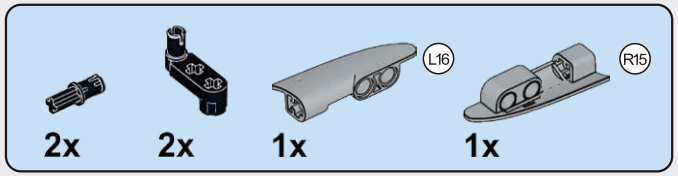

D85

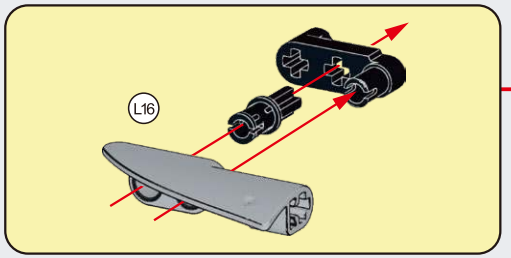

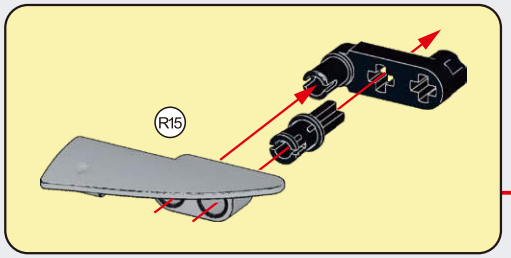

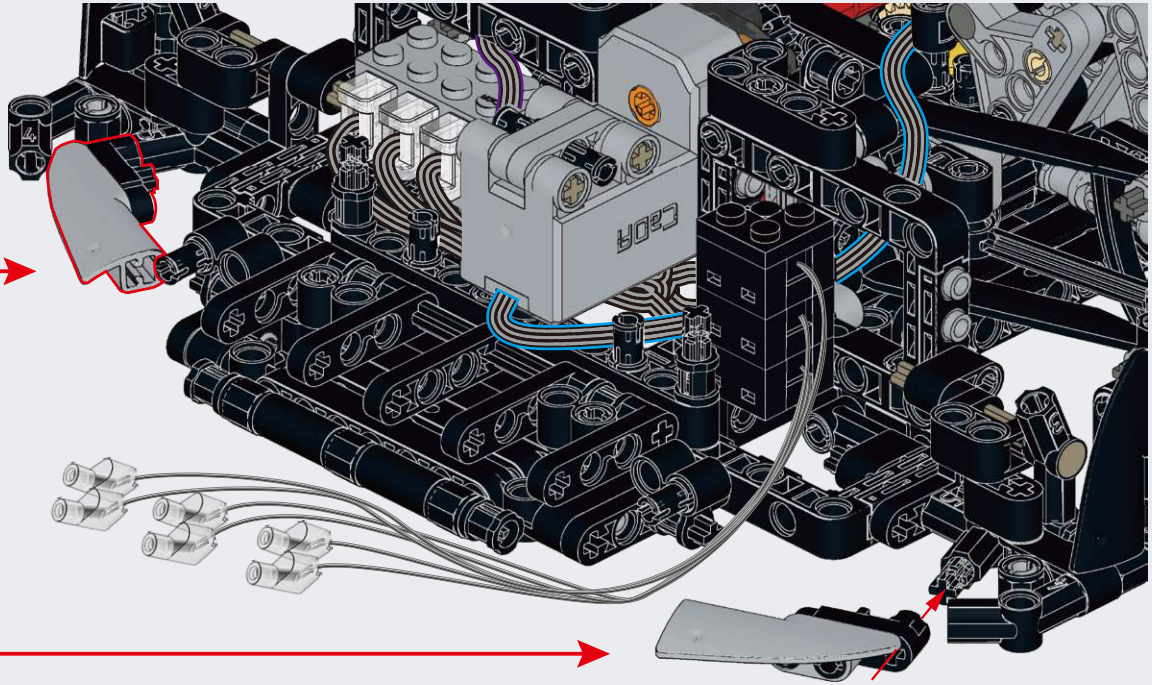

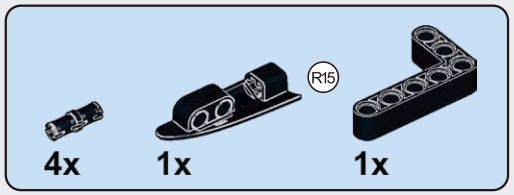

D86

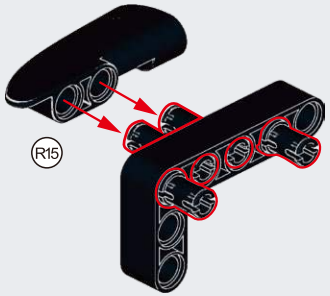

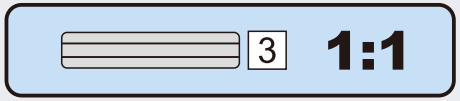

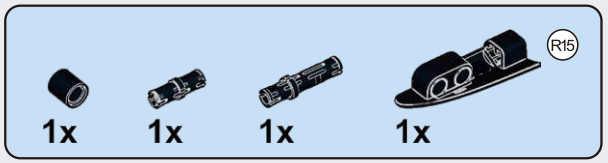

D87

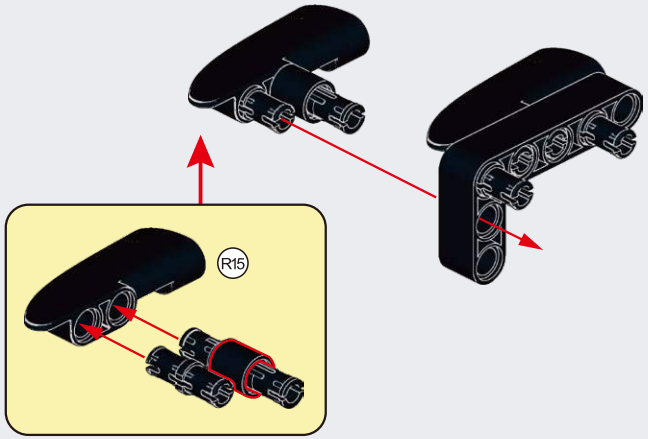

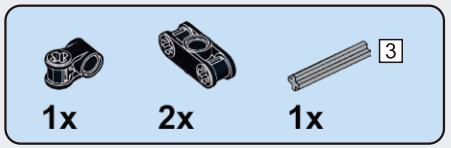

D88

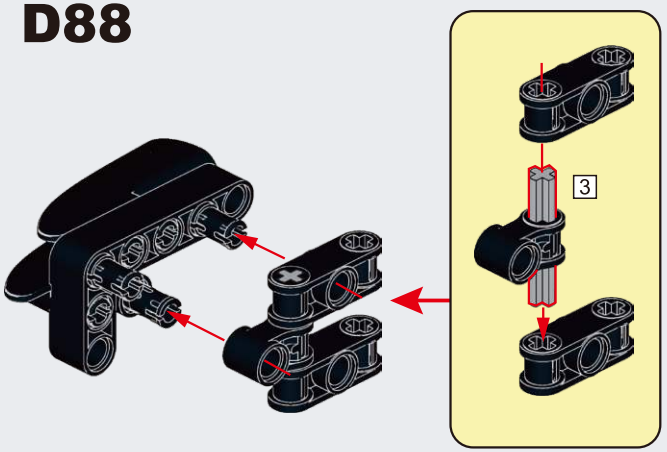

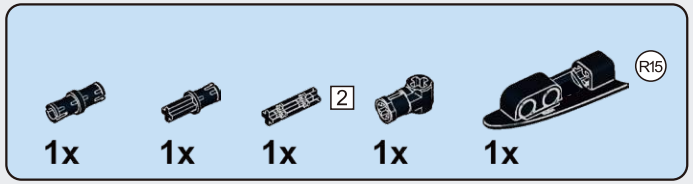

D89

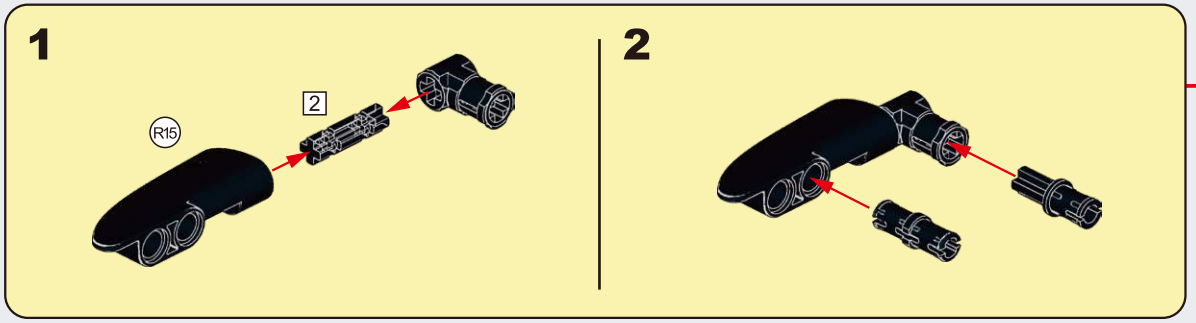

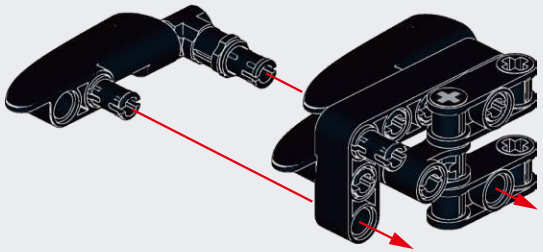

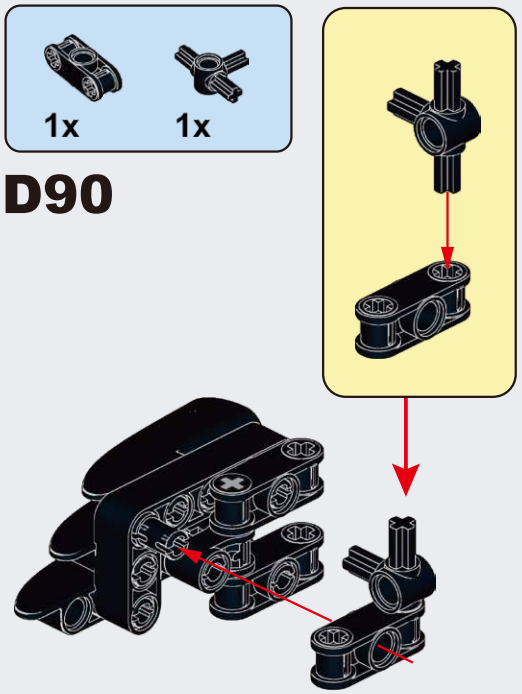

D90

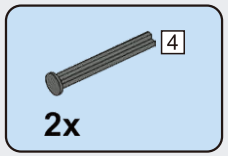

D91

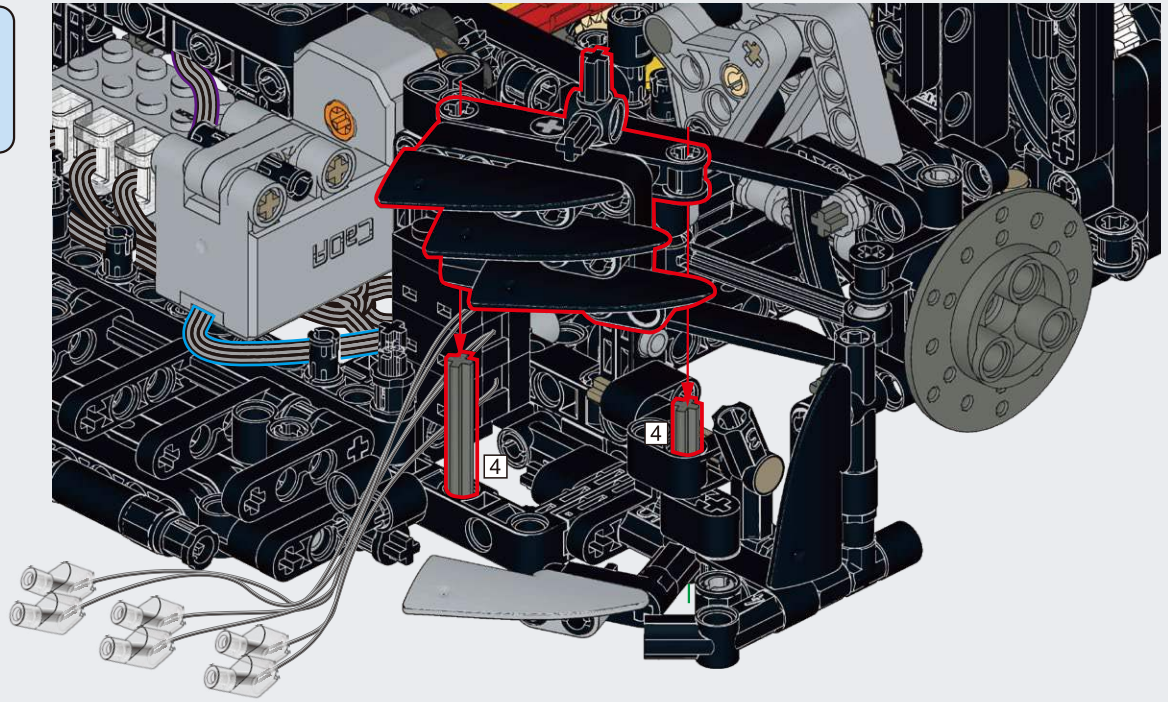

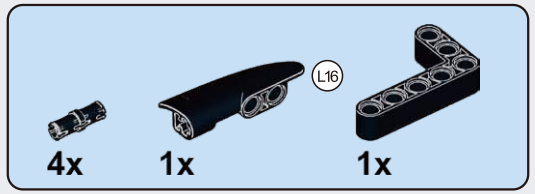

D92

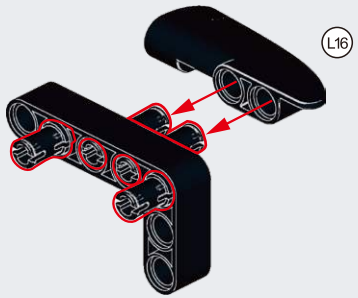

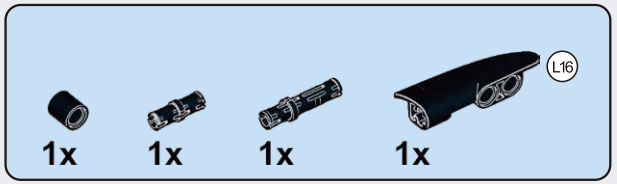

D93

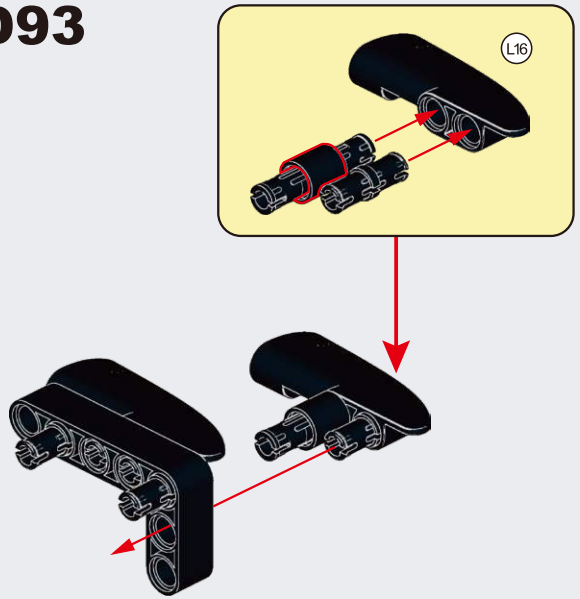

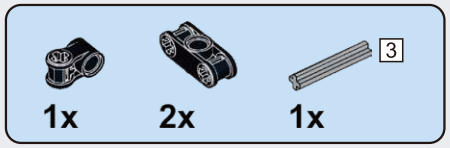

D94

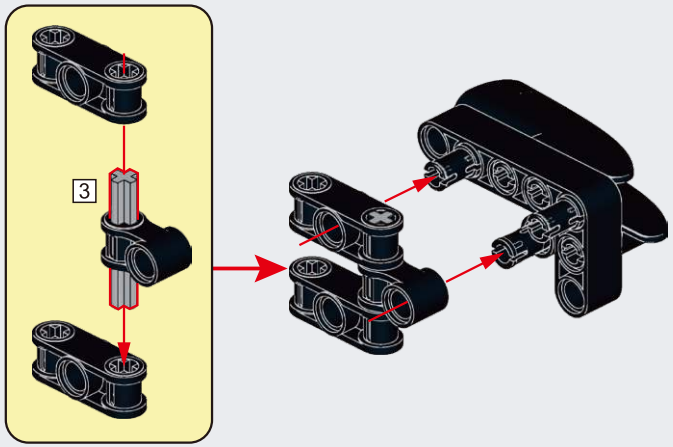

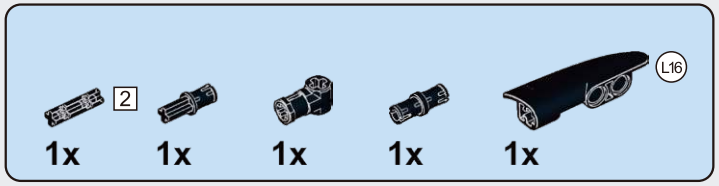

D95

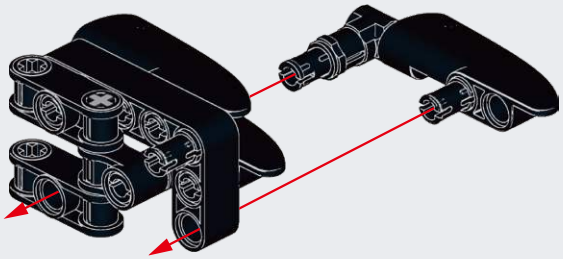

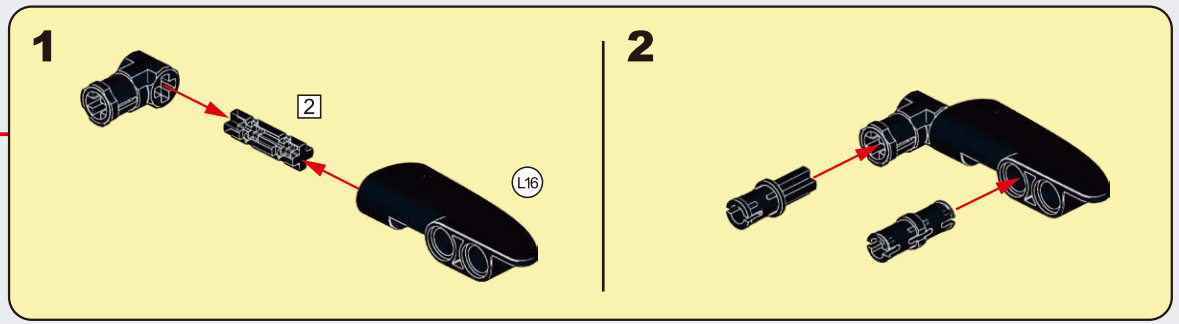

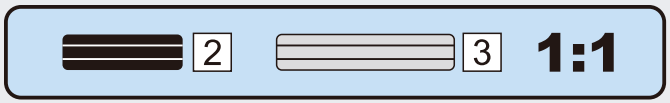

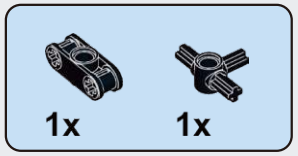

D96

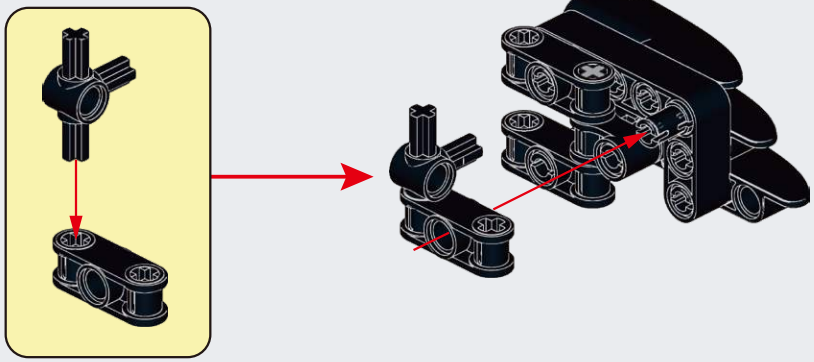

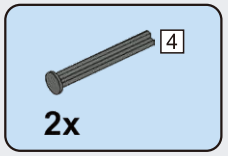

D97

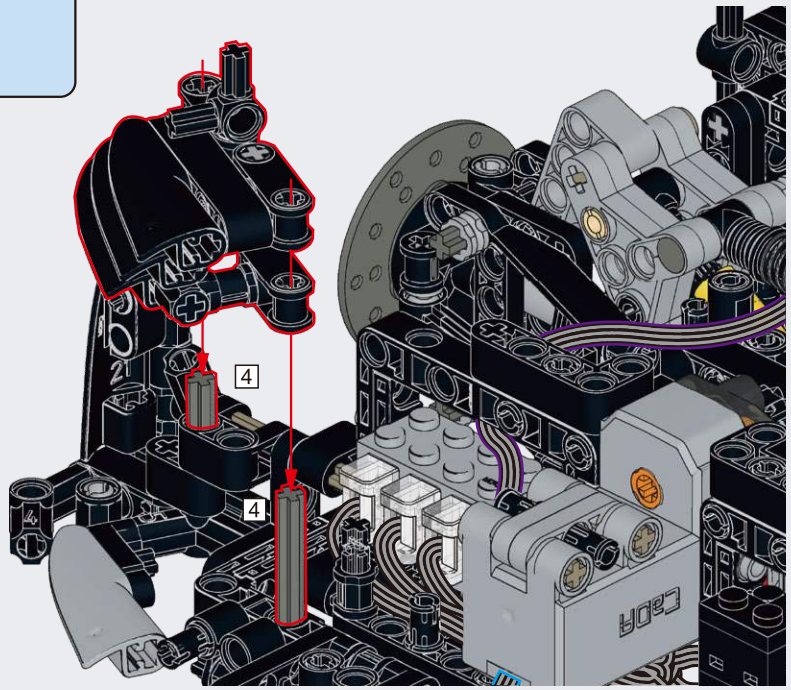

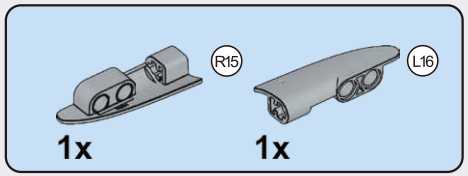

D98

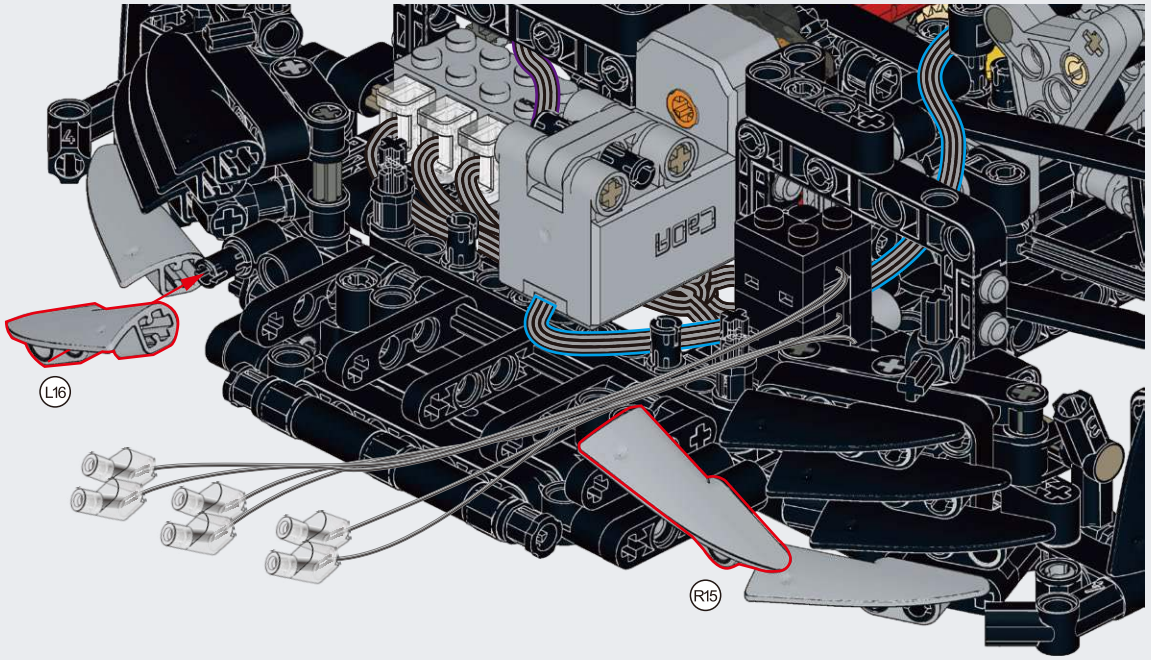

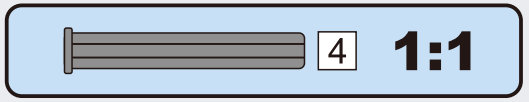

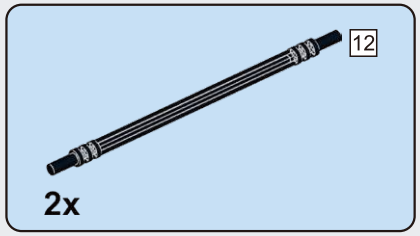

D99

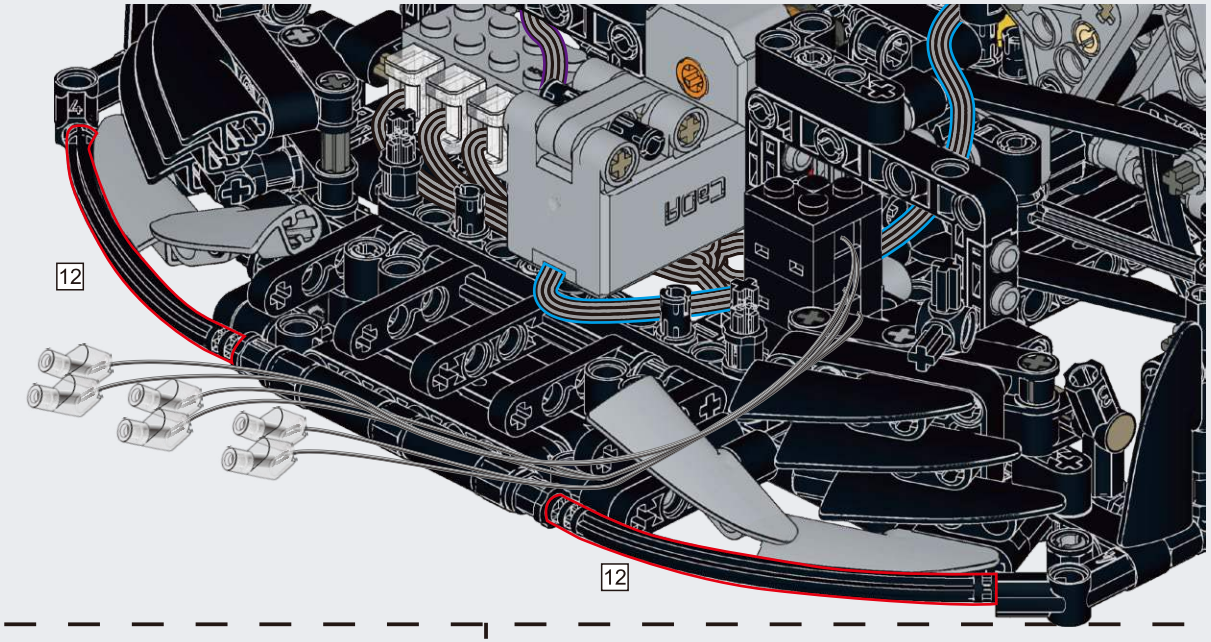

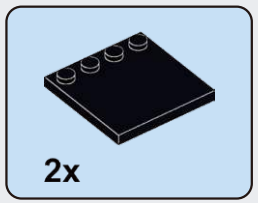

D100

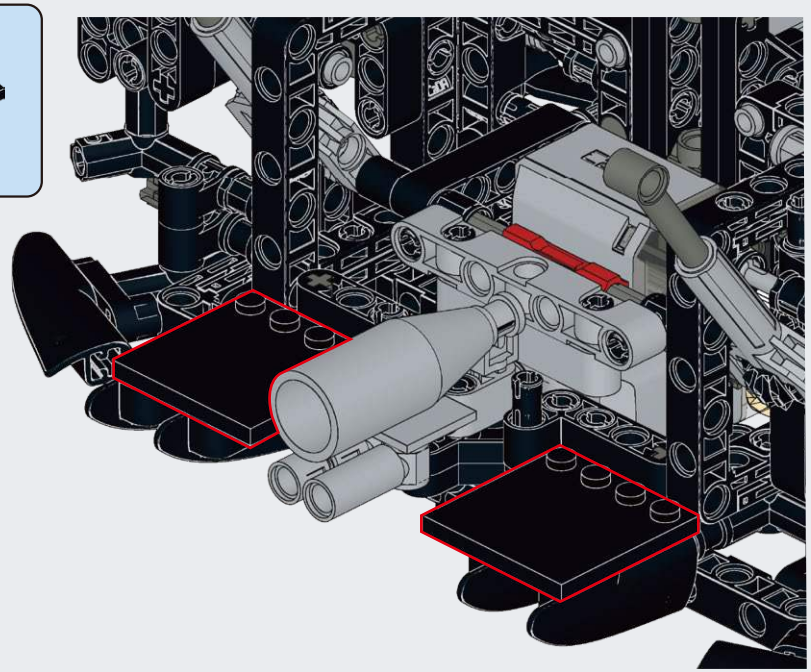

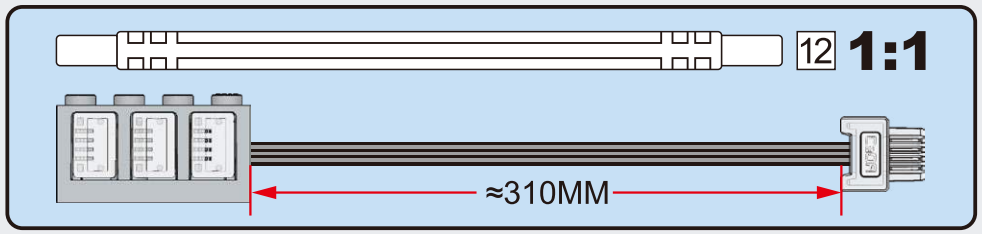

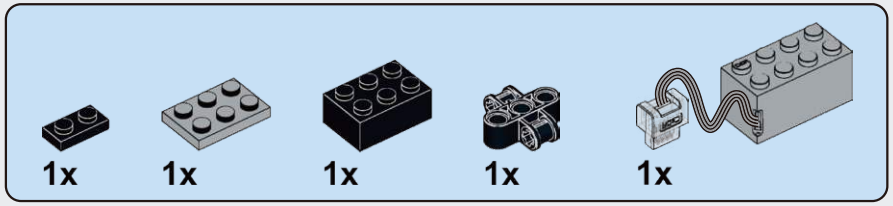

D101

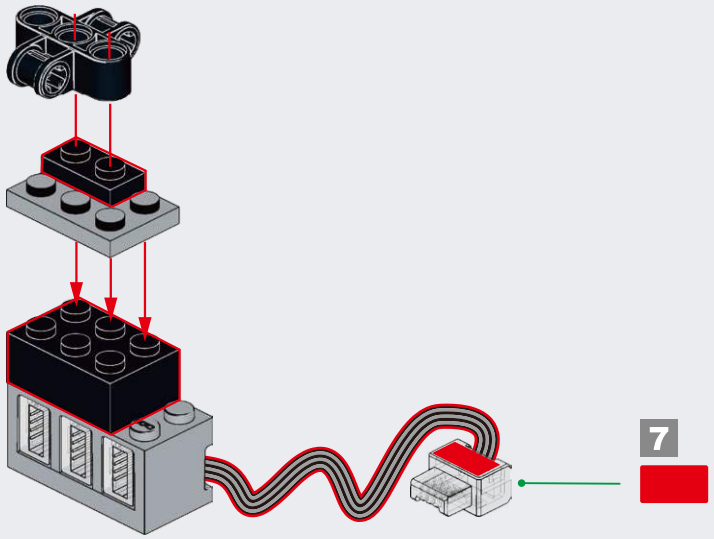

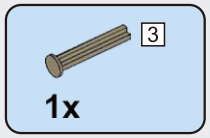

D102

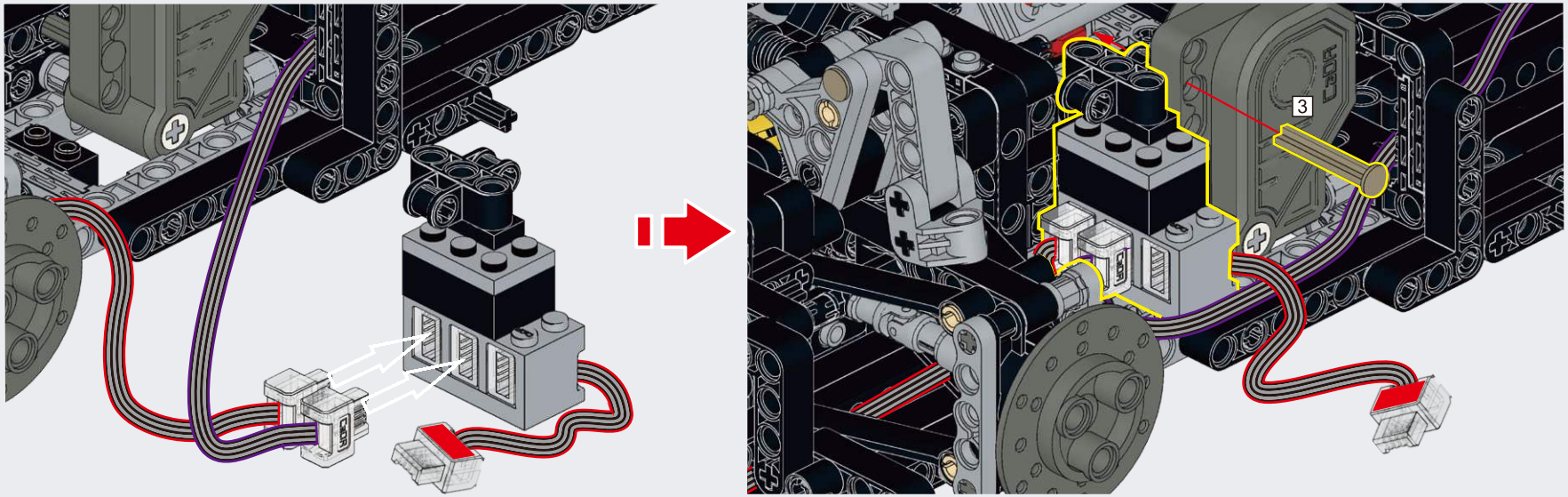

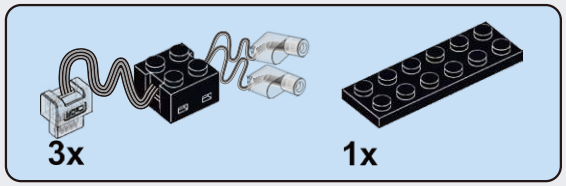

D103

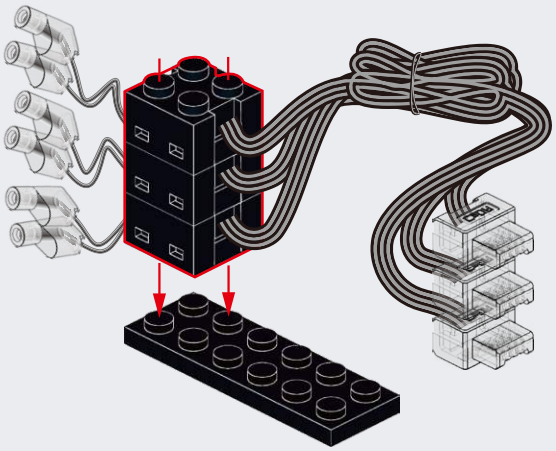

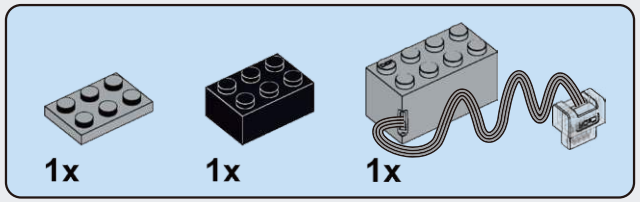

D104

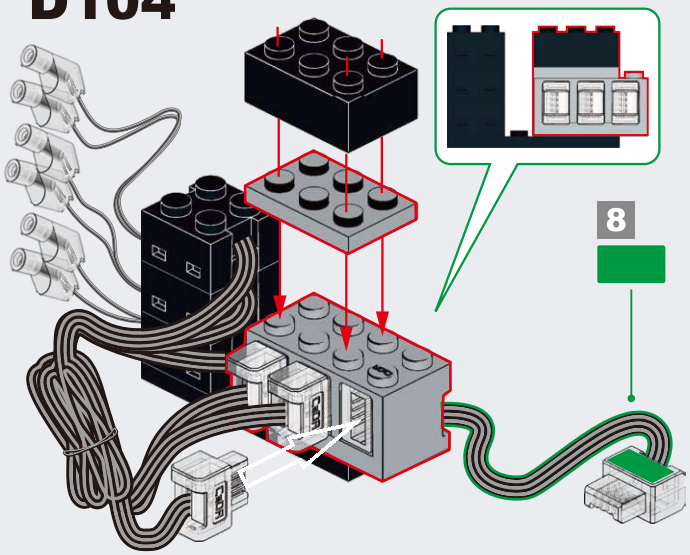

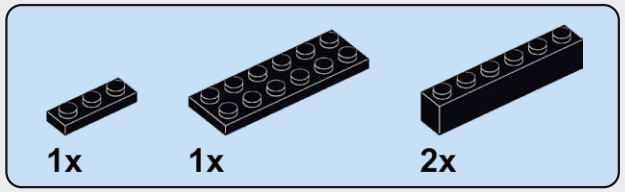

D105

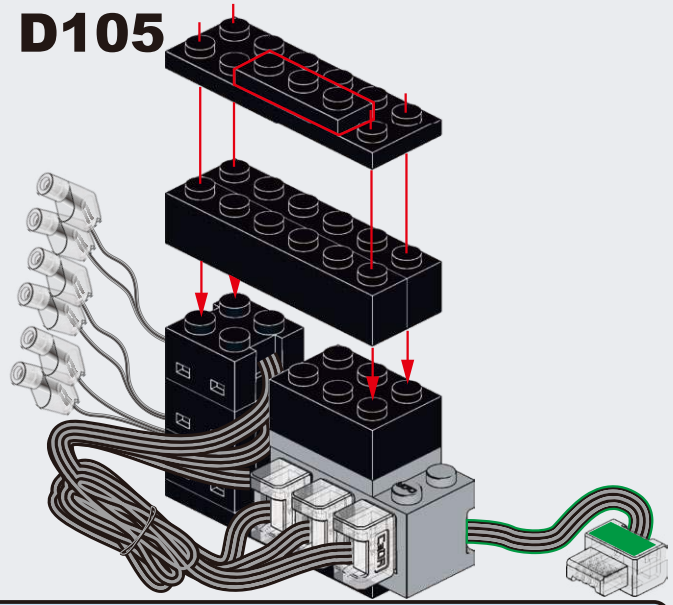

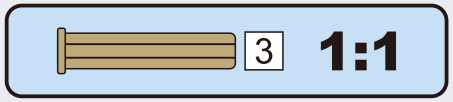

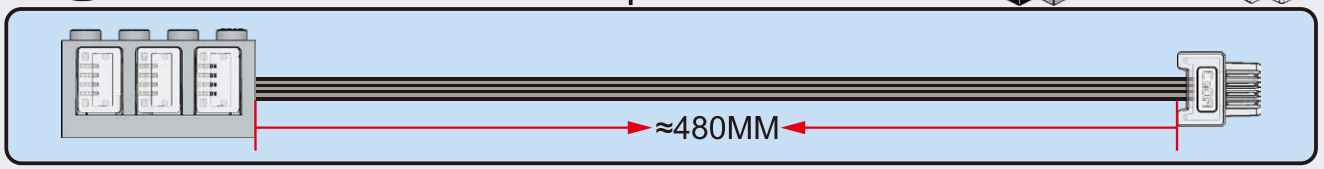

D106

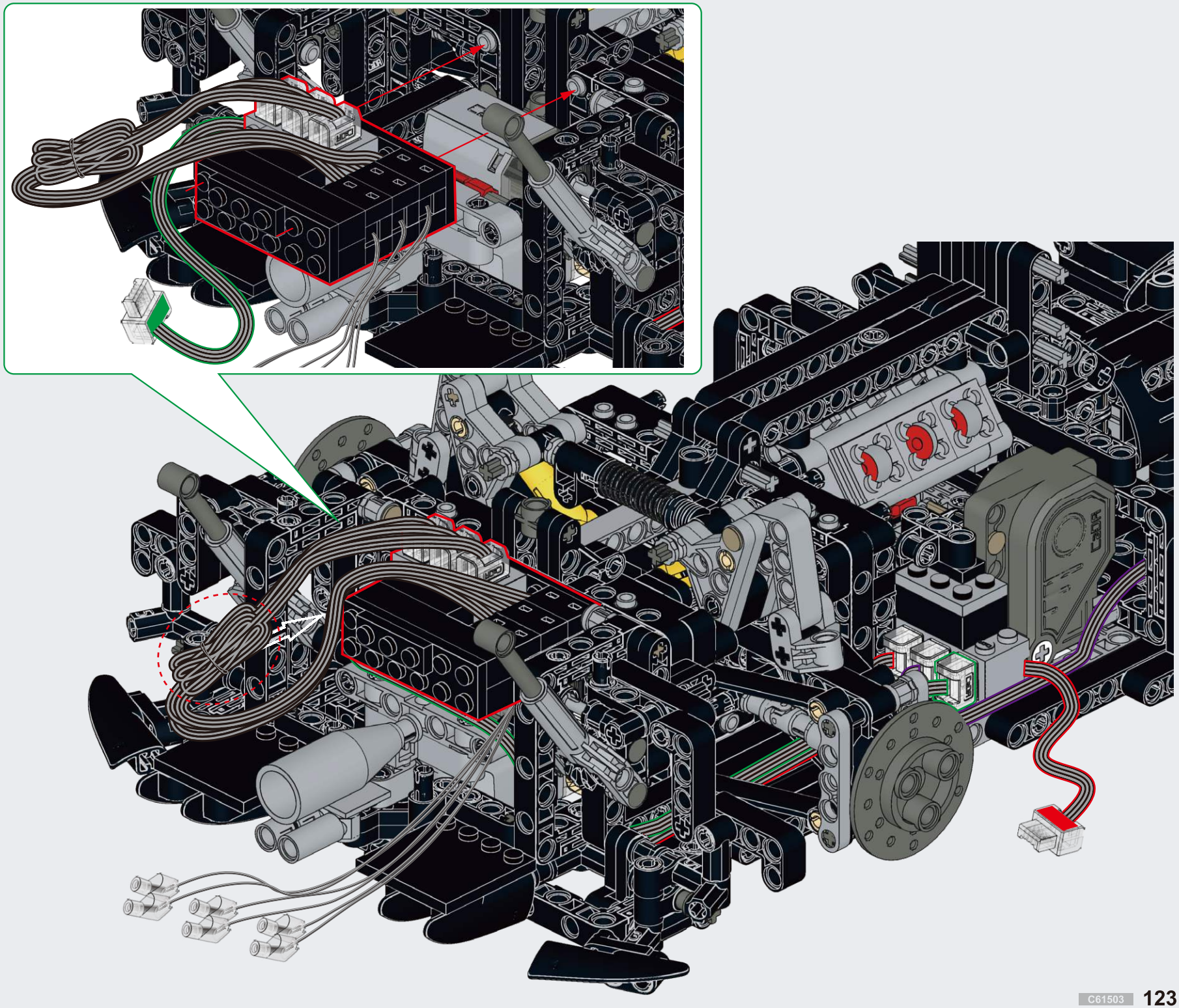

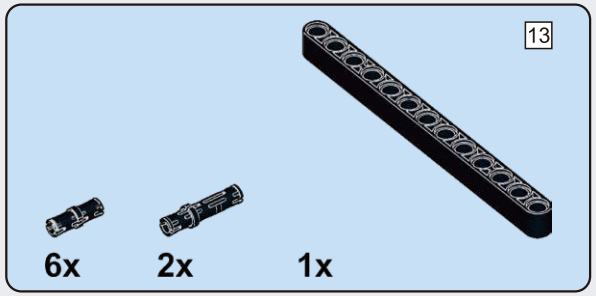

D107

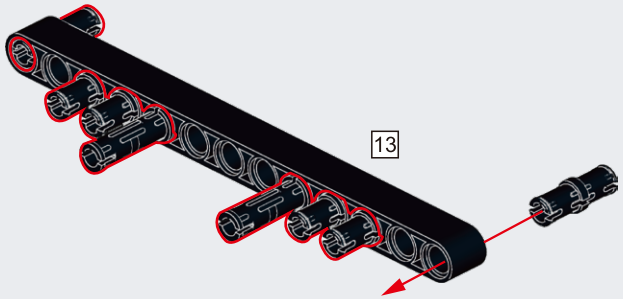

D108

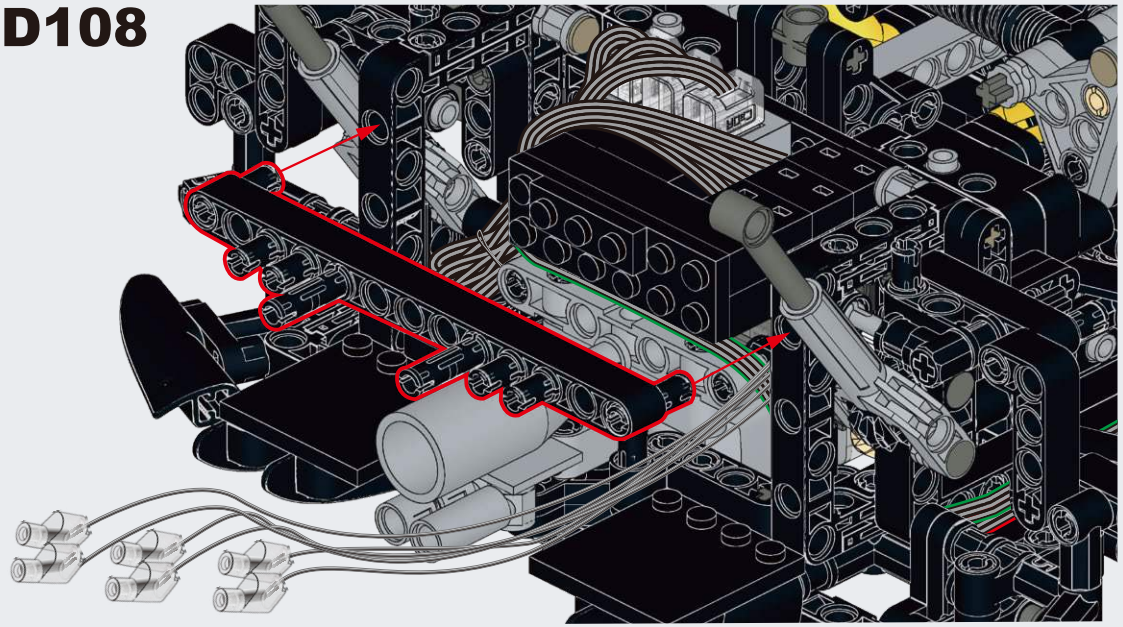

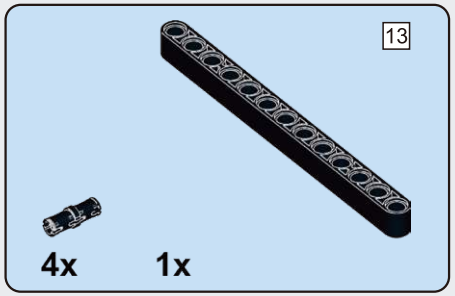

D109

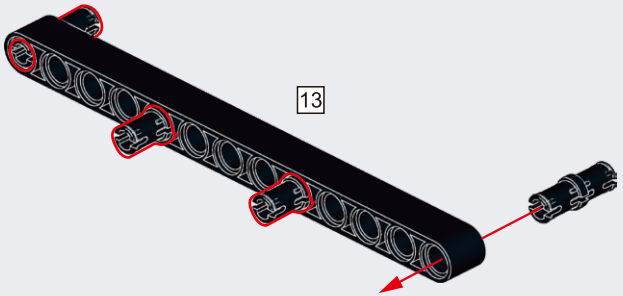

D110

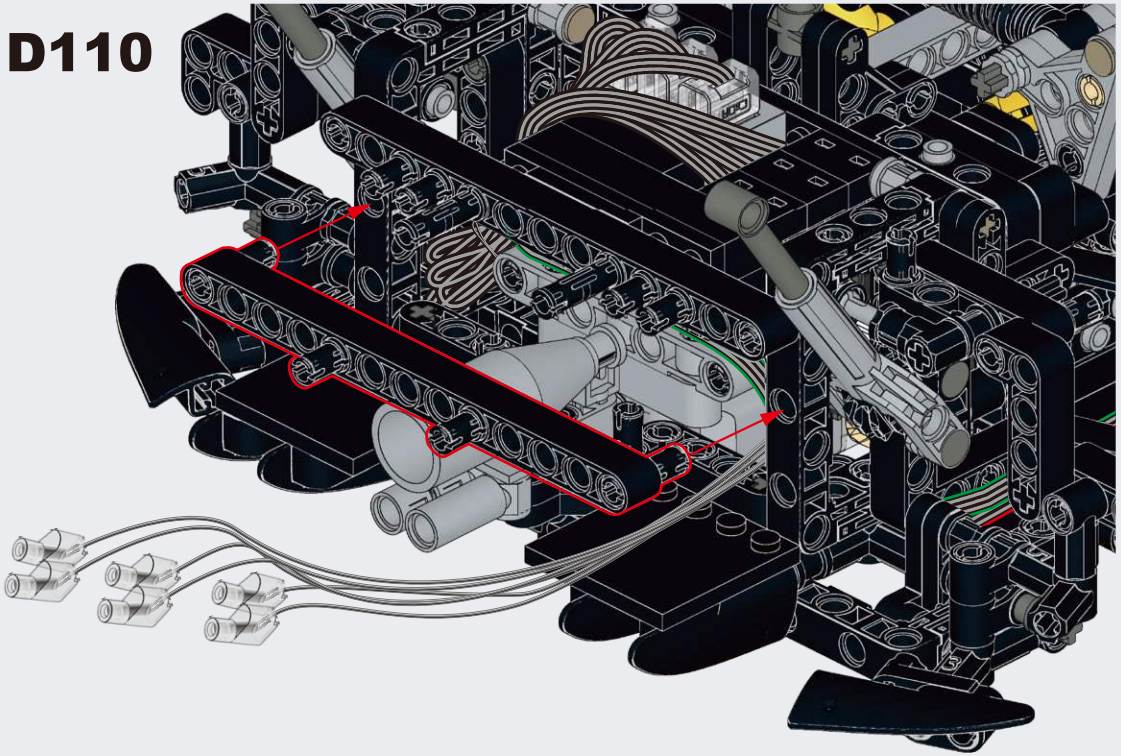

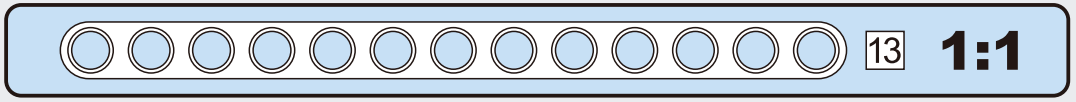

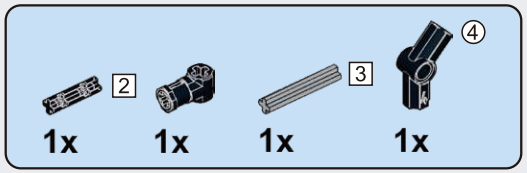

D111

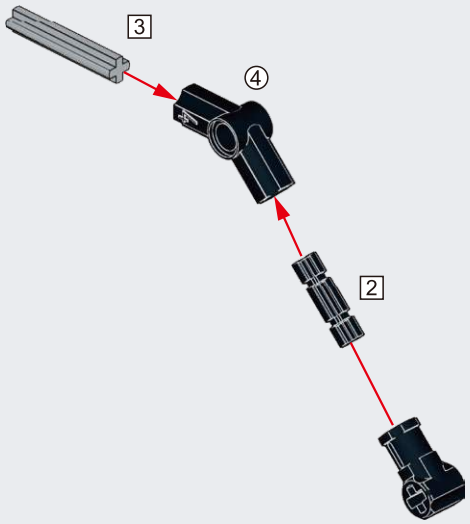

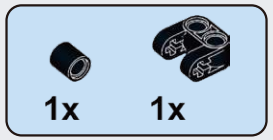

D112

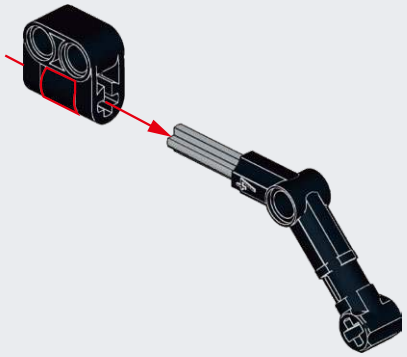

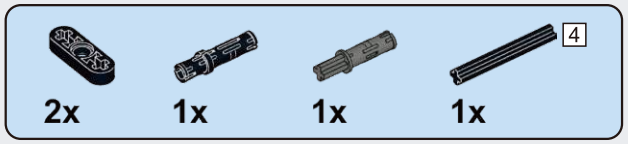

D113

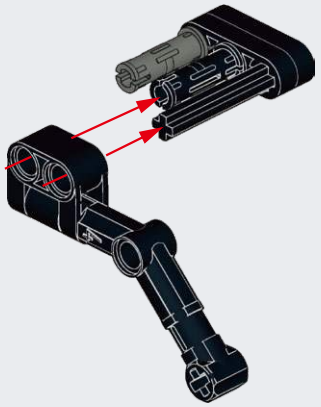

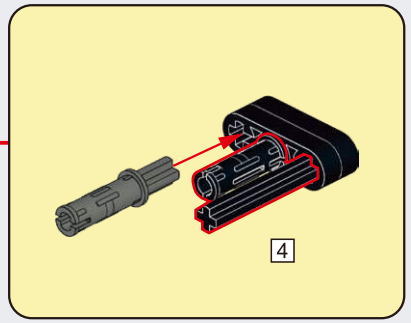

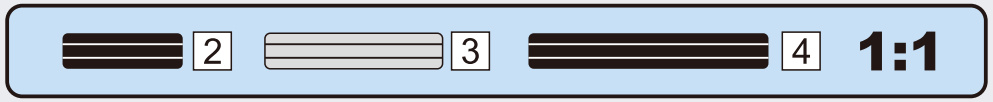

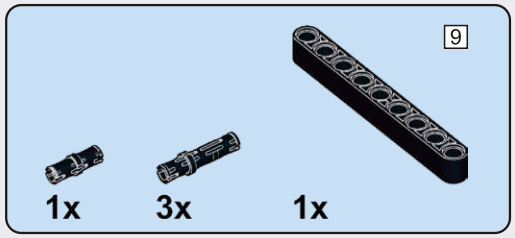

D114

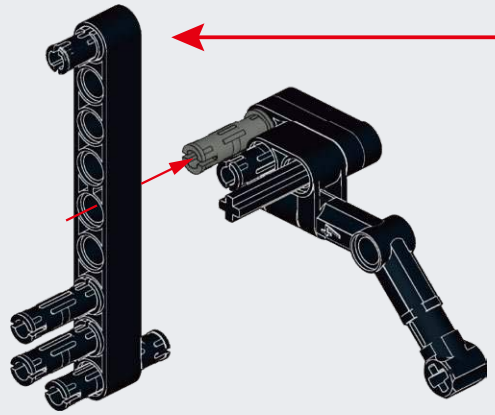

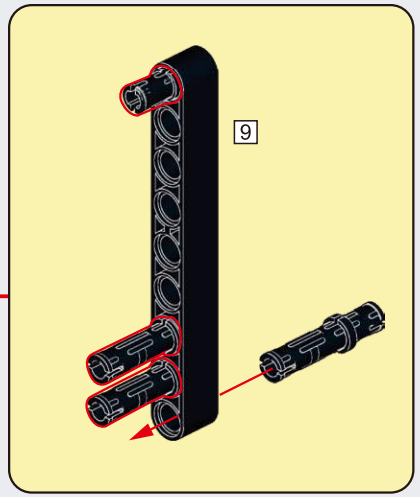

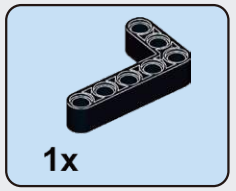

D115

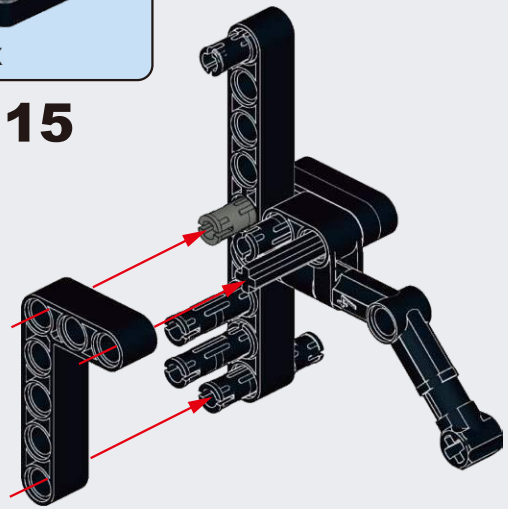

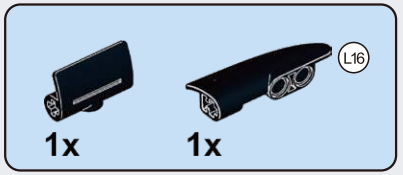

D116

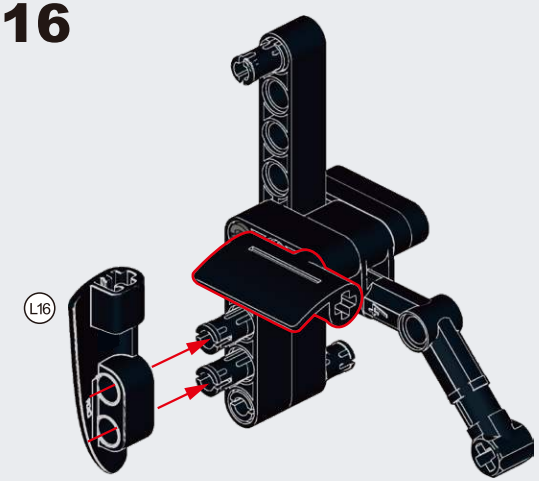

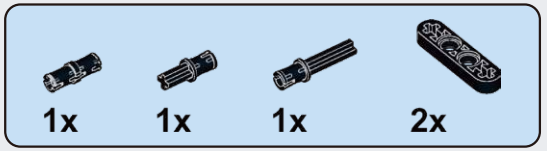

D117

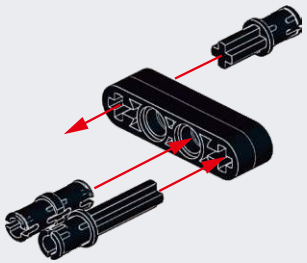

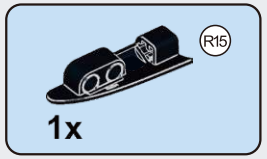

D118

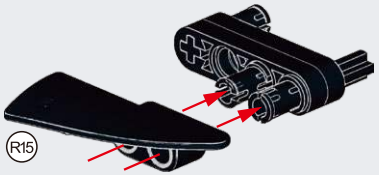

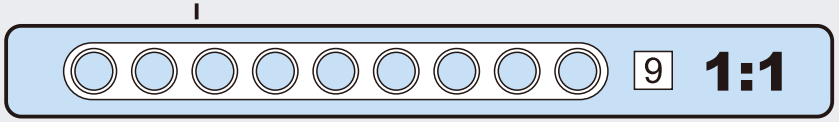

D119

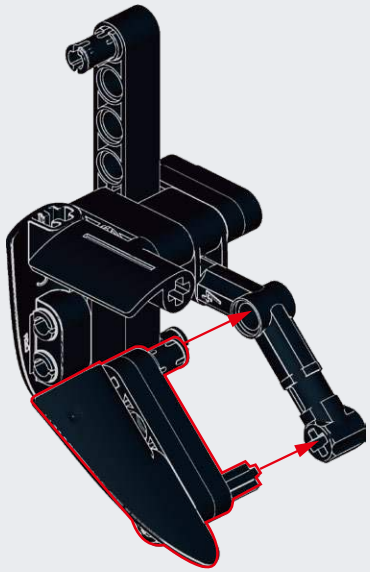

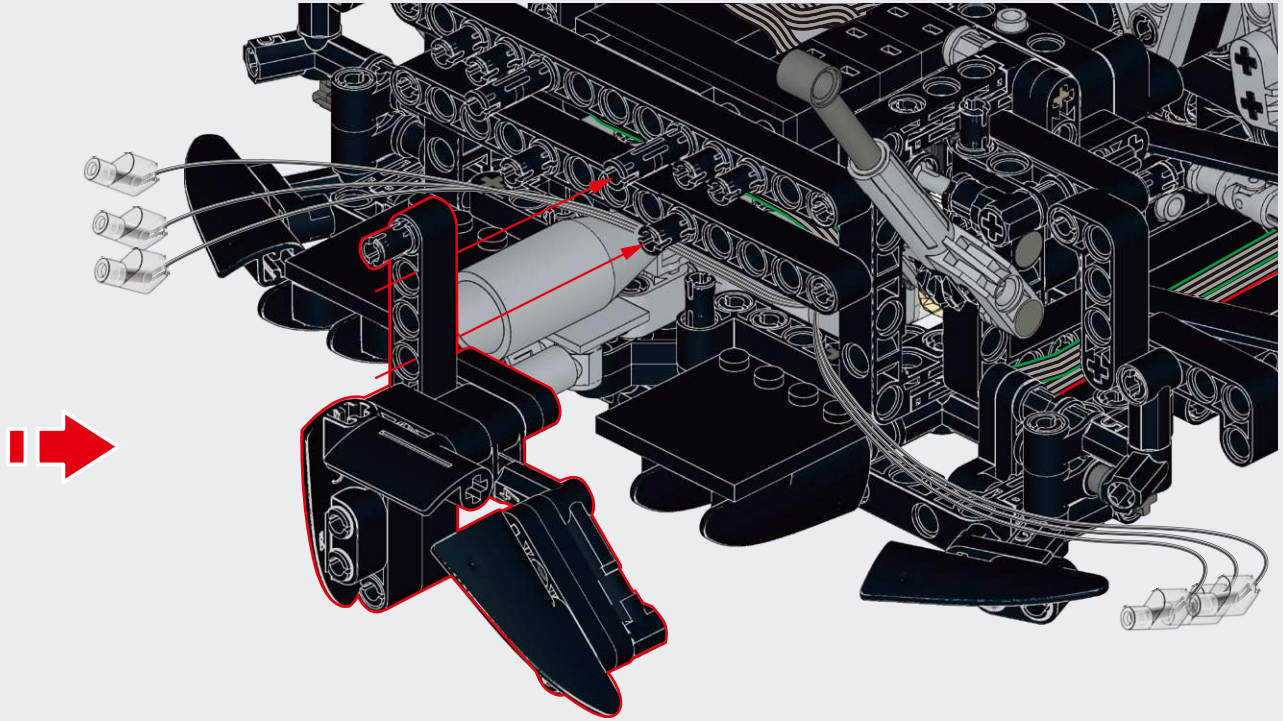

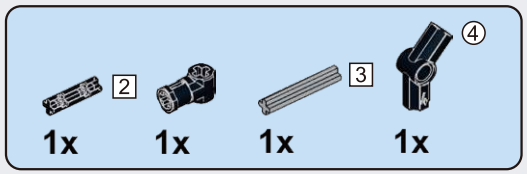

D120

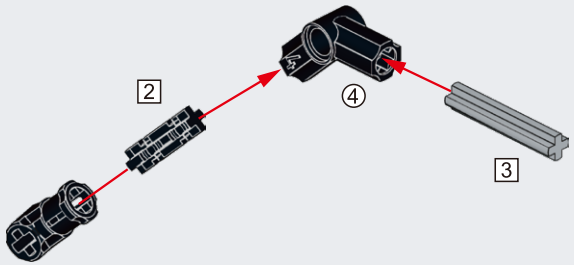

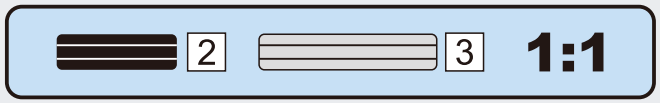

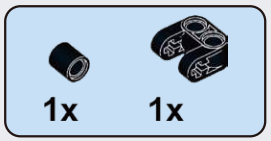

D121

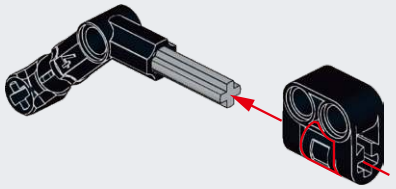

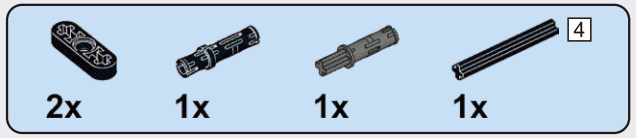

D122

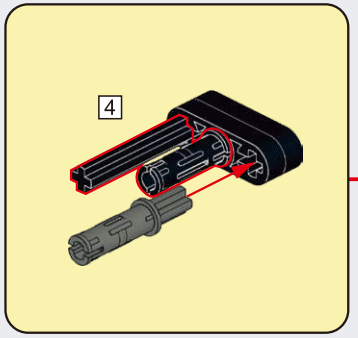

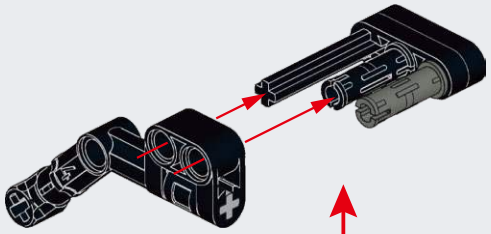

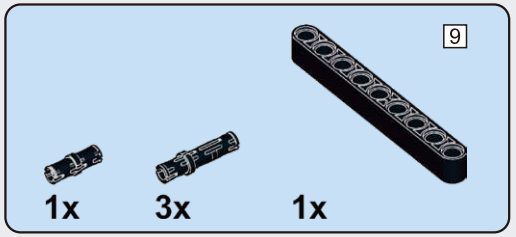

D123

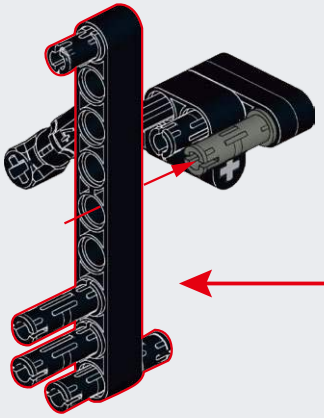

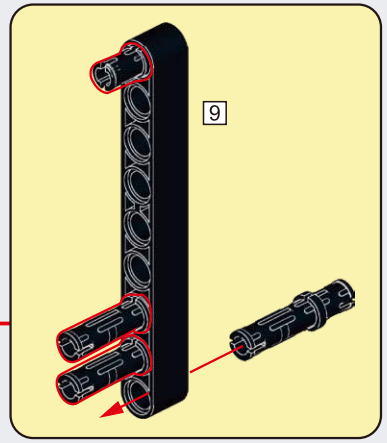

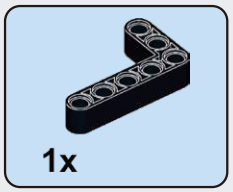

D124

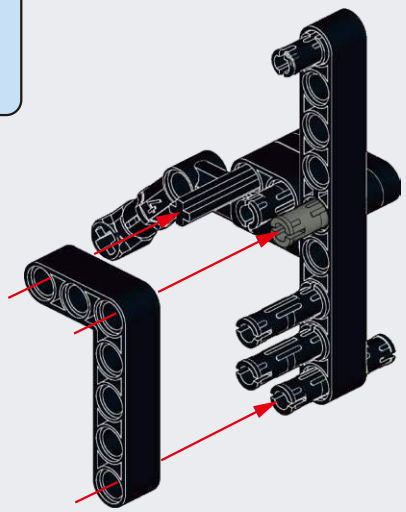

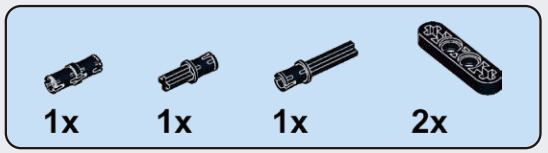

D125

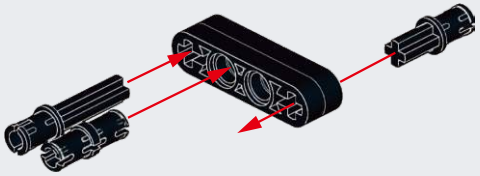

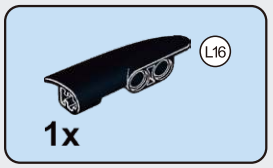

D126

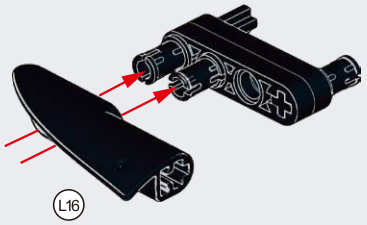

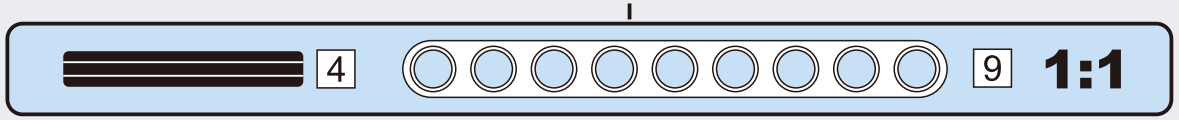

D127

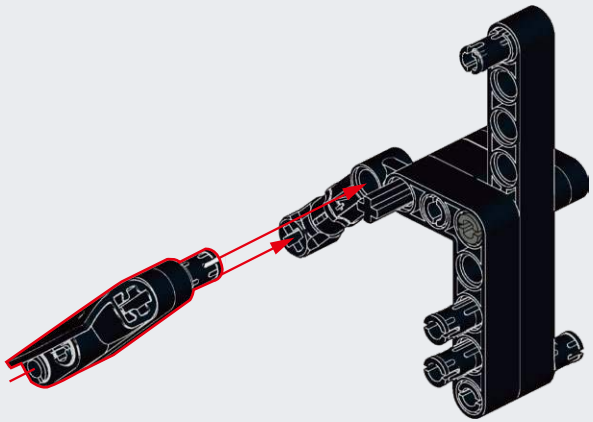

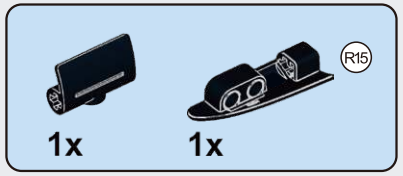

D128

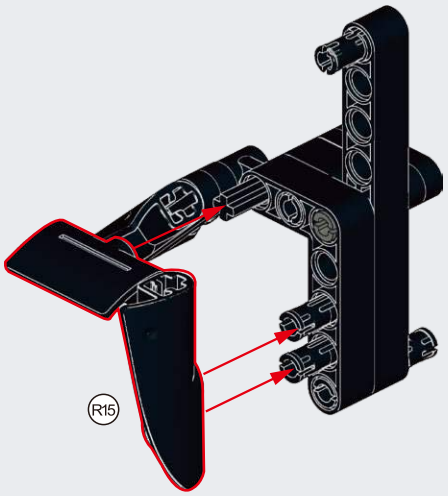

D129

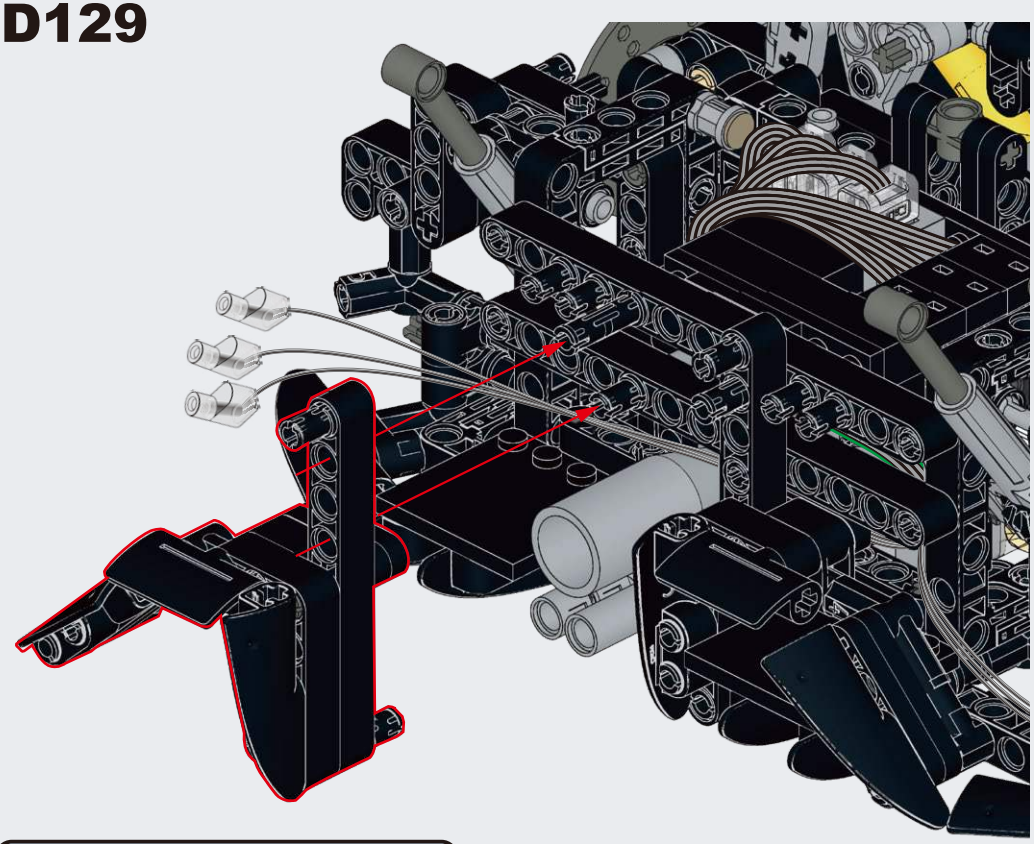

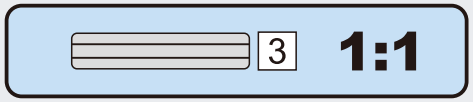

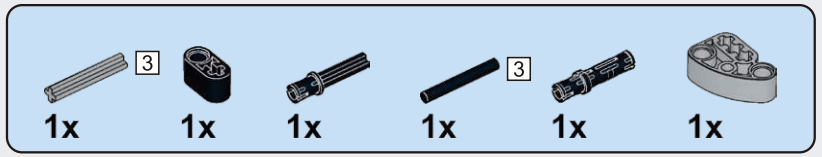

D130

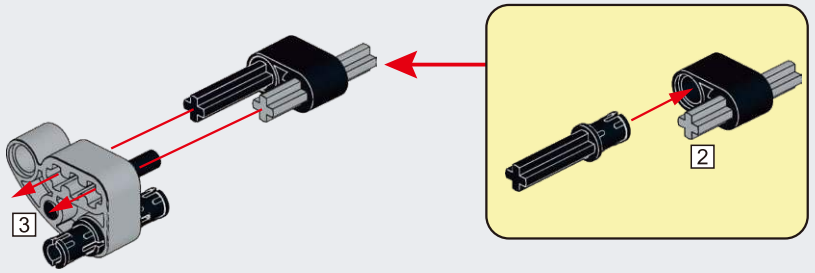

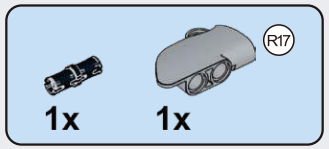

D131

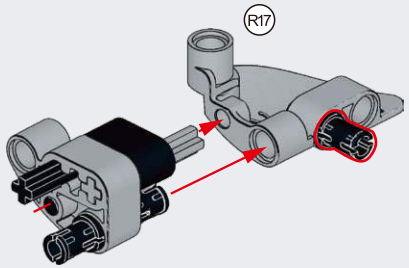

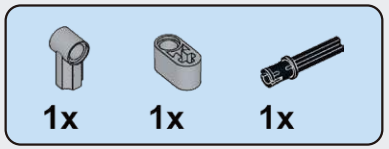

D132

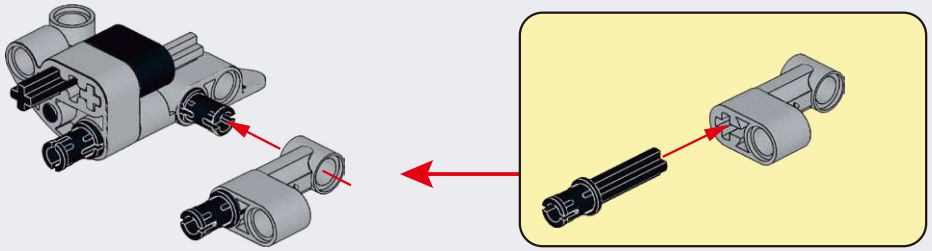

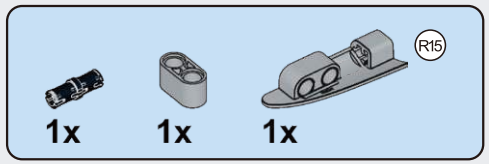

D133

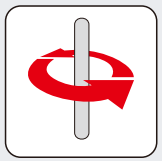

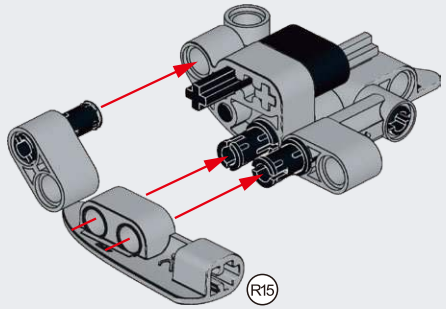

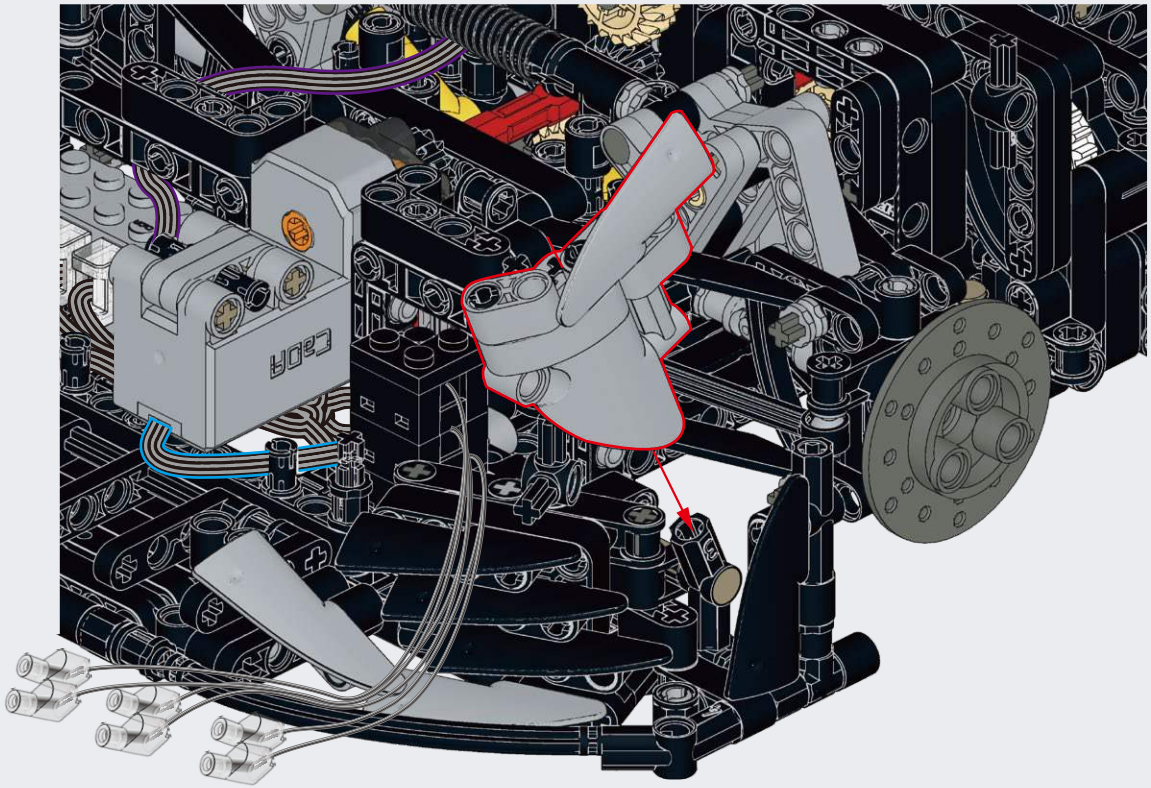

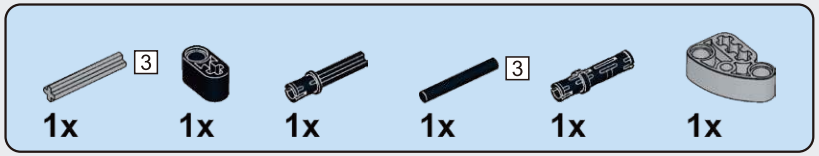

D134

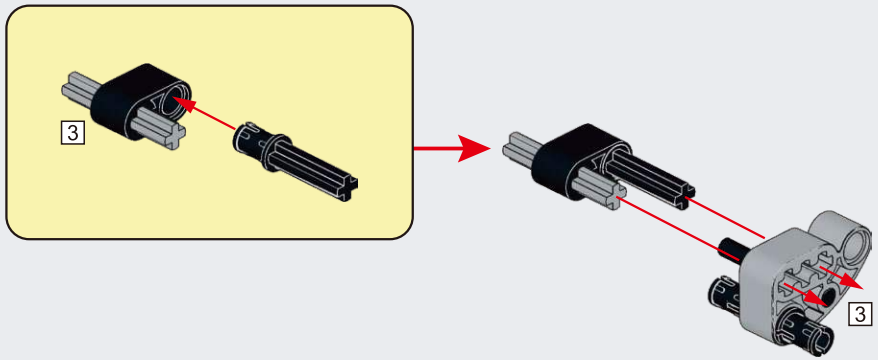

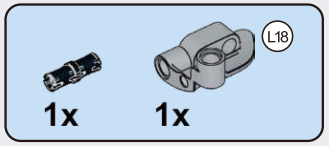

D135

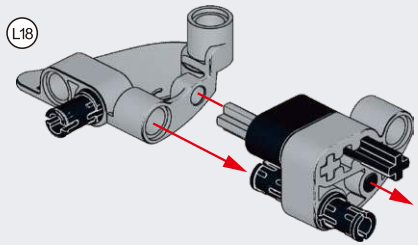

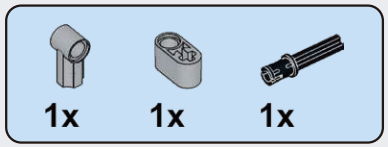

D136

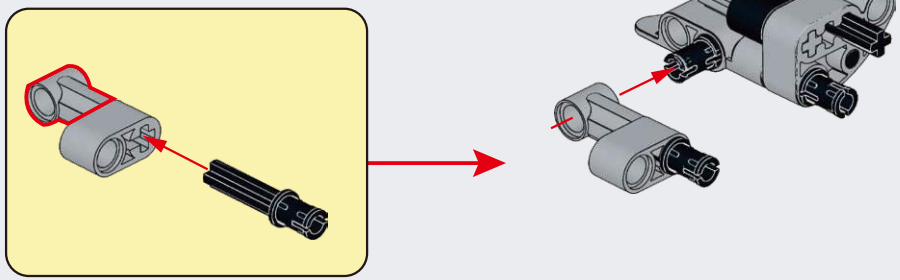

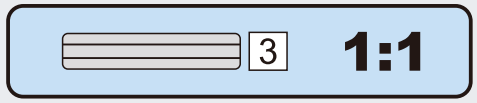

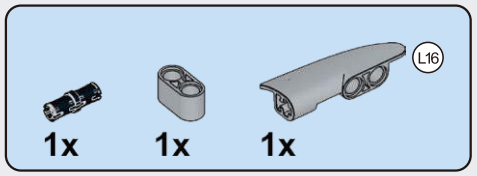

D137

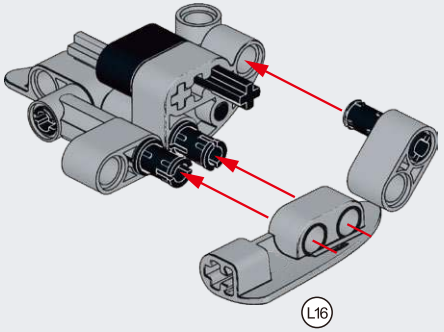

D138

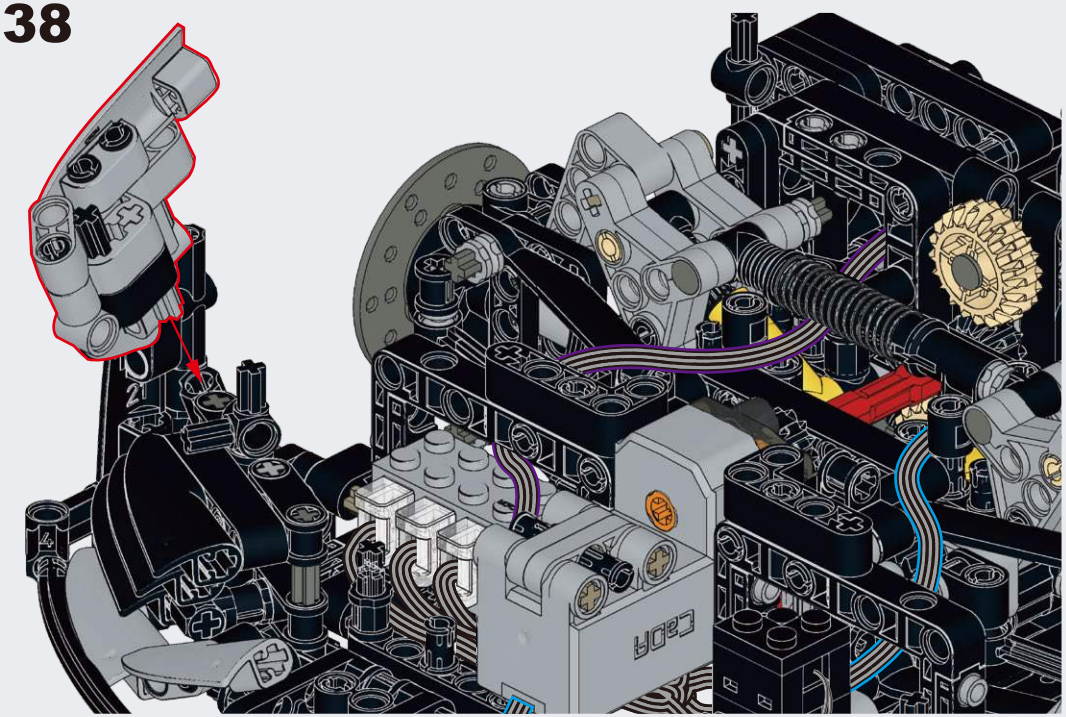

D139

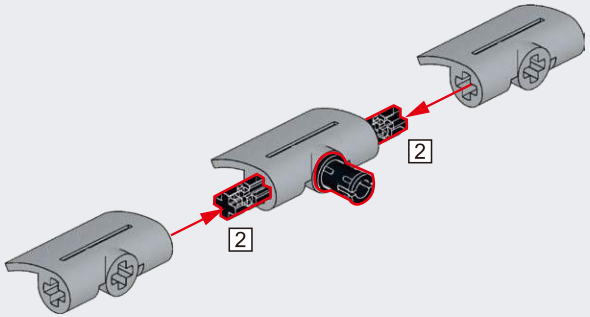

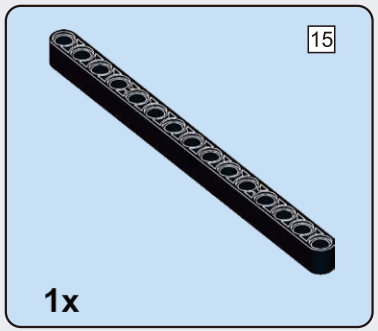

D140

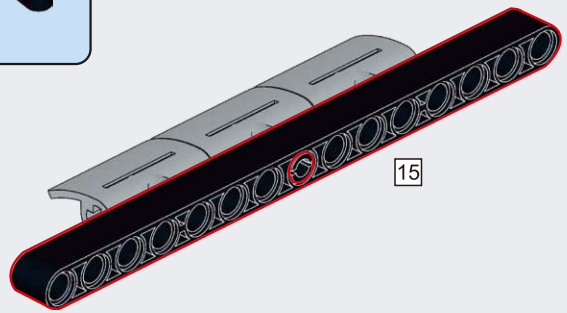

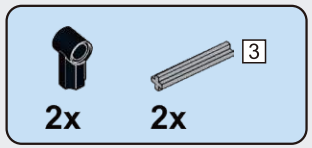

D141

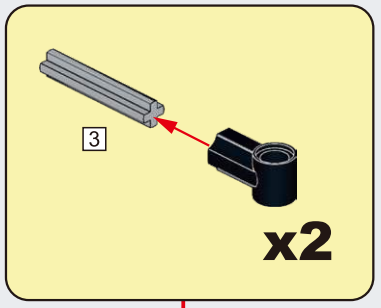

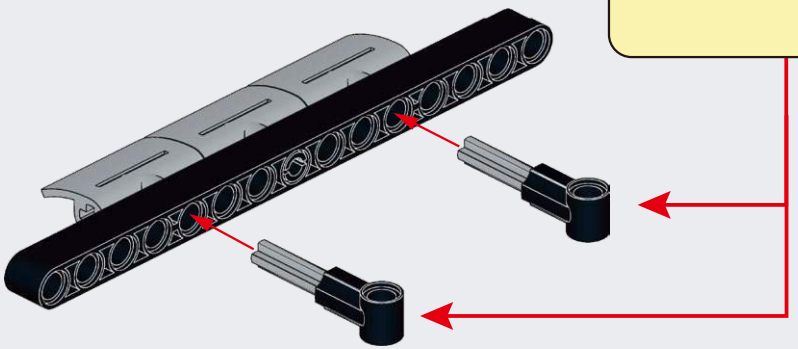

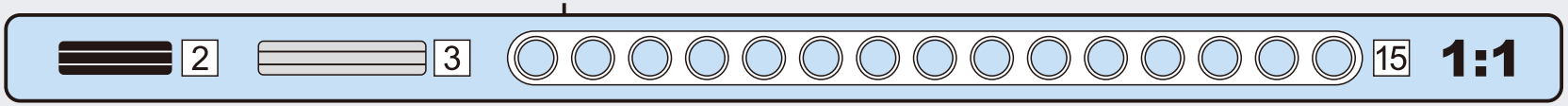

D142

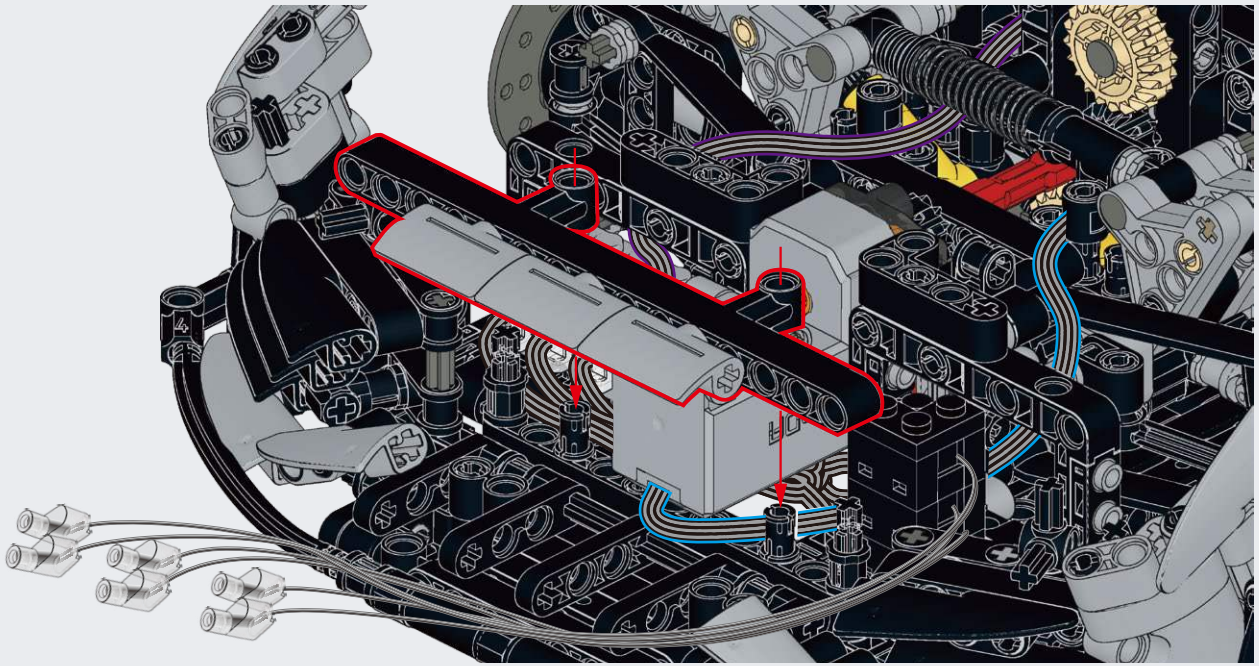

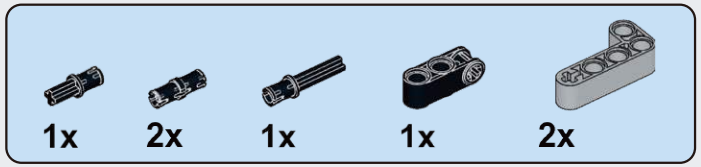

D143

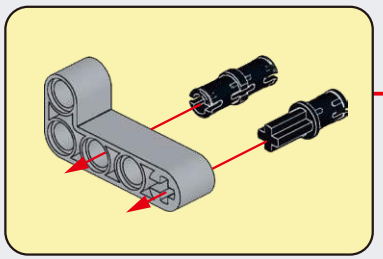

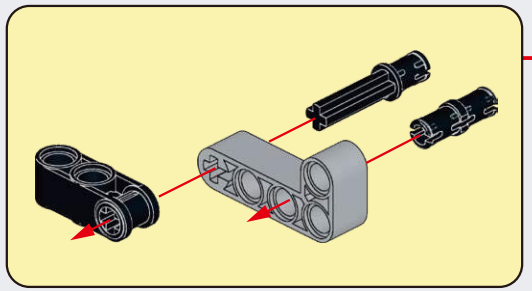

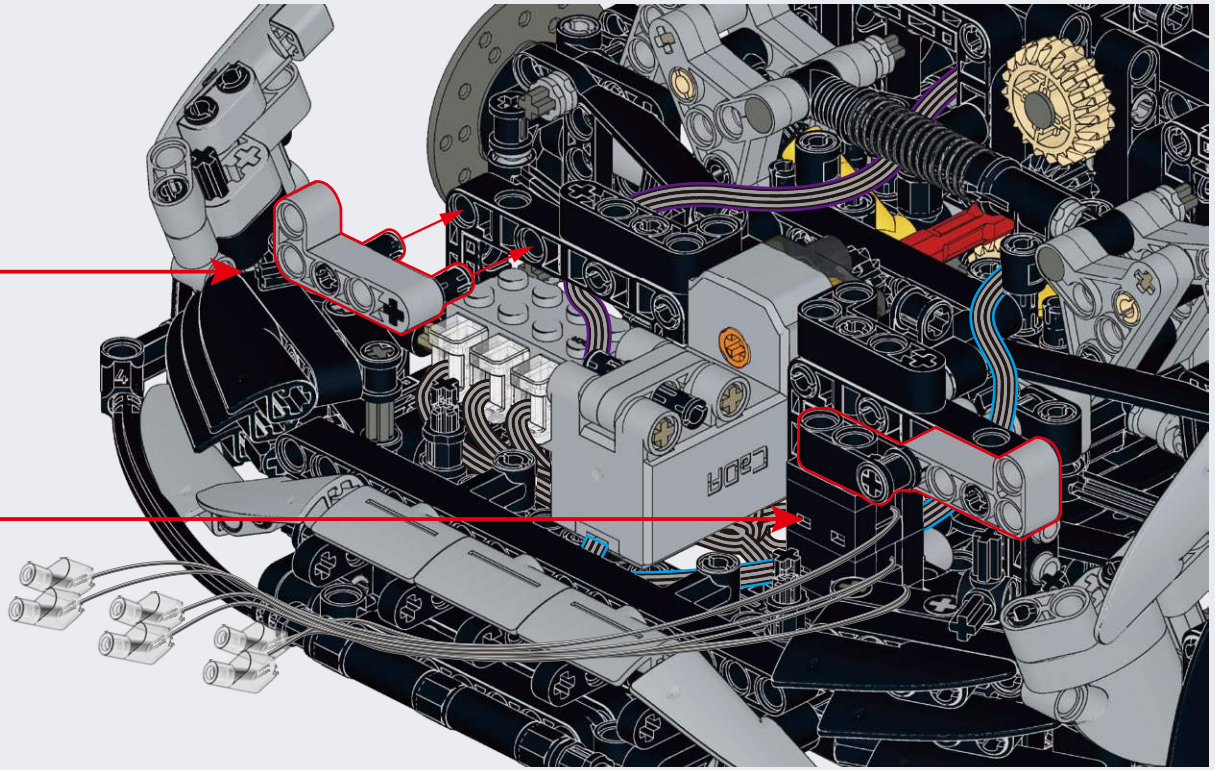

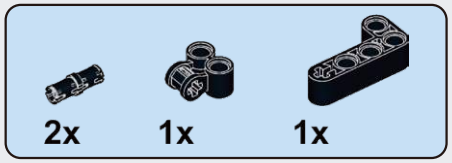

D144

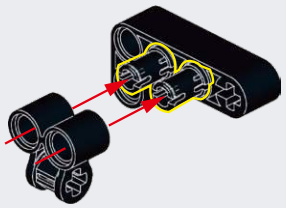

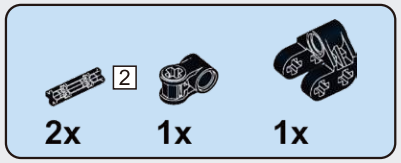

D145

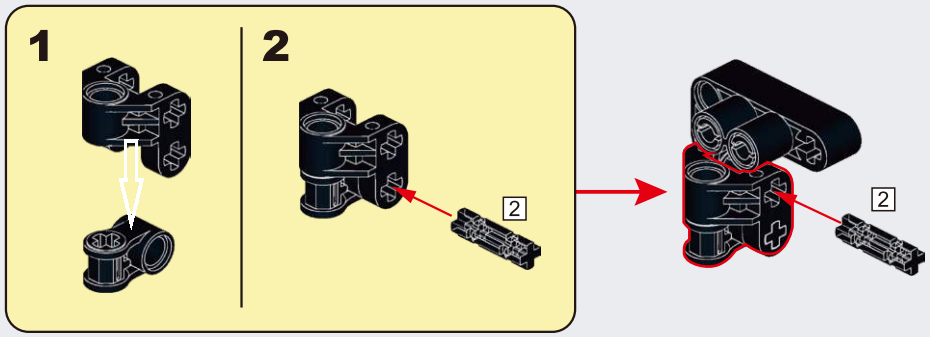

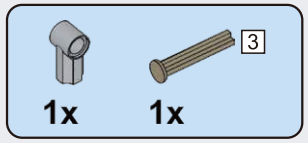

D146

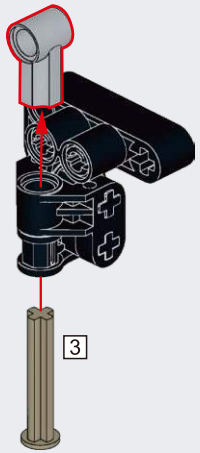

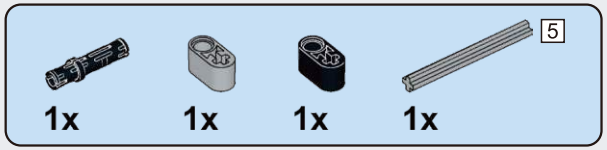

D147

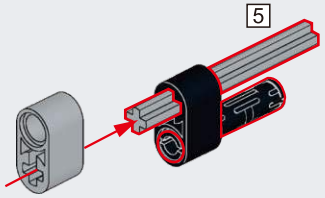

D148

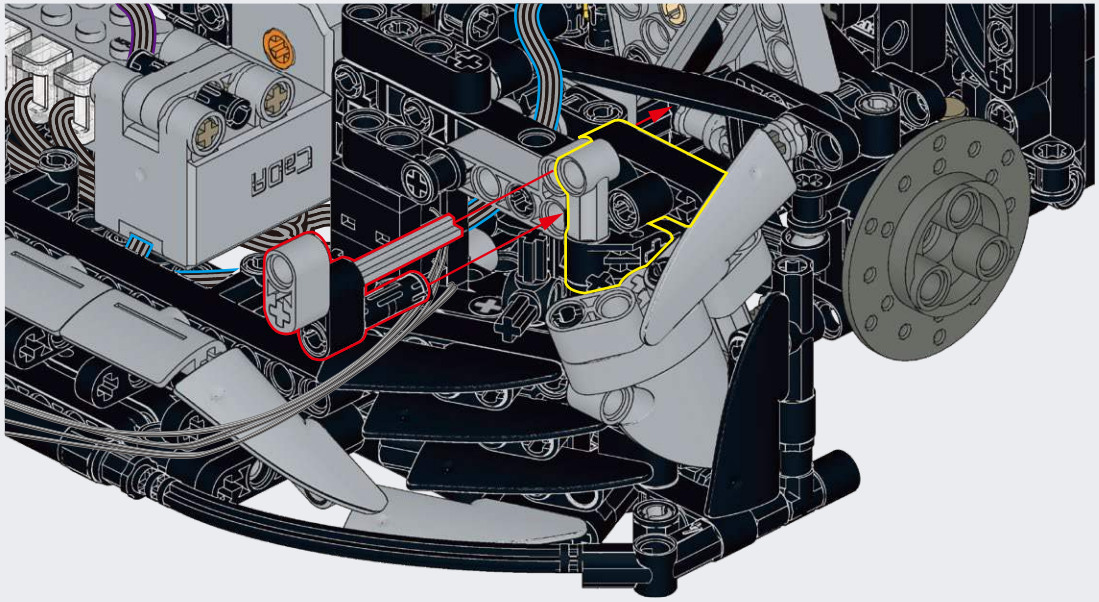

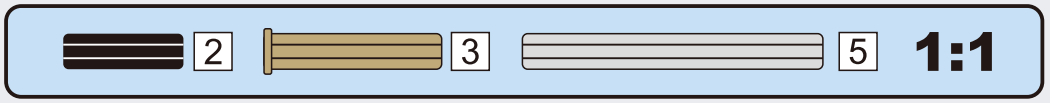

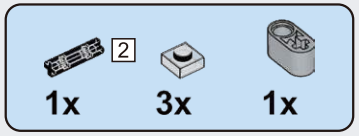

D149

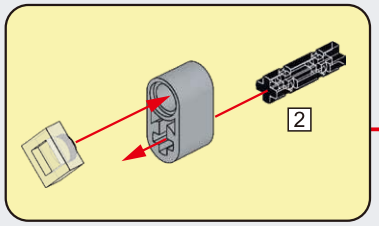

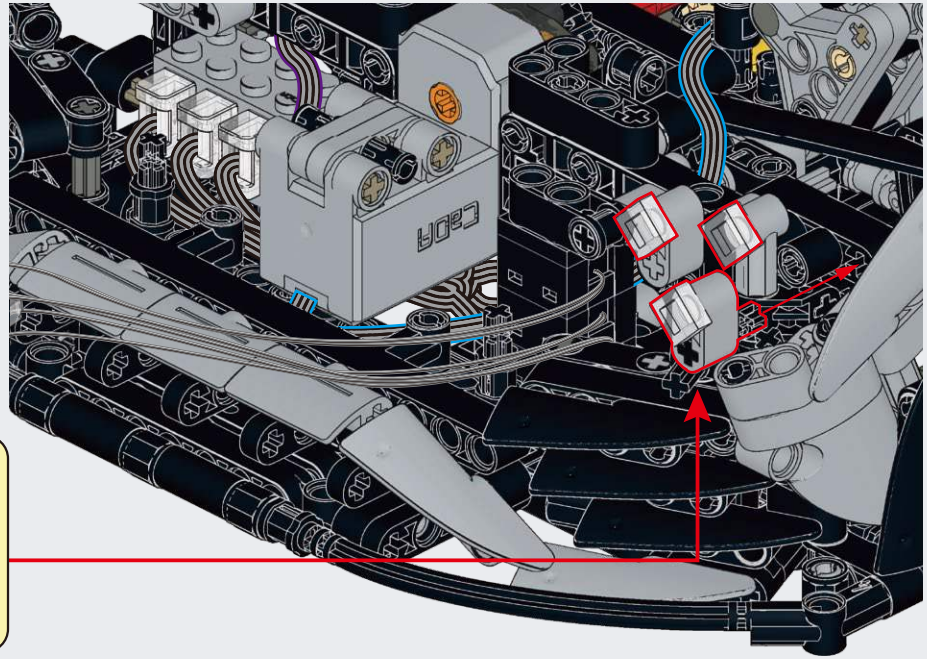

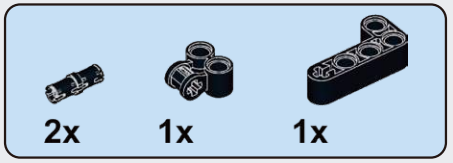

D150

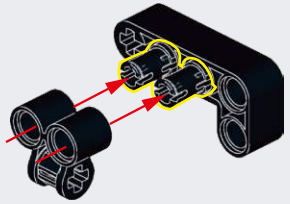

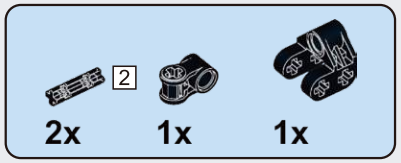

D151

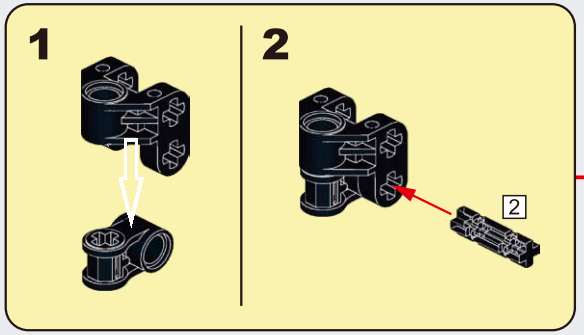

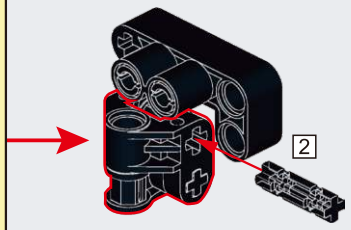

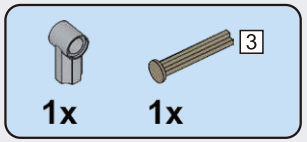

D152

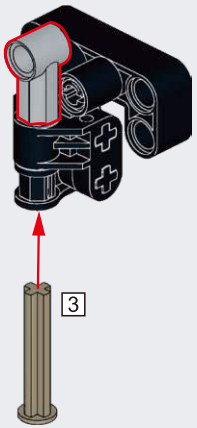

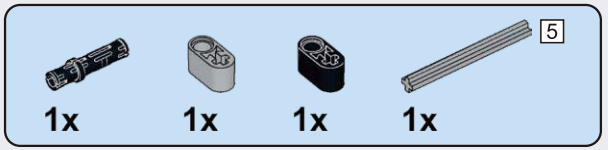

D153

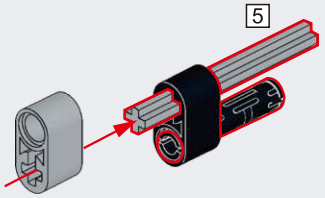

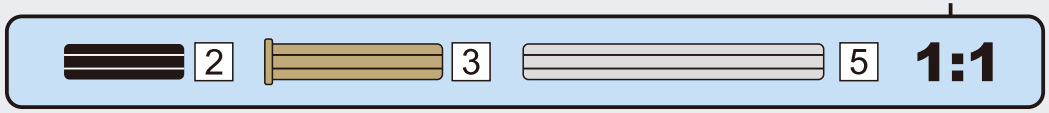

D154

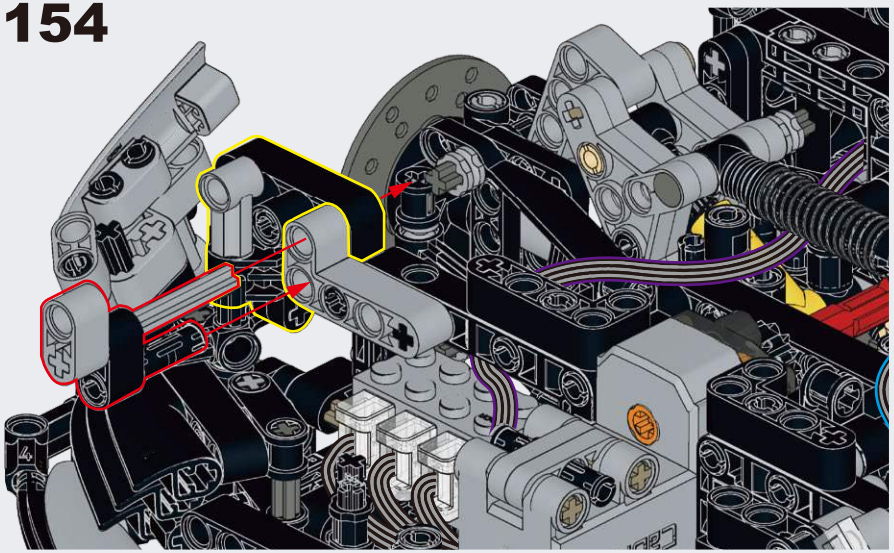

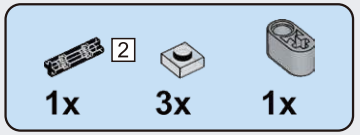

D155

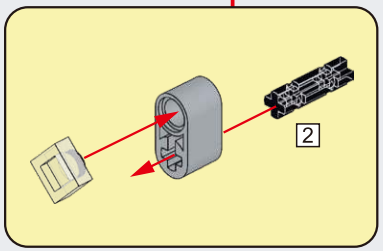

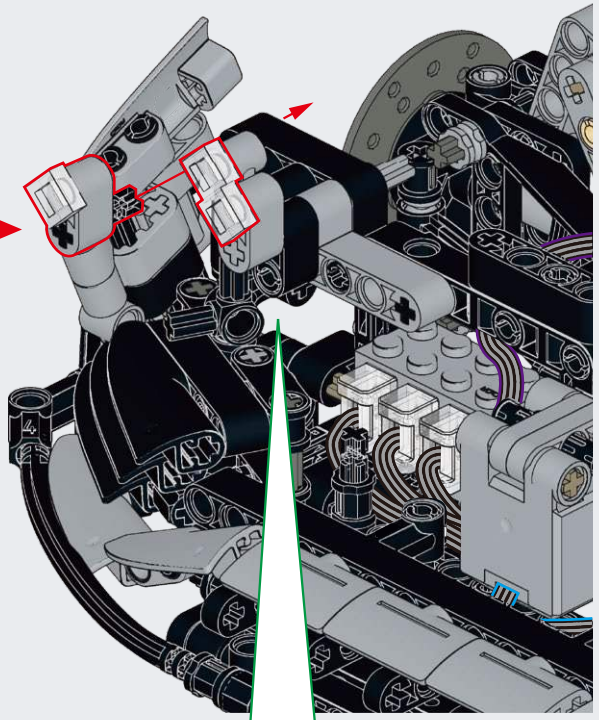

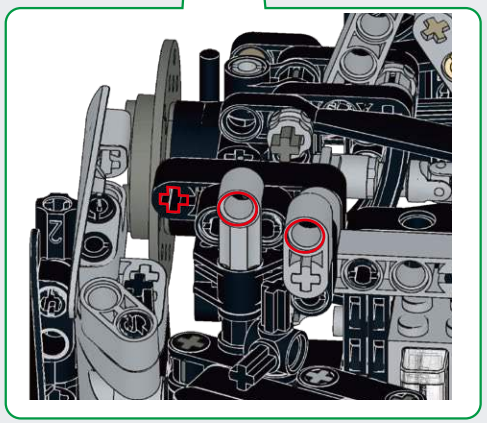

D156

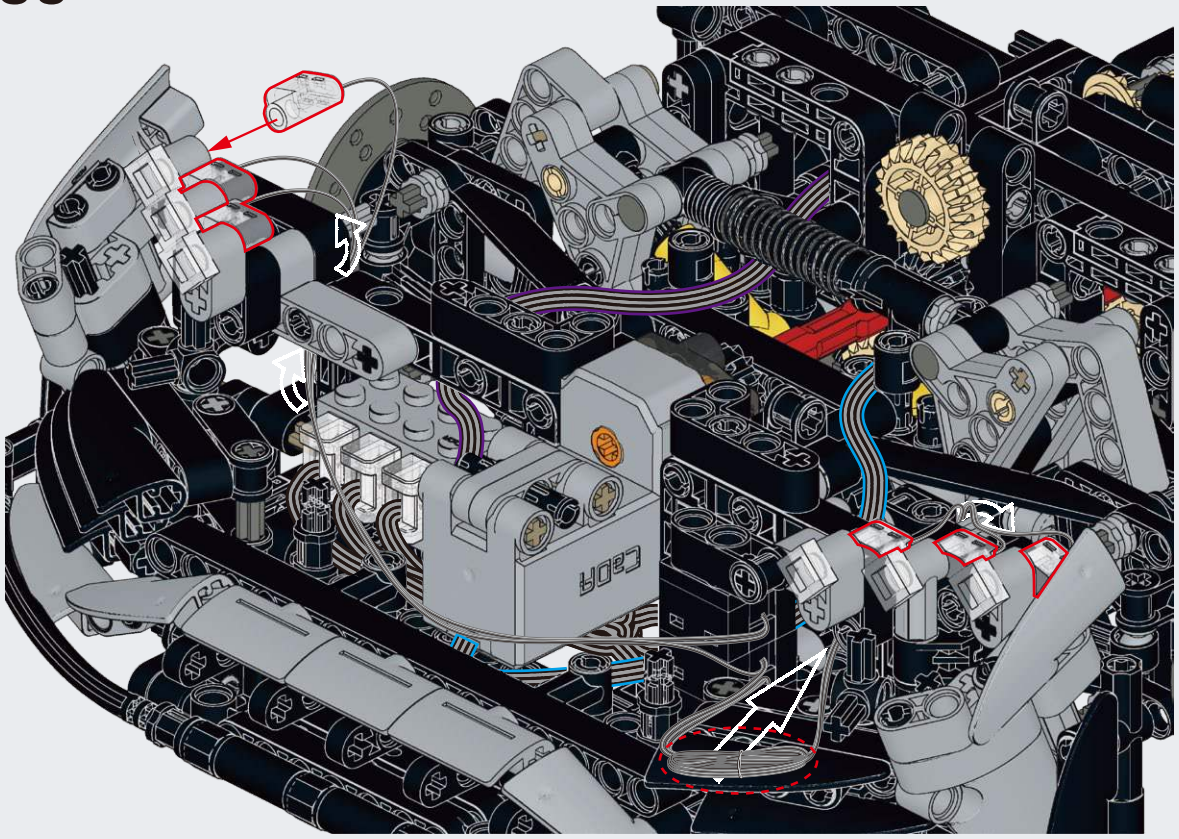

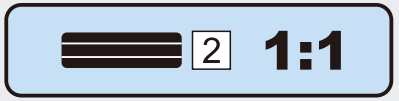

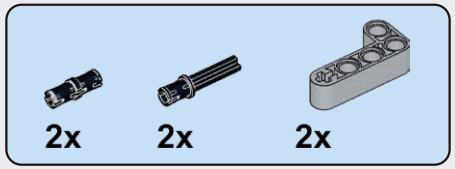

D157

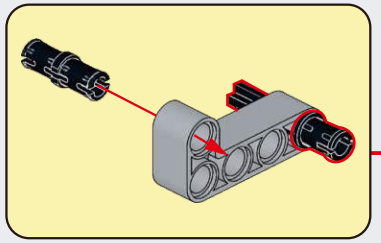

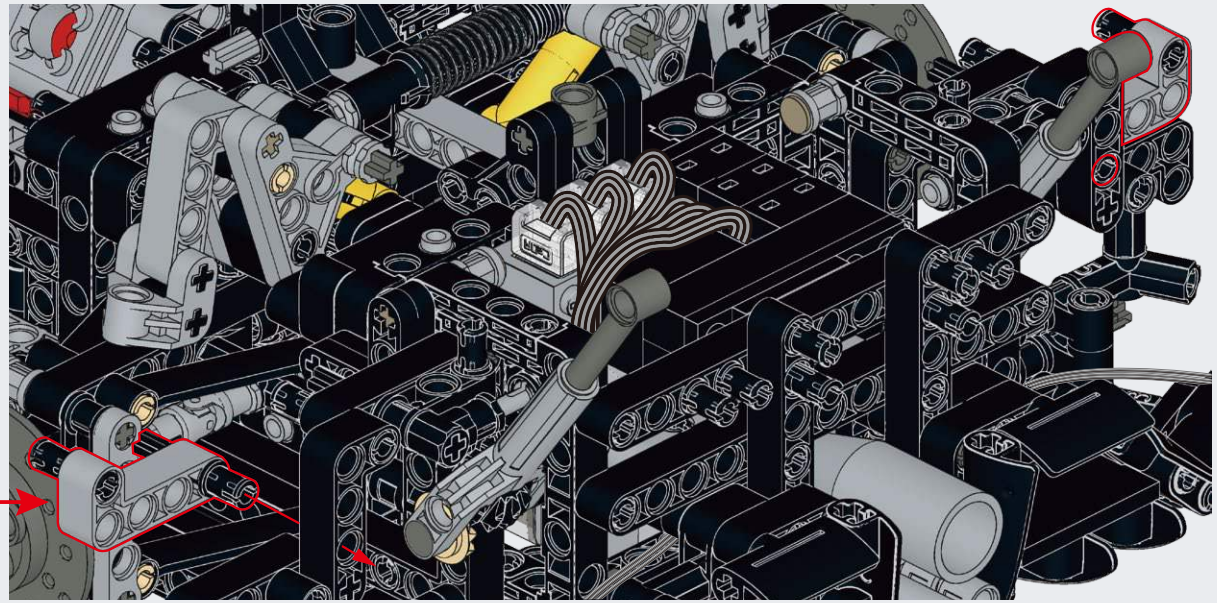

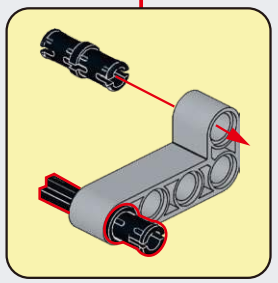

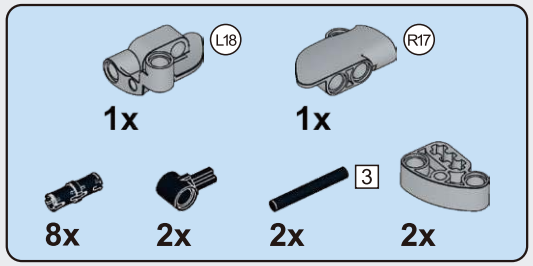

D158

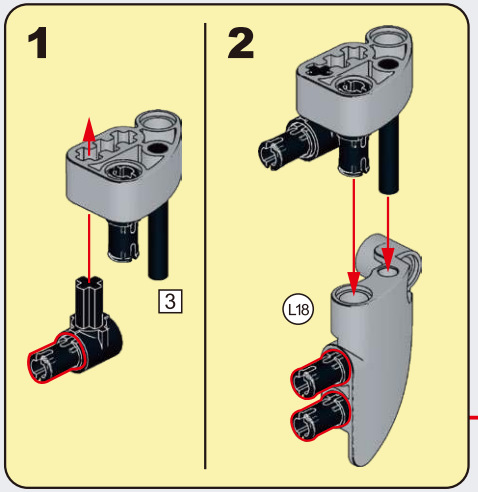

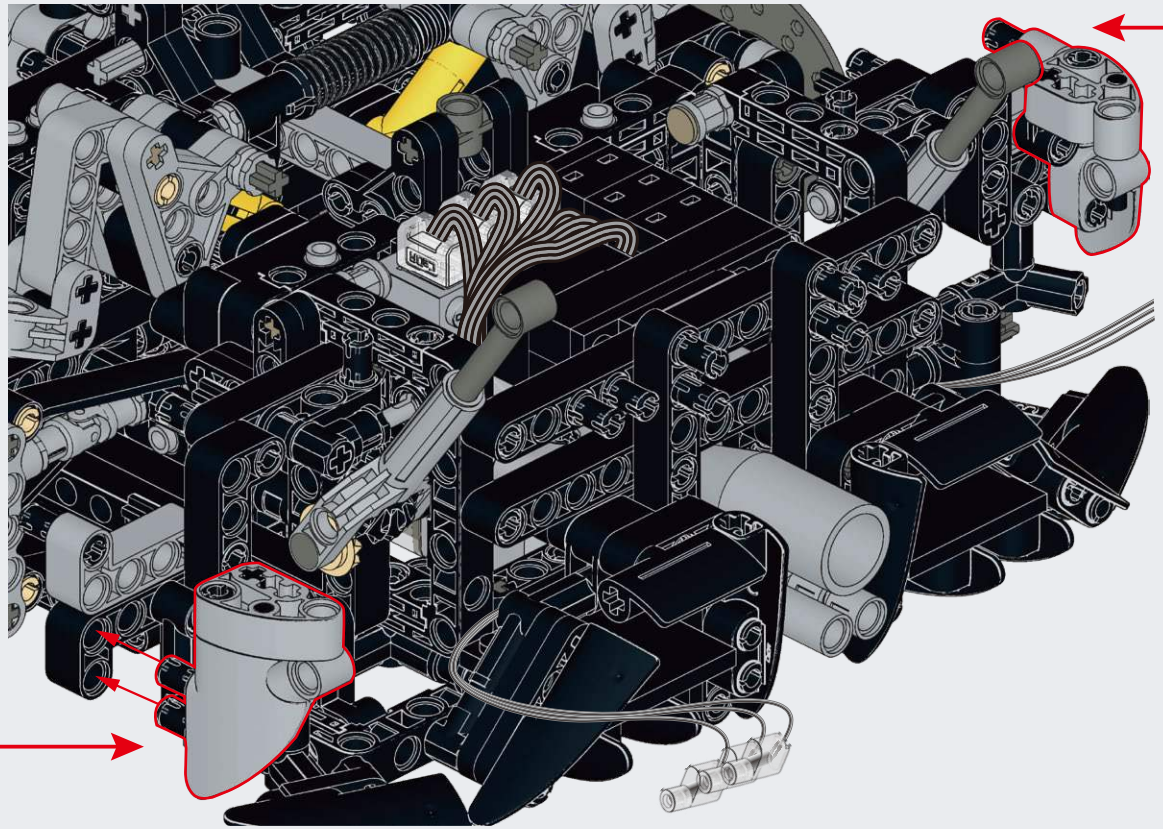

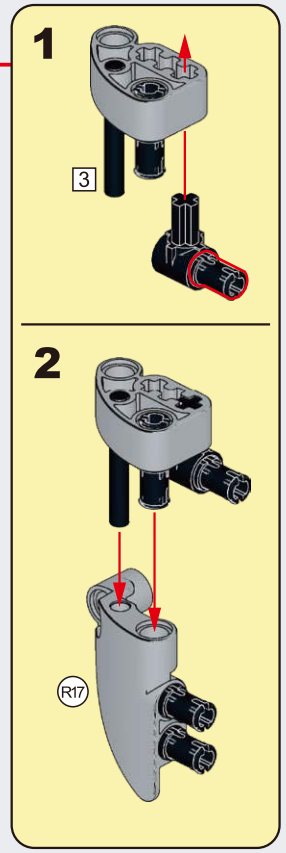

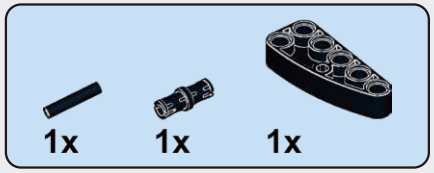

D159

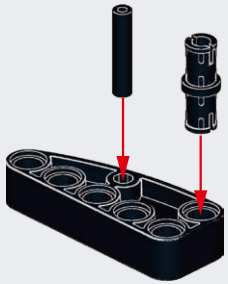

D160

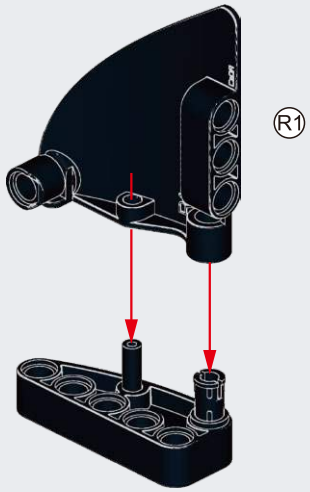

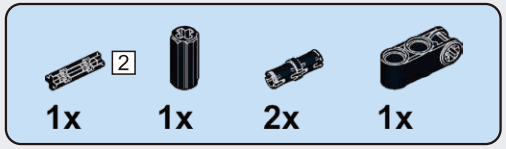

D161

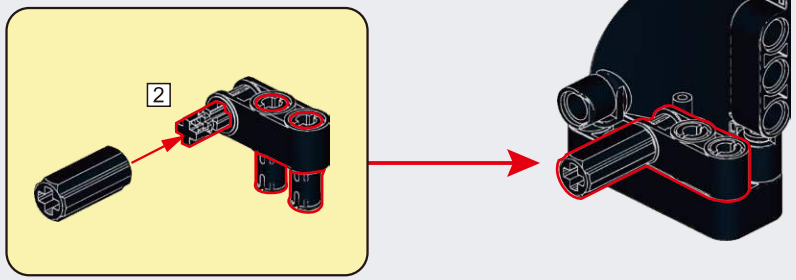

D162

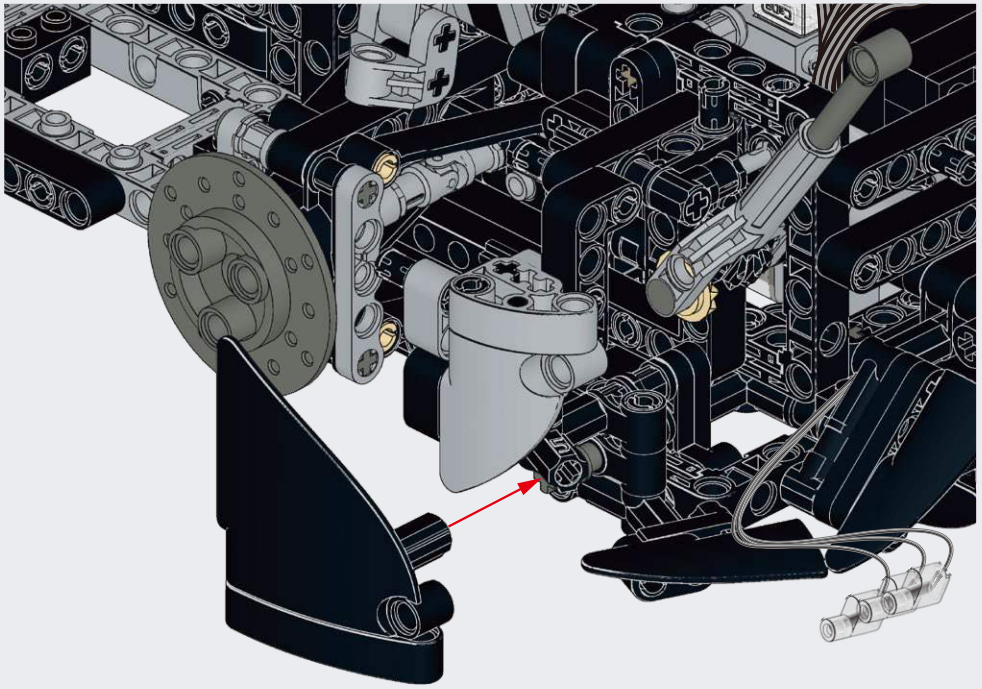

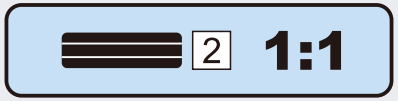

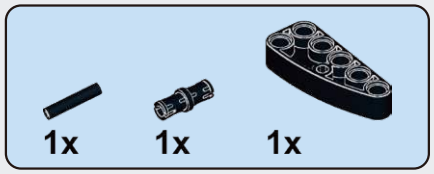

D163

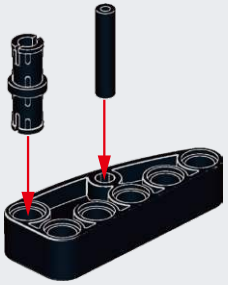

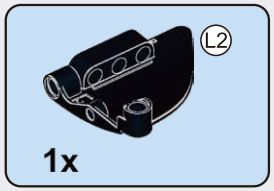

D164

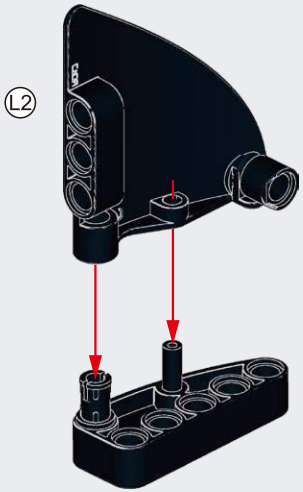

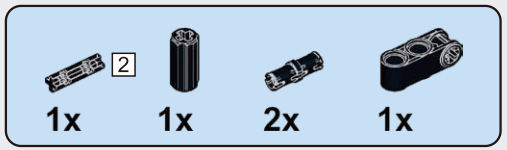

D165

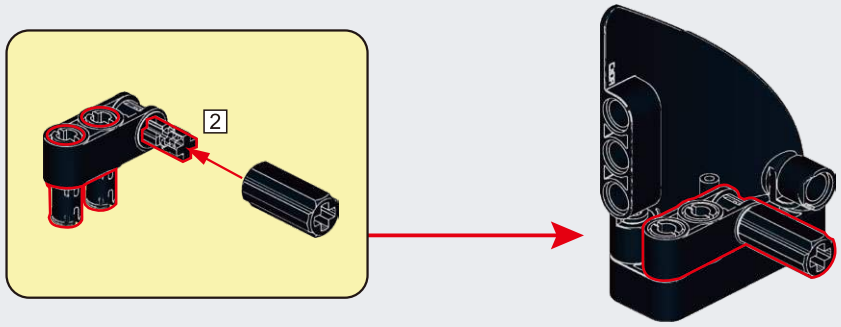

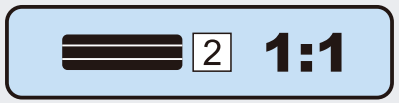

D166

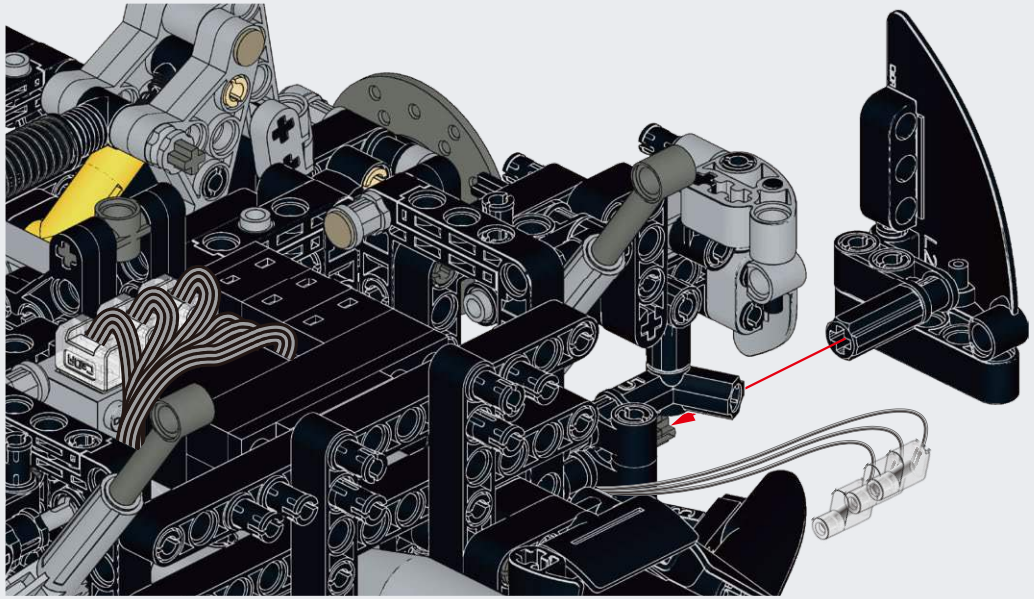

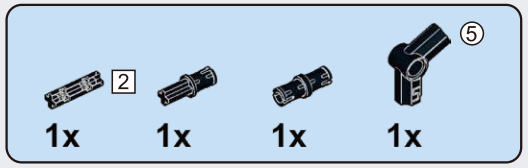

D167

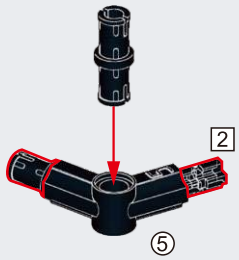

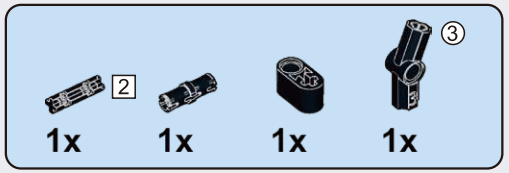

D168

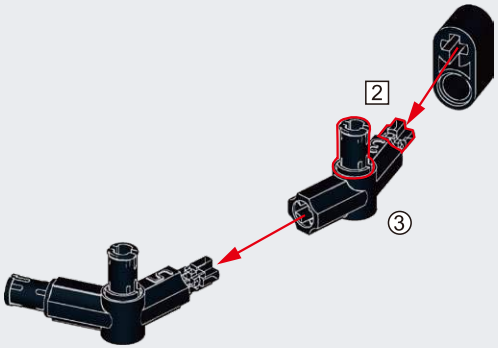

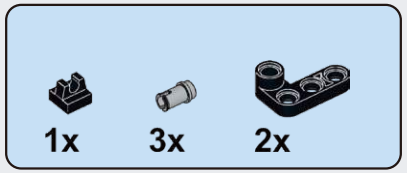

D169

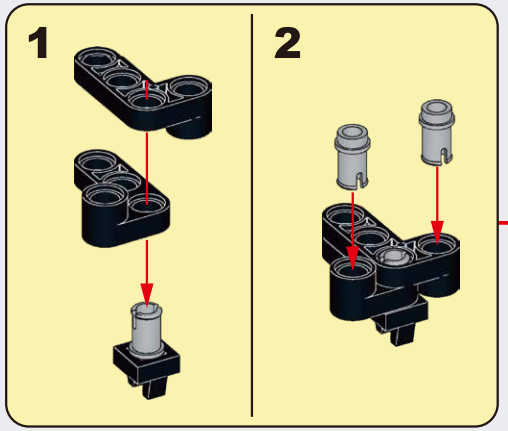

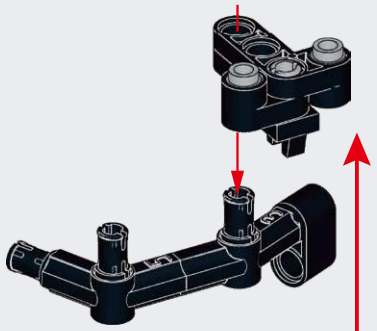

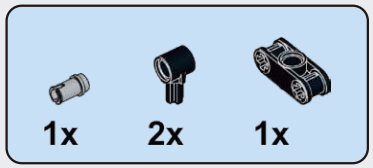

D170

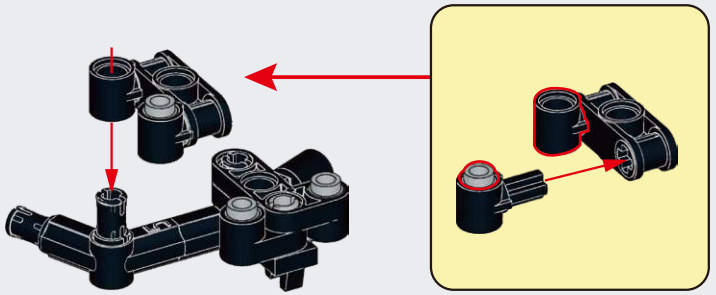

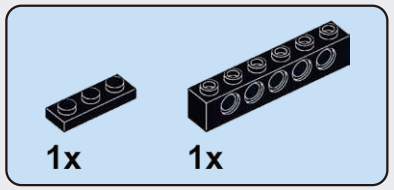

D171

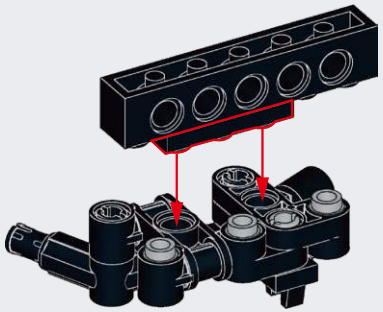

D172

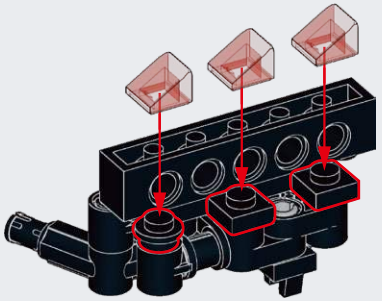

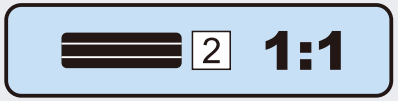

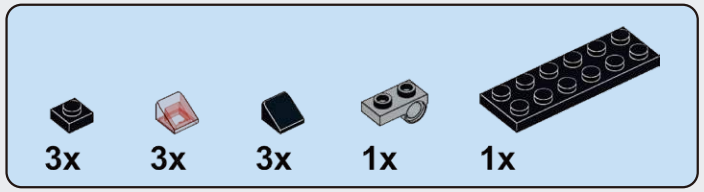

D173

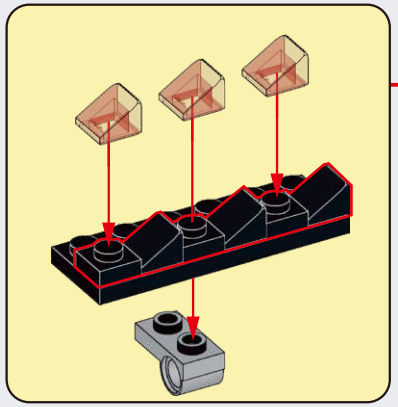

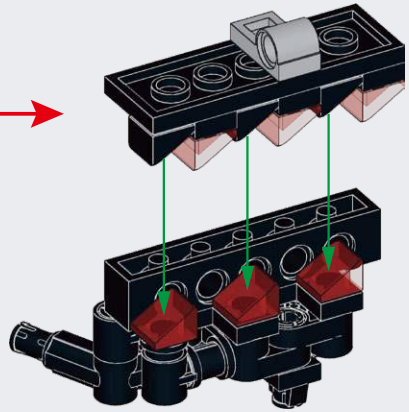

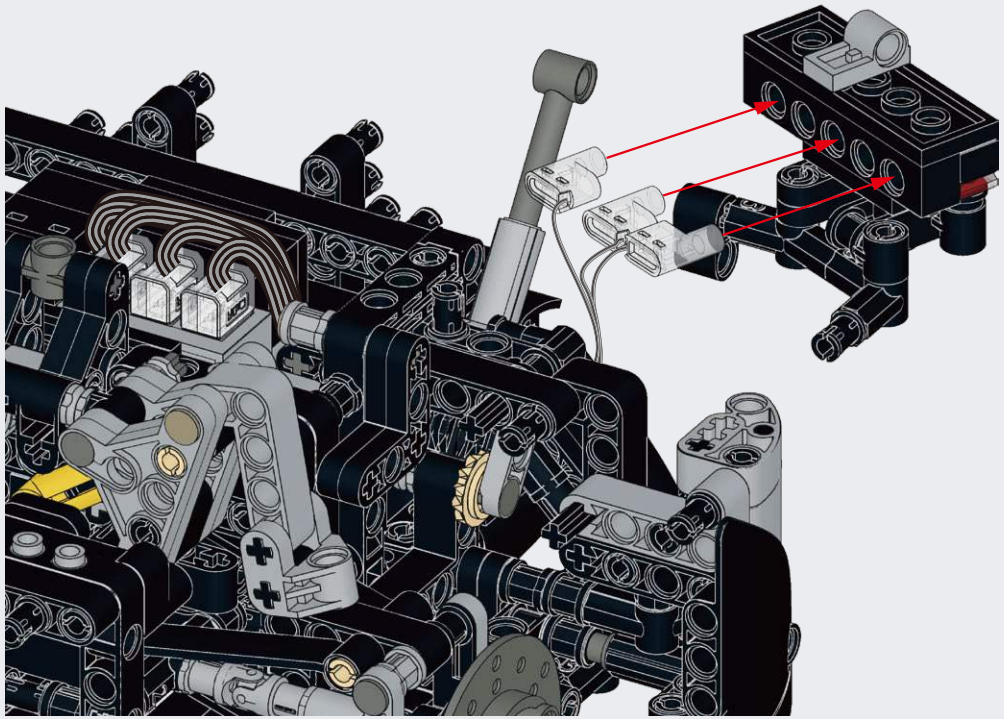

D174

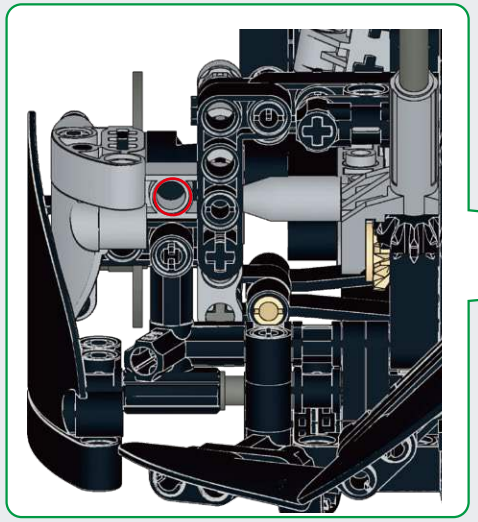

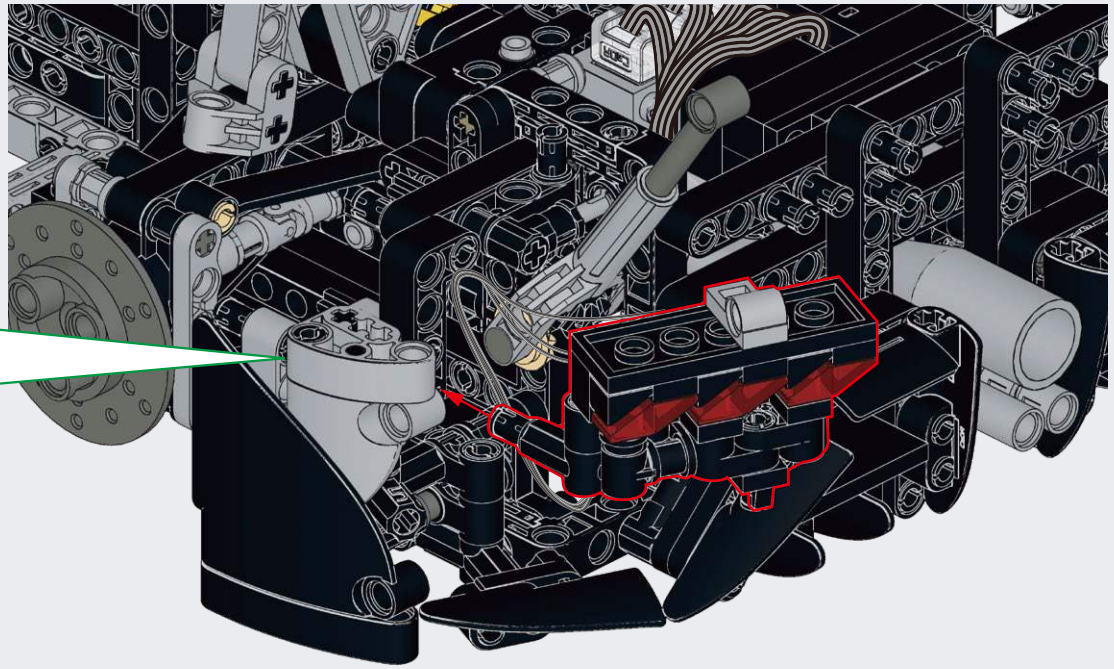

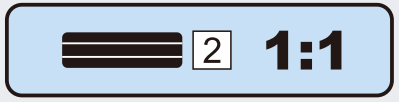

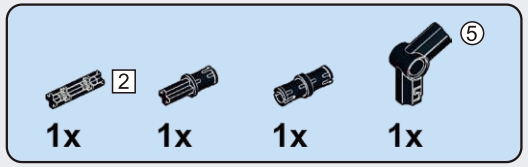

D175

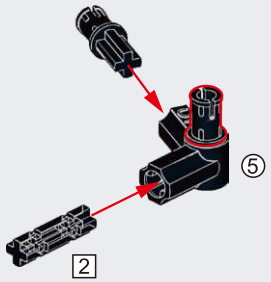

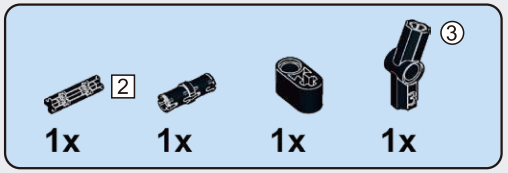

D176

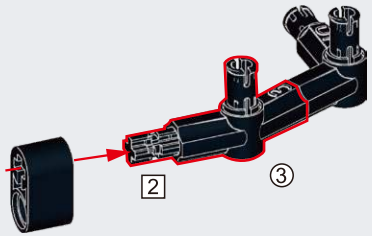

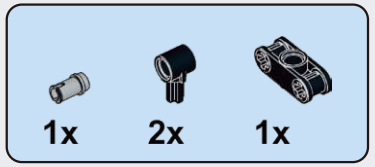

D177

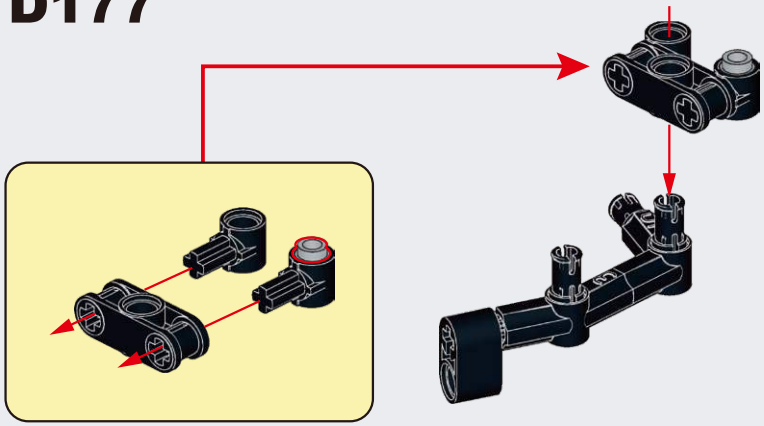

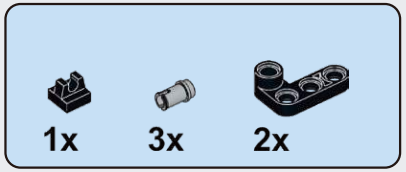

D178

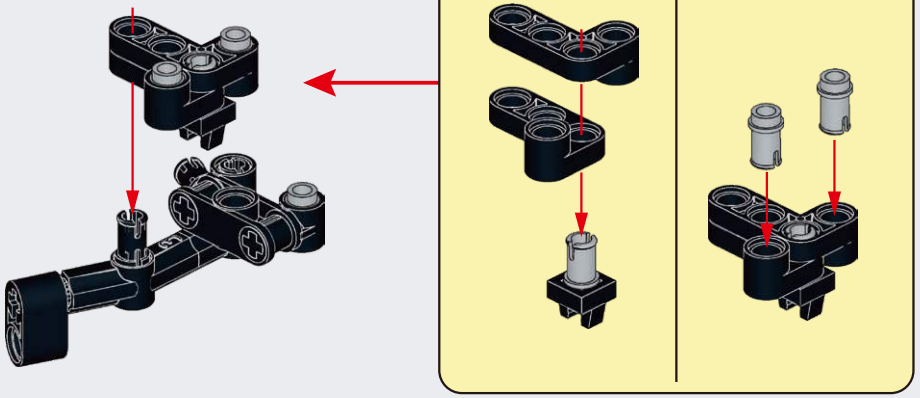

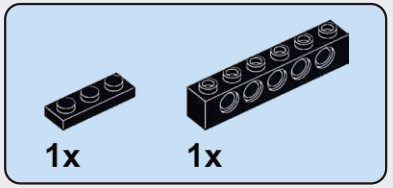

D179

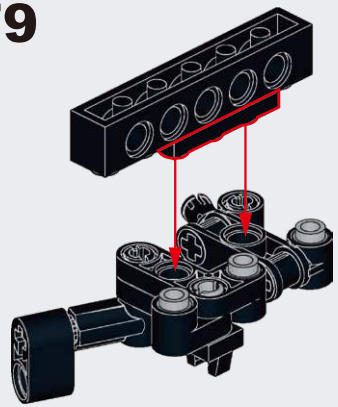

D180

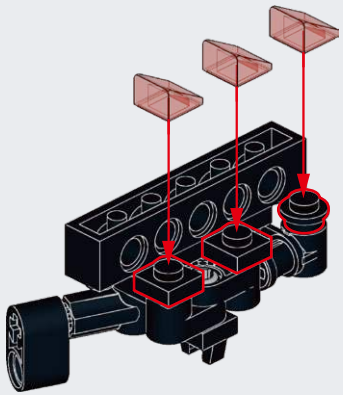

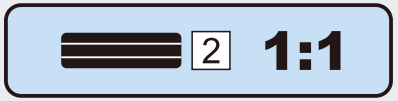

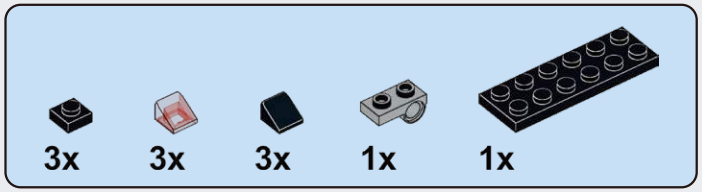

D181

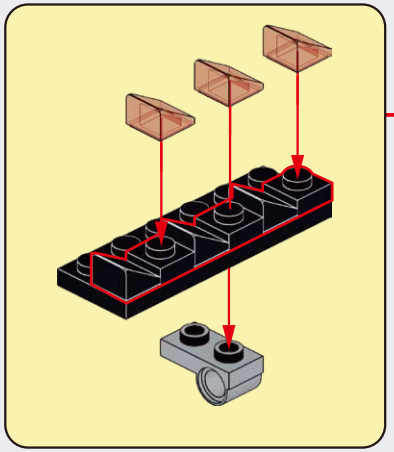

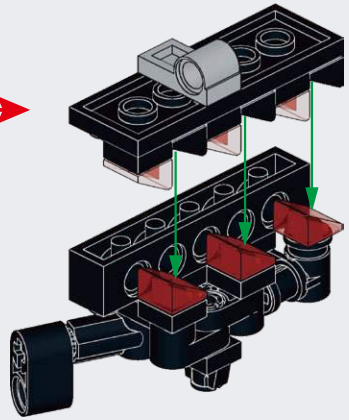

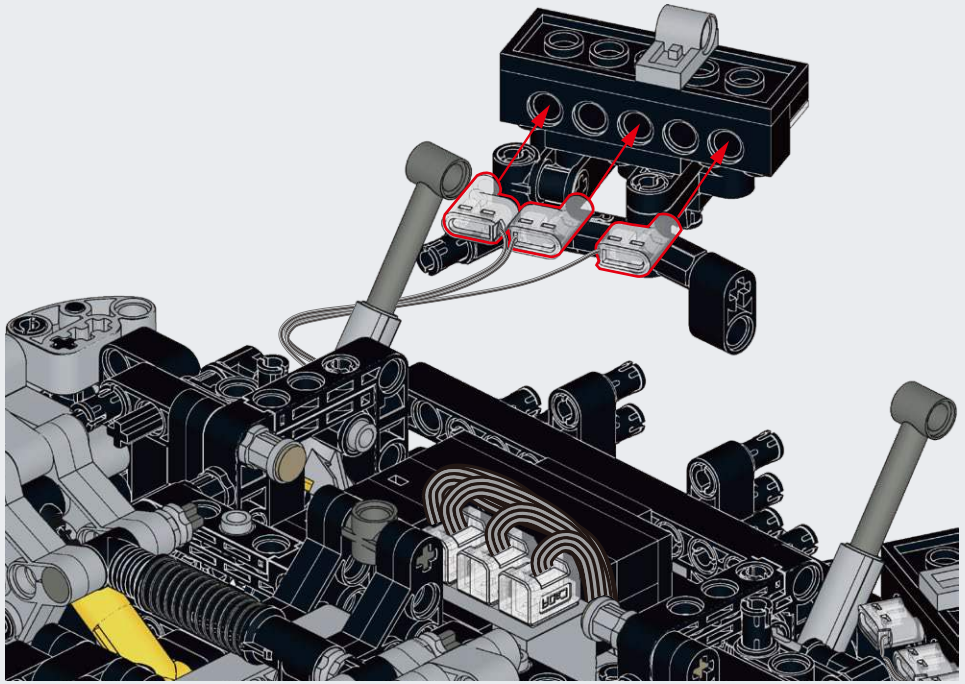

D182

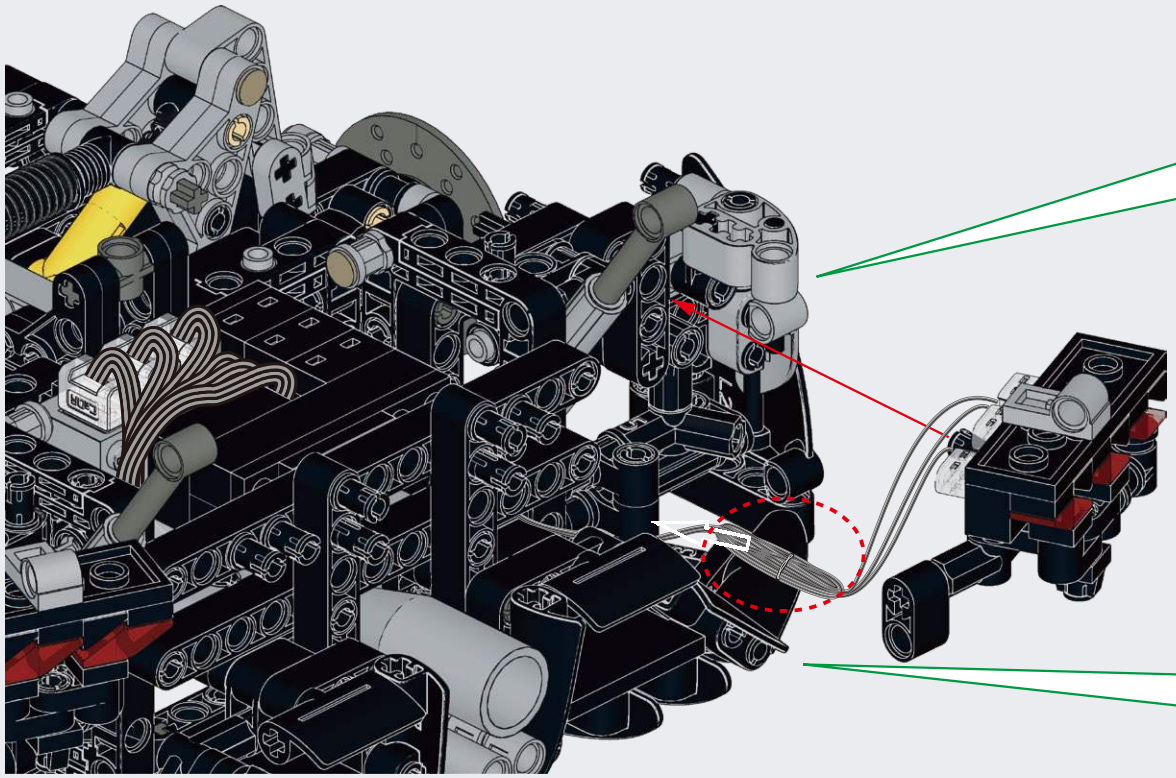

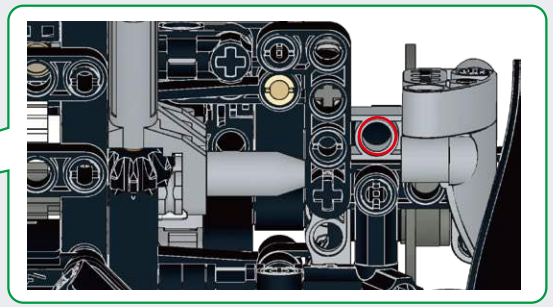

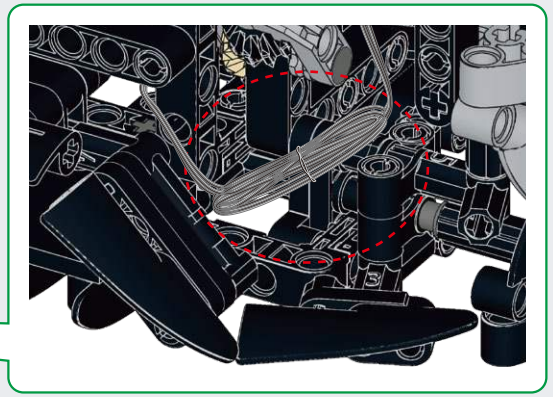

D183

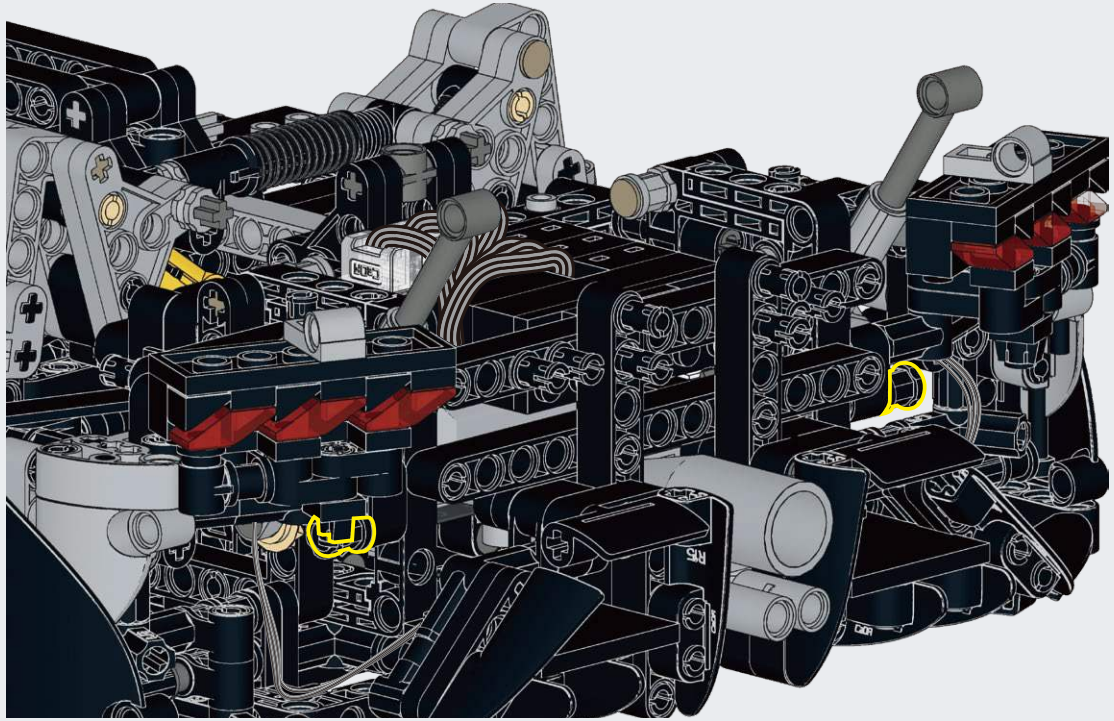

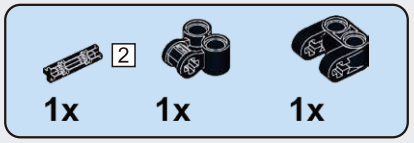

D184

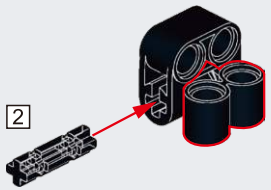

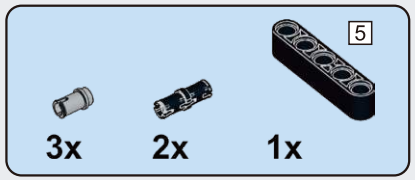

D185

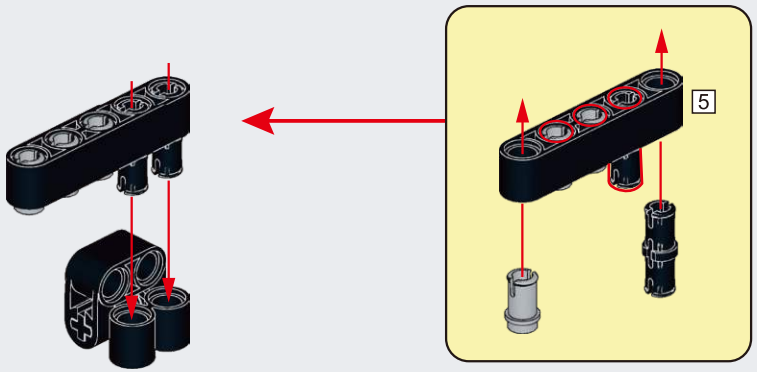

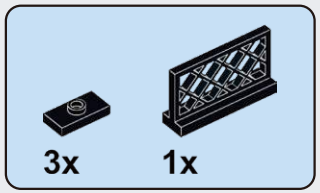

D186

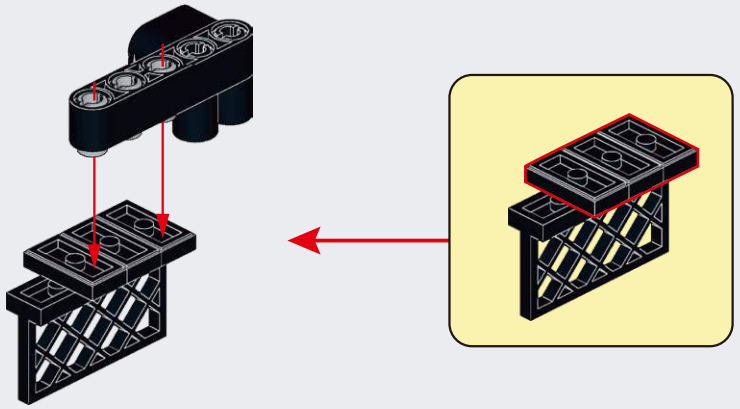

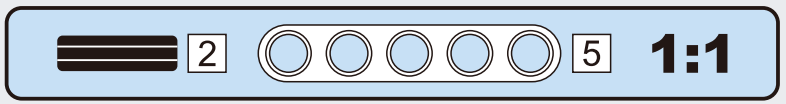

D187

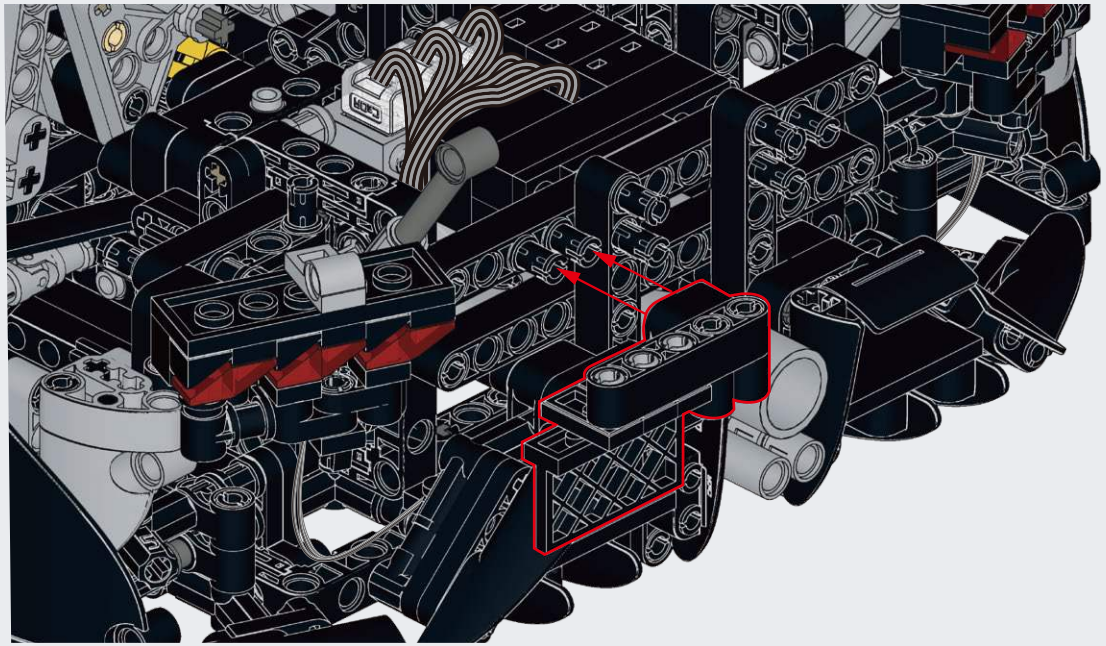

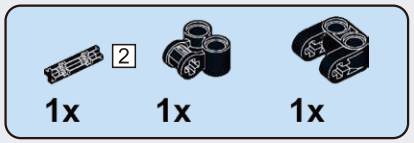

D188

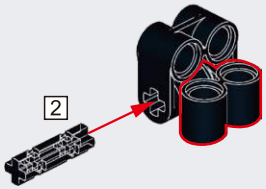

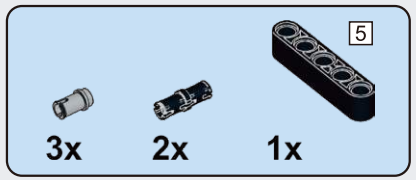

D189

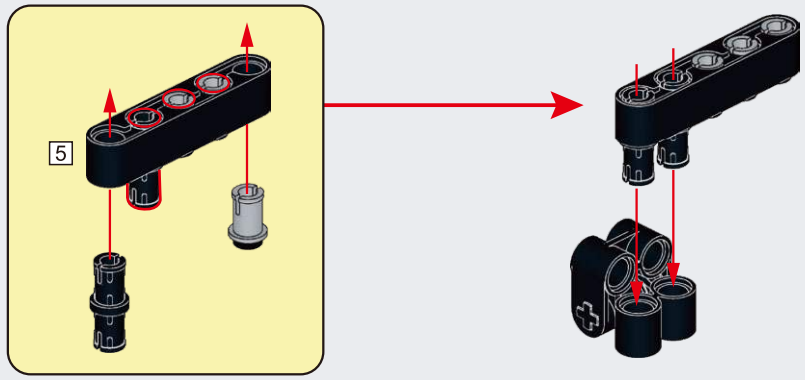

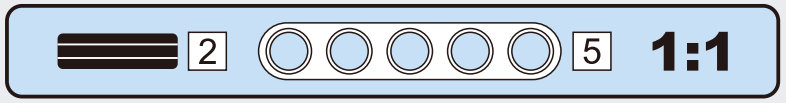

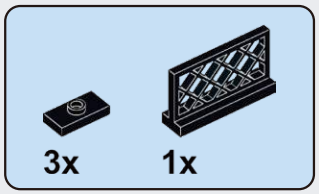

D190

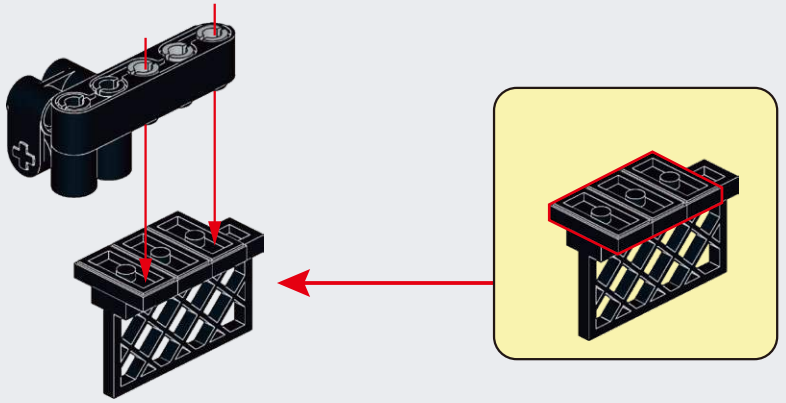

D191

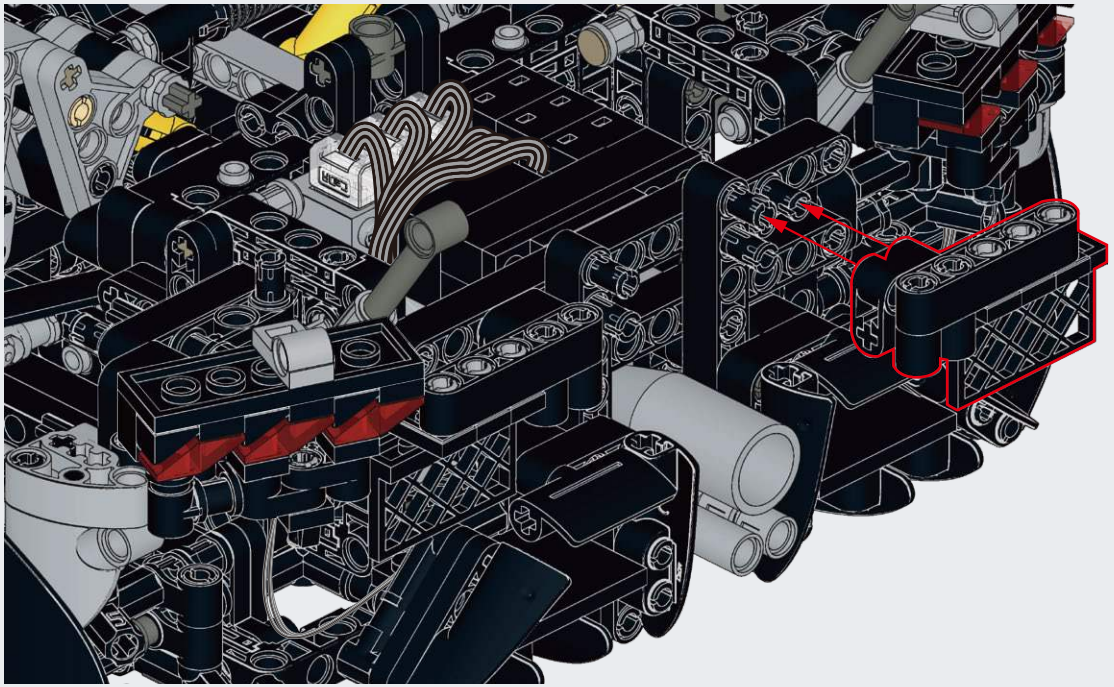

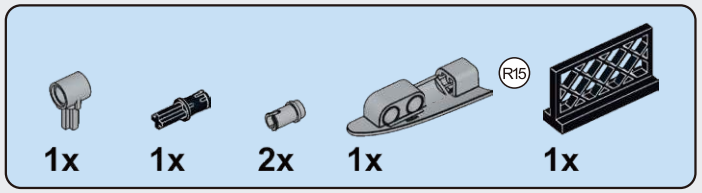

D192

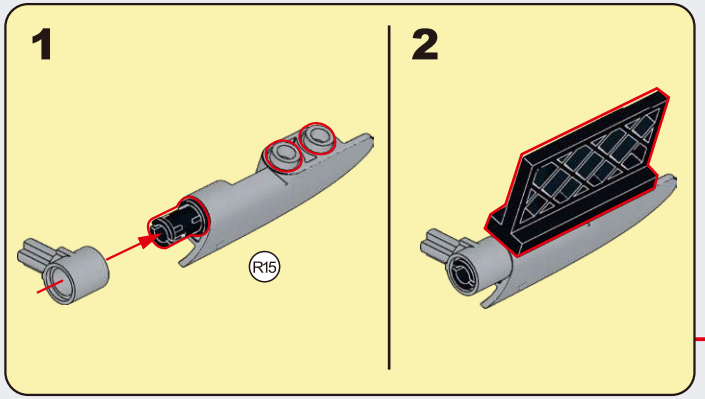

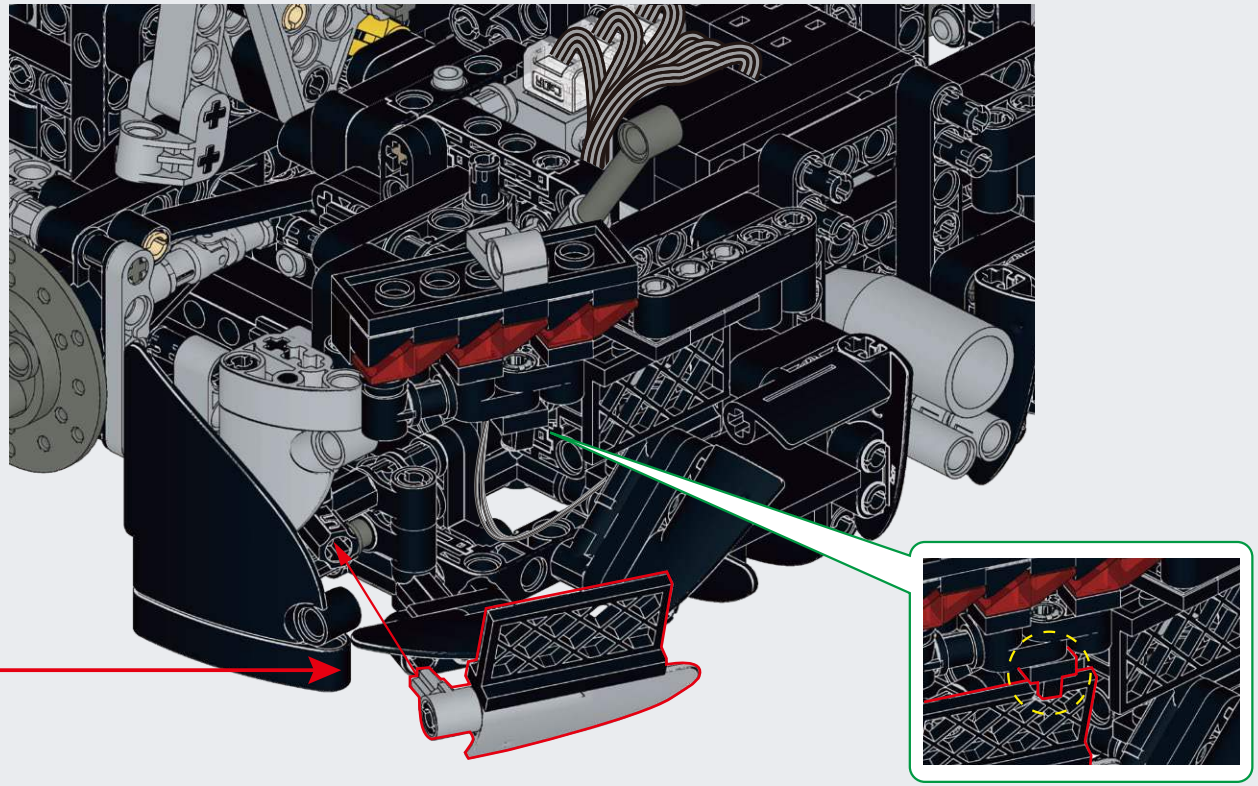

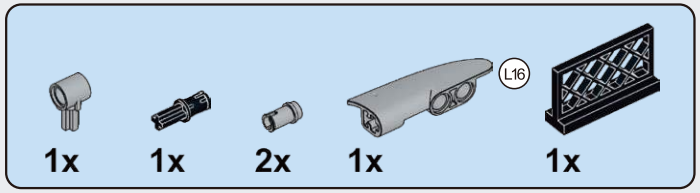
1x
1x
2x
1x
L16
1x

D193

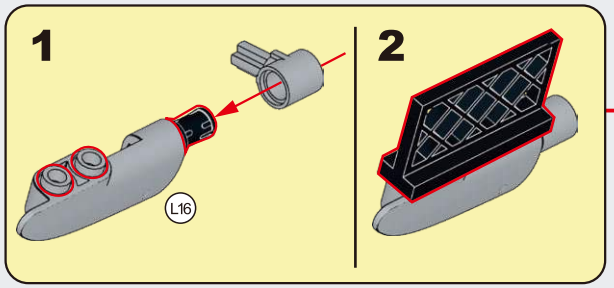
1
L16
2

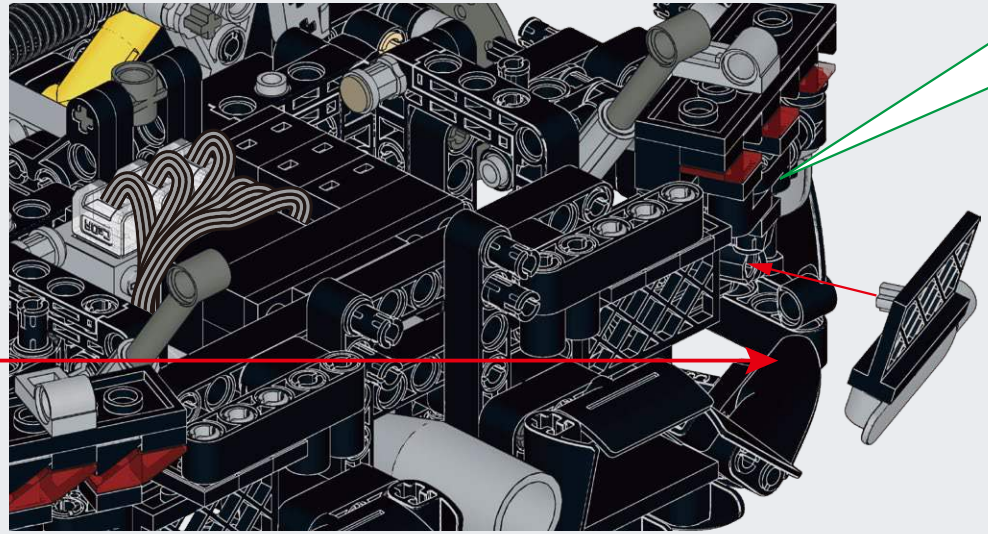

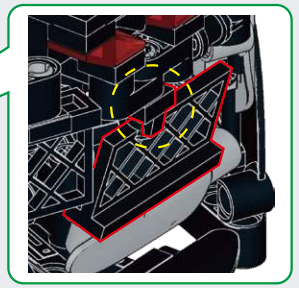

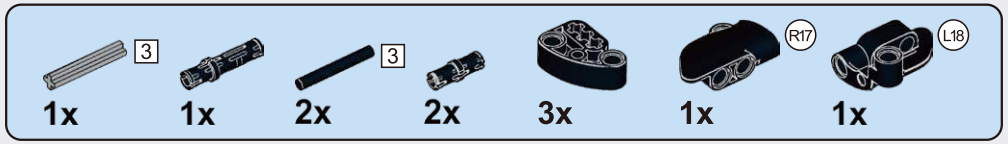
3
1x
1x
3
2x
2x
3x
R17
1x
L18
1x

D194

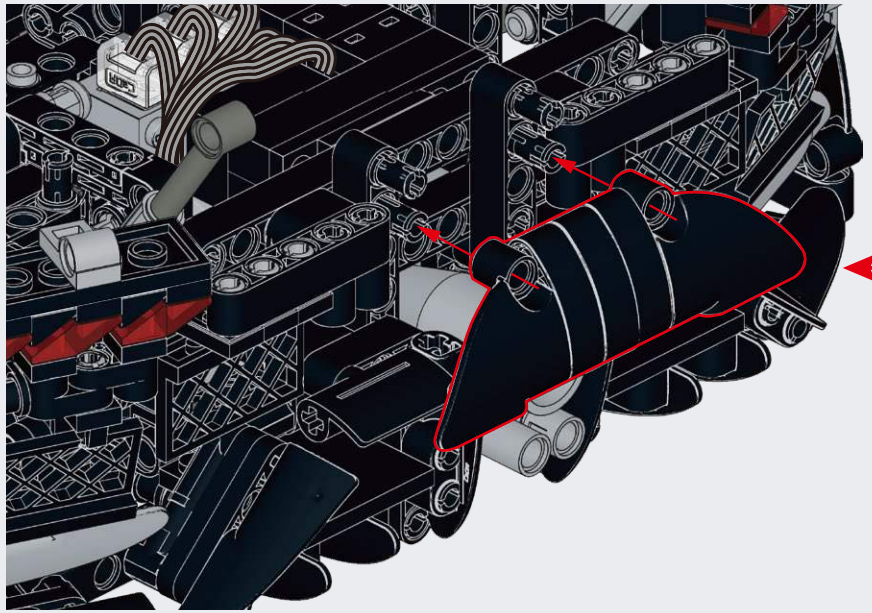

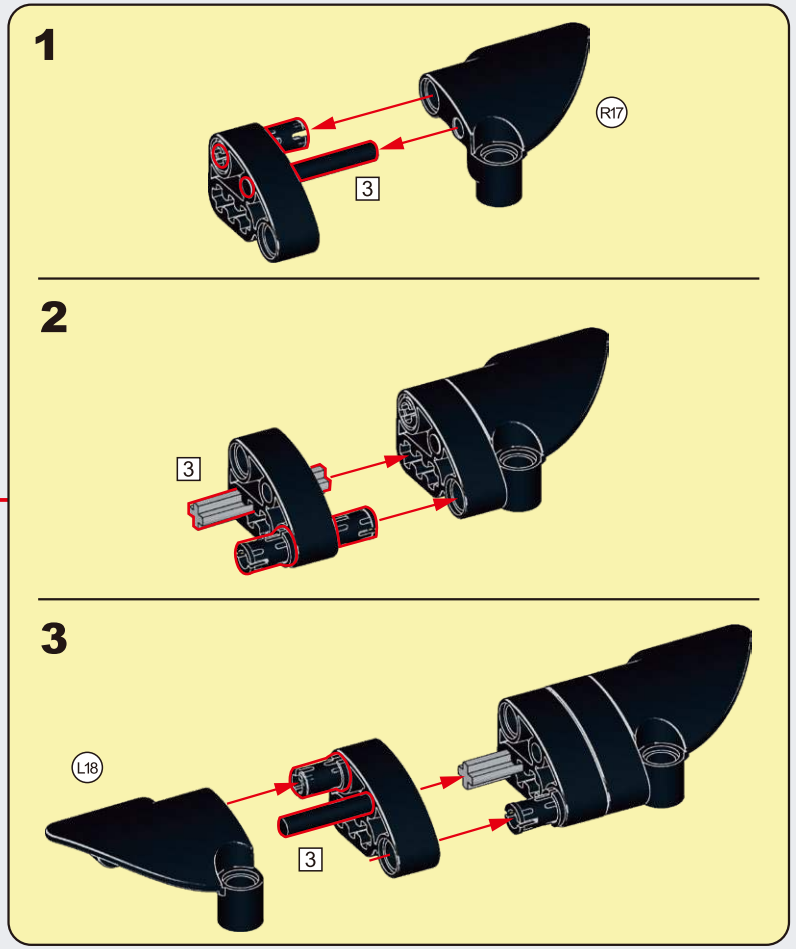
1
R17
3
2
3
3
L18
3

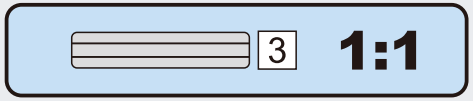
3
1:1

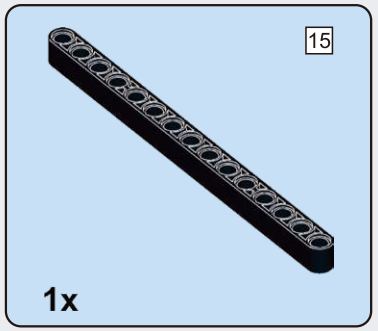

D195

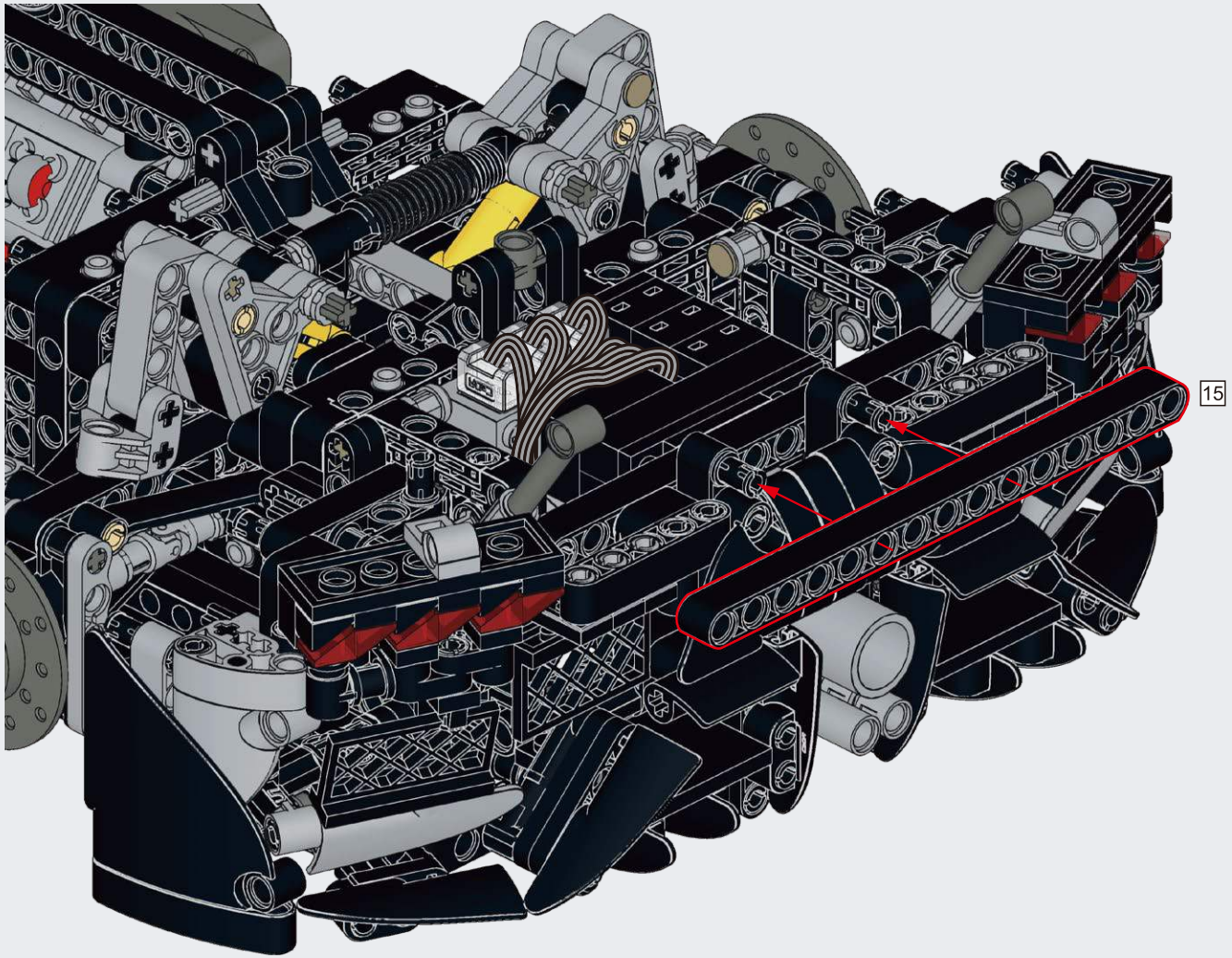

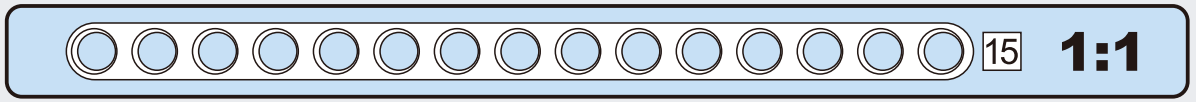

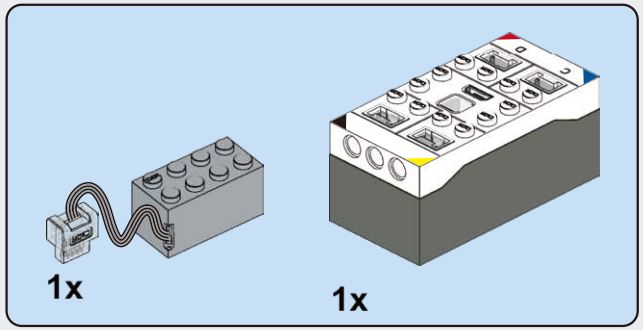

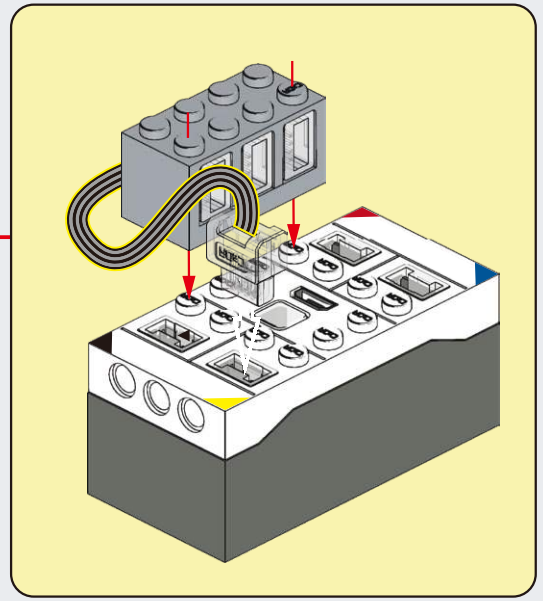

D196

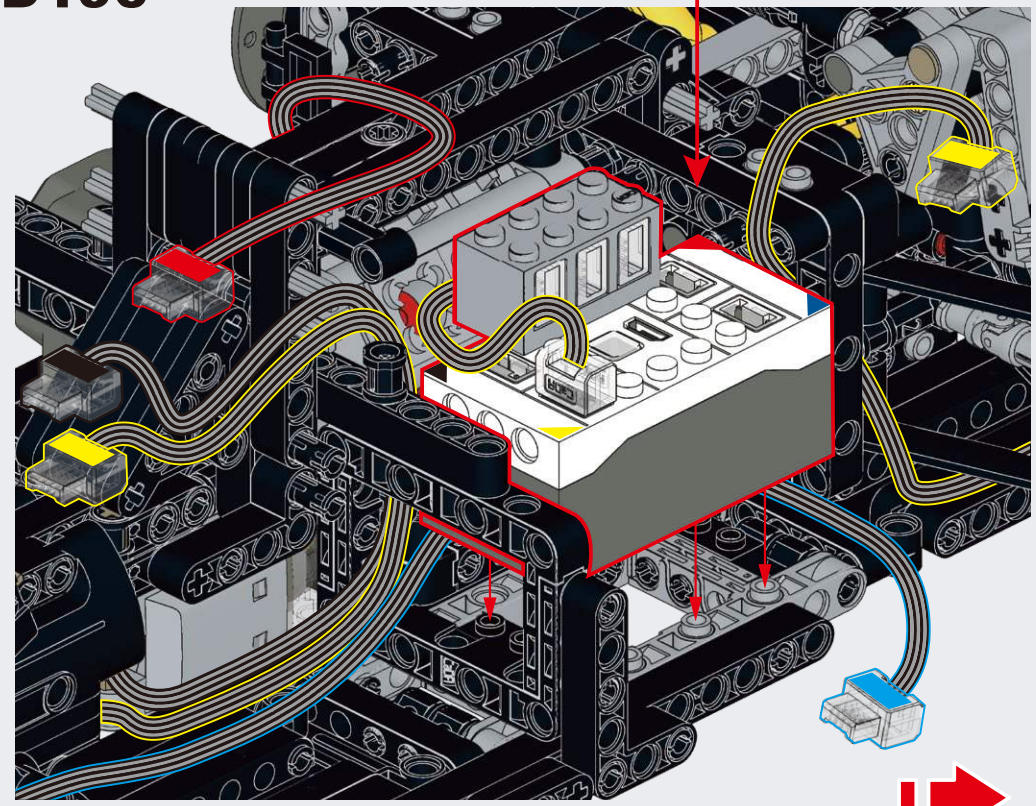

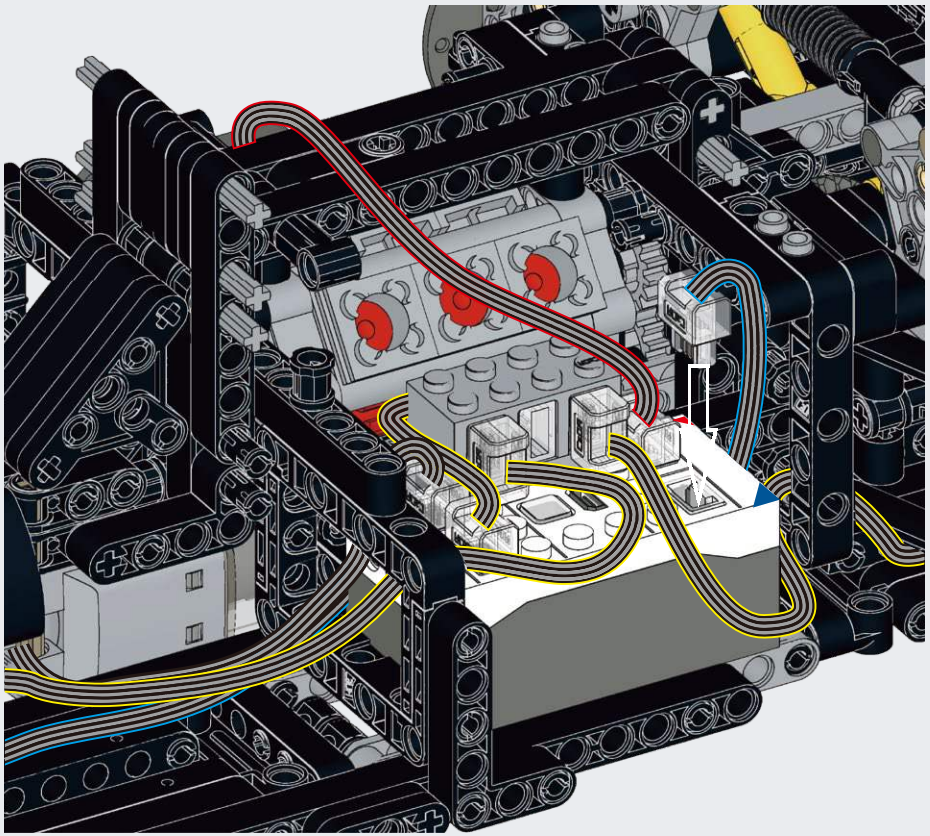

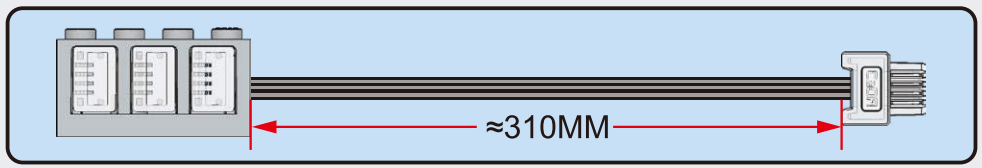

E

BAG 5

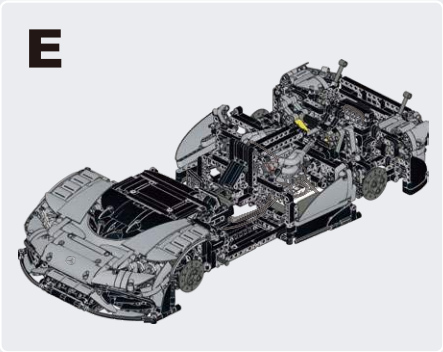

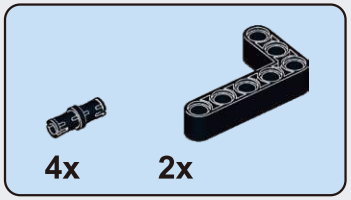

E1

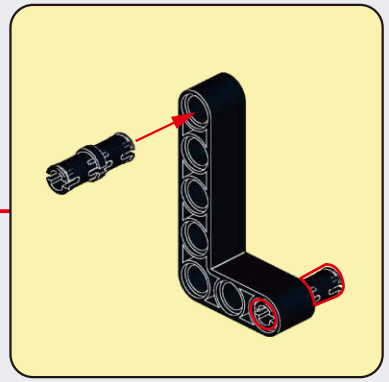

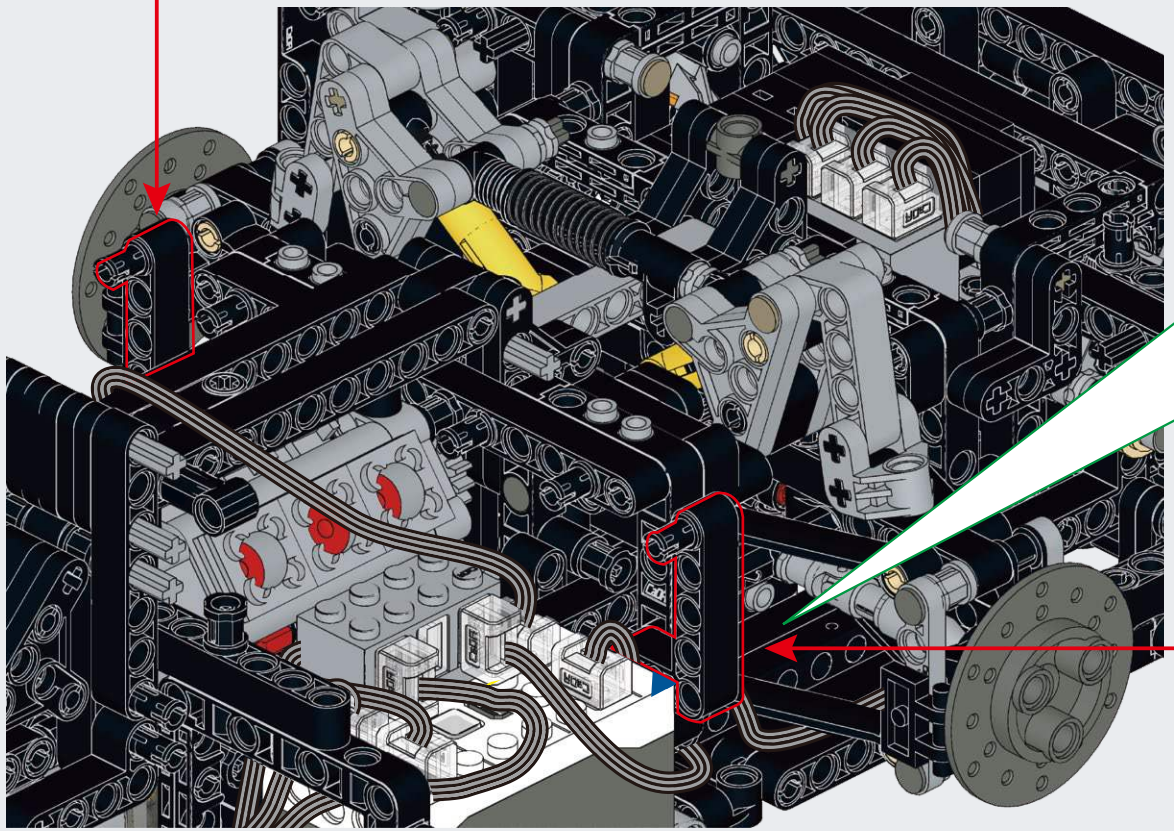

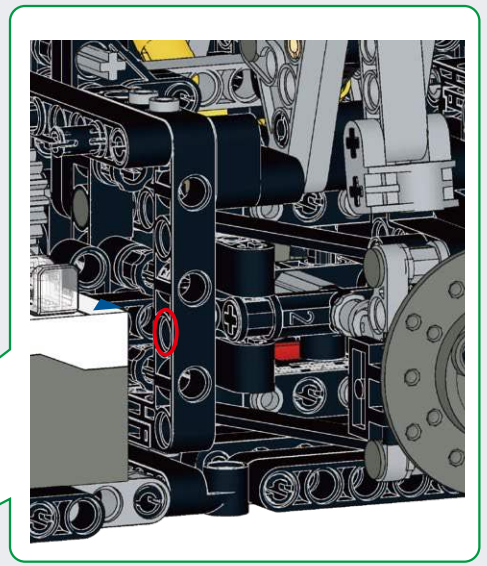

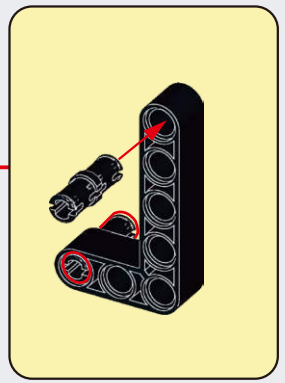

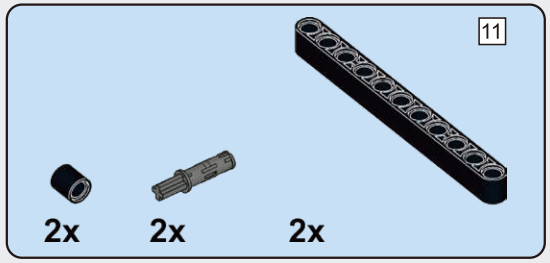

E2

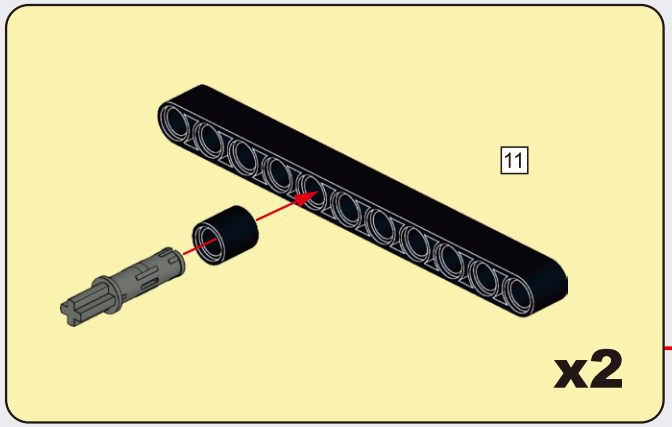

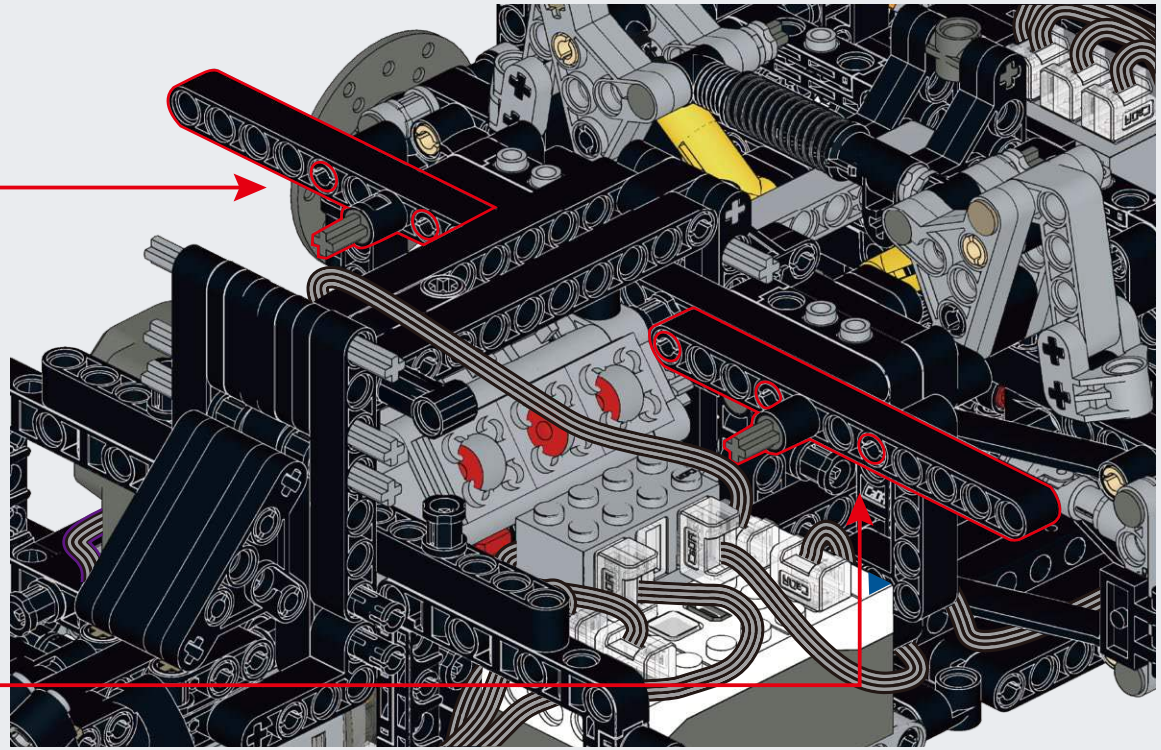

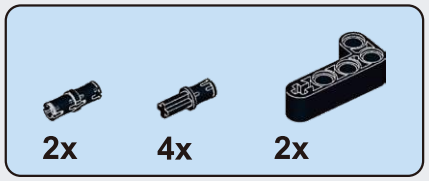

E3

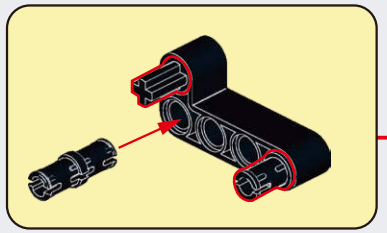

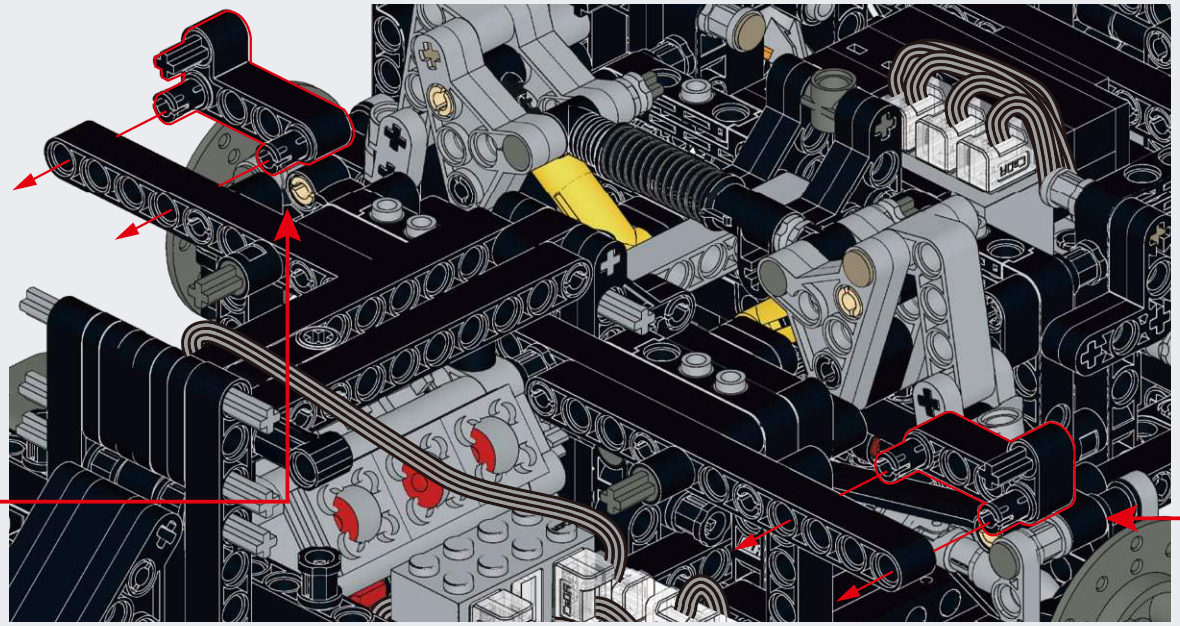

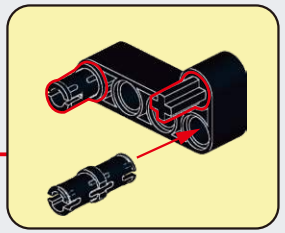

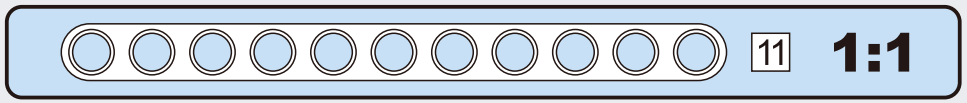

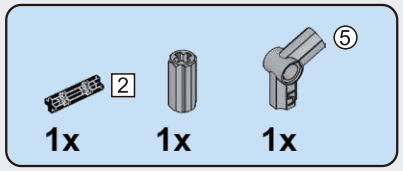

E4

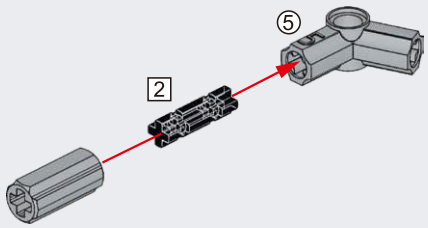

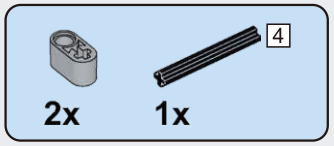

E5

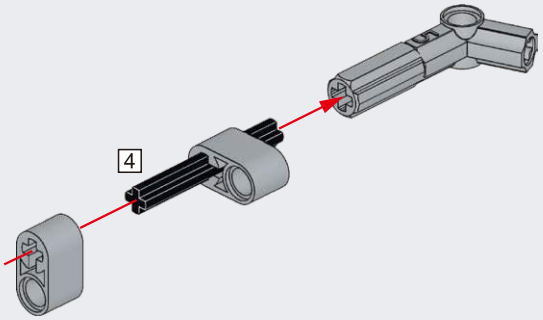

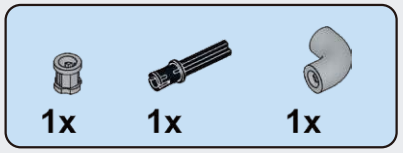

E6

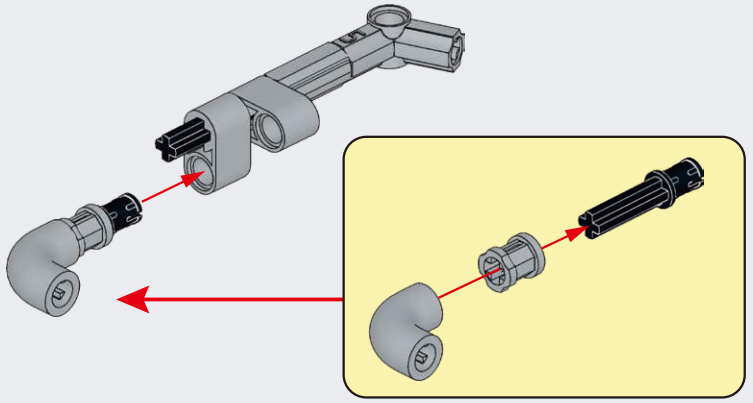

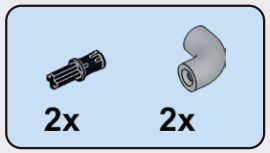

E7

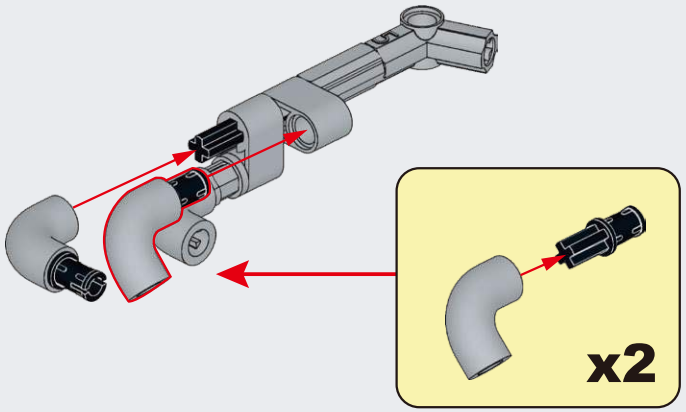

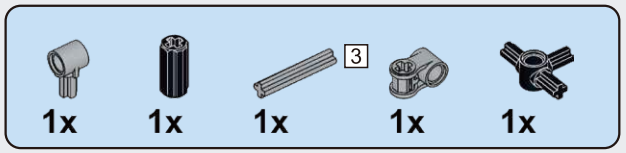

E8

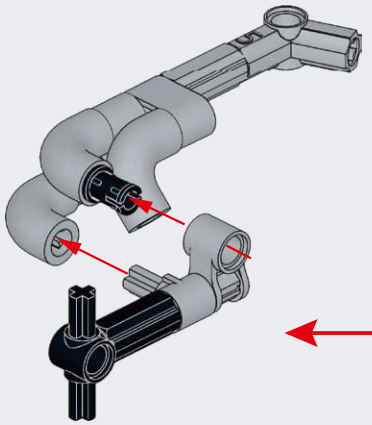

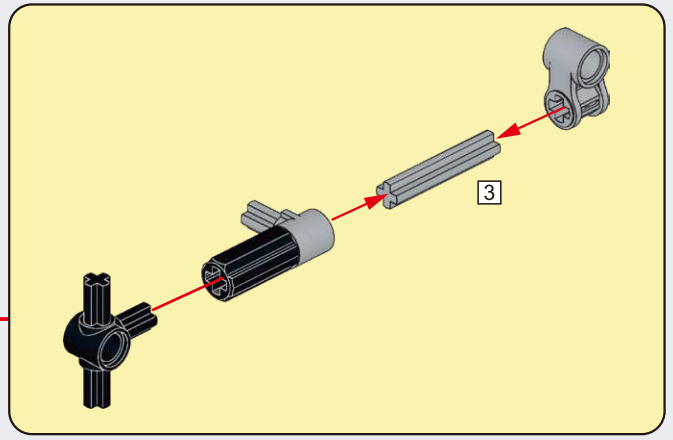

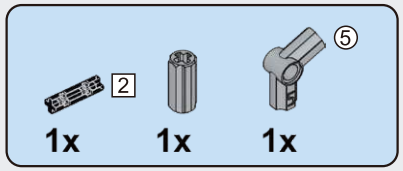

E9

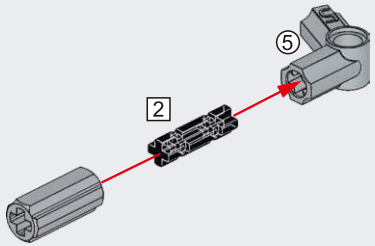

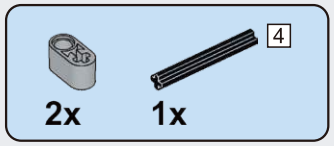

E10

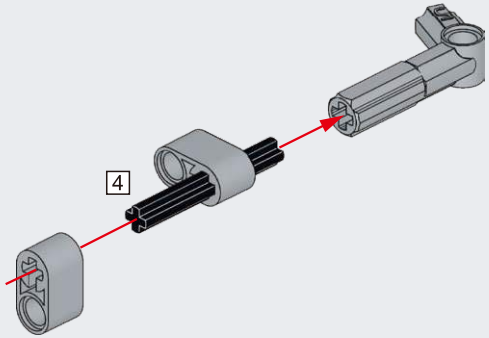

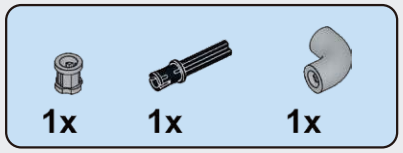

E11

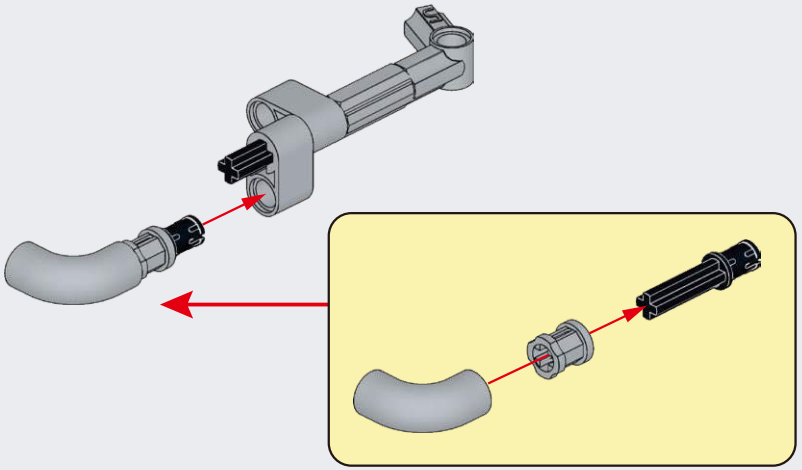

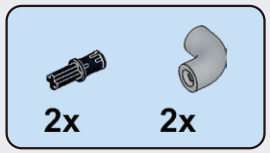

E12

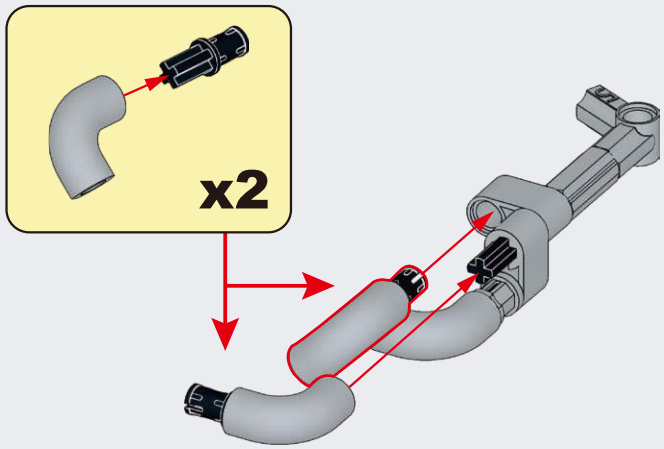

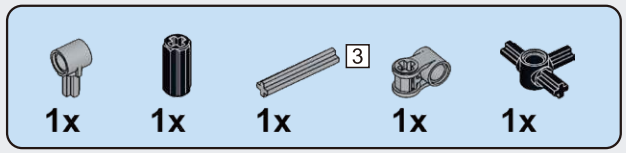

E13

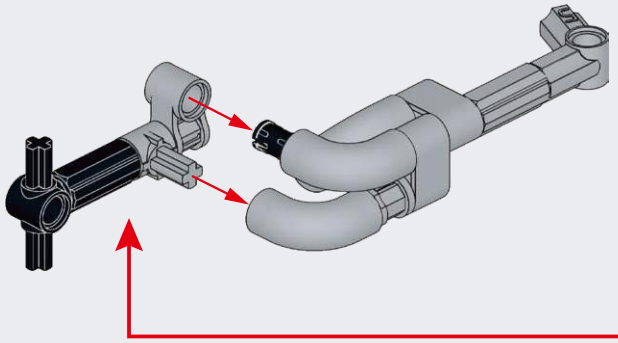

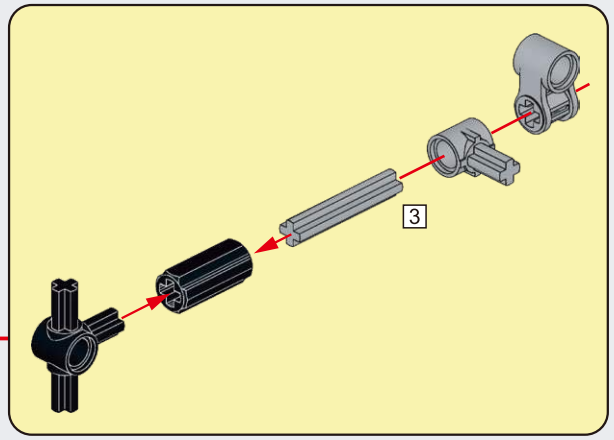

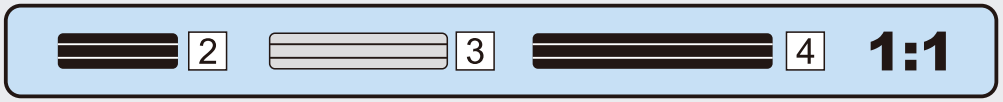

E14

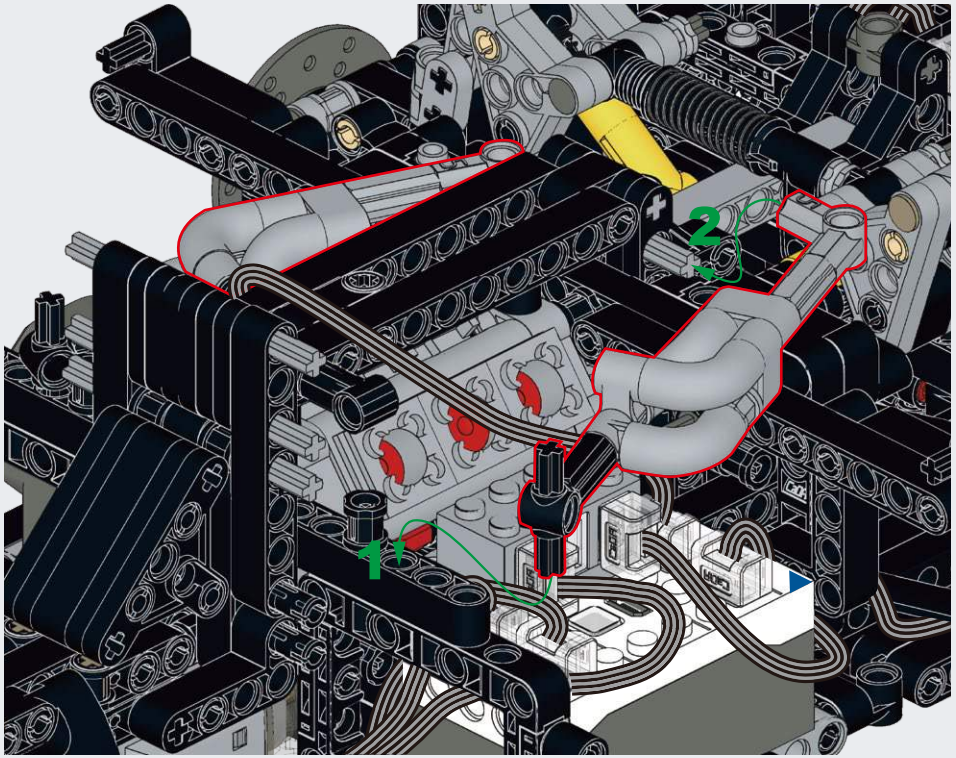

E15

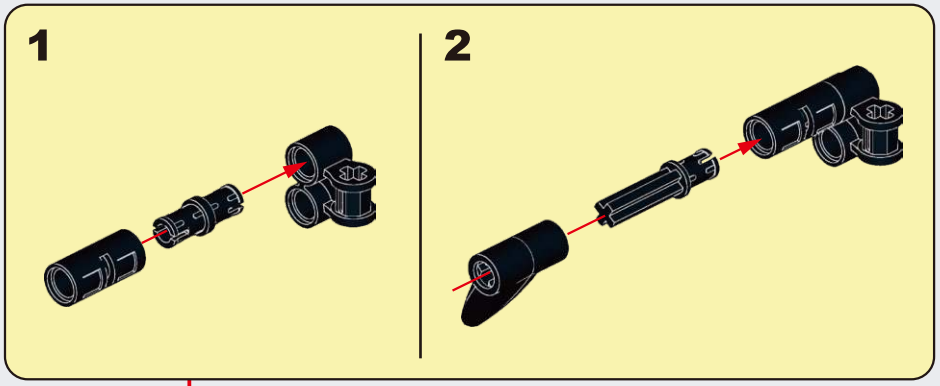

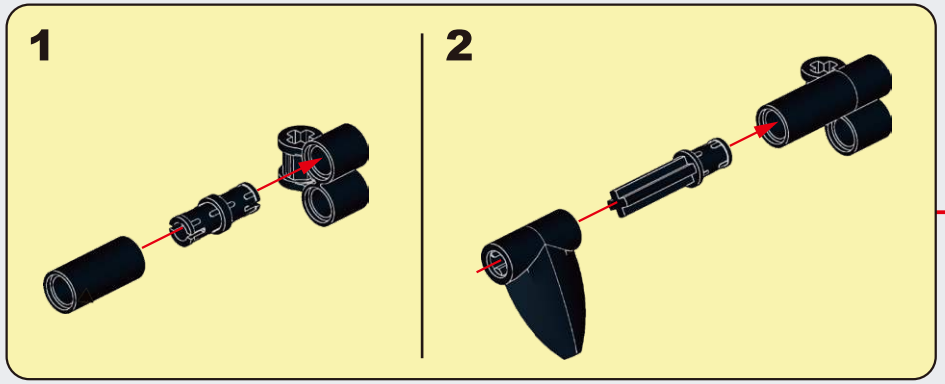

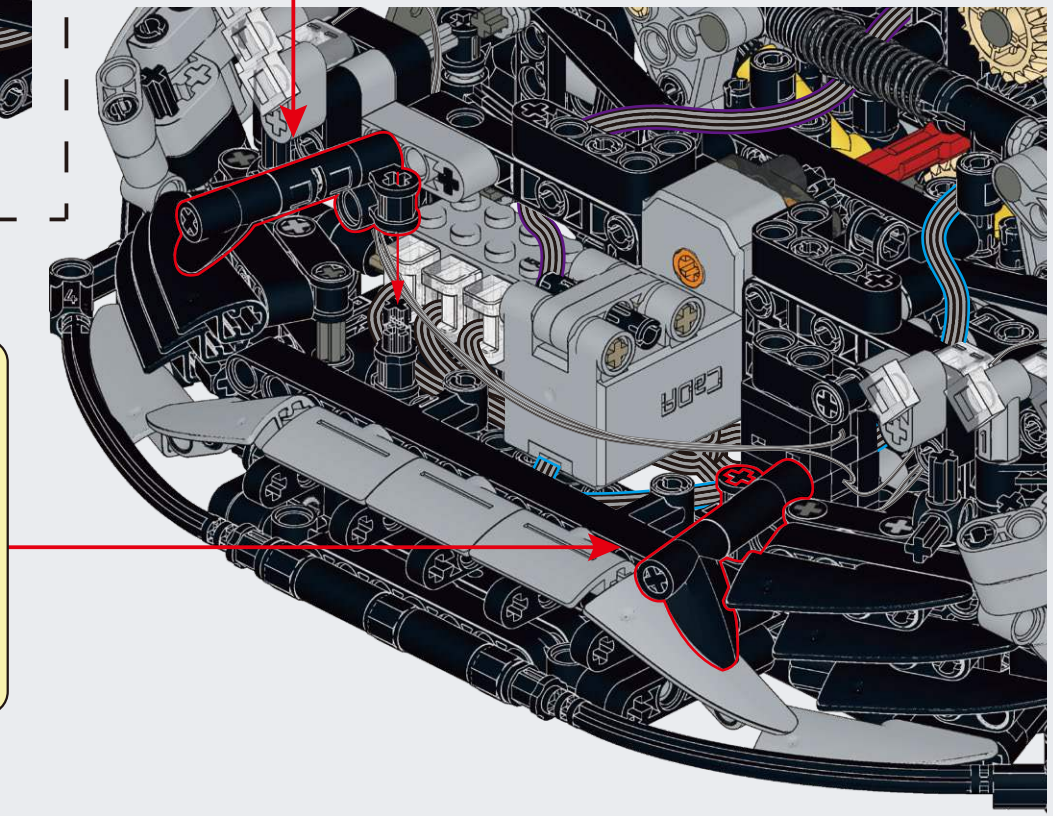

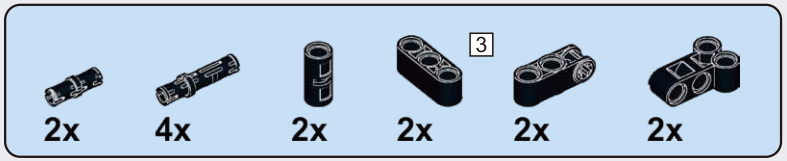

E16

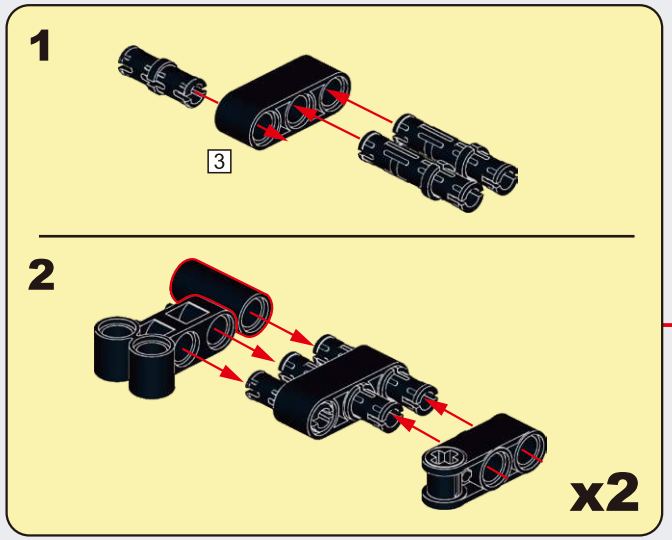

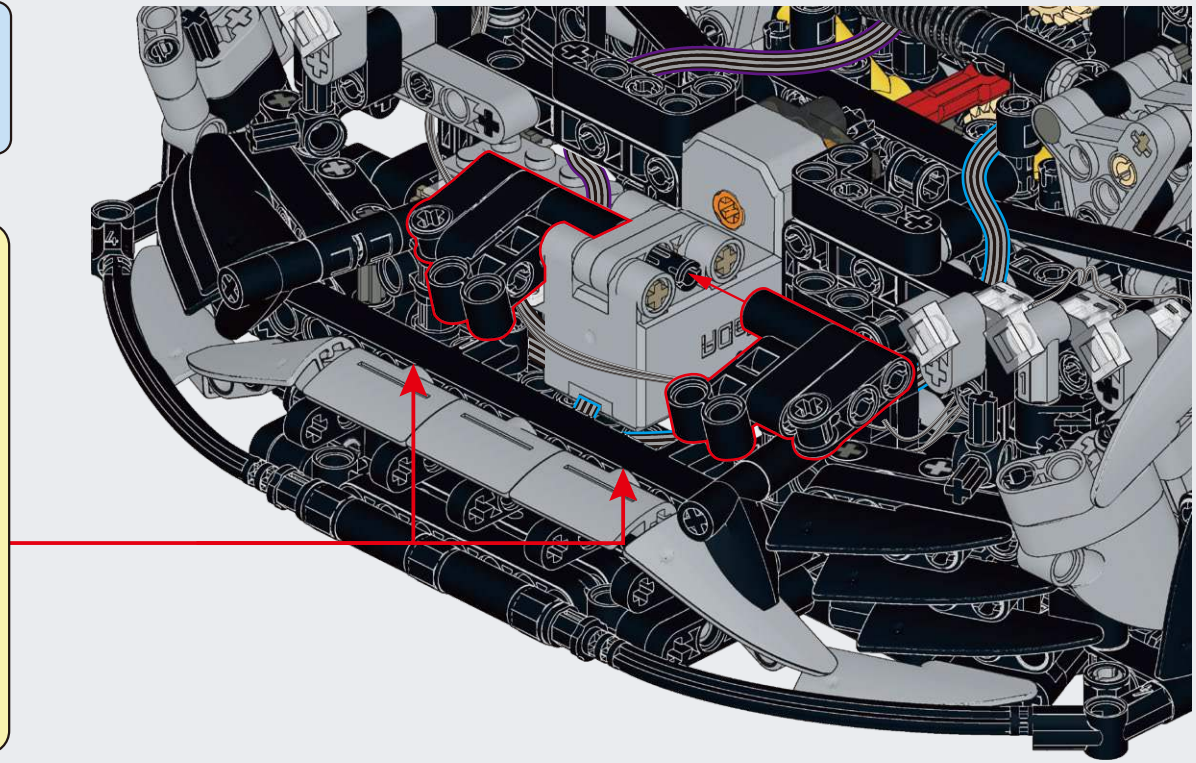

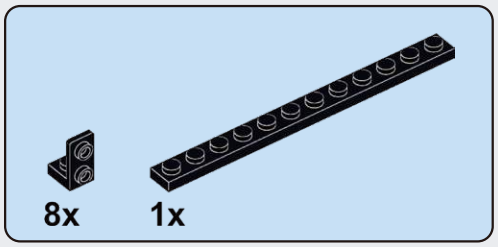

E17

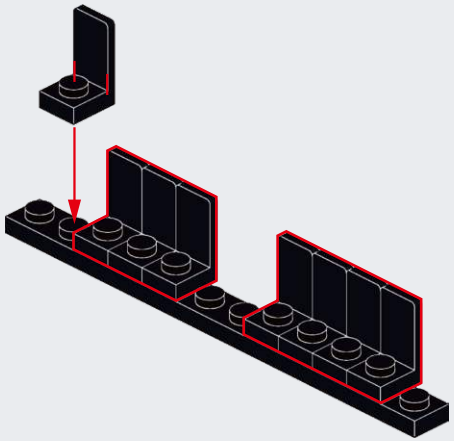

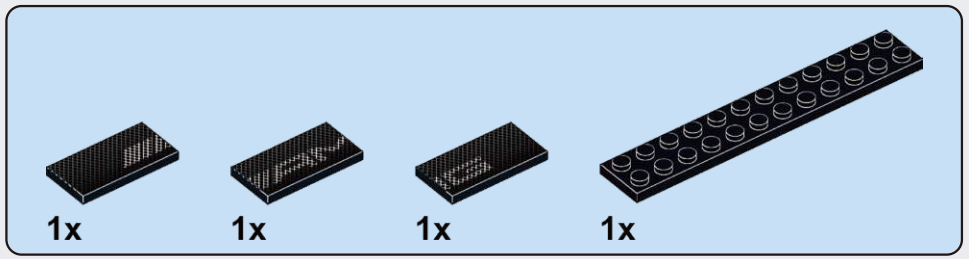

E18

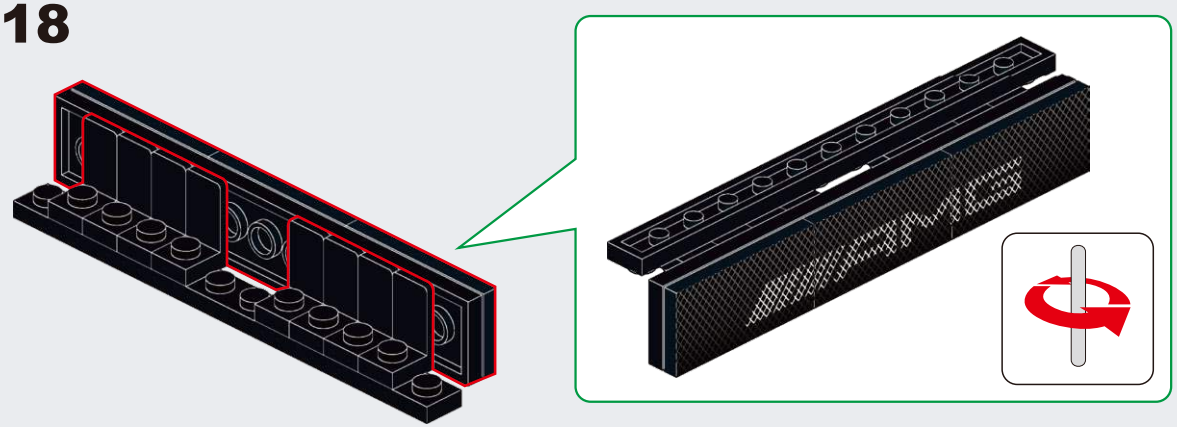

E19

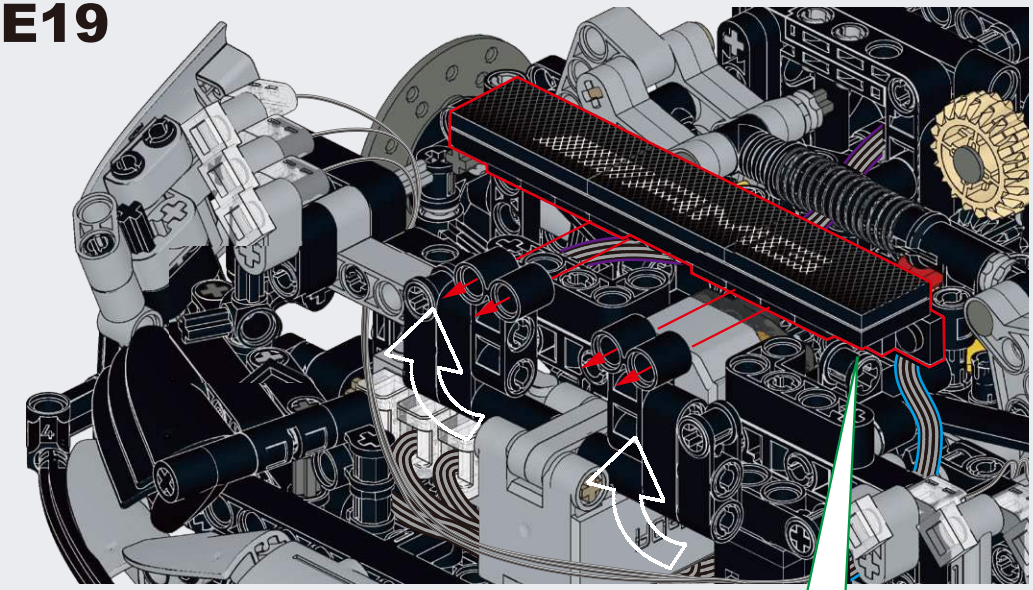

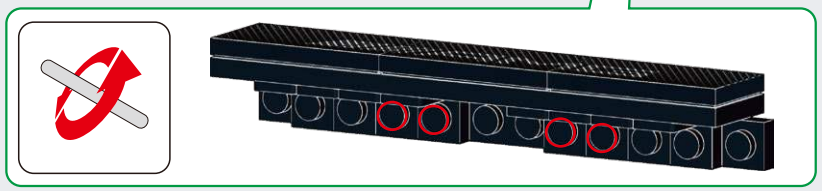

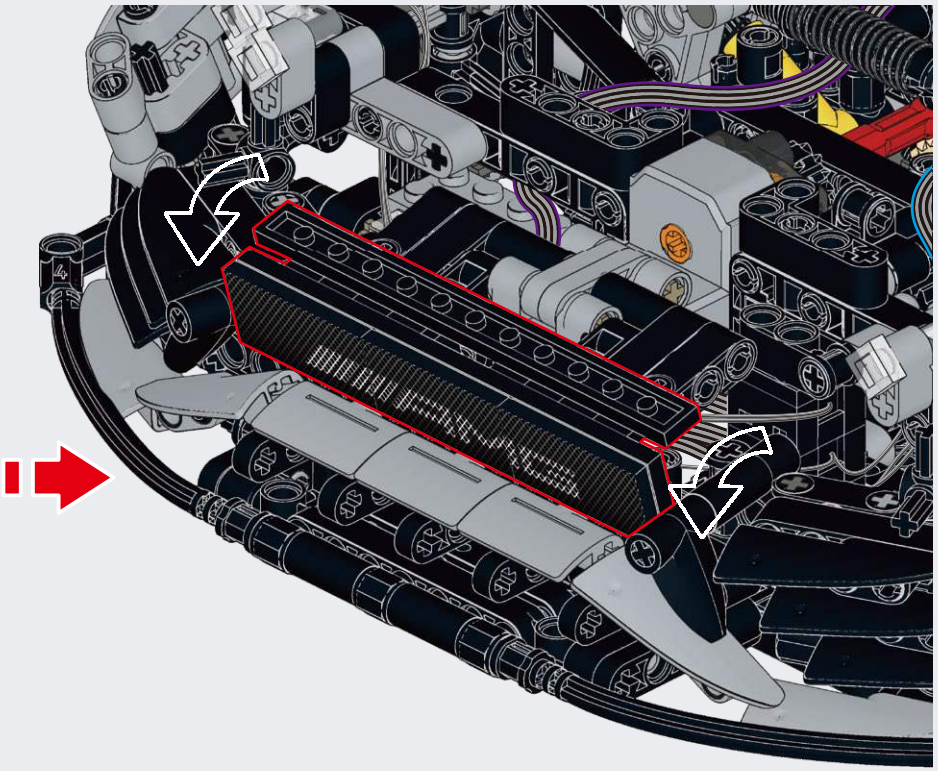

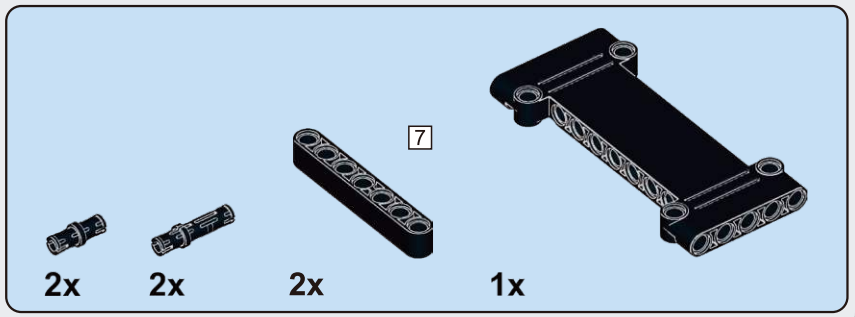

E20

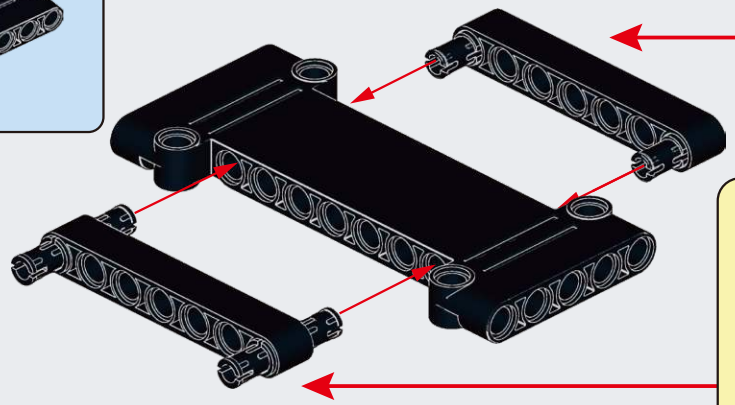

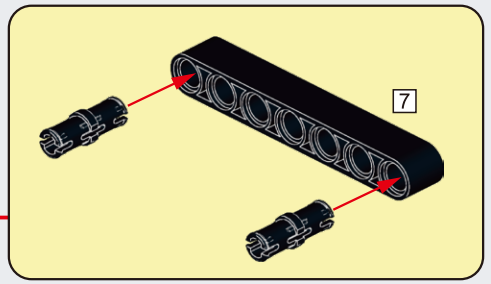

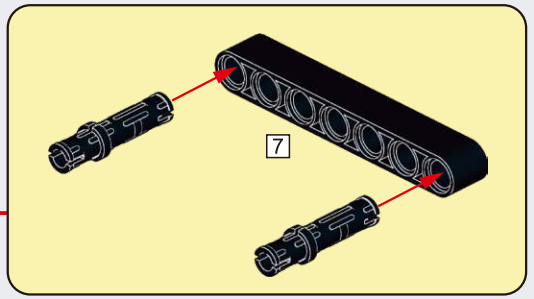

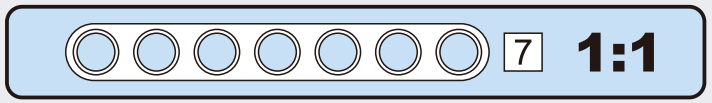

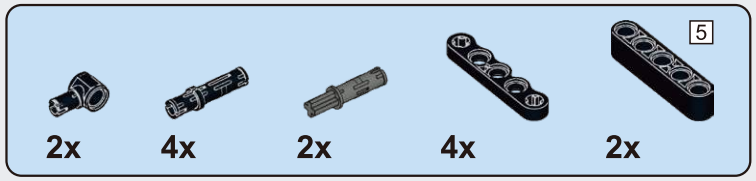

E21

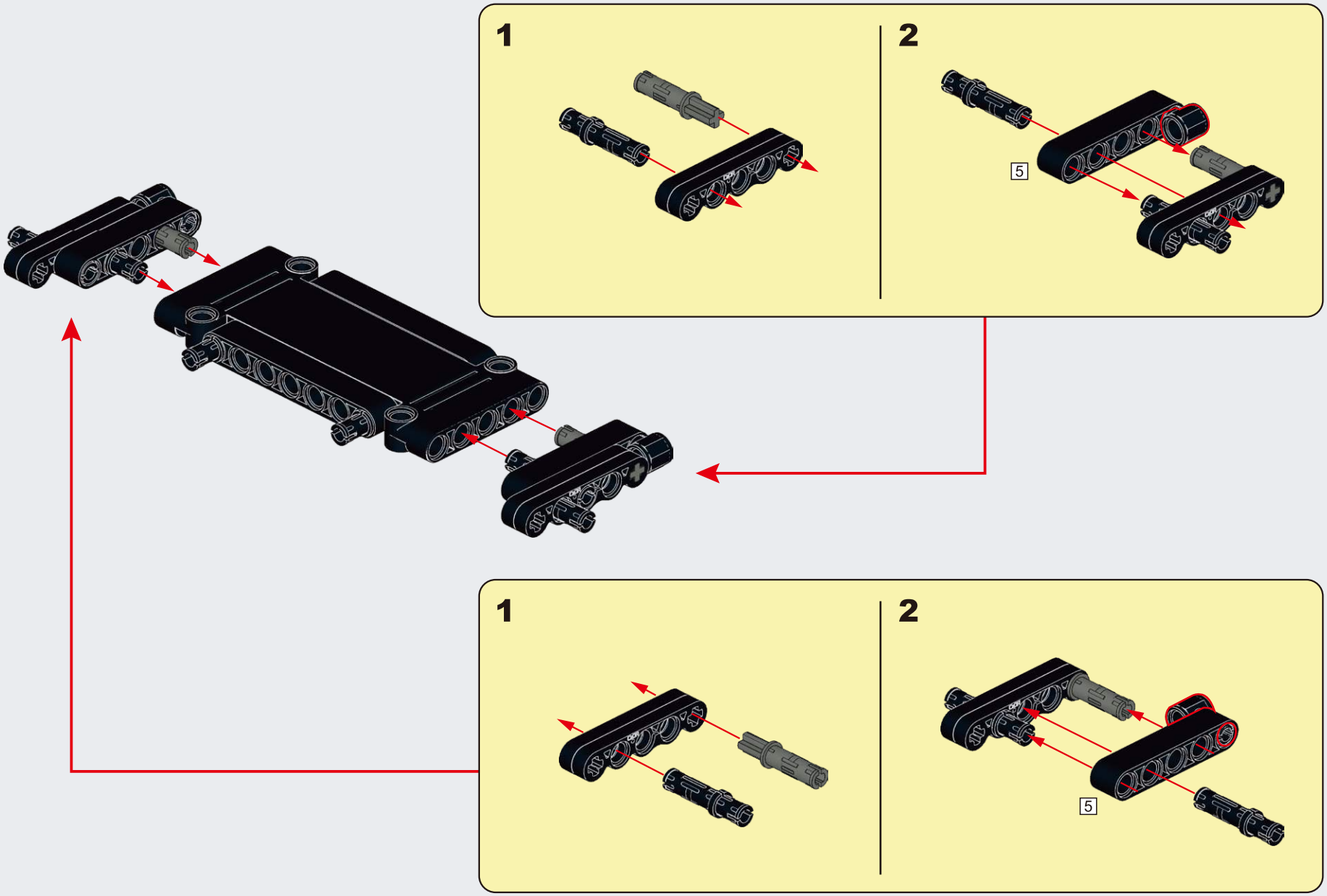

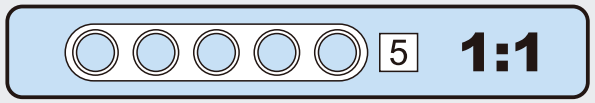

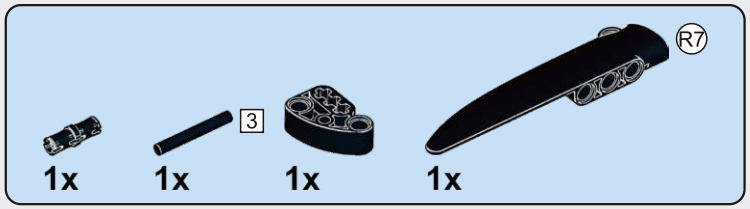

E22

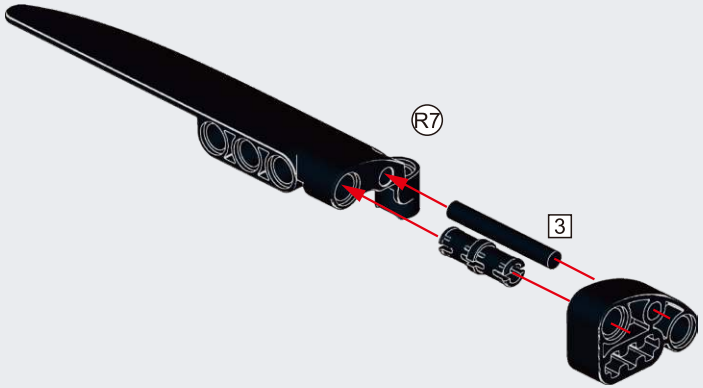

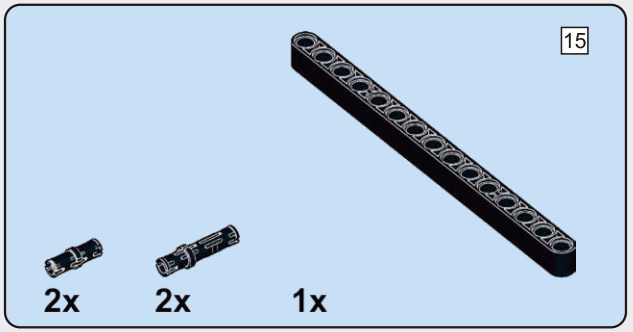

E23

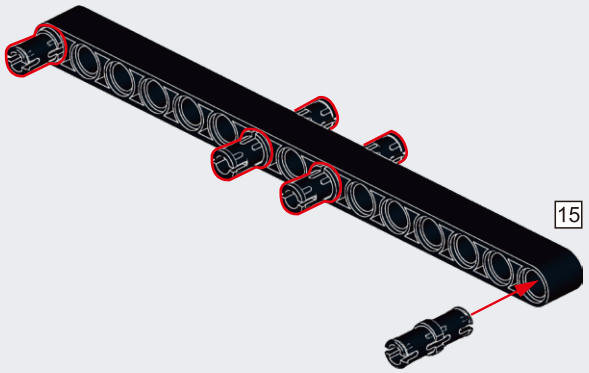

E24

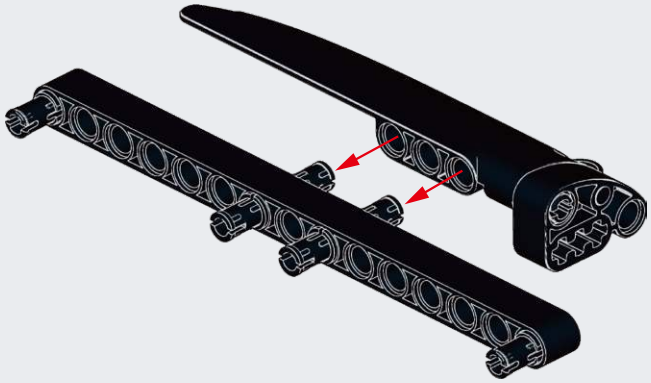

E25

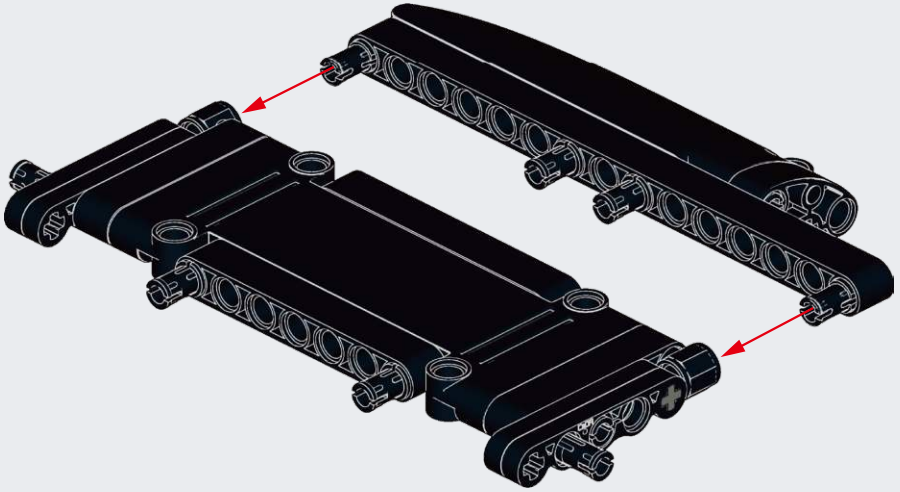

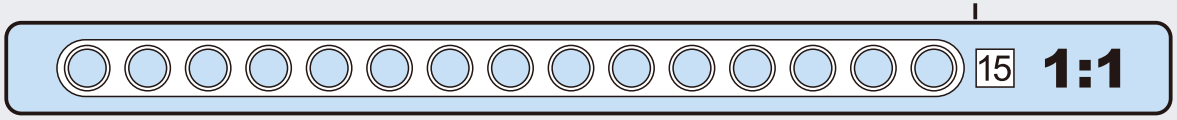

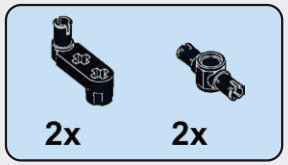

E26

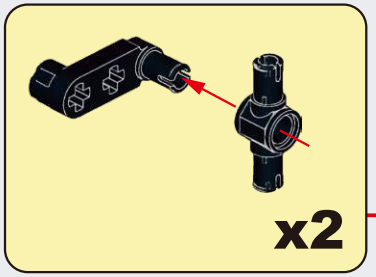

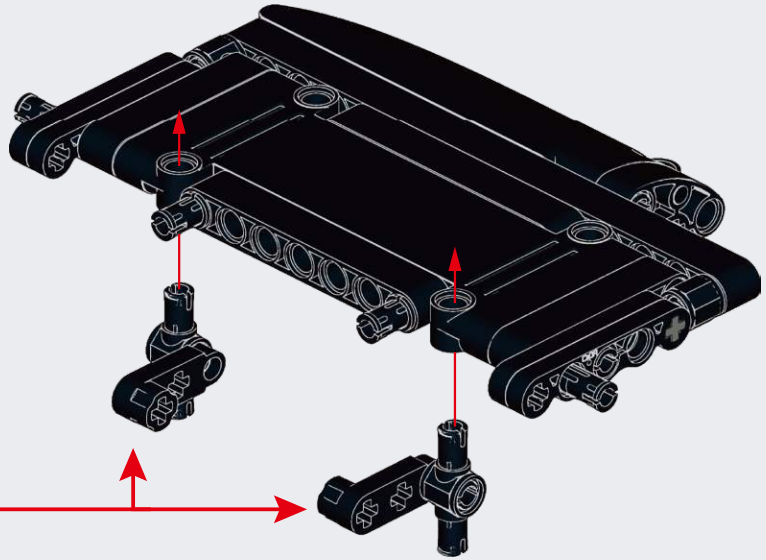

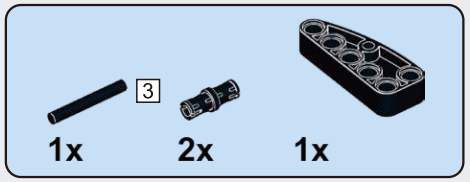

E27

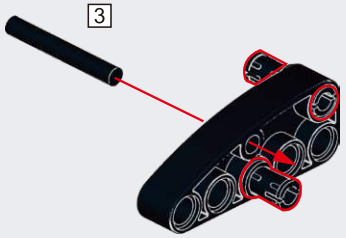

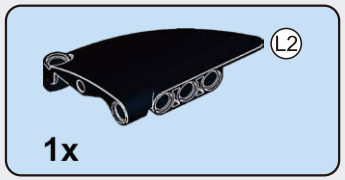

E28

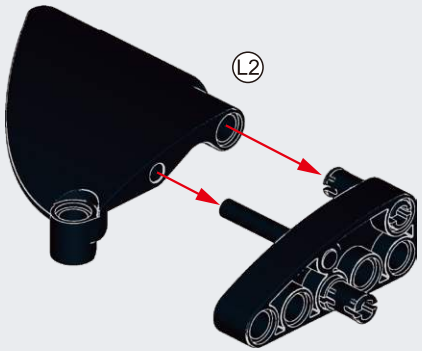

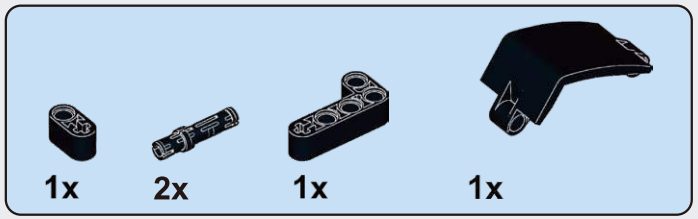

E29

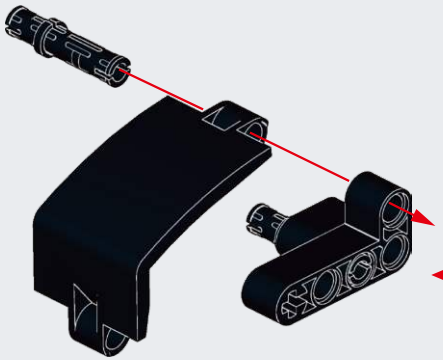

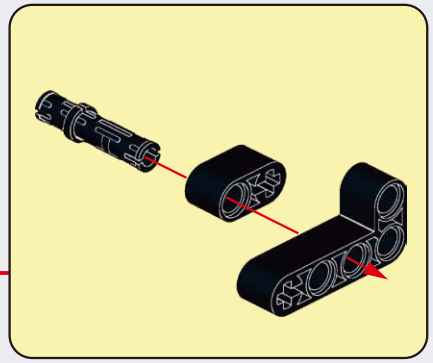

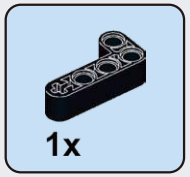

E30

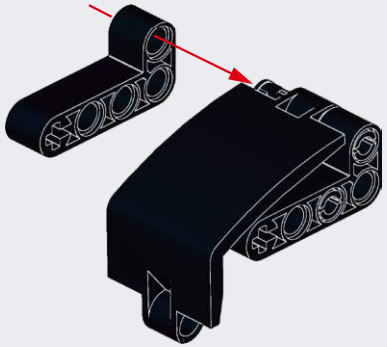

E31

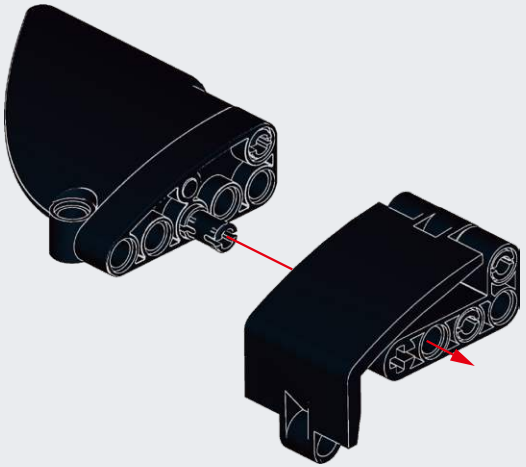

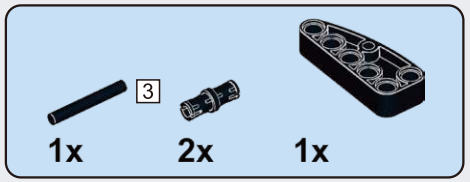

E32

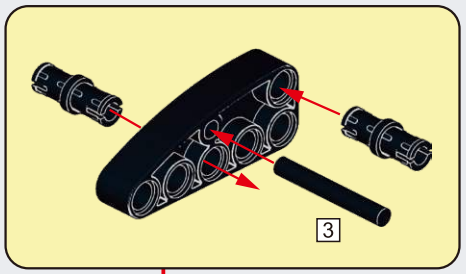

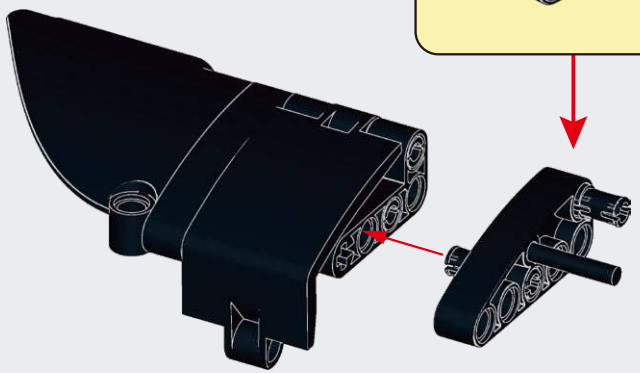

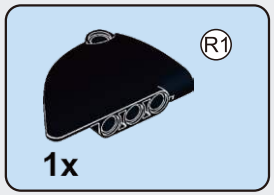

E33

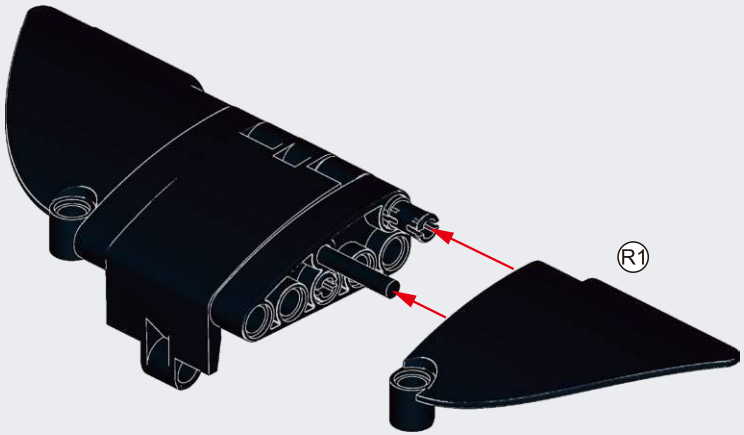

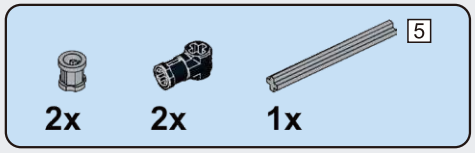

E34

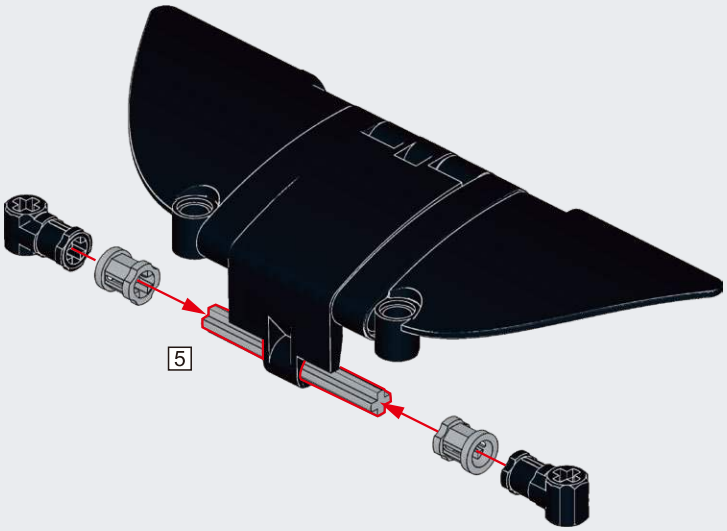

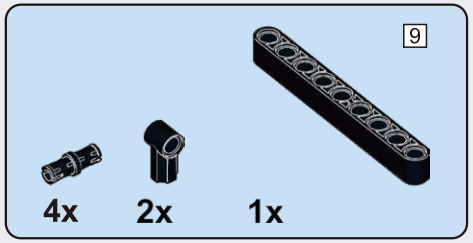

E35

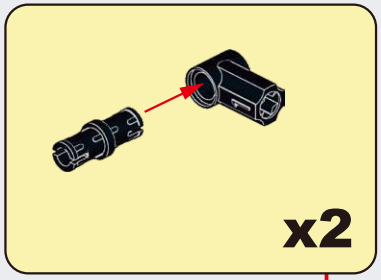

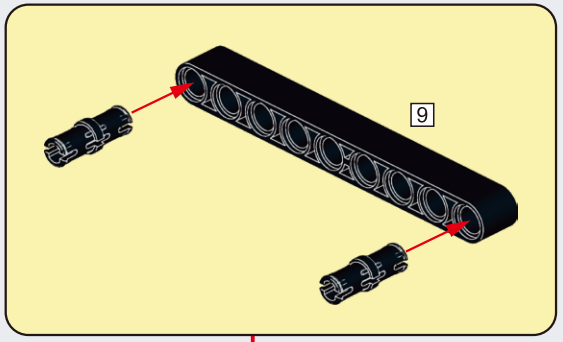

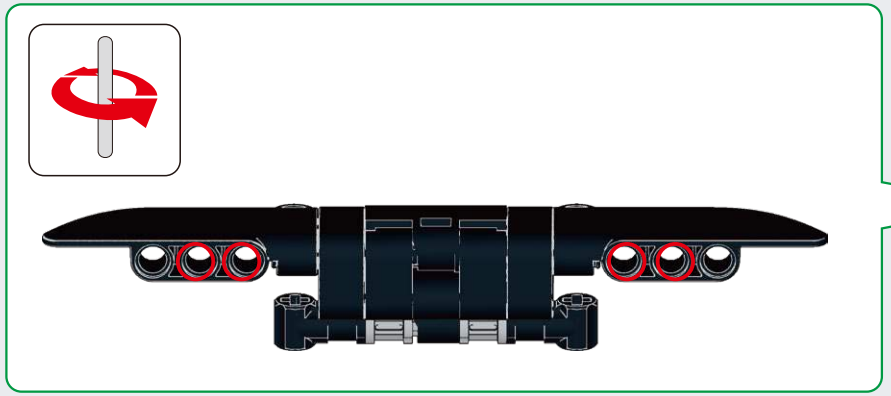

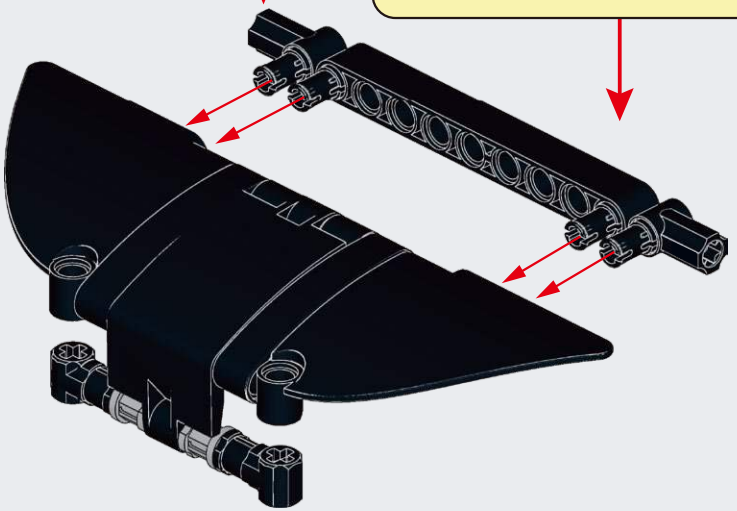

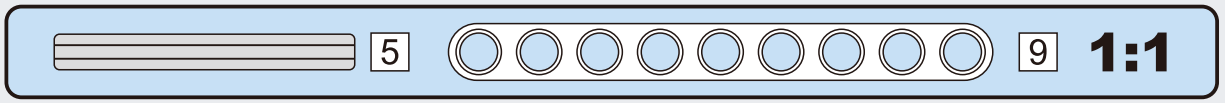

E36

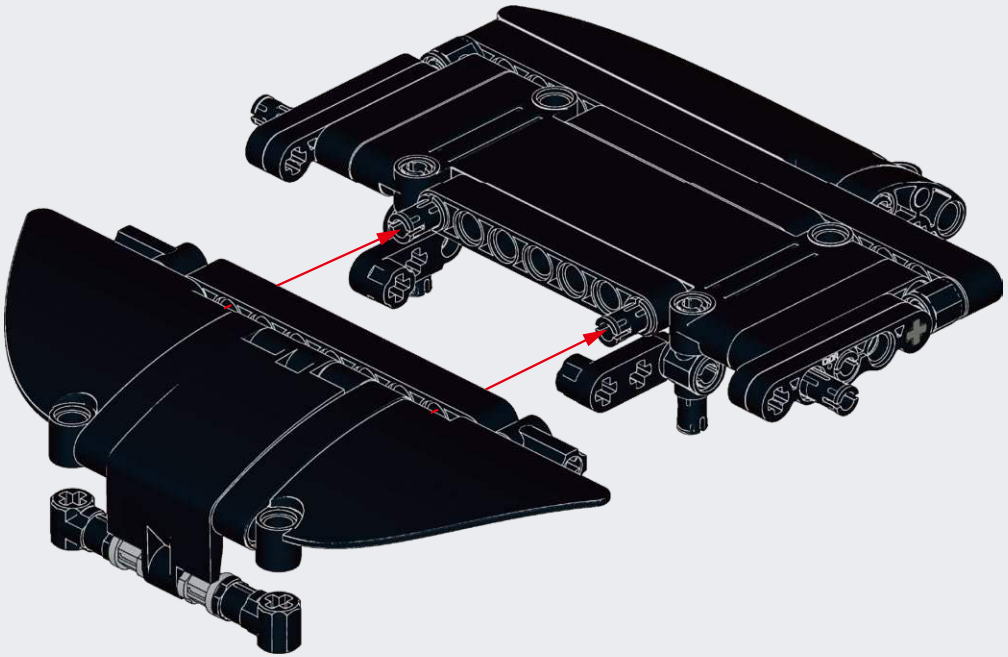

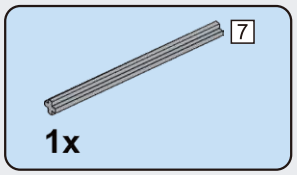

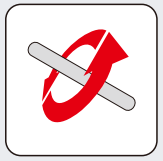

E37

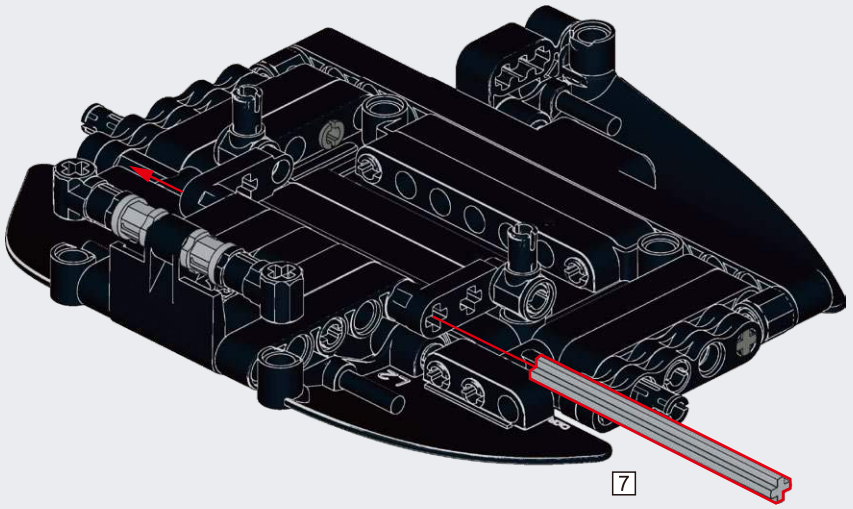

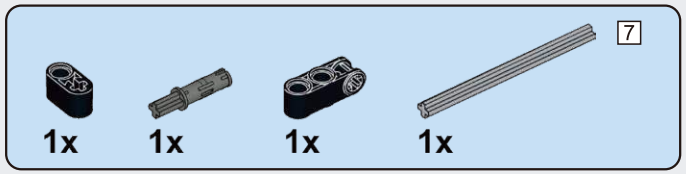

E38

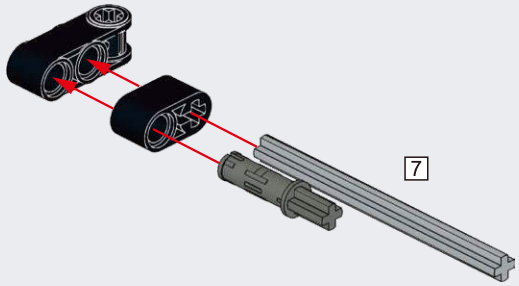

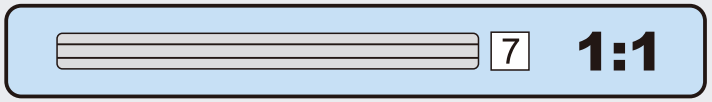

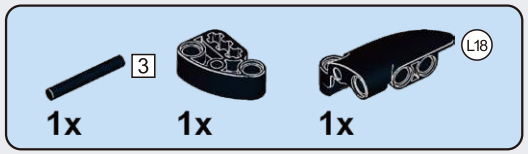

E39

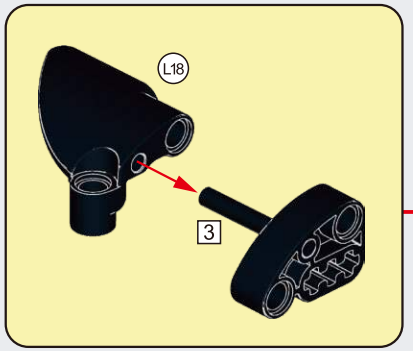

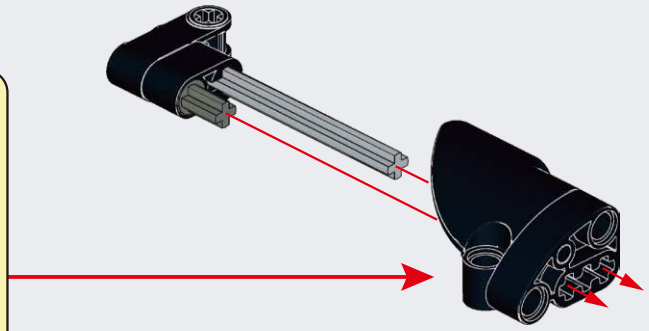

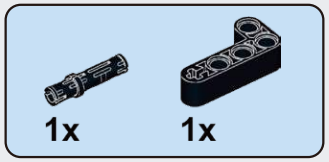

E40

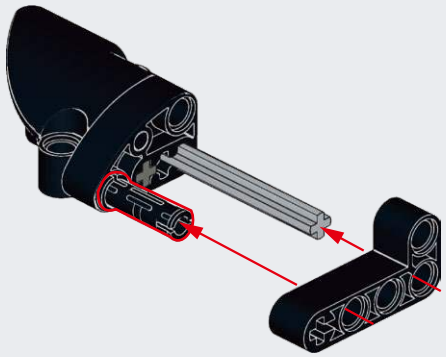

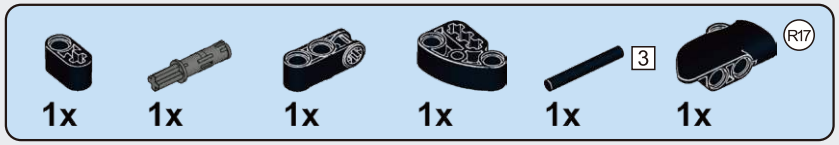

E41

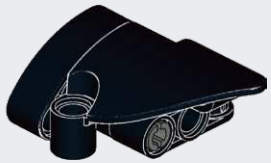

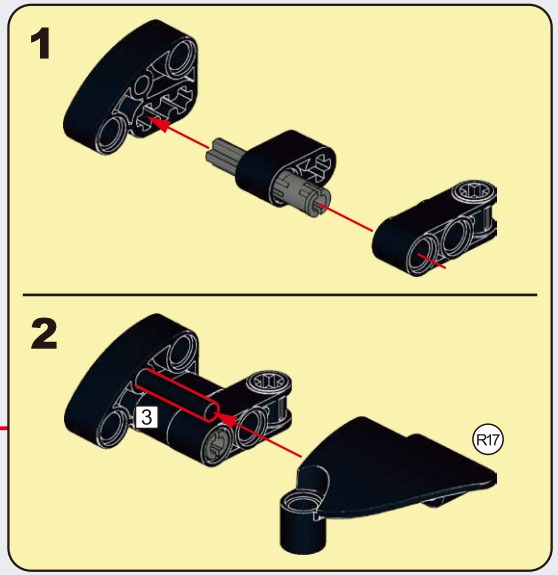

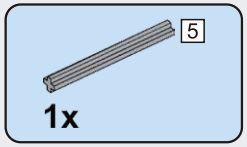

E42

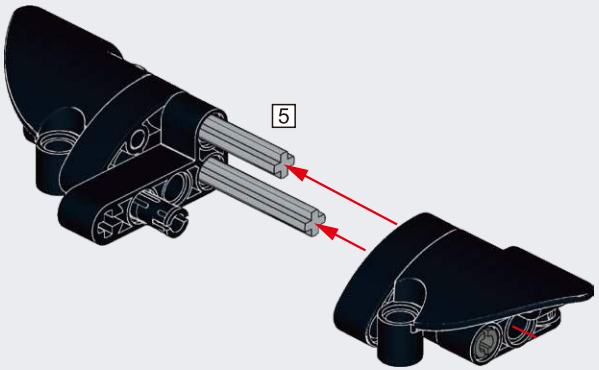

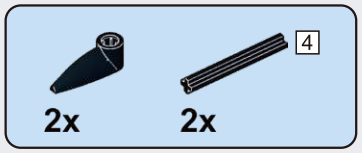

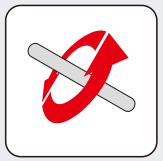

E43

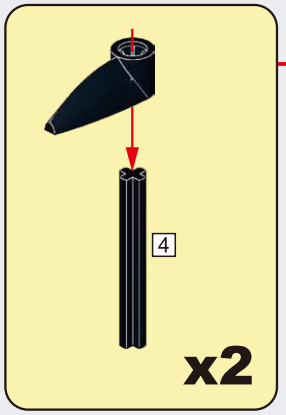

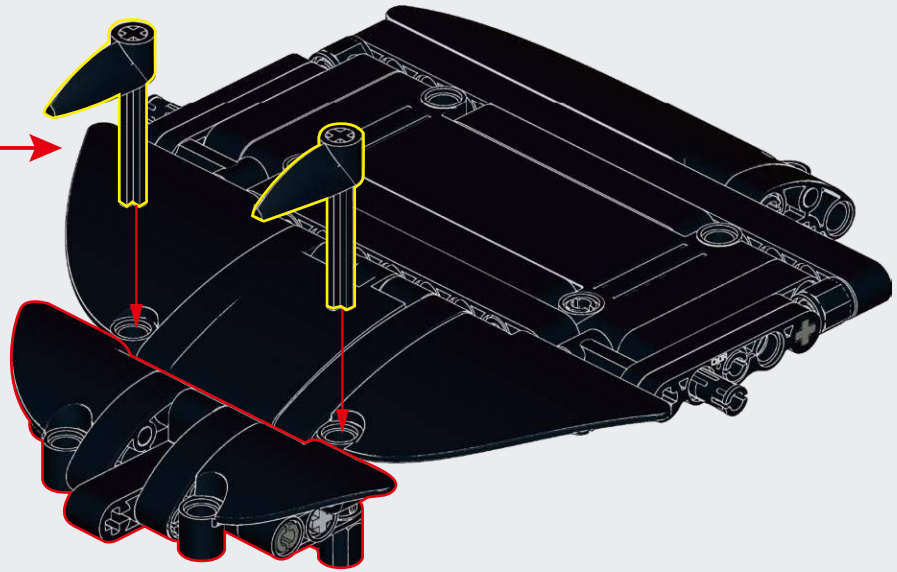

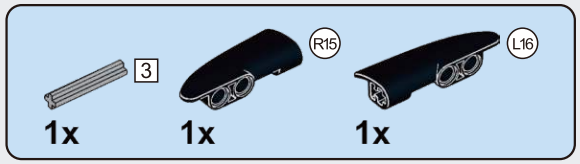

E44

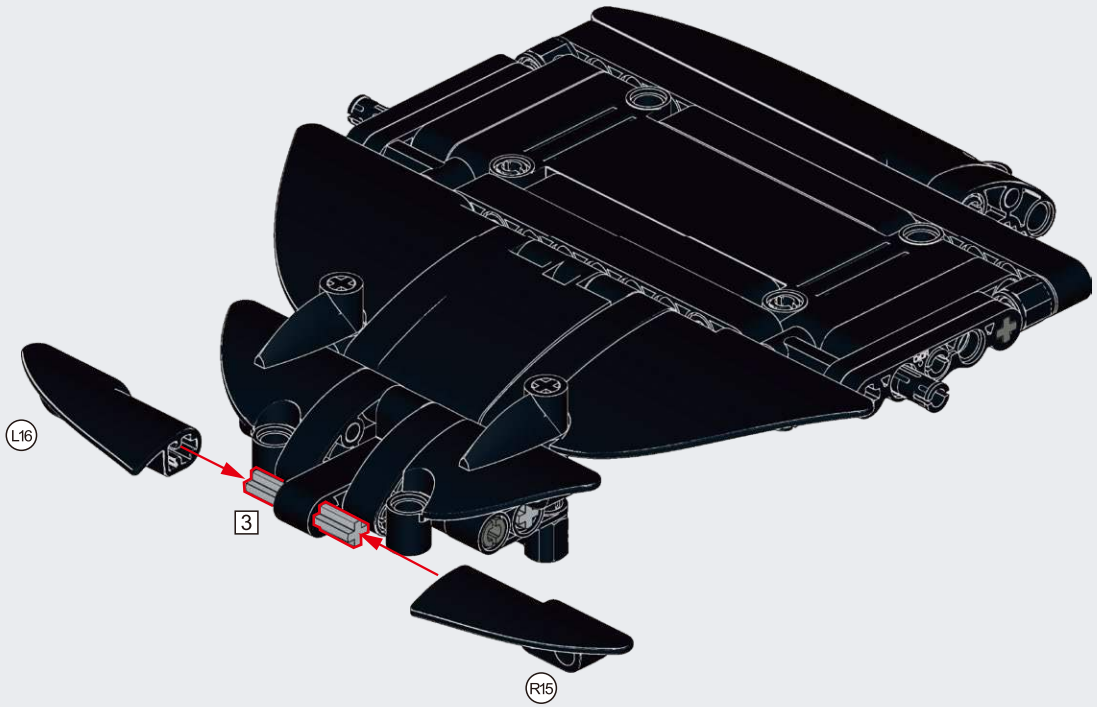

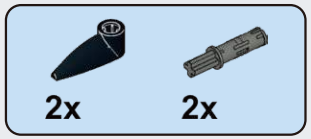

E45

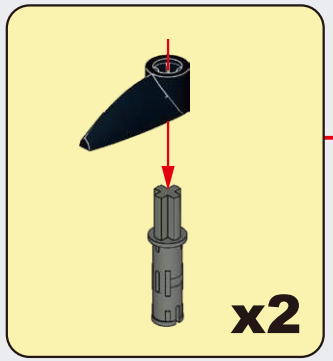

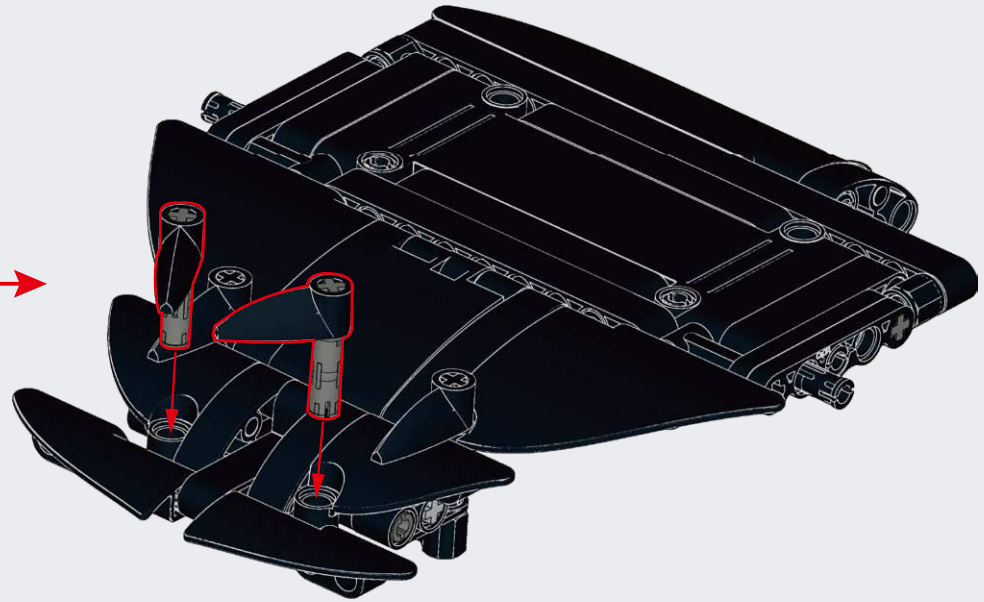

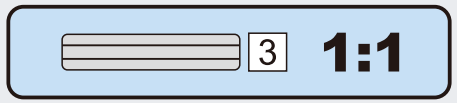

E46

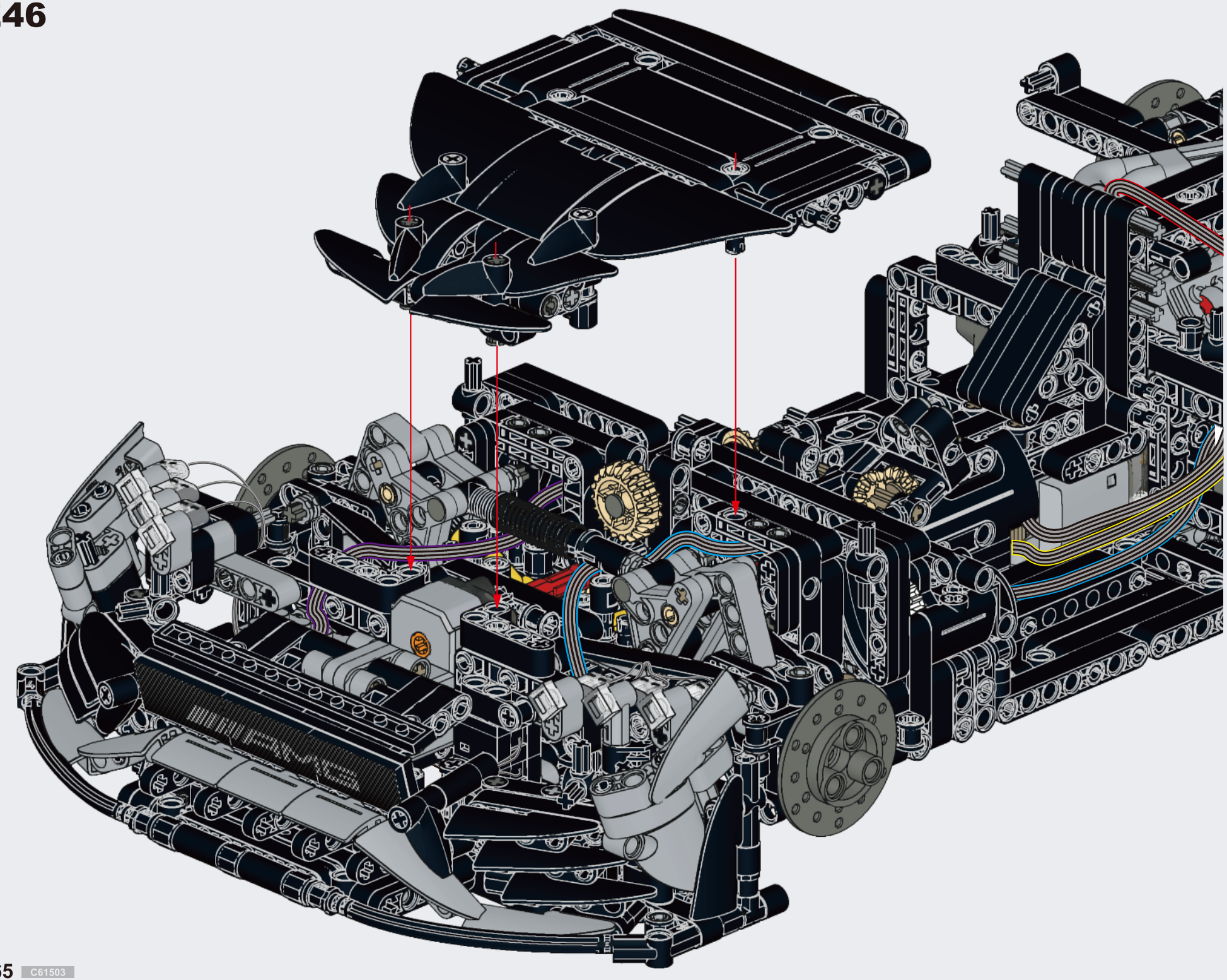

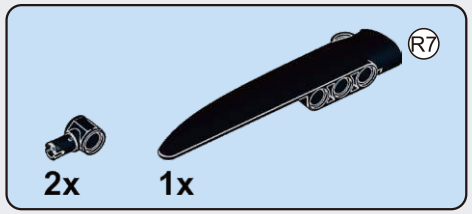

E47

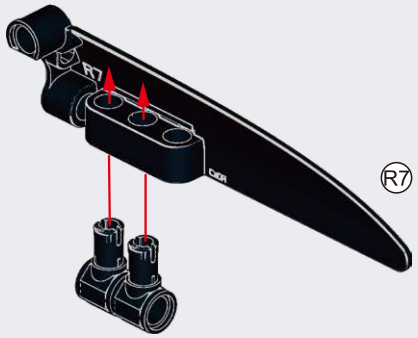

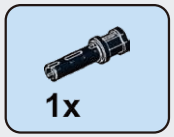

E48

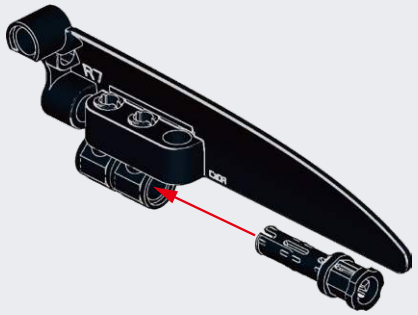

E49

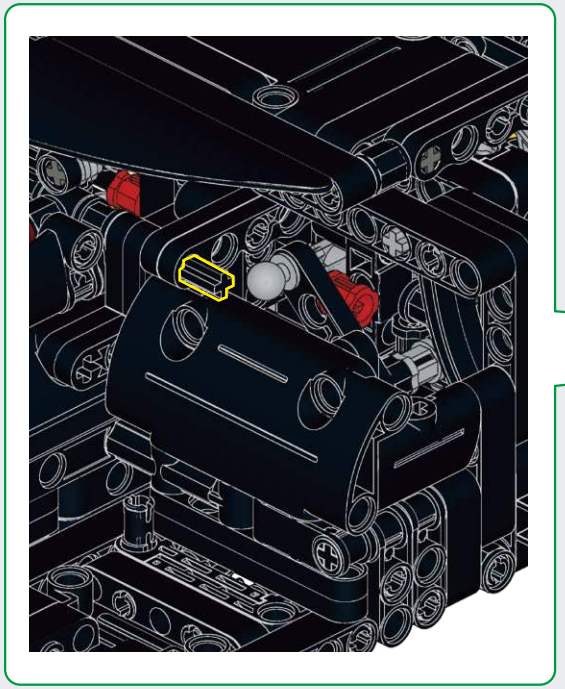

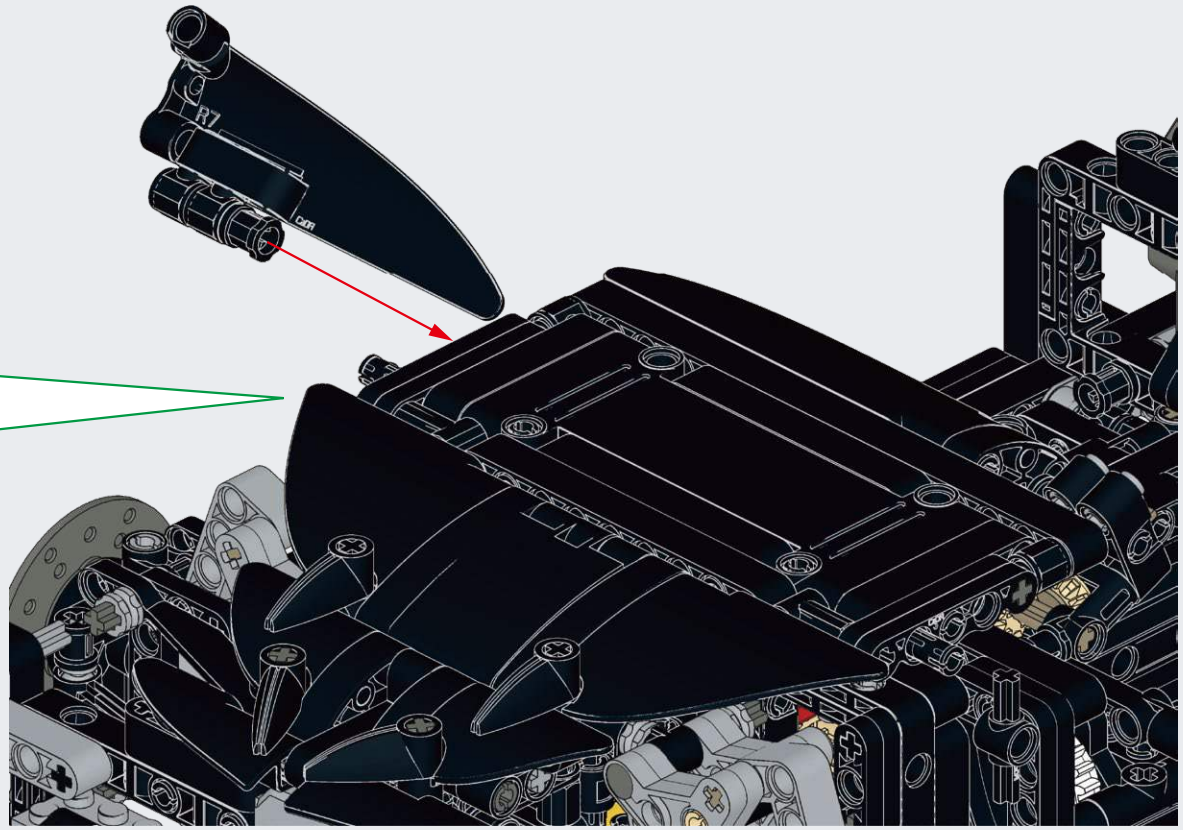

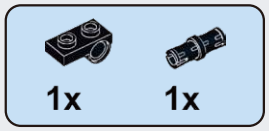

E50

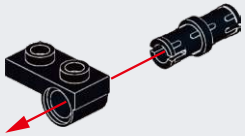

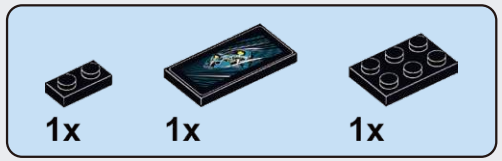

E51

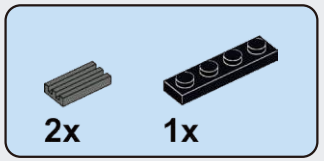

E52

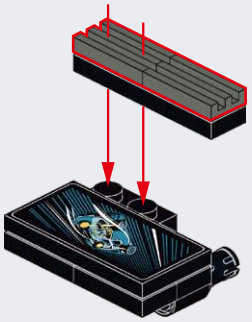

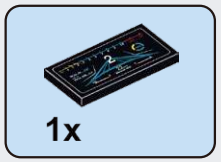

E53

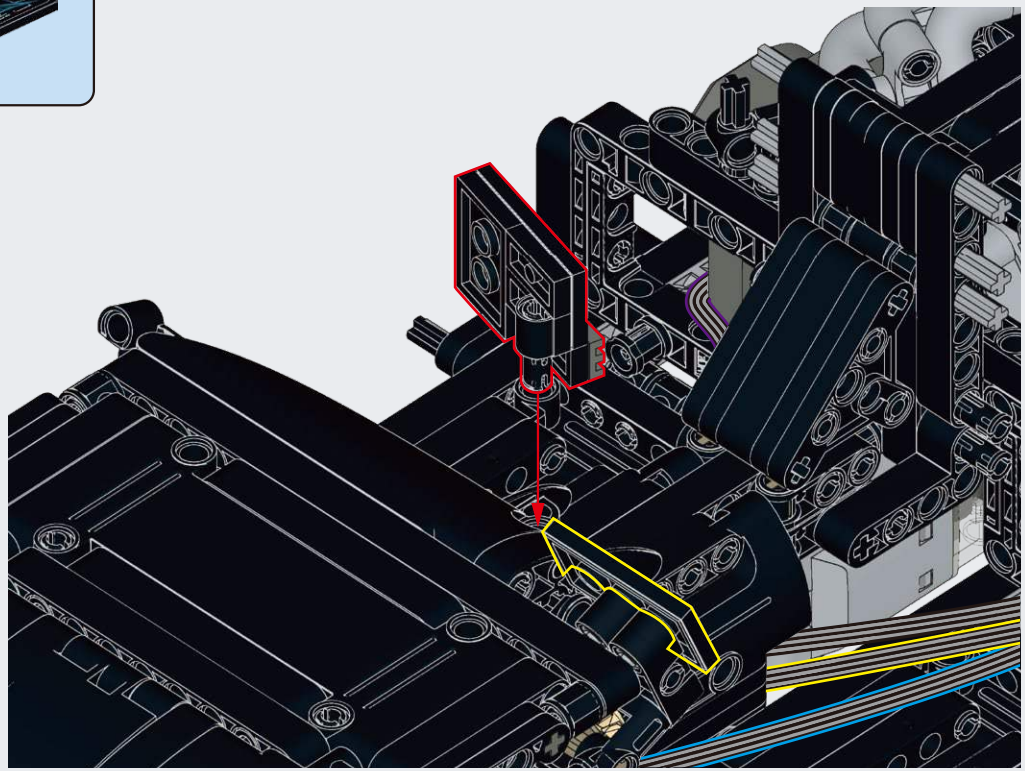

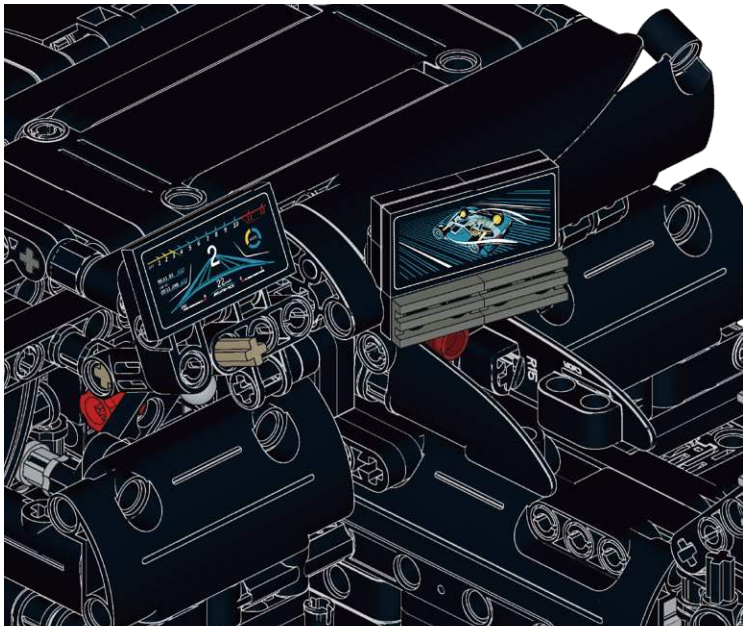

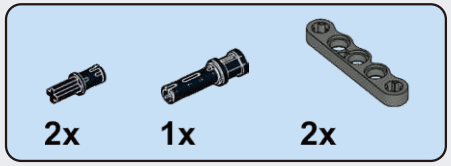

E54

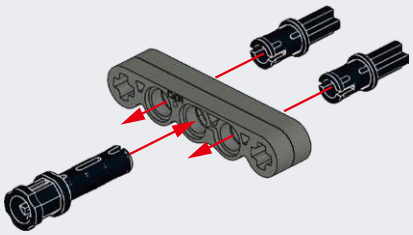

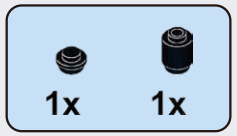

E55

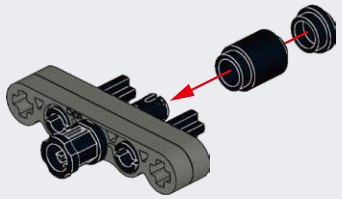

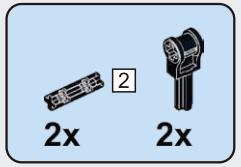

E56

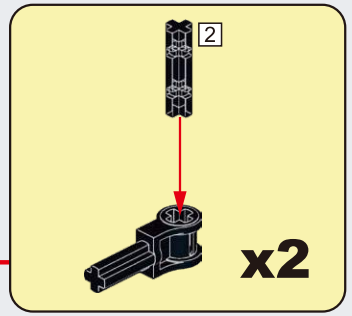

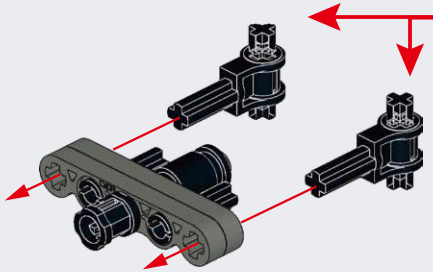

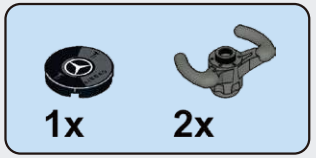

E57

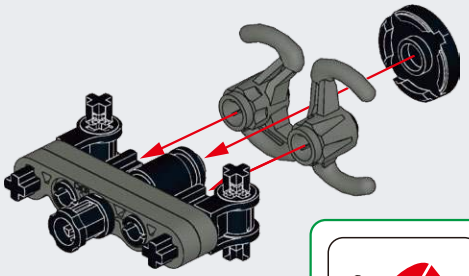

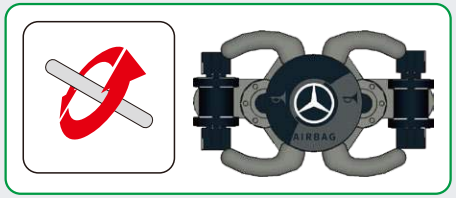

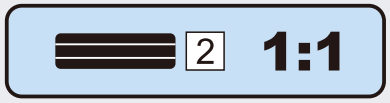

E58

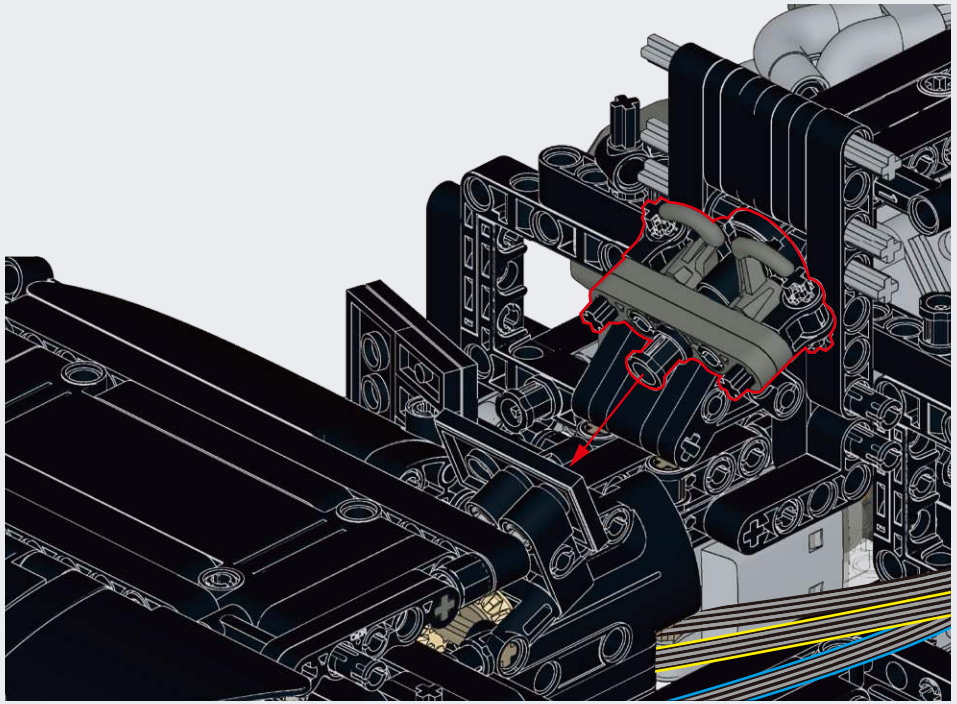

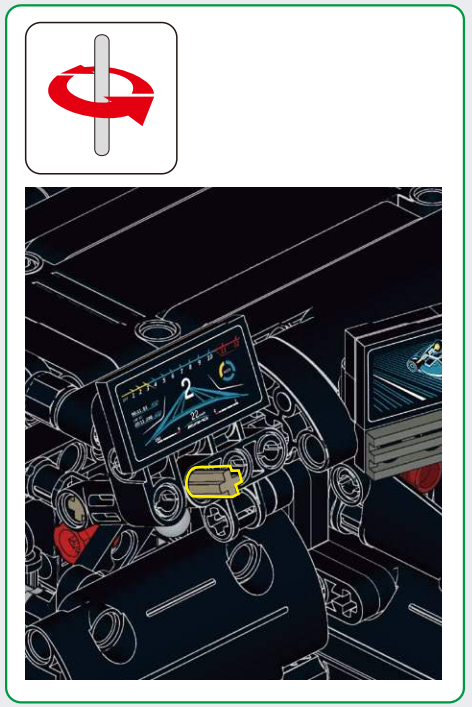

E59

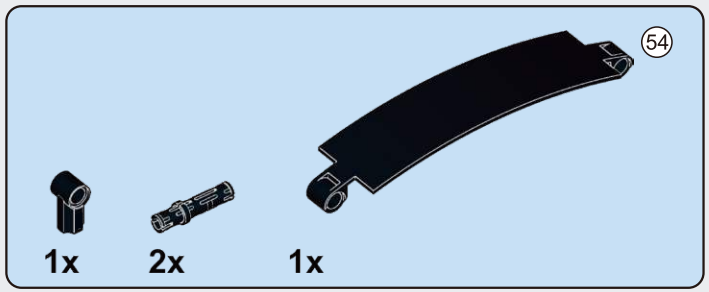

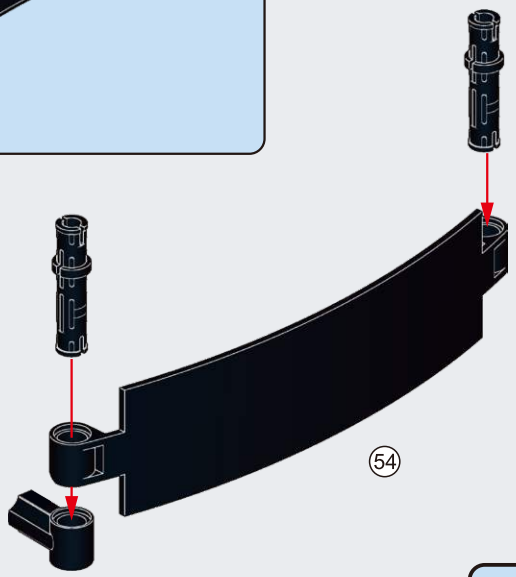

E60

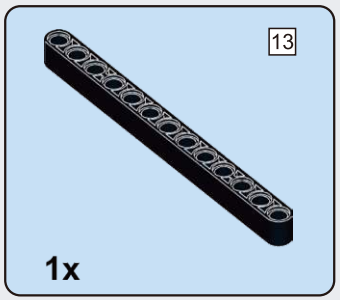

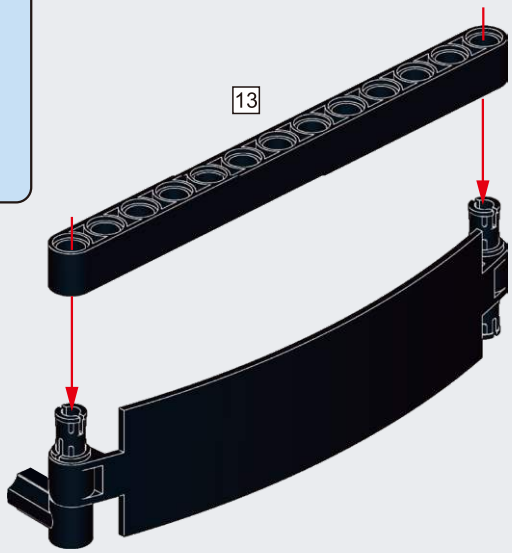

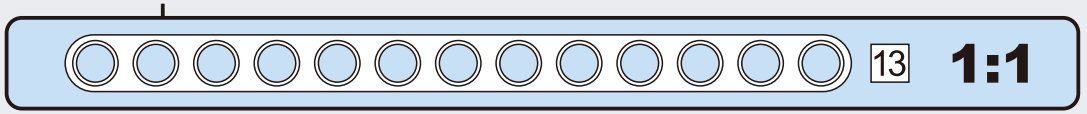

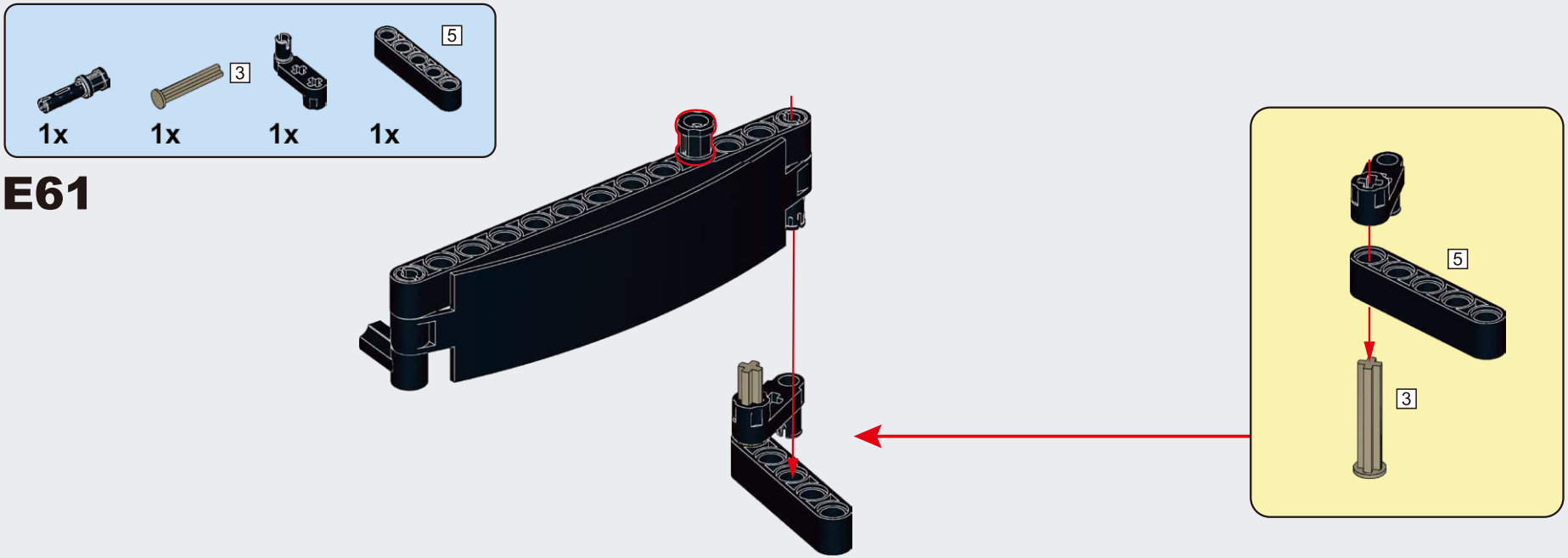
1x
3
1x
1x
5
1x
E61
5
3

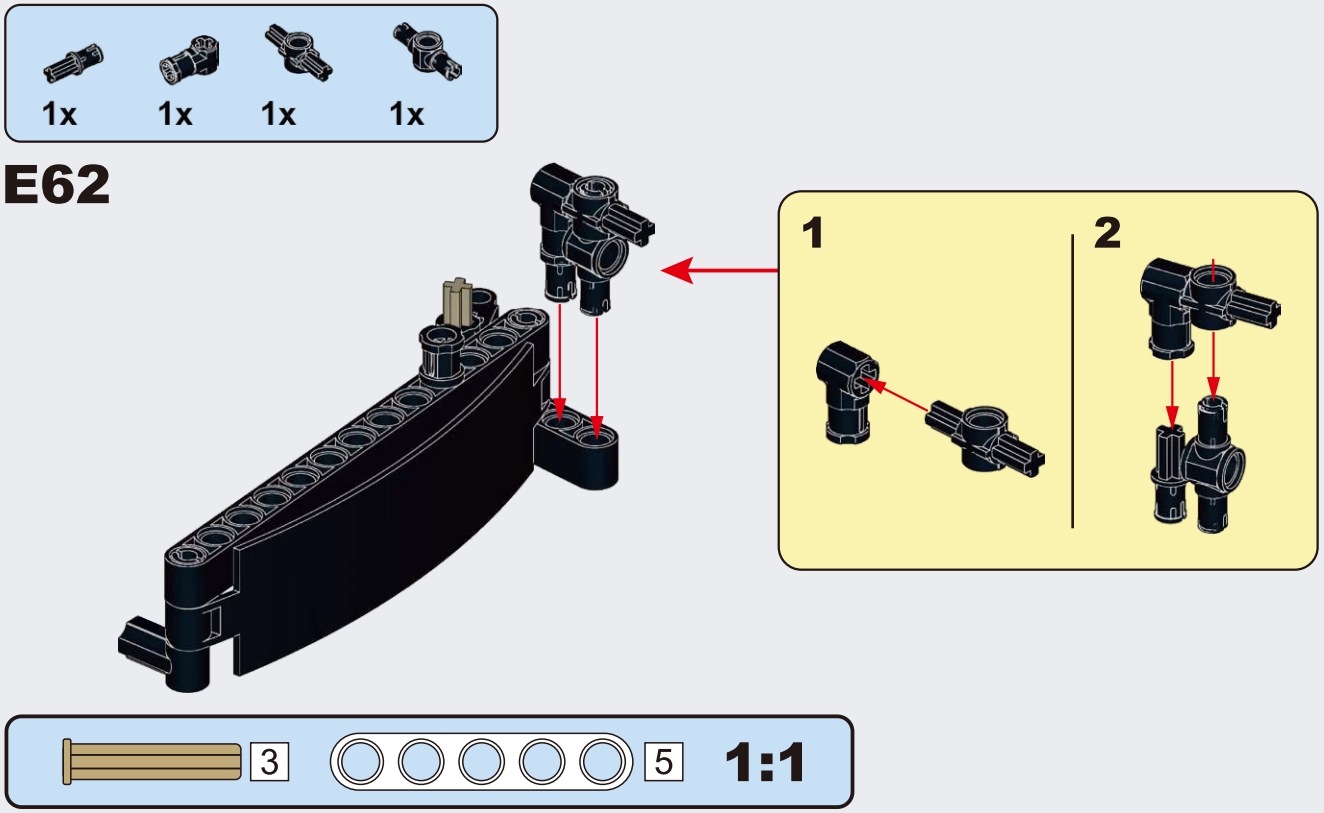
1x
1x
1x
1x
E62
1
2
3
5
1:1

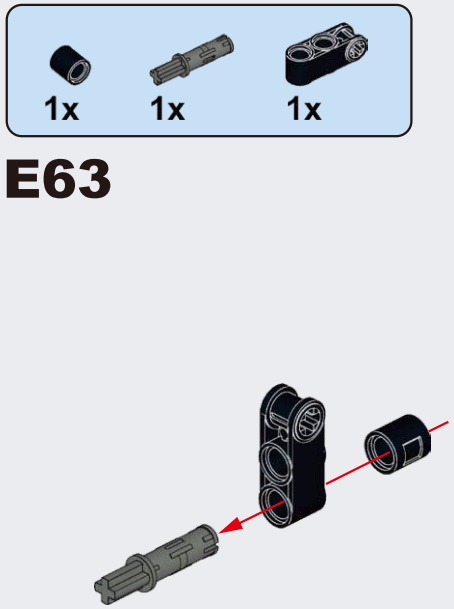
1x
1x
1x
E63

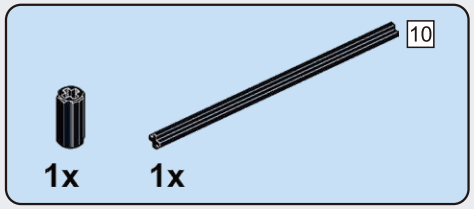

E64

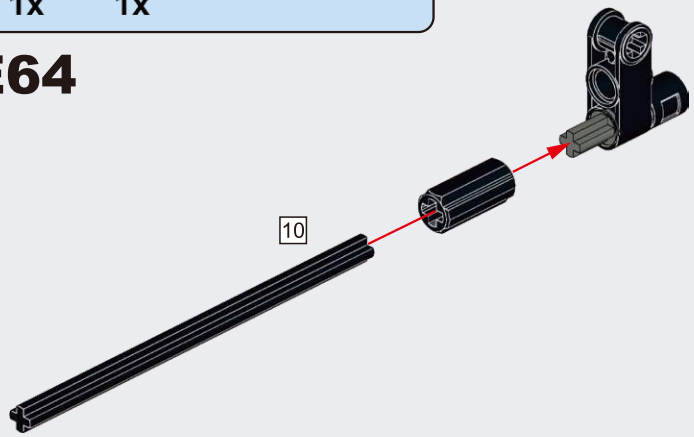

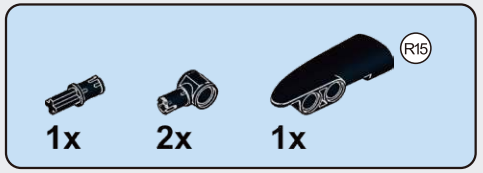

E65

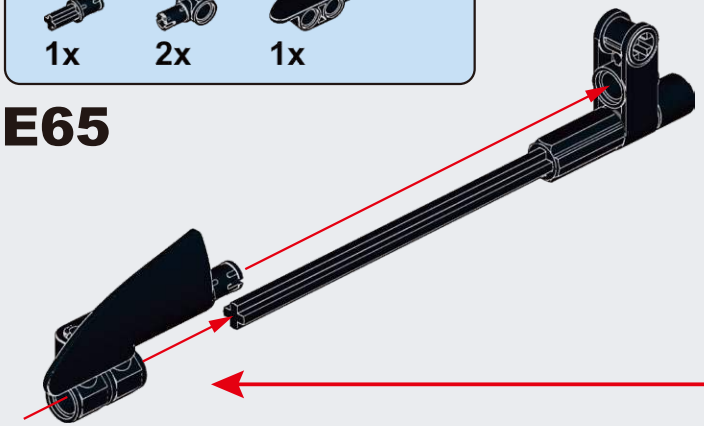

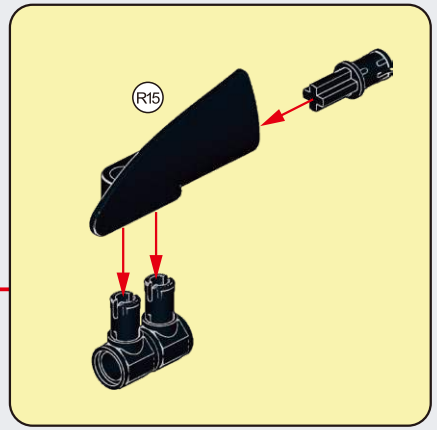

E66

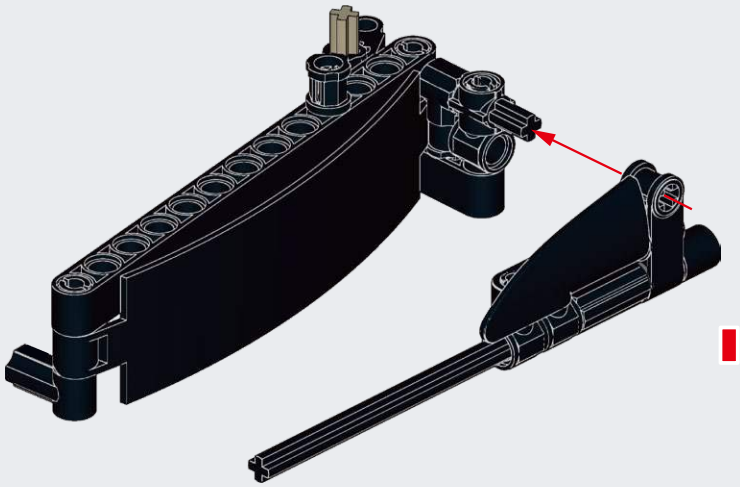

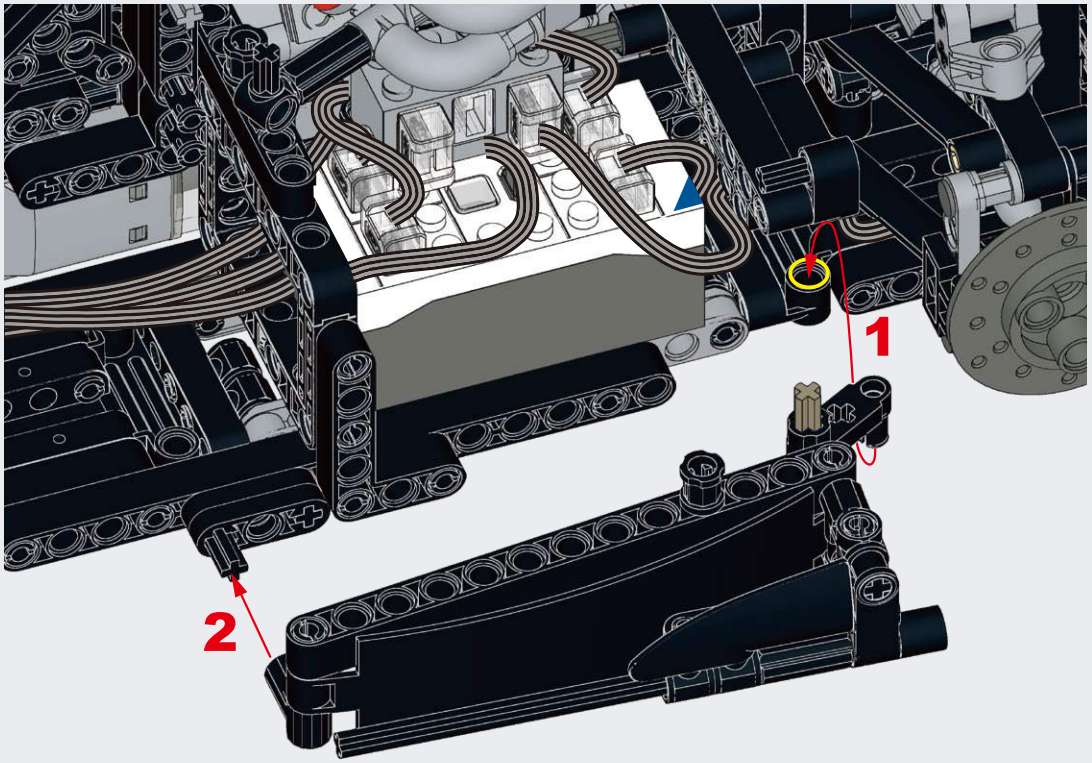

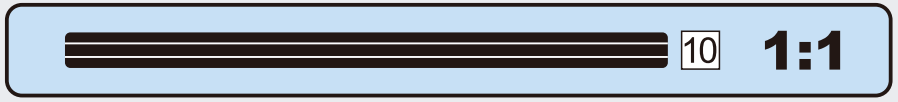

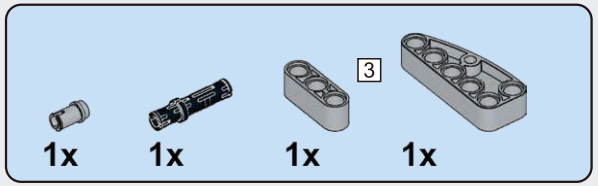

E67

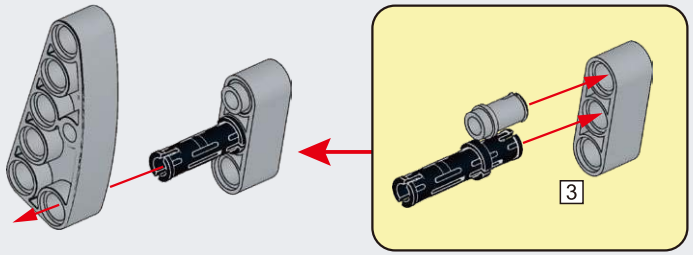

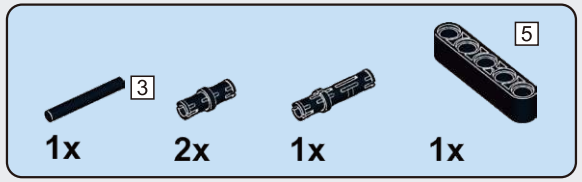

E68

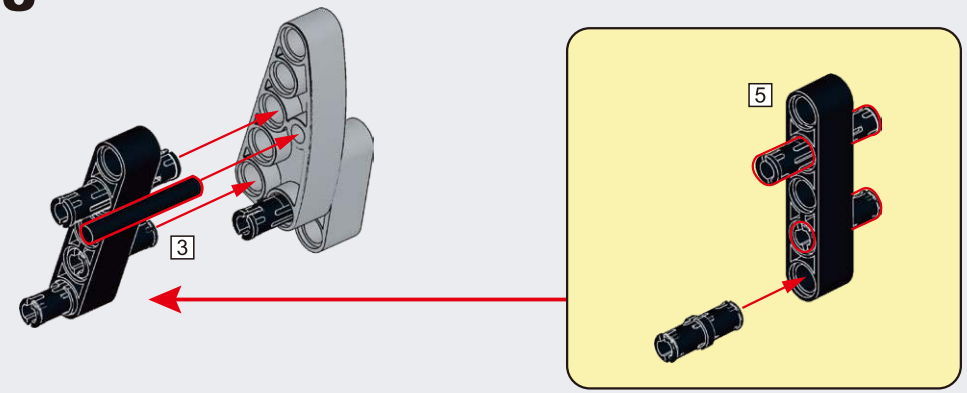

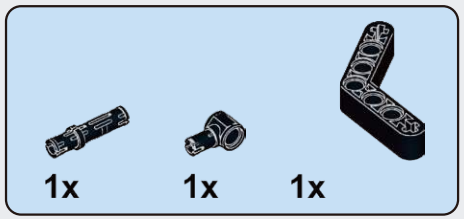

E69

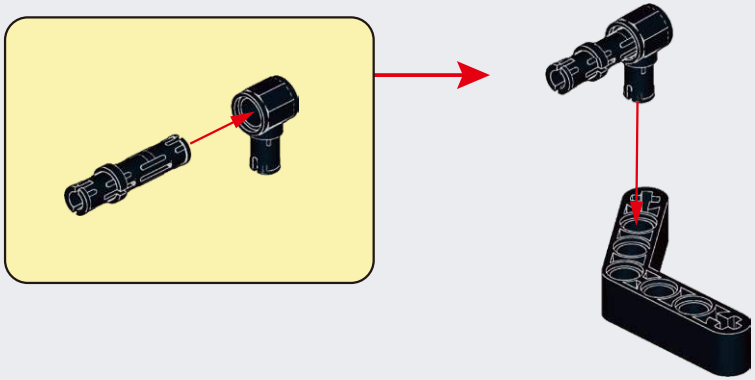

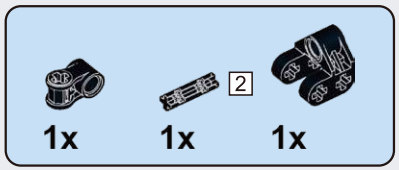

E70

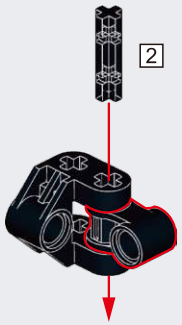

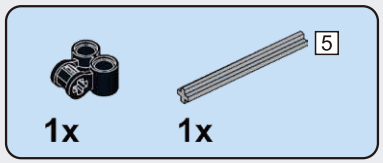

E71

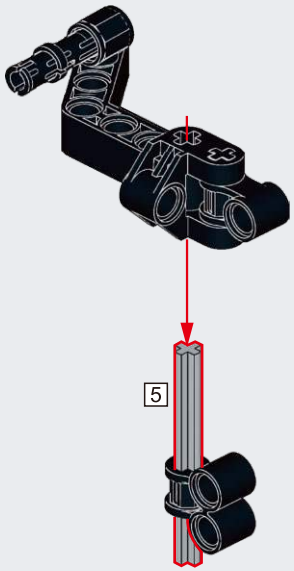

E72

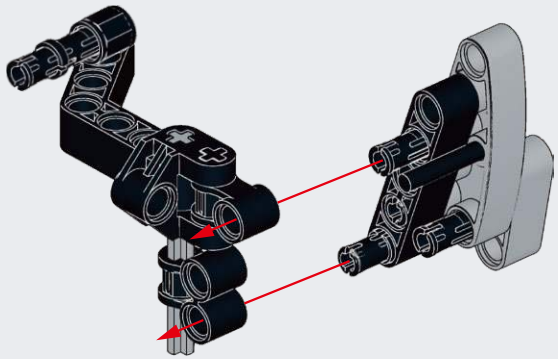

E73

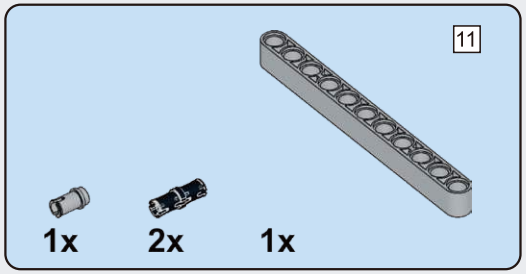

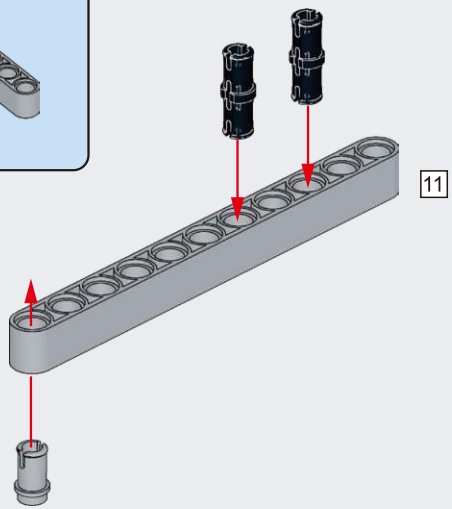

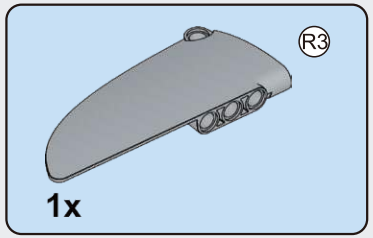

E74

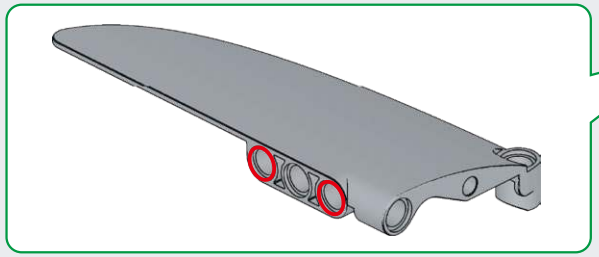

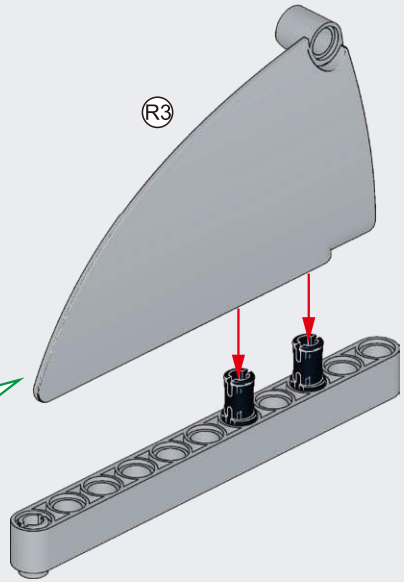

E75

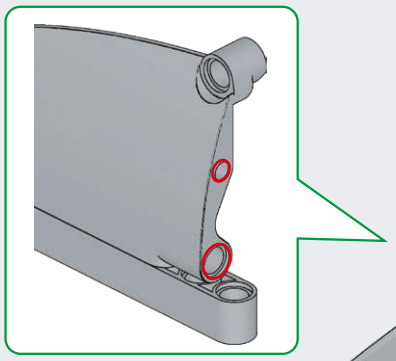

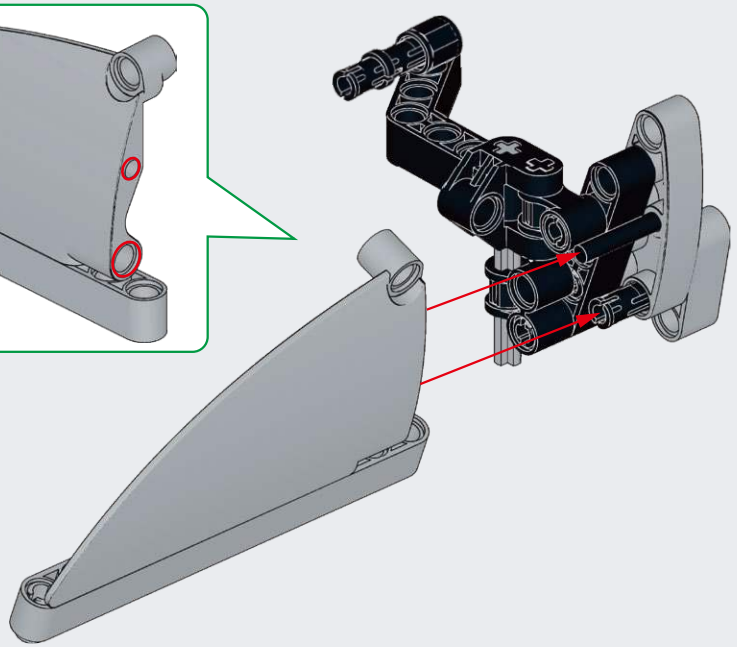

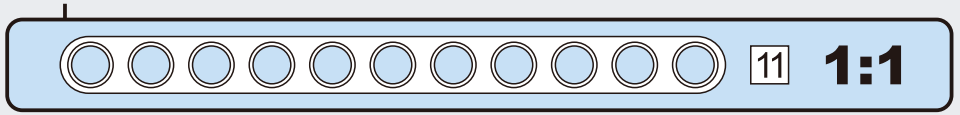

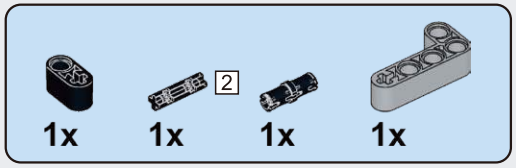

E76

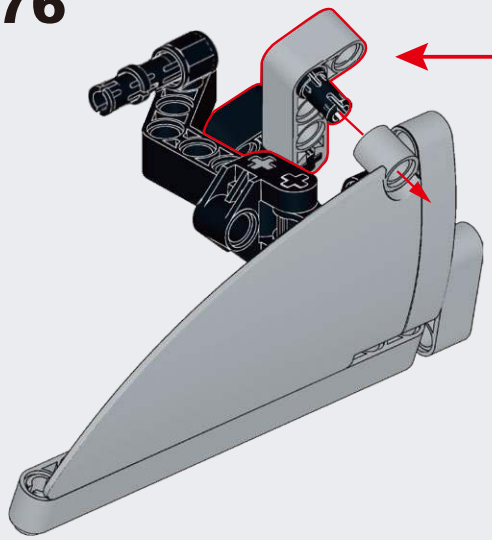

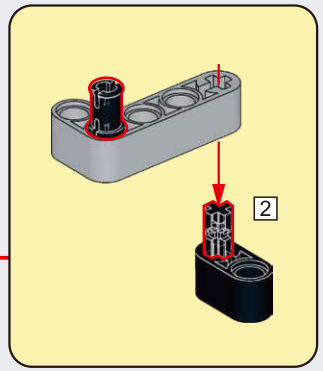

E77

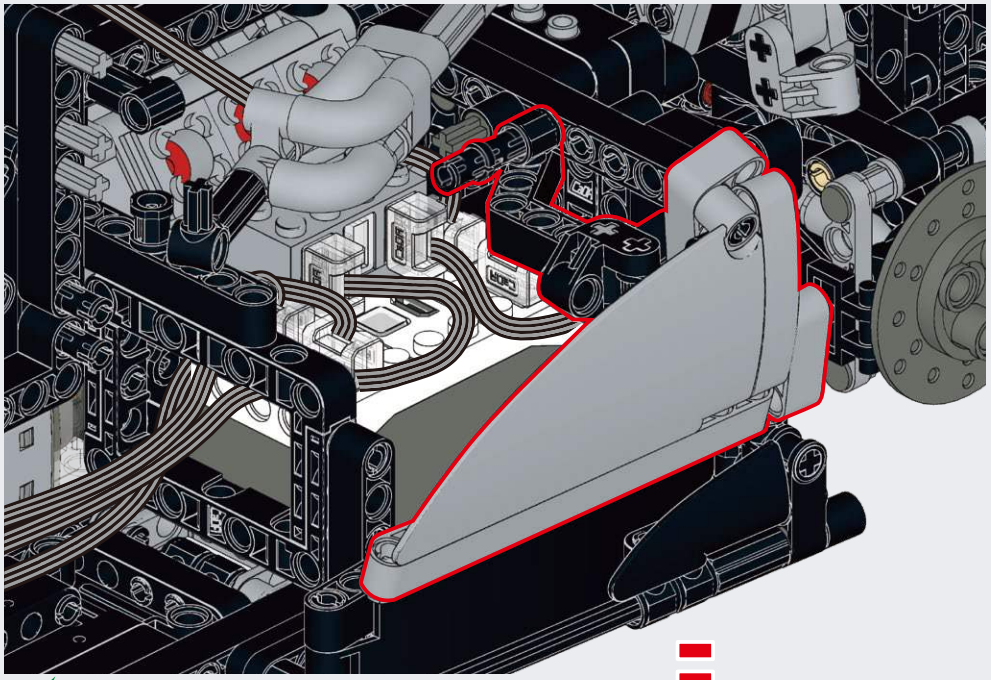

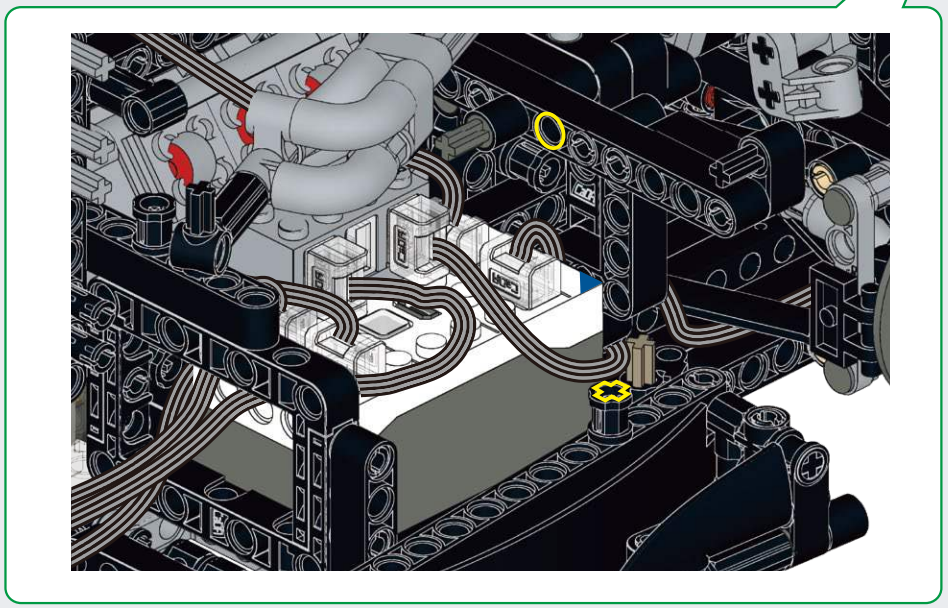

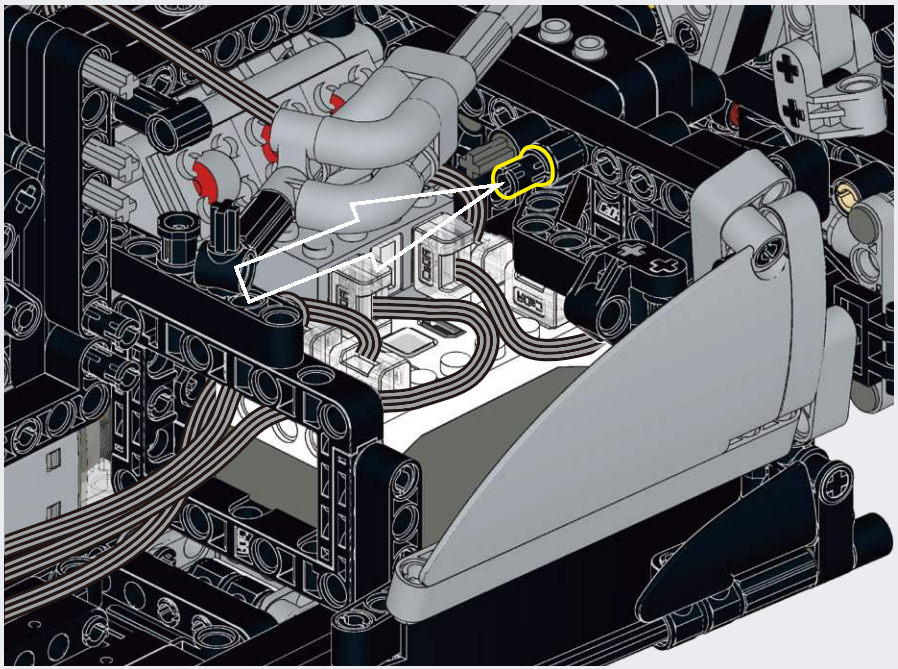

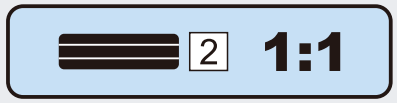

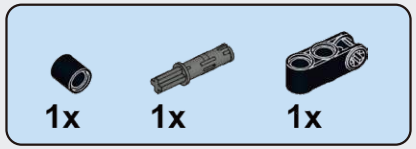

E78

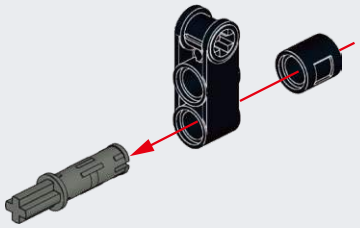

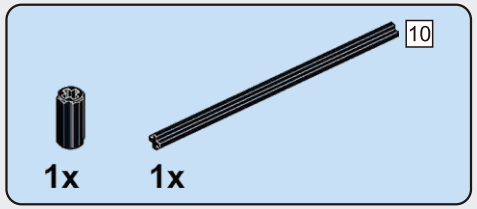

E79

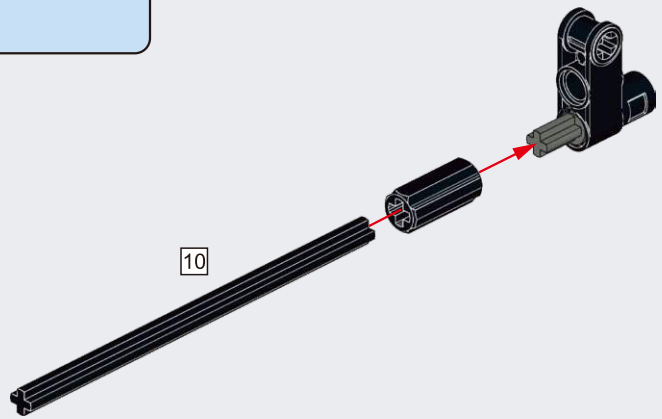

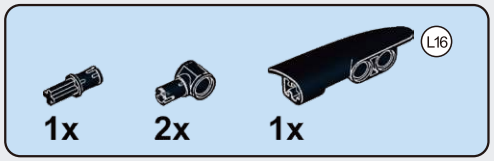

E80

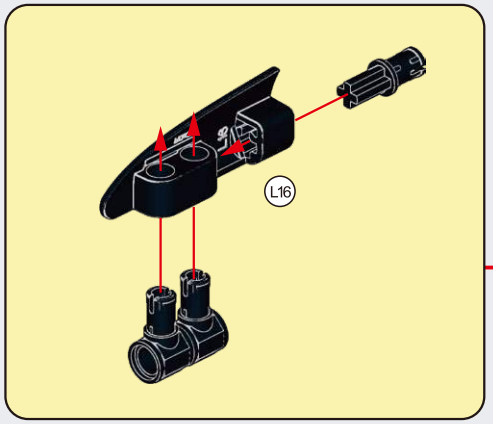

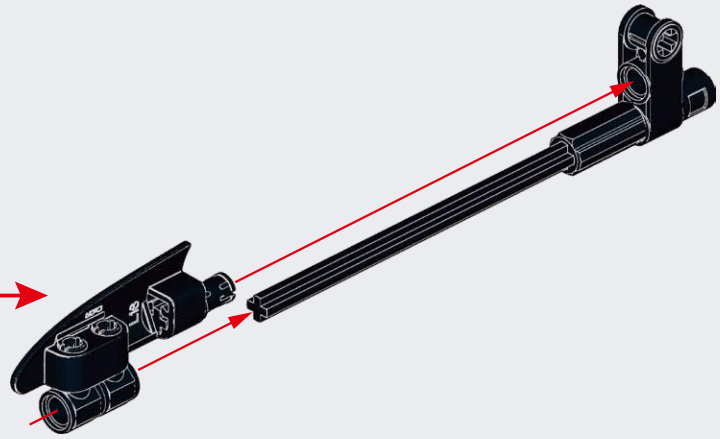

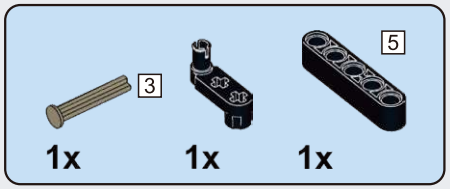

E81

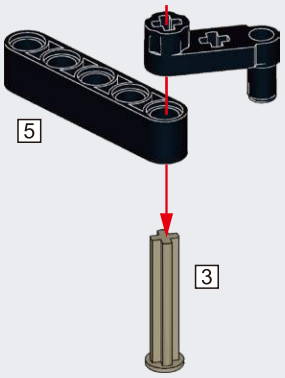

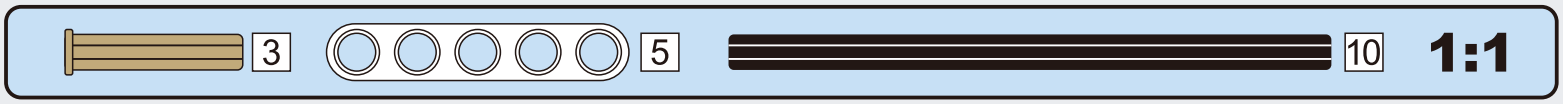

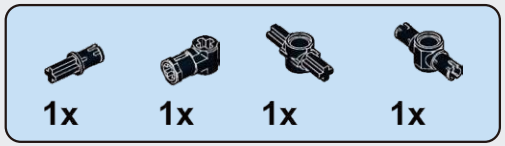

E82

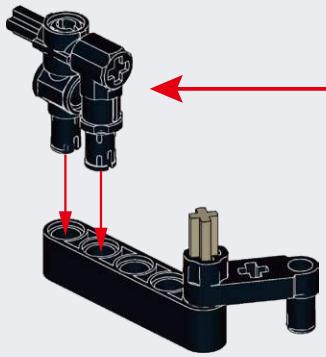

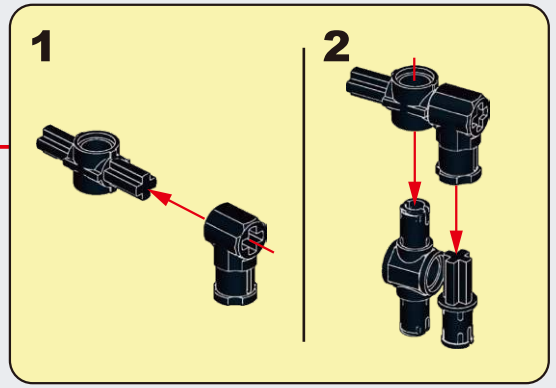

E83

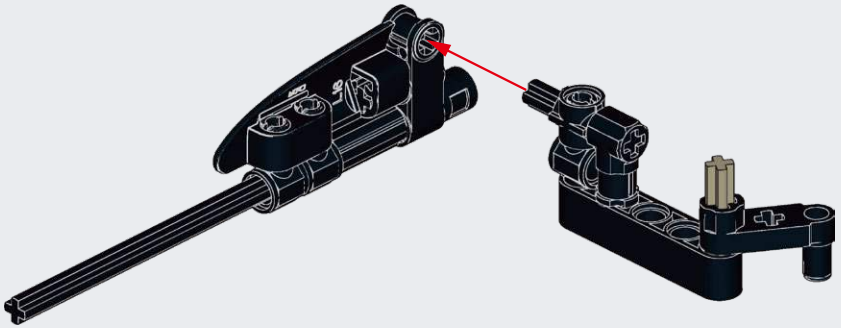

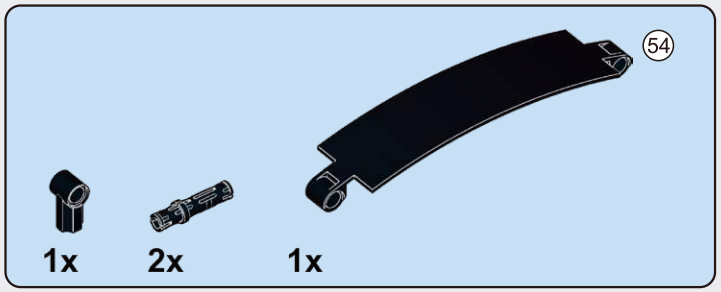

E84

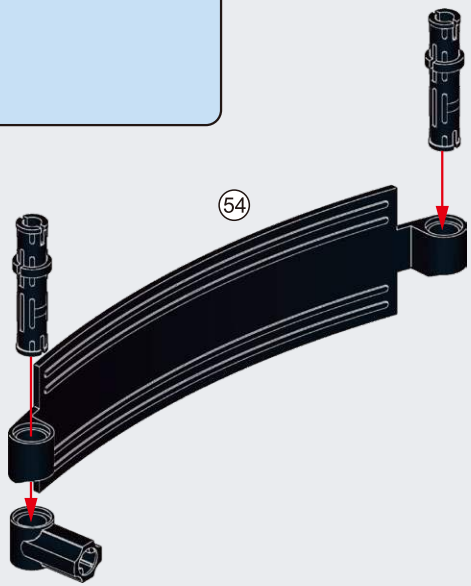

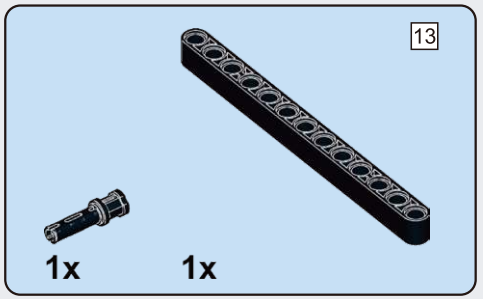

E85

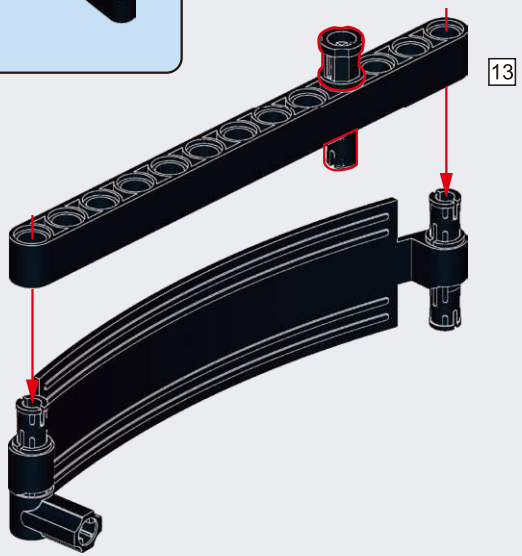

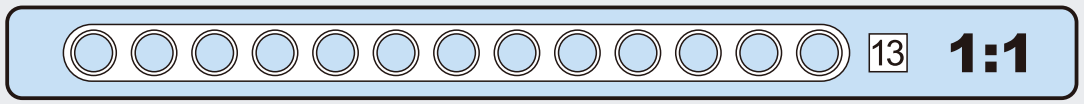

E86

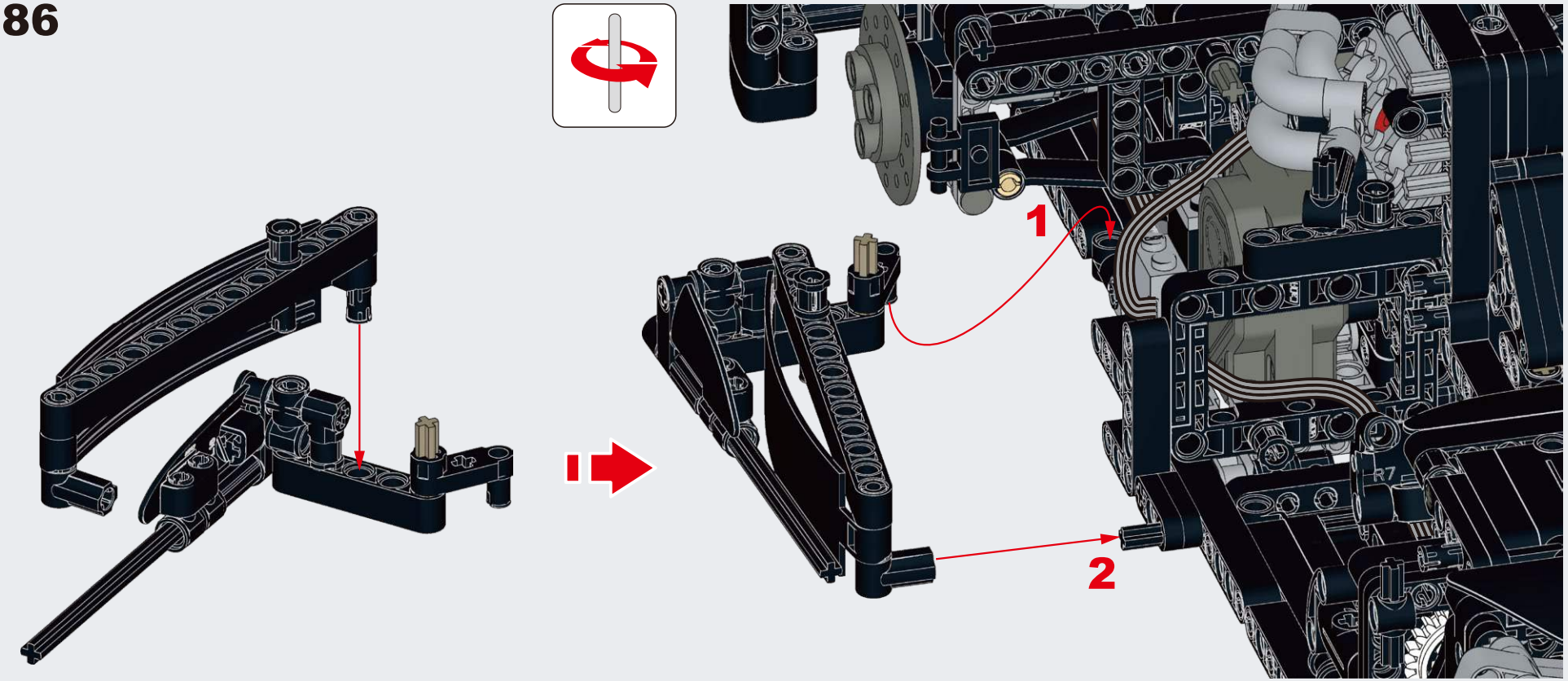

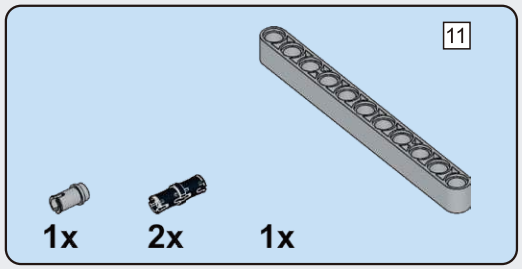

E87

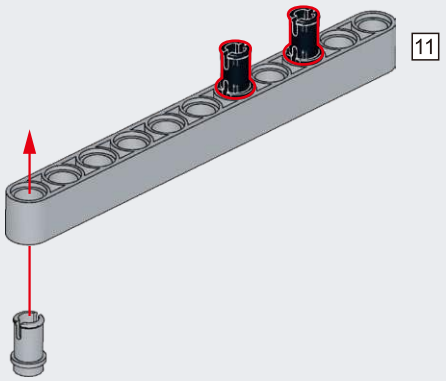

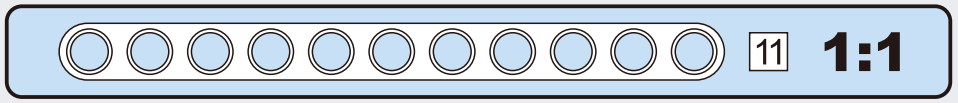

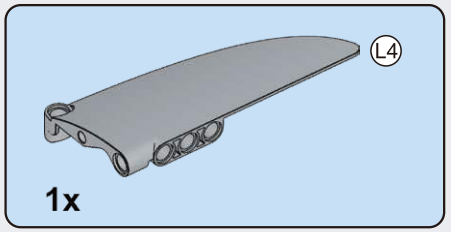

E88

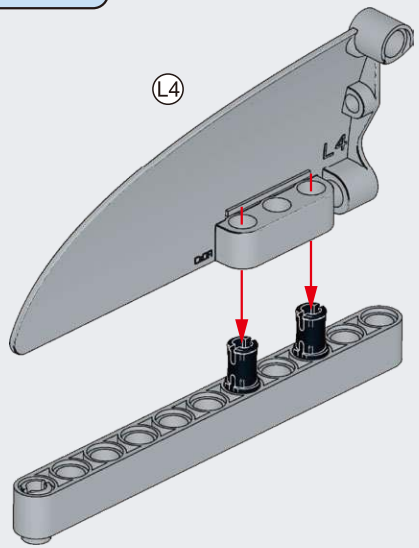

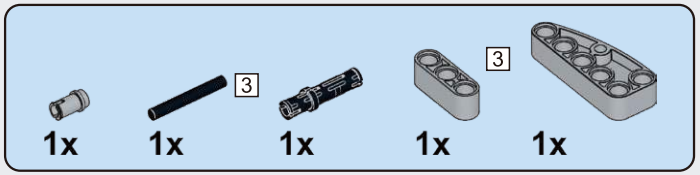

E89

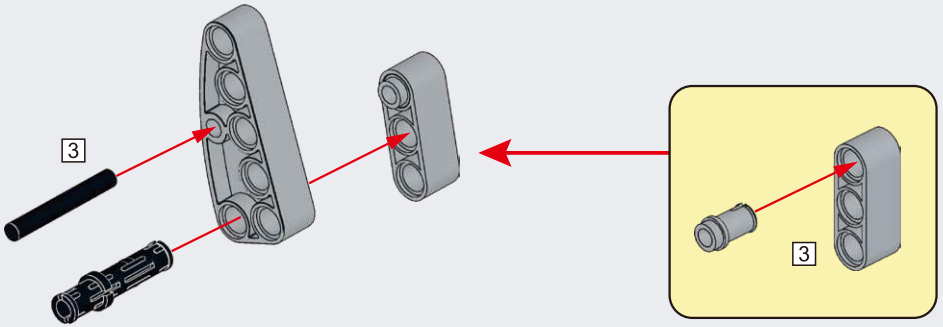

E90

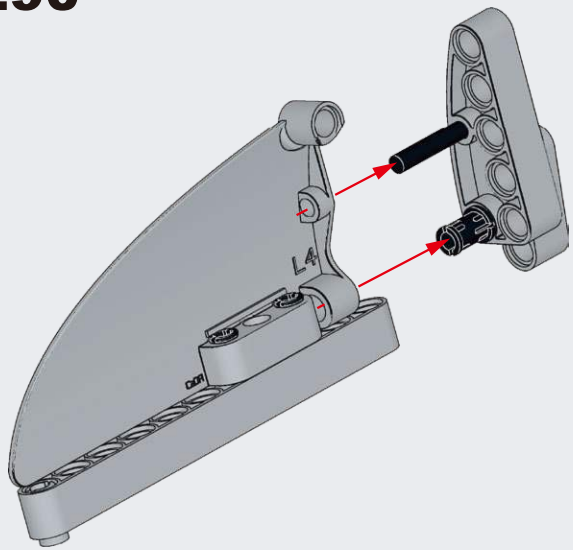

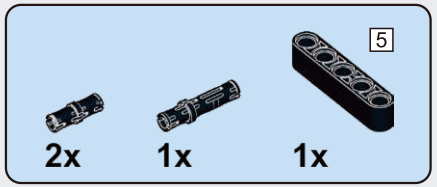

E91

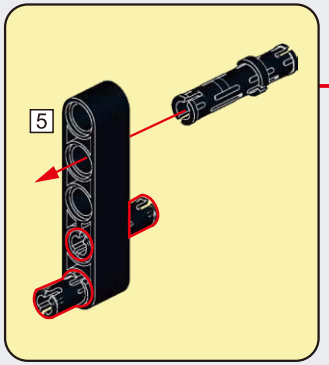

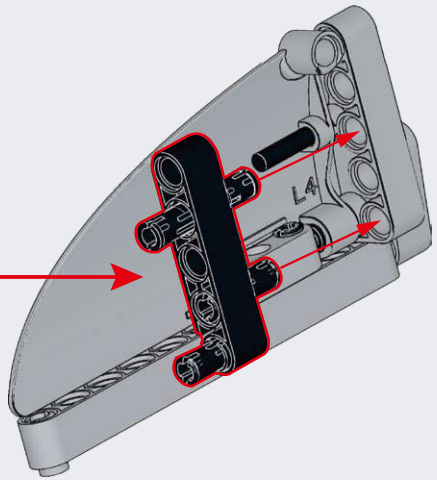

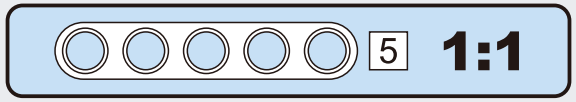

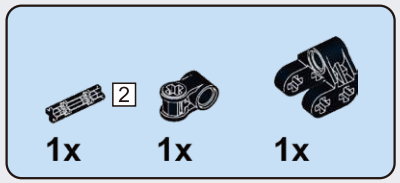

E92

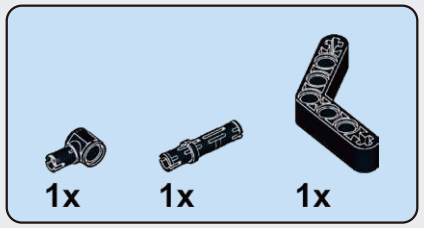

E93

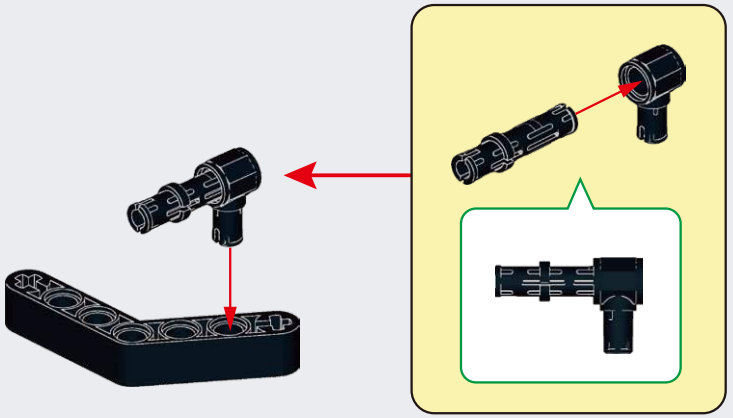

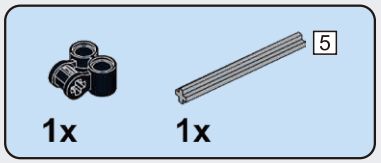

E94

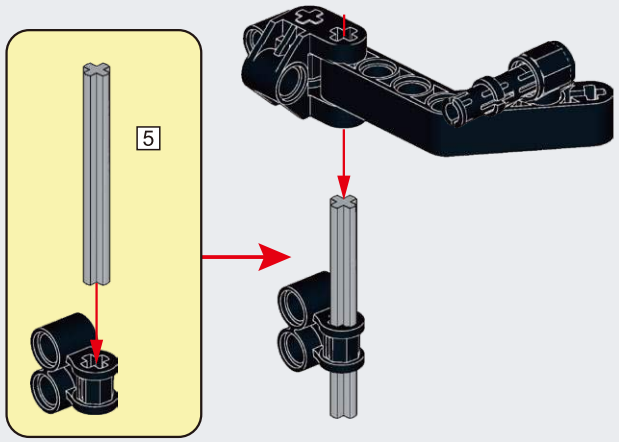

E95

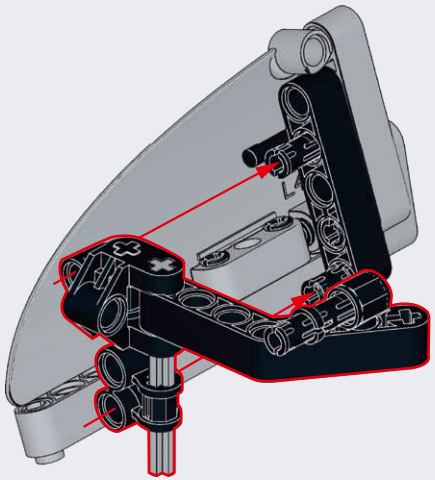

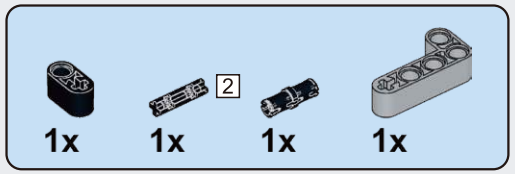

E96

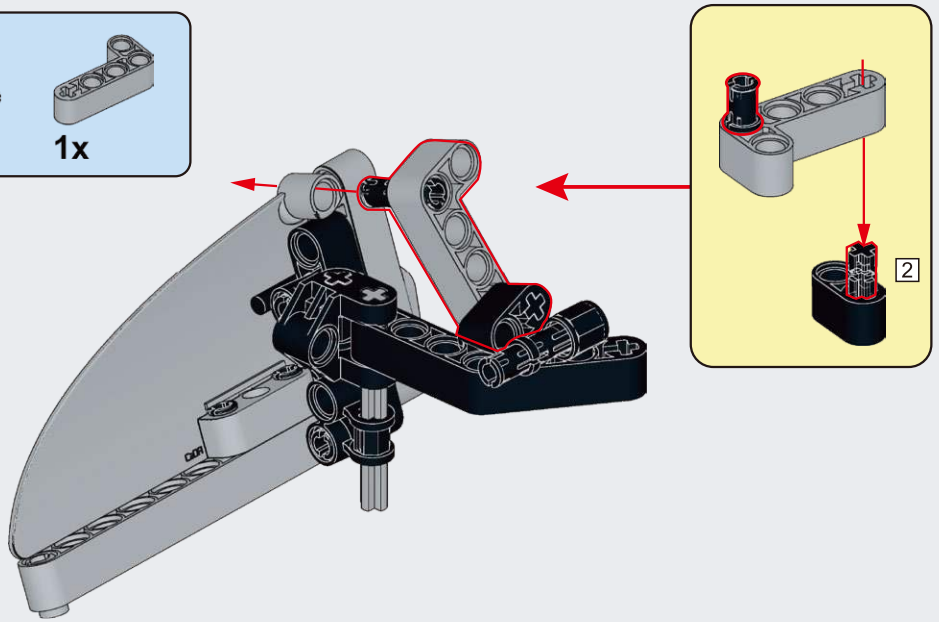

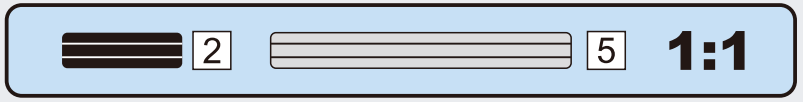

E97

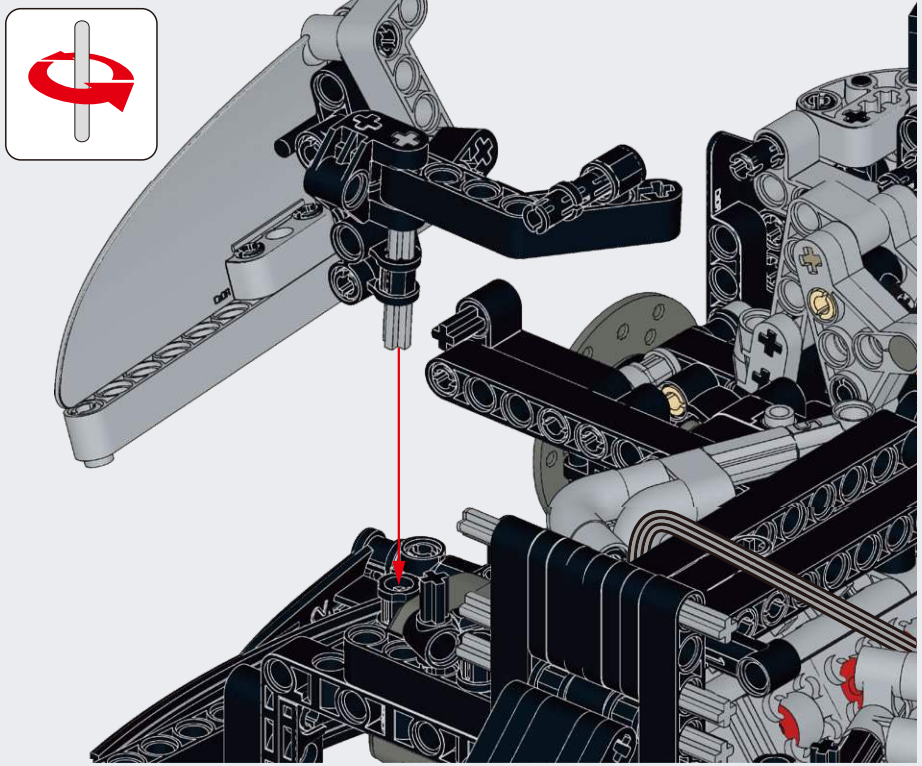

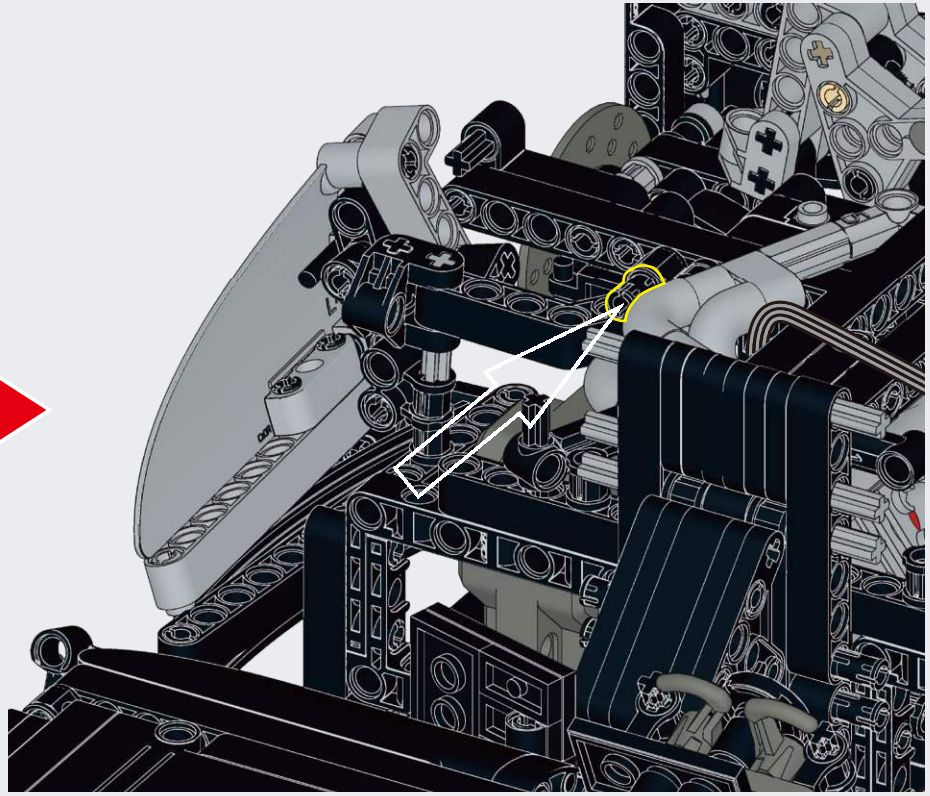

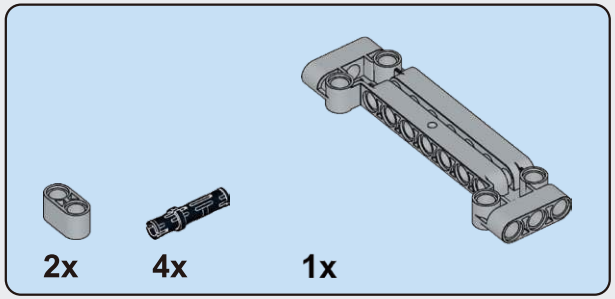

E98

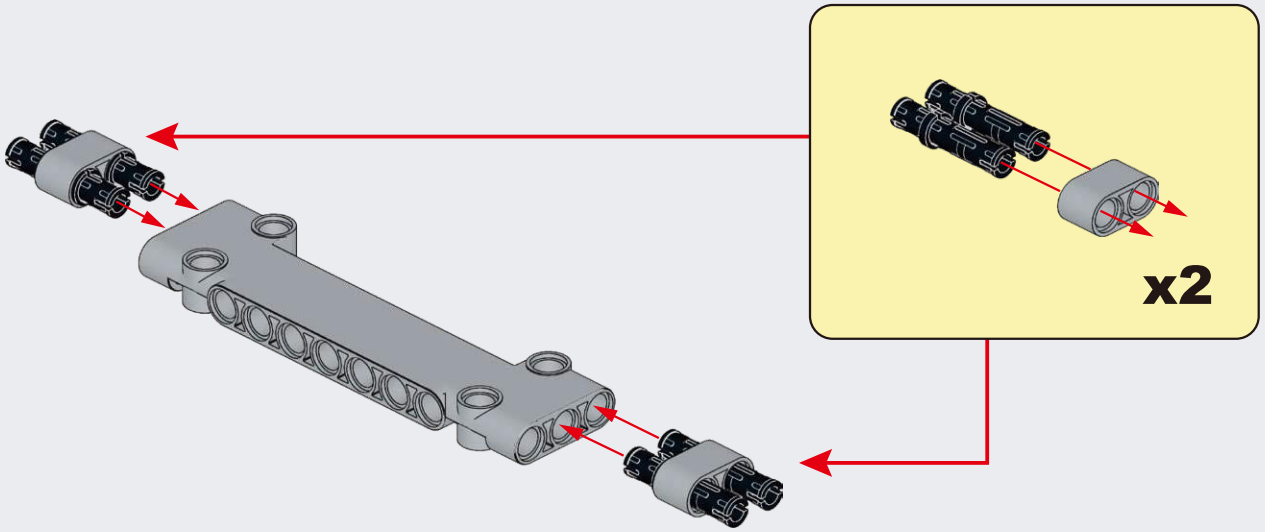

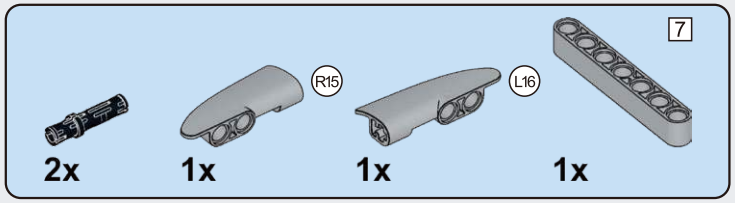

E99

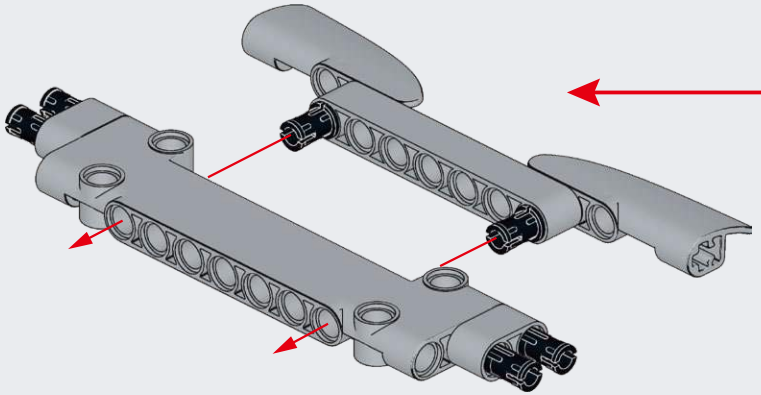

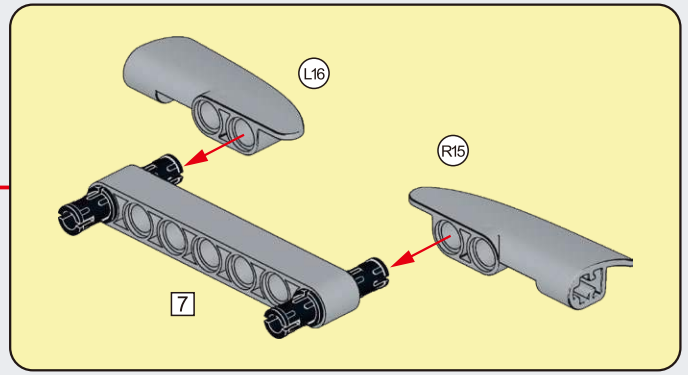

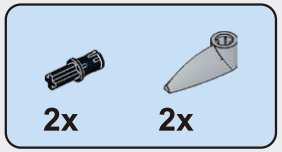

E100

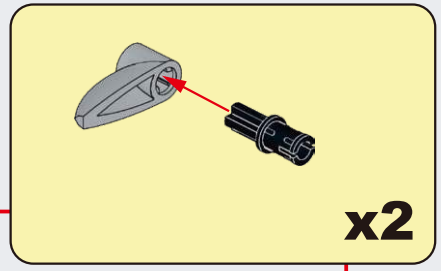

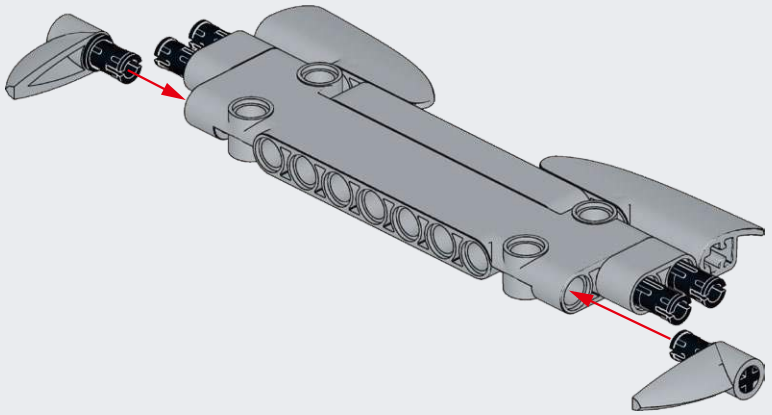

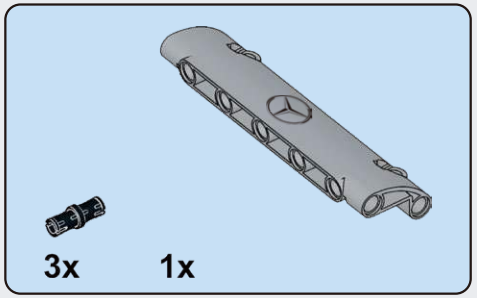

E101

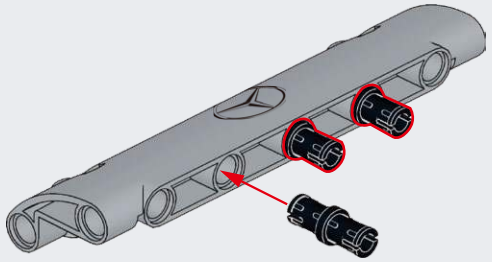

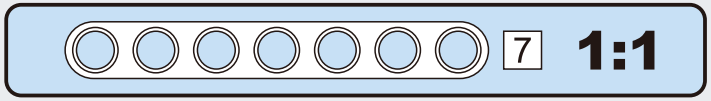

E102

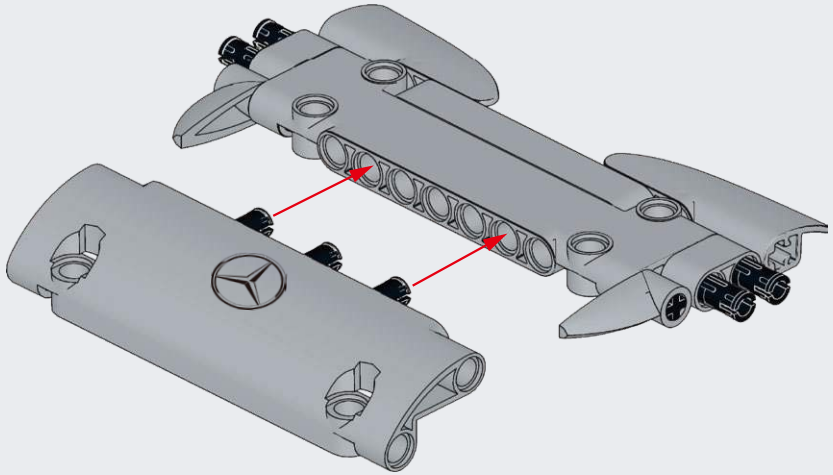

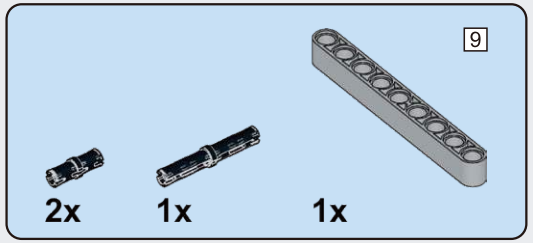

E103

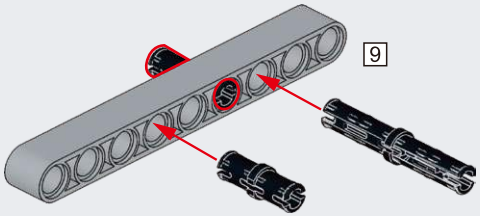

E104

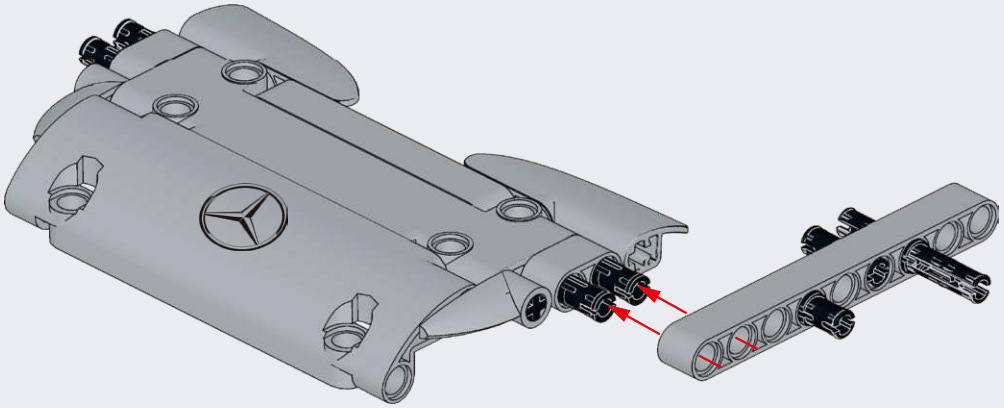

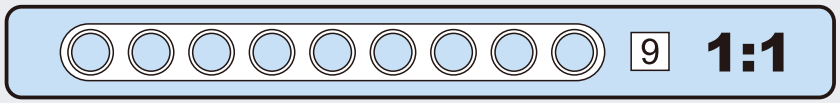

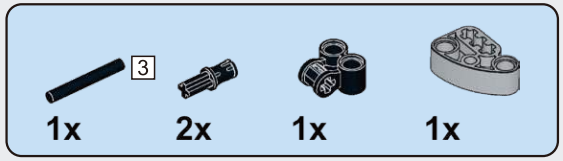

E105

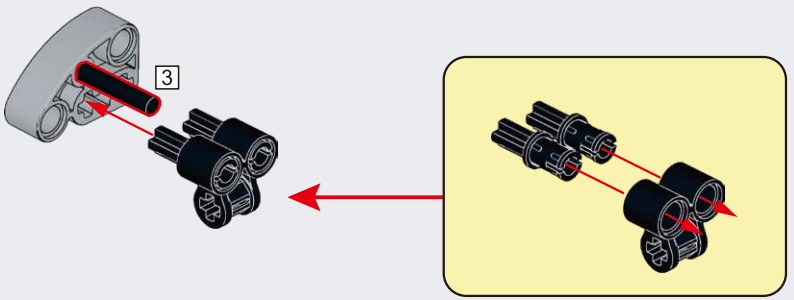

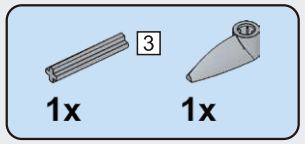

E106

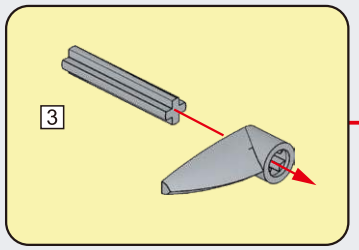

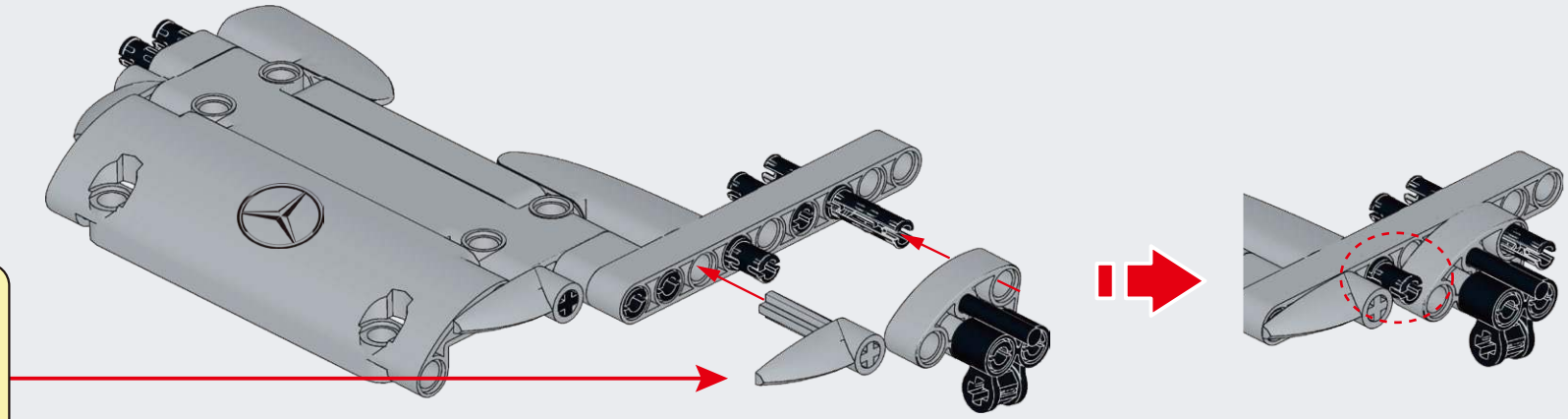

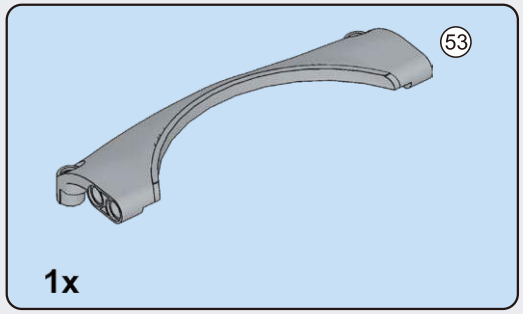

E107

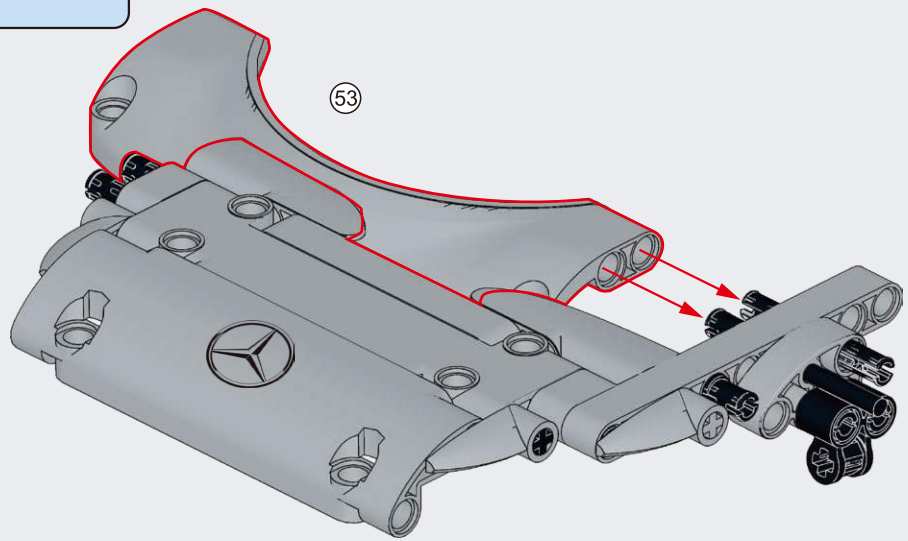

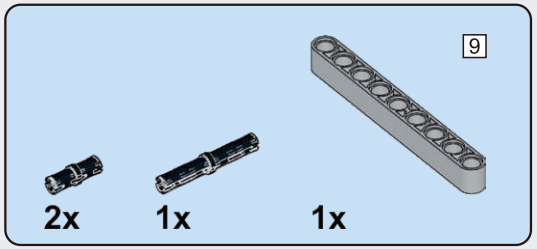

E108

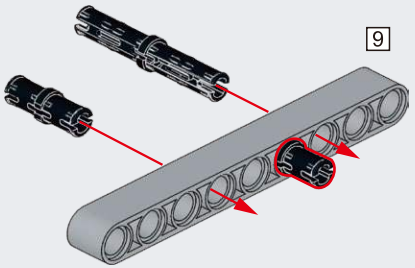

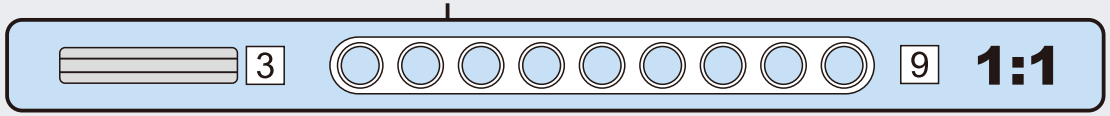

E109

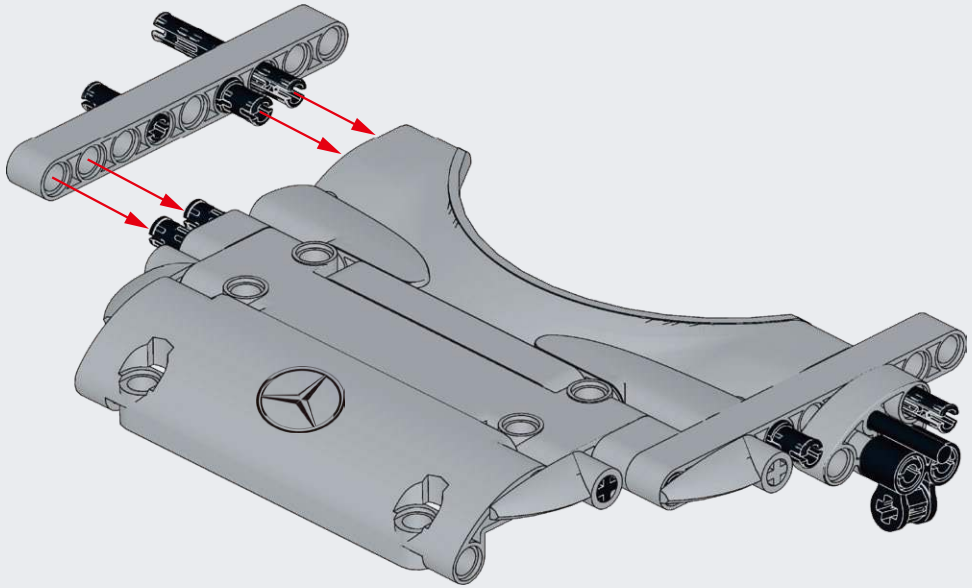

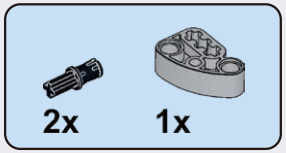

E110

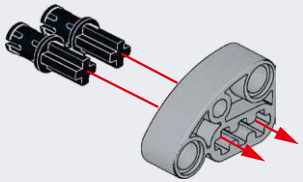

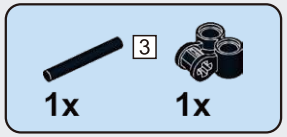

E111

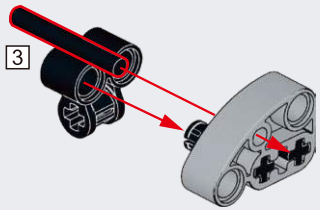

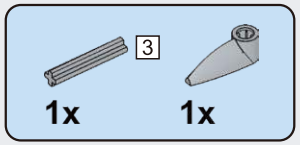

E112

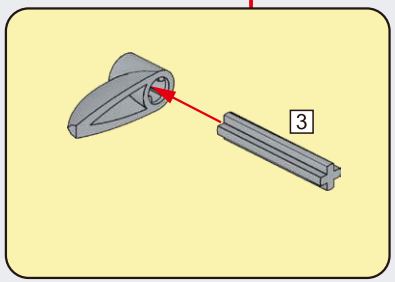

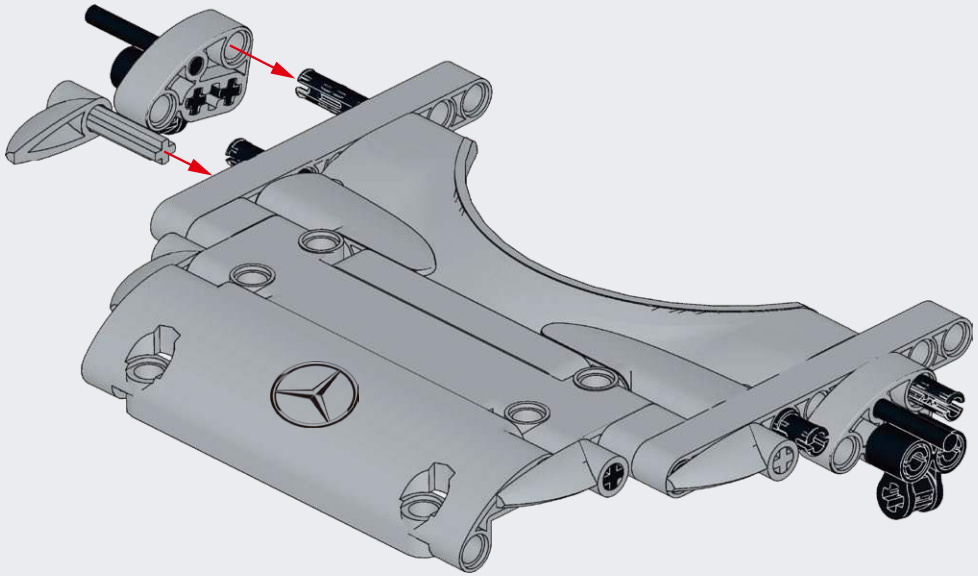

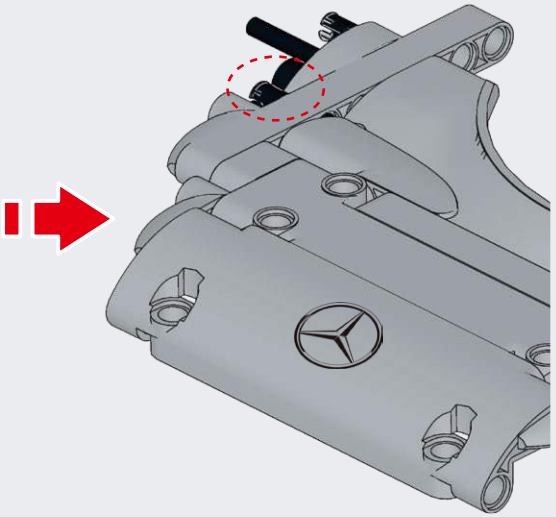

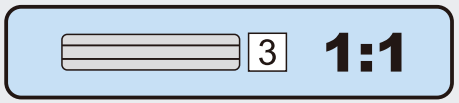

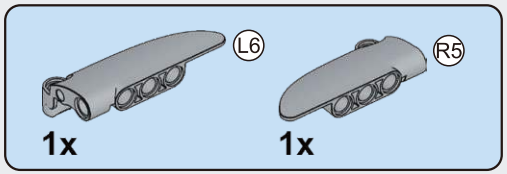

E113

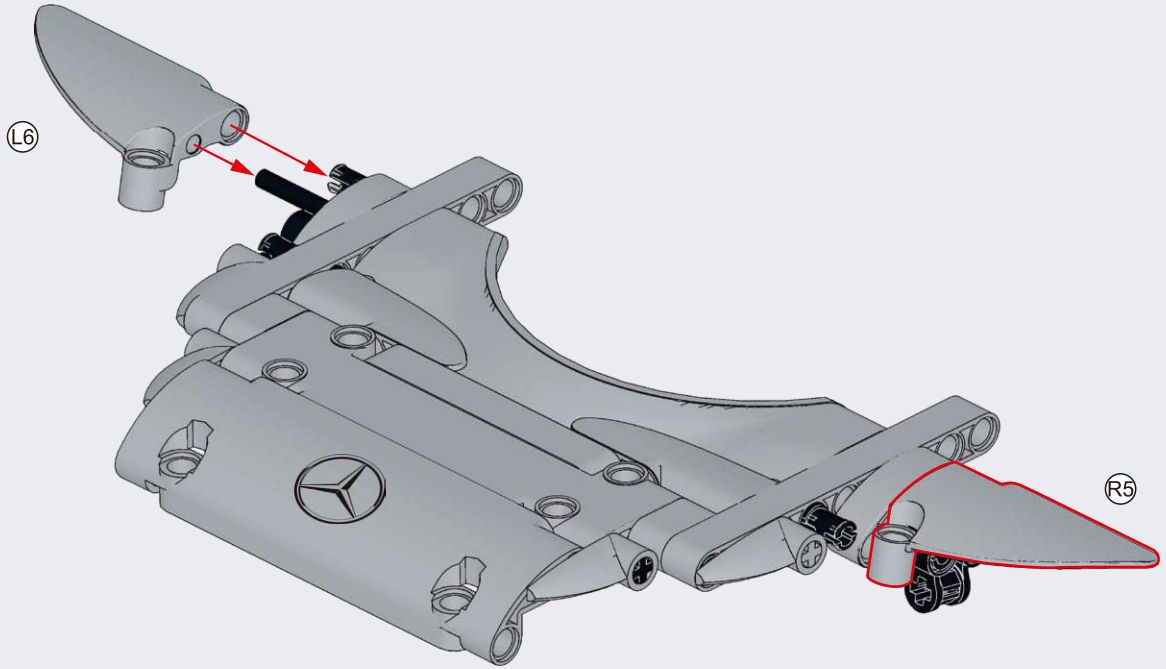

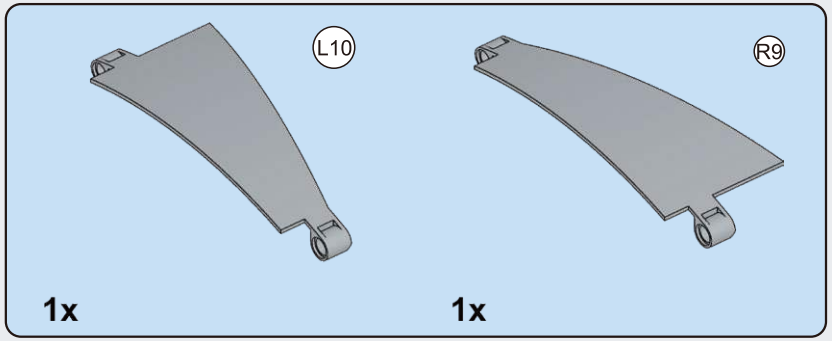

E114

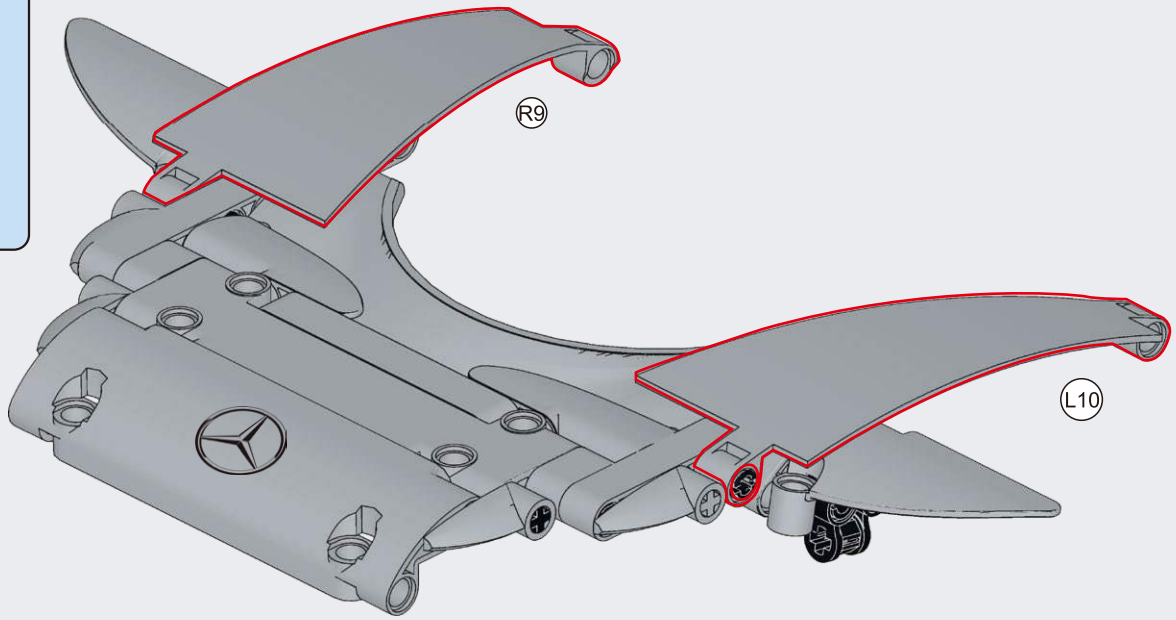

E115

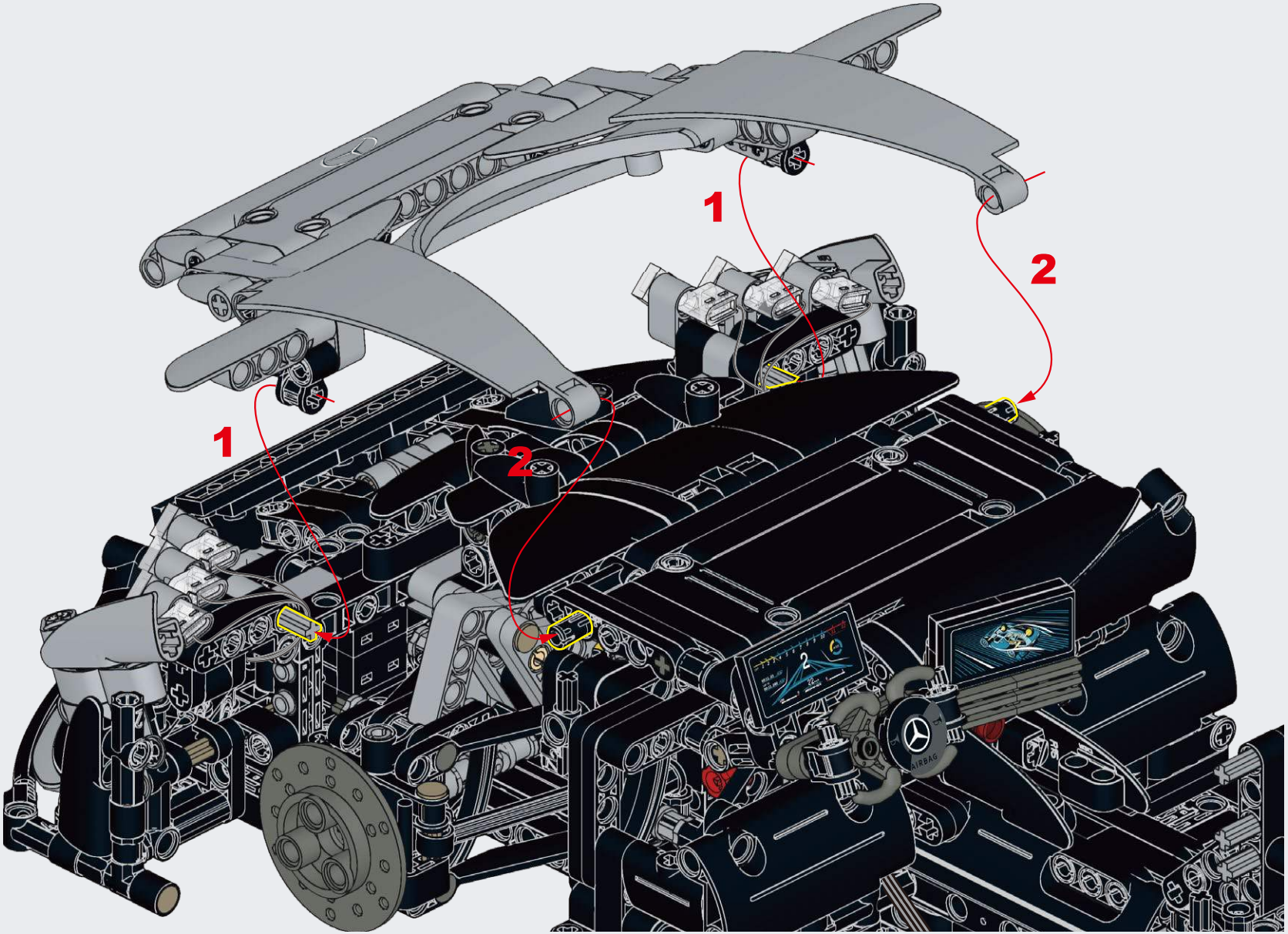

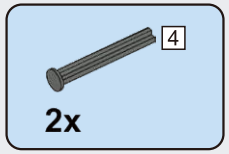

E116

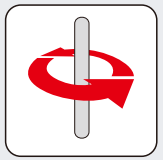

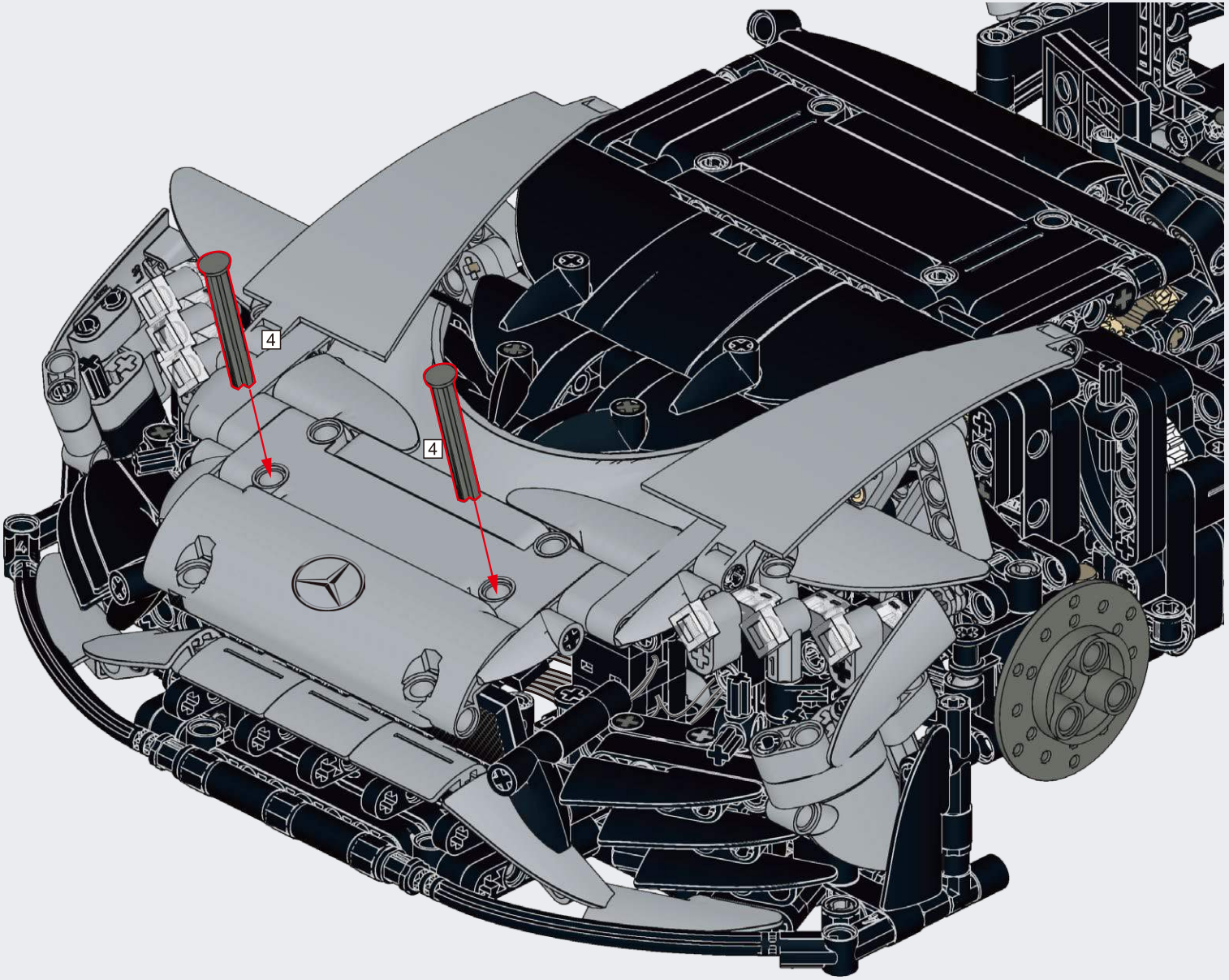

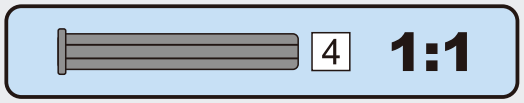

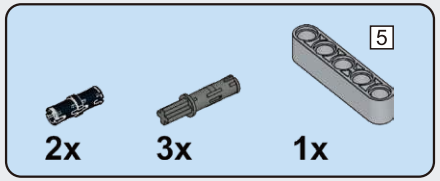

E117

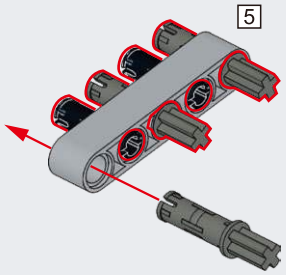

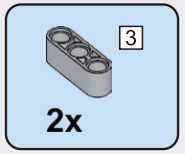

E118

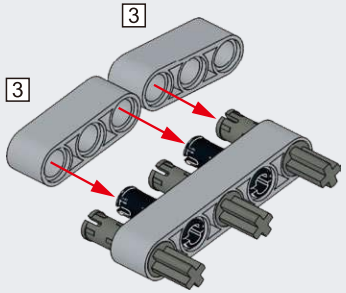

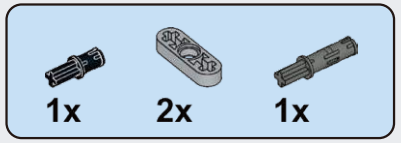

E119

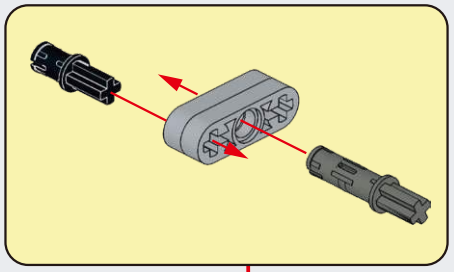

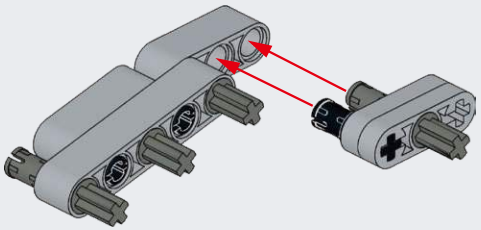

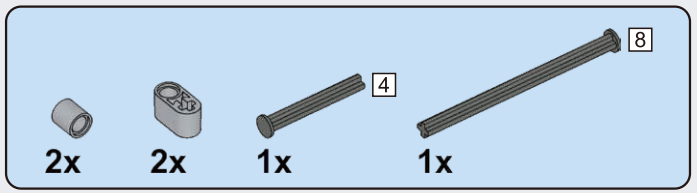

E120

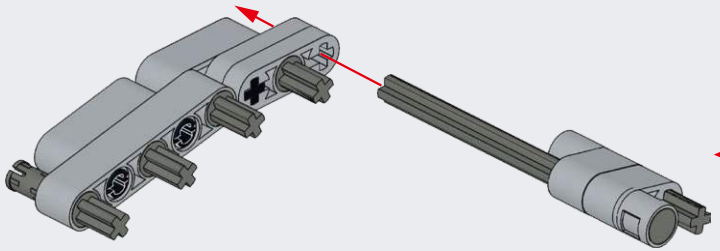

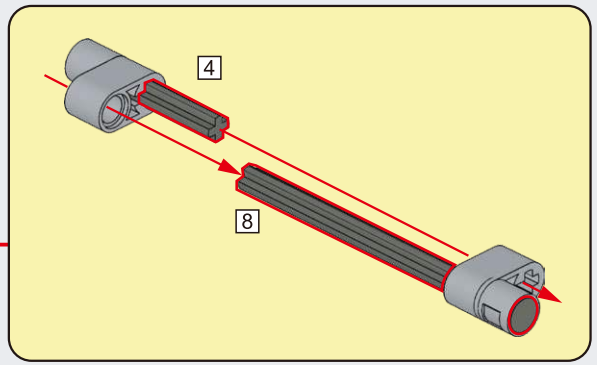

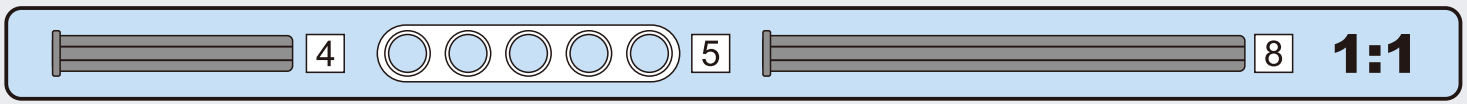

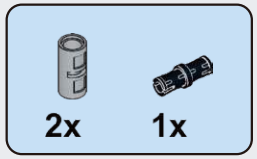

E121

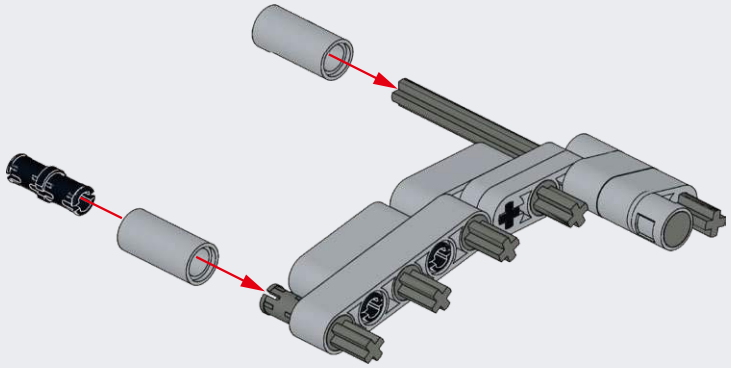

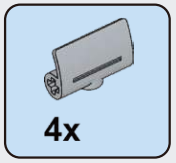

E122

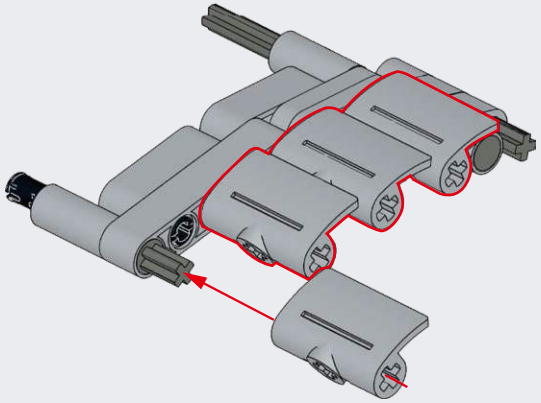

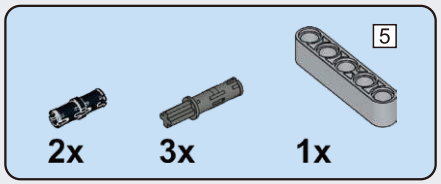

E123

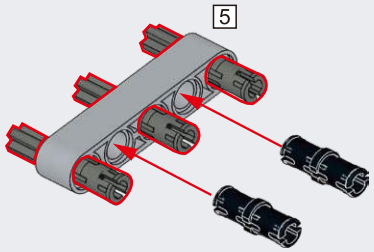

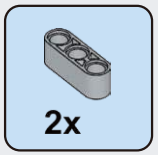

E124

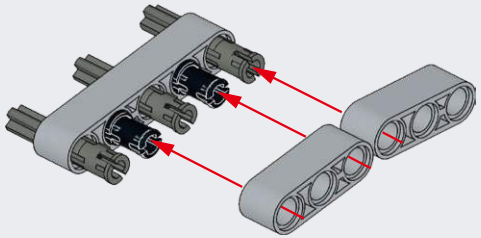

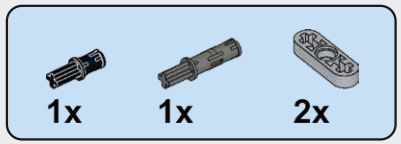

E125

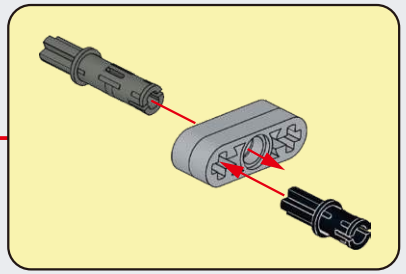

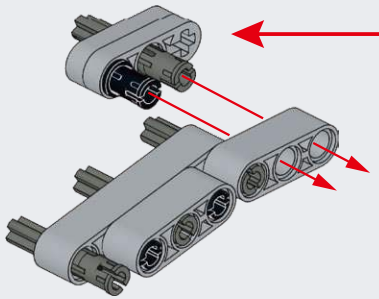

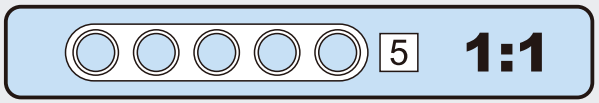

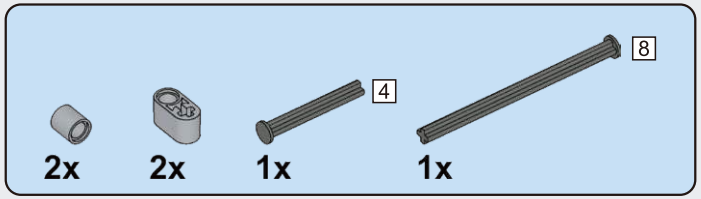

E126

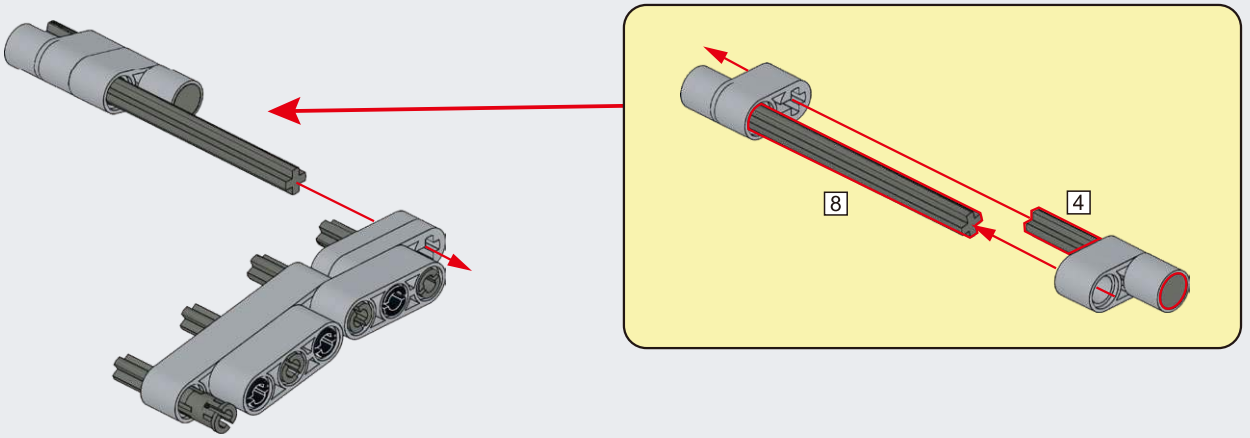

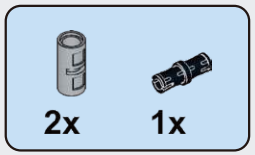

E127

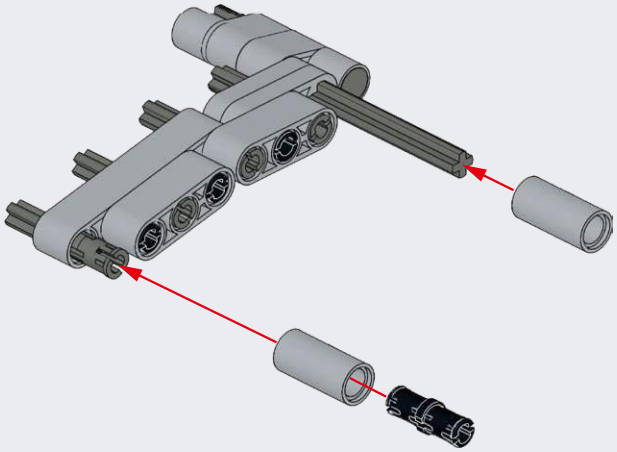

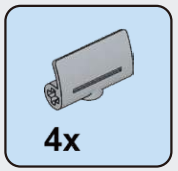

E128

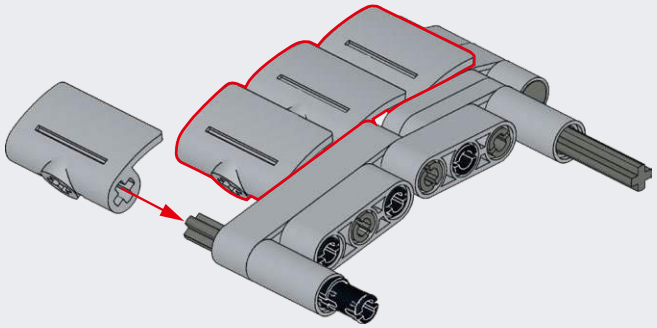

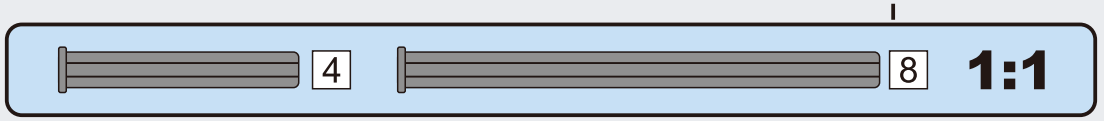

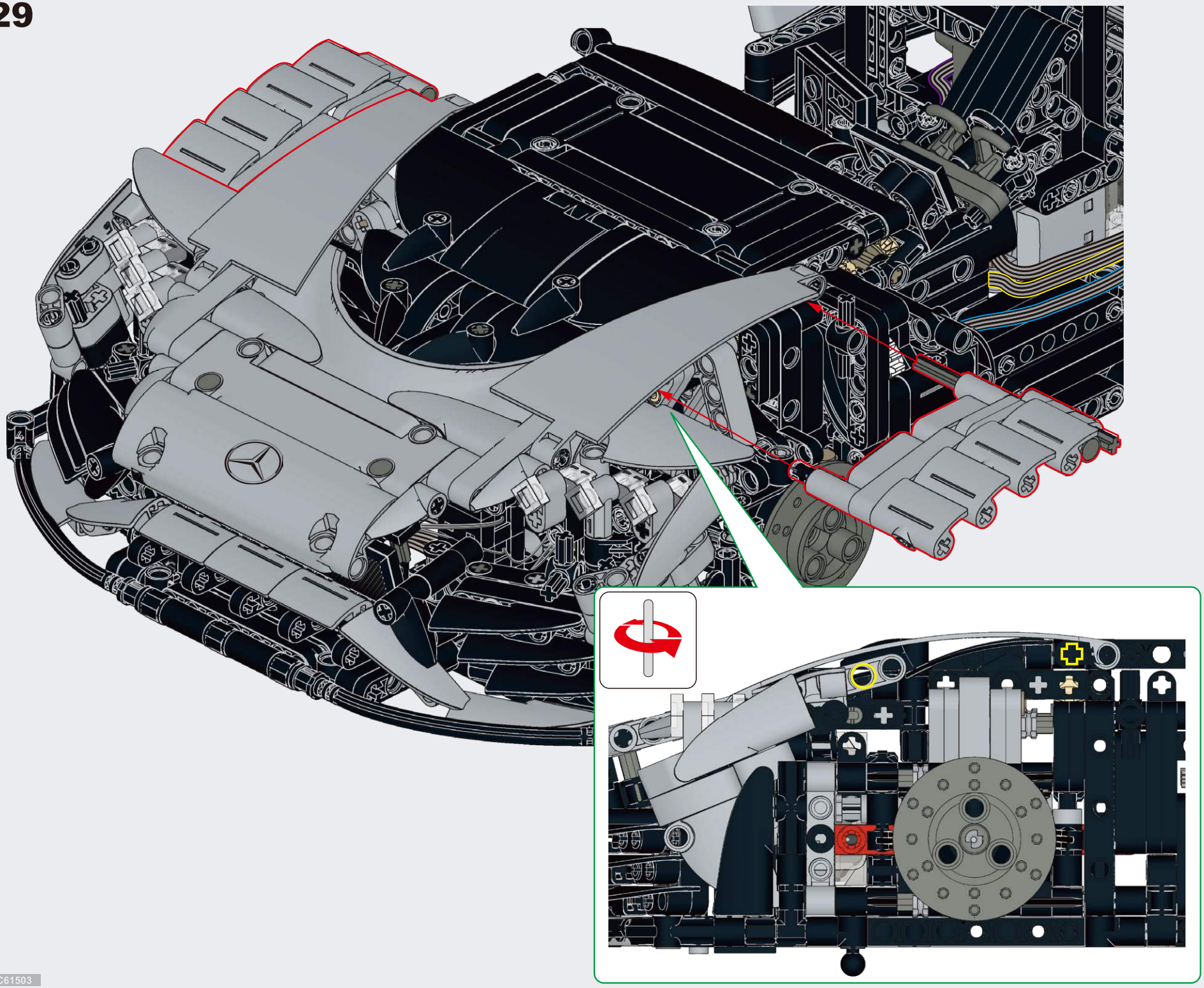

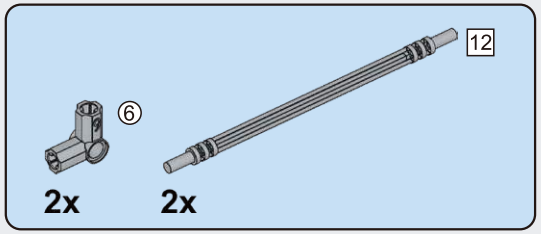

E130

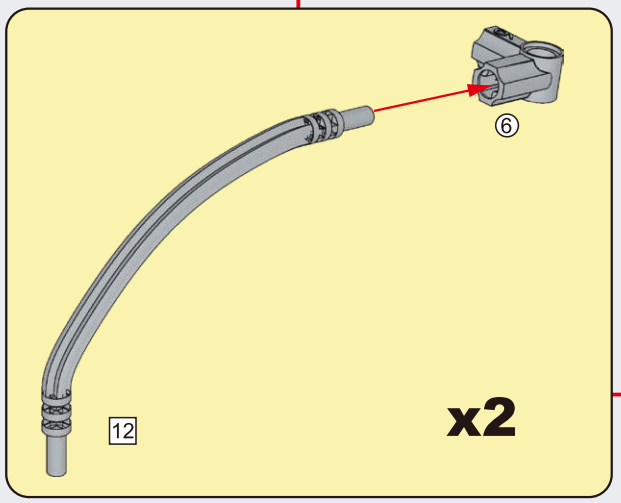

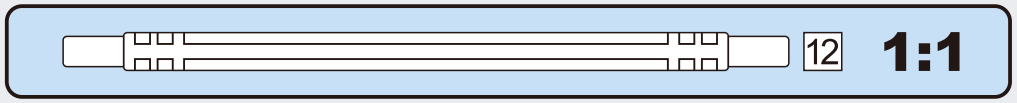

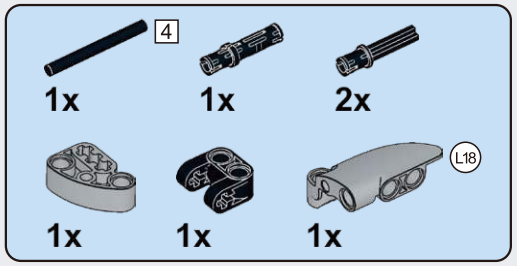

E131

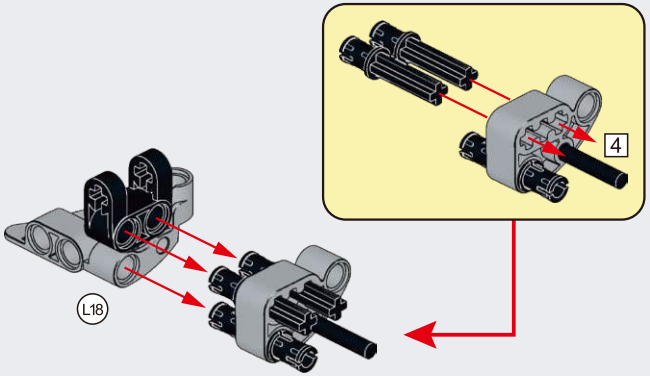

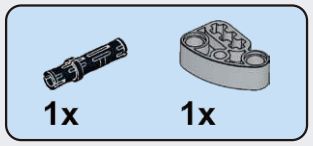

E132

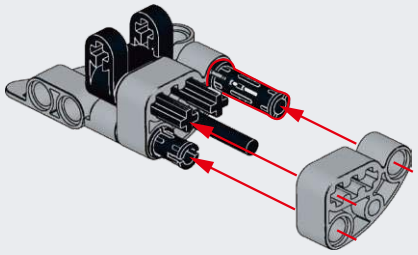

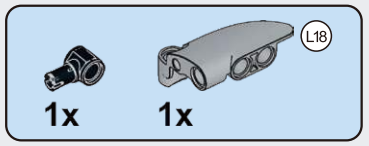

E133

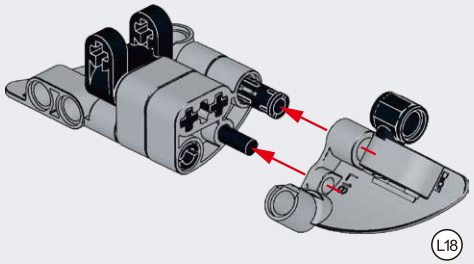

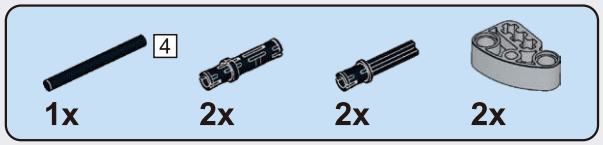

E134

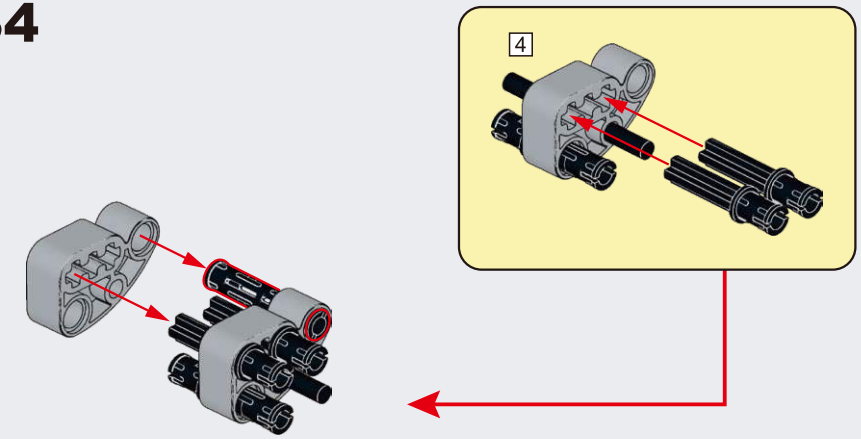

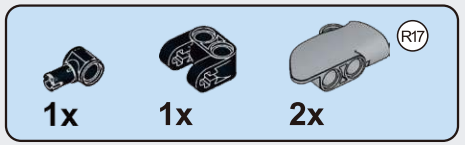

E135

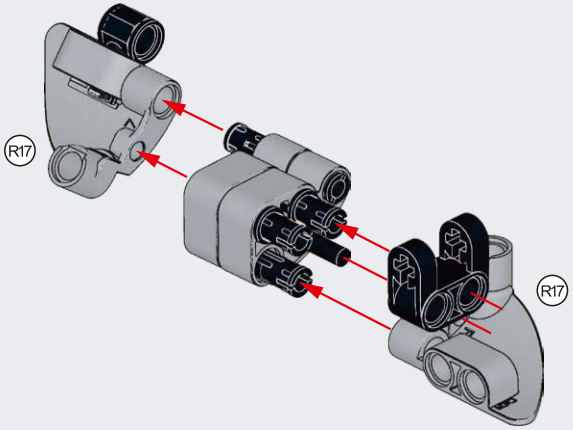

E136

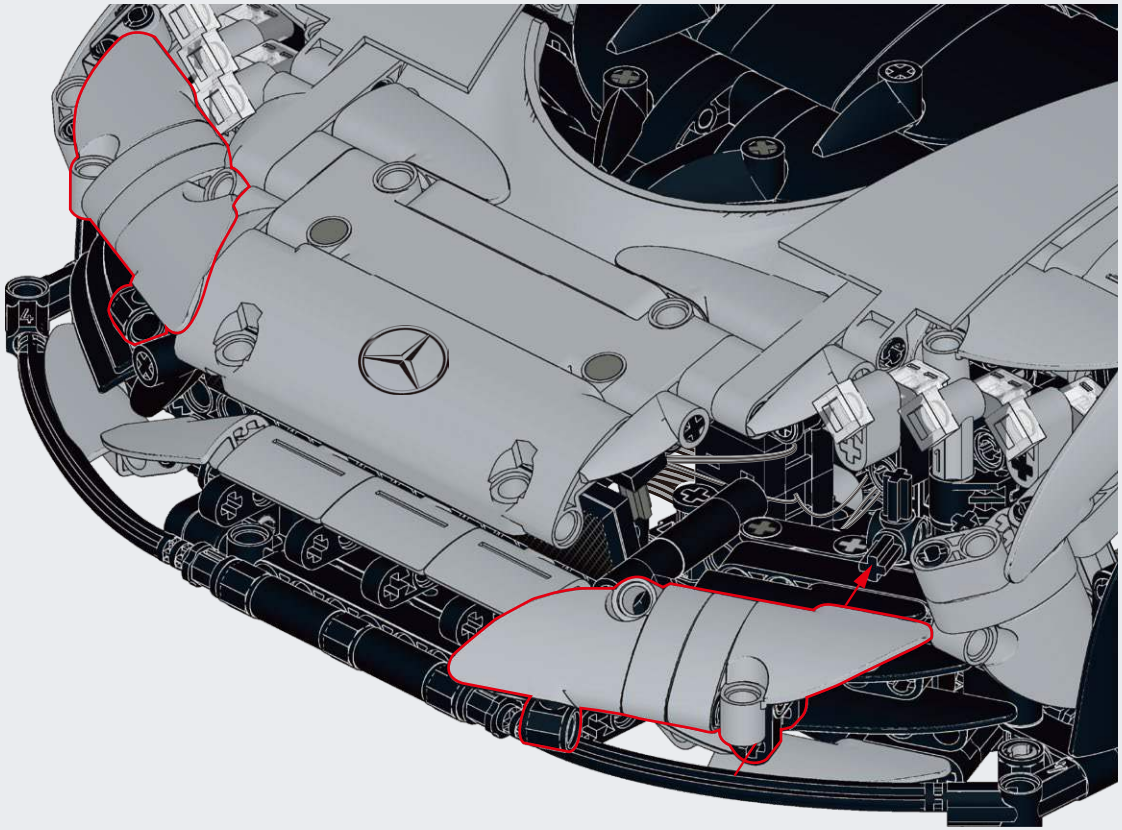

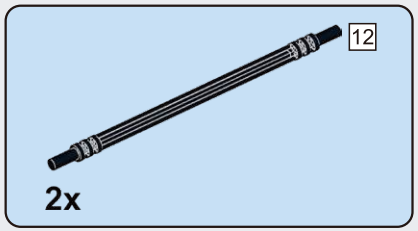

E137

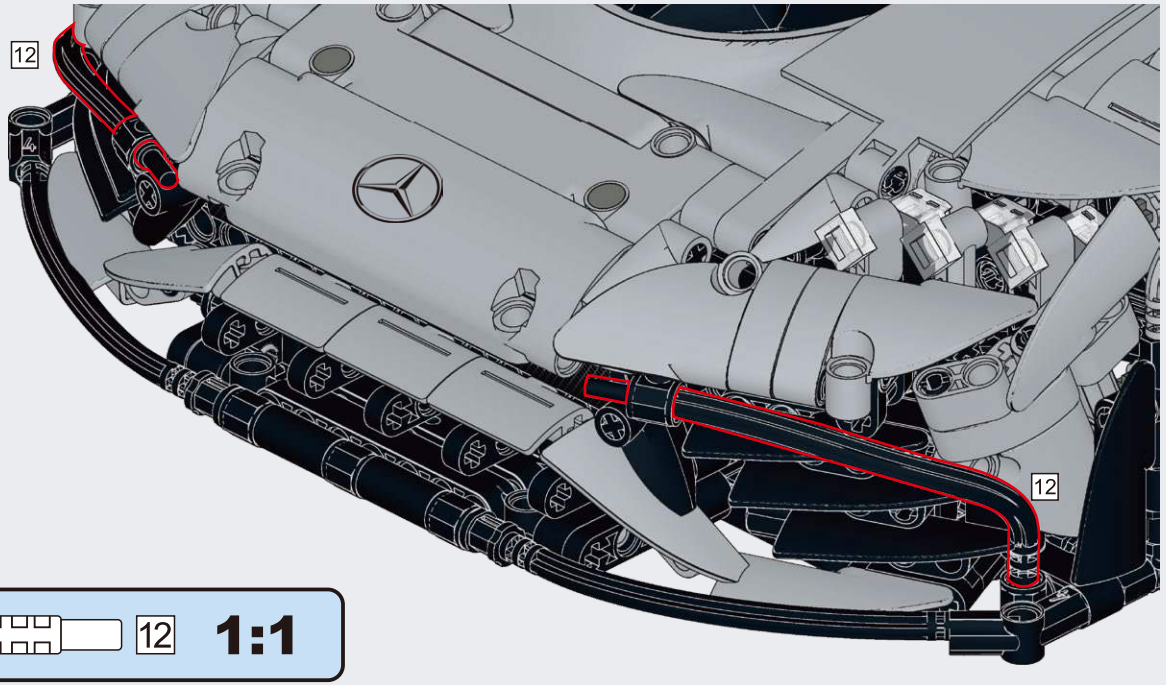

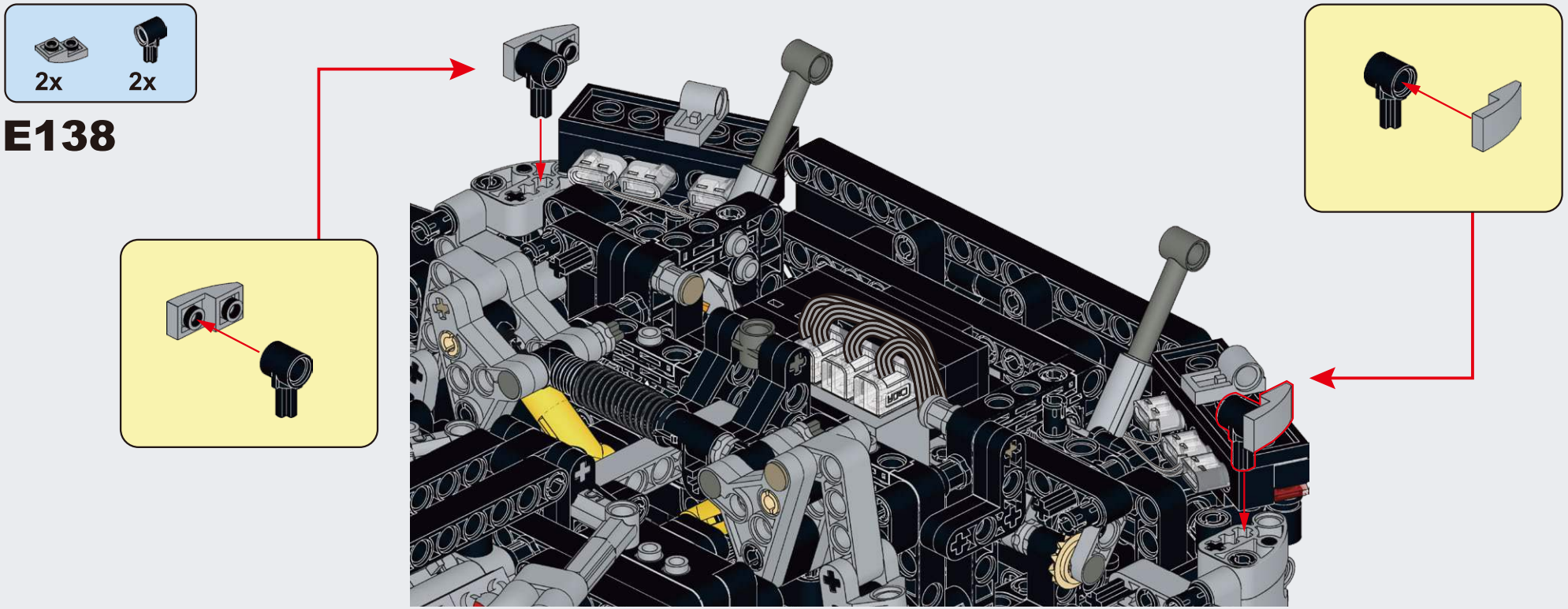
2x
2x
E138

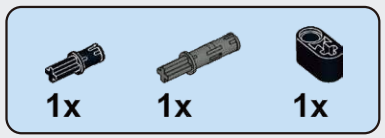
1x
1x
1x
E139

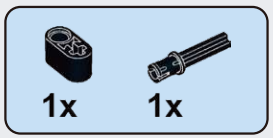
1x
1x
E140

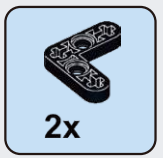
2x
E141

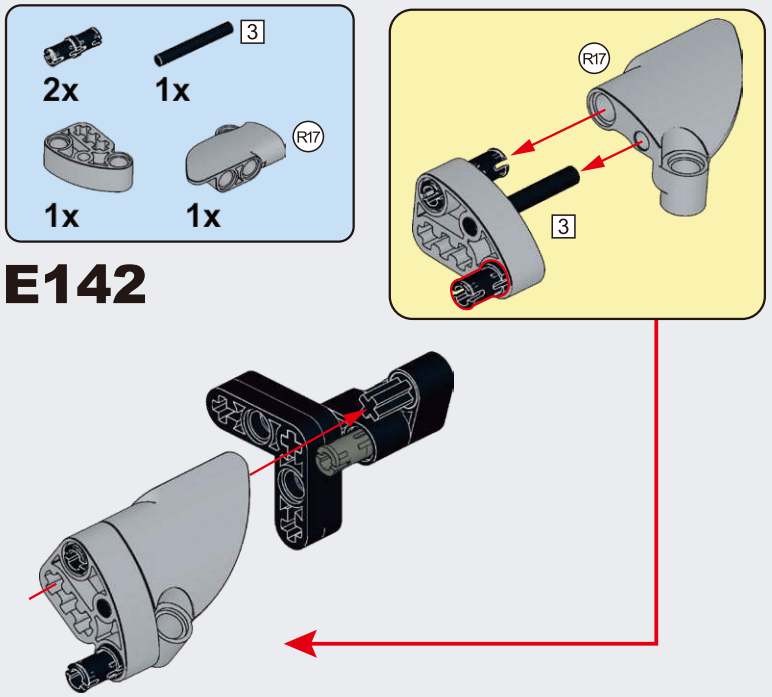
2x
1x
3
1x
1x
R17
E142
R17
3

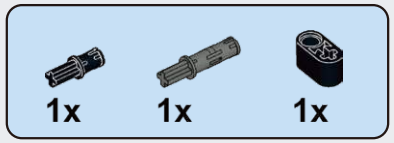

E143

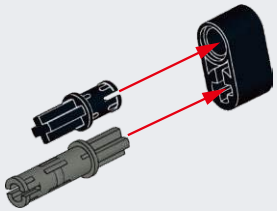

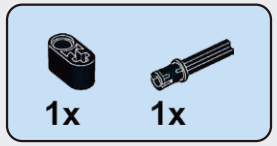

E144

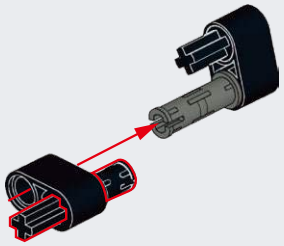

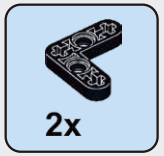

E145

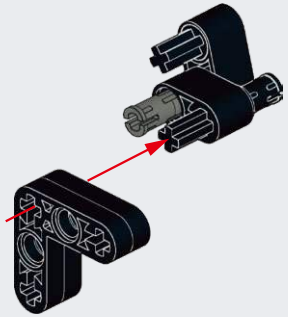

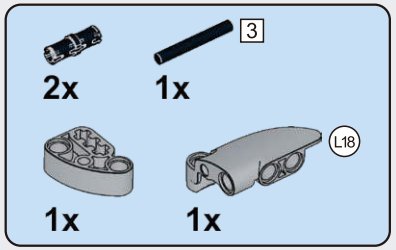

E146

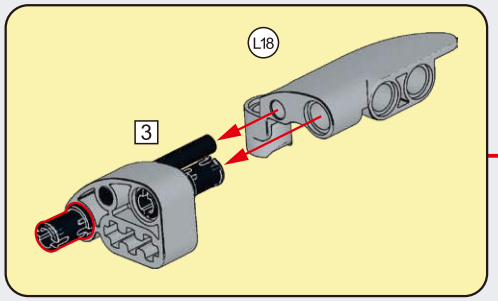

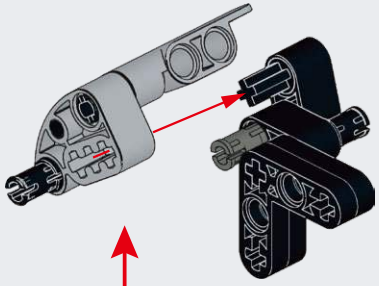

E147

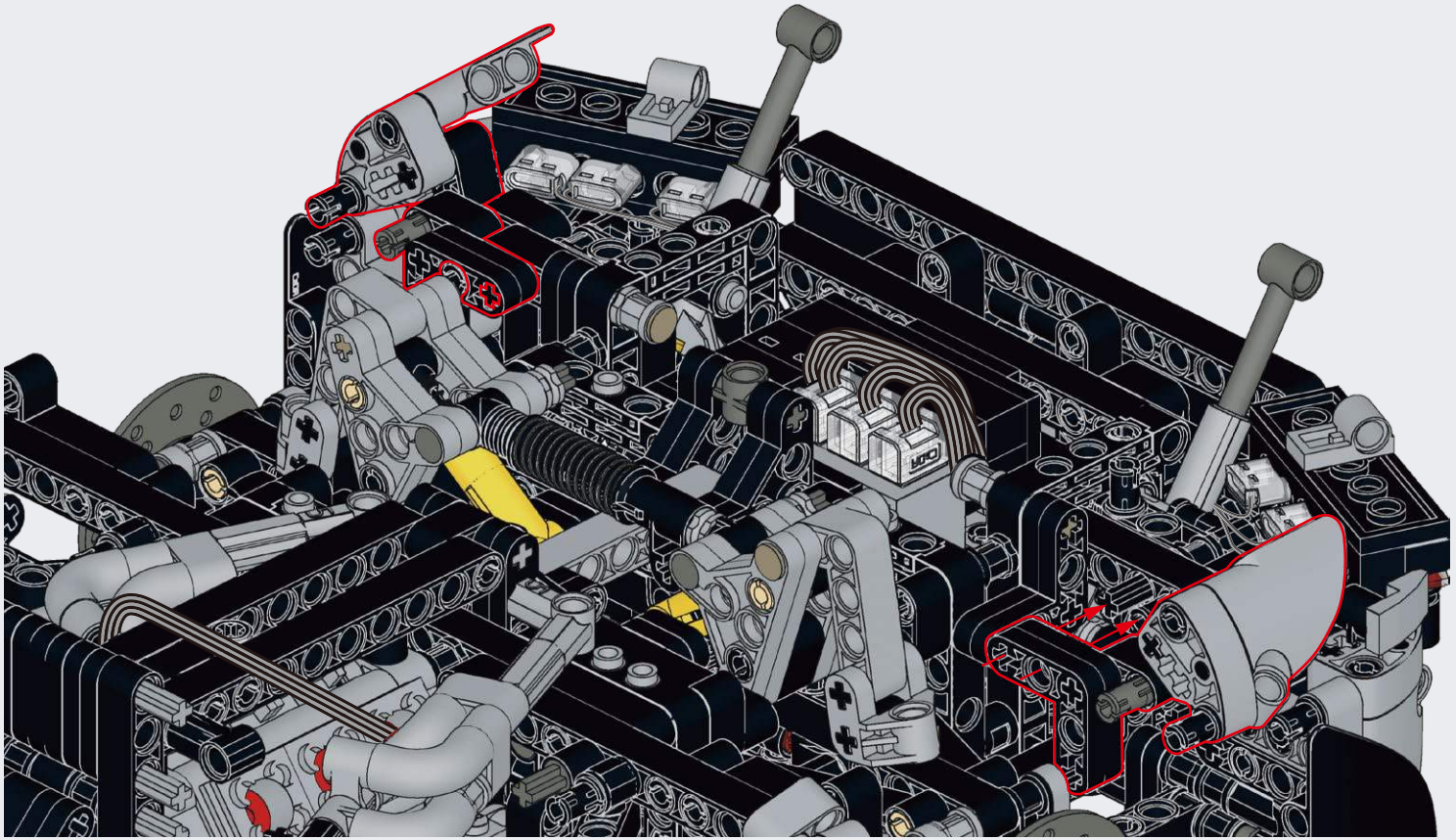

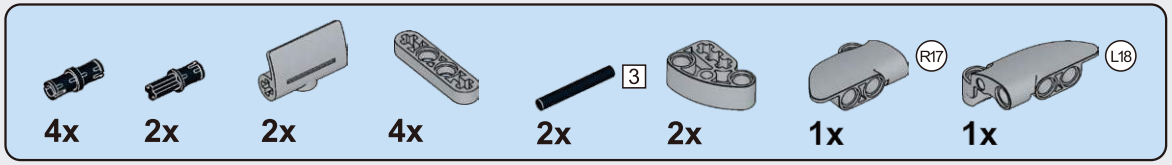

E148

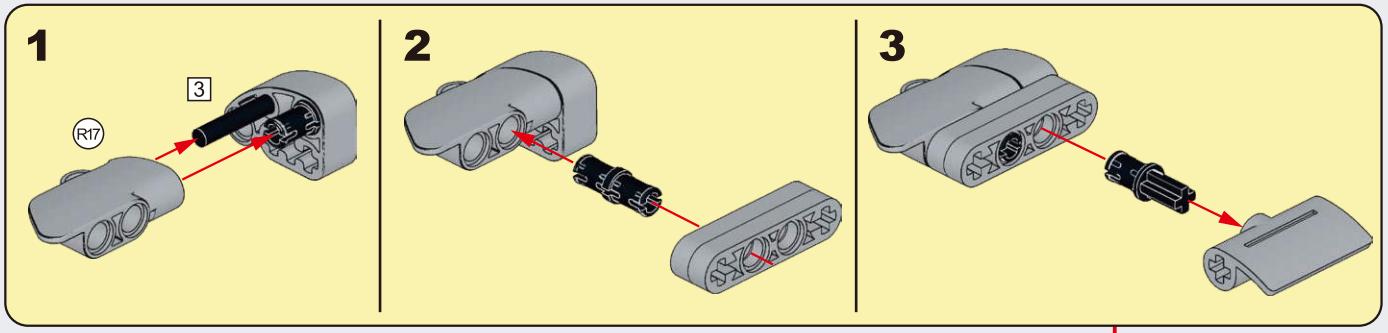

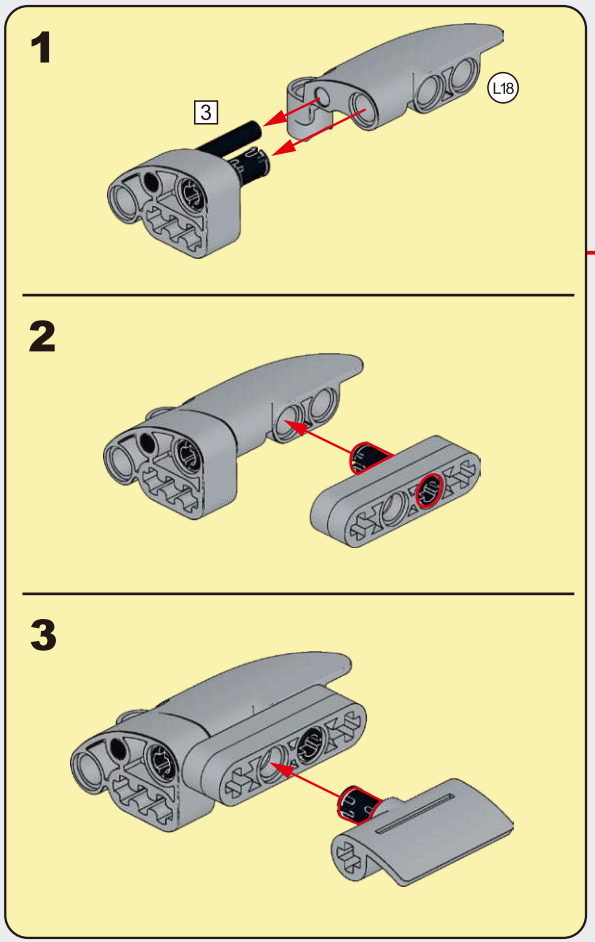

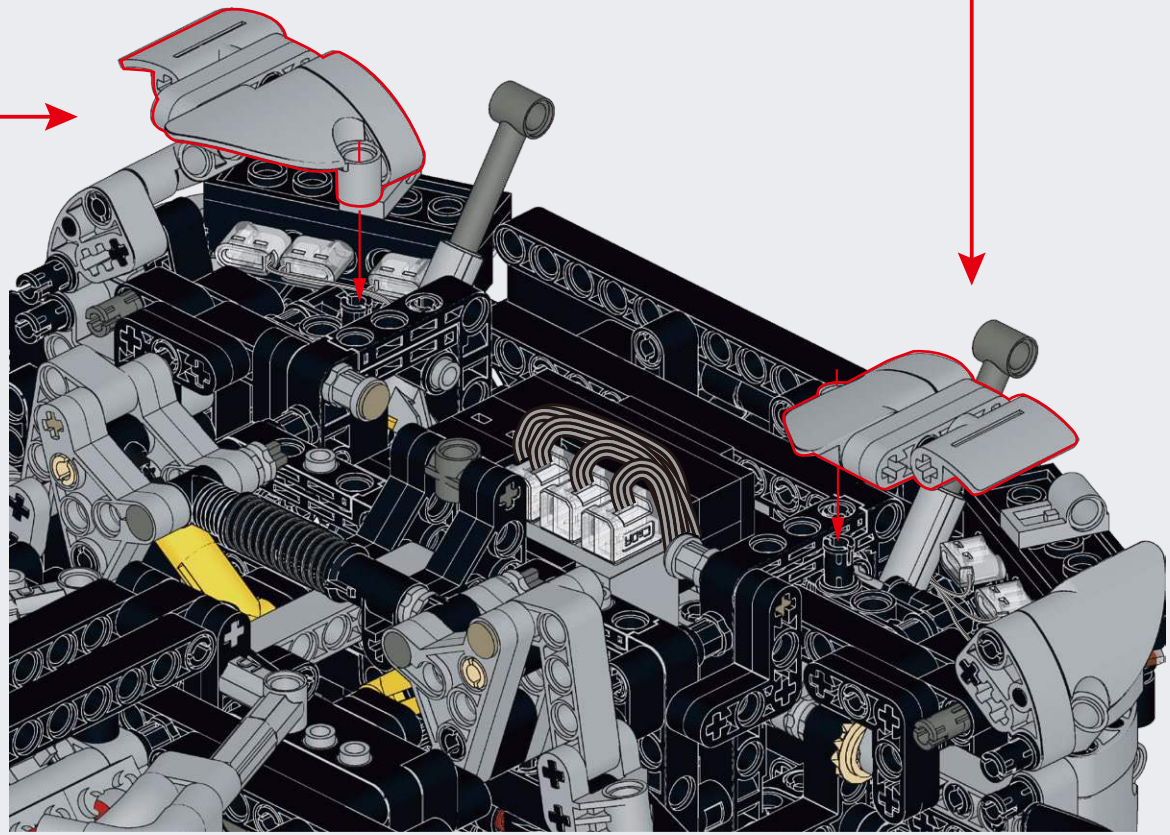

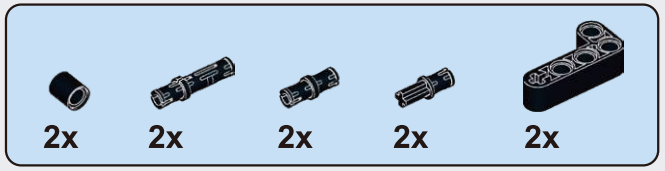

E149

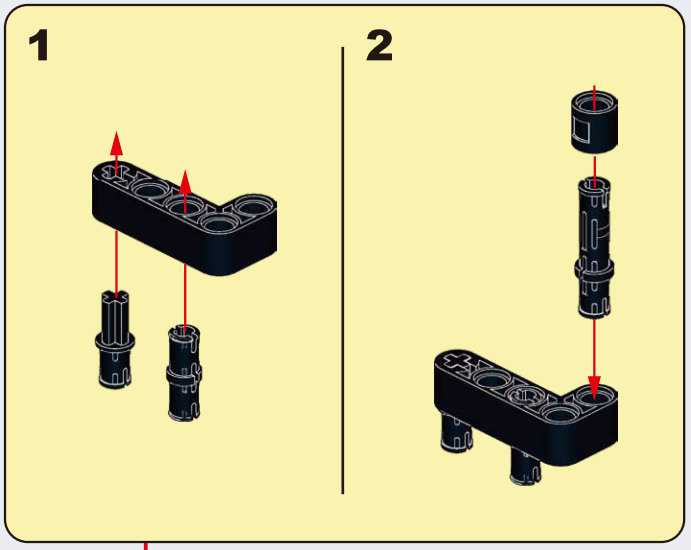

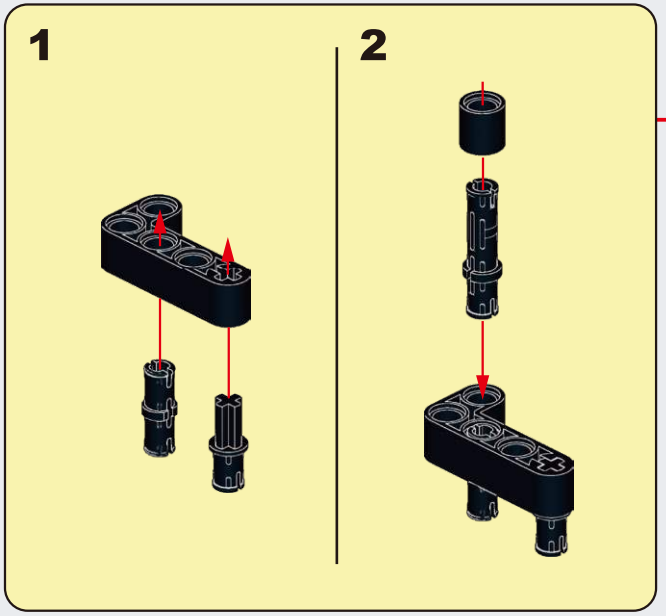

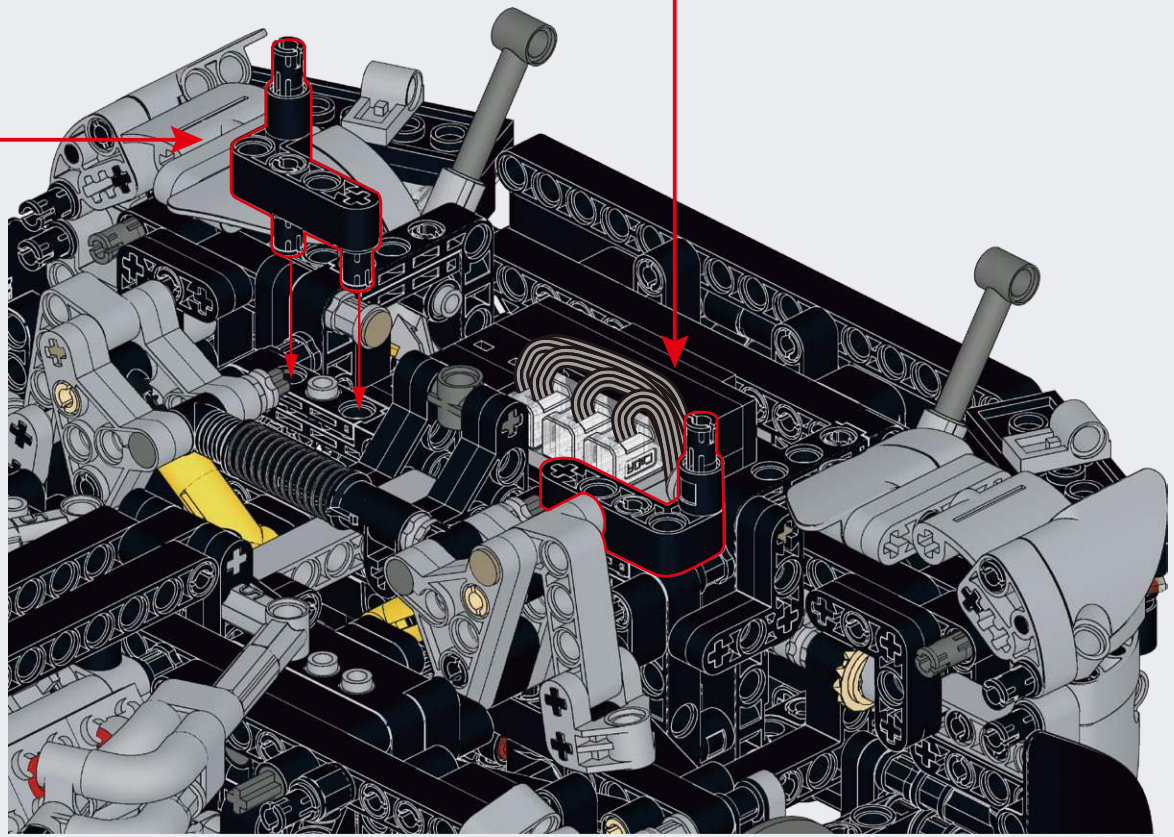

F

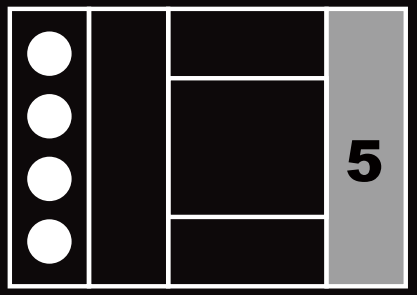

BAG 6

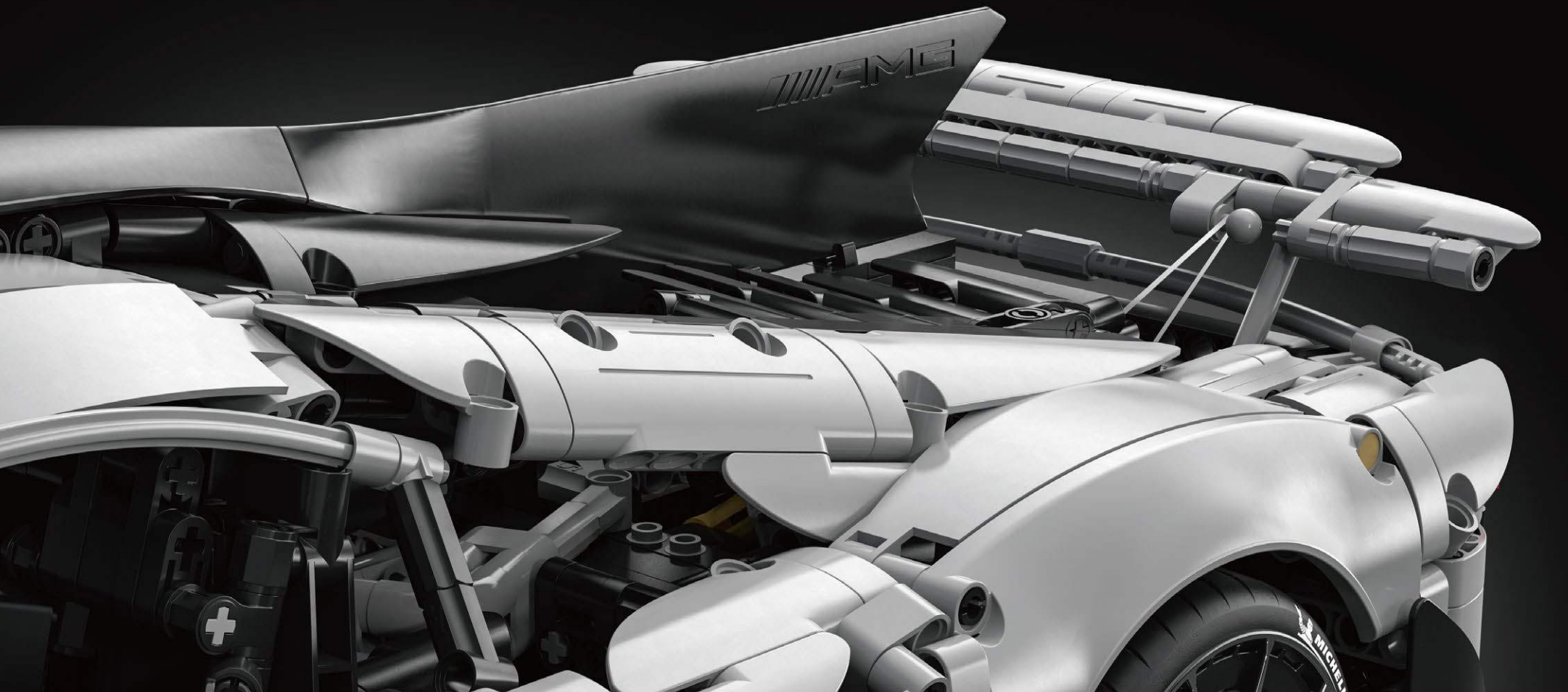

F

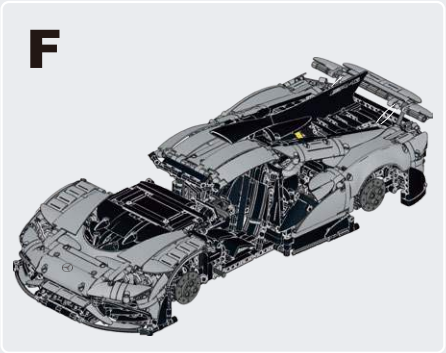

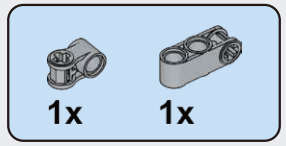

F1

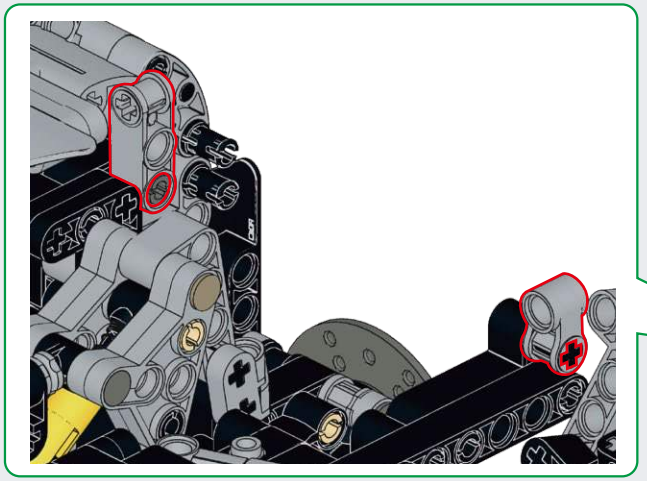

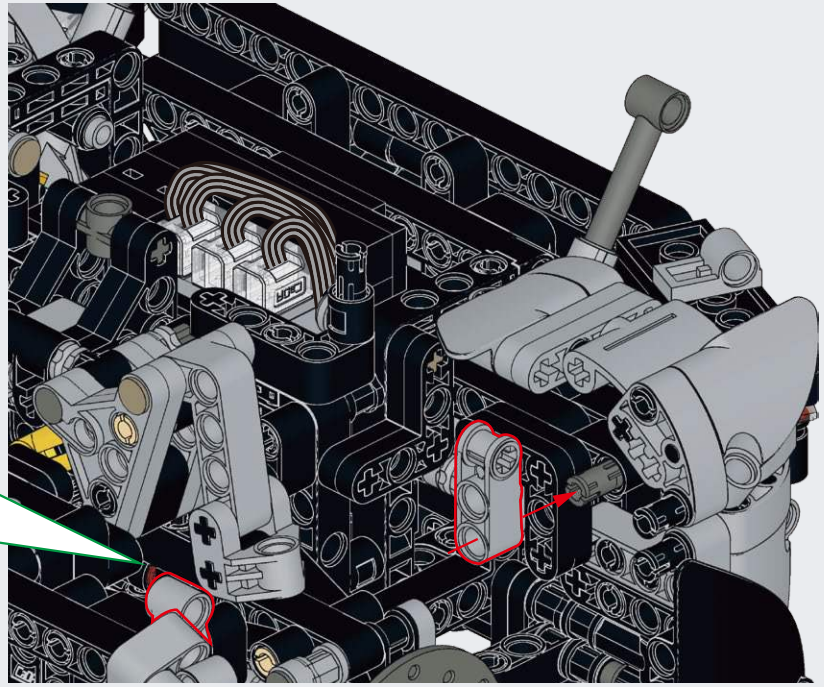

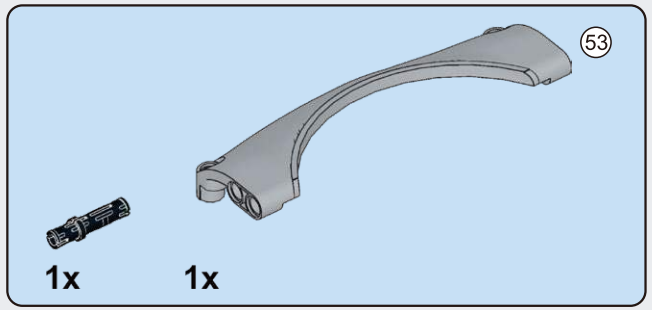

F2

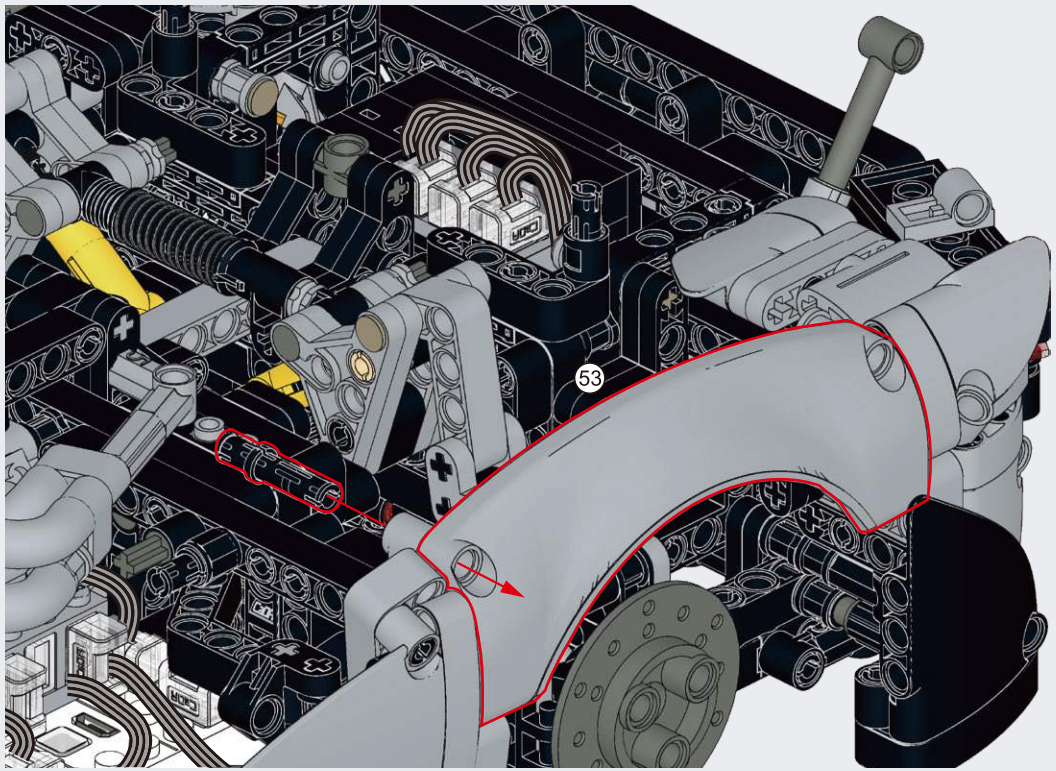

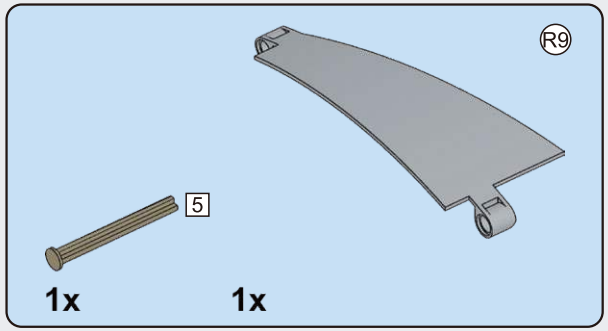

F3

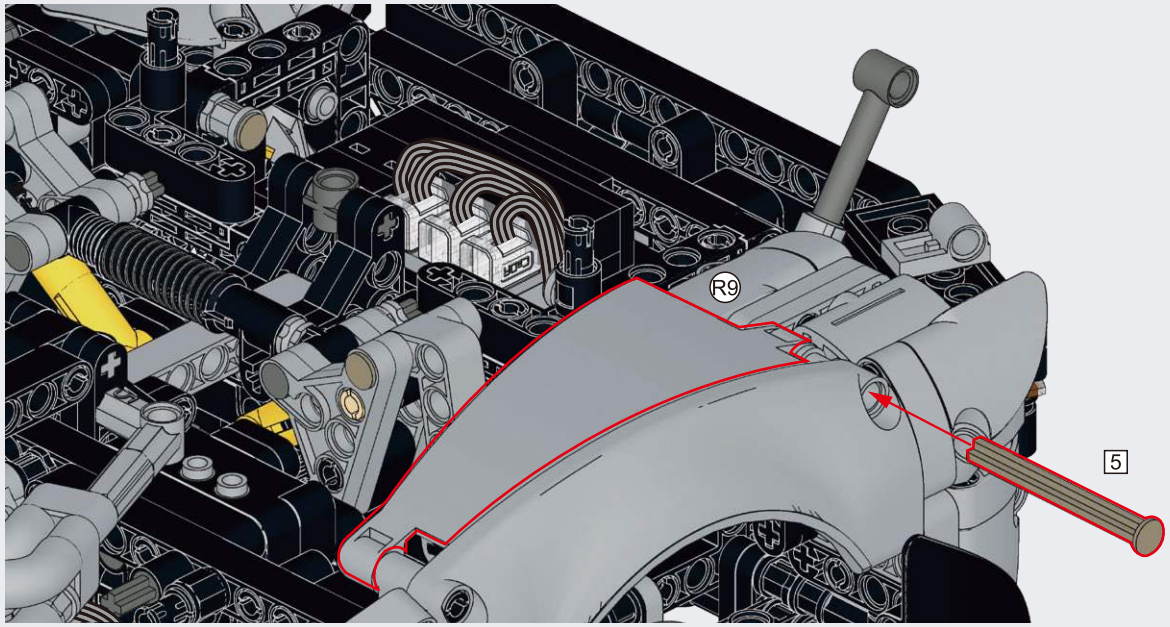

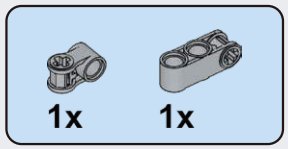

F4

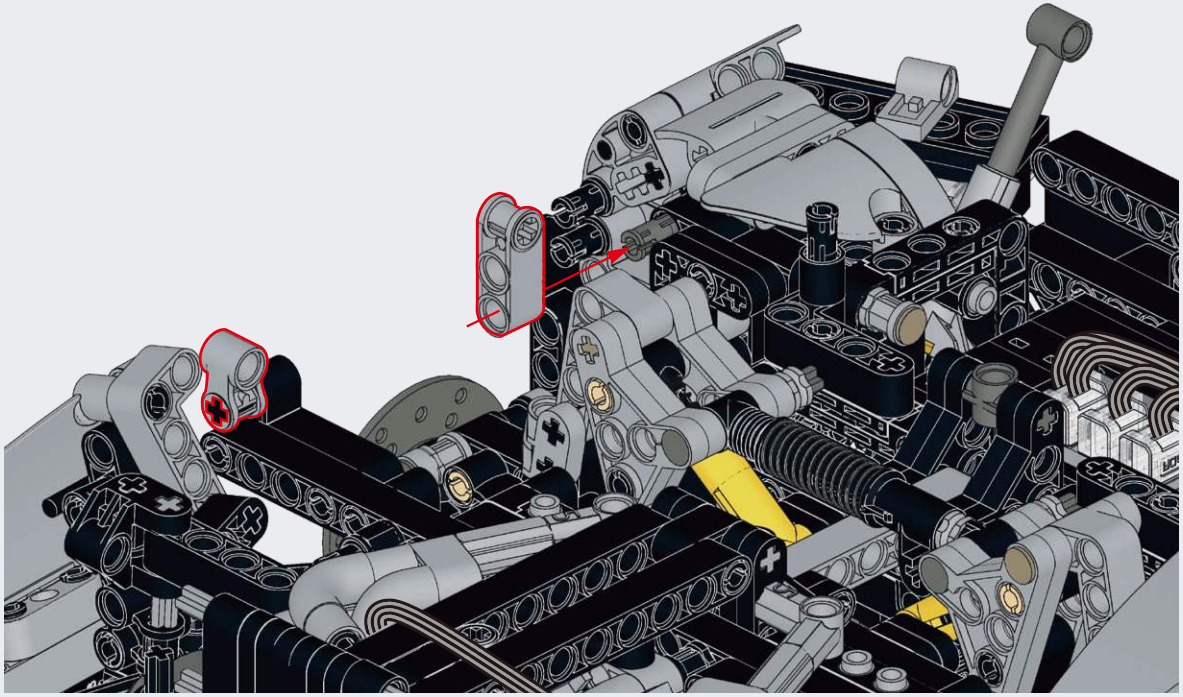

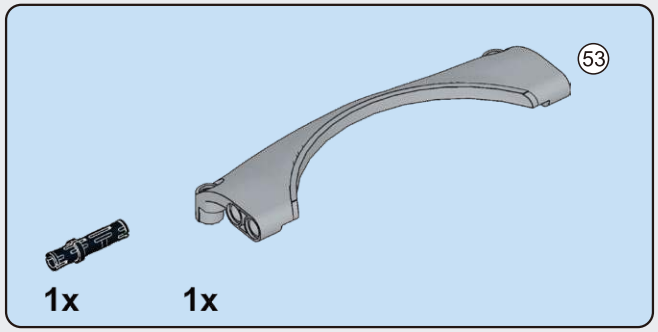

F5

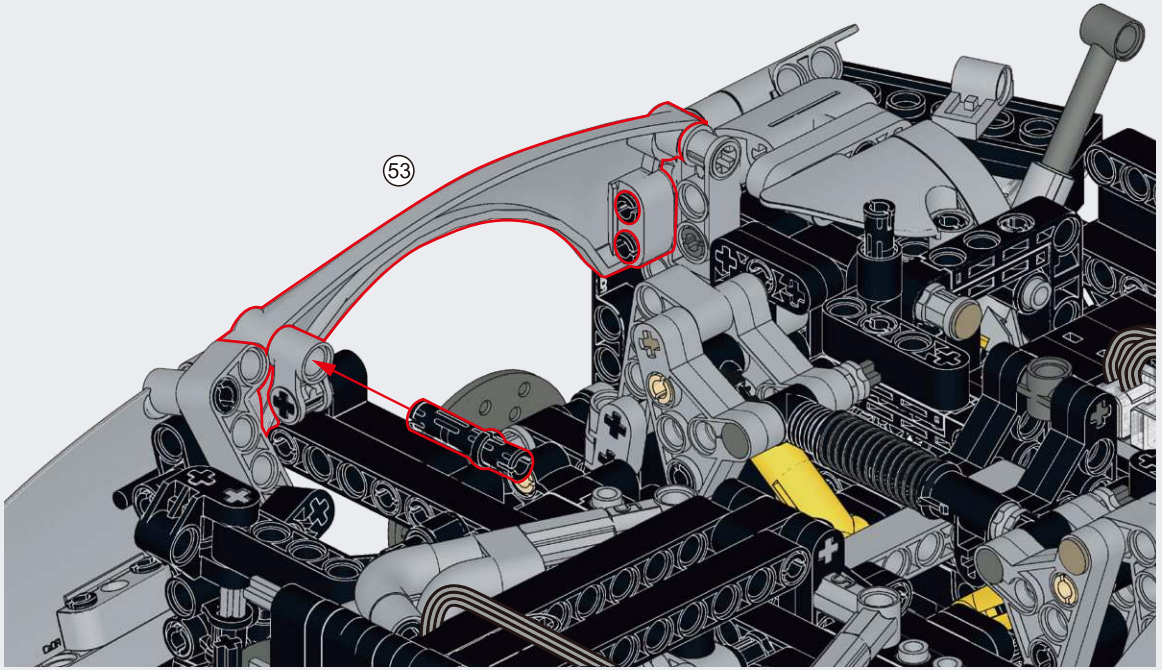

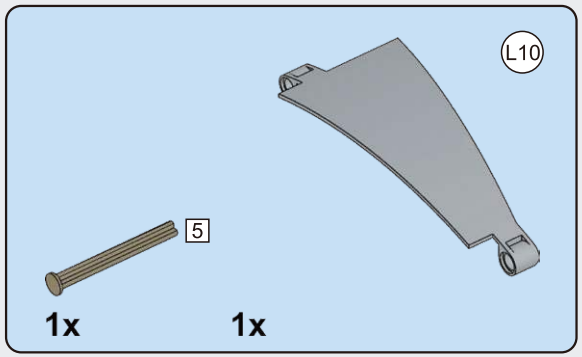

F6

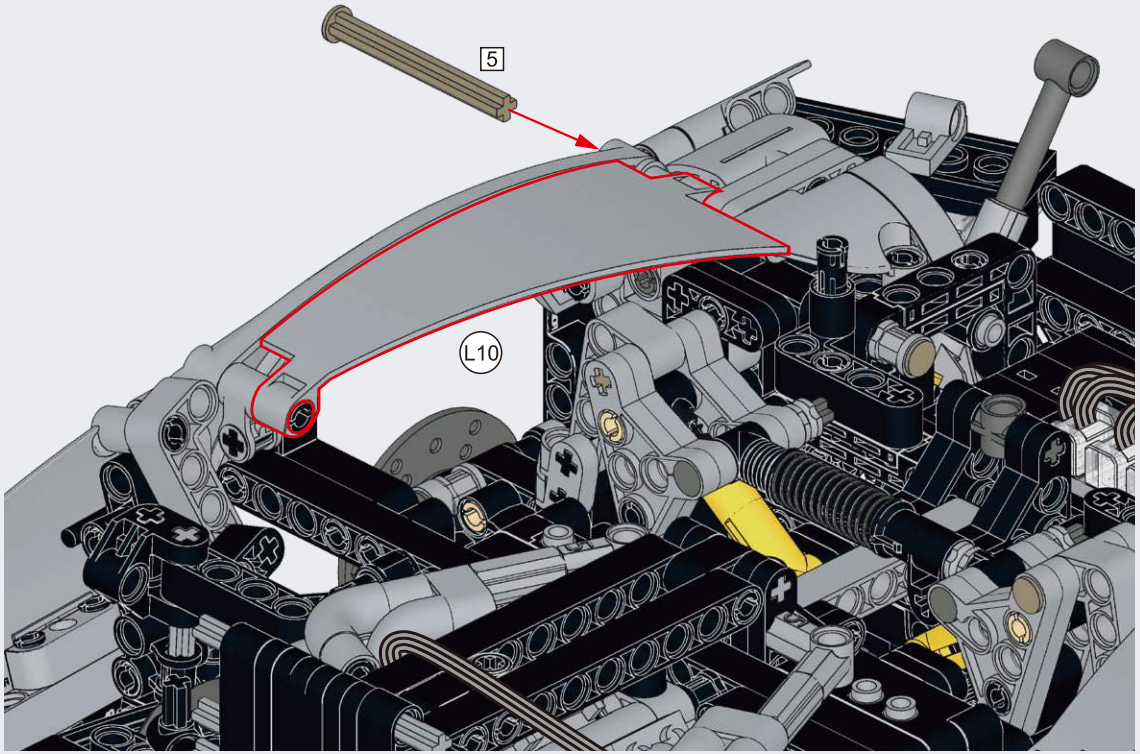

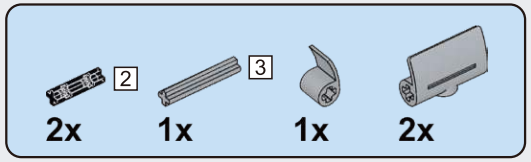

F7

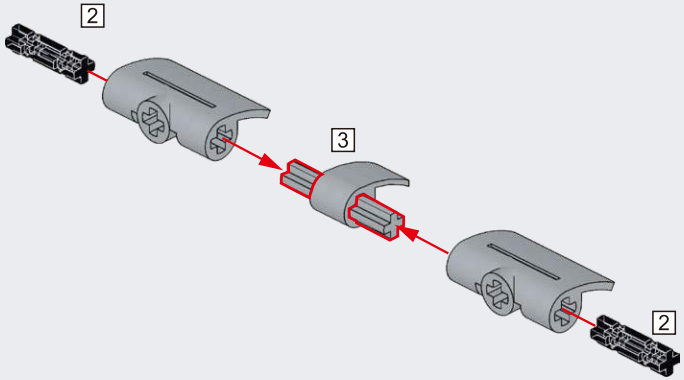

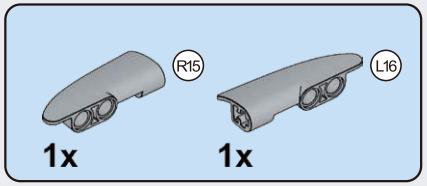

F8

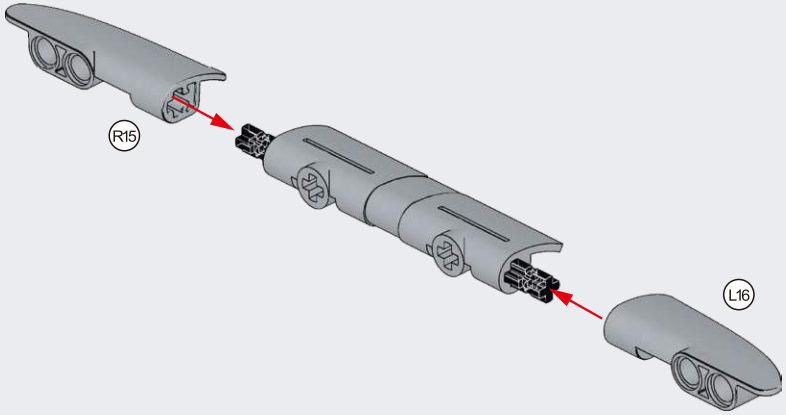

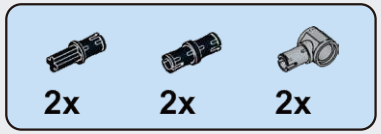

F9

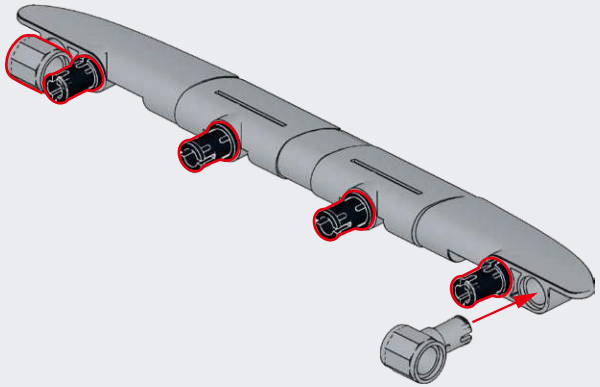

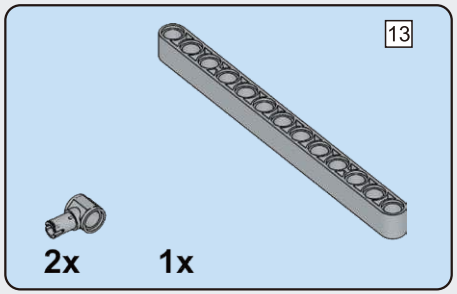

F10

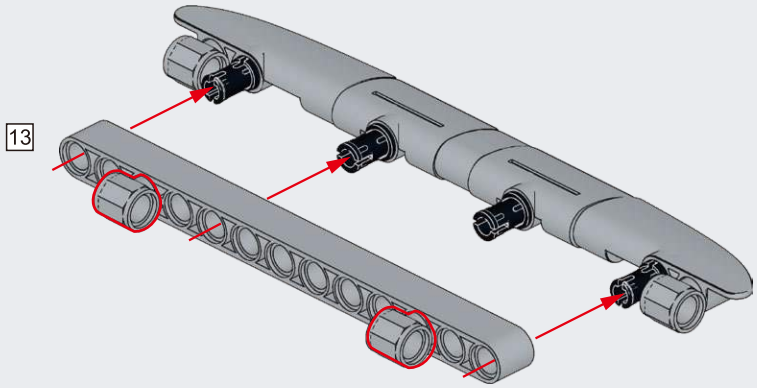

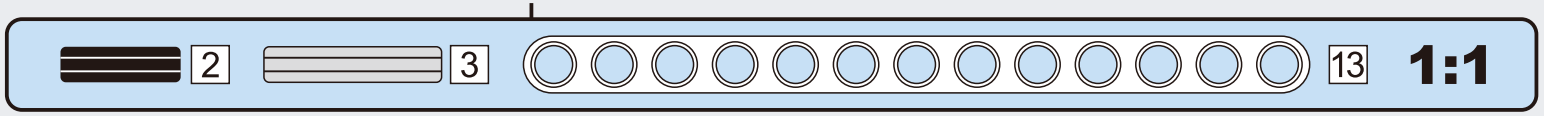

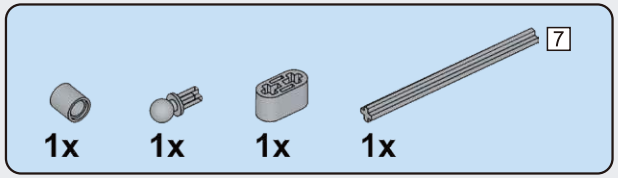

F11

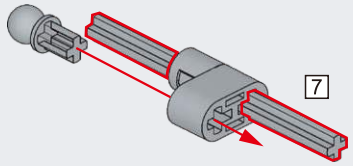

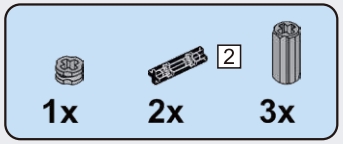

F12

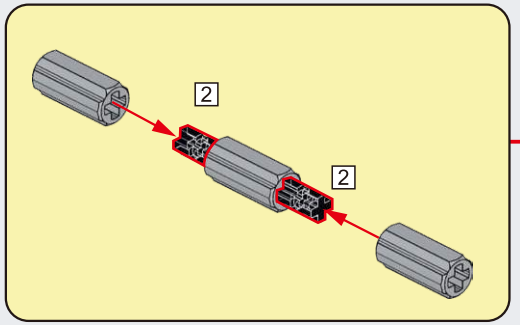

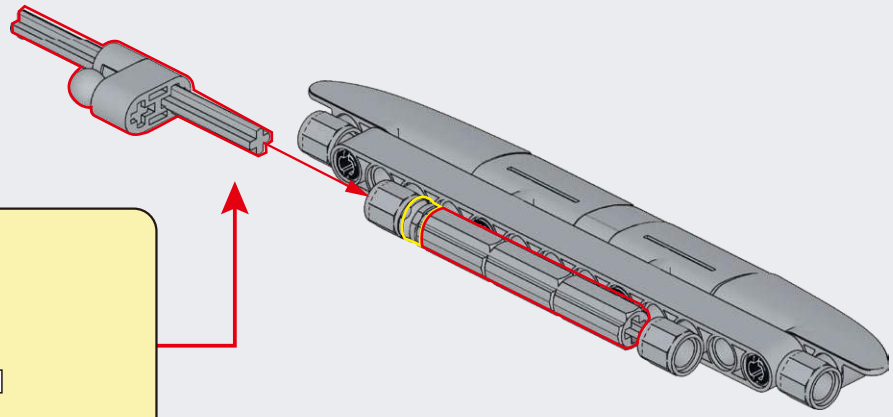

F13

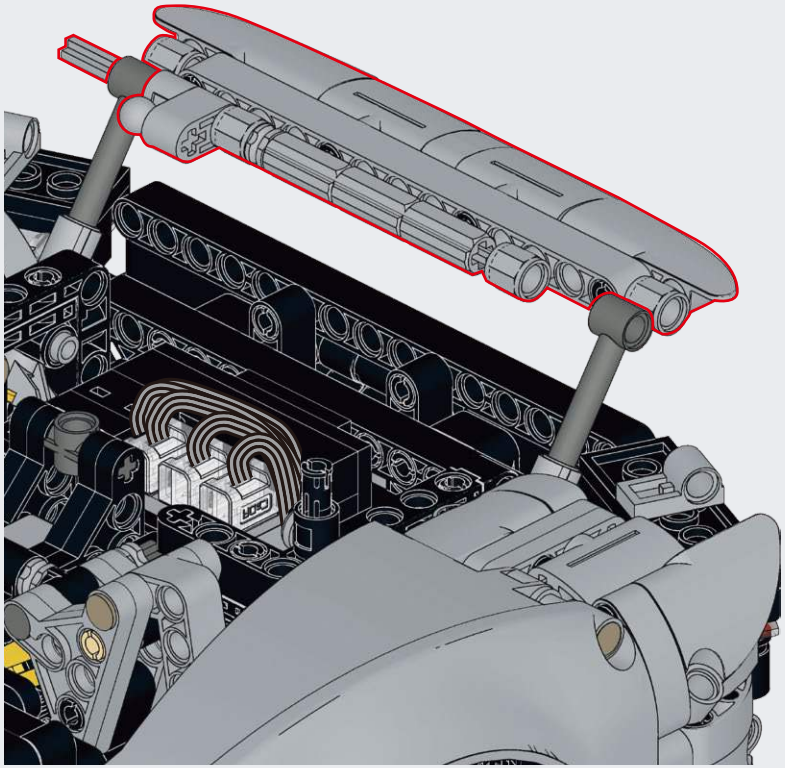

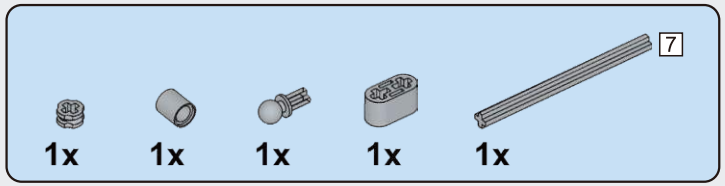

F14

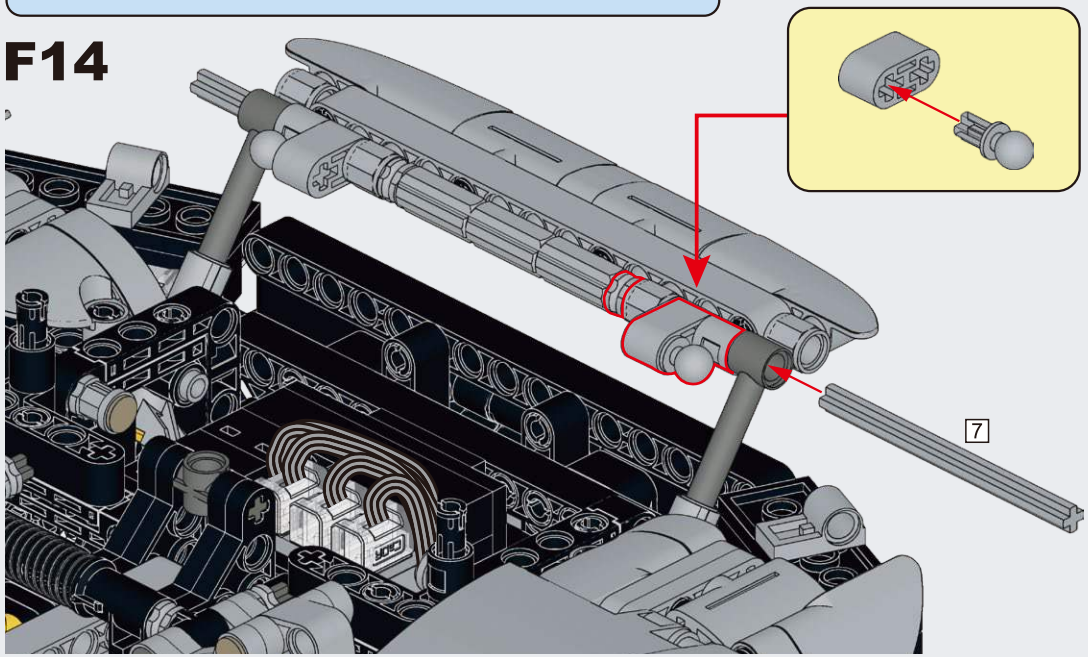

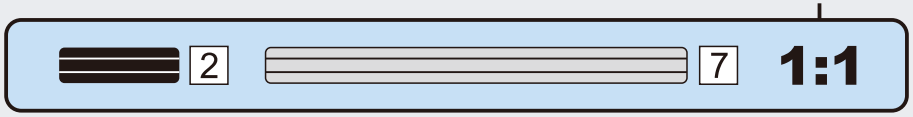

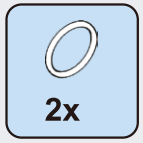

F15

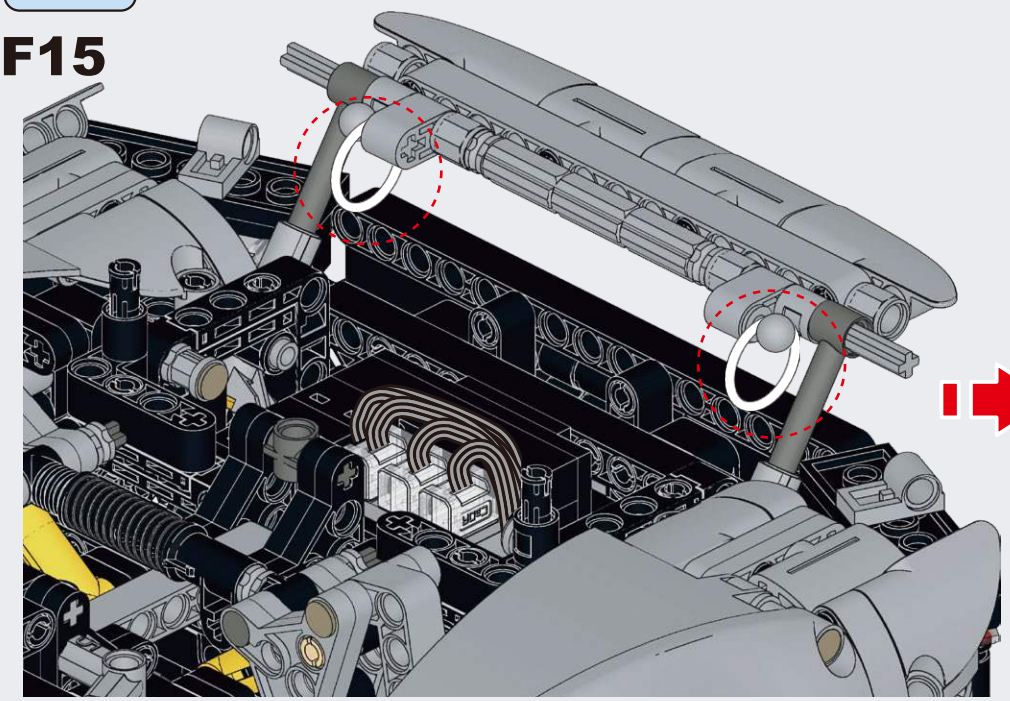

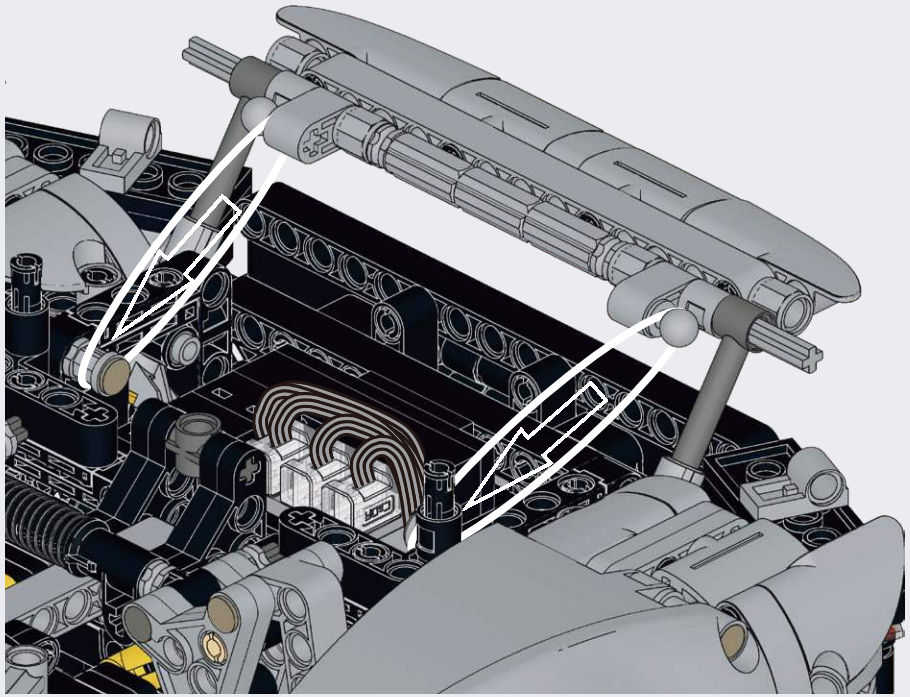

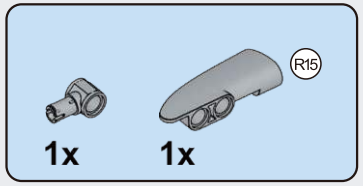

F16

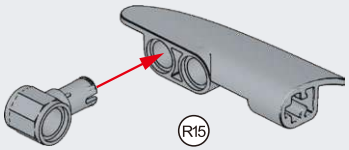

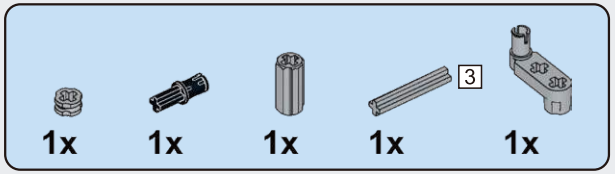

F17

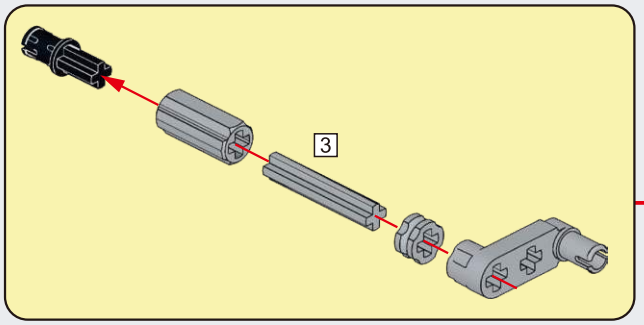

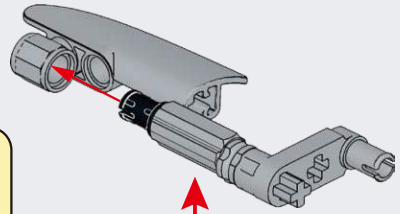

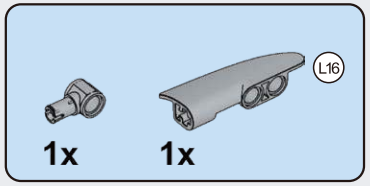

F18

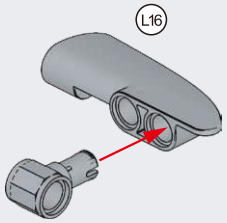

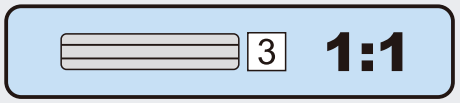

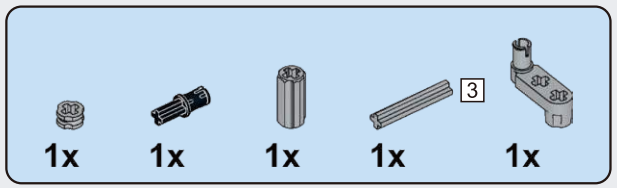

F19

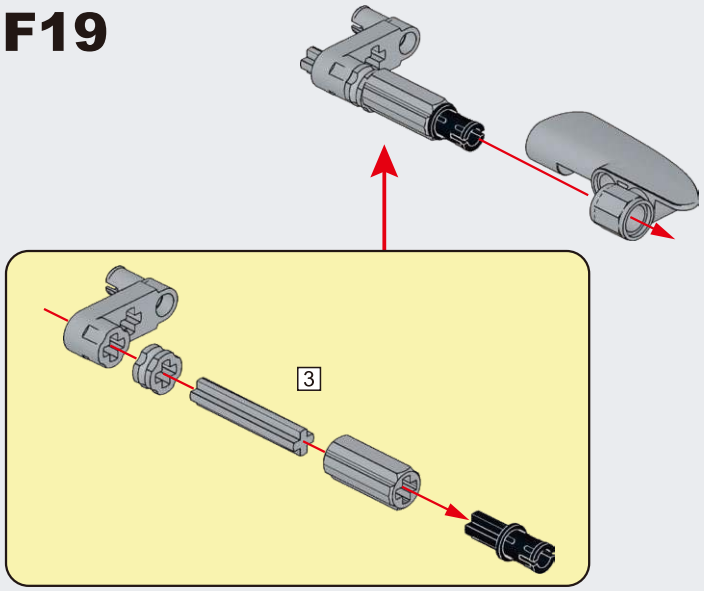

F20

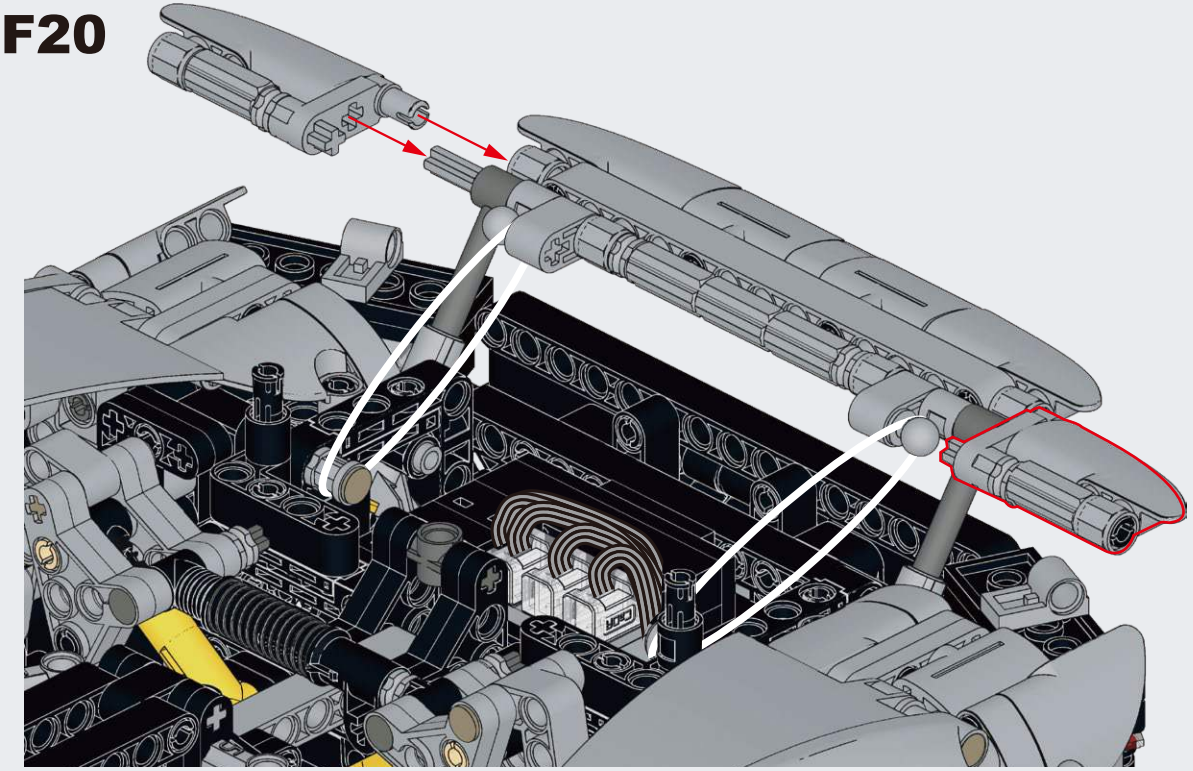

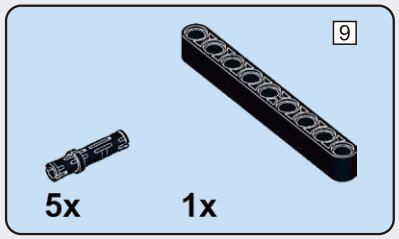

F21

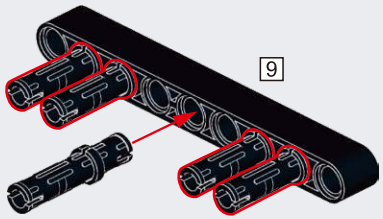

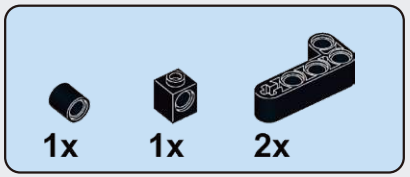

F22

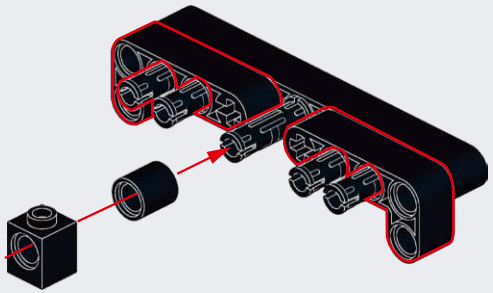

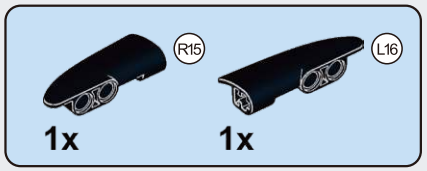

F23

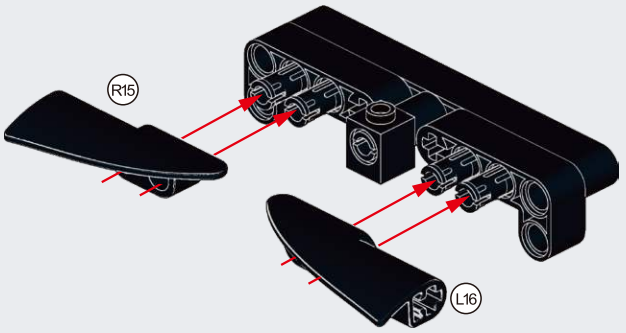

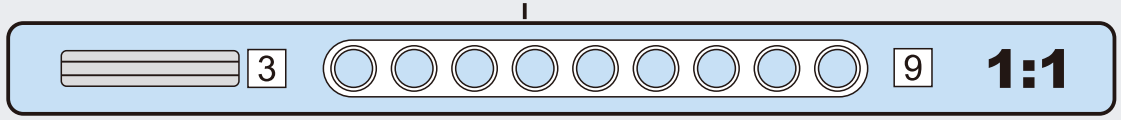

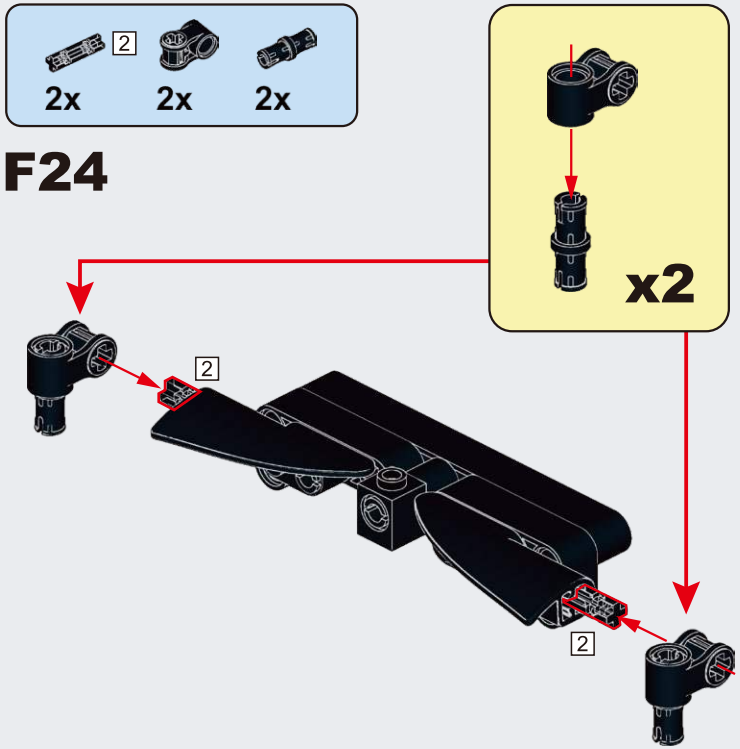
2
2x
2x
2x
F24
x2
2
2

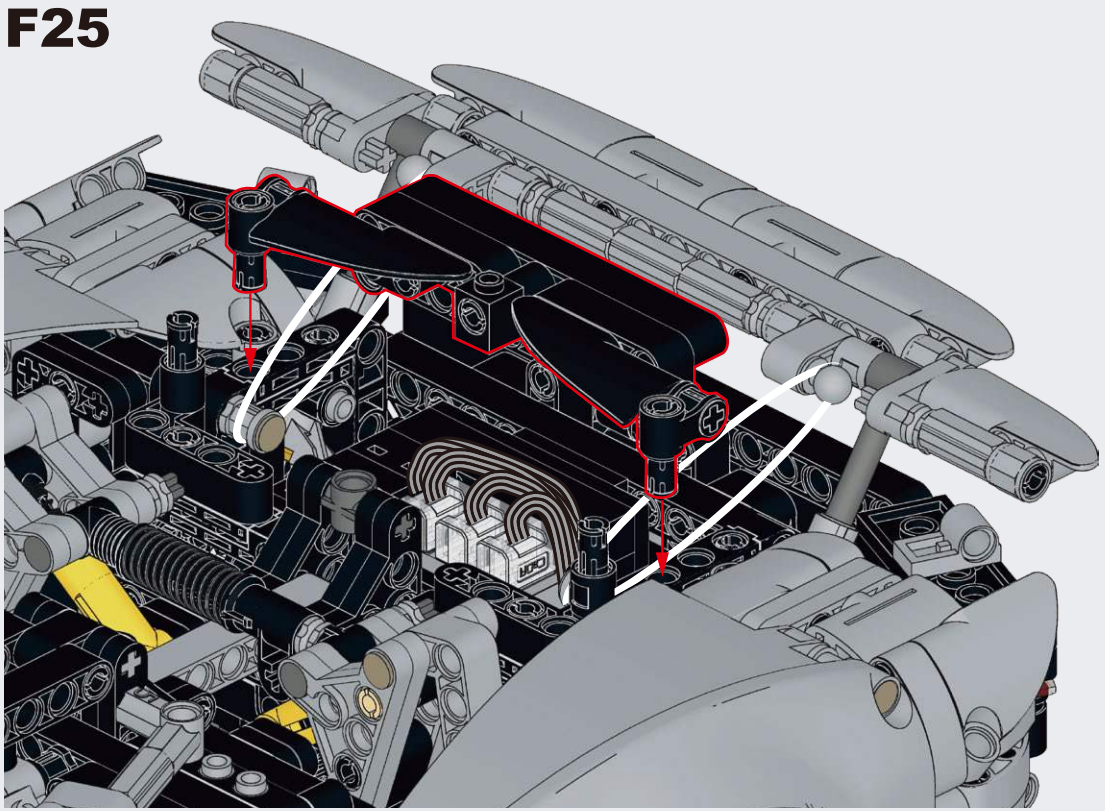
F25

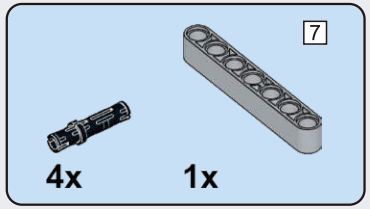
7
4x
1x

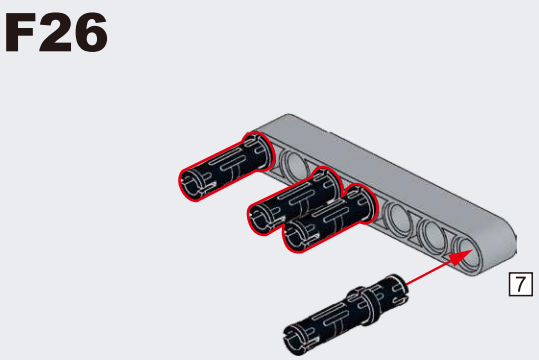
F26
7

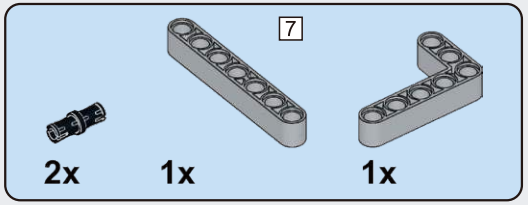
7
2x
1x
1x

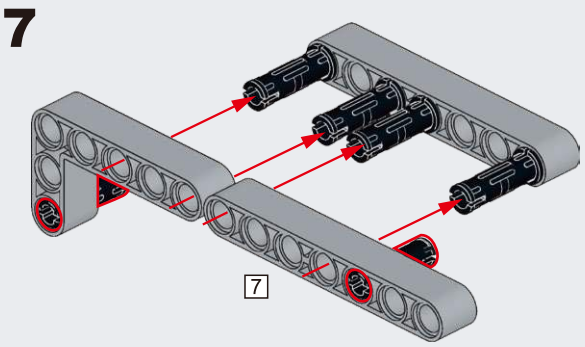
F27
7

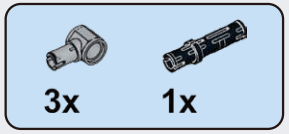
3x
1x

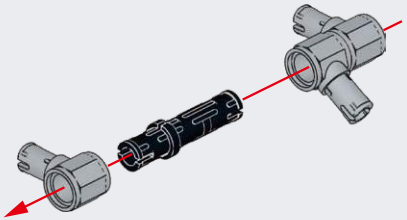
F28

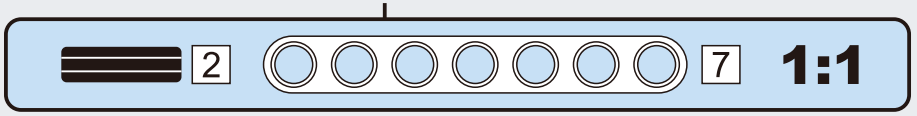
2
7
1:1

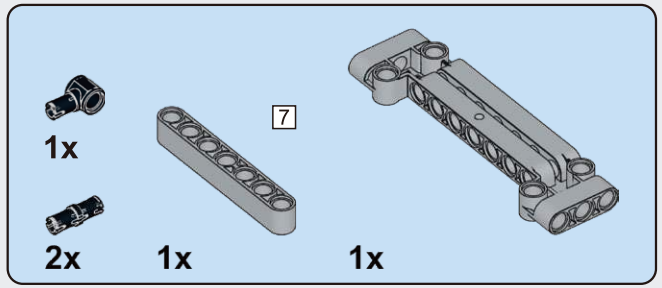

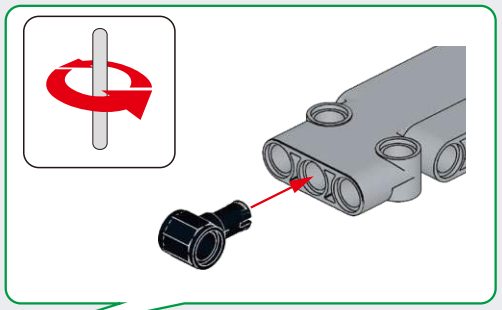

F29

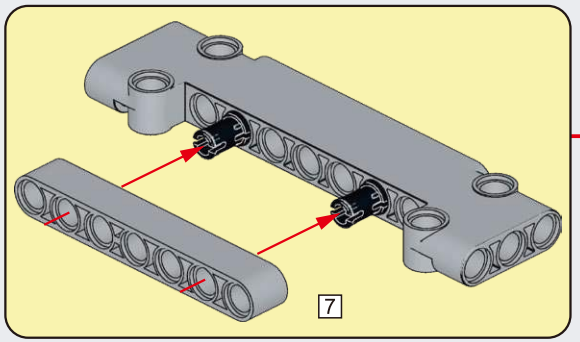

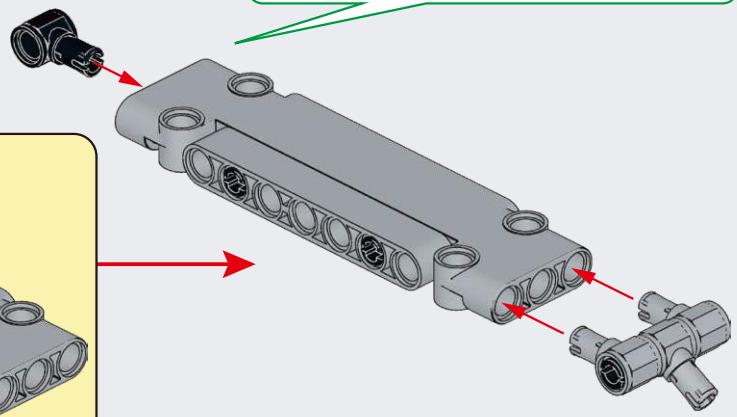

F30

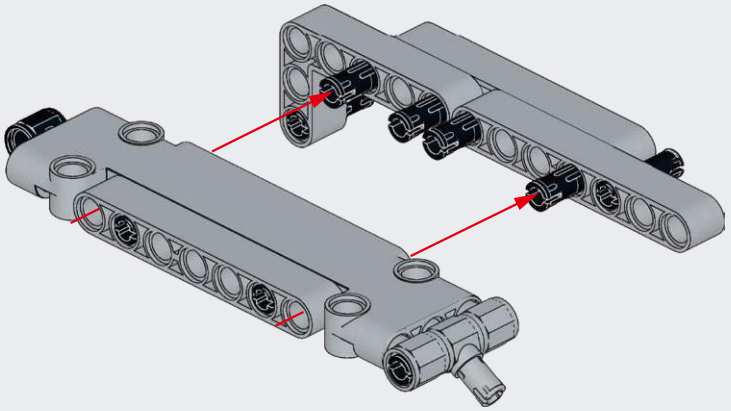

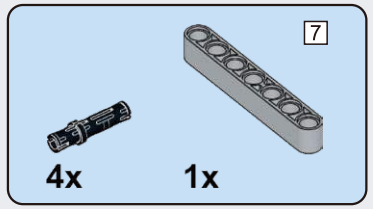

F31

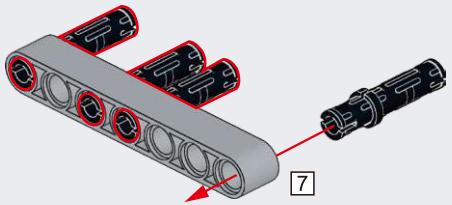

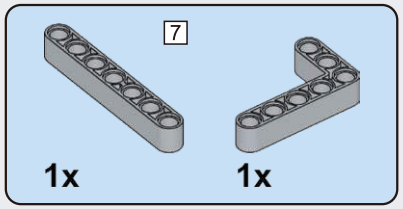

F32

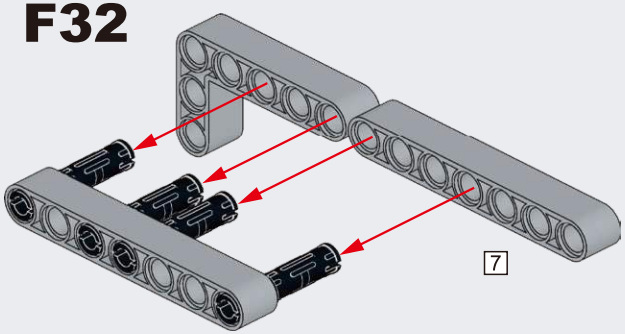

F33

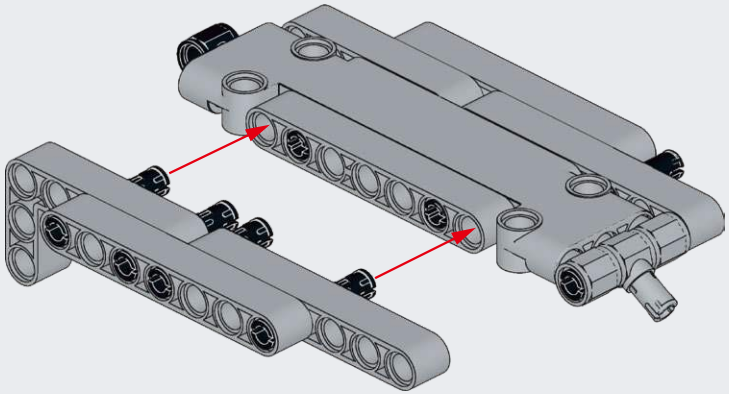

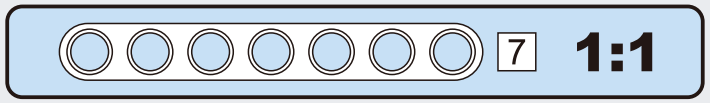

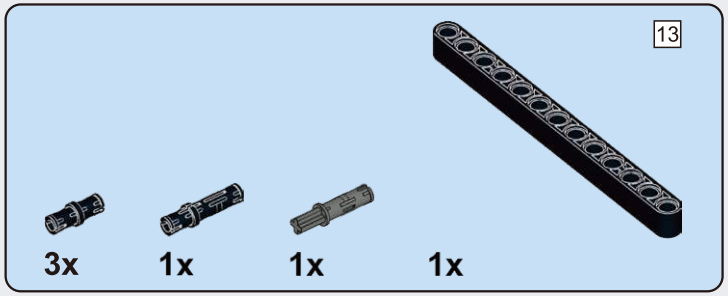

F34

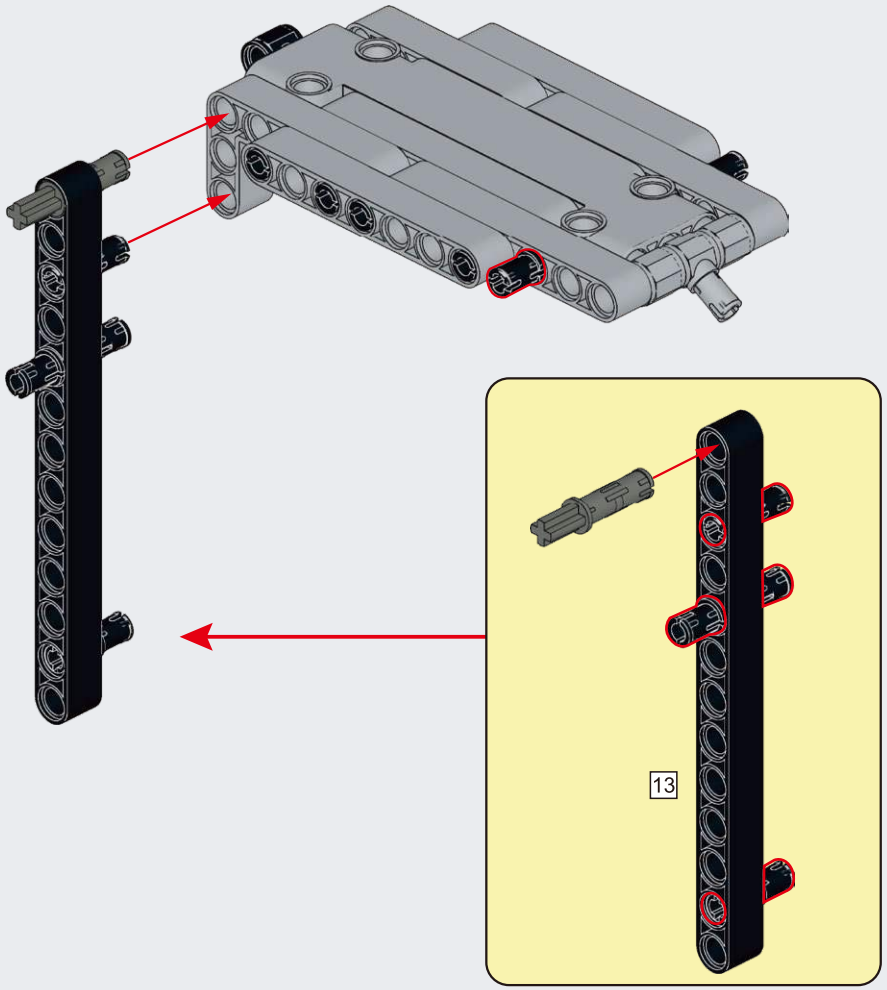

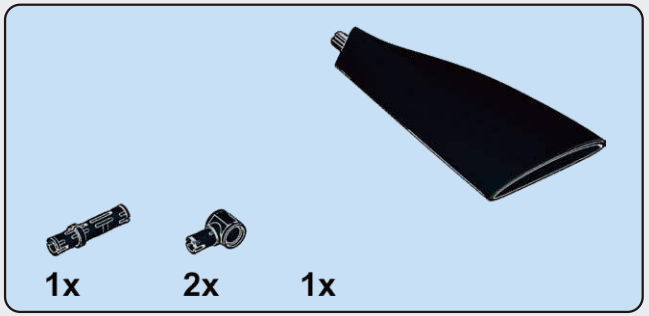

F35

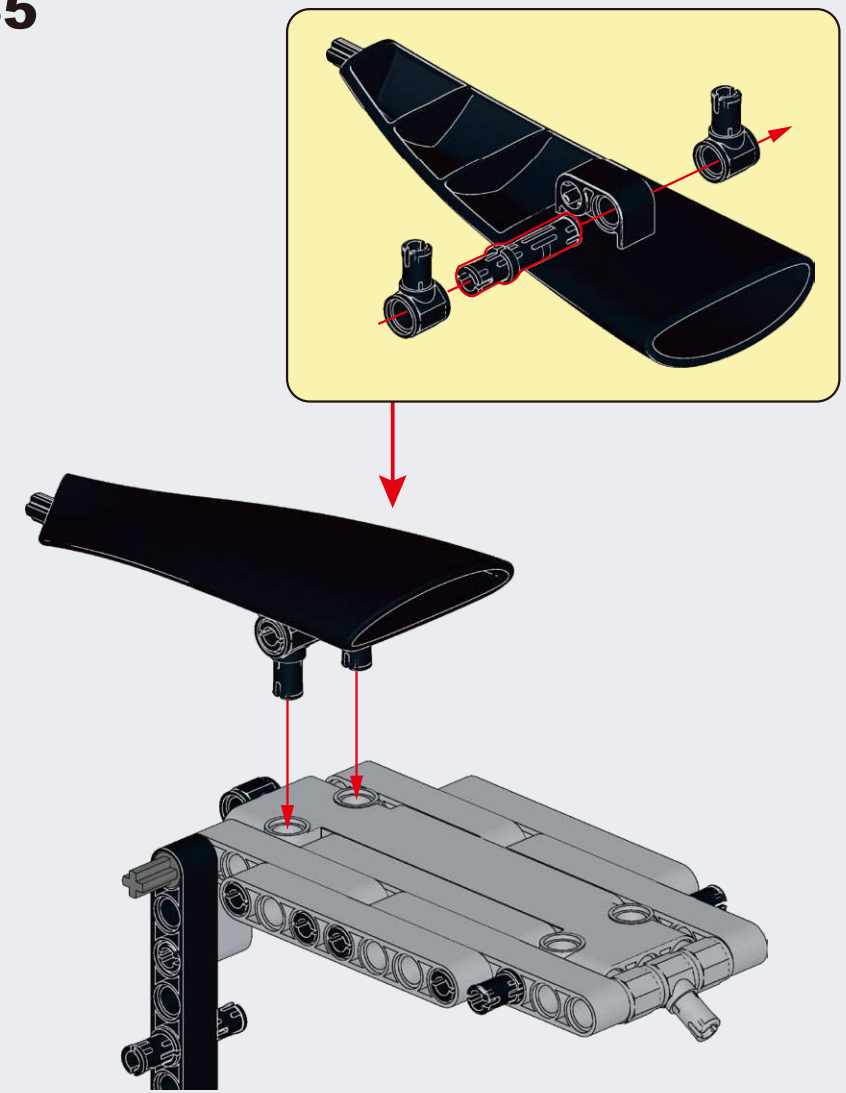

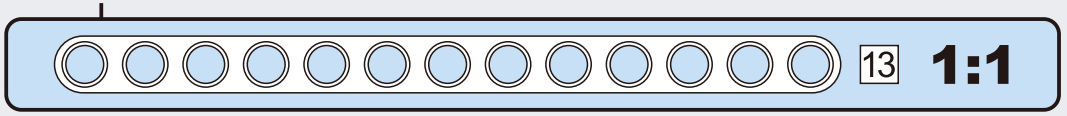

F36

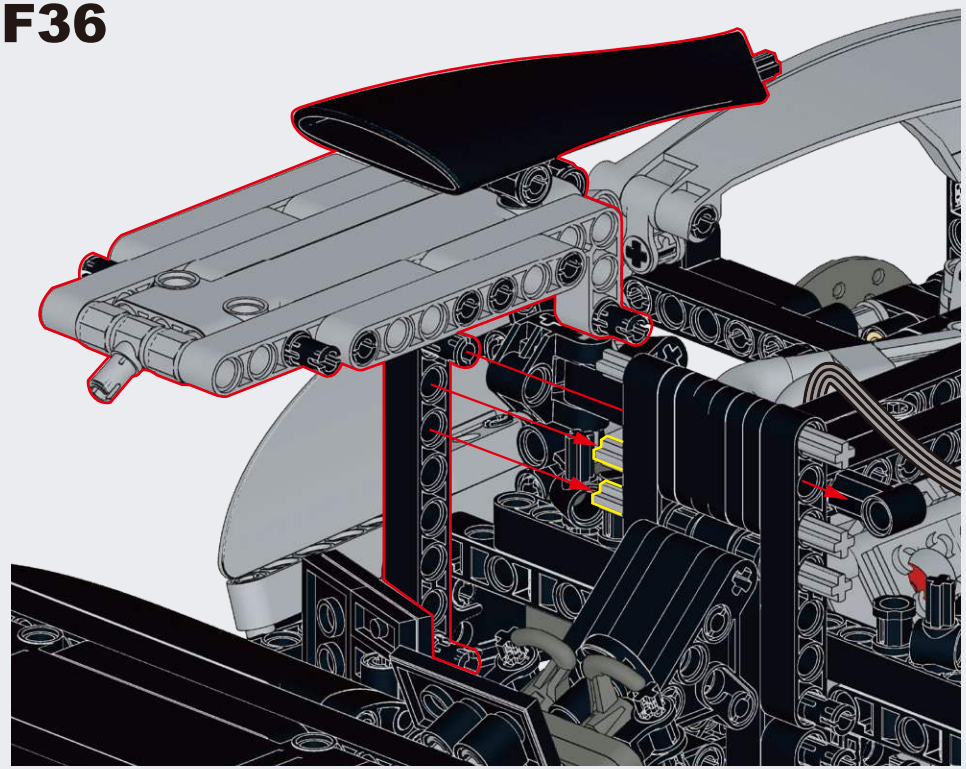

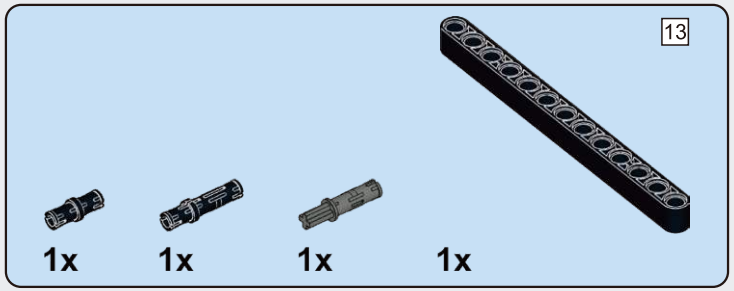

F37

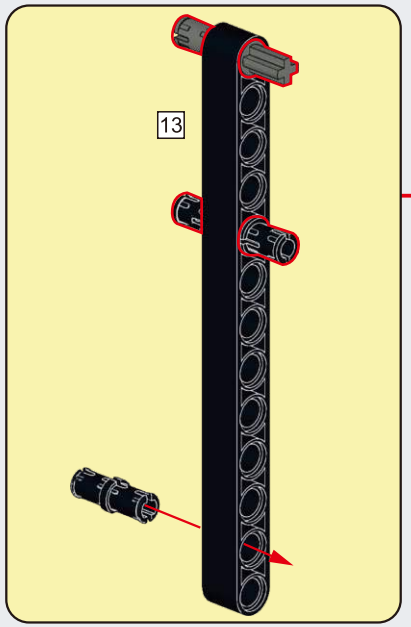

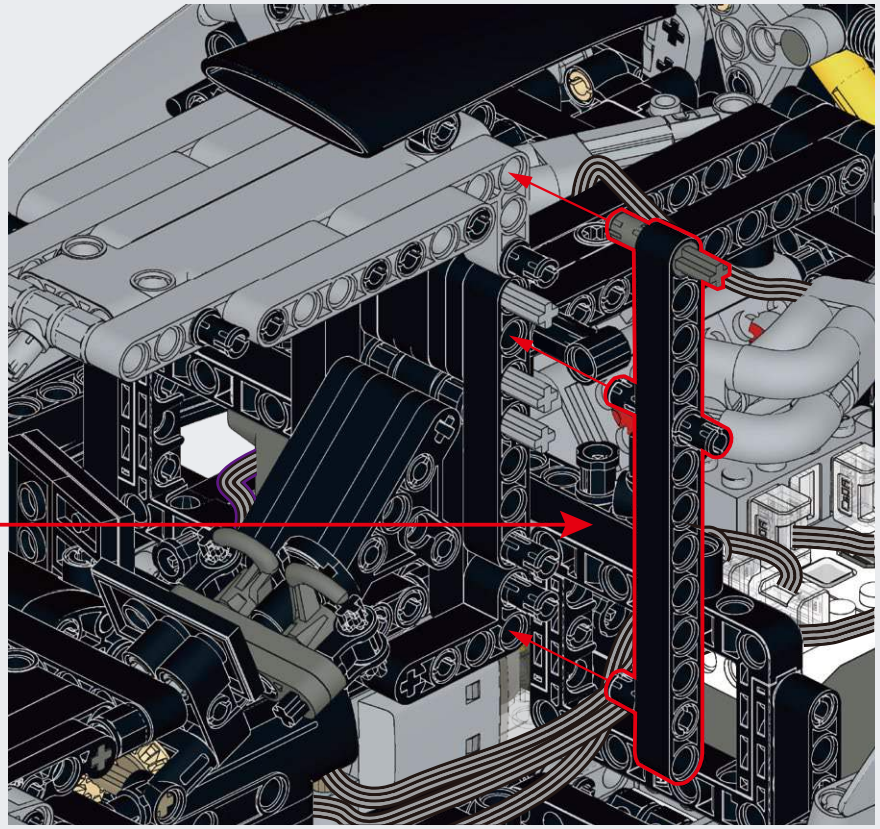

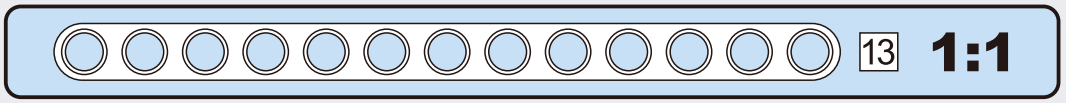

F38

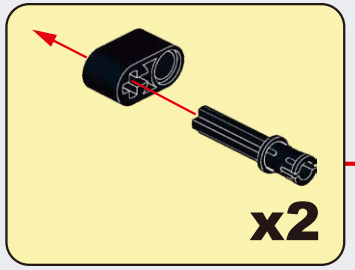

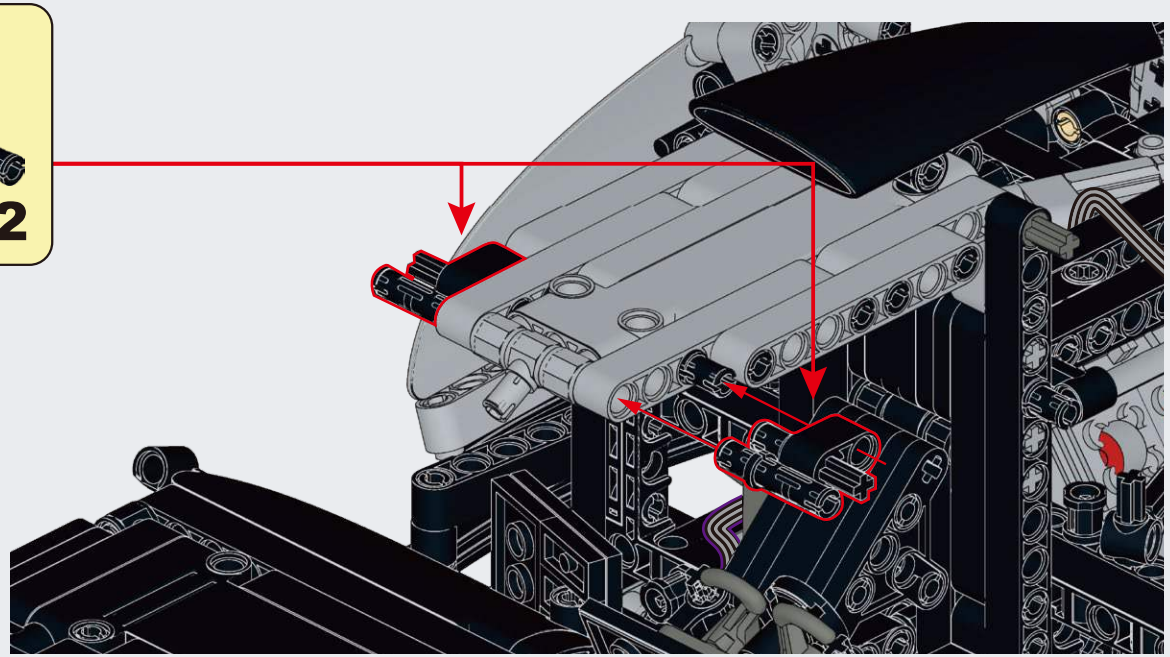

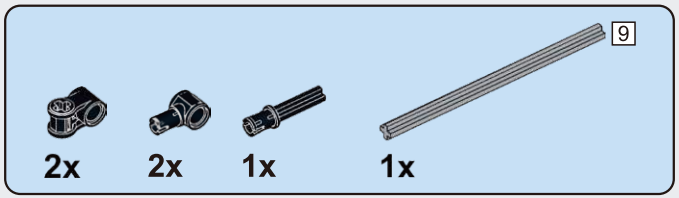

F39

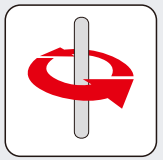

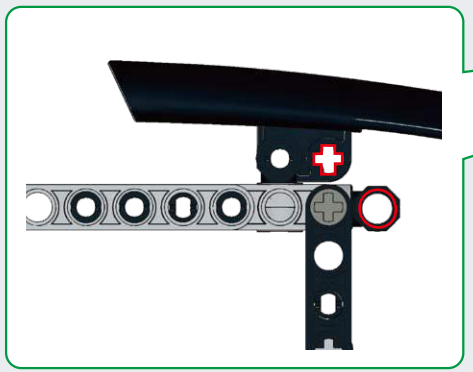

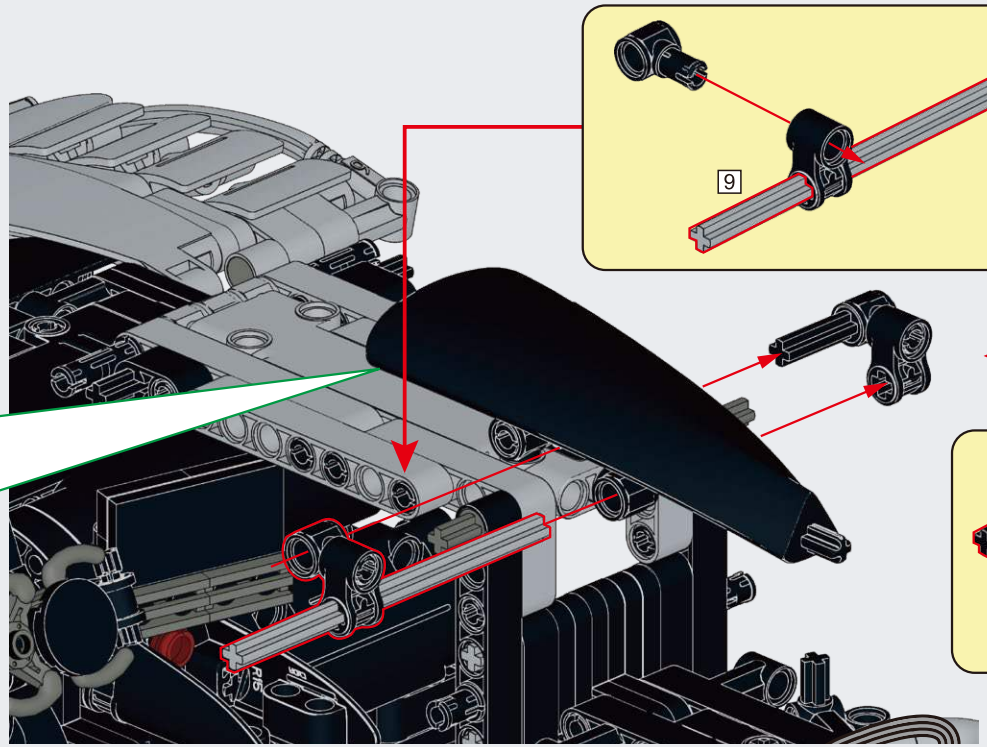

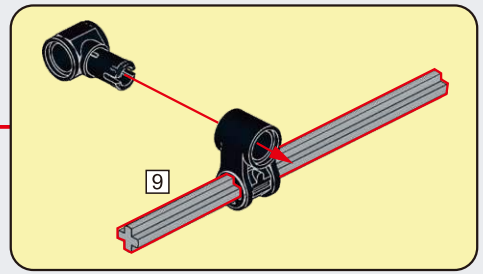

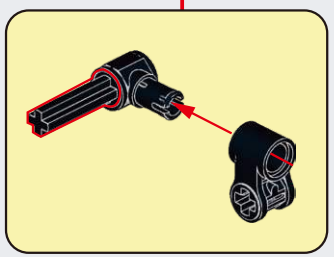

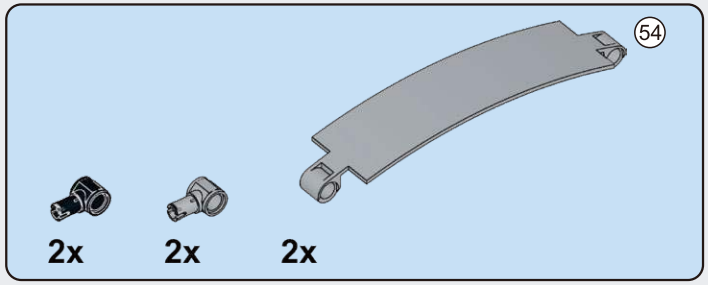

F40

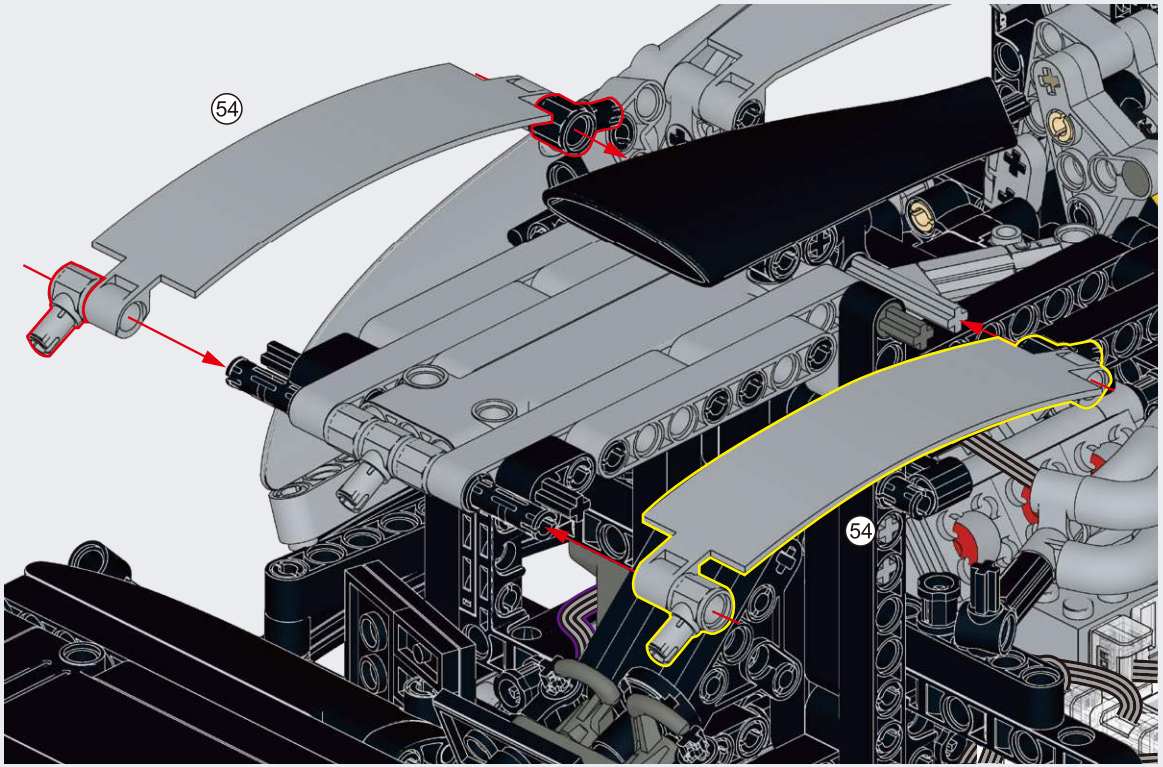

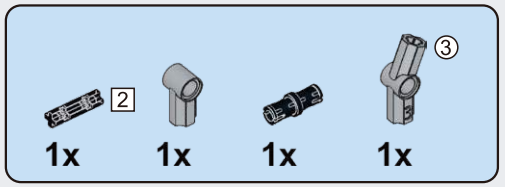

F41

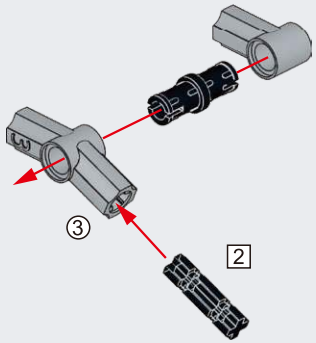

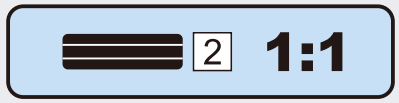

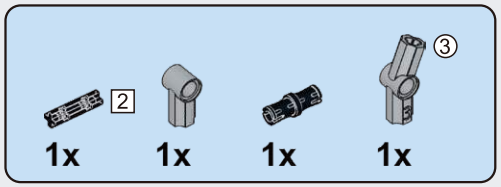

F42

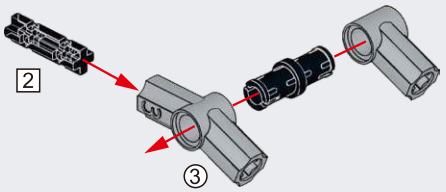

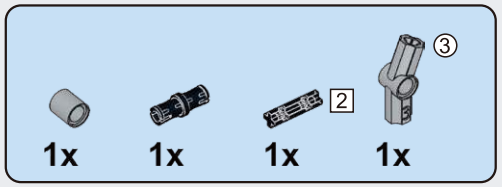

F43

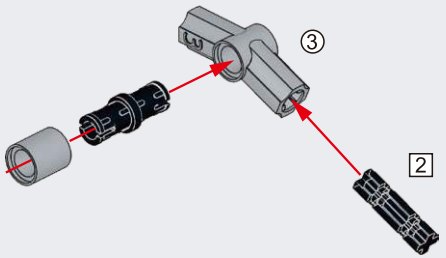

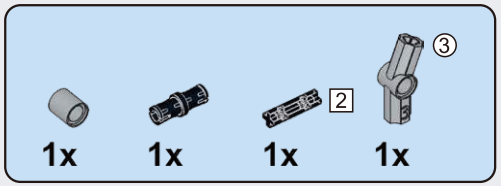

F44

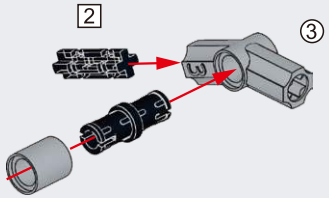

F45

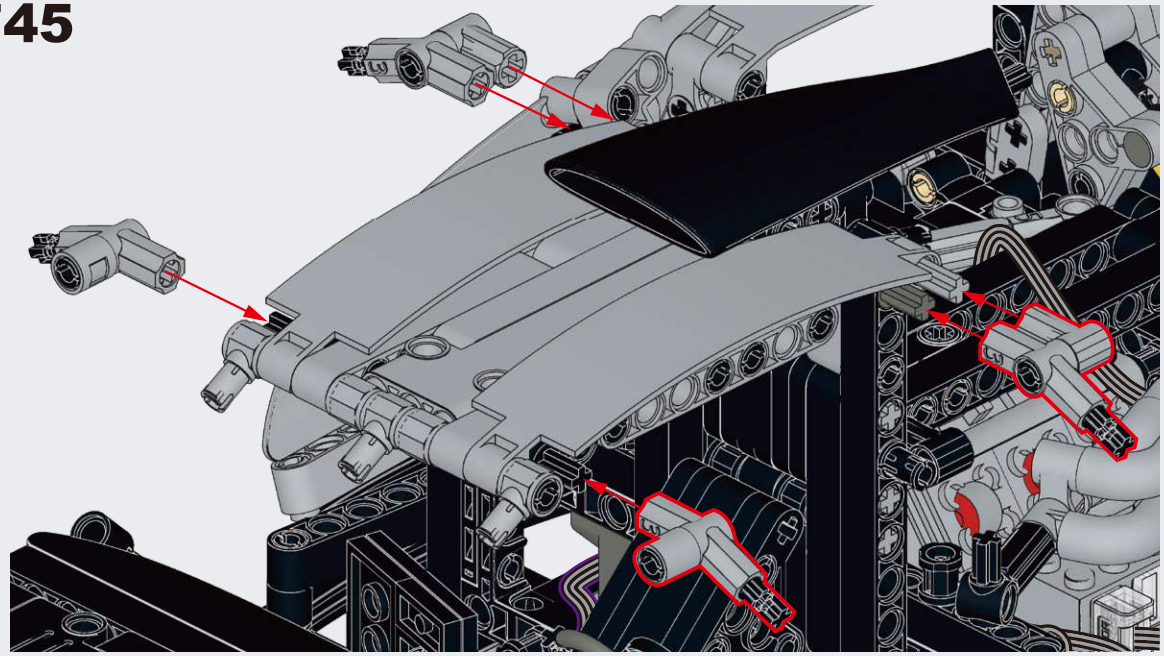

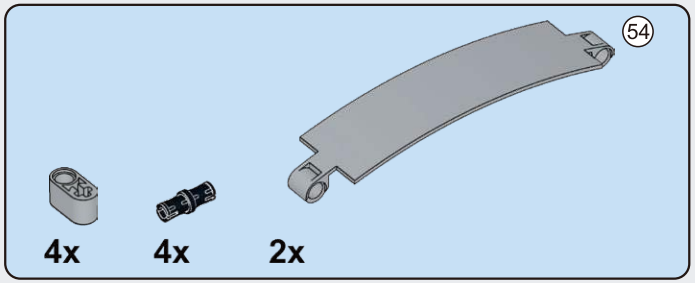

F46

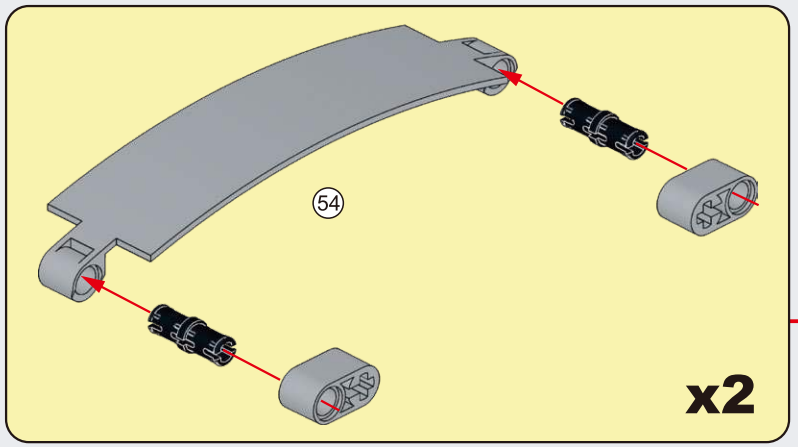

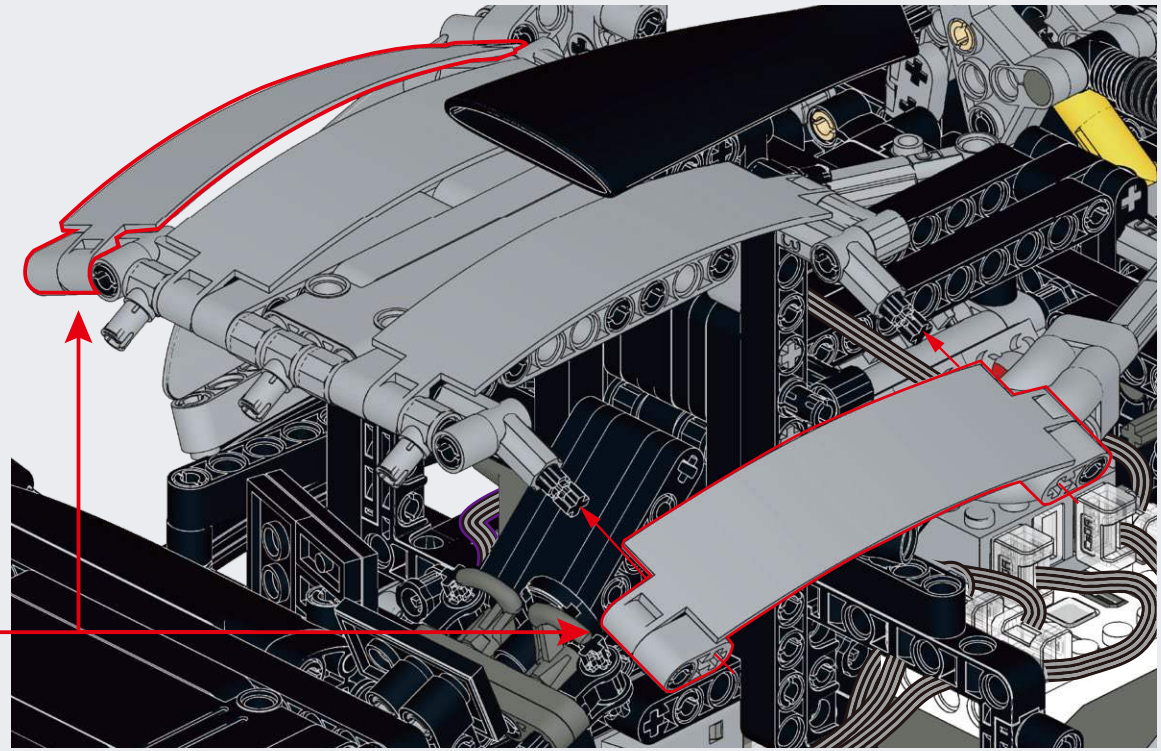

2 1:1

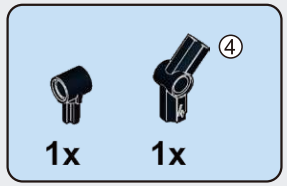

F47

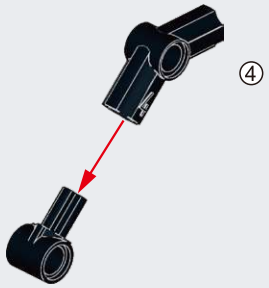

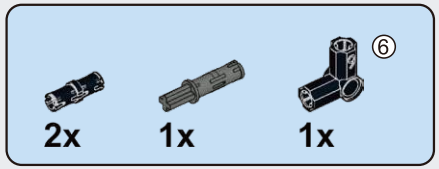

F48

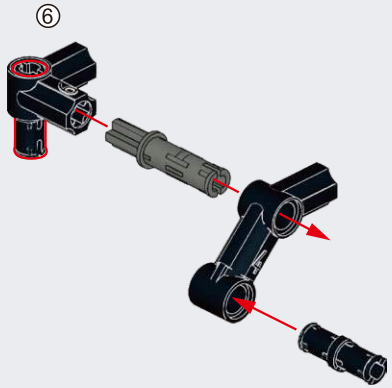

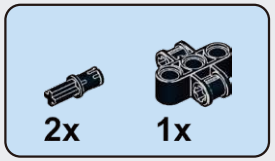

F49

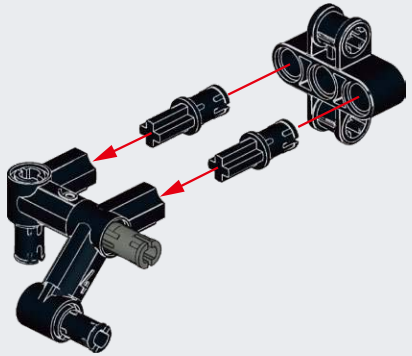

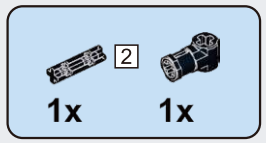

F50

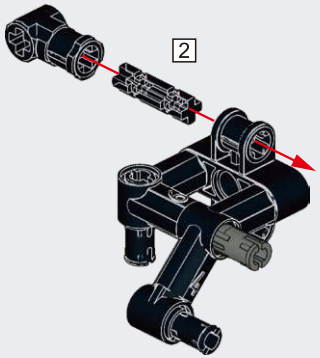

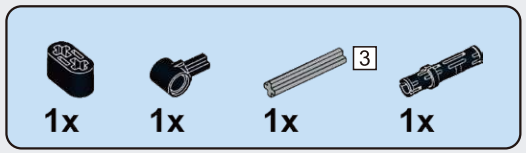

F51

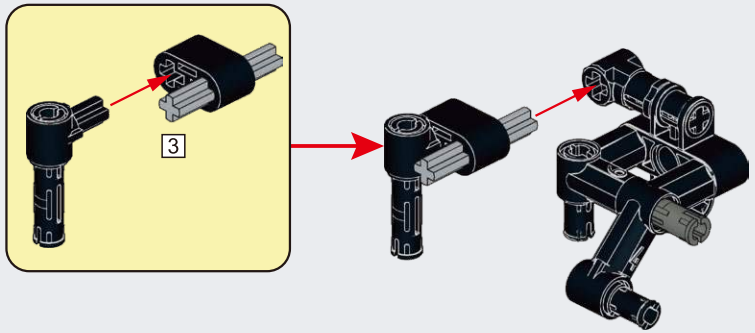

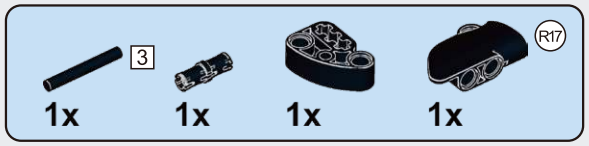

F52

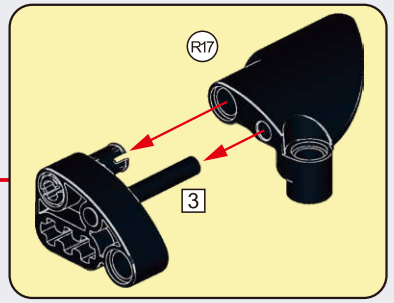

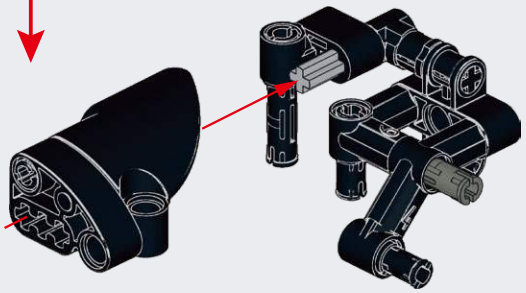

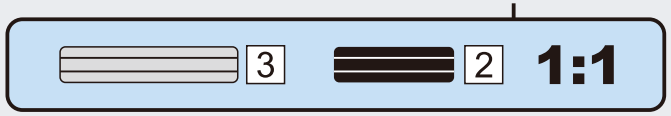

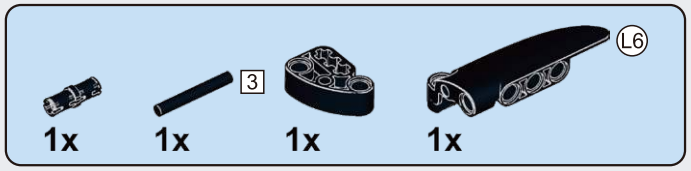

F53

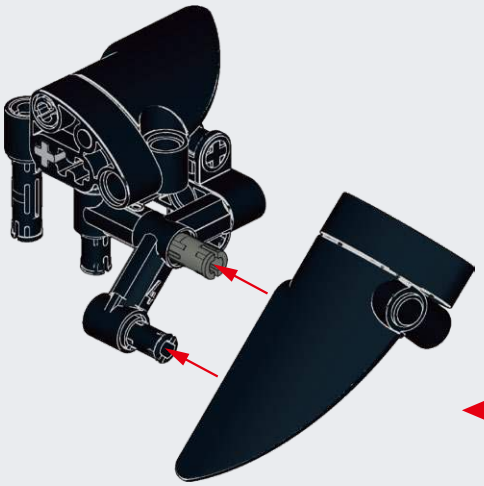

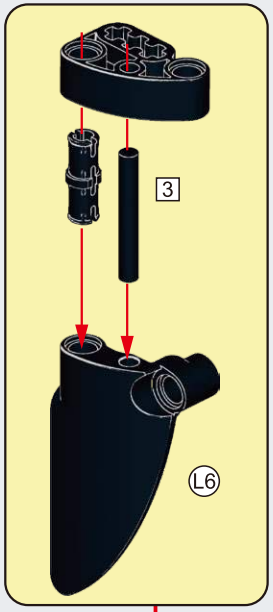

F54

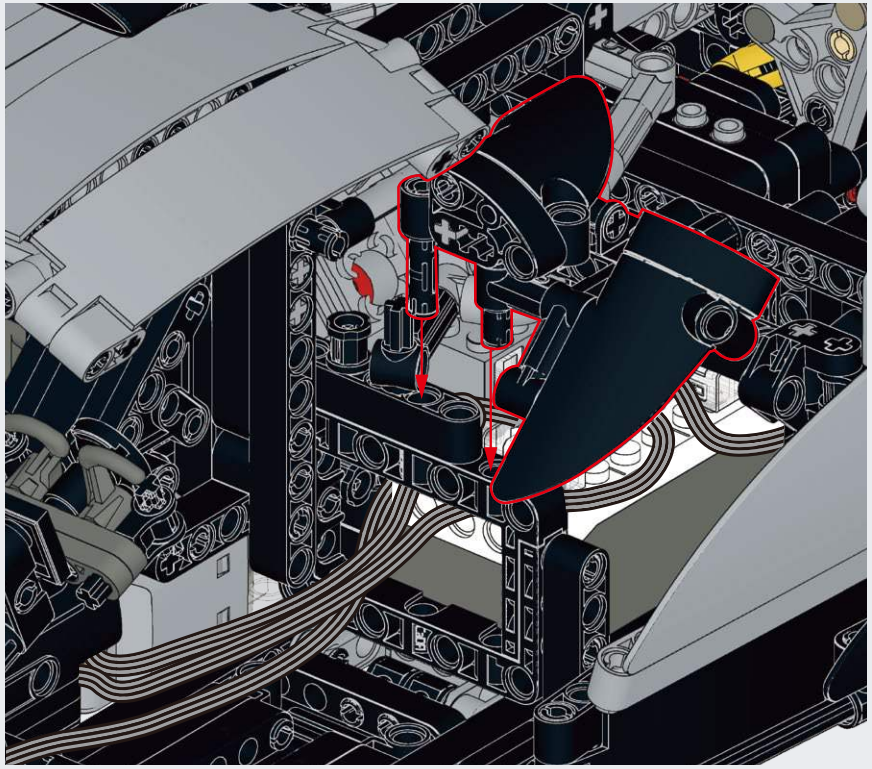

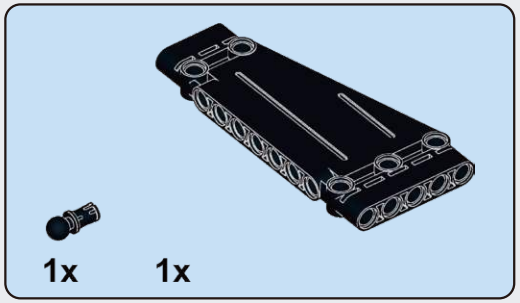

F55

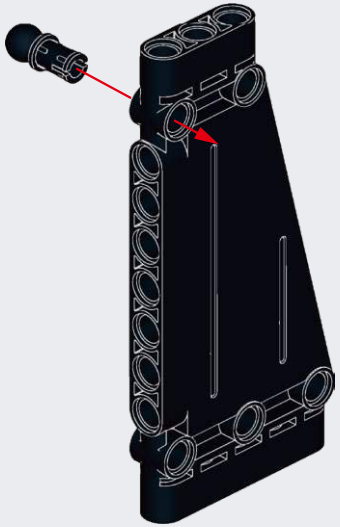

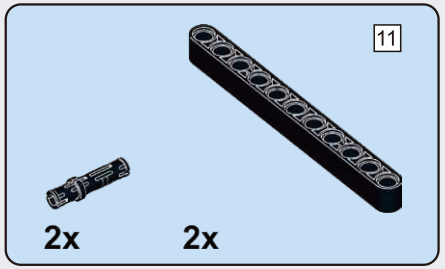

F56

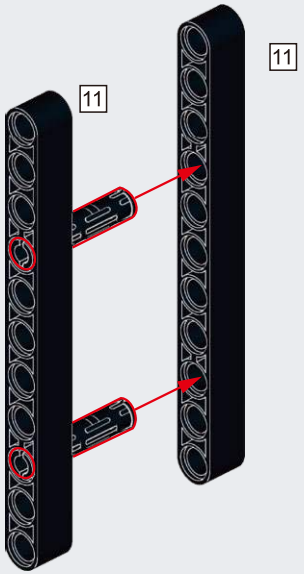

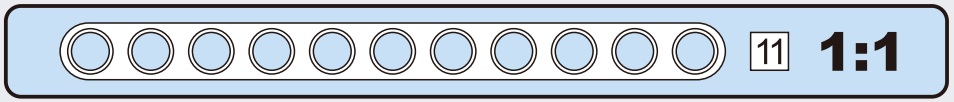

F57

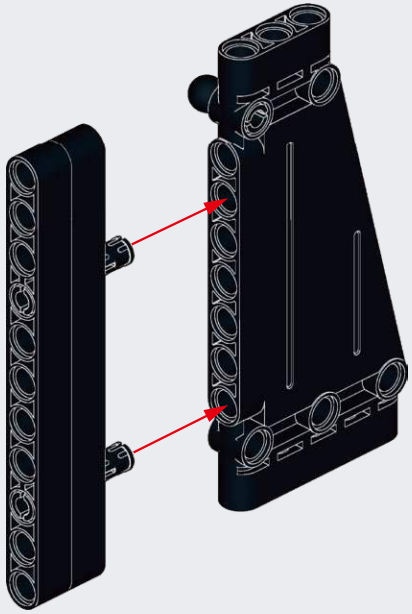

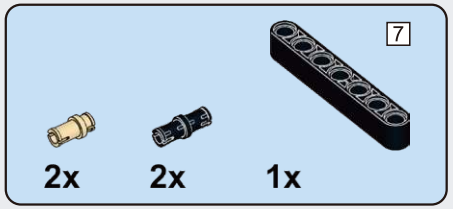

F58

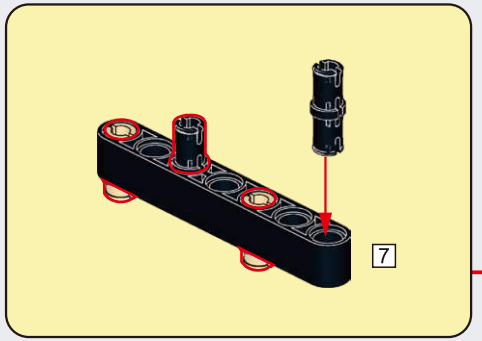

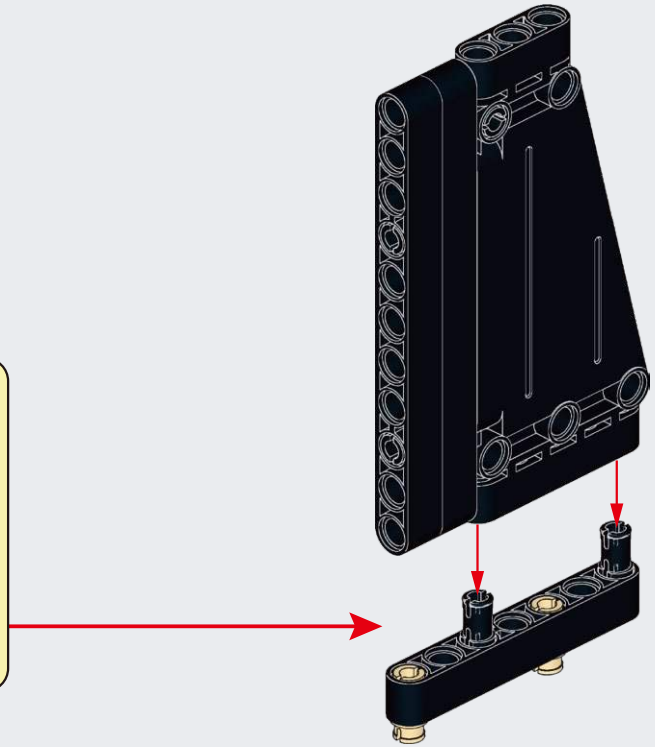

F59

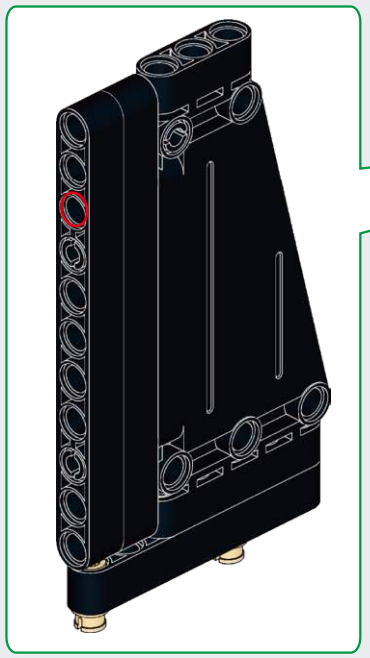

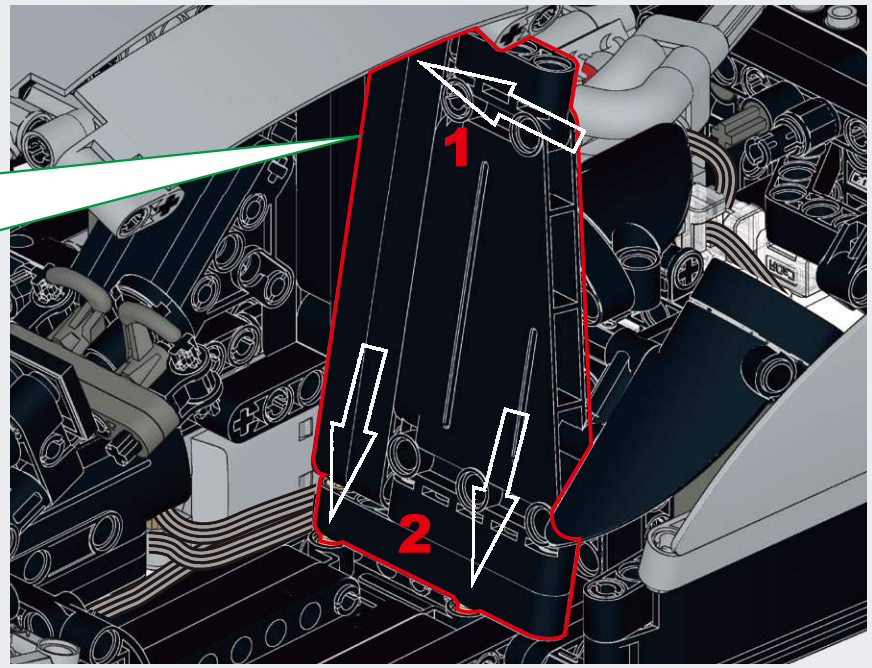

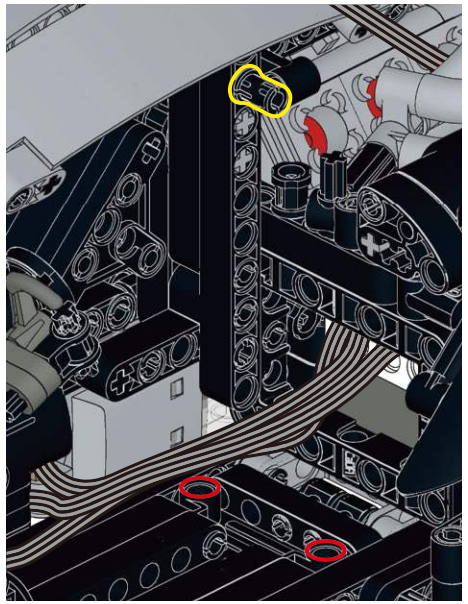

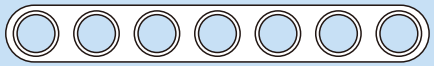

1:1

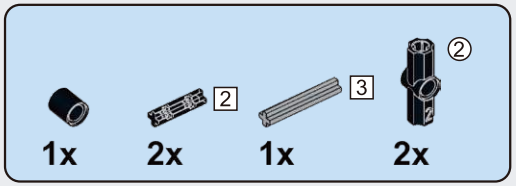

F60

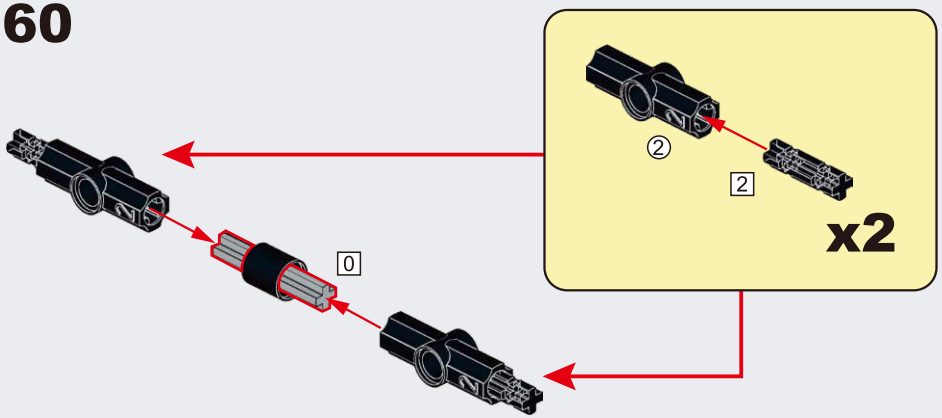

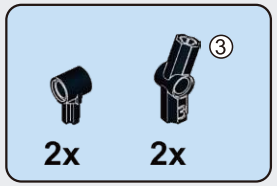

F61

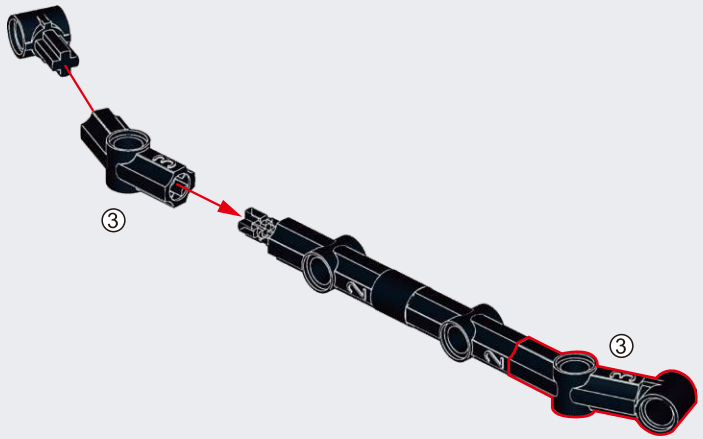

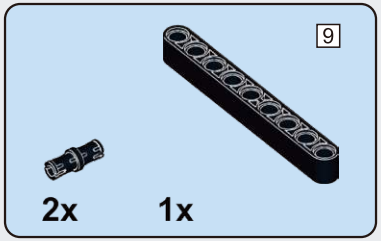

F62

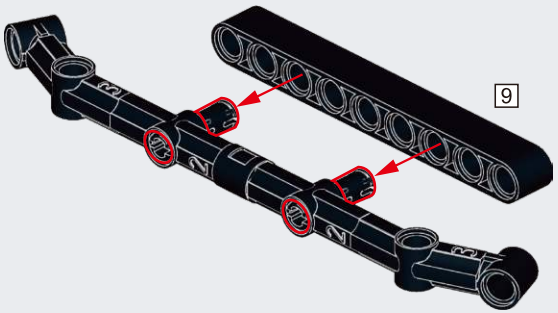

F63

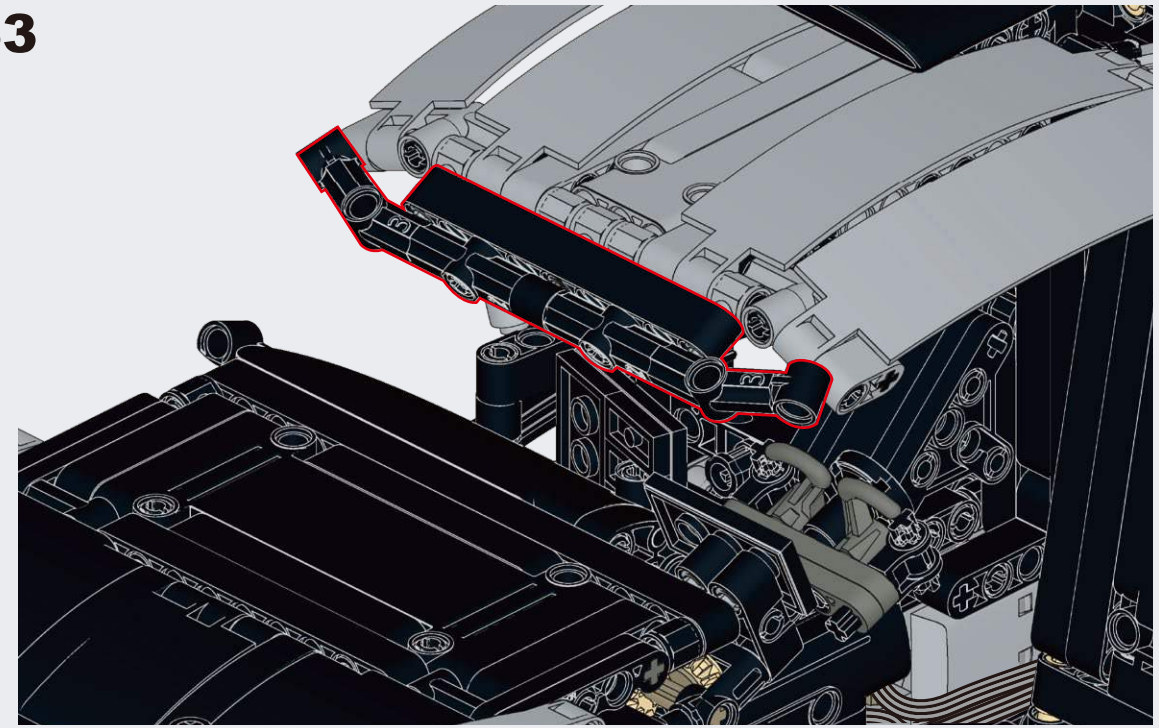

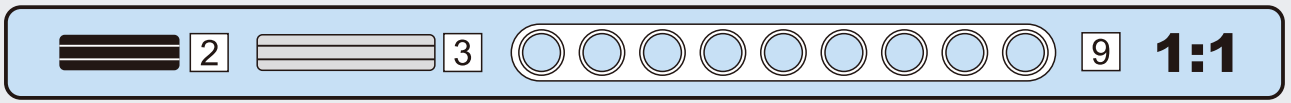

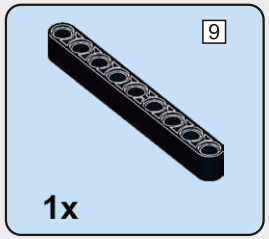

F64

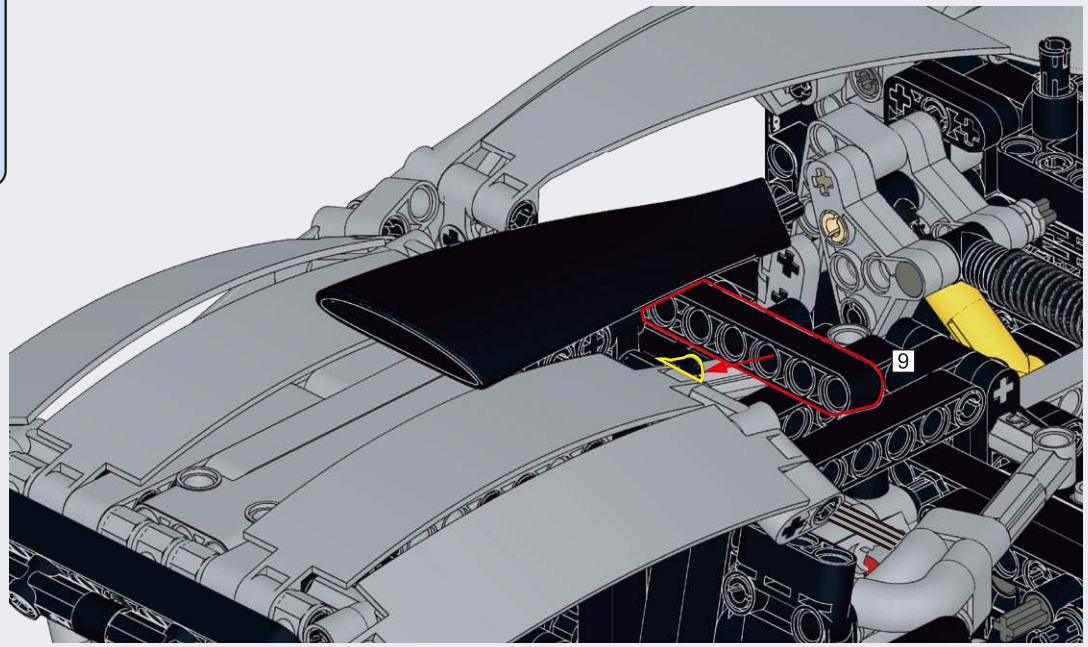

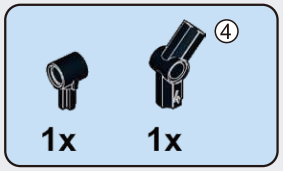

F65

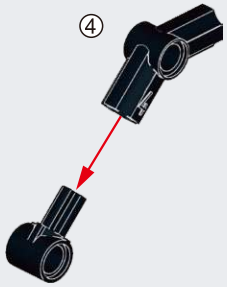

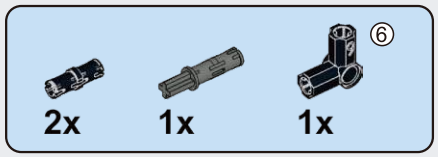

F66

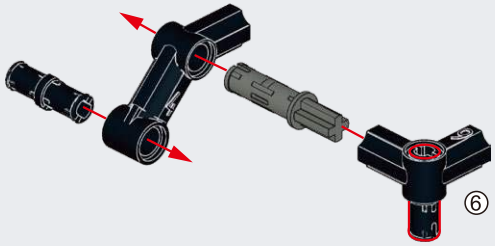

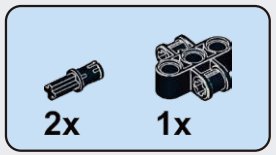

F67

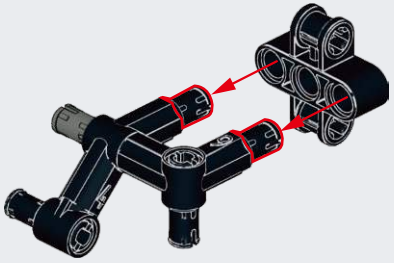

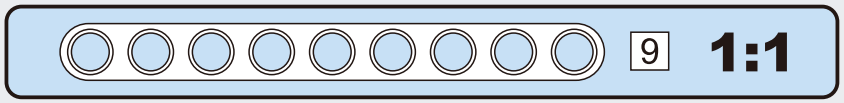

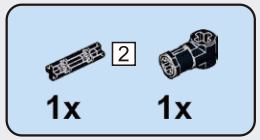

F68

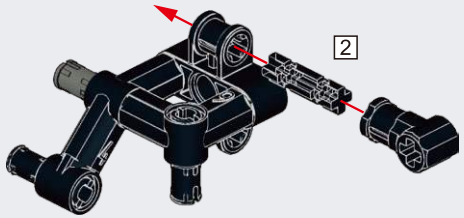

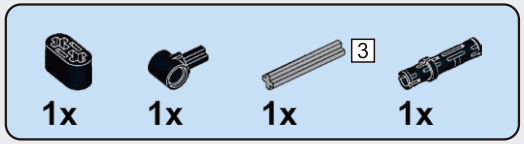

F69

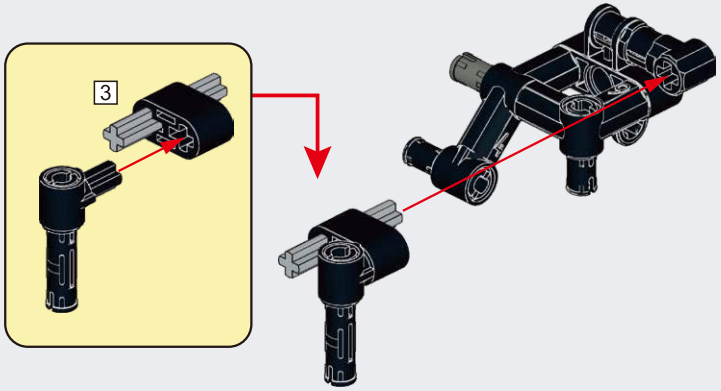

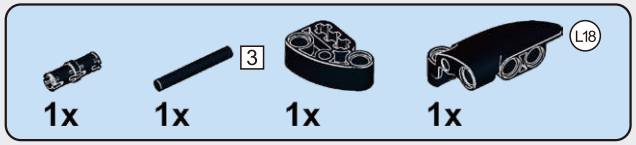

F70

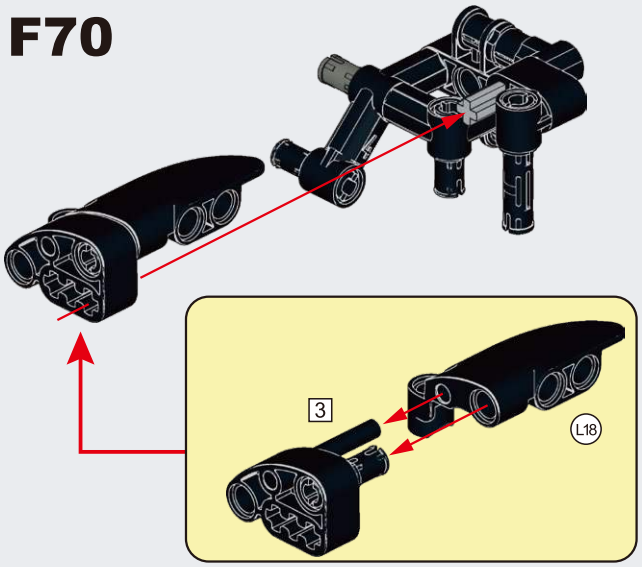

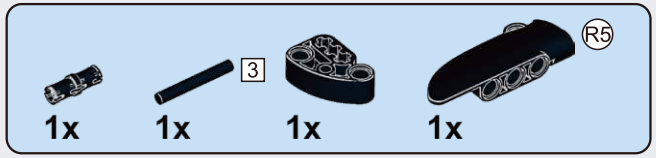

F71

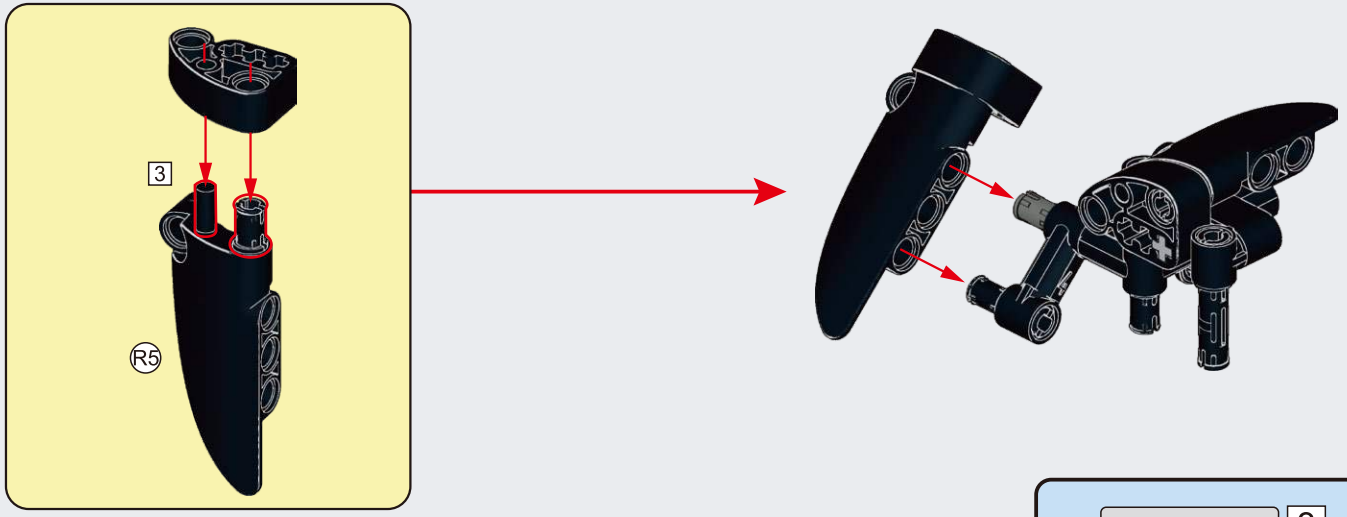

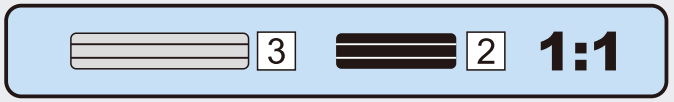

F72

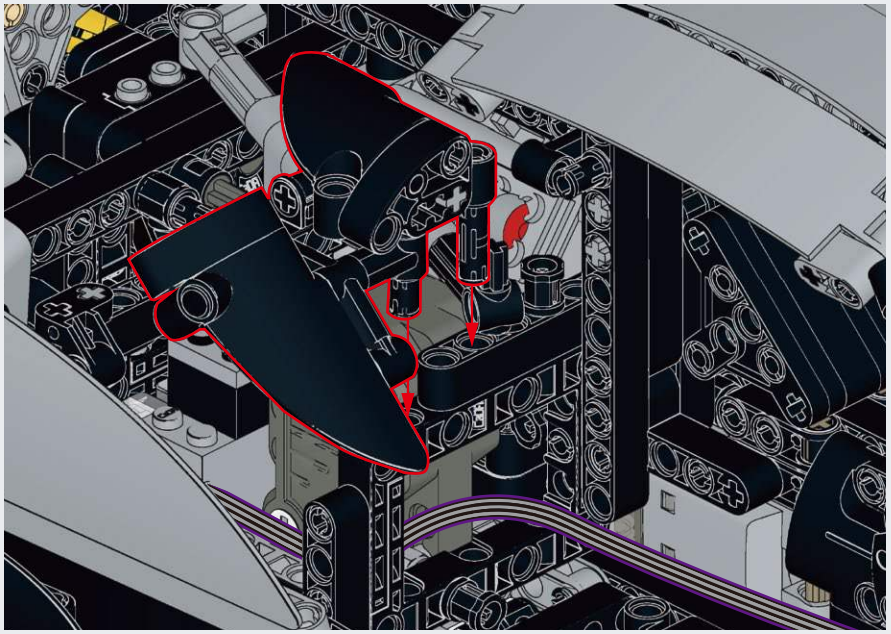

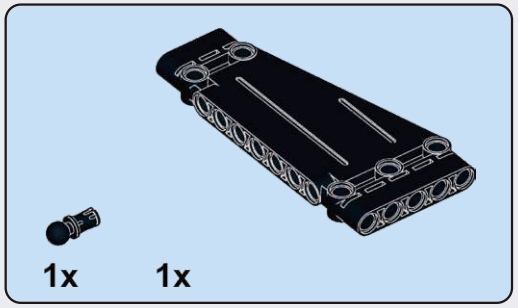

F73

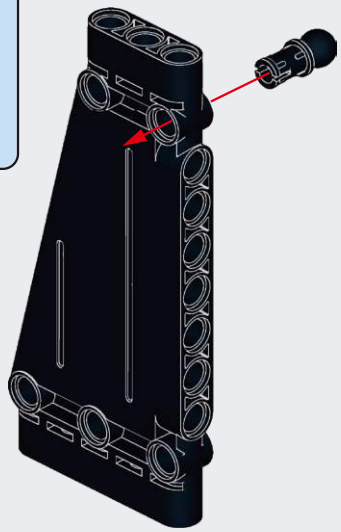

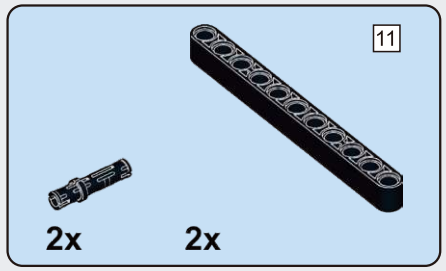

F74

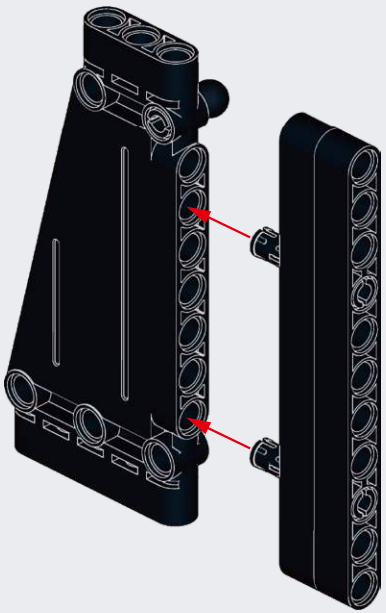

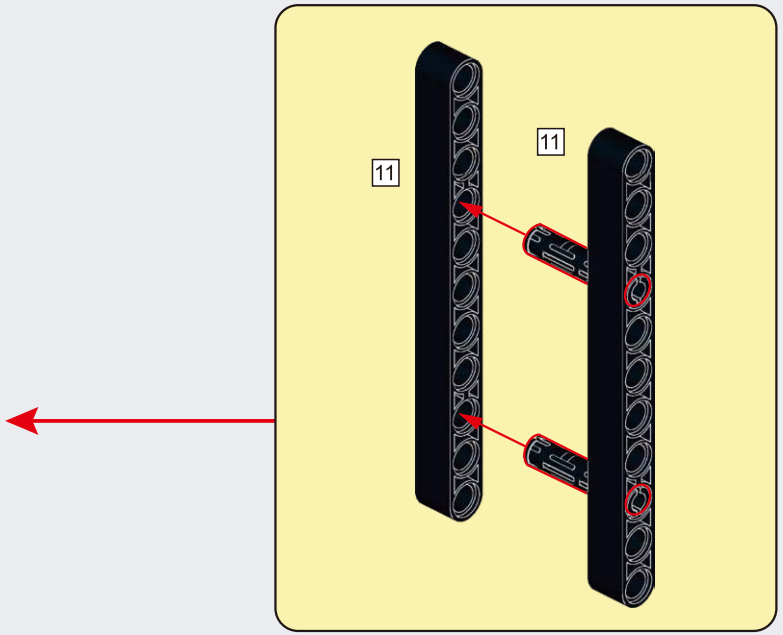

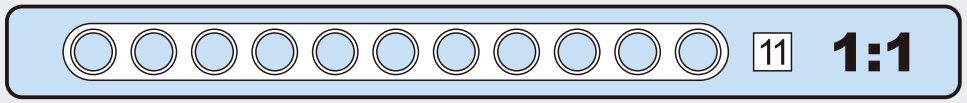

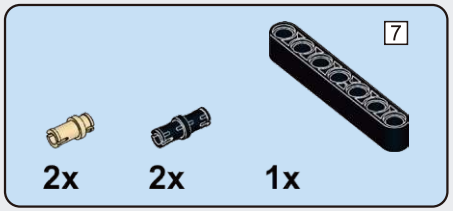

F75

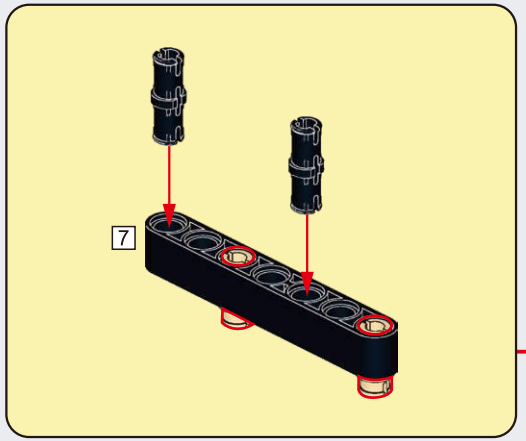

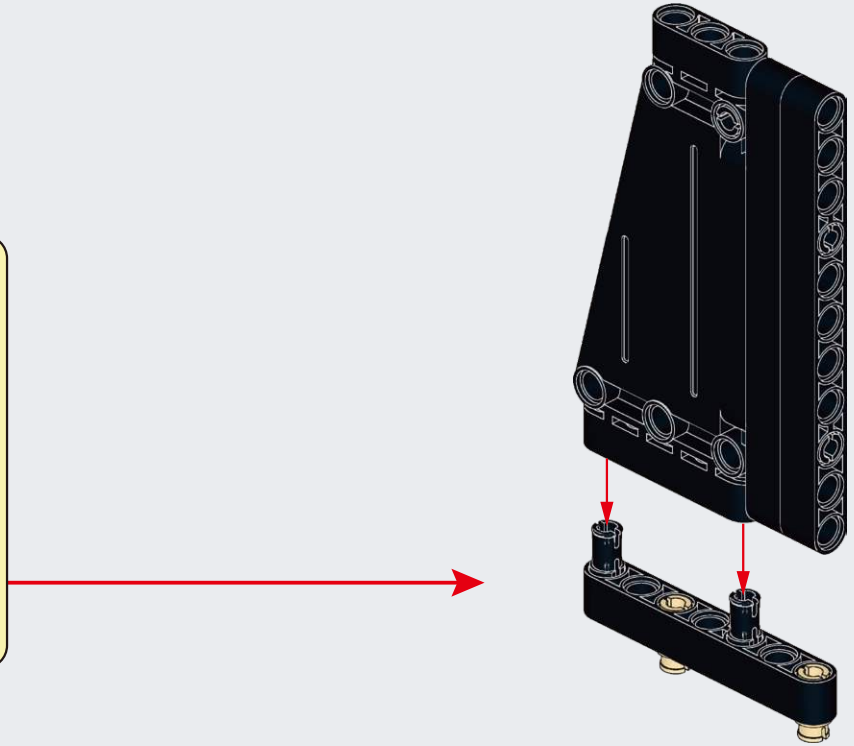

F76

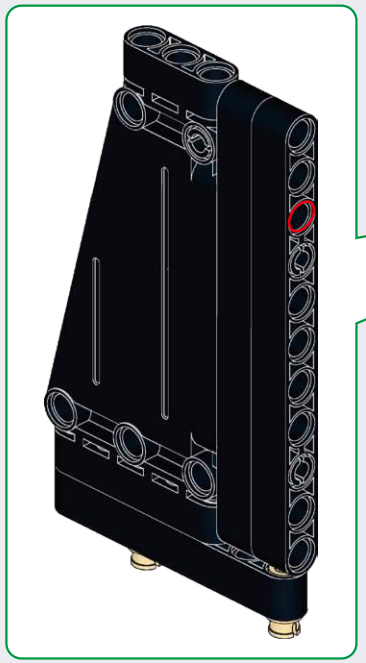

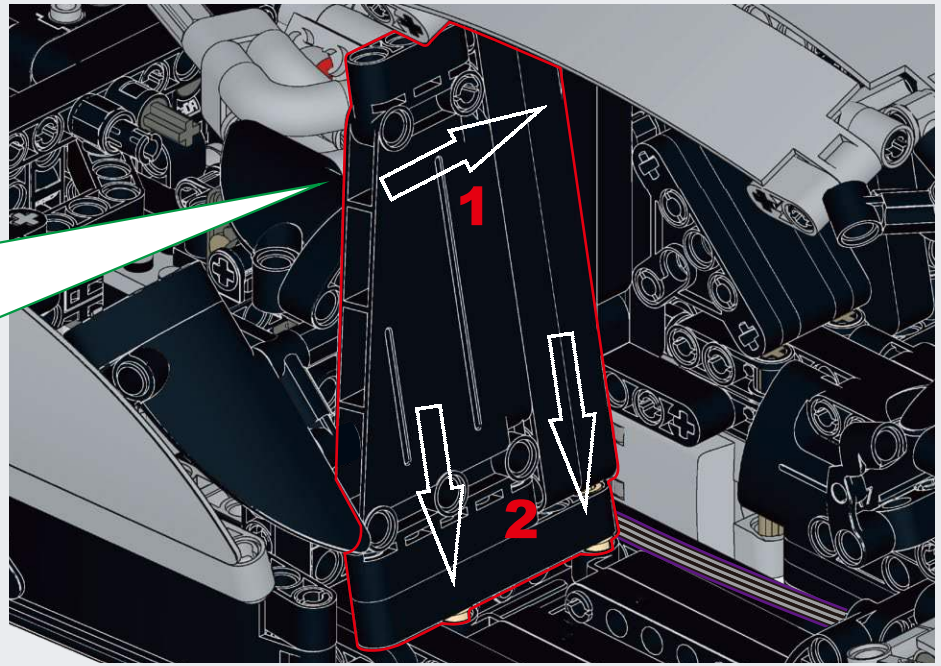

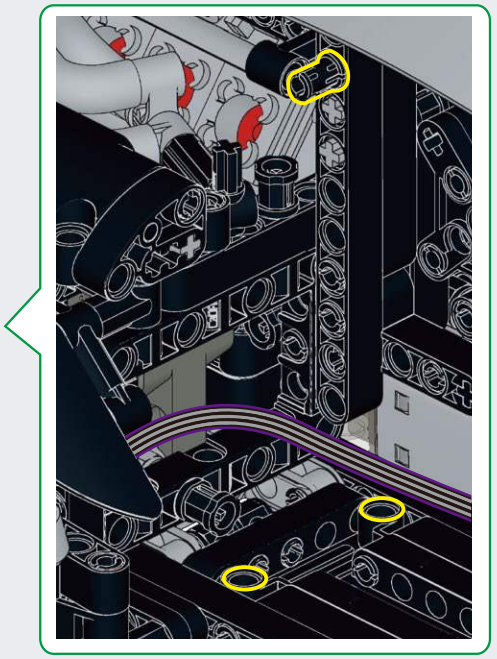

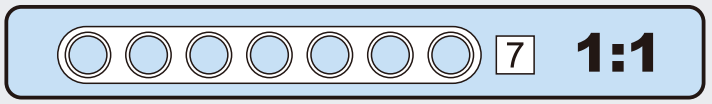

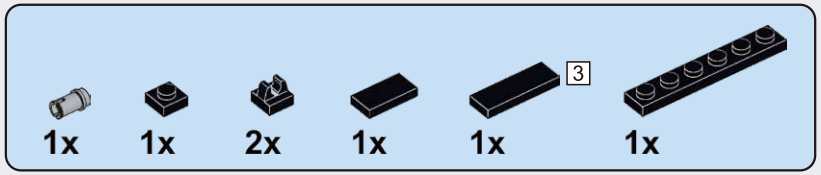

F77

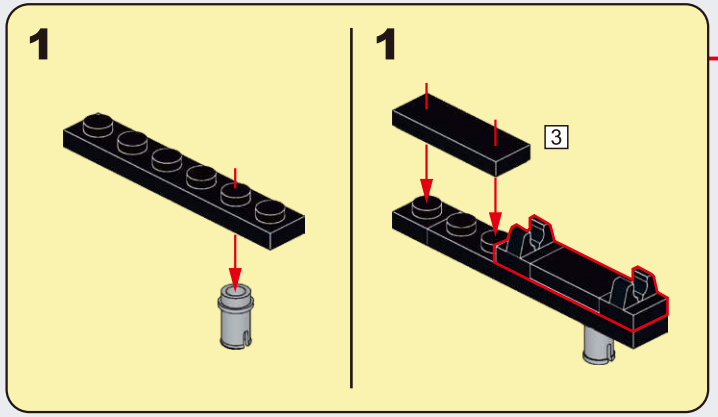

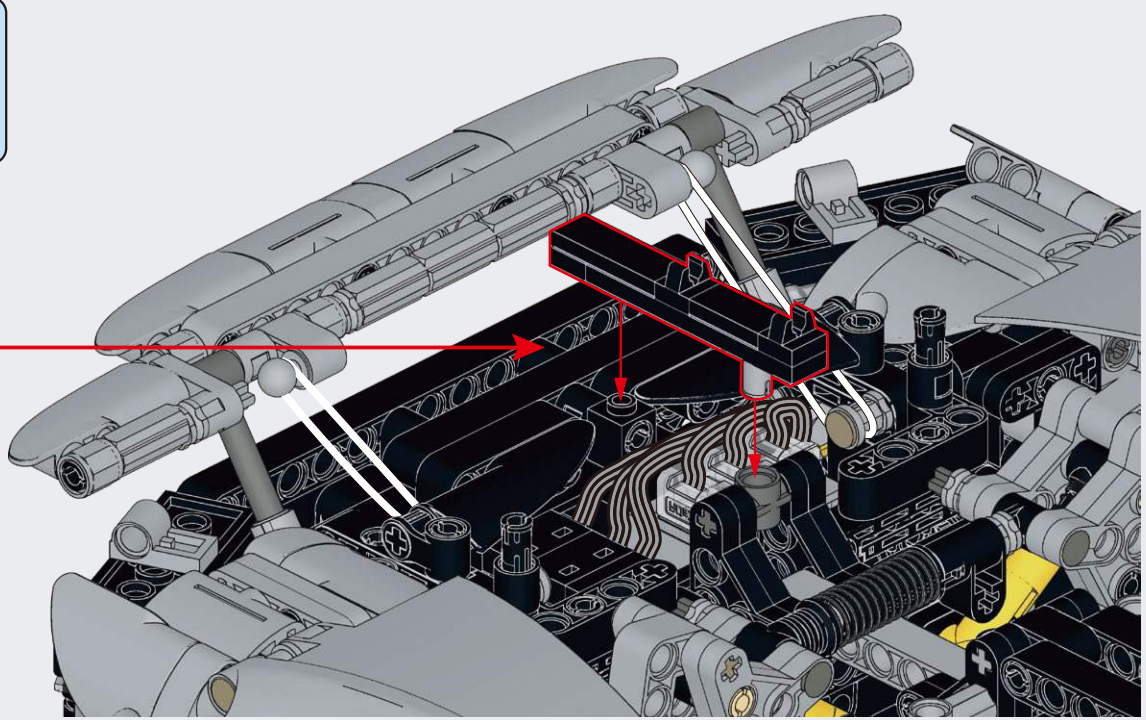

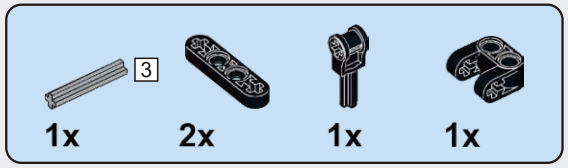

F78

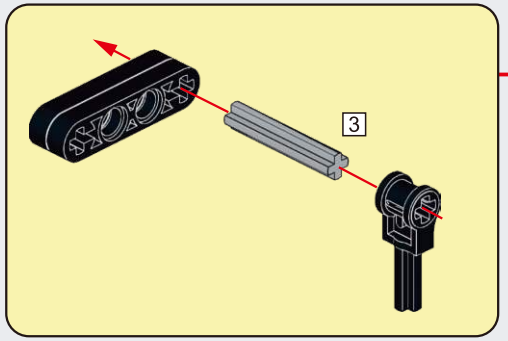

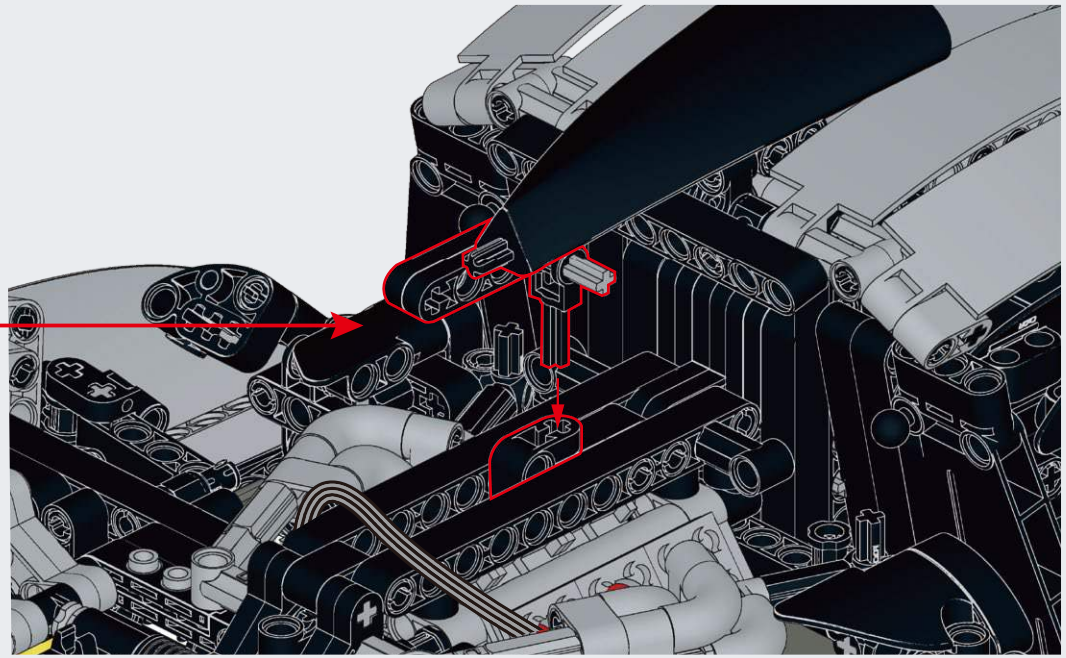

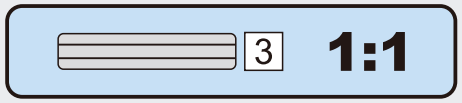

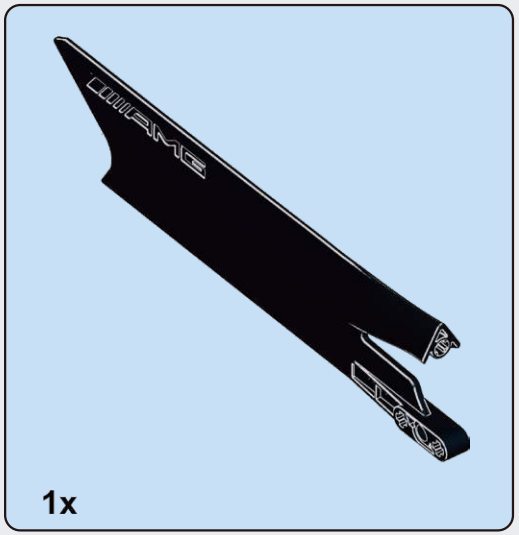

F79

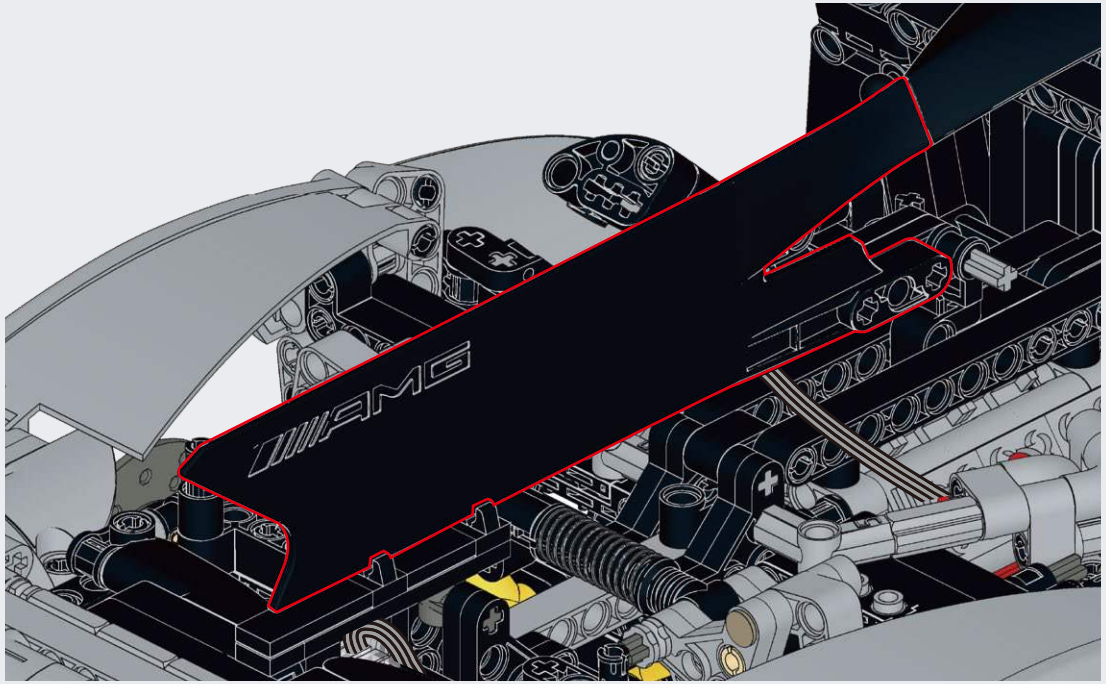

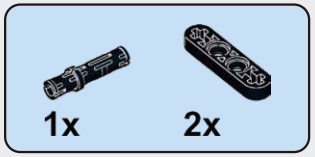

F80

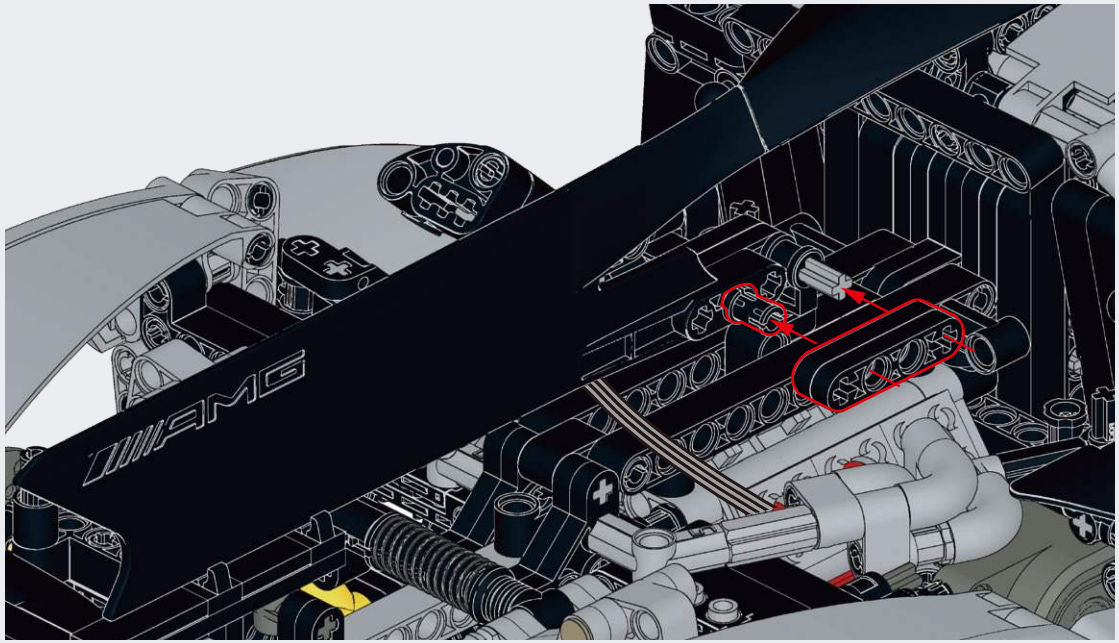

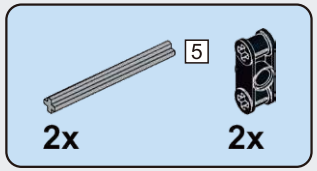

F81

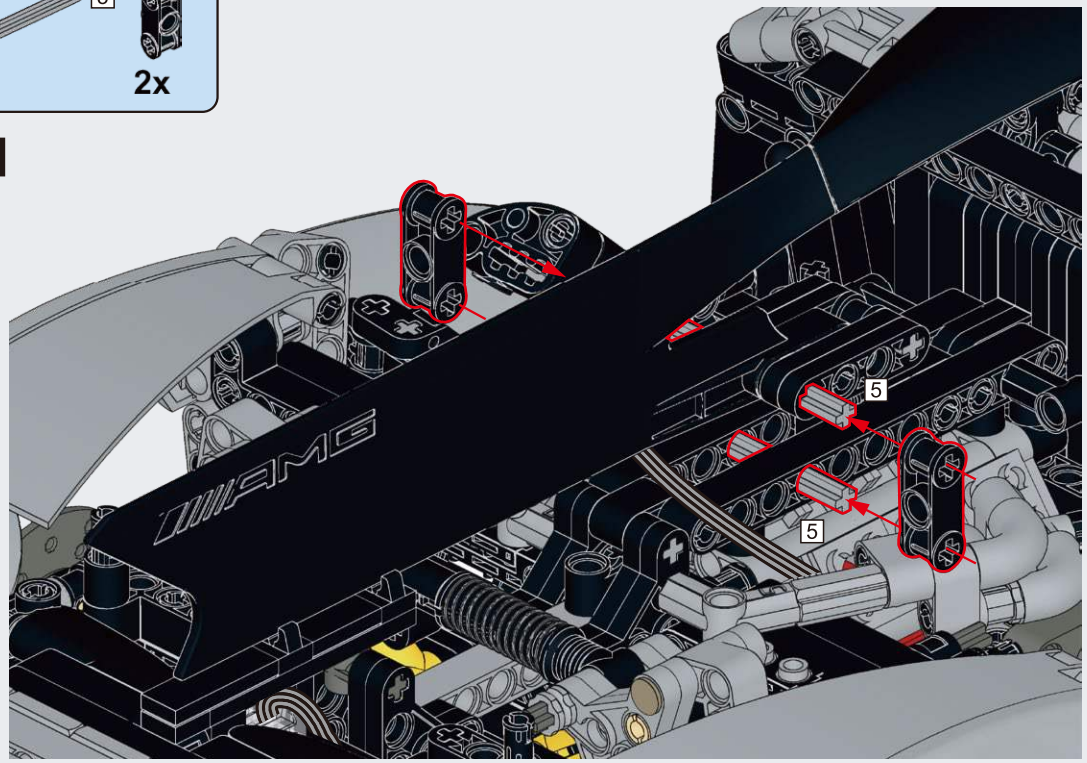

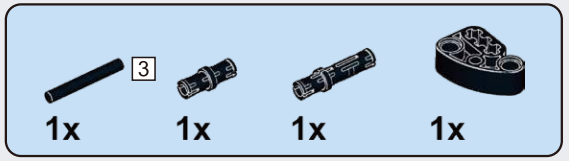

F82

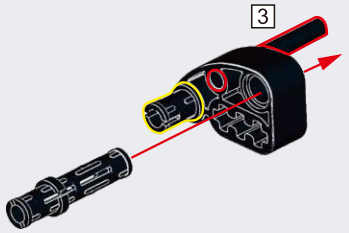

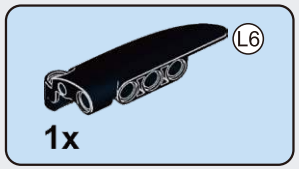

F83

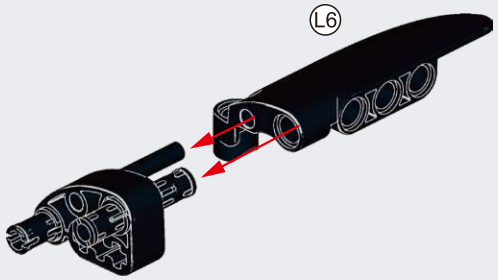

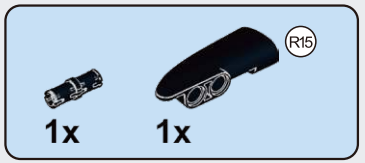

F84

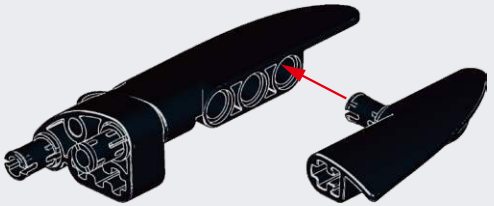

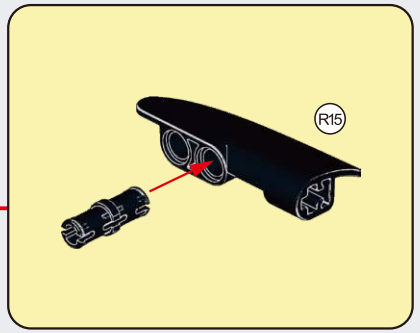

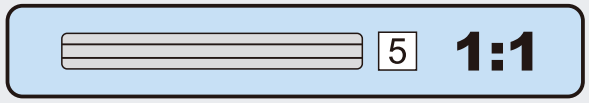

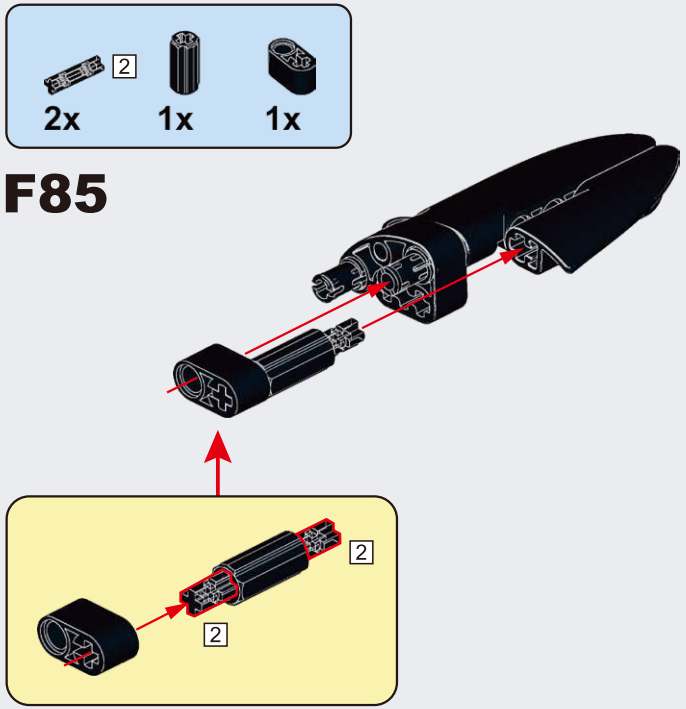
2
2x
1x
1x
F85
2
2

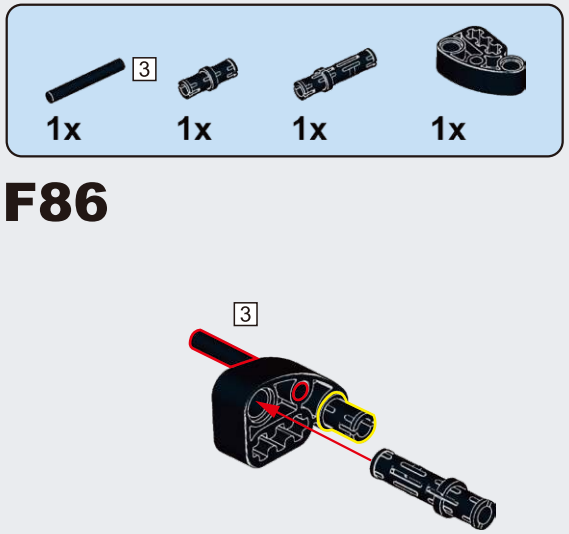
3
1x
1x
1x
1x
F86
3

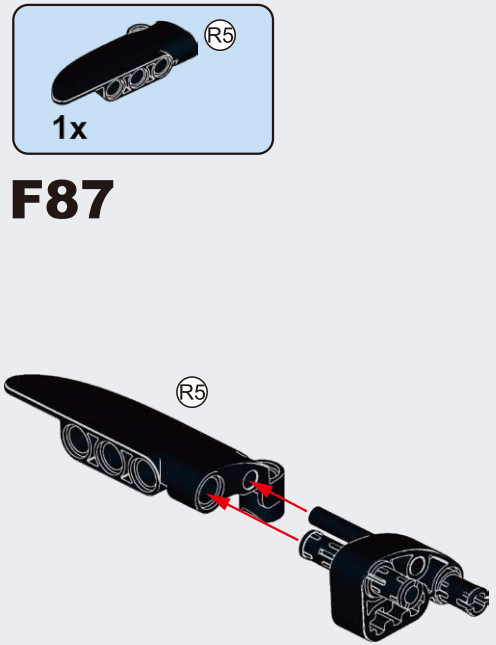
R5
1x
F87
R5

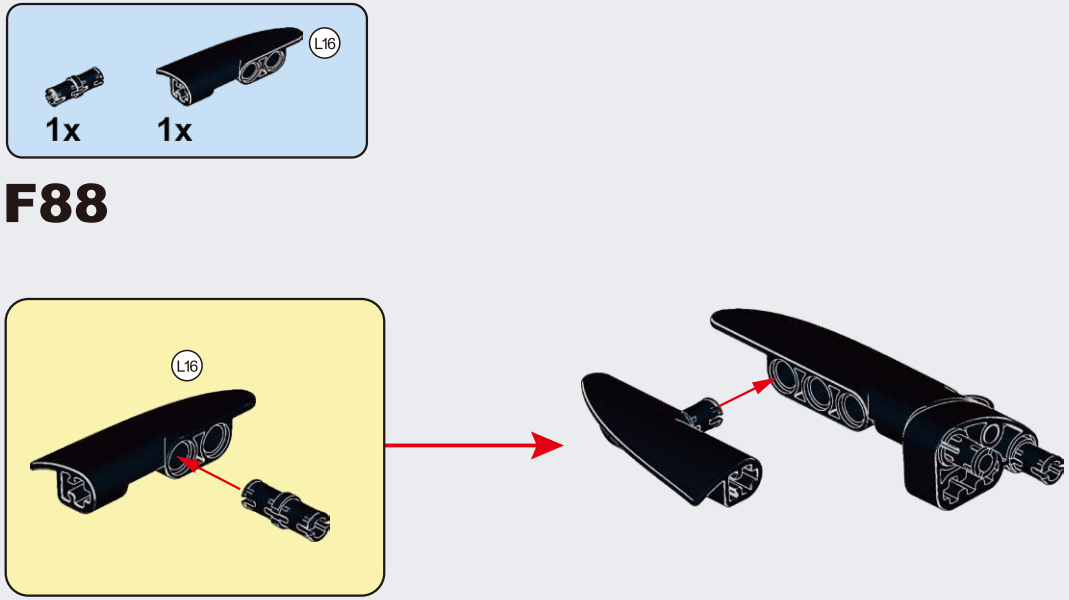
L16
1x
1x
F88
L16

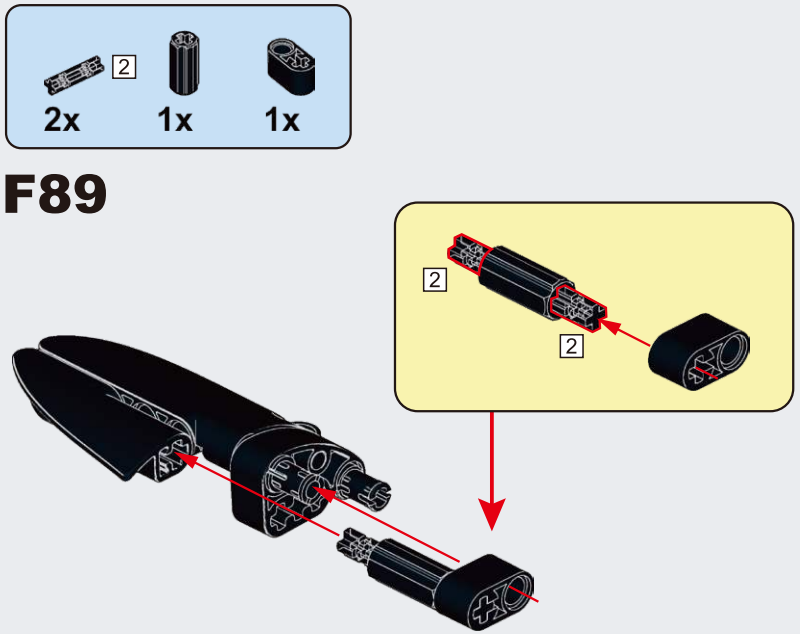
2
2x
1x
1x
F89
2
2

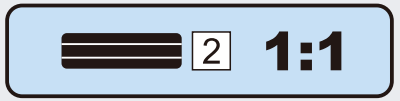
2
1:1

F90

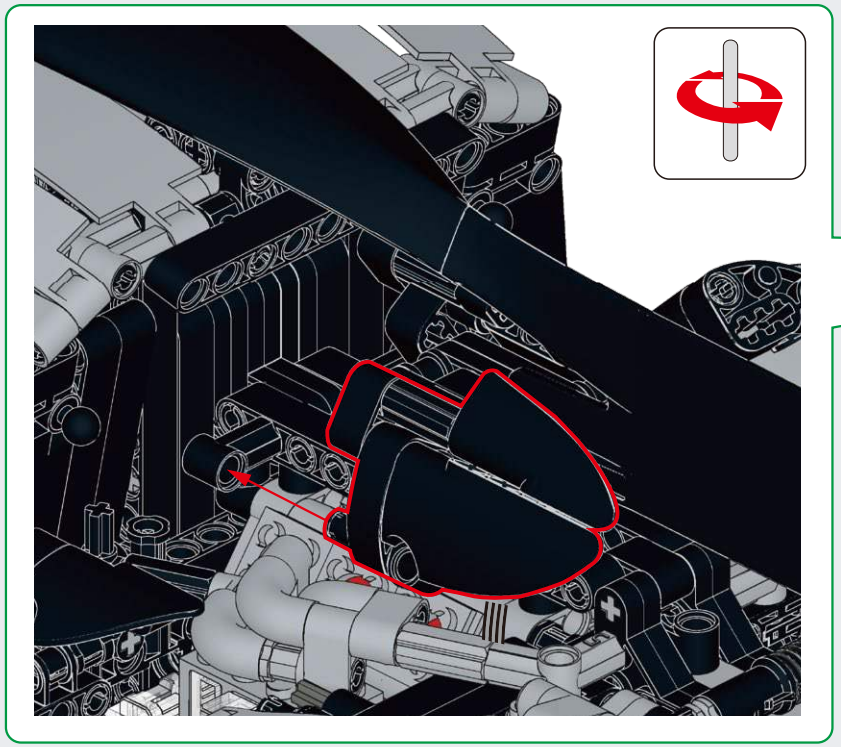

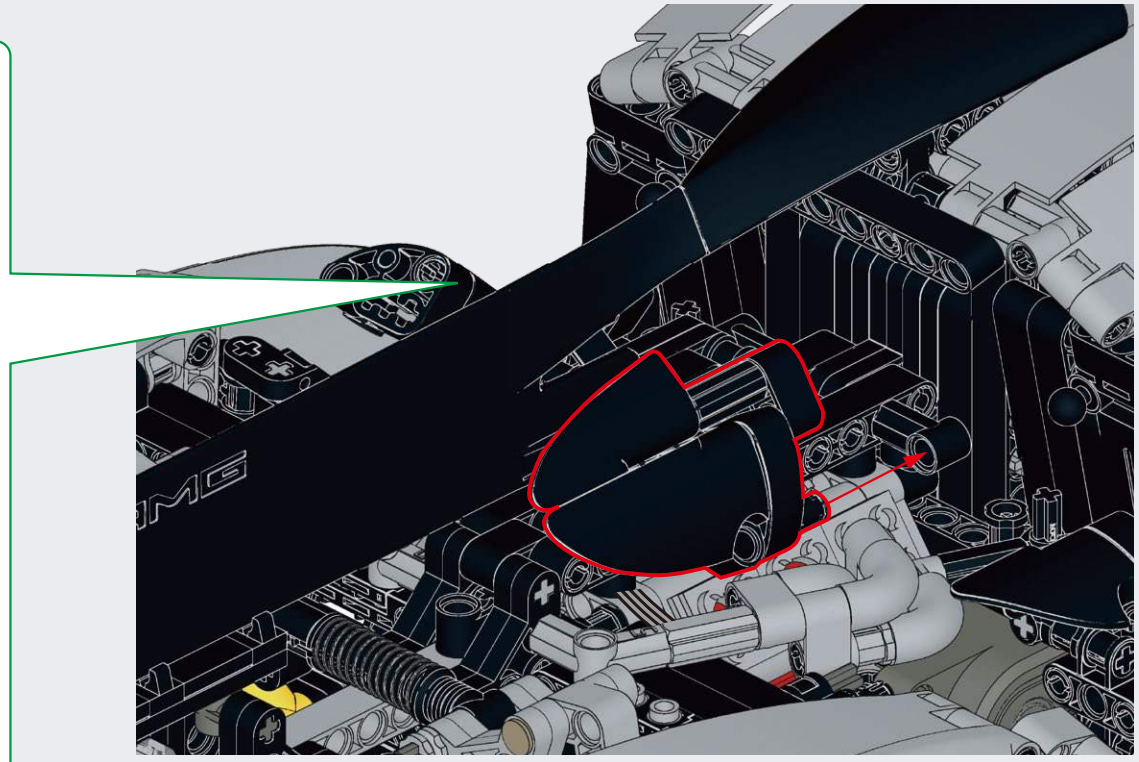

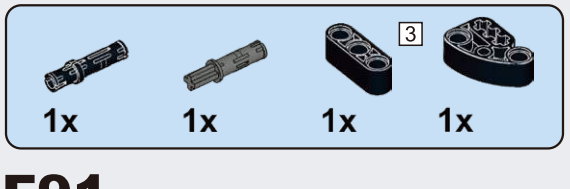

F91

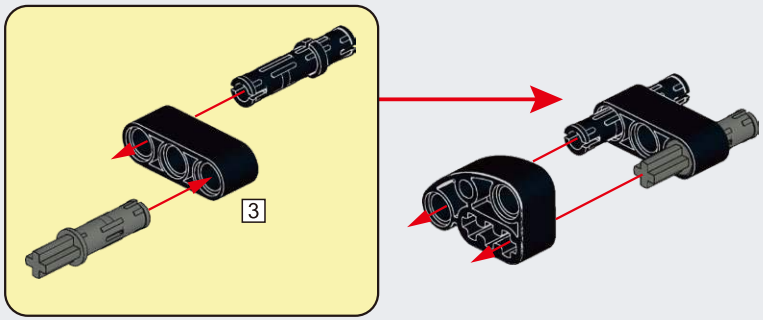

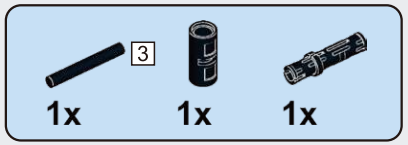

F92

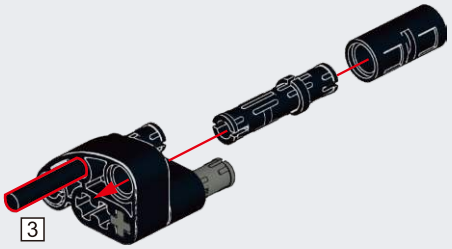

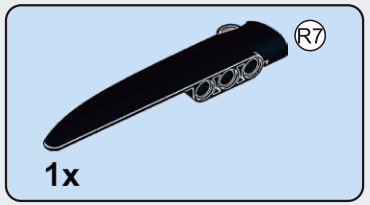

F93

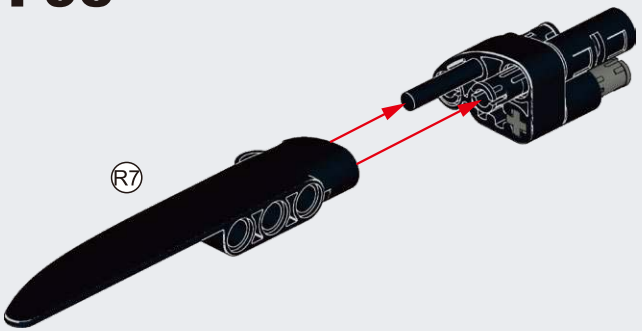

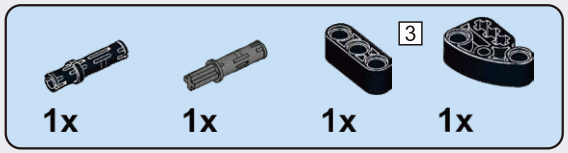

F94

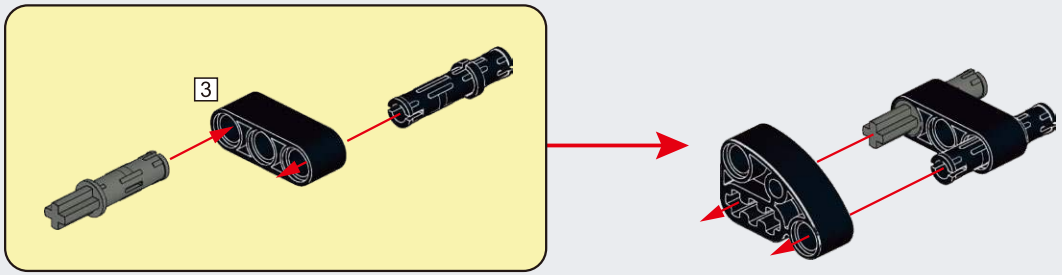

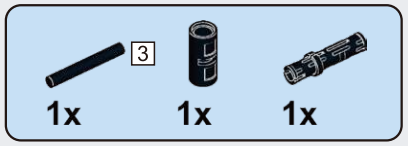

F95

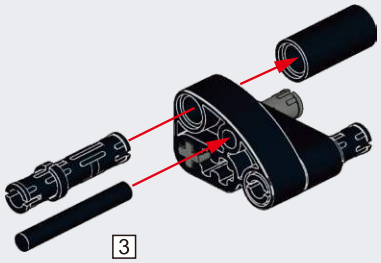

F96

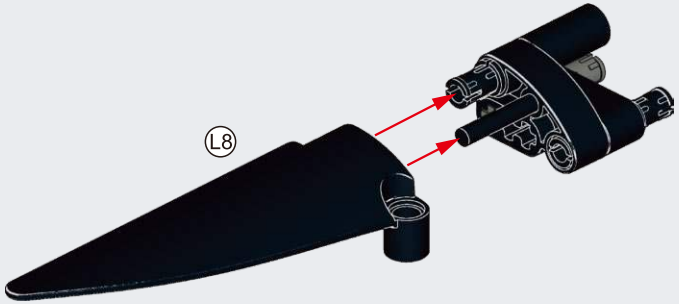

F97

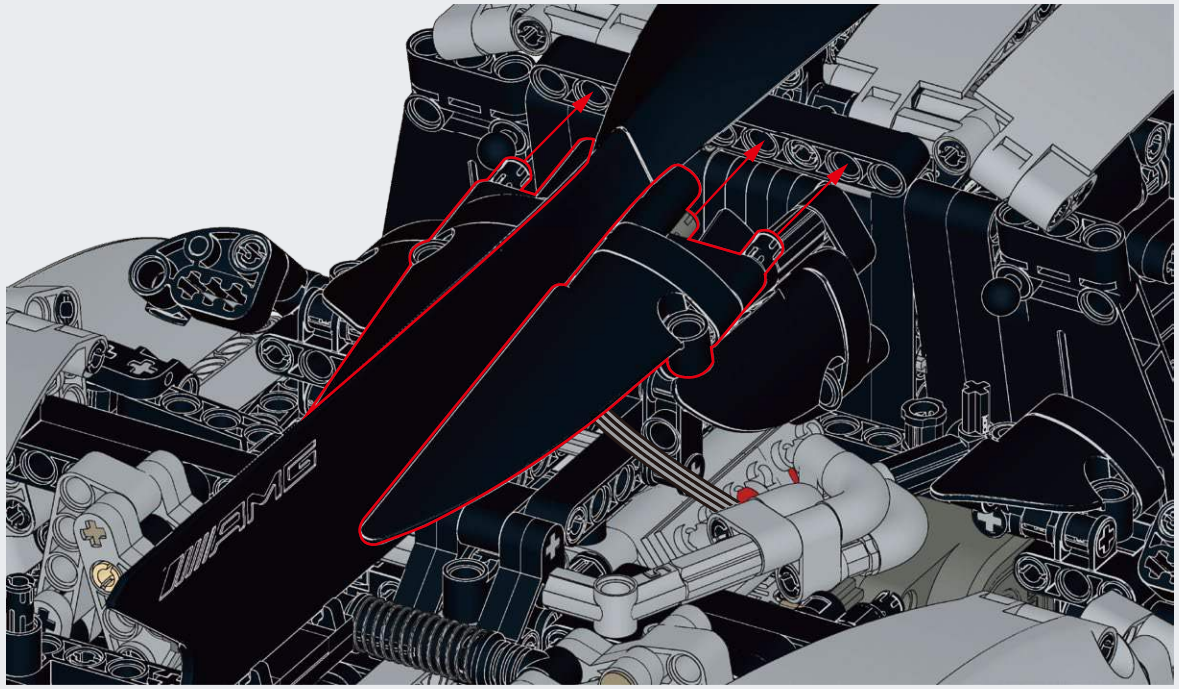

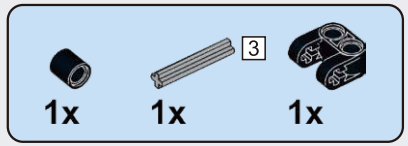

F98

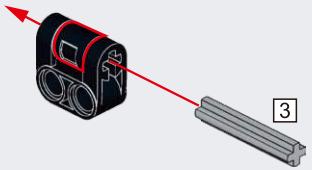

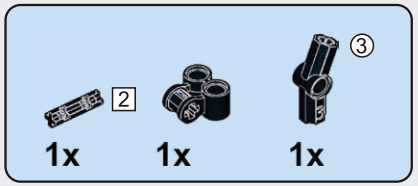

F99

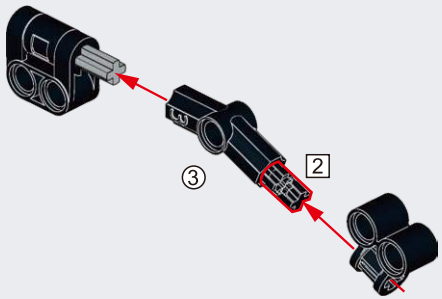

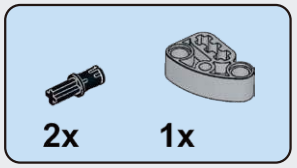

F100

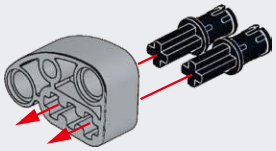

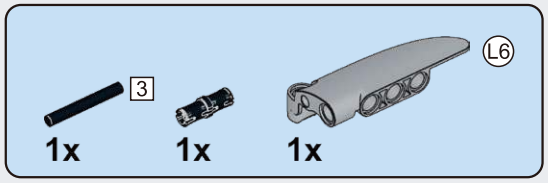

F101

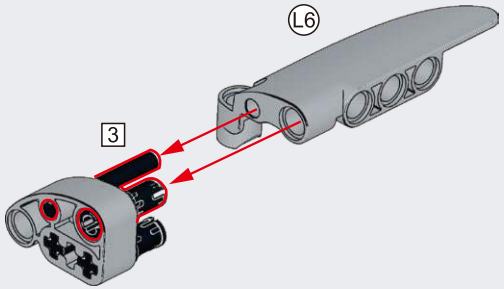

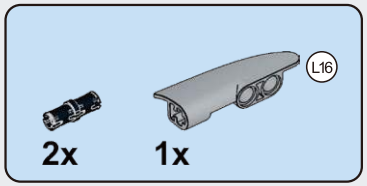

F102

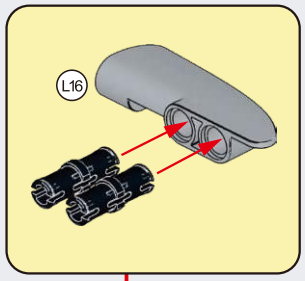

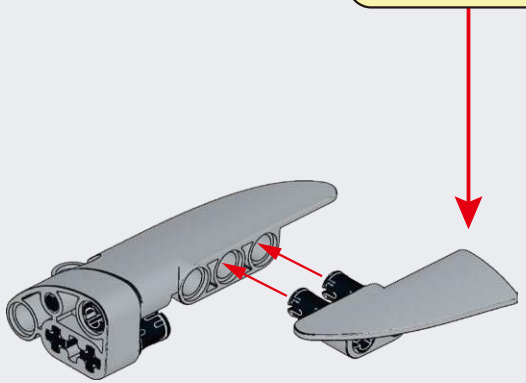

F103

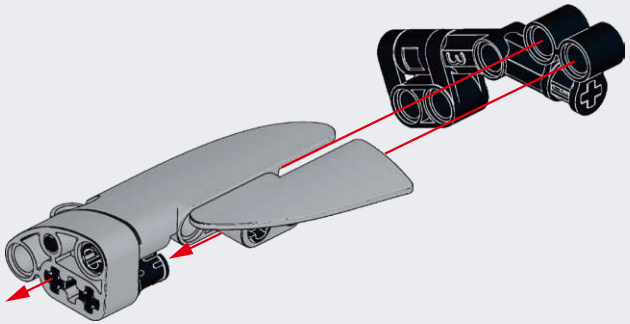

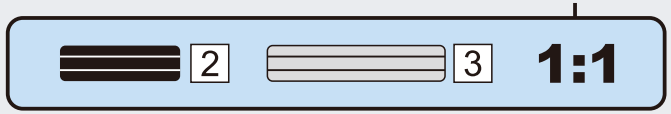

F104

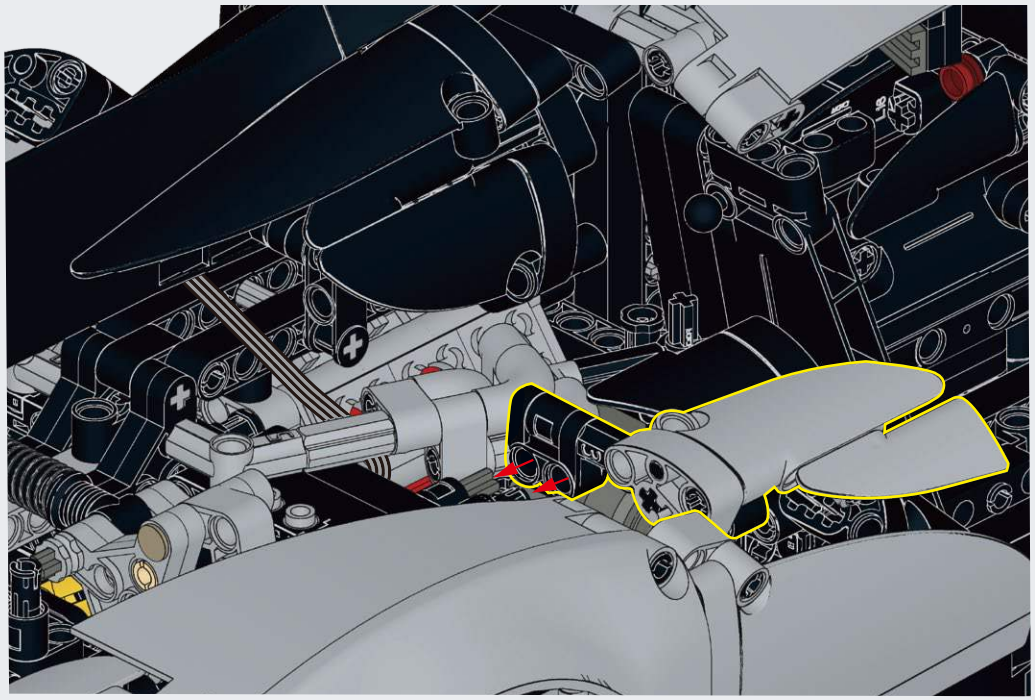

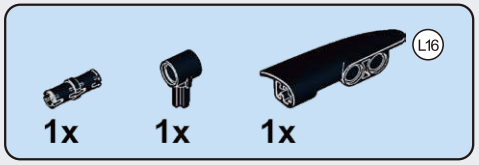

F105

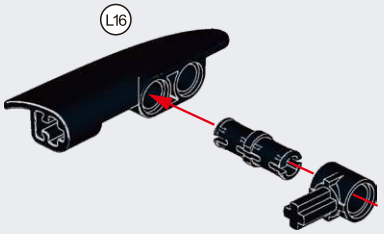

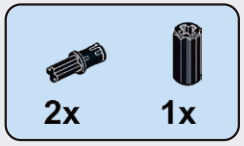

F106

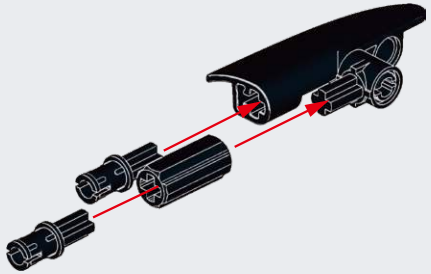

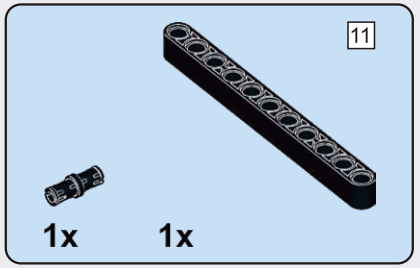

F107

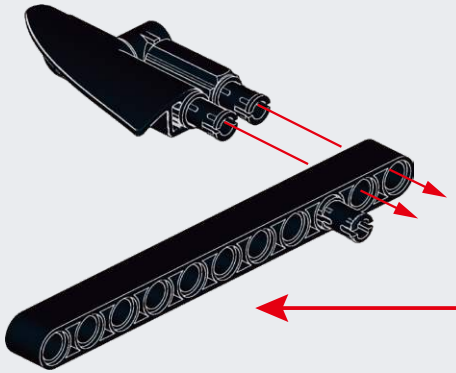

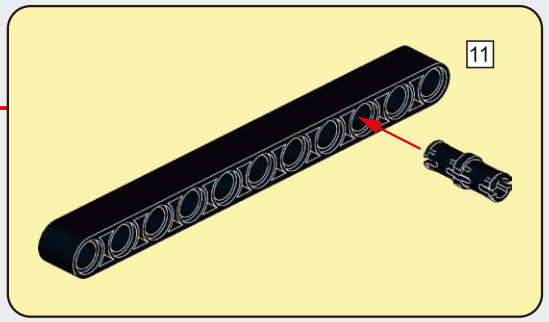

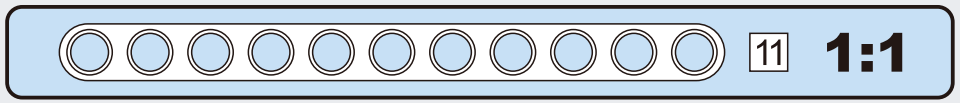

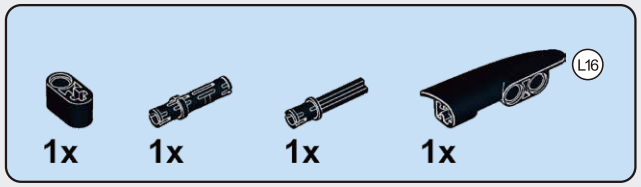

F108

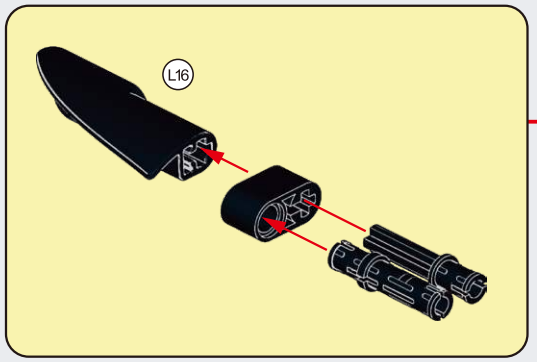

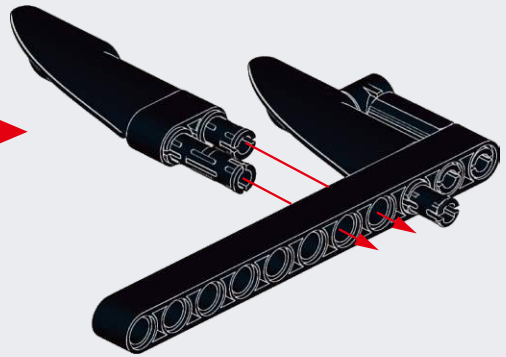

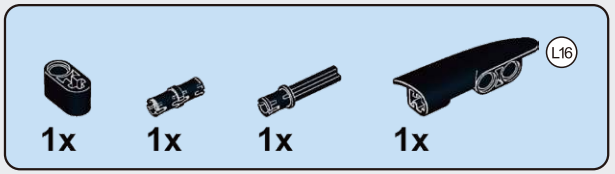

F109

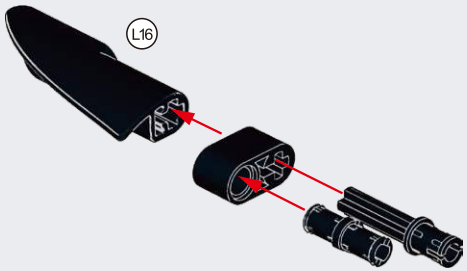

F110

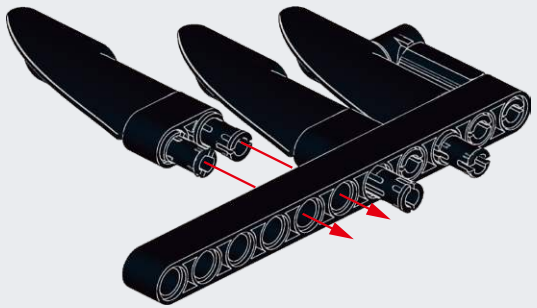

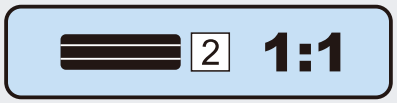

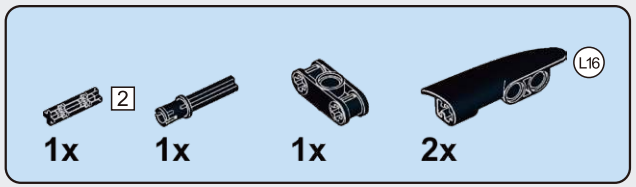

F111

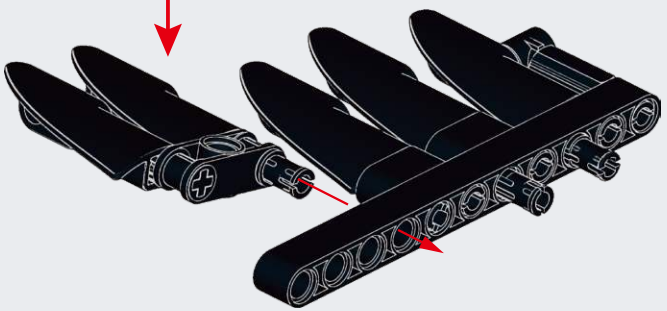

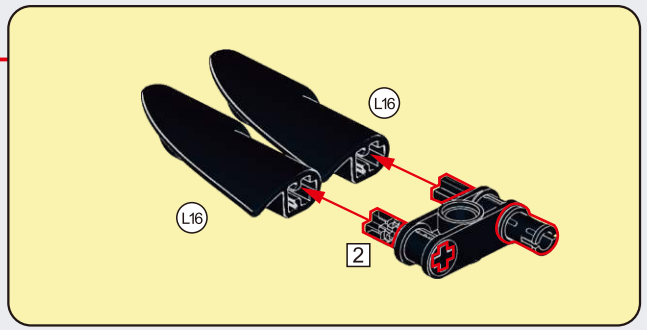

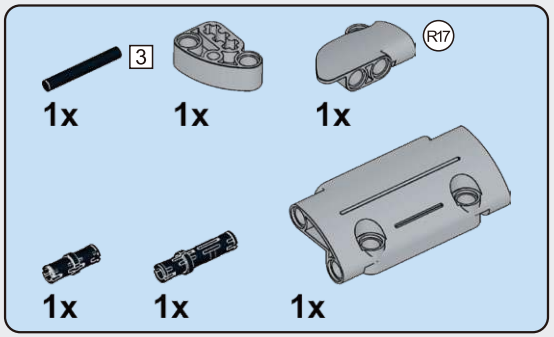

F112

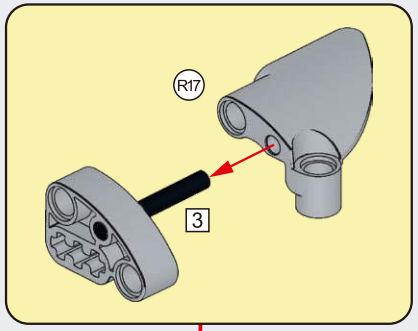

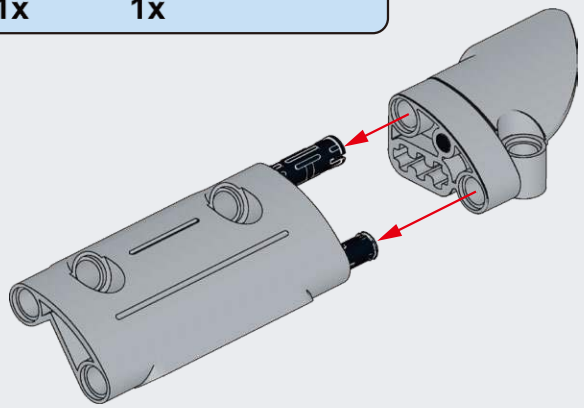

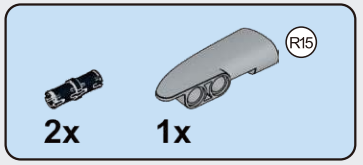

F113

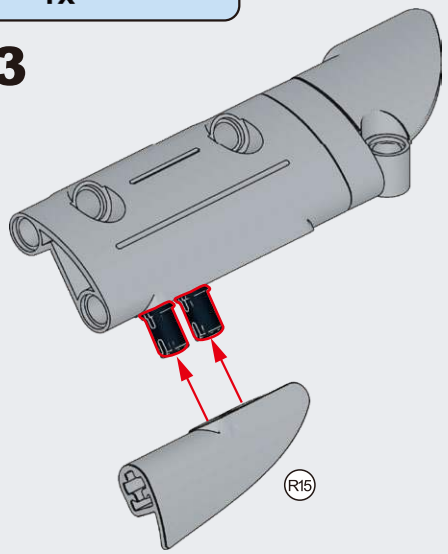

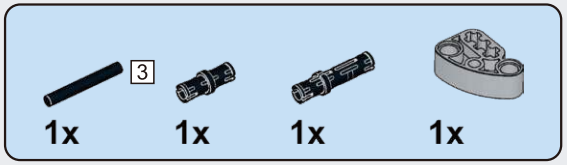

F114

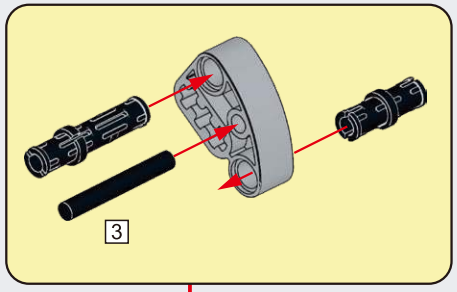

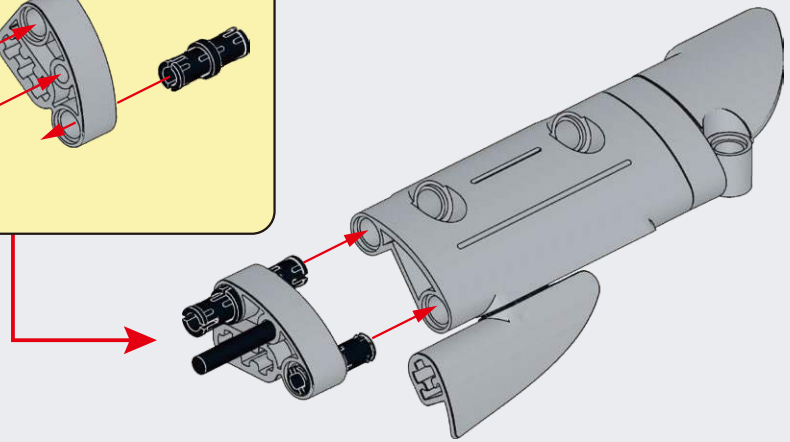

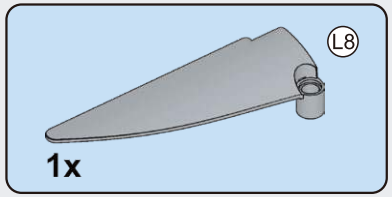

F115

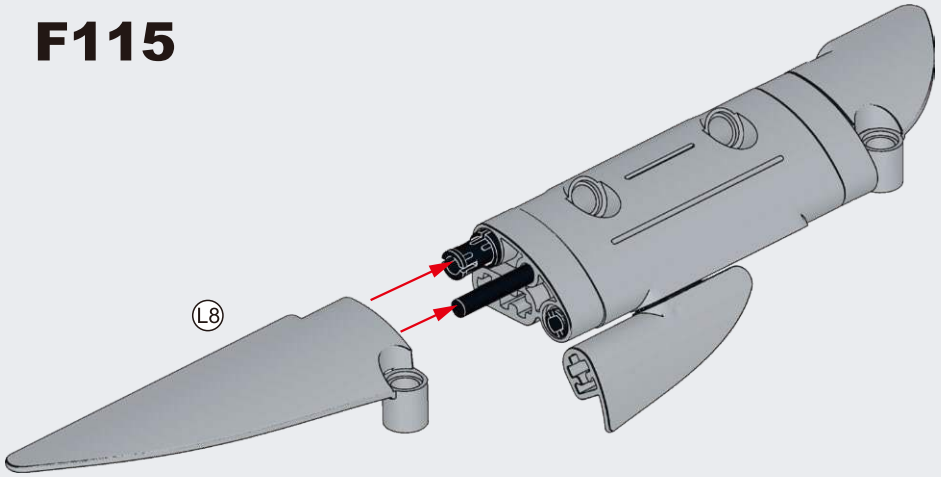

F116

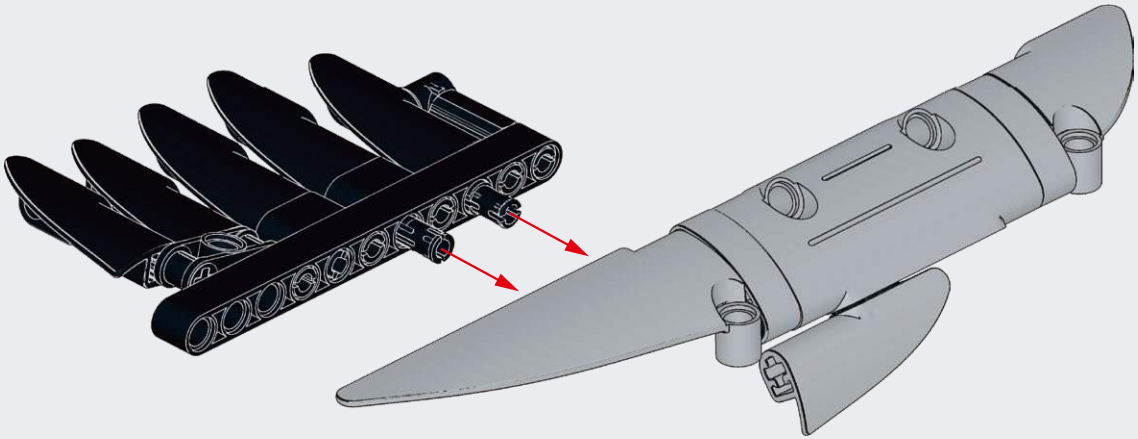

F117

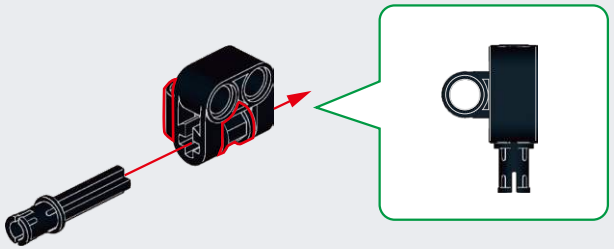

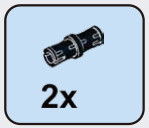

F118

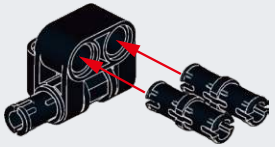

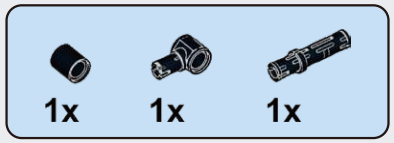

F119

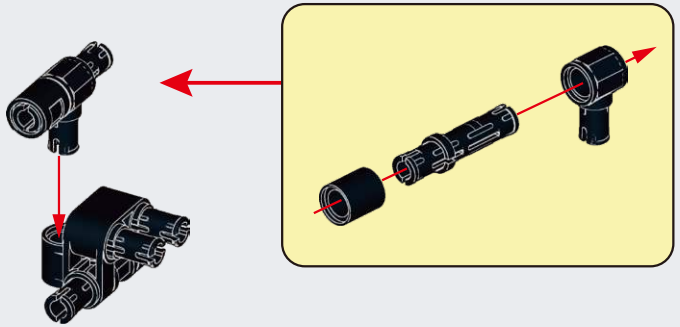

F120

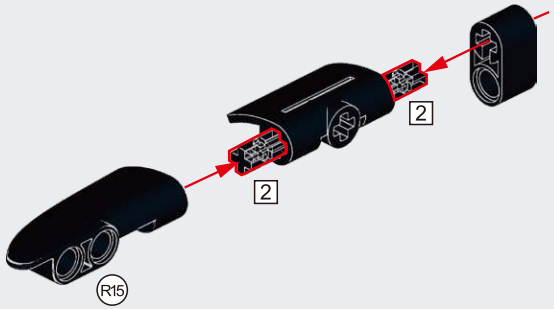

F121

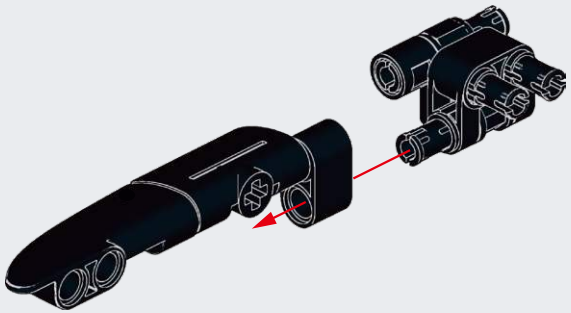

F122

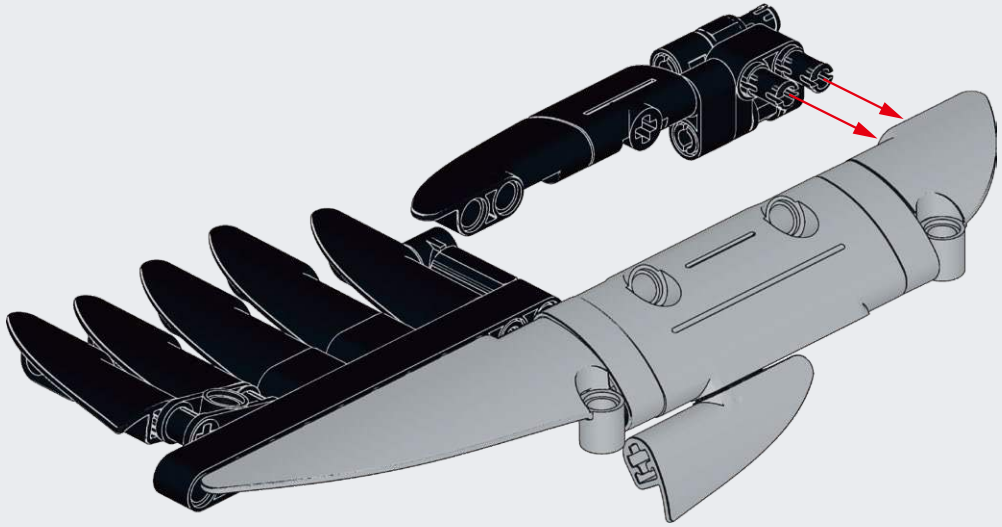

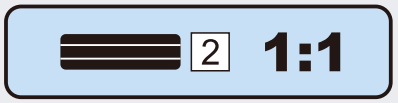

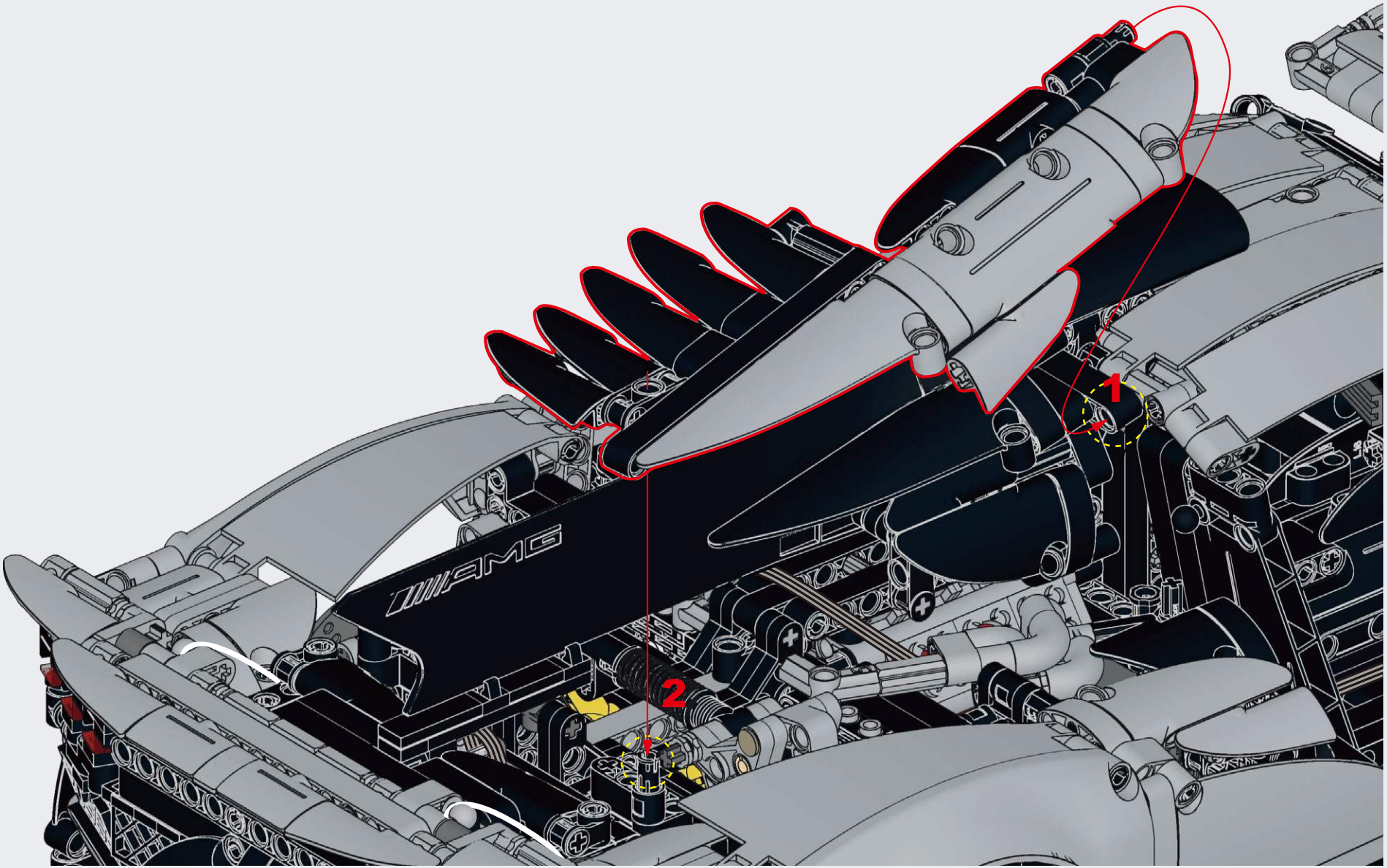
1
2
AMG

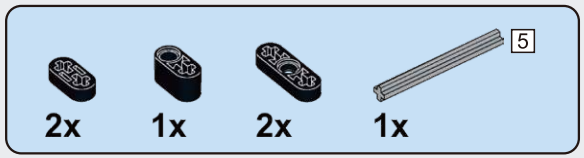

F124

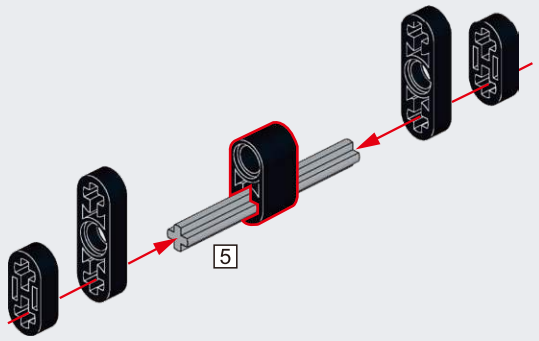

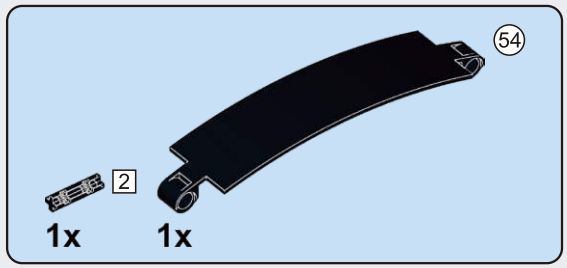

F125

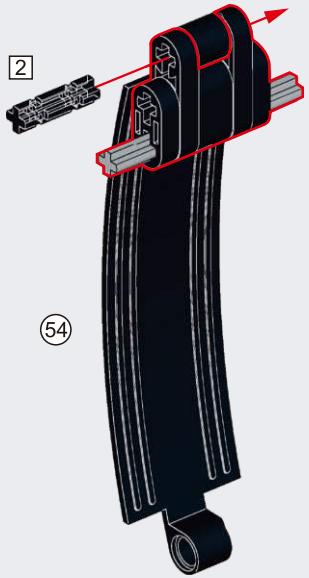

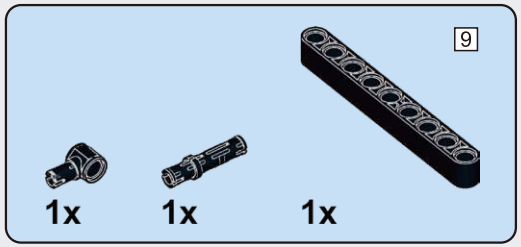

F126

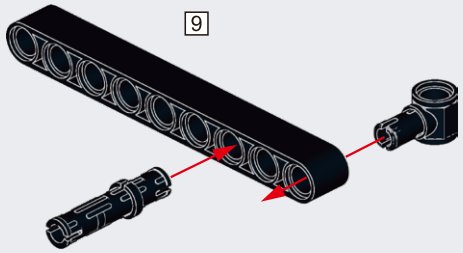

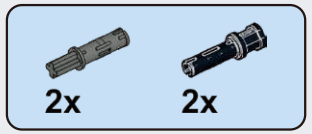

F127

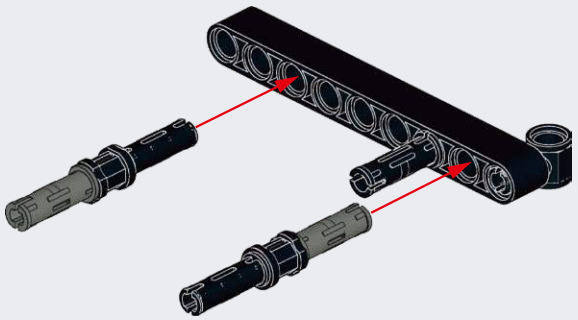

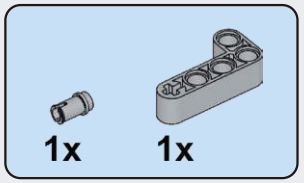

F128

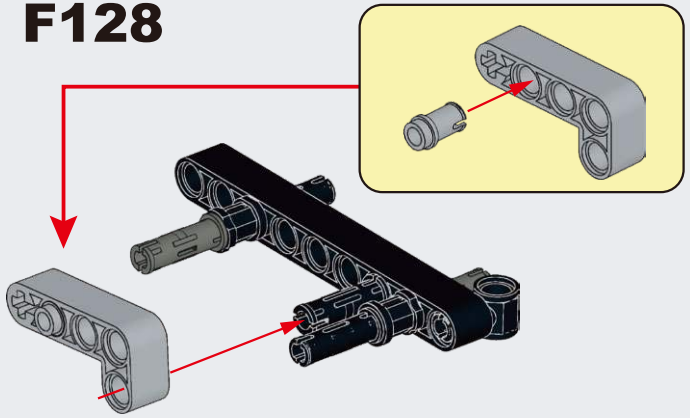

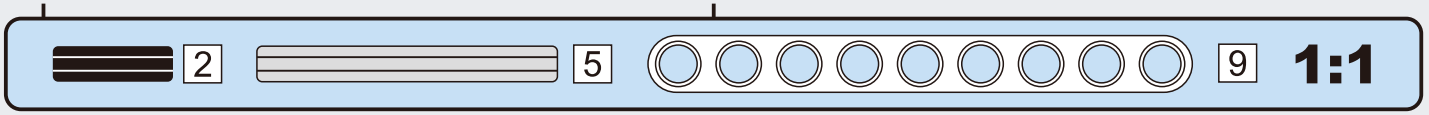

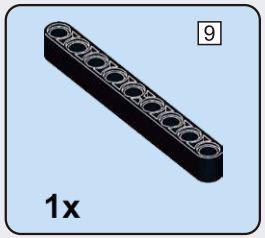

F129

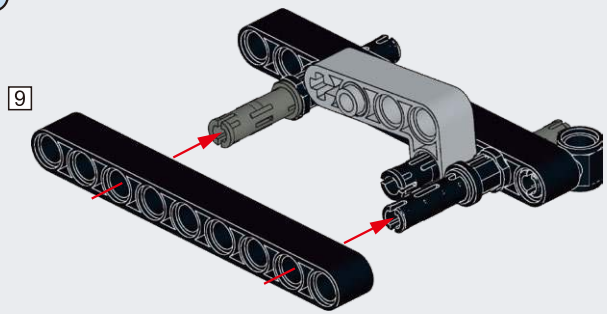

F130

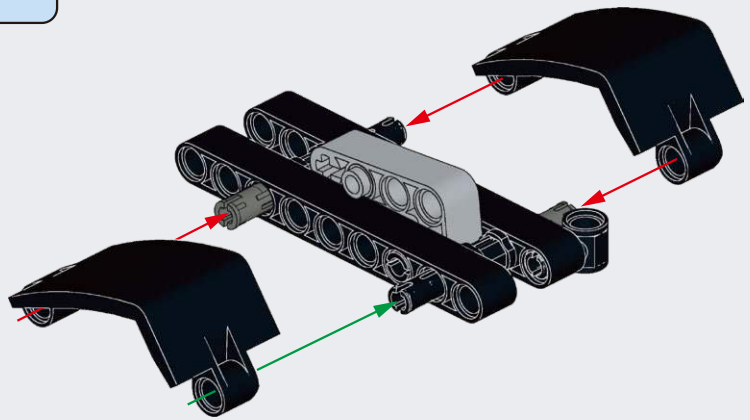

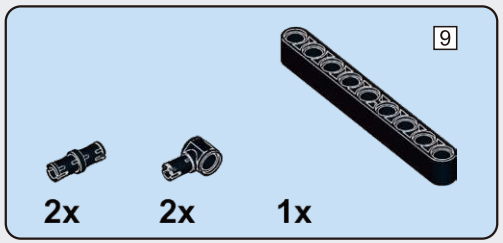

F131

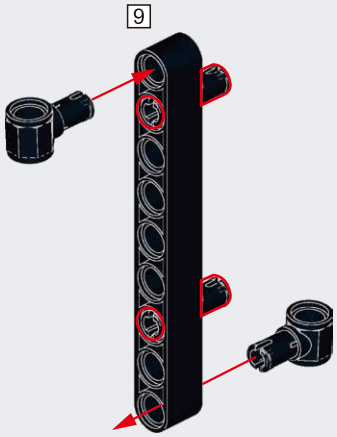

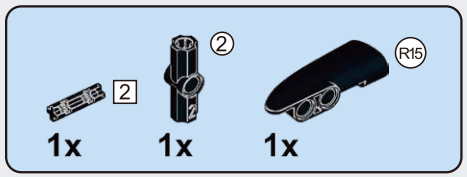

F132

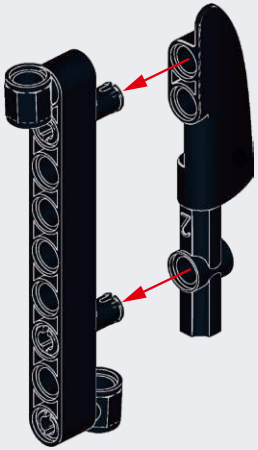

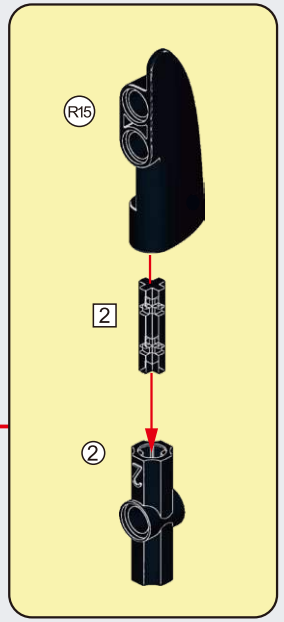

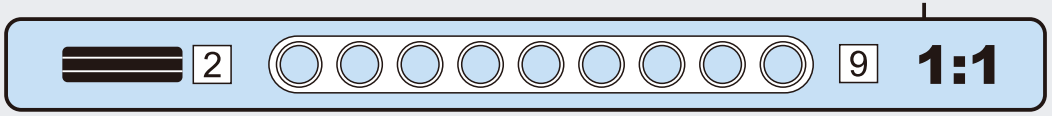

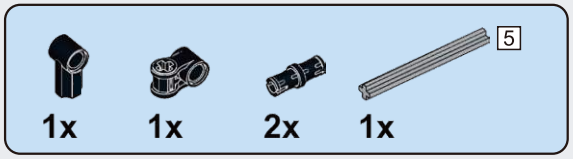

F133

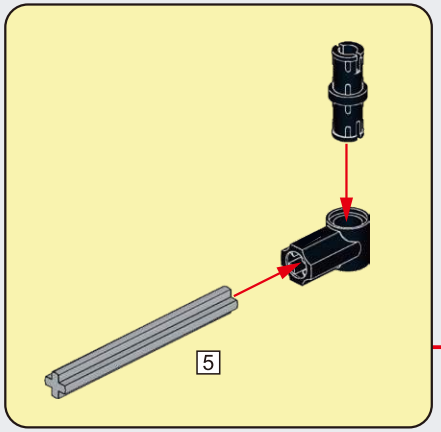

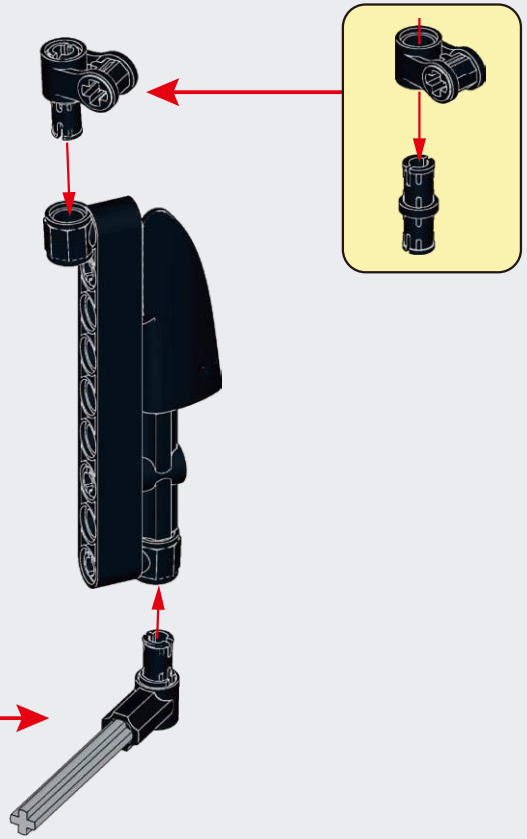

F134

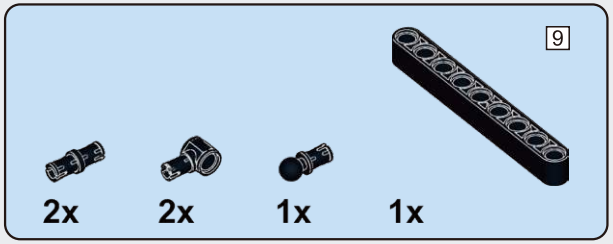

F135

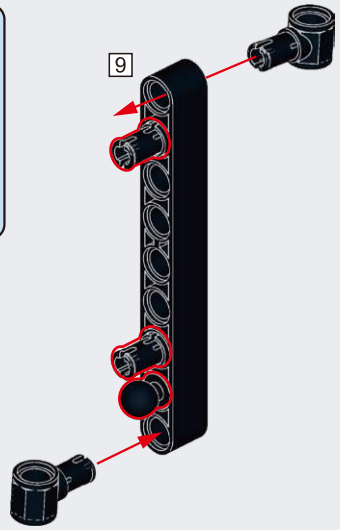

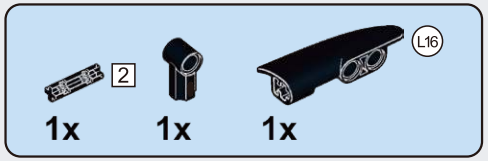

F136

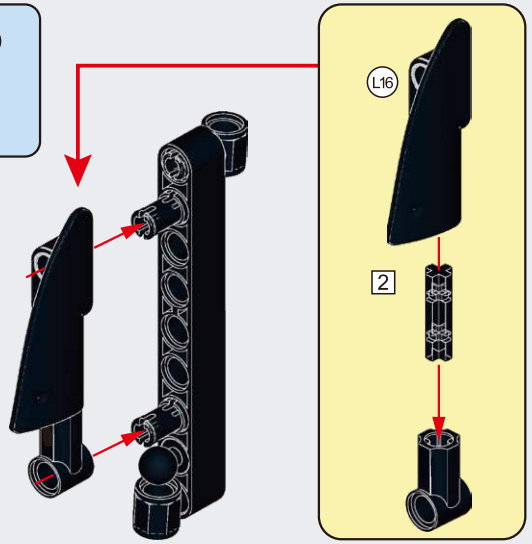

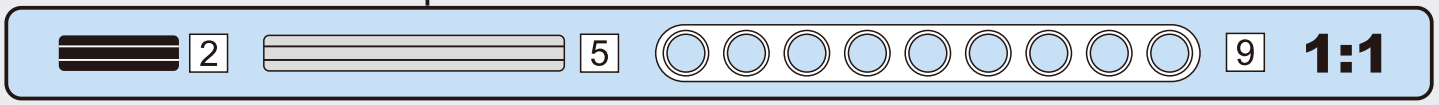

F137

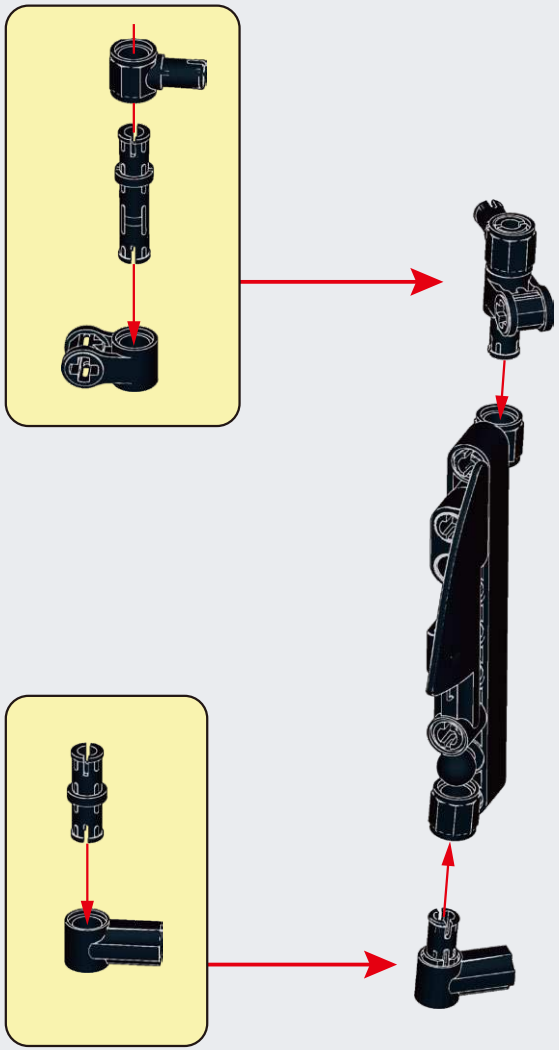

F138

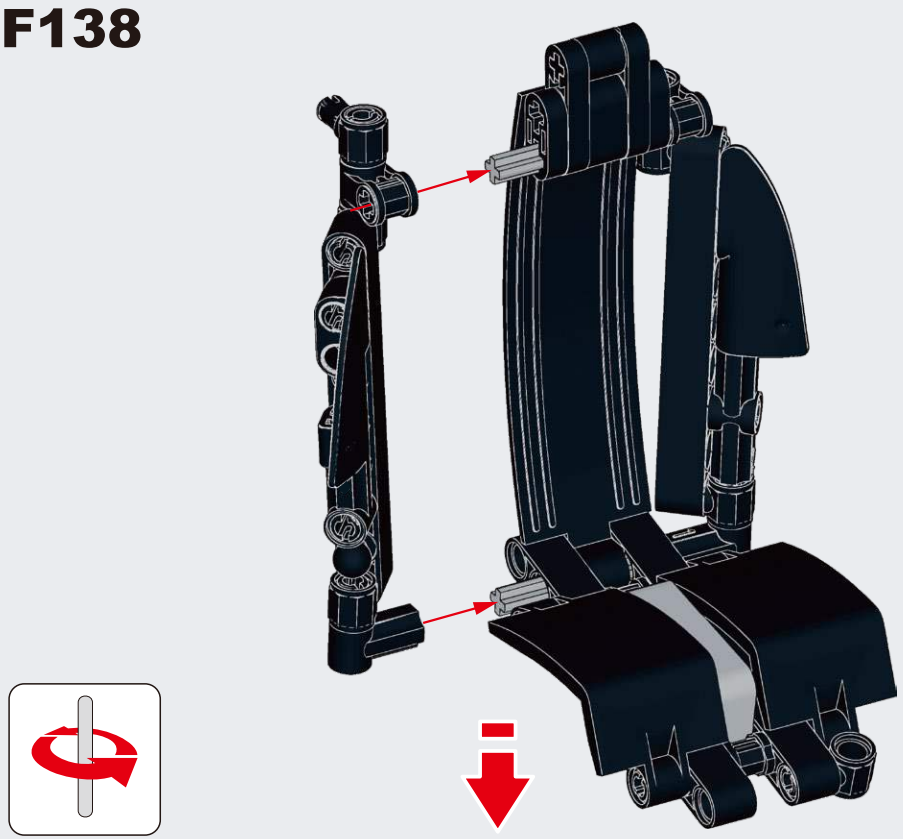

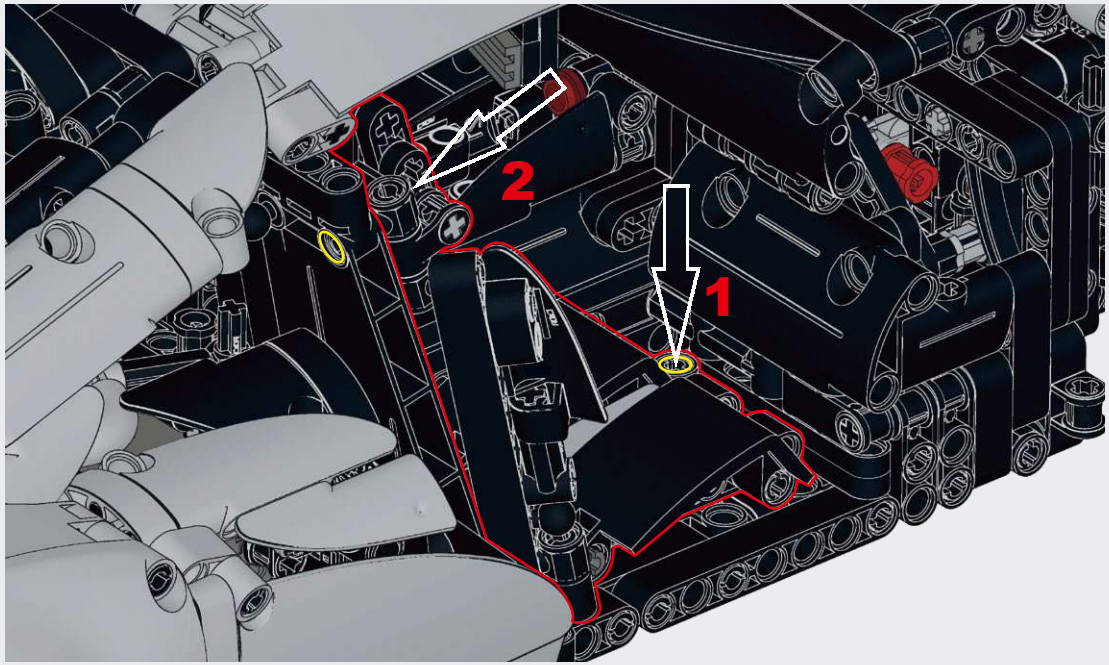

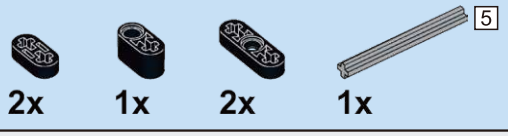

F139

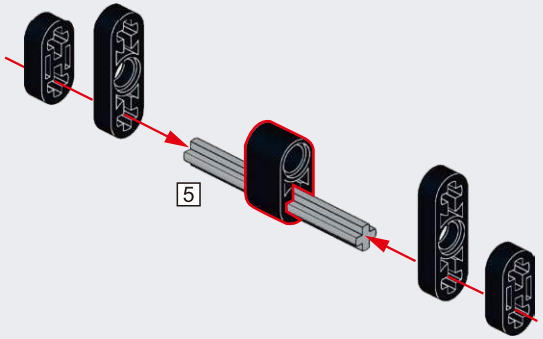

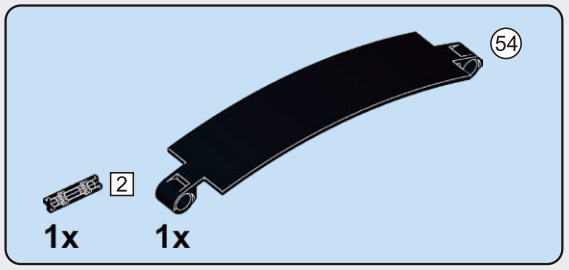

F140

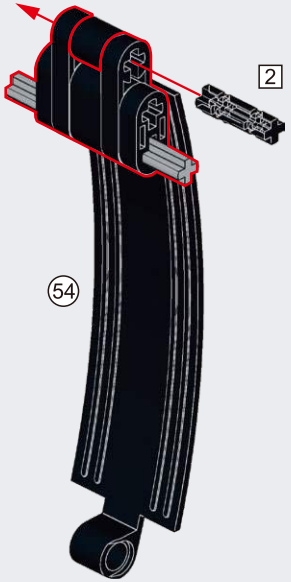

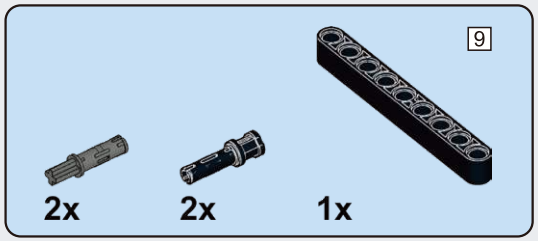

F141

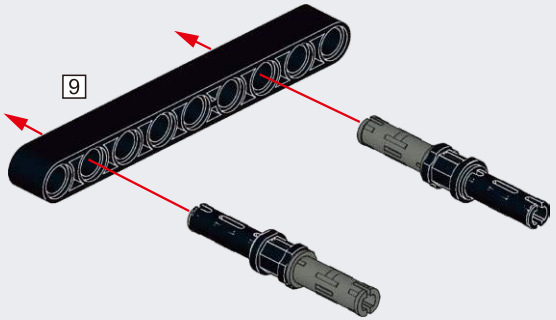

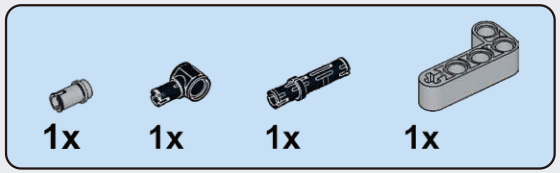

F142

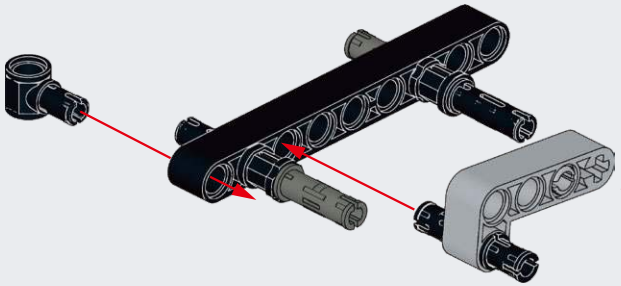

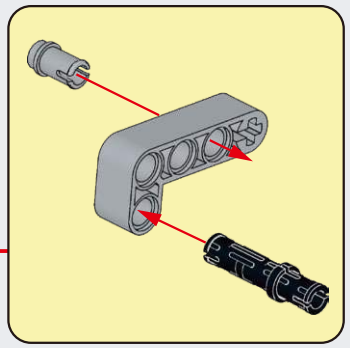

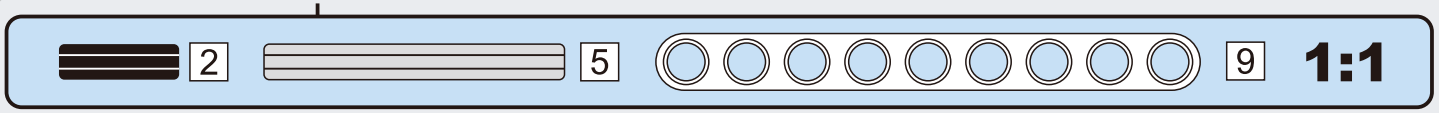

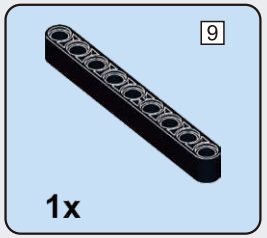

F143

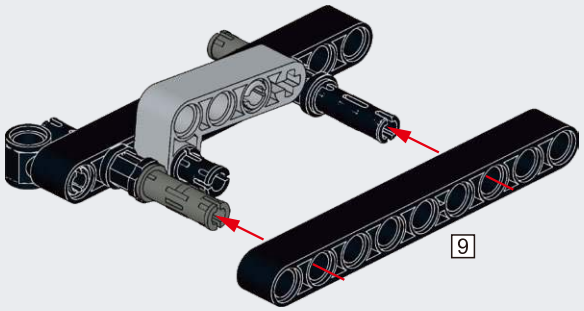

F144

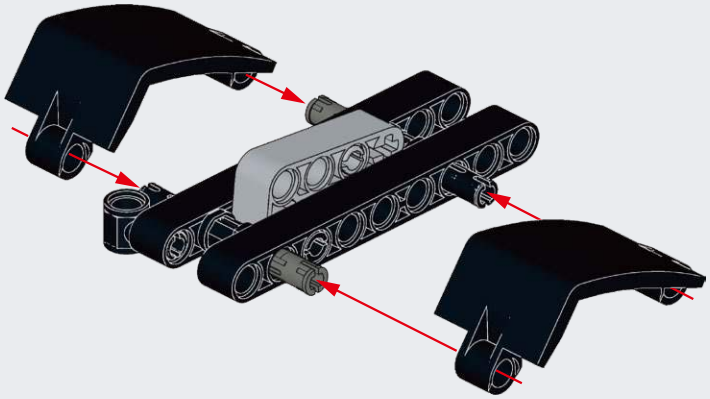

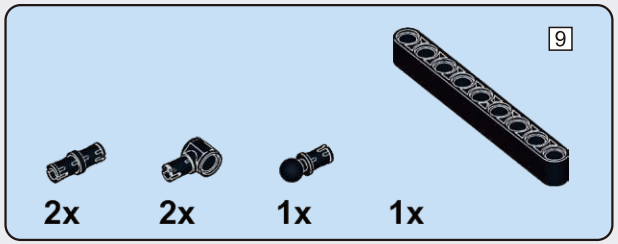

F145

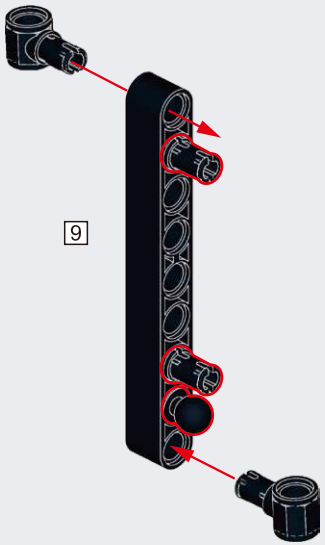

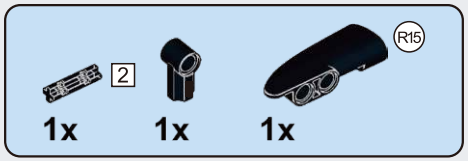

F146

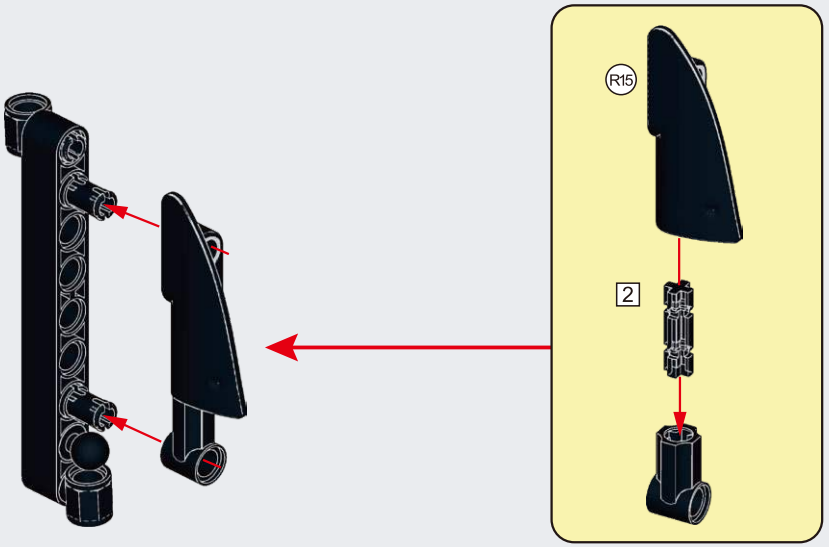

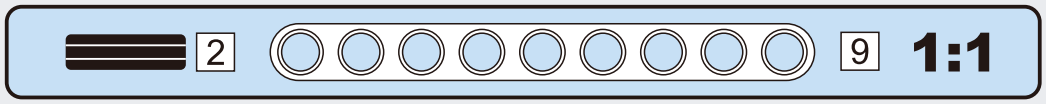

F147

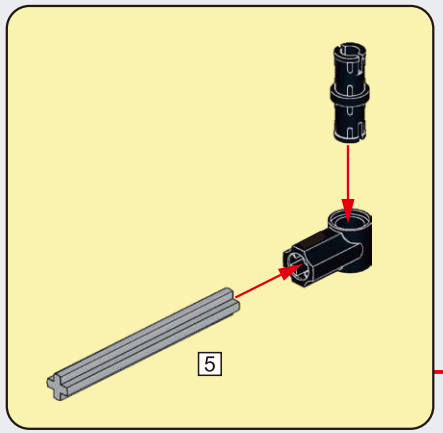

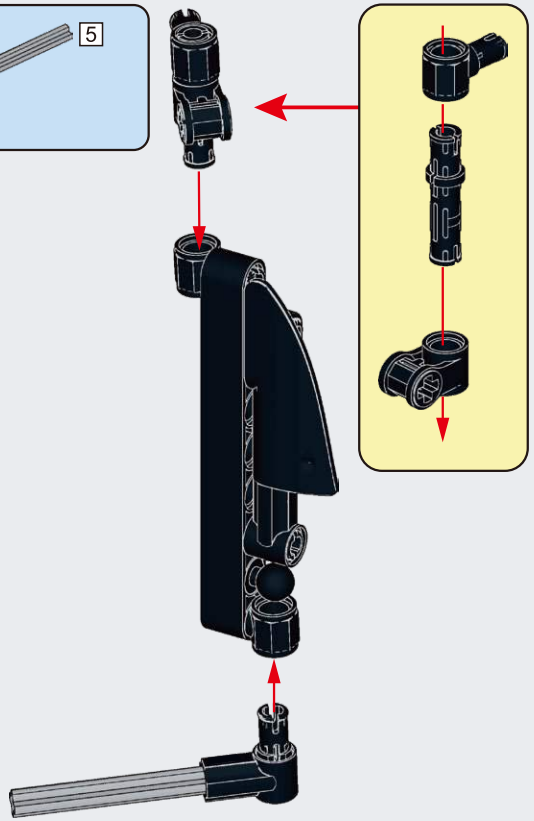

F148

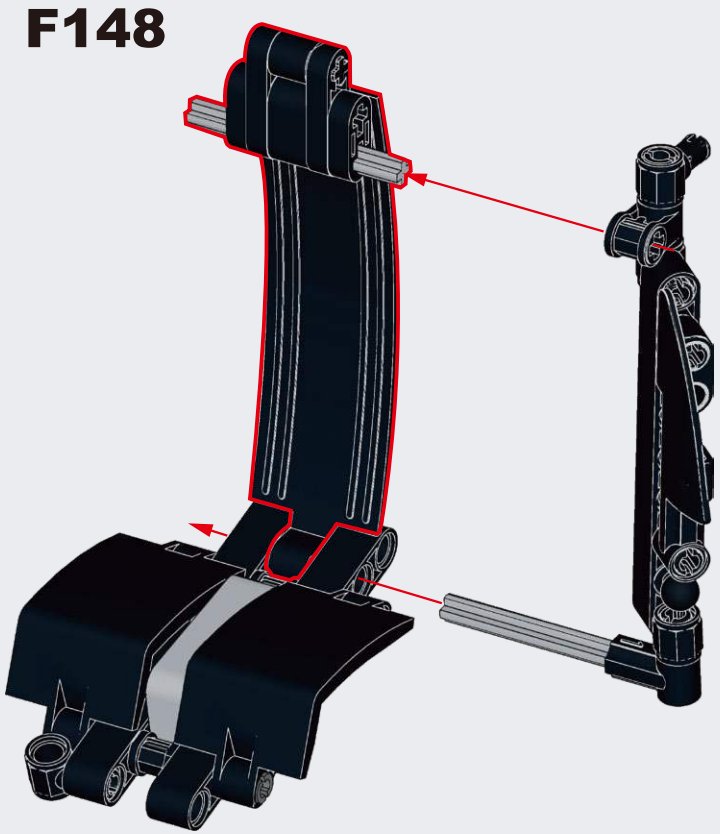

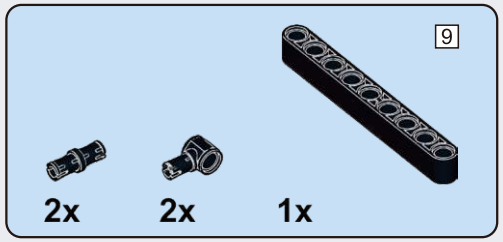

F149

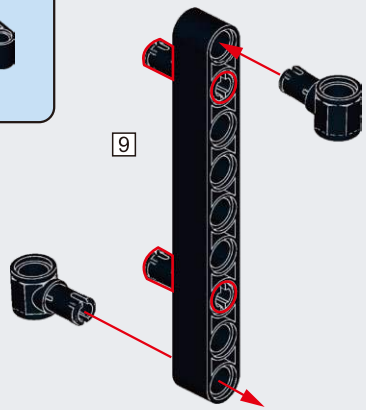

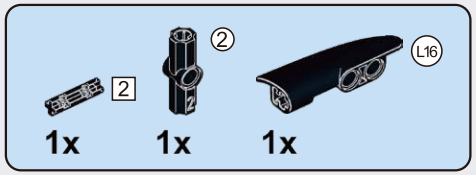

F150

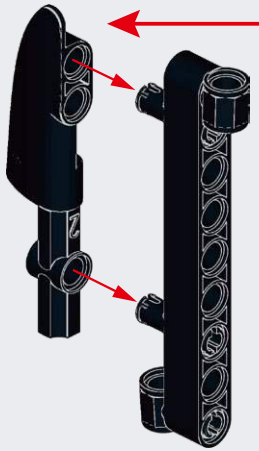

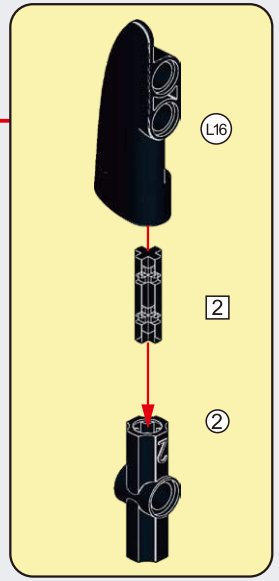

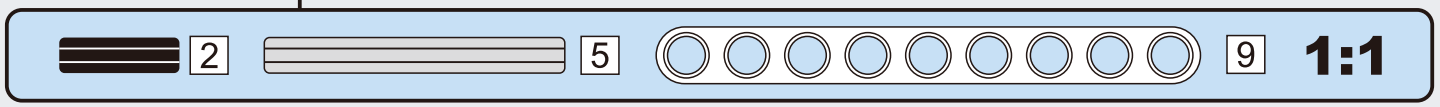

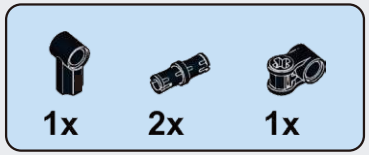

F151

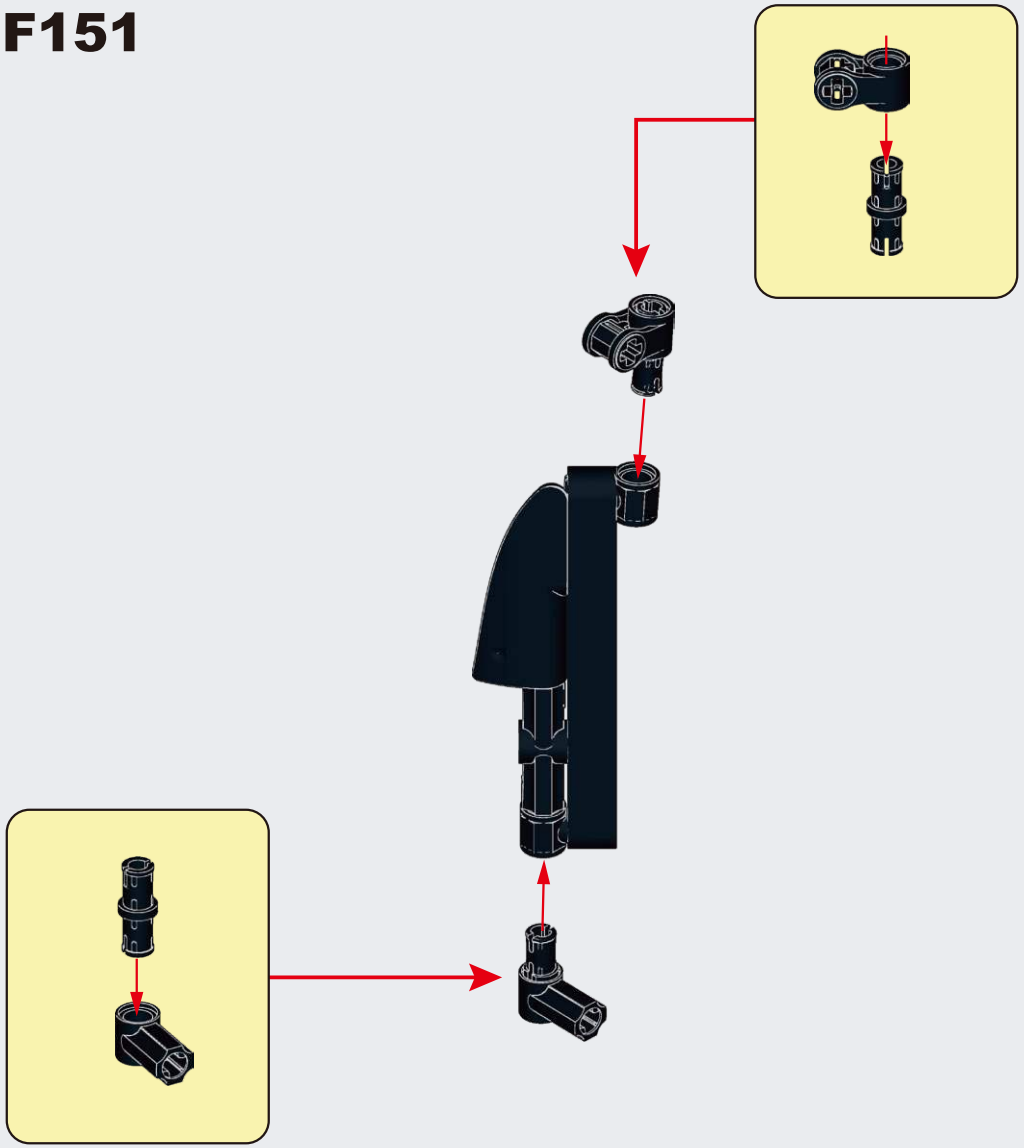

F152

F153

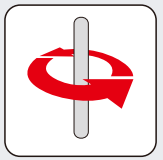

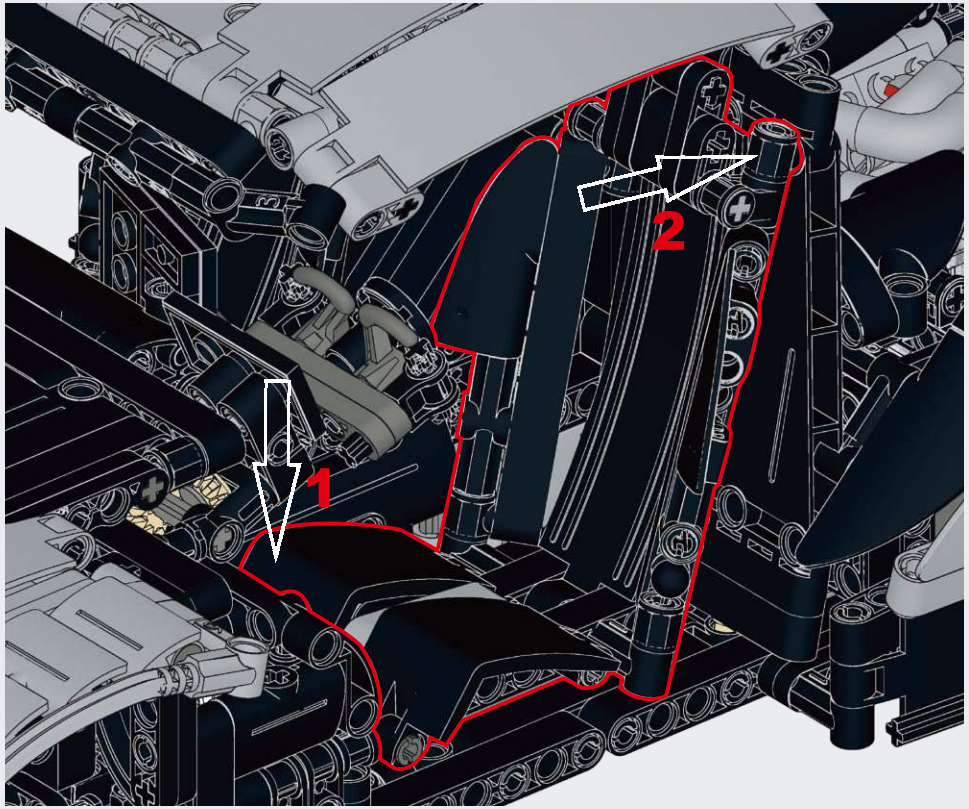

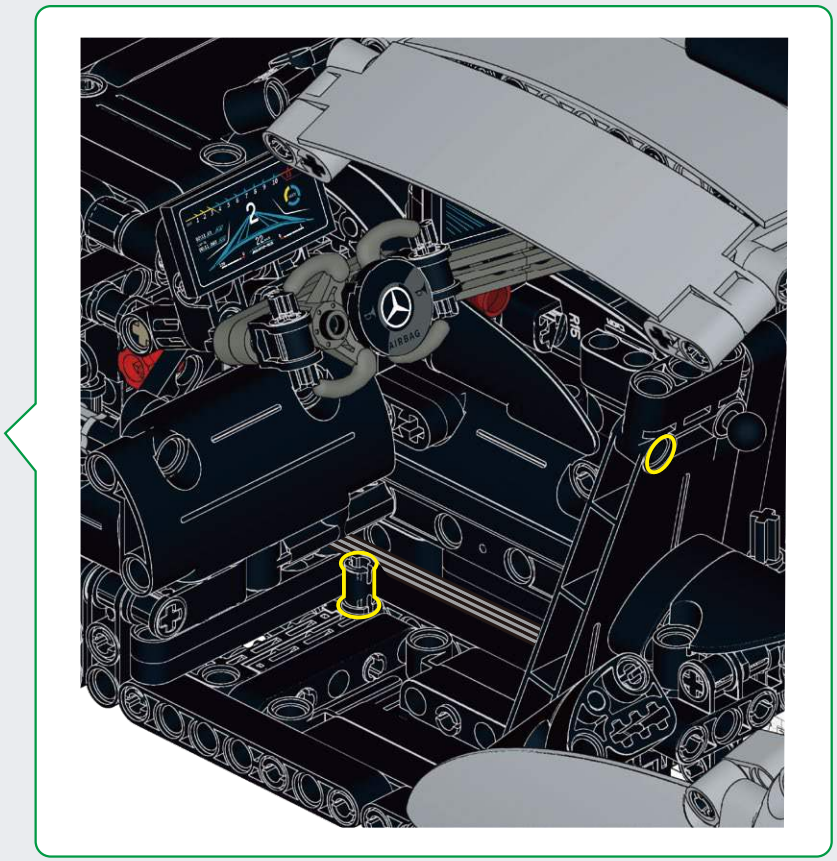

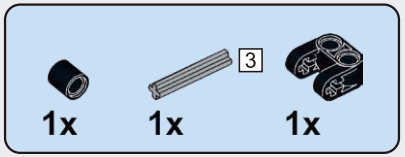

F154

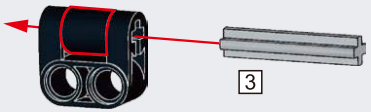

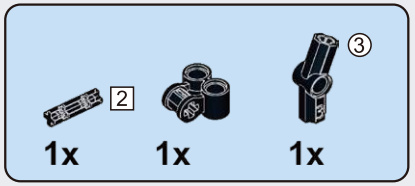

F155

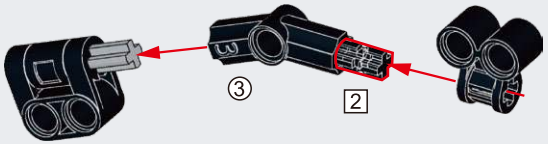

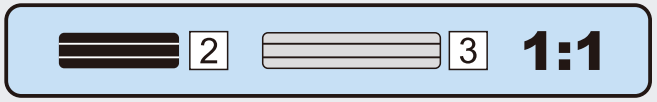

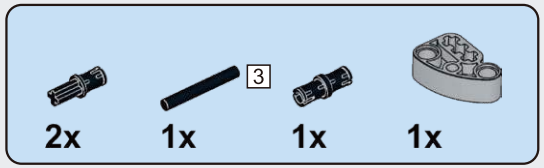

F156

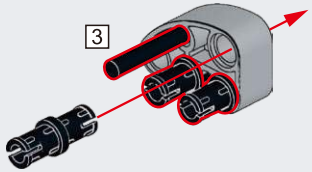

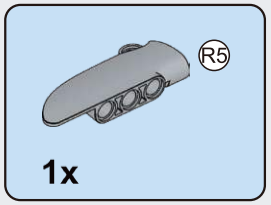

F157

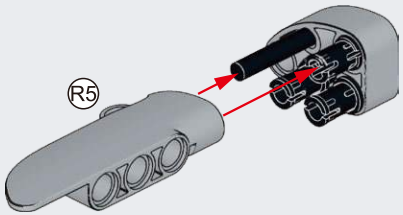

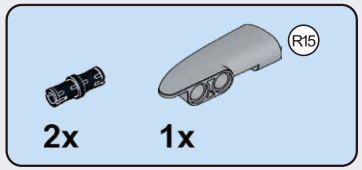

F158

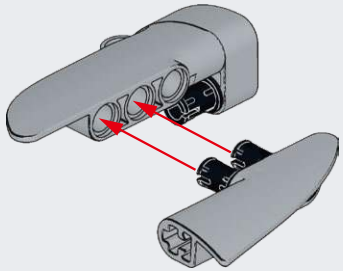

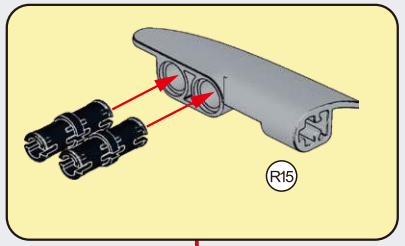

F159

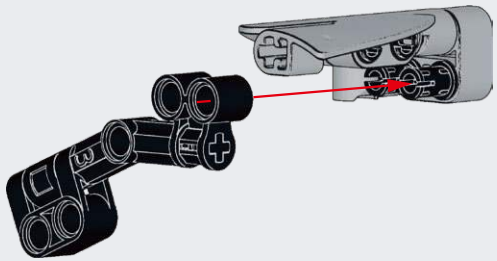

F160

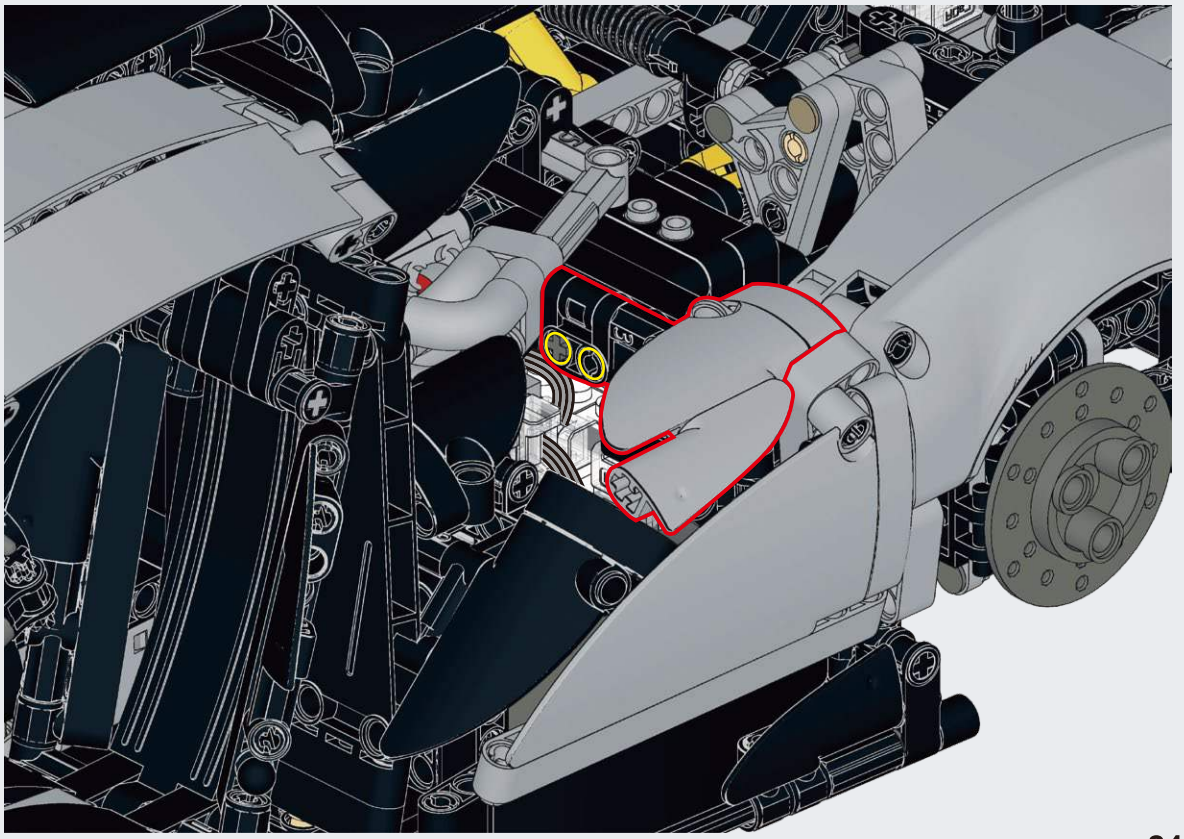

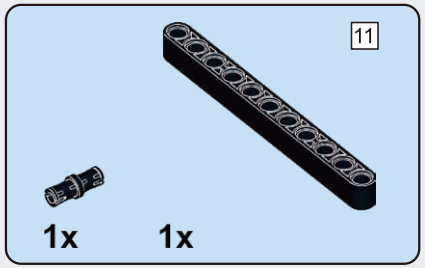

F161

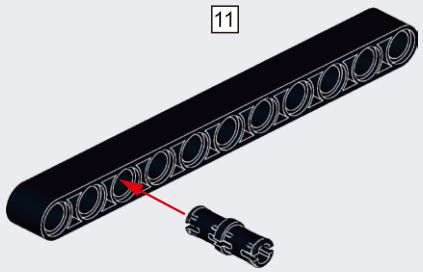

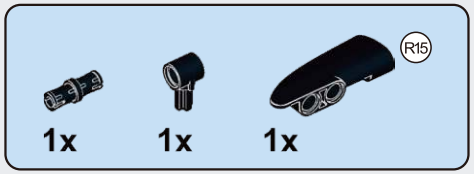

F162

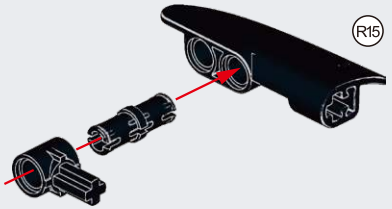

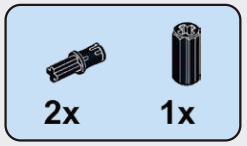

F163

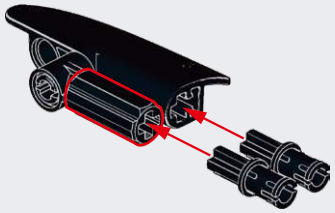

F164

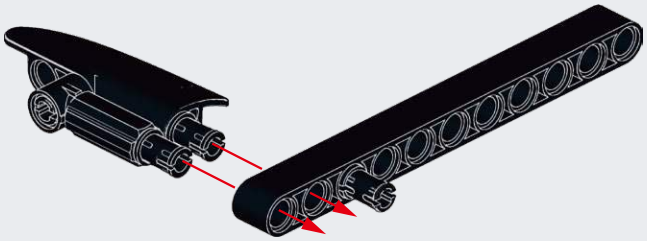

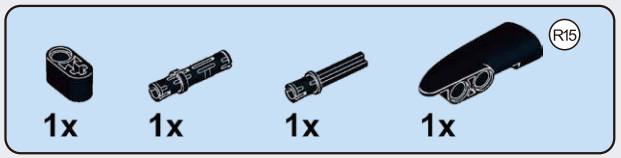

F165

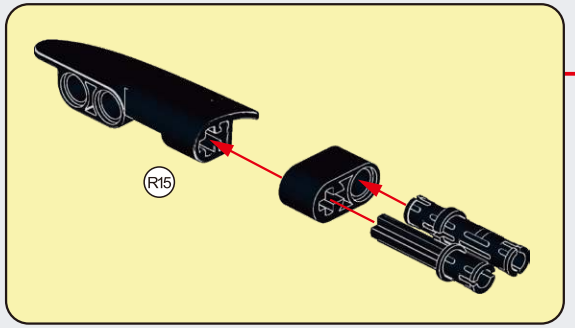

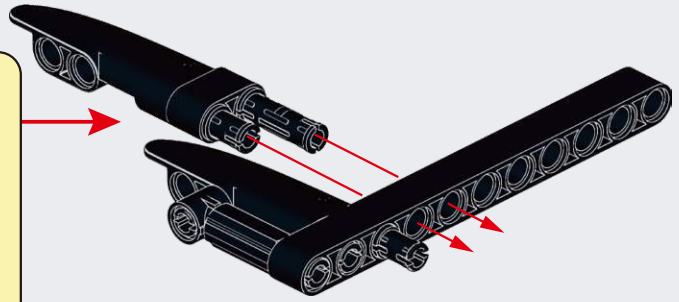

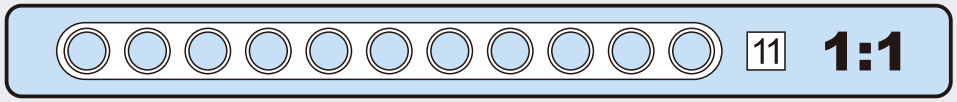

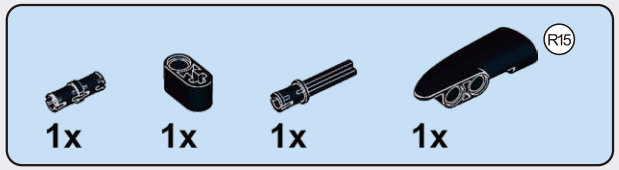

F166

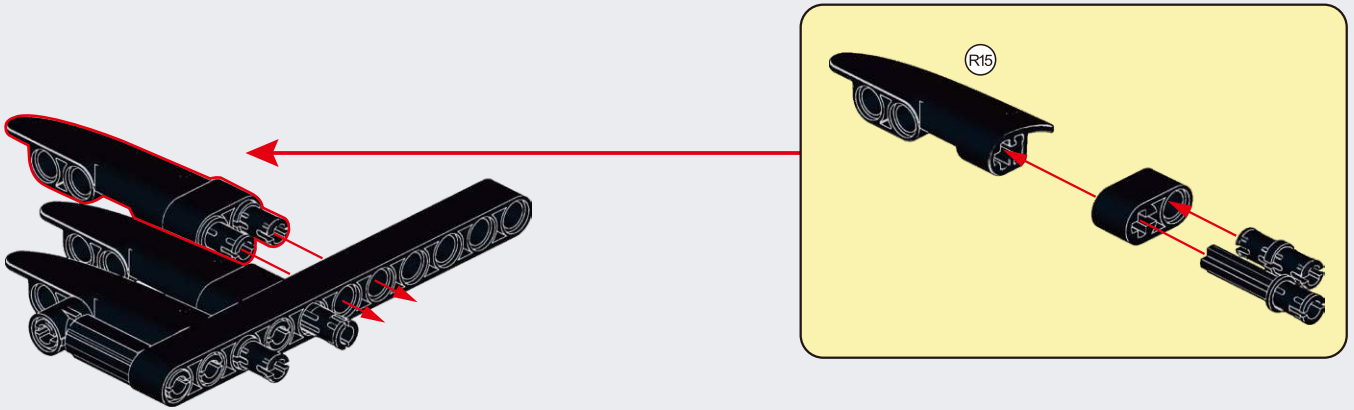

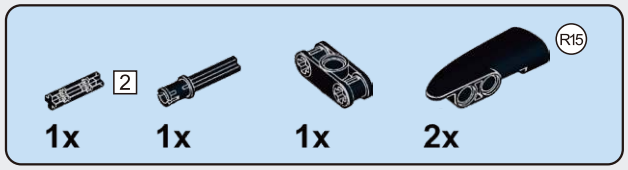

F167

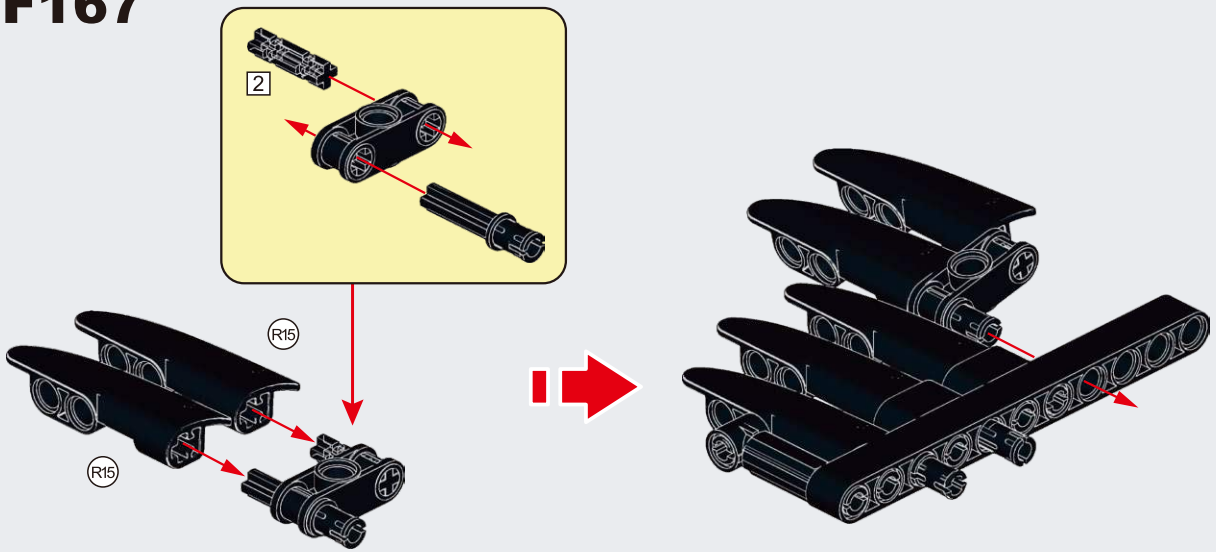

2 1:1

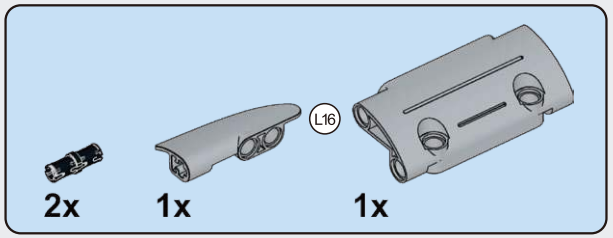

F168

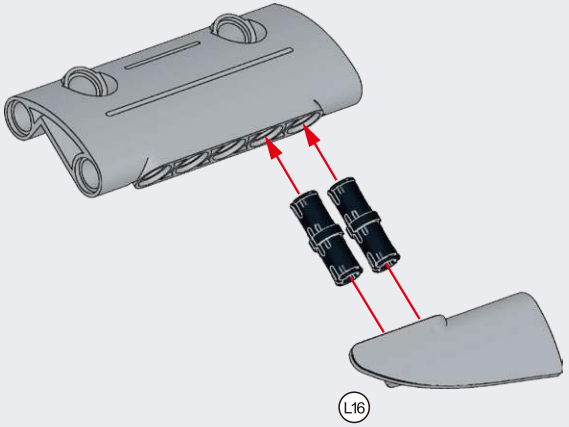

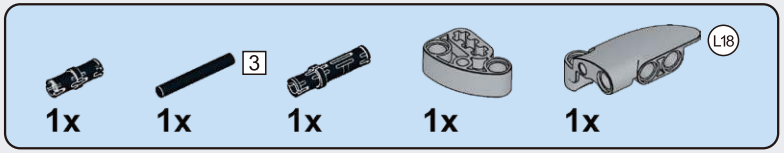

F169

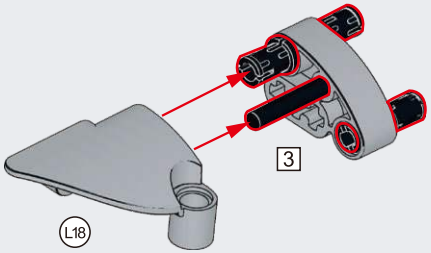

F170

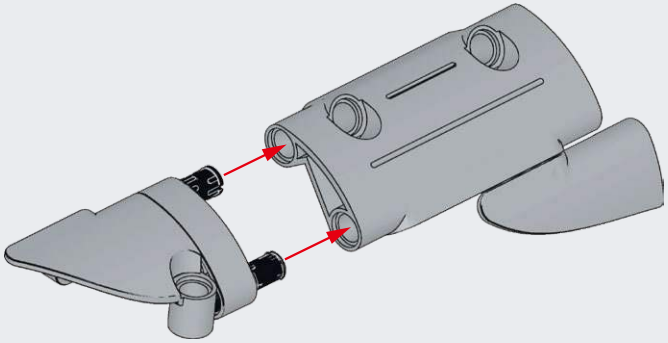

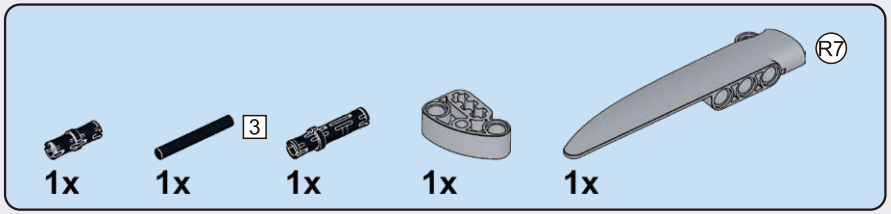

F171

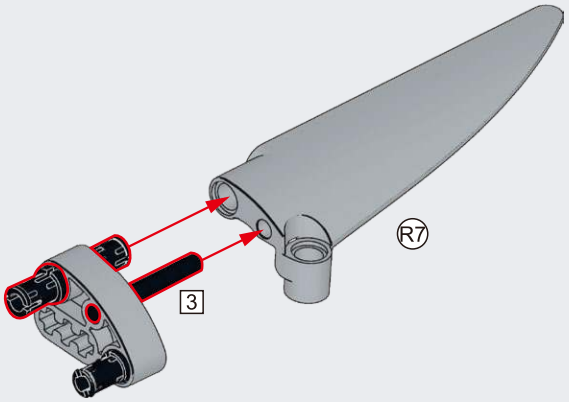

F172

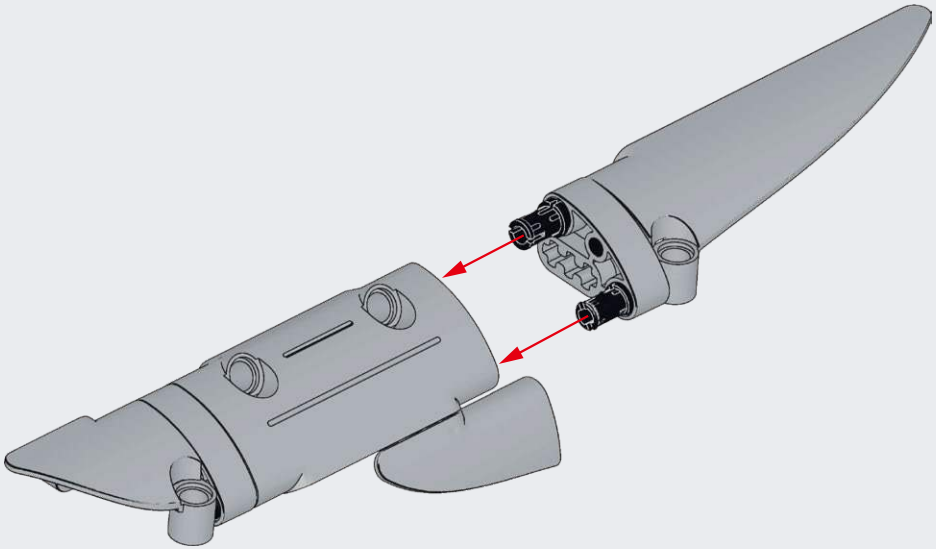

F173

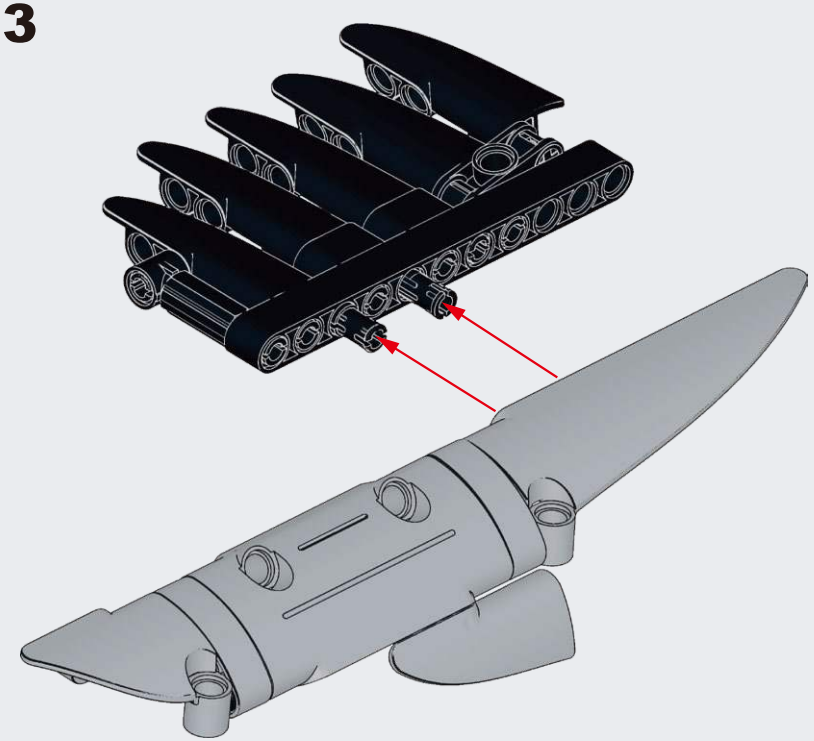

F174

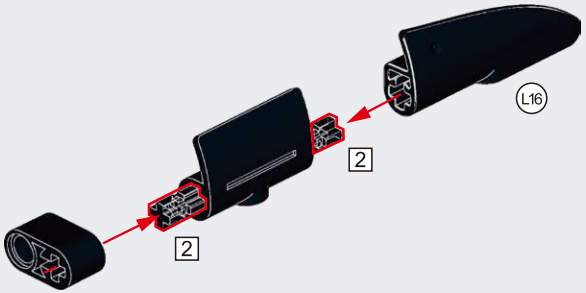

F175

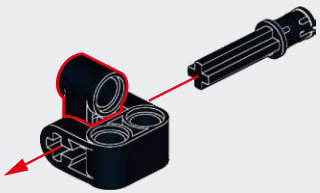

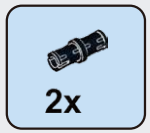

F176

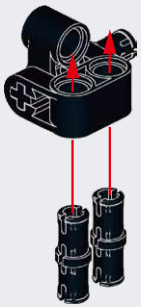

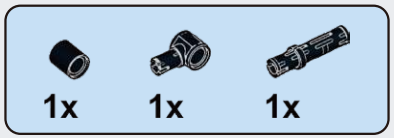

F177

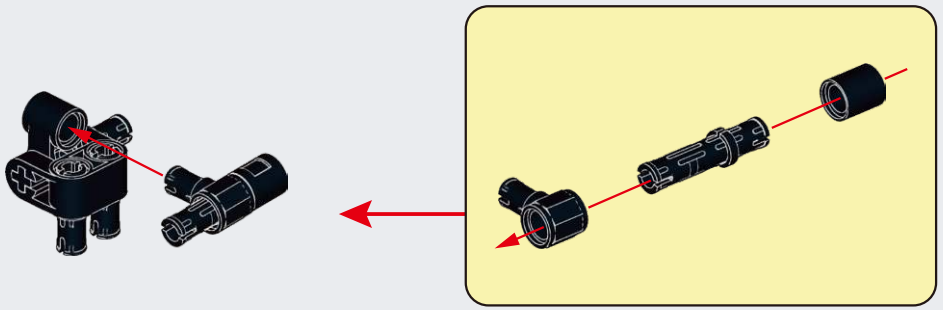

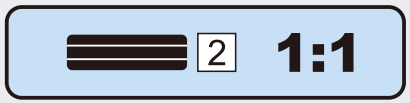

F178

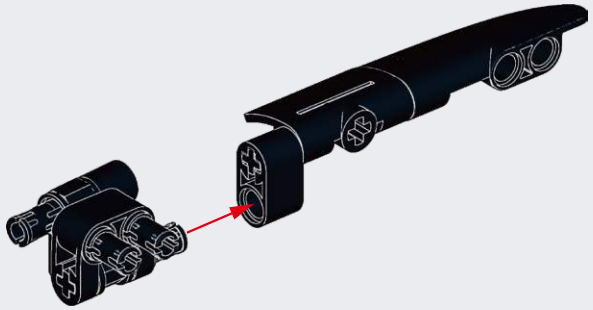

F179

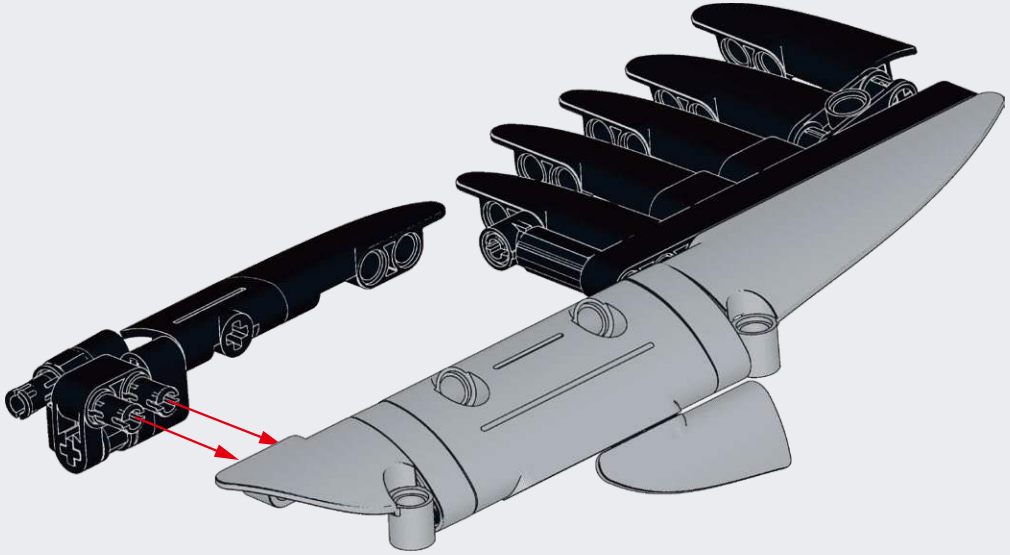

F180

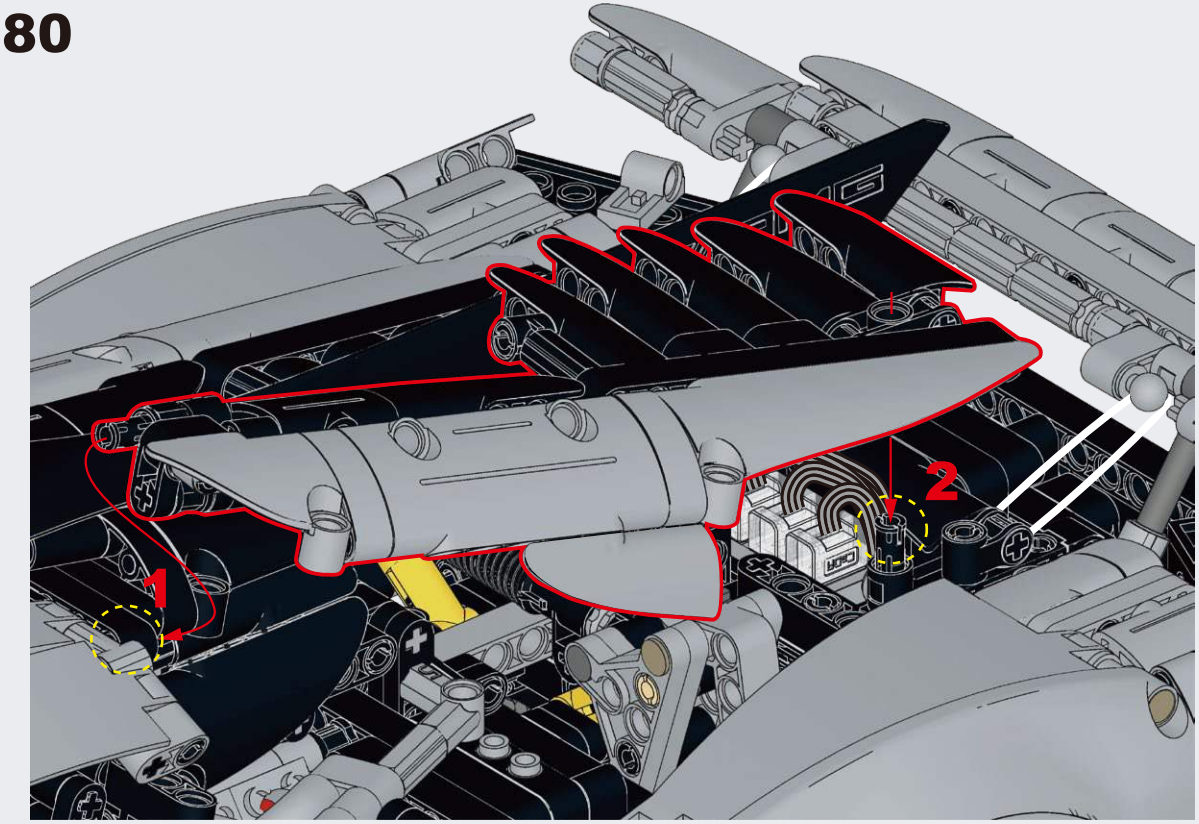

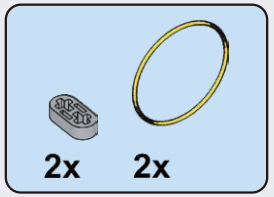

F181

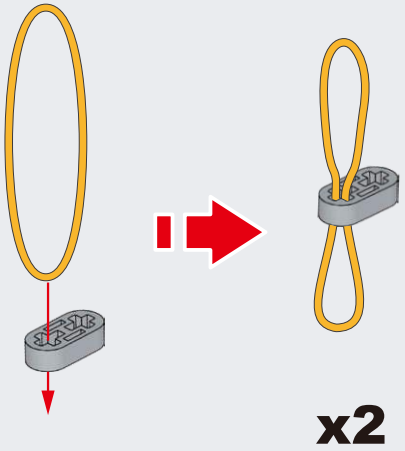

F182

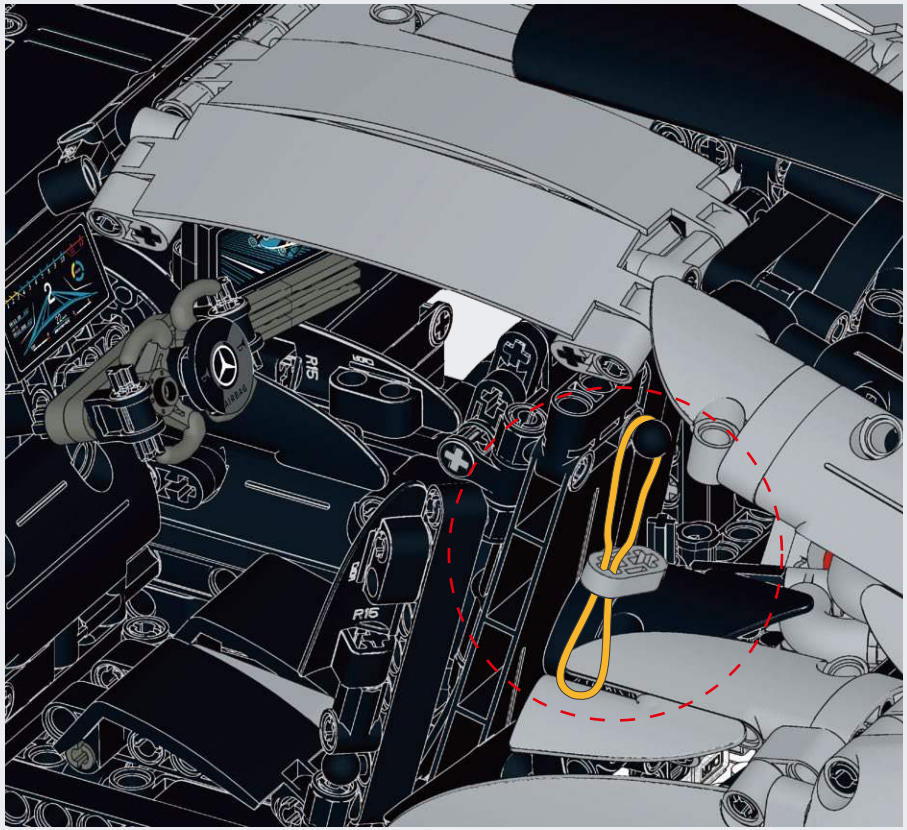

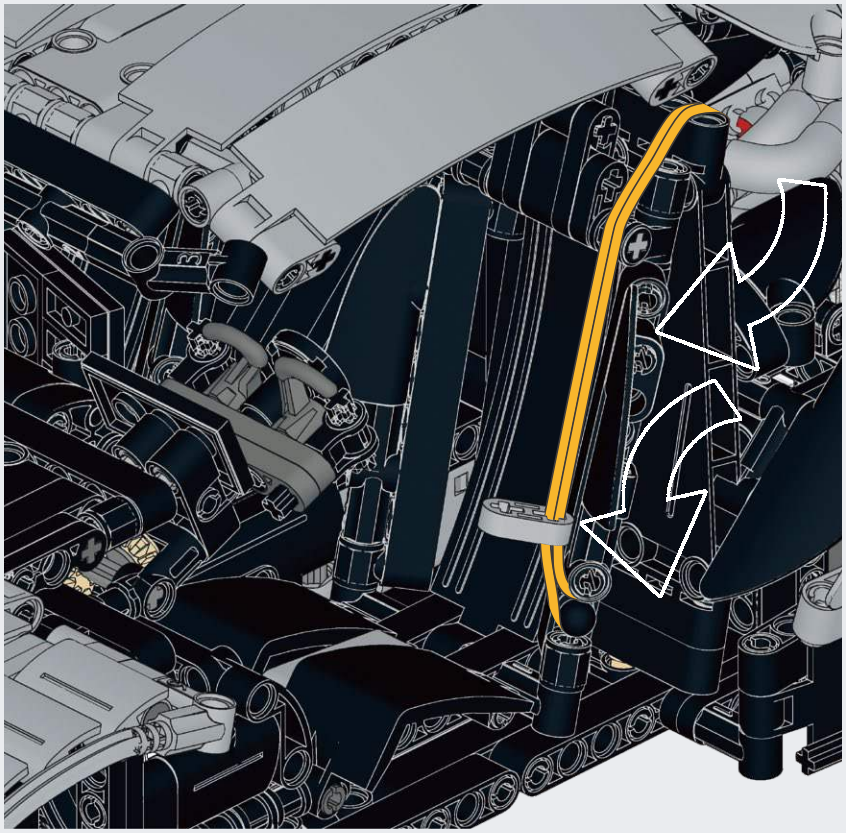

F183

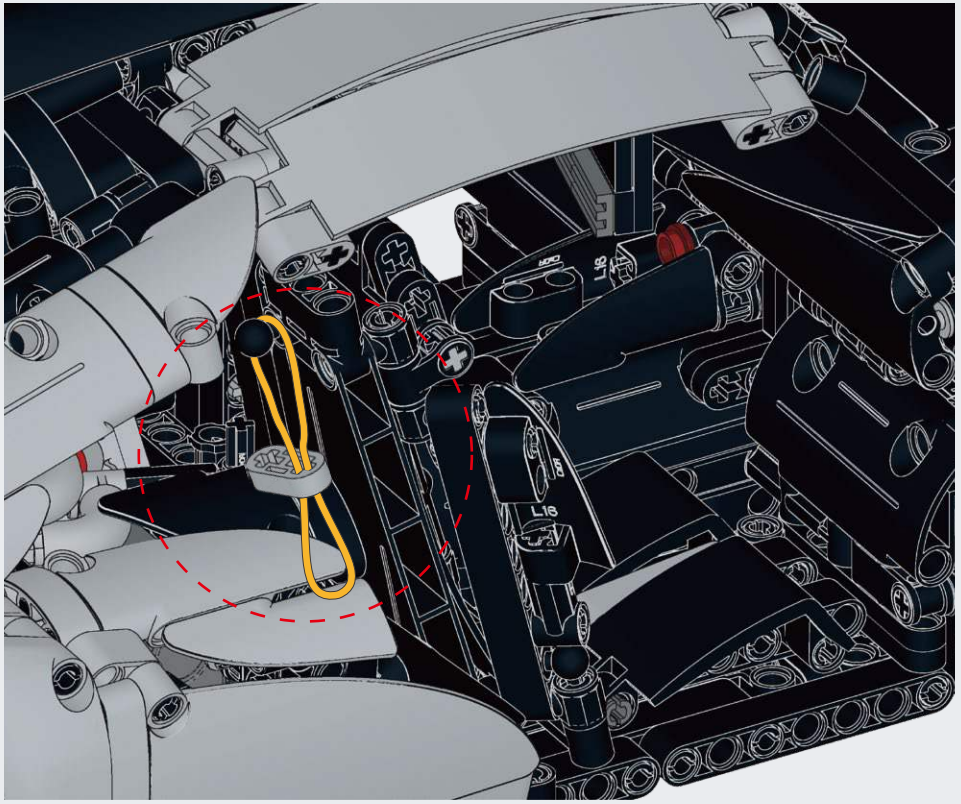

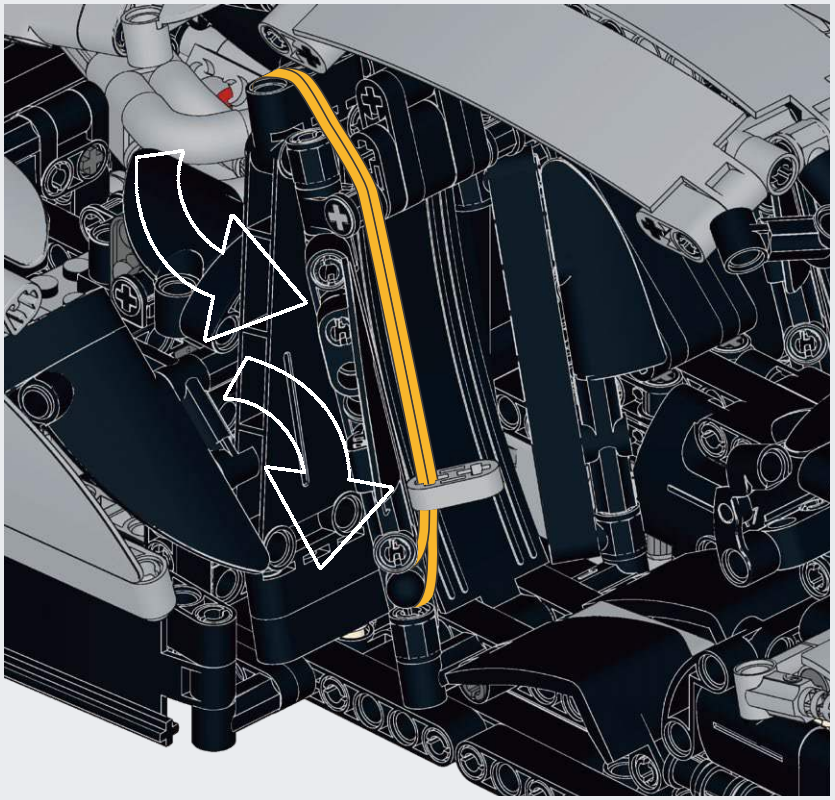

G

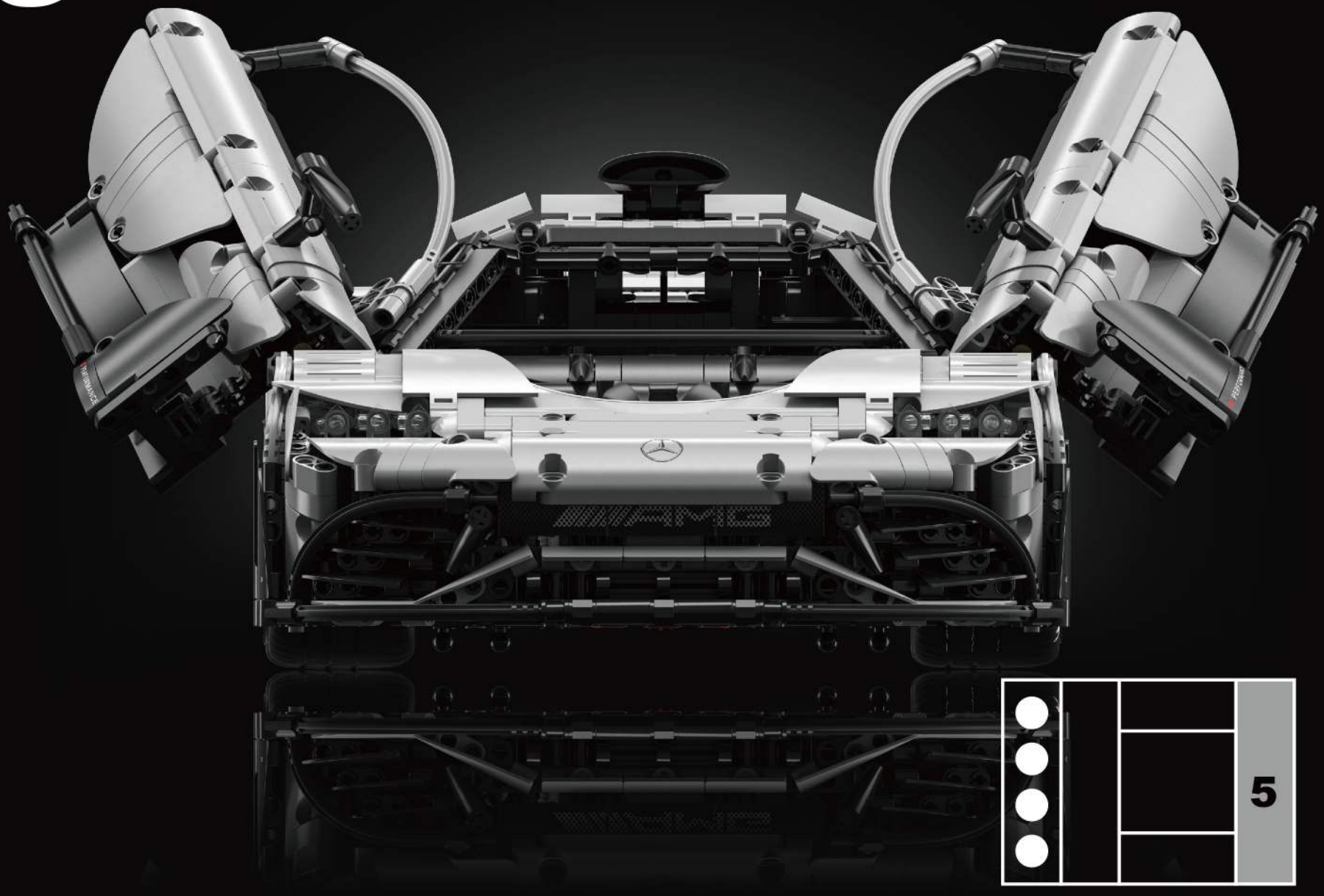

BAG 7

G

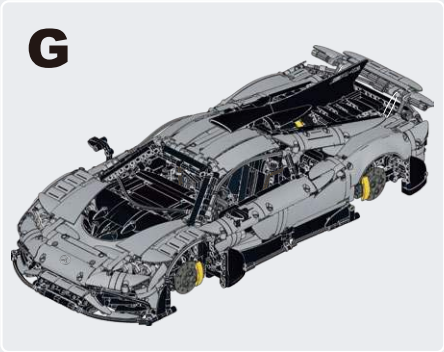

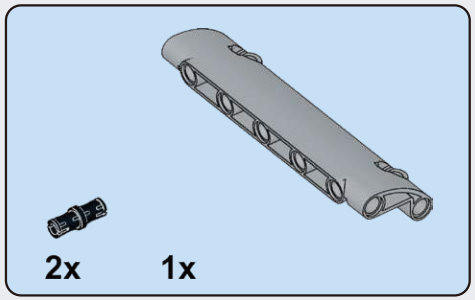

G1

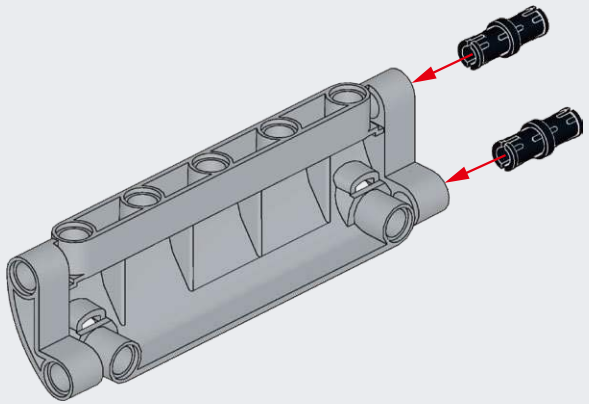

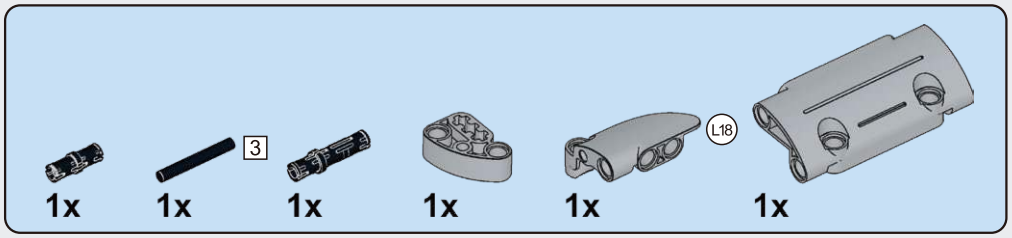

G2

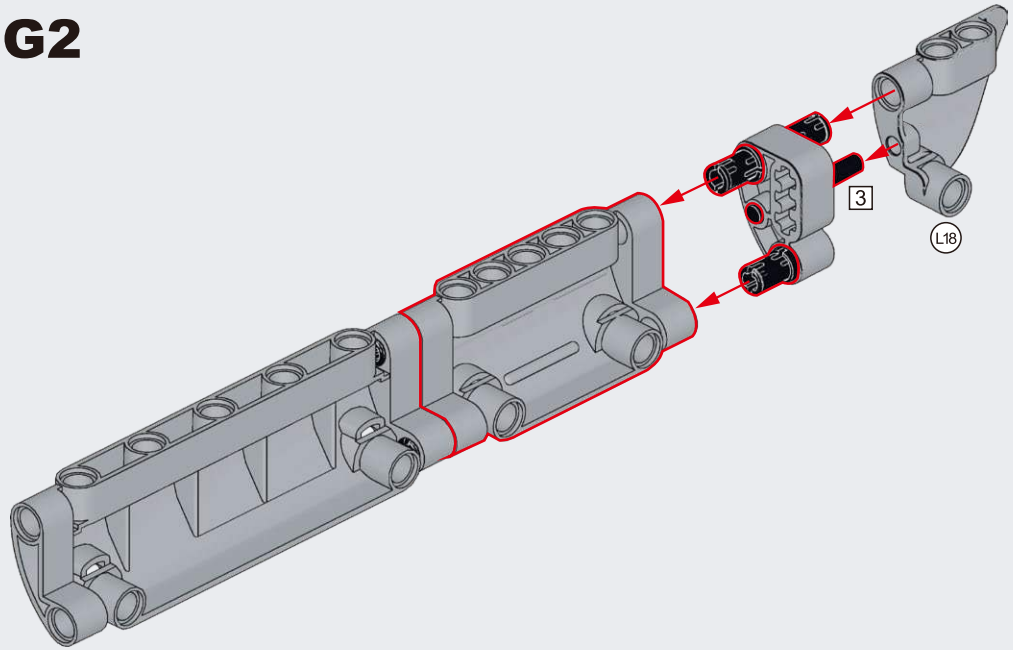

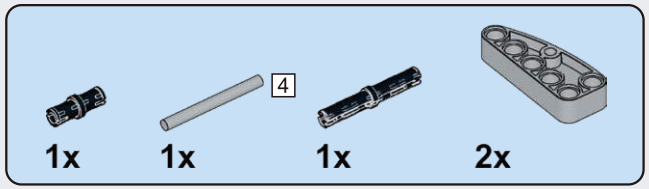

G3

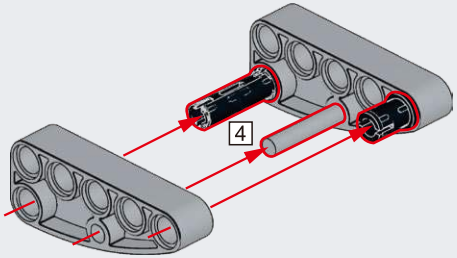

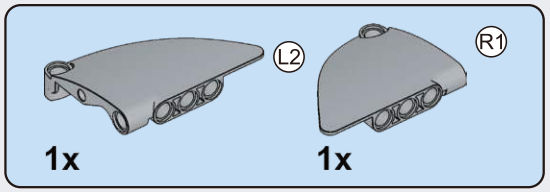

G4

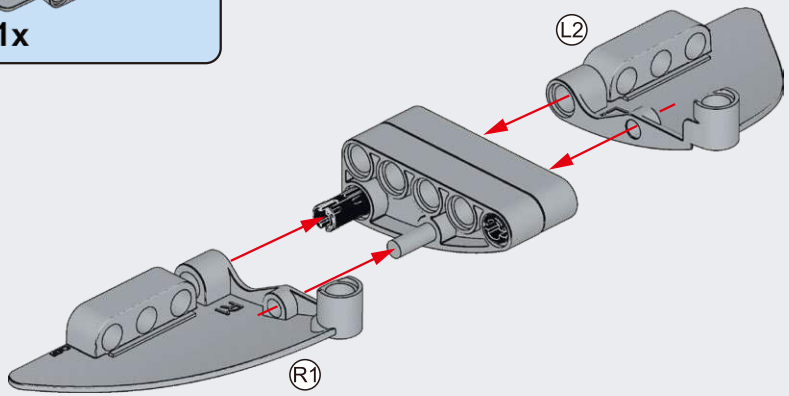

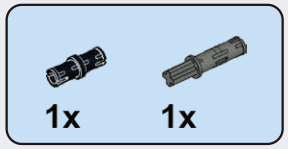

G5

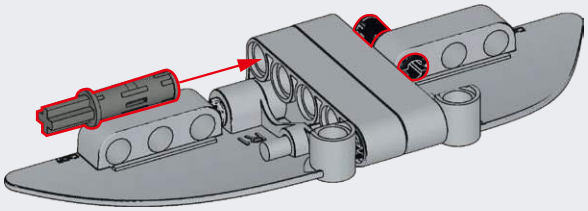

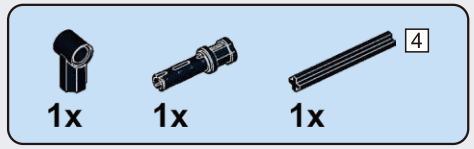

G6

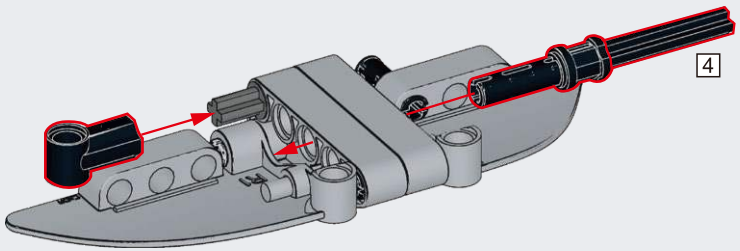

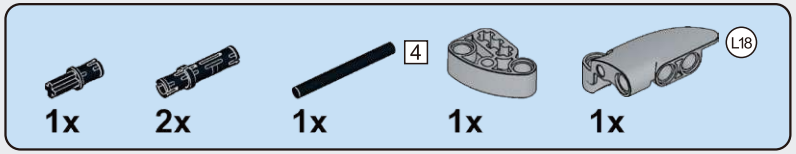

G7

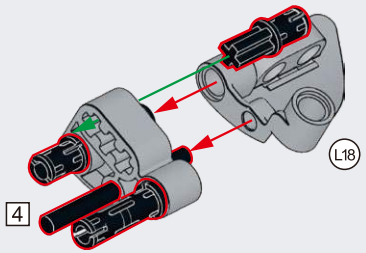

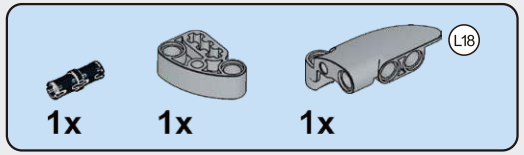

G8

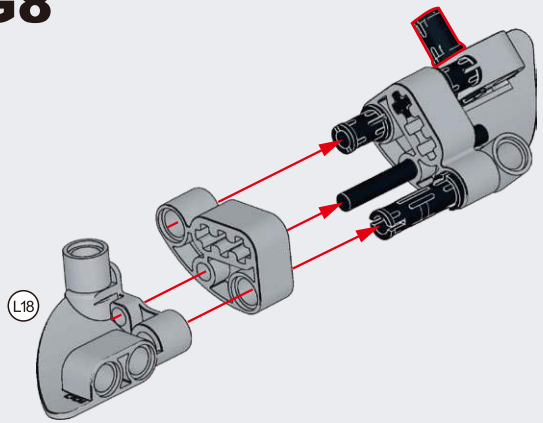

G9

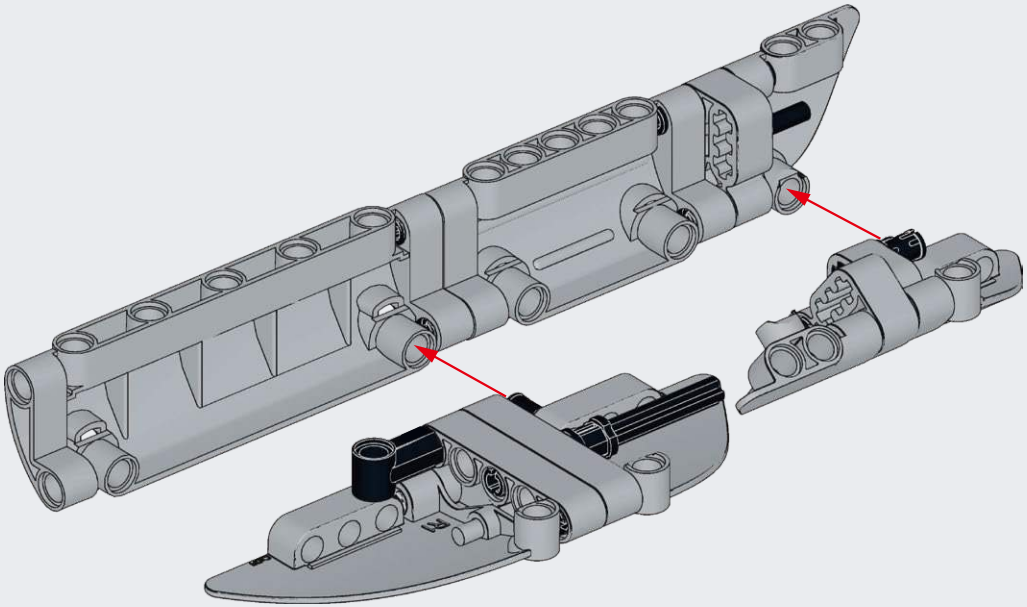

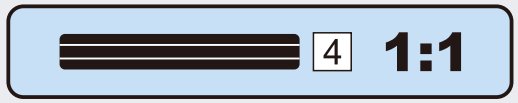

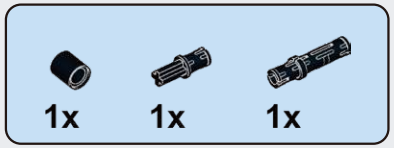

G10

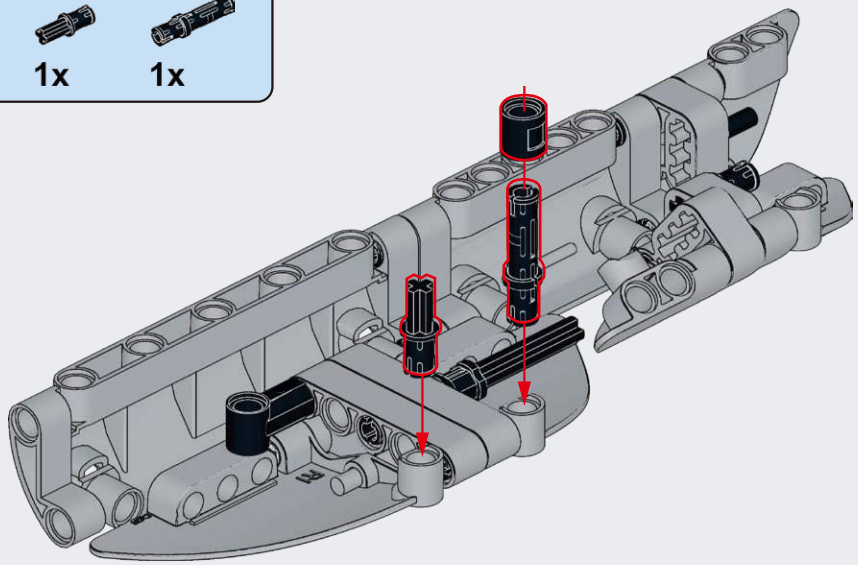

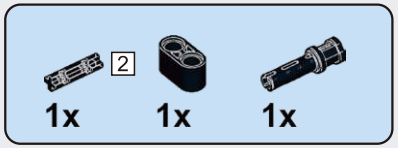

G11

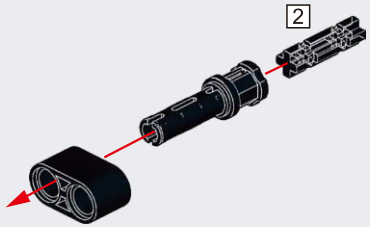

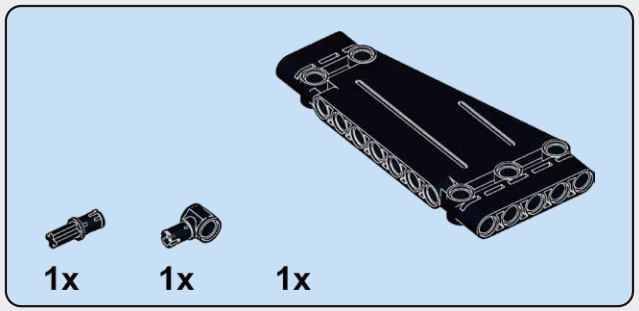

G12

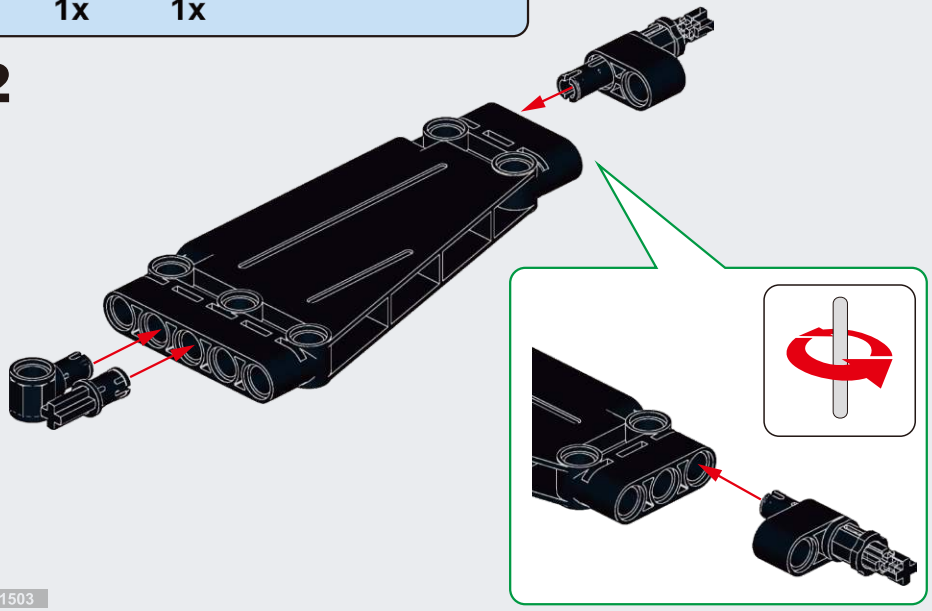

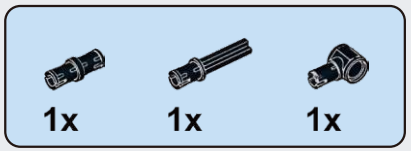

G13

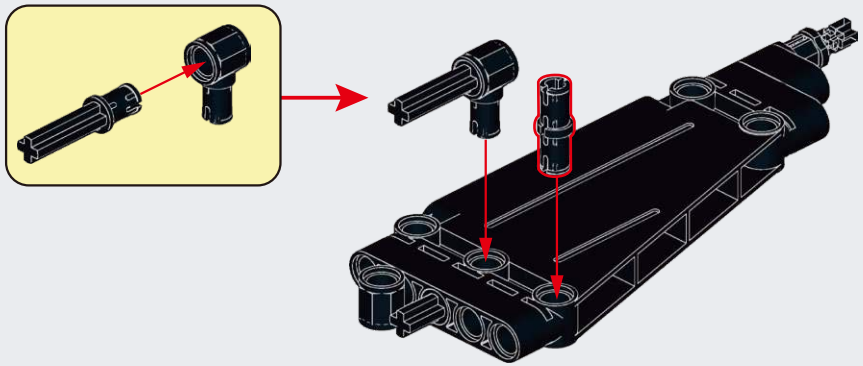

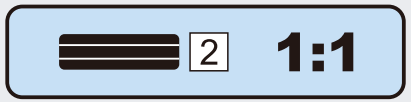

G14

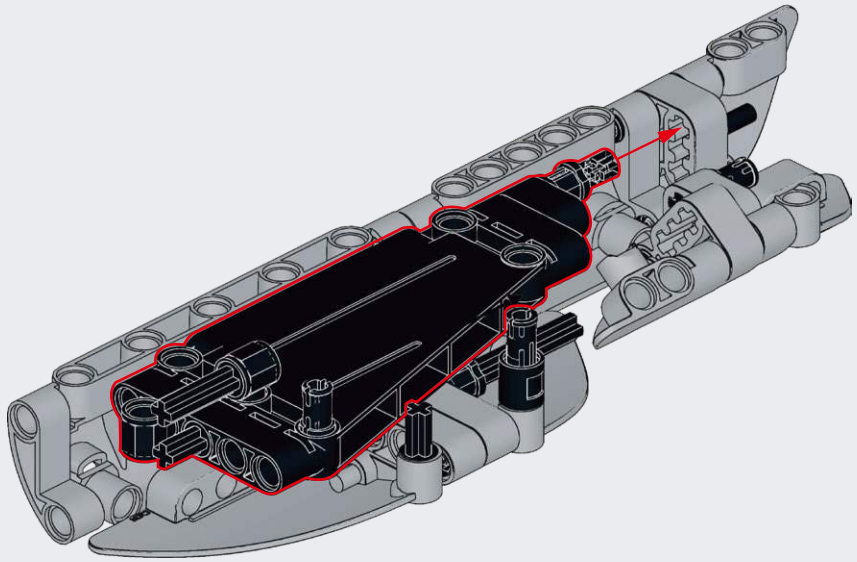

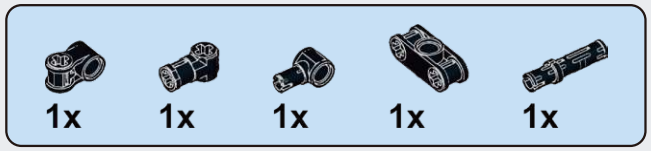

G15

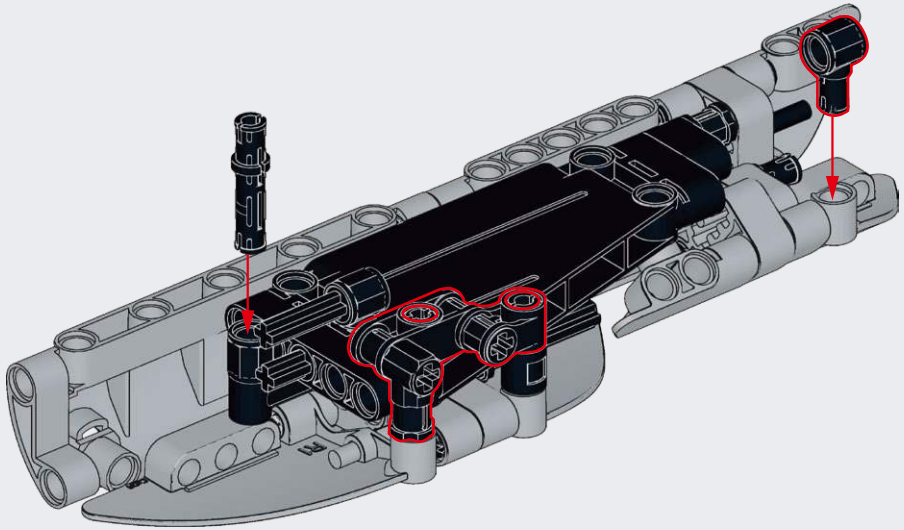

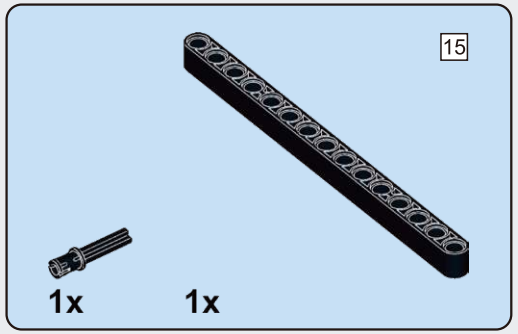

G16

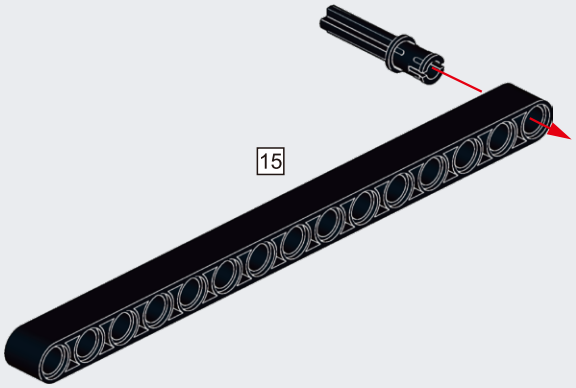

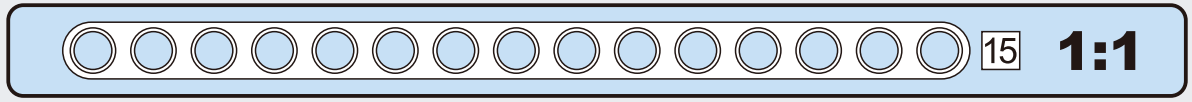

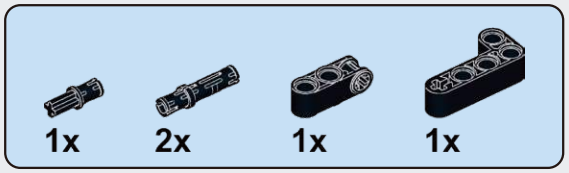

G17

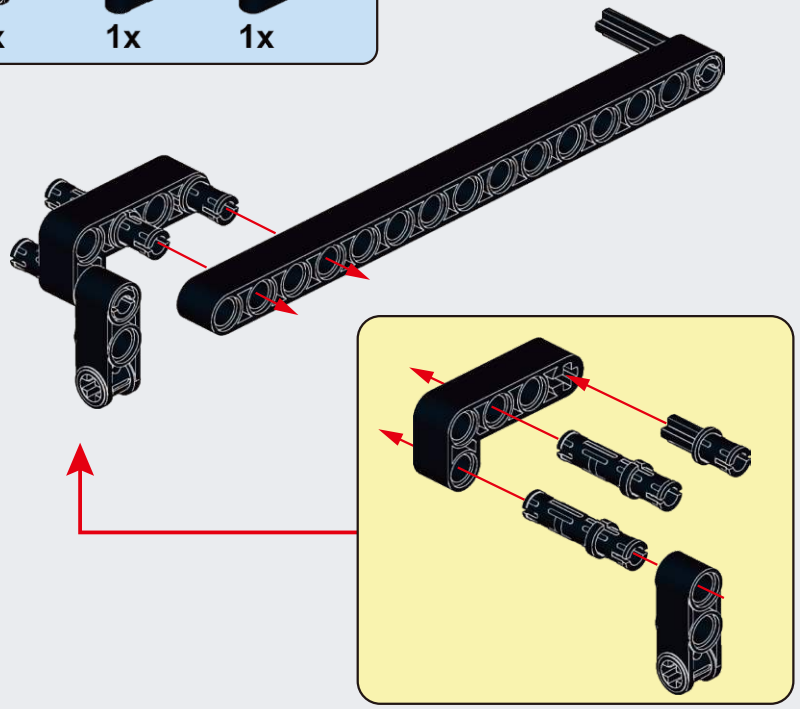

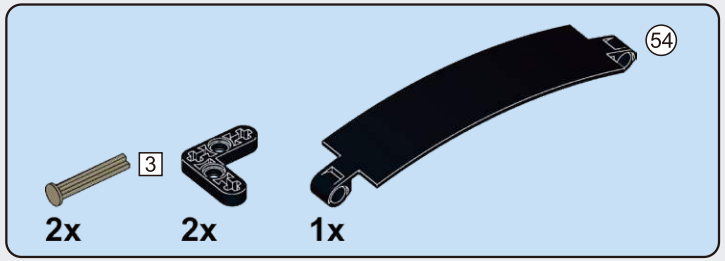

G18

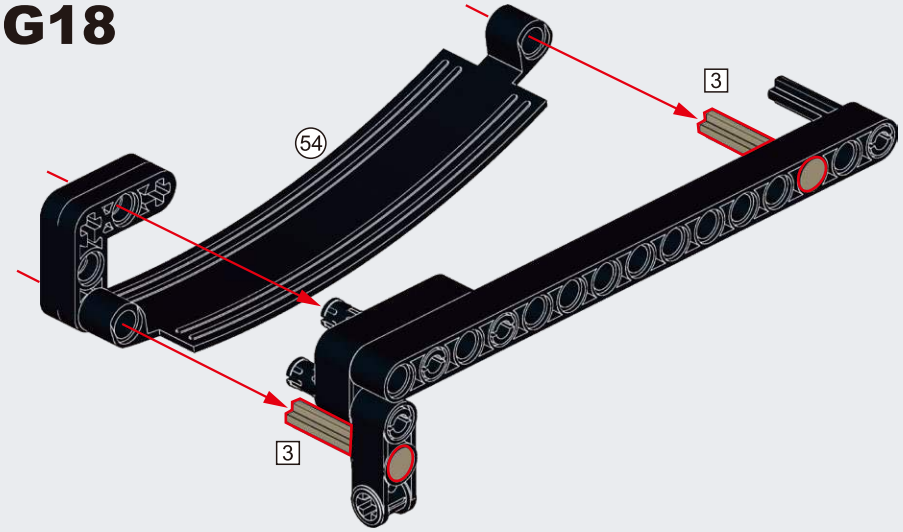

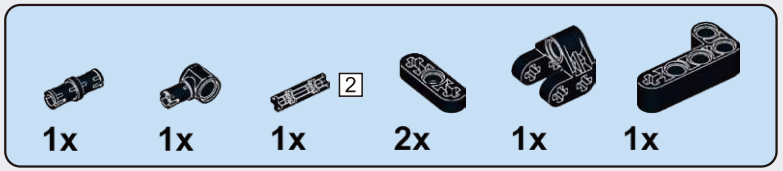

G19

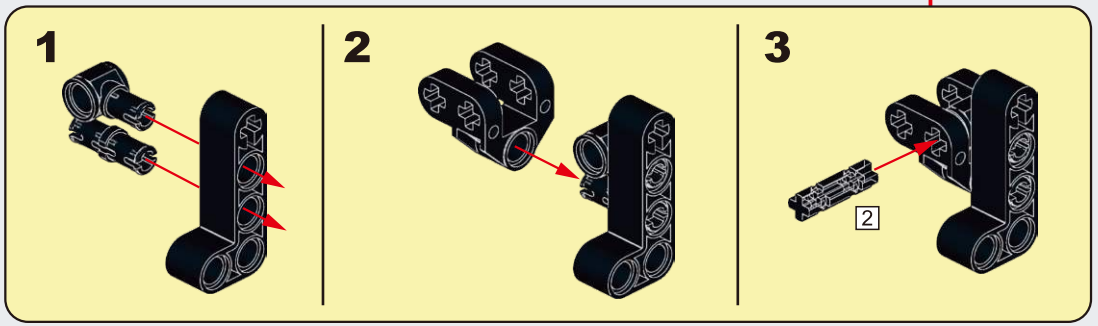

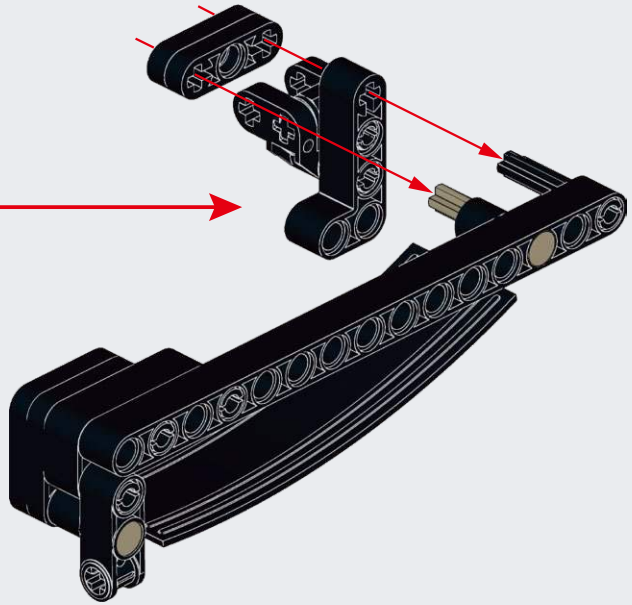

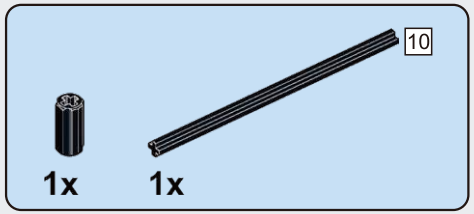

G20

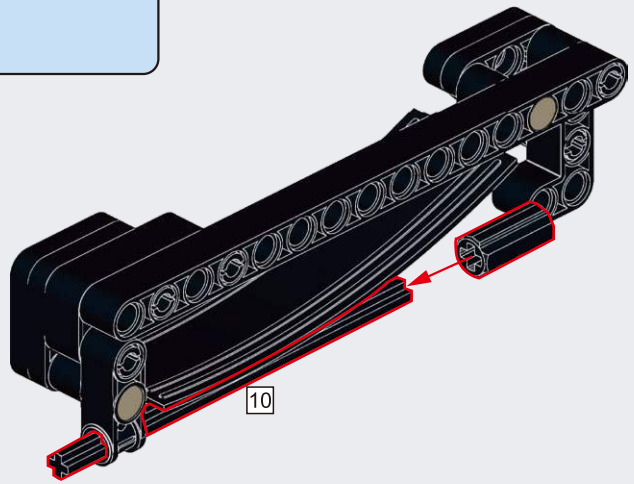

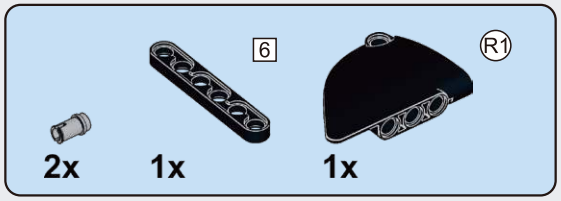

G21

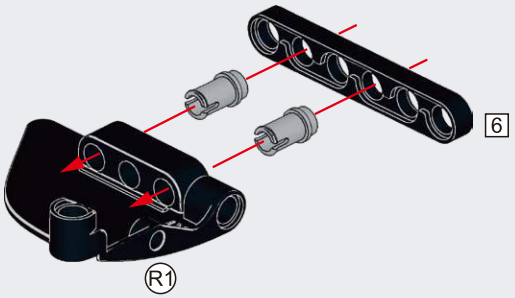

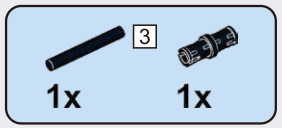

G22

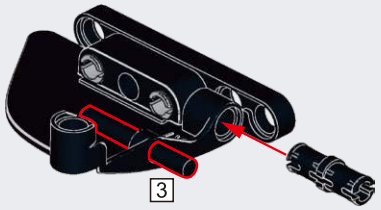

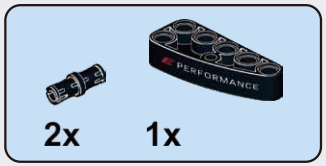

G23

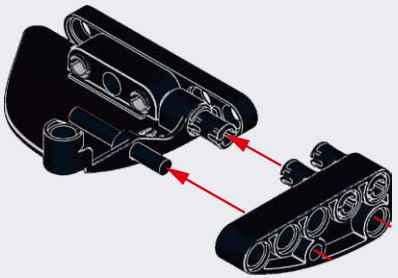

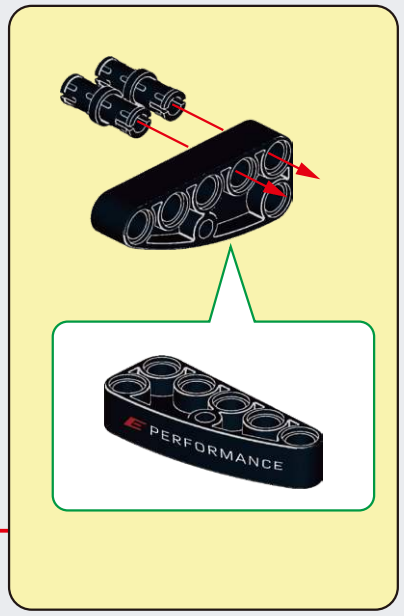

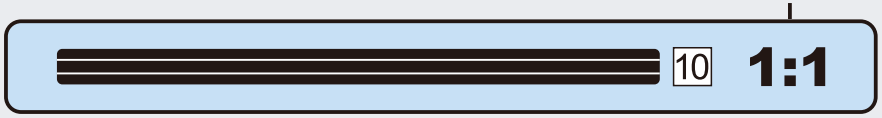

G24

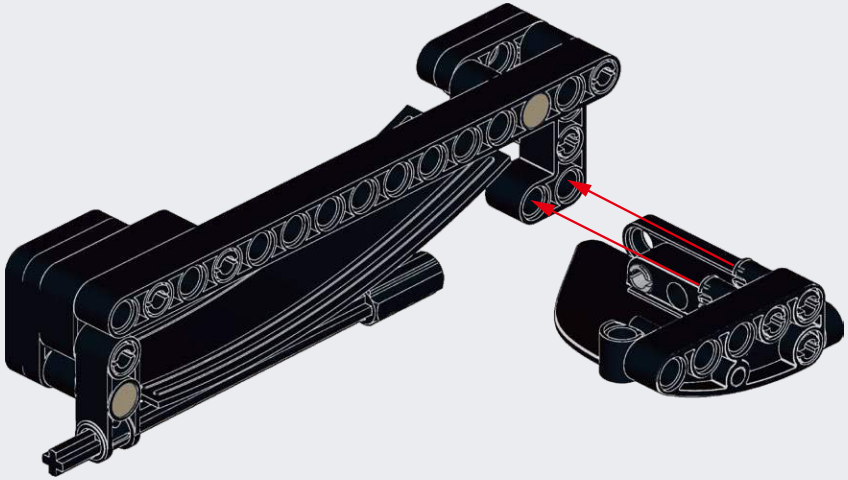

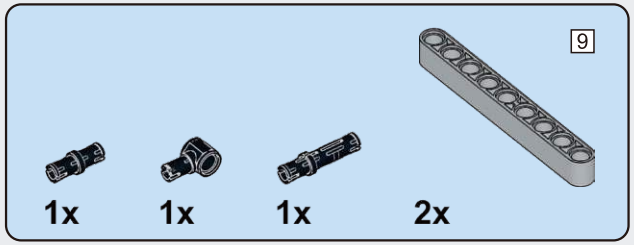

G25

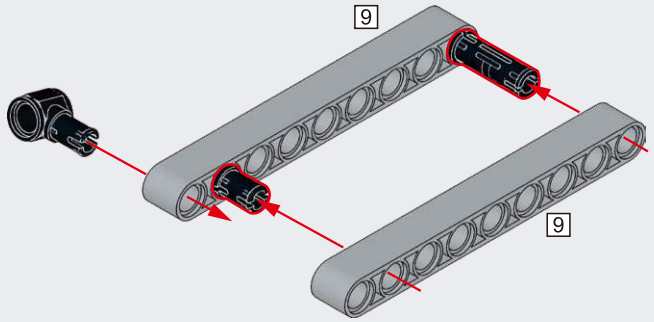

G26

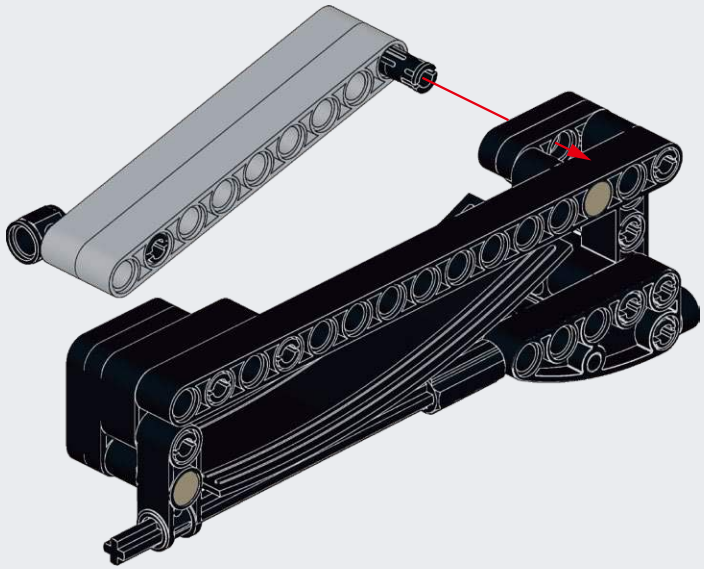

G27

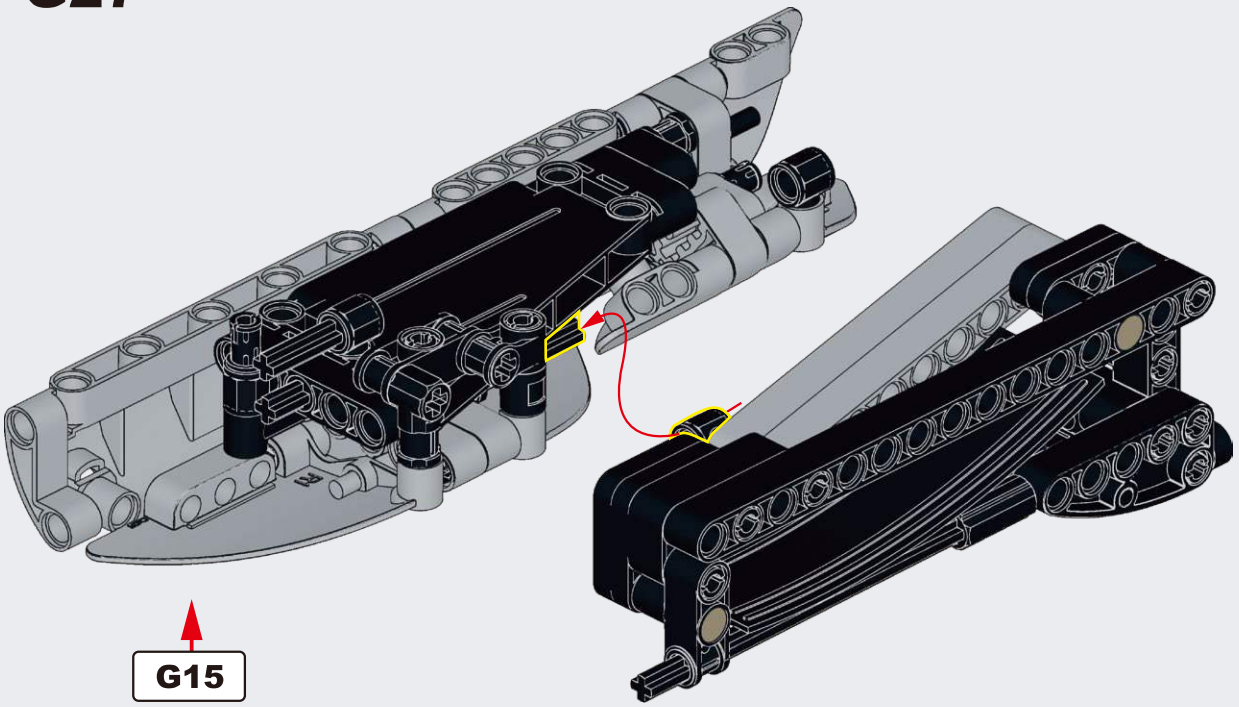

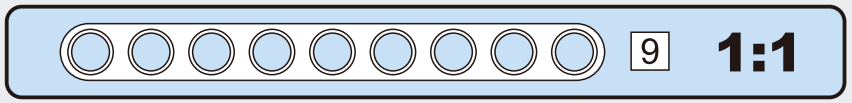

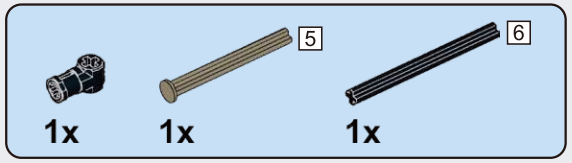

G28

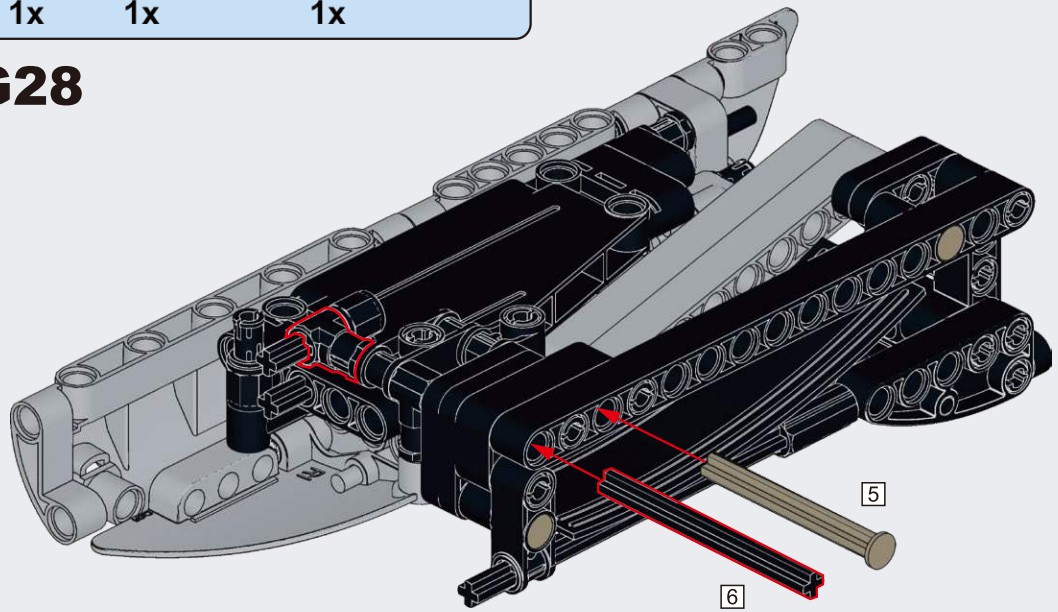

G29

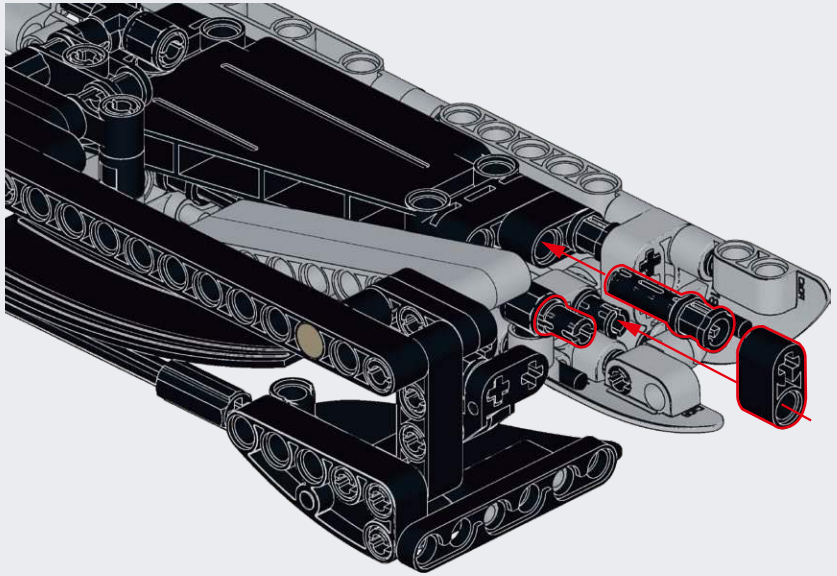

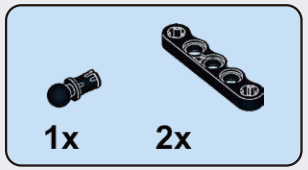

G30

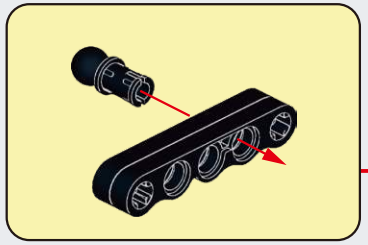

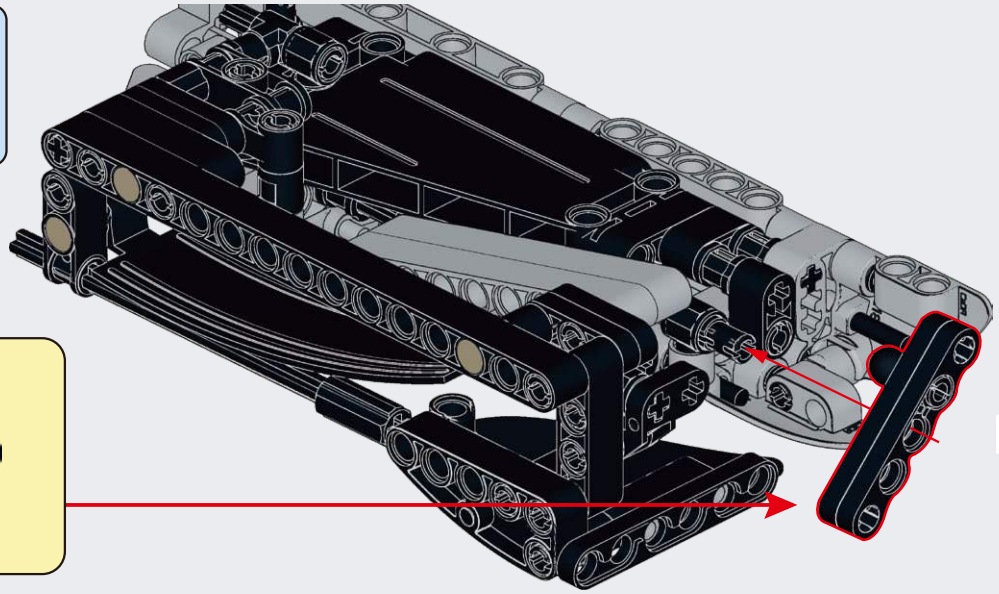

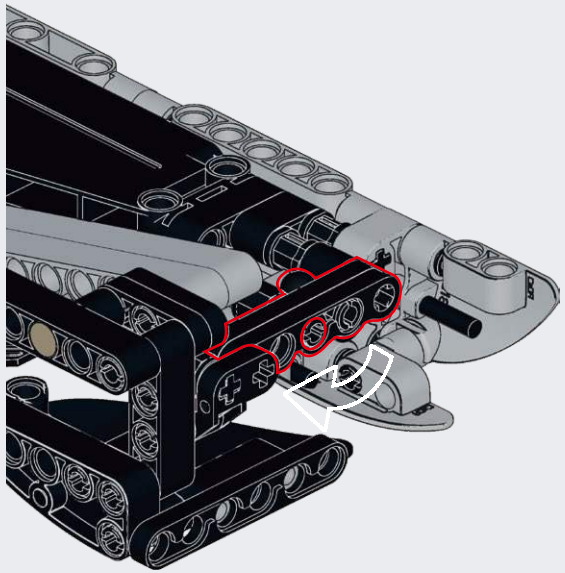

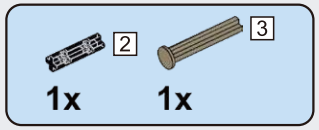

G31

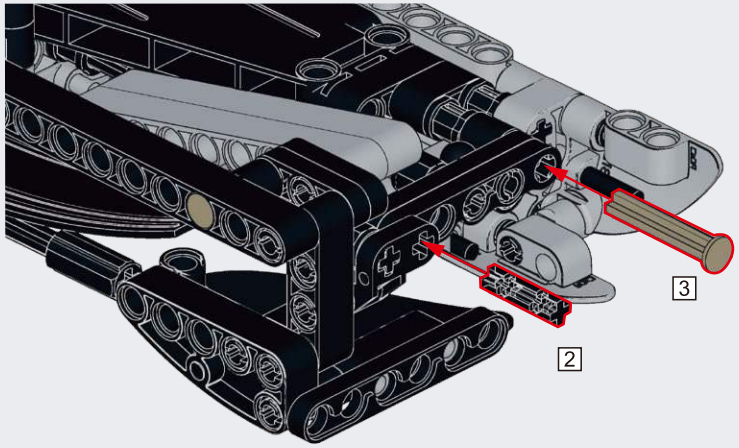

G32

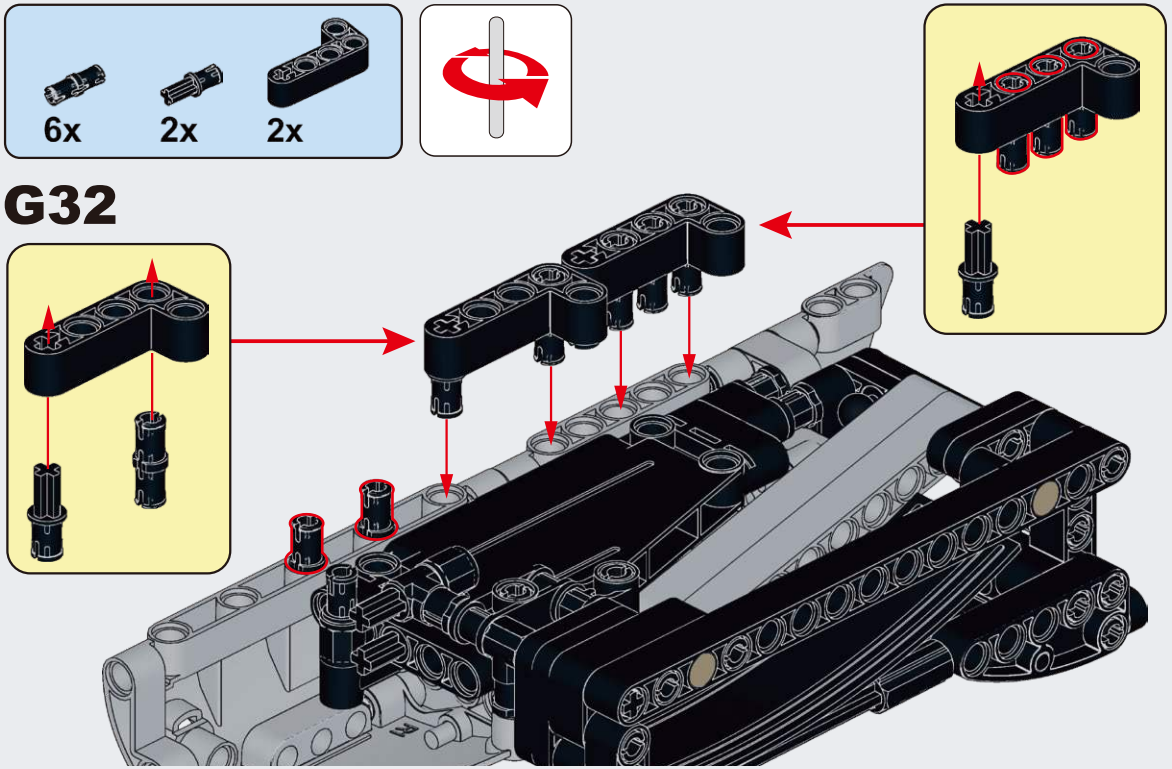

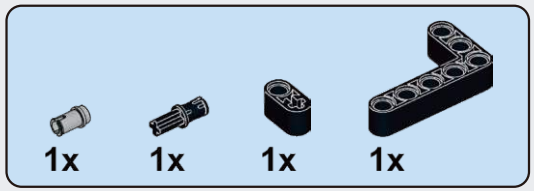

G33

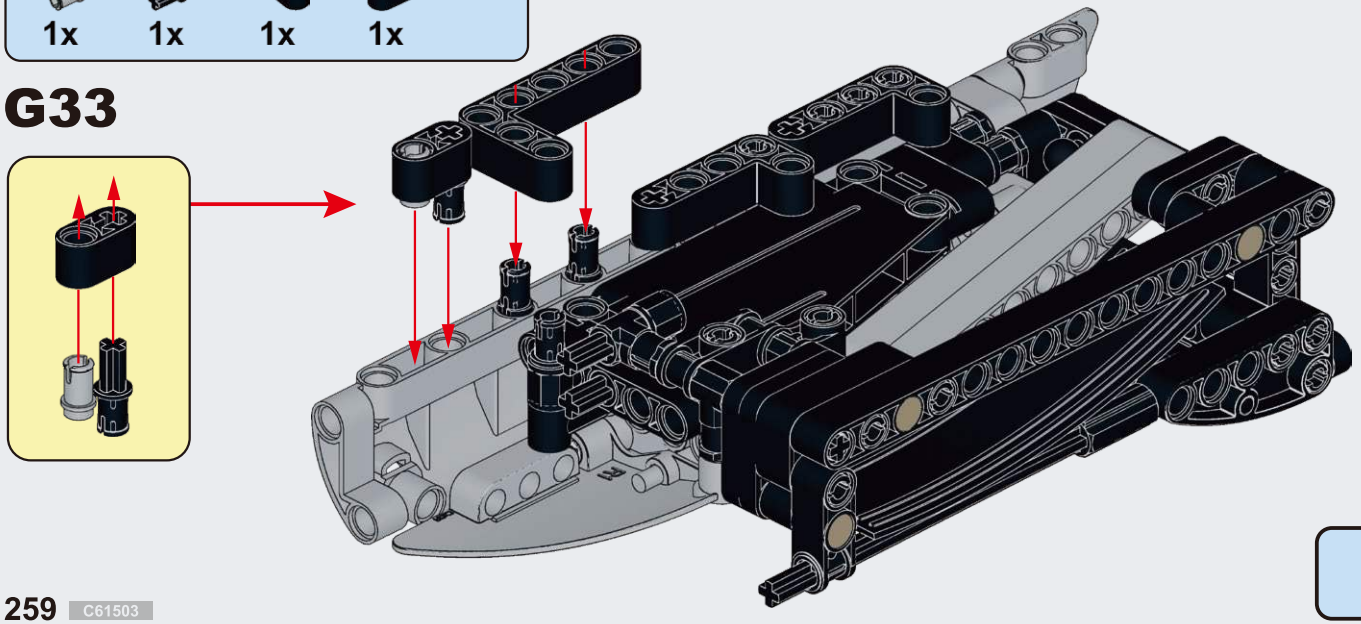

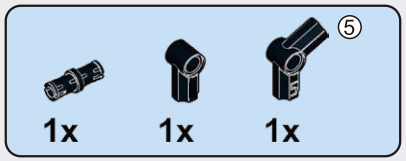

G34

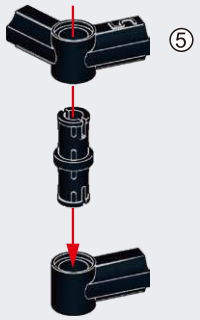

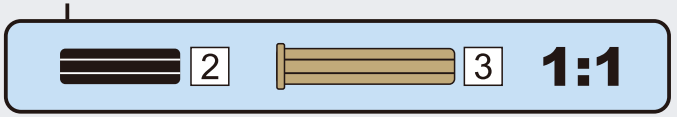

G35

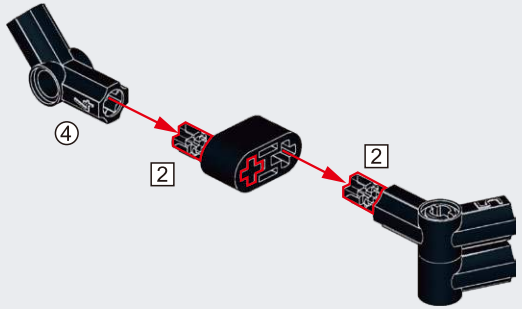

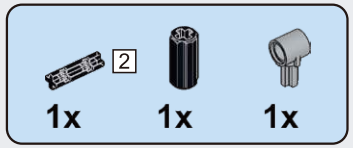

G36

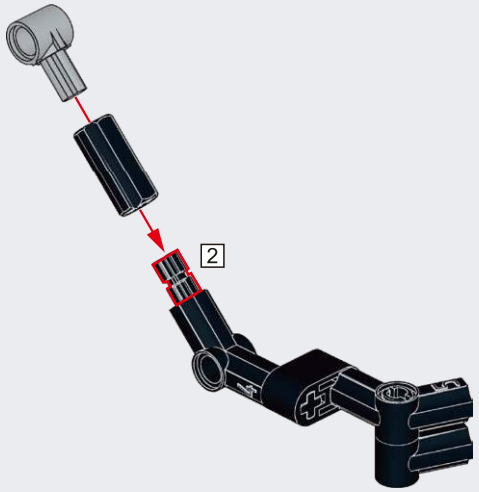

G37

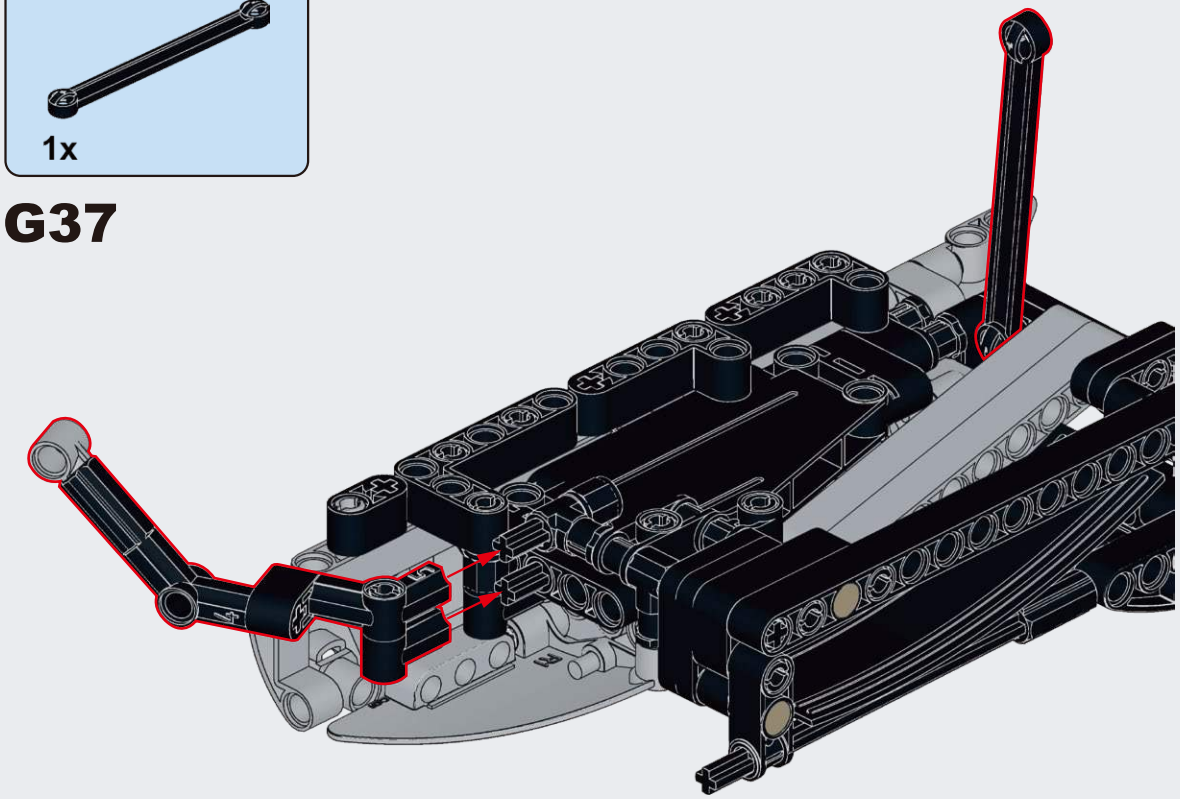

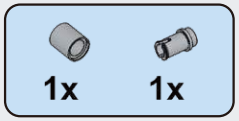

G38

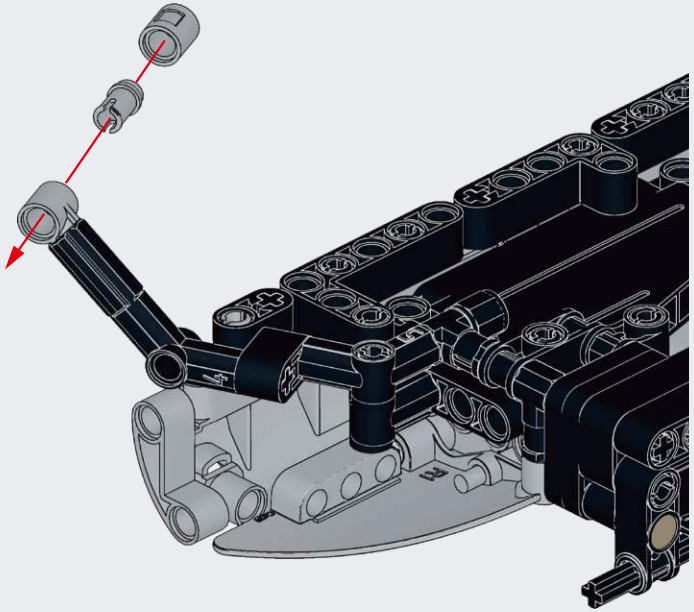

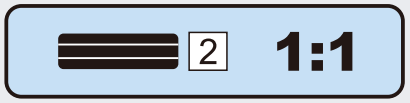

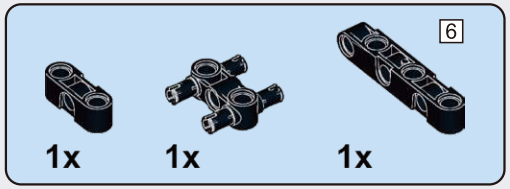

G39

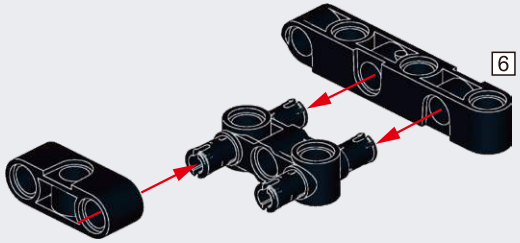

G40

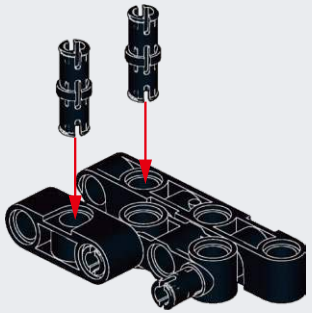

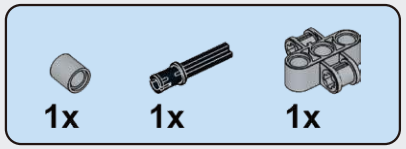

G41

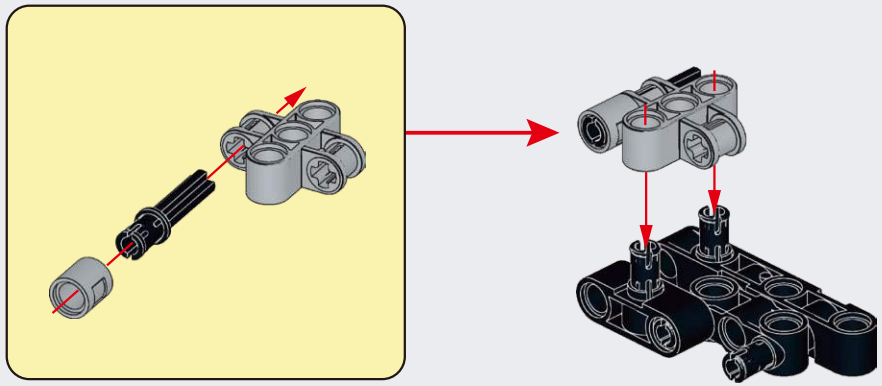

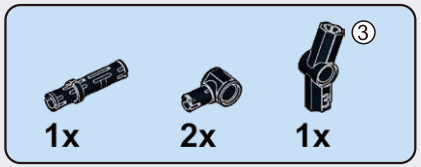

G42

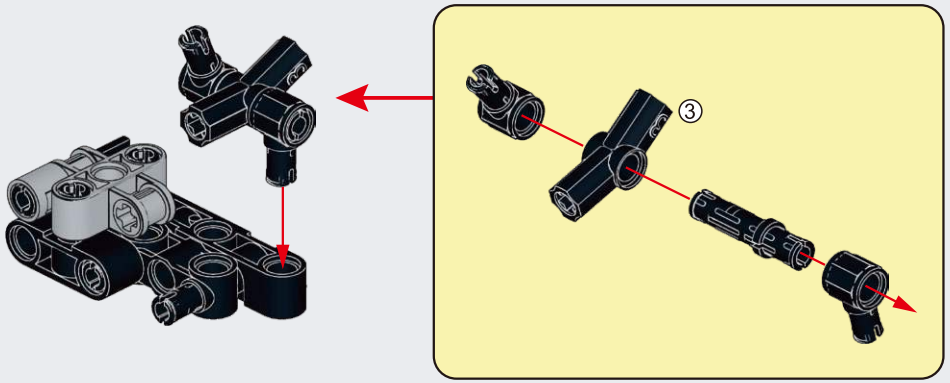

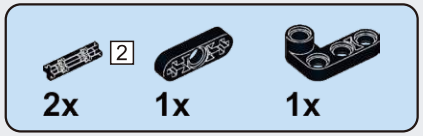

G43

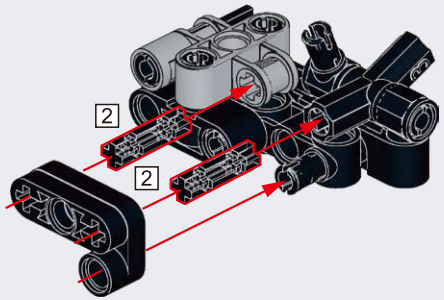

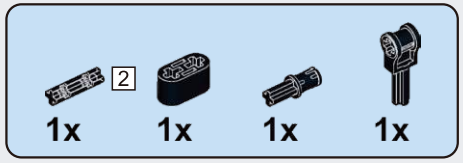

G44

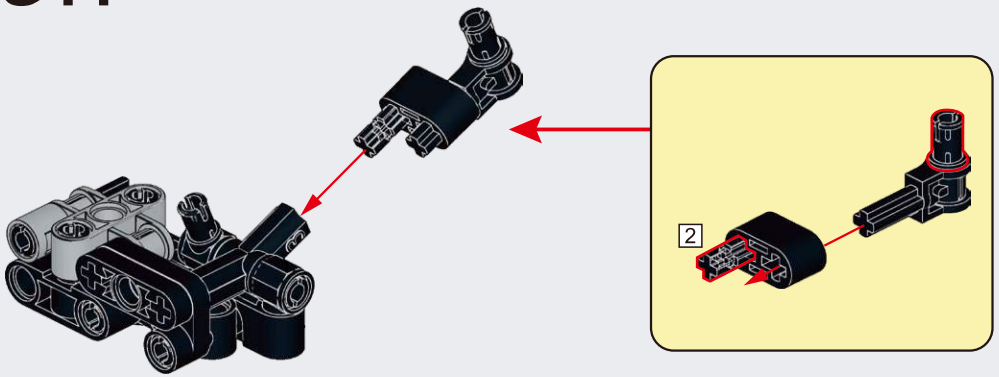

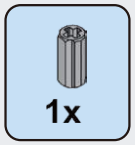

G45

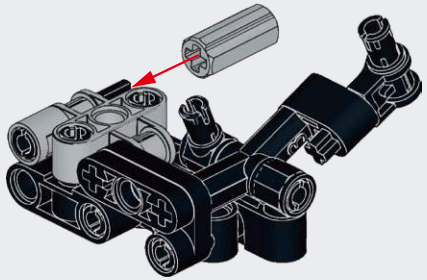

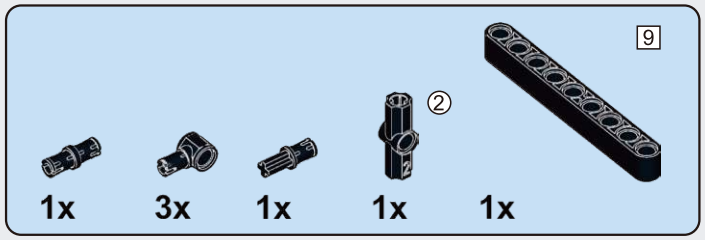

G46

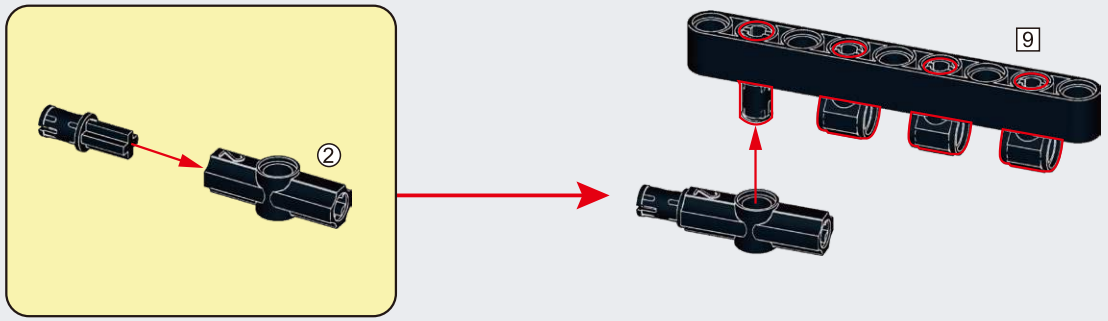

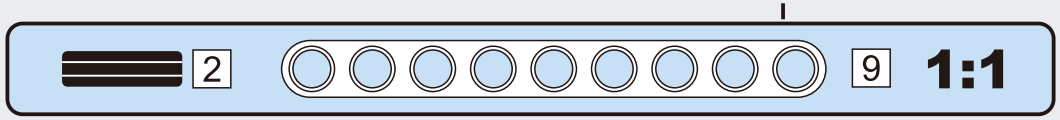

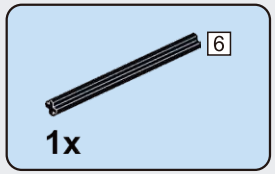

G47

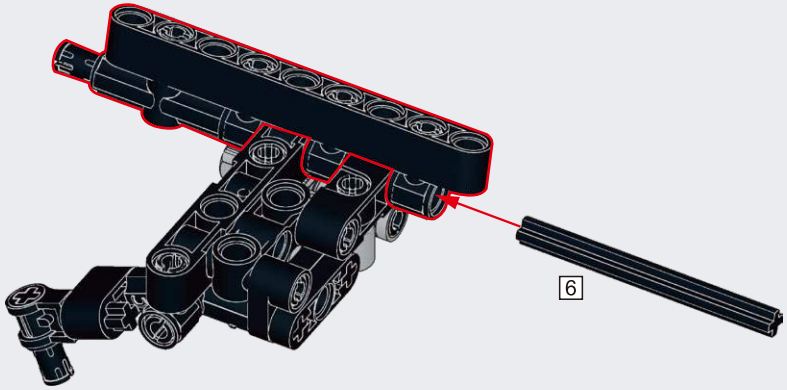

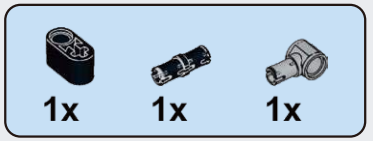

G48

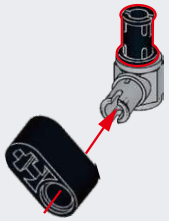

G49

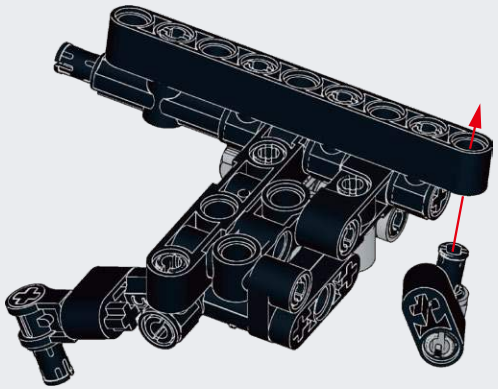

G50

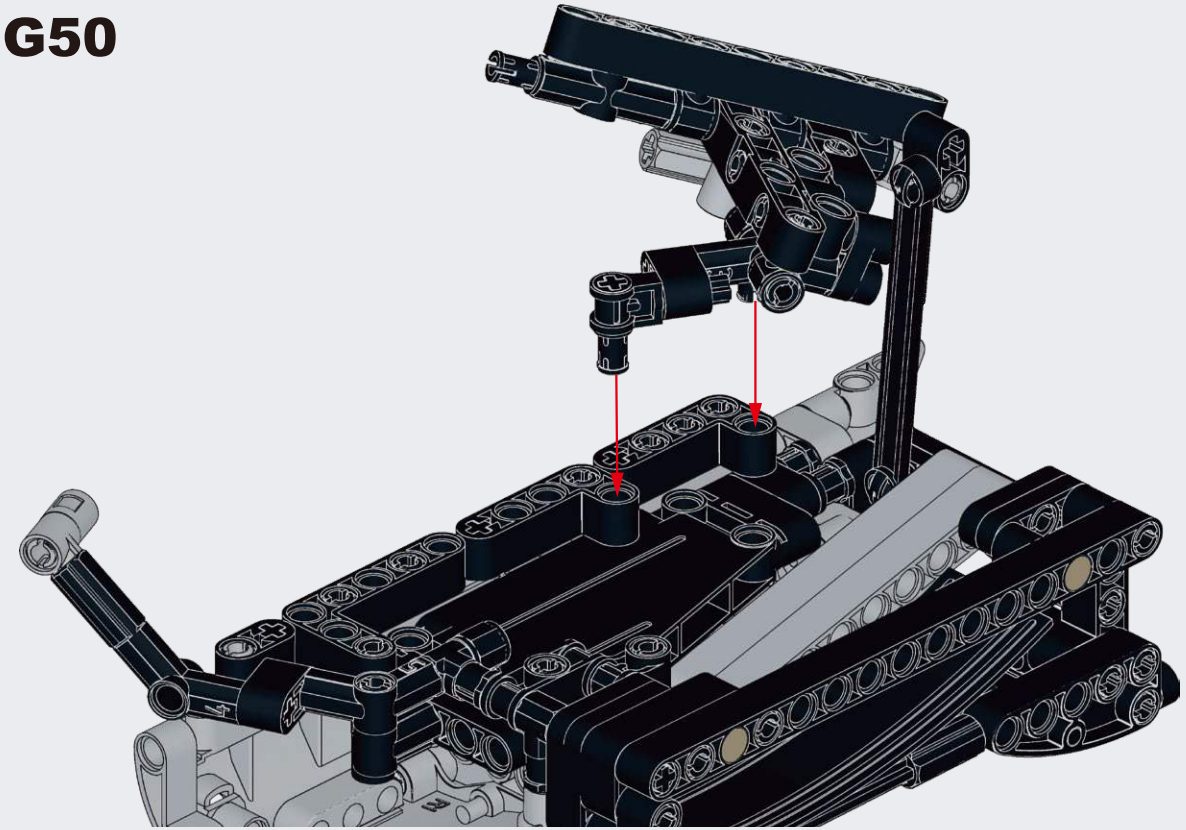

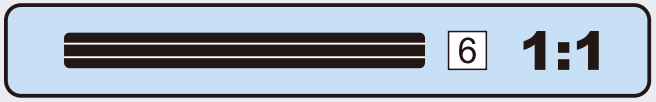

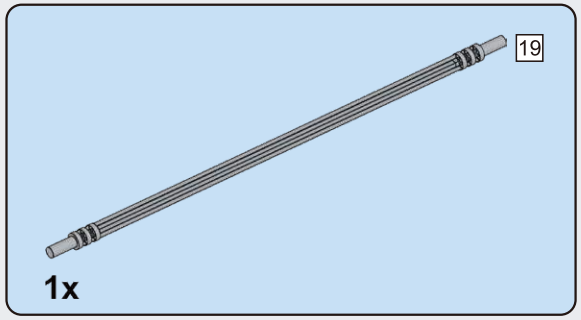

G51

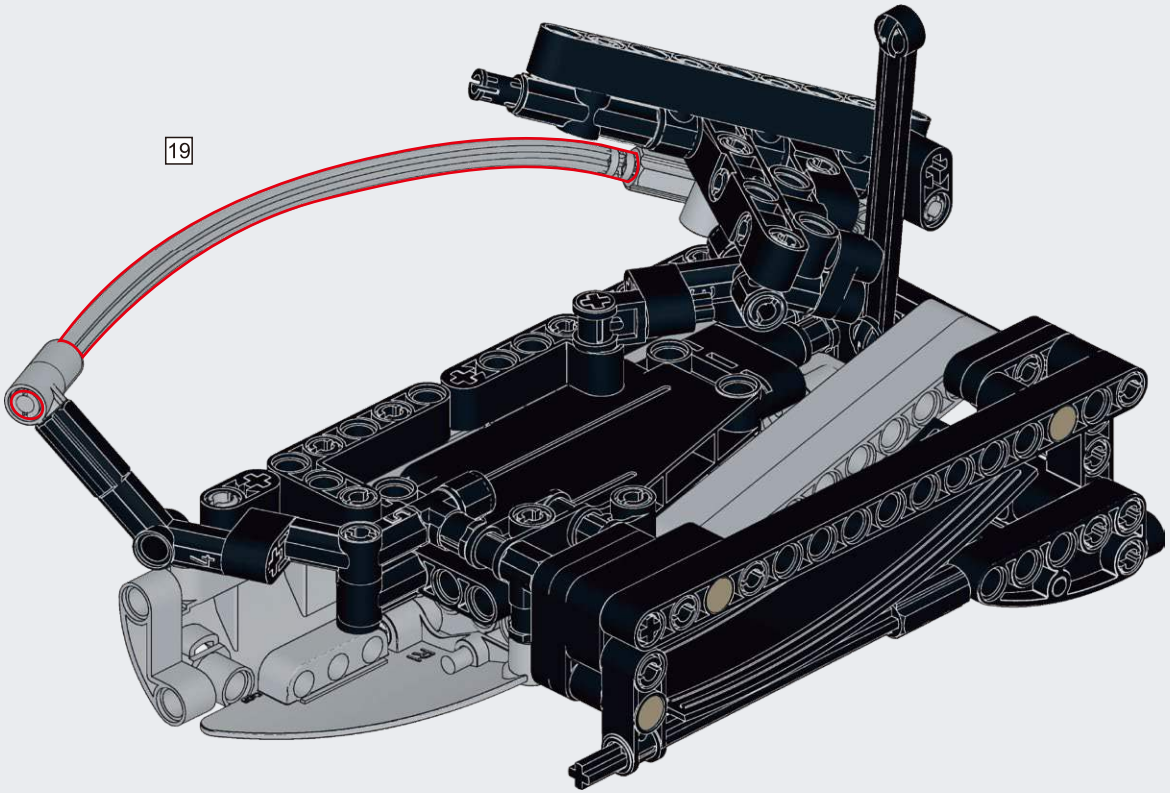

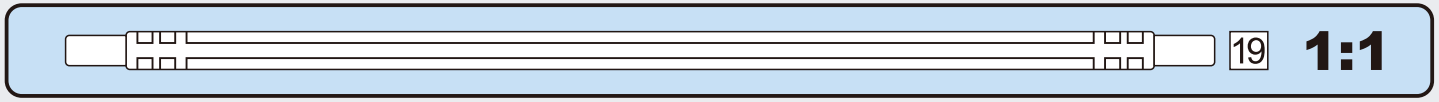

G52

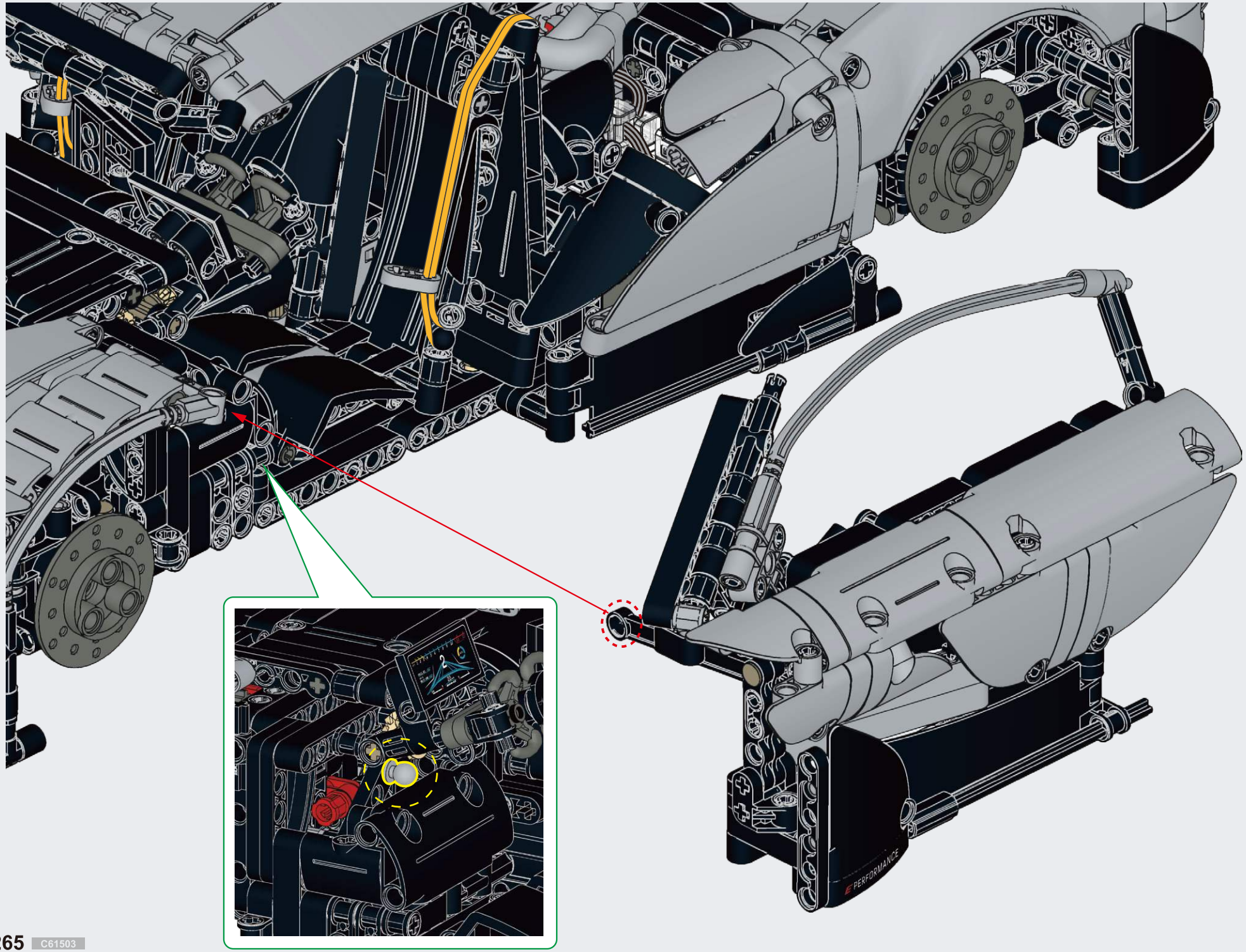

G53

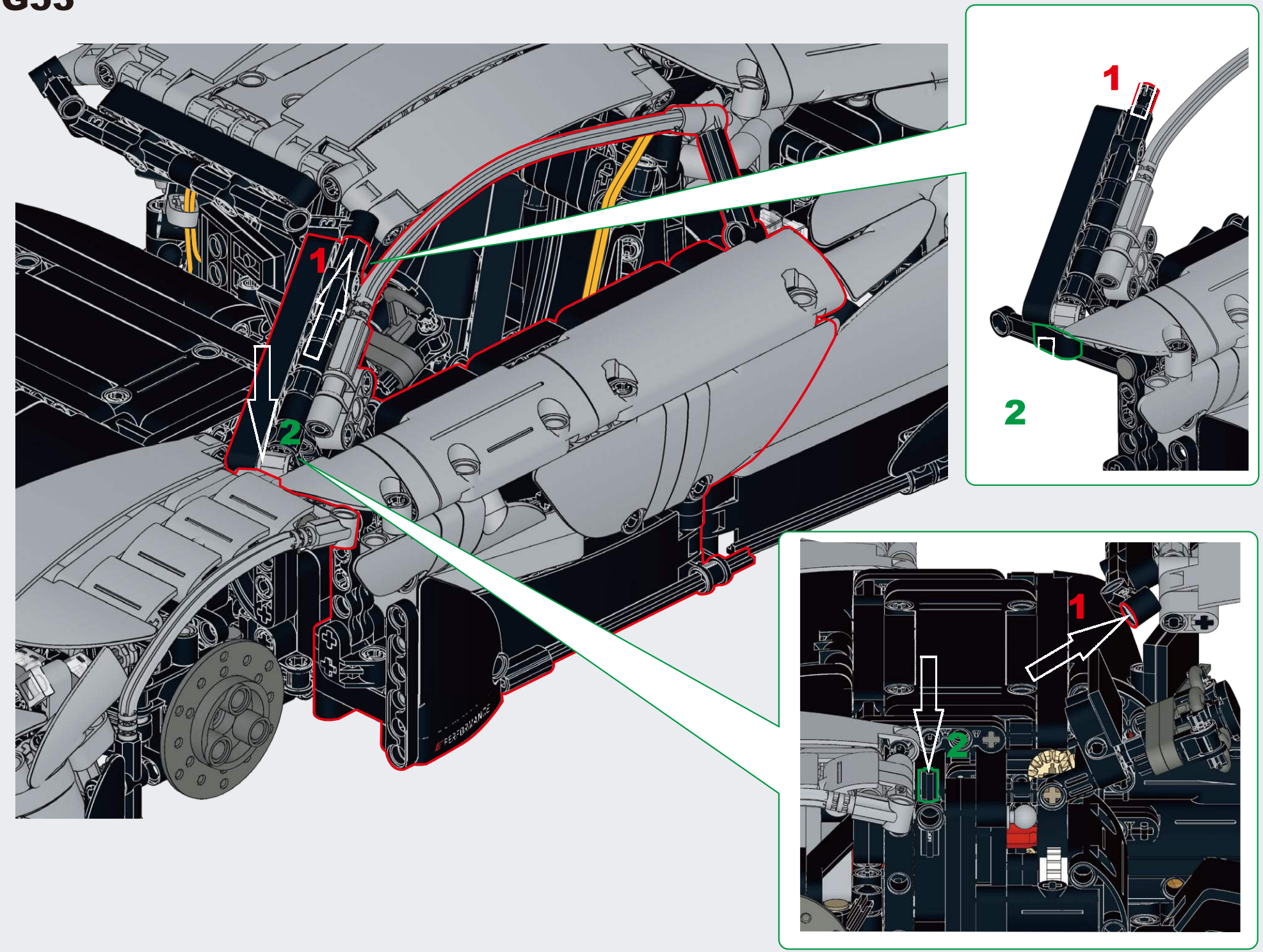

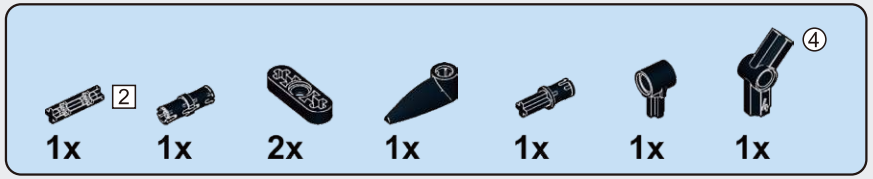

G54

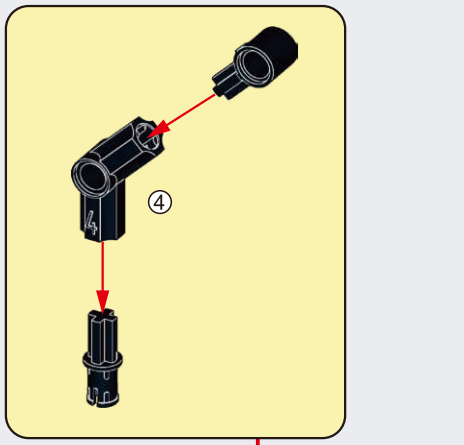

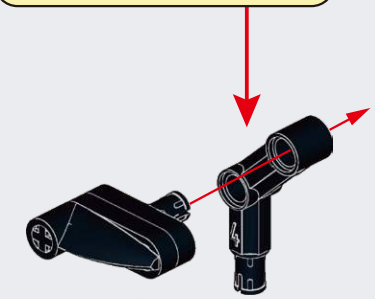

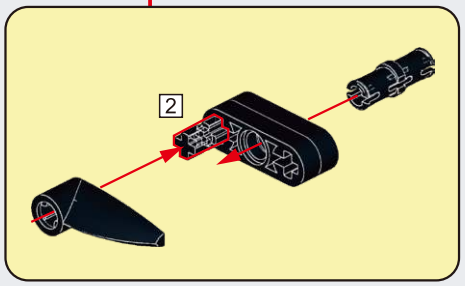

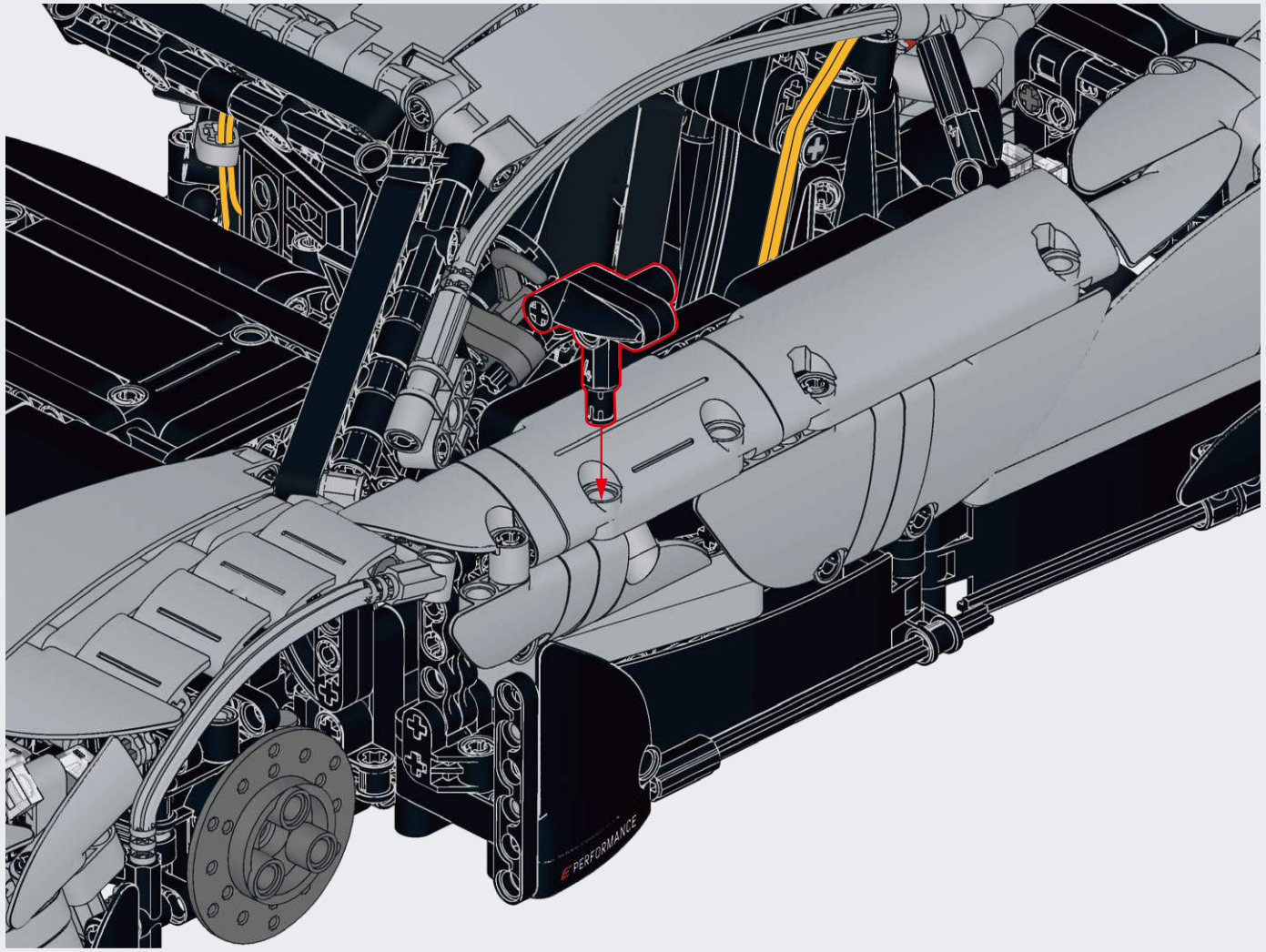

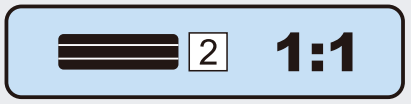

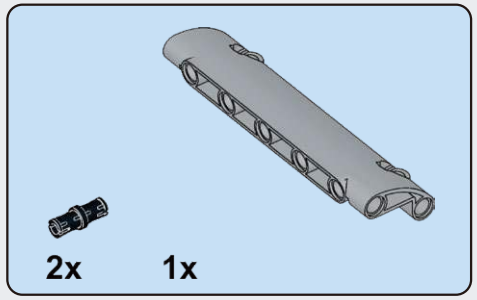

G55

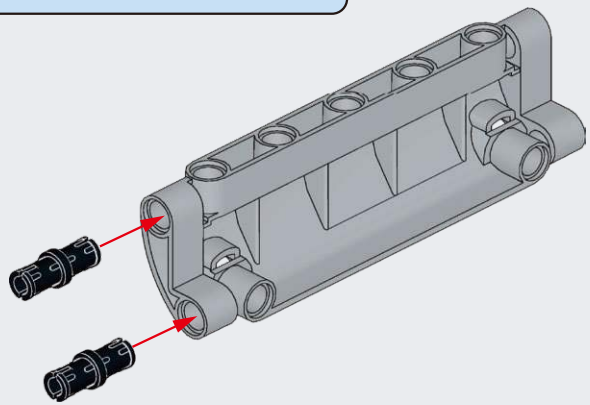

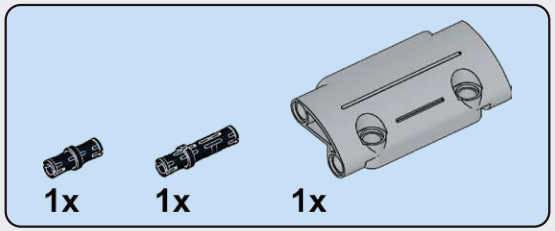

G56

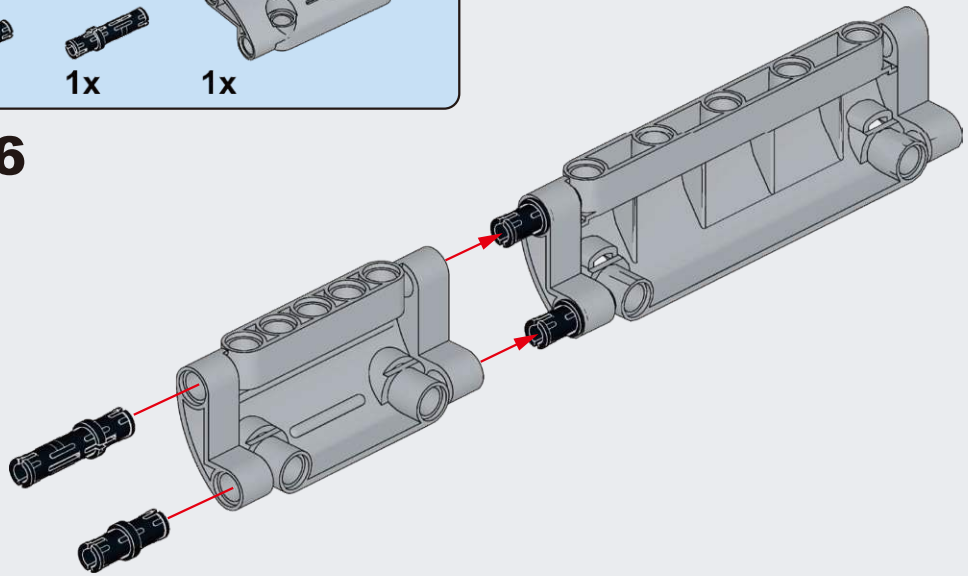

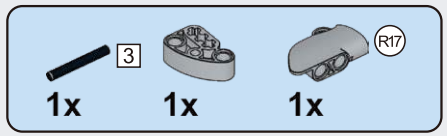

G57

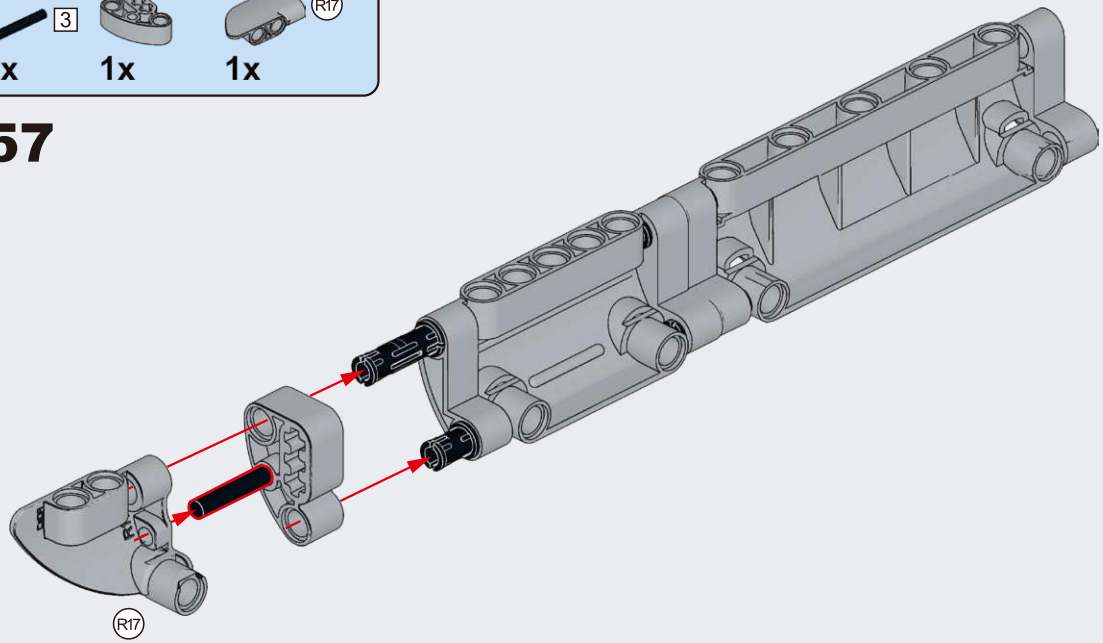

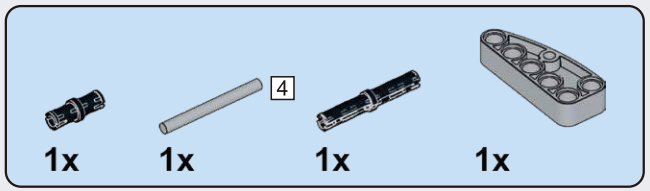

G58

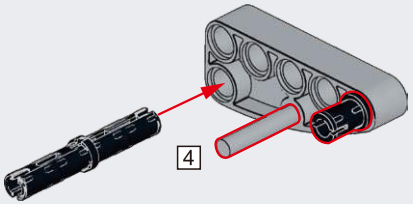

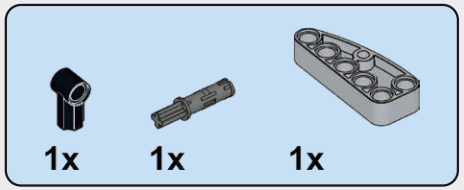

G59

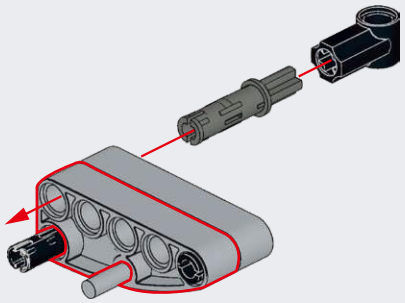

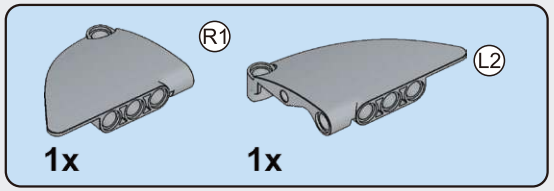

G60

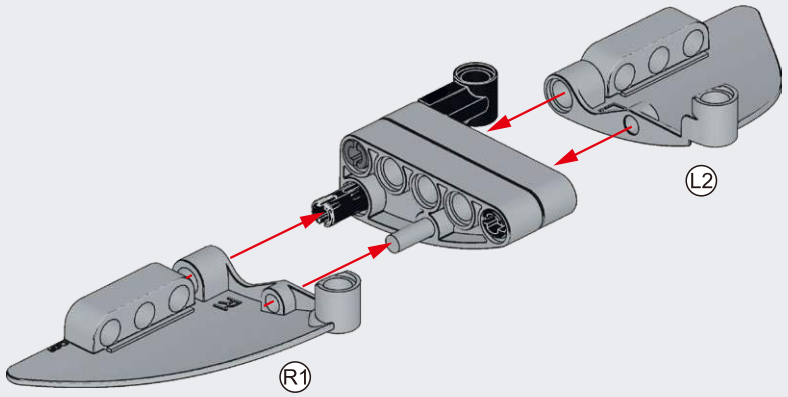

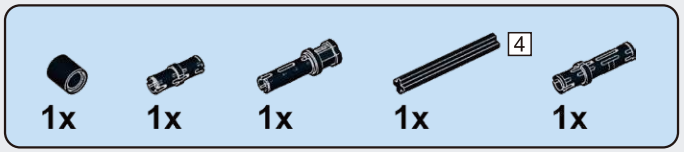

G61

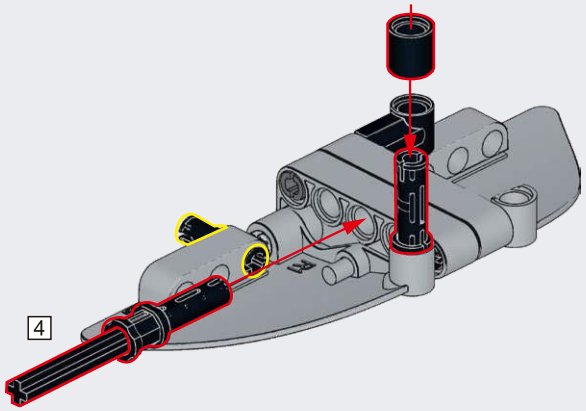

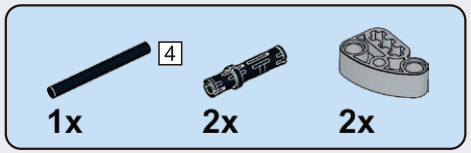

G62

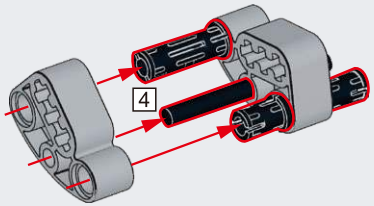

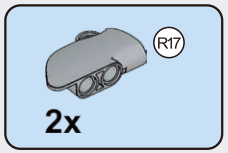

G63

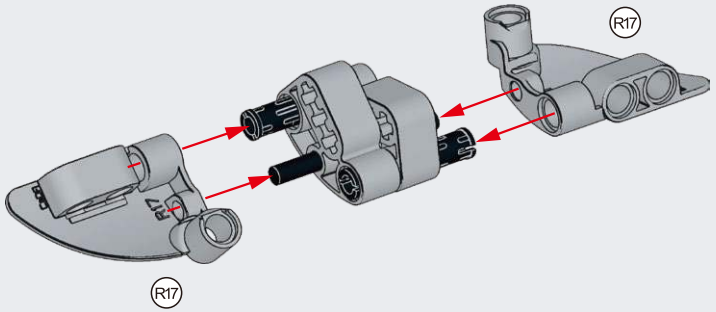

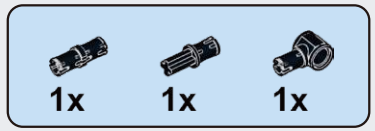

G64

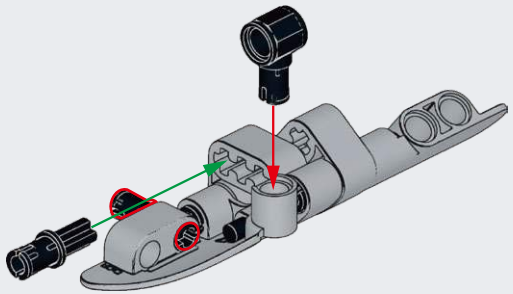

G65

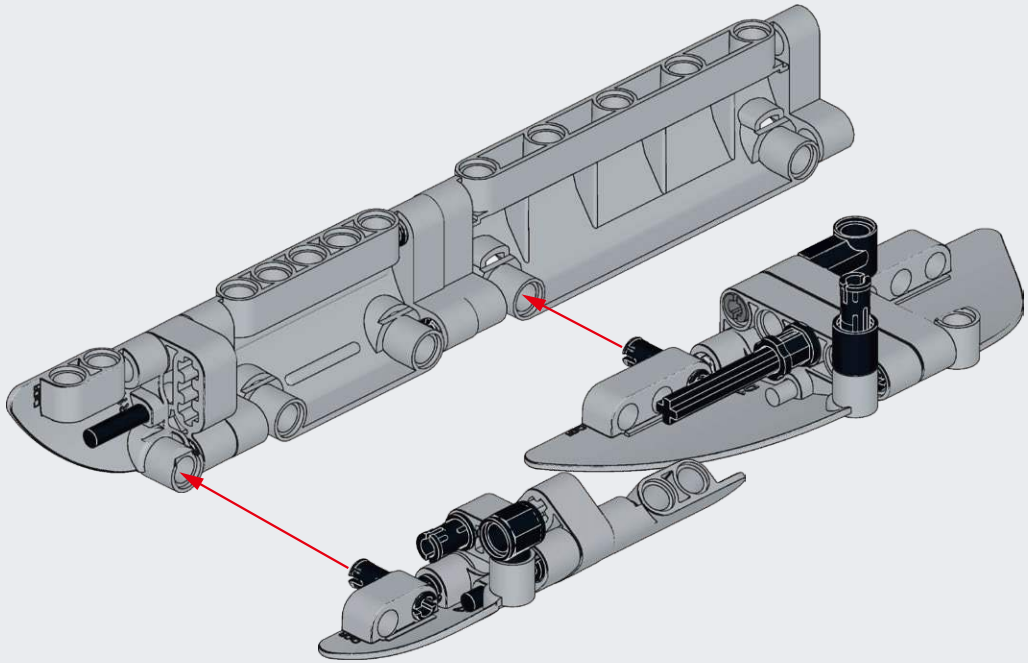

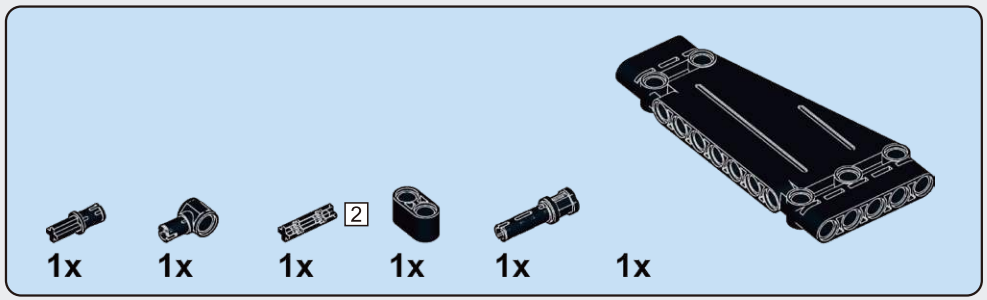

G66

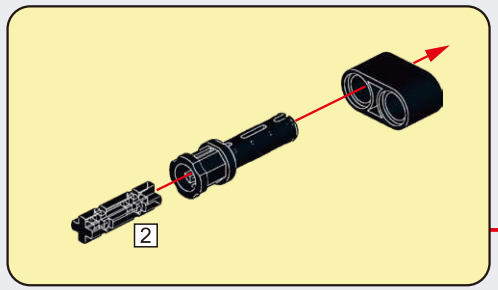

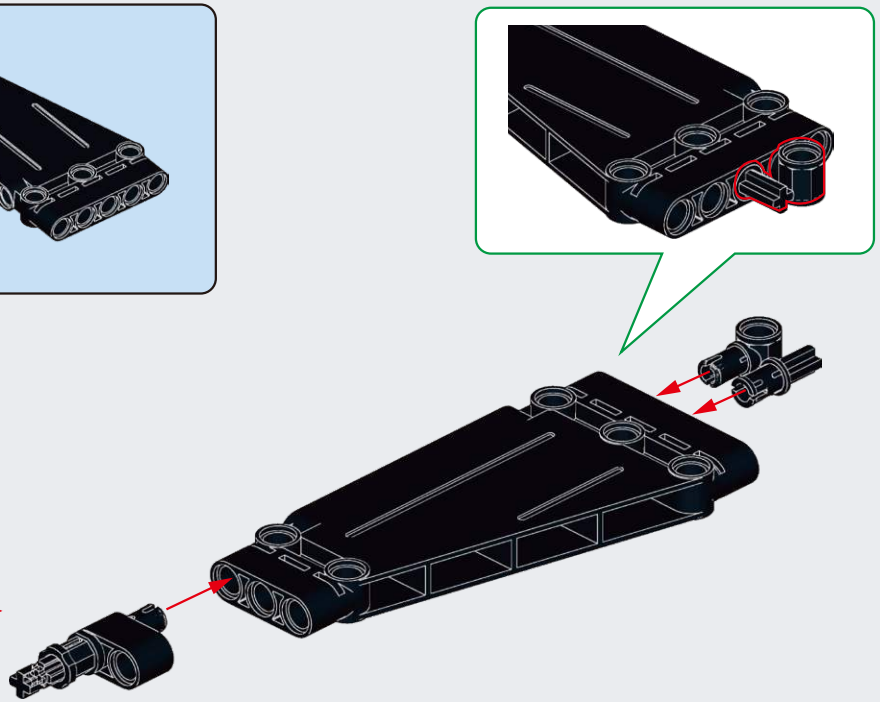

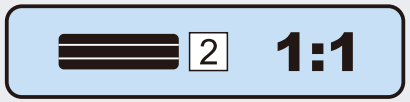

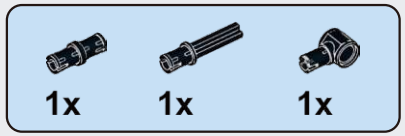

G67

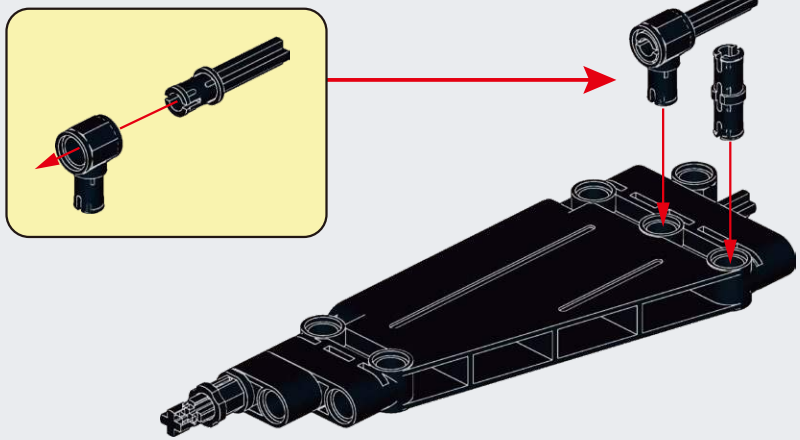

G68

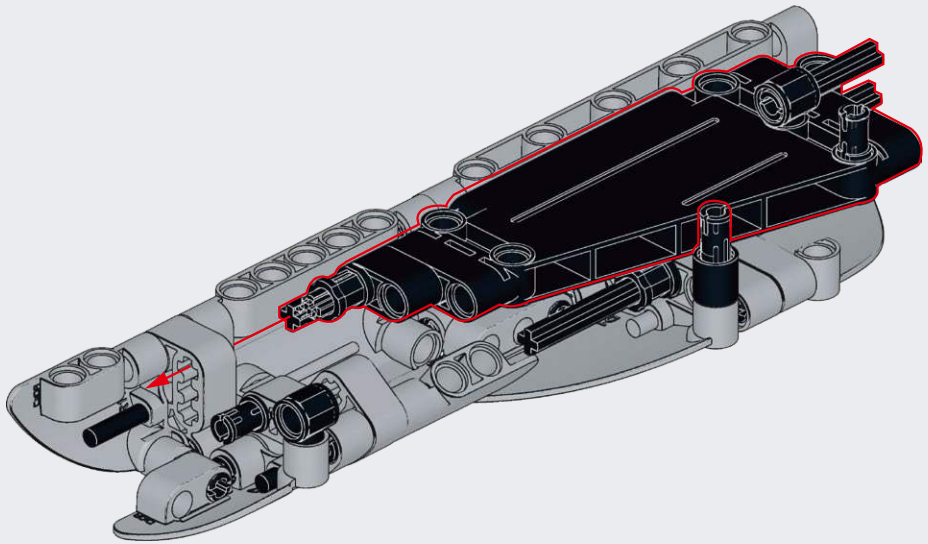

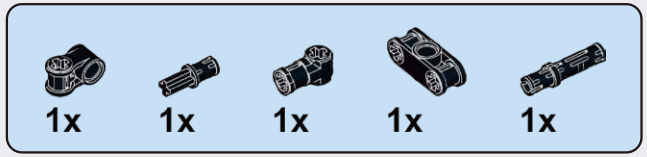

G69

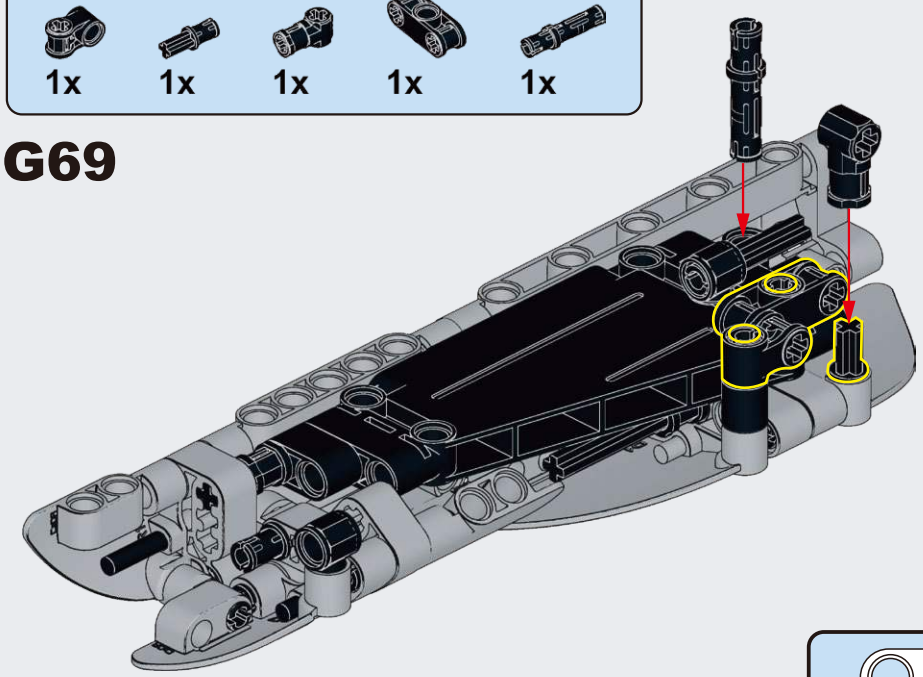

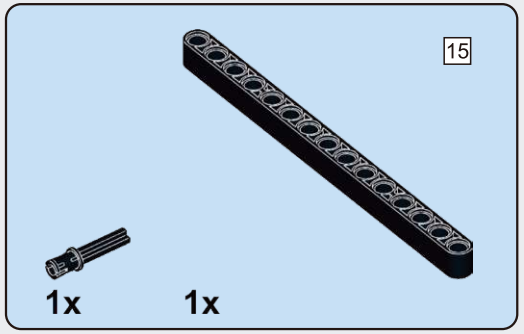

G70

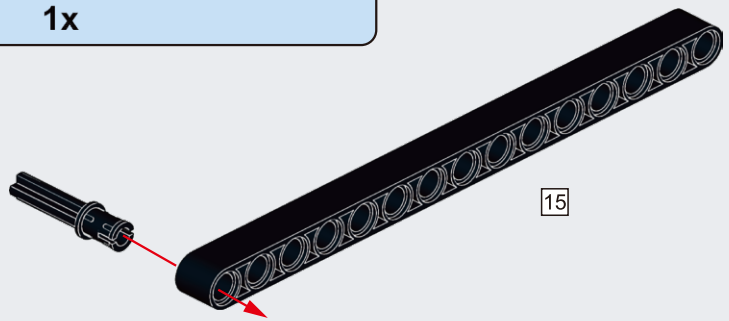

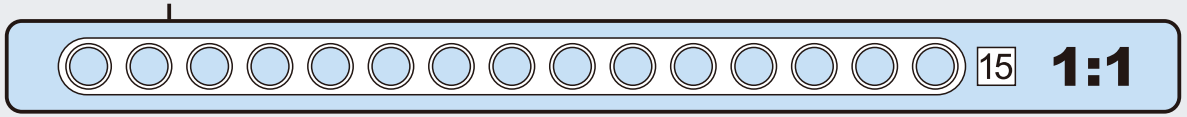

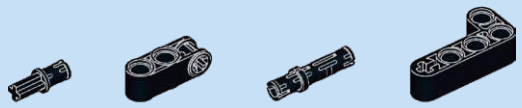

G71

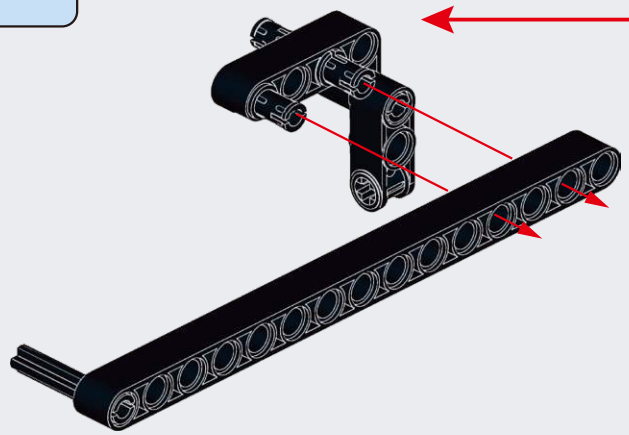

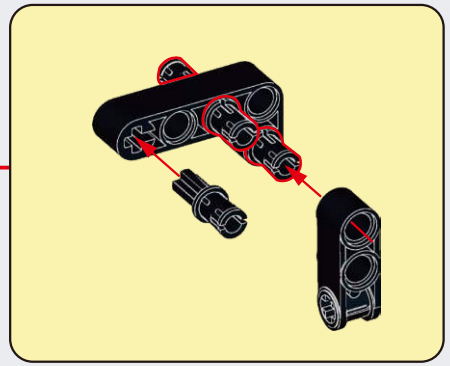

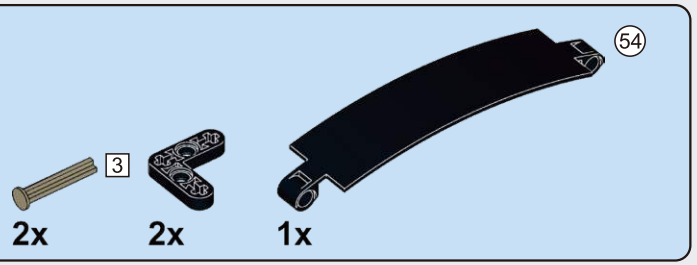

G72

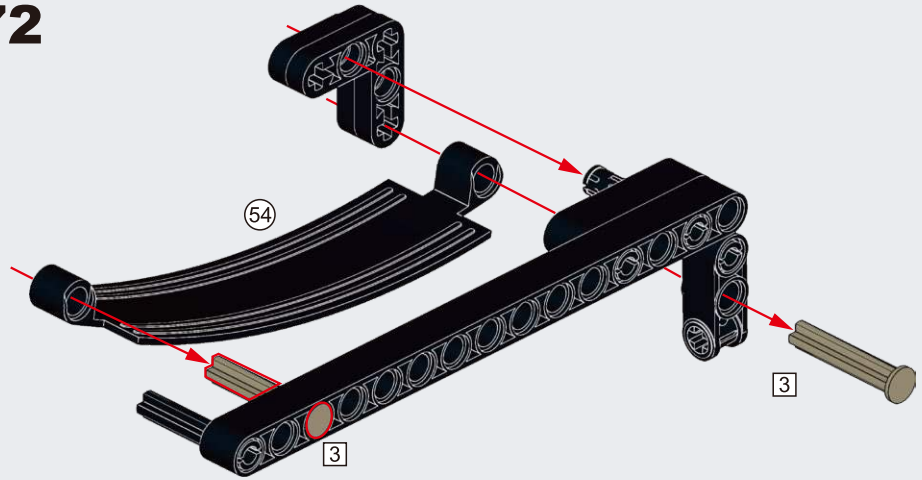

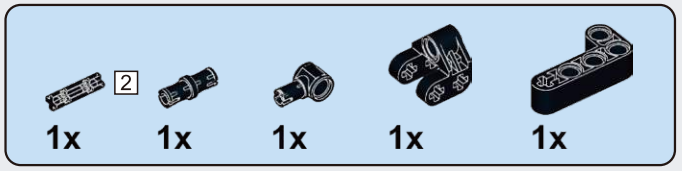

G73

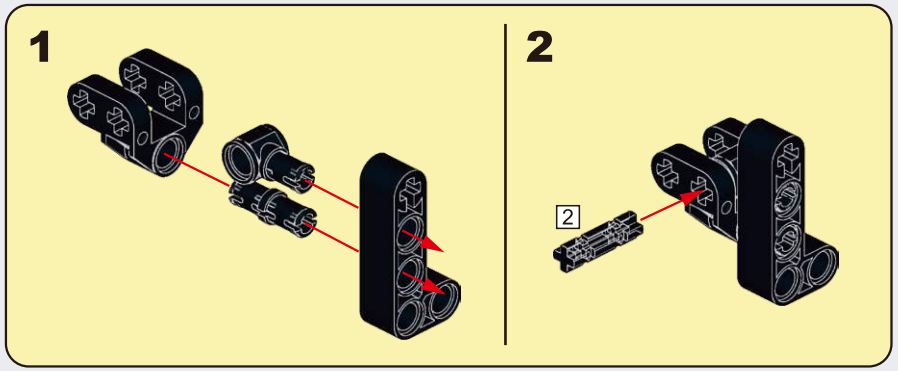

G74

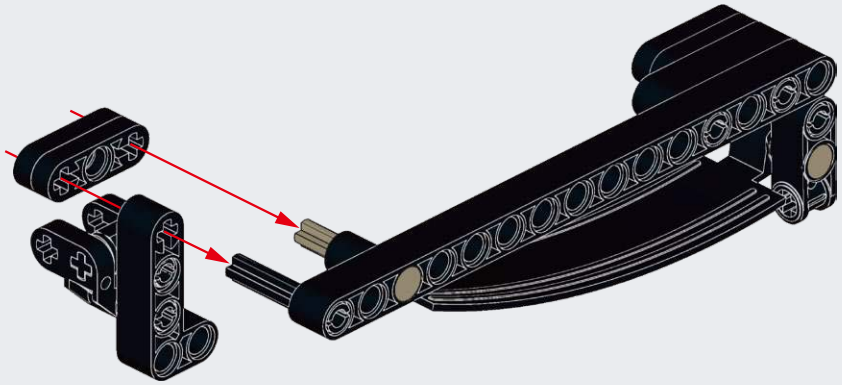

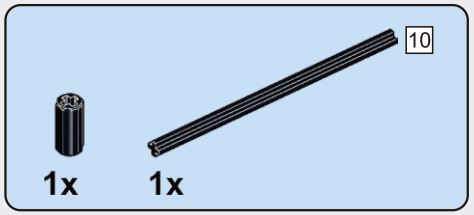

G75

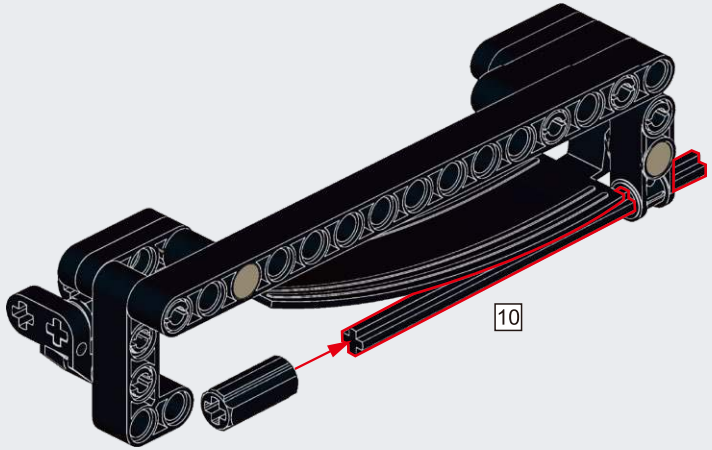

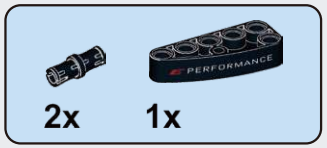

G76

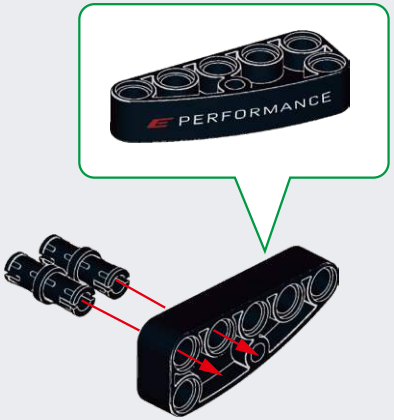

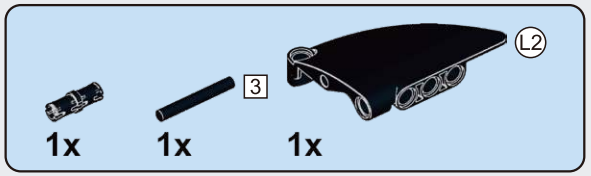

G77

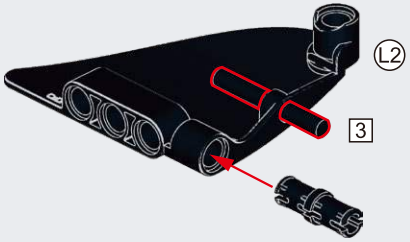

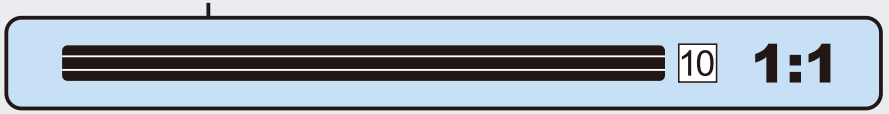

G78

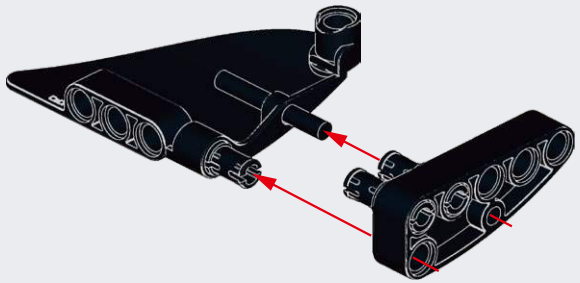

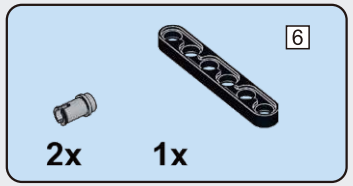

G79

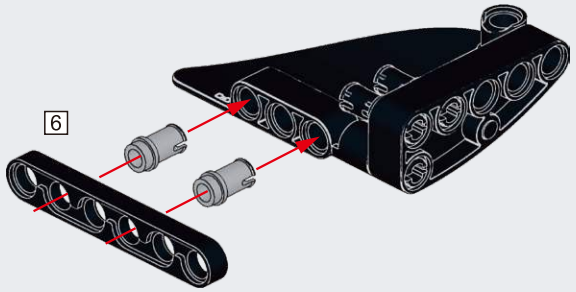

G80

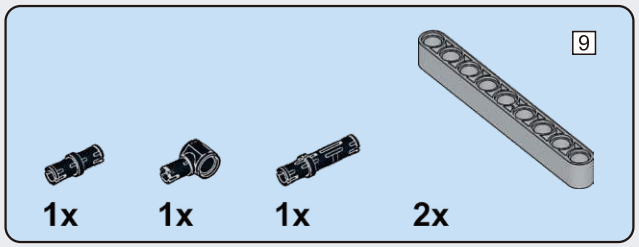

G81

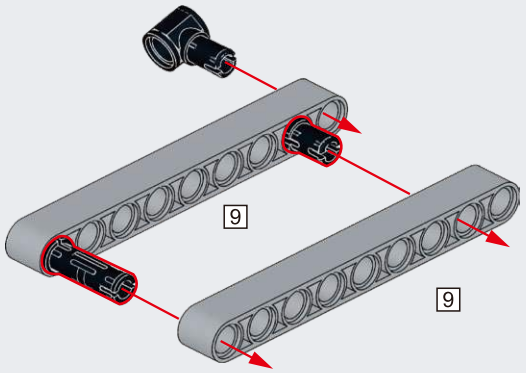

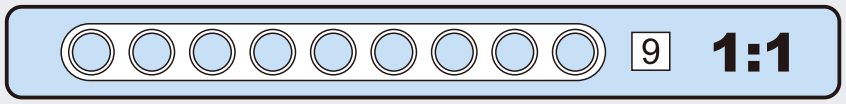

G82

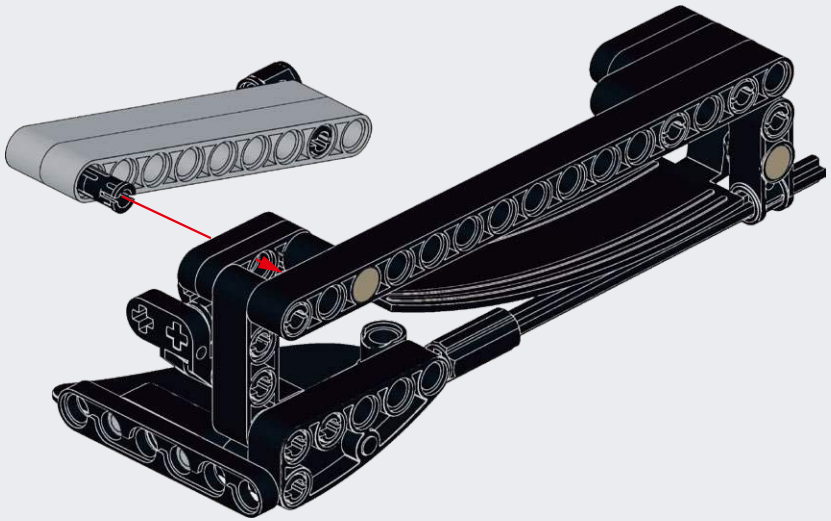

G83

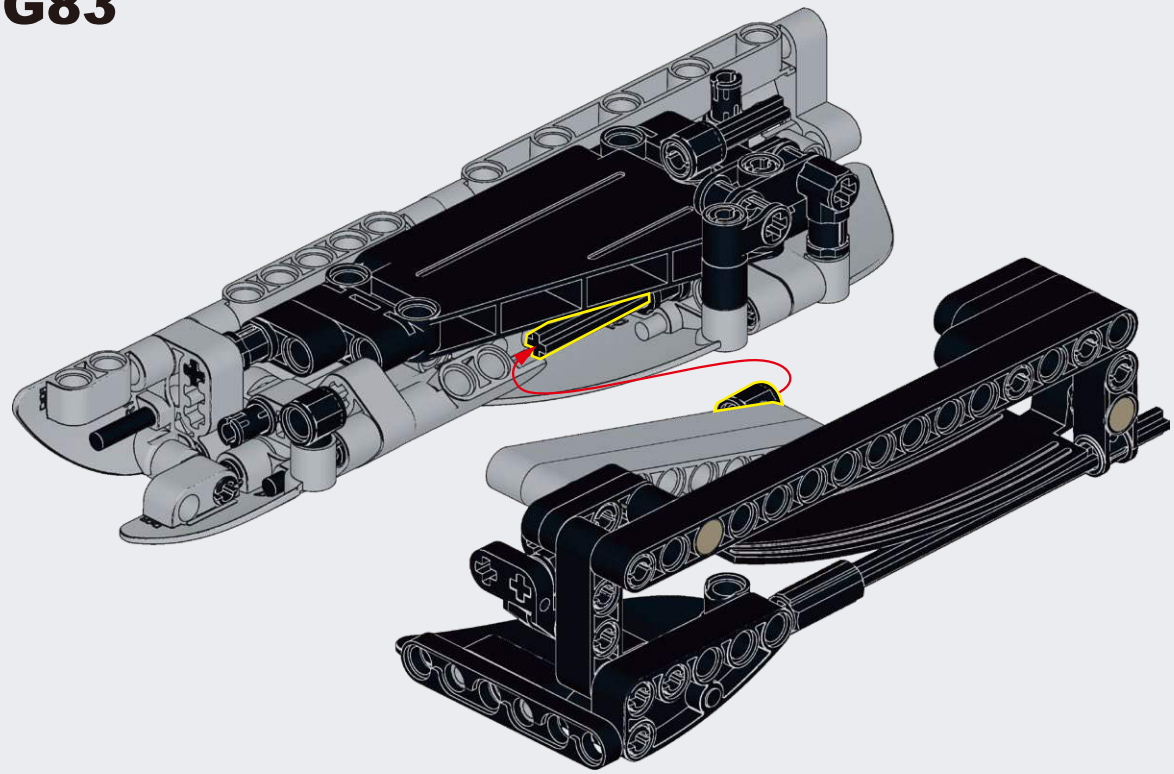

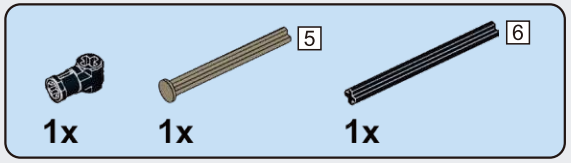

G84

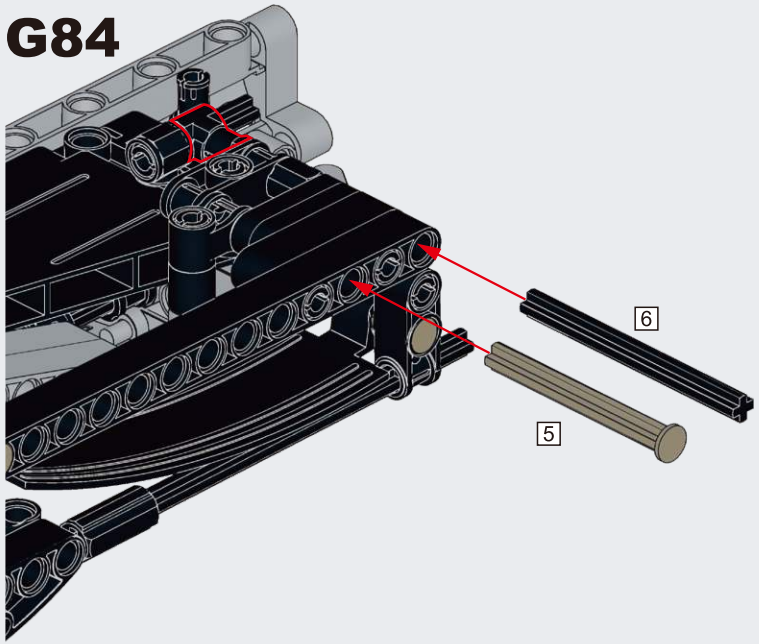

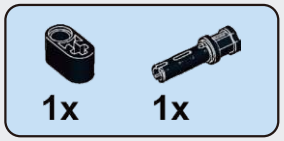

G85

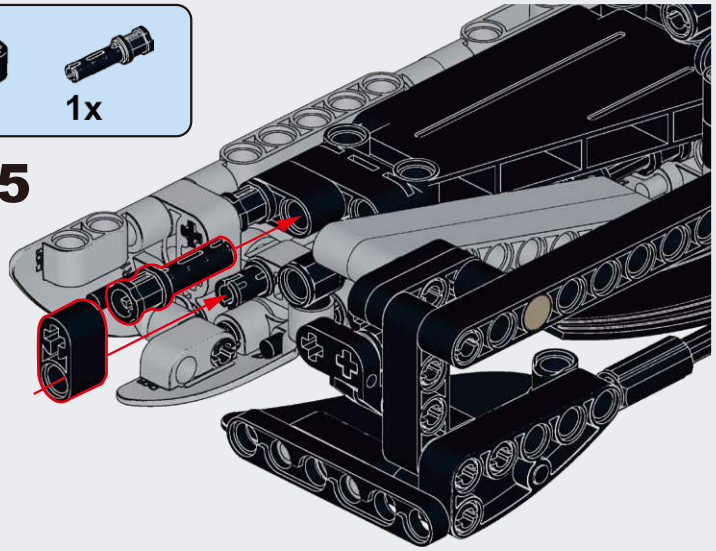

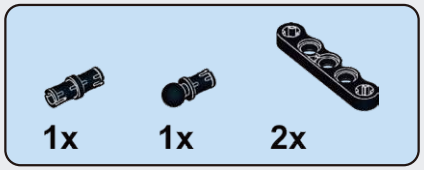

G86

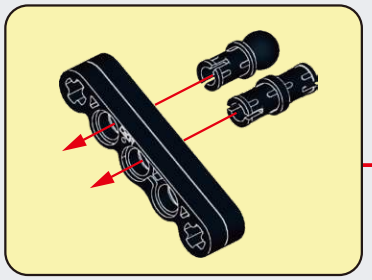

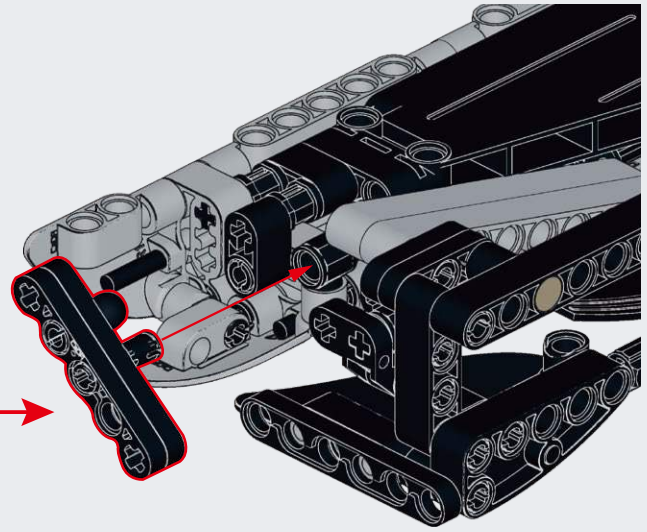

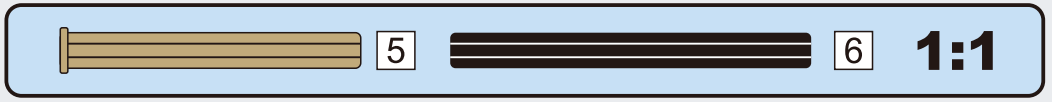

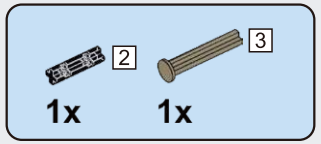

G87

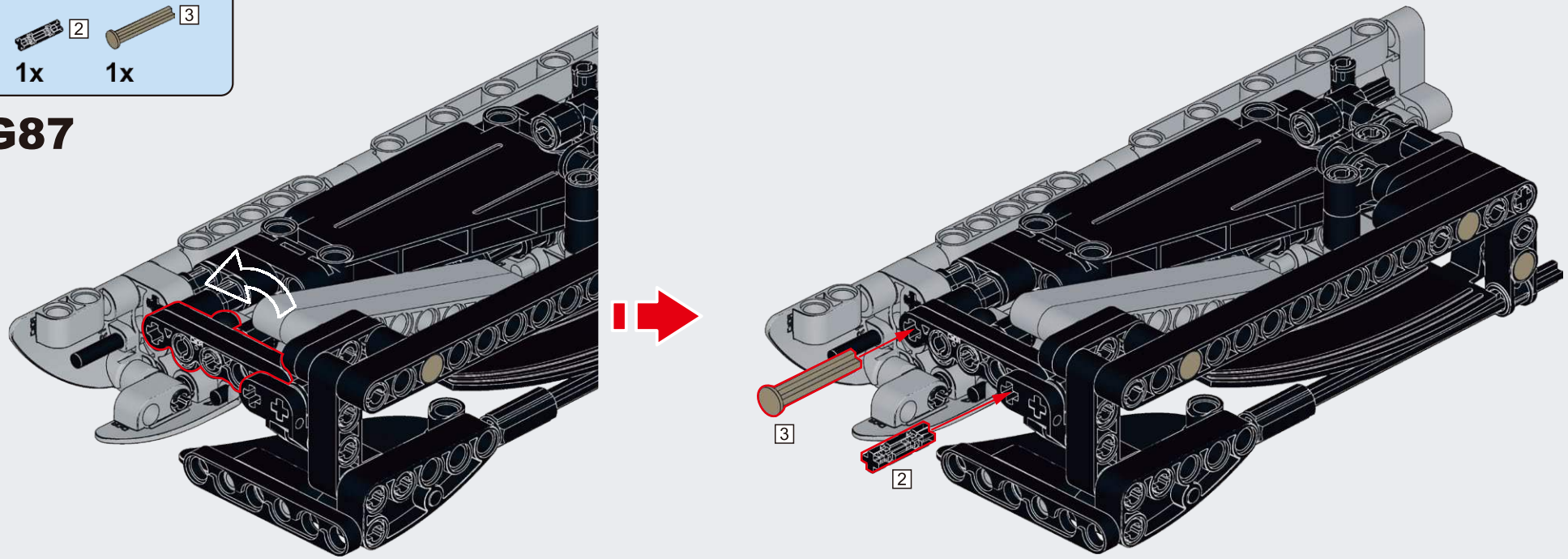

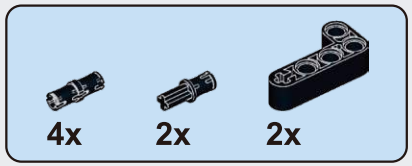

G88

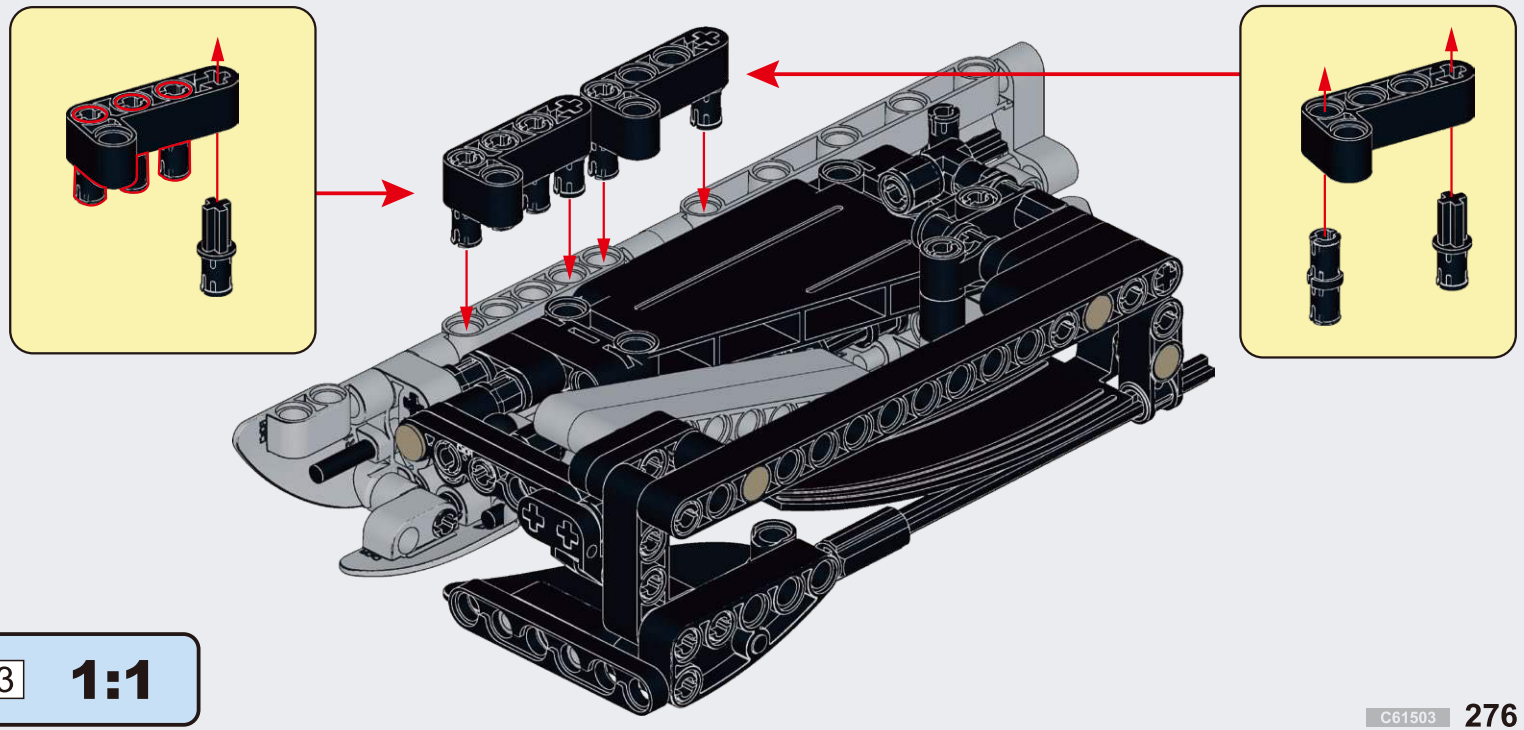

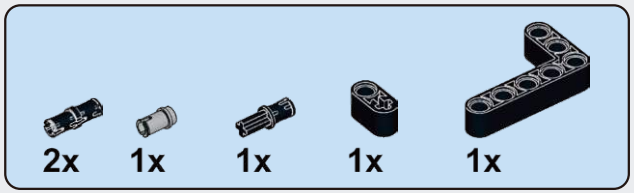

G89

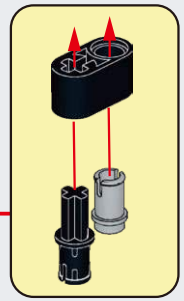

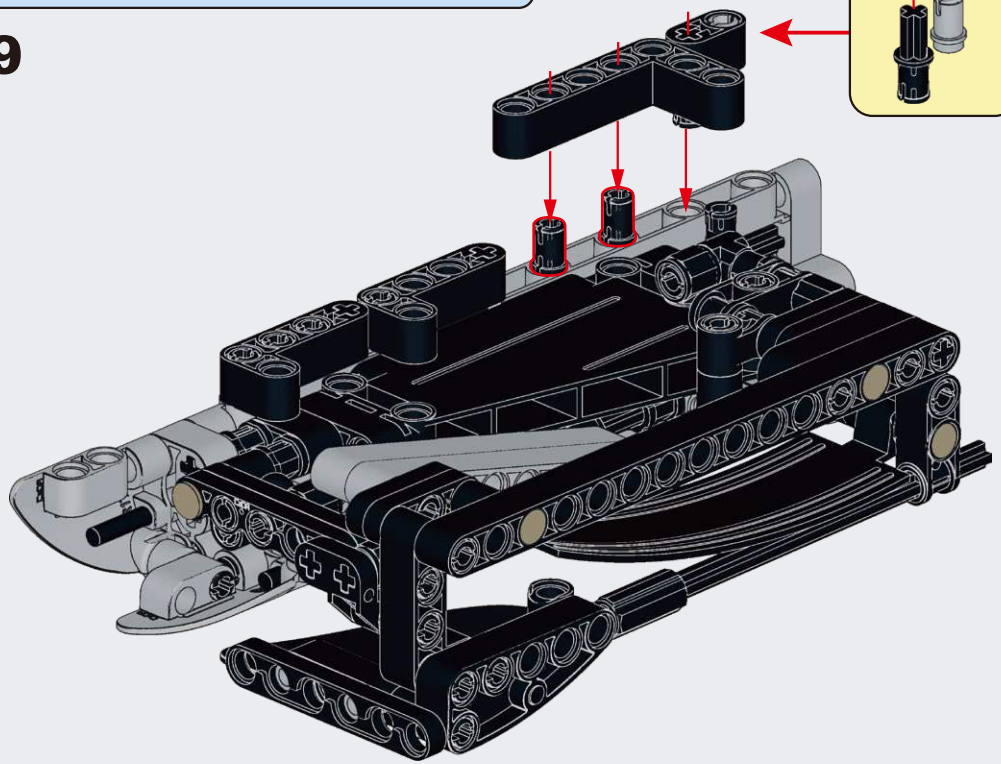

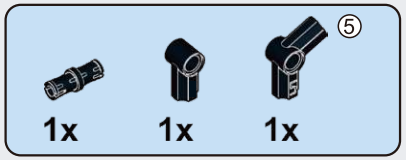

G90

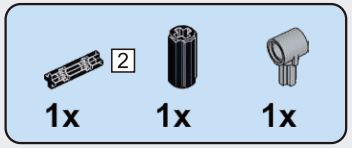

G92

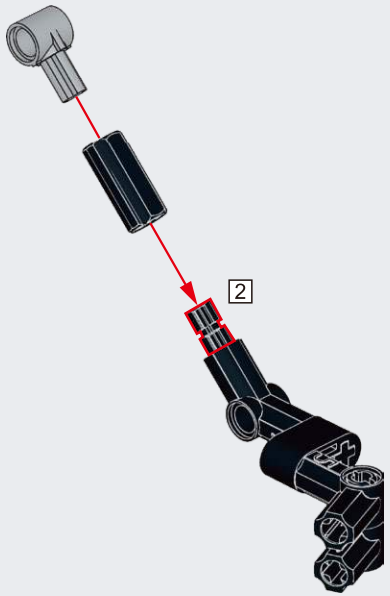

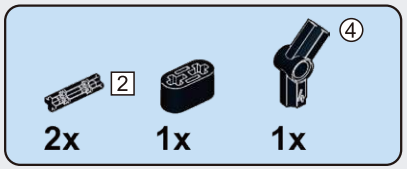

G91

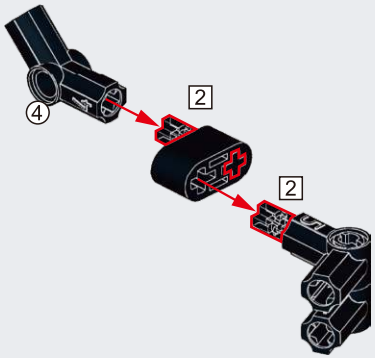

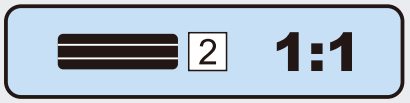

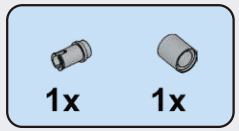

G93

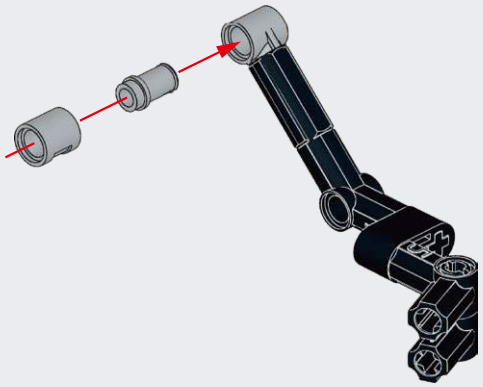

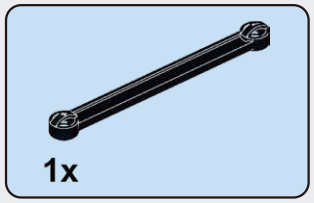

G94

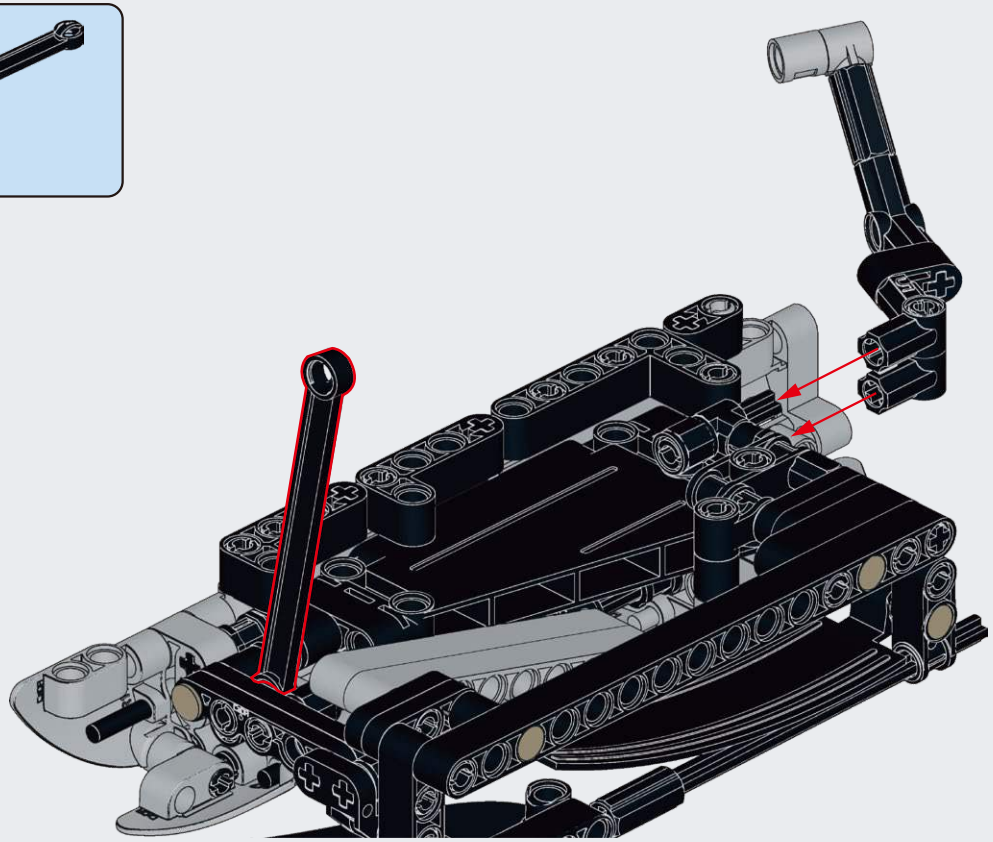

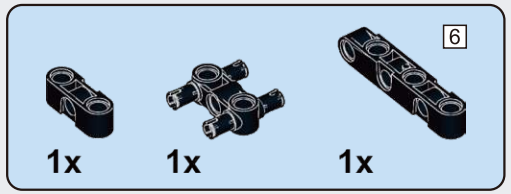

G95

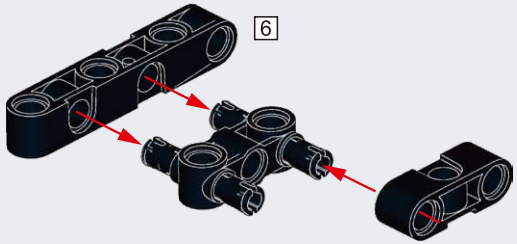

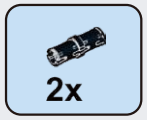

G96

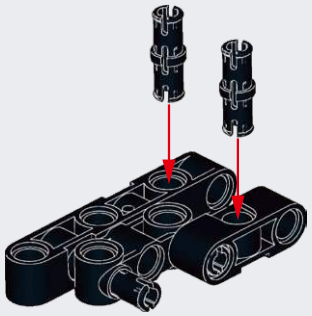

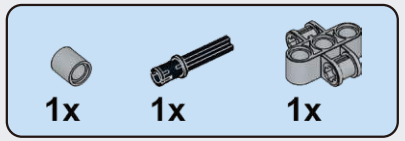

G97

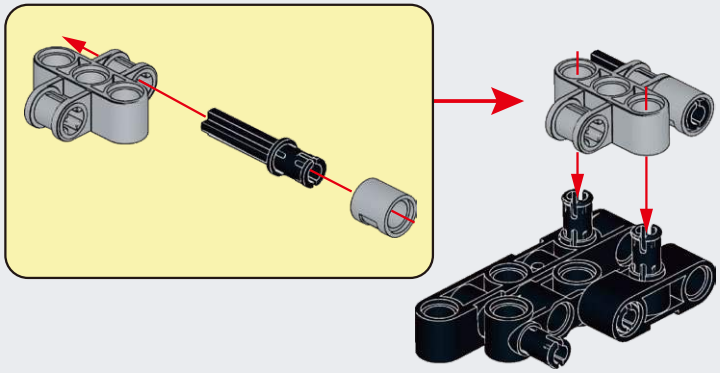

G98

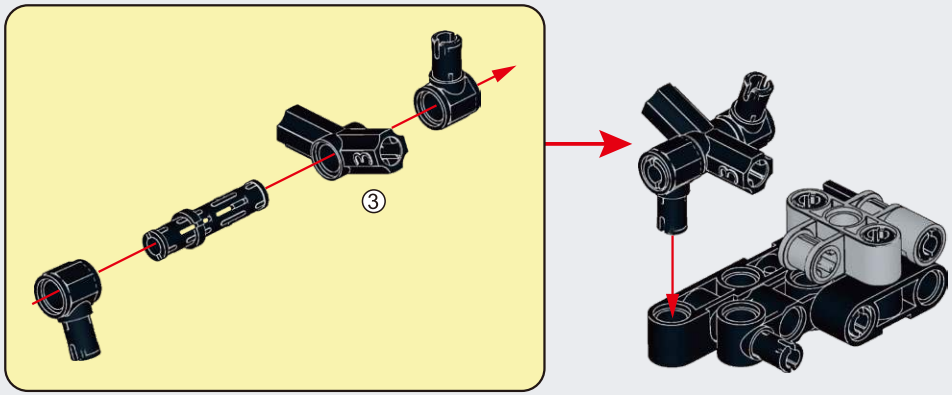

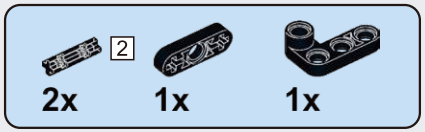

G99

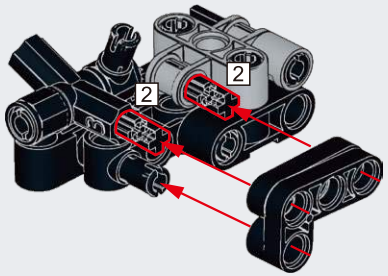

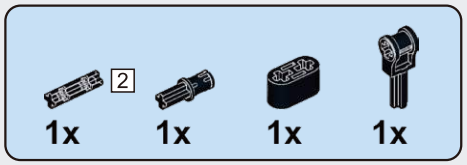

G100

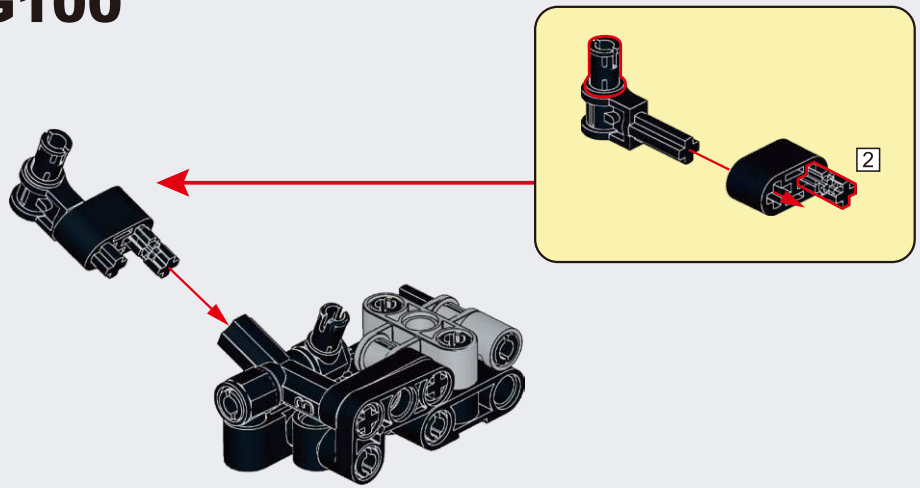

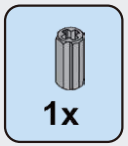

G101

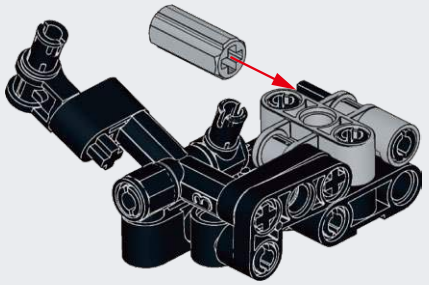

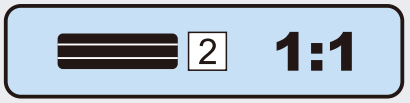

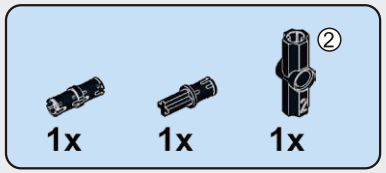

G102

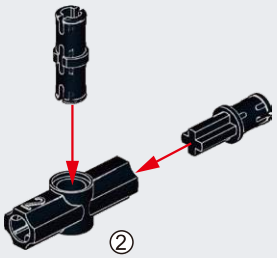

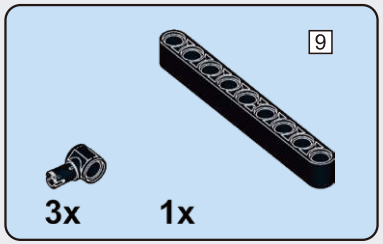

G103

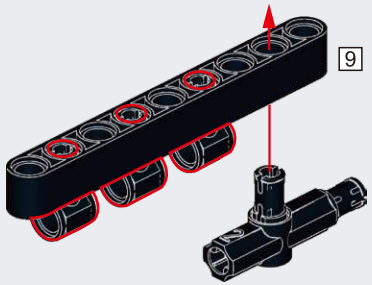

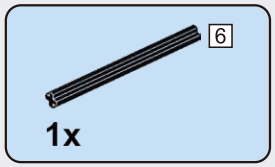

G104

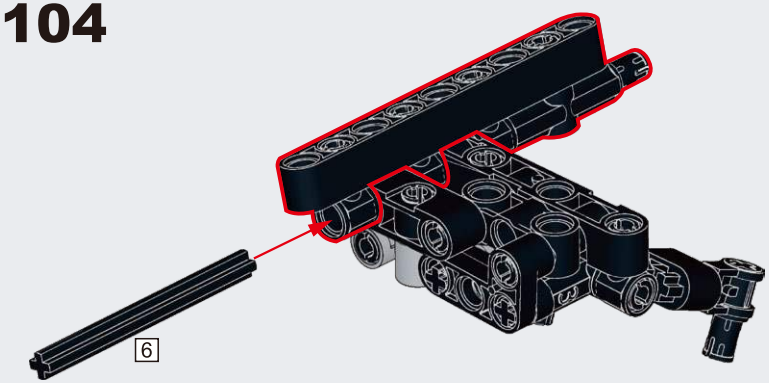

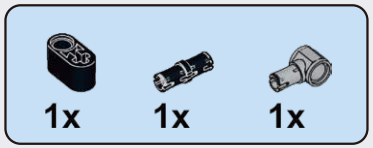

G105

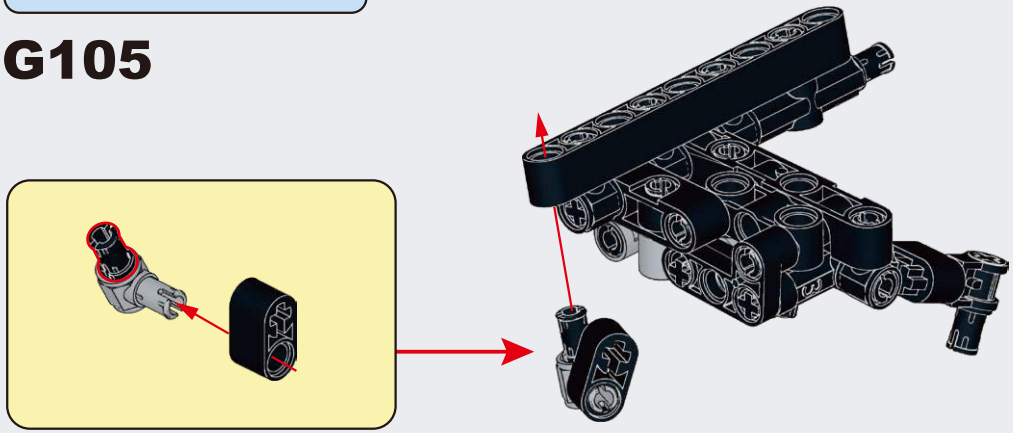

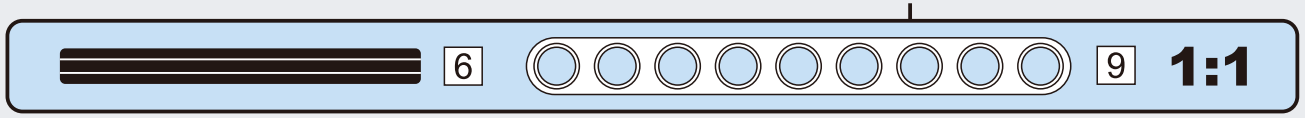

G106

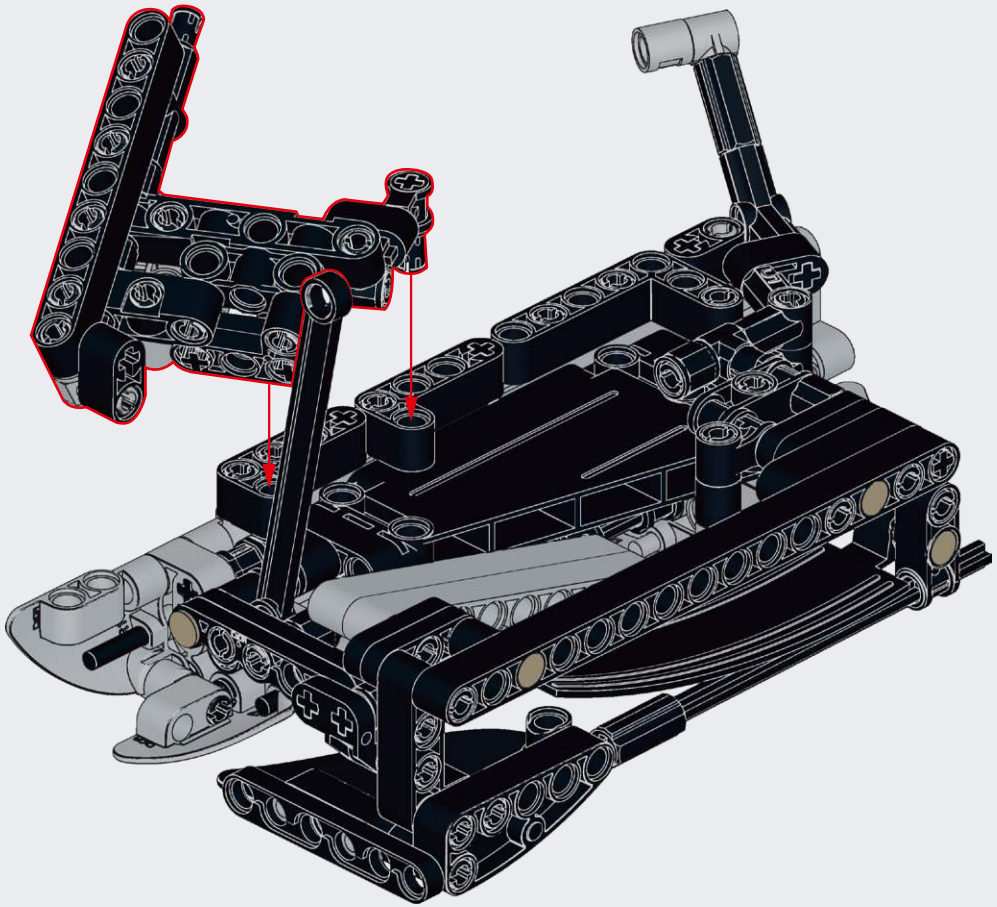

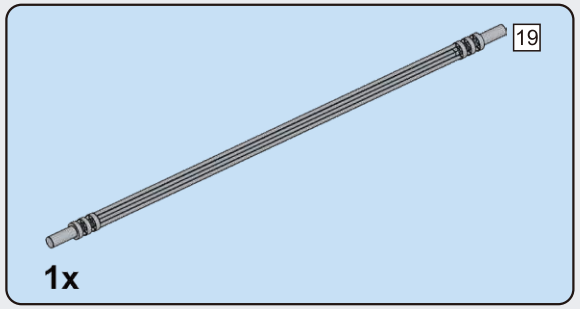

G107

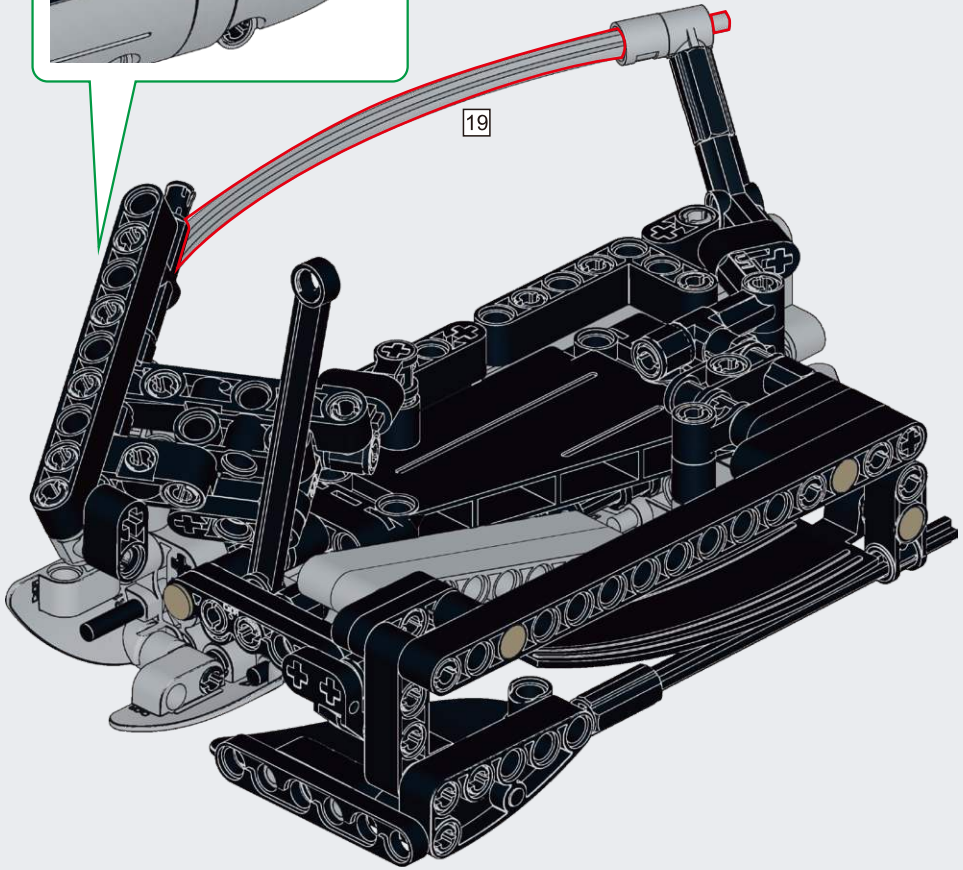

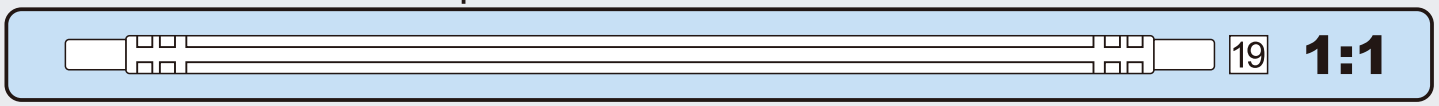

G108

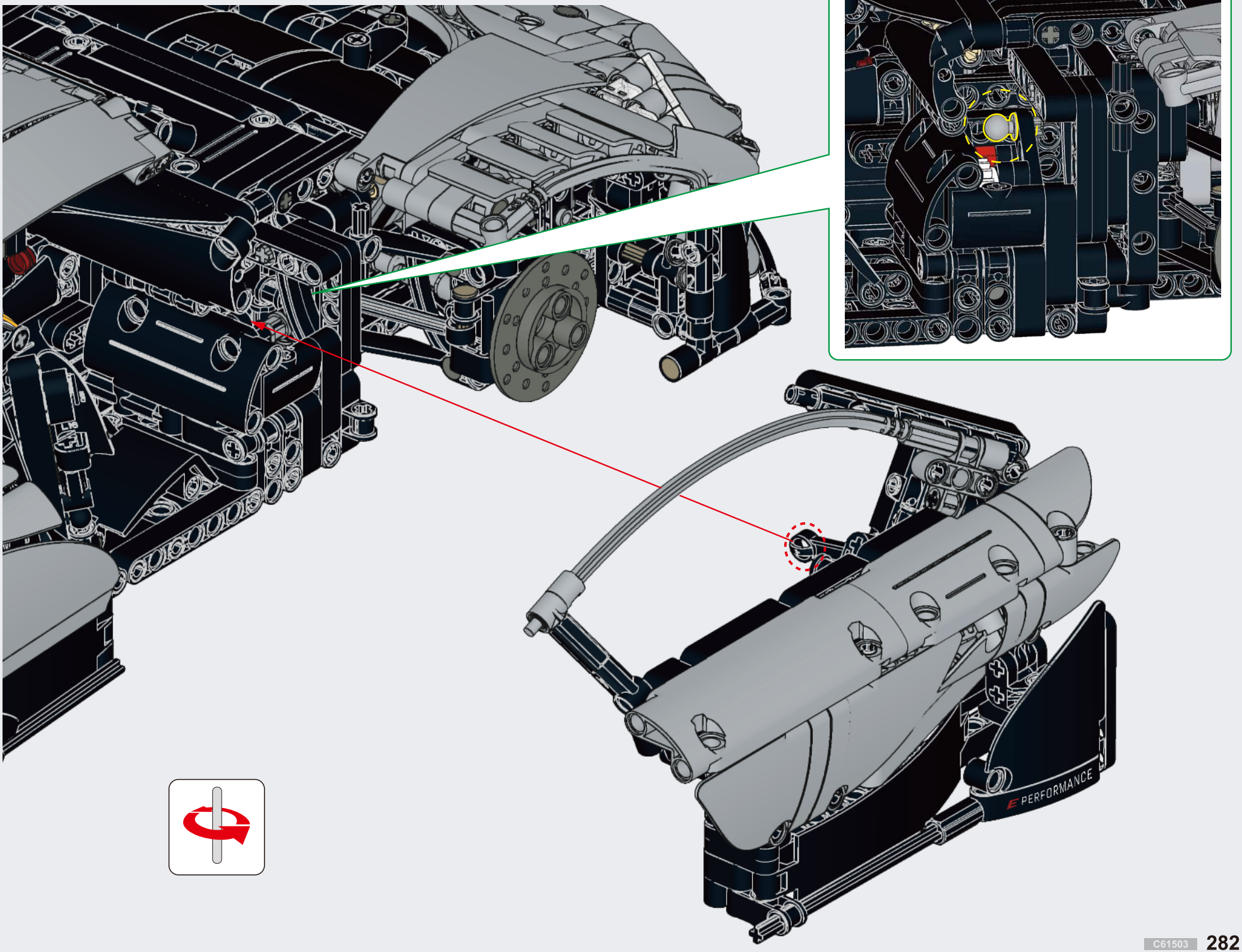

G109

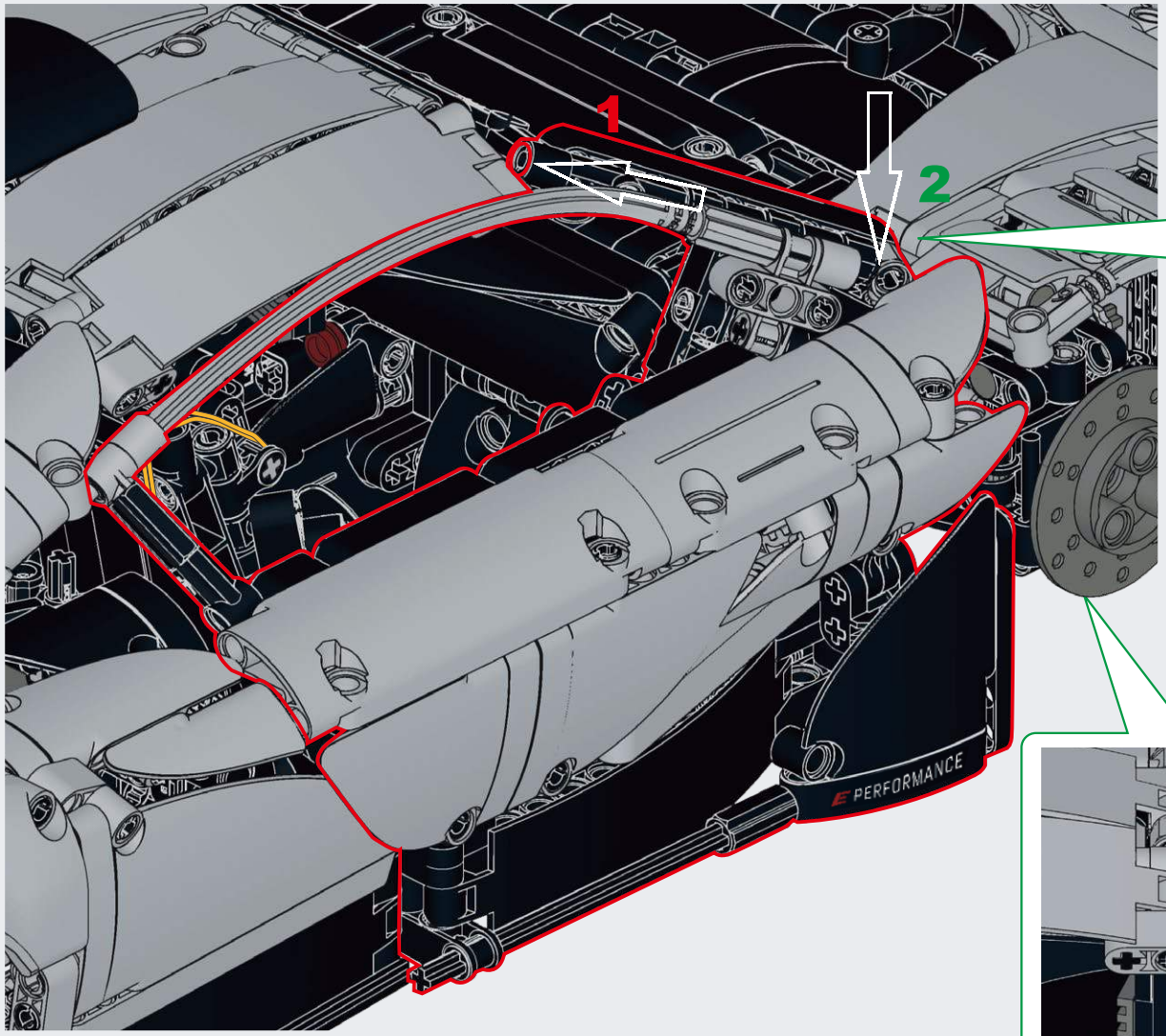

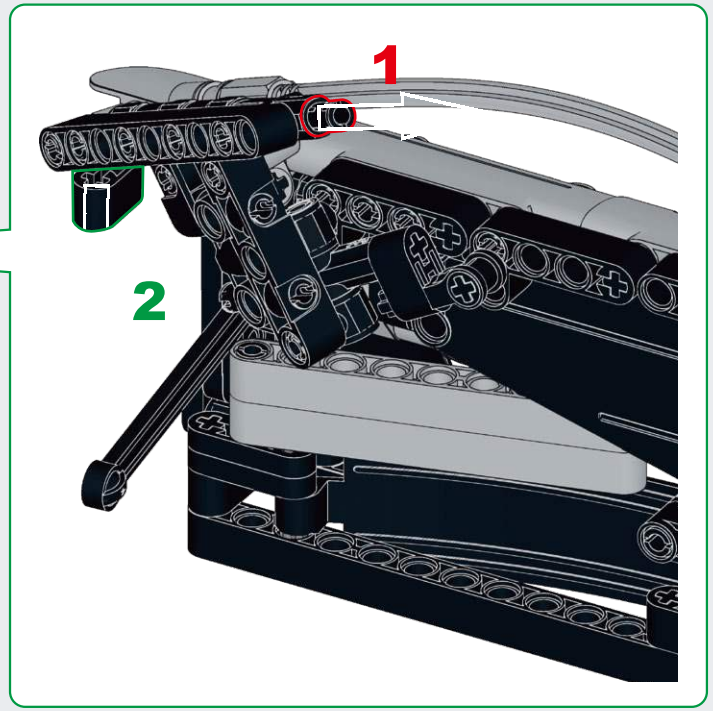

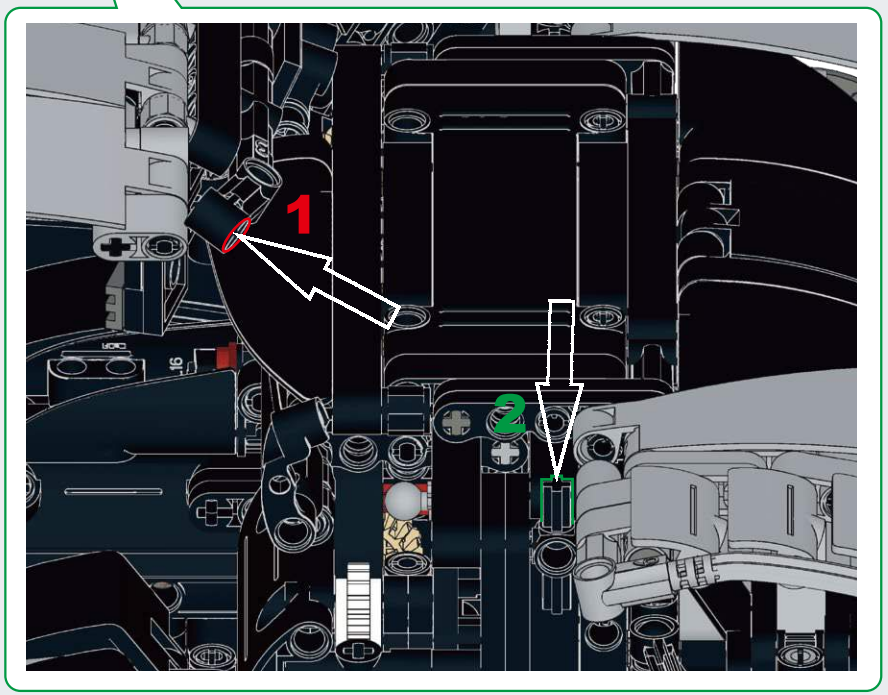

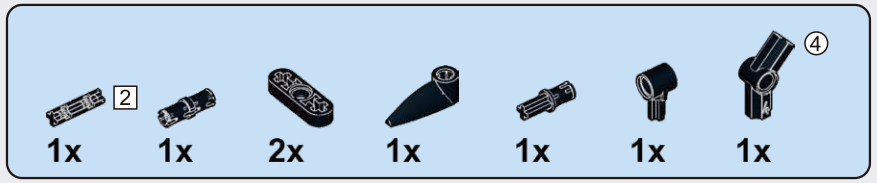

G110

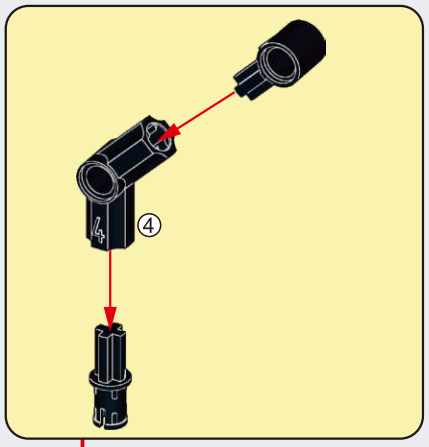

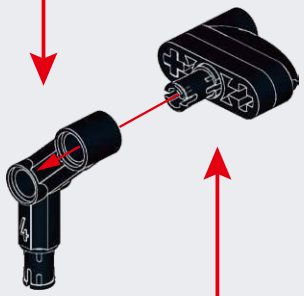

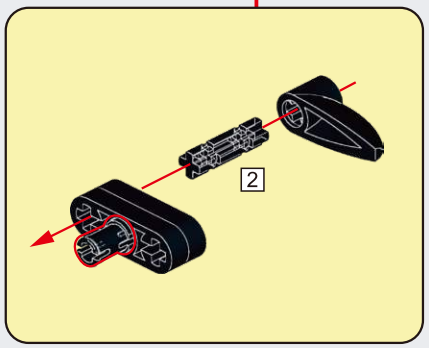

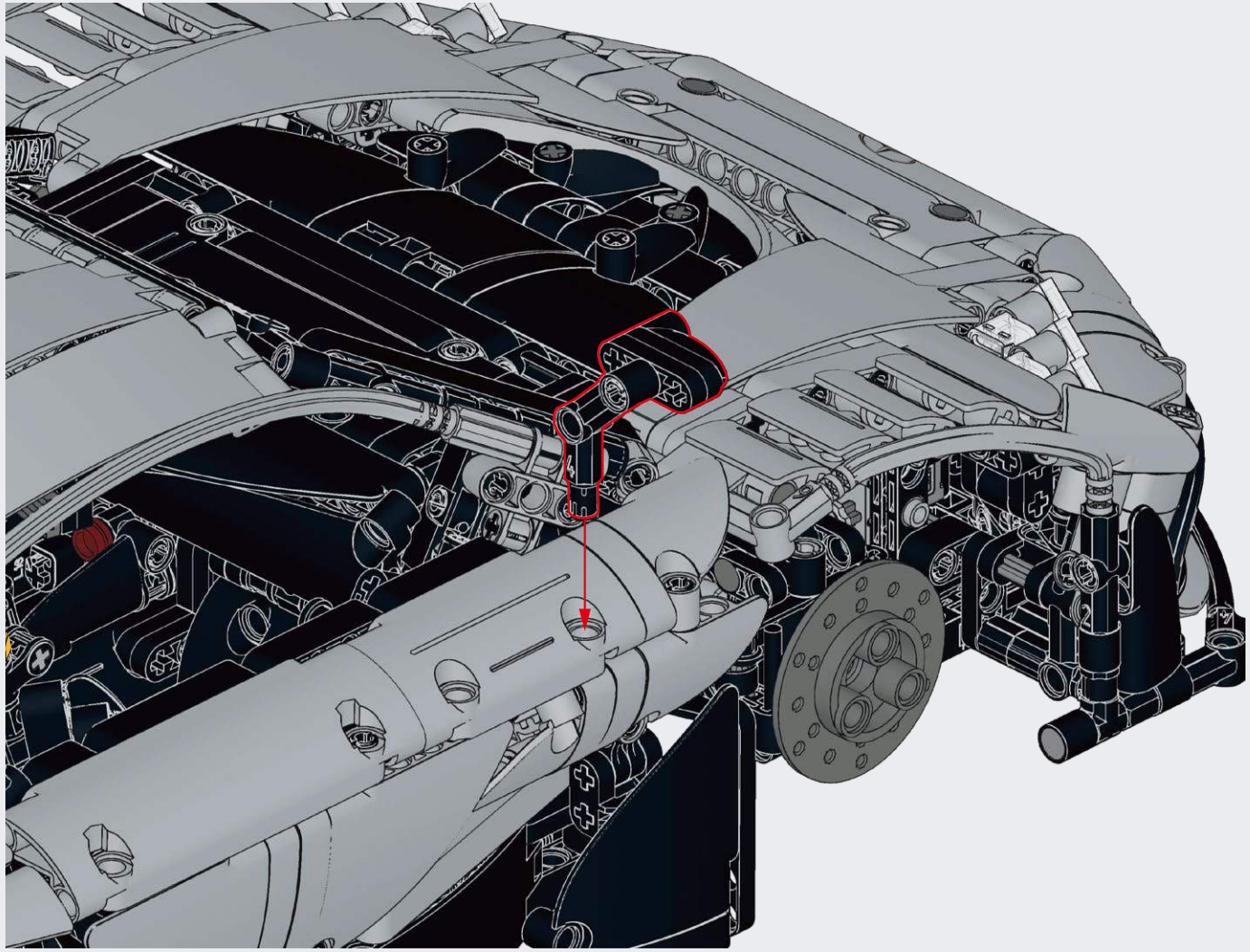

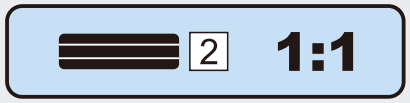

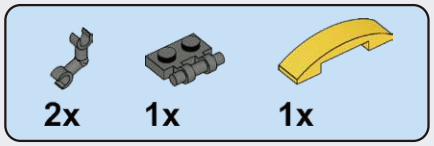

G111

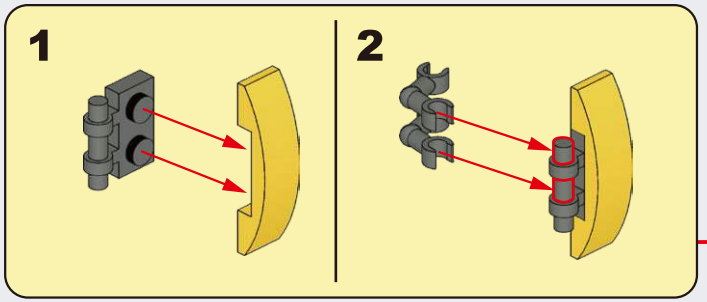

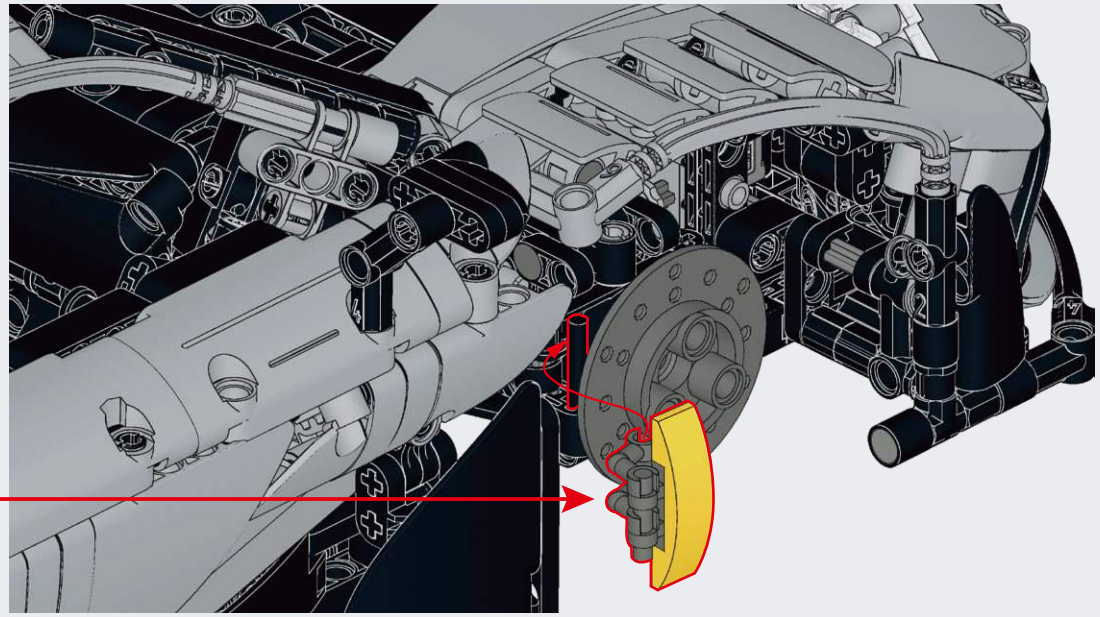

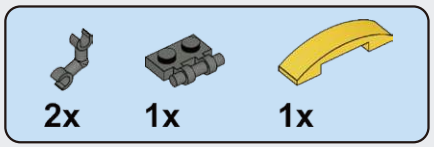

G112

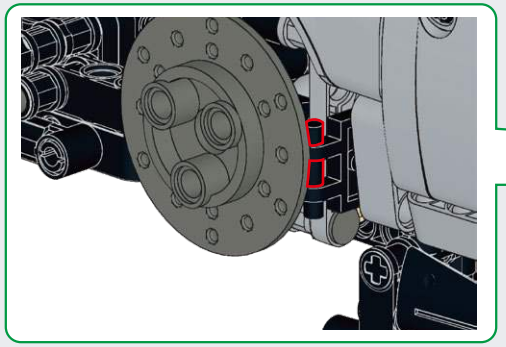

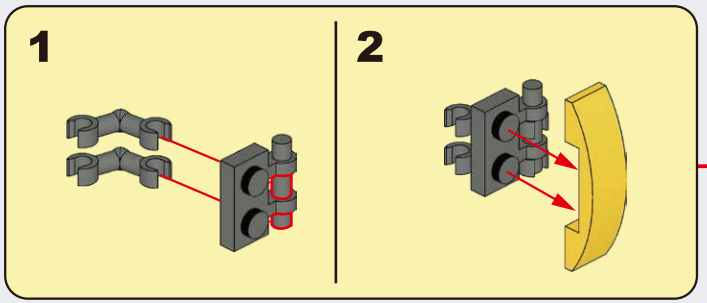

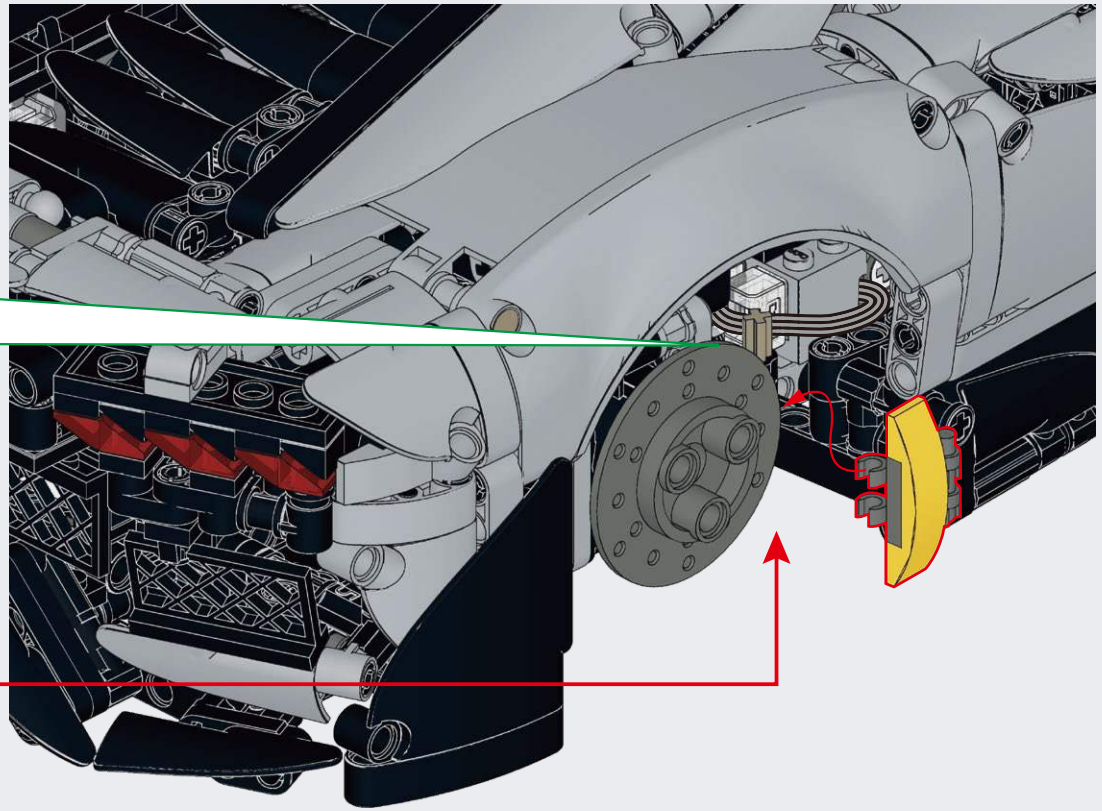

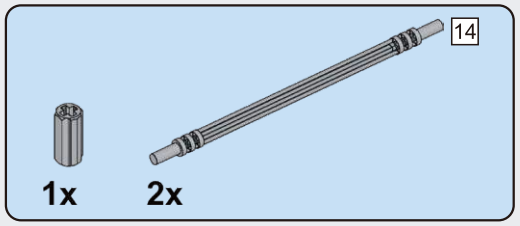

G113

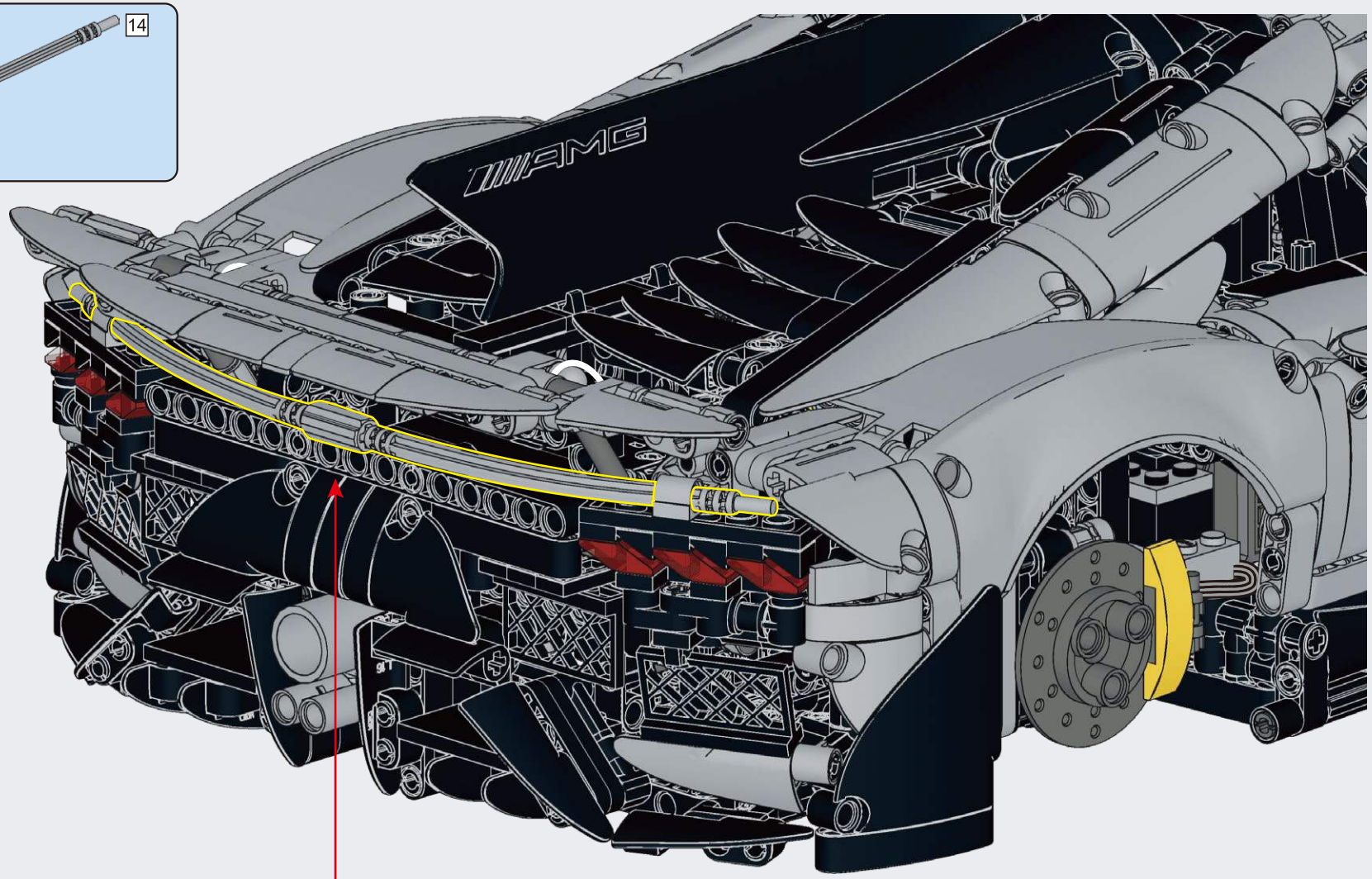

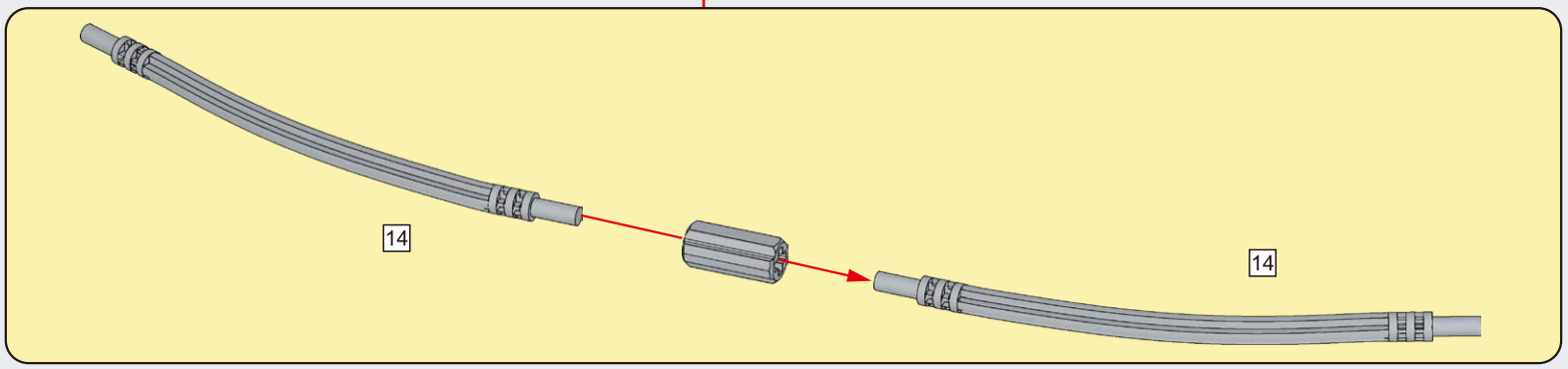

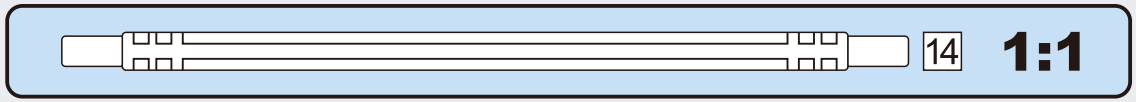

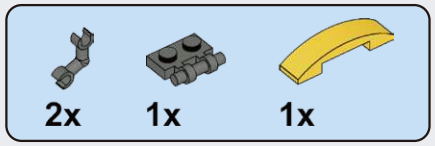

G114

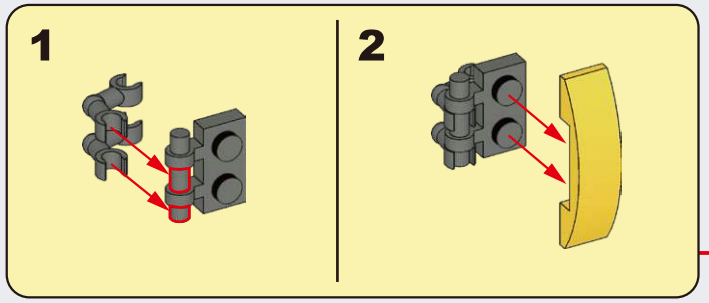

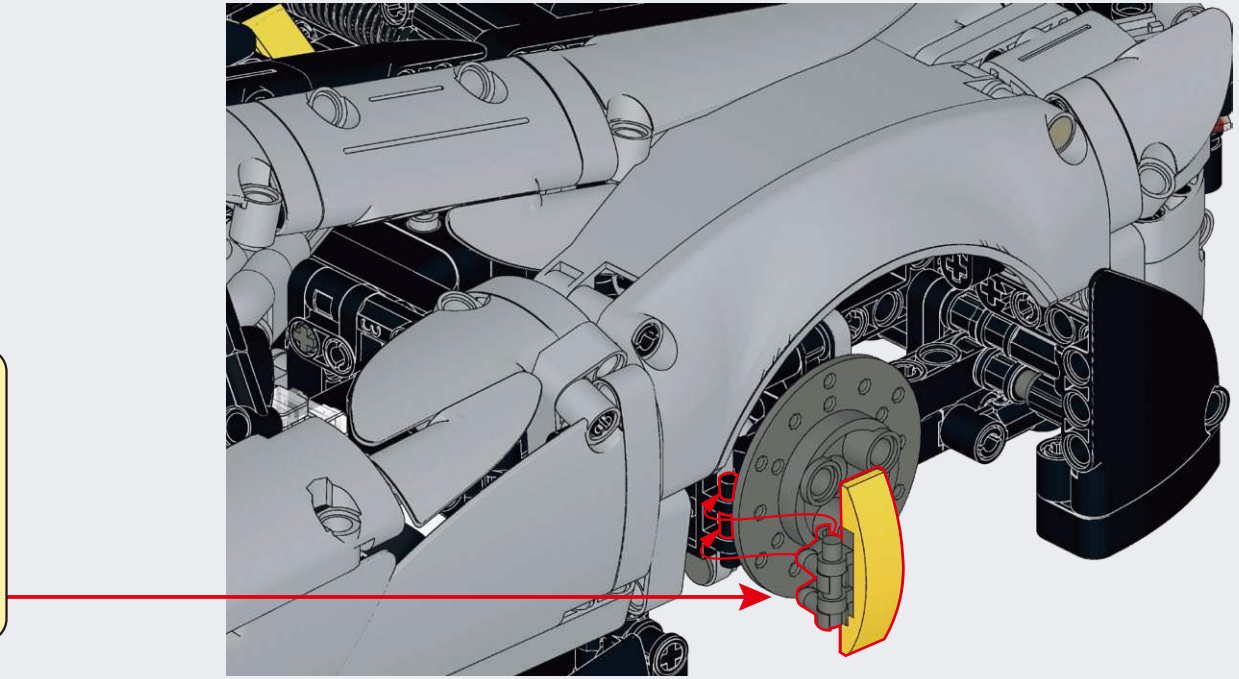

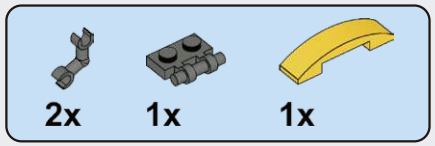

G115

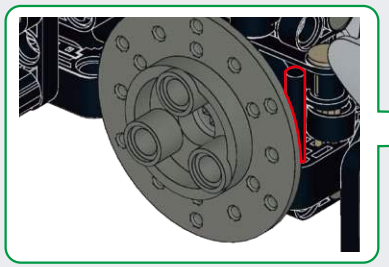

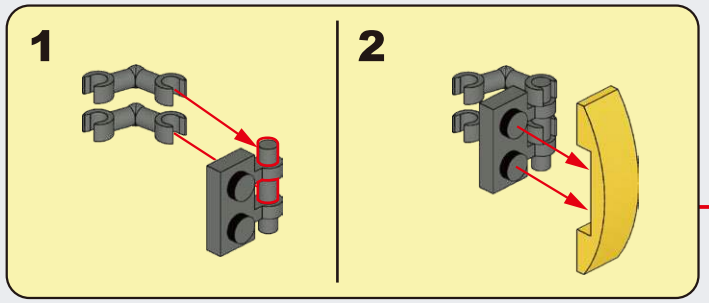

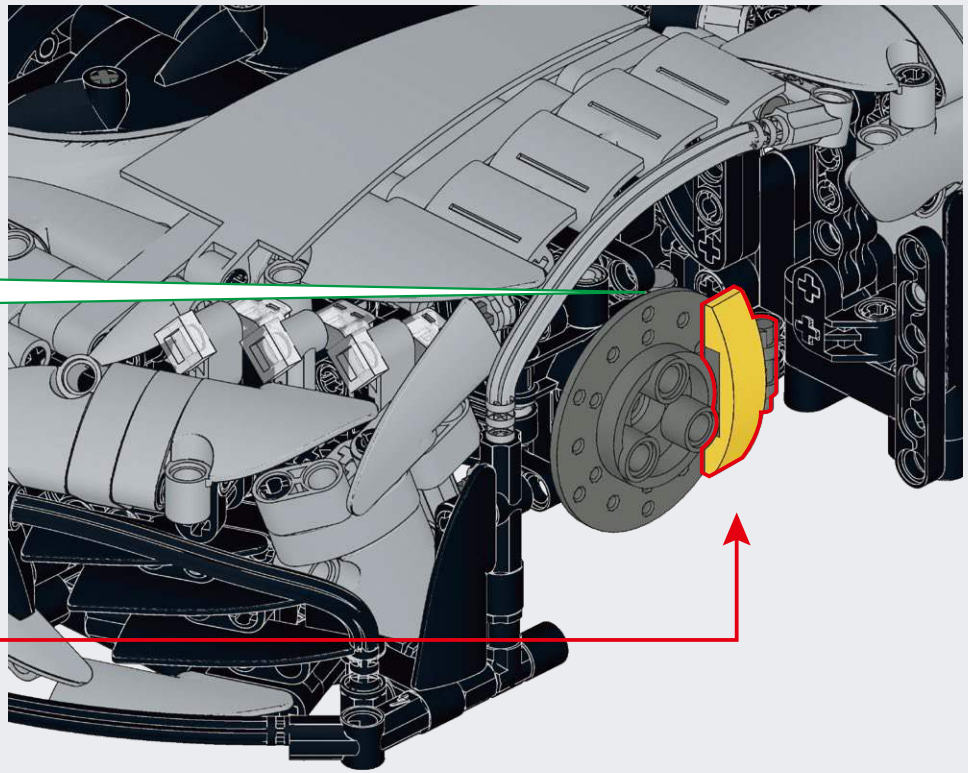

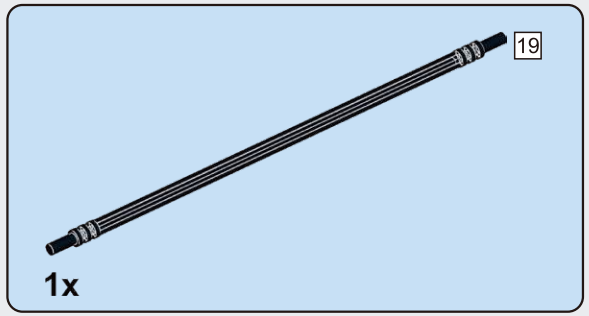

G116

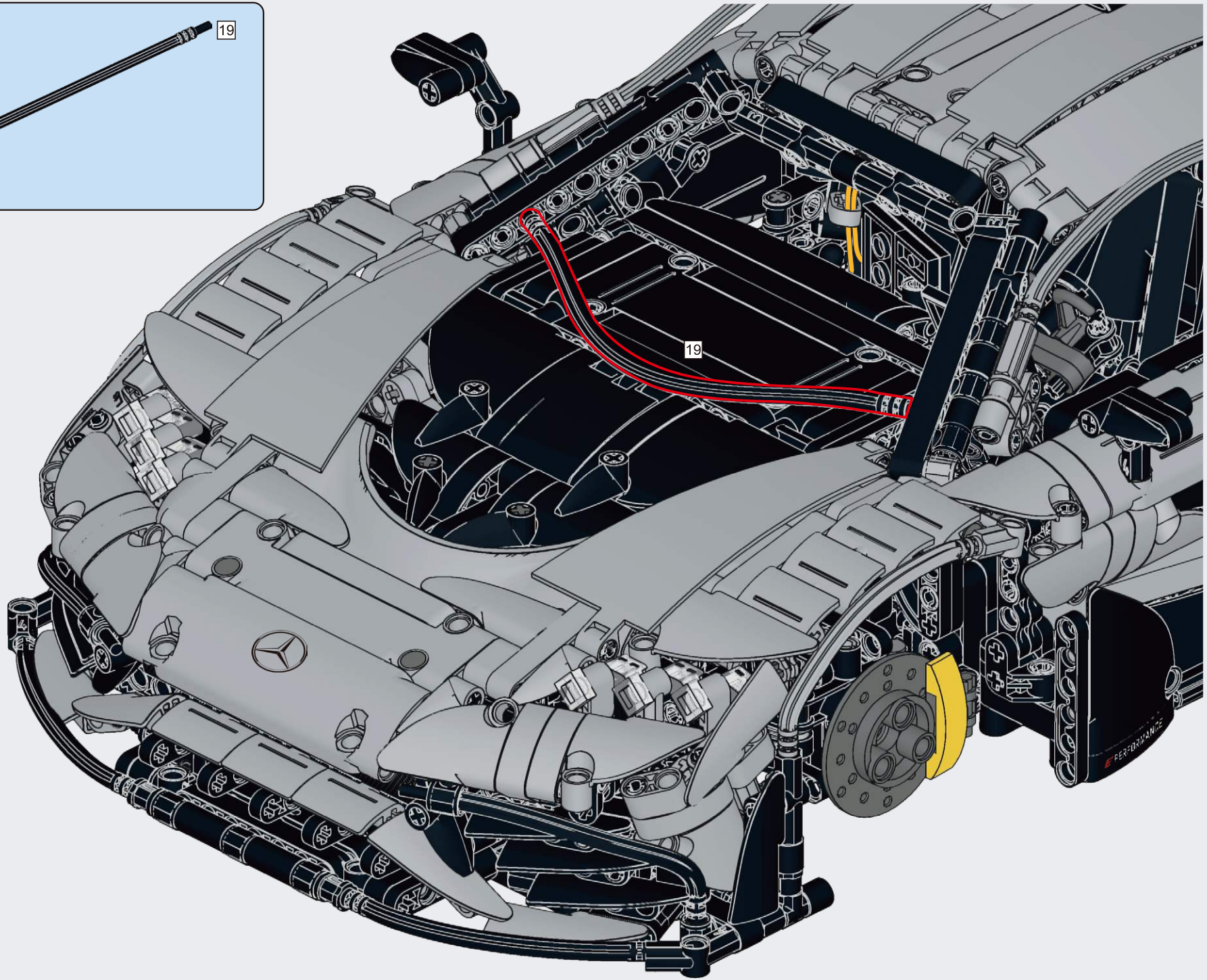

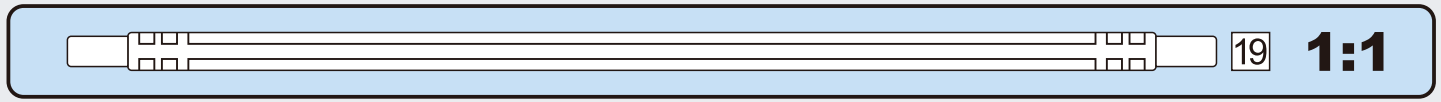

H

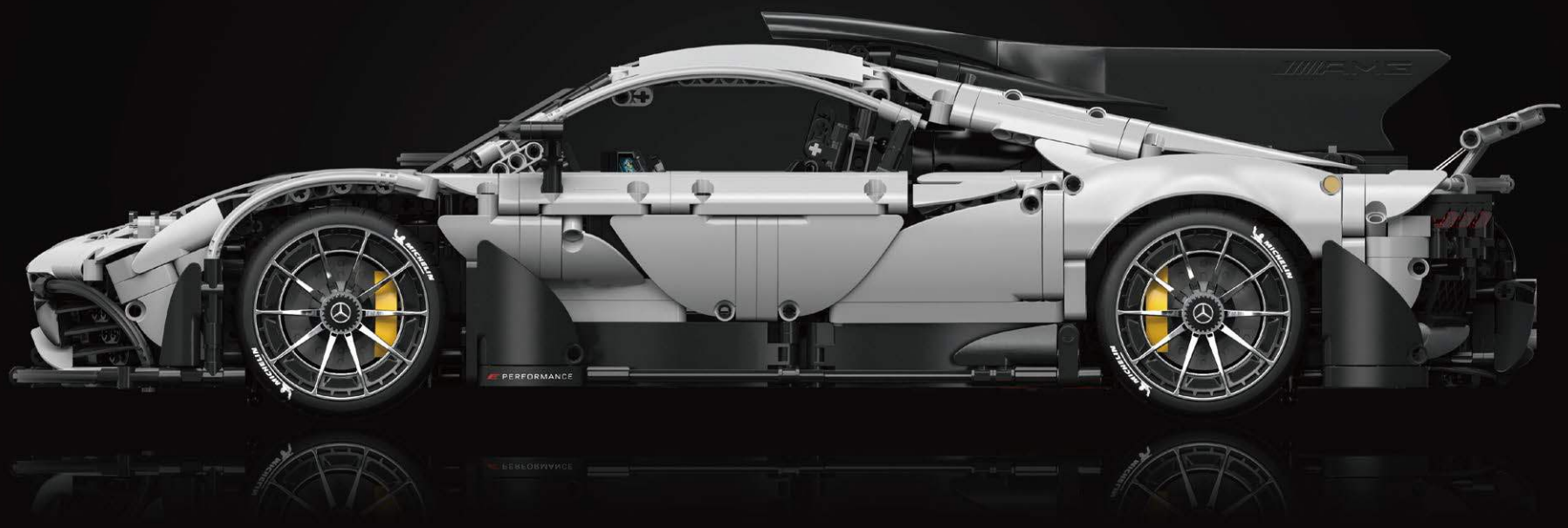

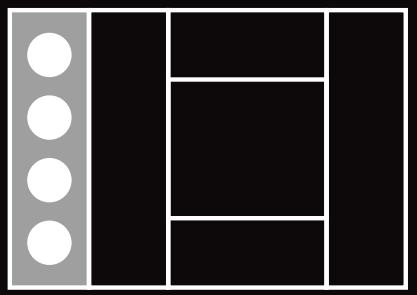

BAG 8

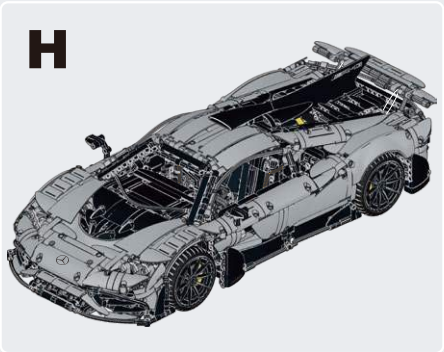

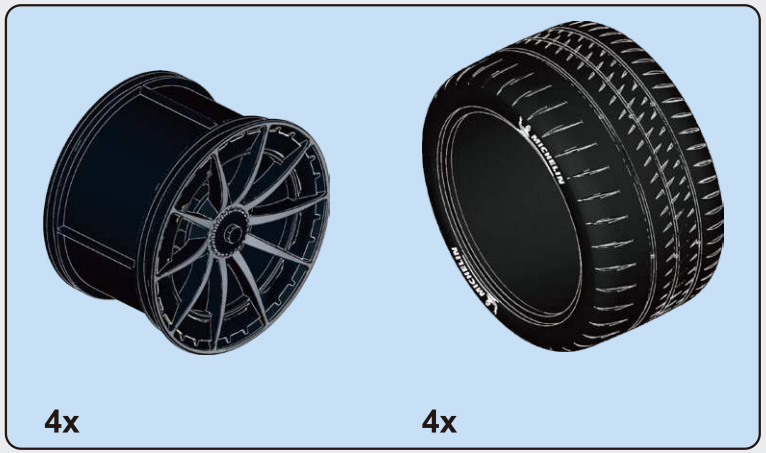

H1

x4

H2

x4

H3

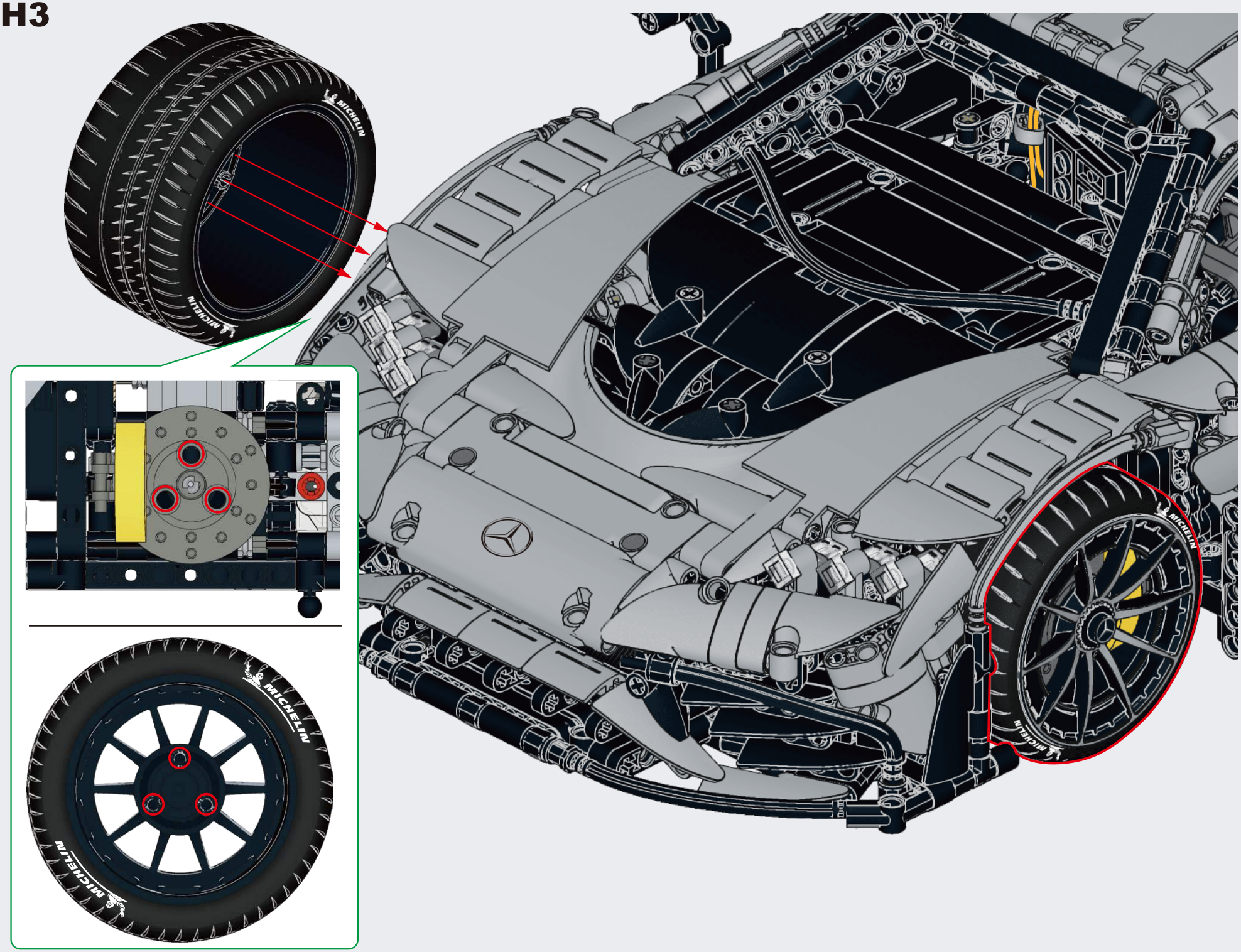

H4

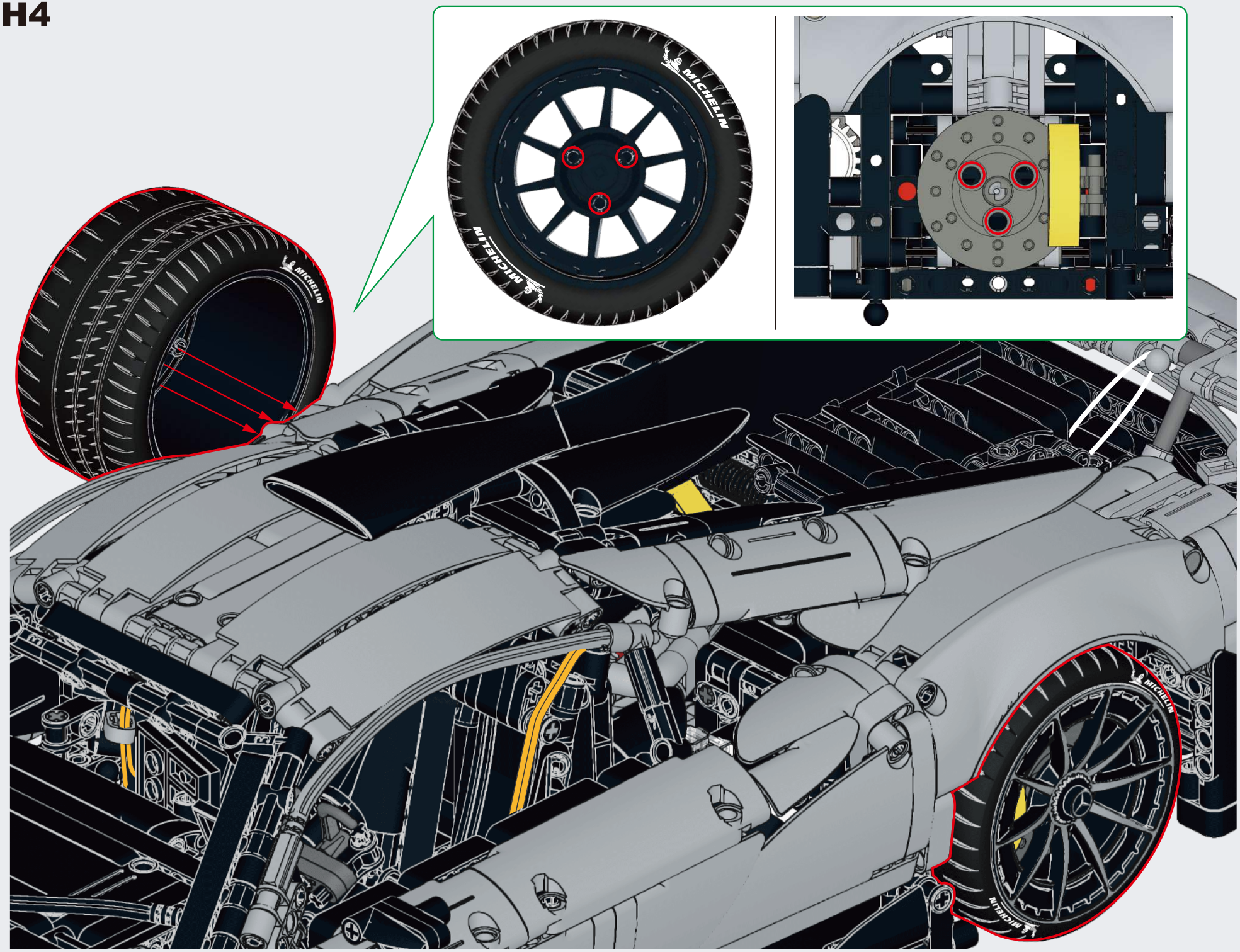

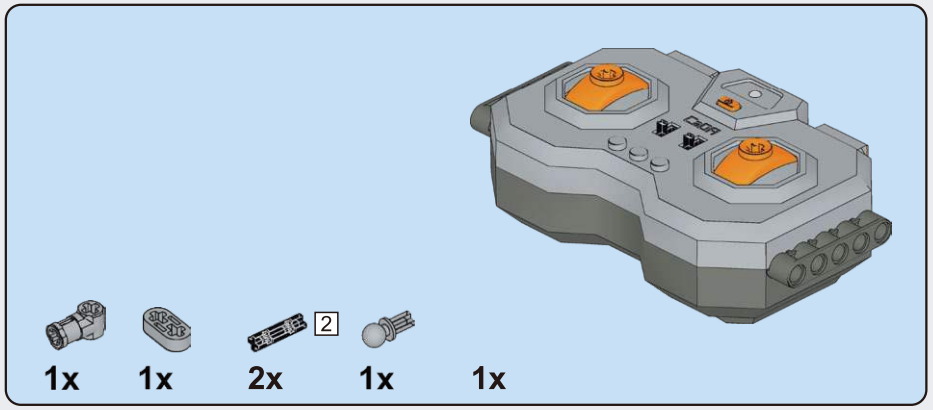

H5

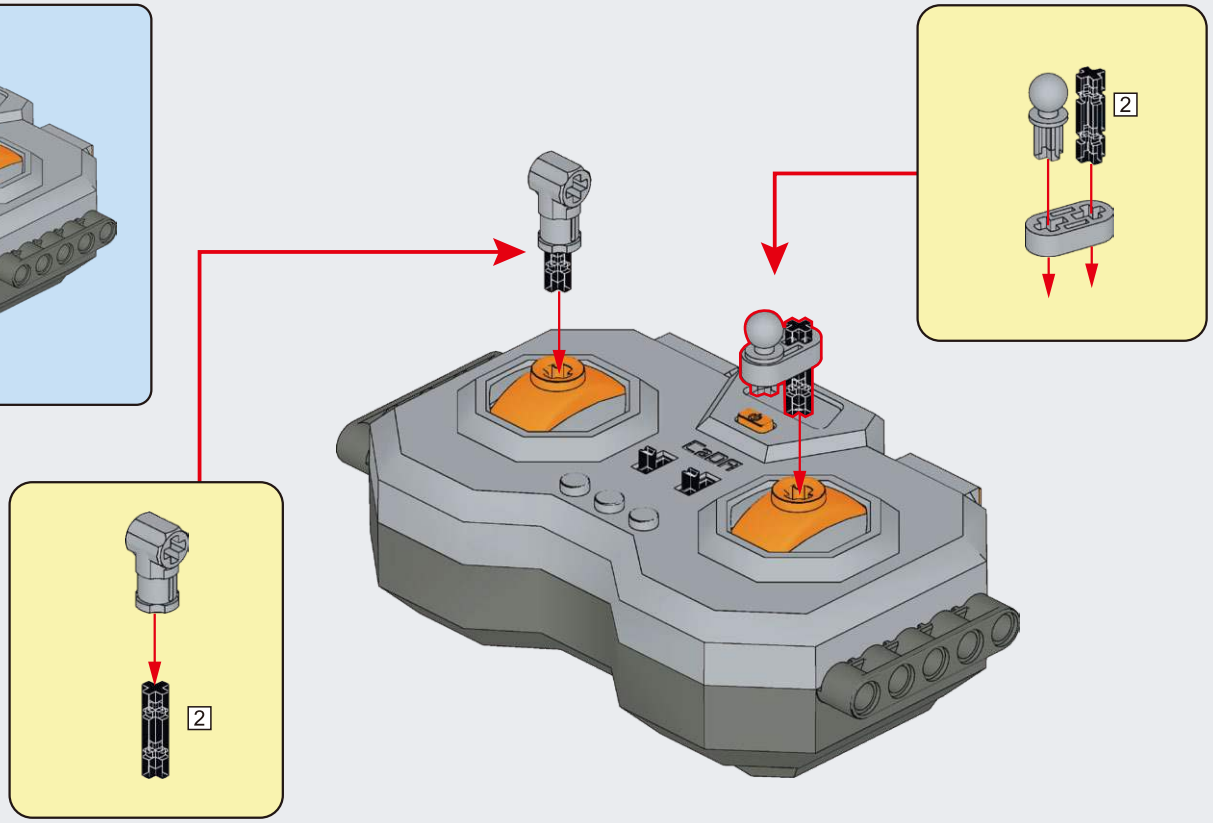

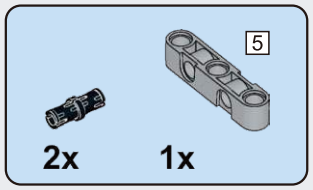

H6

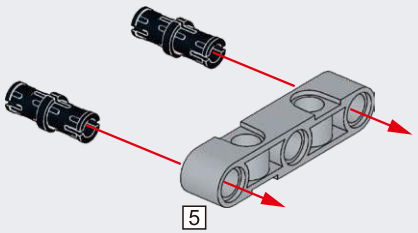

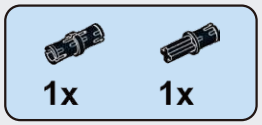

H7

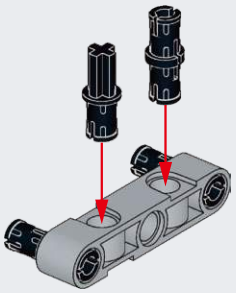

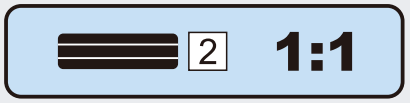

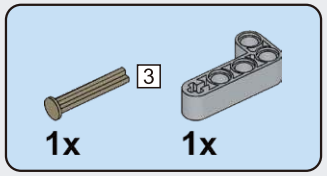

H8

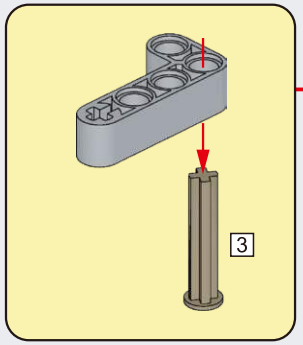

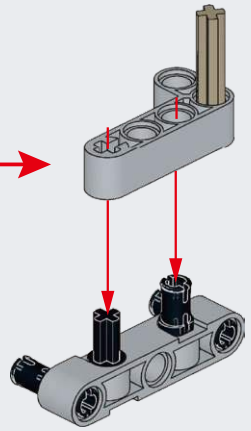

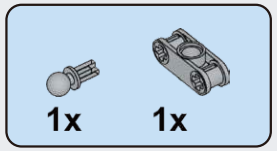

H9

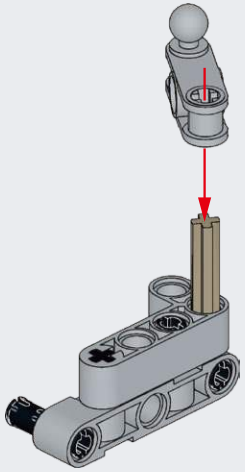

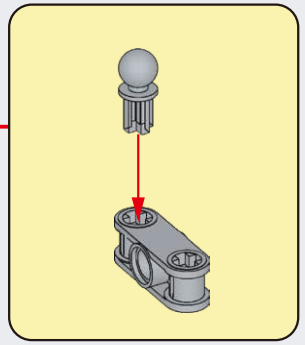

H10

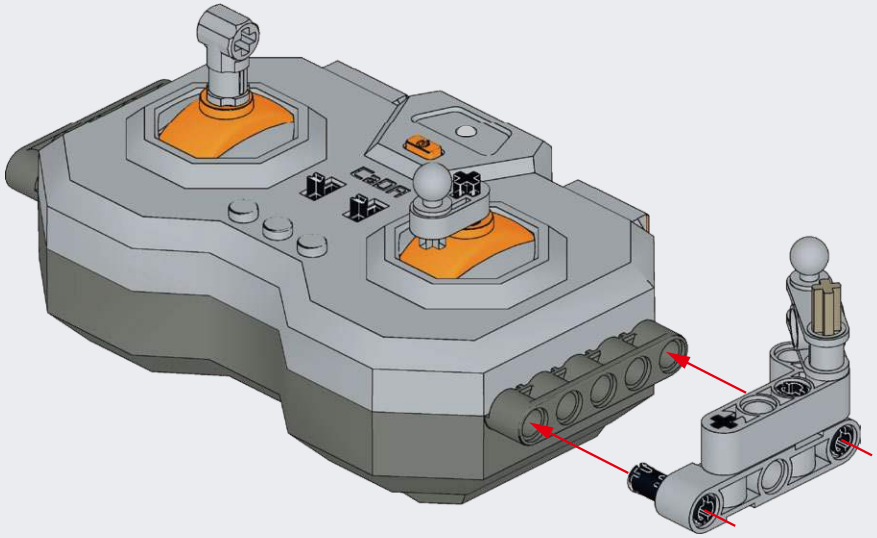

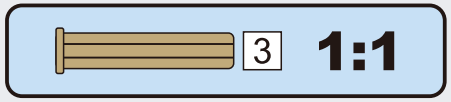

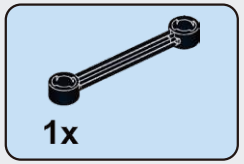

H11

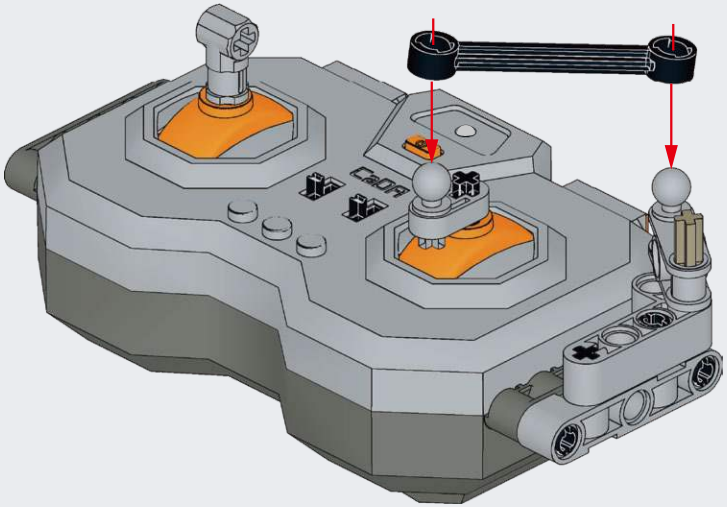

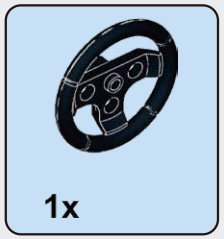

H12

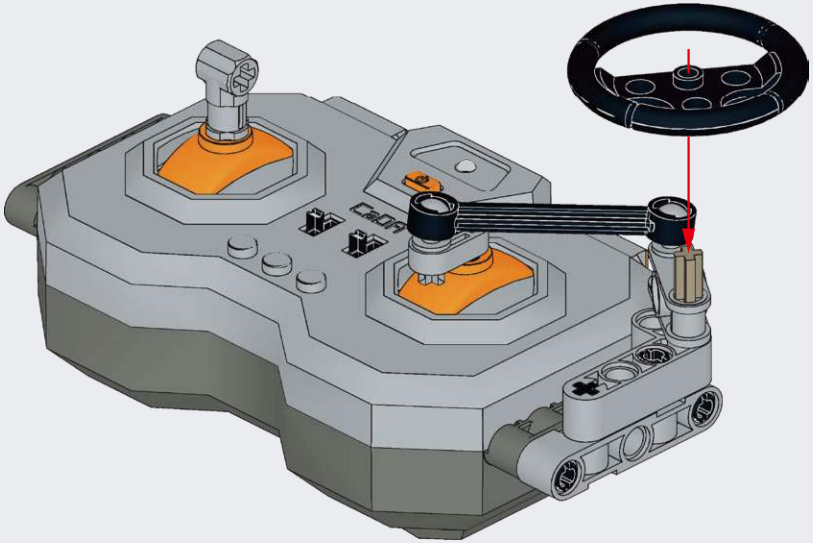

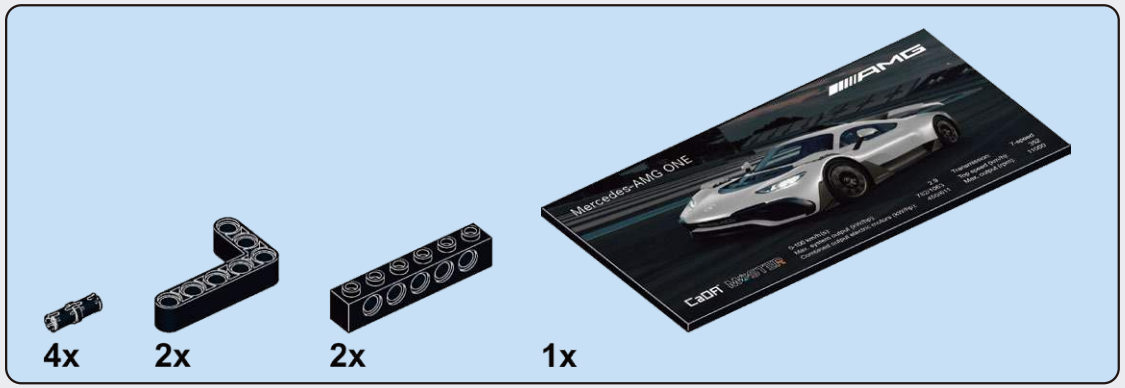
4x
2x
2x
1x
Mercedes-AMG ONE
AMG
CaDA MASTER

H13

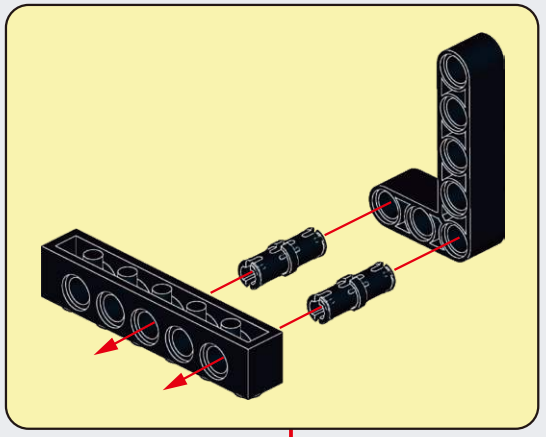

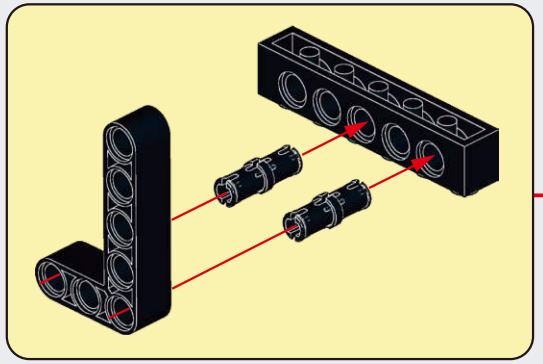

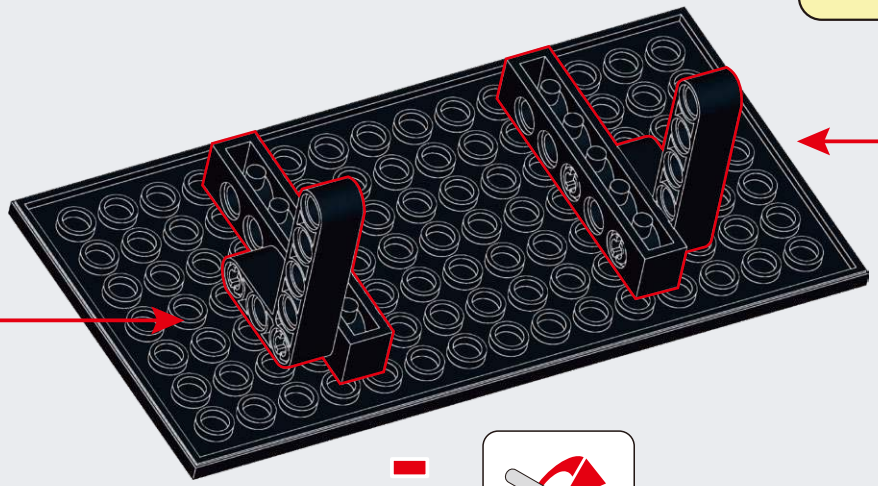

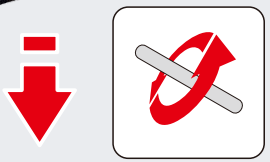

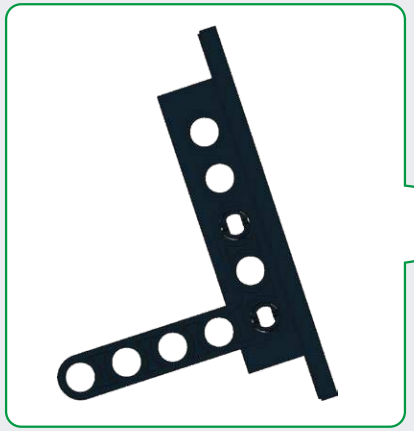

AMG
Mercedes-AMG ONE
0-100 km/h (s): 2.9
Max. system output (kW/hp): 782/1063
Combined output electric motors (kW/hp): 450/611
Transmission: 7-speed
Top speed (km/h): 352
Max. output (rpm): 11000
CaDA MASTER

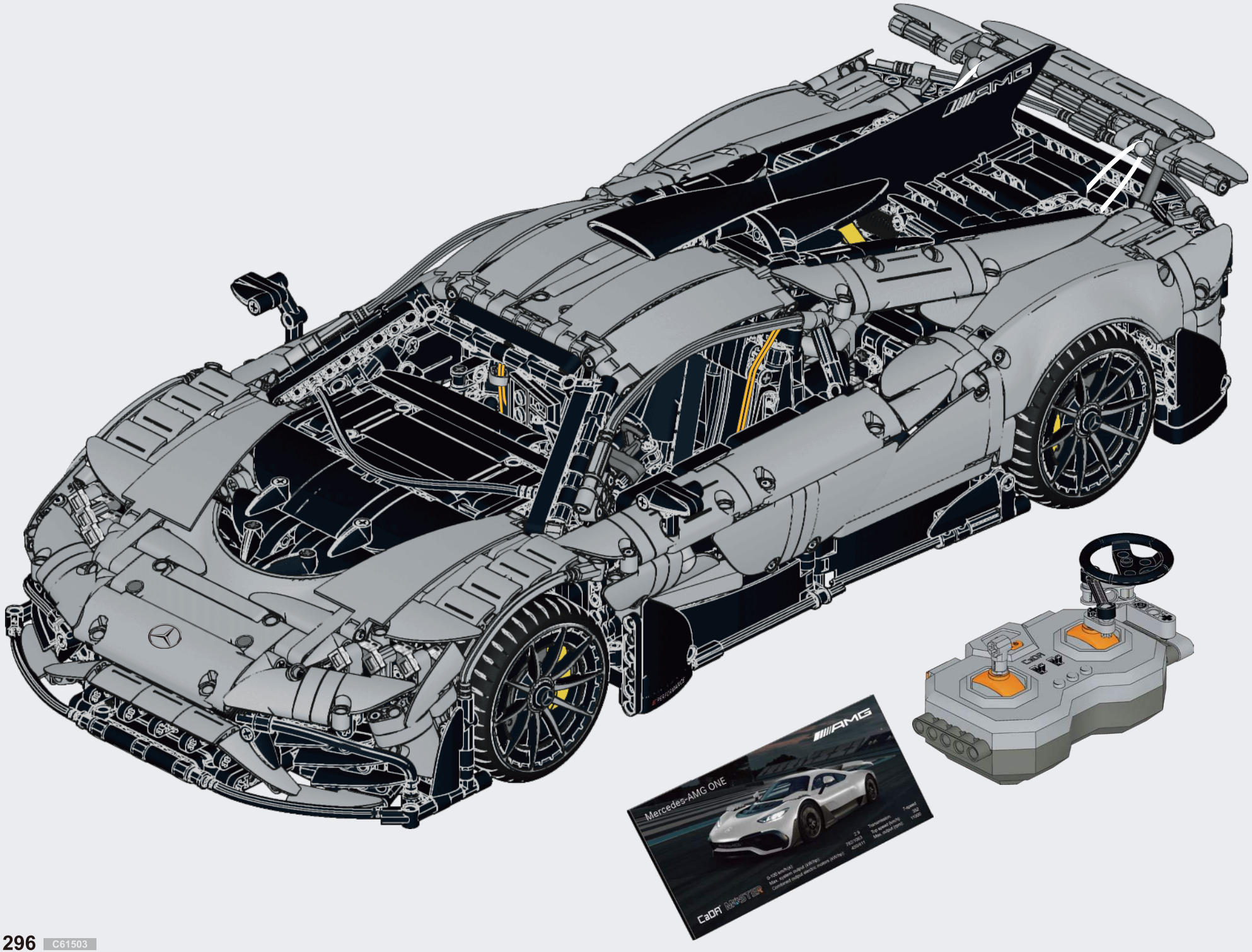
AMG
Mercedes-AMG ONE
CaDA MASTER

1

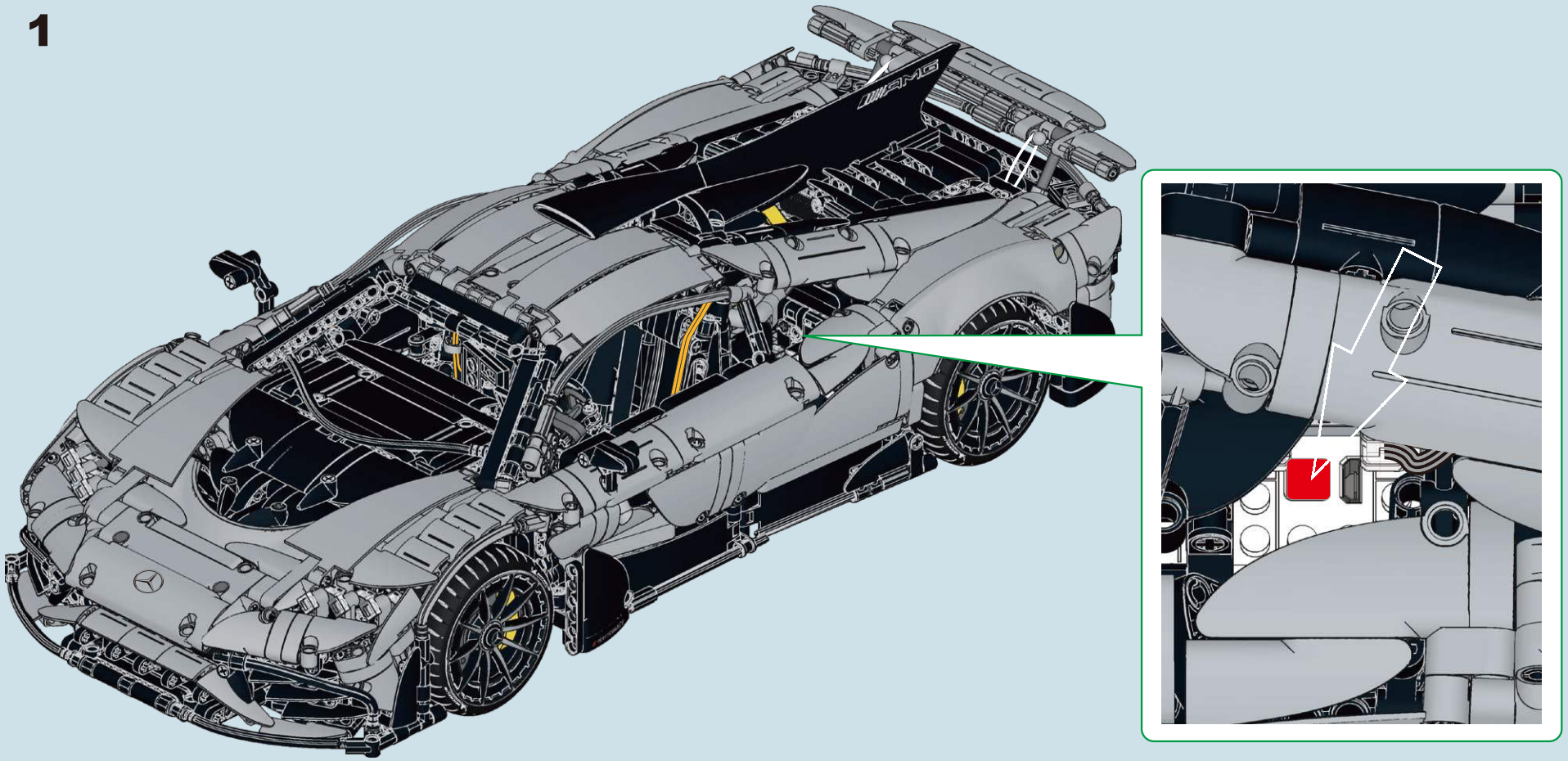

2

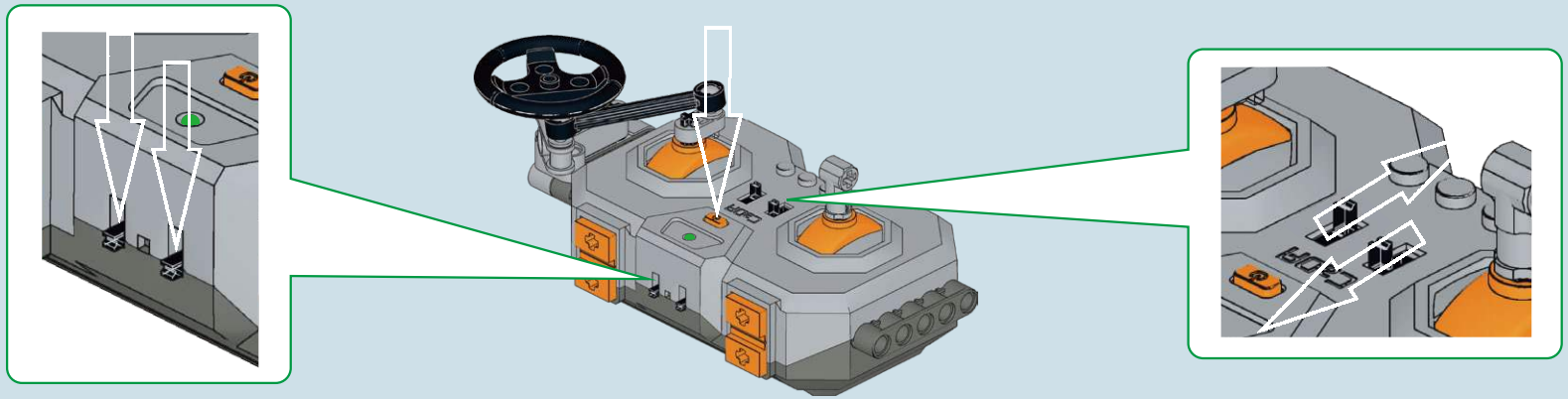

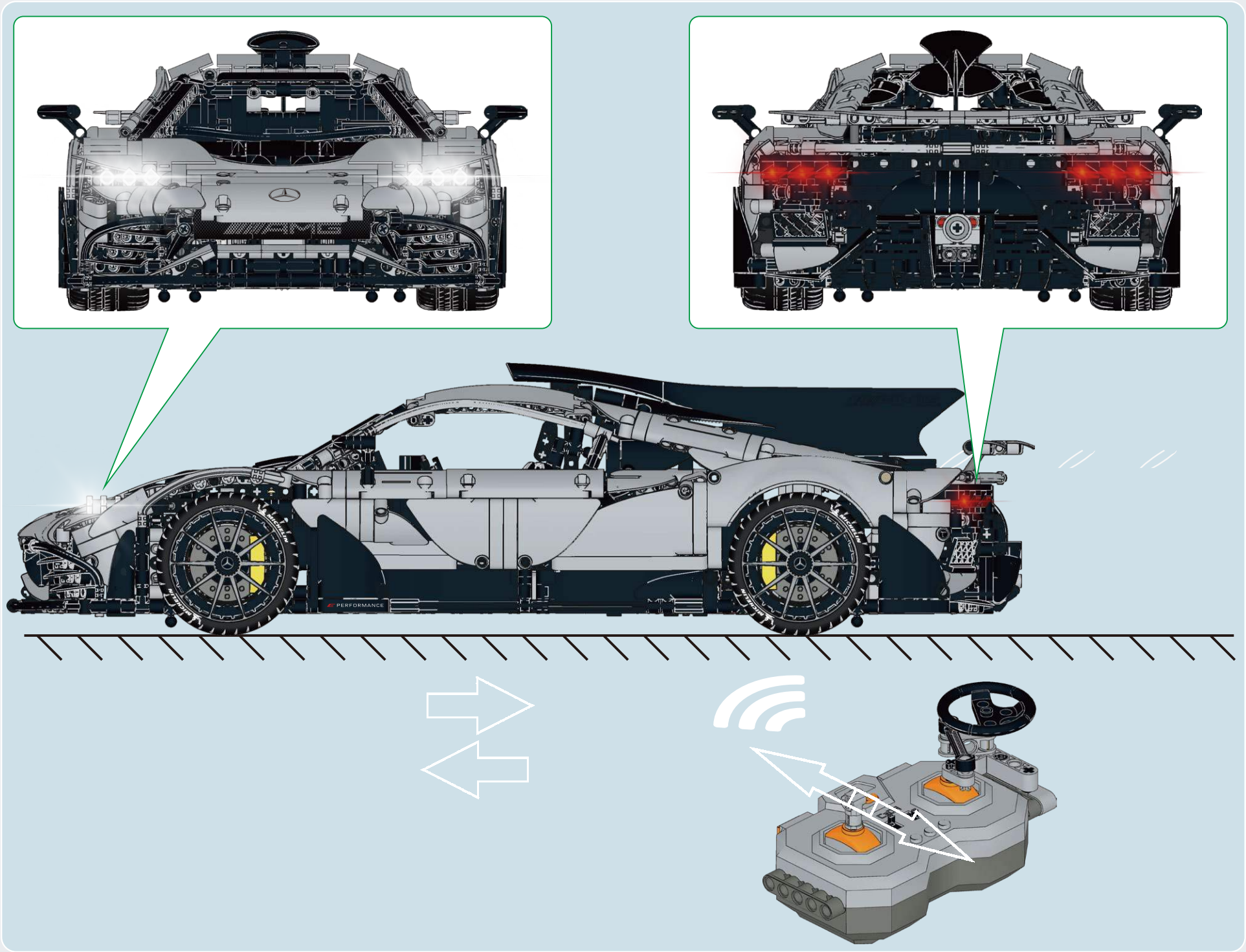
PERFORMANCE

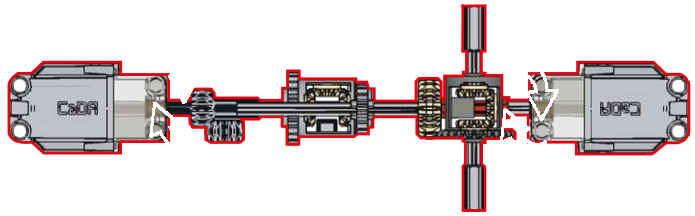

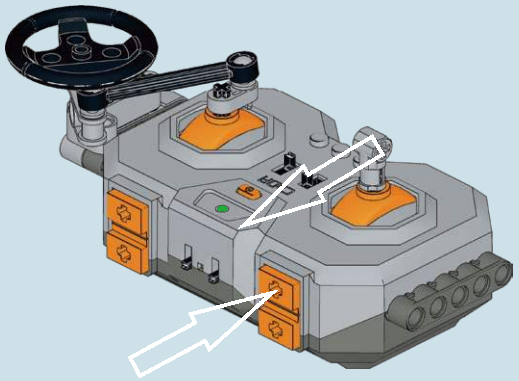

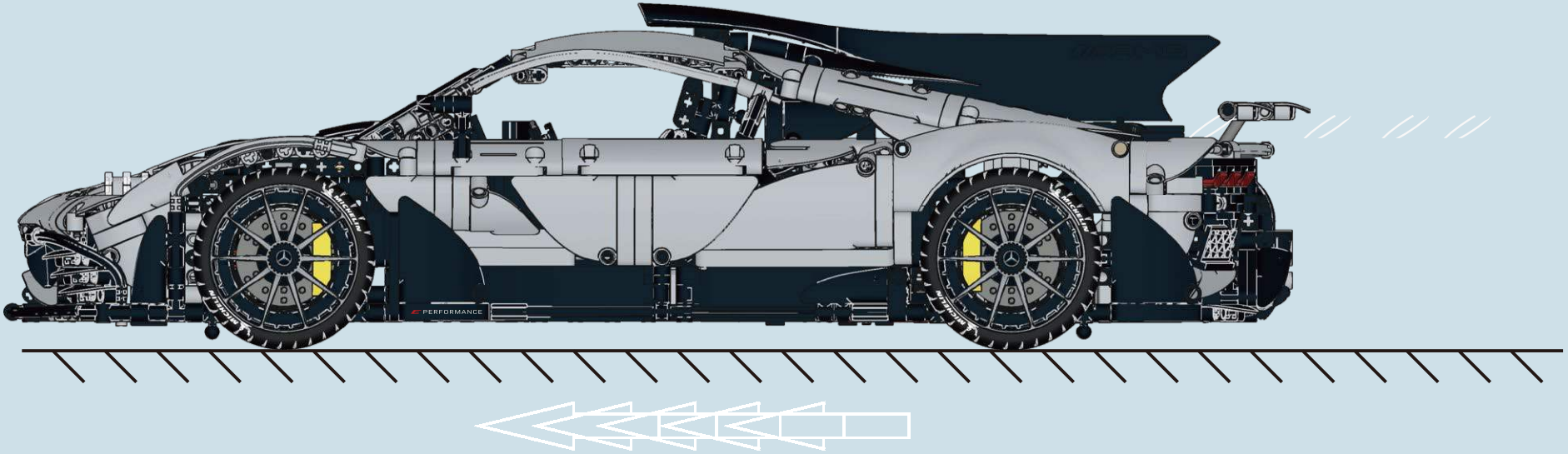

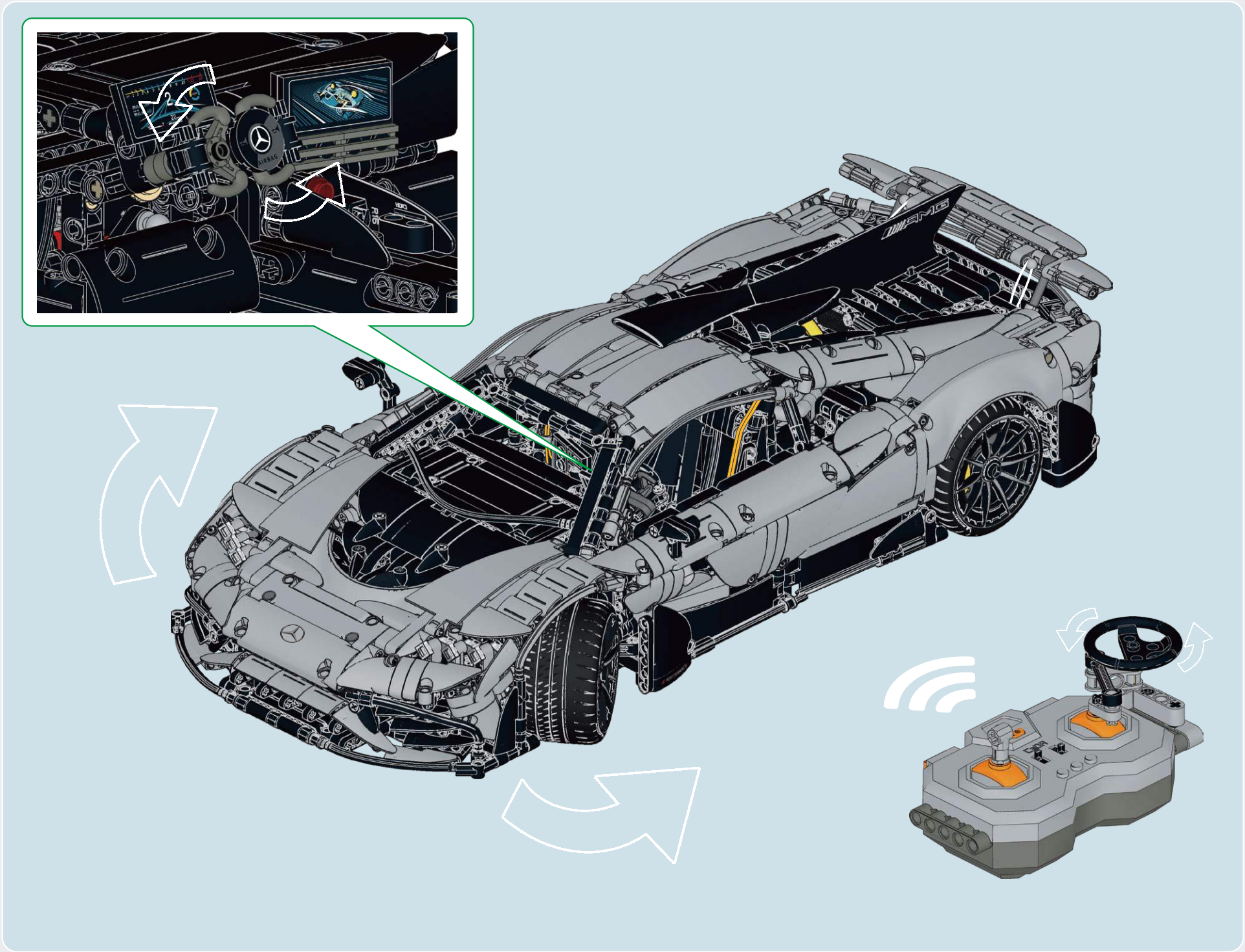

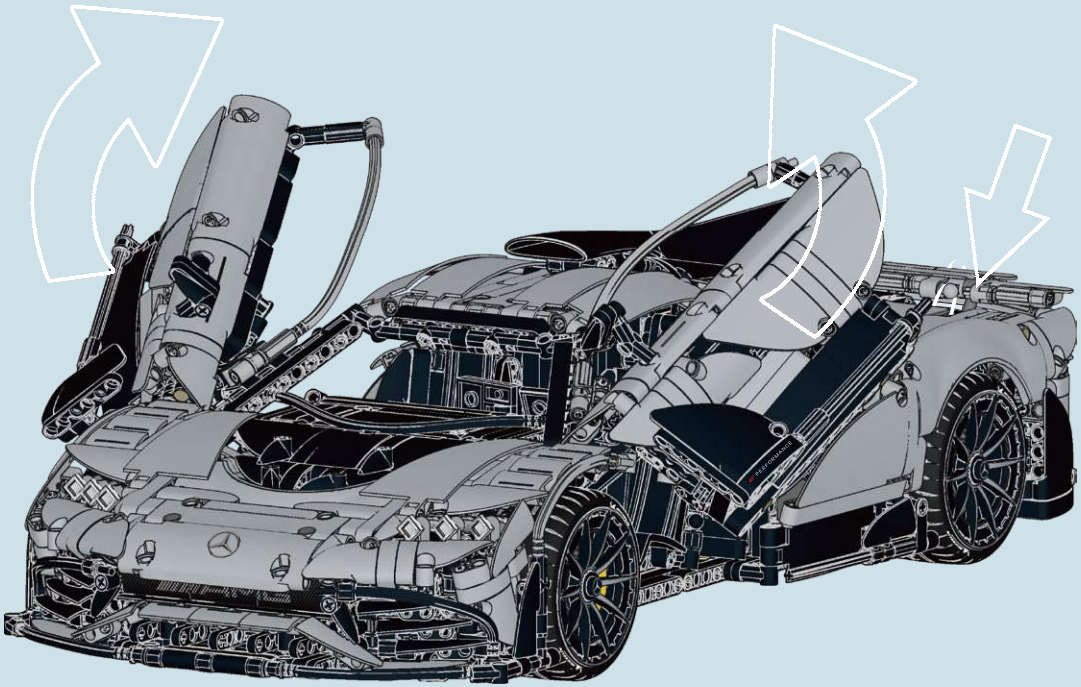

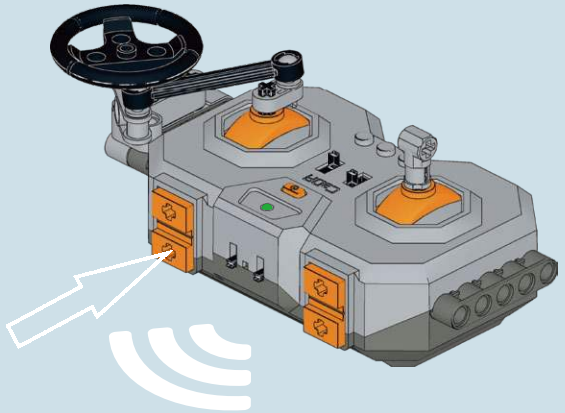

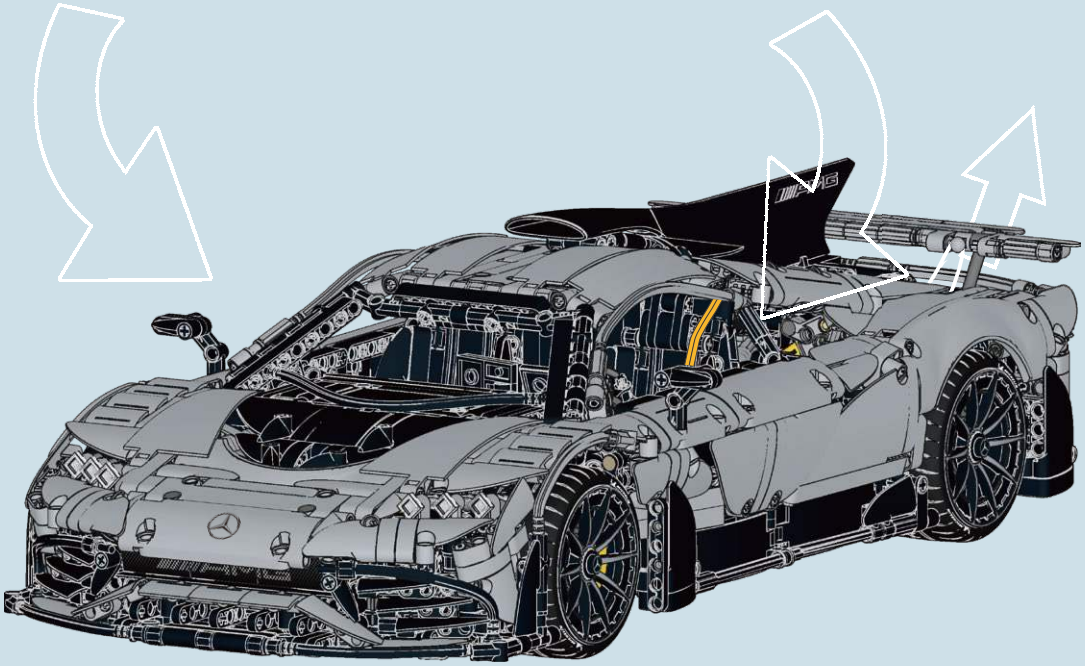

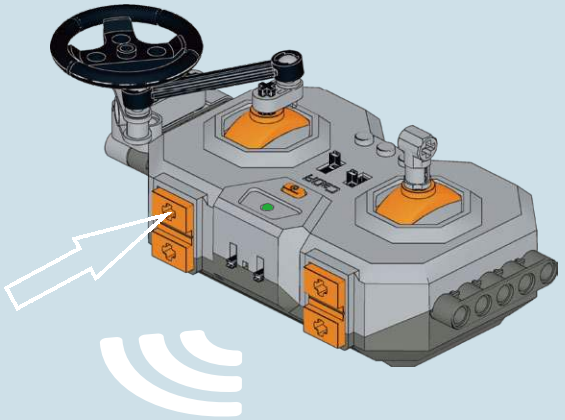

1

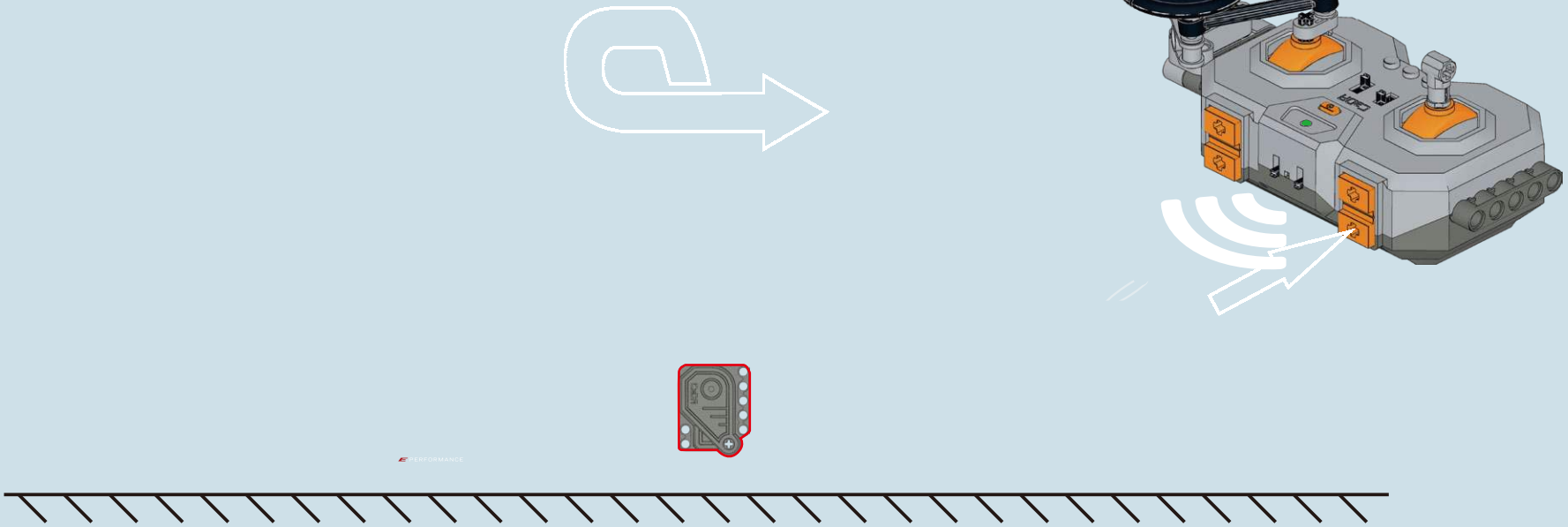

2

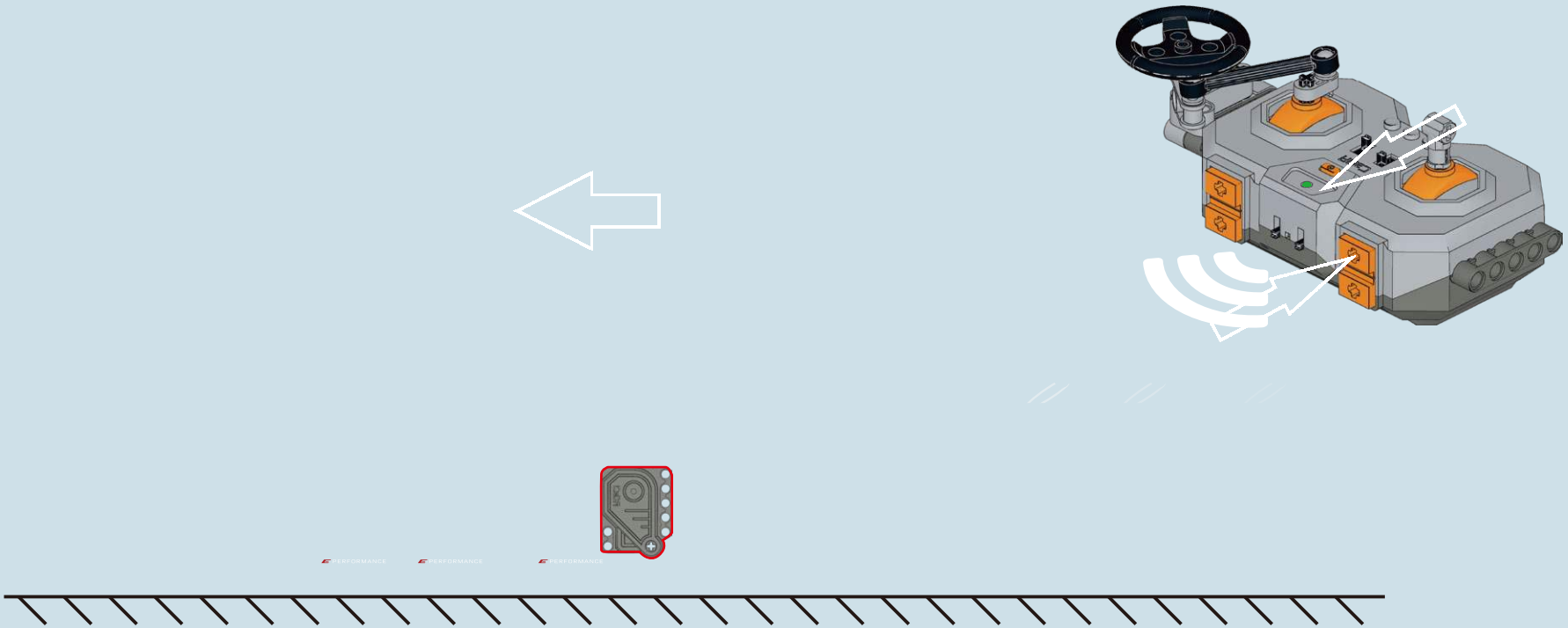

1

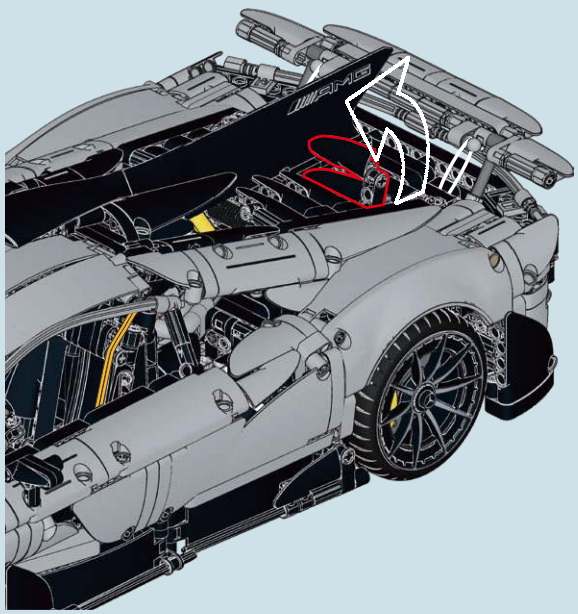

2

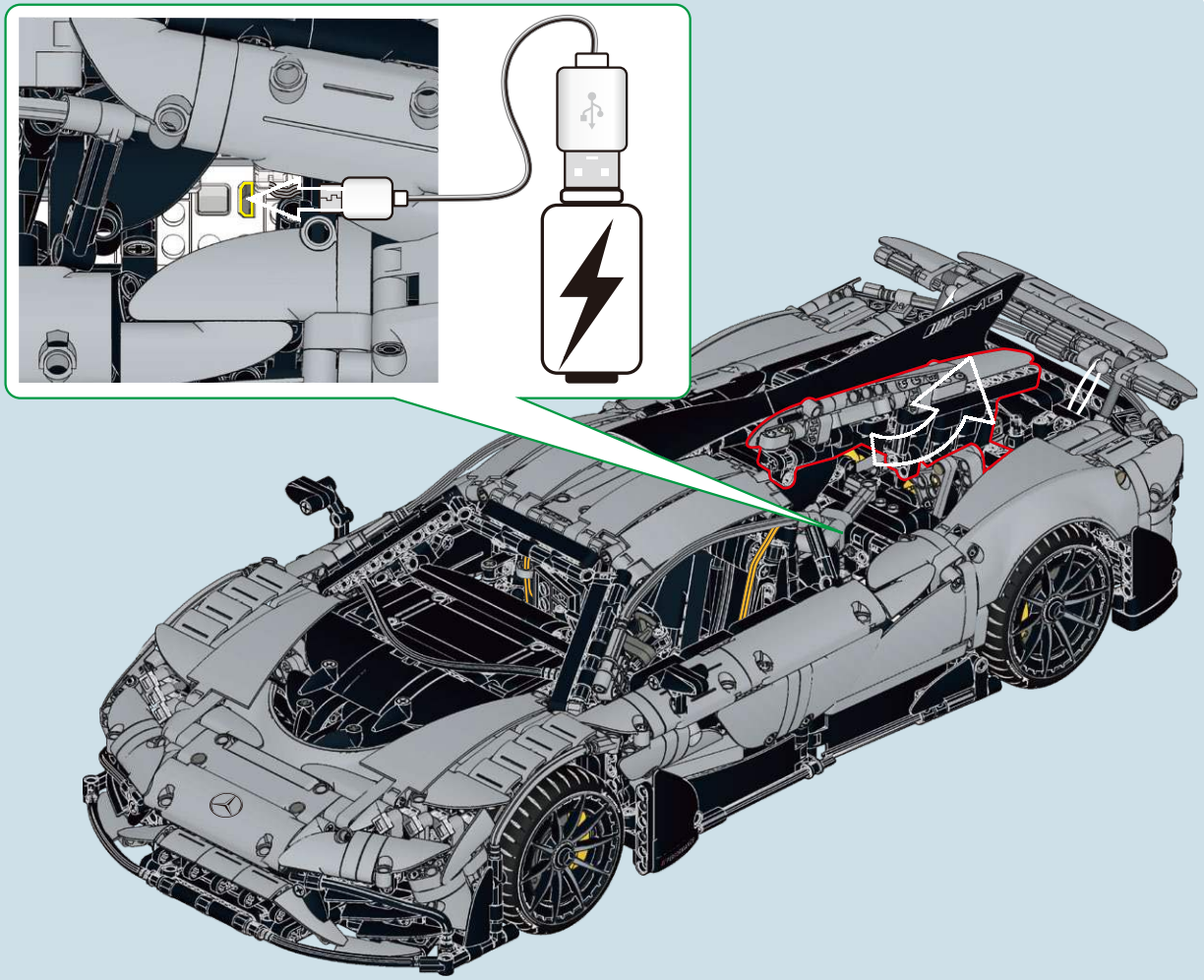

3

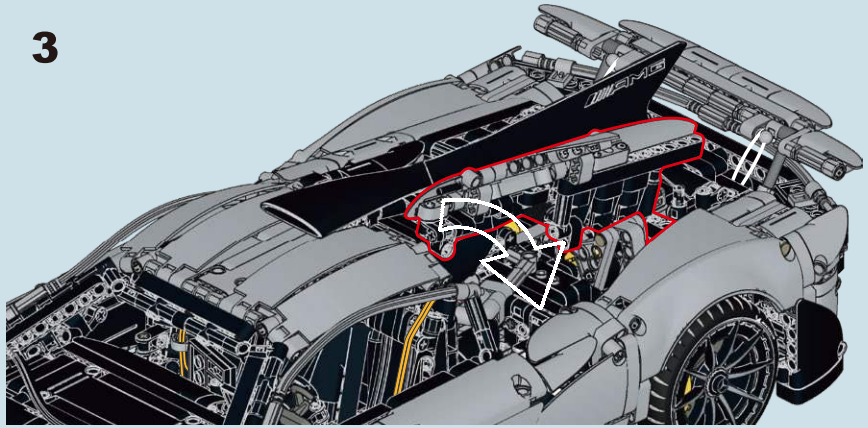

4

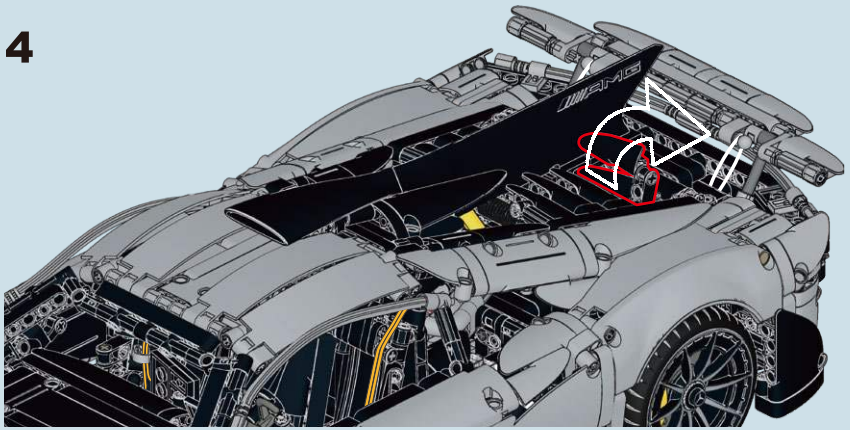

x1 JB10010005
x6 JA10150016
x12 JD10010002
x17 JH10180001
x19 JH10170001
x111 JH20150001
x12 JH10790008
x10 JF30520001
x6 JH50860006
x16 JH50320006
x6 JH30210003
x14 JH10190006
x4 202RJB10160006
x5 JB10010002
x6 JD10010005
x4 JF20110001
x11 JA10150009
x1 JJ00010009
x1 JB20020001
x33 JH10790001
x27 JH50860002
x1 JH90730004
x22 JH40230001
x85 JH50320001
x52 JH50410001
x2 JA30290001
x6 JA40360001
x7 JA10140001
x1 JF80720002
x439 JH20250001
x14 JF30440001
2
x114 JH00110001
x105 JH50010002
x16 JJ40220001
x4 JJ60030003
x44 JJ60180004
x10 JJ60190001
x8 JH30210002
x21 JH10190002
x22 JH50260001
2
x21 JH60270001
3
x13 JH60310001
4
x10 JH60300001
5
x8 JH60290001
6
x4 JH60280001
x5 JH50540001
x1 JH50260011
x6 JX40530001
x2 JX40580001
x4 JH20140001
x16 JM00170001
x1 JM00100001
x6 JM00150001
x4 JH20240001
x3 JJ40220007
x2 JJ60190005
x20 JJ60180002
x4 JJ60030002
x2 JM00110002
x4 JH50410002
x1 JH40230002
x4 JF80720001
x4 JX40420016
x2 JC00150006
x6 JH40870001
x6 JH50260002
x6 JX40570001
x1 JH50540003
3
x4 JH60310003
5
x2 JH60290009
6
x2 JH60280004
x2 JM00130001
x2 JH60820001
x6 JJ40250006
x1 JH60380001
3
x6 JJ60040005
3
x51 JH00130001
x4 JH90560001
x1 JX41850008
x2 JH60390002
x2 JH50740001
x2 206RJT00010005
x2 JF10060001
x6 JJ00200001
x10 JH61080001
x3 JE30150002
x1 202RJB10040006
x2 JM00200002
x8 JF11220002
x3 JA10130002
x32 JJ40250002
3
x8 JJ60040001
x19 JH60380002
x3 JJ60310002
10x JH61070001
x8 JH60480003
x2 JH60850002
x8 JH60820003
x9 JJ40240001
x6 JJ50460003

x10
JX40420001

x18
JH60400001

x13
JH60500001

x6
JH60650002

x34
JH60390001

x2
JH60490001

x14
JJ50710001

x20
JJ50260001

x28
JJ70820001

3
x1
JA30300002

x1
JA10070001

x2
JA20240001

x6
JX41360002

x2
206RJT10020012

3
x39
JF10890001

x53
JH50640001

x71
JH50200002

x281
JH20160002

4
x21
JH00050001

x4
JH21030001

x47
JJ70110002

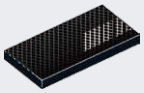
x1
202RJA30410016

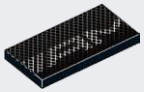
x1
202RJA30410017

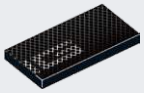
x1
202RJA30410018

x1
202RJA30410022

x1
202RJA30410023

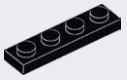
x3
JA10120001

x10
JH60350001

x2
JH60900001

x8
JG20150001

x4
JF10060002

x2
JX80010003

x2
JH60850003

x48
JH50440001

x2
JX10440001

x2
JJ40730004

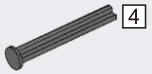
4
x31
JH00460001

x2
JM00250001

x2
JH00810001

3
x23
JH00630001

x12
JH20430001

x5
JH50200001

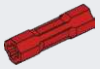
x5
JM90420001

x5
JM00160001

x2
JM00200001

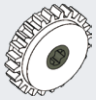
x1
JM00610001

x4
JC00270015

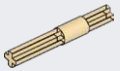
x3
JH00930002

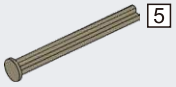
5
x14
JH00470001

x4
JH90770002

x2
JH20550005

x4
JJ40240008

x2
JH60650003

x26
JJ50710003

x2
JA10070003

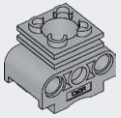
x6
JX40520001

x15
JX41360006

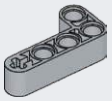
x17
JJ70110004

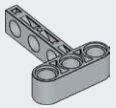
x4
JJ20750003

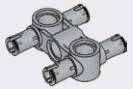
x2
JH60350003

x5
JJ40730003

5
x3
JJ60050002

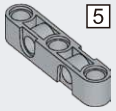
5
x1
JJ60320006

4
x2
JF10460003

4
x4
JF10460002

5
x21
JH00040001

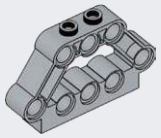
x2
JJ20480001

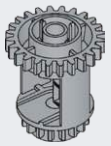
x1
JM00450001

x6
JJ50720002

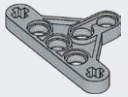
x16
JJ50440003

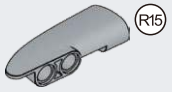
R15
x9
JX41980008

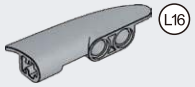
L16
x9
JX41970008

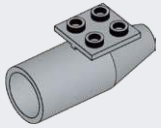
x1
JX41580001

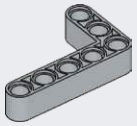
x2
JJ70120004

x2
JH61070002

x12
JJ40730002

x12
JJ60050001

x12
JJ40290001

x2
JJ40280001

x8
JJ50270002

x22
JJ50440001

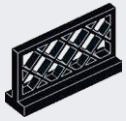
x4
JX80820002

x4
JJ50720001

x4
JM80470001

x22
JX41980004

x22
JX41970004

x2
JJ70130002

x26
JJ70120002

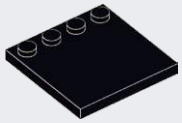
x2
JA40620001

x5
JX40550003

x3
JX41950003

x1
202RJJ50720001

x3
JX41960003

x2
JX41670008

x3
JX41620007

x2
JX41660008

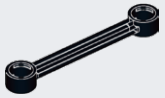
x5
JF40480001

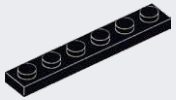
x3
JA10110001

x4
JJ00210001

x2
JA20210009

x1
202RJJ50720002

x2
206RJT00010007

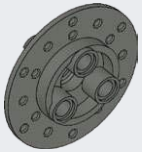
x4
JM30750003

x1
JX00590001

x2
JX40540001

x1
JH00080001

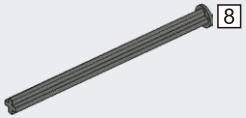

x7
JH00610001

x3
JX41680011

x10
JH00060001

x4
JA10050006

x3
JX41630007

x25
JJ60060001

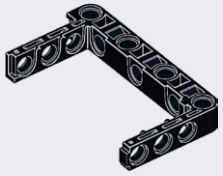
x55
JJ20760002

x18
JJ60070001

x15
JJ60080002

x10
JX41950001

x10
JX41960001

x2
JX41660009

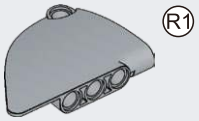

x2
JX41620008

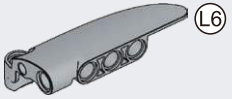

x2
JX41670009

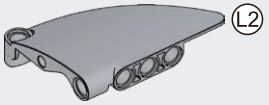

x2
JX41630008

x4
JX40540004

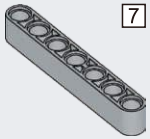

x7
JJ60060004

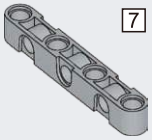

x1
JJ60330006

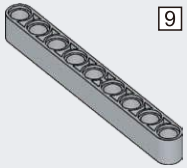

x6
JJ60070004

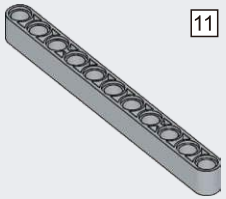

x2
JJ60080004

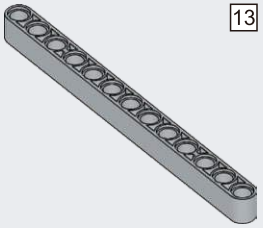

x1
JJ60090003

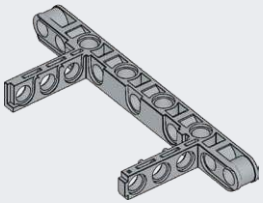

x7
JJ20770001

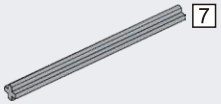

x9
JH00070001

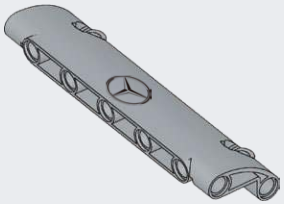

x1
202RJX40660001

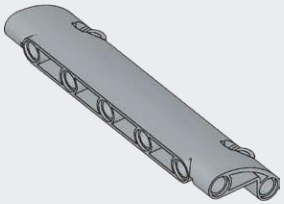

x2
JX40660009

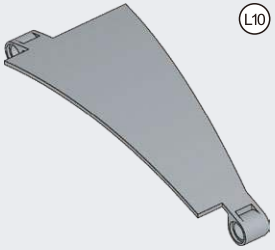

x2
JX41500003

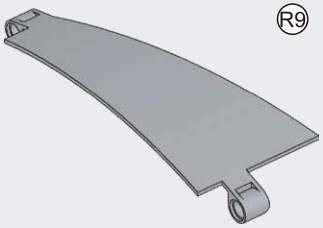

x2
JX41490003

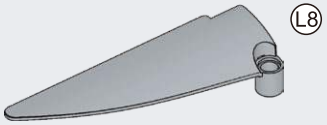

x1
JX41690010

x1
JX41680010

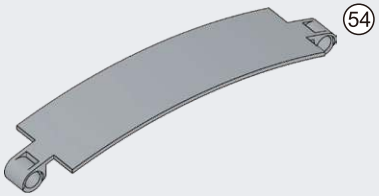

x4
JX40600012

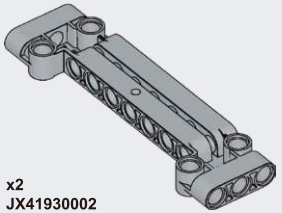

x2
JX41930002

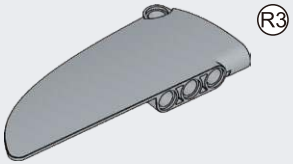

x1
JX41640006

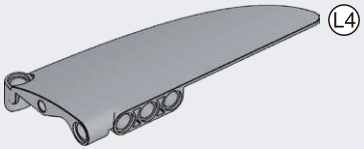

x1
JX41650006

x3
JH00620001

x4
JH80670007

x2
2050JH80750002

x2
JJ60400001

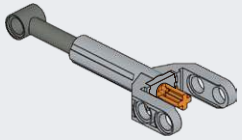

x2
2050JH80700001

x1
JX41690011

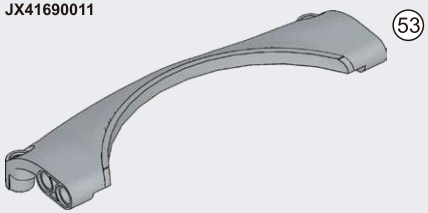

x3
JX41570001

x6
JH00100001

x2
JF40530001

x16
JX41540001

x6
JX40600003

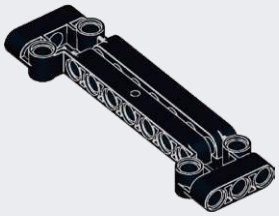

x3
JX41930001

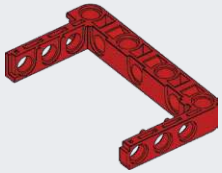

x3
JJ20760004

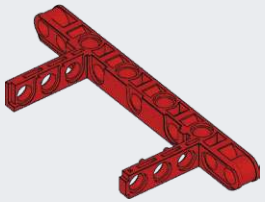

x1
JJ20770002

x4
JR30120001

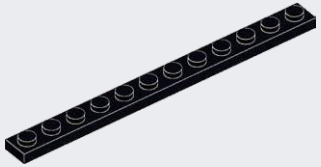

x1
JA10660001

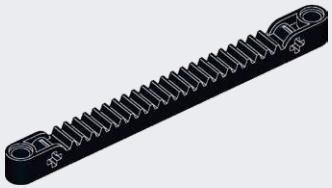

x1
JM00390001

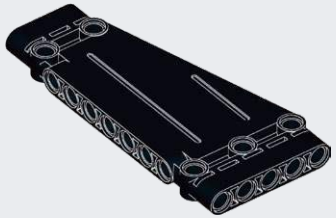

x4
JX40630003

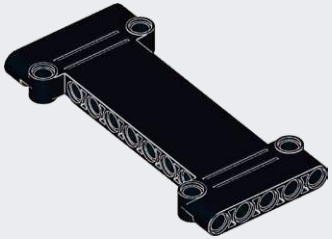

x5
JX41610003

x1
JJ70160001

2x
JX40400008

x11
JJ60090002

x14
JJ60100003

x1
JA10400005

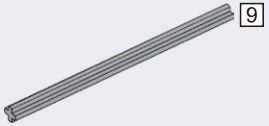

x2
JH00090001

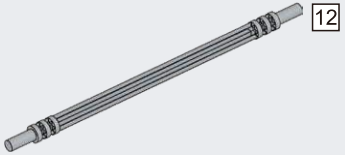

x2
JR30120010

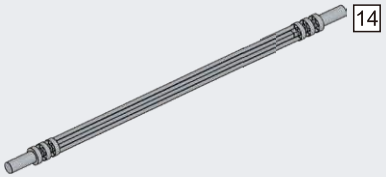

x2
JR30110010

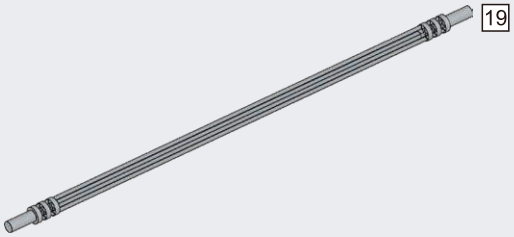

x2
JR30240009

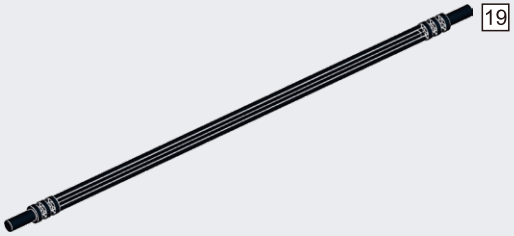

x1
JR30240004

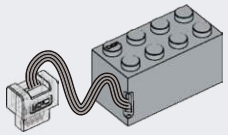

x2
205RJV90800006

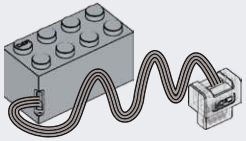

x2
205RJV90800008

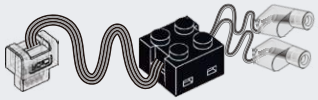

x6
205RJV30720003

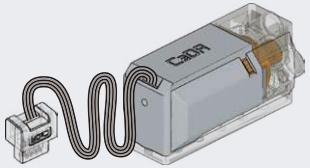

x2
205RJV50730004

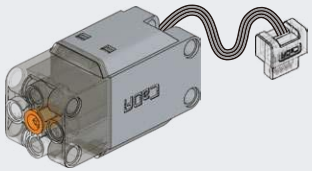

x2
205RJV50740006

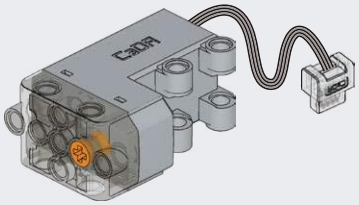

x1
205RJV50750004

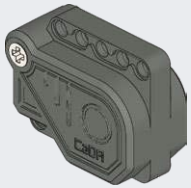

x1
JV50030001

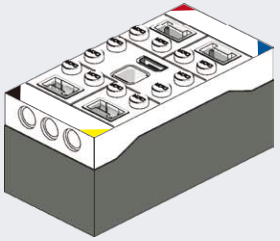

x1
205RJV10770003

x1
JX41560002

x4
202RJM30910001

x1
202RJA30880004

x4
202RJR40360001

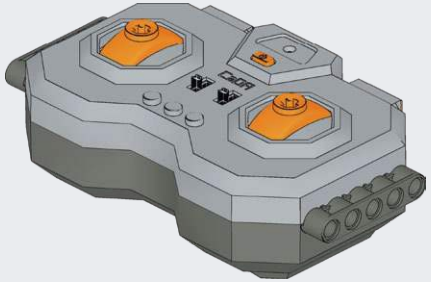

x1
205RJV80110005

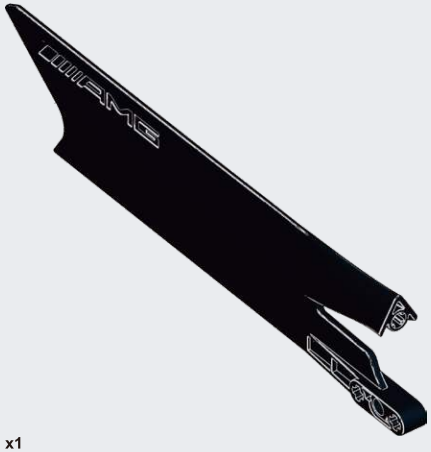

x1
JX41590002

CaDA® MASTER

AMG

MERCEDES-AMG ONE

www.doubleeagle-group.com

403ARC615030005