CaDA MASTER

Designer Introduction

Greetings, my name is Michael "Efferman"Wirth and my passion lies in the world of heavy machinery, specifically trucks and cranes.For the past 35 years, i have been dedicated to creating functional models of these powerful vehicles.

Designer: Michael "Efferman" Wirth

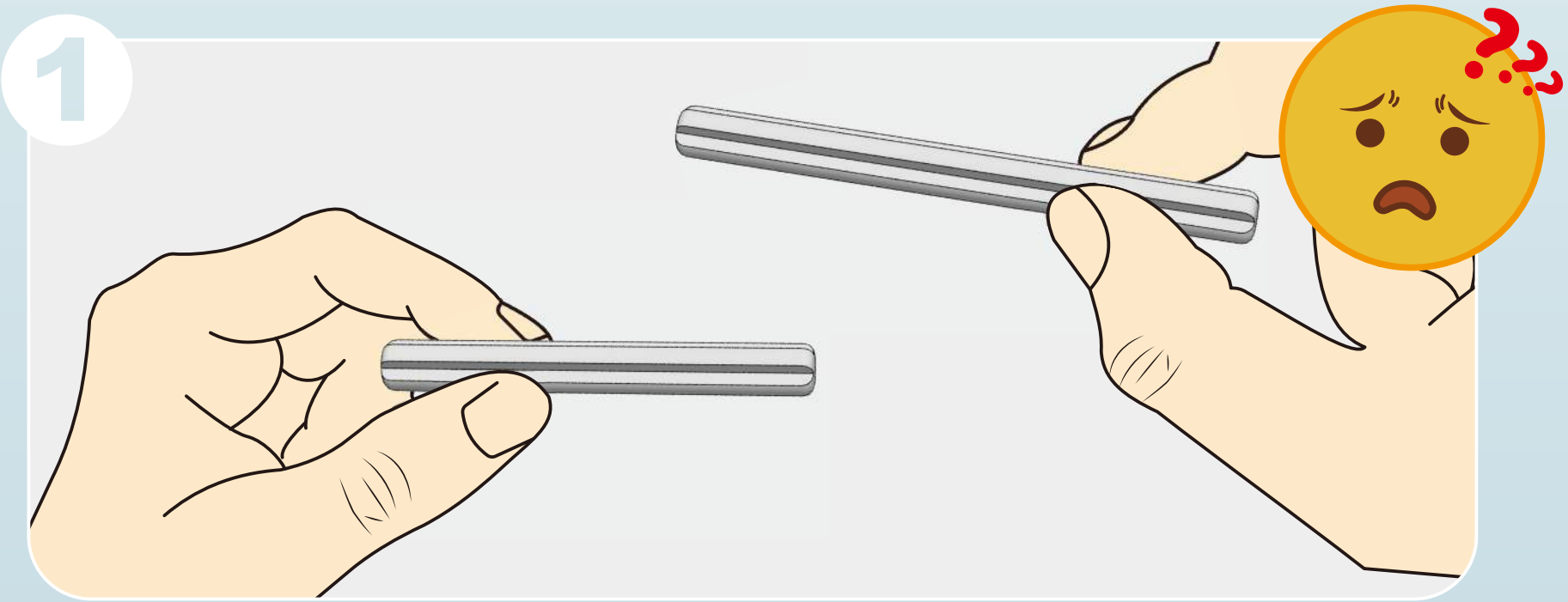
1

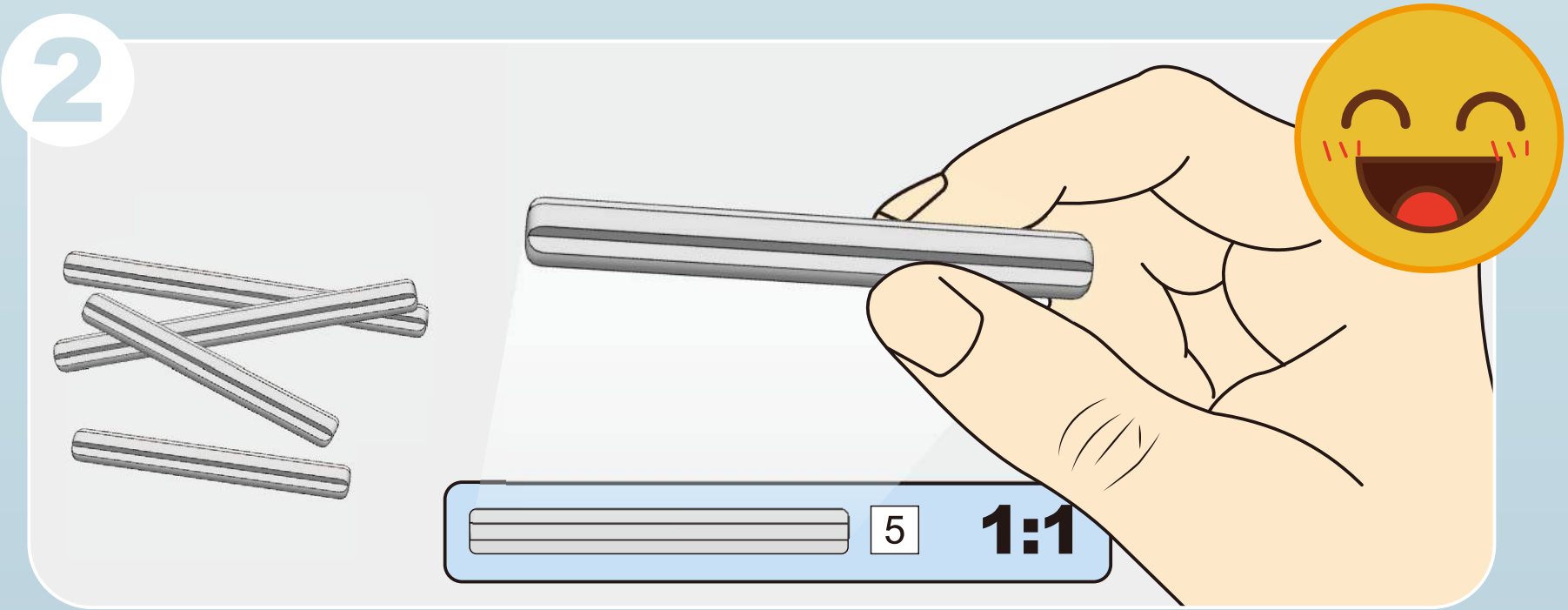
2
5
1:1

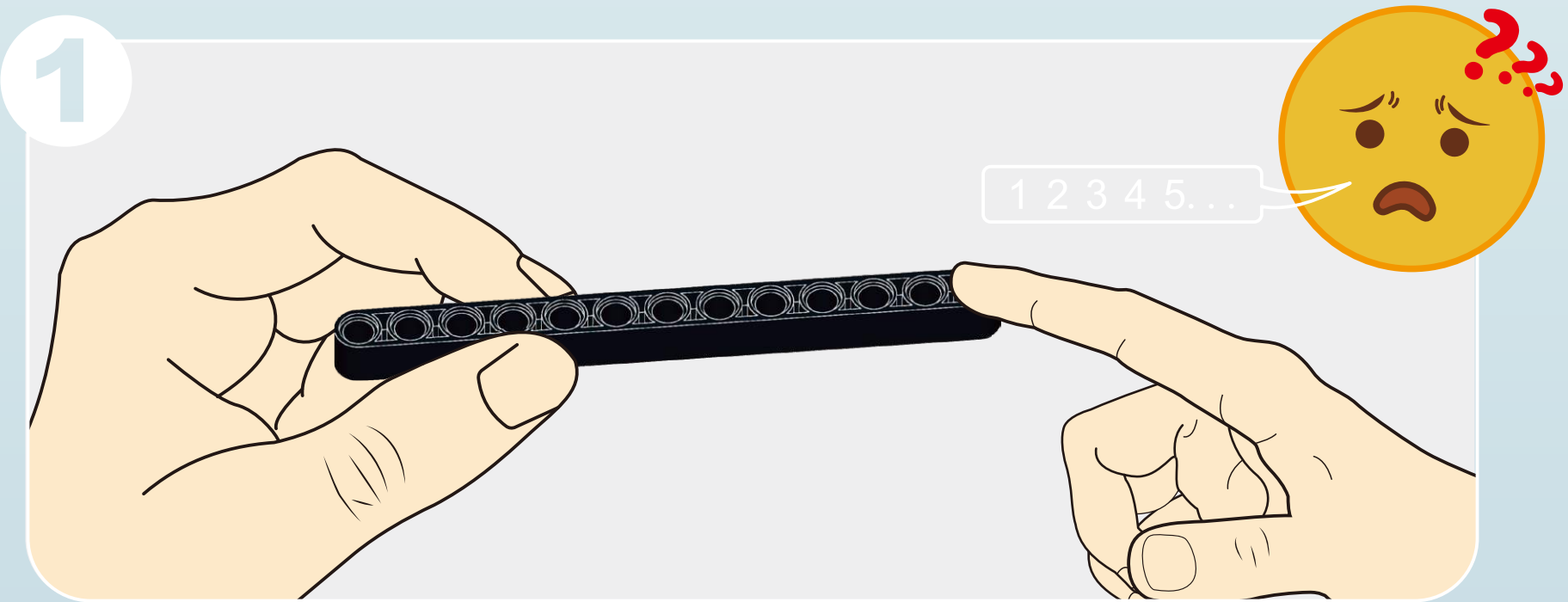
1
1 2 3 4 5. . .

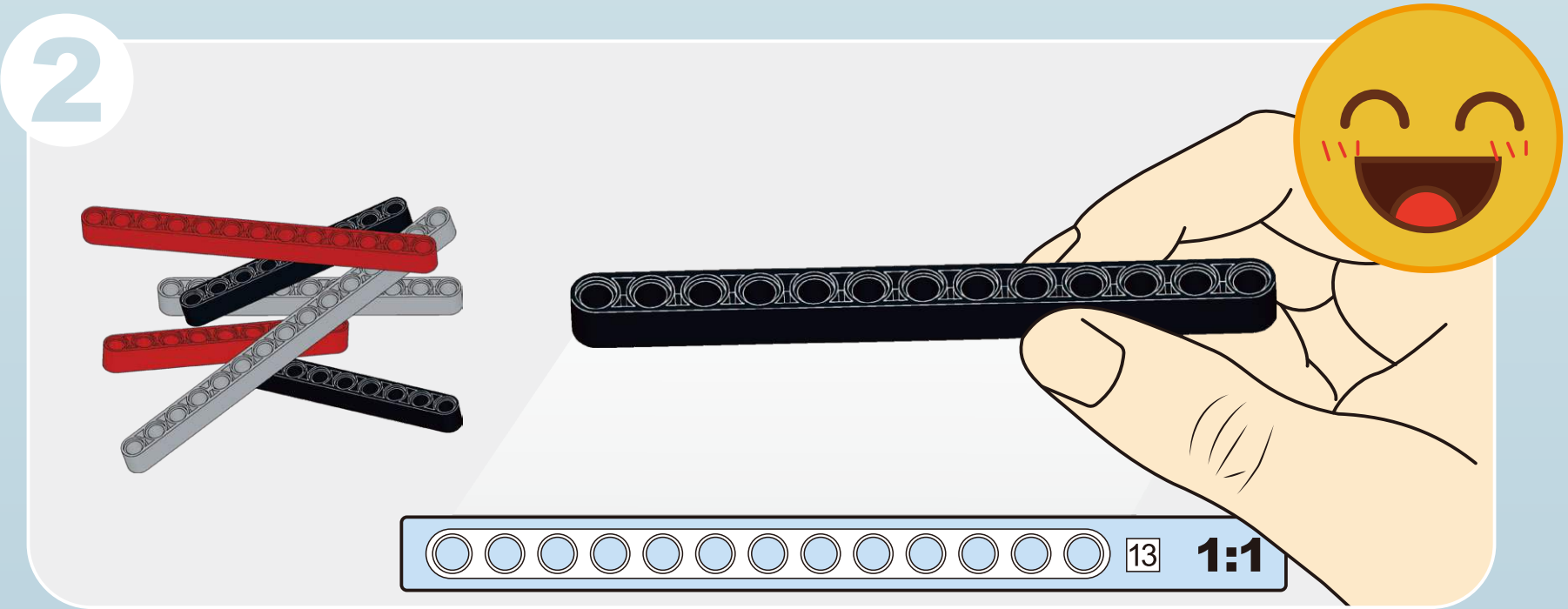
2
13
1:1

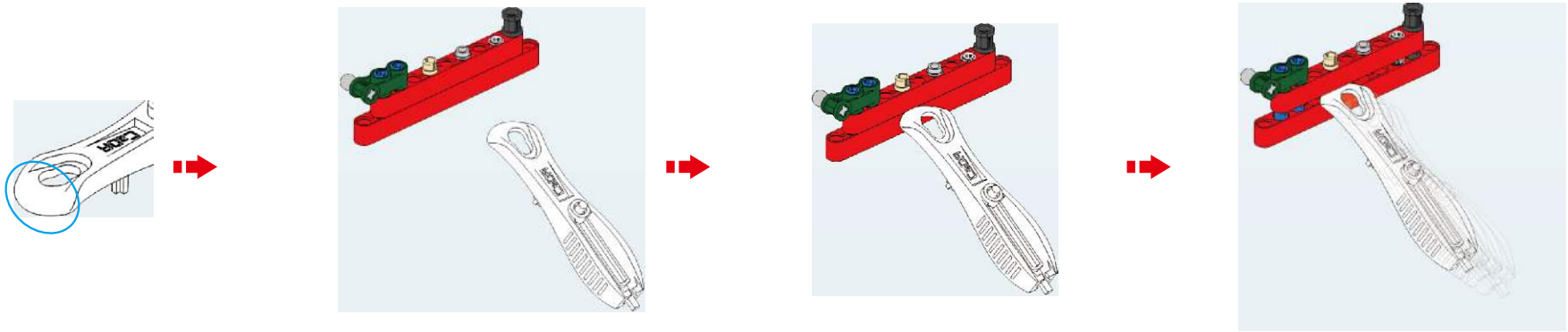

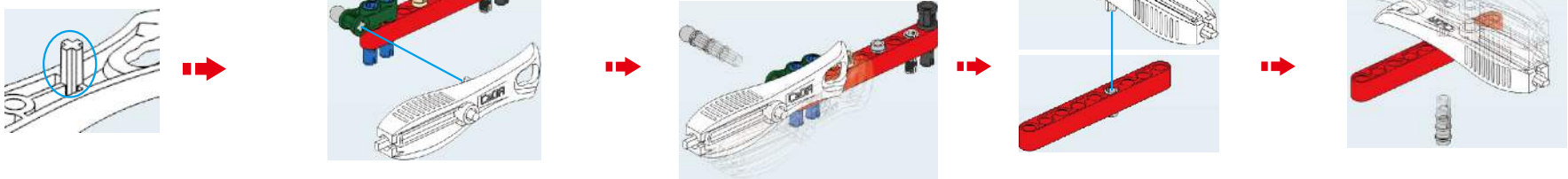

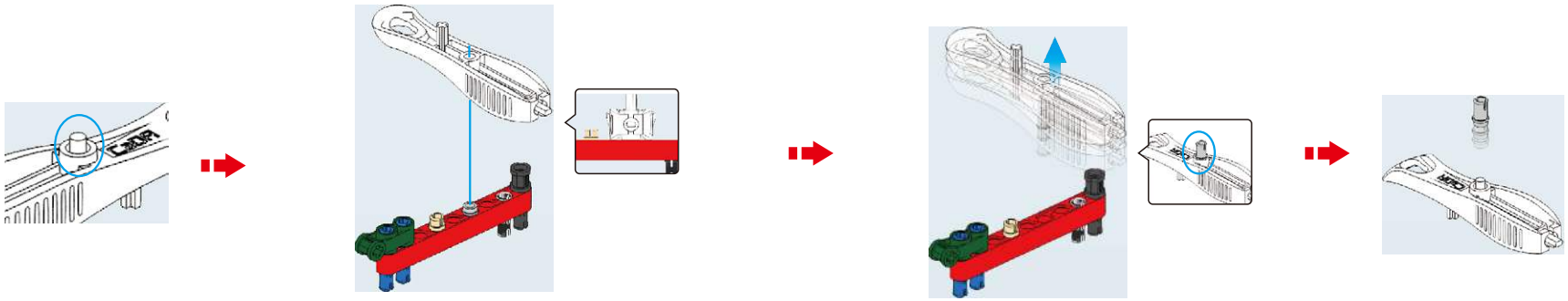

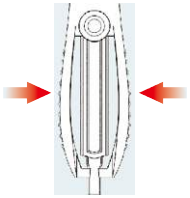

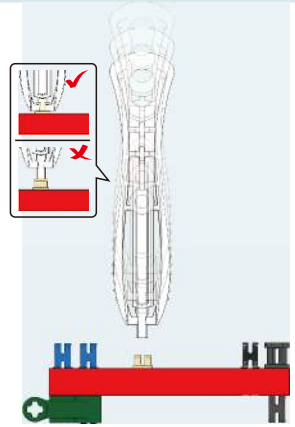

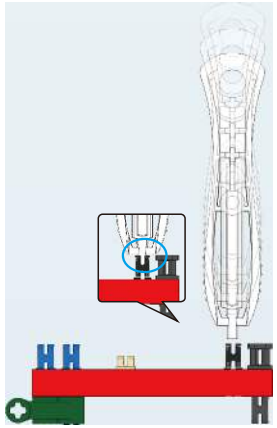

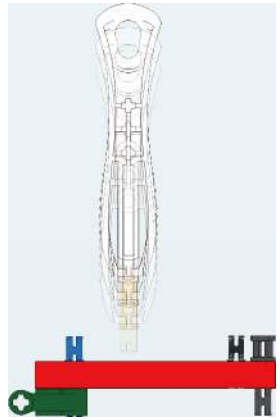

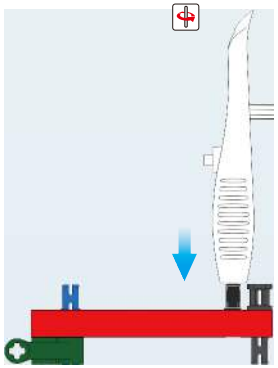

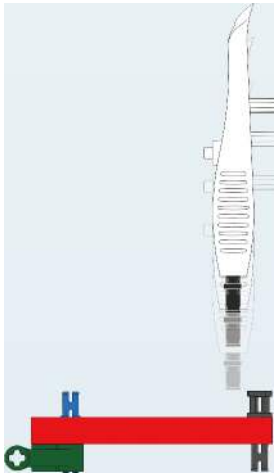

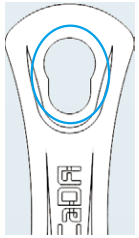

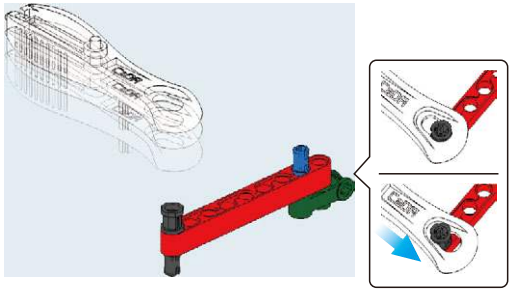

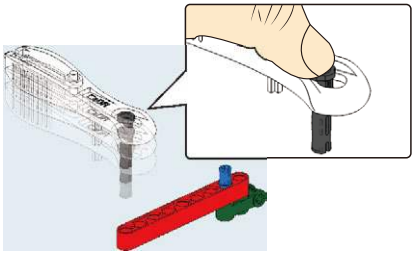

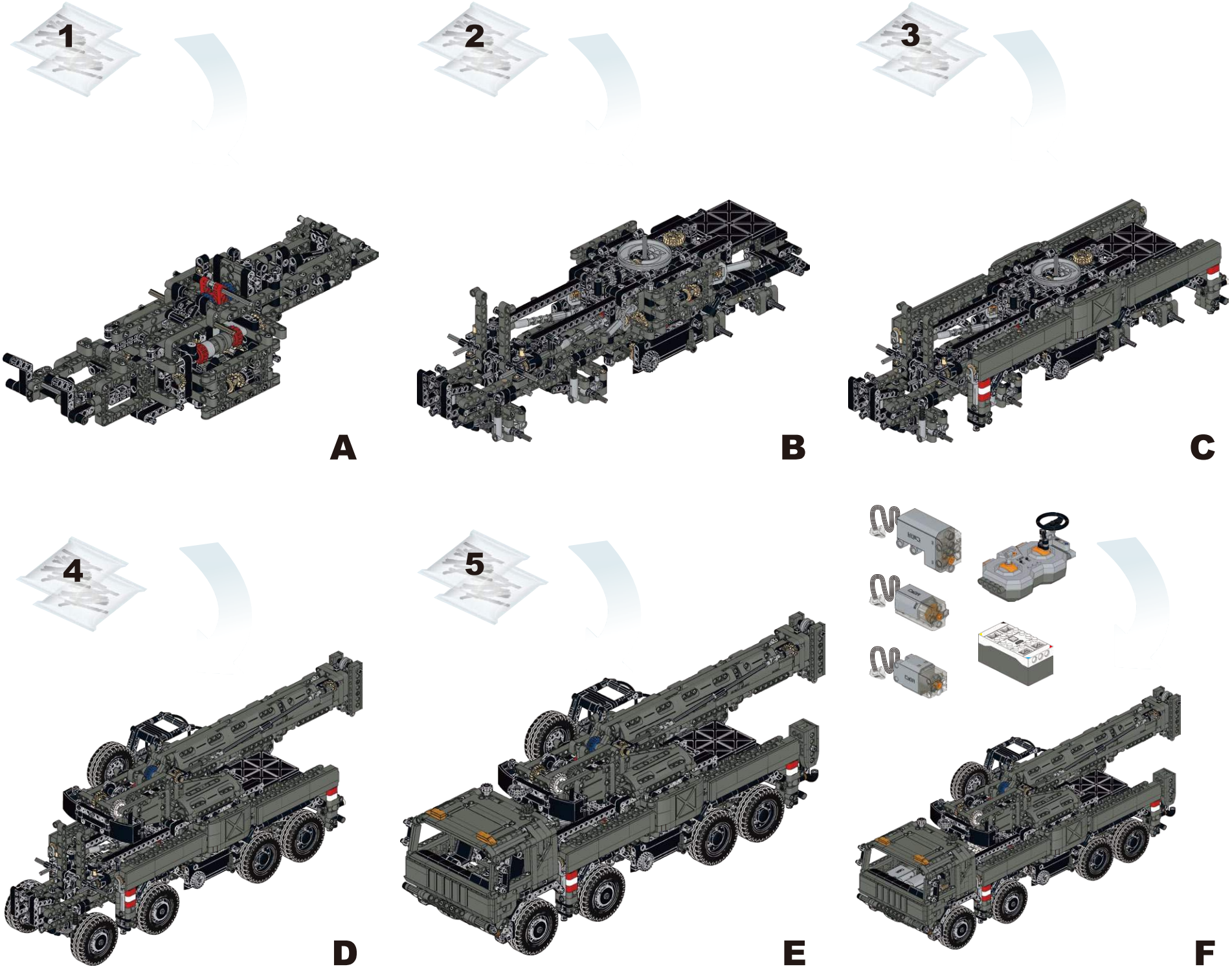
1
A
2
B
3
C
4
D
5
E
F

A

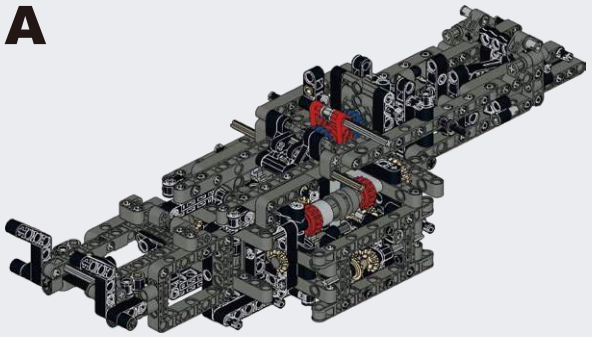

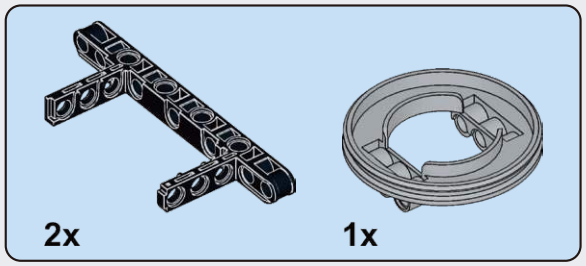

A1

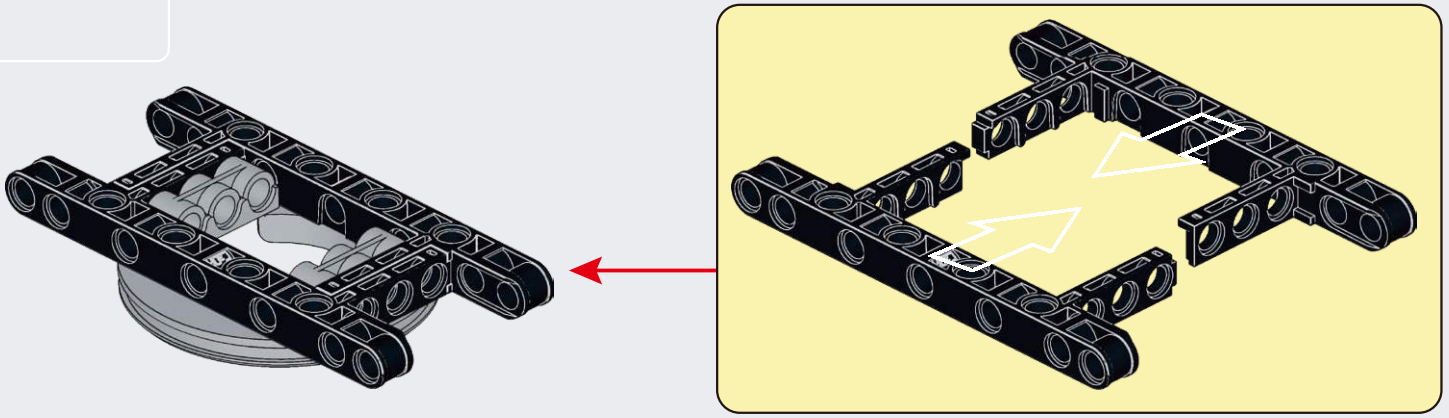

A2

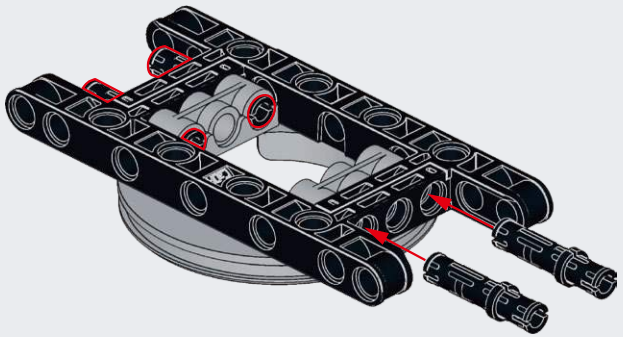

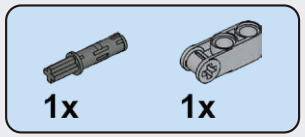

A3

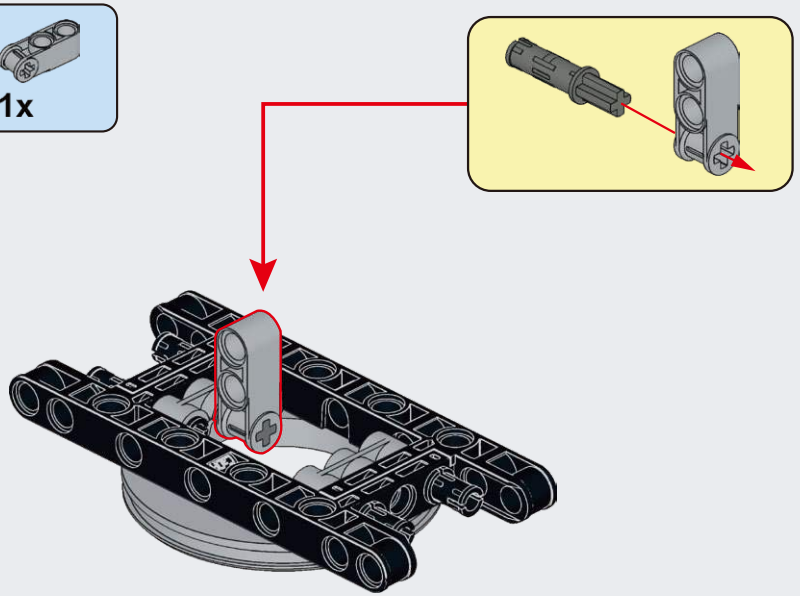

A4

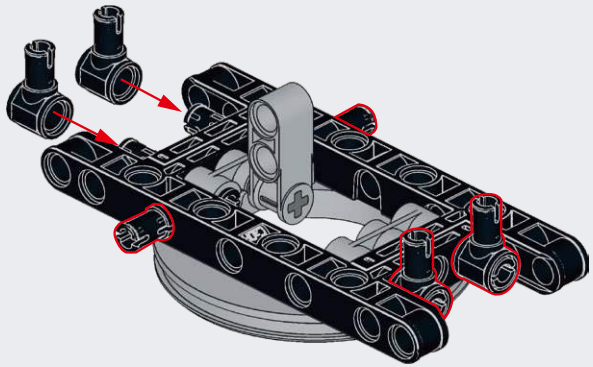

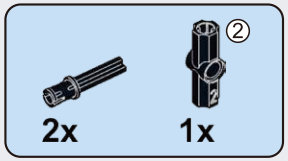

A5

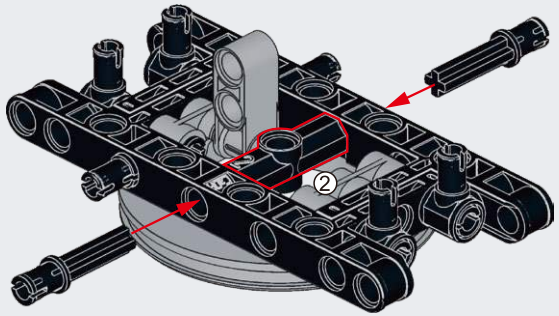

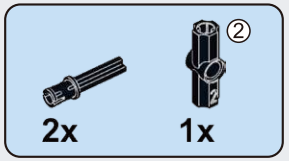

A6

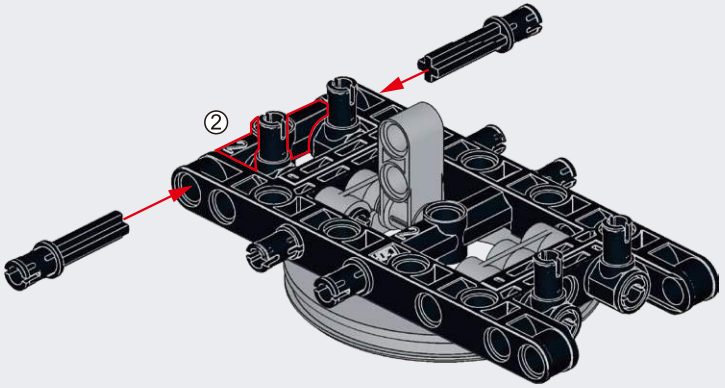

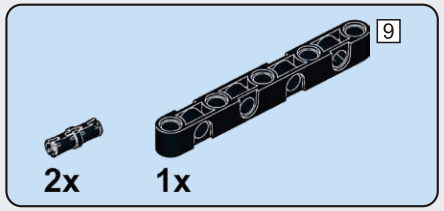

A7

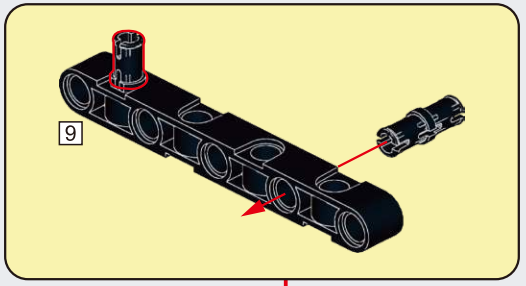

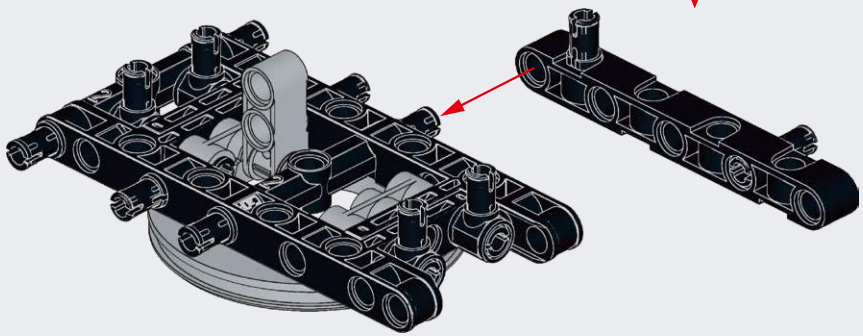

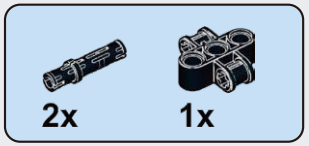

A8

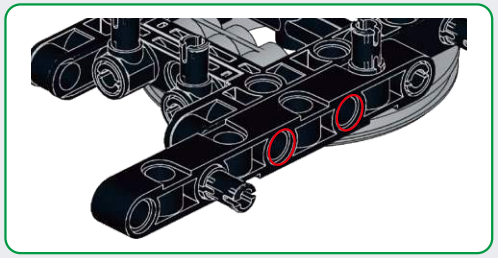

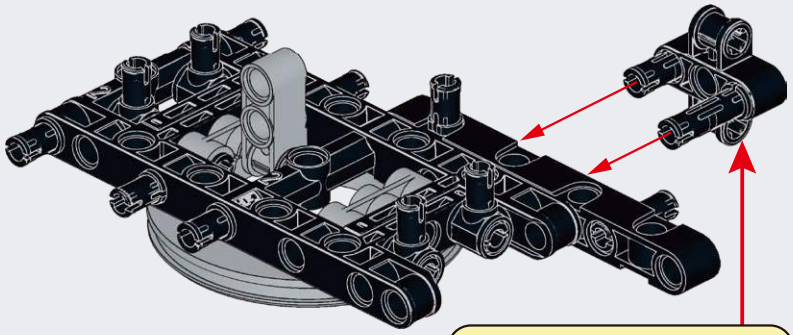

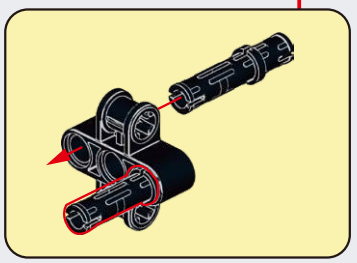

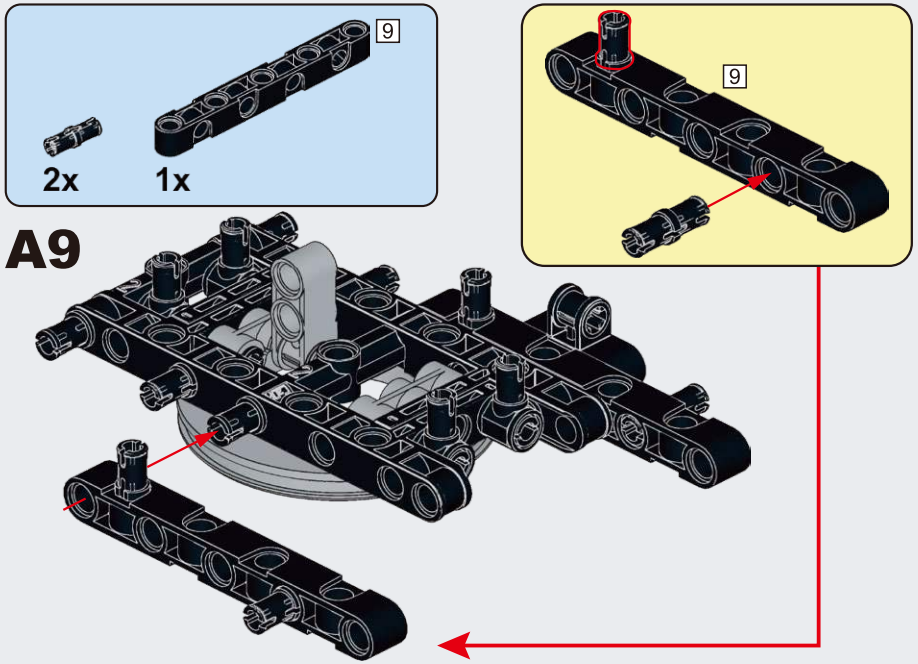
9
2x
1x
A9
9

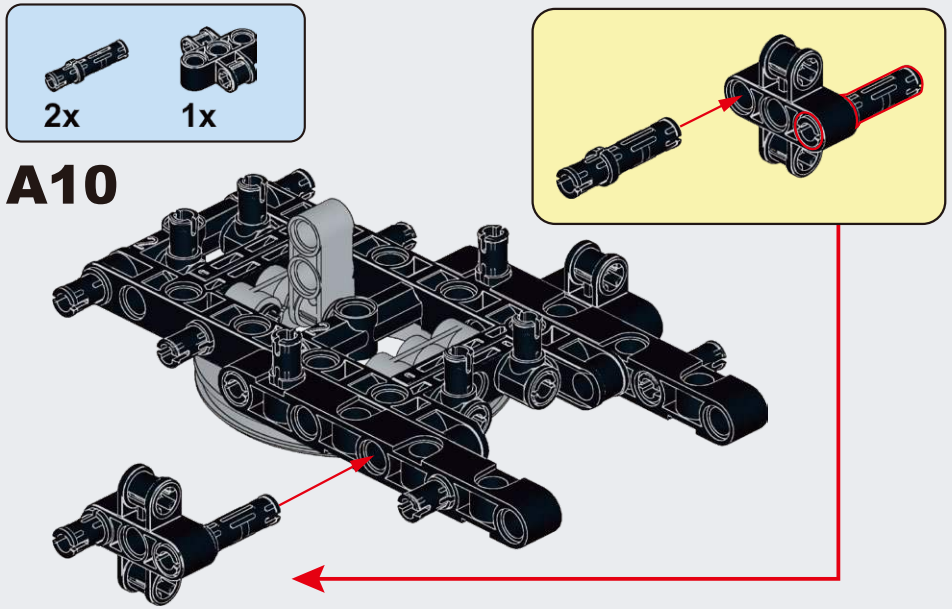
2x
1x
A10

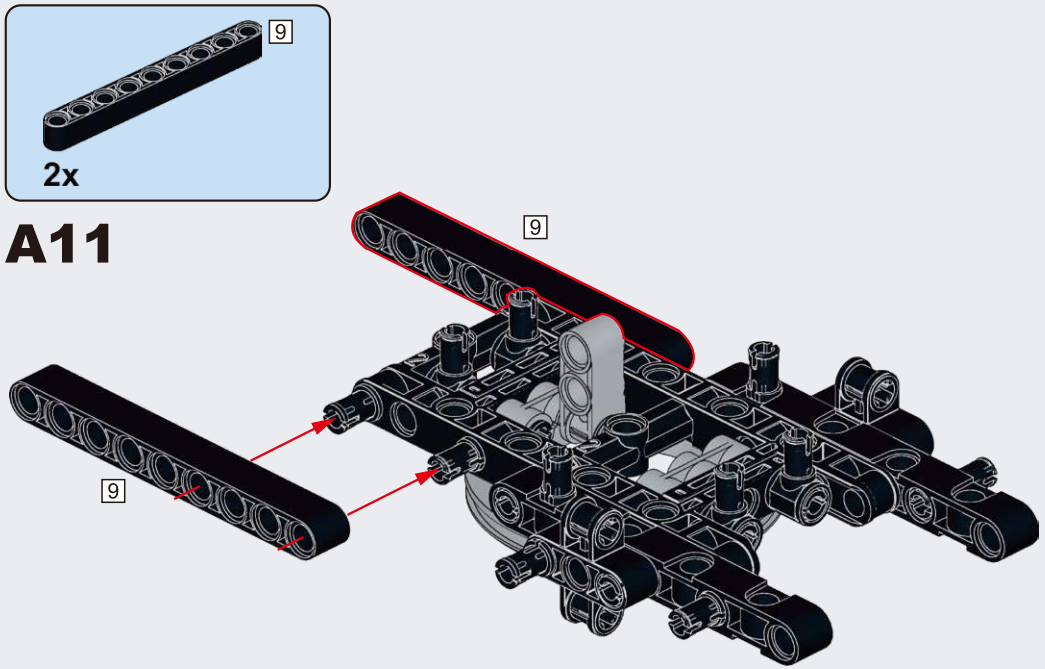
9
2x
A11
9
9

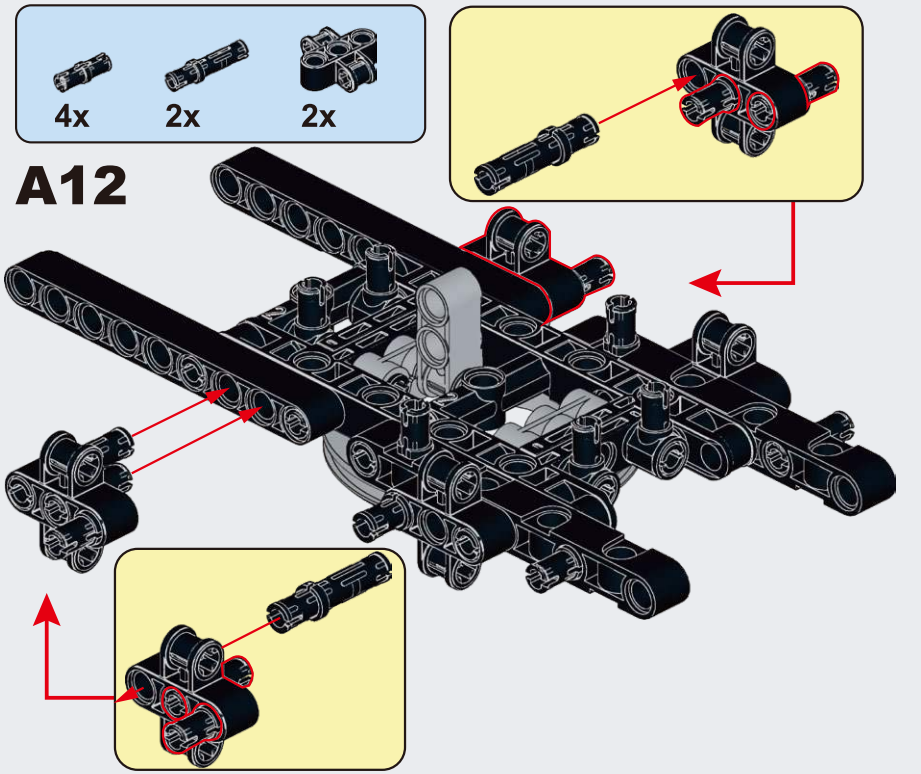
4x
2x
2x
A12

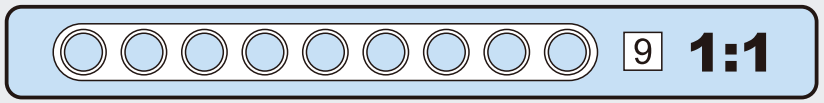
9
1:1

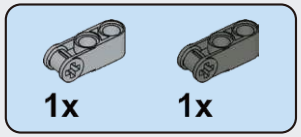

A13

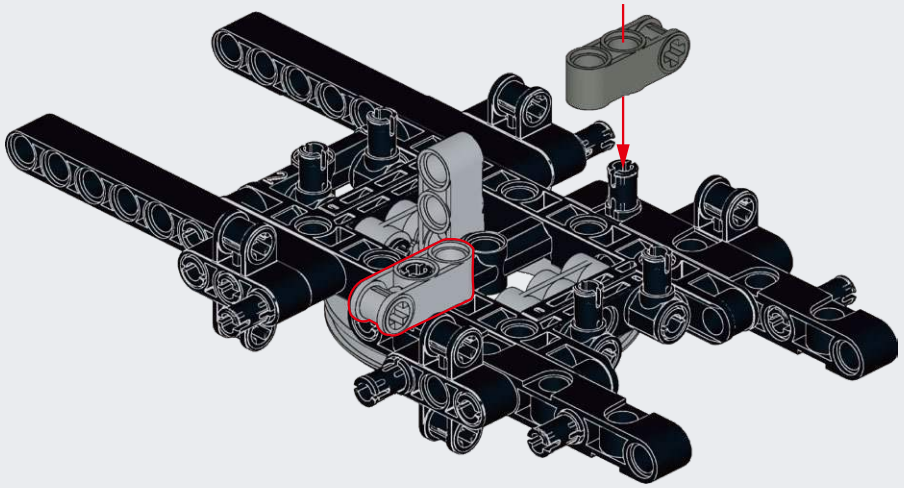

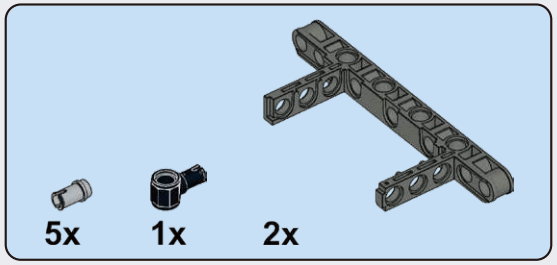

A14

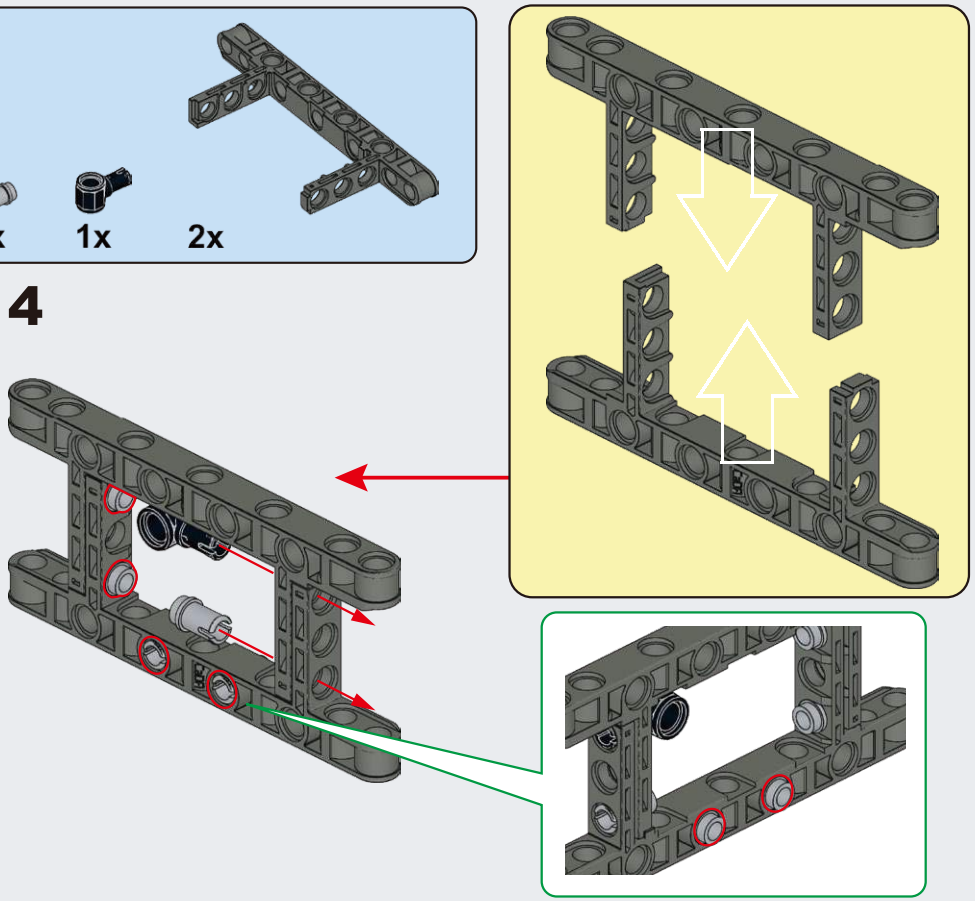

A15

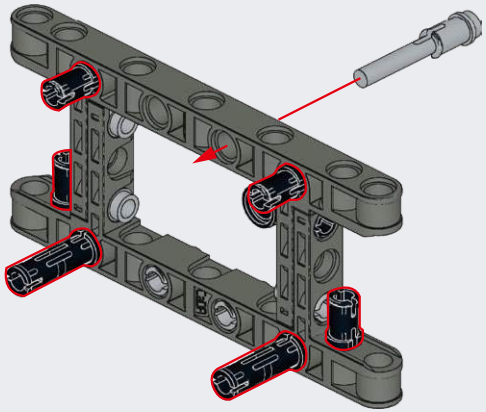

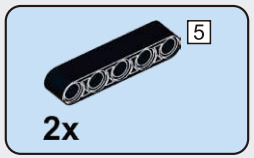

A16

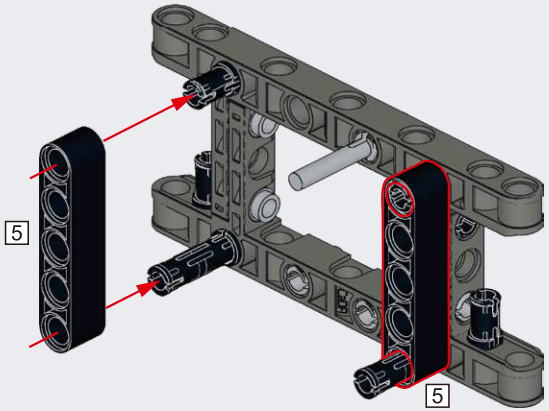

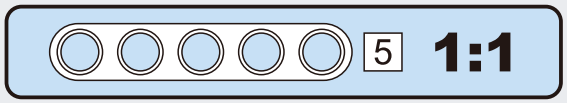

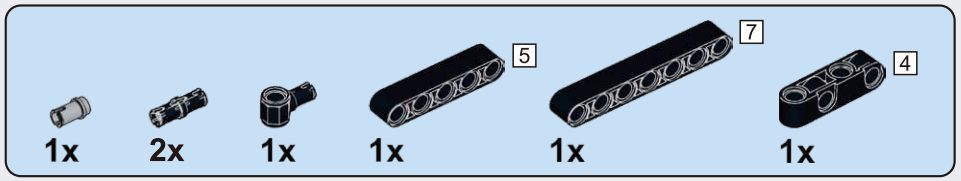

A17

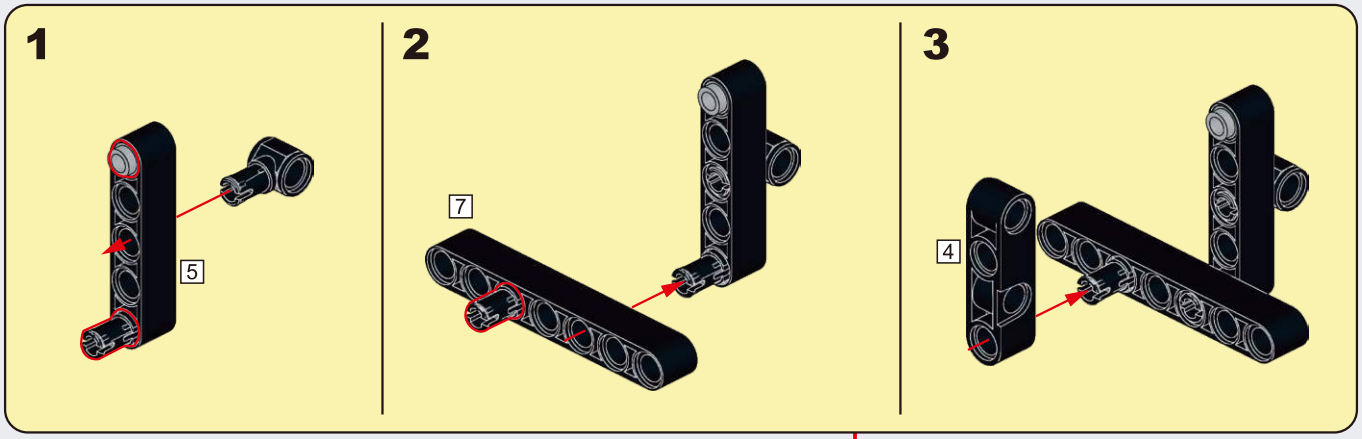

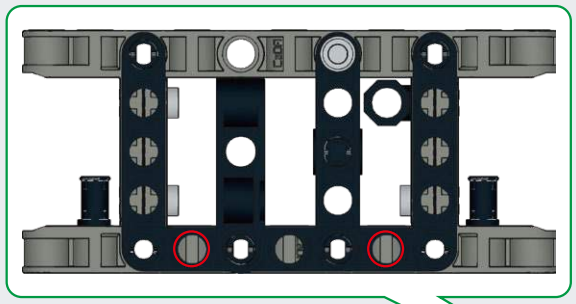

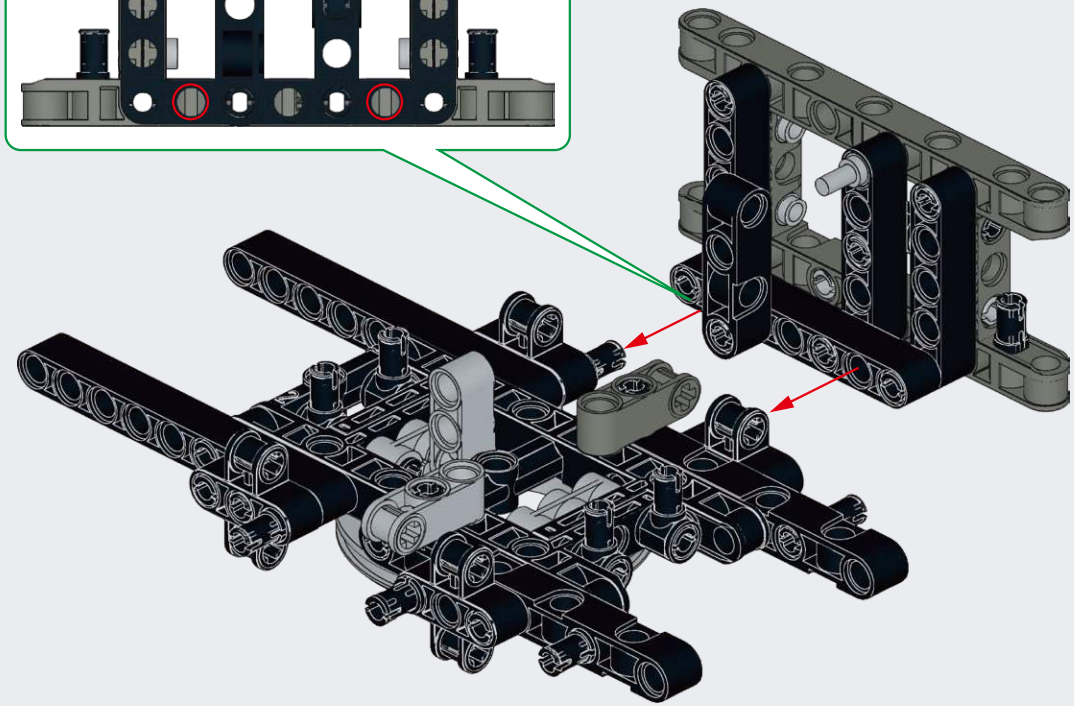

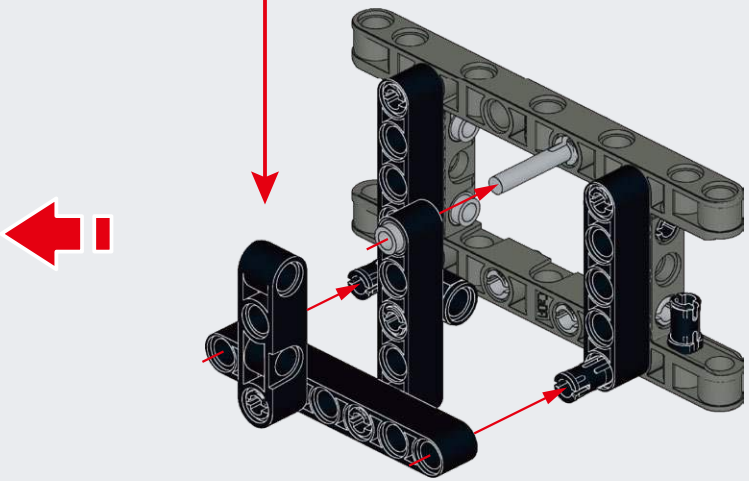

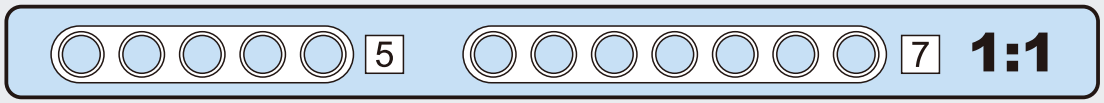

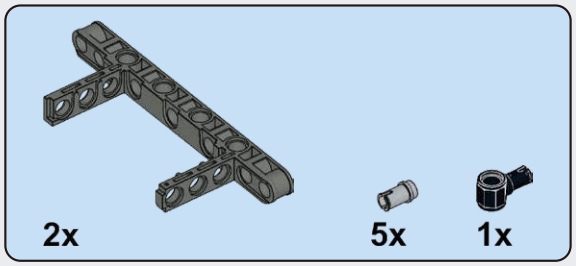

A18

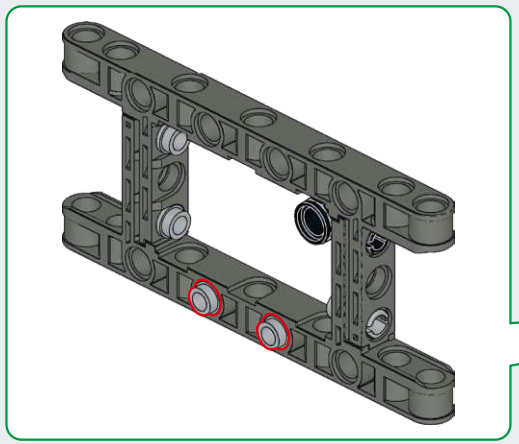

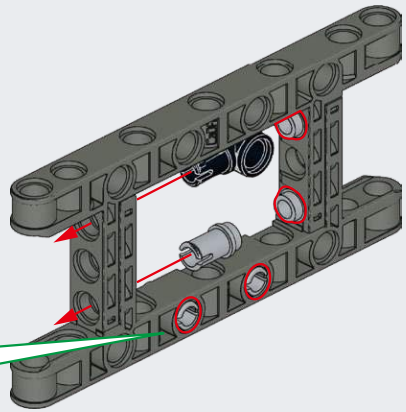

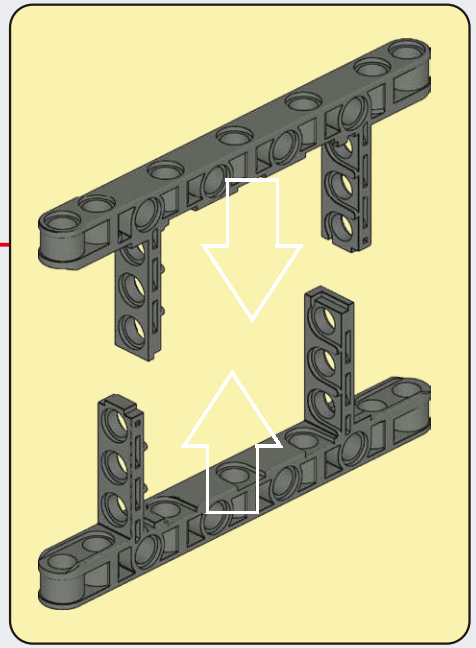

A19

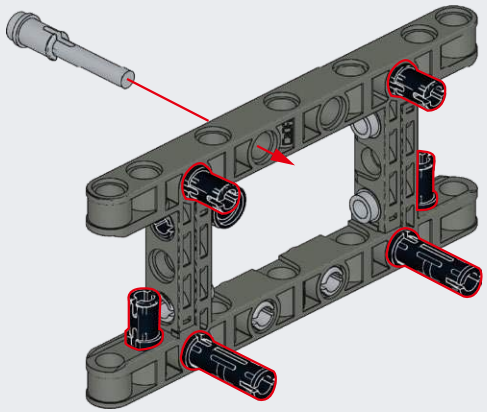

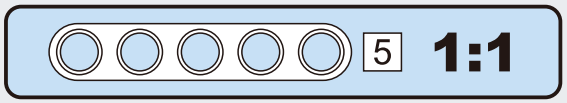

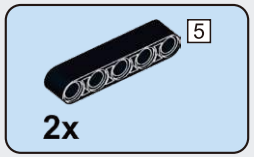

A20

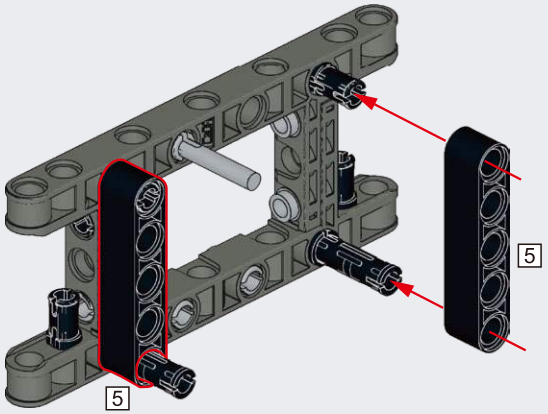

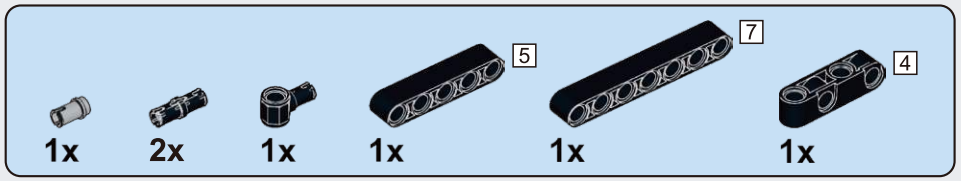

A21

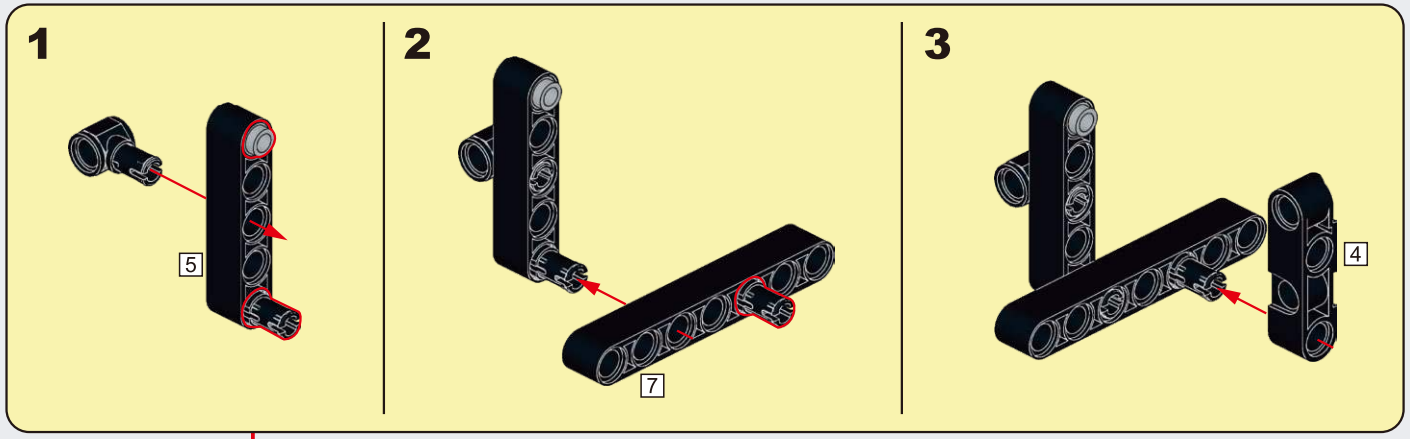

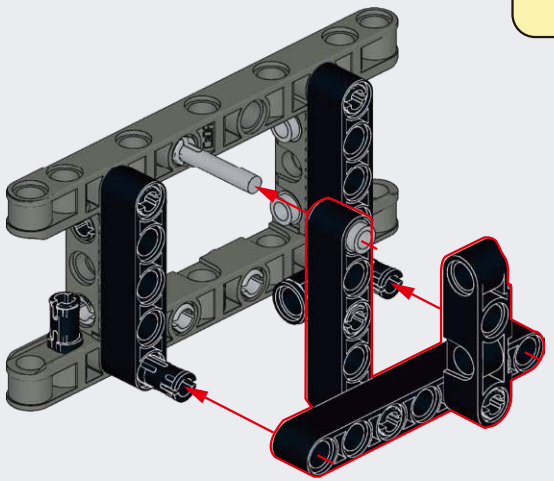

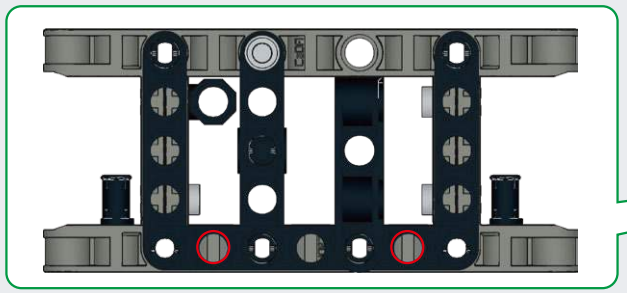

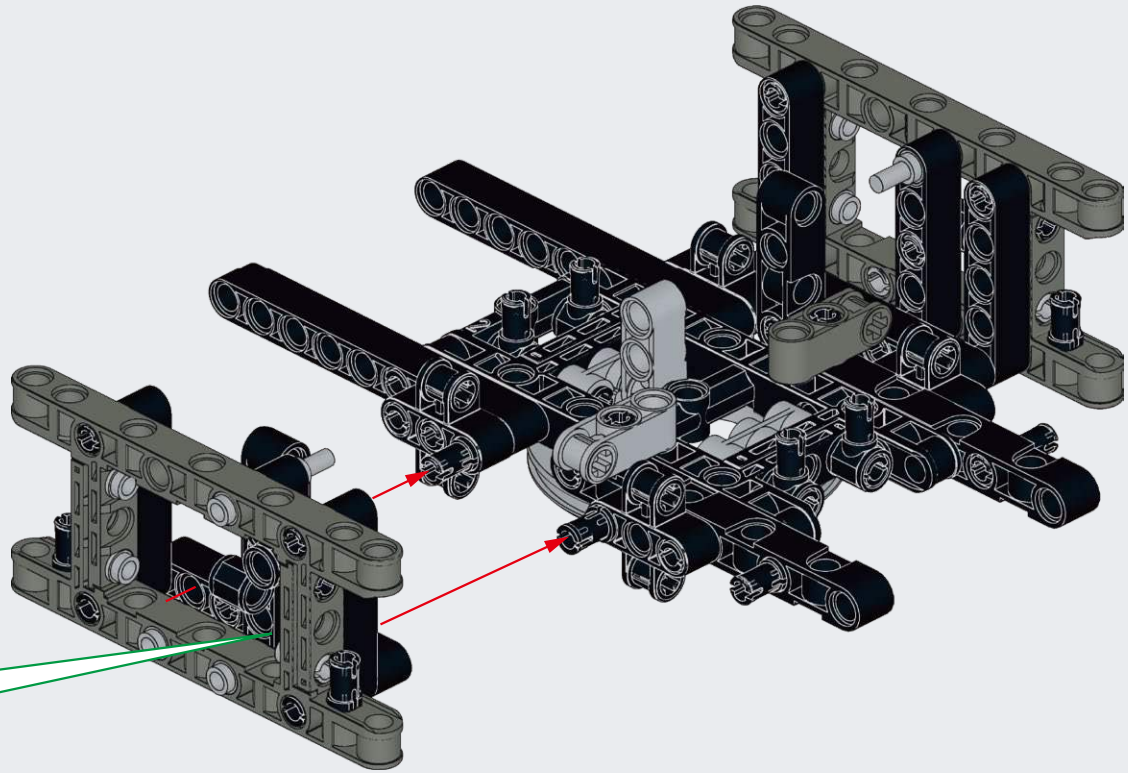

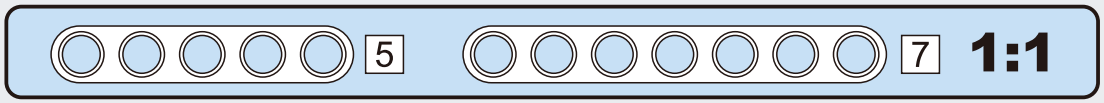

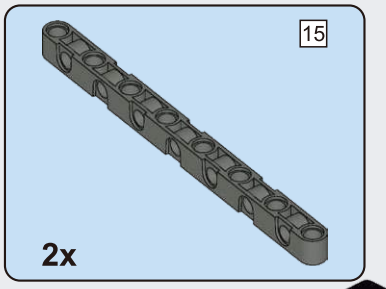

A22

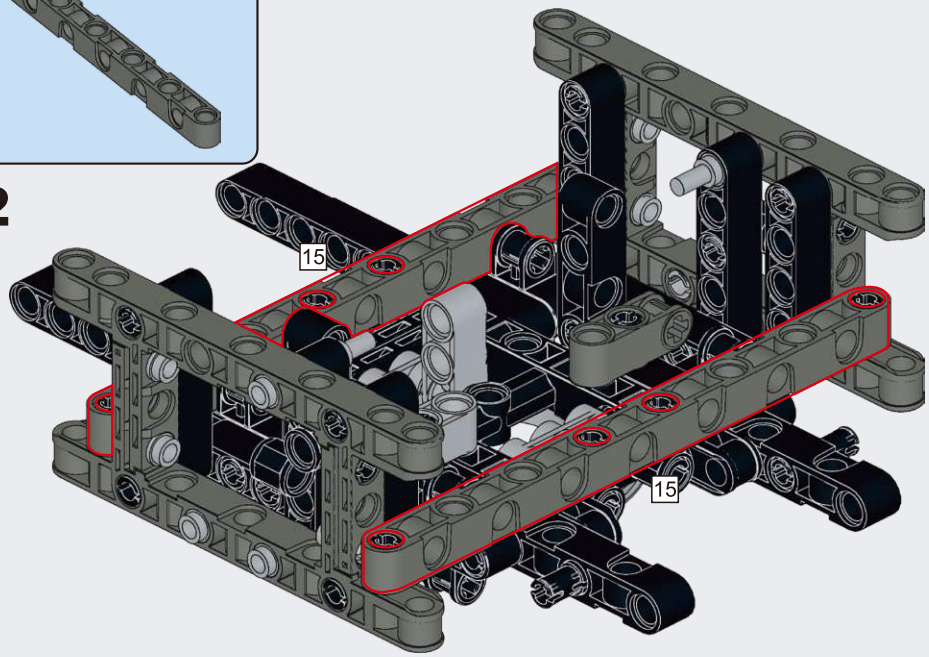

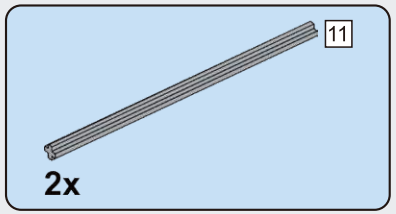

A23

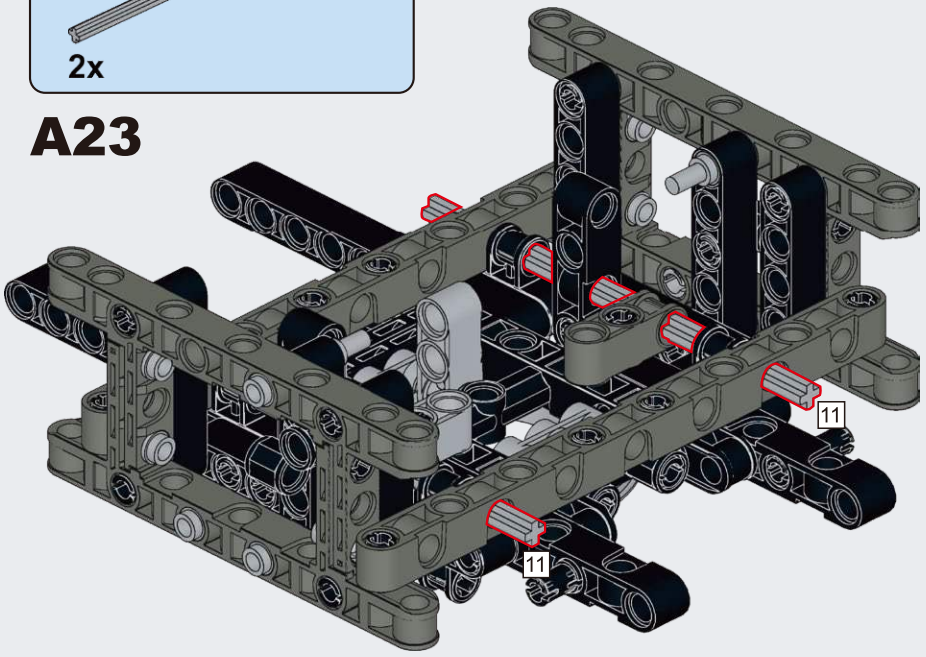

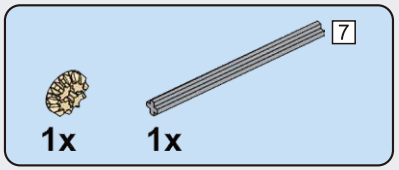

A24

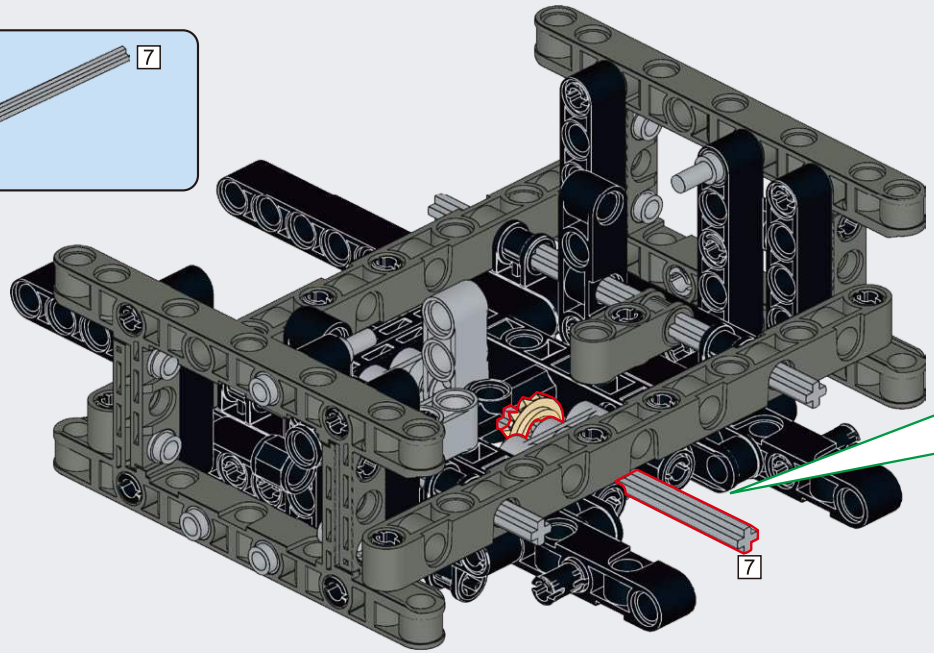

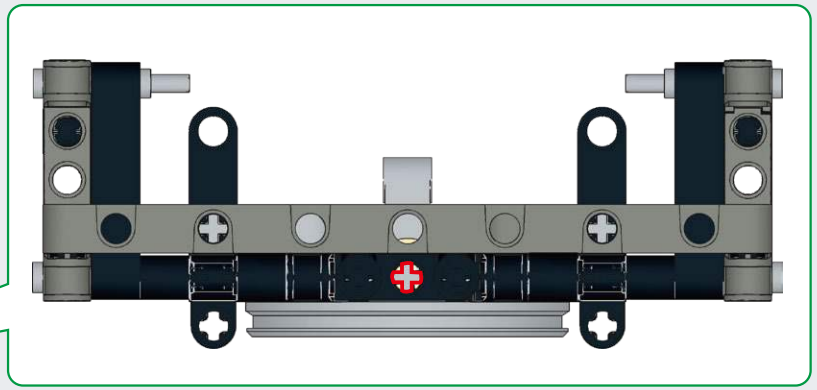

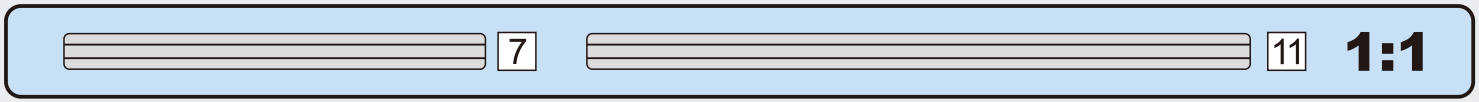

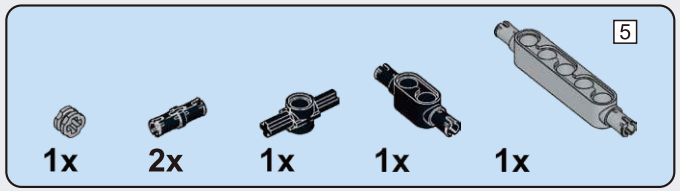

A25

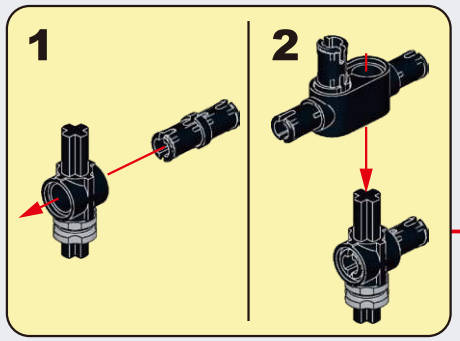

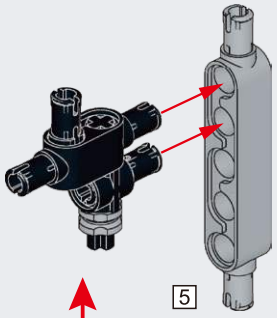

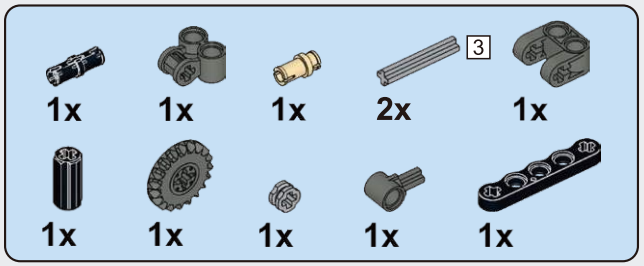

A26

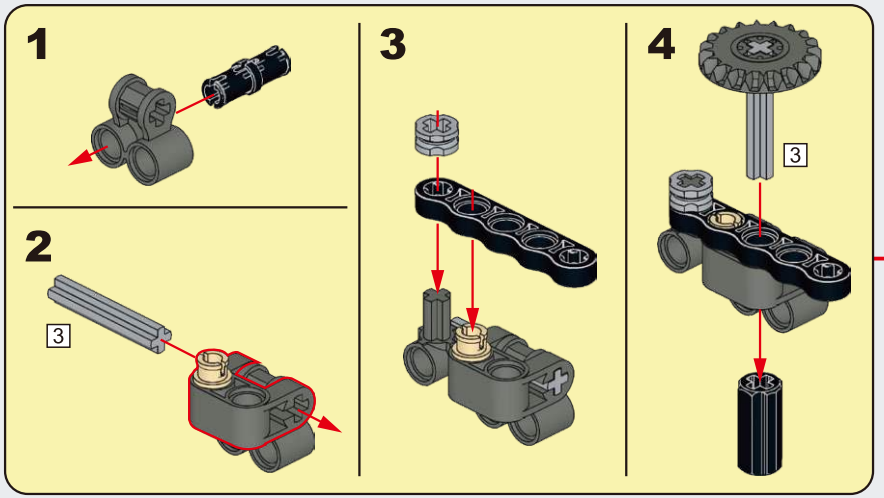

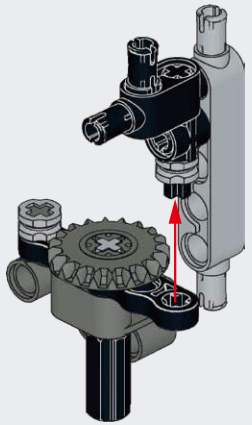

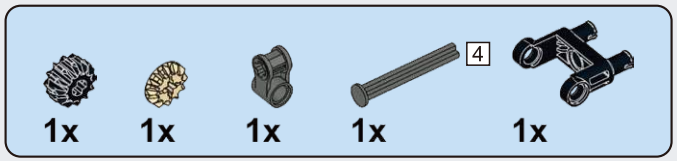

A27

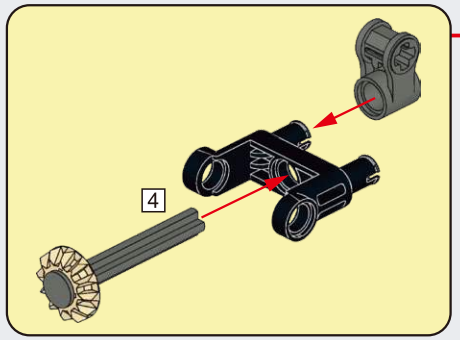

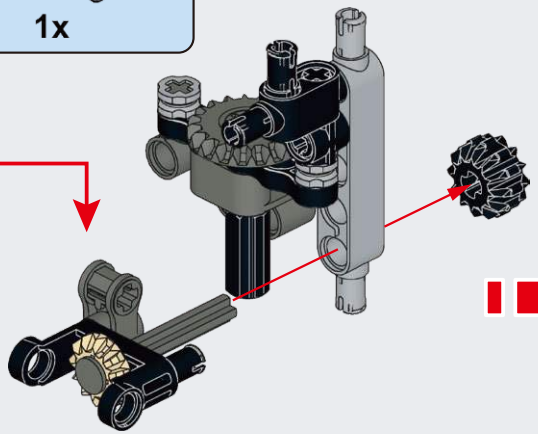

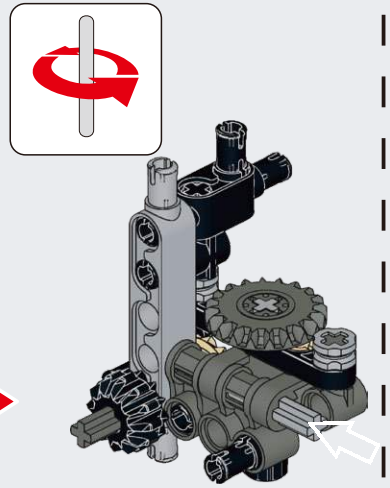

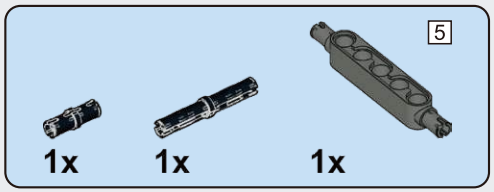

A28

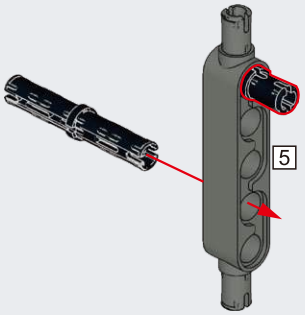

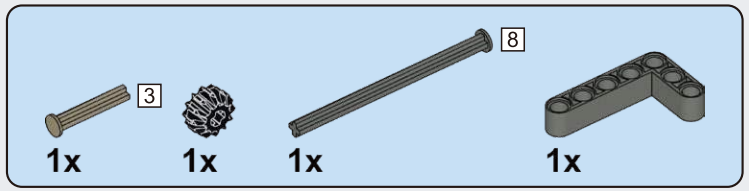

A29

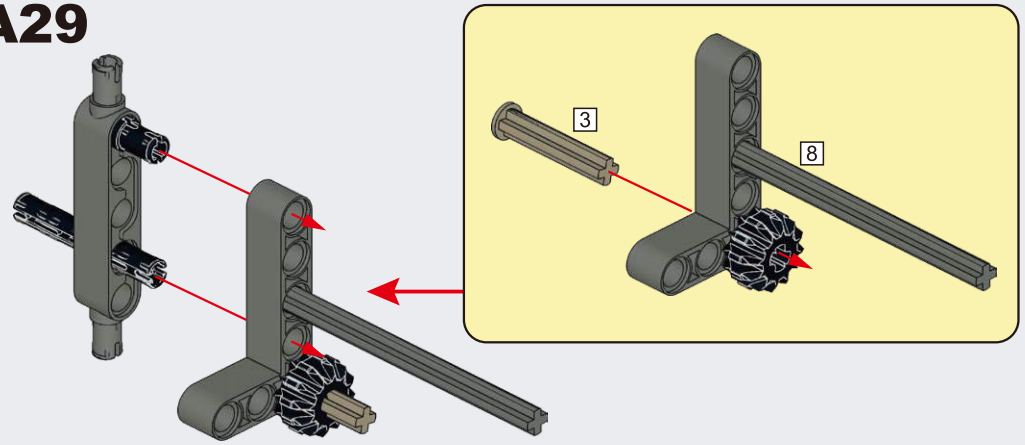

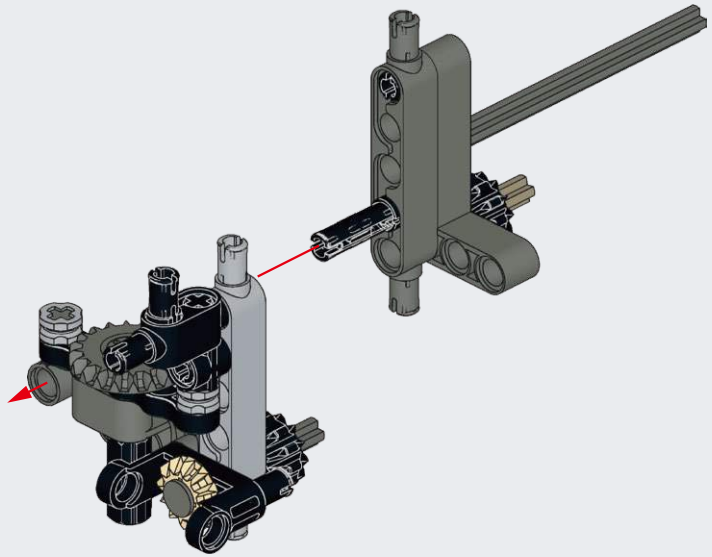

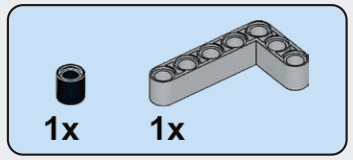

A30

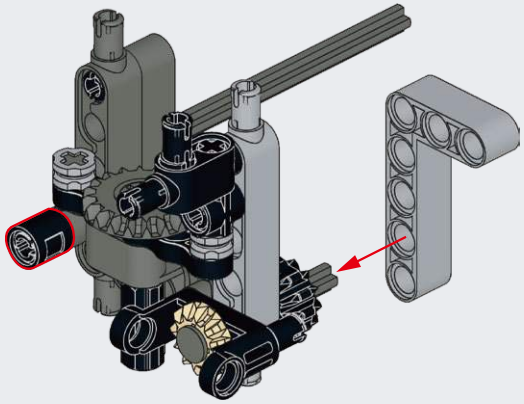

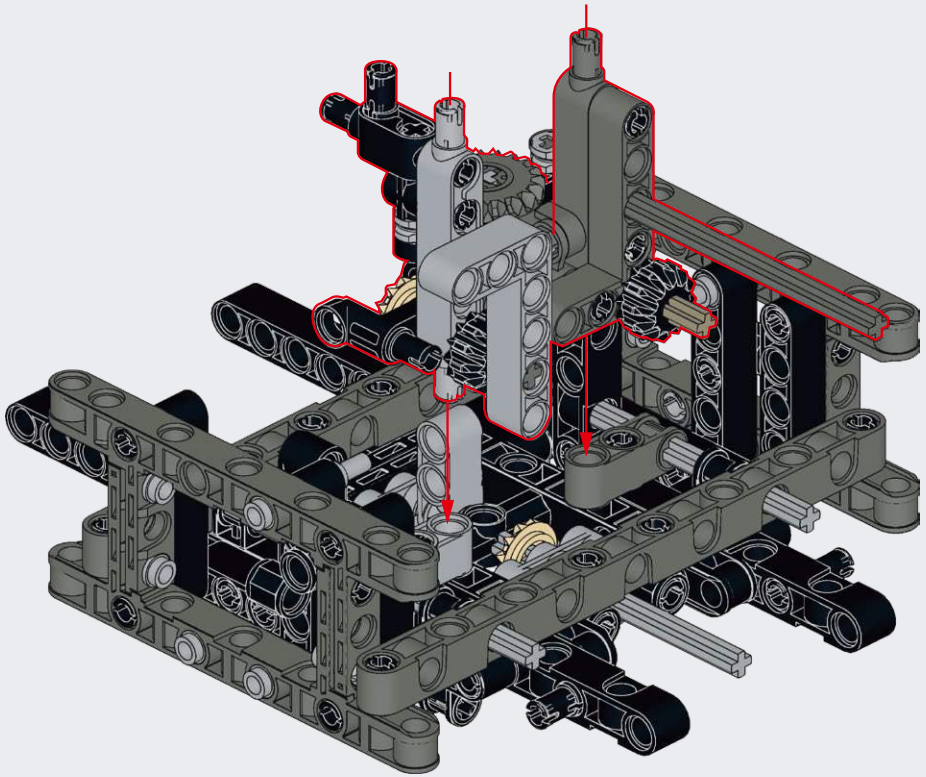

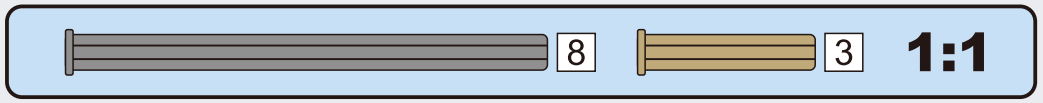

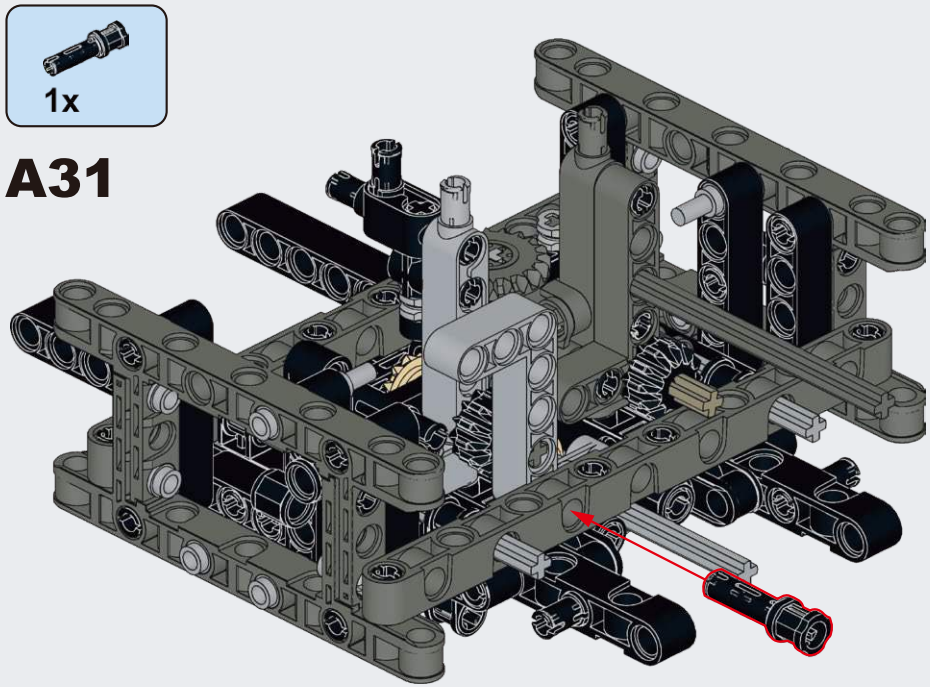
1x
A31

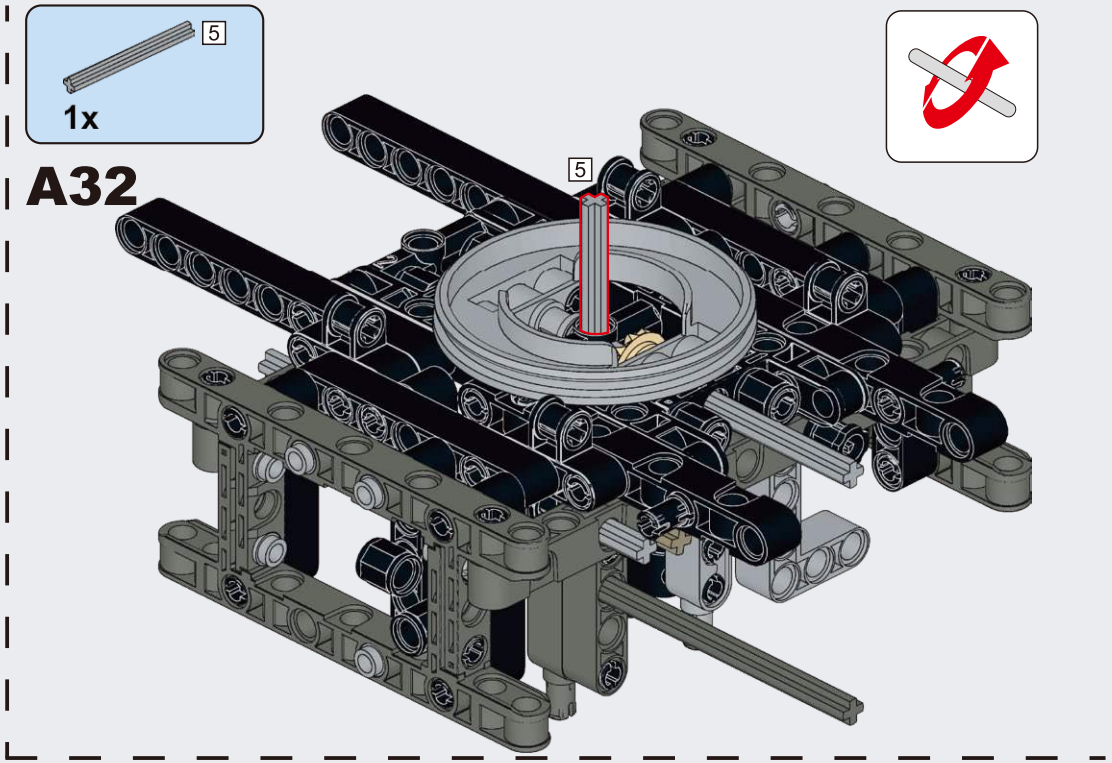
5
1x
A32
5

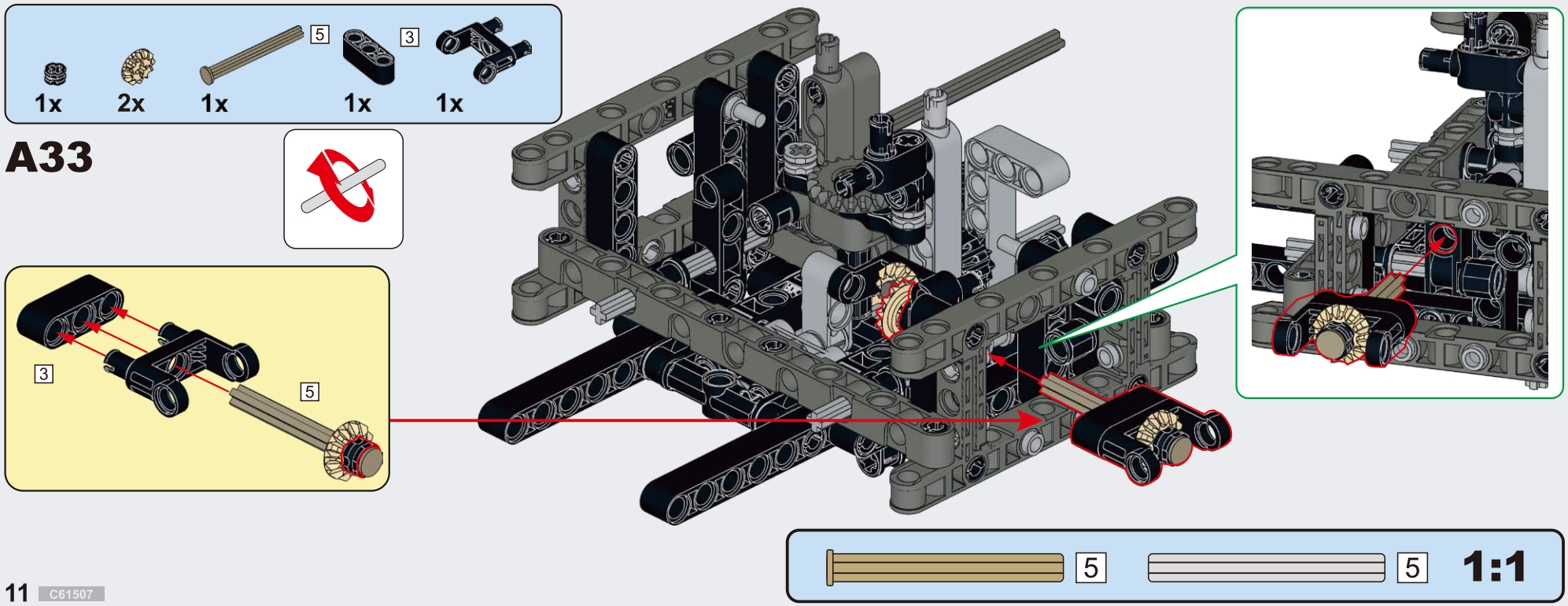
5
3
1x
2x
1x
1x
1x
A33
3
5
5
5
1:1

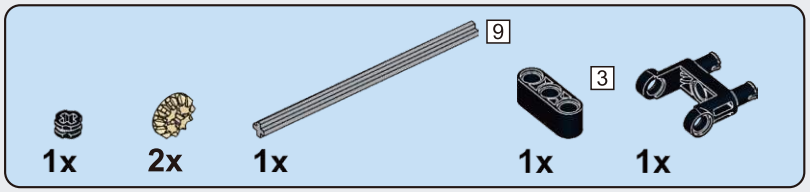

A34

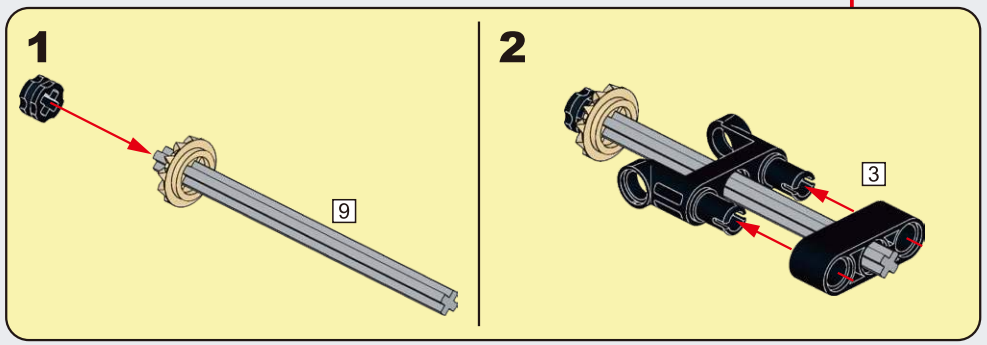

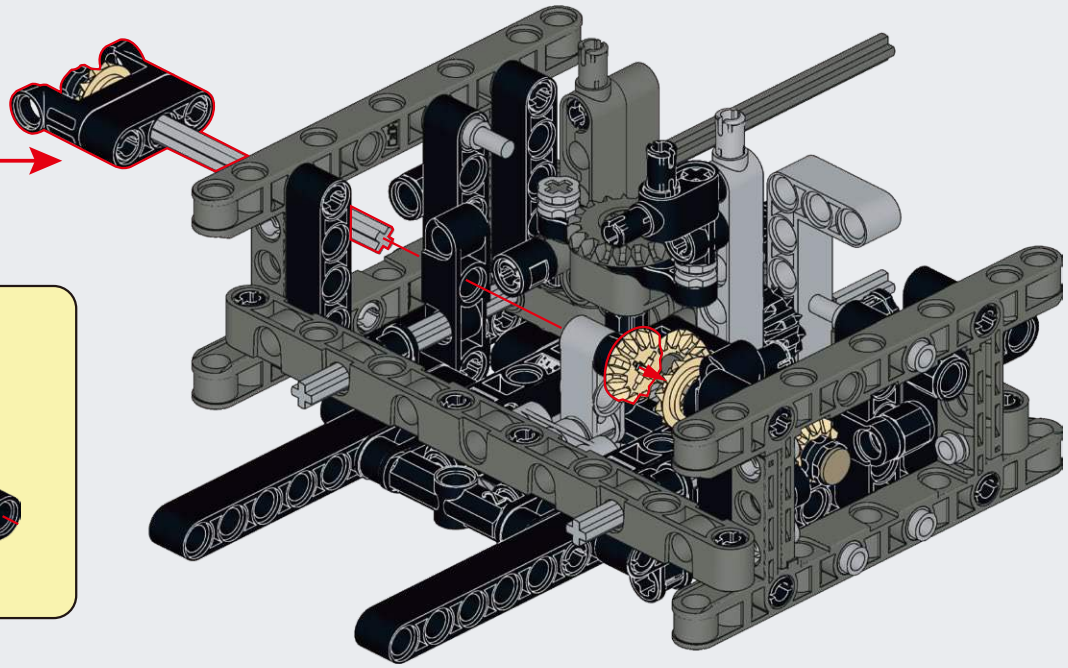

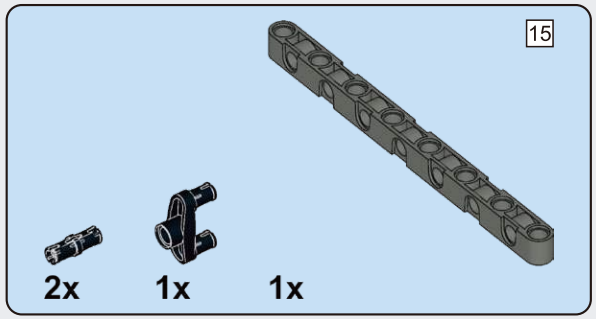

A35

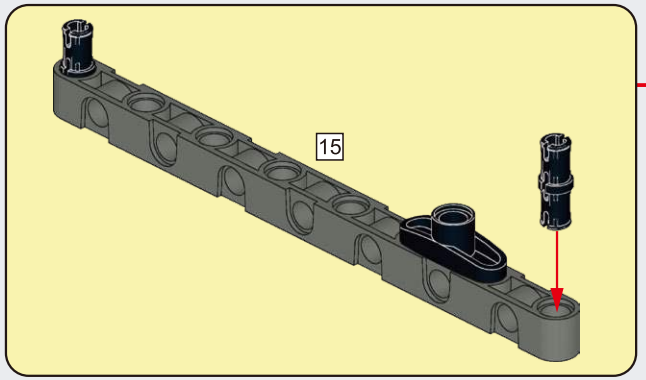

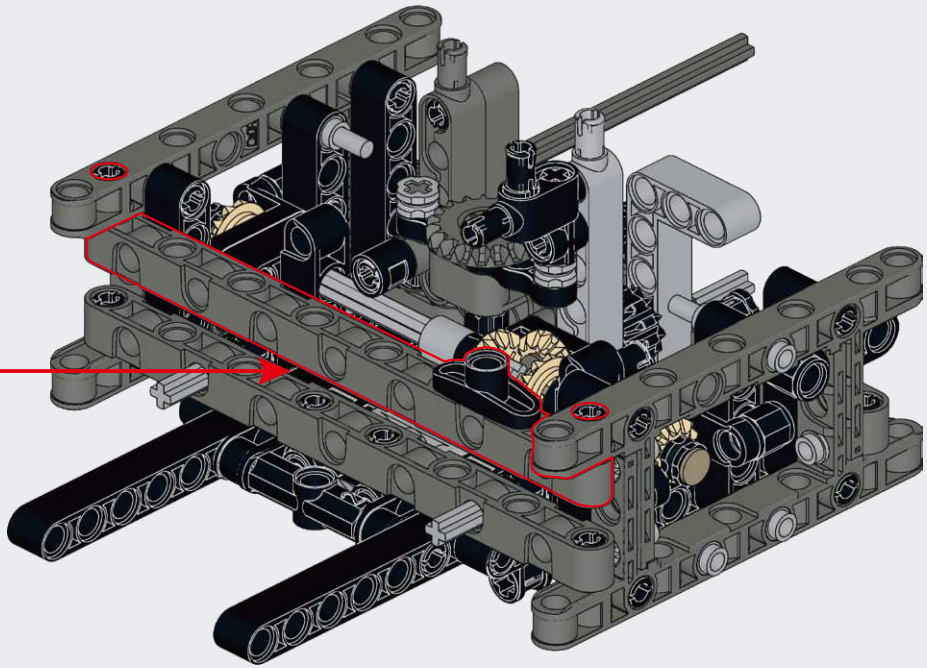

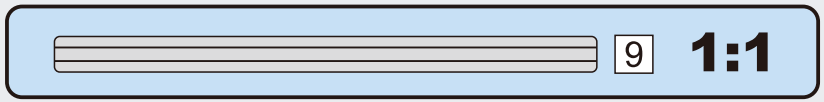

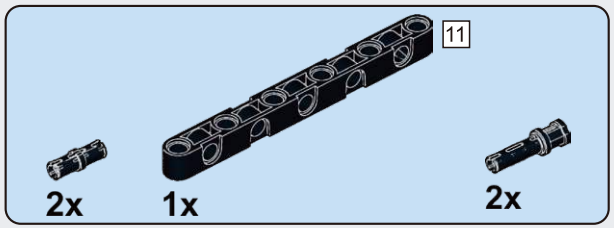

A36

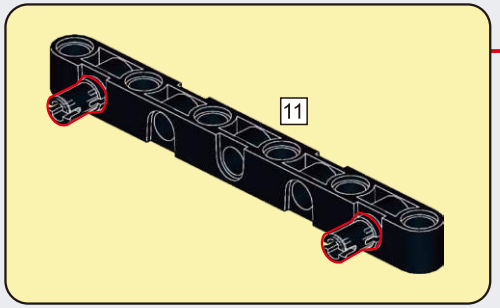

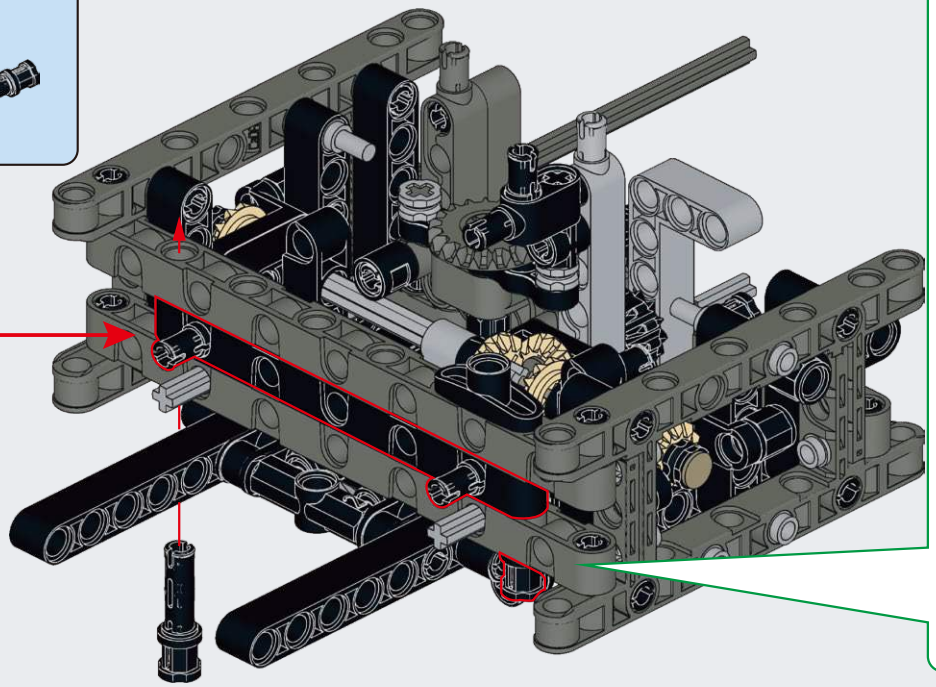

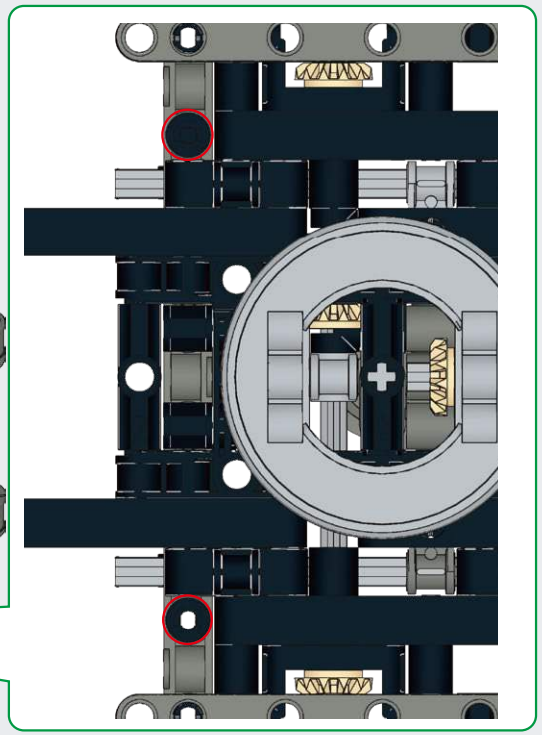

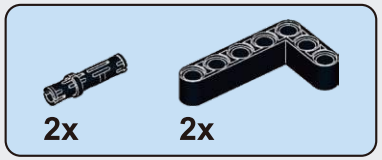

A37

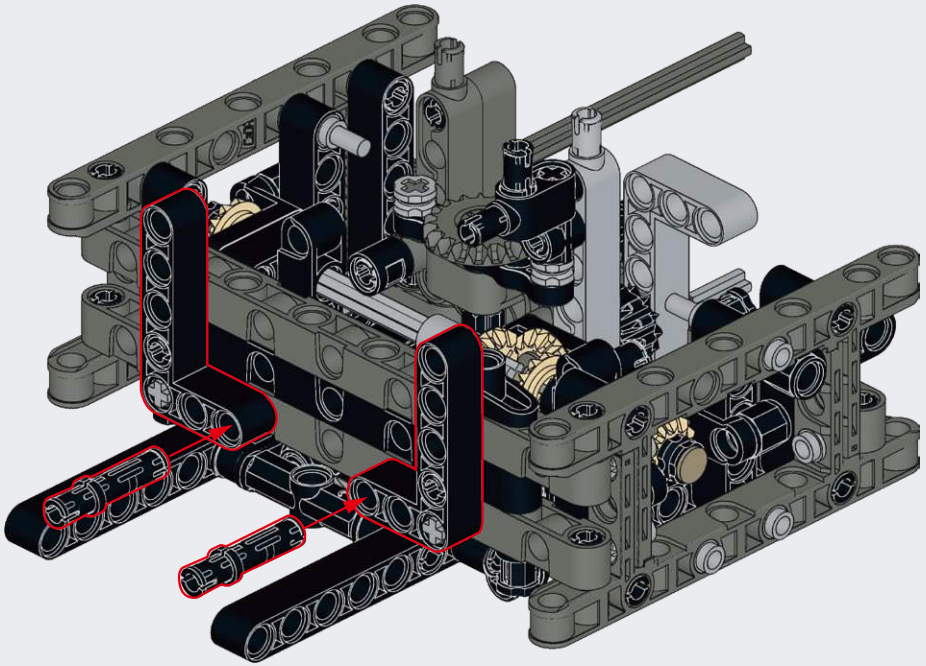

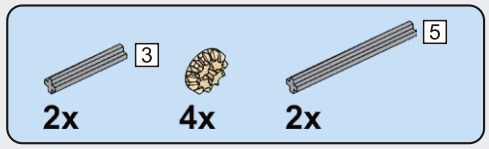

A38

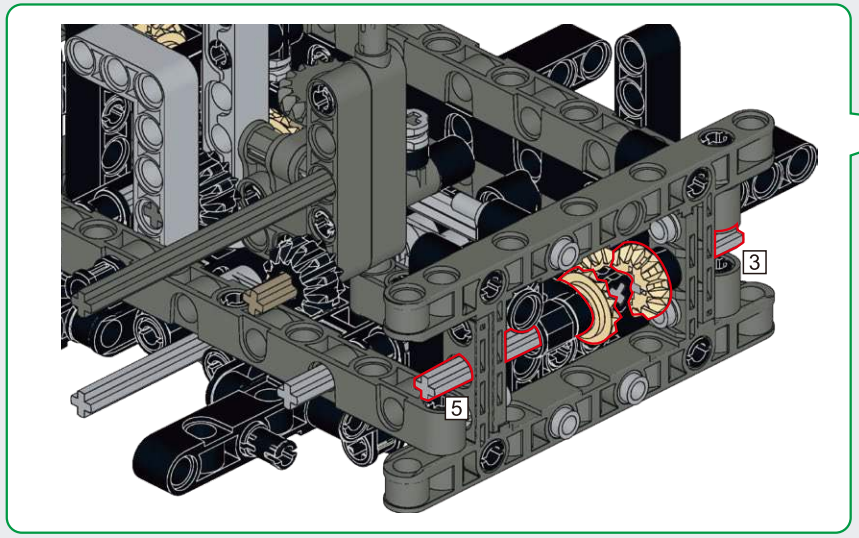

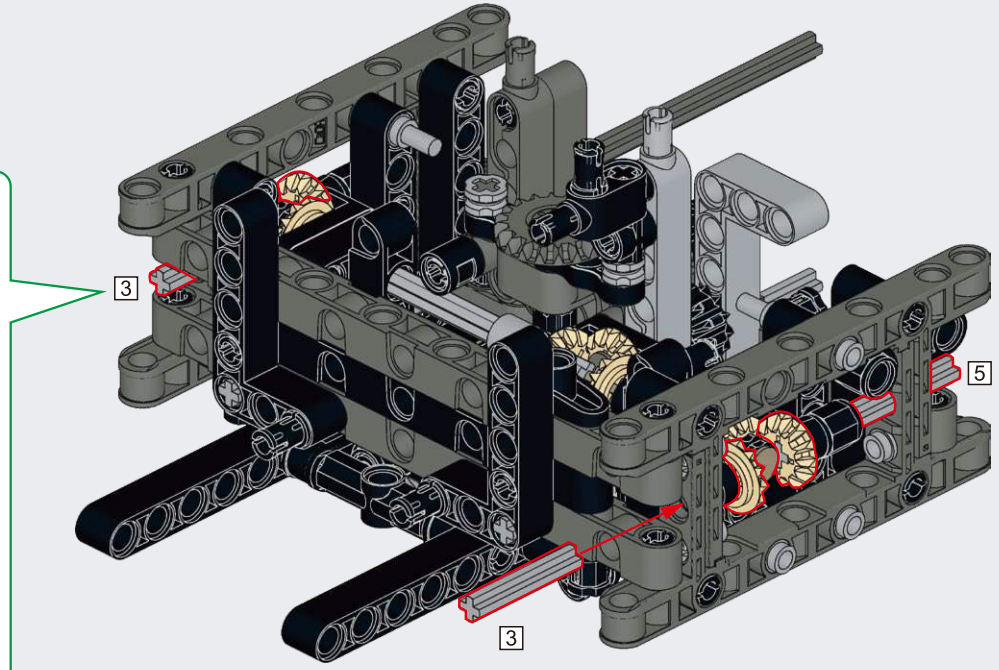

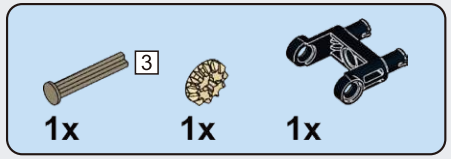

A39

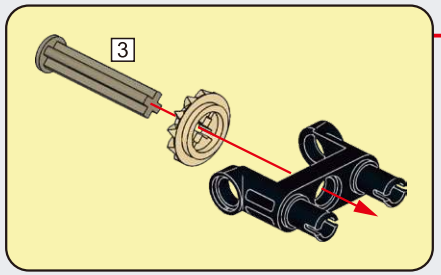

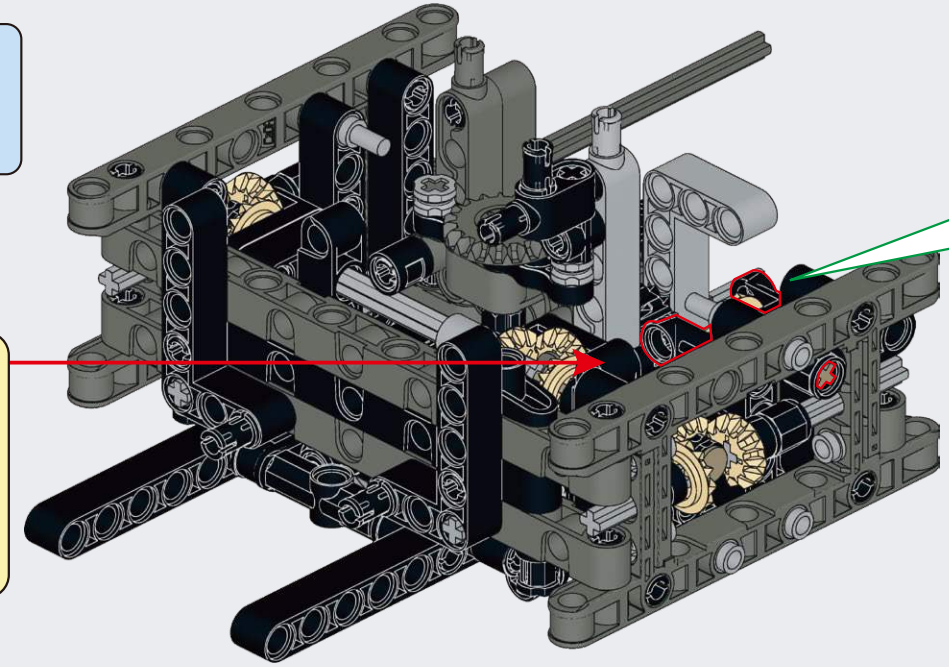

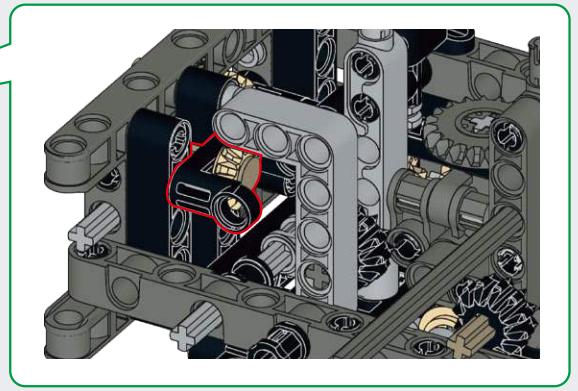

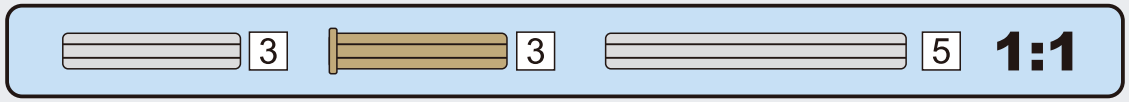

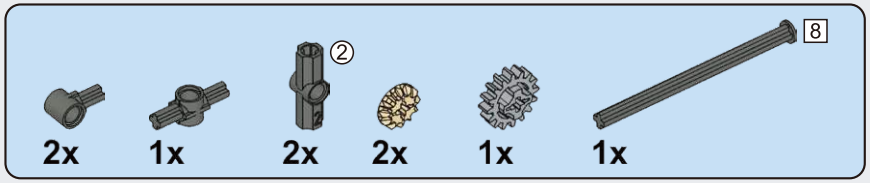

A40

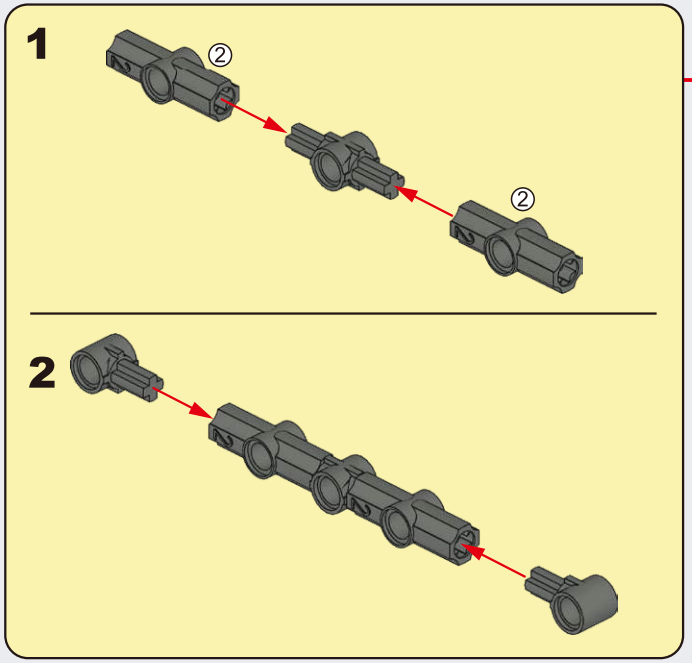

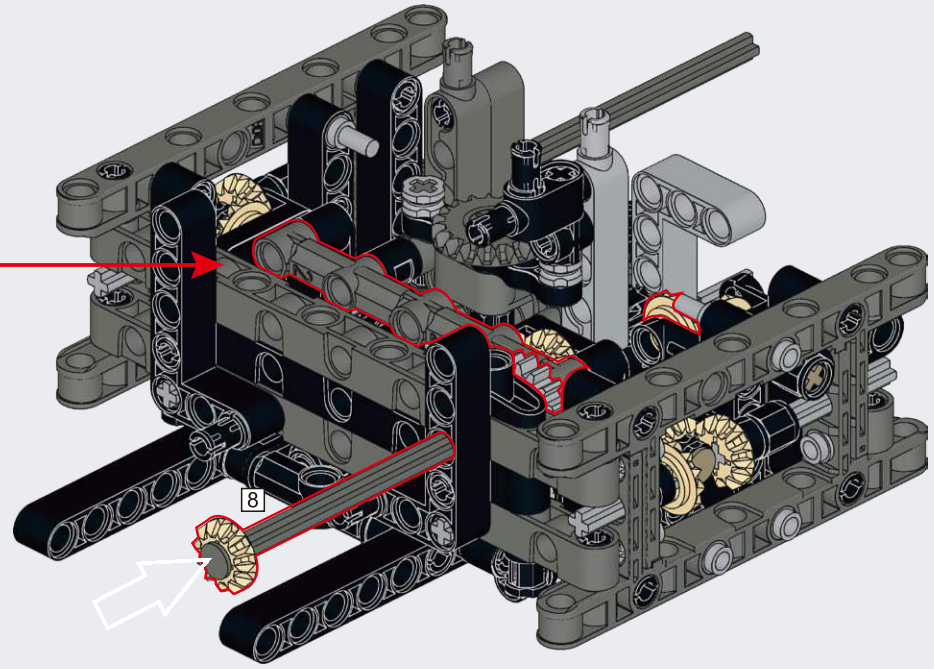

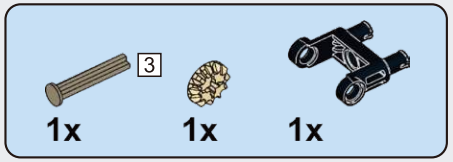

A41

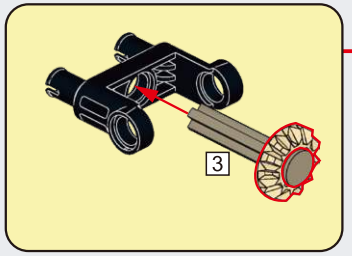

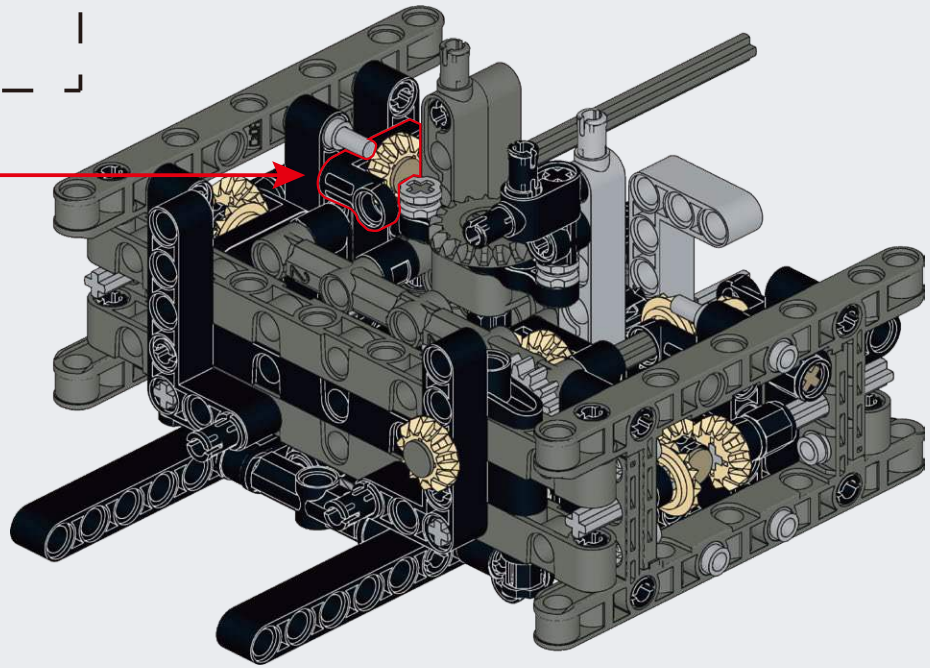

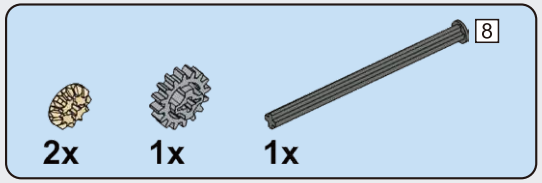

A42

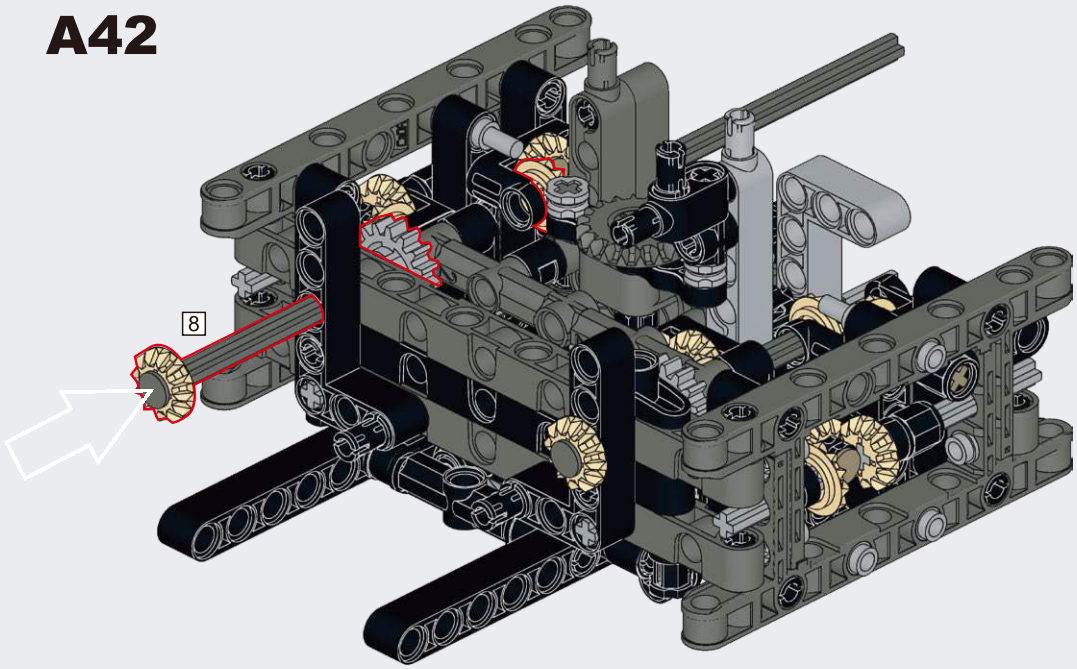

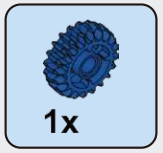

A43

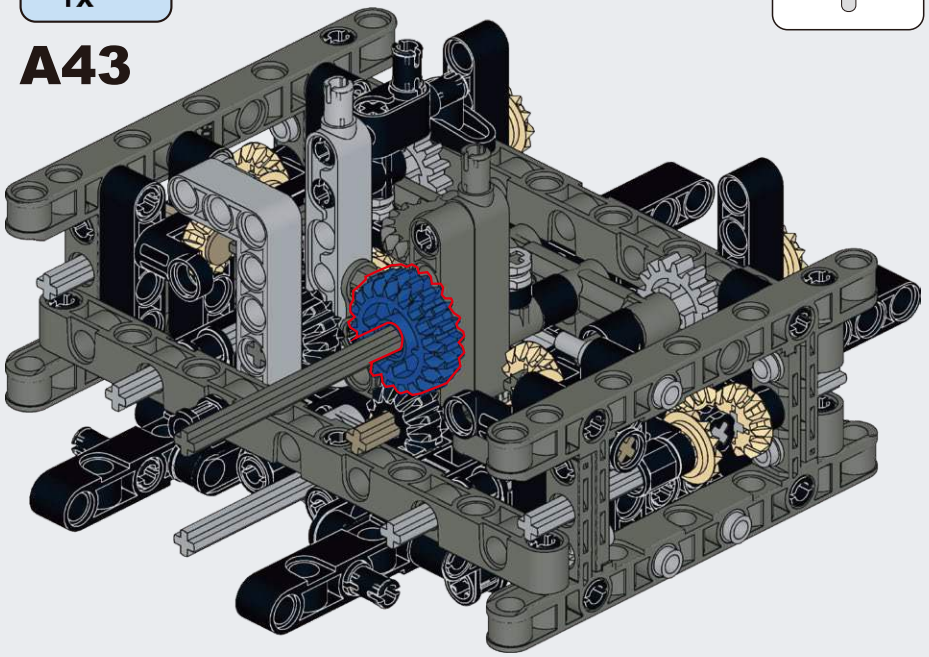

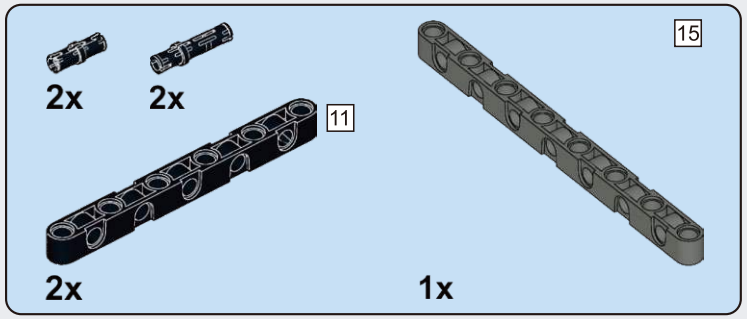

A44

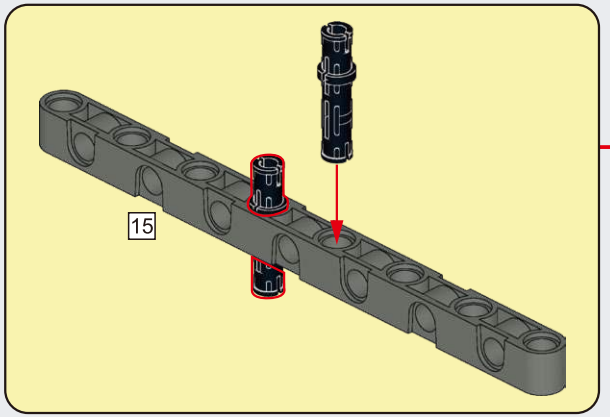

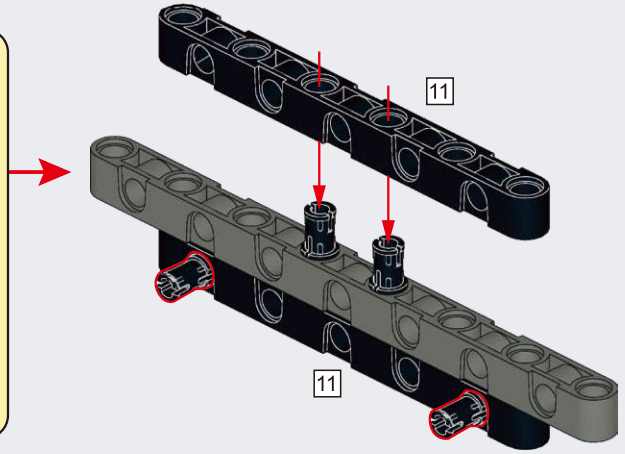

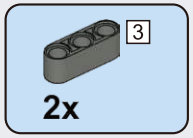

A45

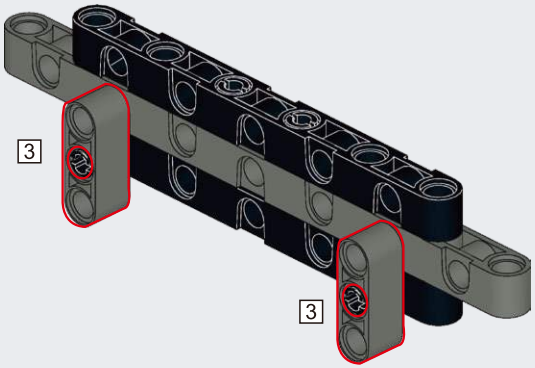

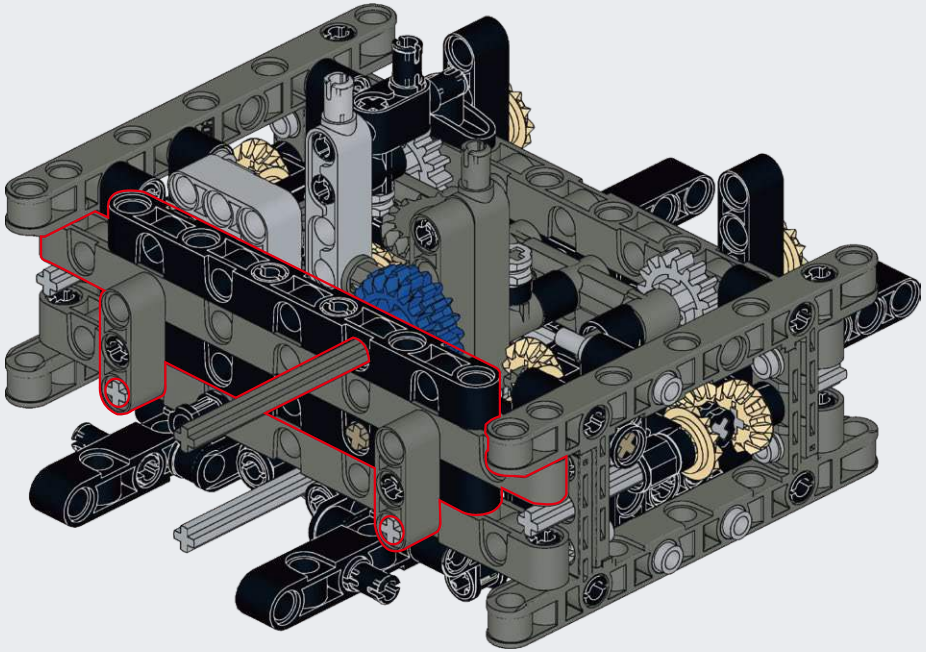

A46

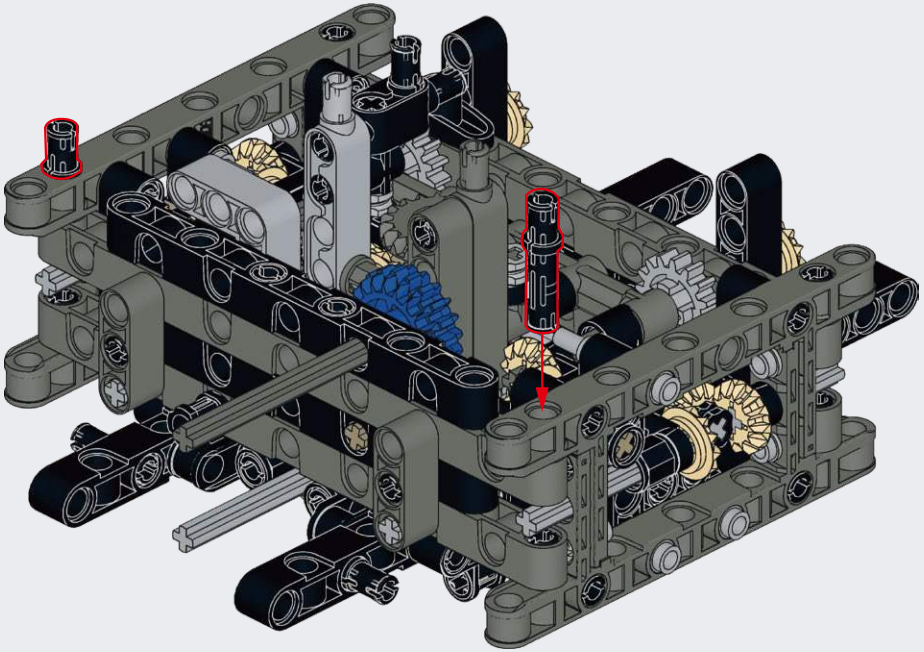

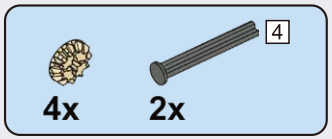

A47

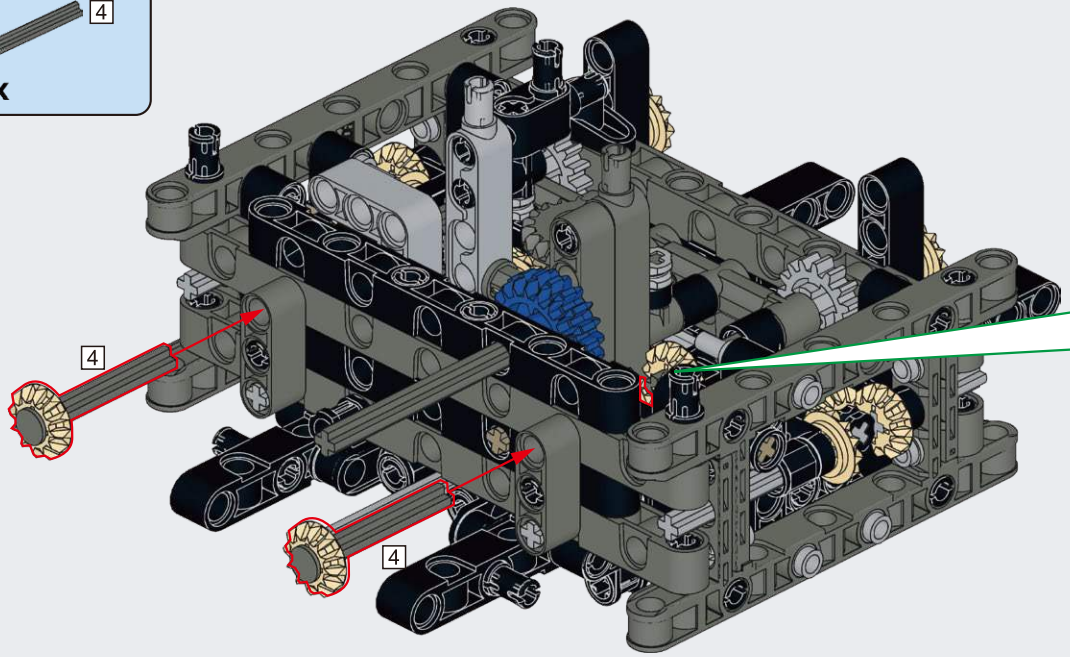

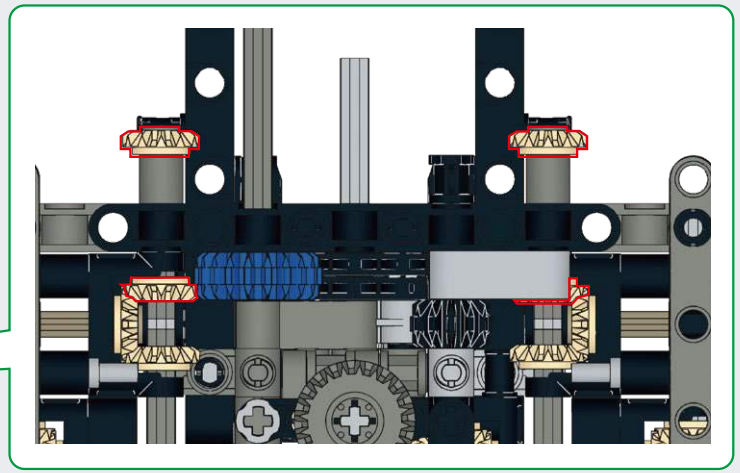

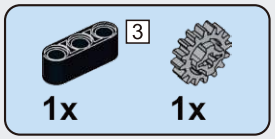

A48

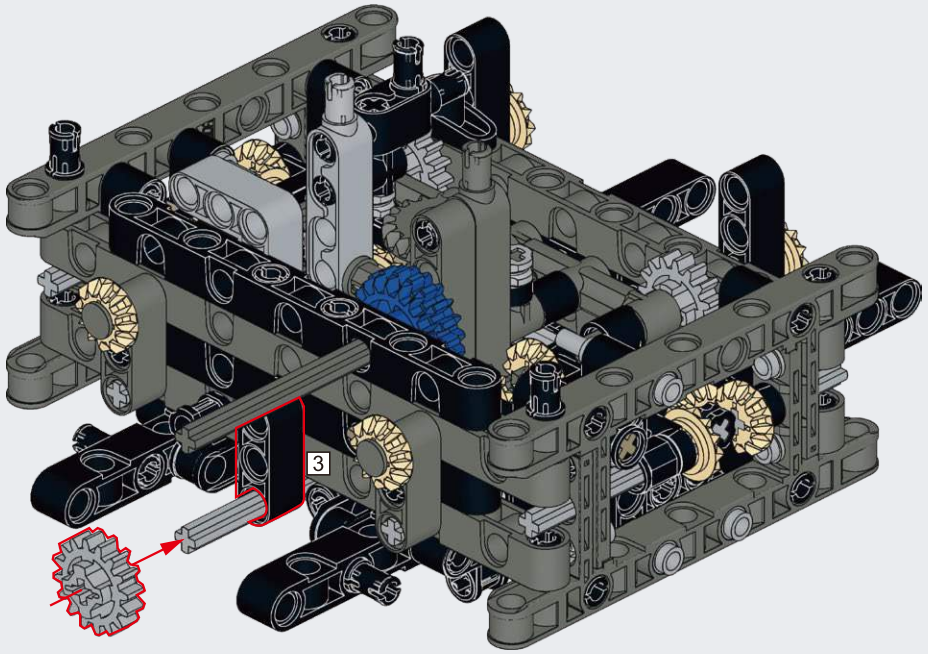

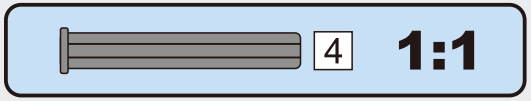

A49

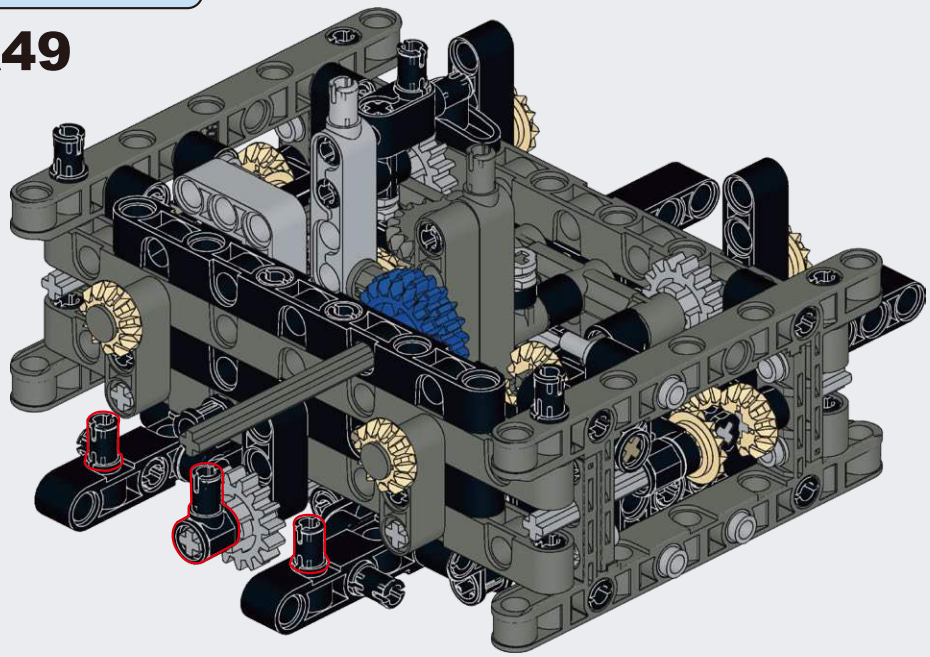

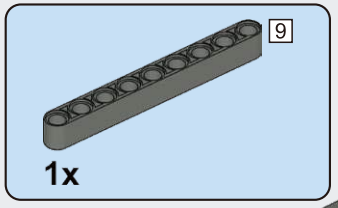

A50

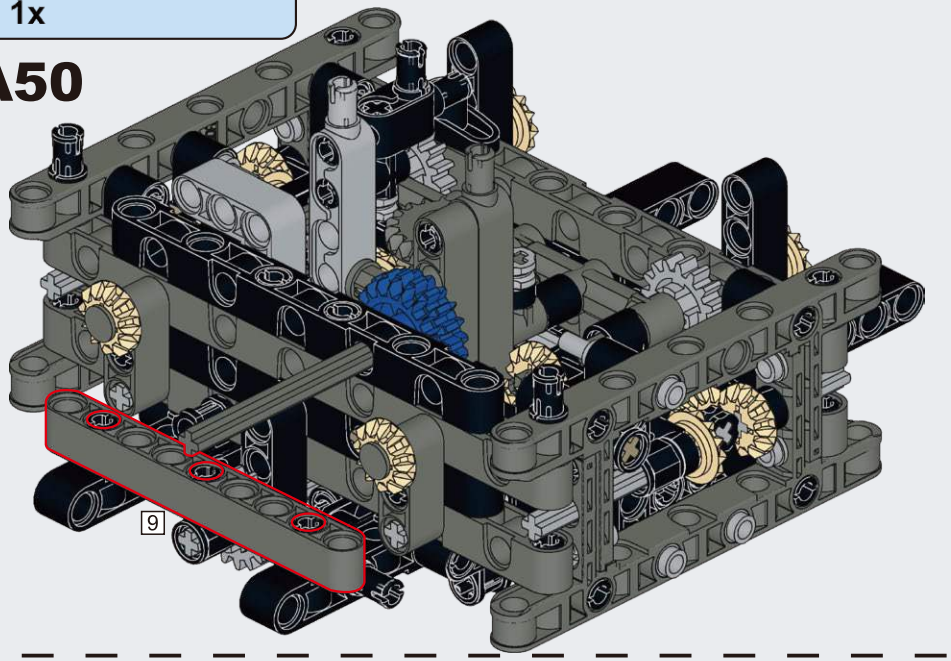

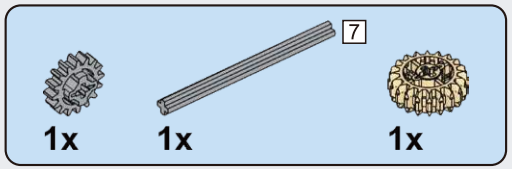

A51

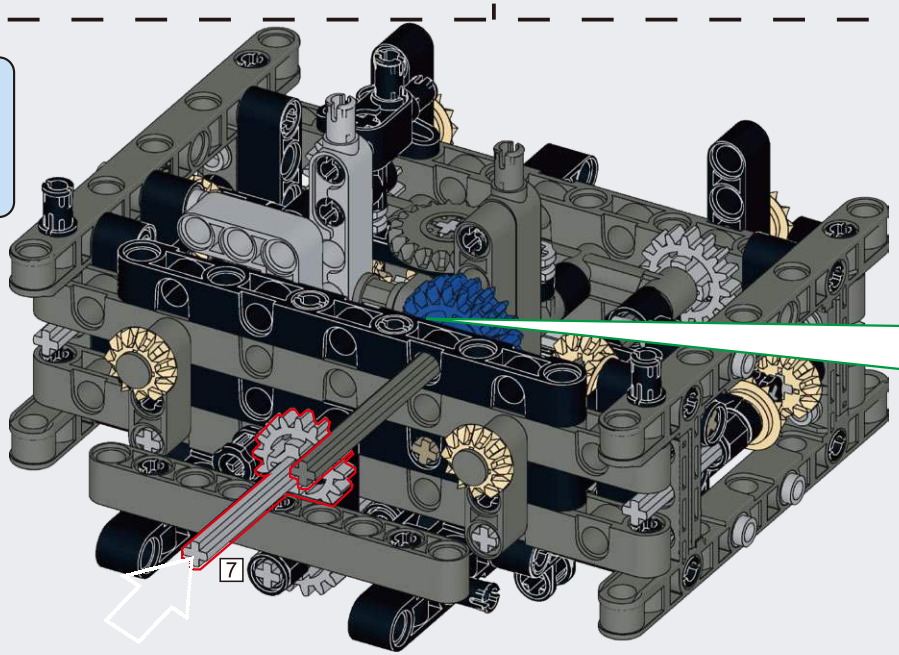

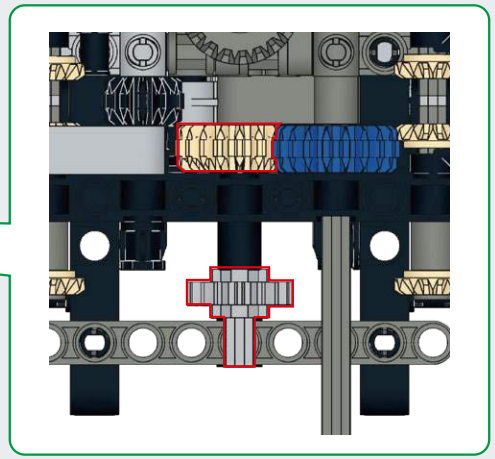

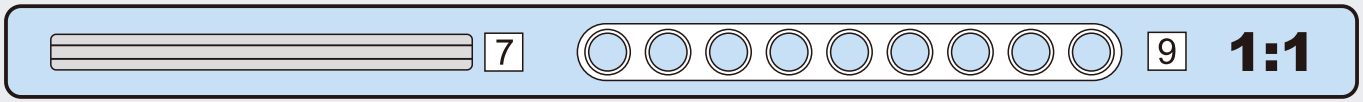

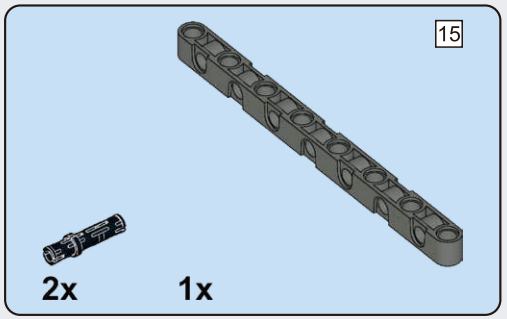

A52

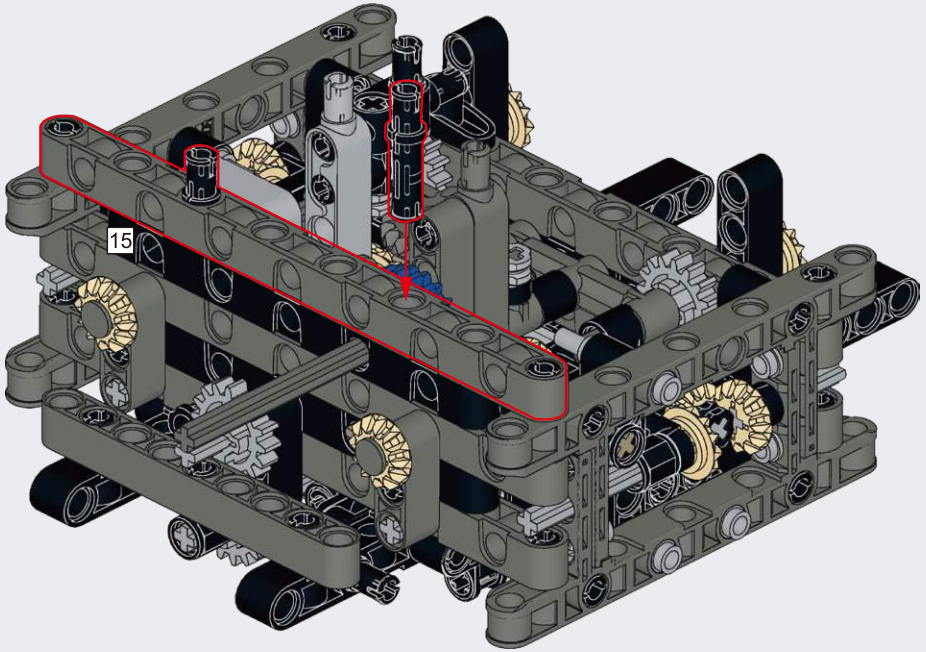

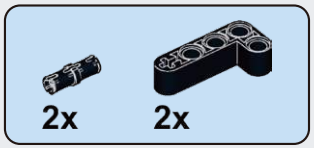

A53

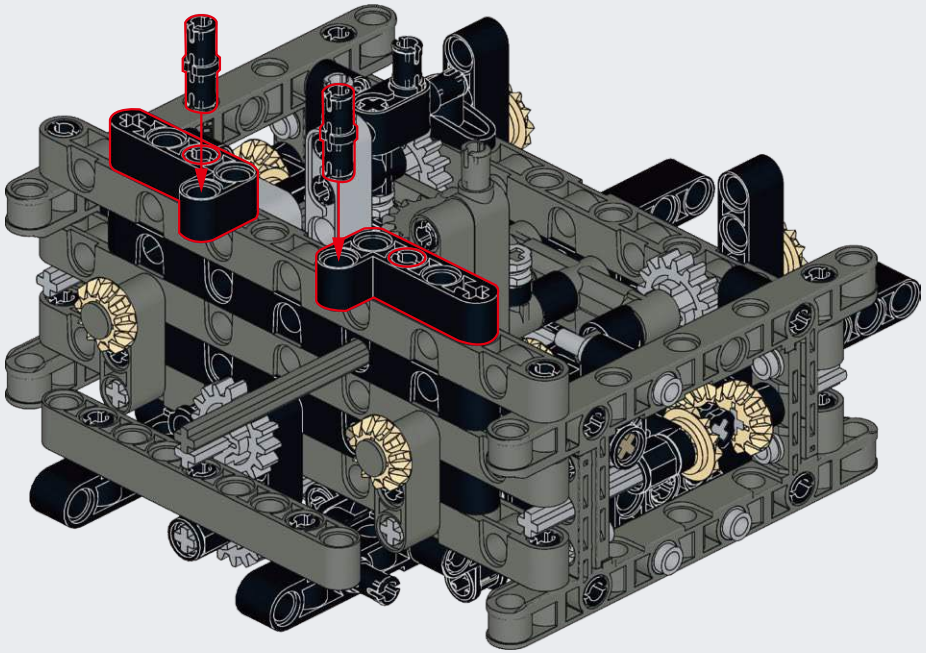

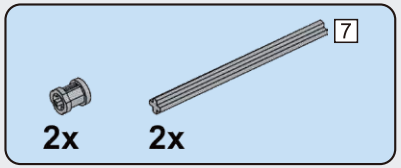

A54

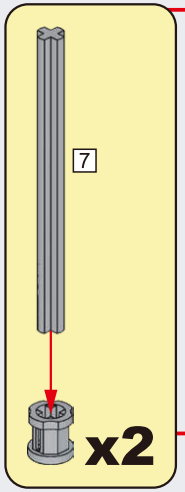

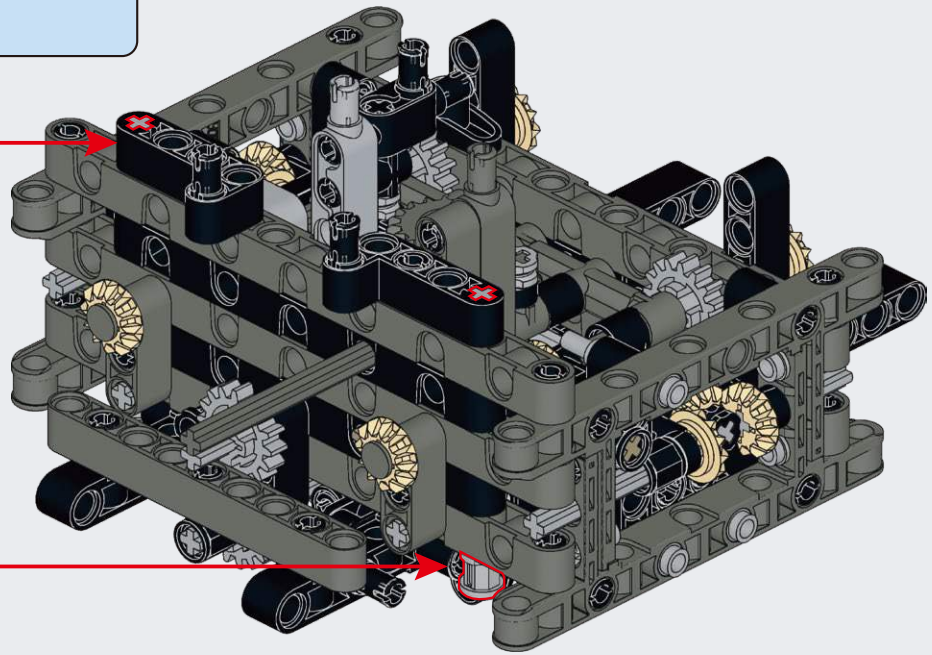

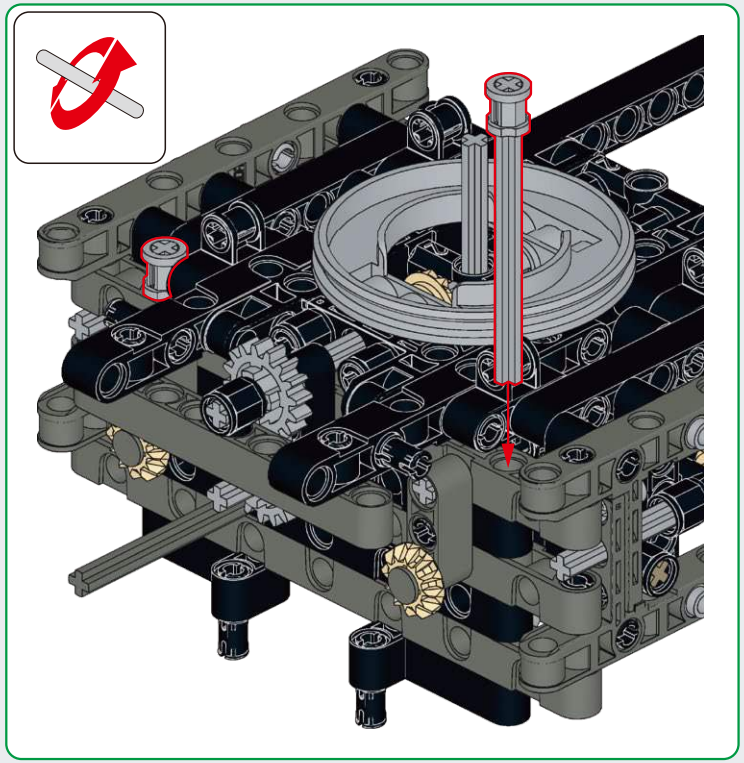

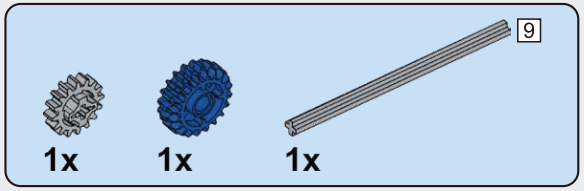

A55

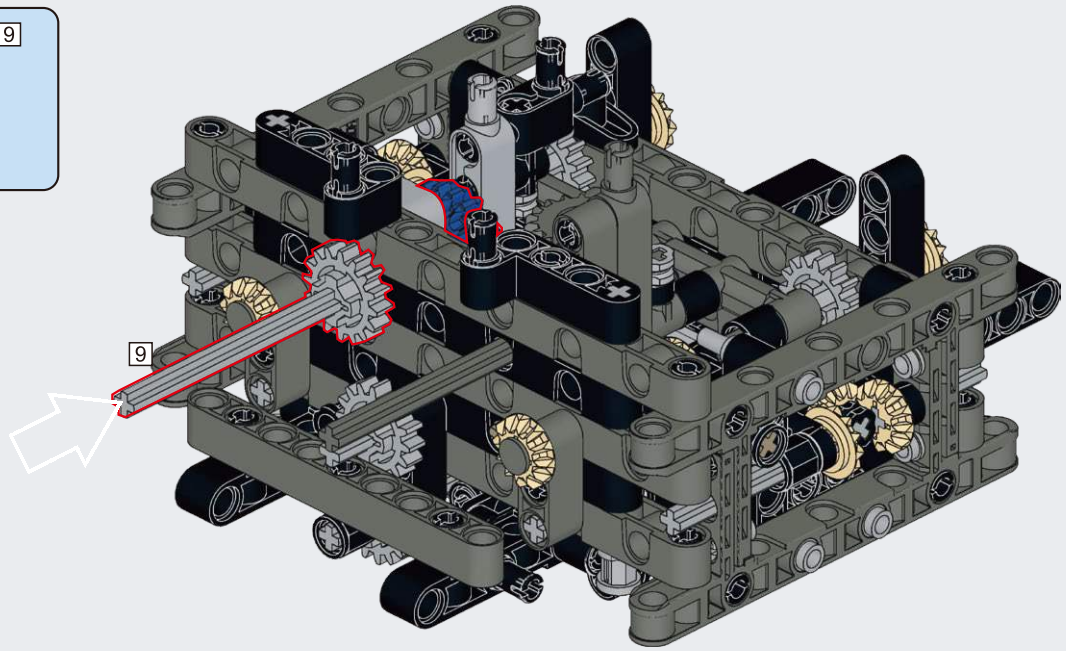

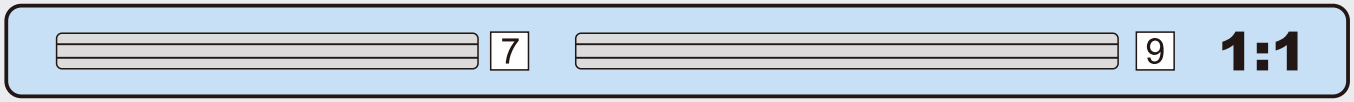

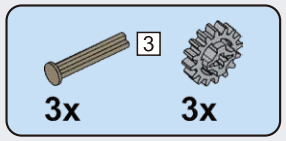

A56

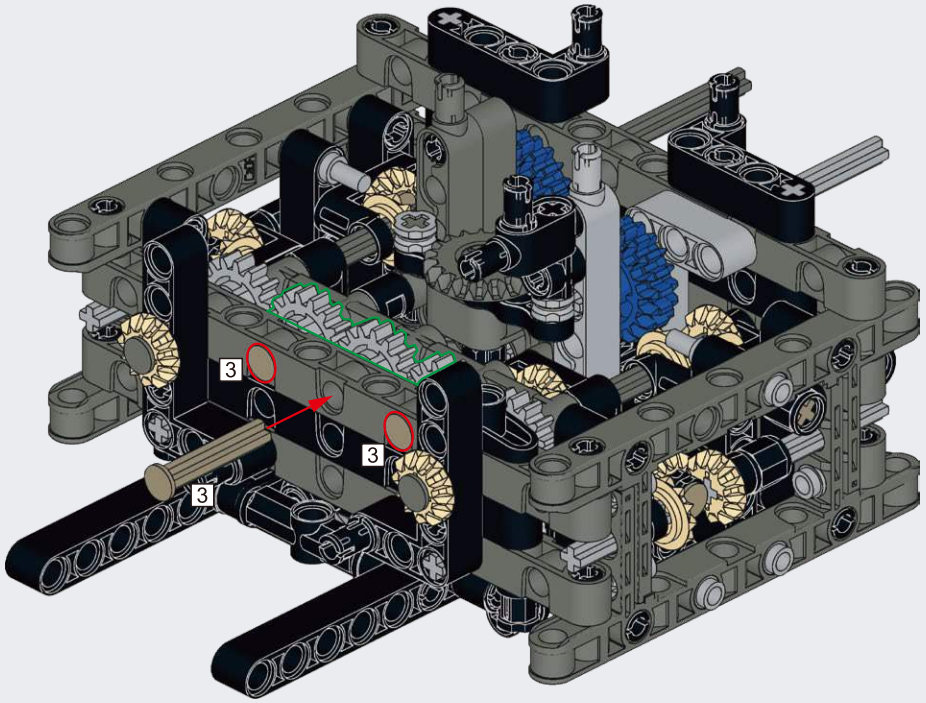

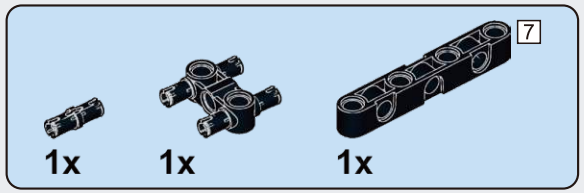

A57

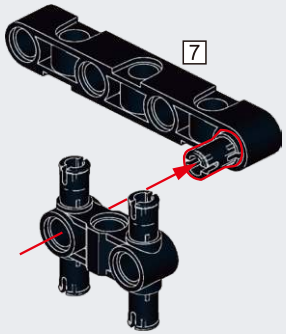

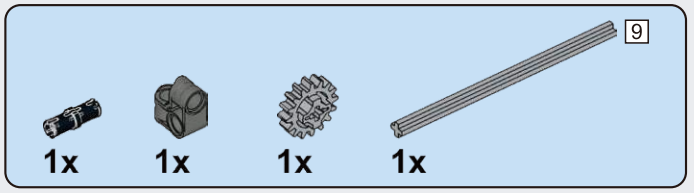

A58

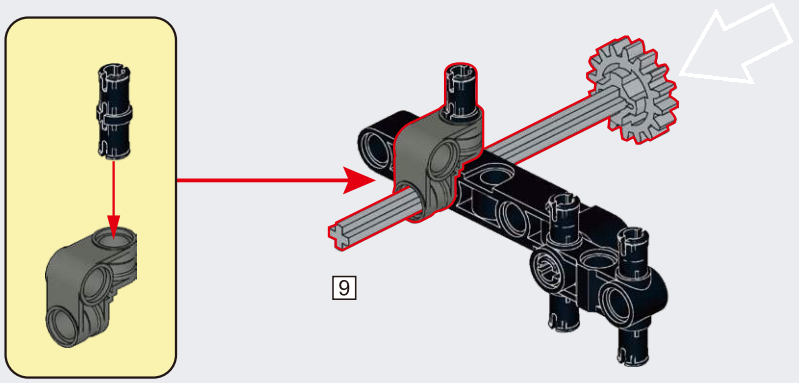

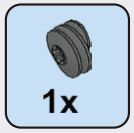

A59

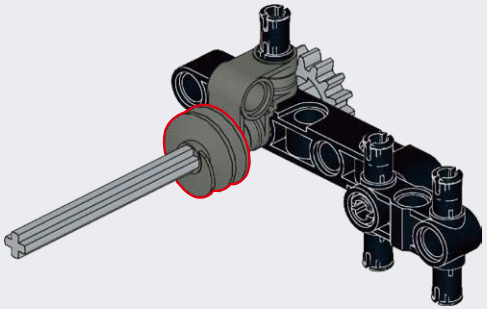

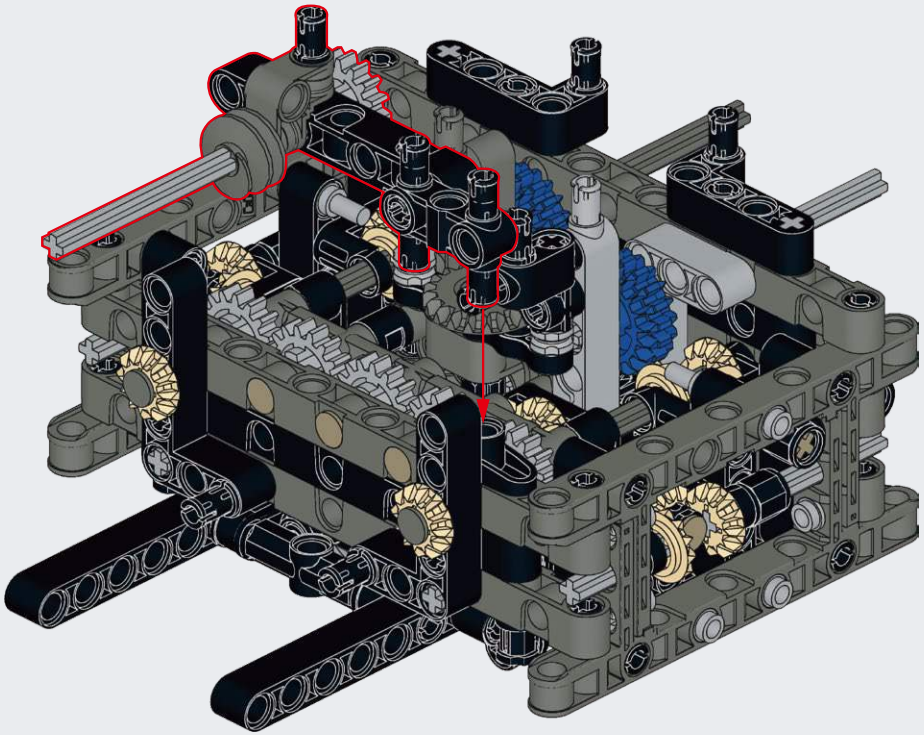

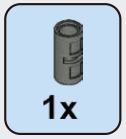

A60

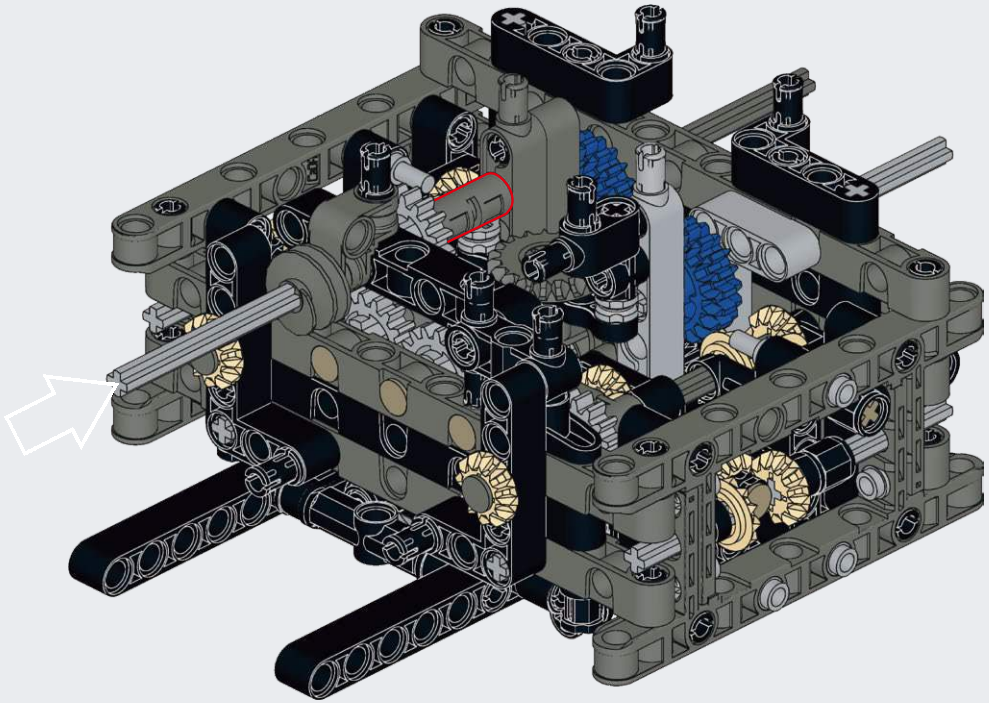

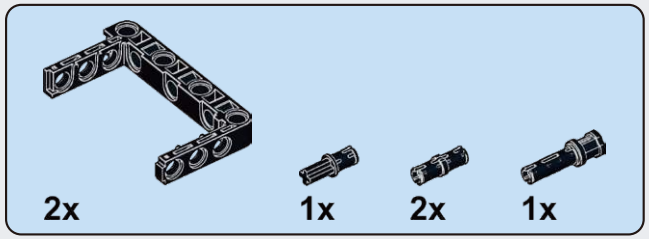

A61

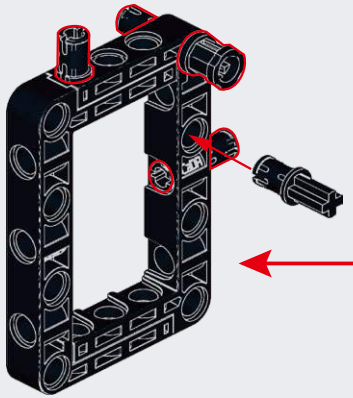

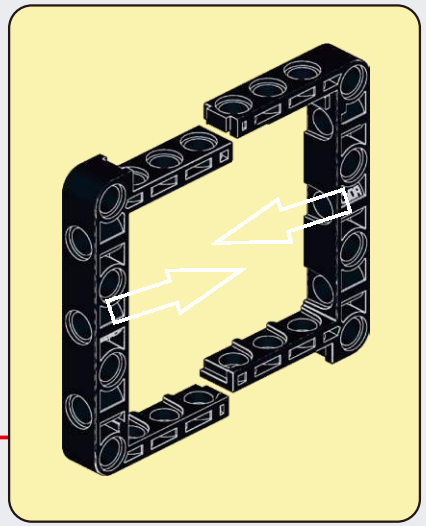

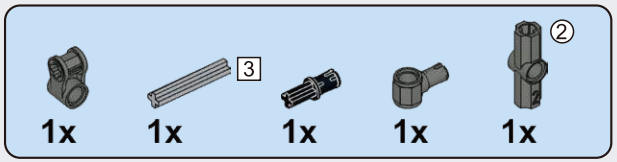

A62

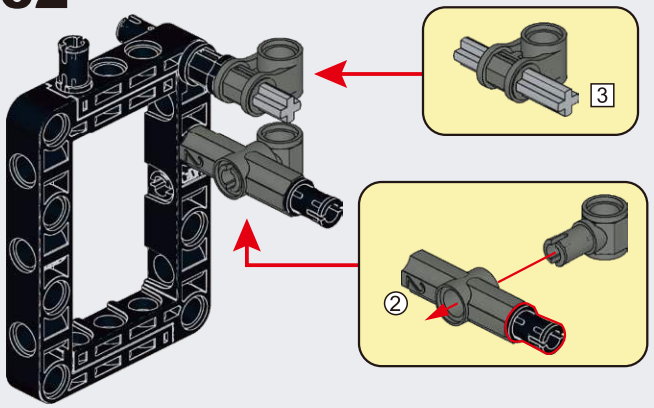

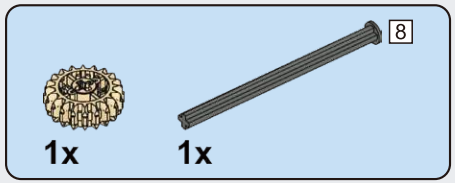

A63

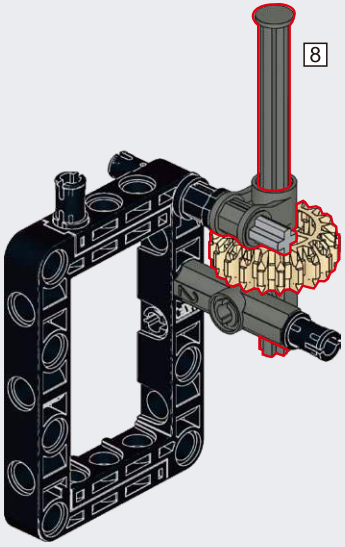

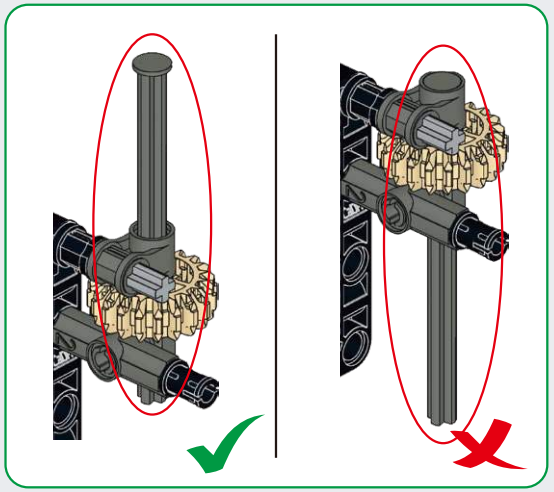

A64

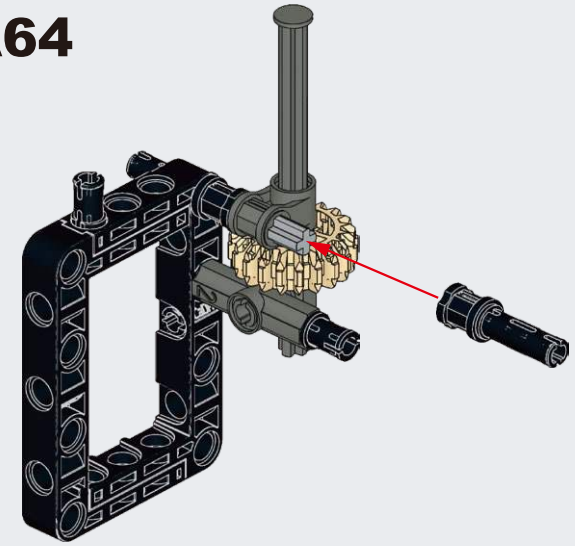

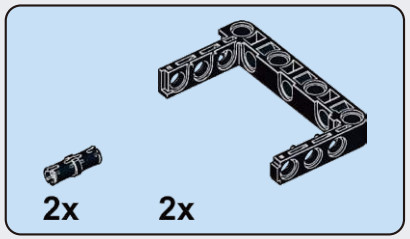

A65

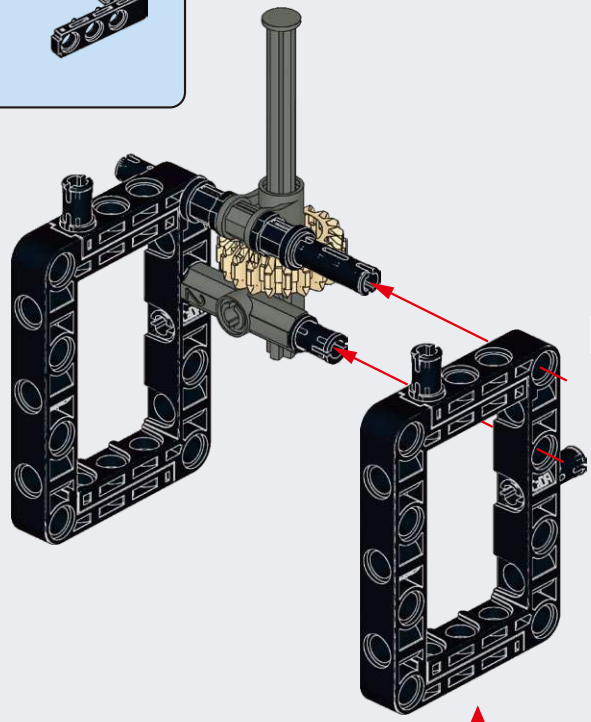

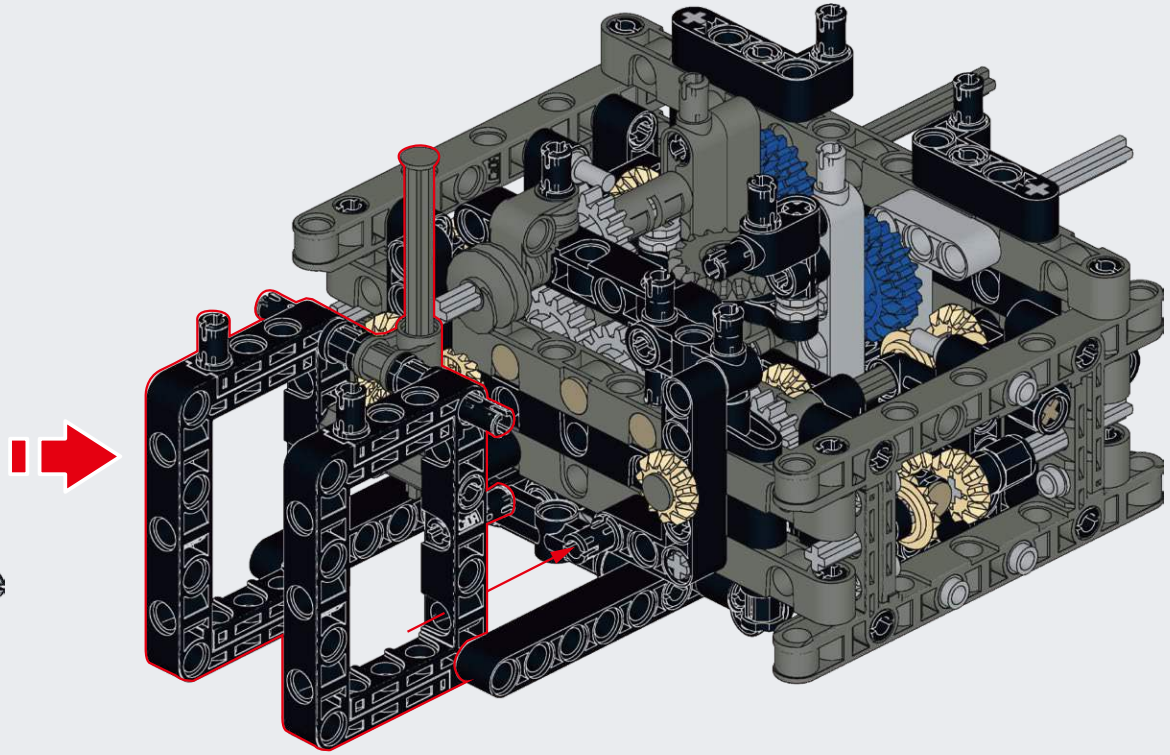

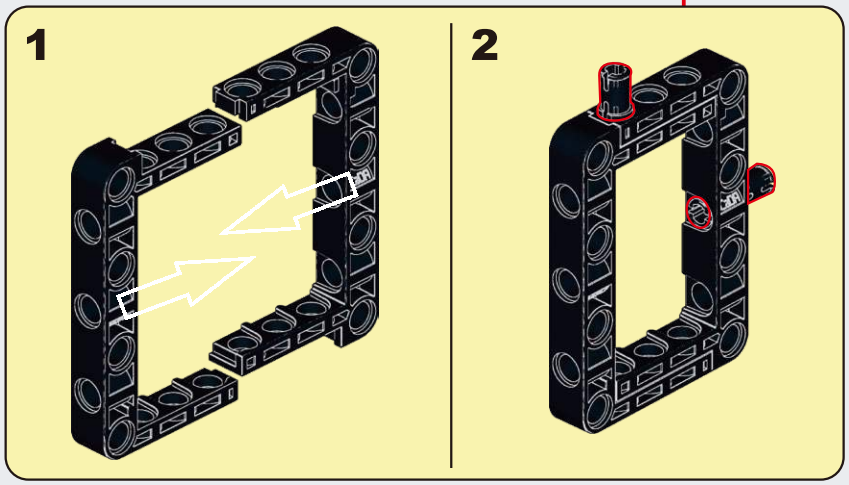

A66

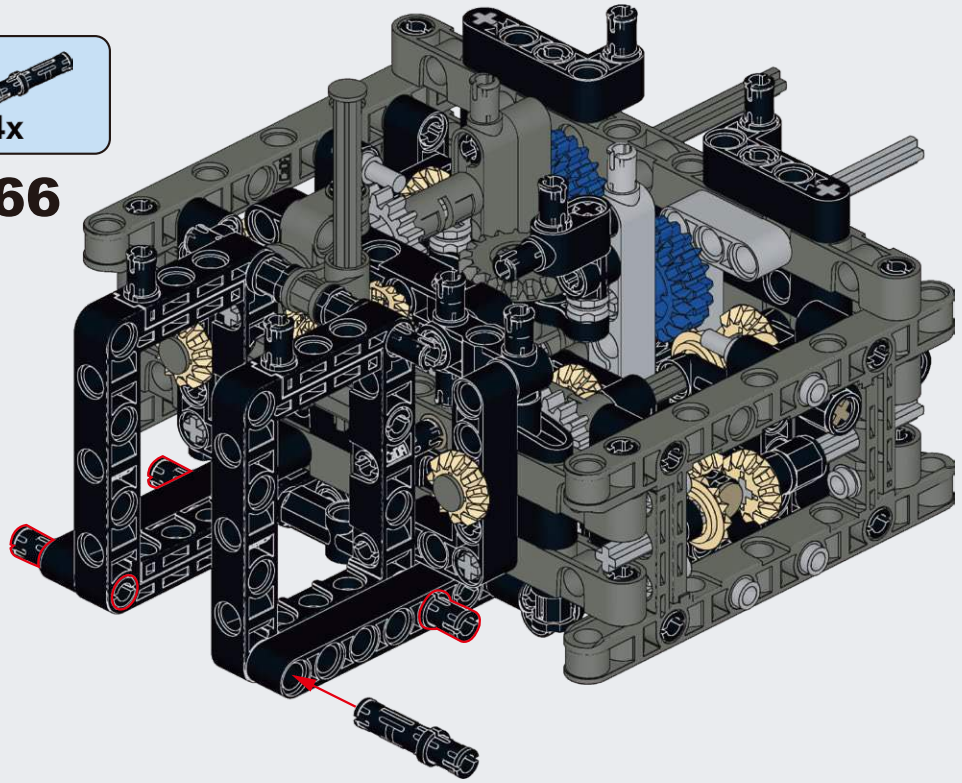

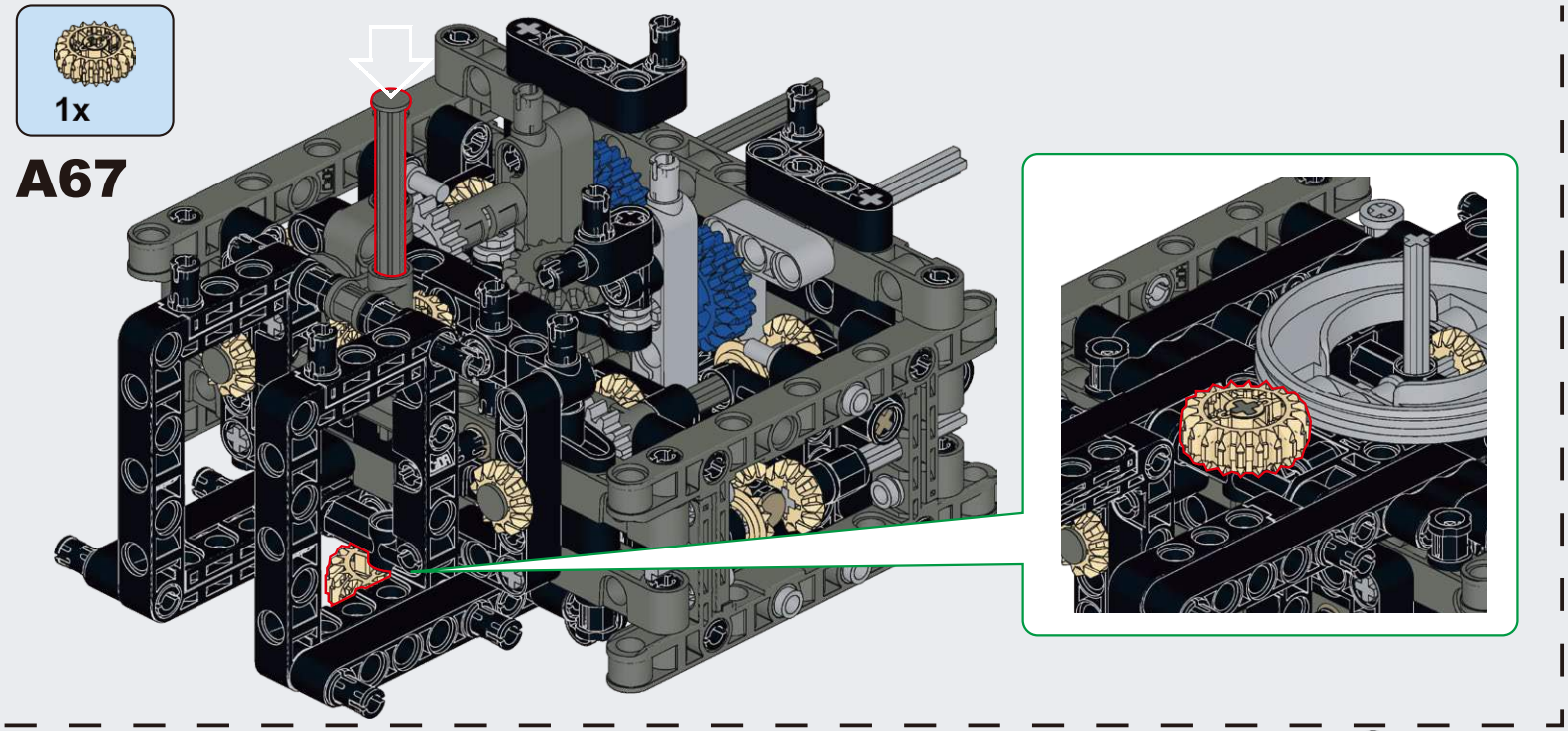

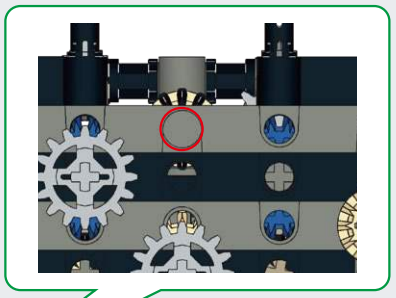

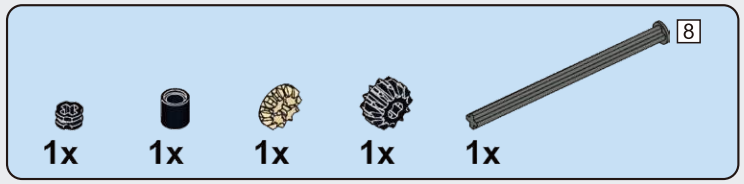

A68

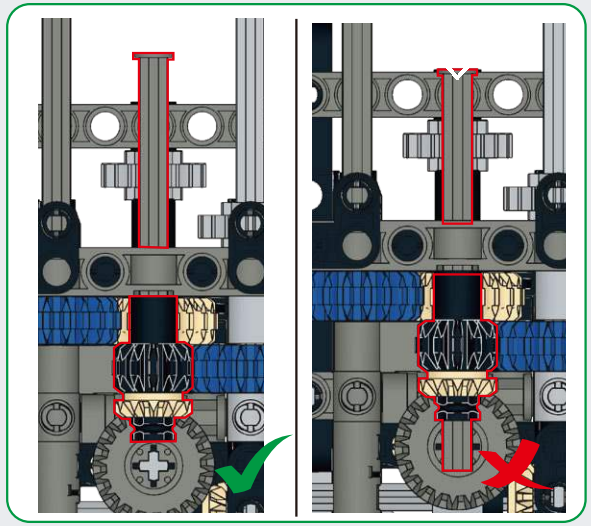

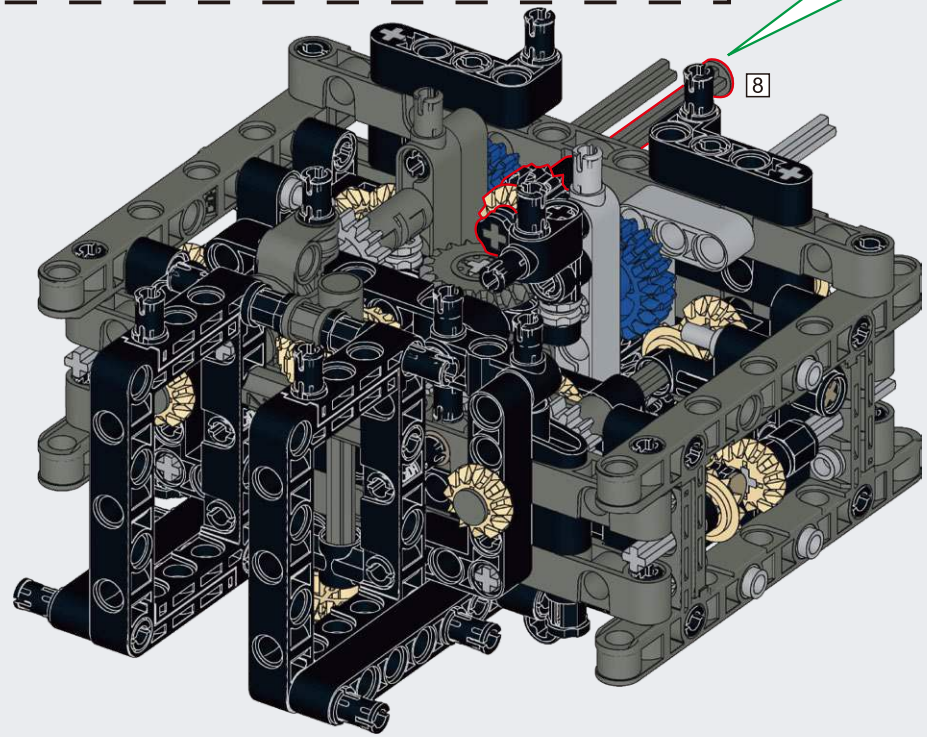

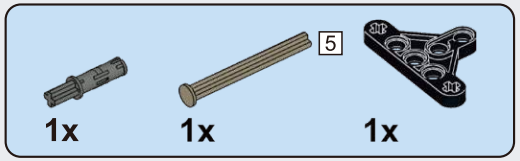

A69

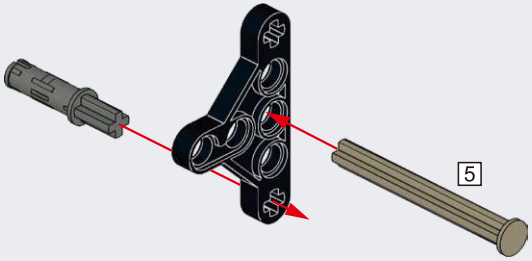

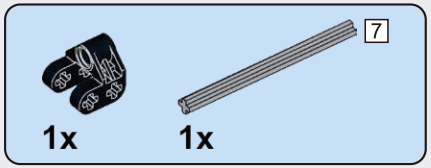

A70

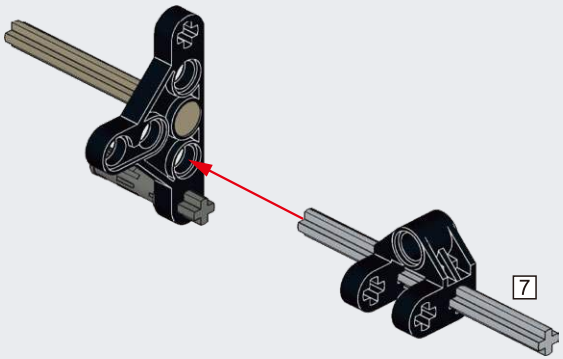

A71

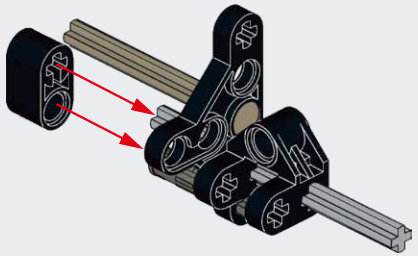

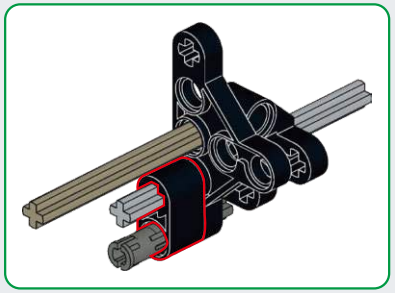

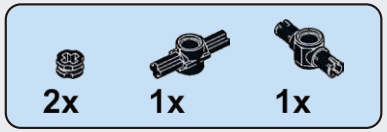

A72

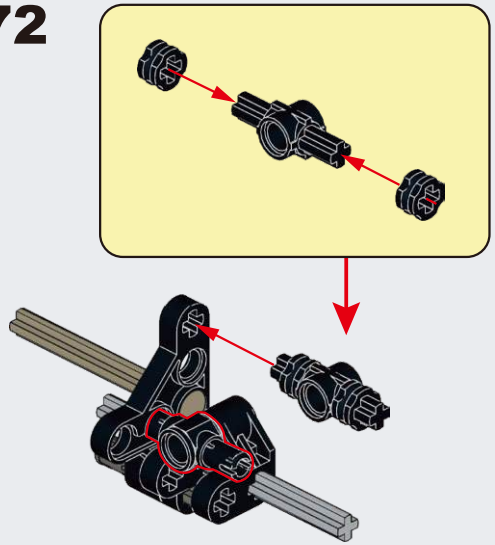

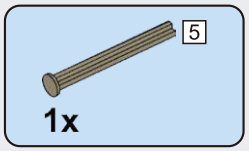

A73

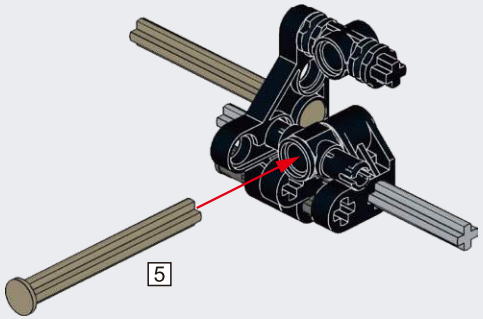

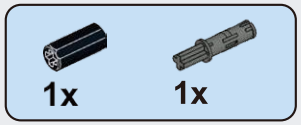

A74

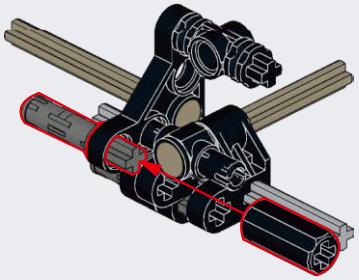

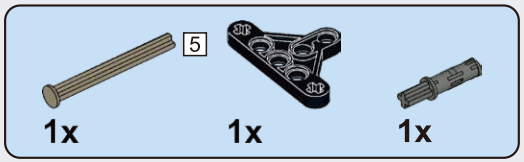

A75

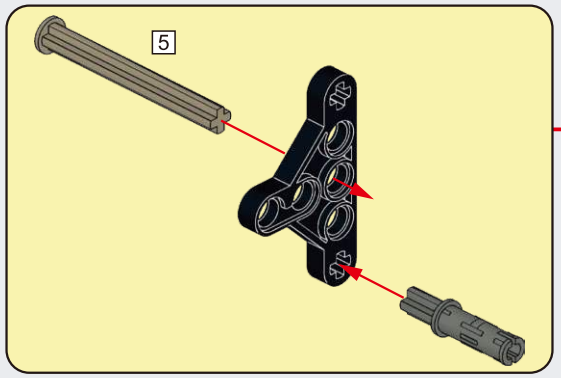

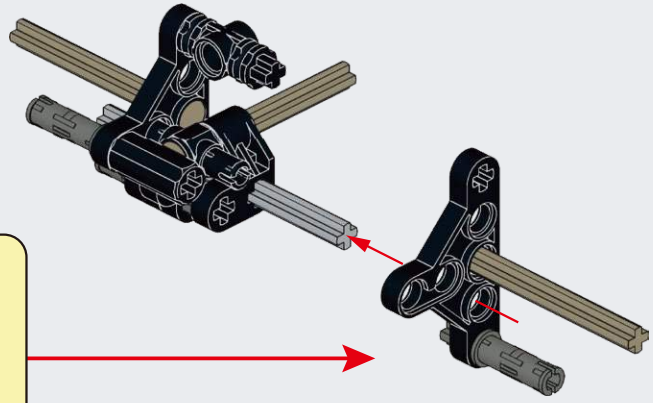

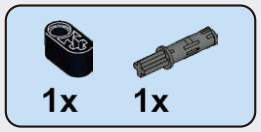

A76

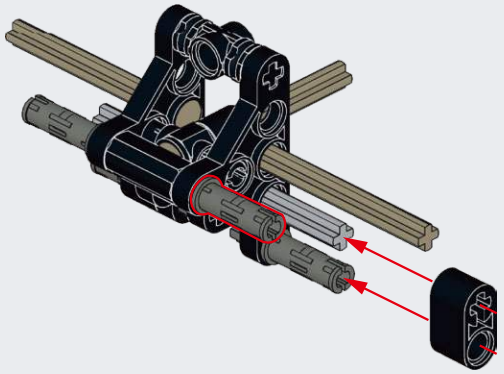

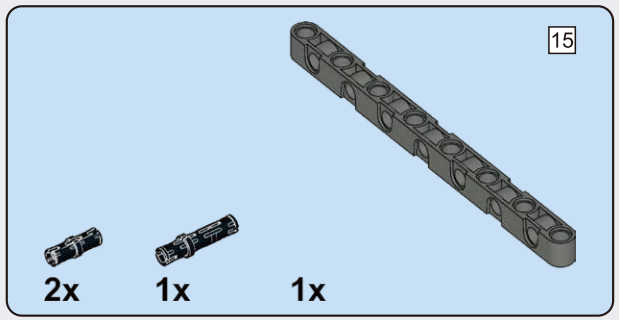

A77

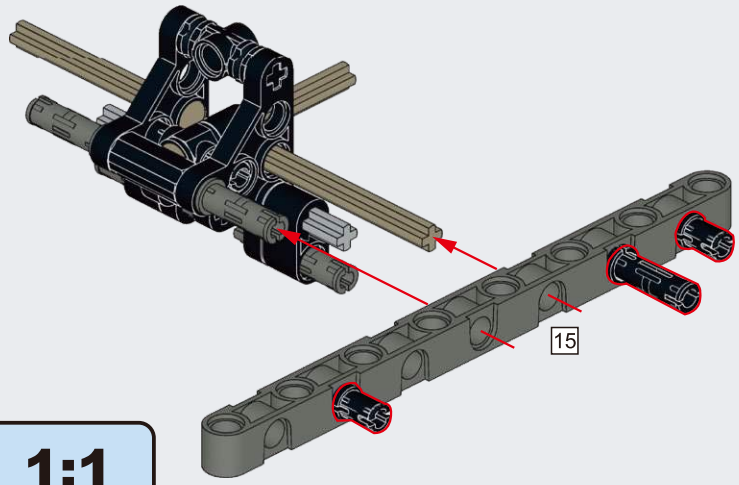

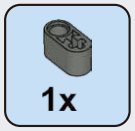

A78

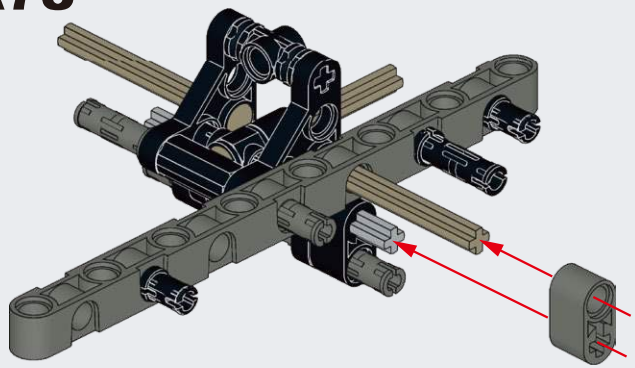

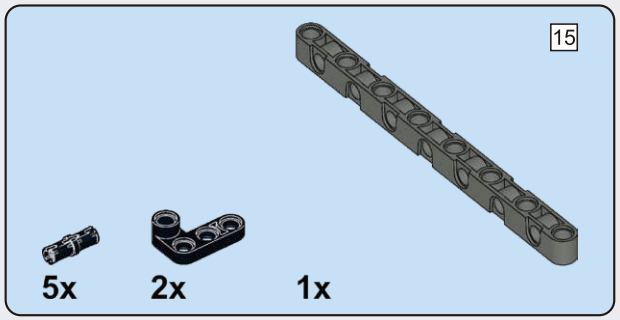

A79

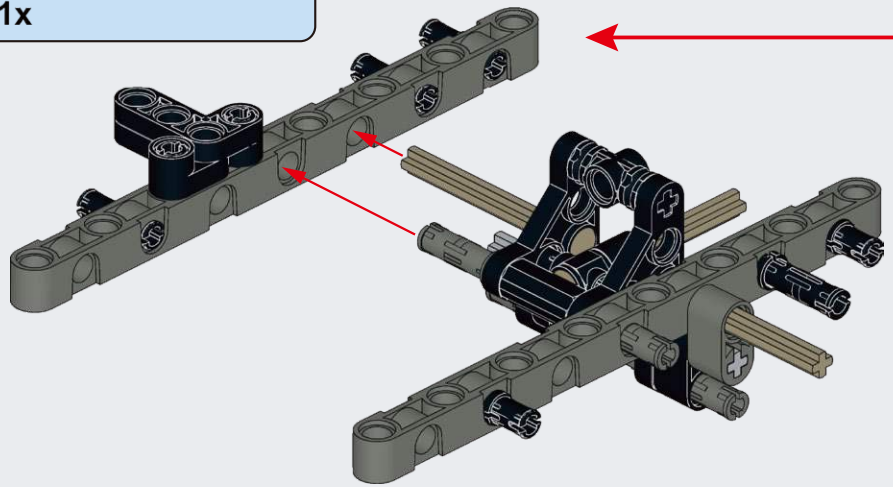

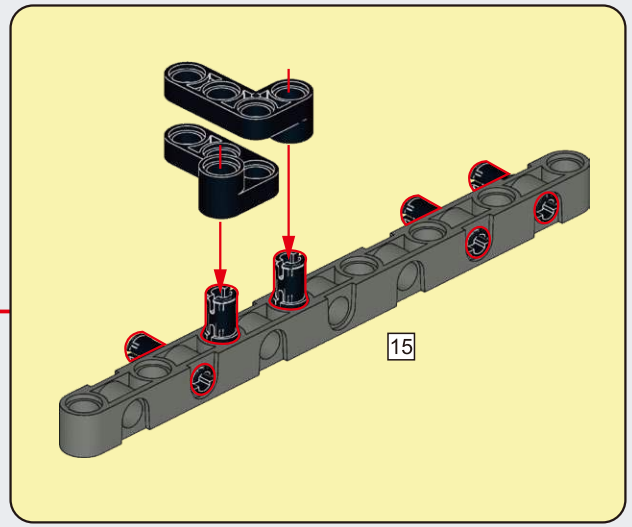

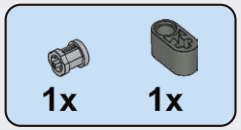

A80

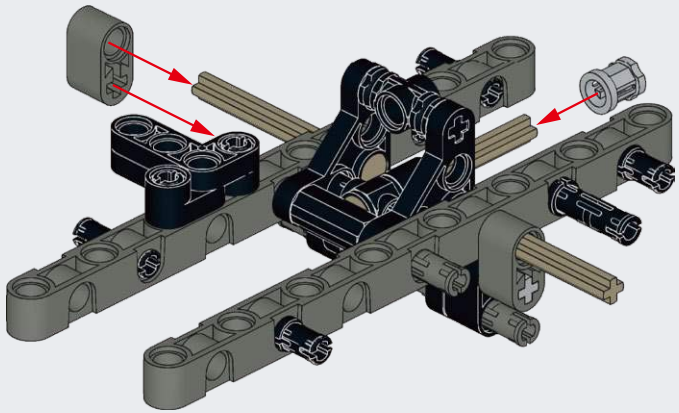

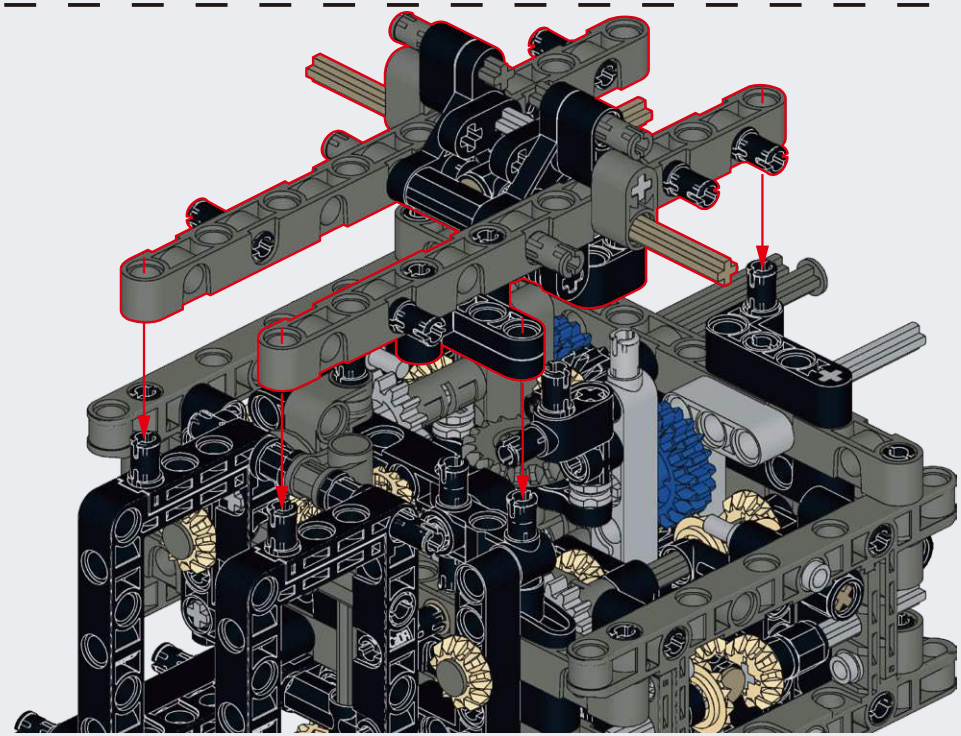

A81

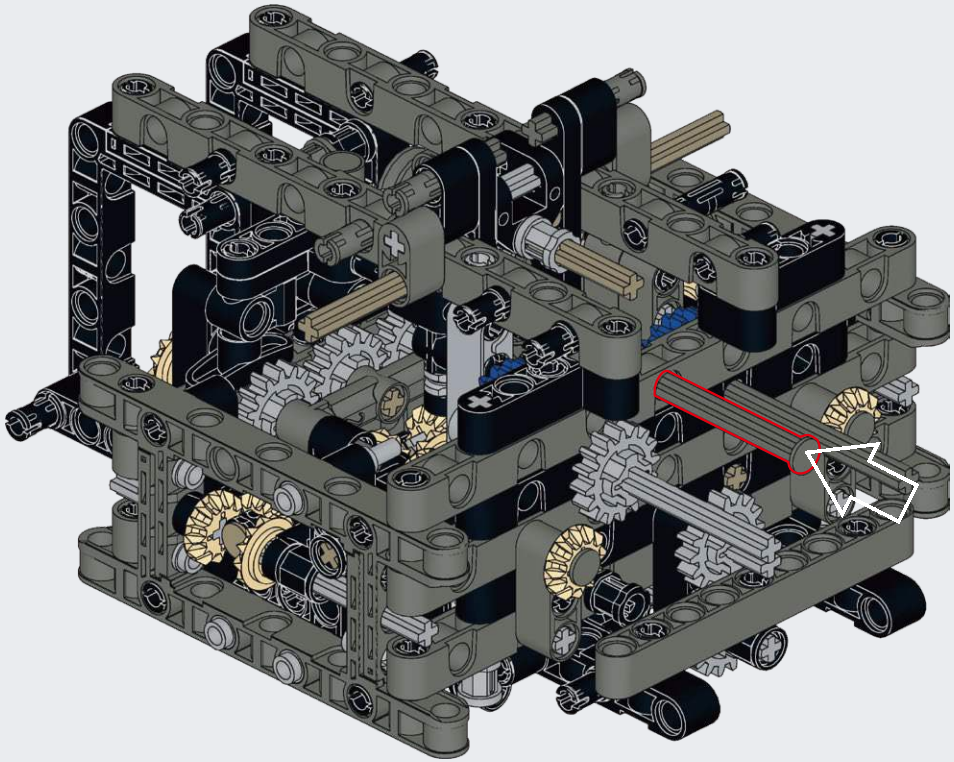

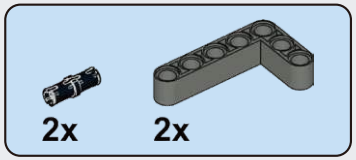

A82

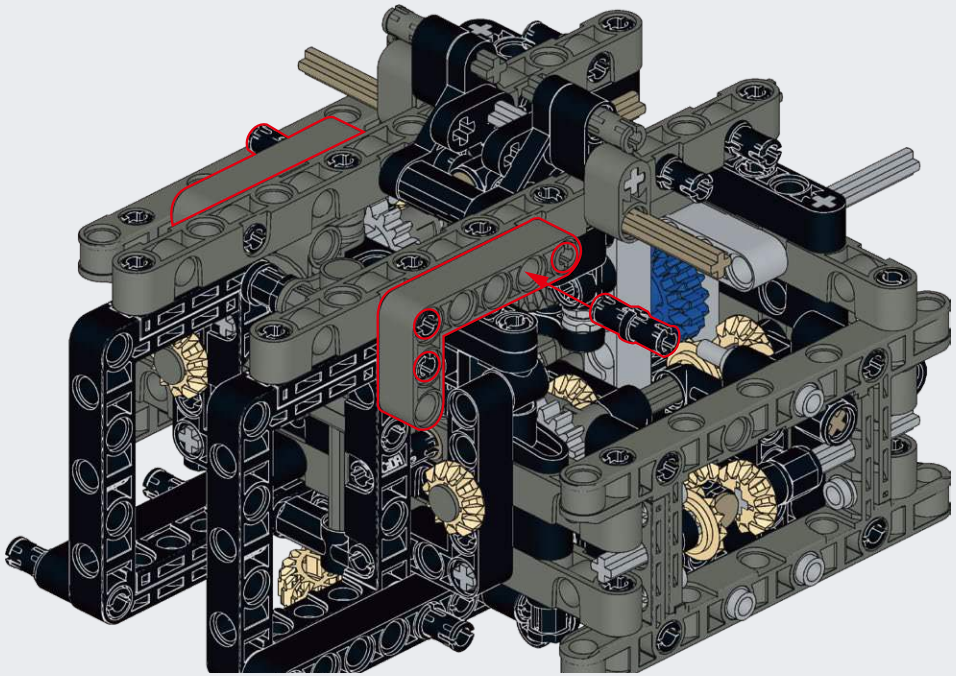

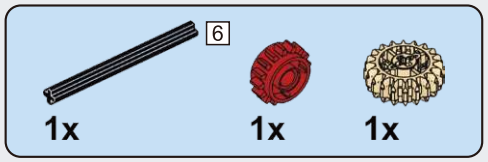

A83

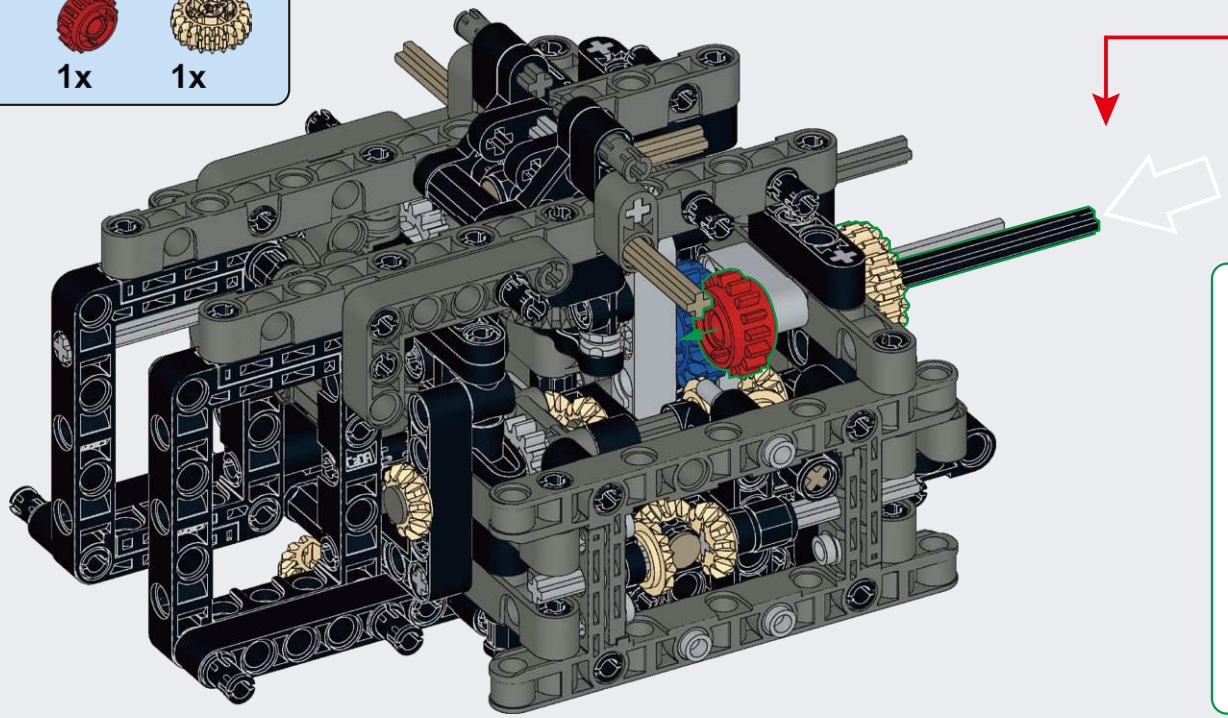

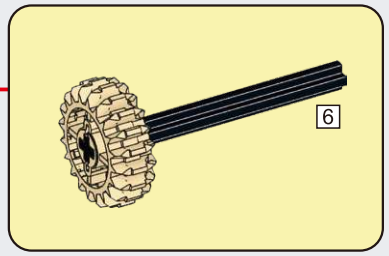

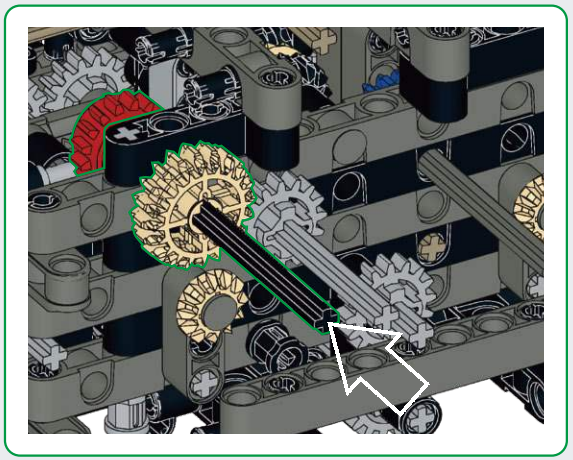

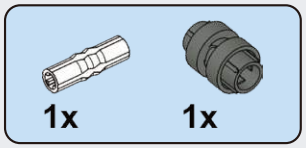

A84

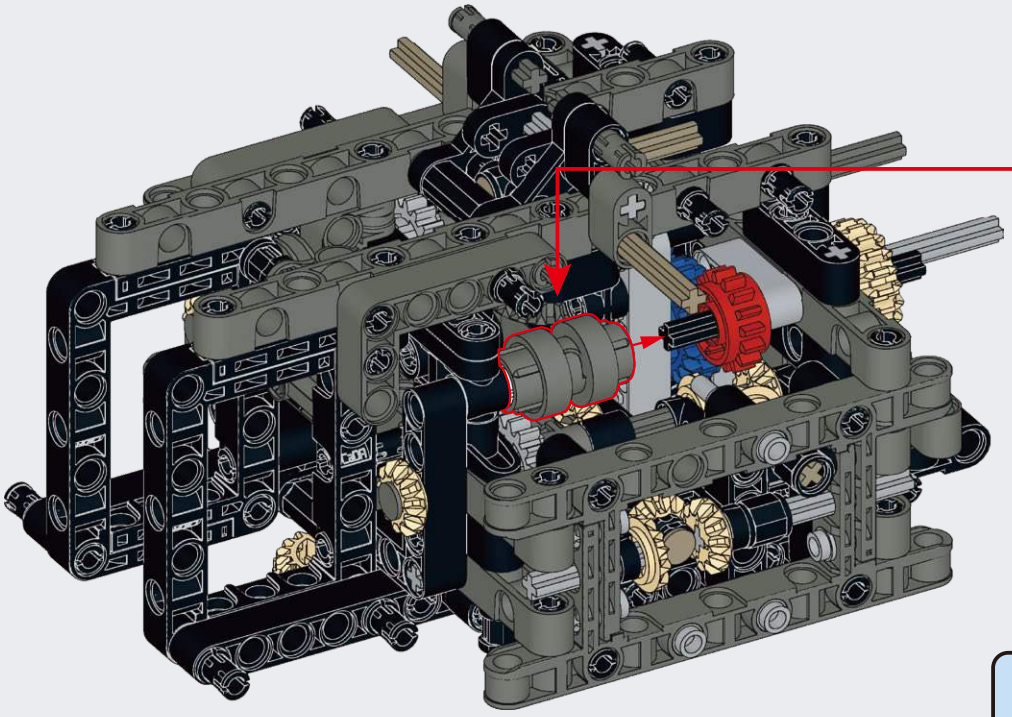

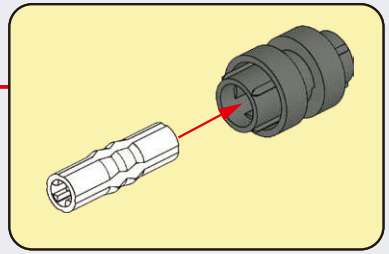

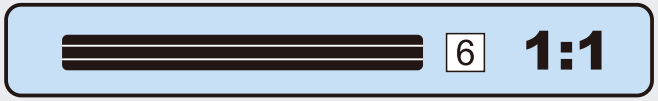

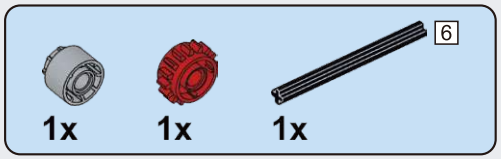

A85

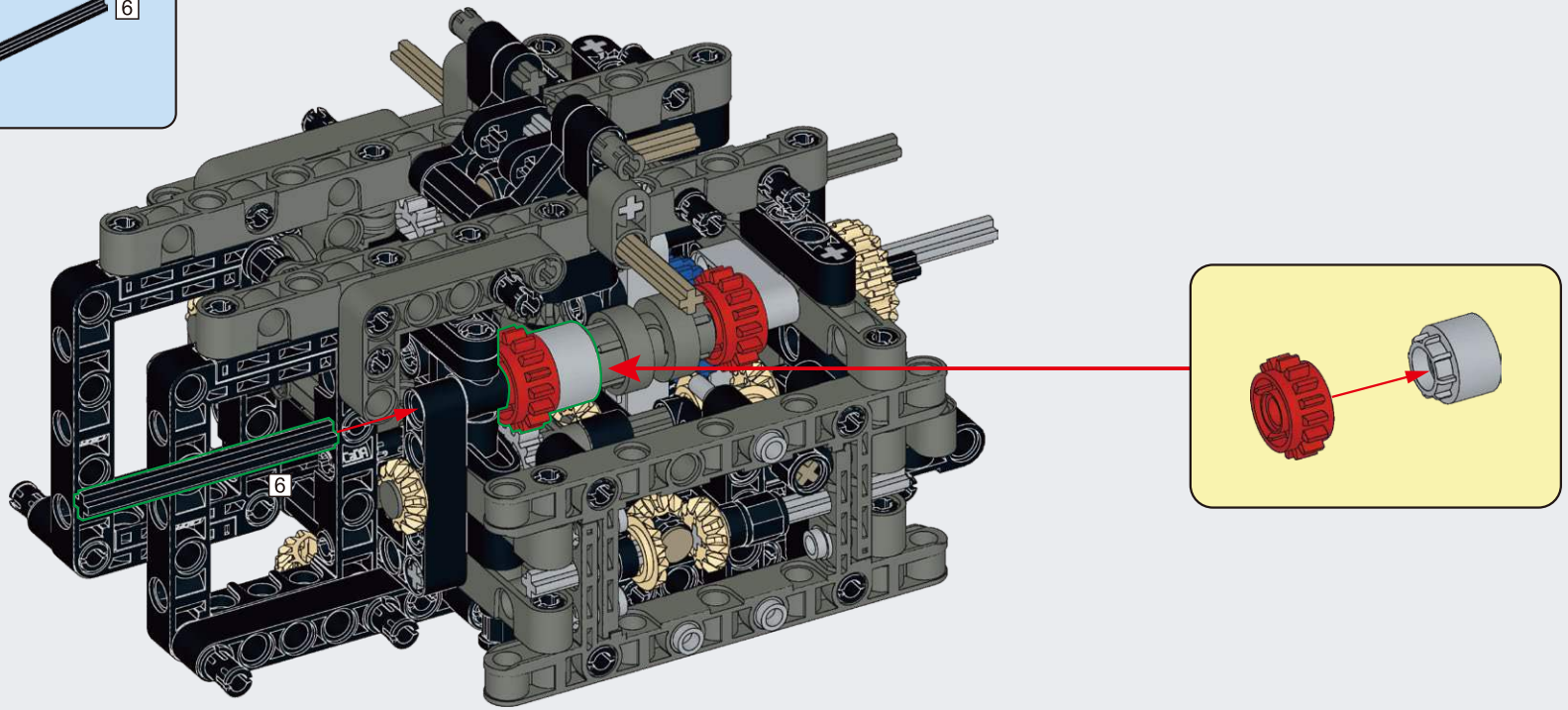

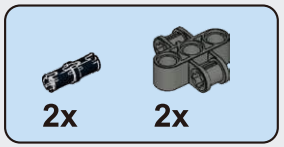

A86

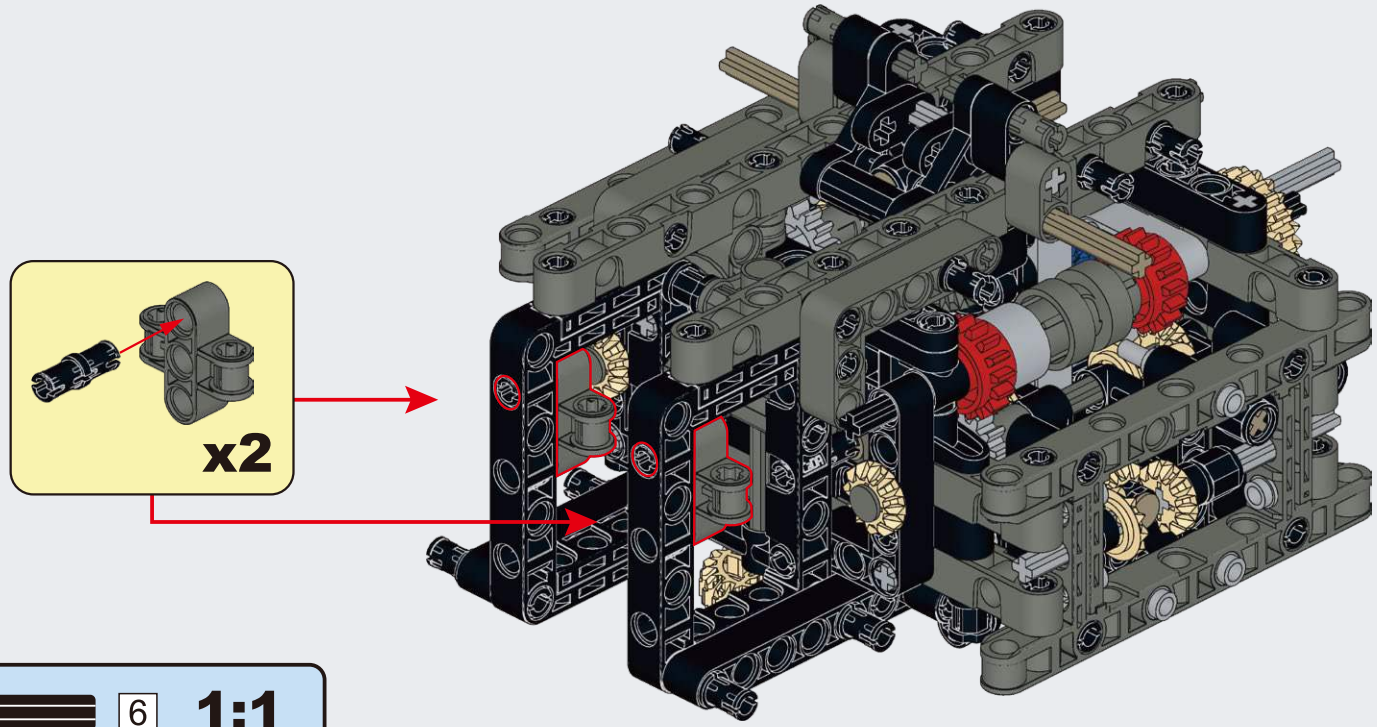

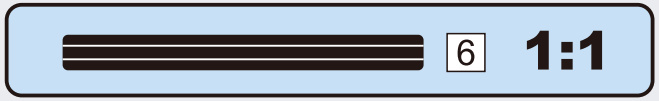

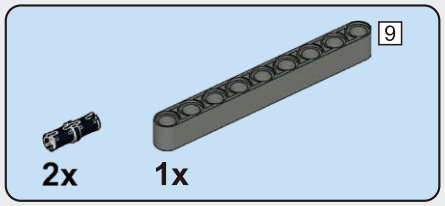

A87

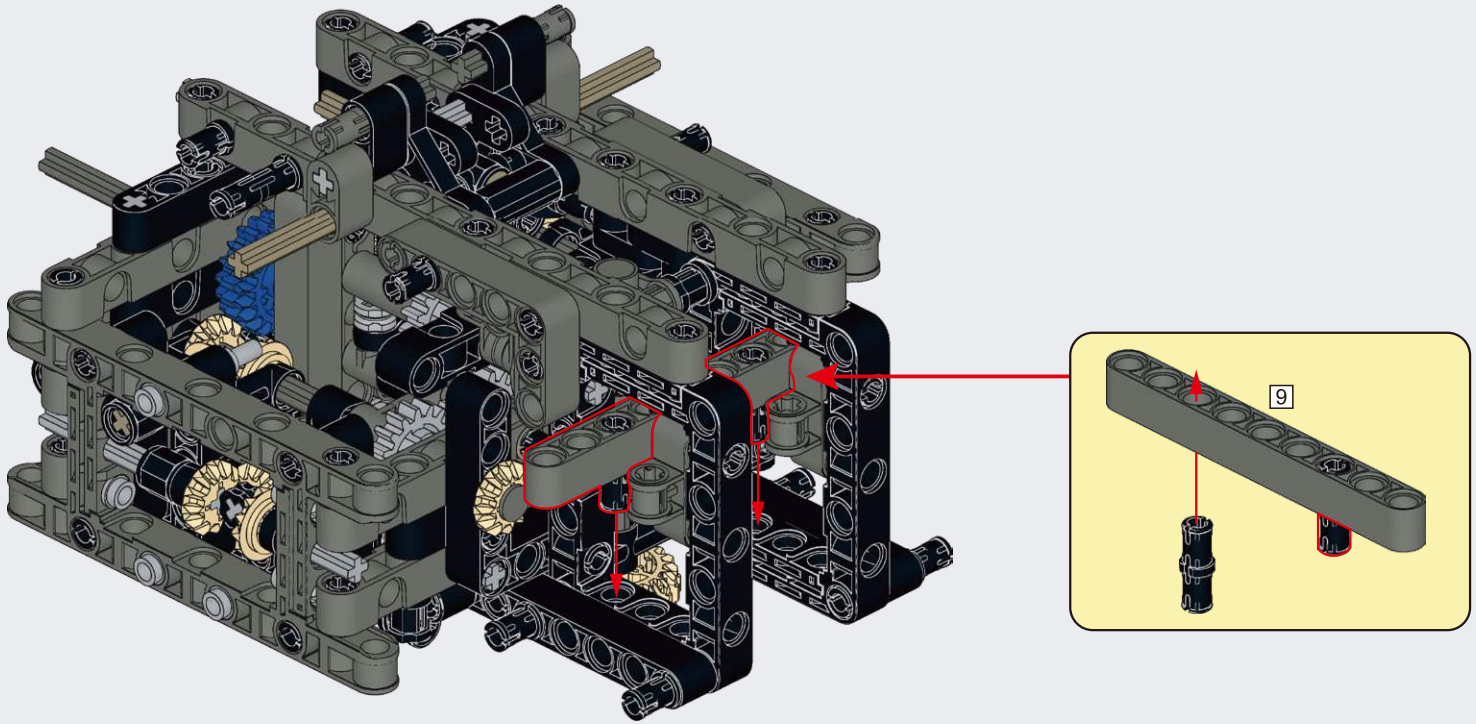

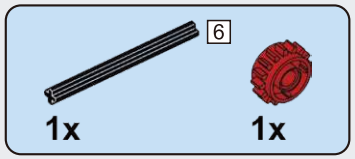

A88

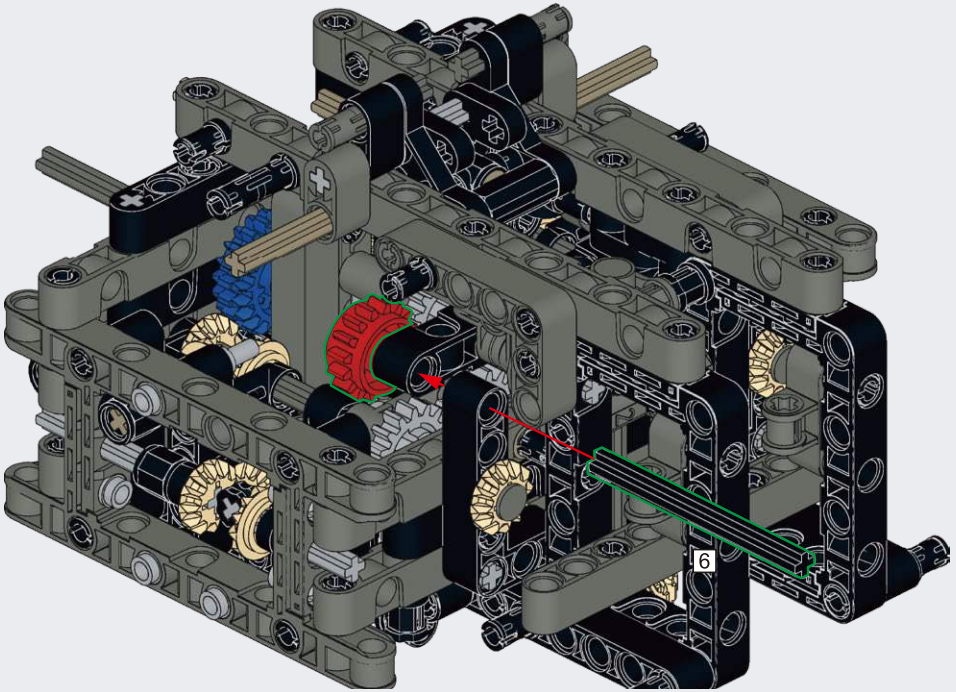

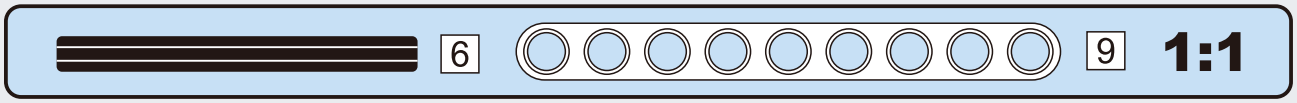

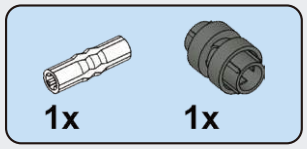

A89

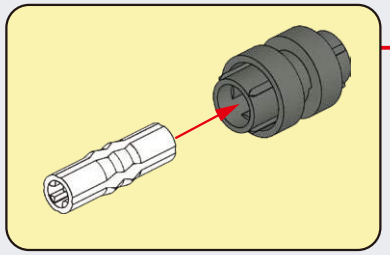

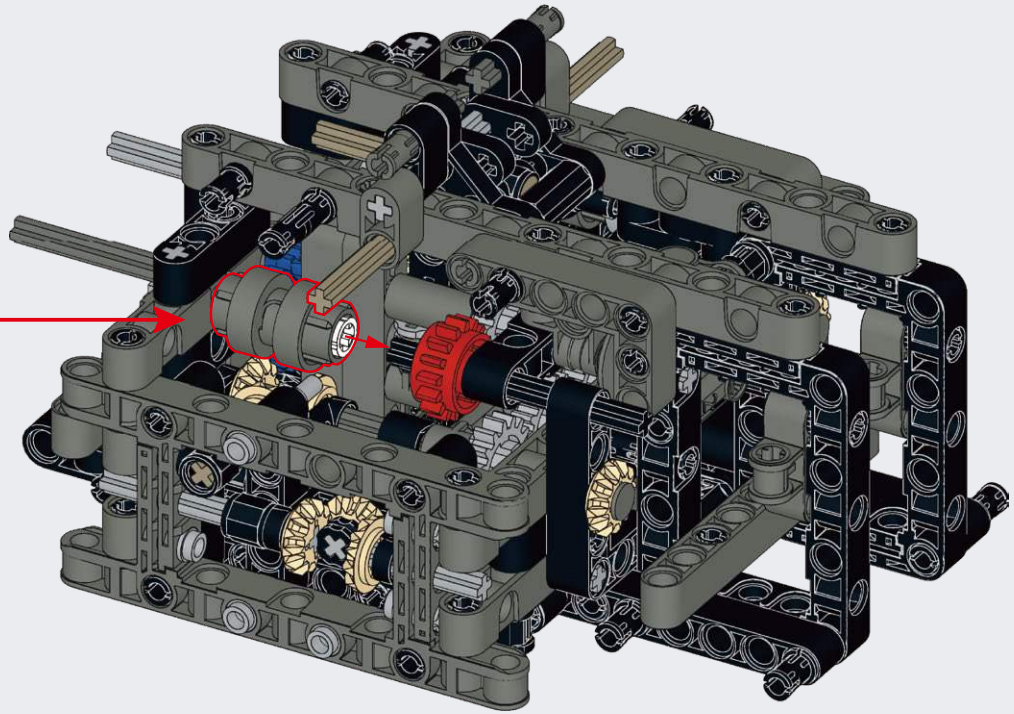

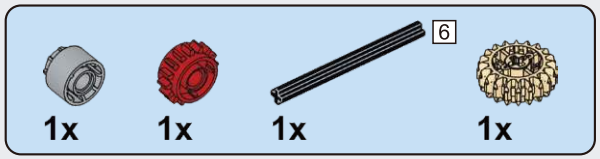

A90

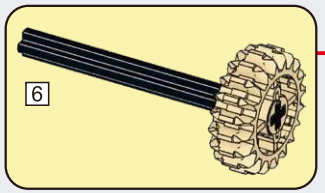

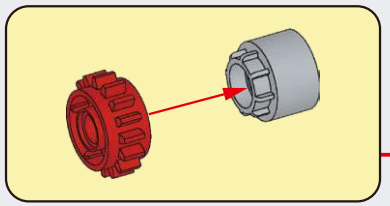

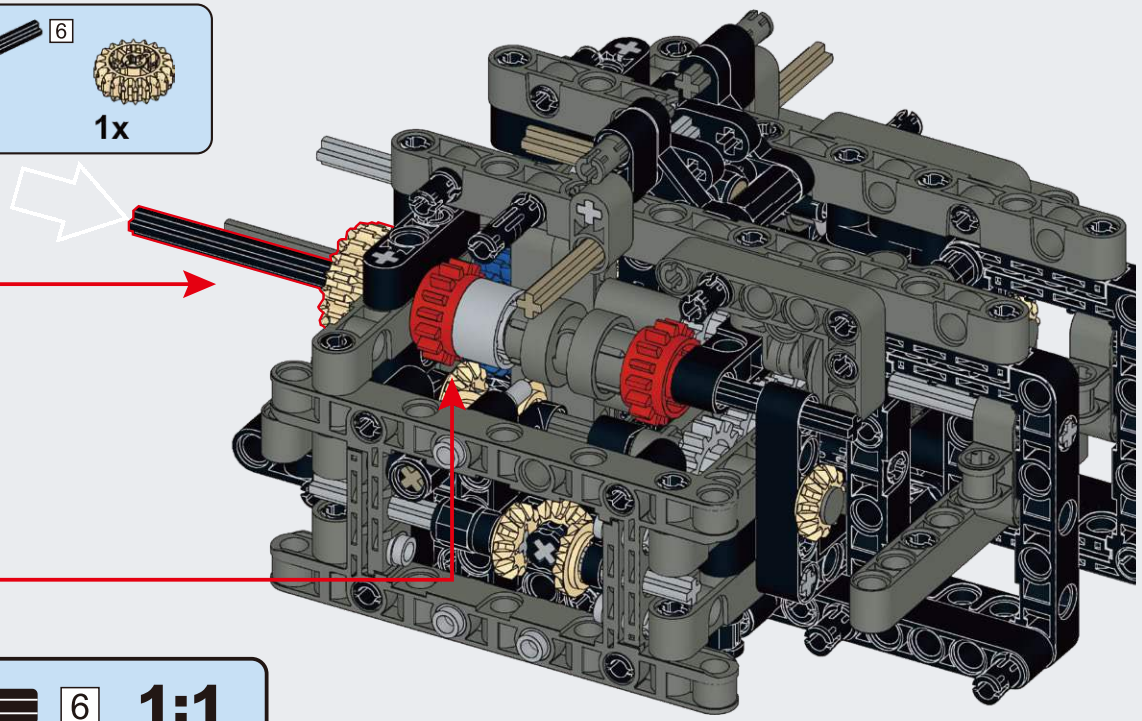

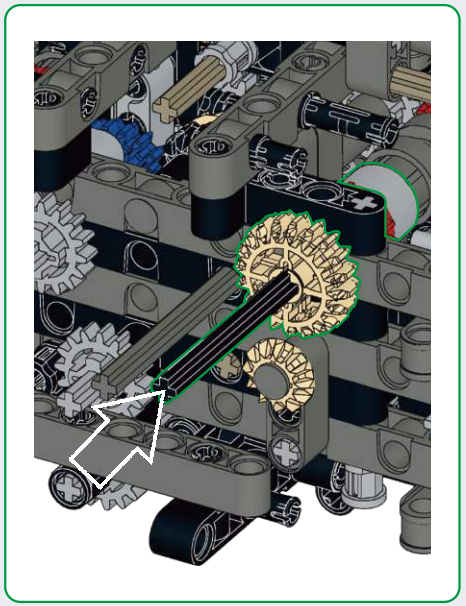

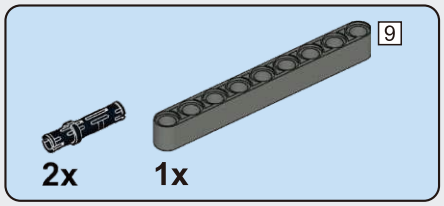

A91

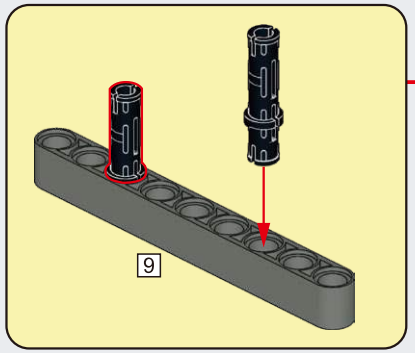

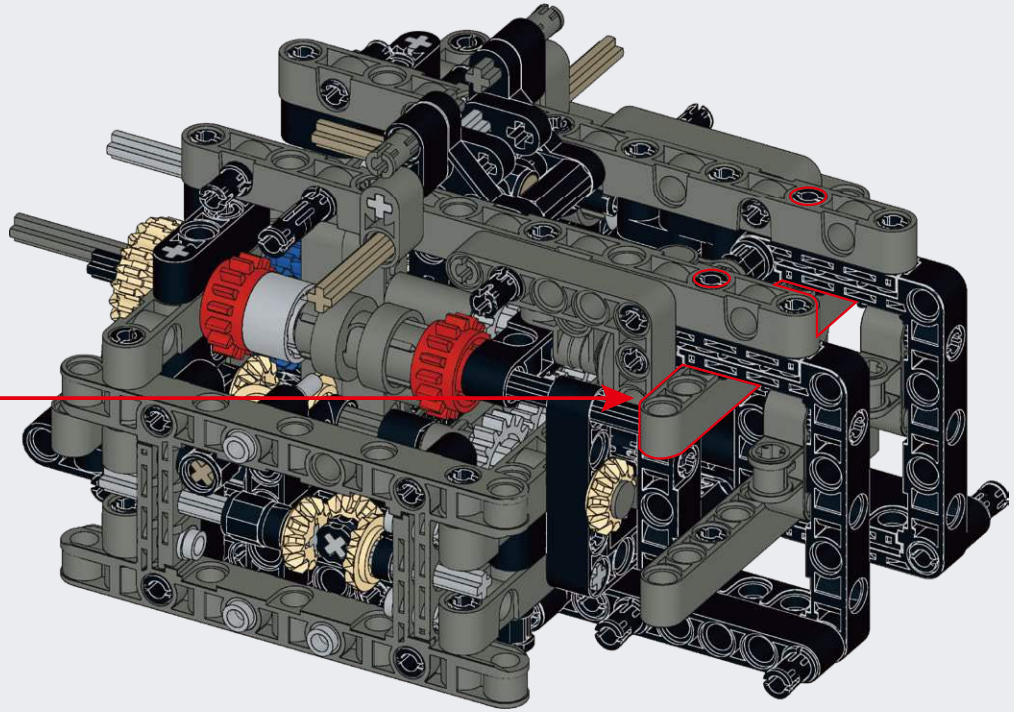

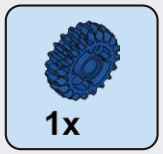

A92

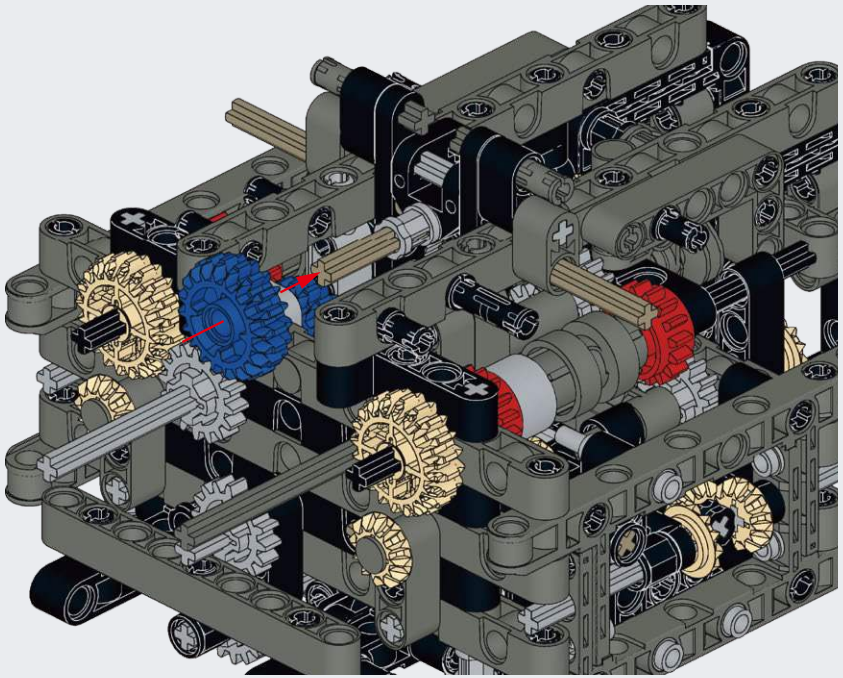

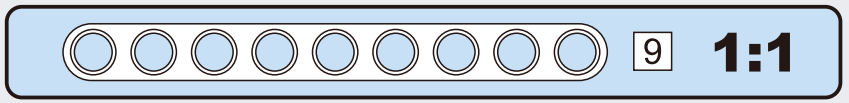

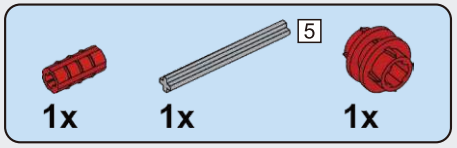

A93

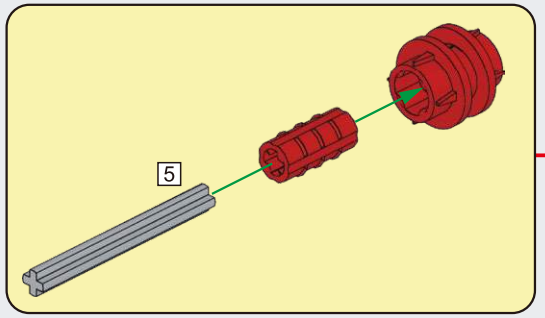

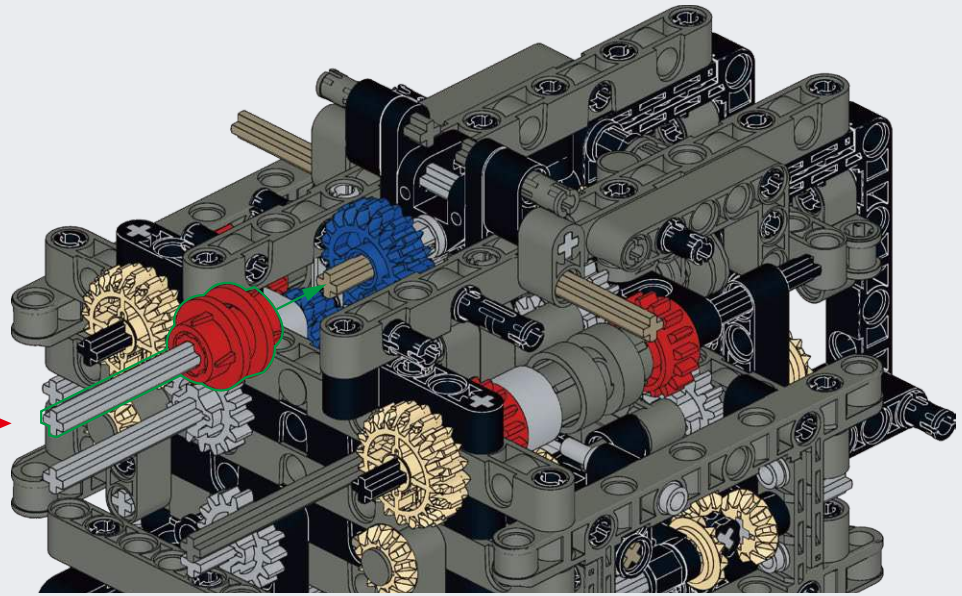

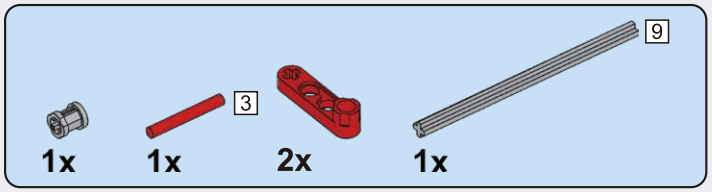

A94

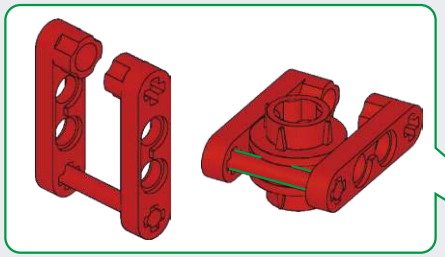

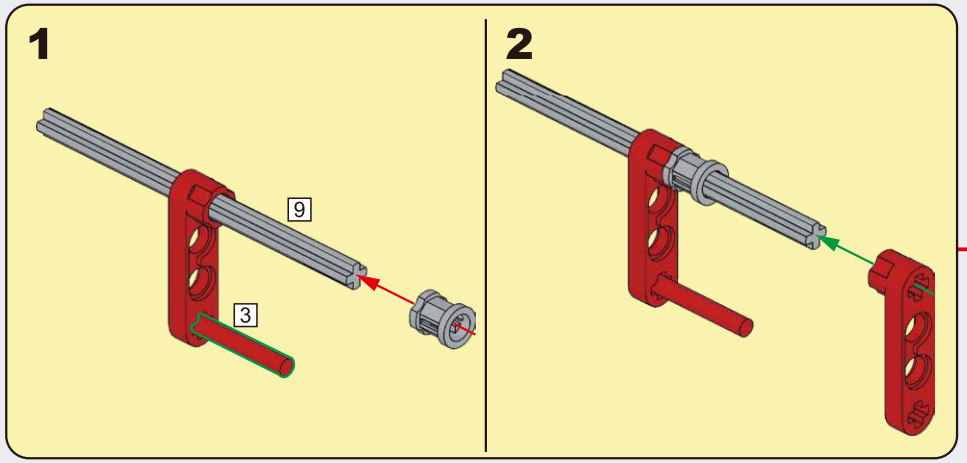

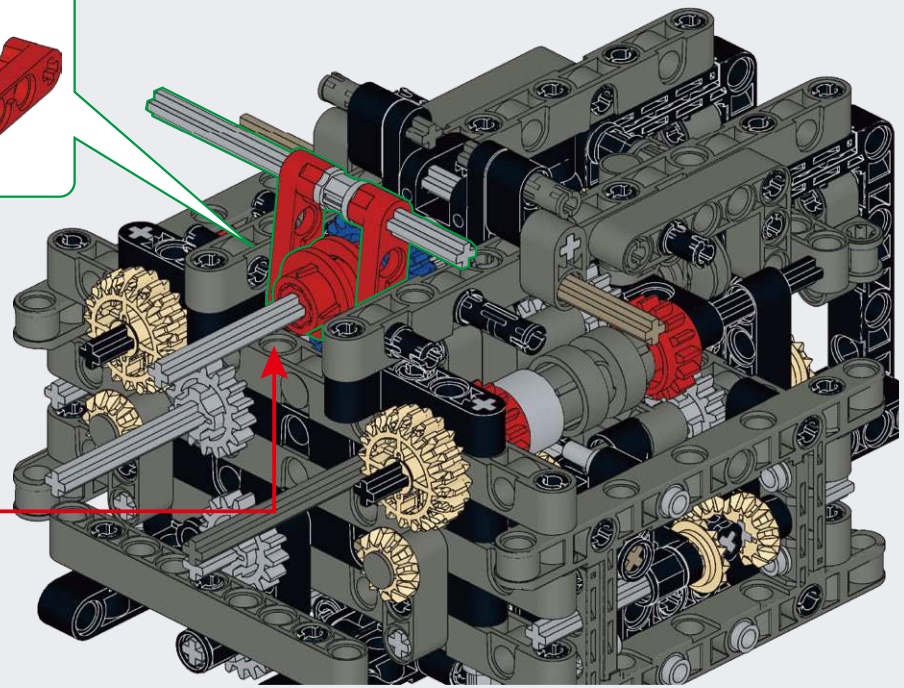

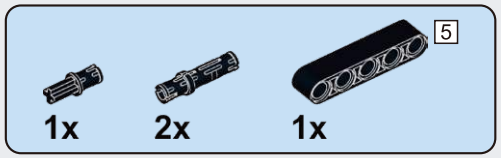

A95

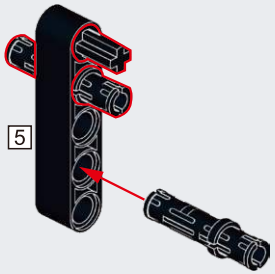

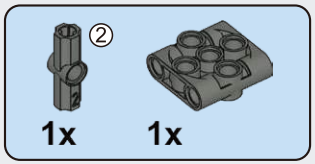

A96

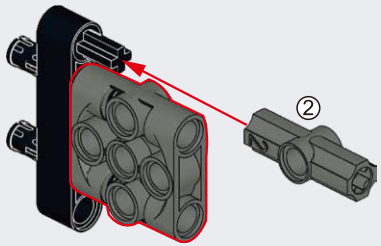

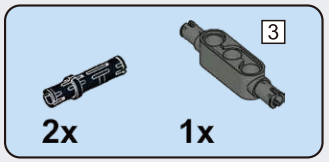

A97

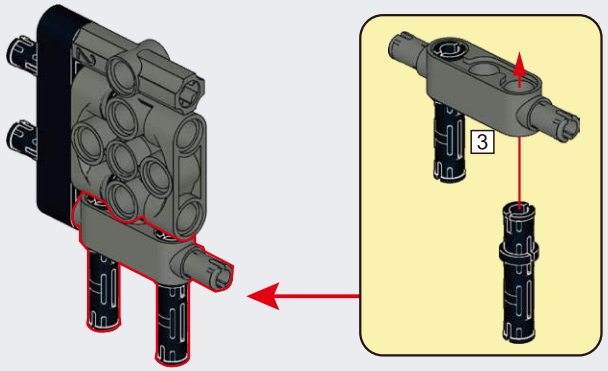

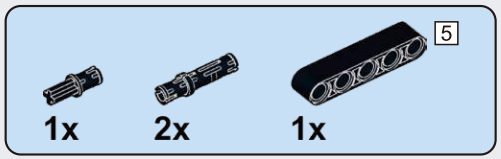

A98

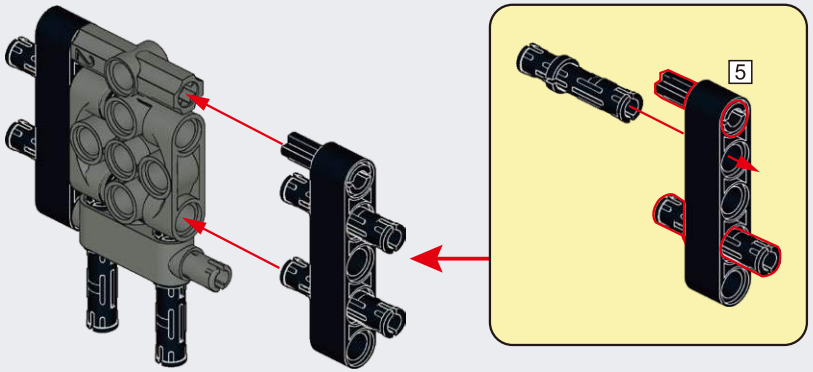

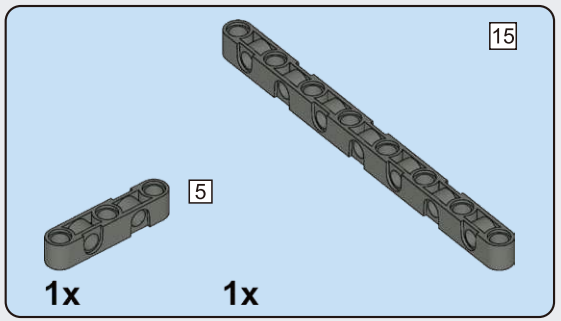

A99

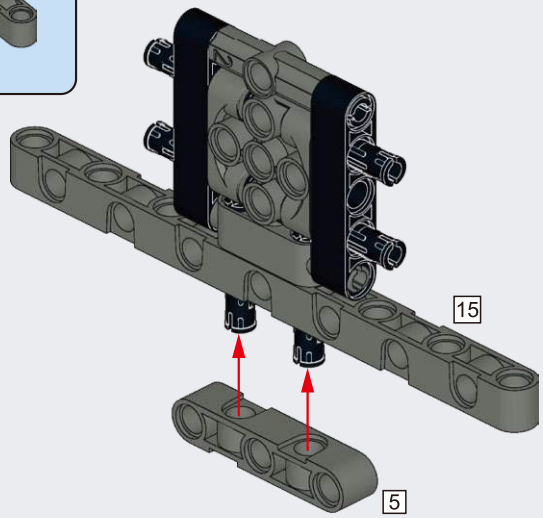

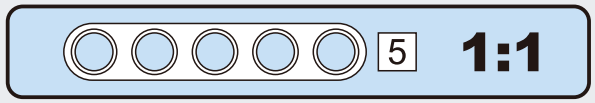

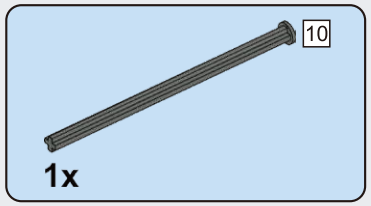

A100

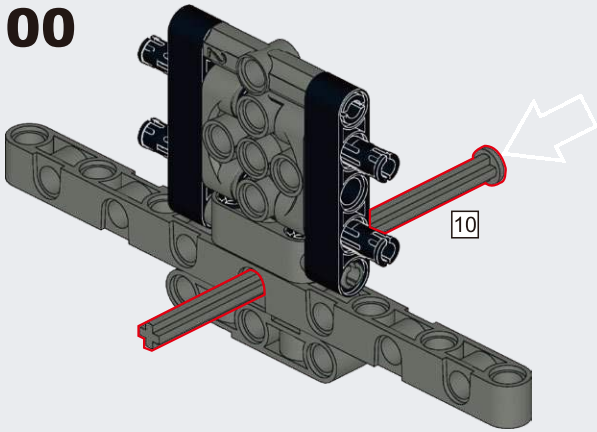

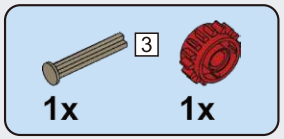

A101

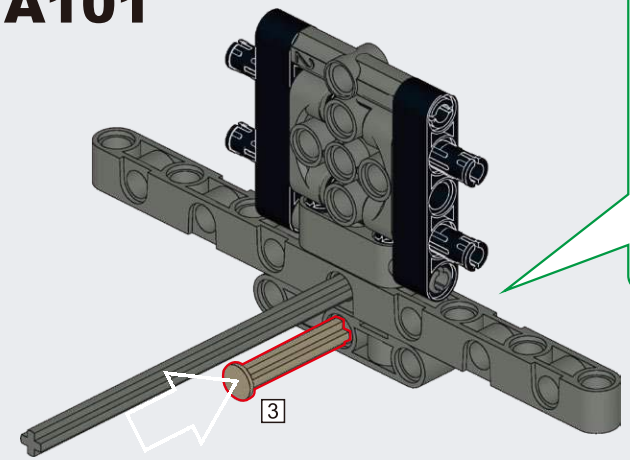

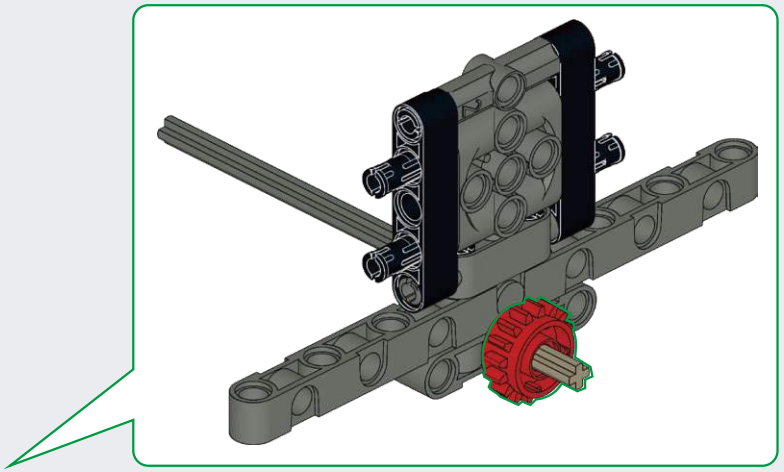

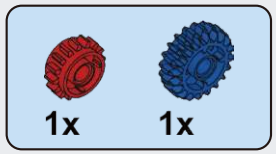

A102

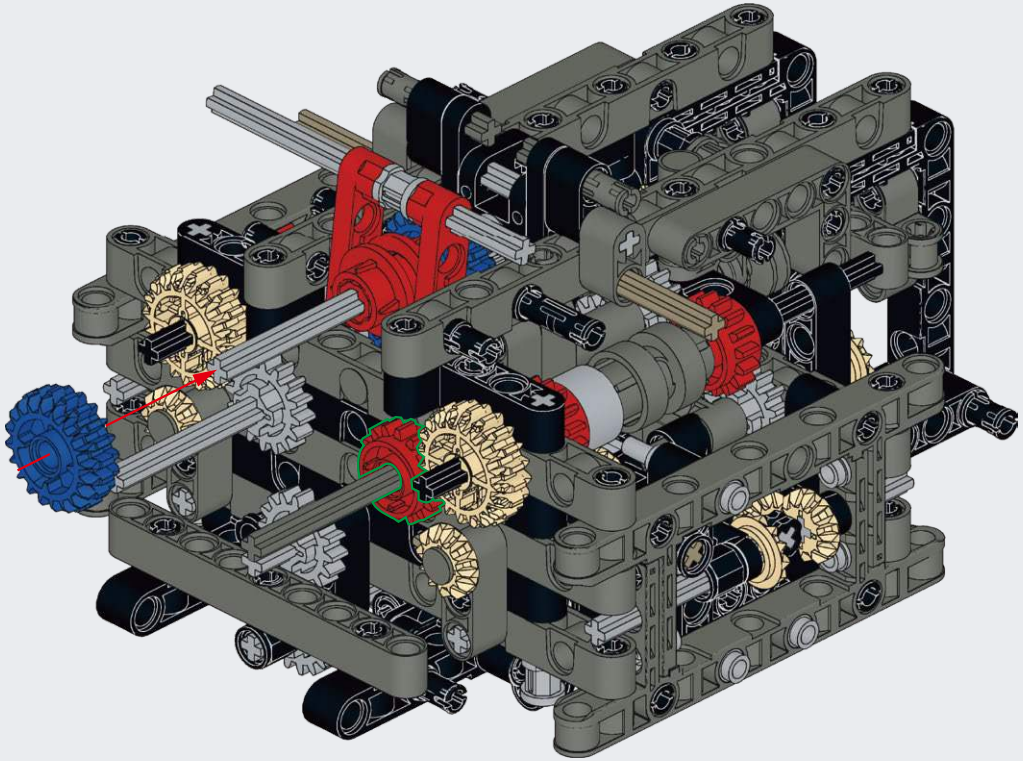

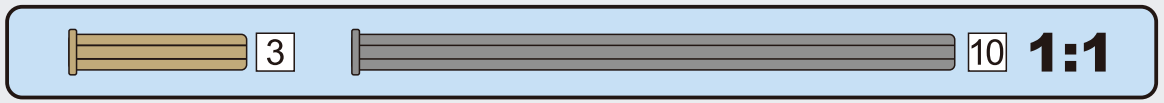

A103

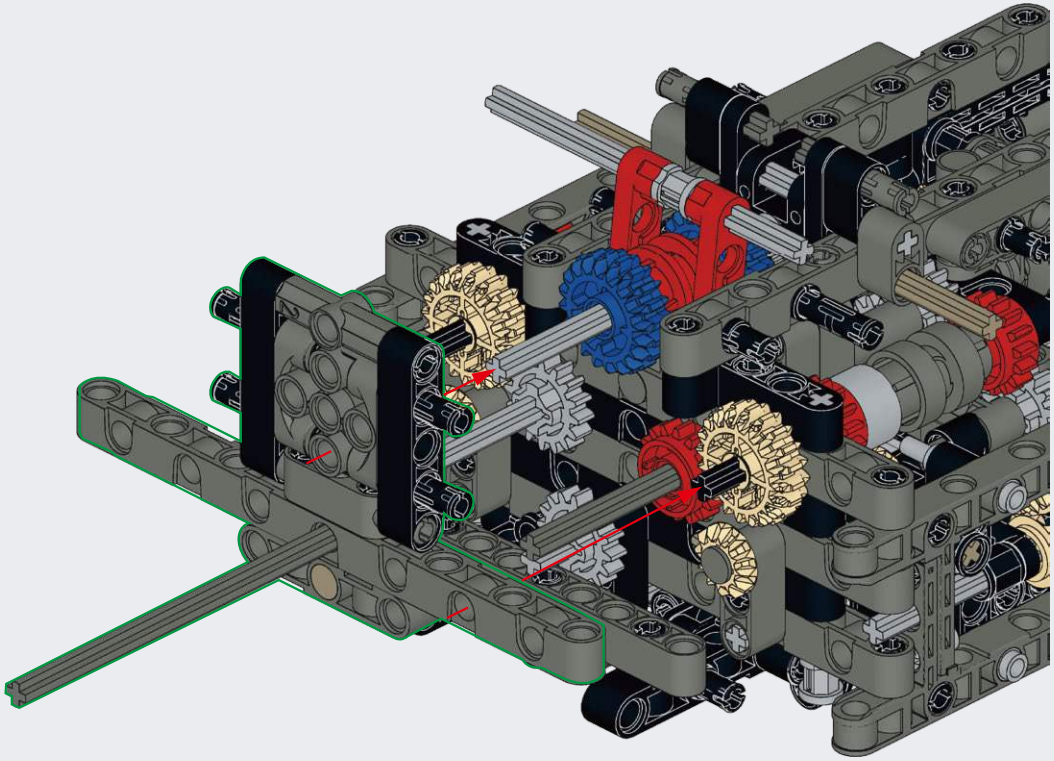

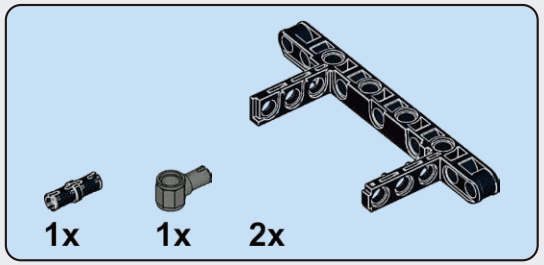

A104

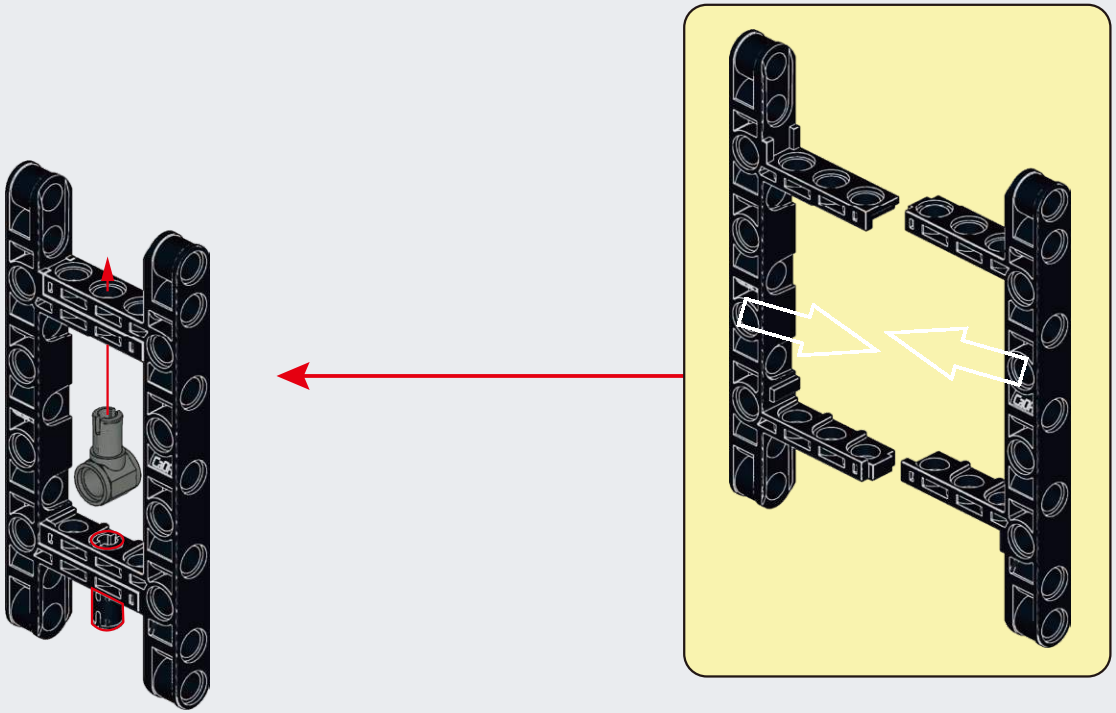

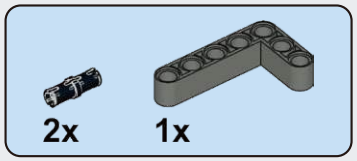

A105

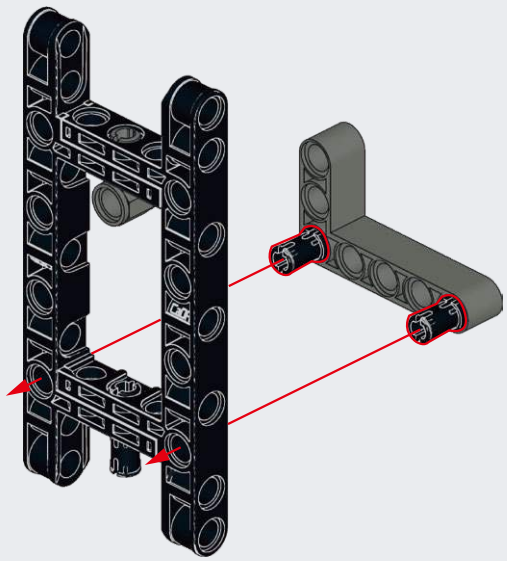

A106

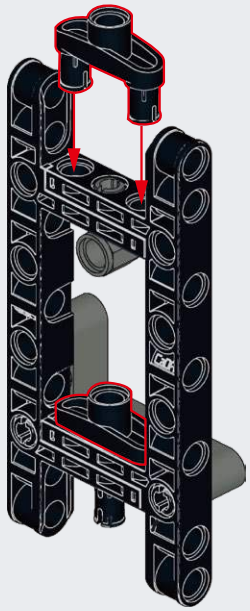

A107

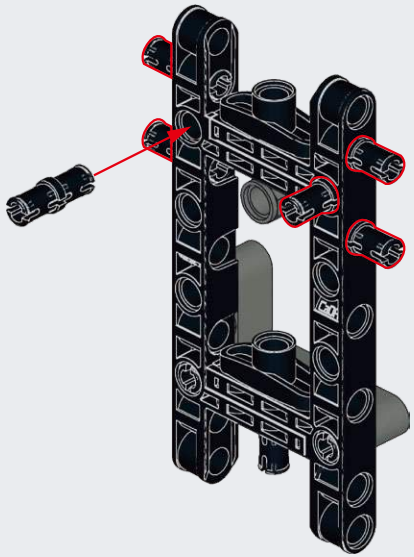

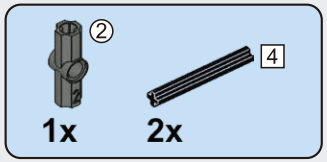

A108

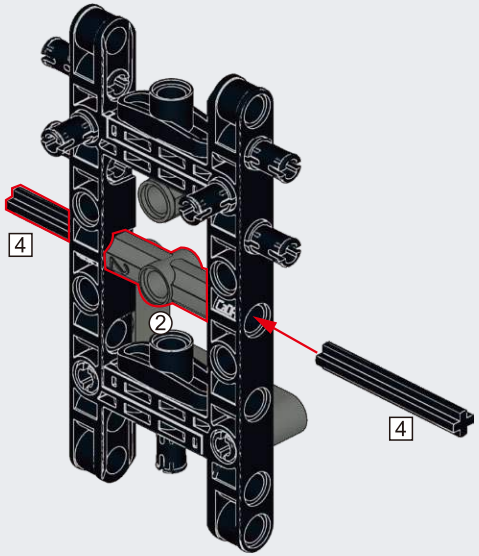

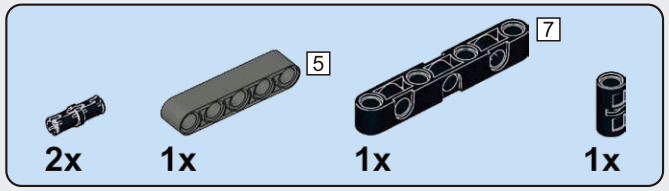

A109

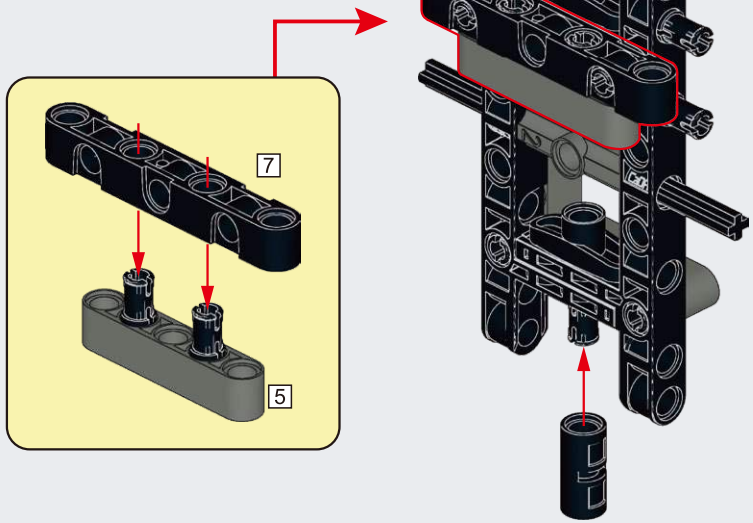

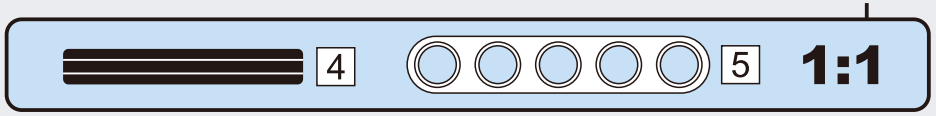

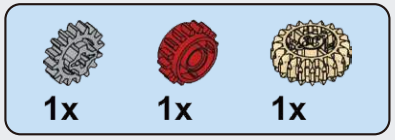

A110

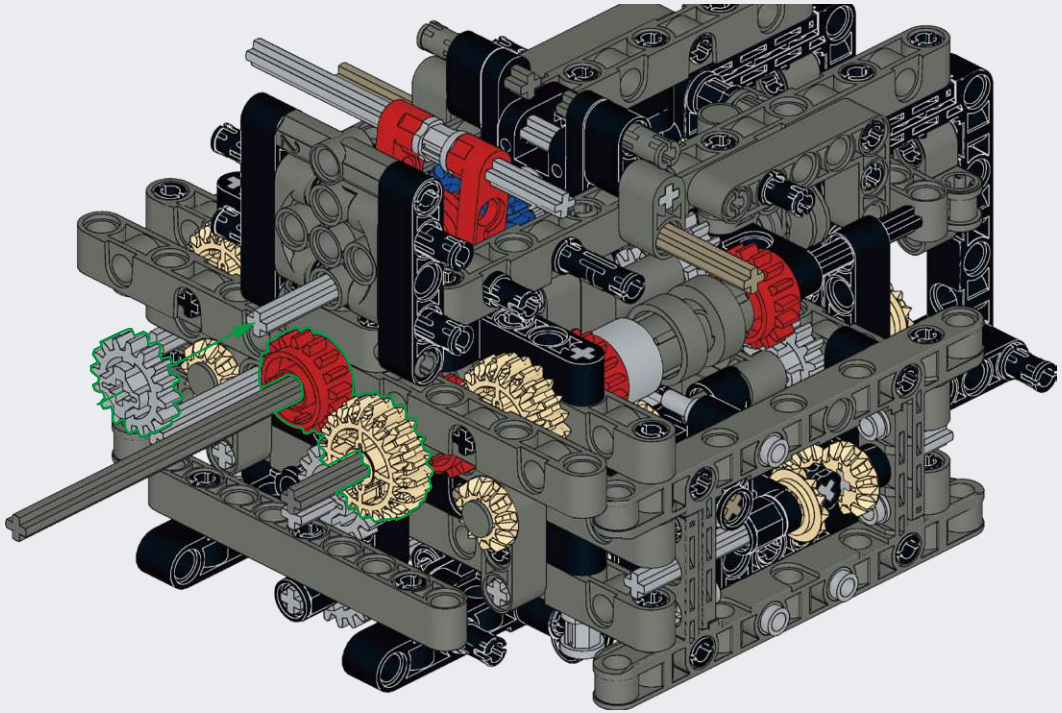

A111

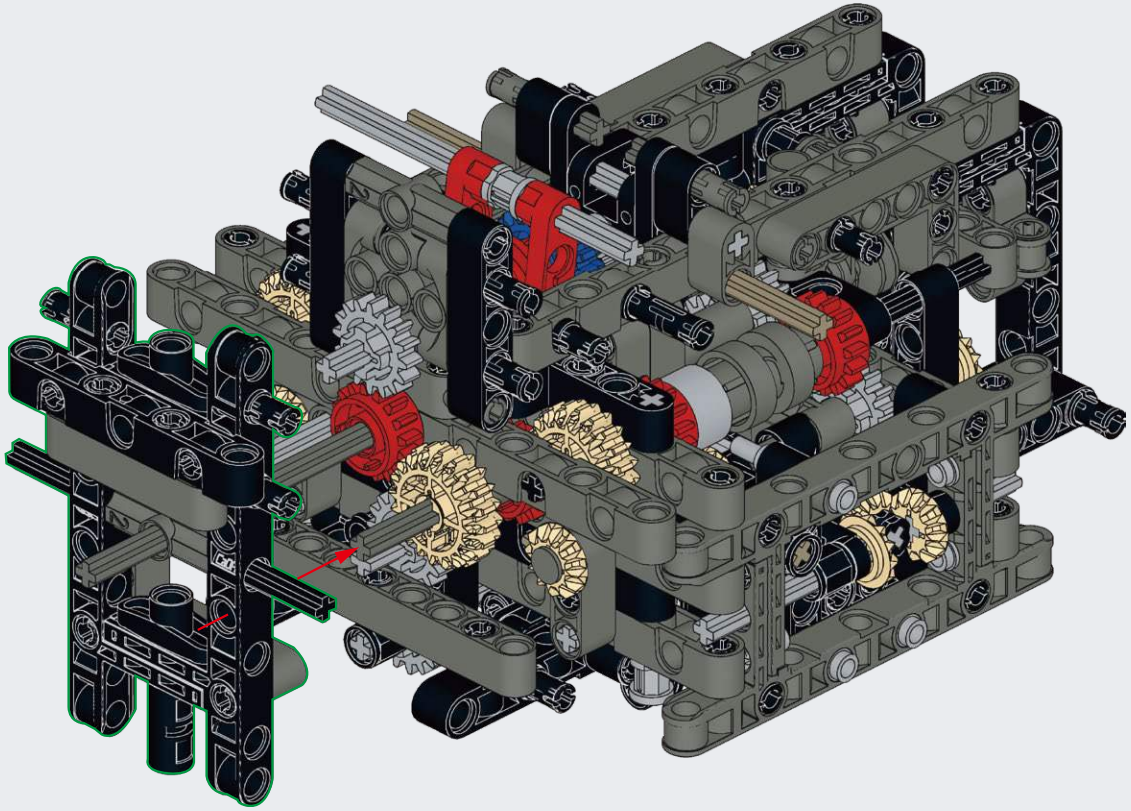

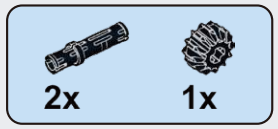

A112

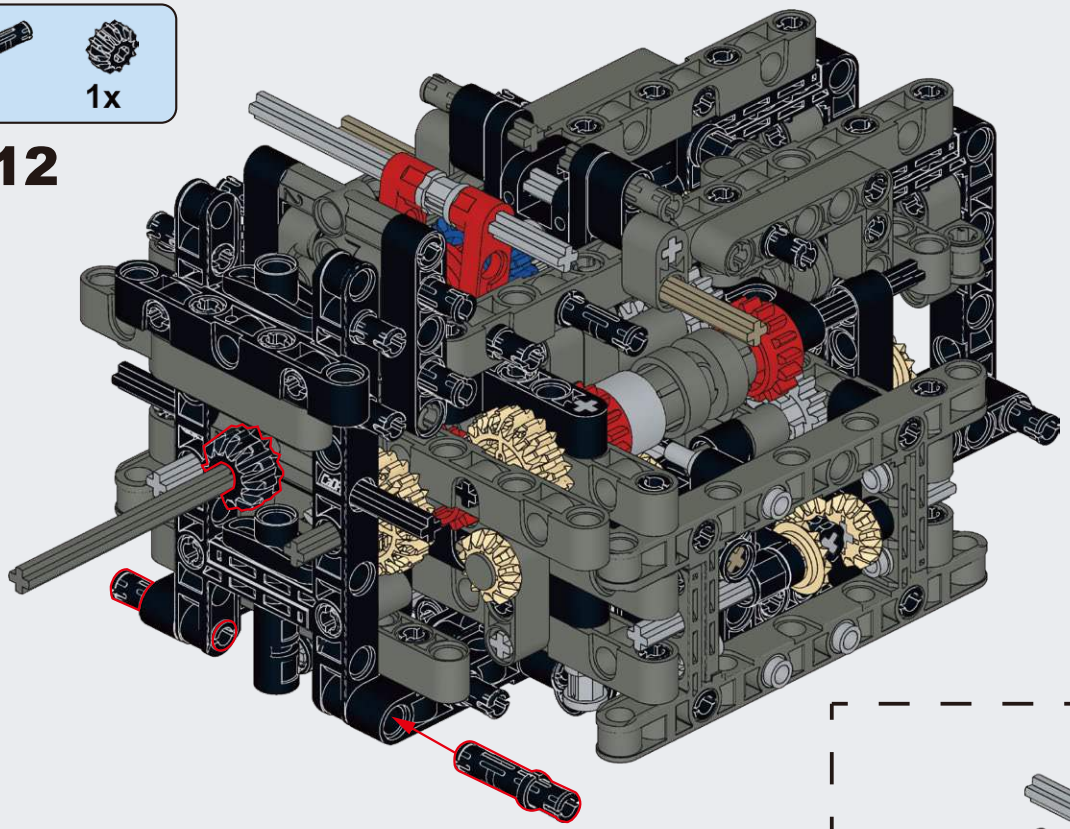

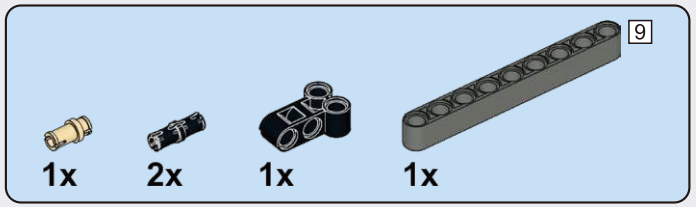

A113

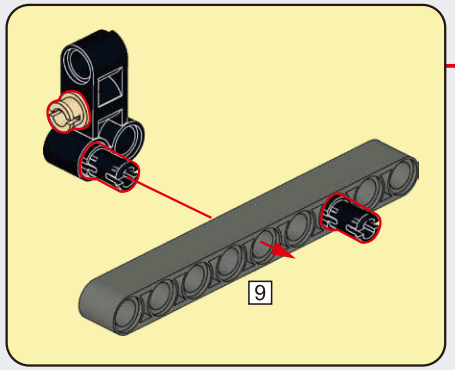

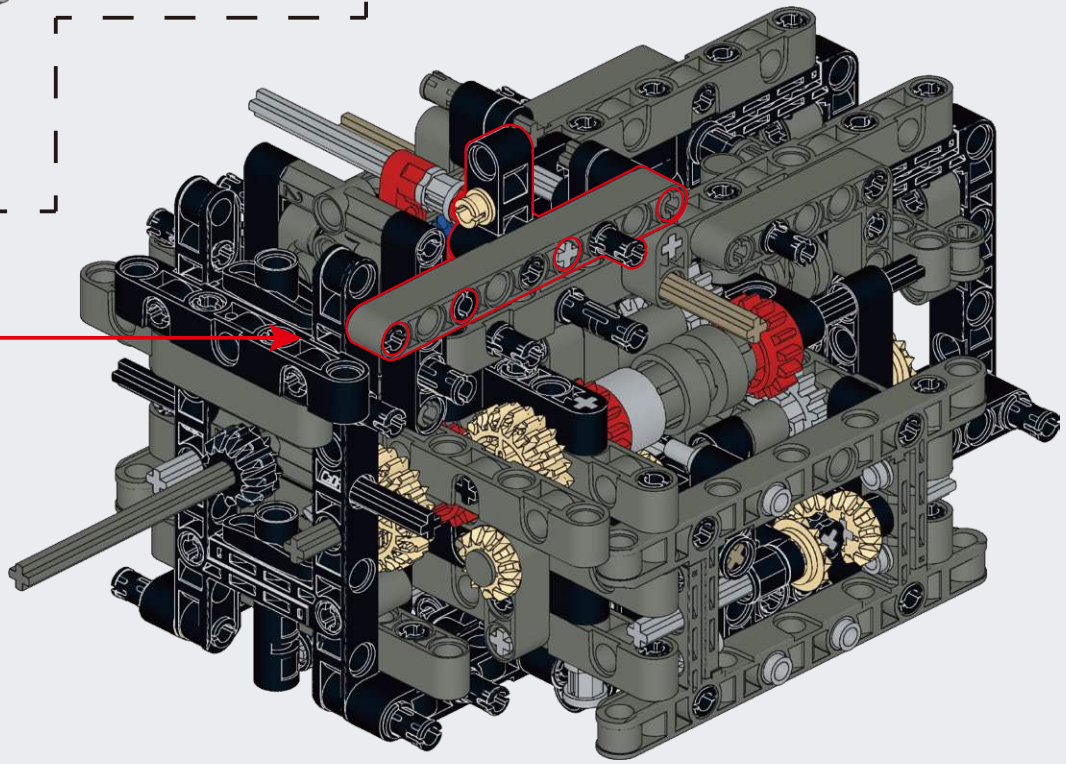

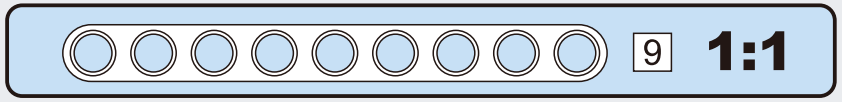

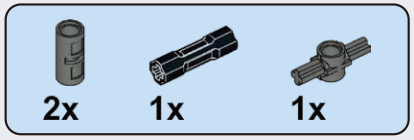

A114

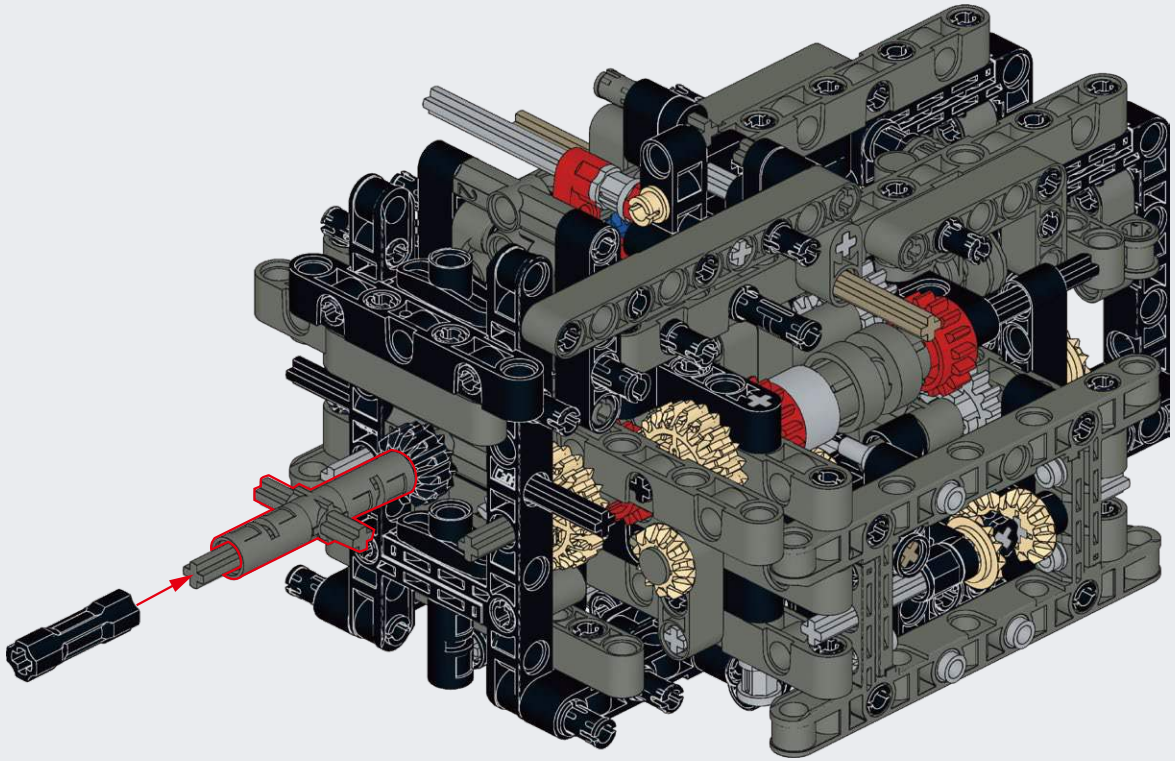

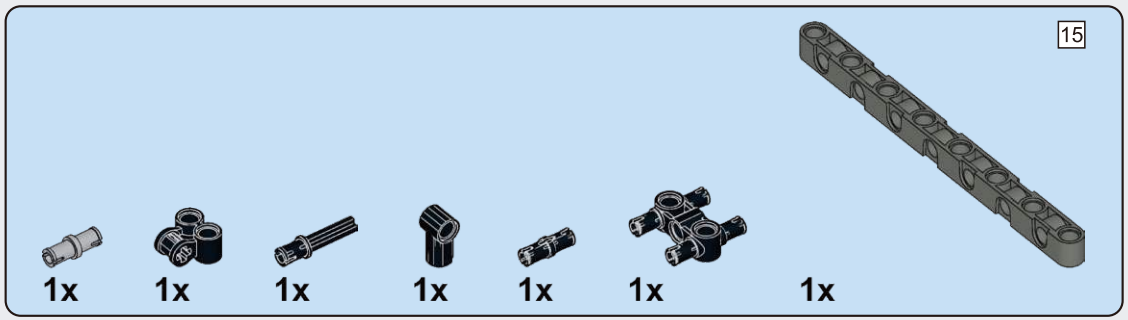

A115

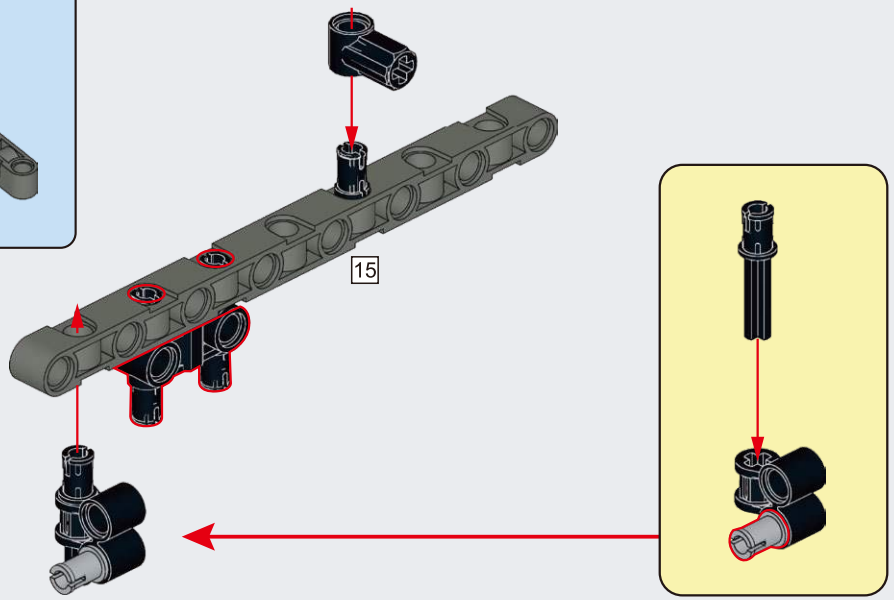

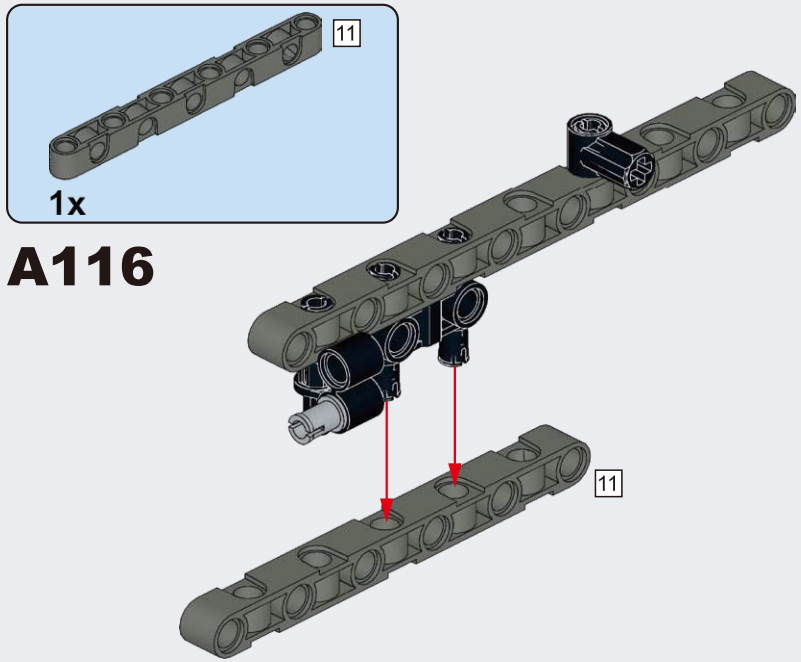
11
1x
A116
11

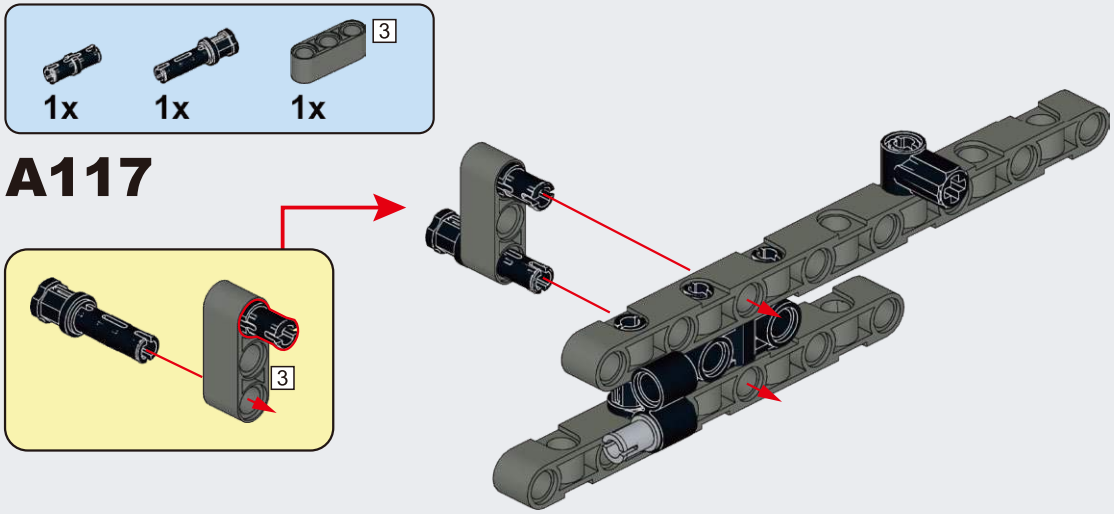
3
1x
1x
1x
A117
3

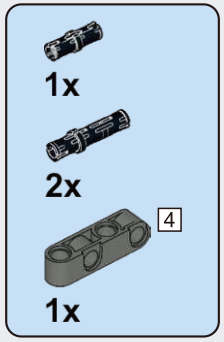
1x
2x
4
1x
A118
4

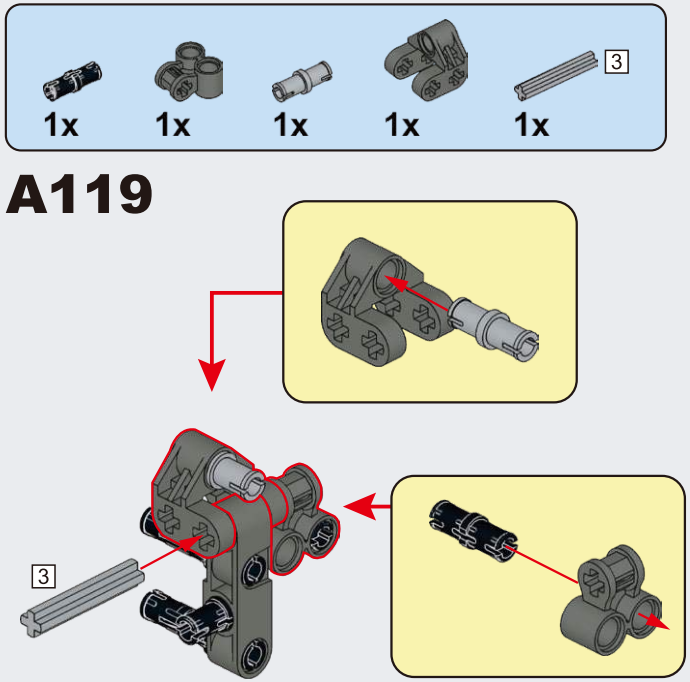
3
1x
1x
1x
1x
1x
A119
3

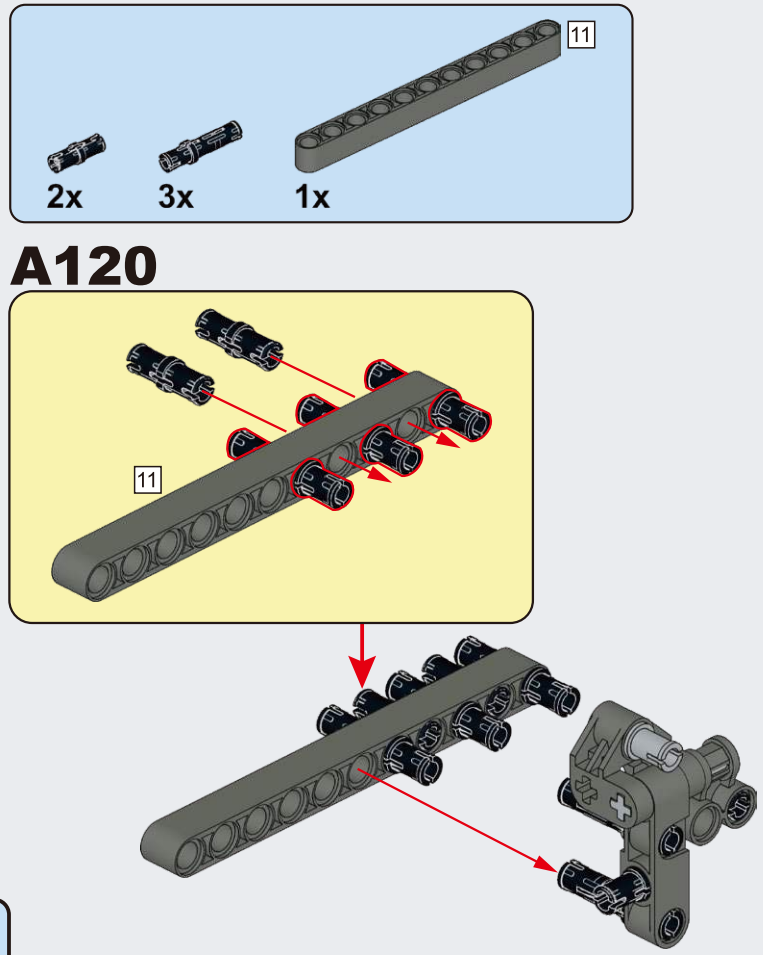
11
2x
3x
1x
A120
11

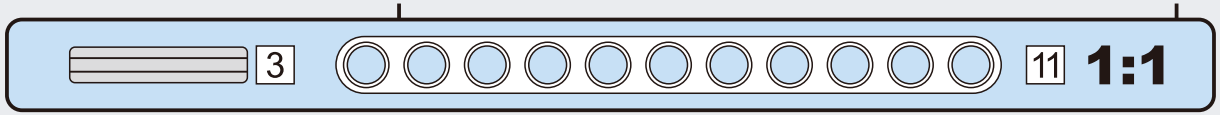
3
11
1:1

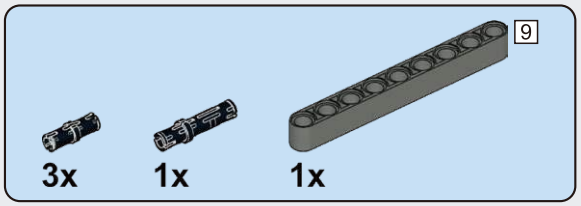

A121

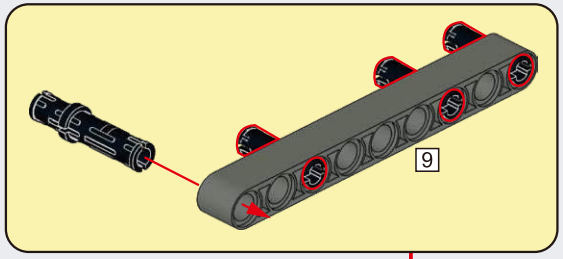

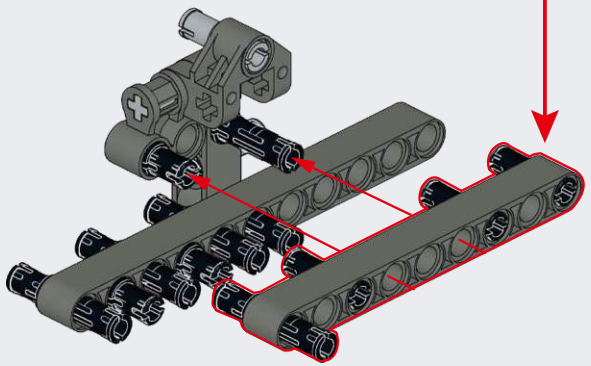

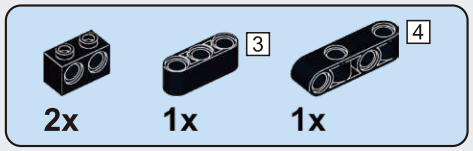

A122

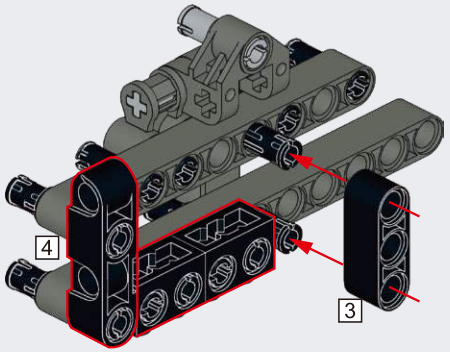

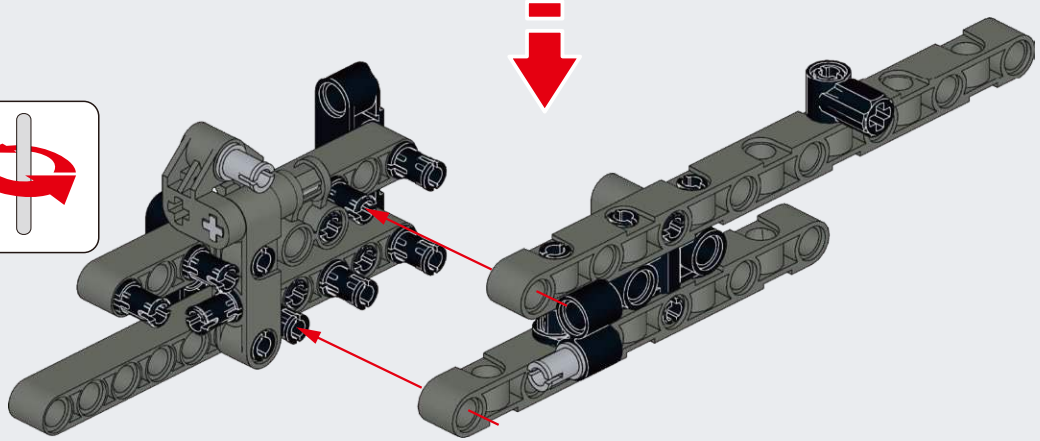

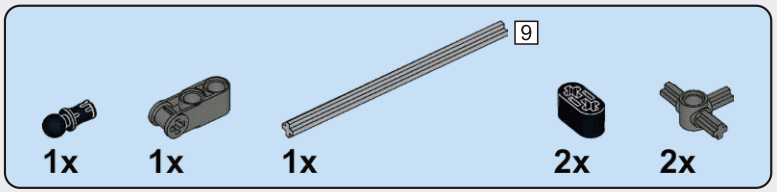

A123

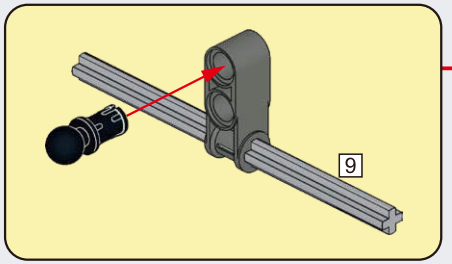

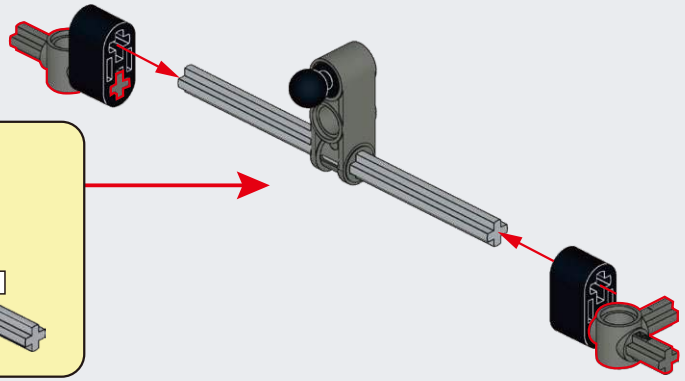

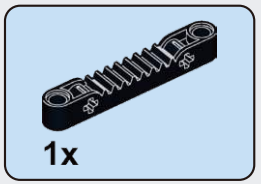

A124

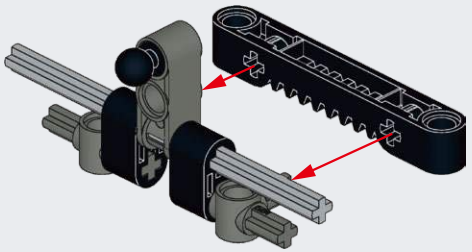

A125

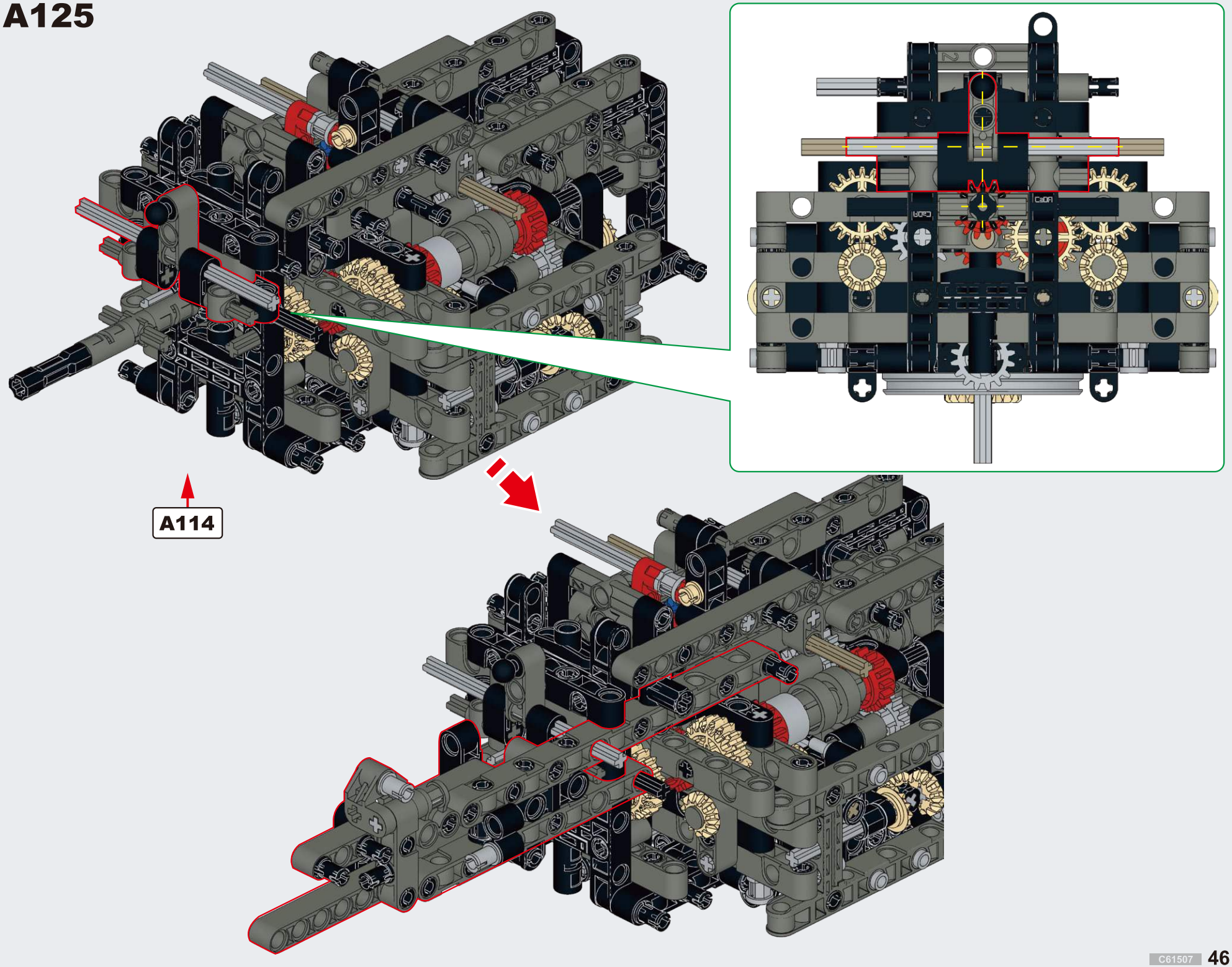

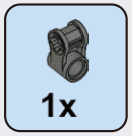

A126

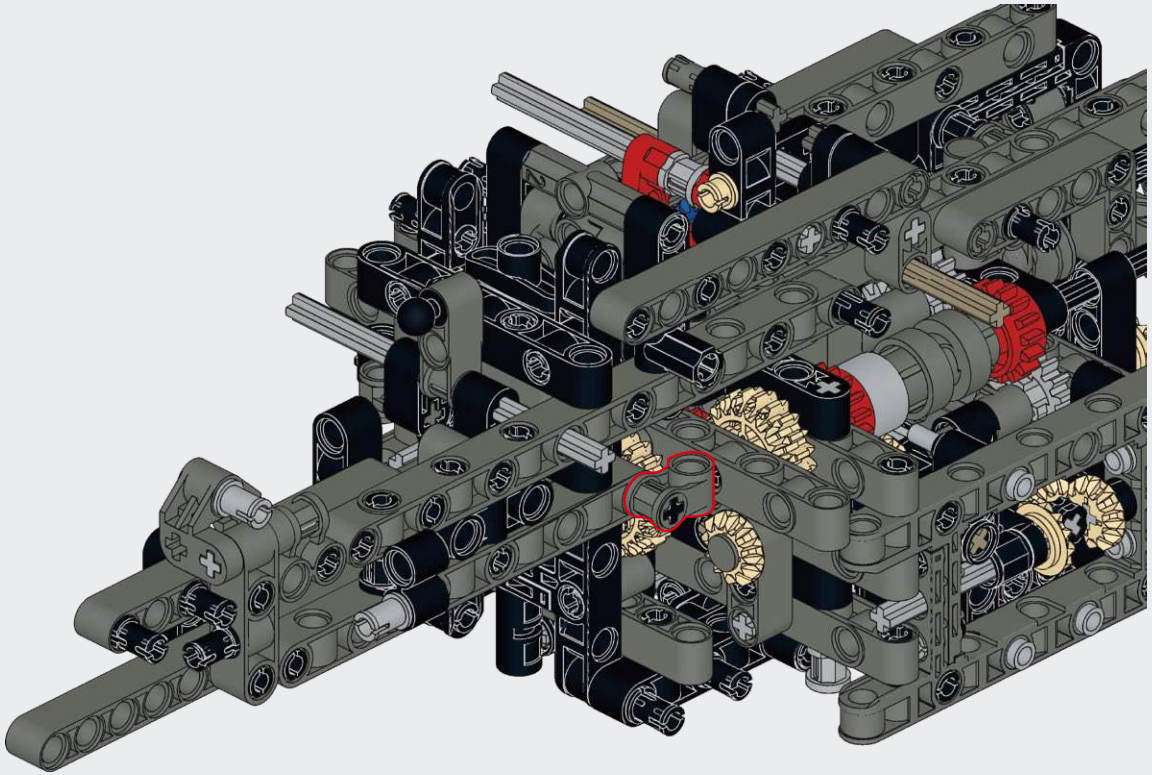

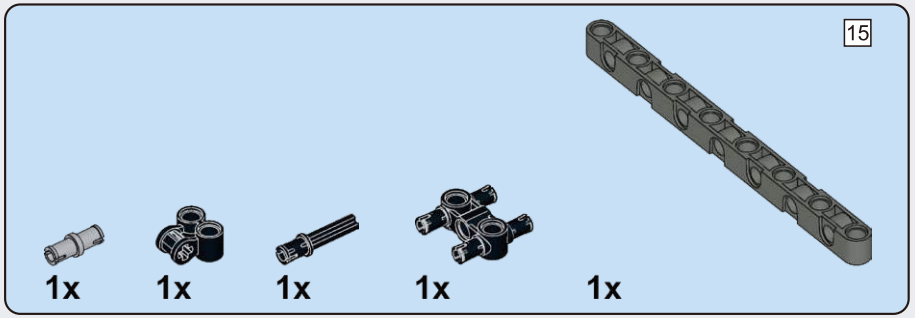

A127

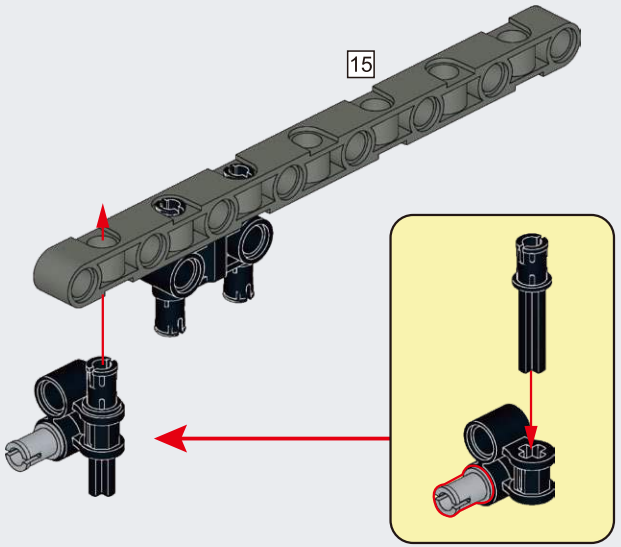

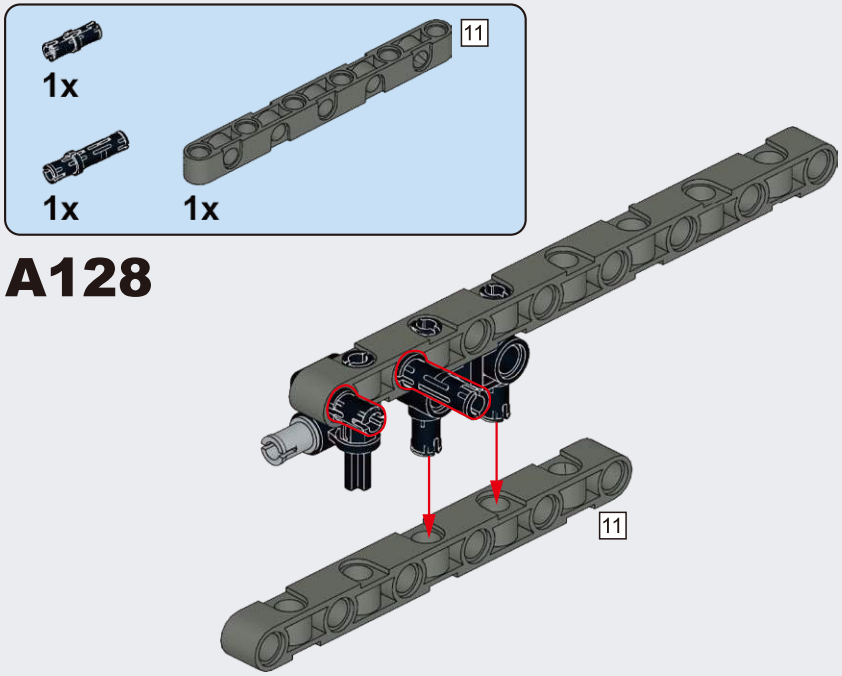
1x
1x
1x
11
A128
11

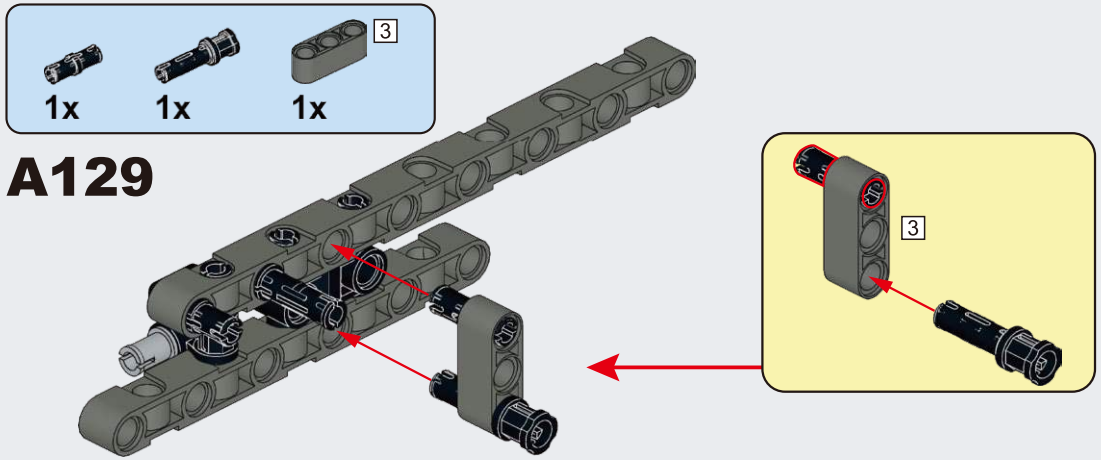
1x
1x
1x
3
A129
3

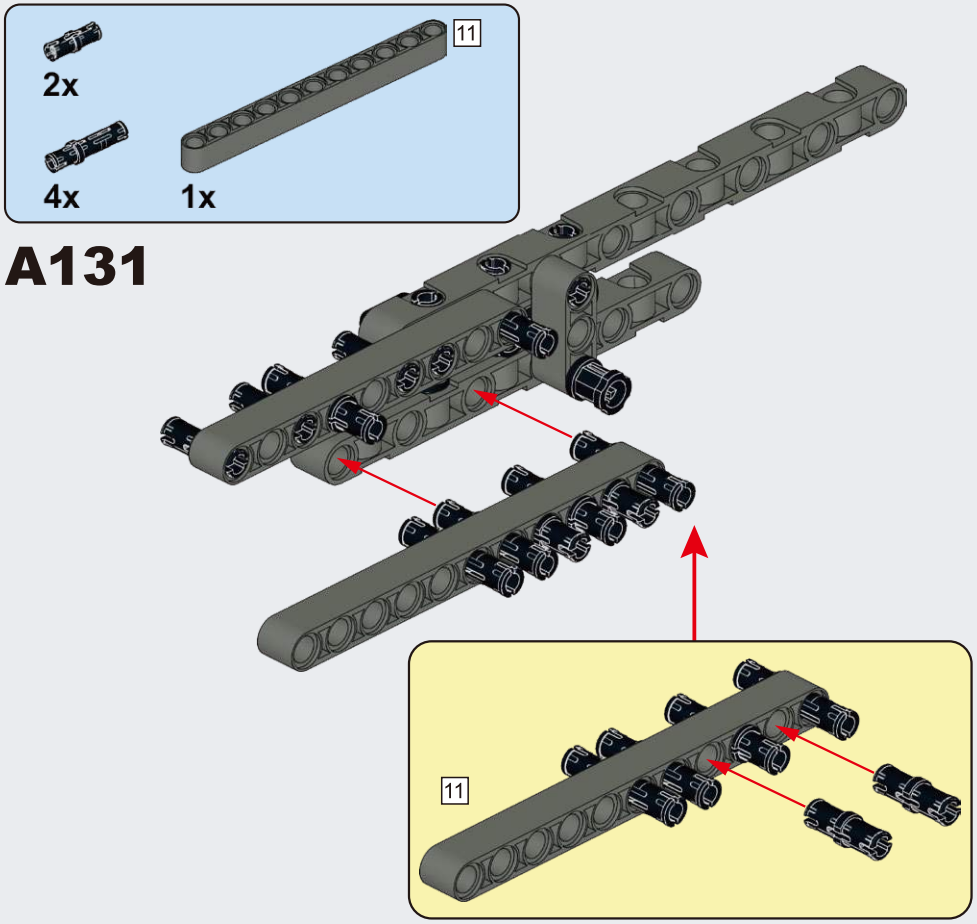
2x
4x
1x
11
A131
11

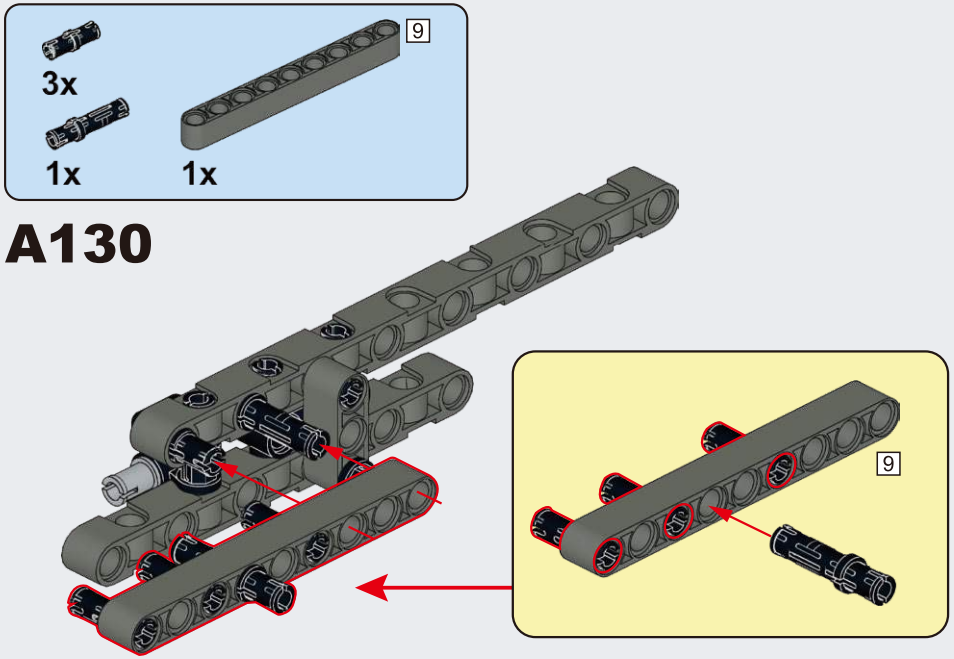
3x
1x
1x
9
A130
9

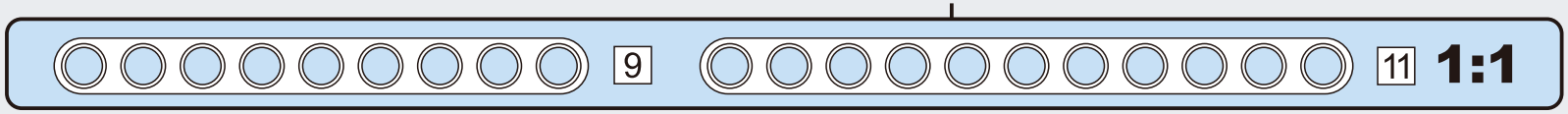
9
11
1:1

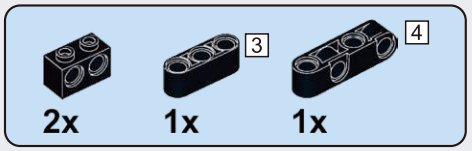

A132

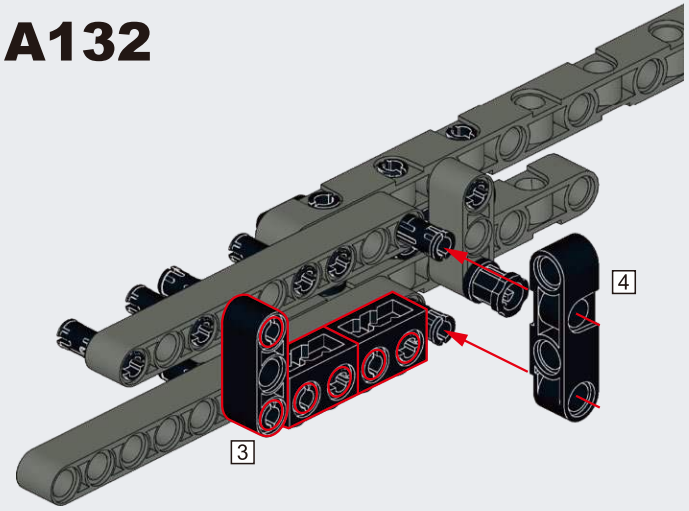

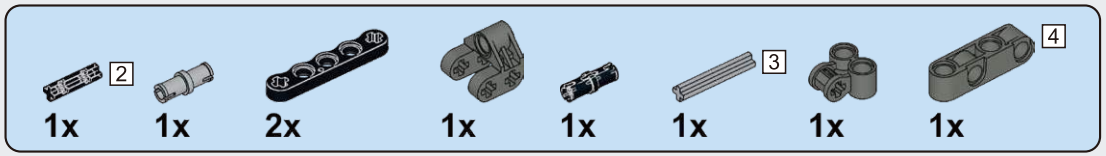

A133

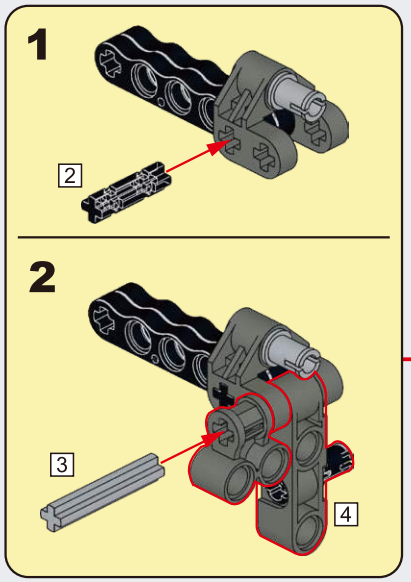

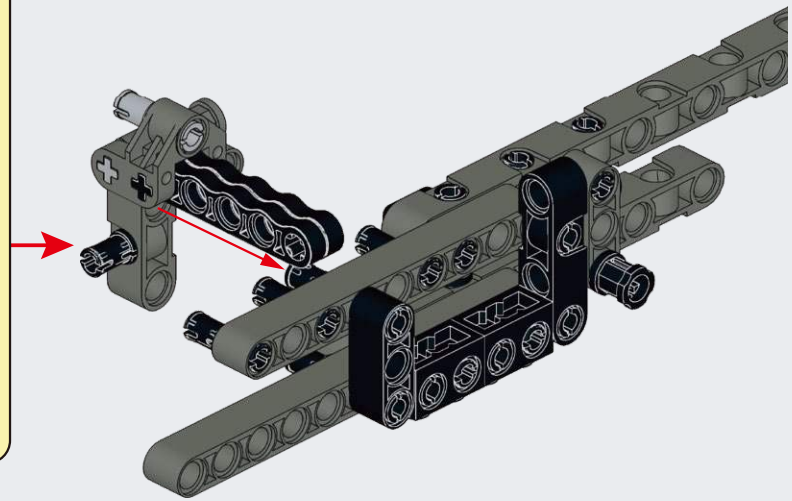

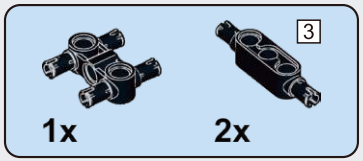

A134

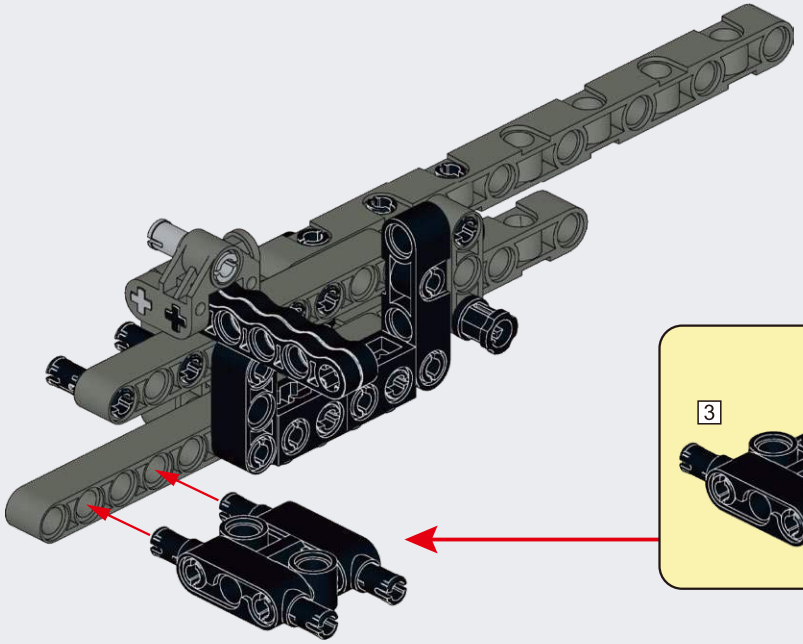

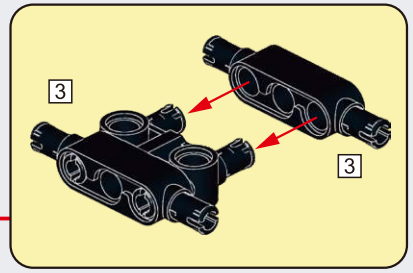

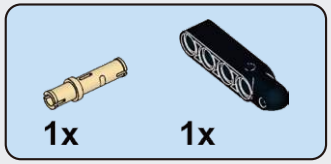

A135

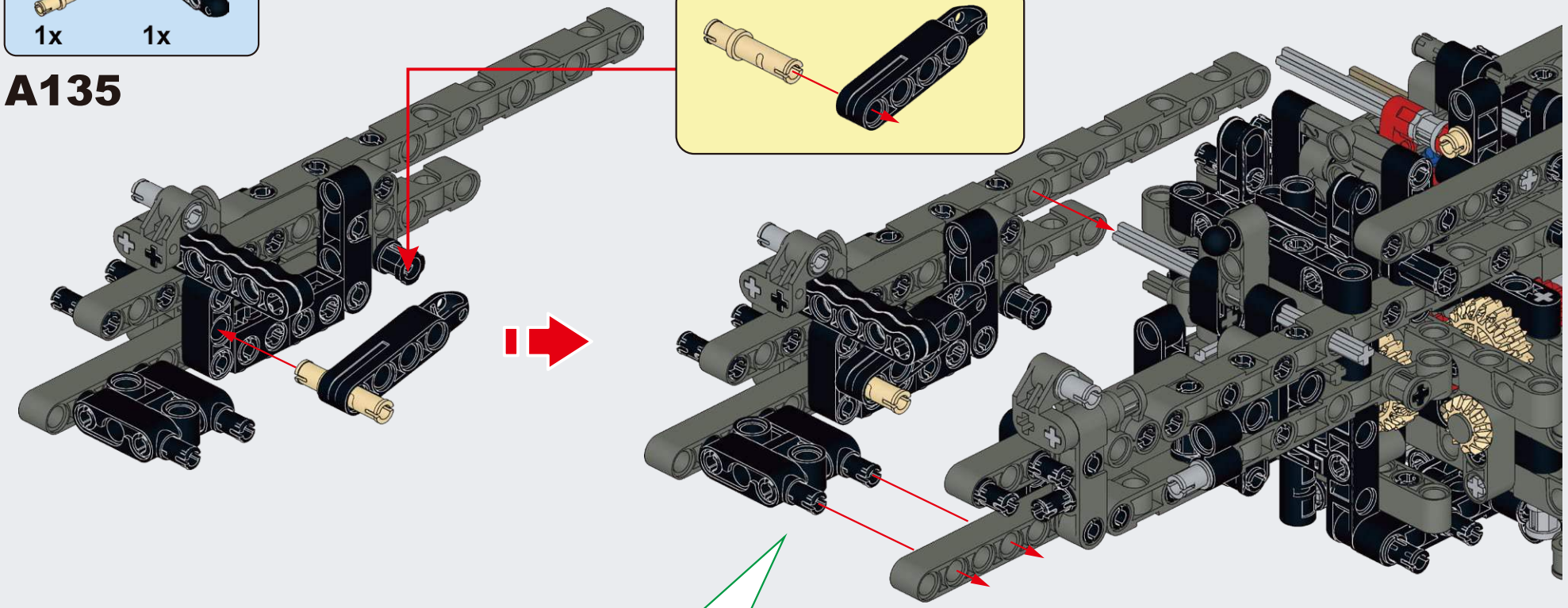

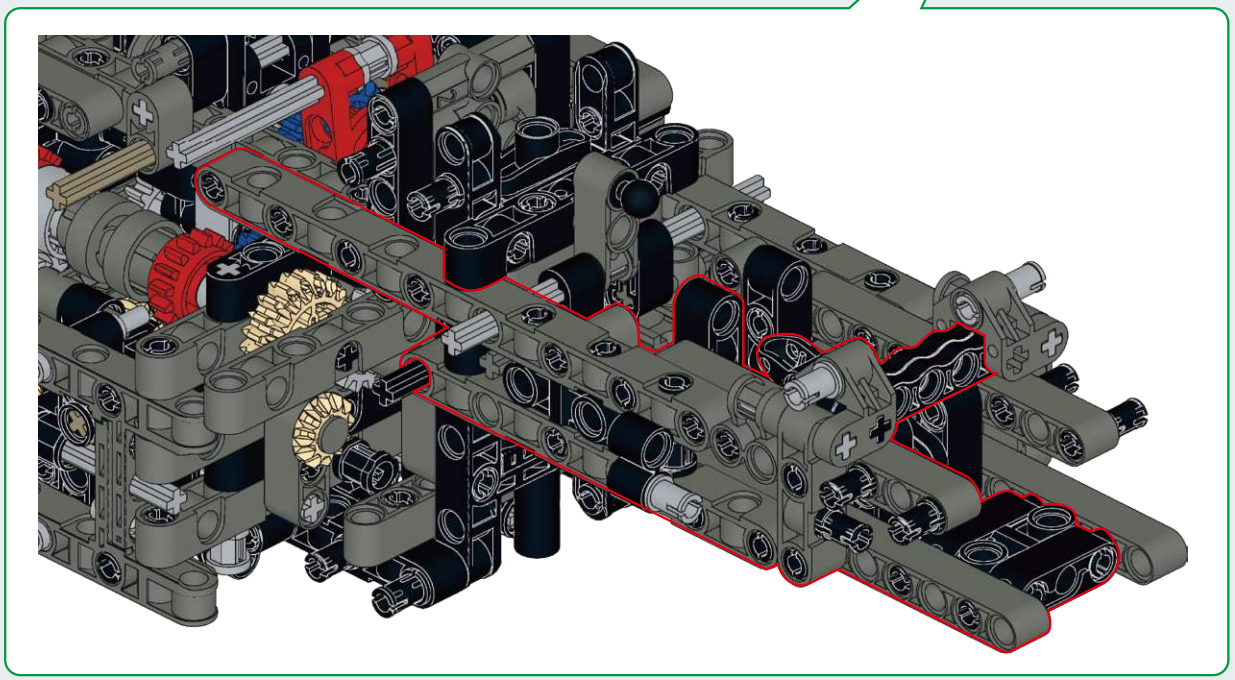

A136

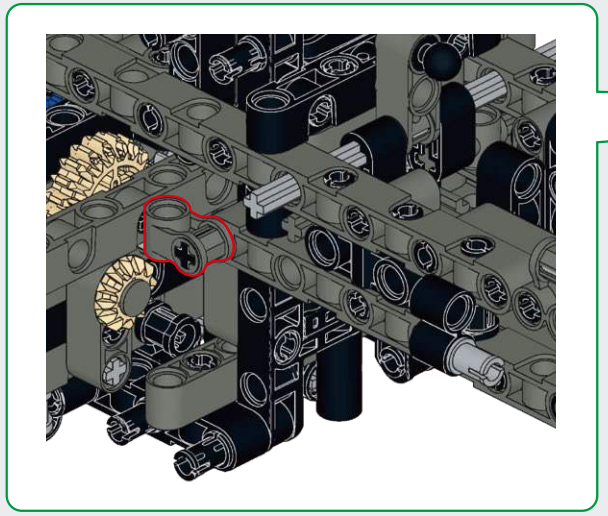

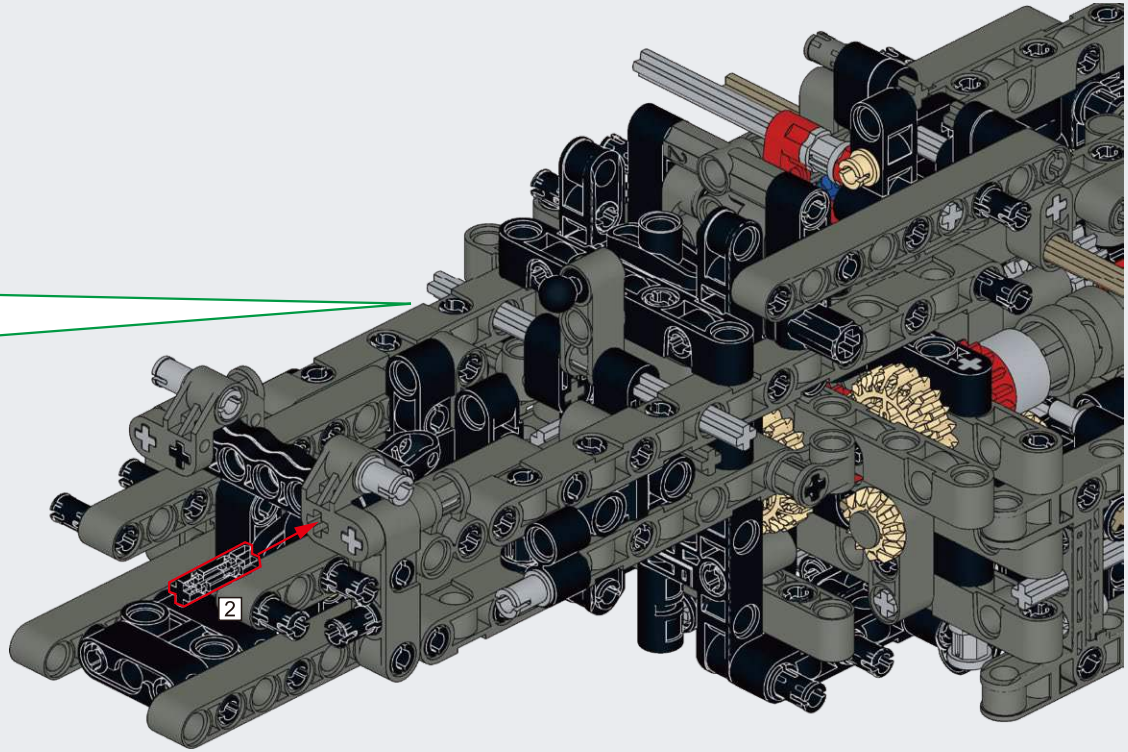

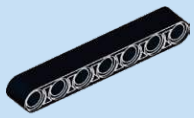

A137

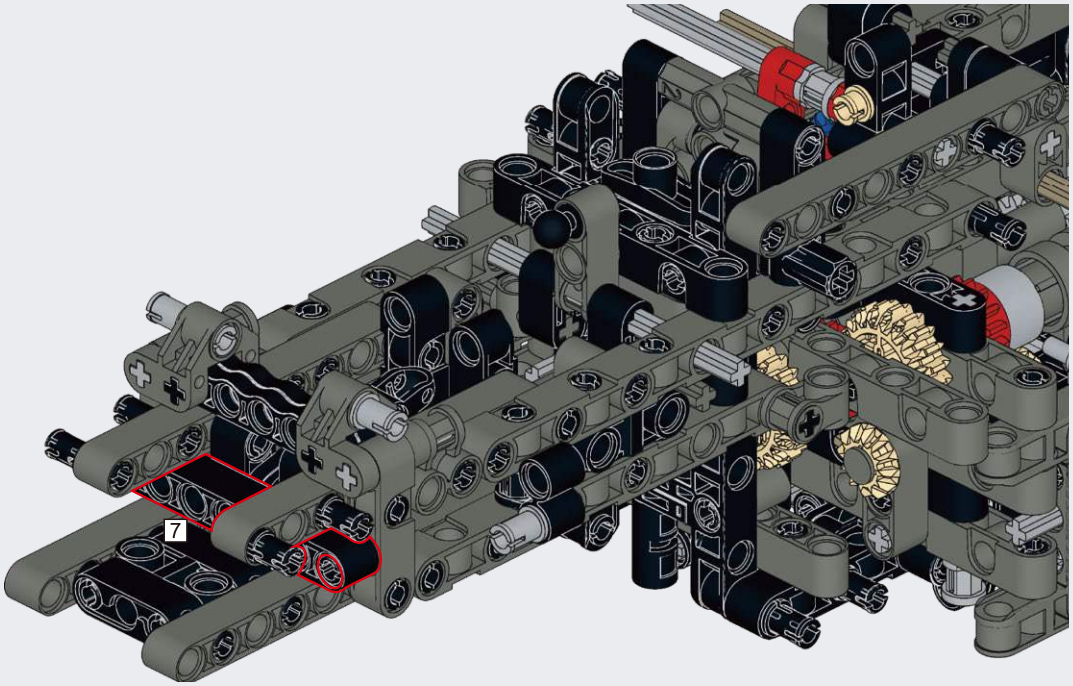

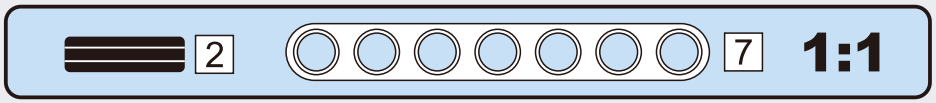

A138

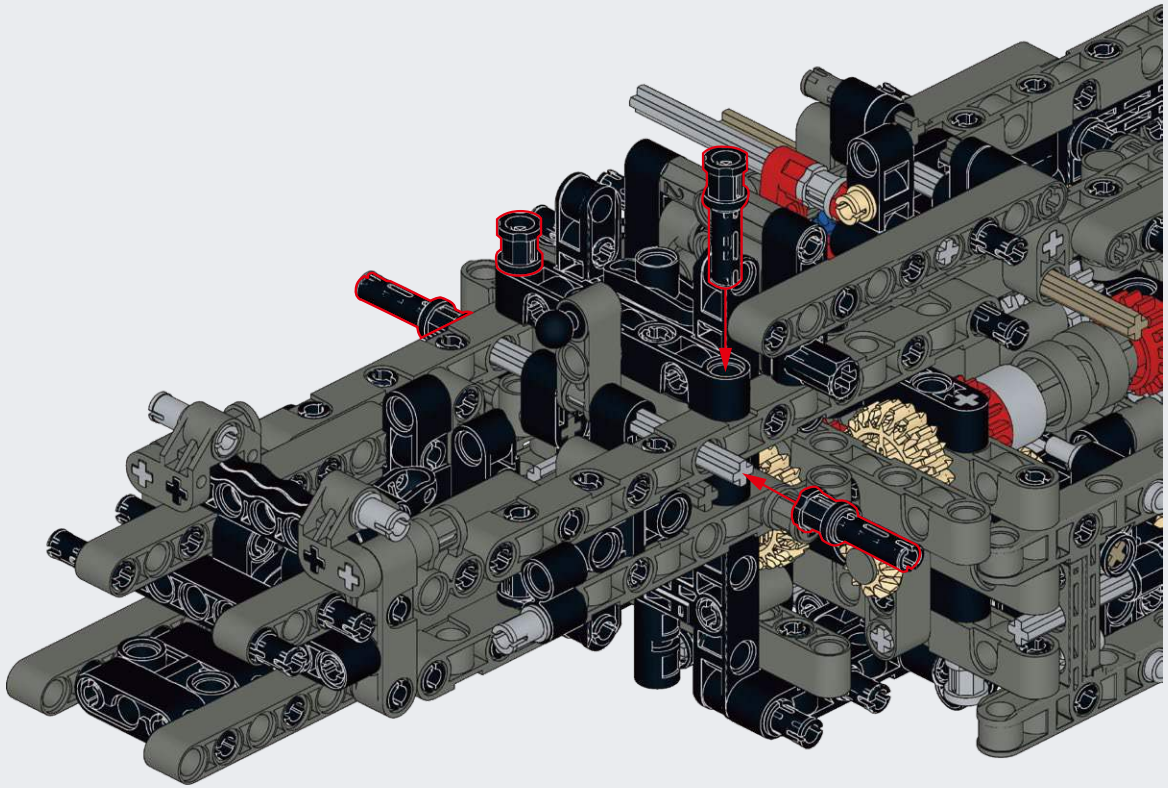

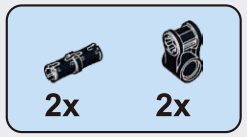

A139

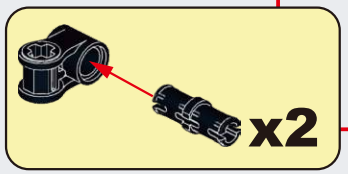

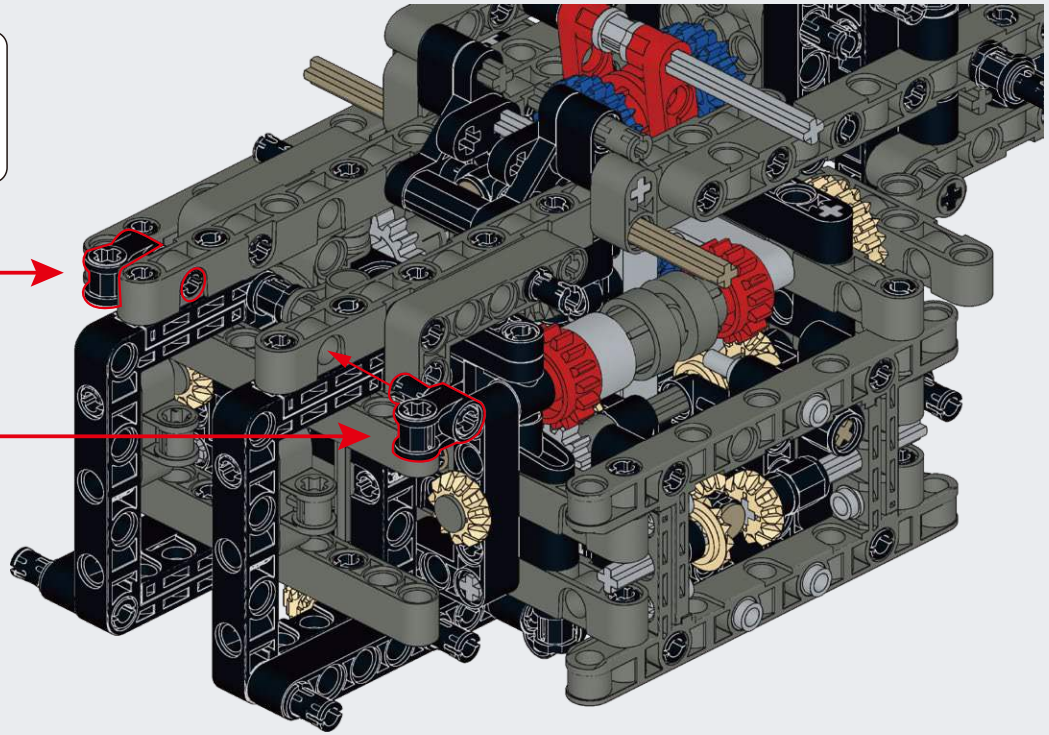

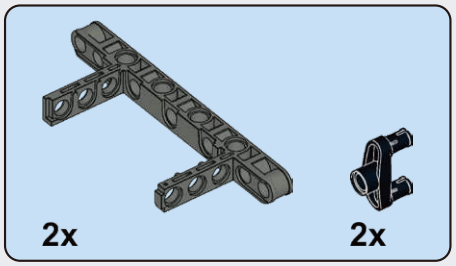

A140

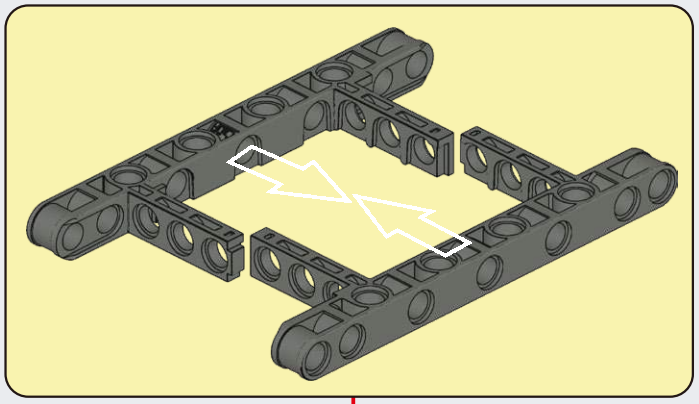

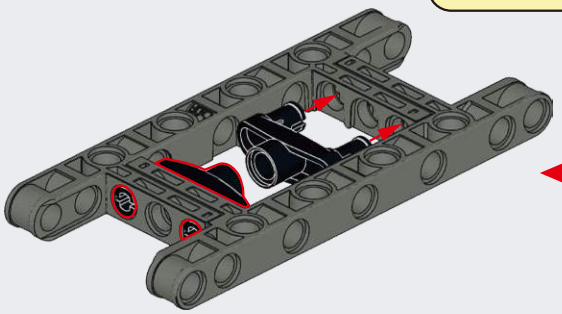

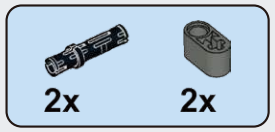

A141

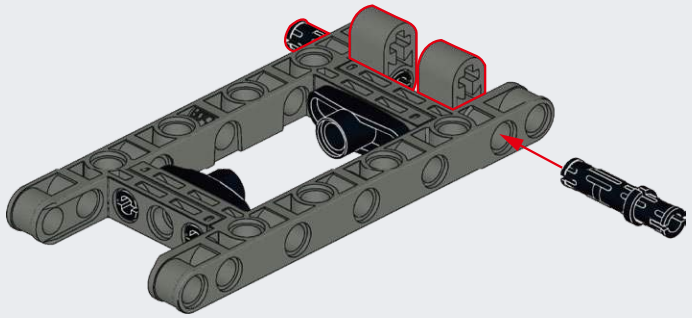

A142

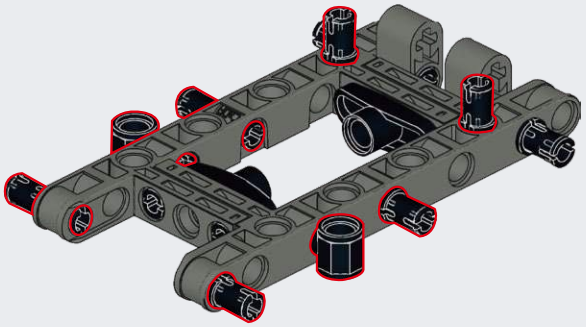

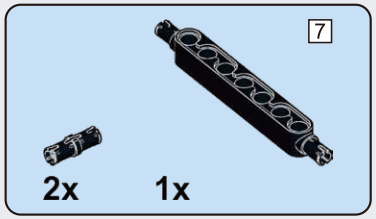

A143

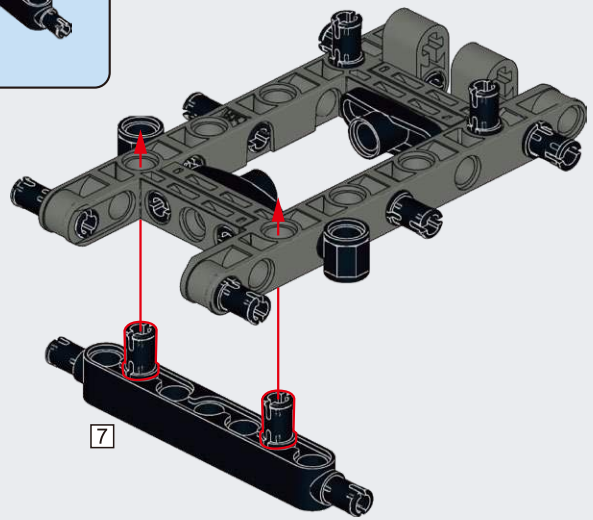

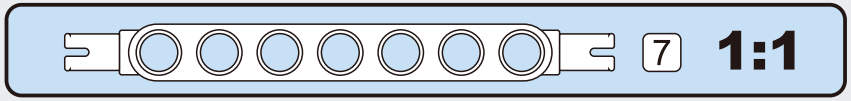

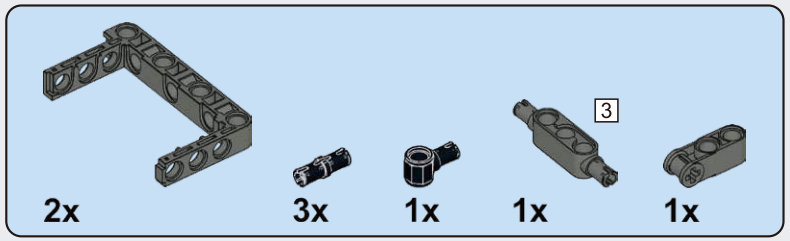

A144

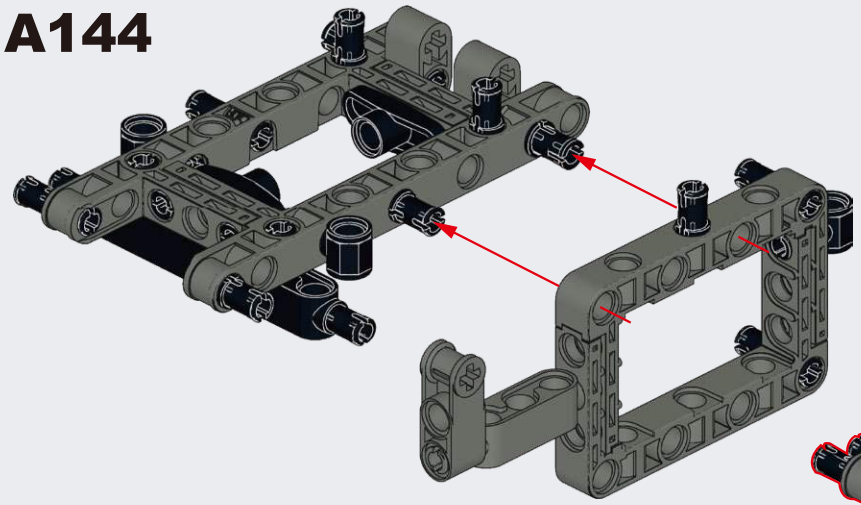

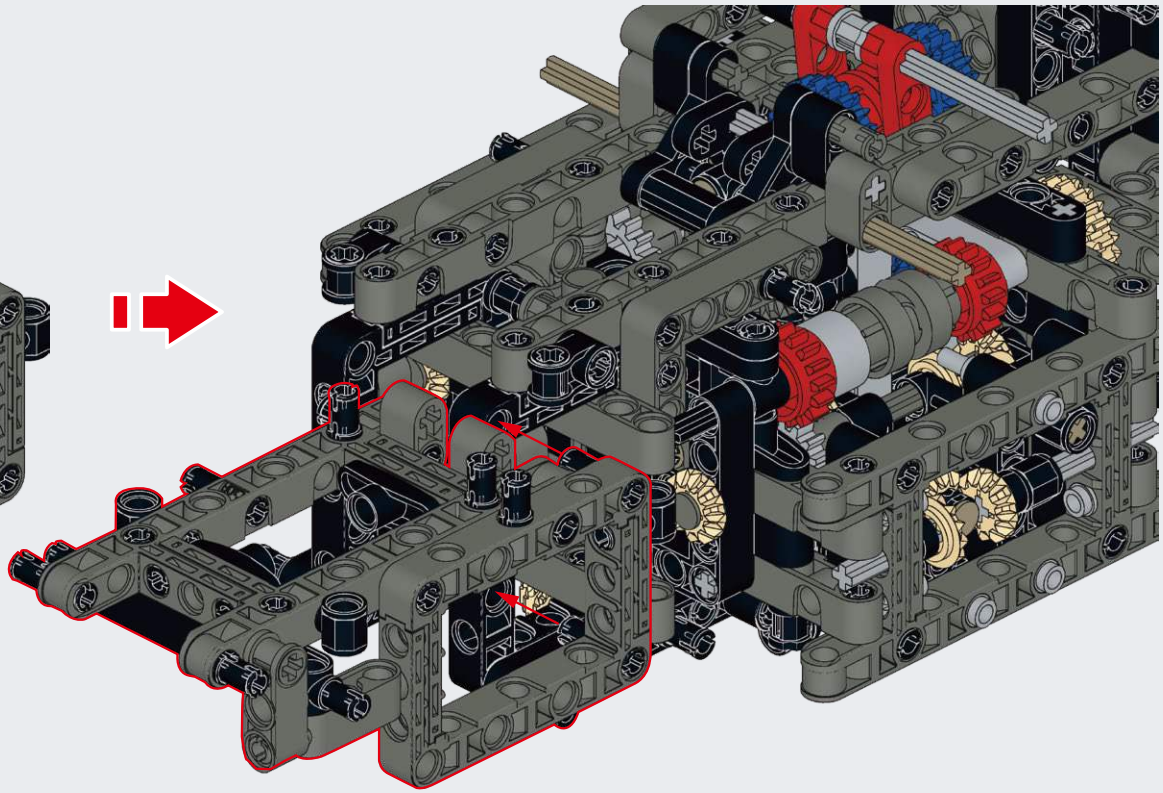

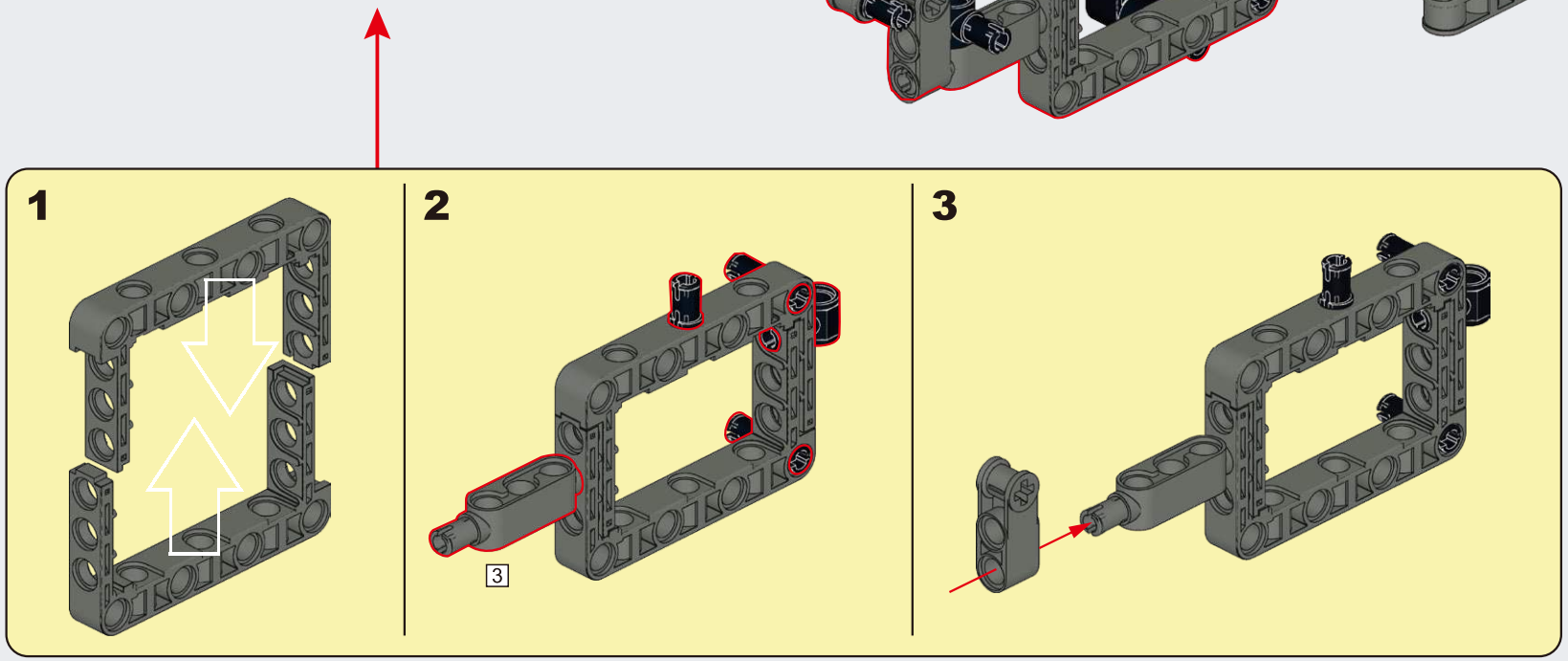

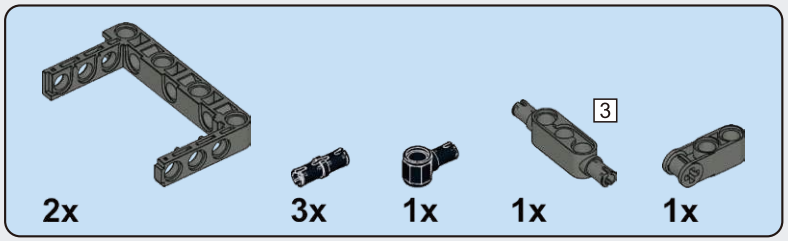

A145

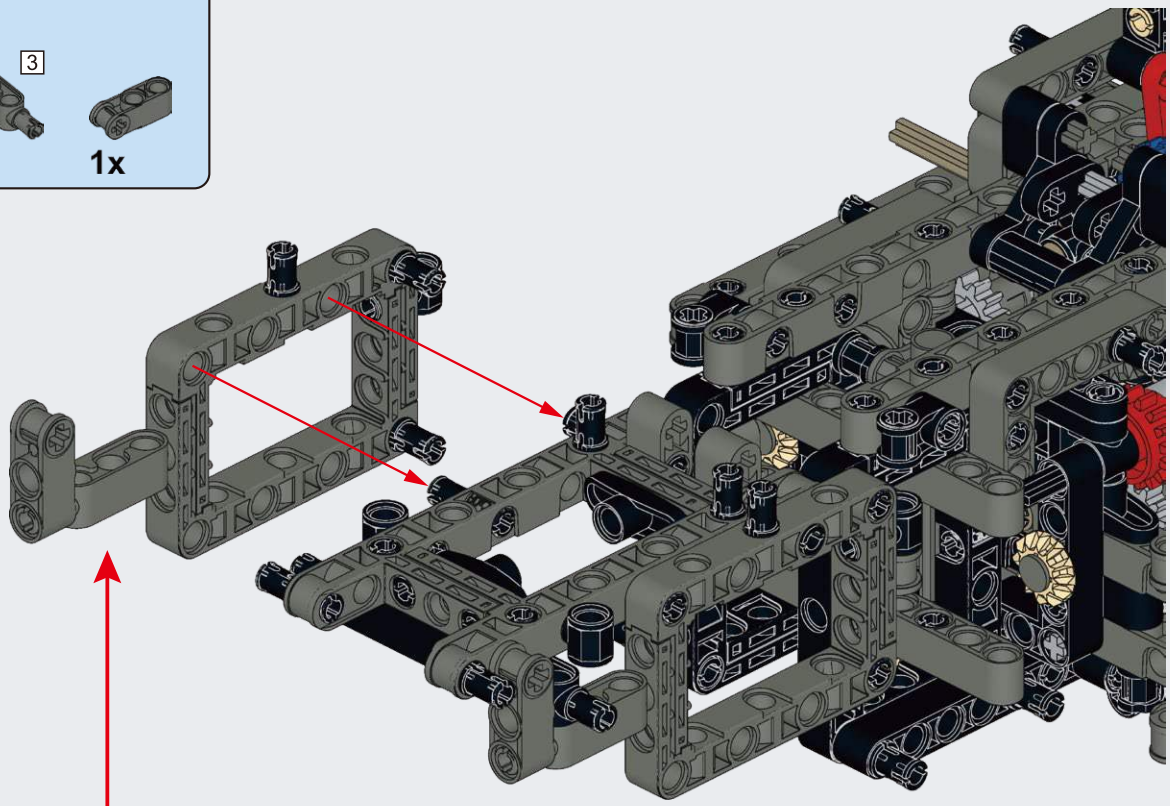

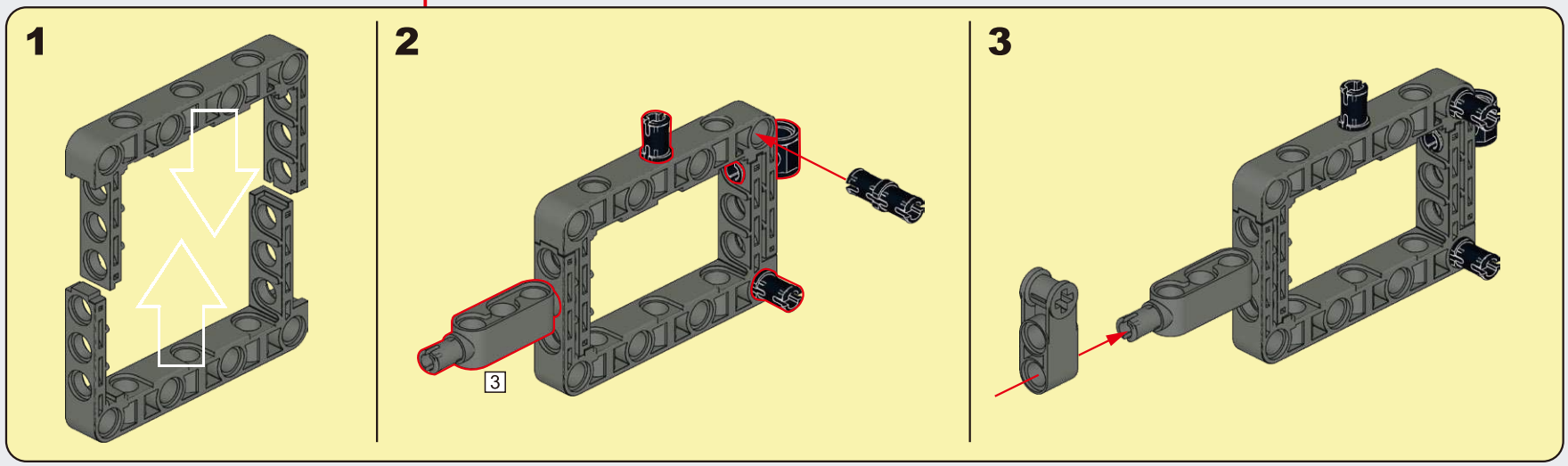

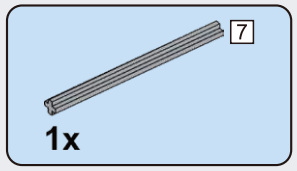

A146

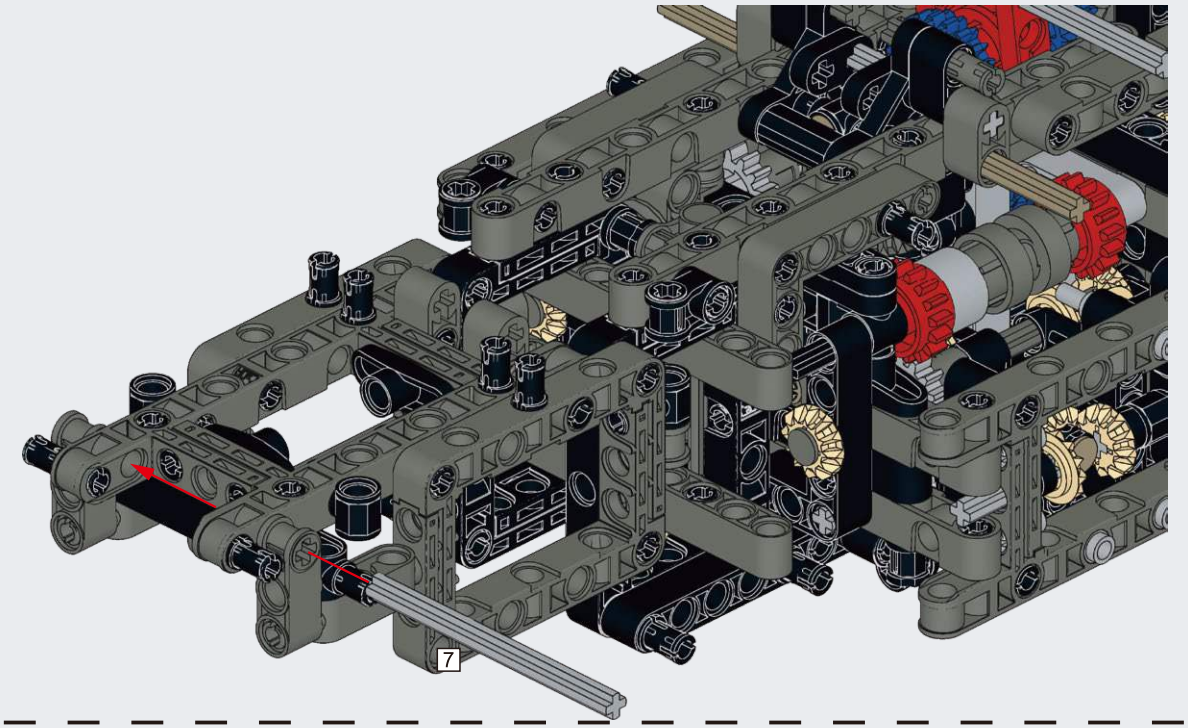

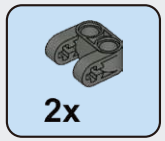

A147

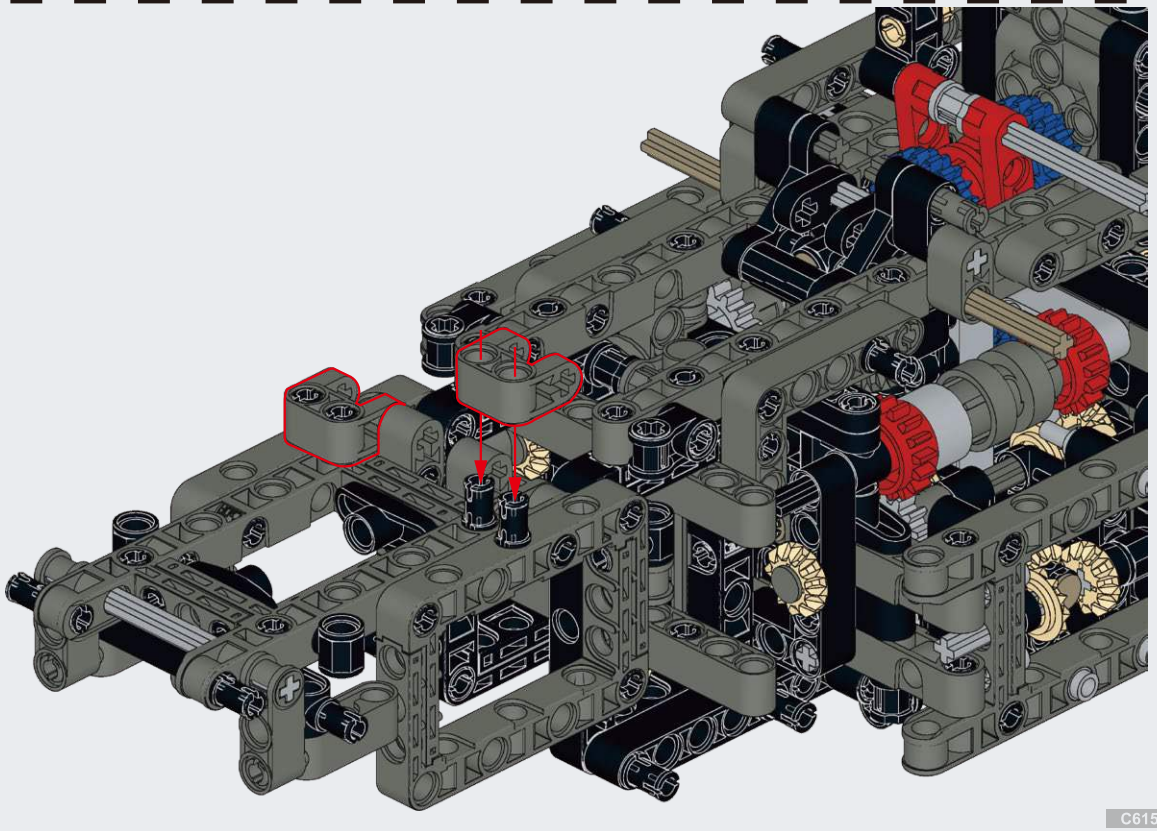

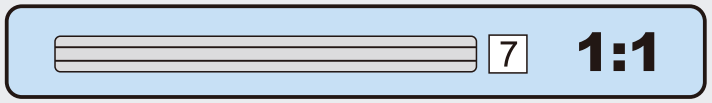

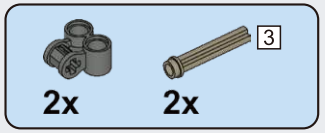

A148

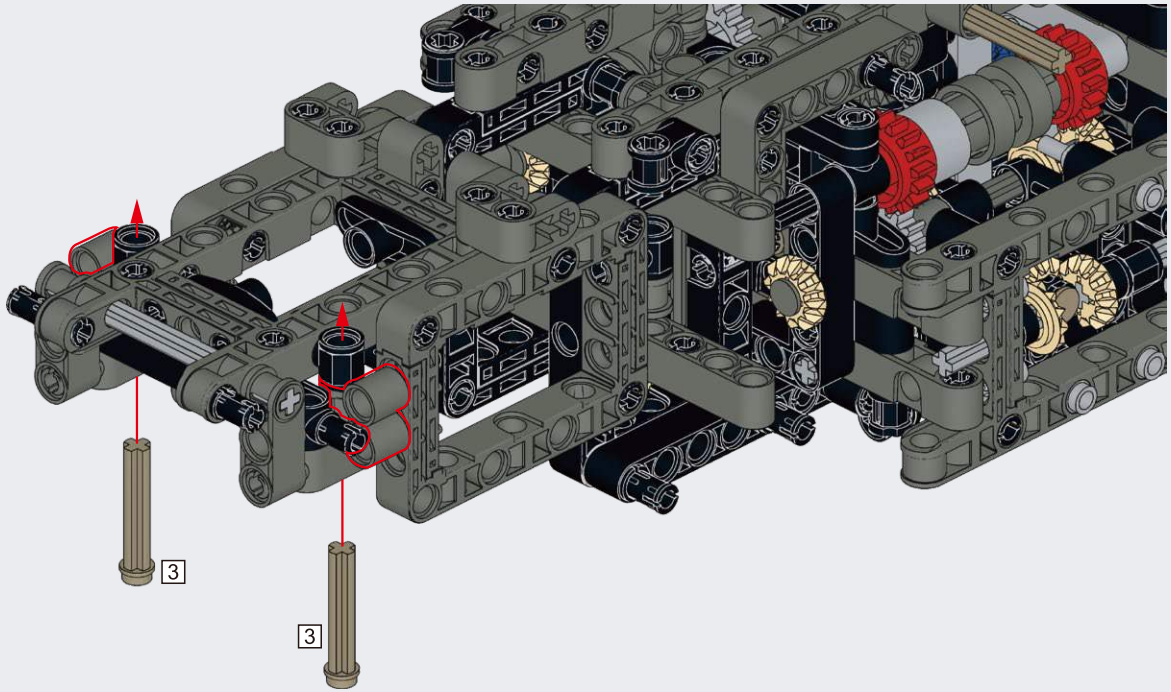

A149

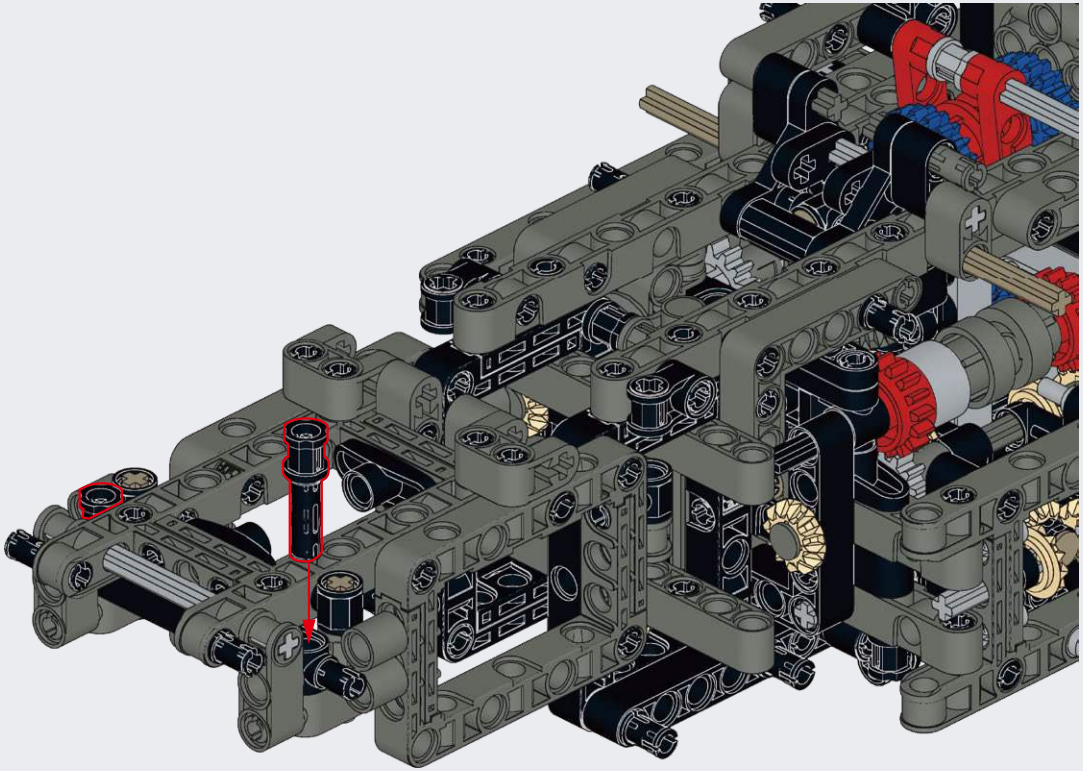

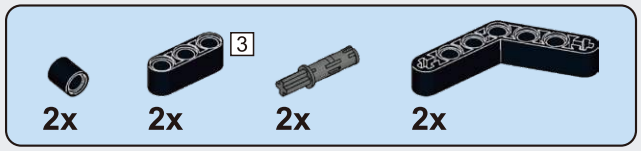

A150

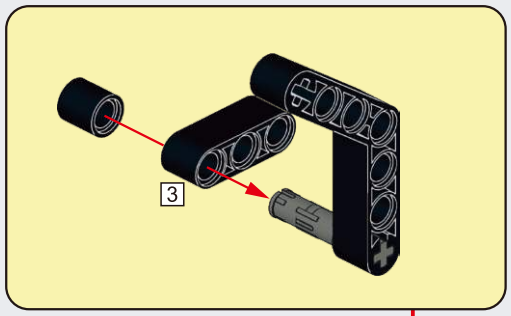

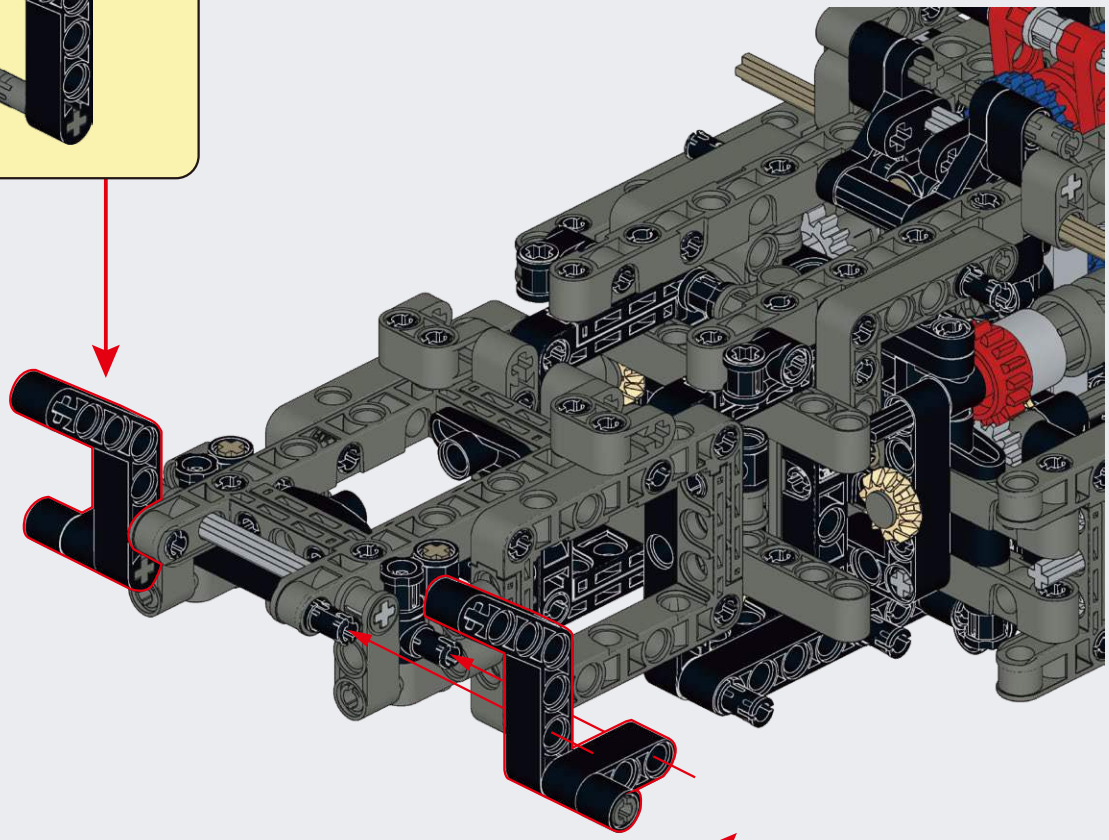

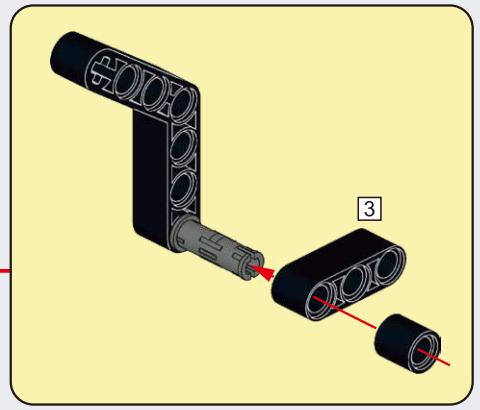

A151

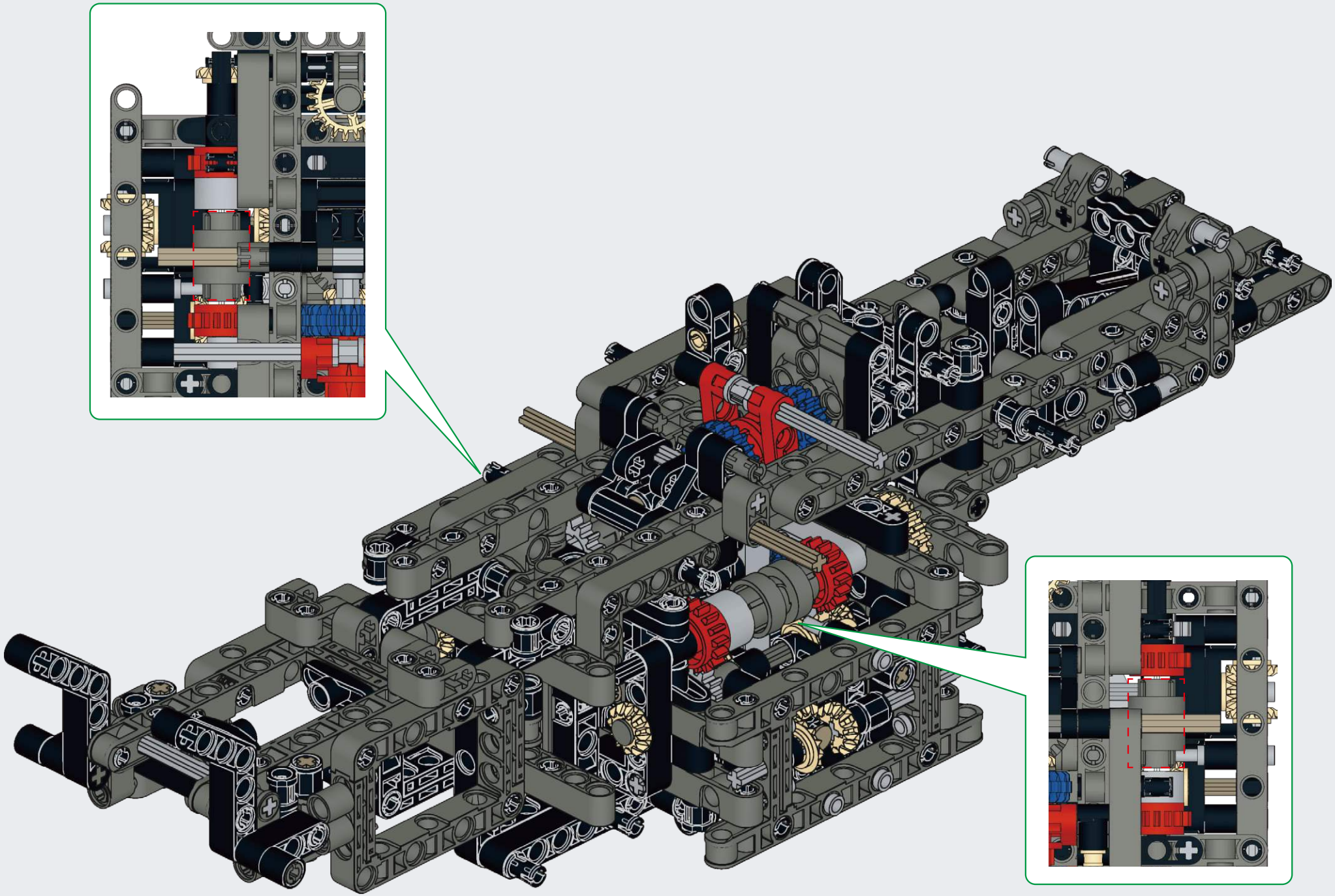

B

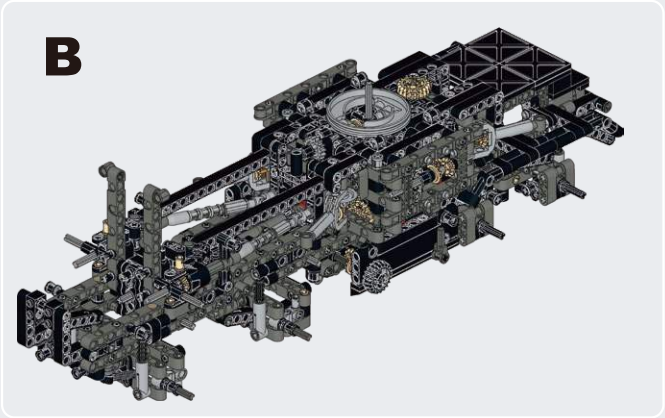

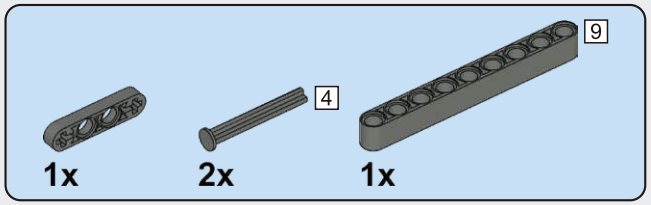

B1

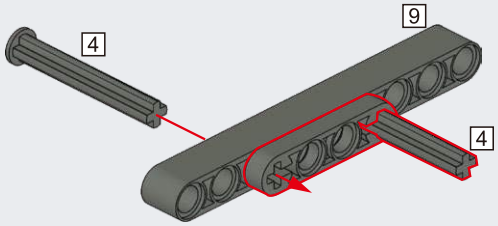

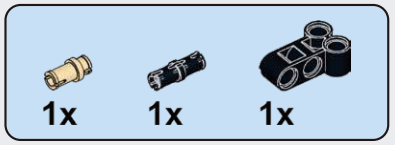

B2

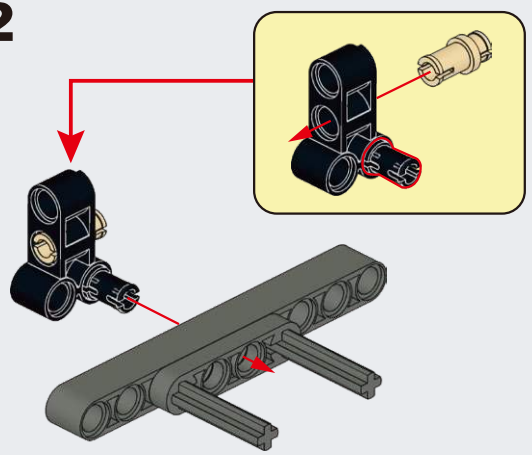

B3

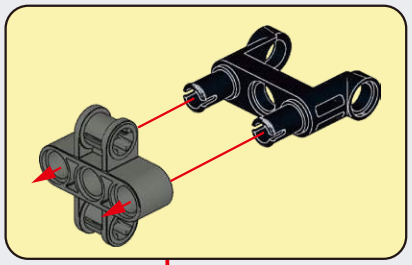

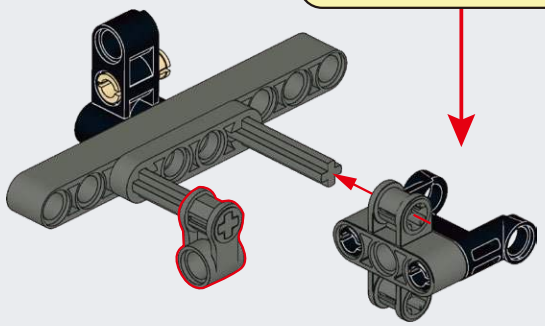

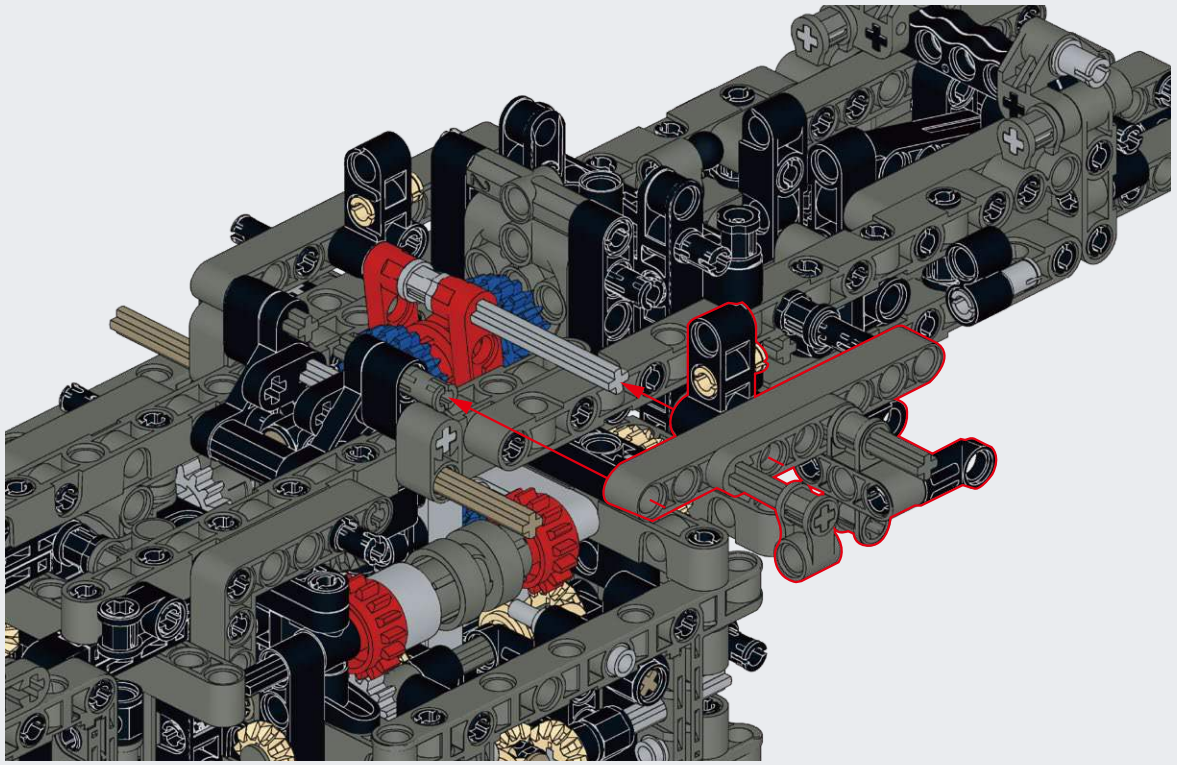

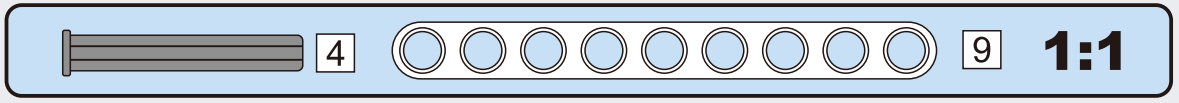

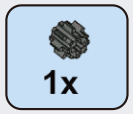

B4

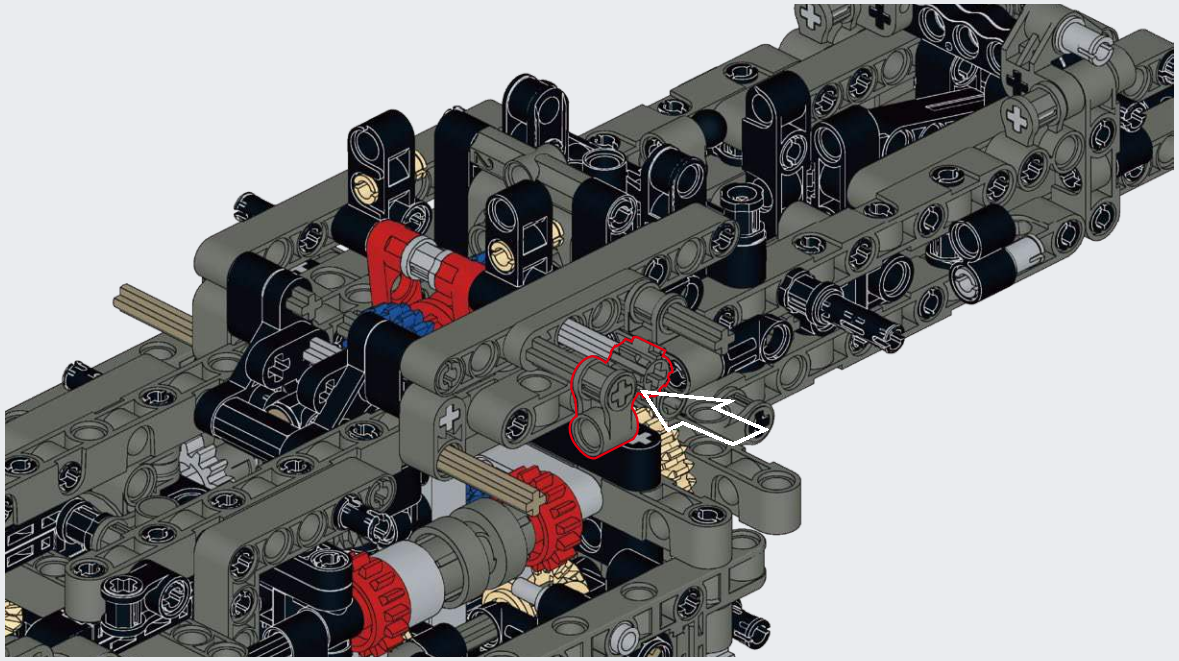

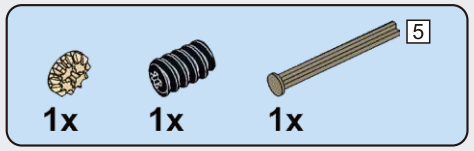

B5

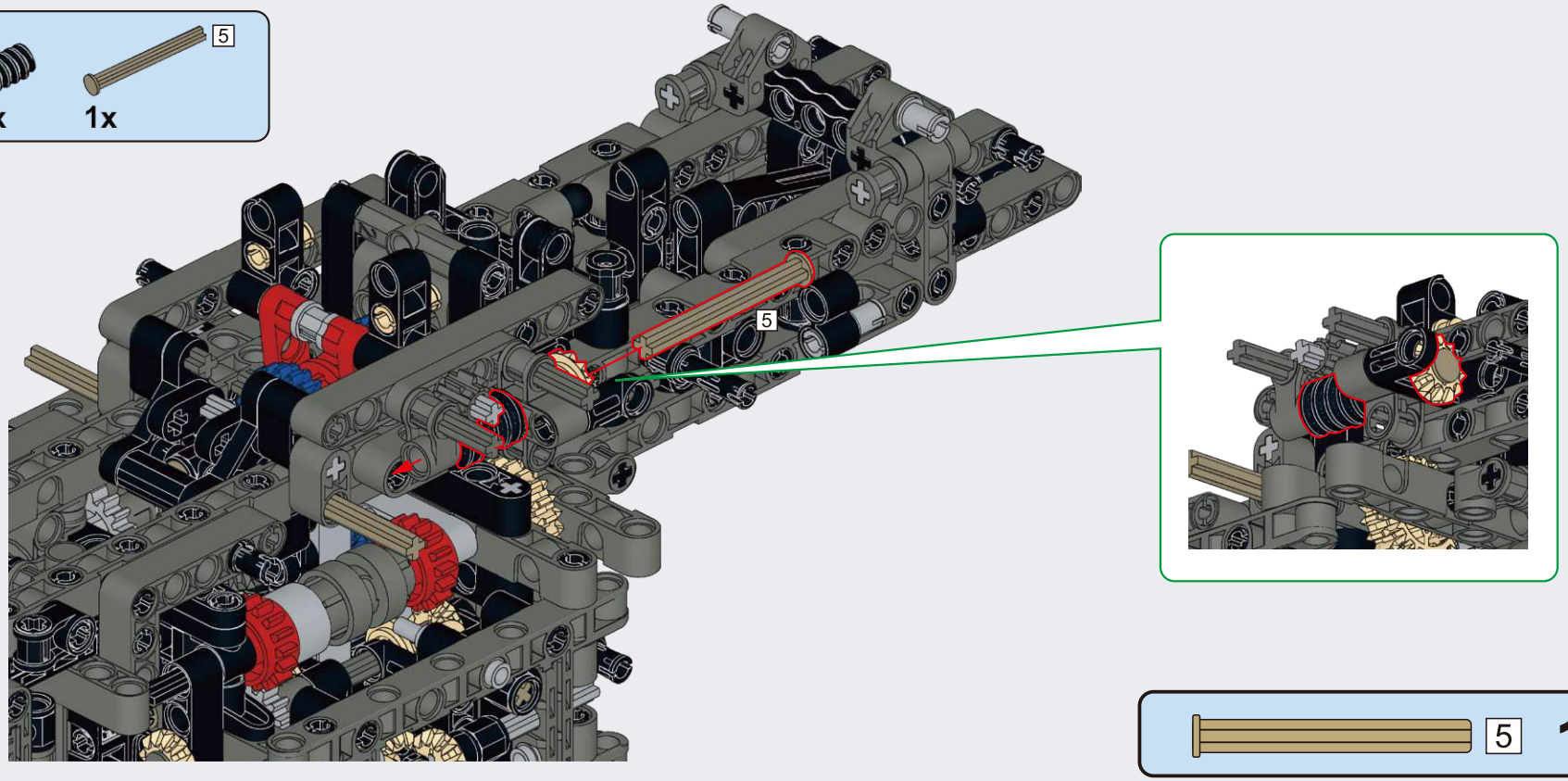

B6

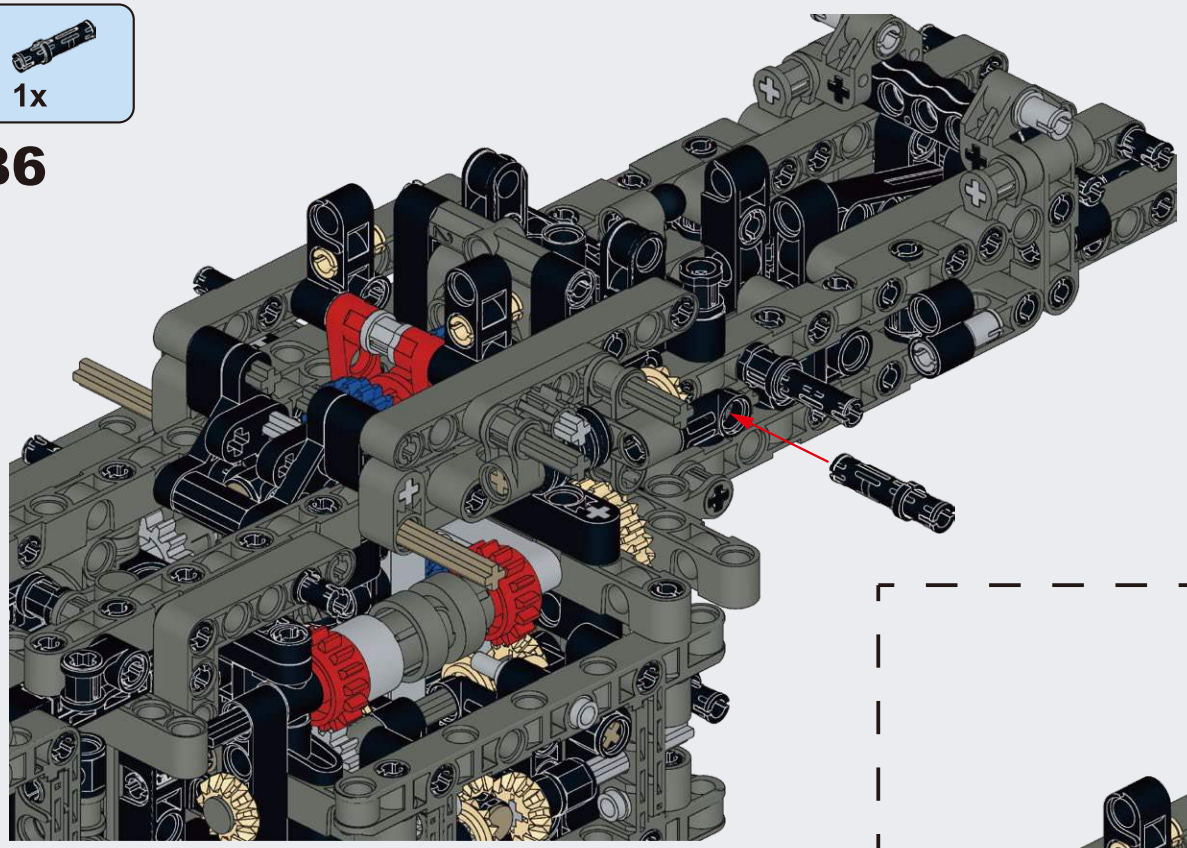

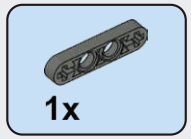

B7

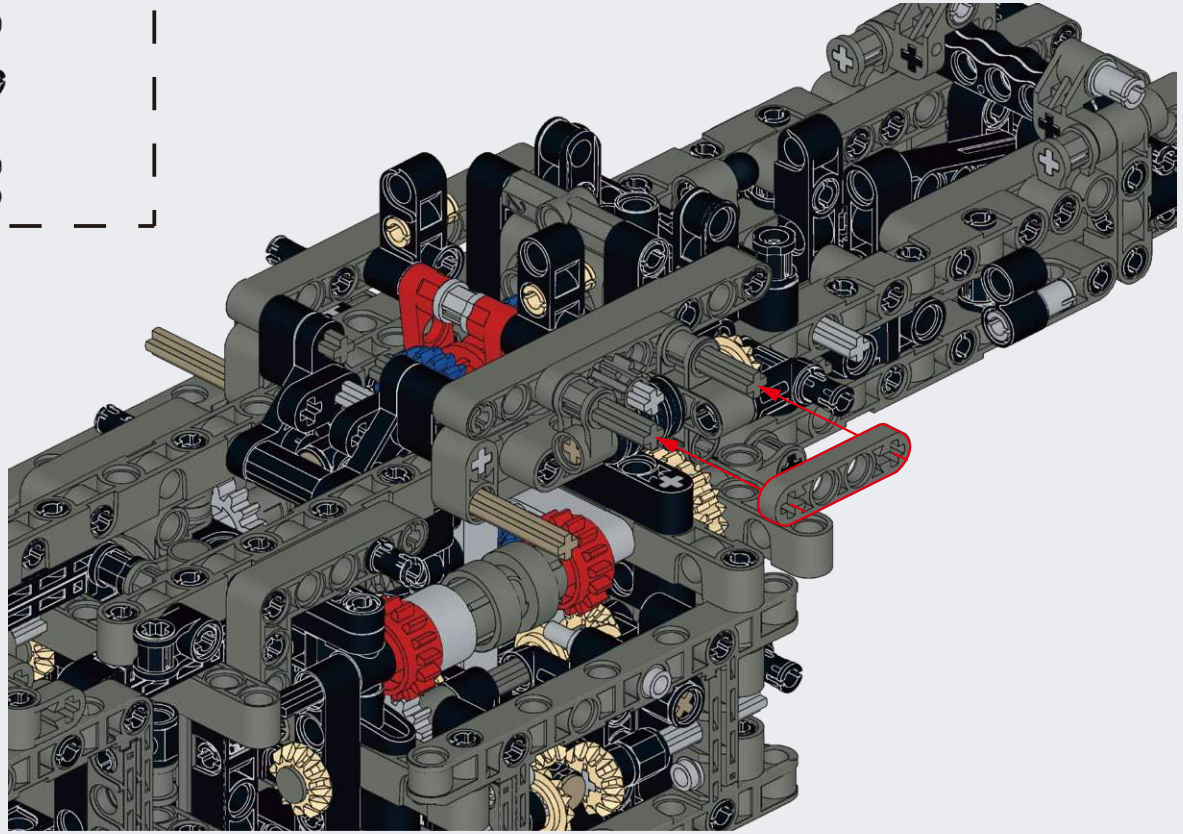

B8

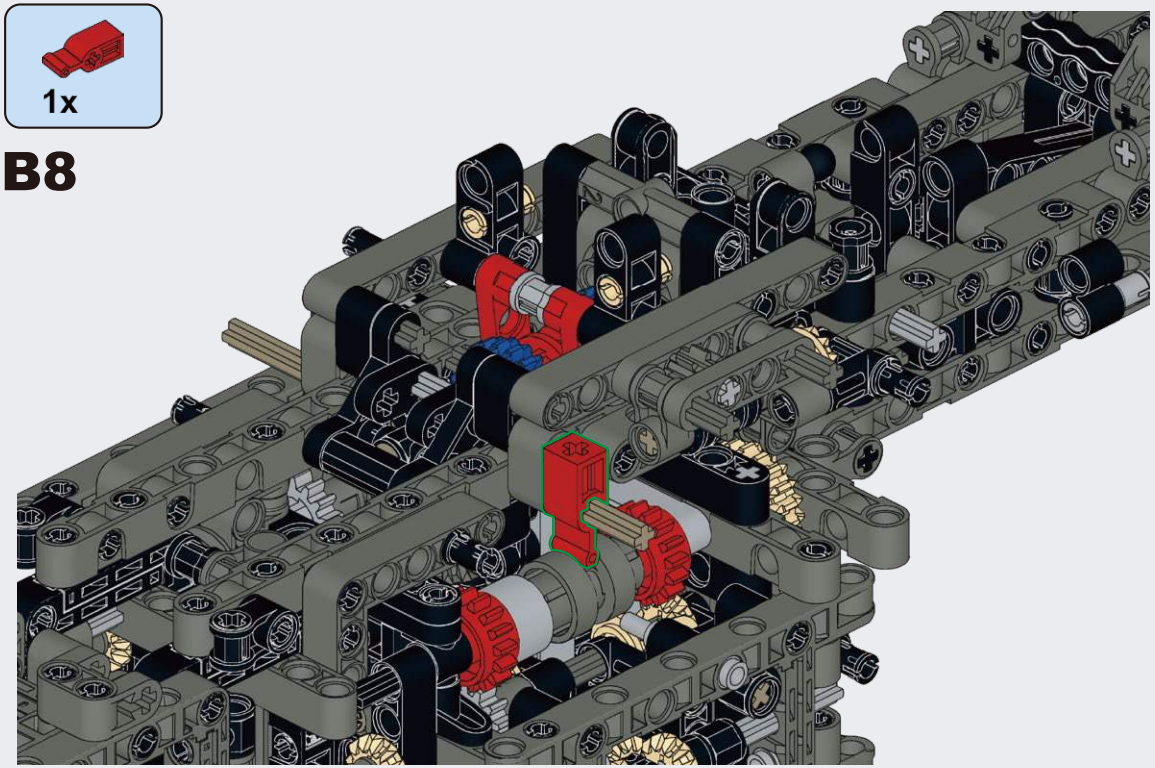

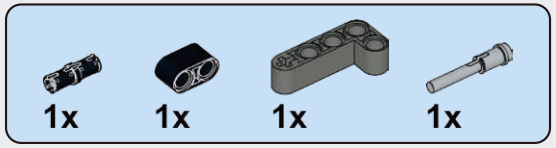

B9

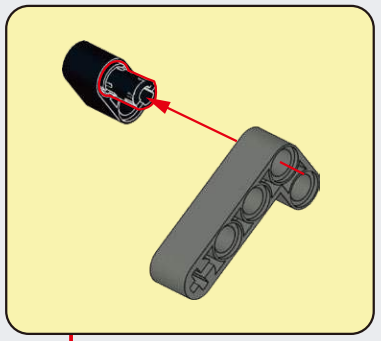

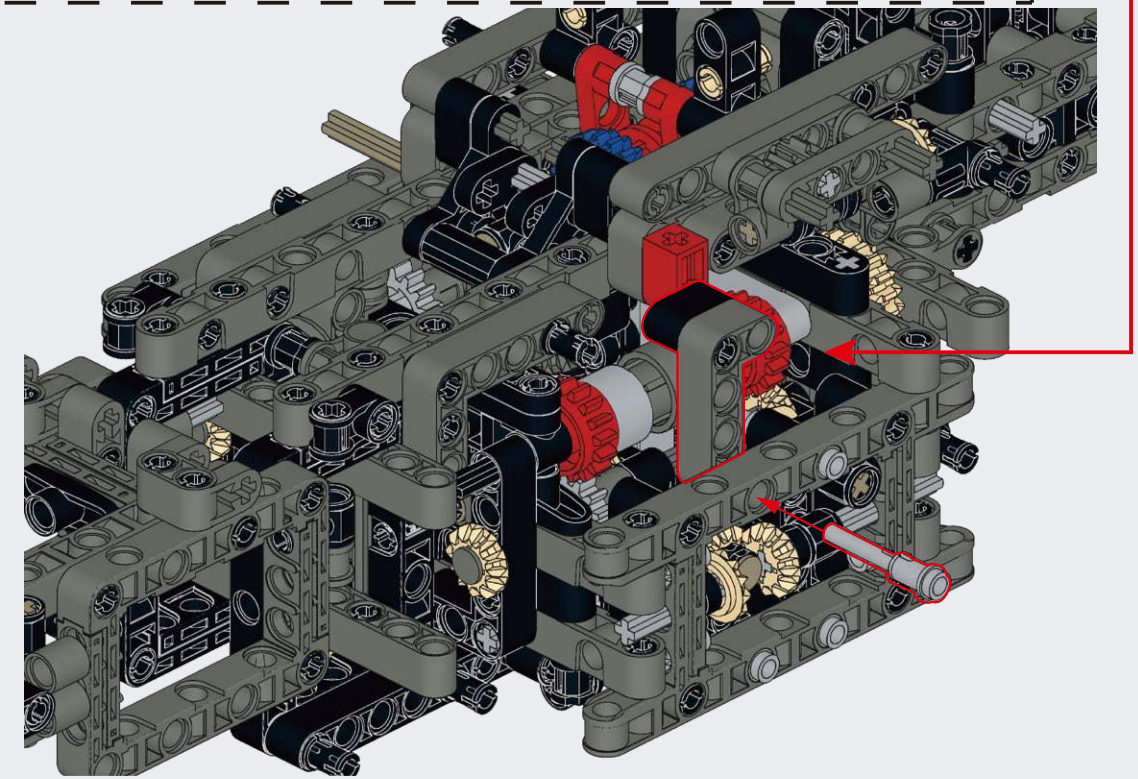

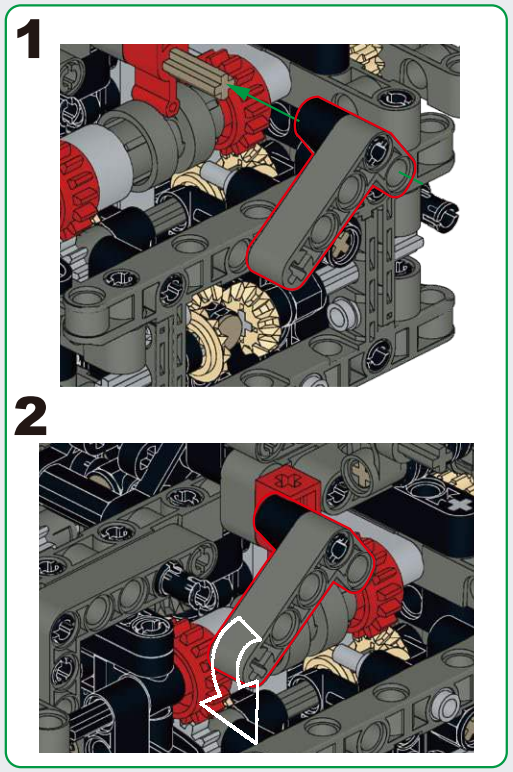

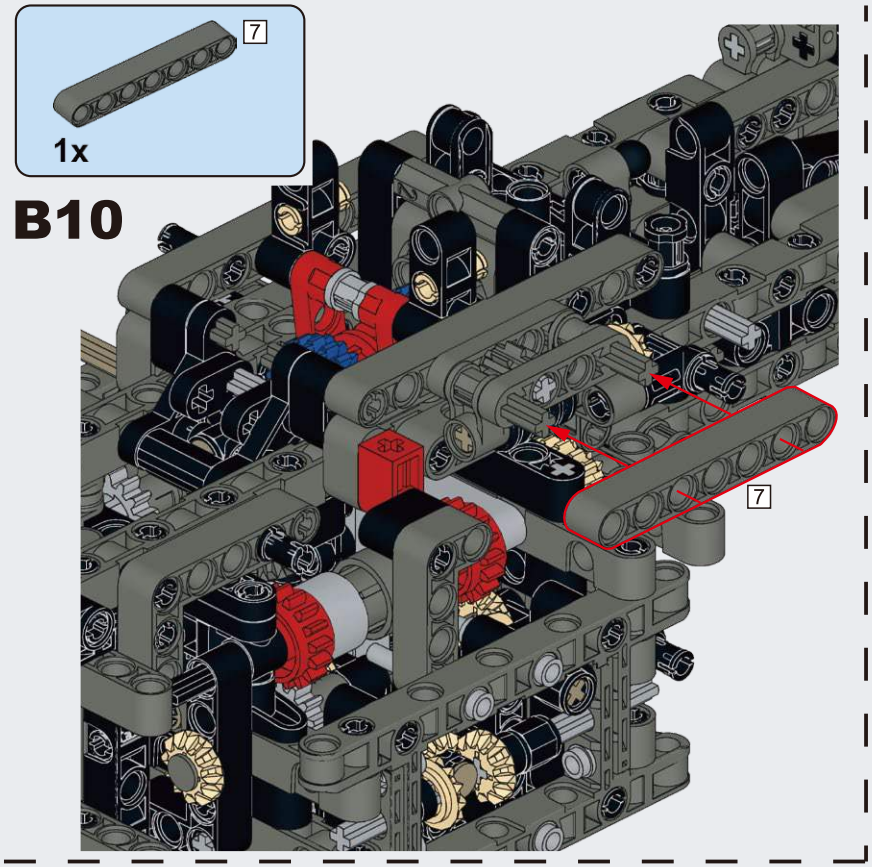
7
1x
B10
7

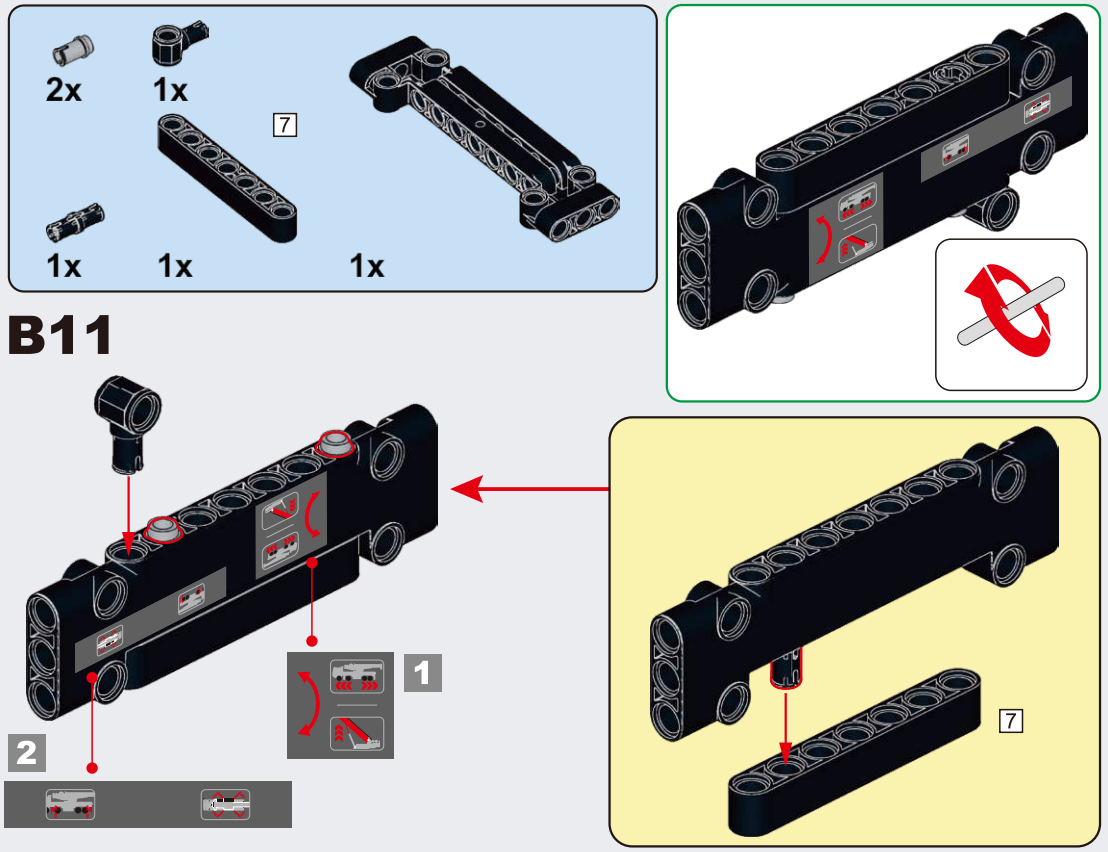
2x
1x
7
1x
1x
1x
B11
1
2
7

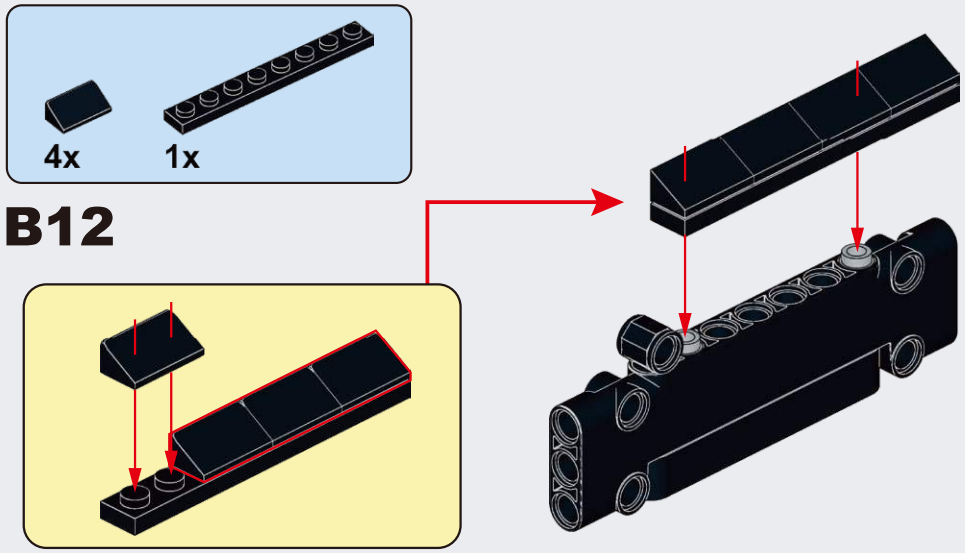
4x
1x
B12

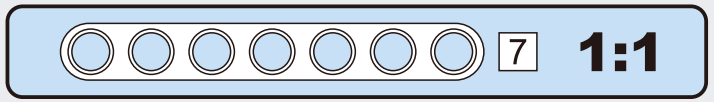
7
1:1

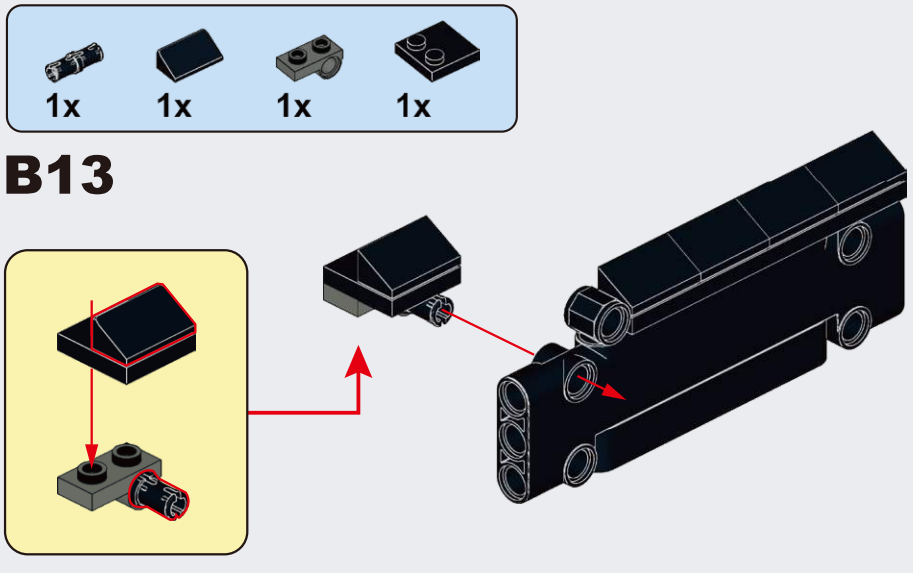
1x
1x
1x
1x
B13

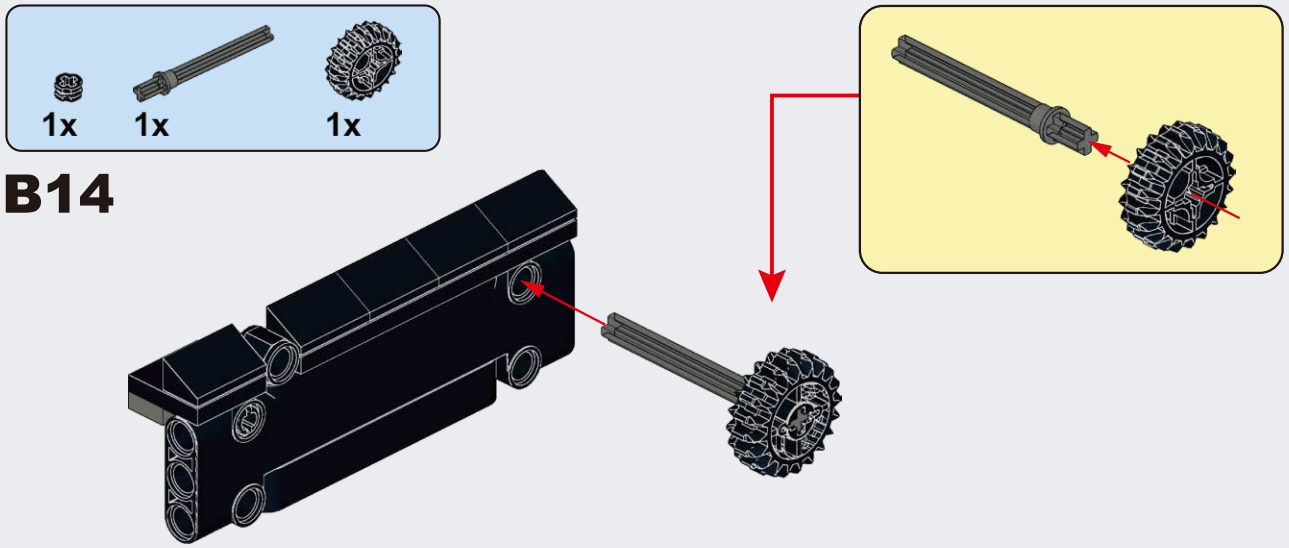

B14

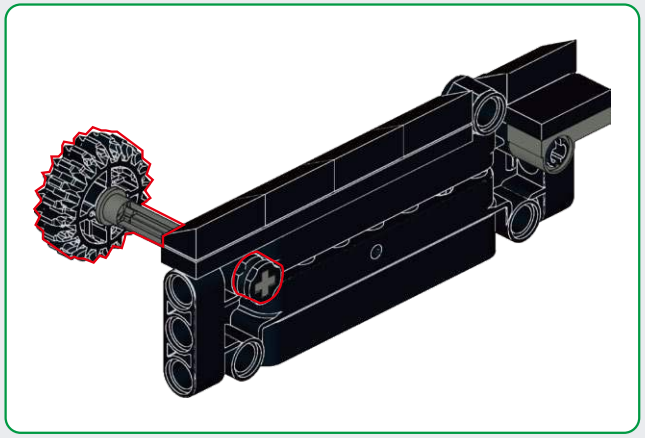

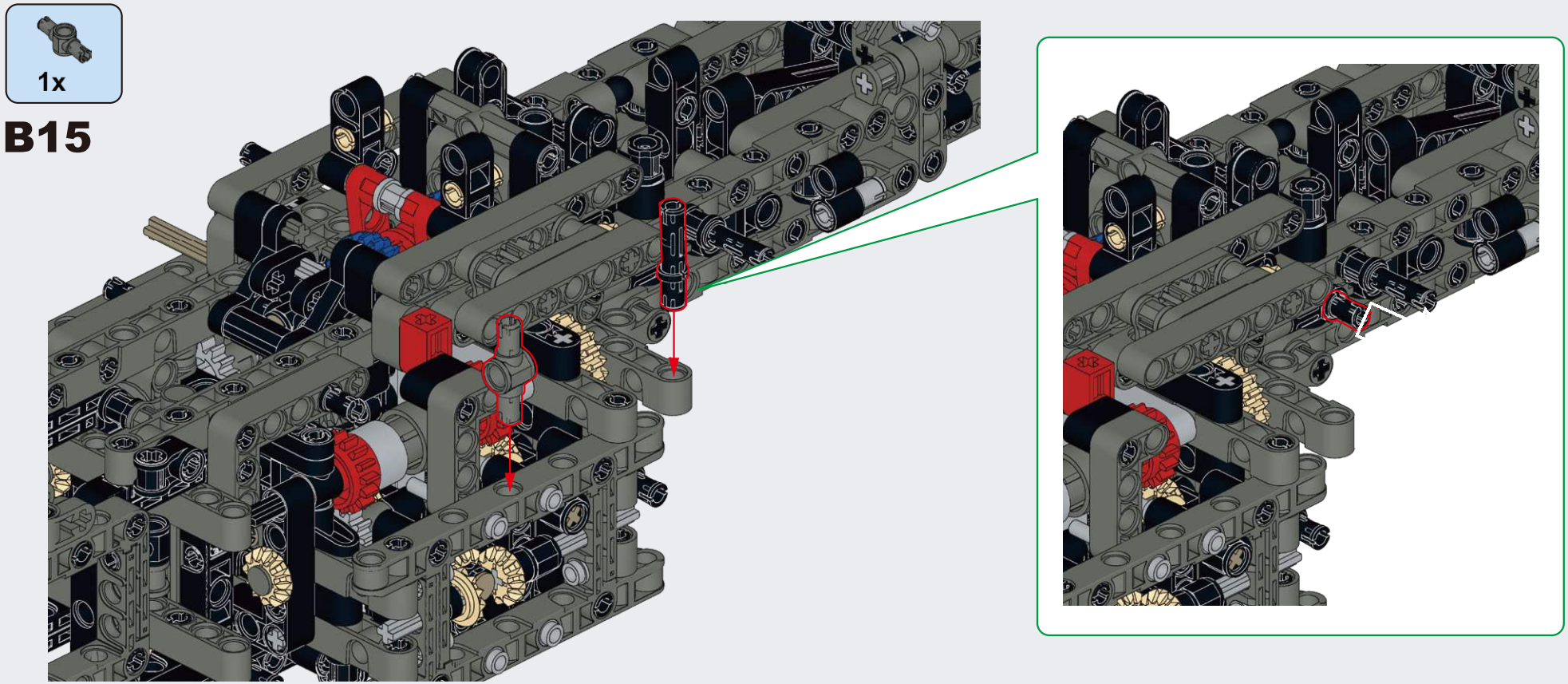

B15

B16

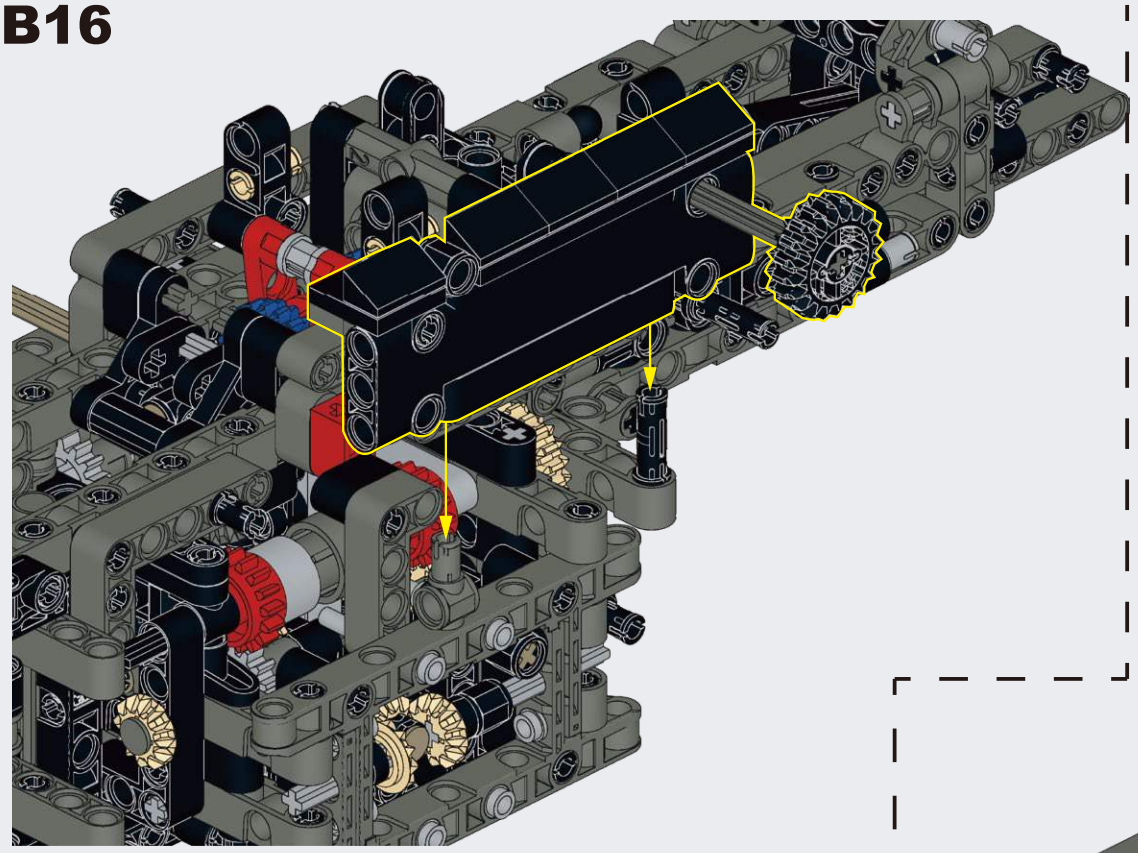

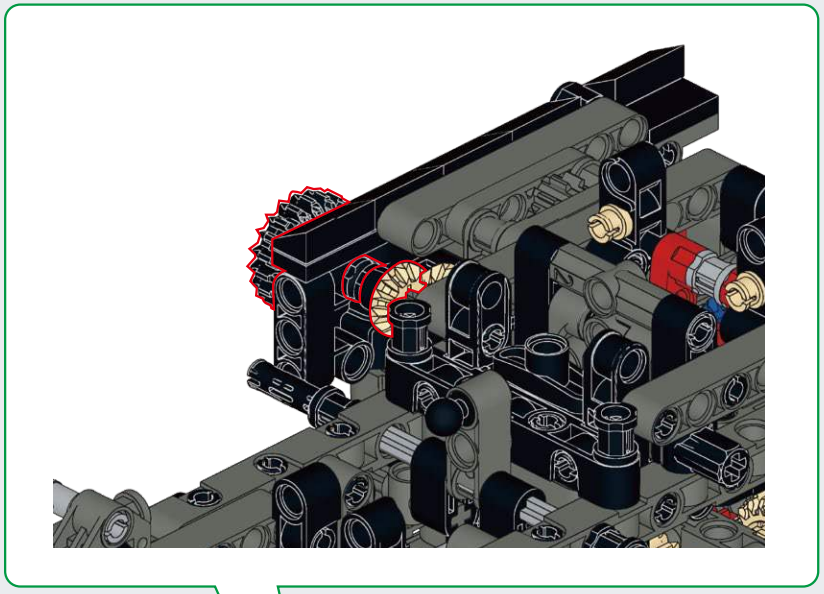

B17

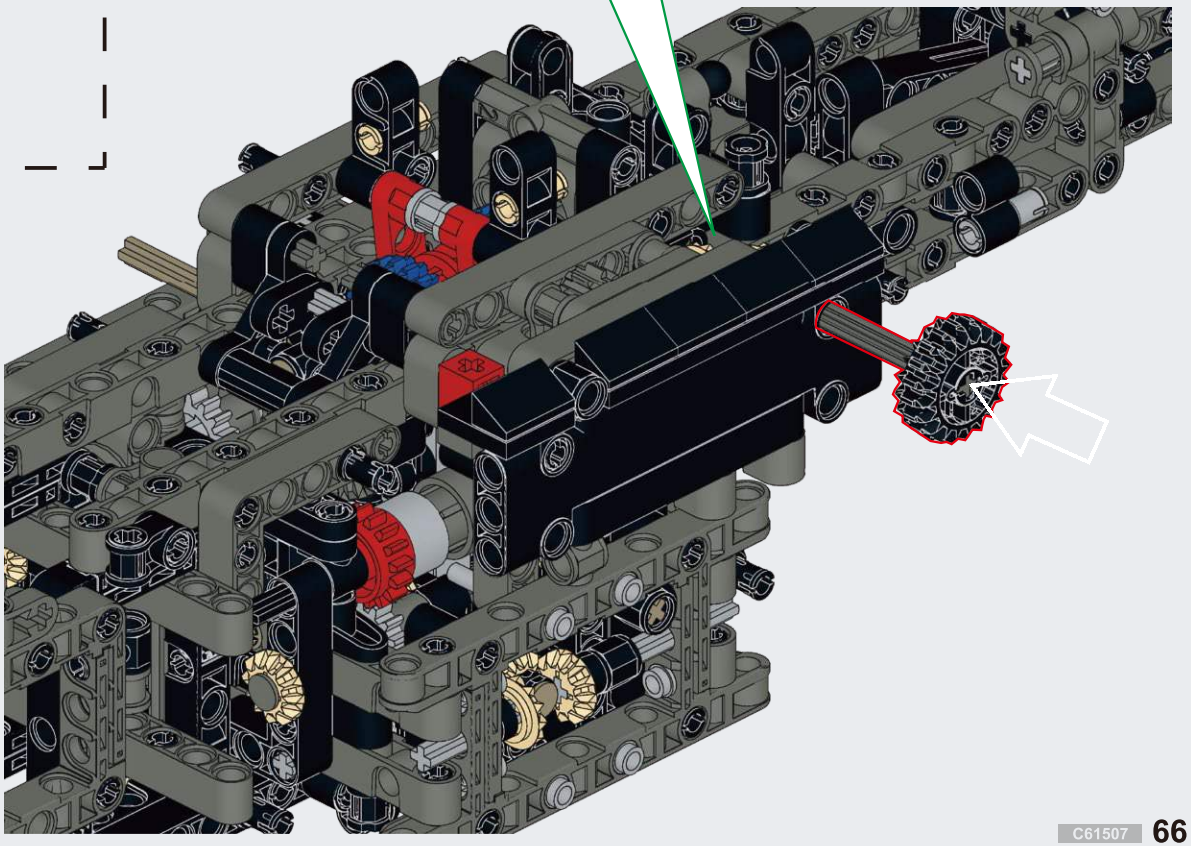

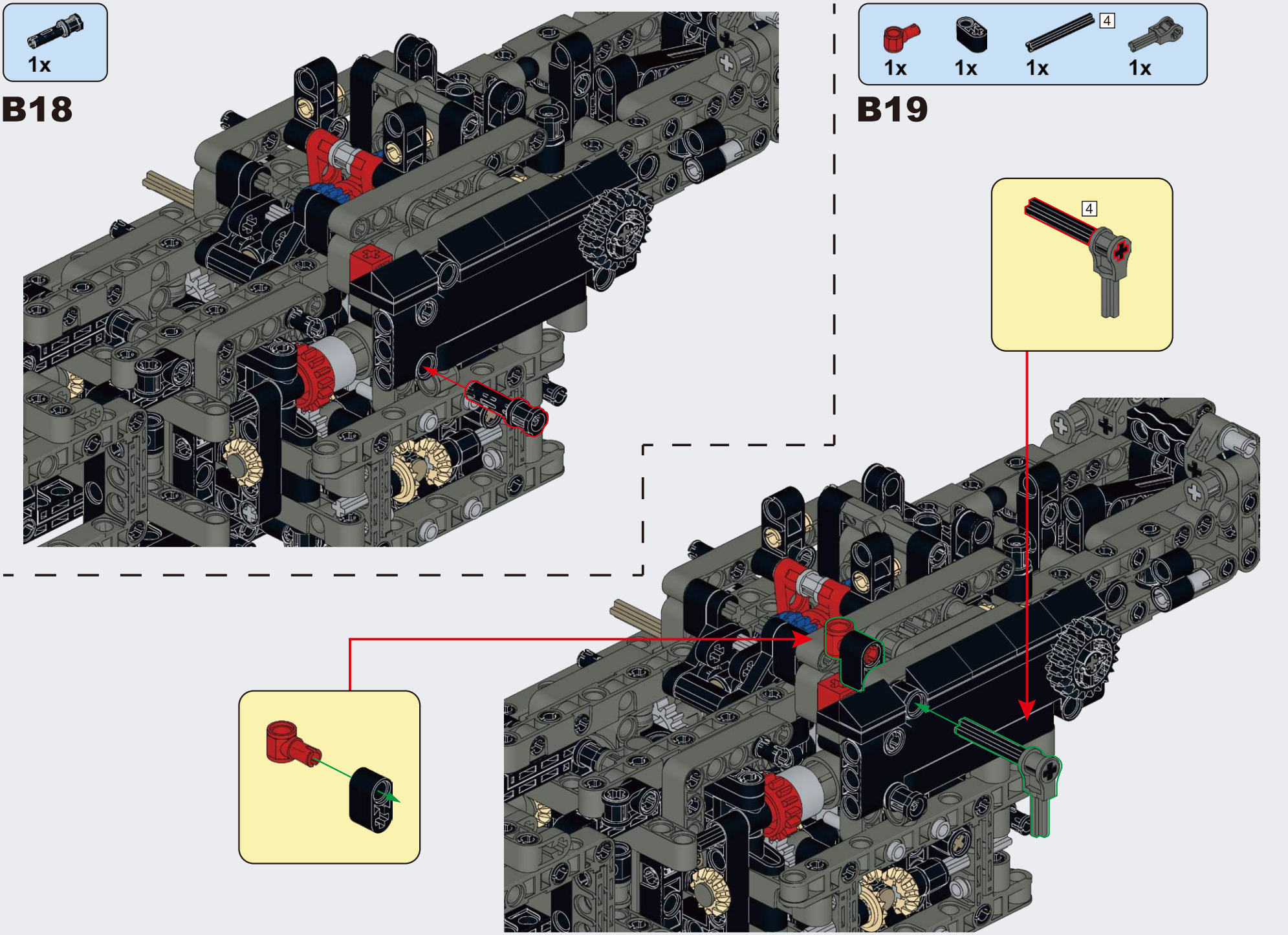
1x
B18
1x
1x
1x
4
1x
B19
4
4
1:1

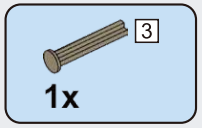

B20

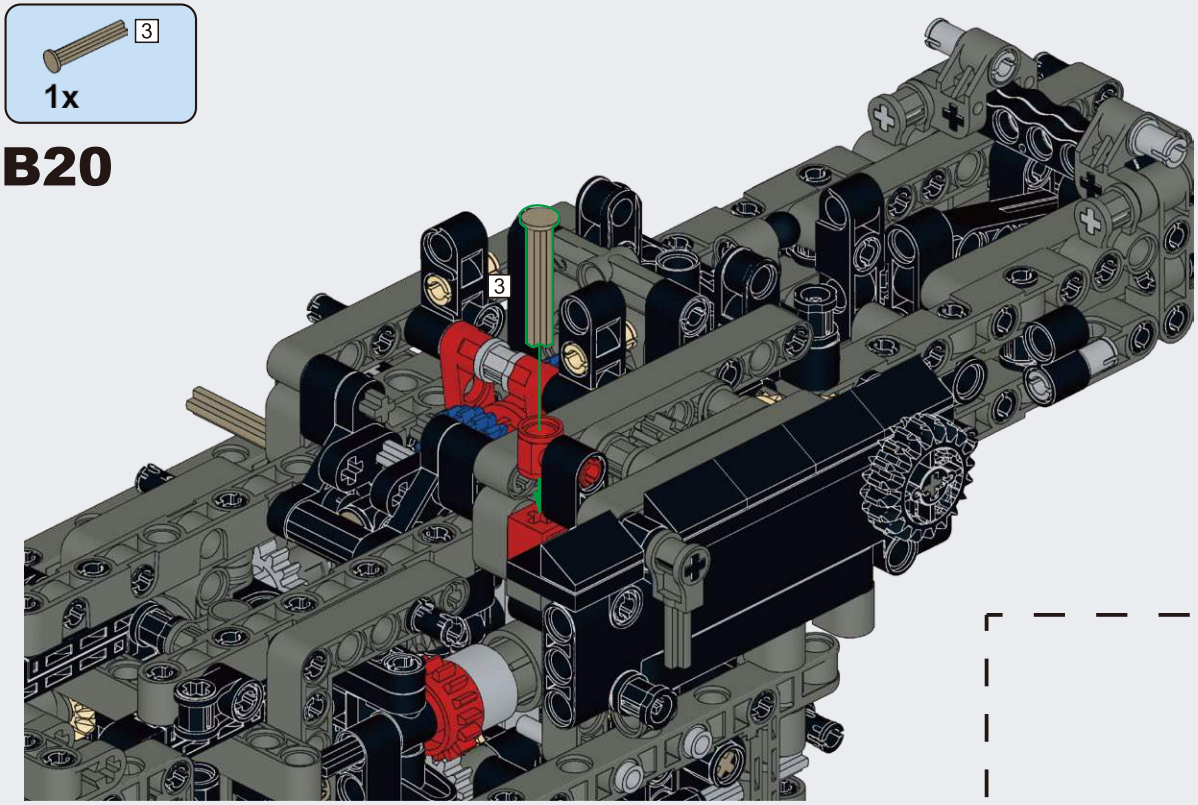

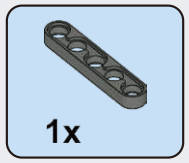

B21

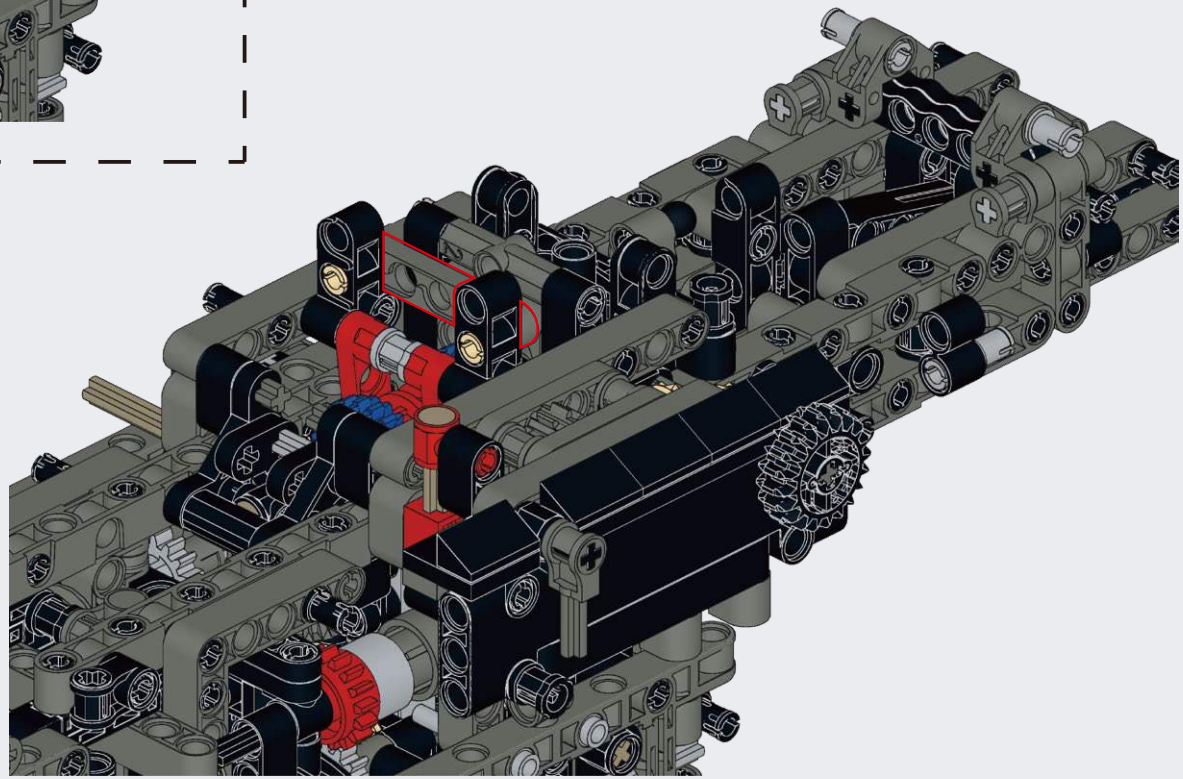

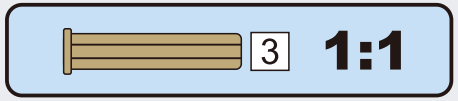

B22

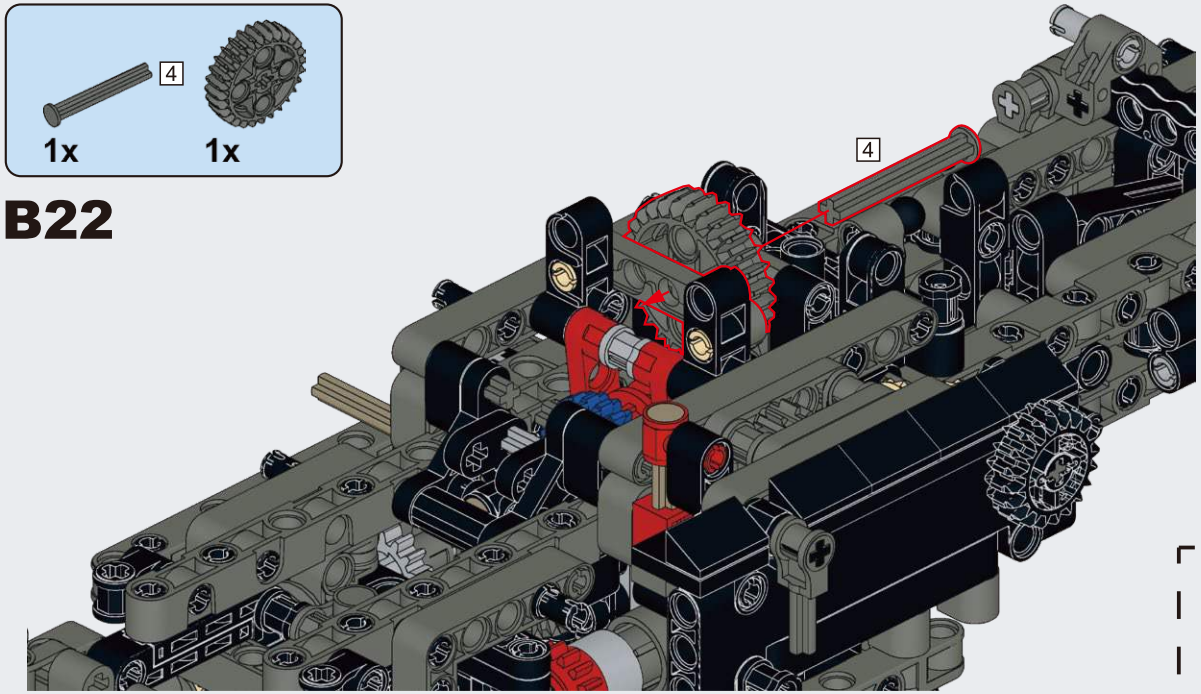

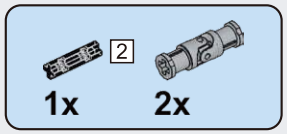

B23

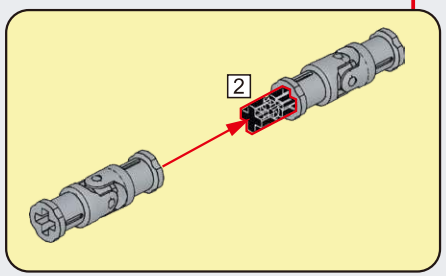

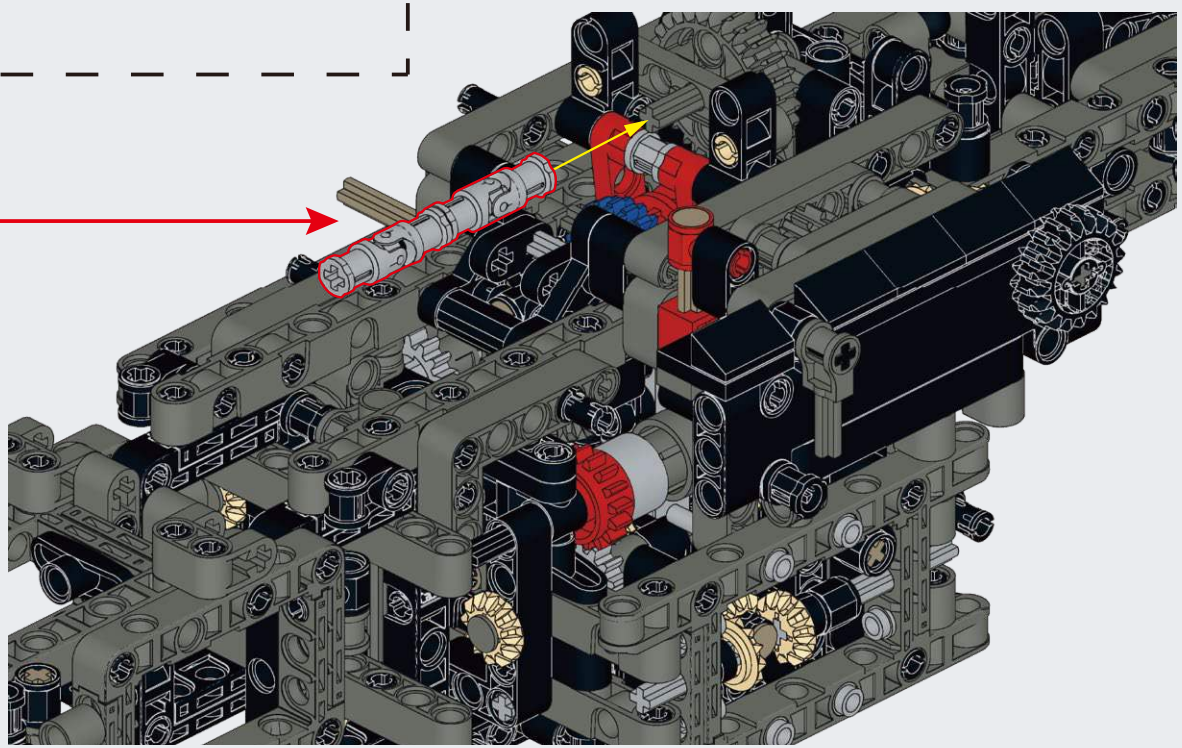

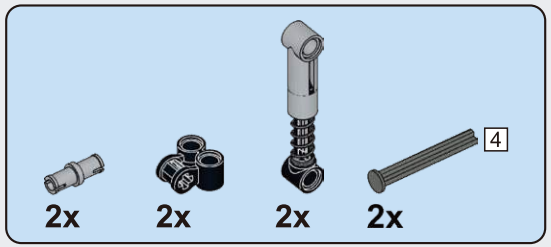

B24

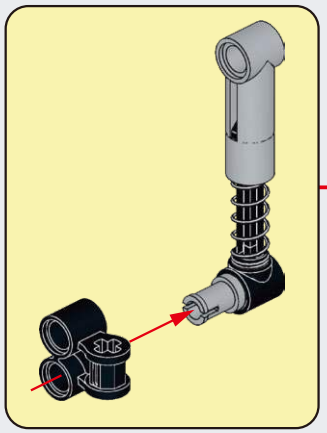

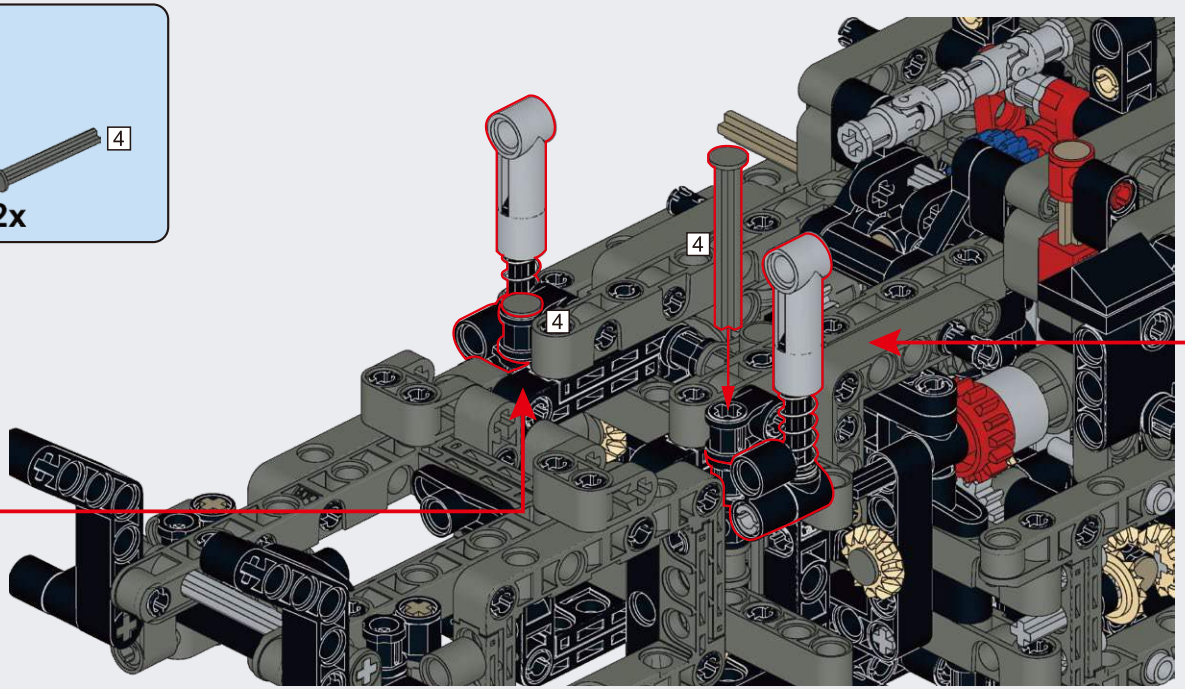

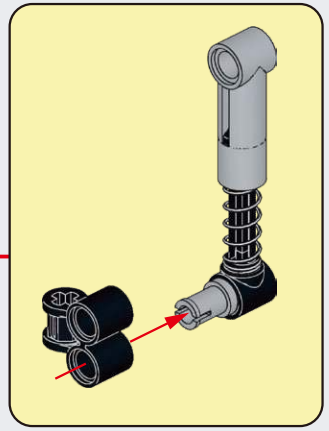

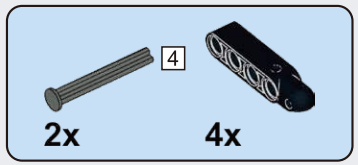

B25

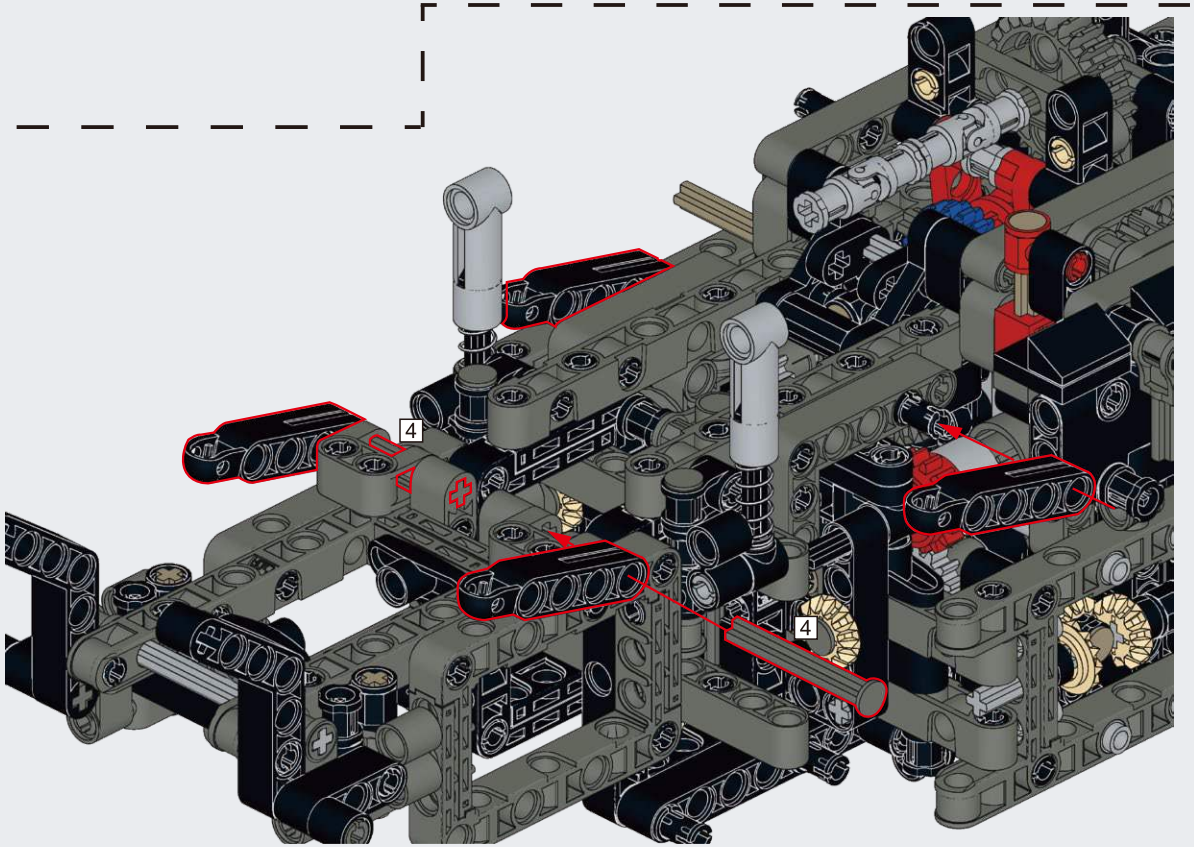

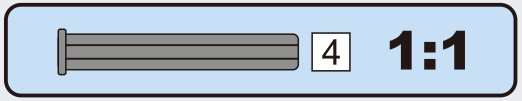

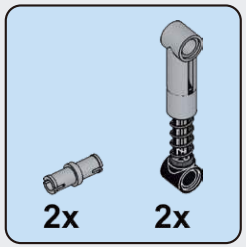

B26

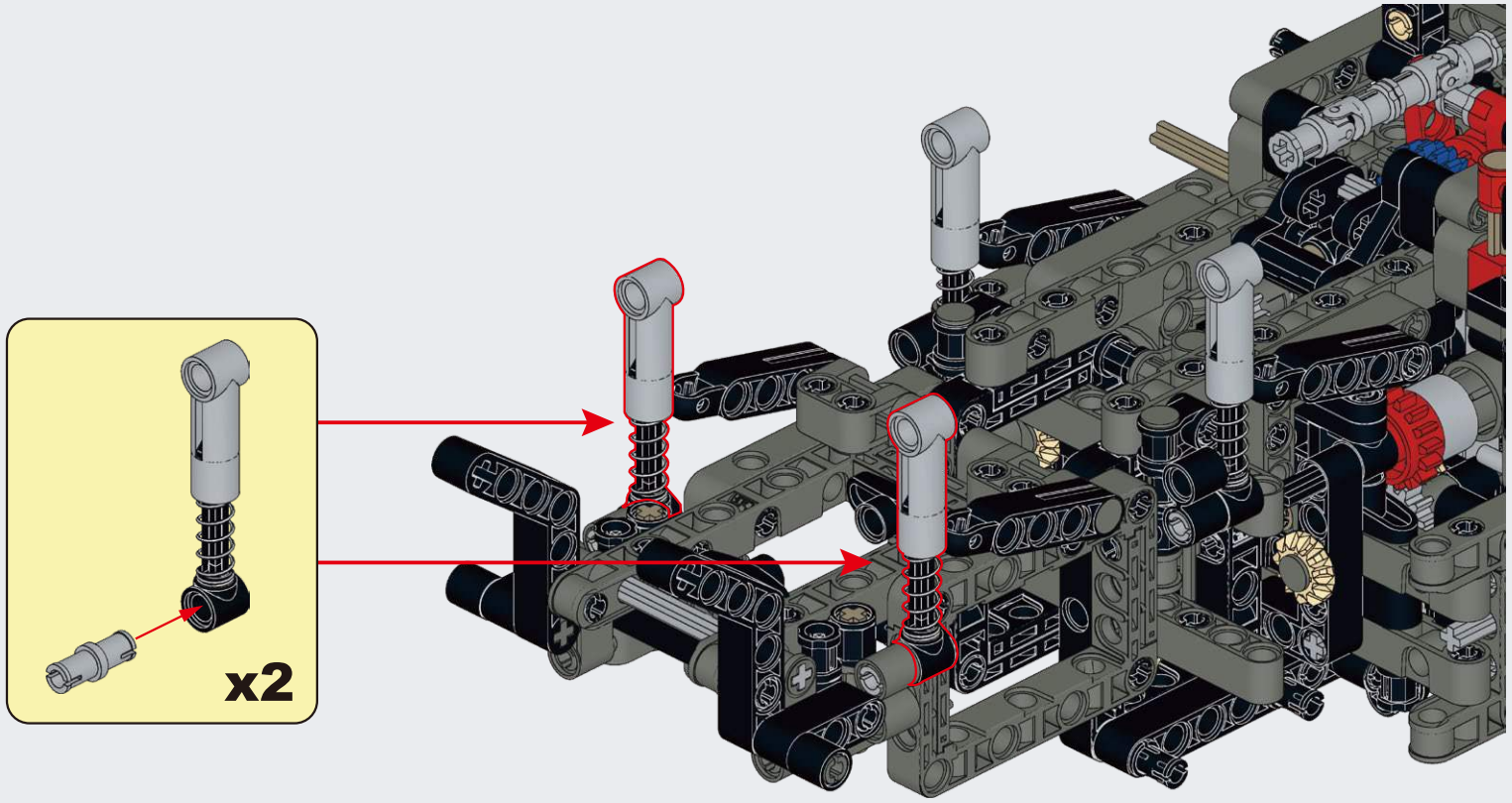

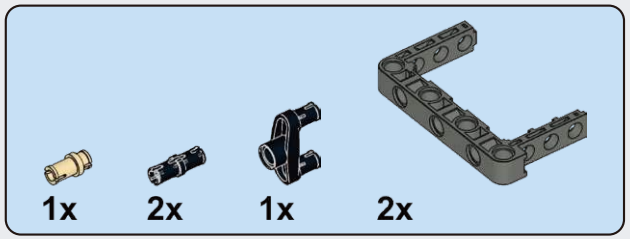

B27

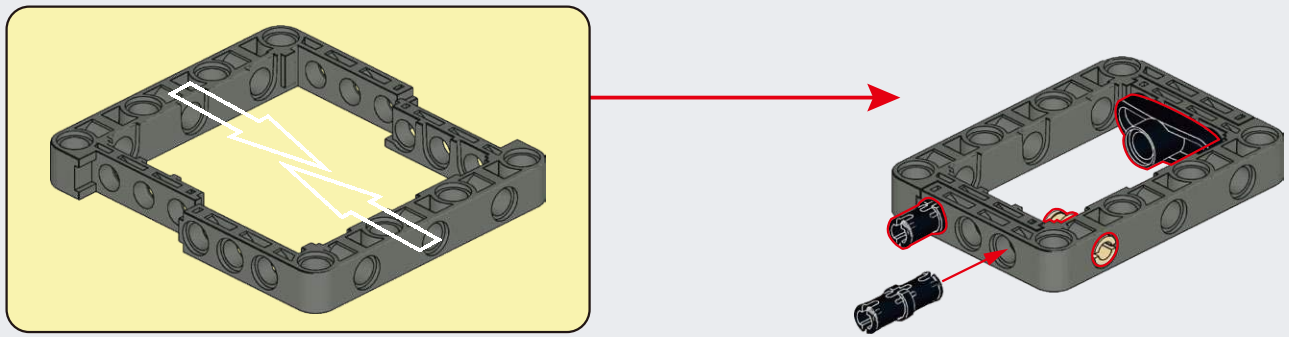

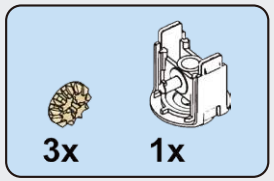

B28

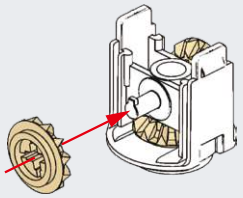

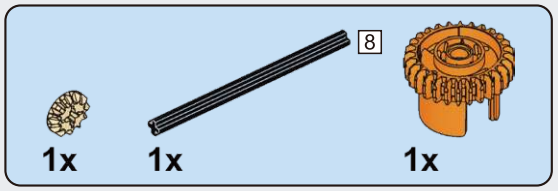

B29

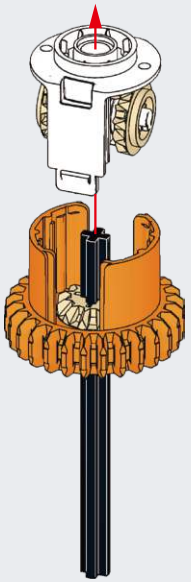

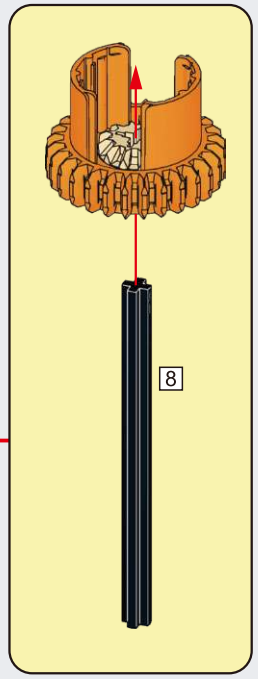

B30

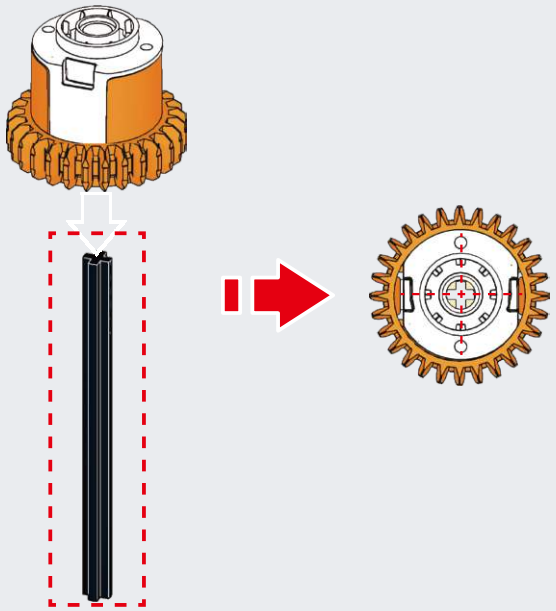

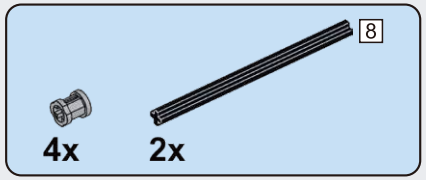

B31

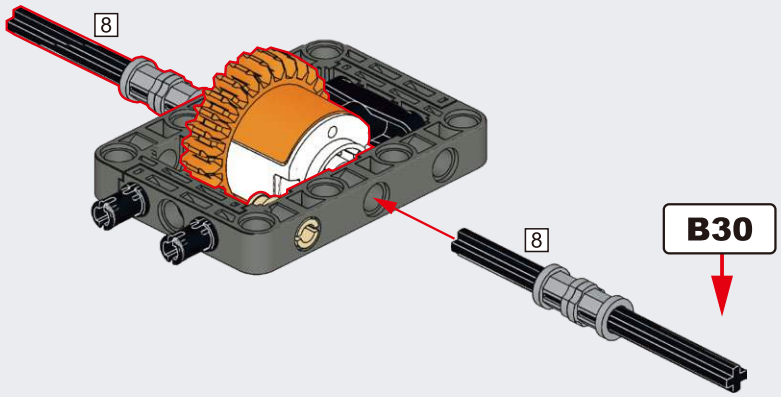

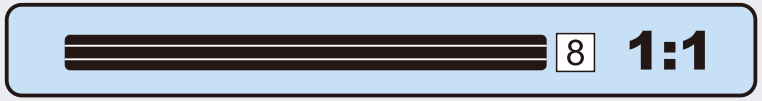

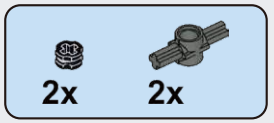

B32

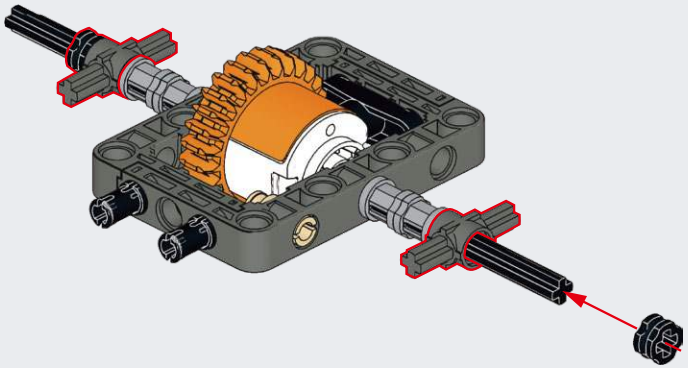

B33

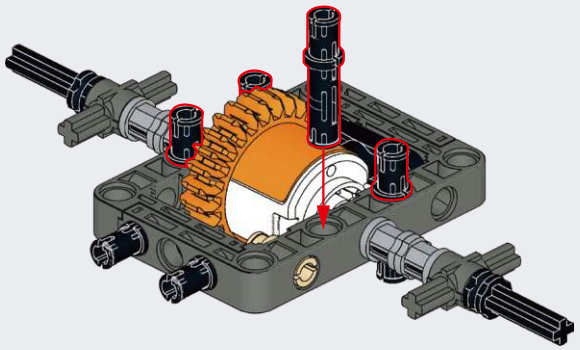

B34

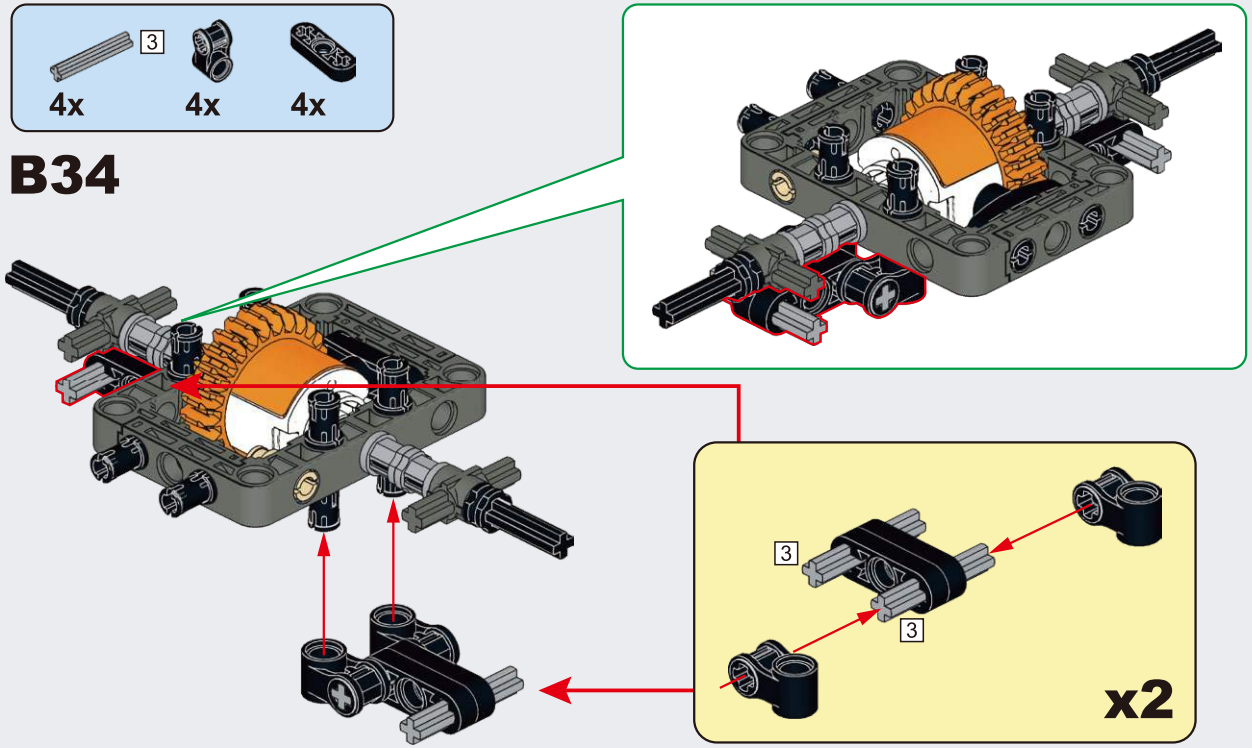

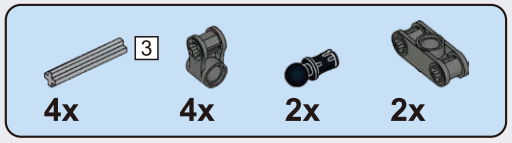

B35

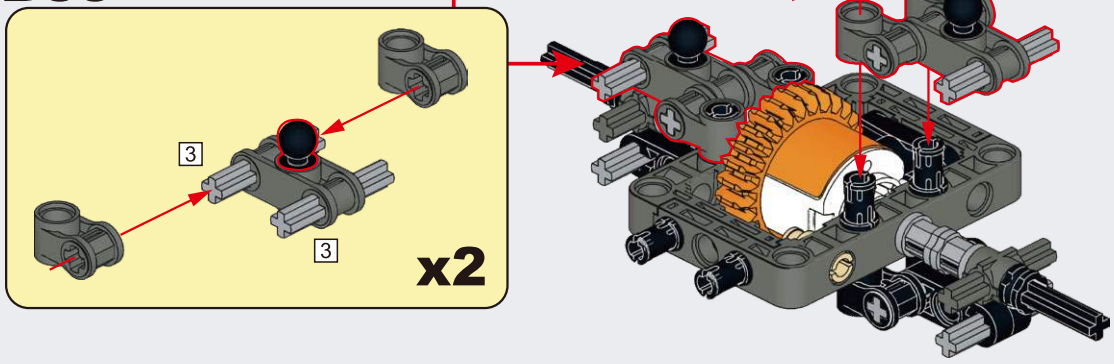

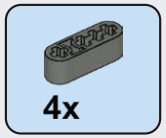

B36

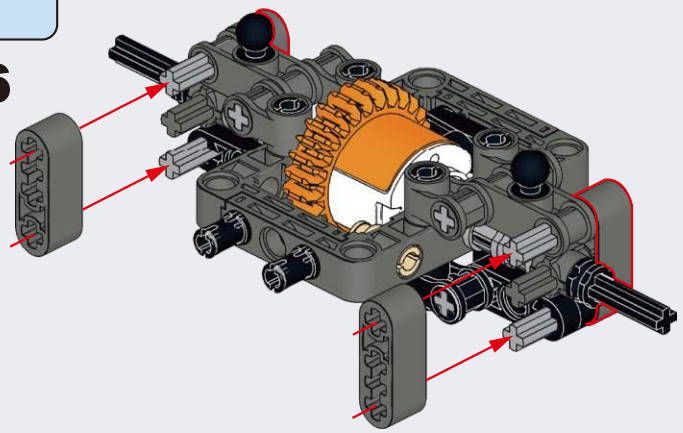

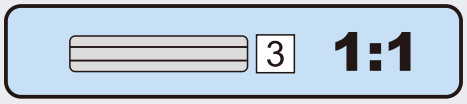

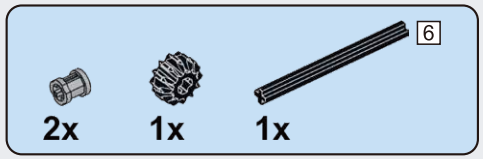

B37

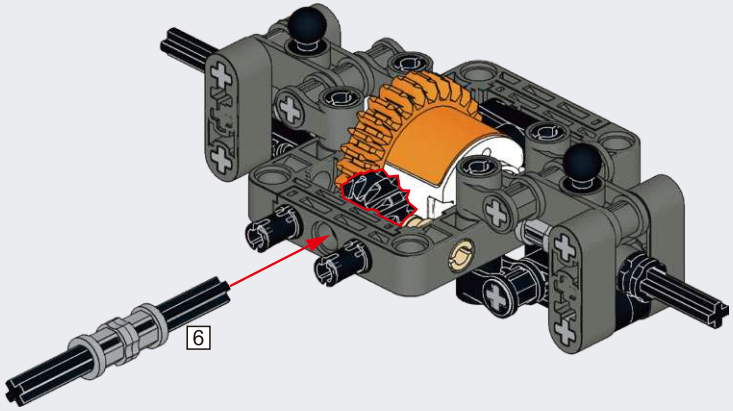

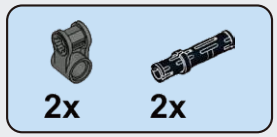

B38

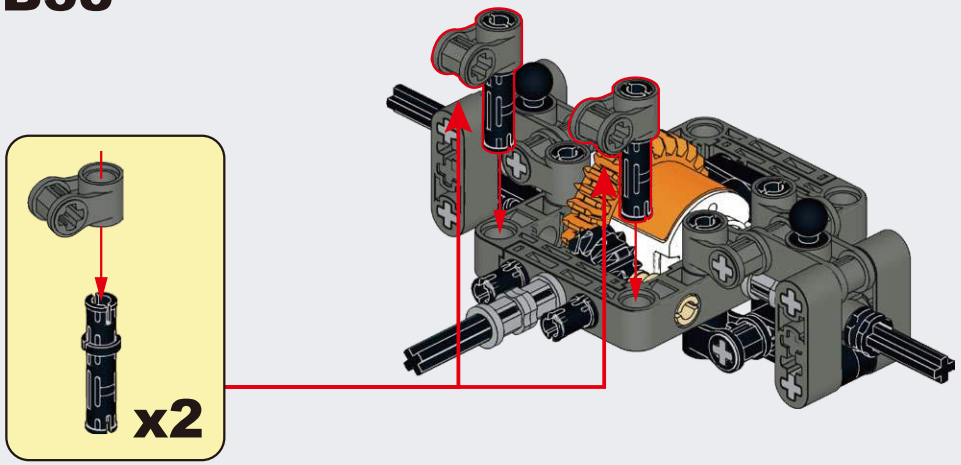

B39

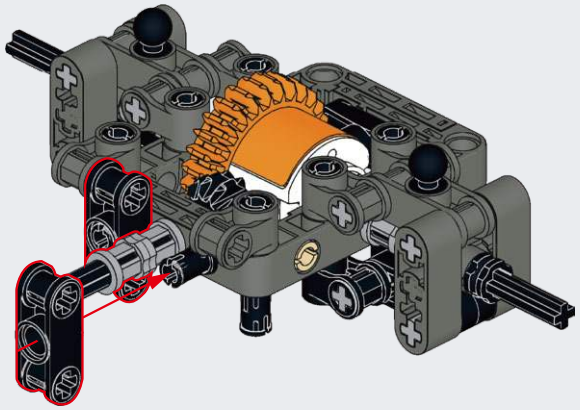

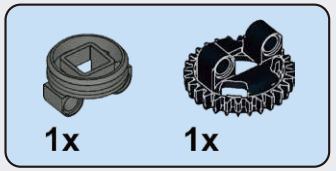

B40

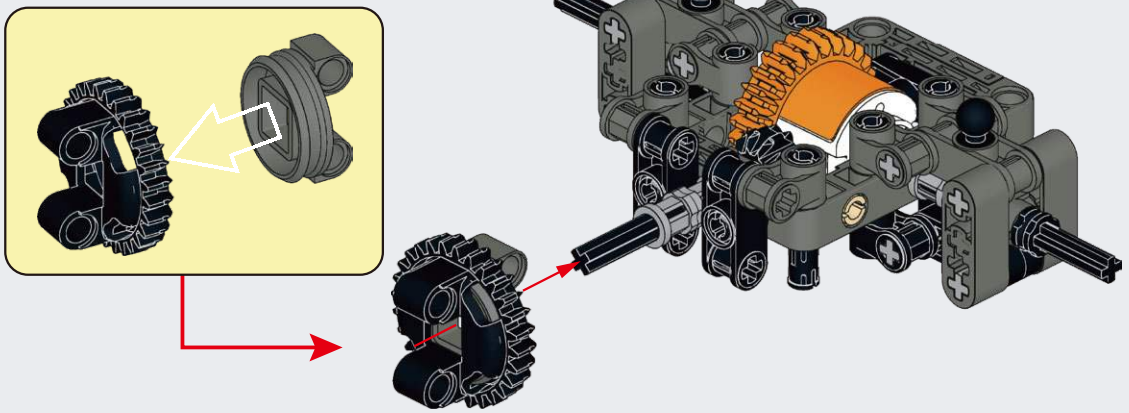

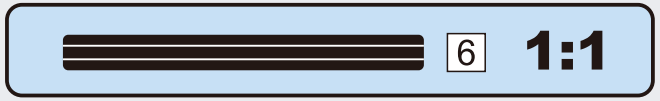

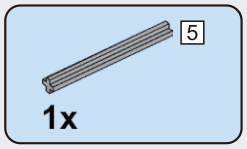

B41

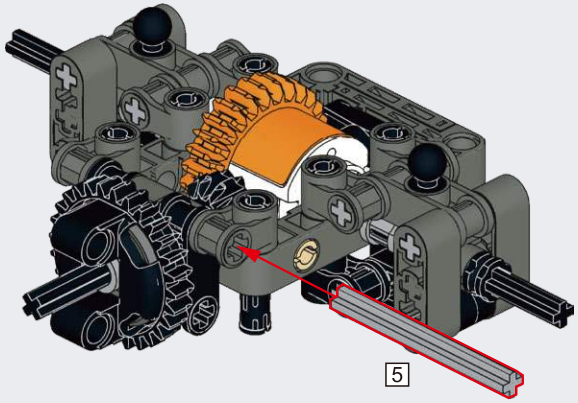

B42

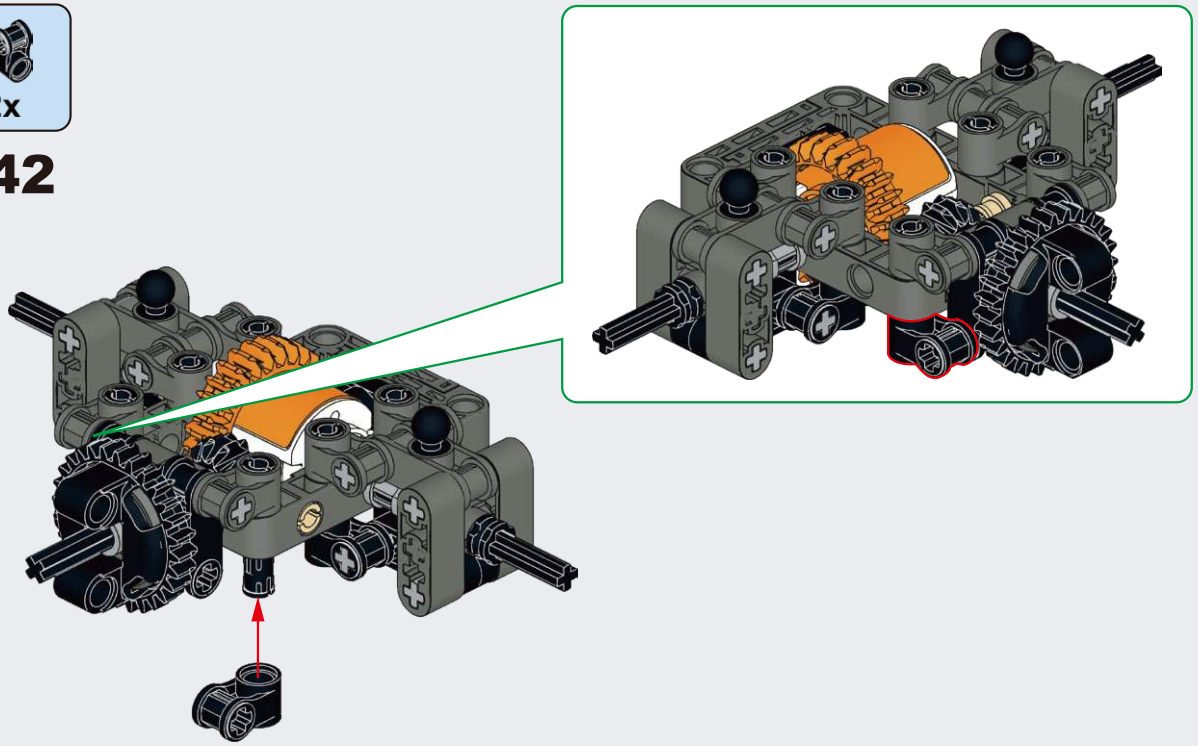

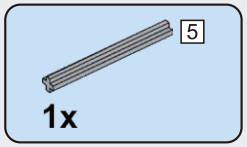

B43

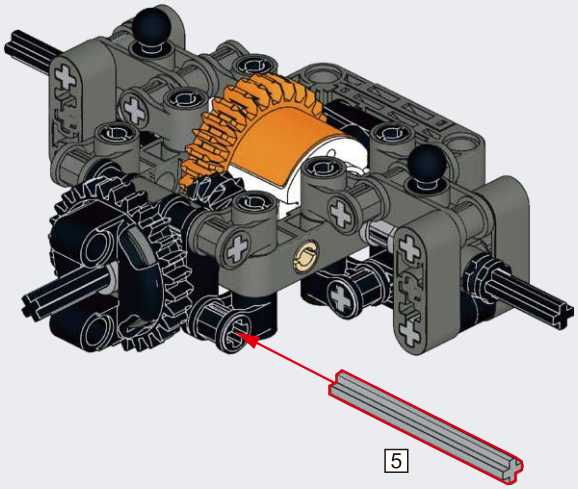

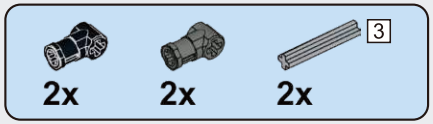

B44

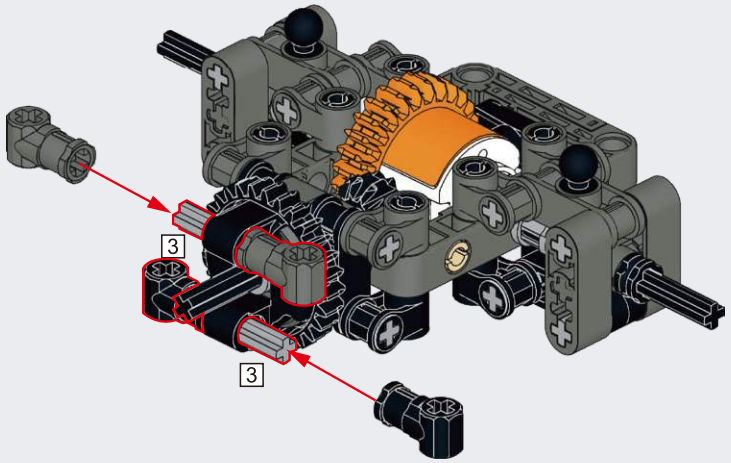

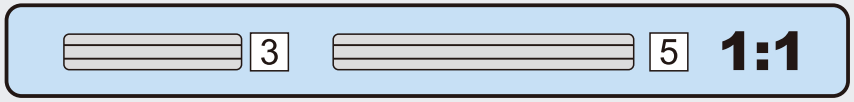

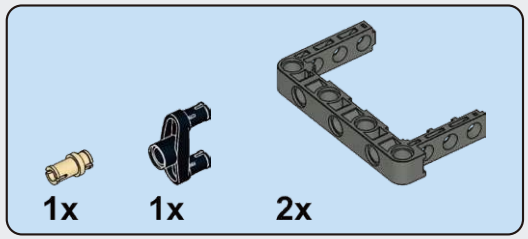

B45

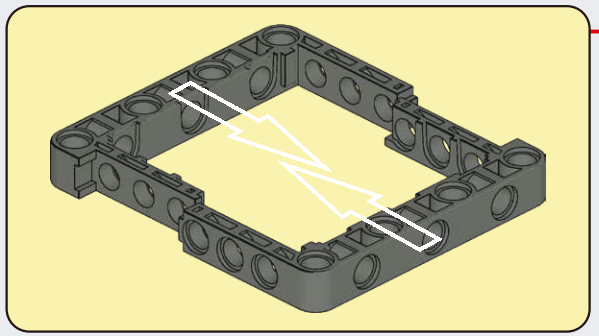

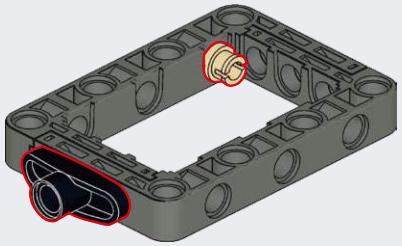

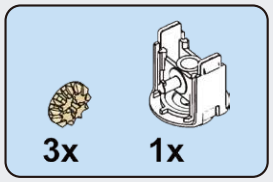

B46

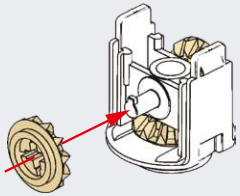

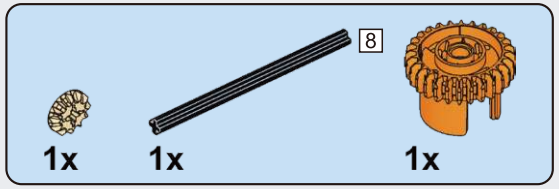

B47

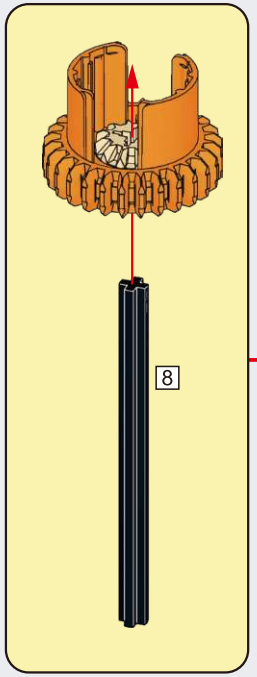

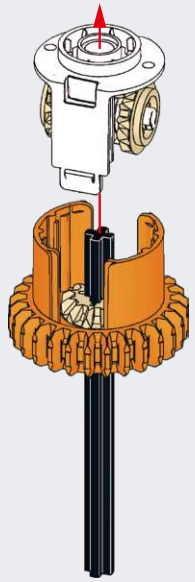

B48

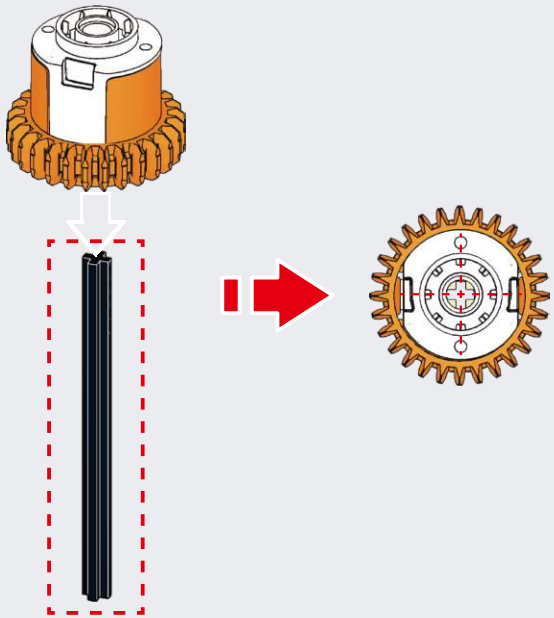

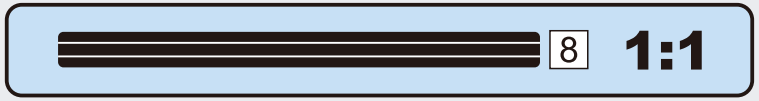

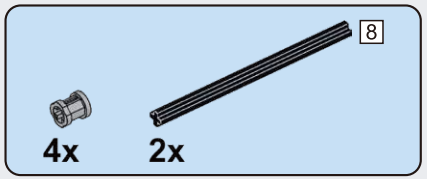

B49

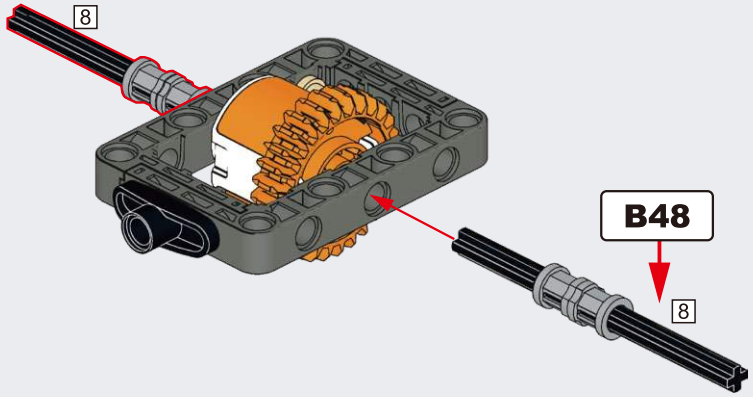

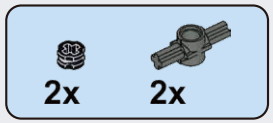

B50

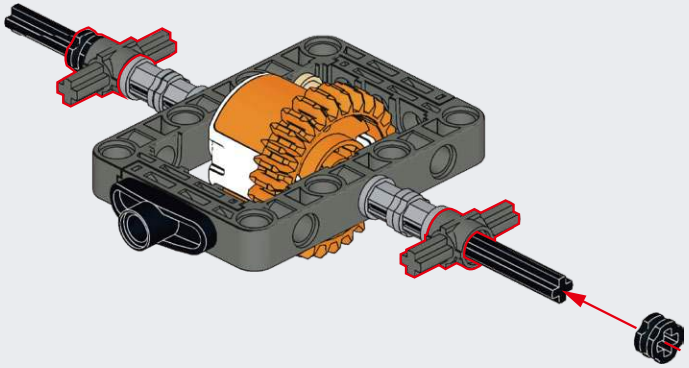

B51

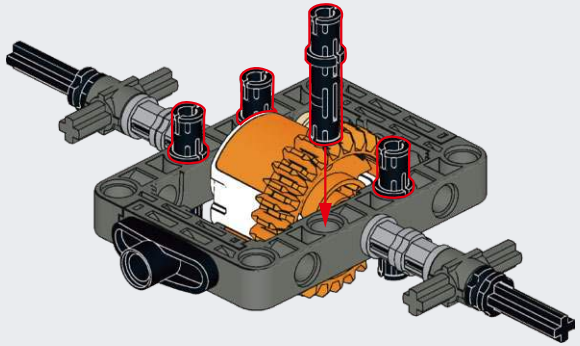

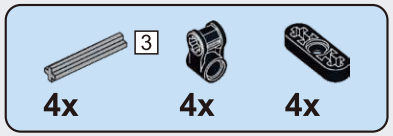

B52

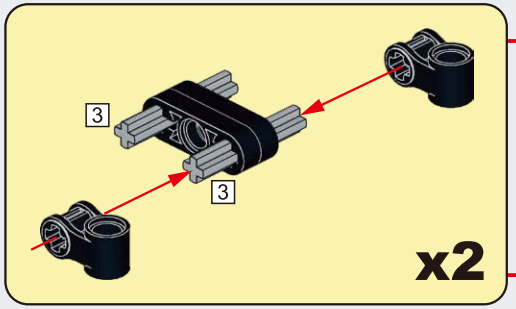

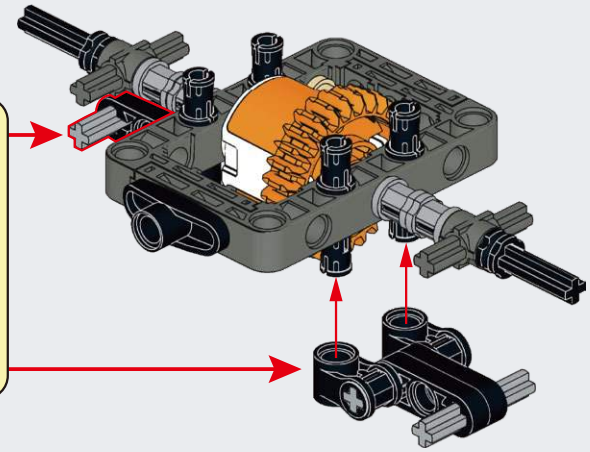

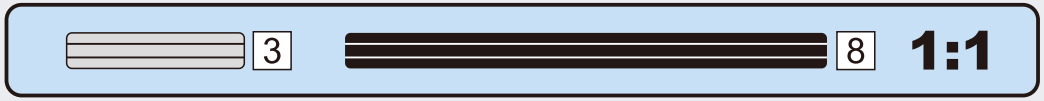

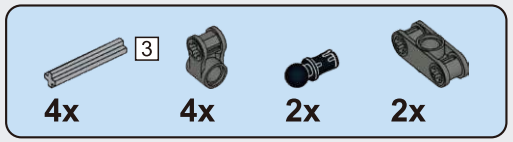

B53

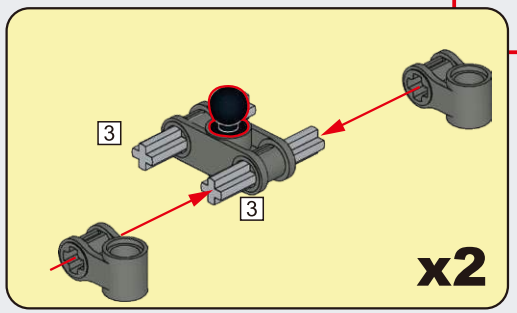

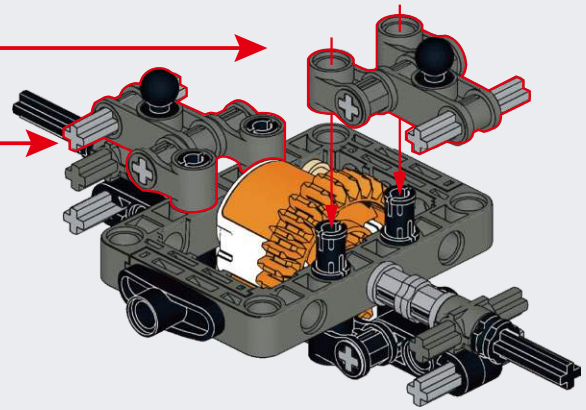

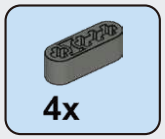

B54

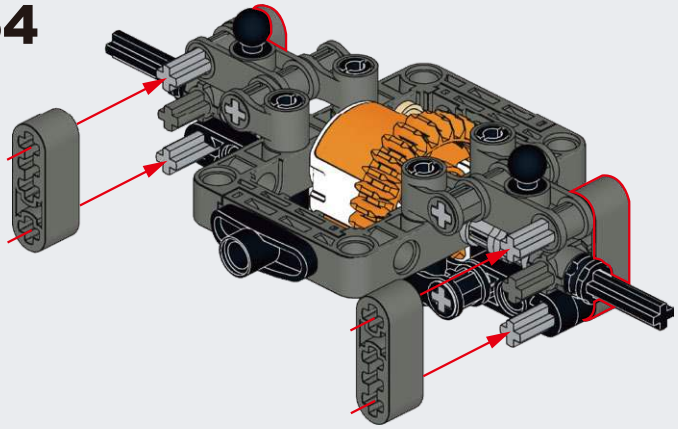

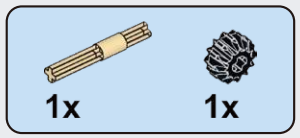

B55

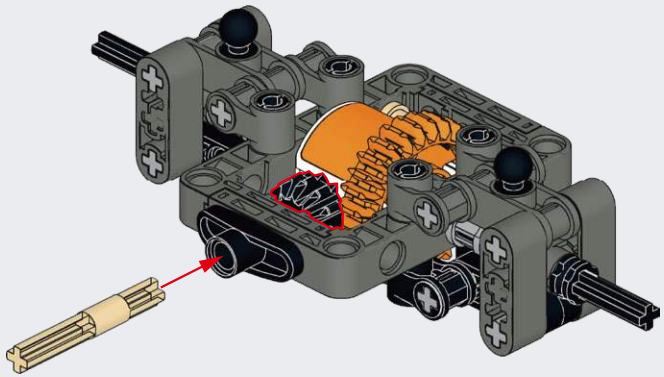

B56

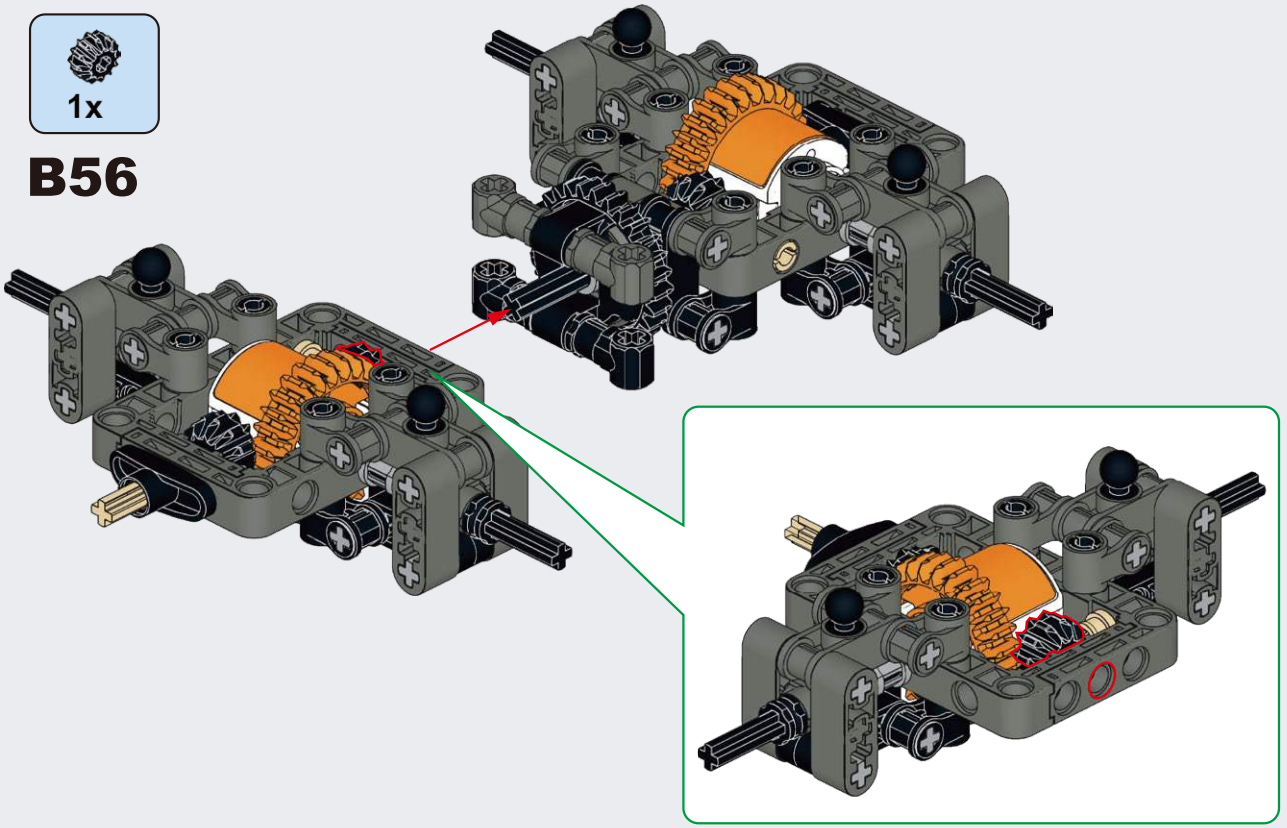

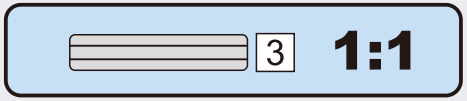

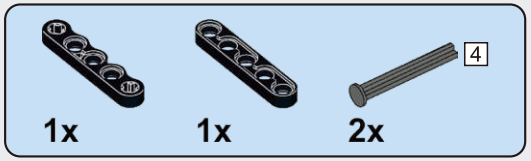

B57

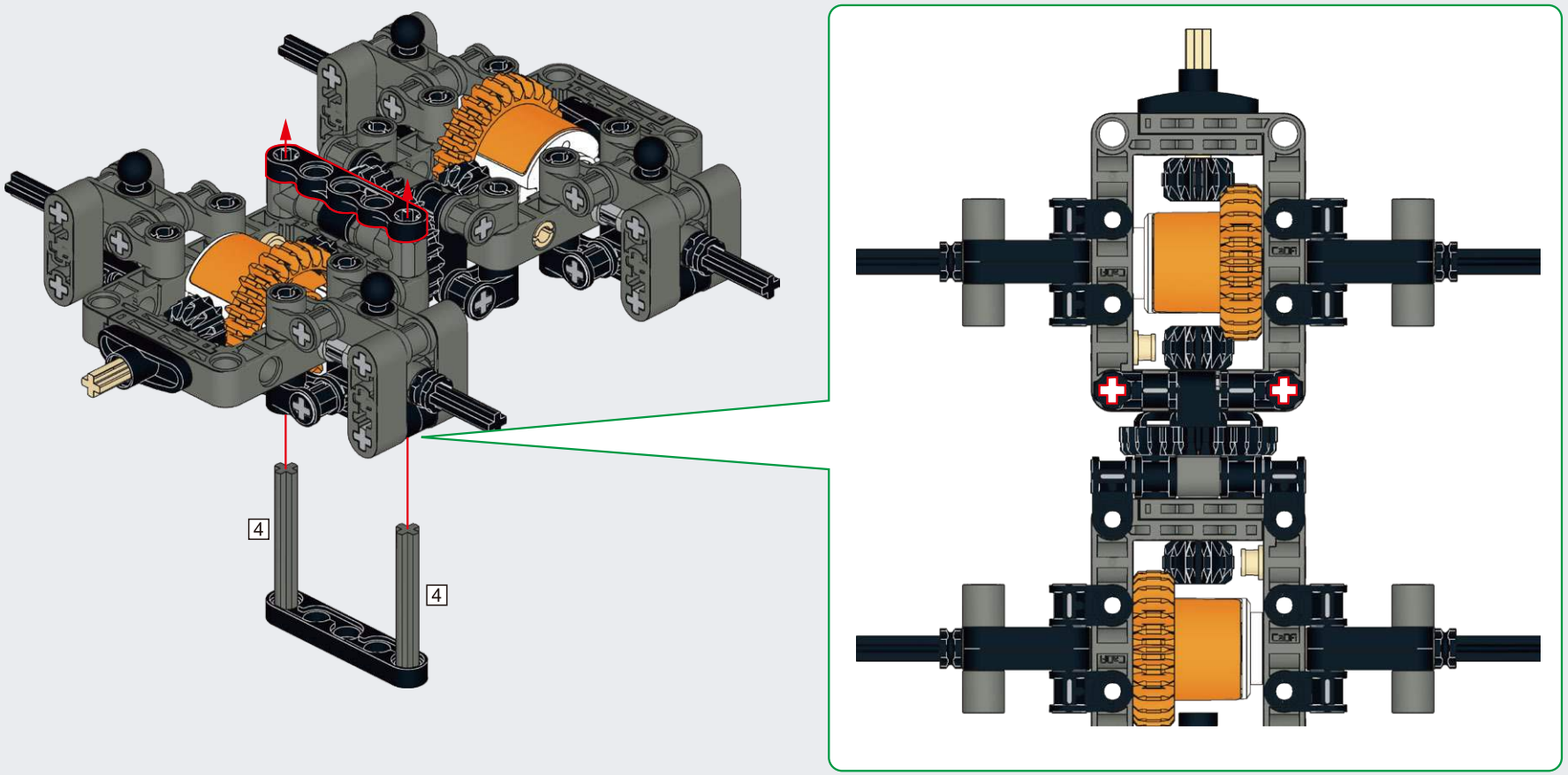

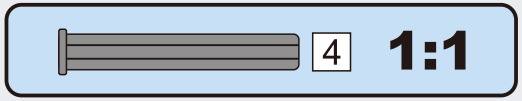

B58

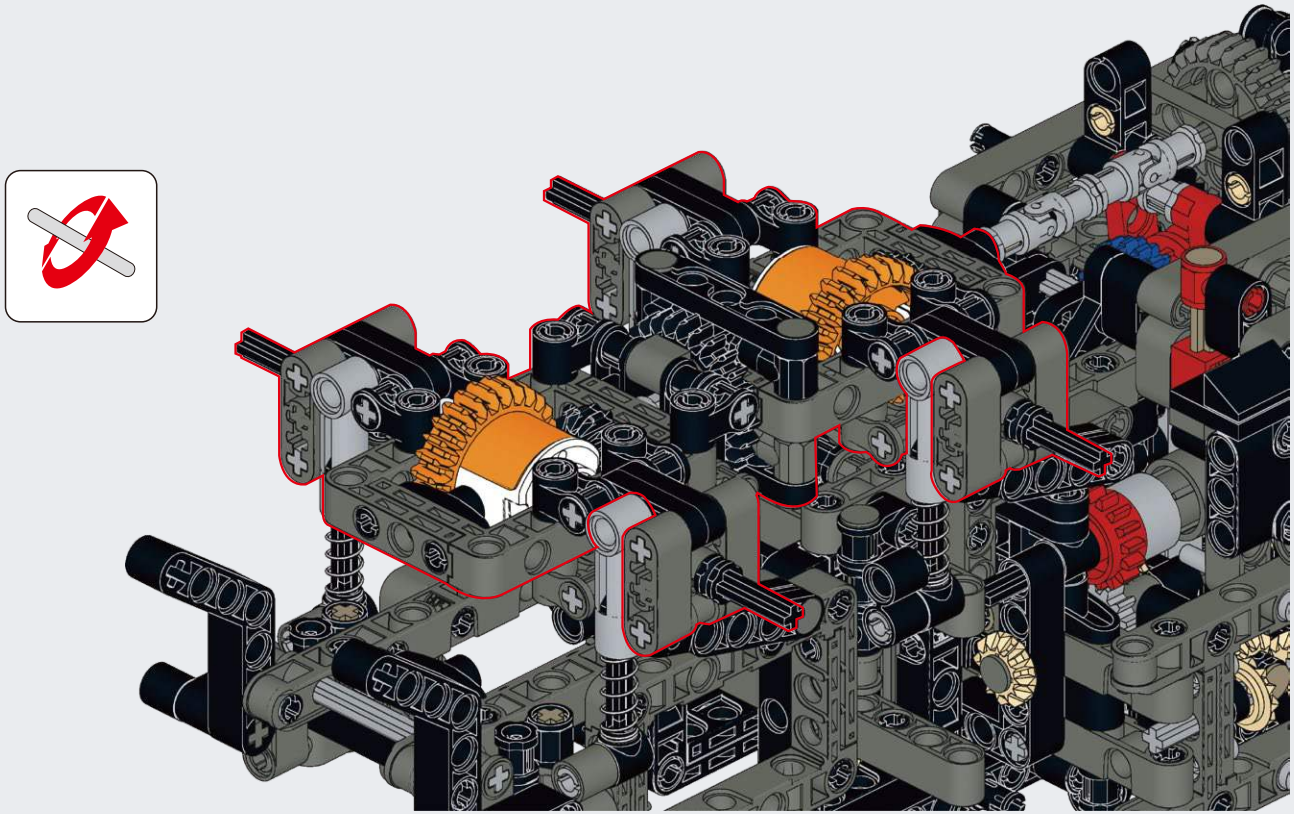

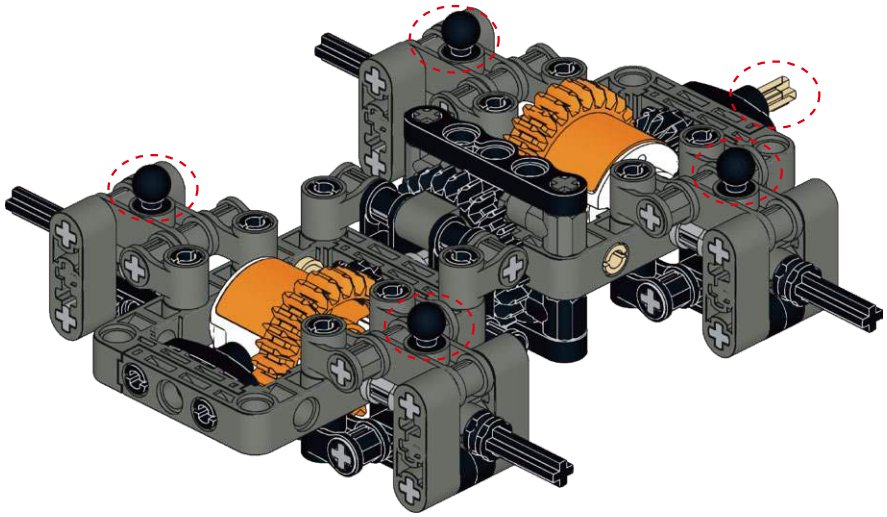

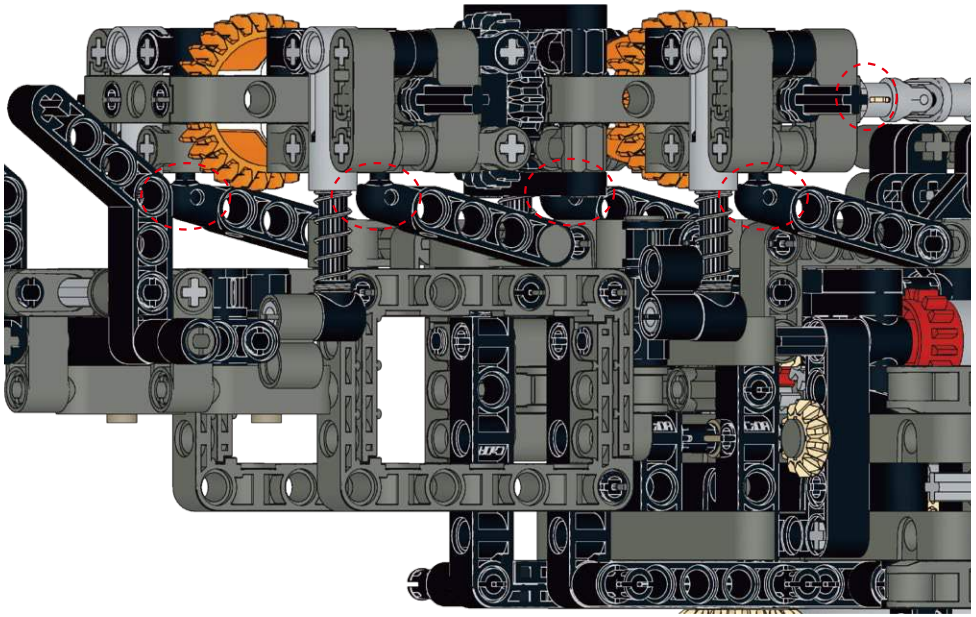

B59

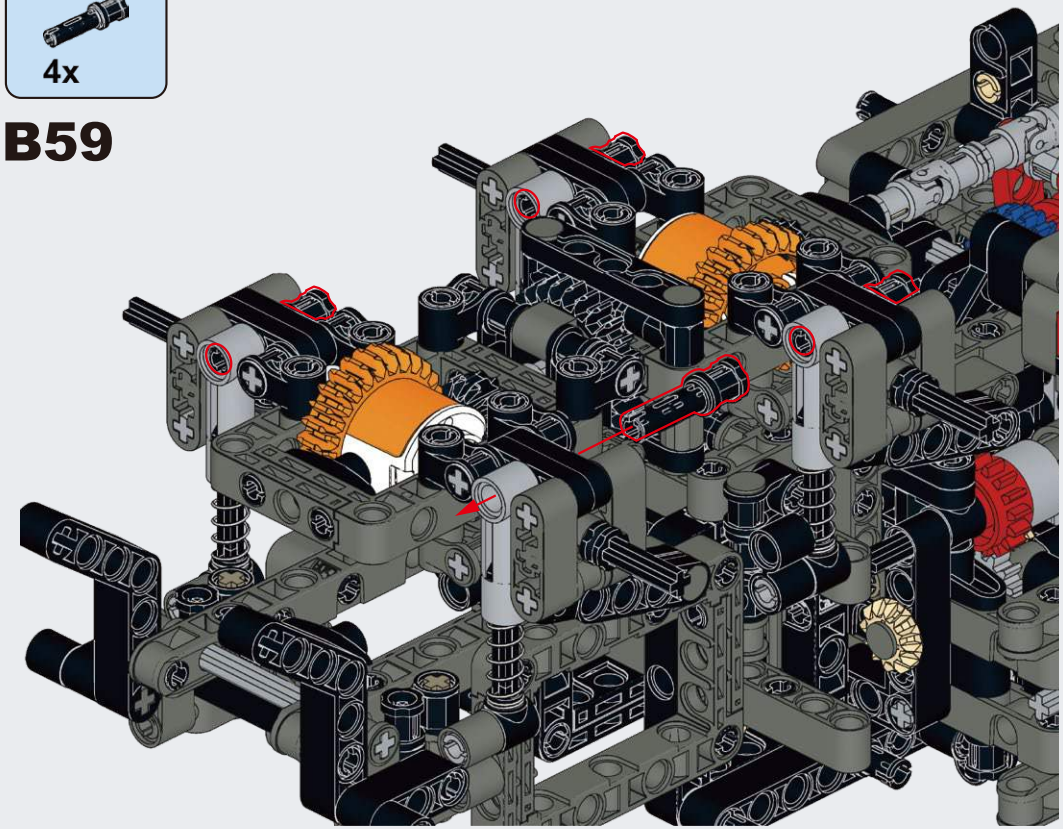

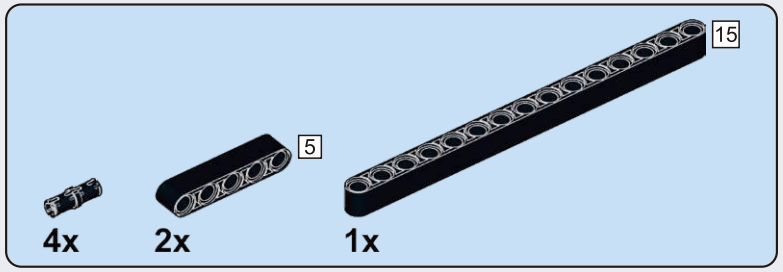

B60

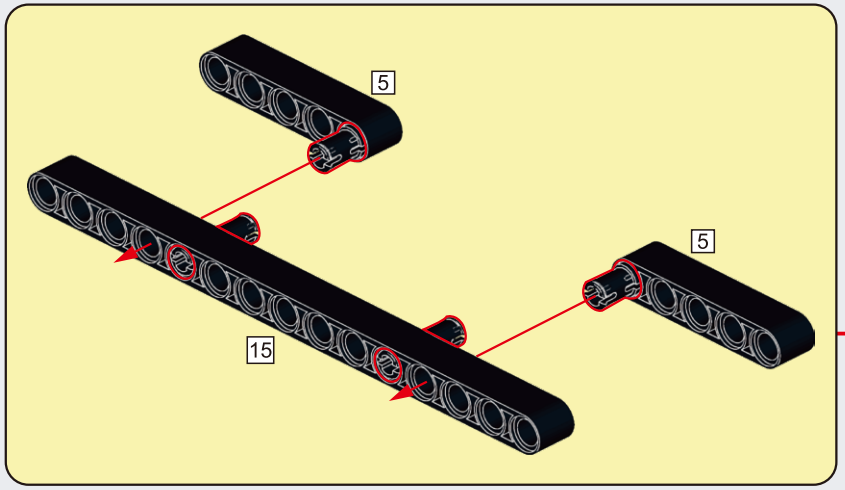

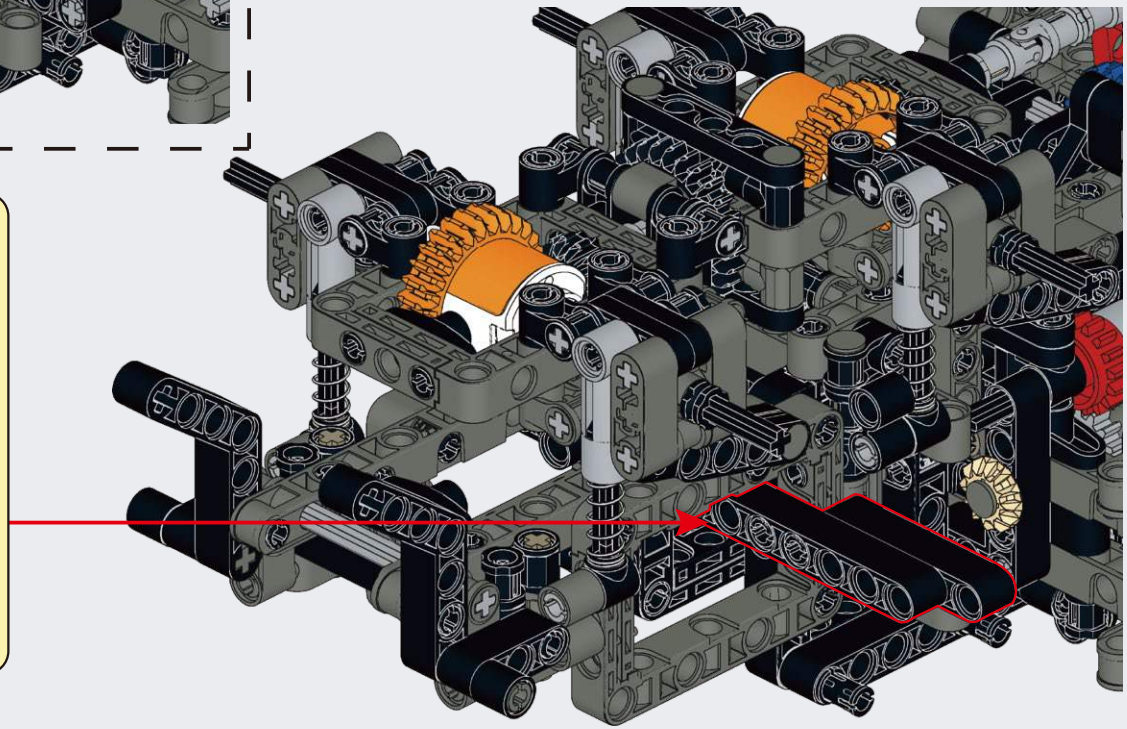

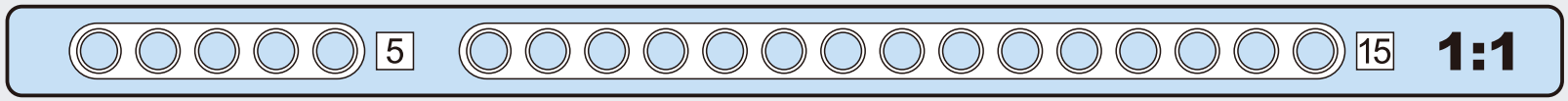

B61

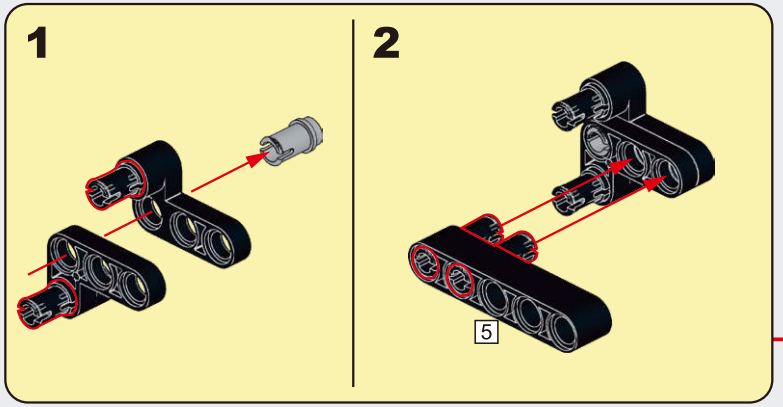

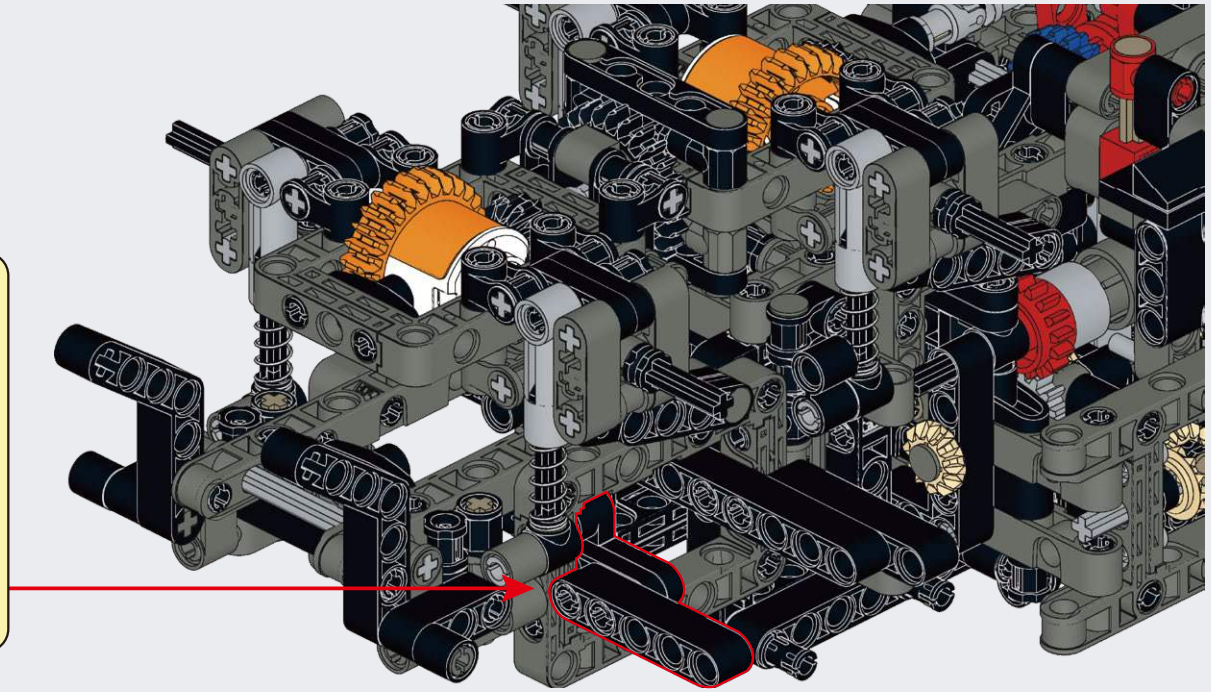

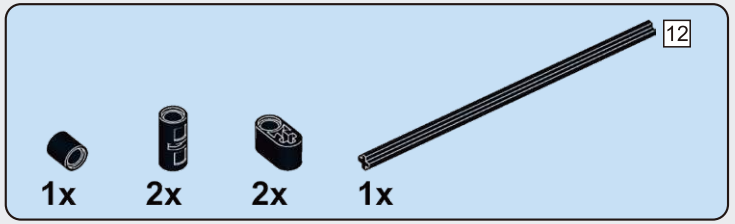

B62

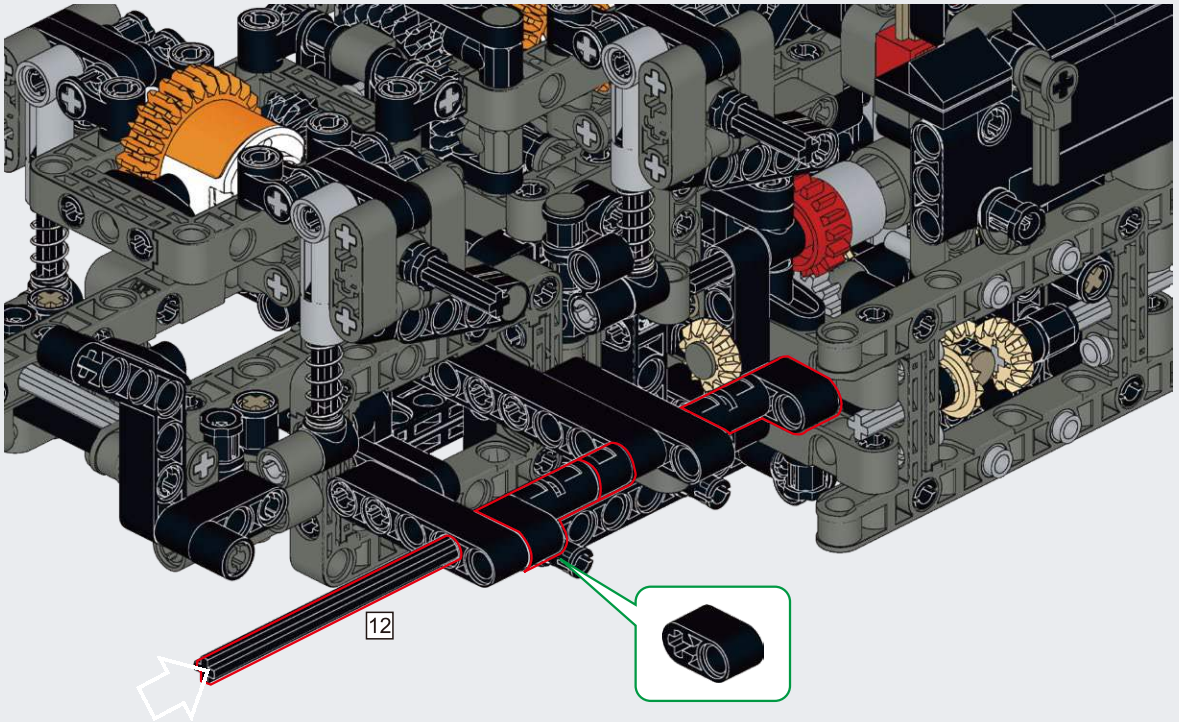

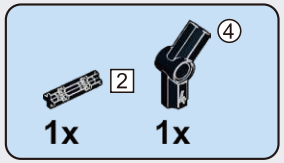

B63

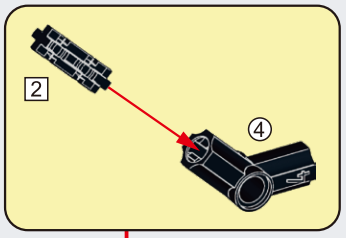

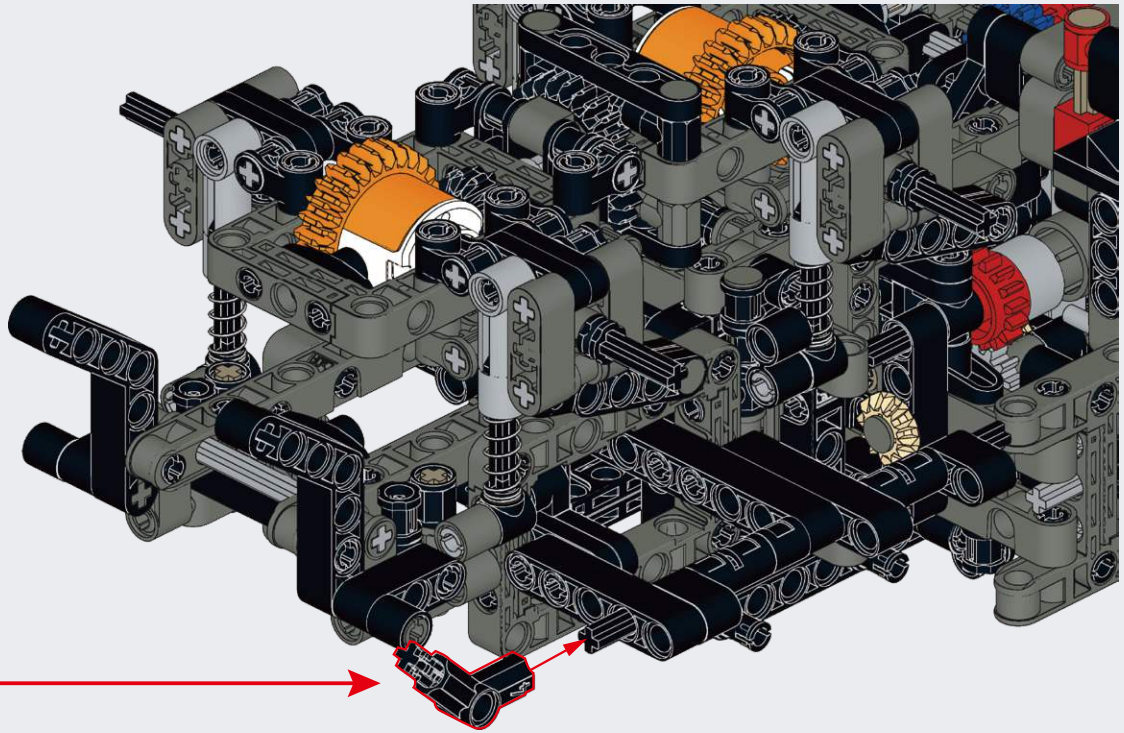

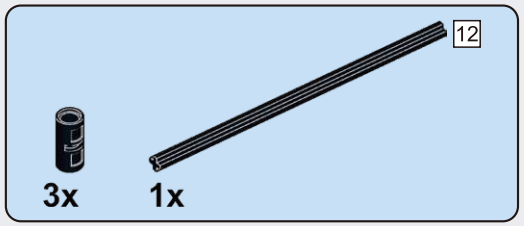

B64

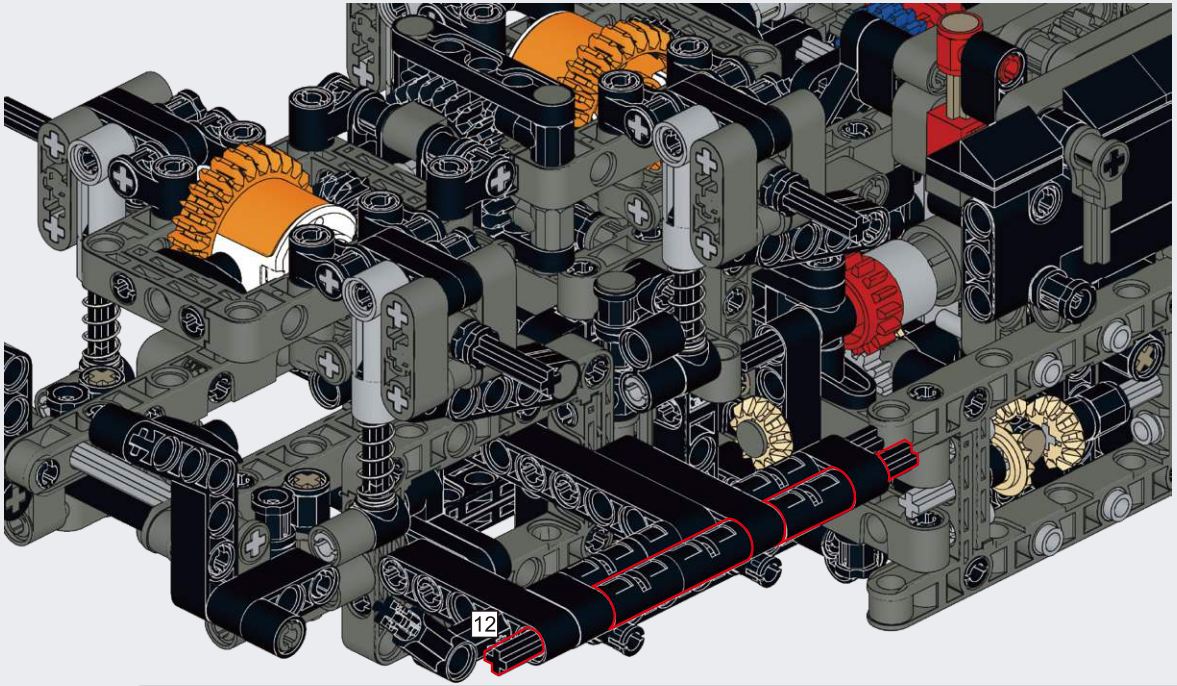

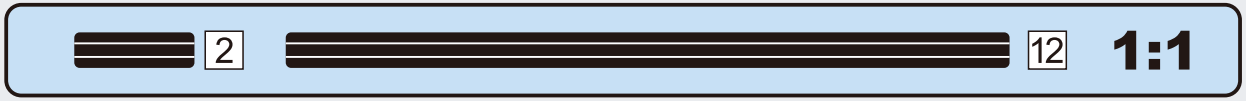

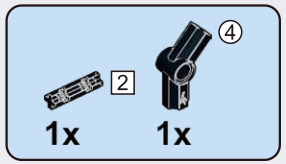

B65

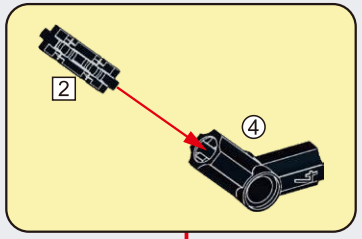

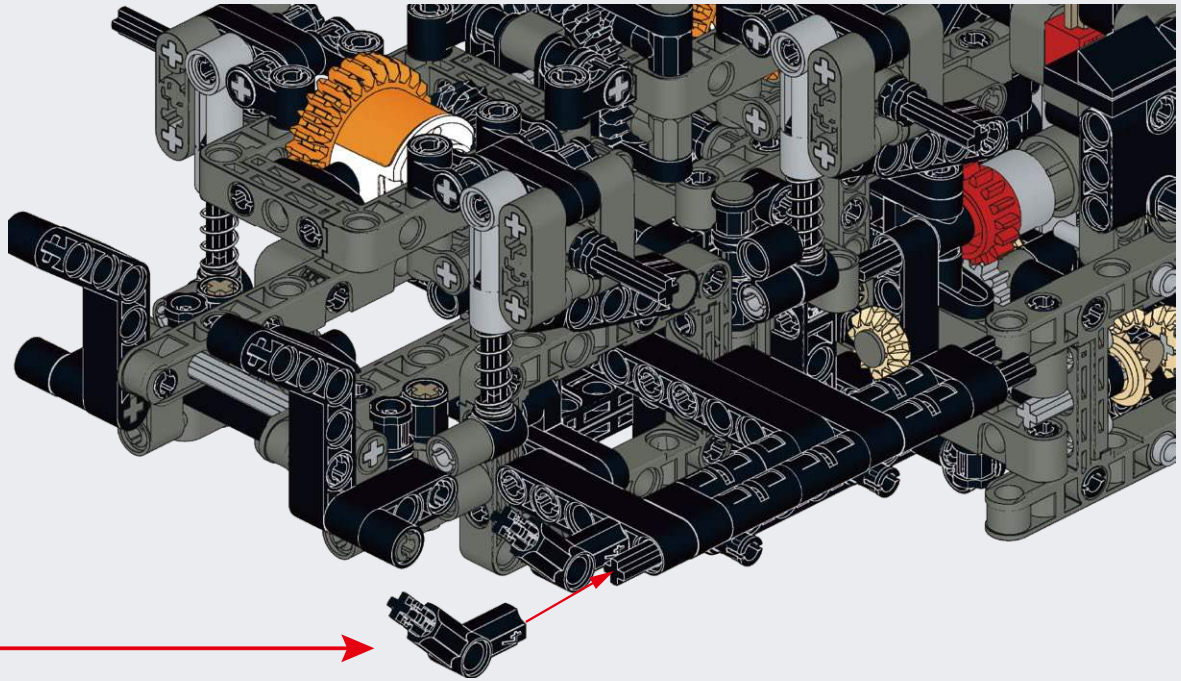

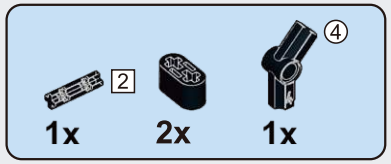

B66

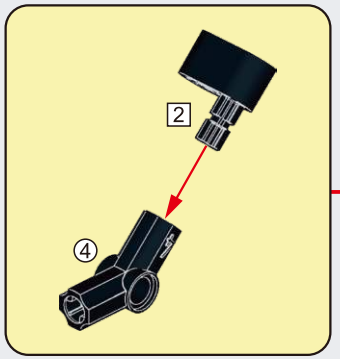

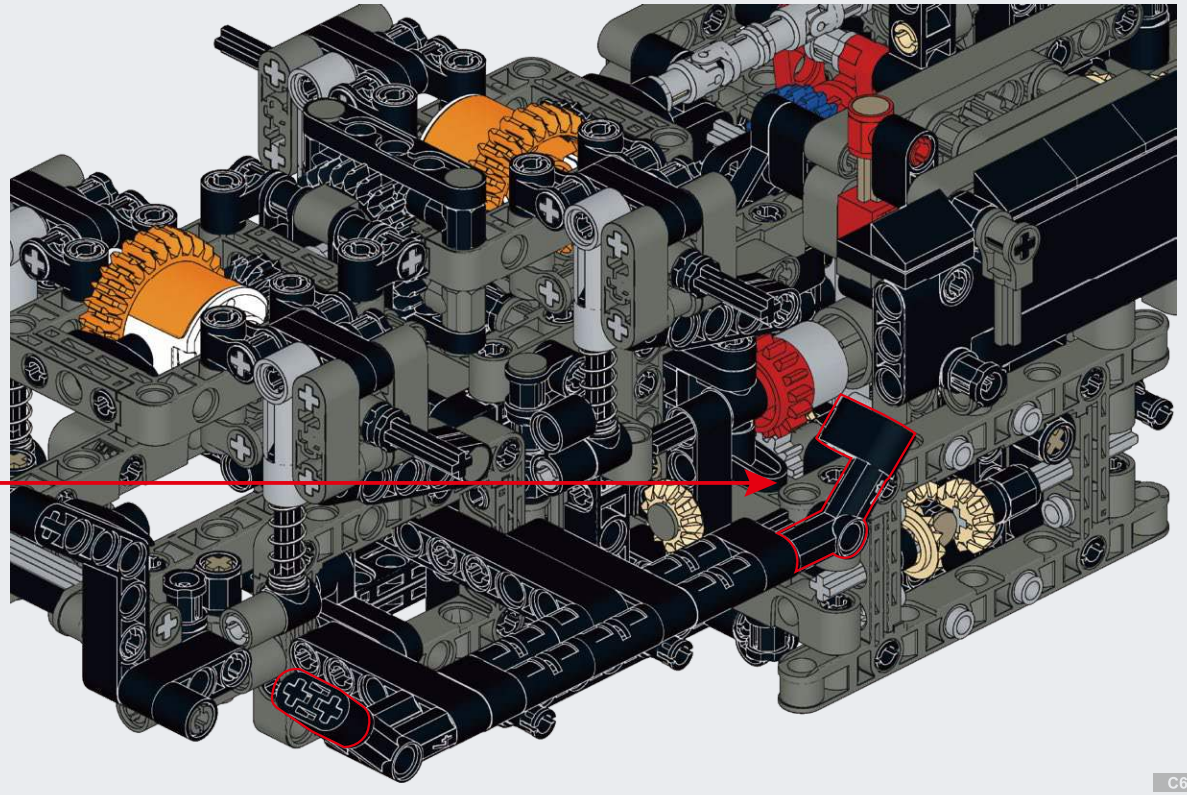

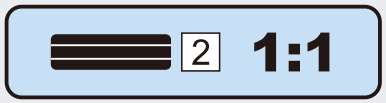

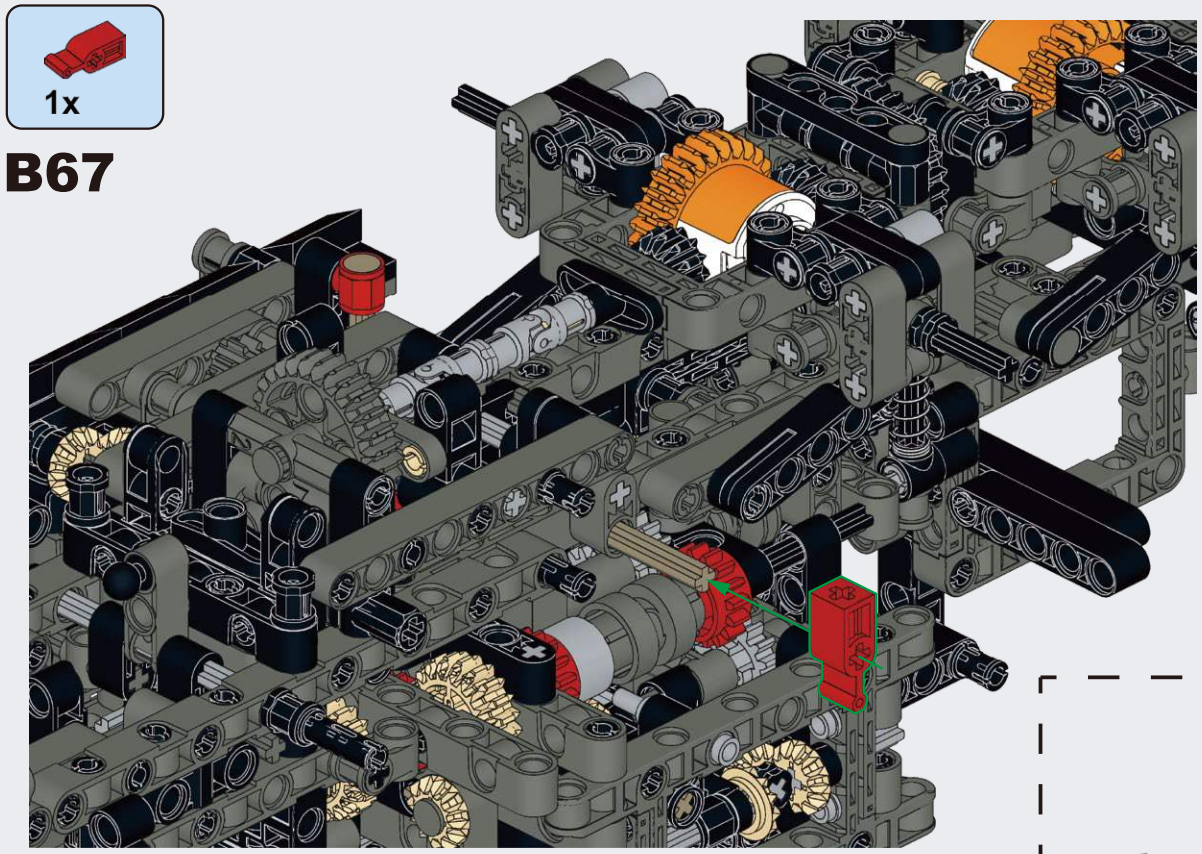

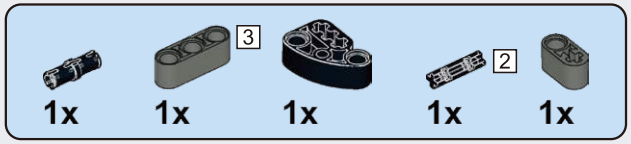

B68

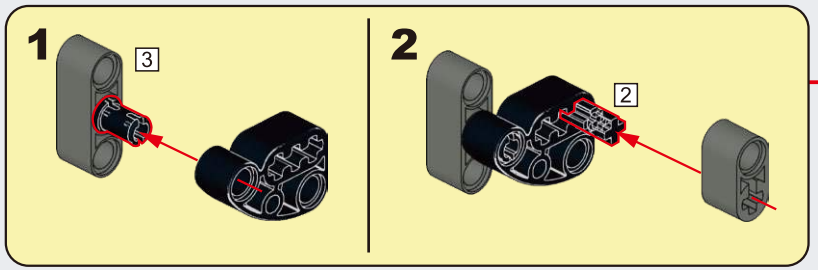

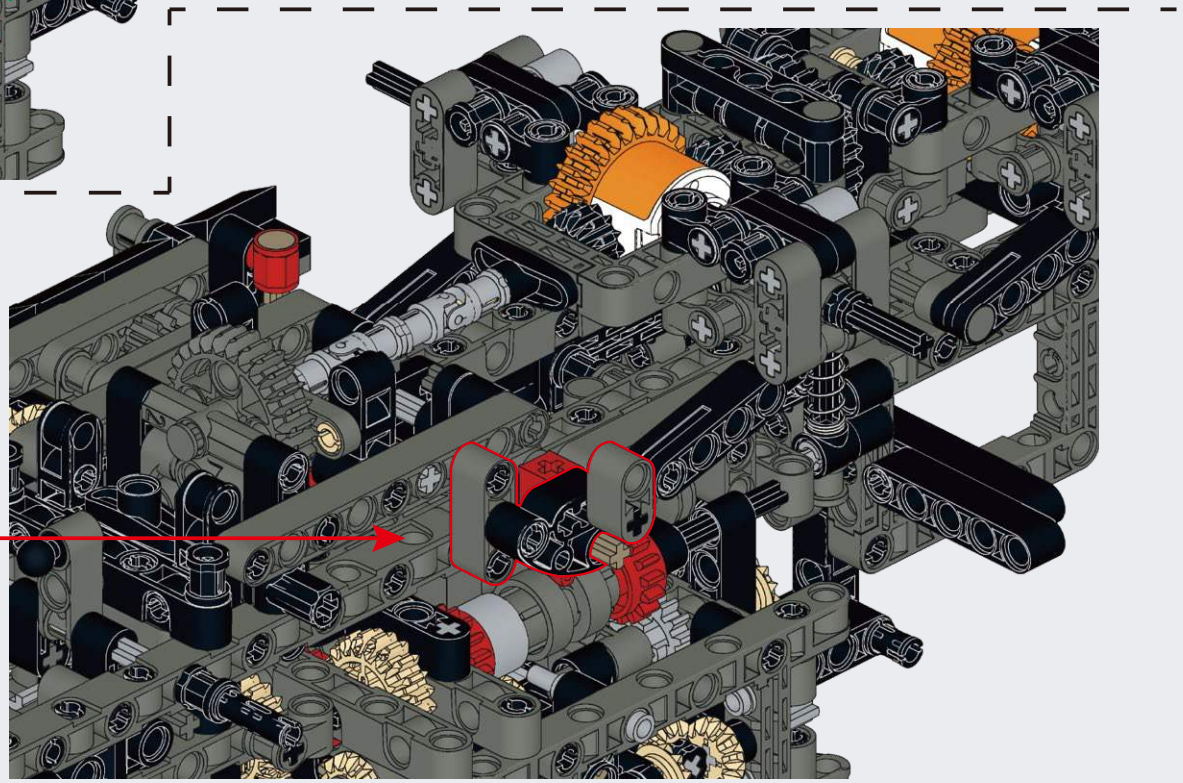

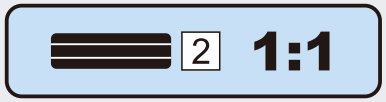

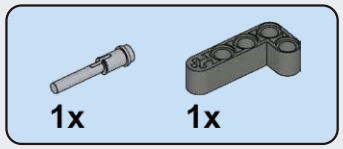

B69

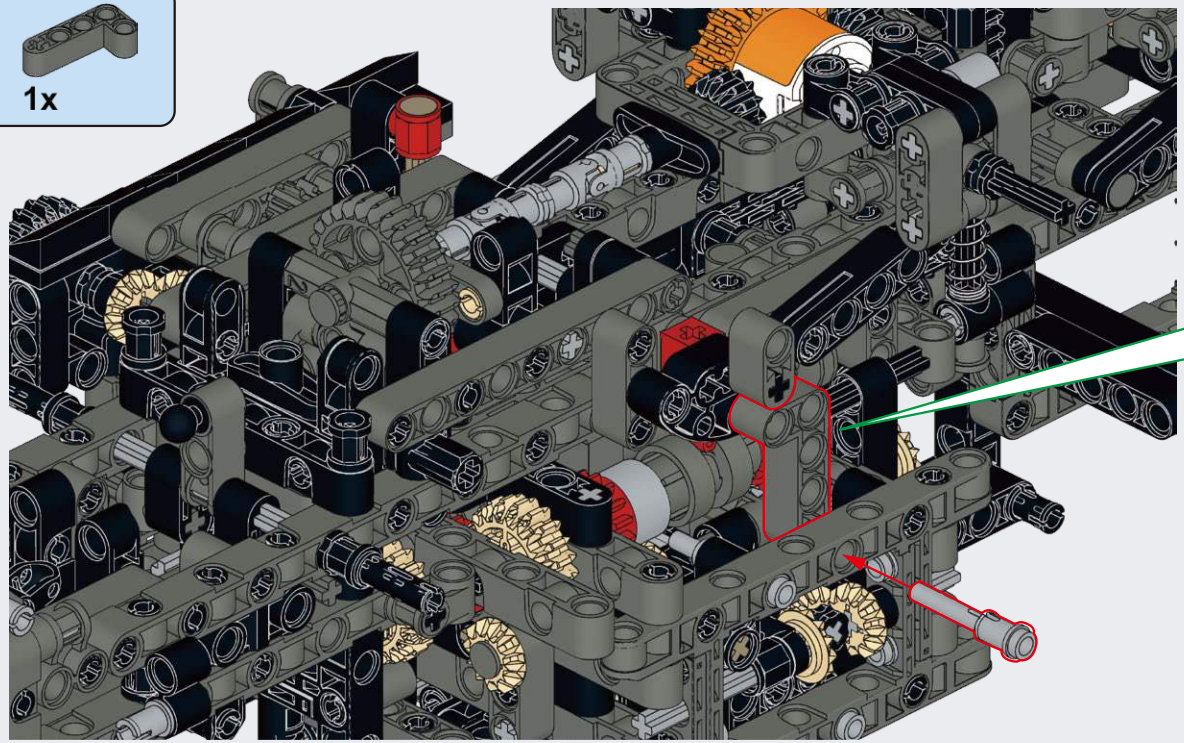

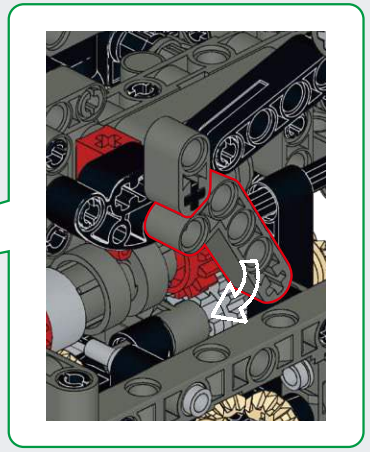

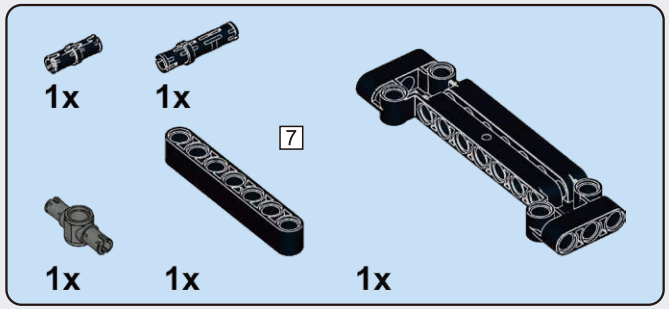

B70

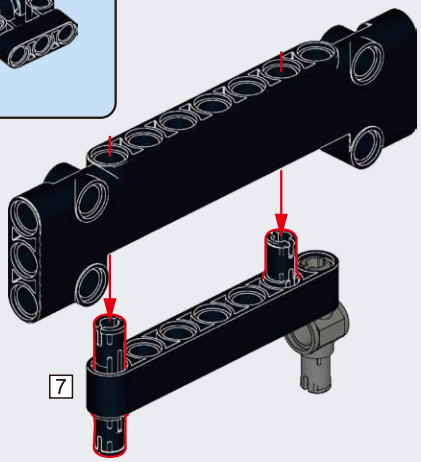

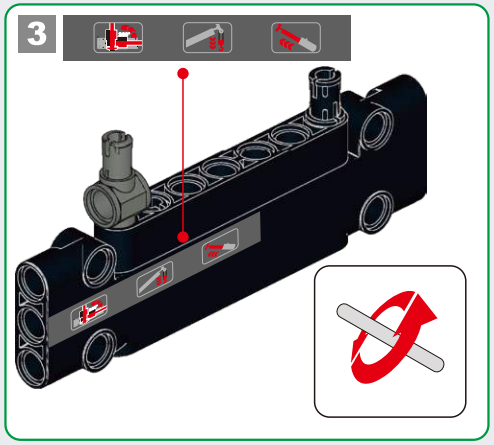

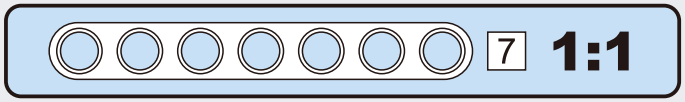

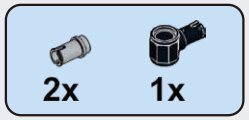

B71

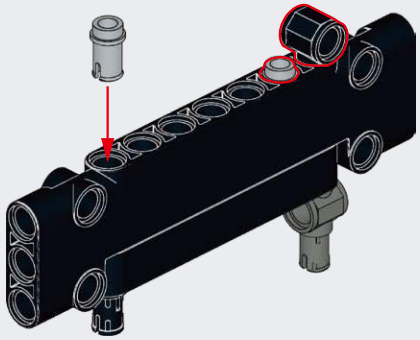

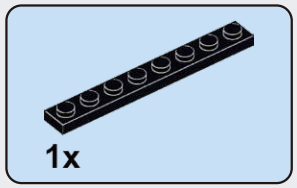

B72

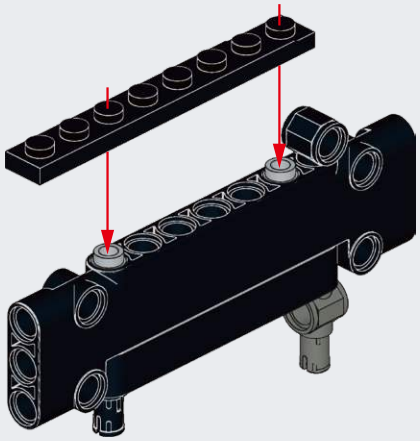

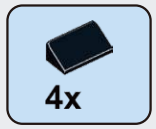

B73

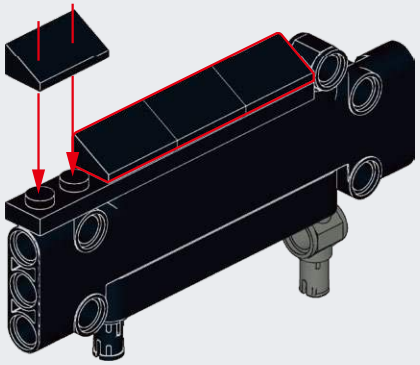

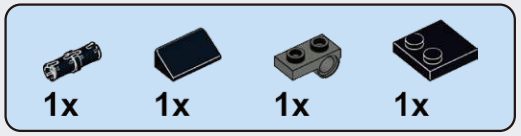

B74

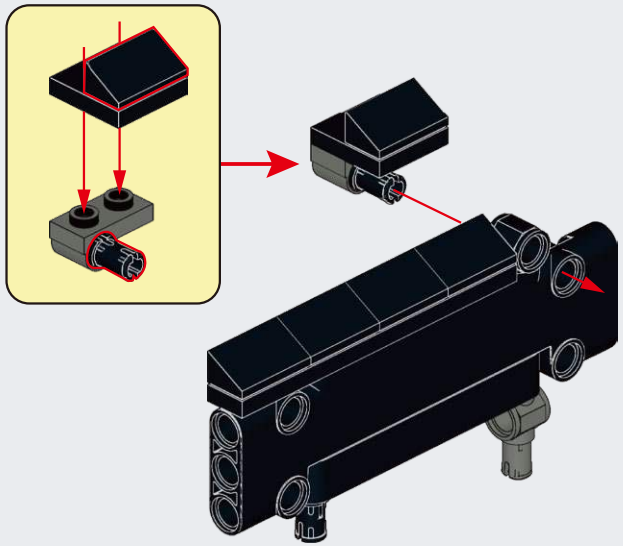

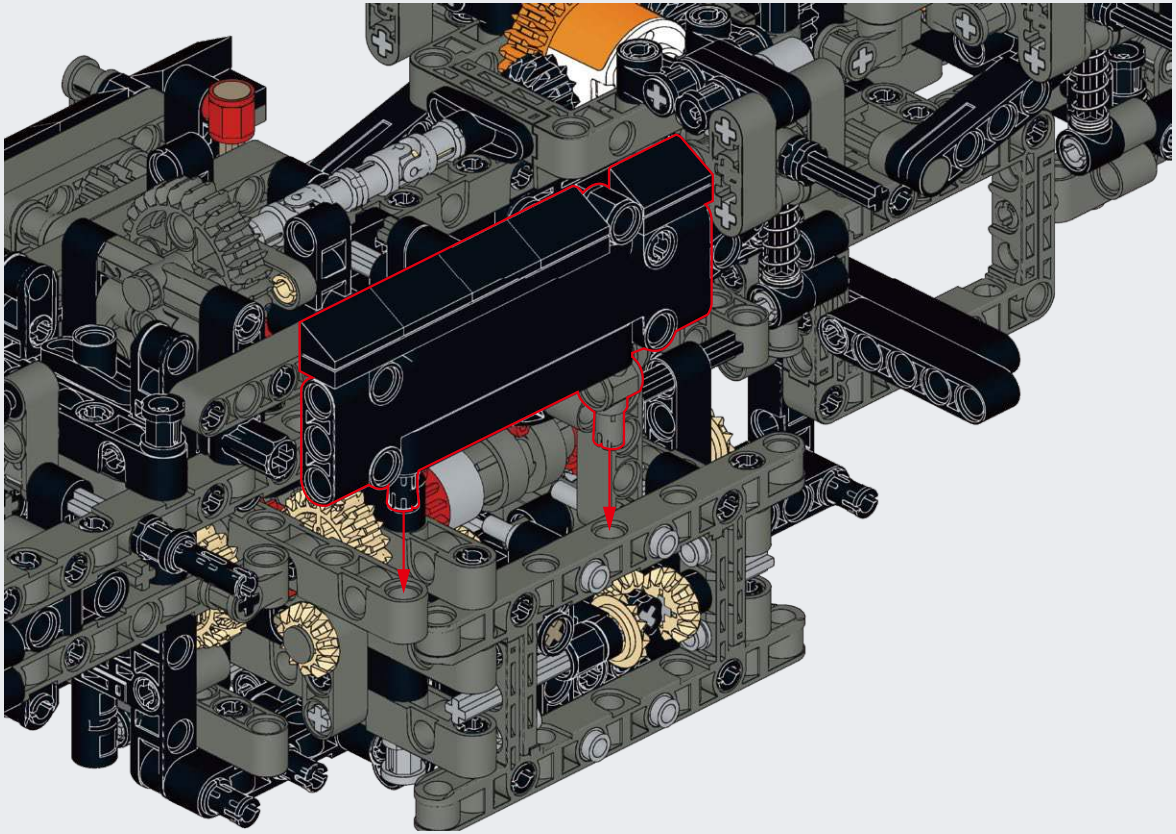

B75

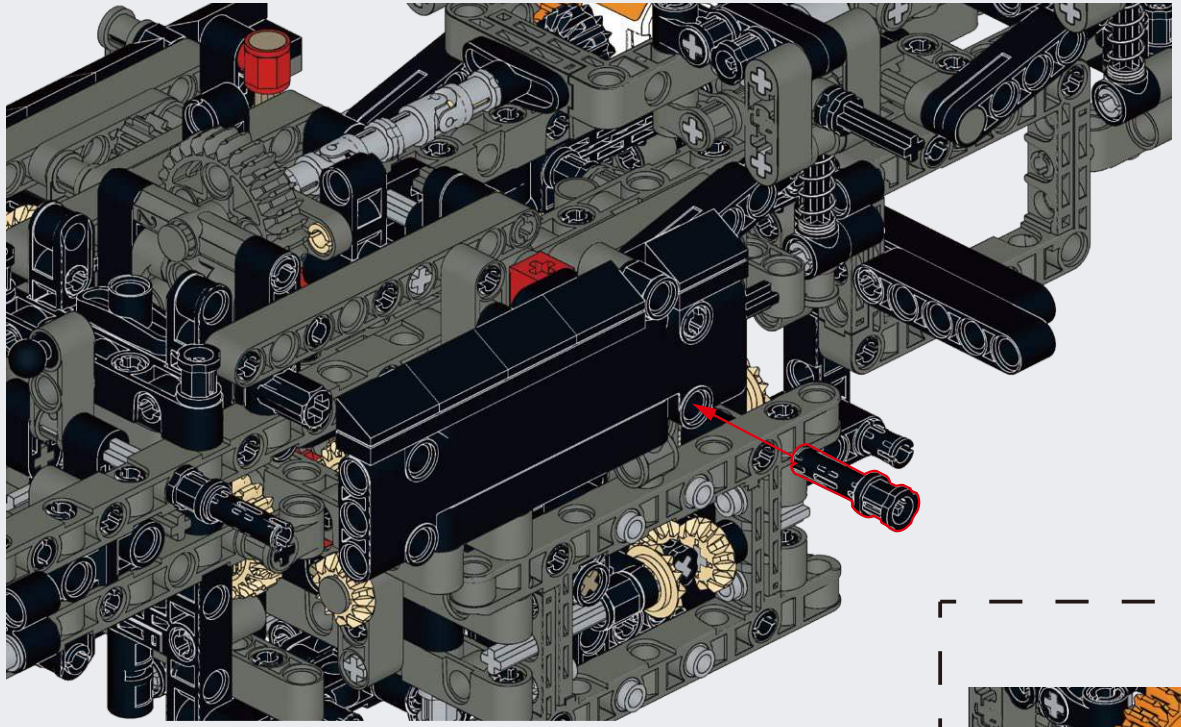

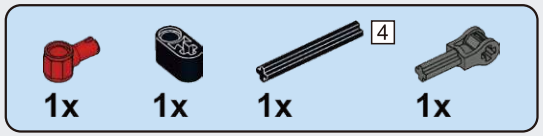

B76

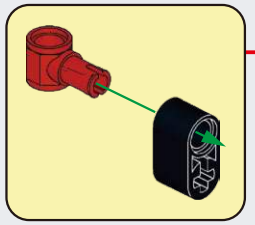

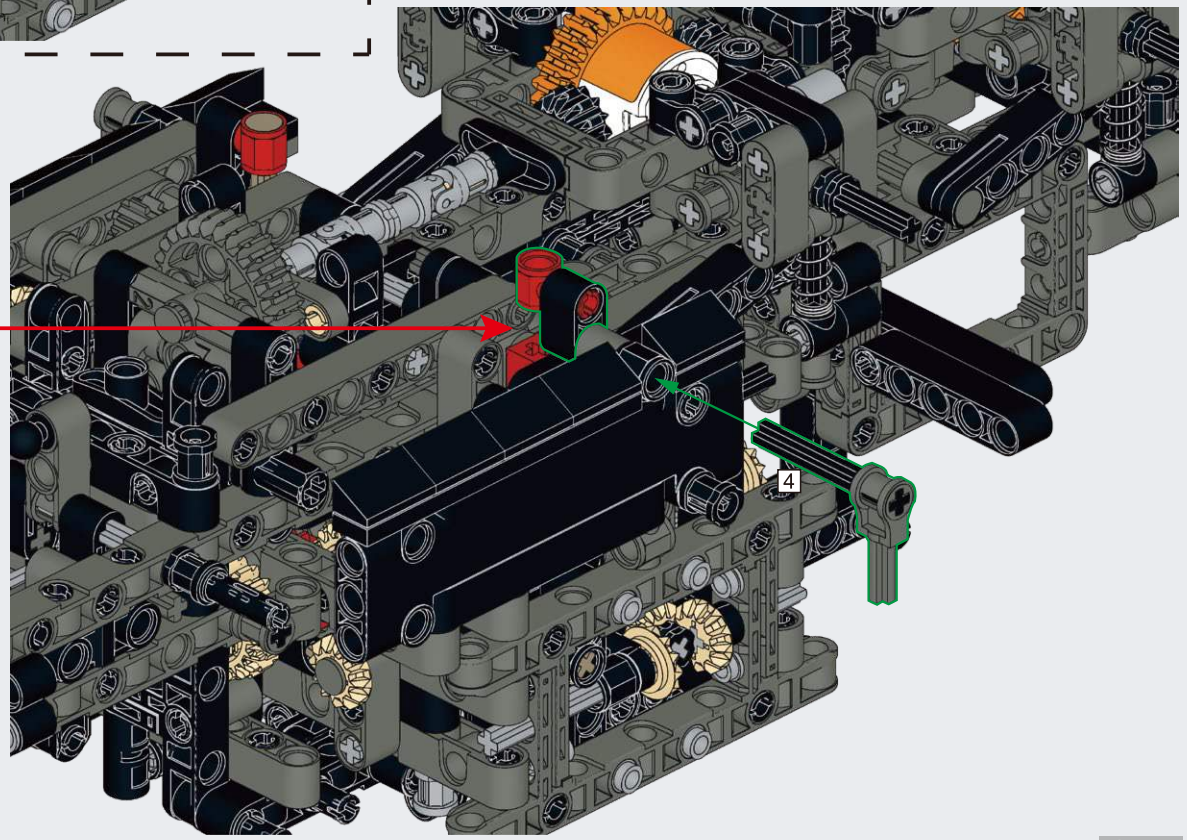

B77

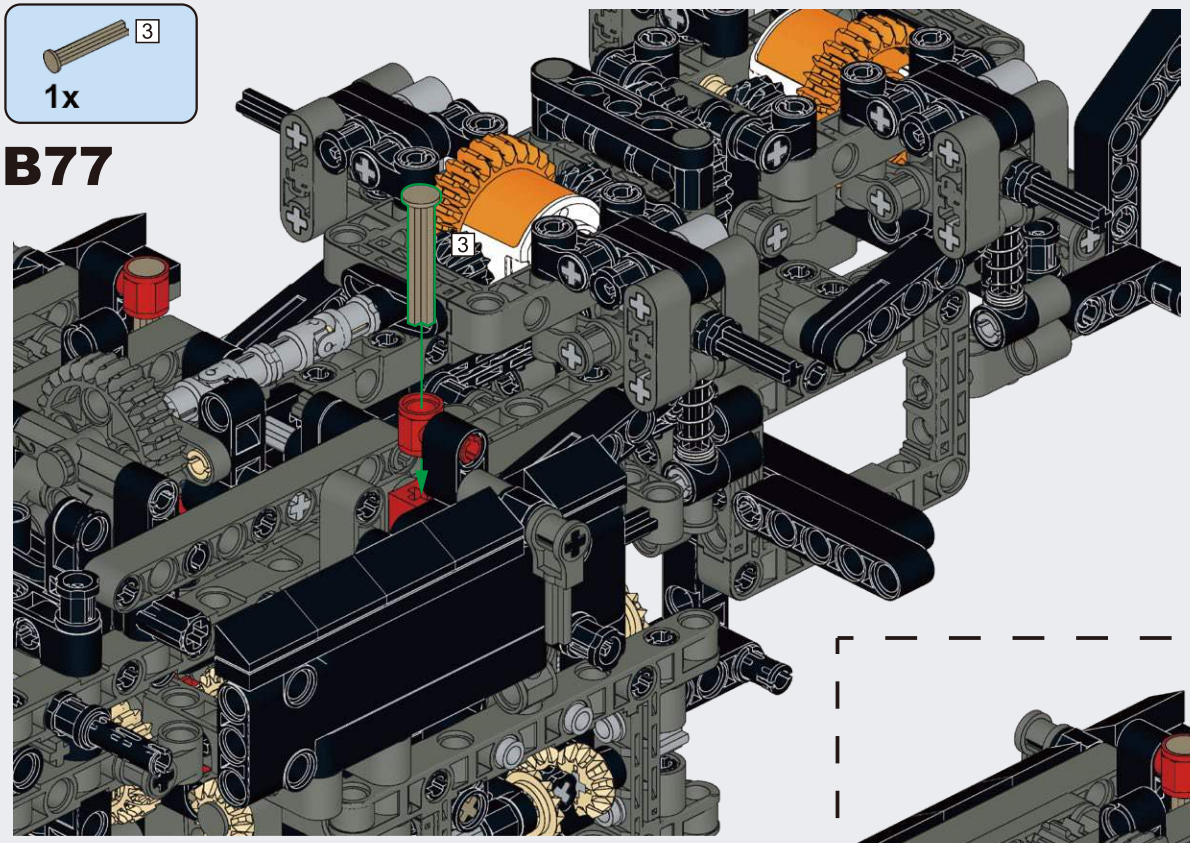

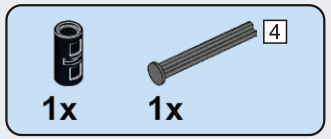

B78

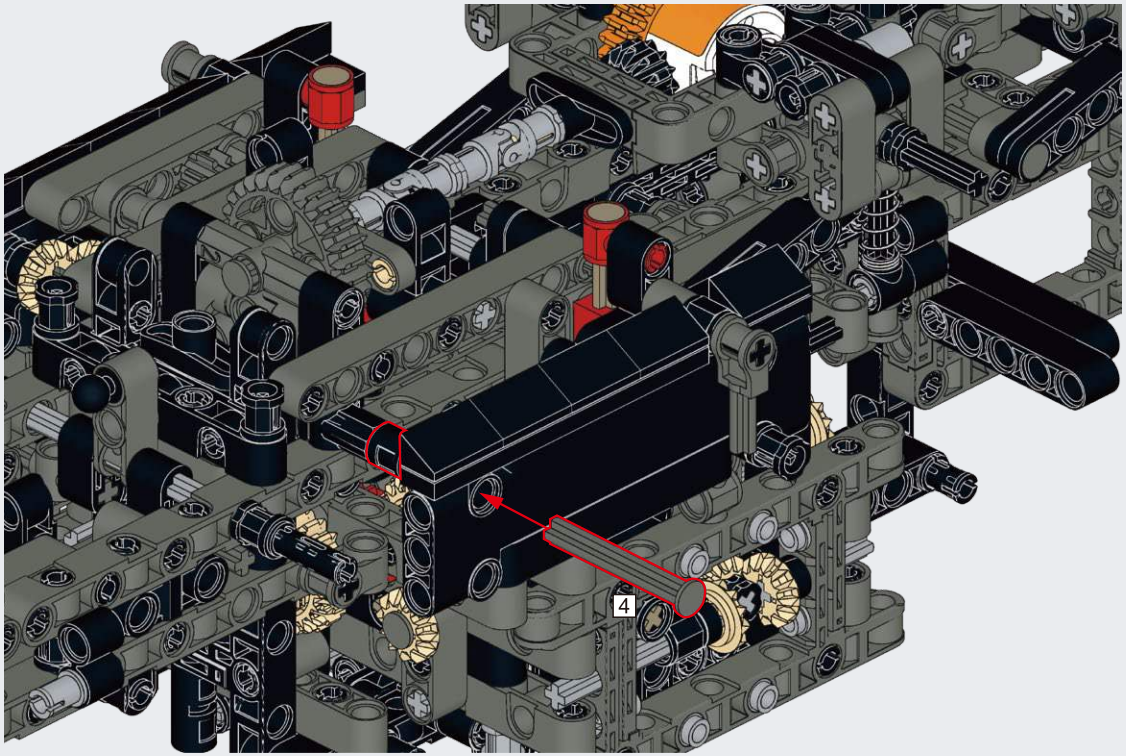

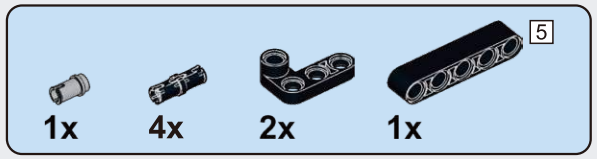

B79

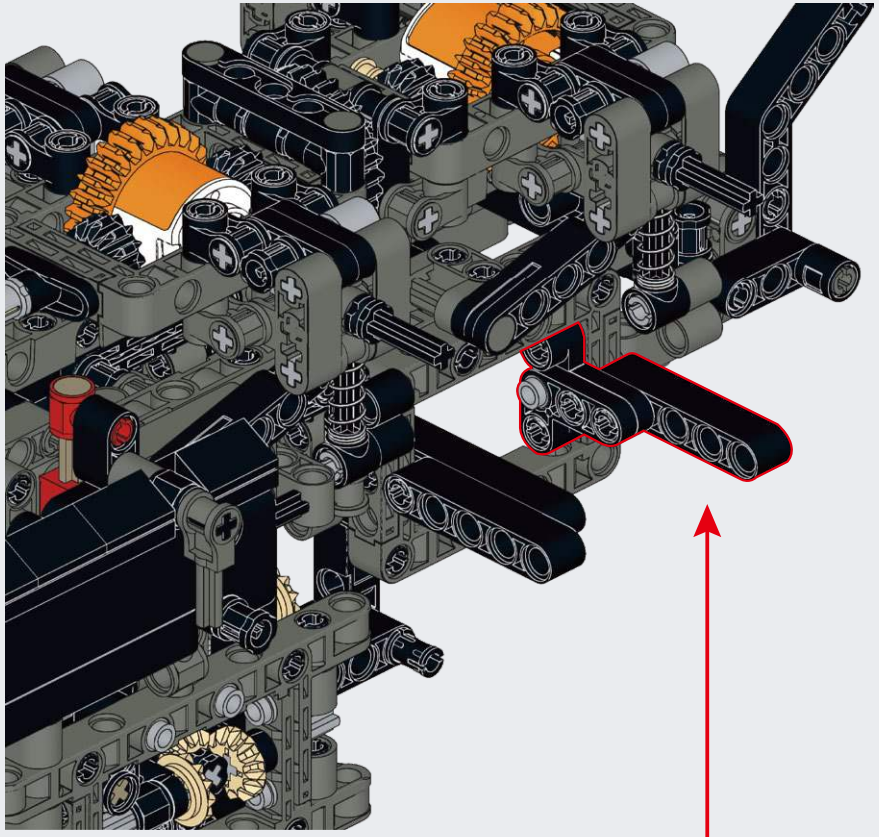

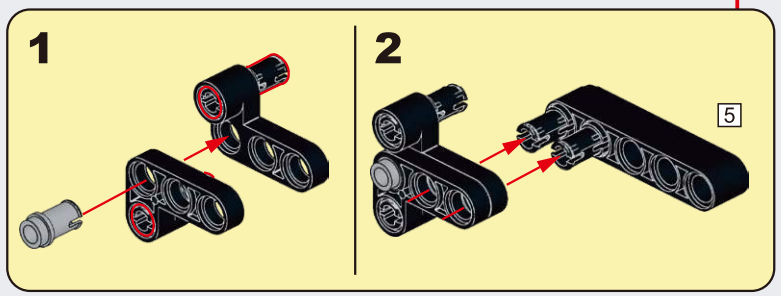

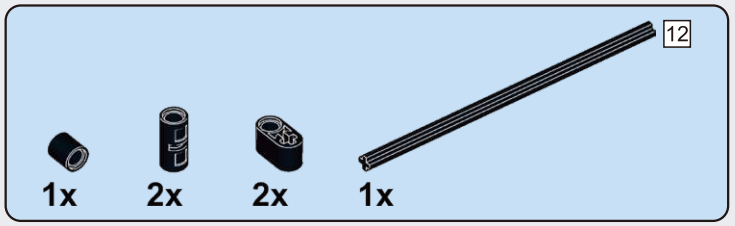

B80

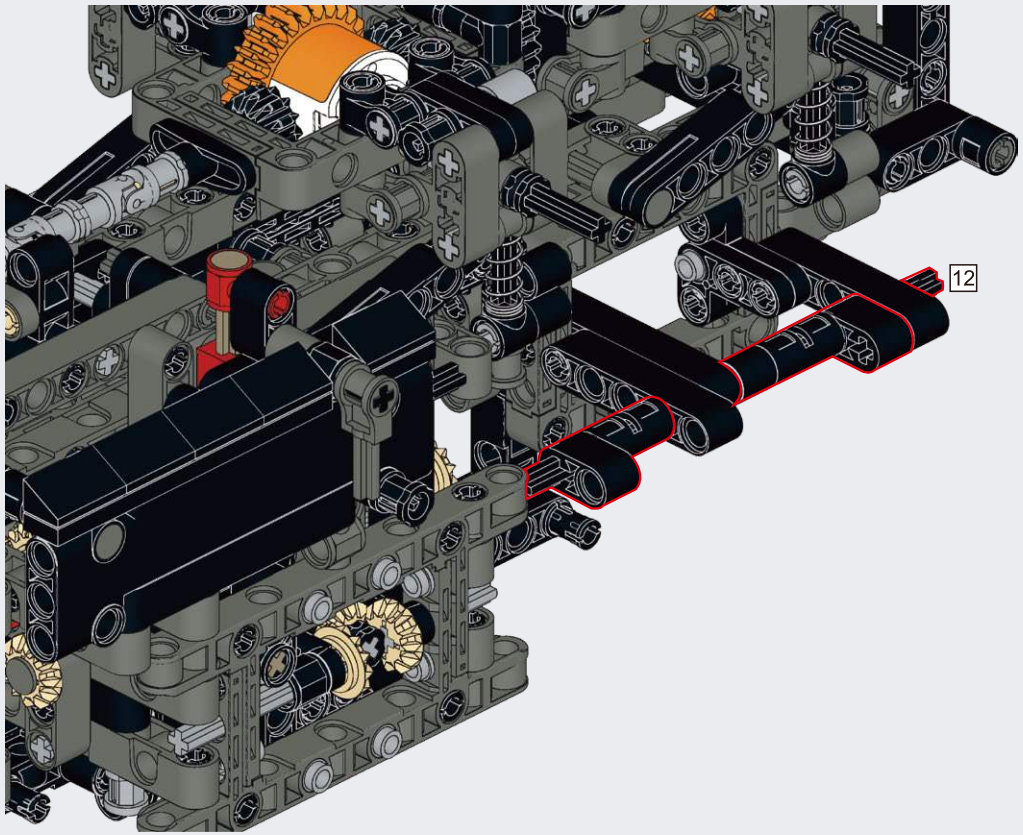

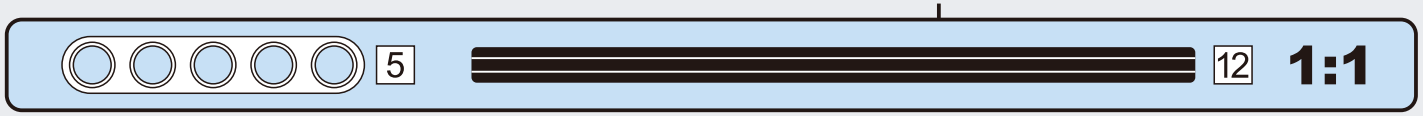

B81

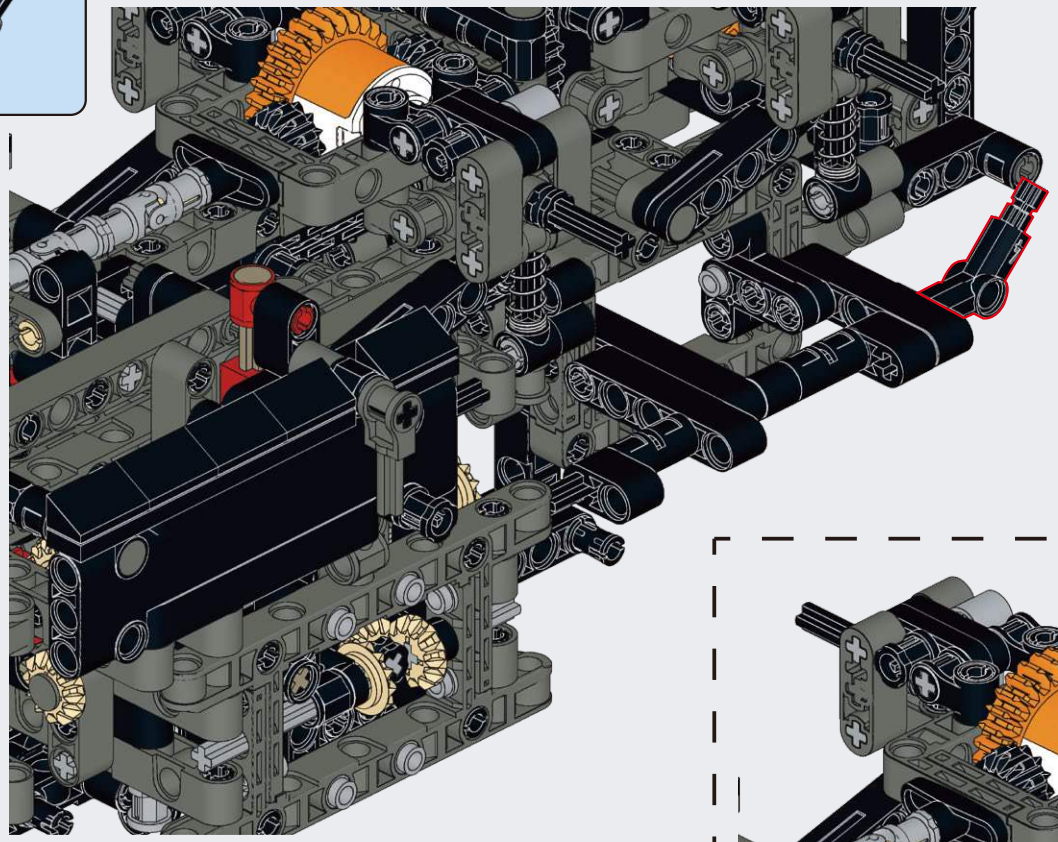

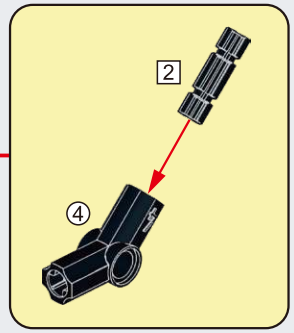

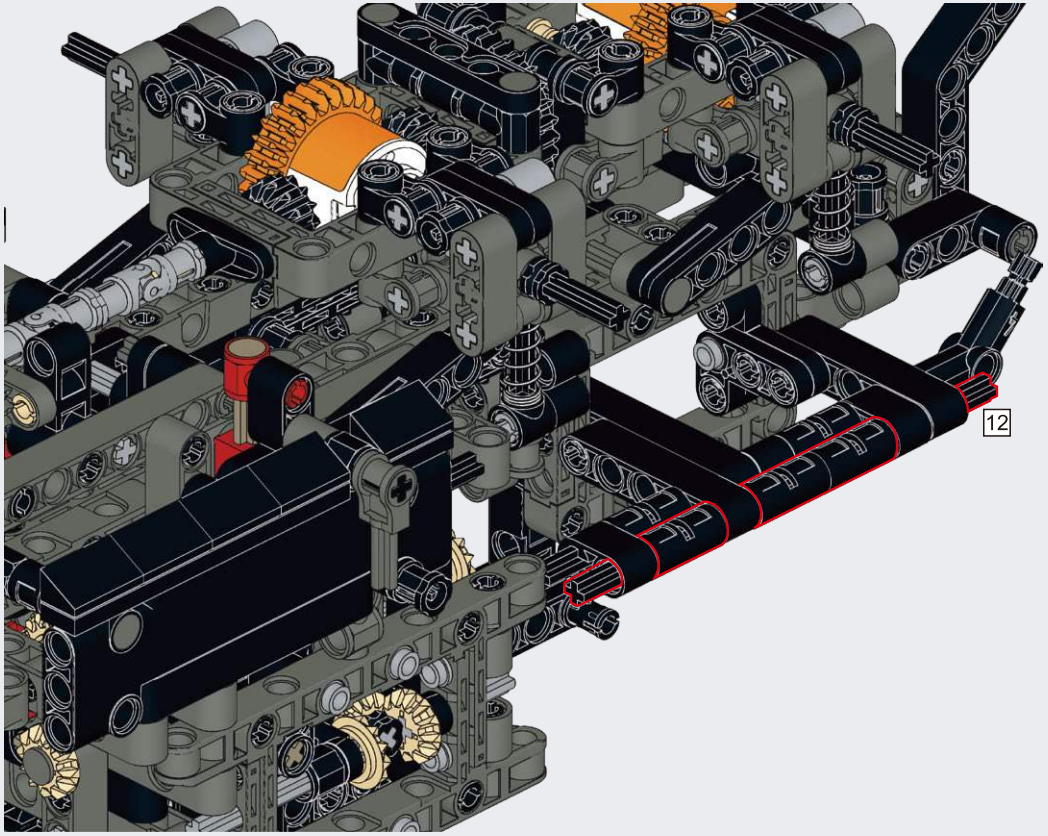

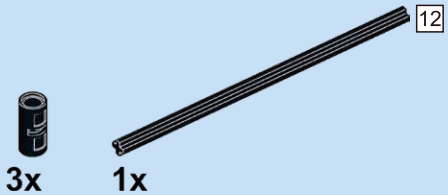

B82

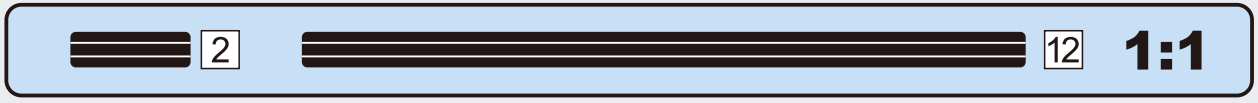

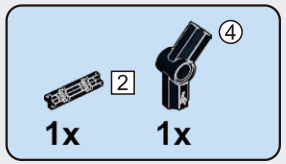

B83

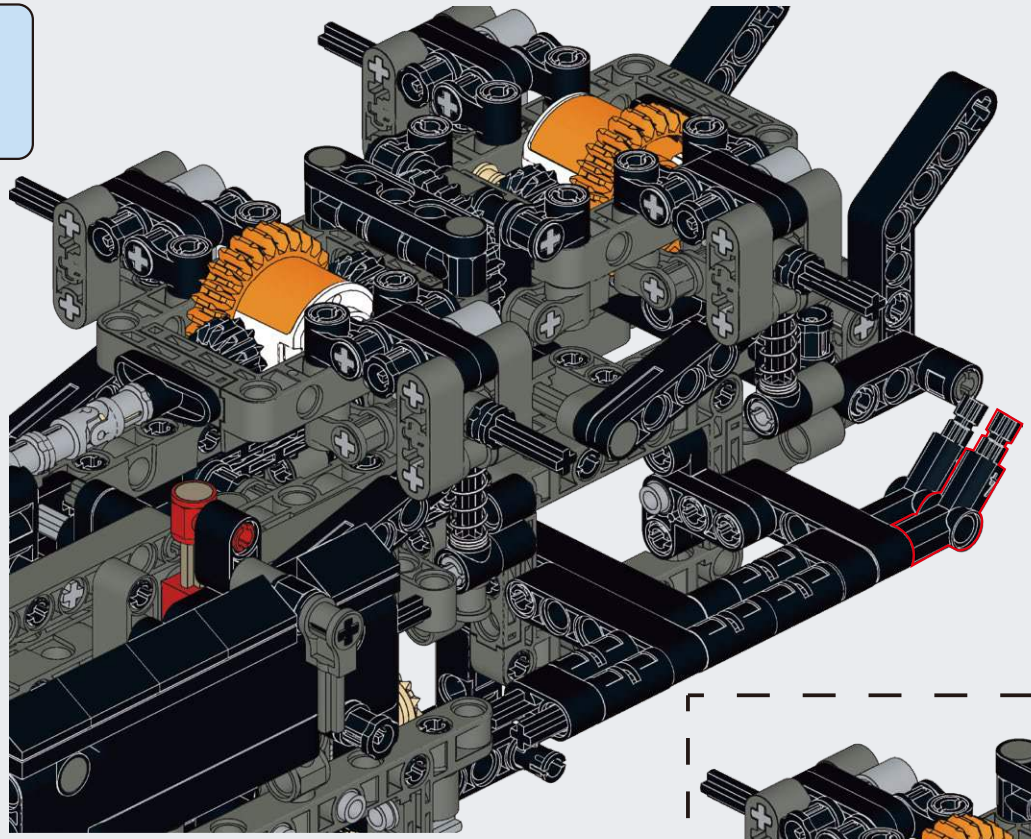

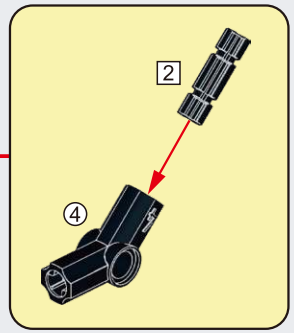

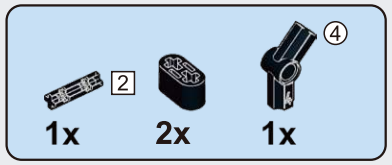

B84

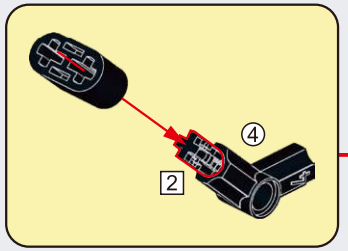

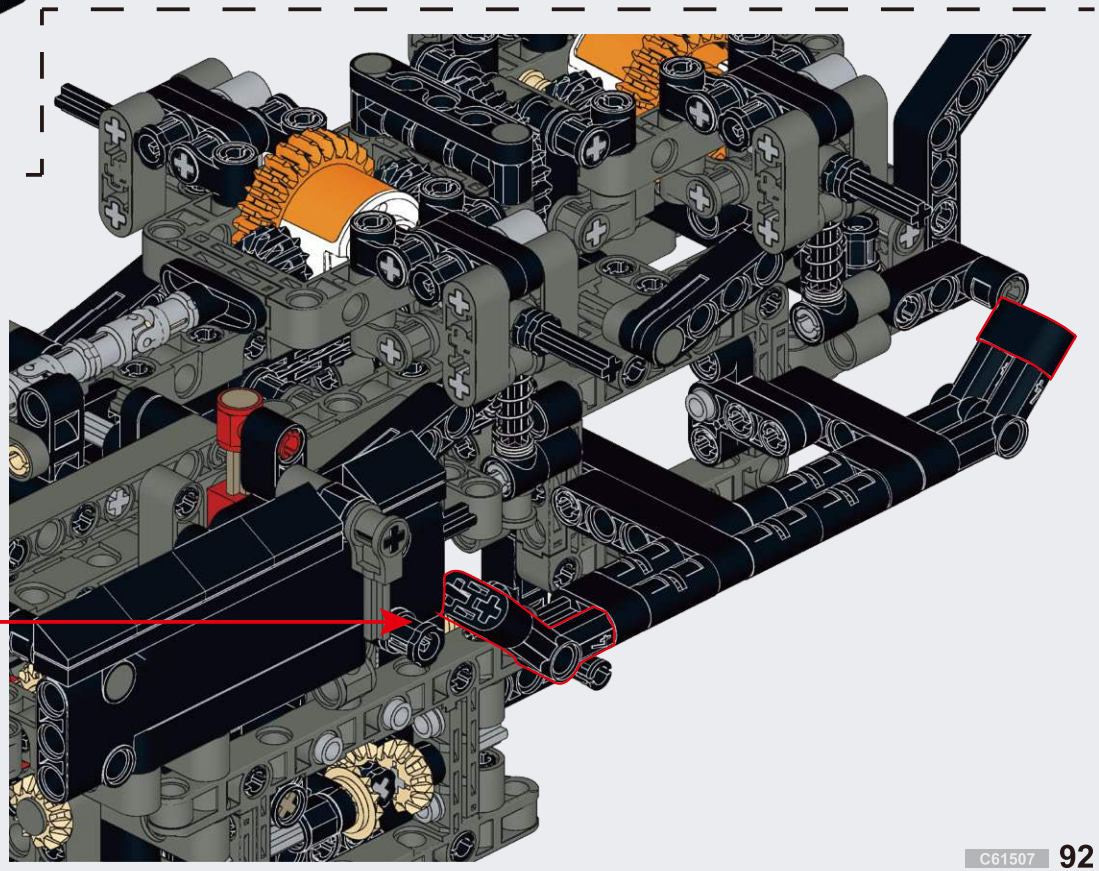

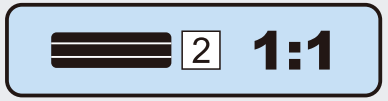

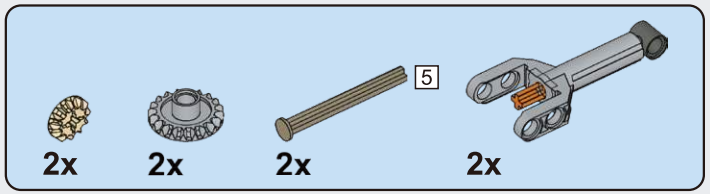

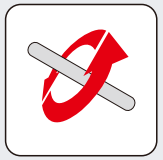

B85

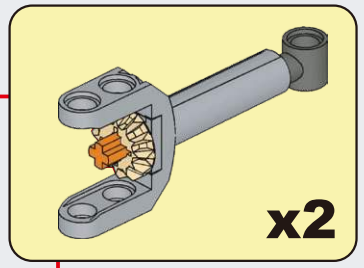

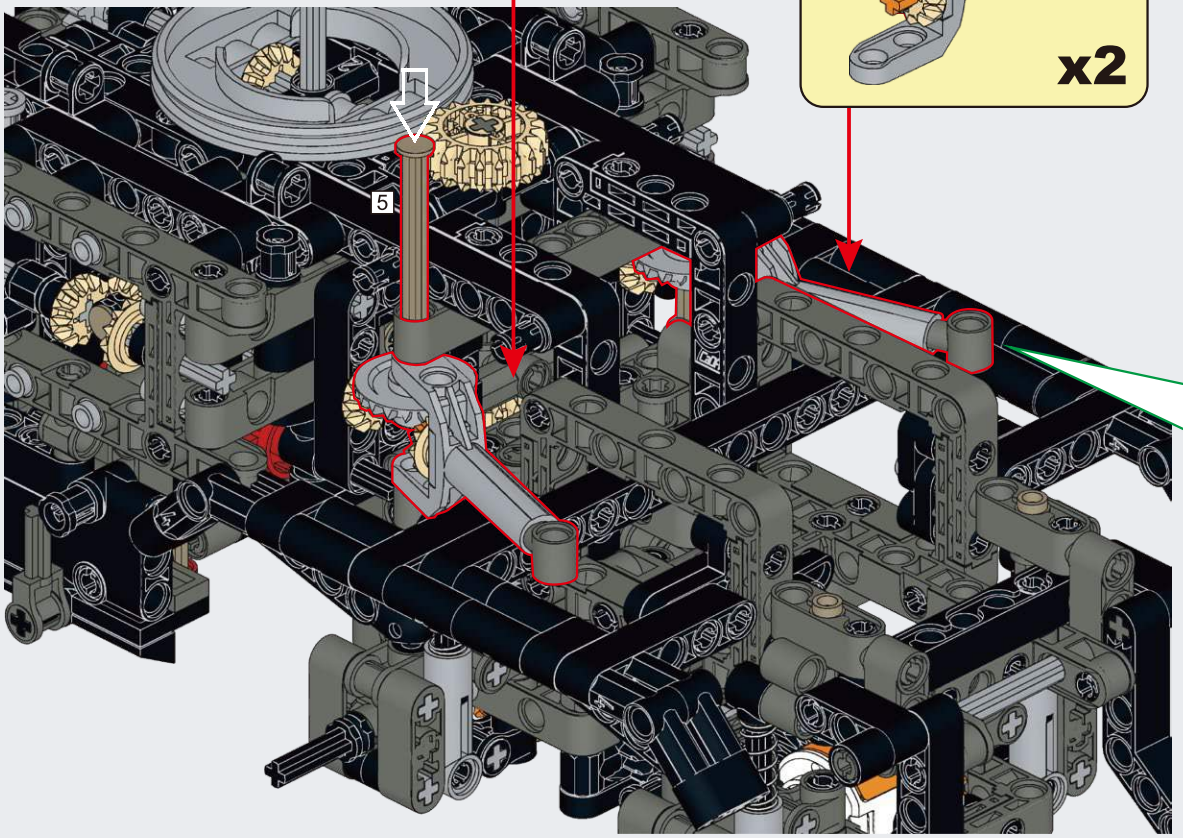

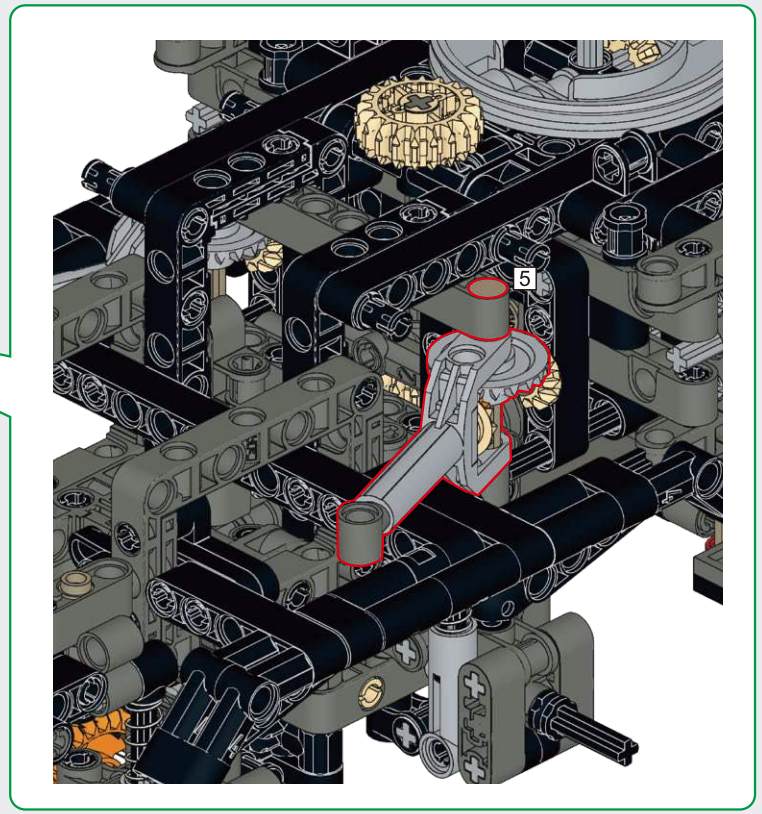

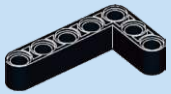

2x

B86

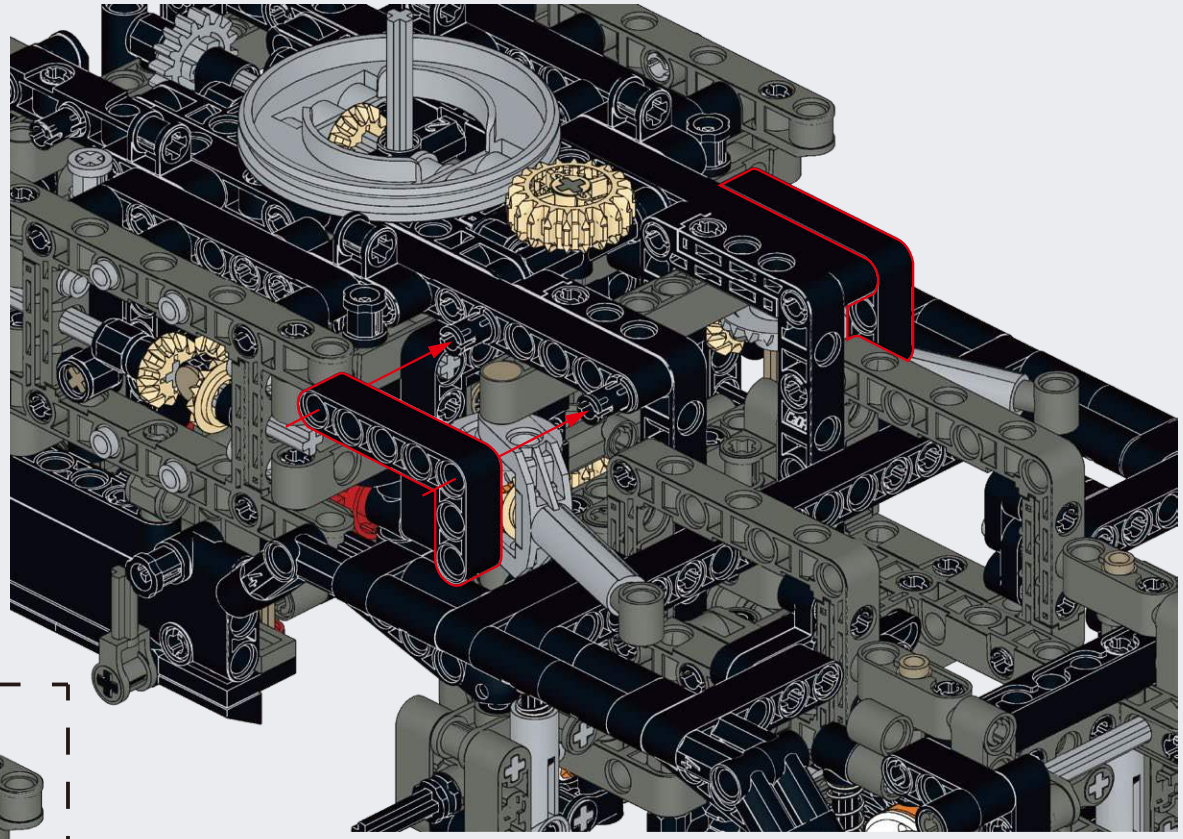

6x

B87

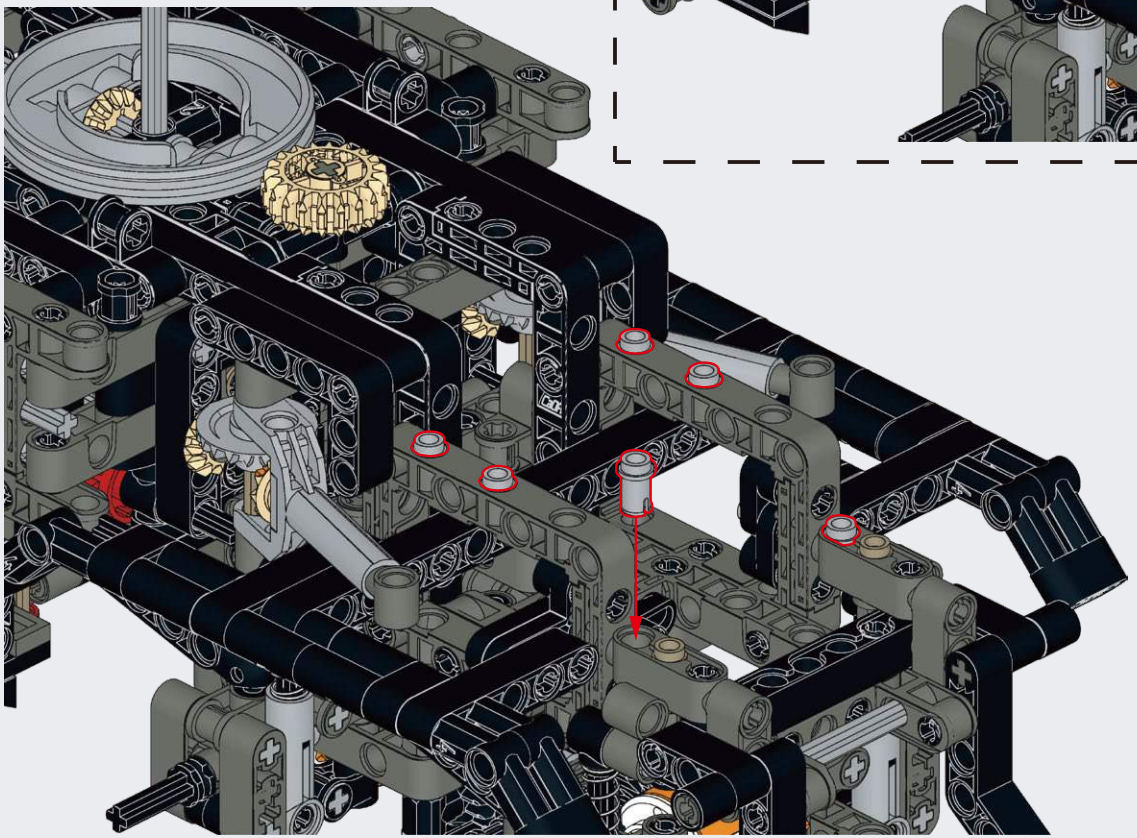

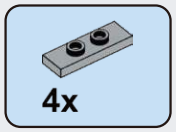

B88

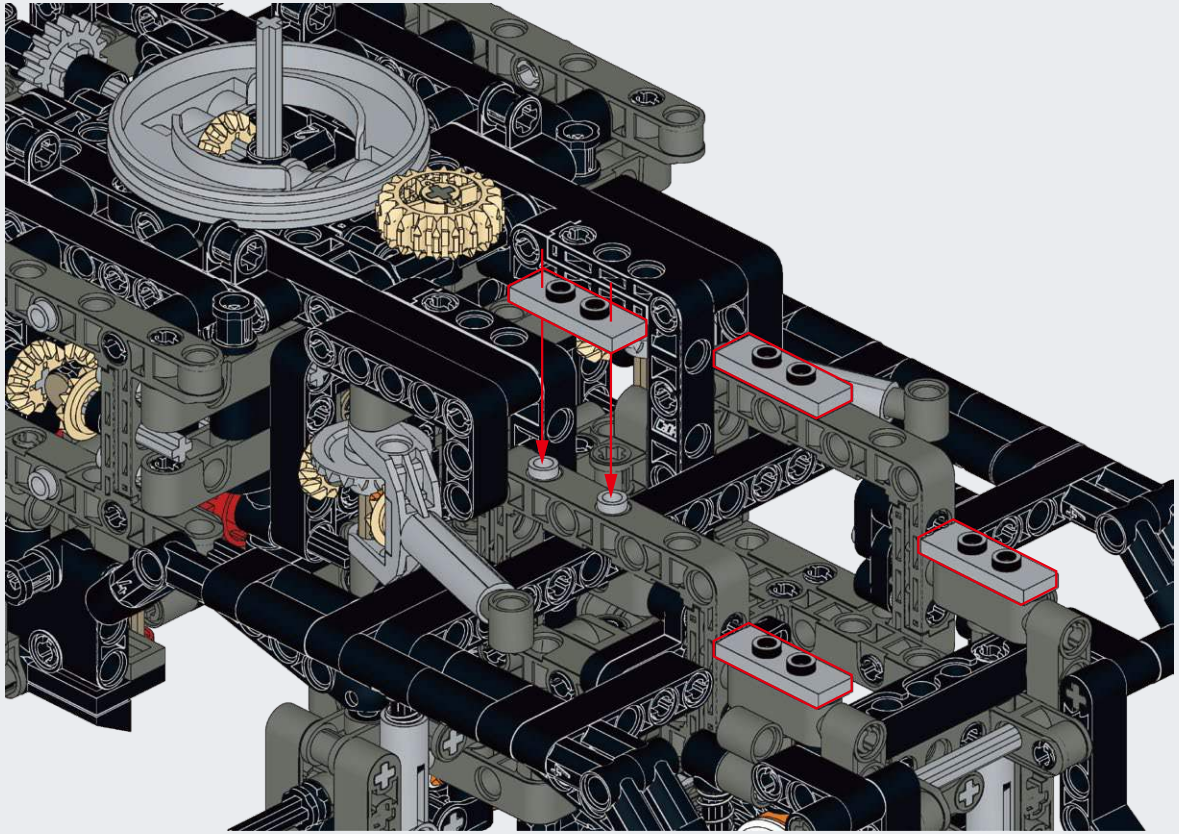

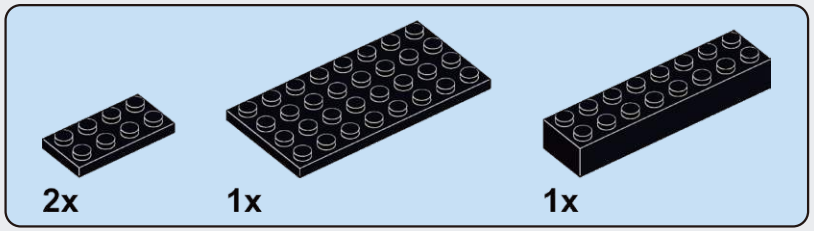

B89

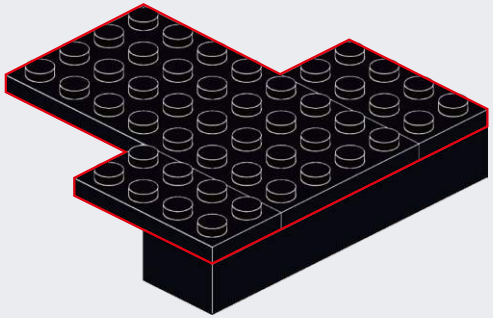

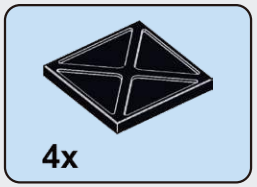

B90

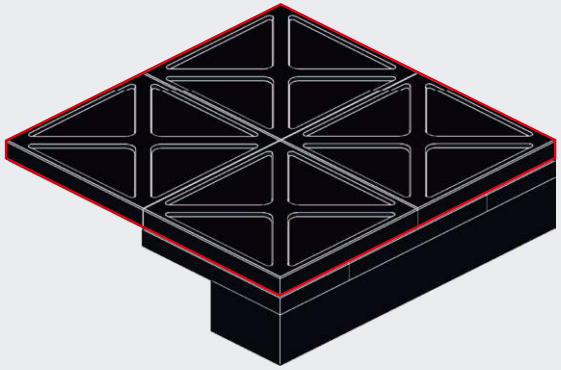

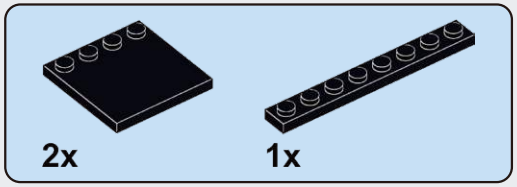

B91

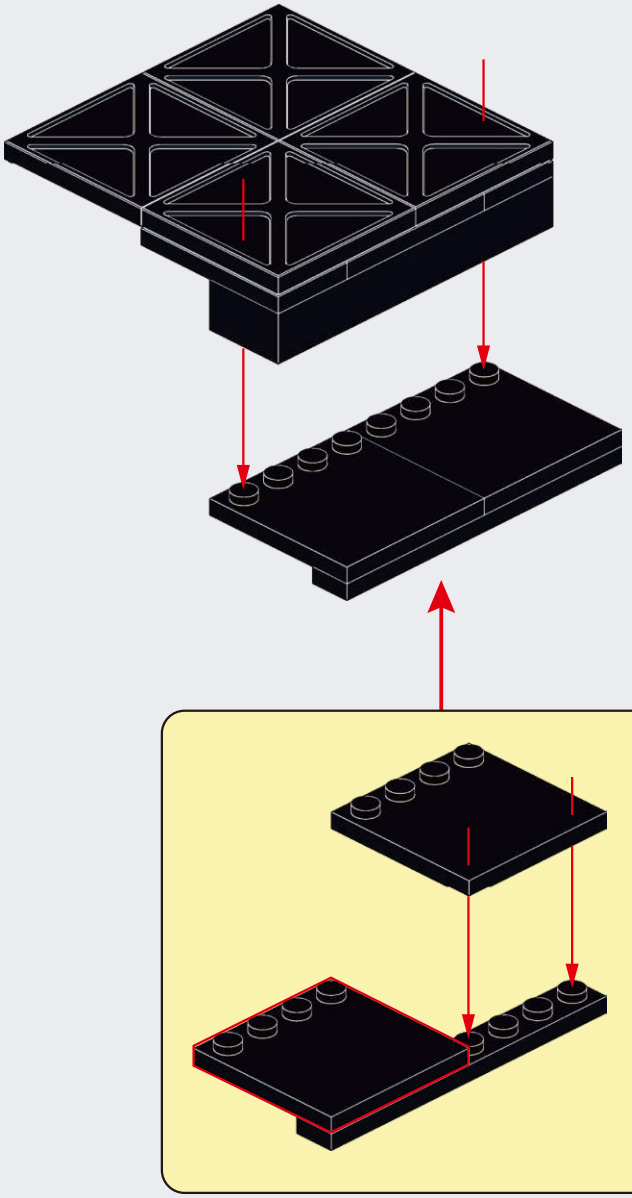

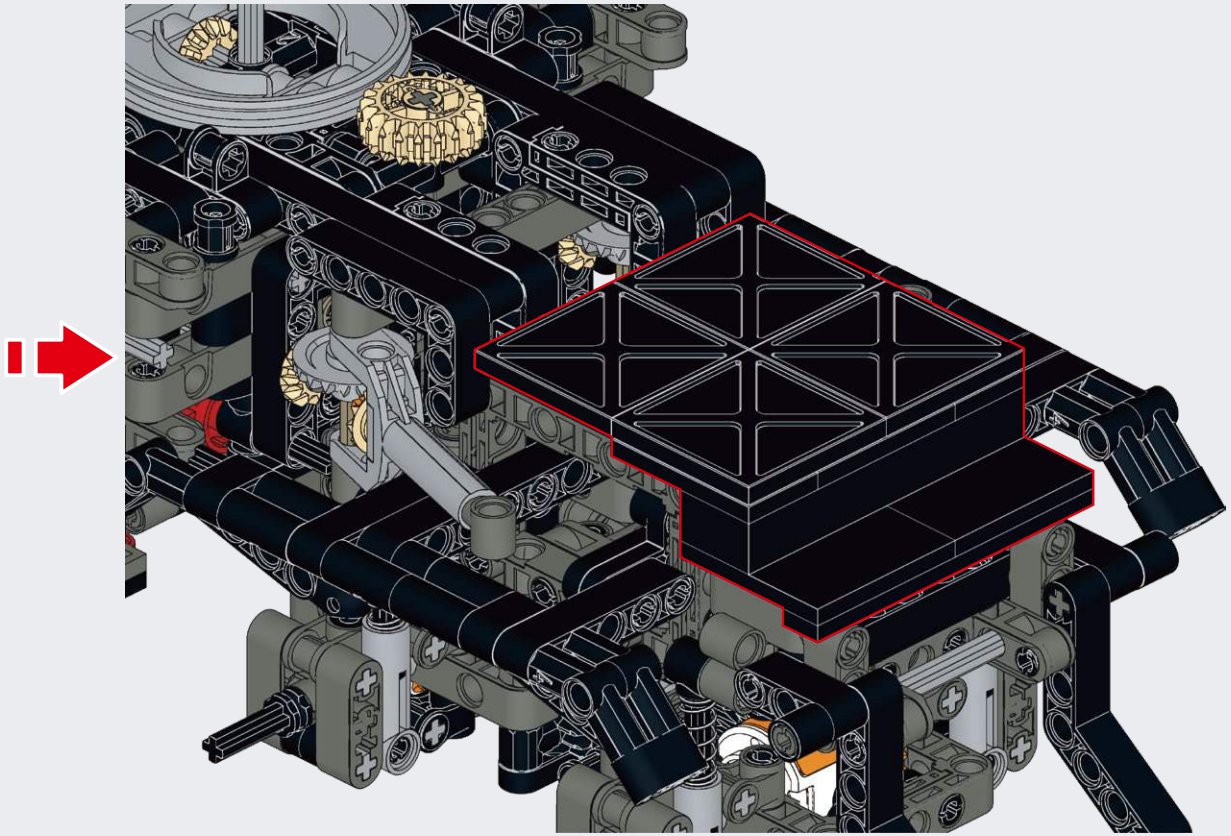

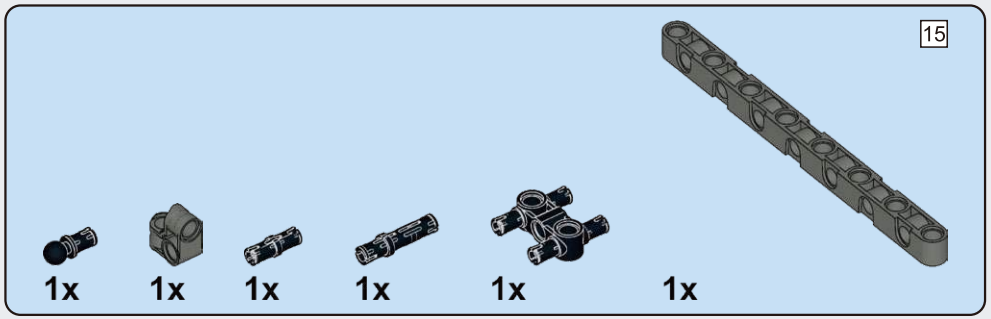

B92

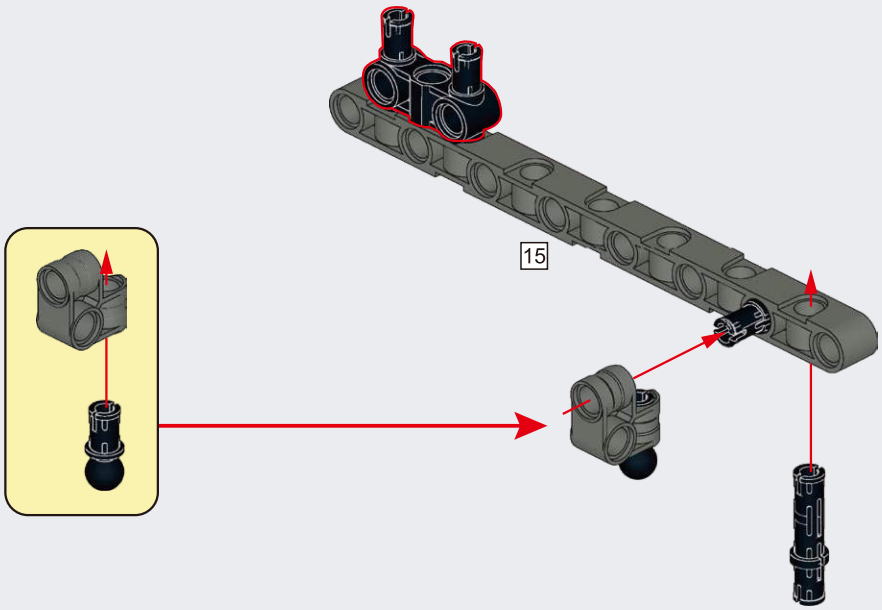

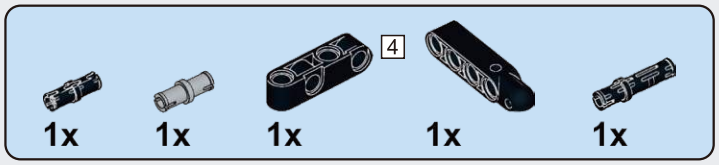

B93

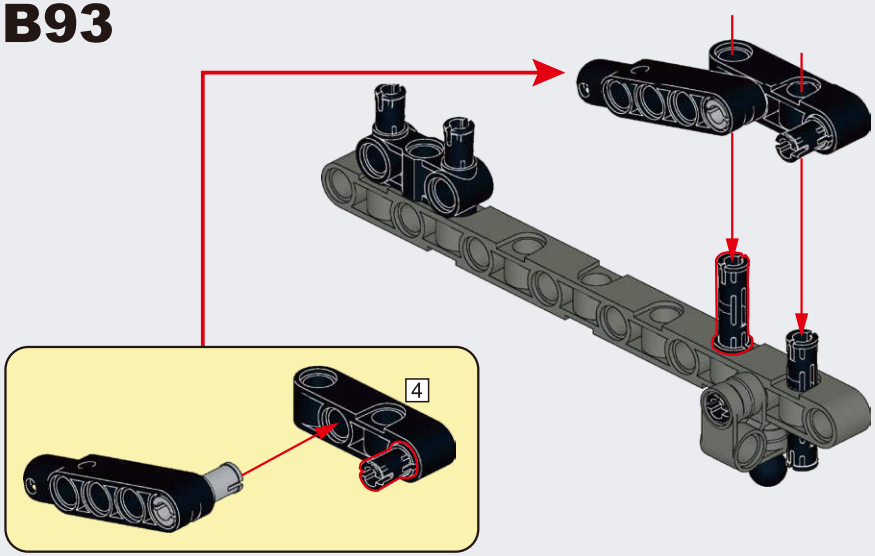

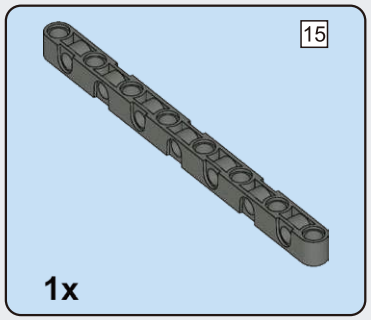

B94

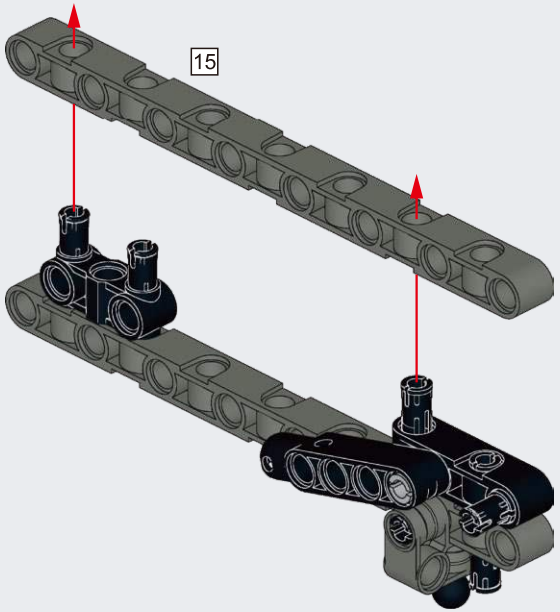

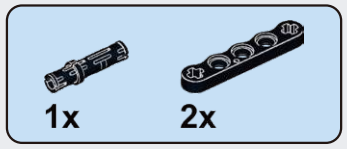

B95

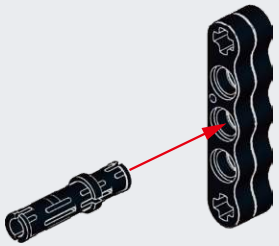

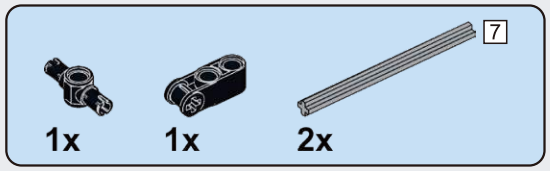

B96

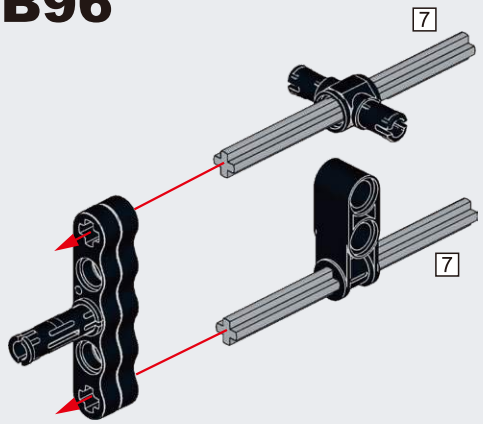

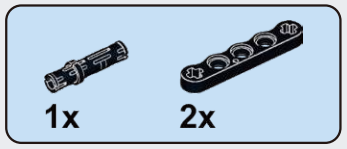

B97

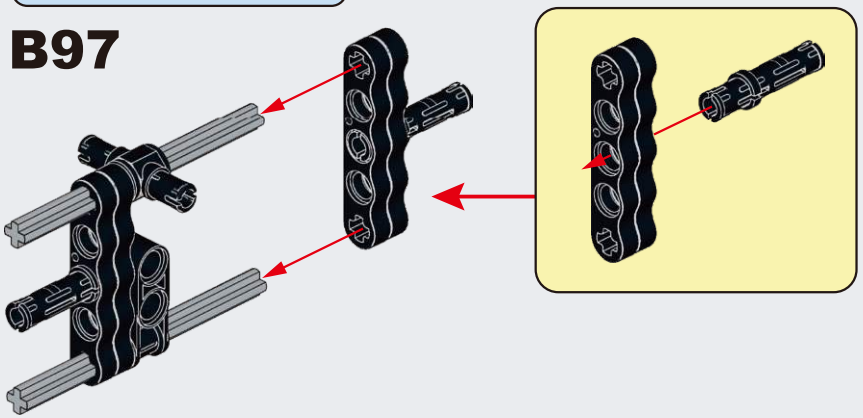

B98

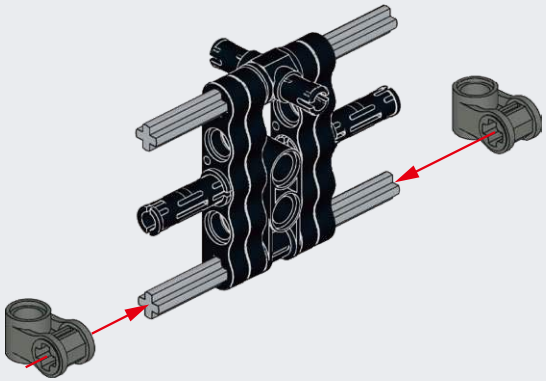

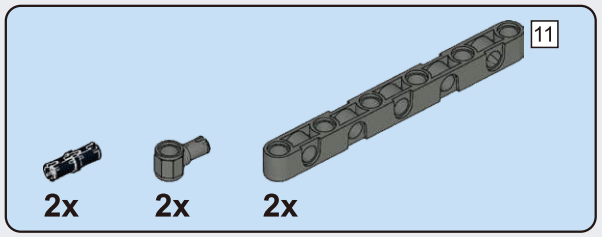

B99

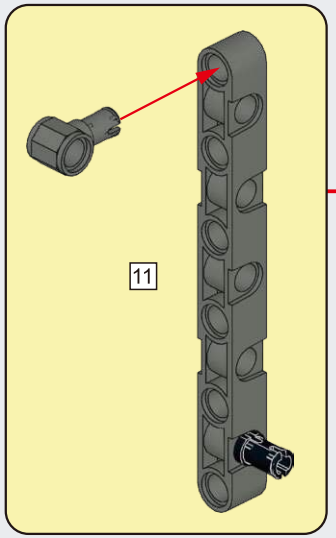

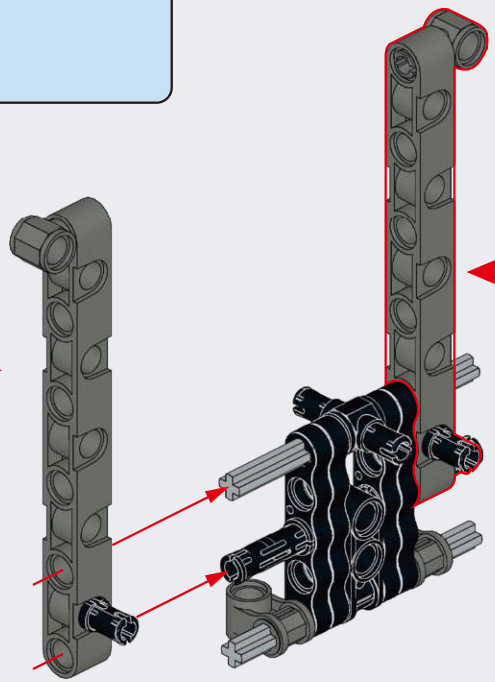

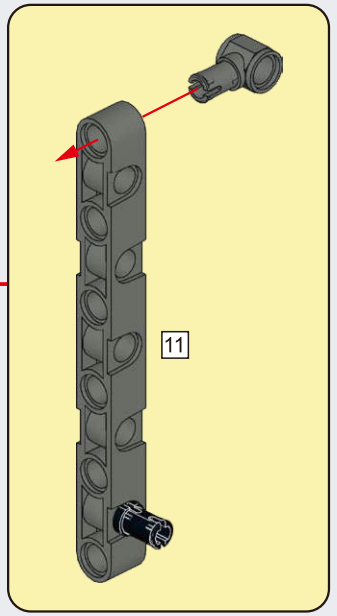

B100

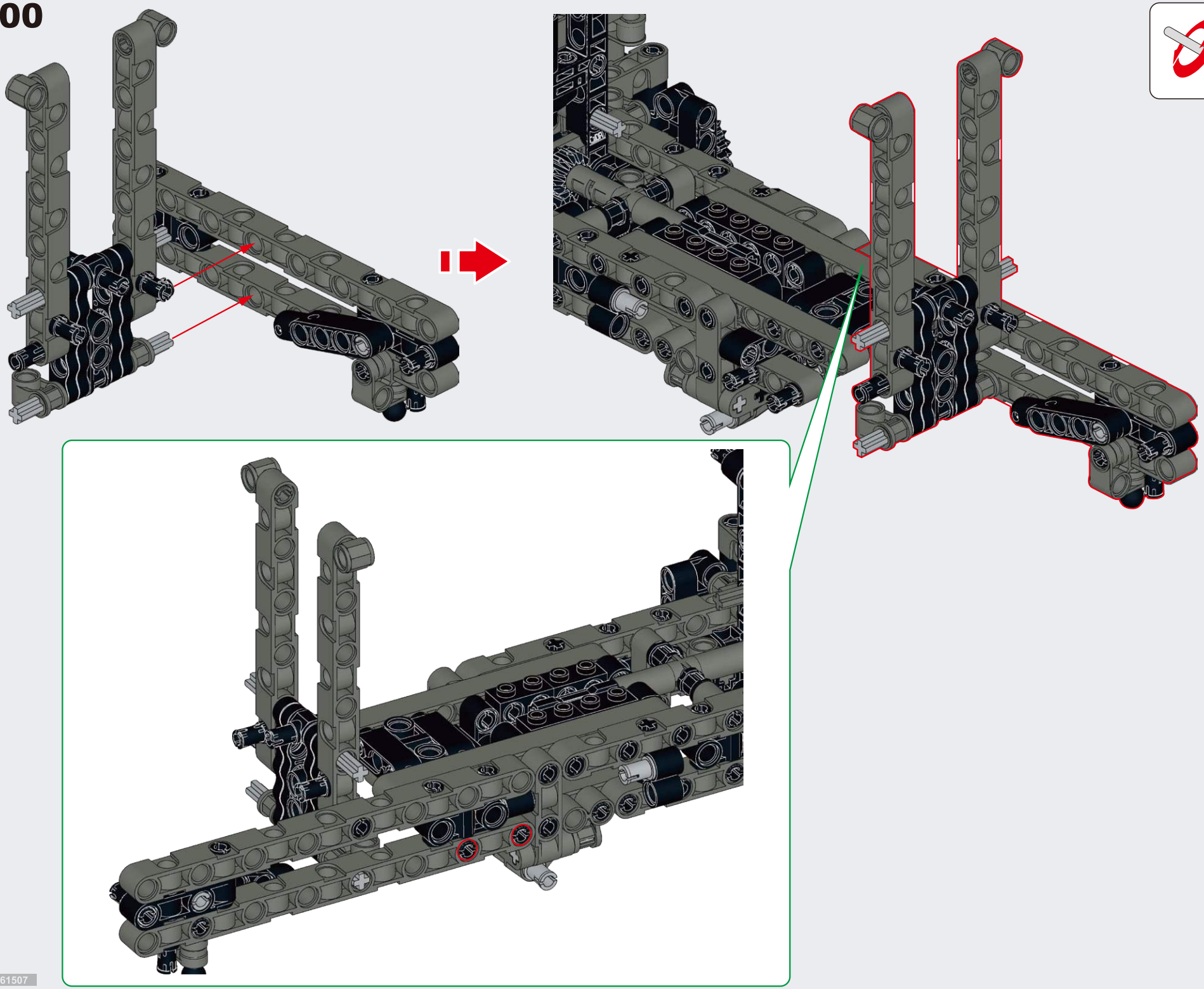

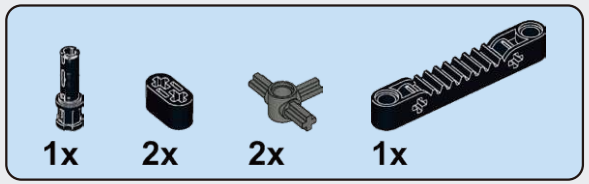

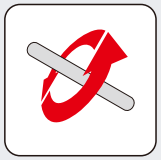

B101

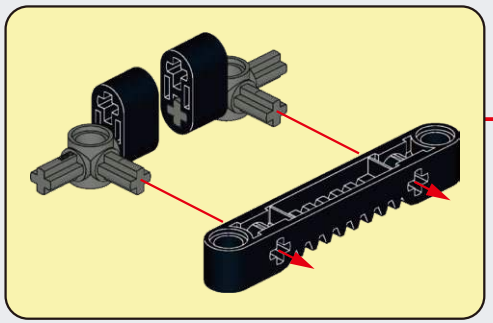

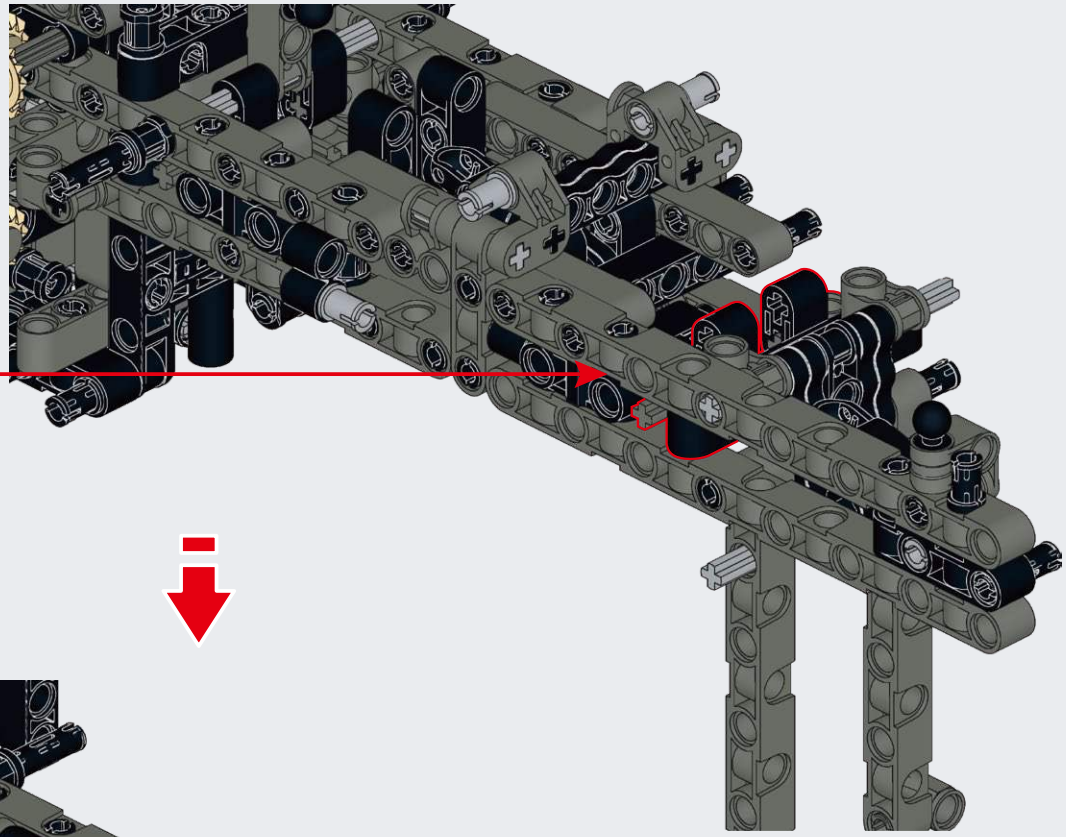

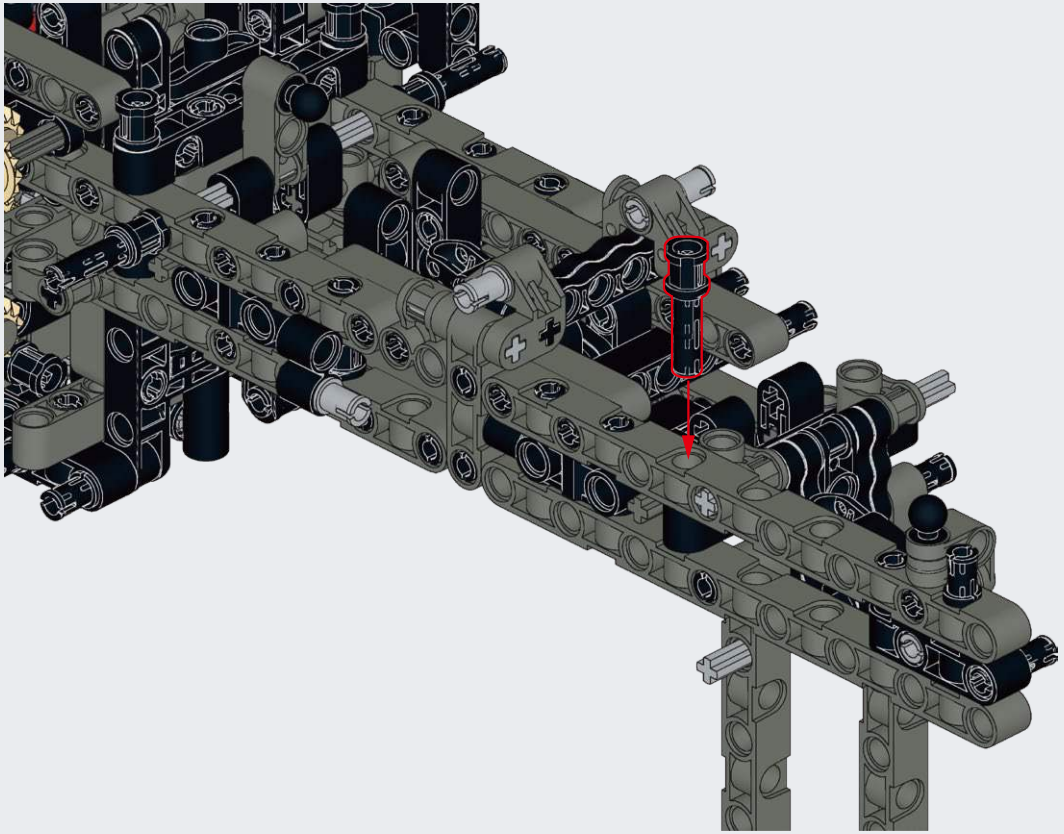

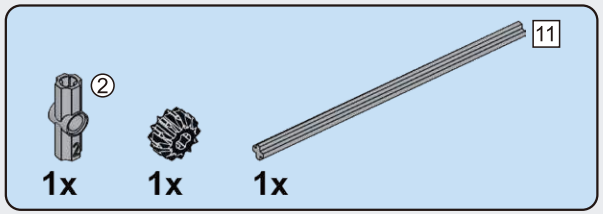

B102

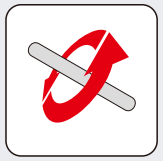

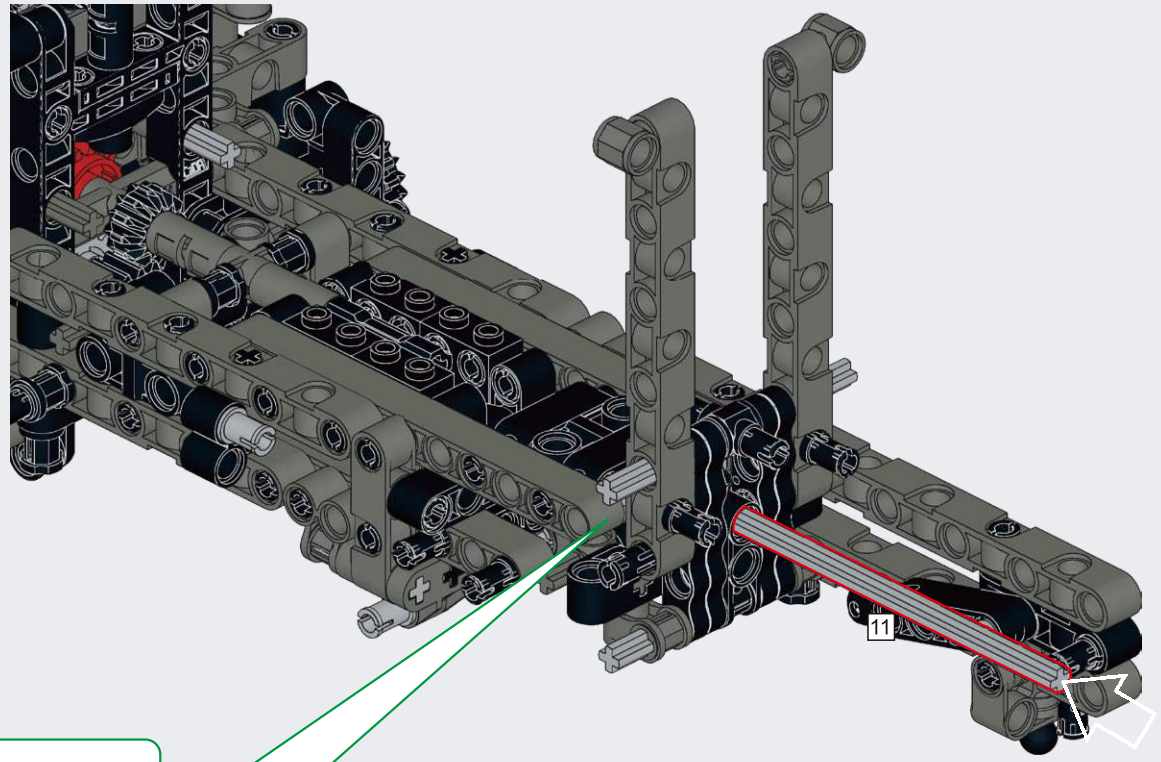

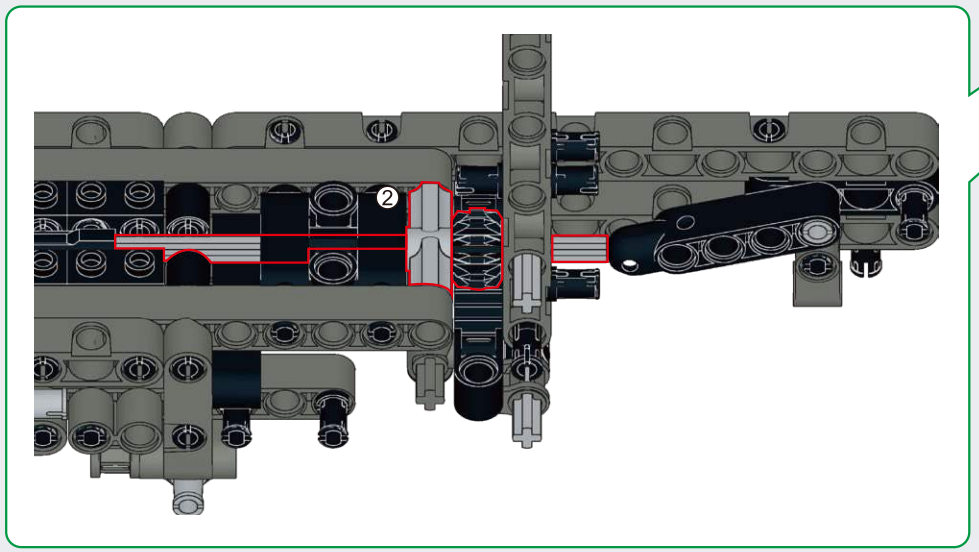

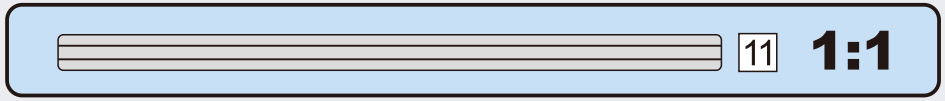

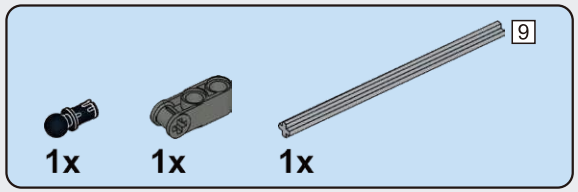

B103

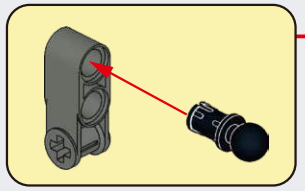

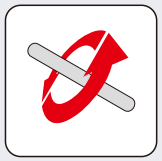

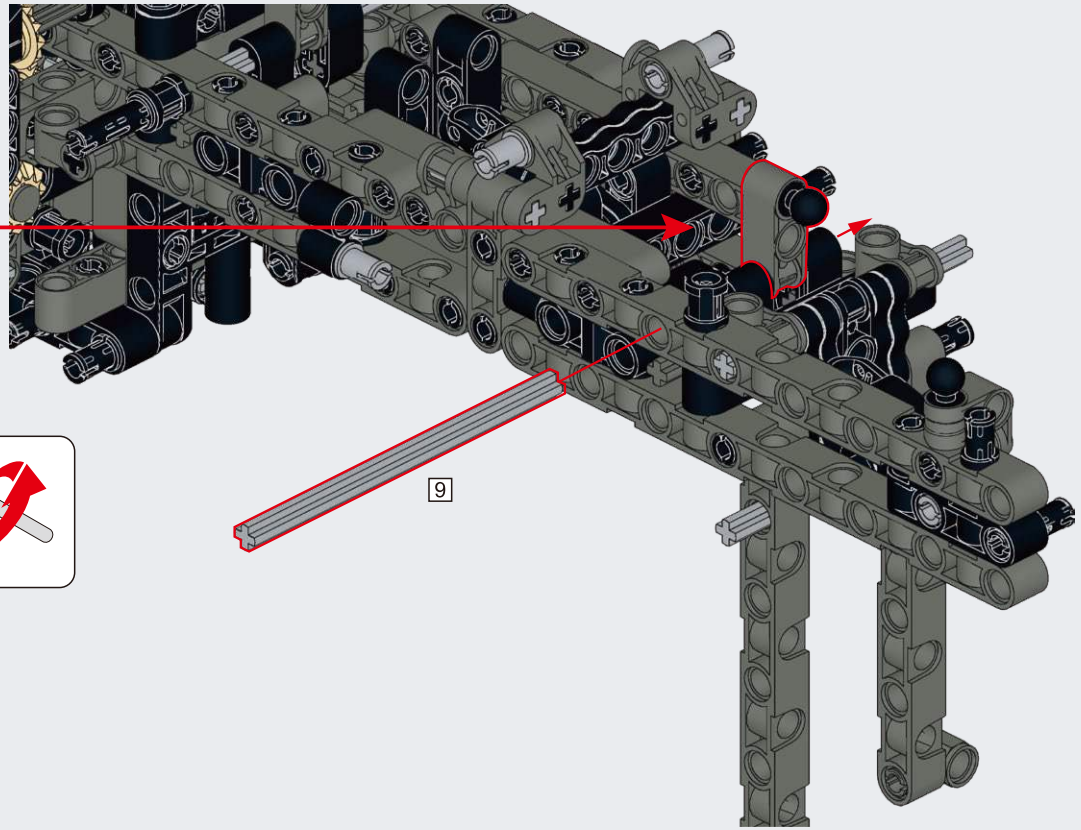

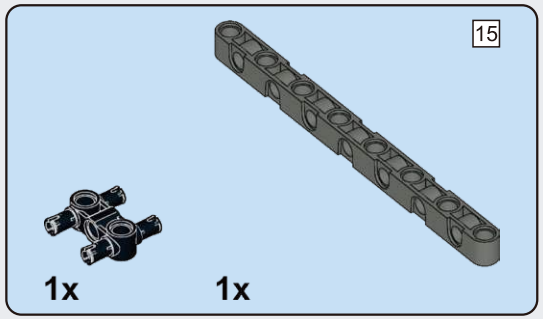

B104

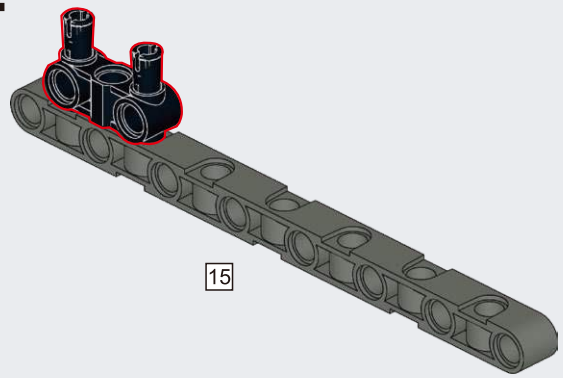

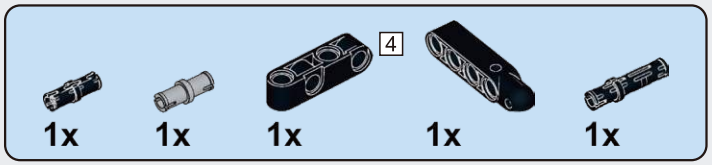

B105

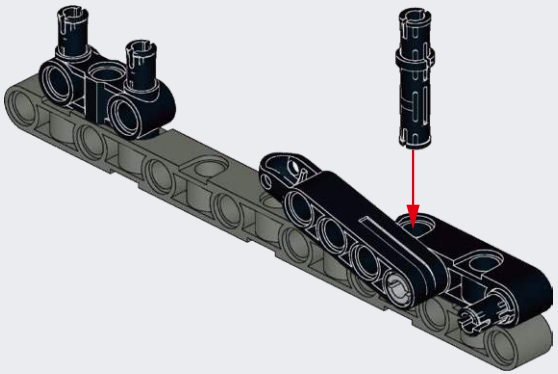

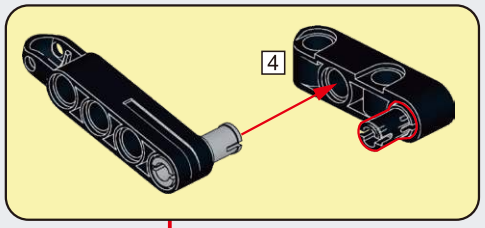

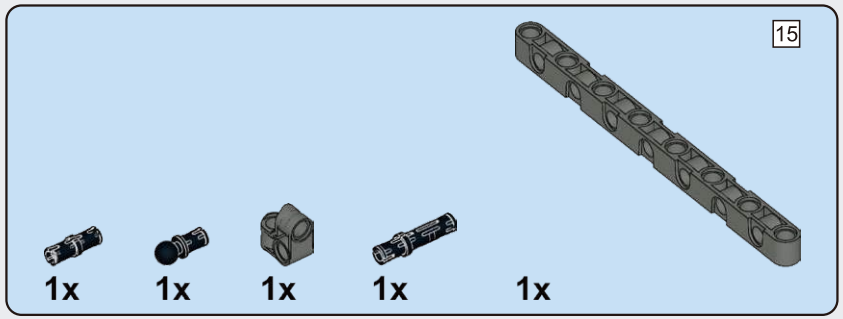

B106

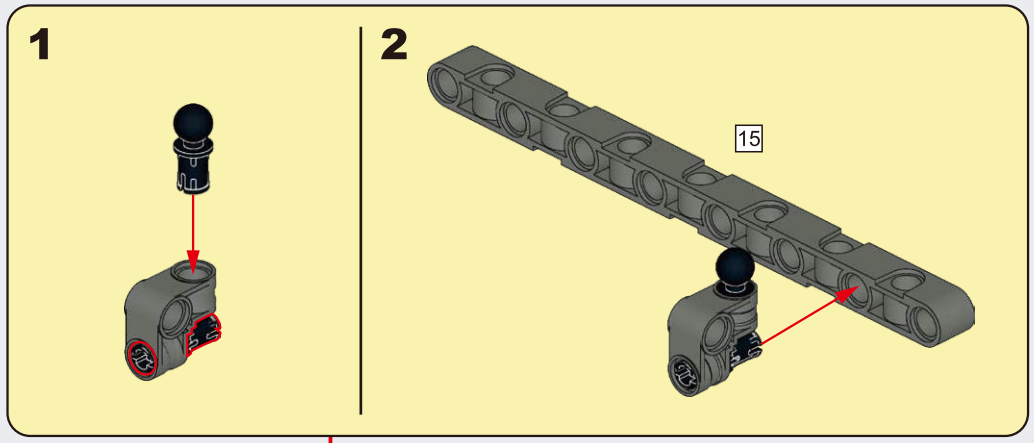

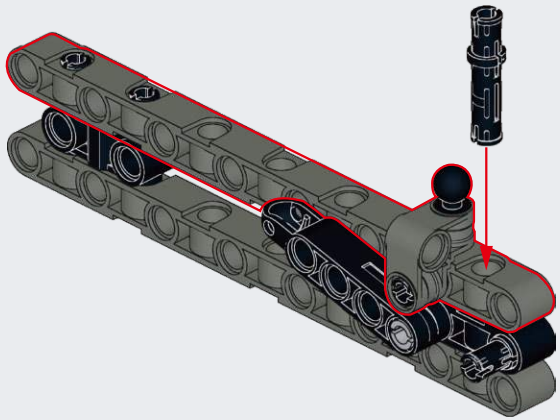

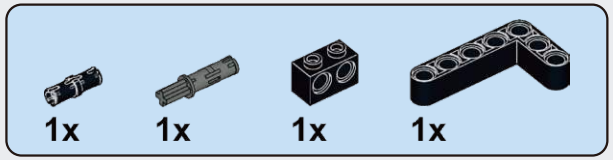

B107

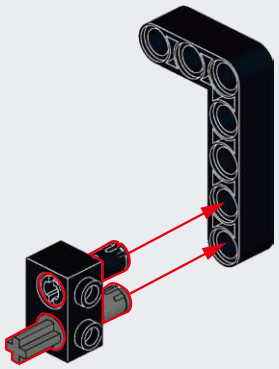

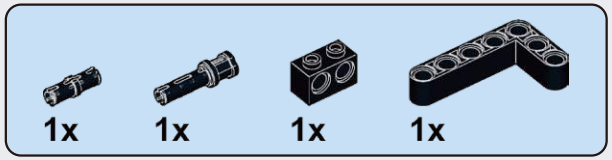

B108

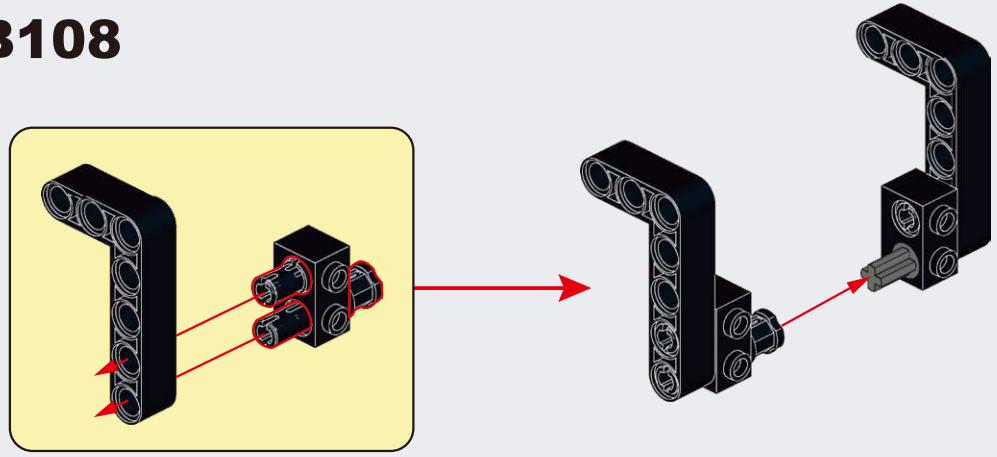

B109

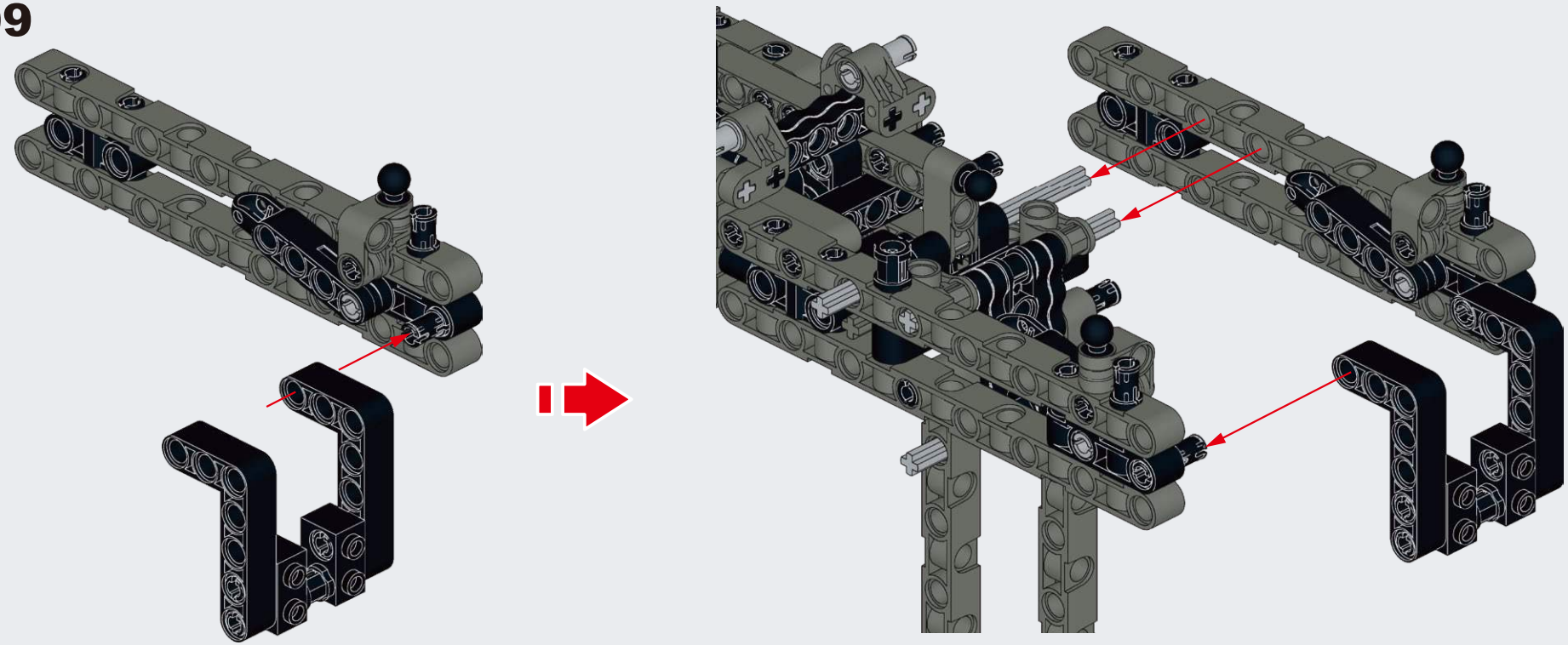

B110

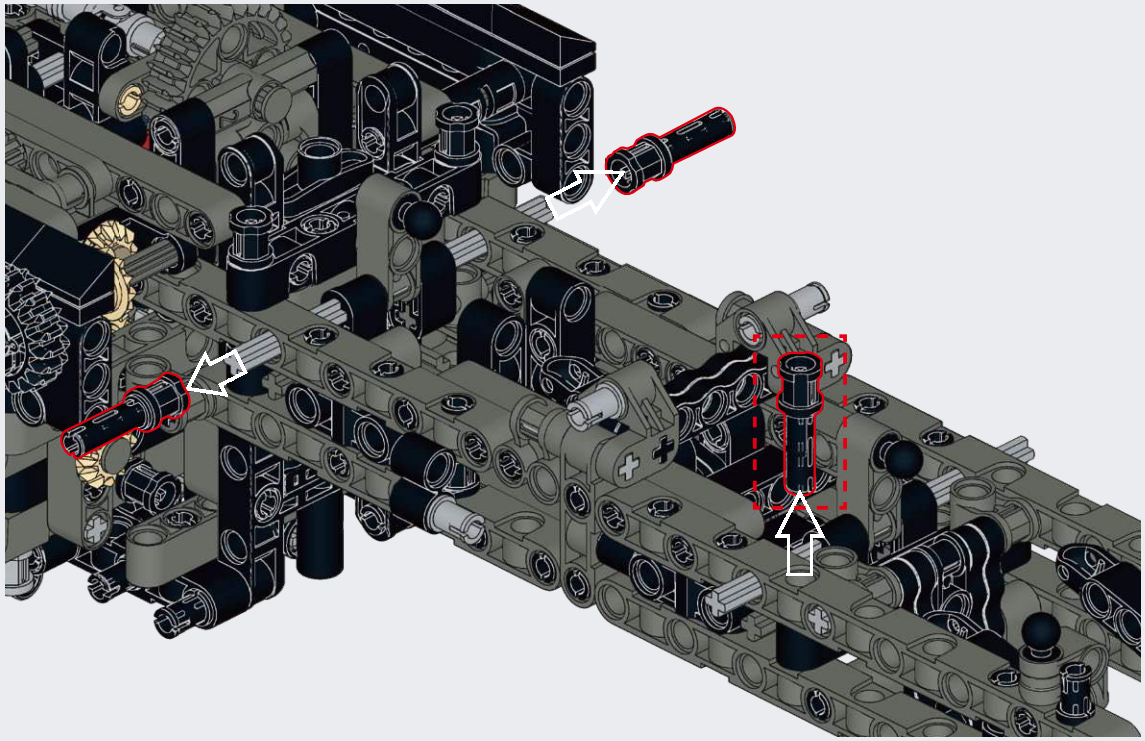

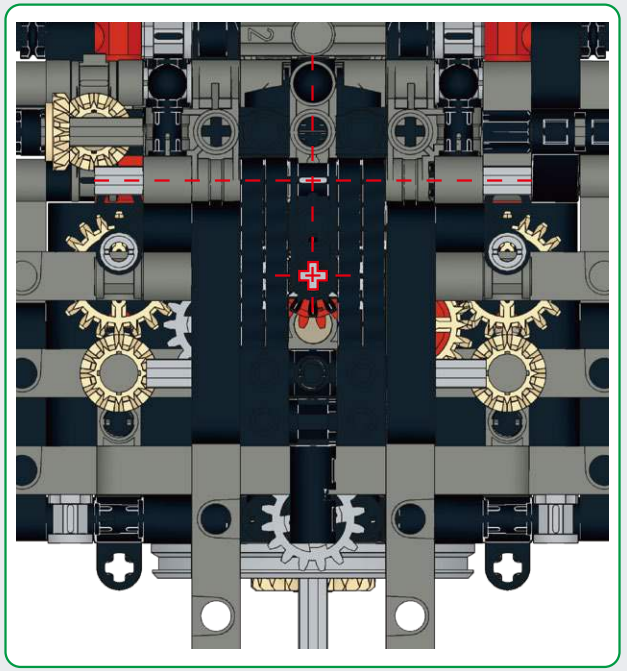

B111

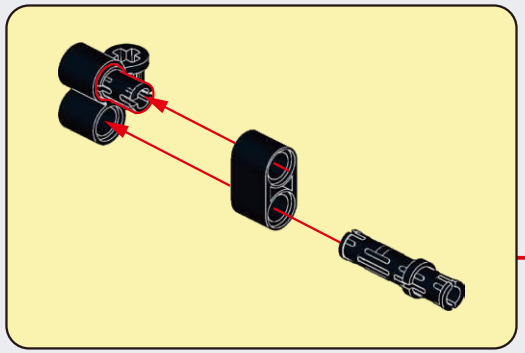

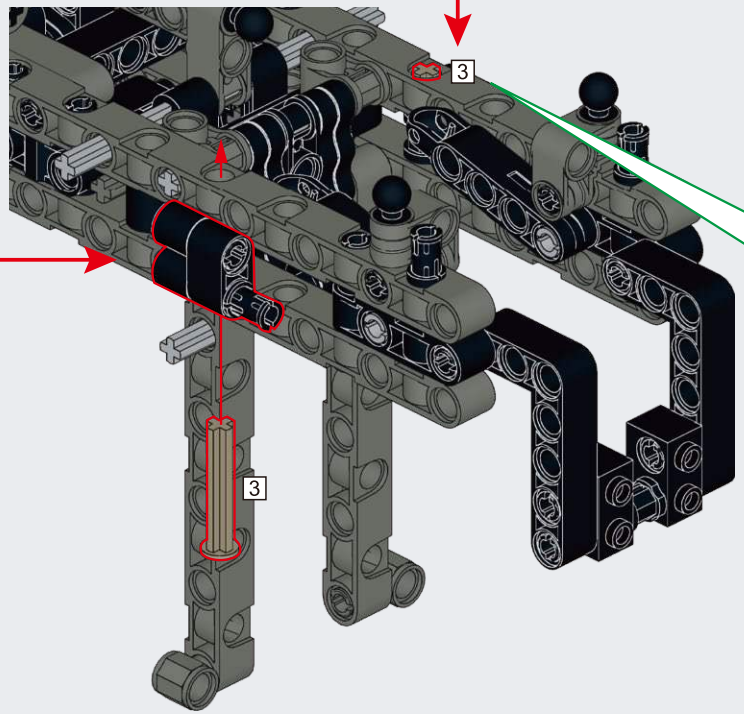

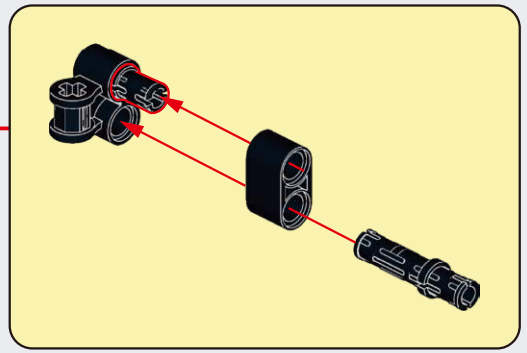

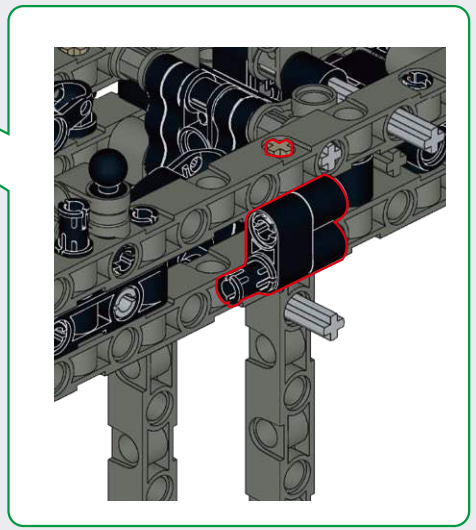

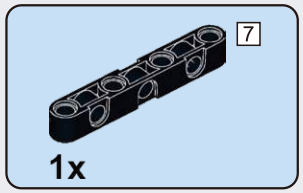

B112

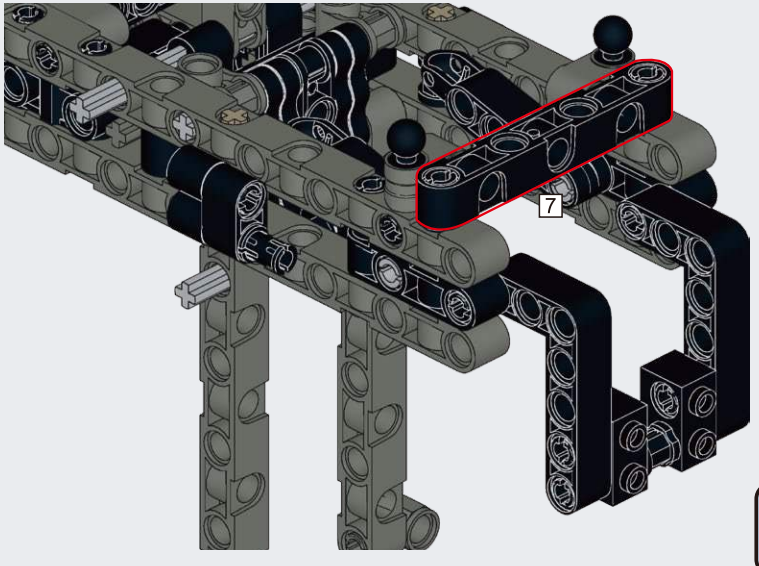

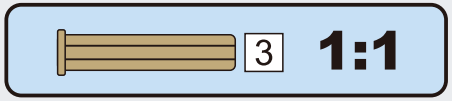

B113

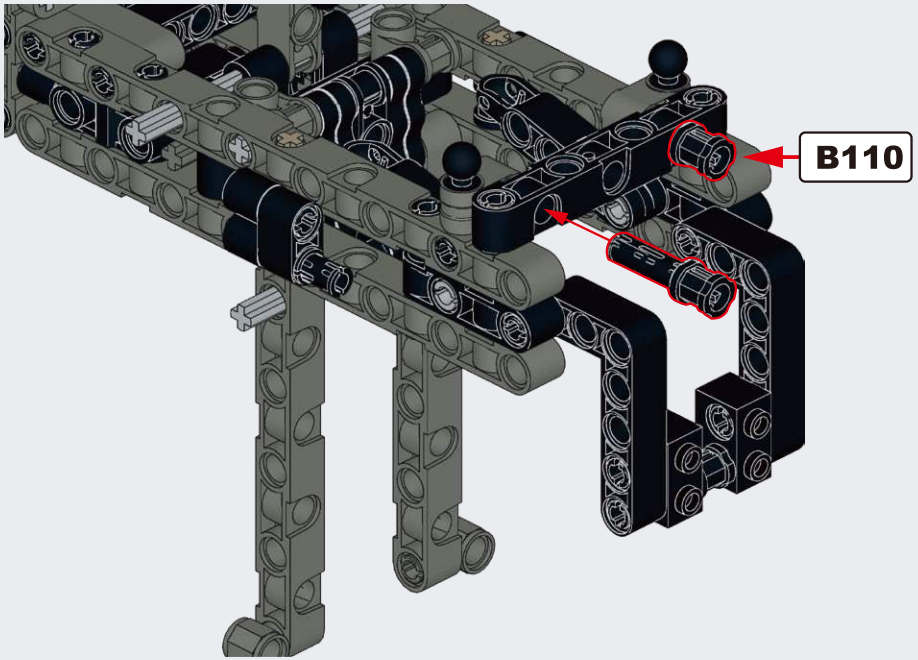

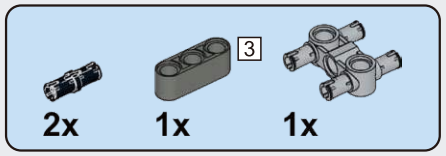

B114

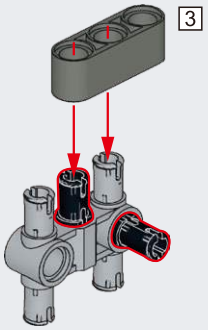

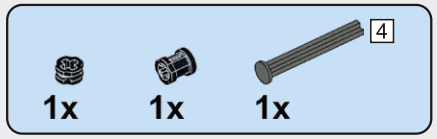

B115

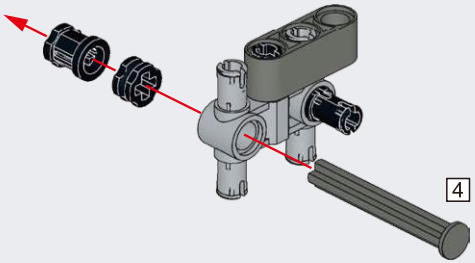

B116

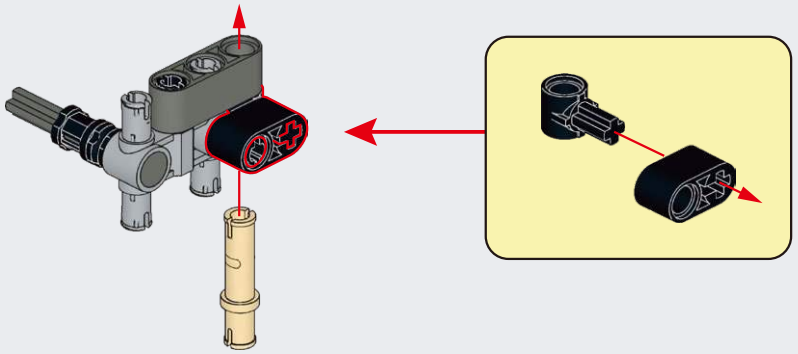

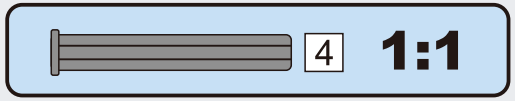

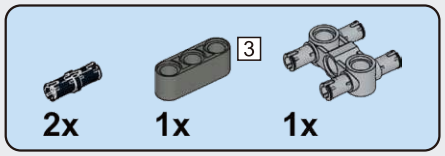

B117

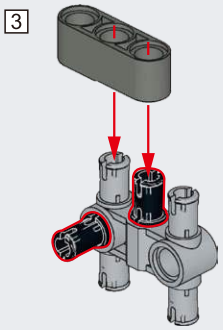

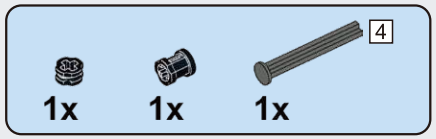

B118

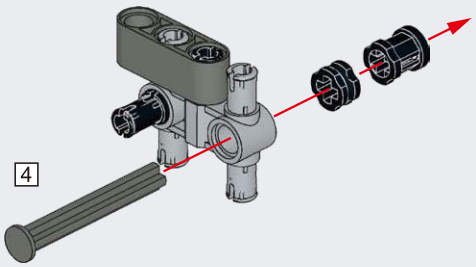

B119

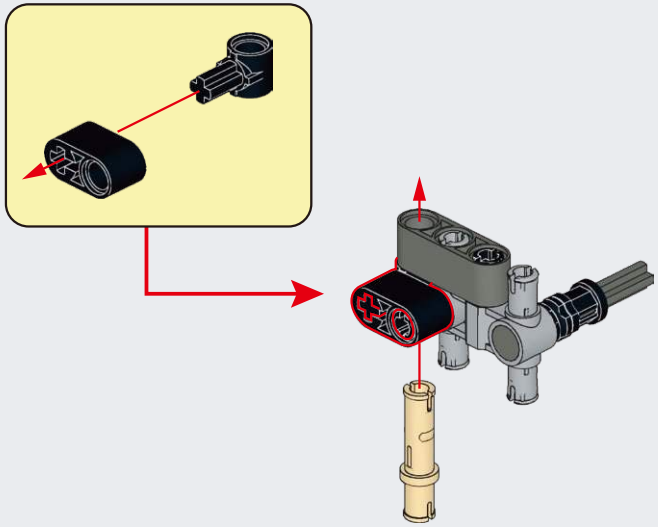

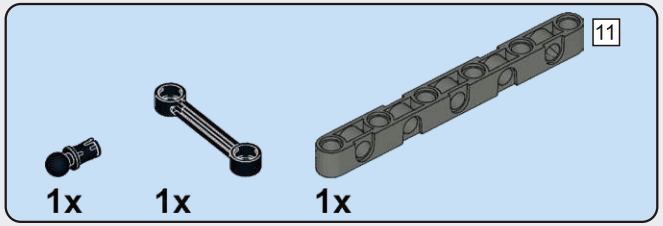

B120

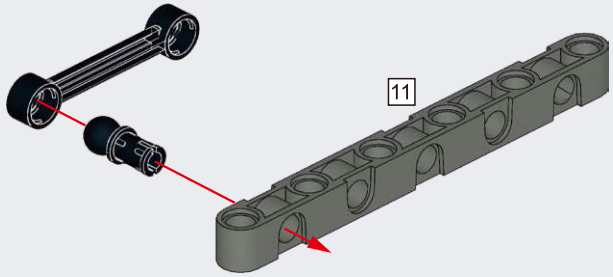

B121

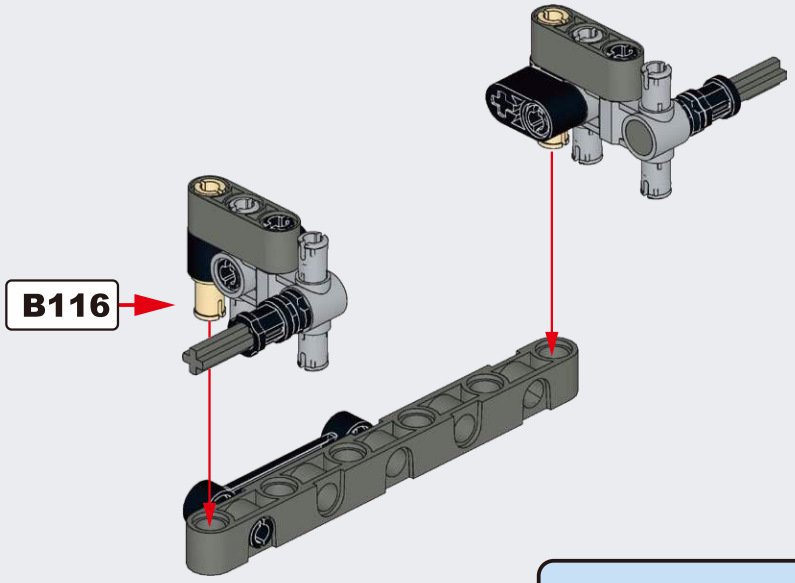

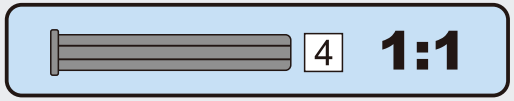

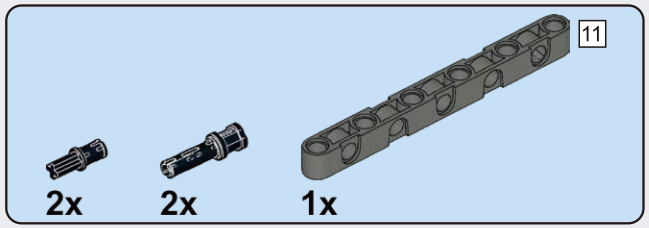

B122

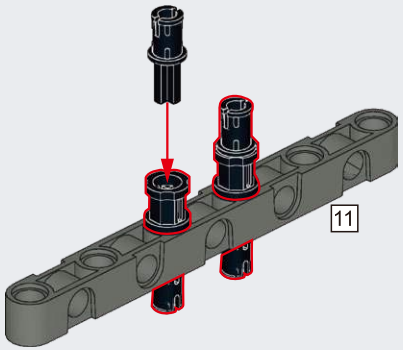

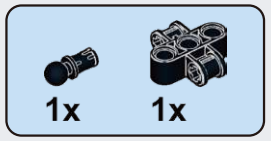

B123

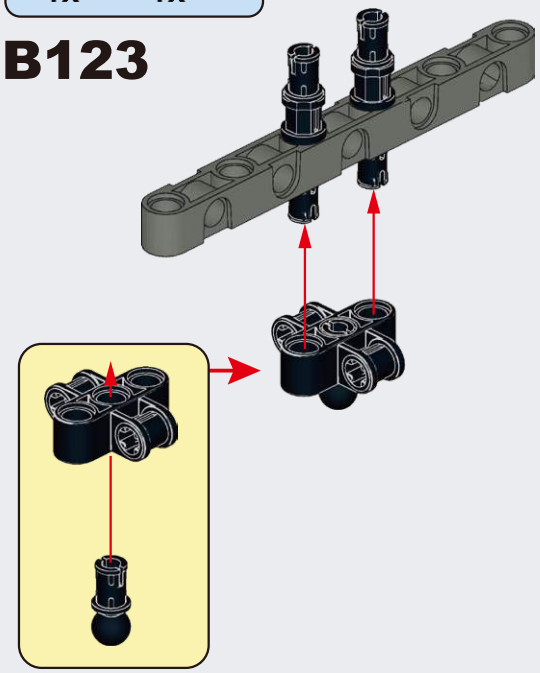

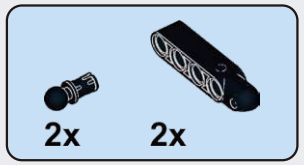

B124

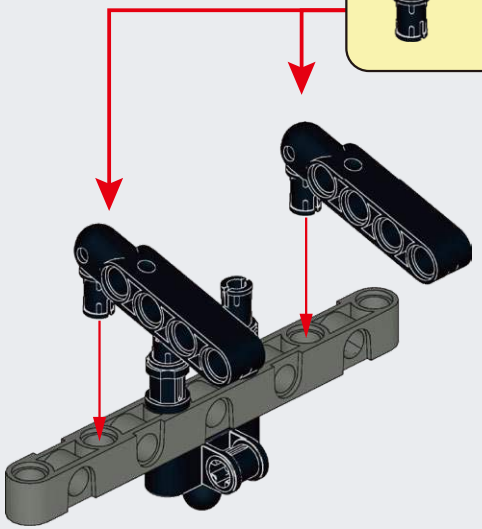

B125

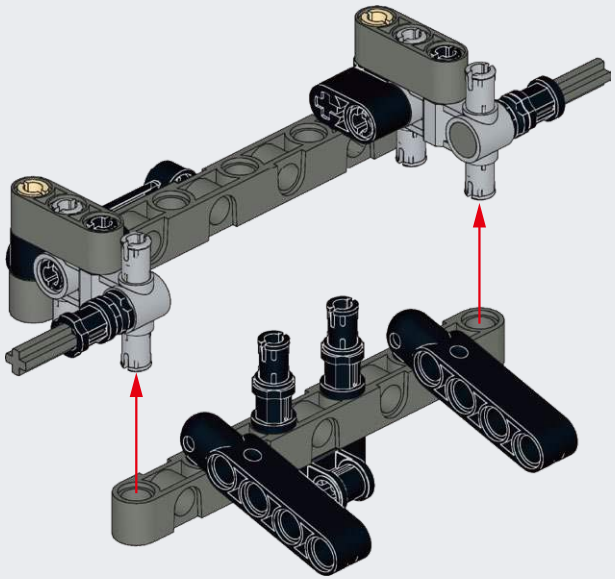

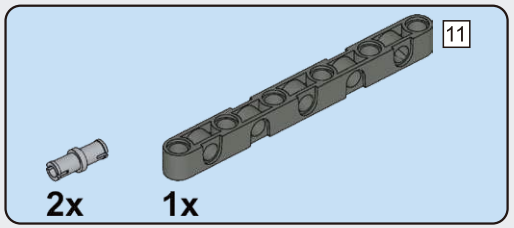

B126

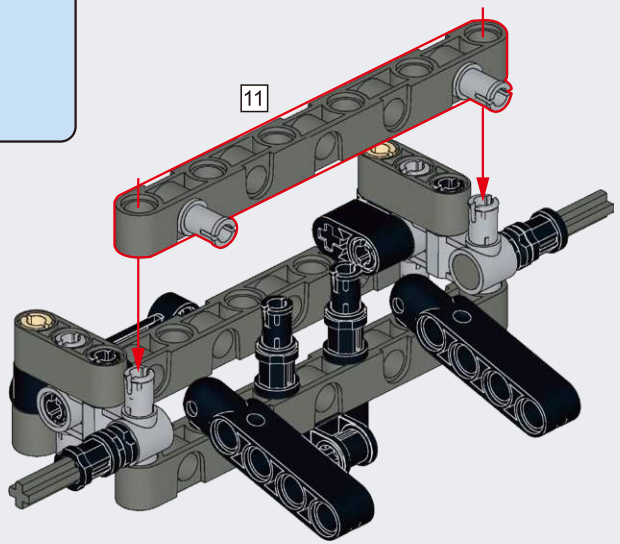

B127

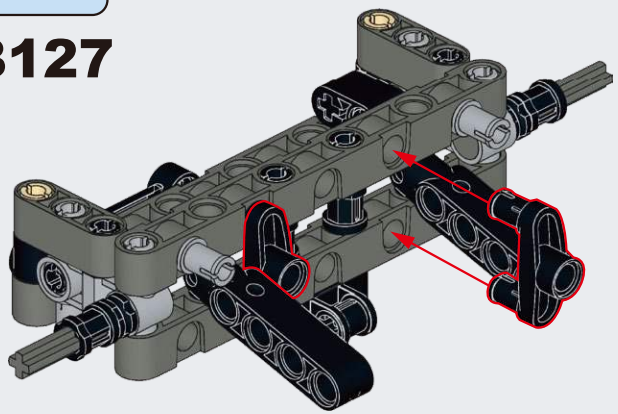

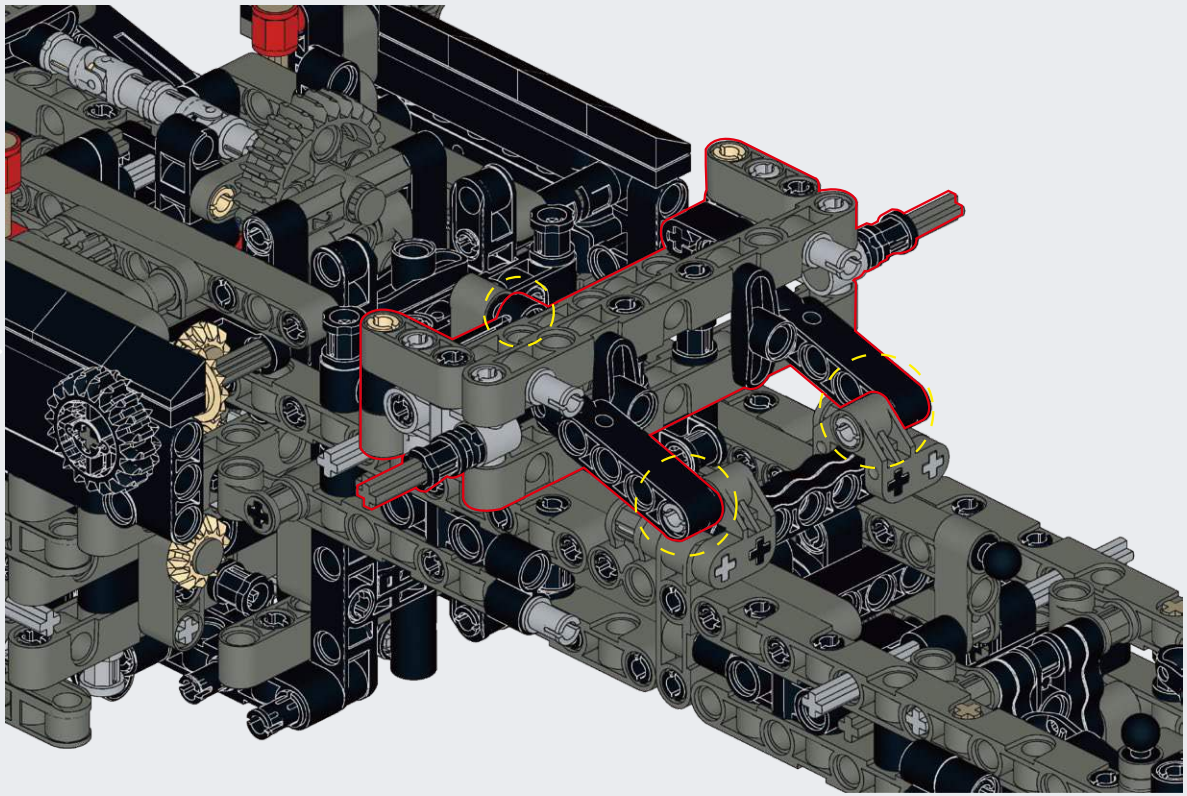

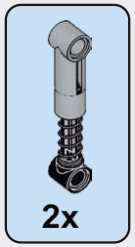

B128

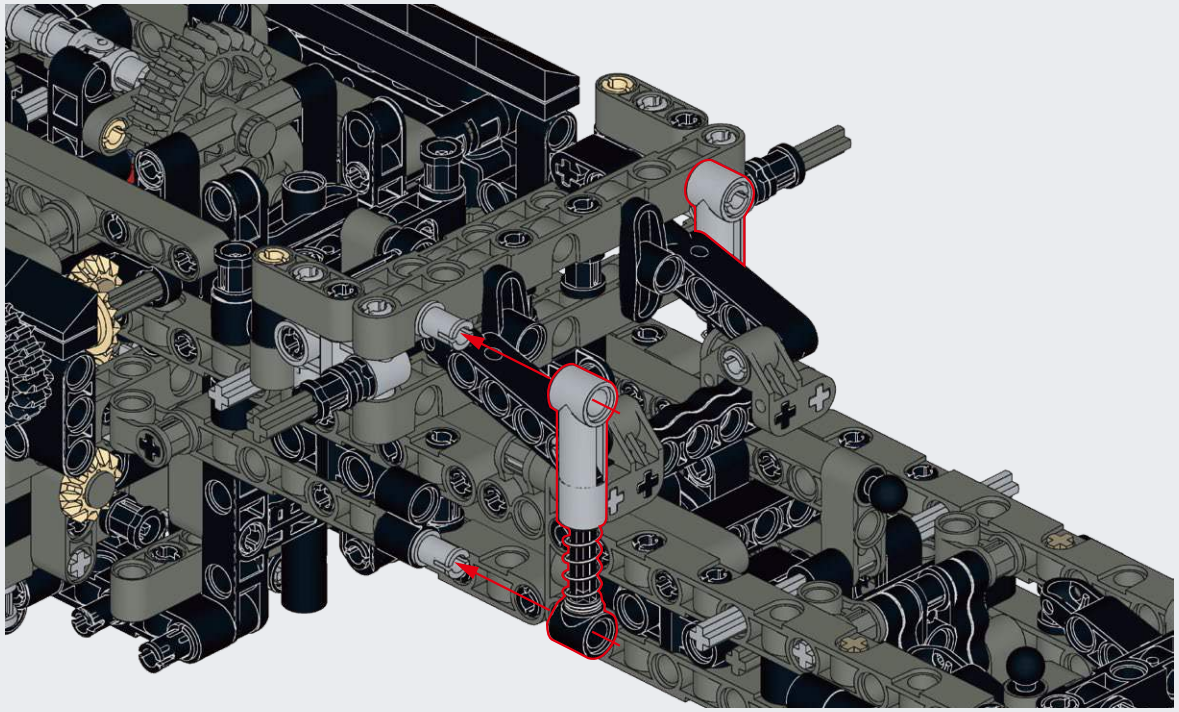

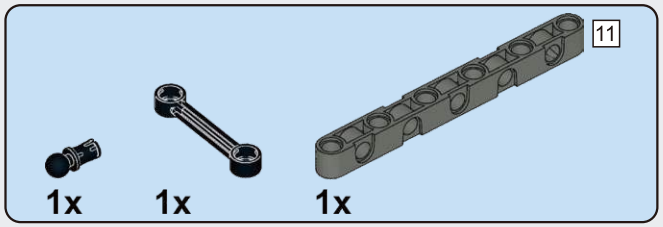

B129

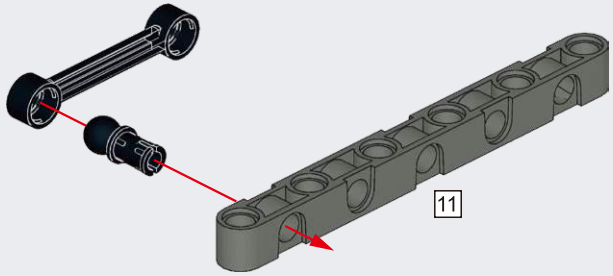

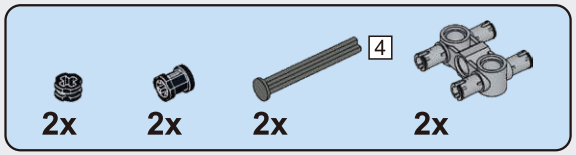

B130

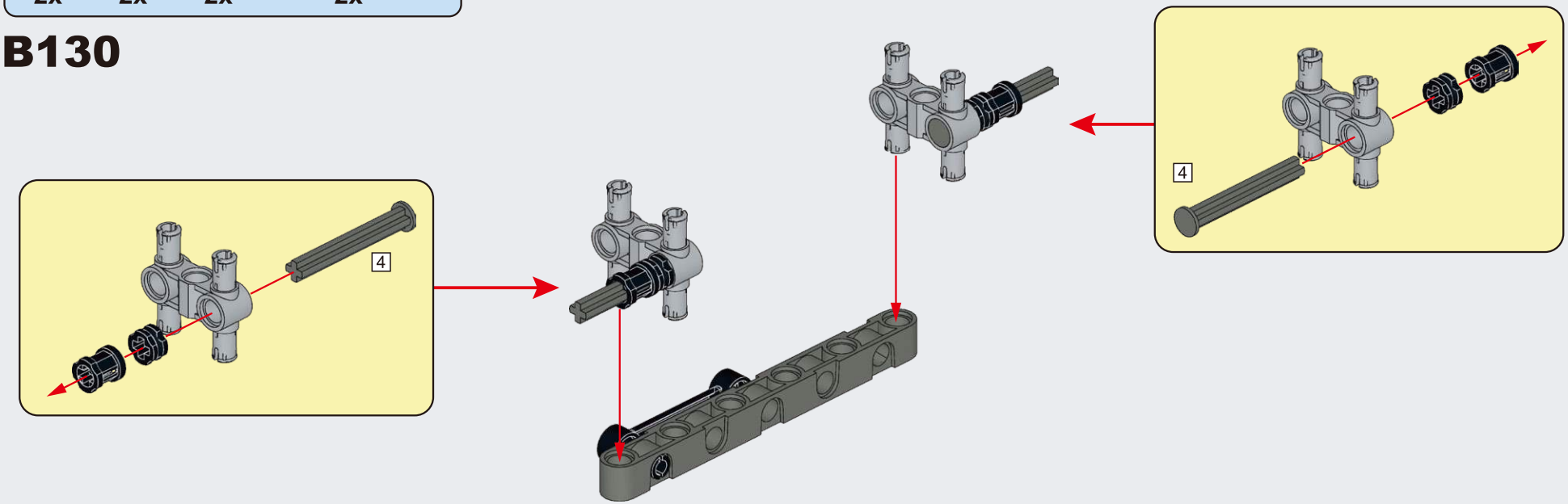

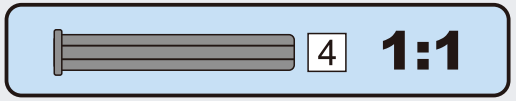

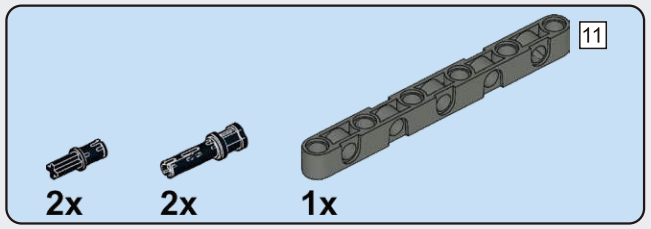

B131

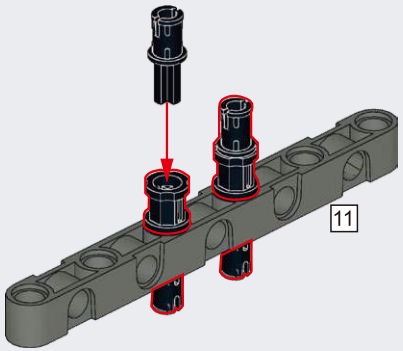

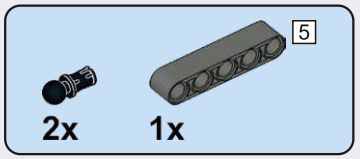

B132

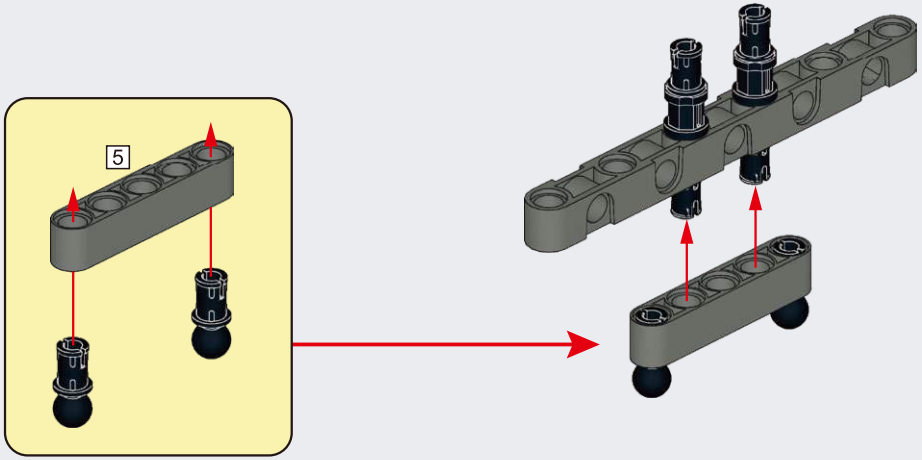

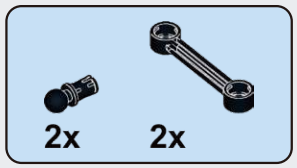

B133

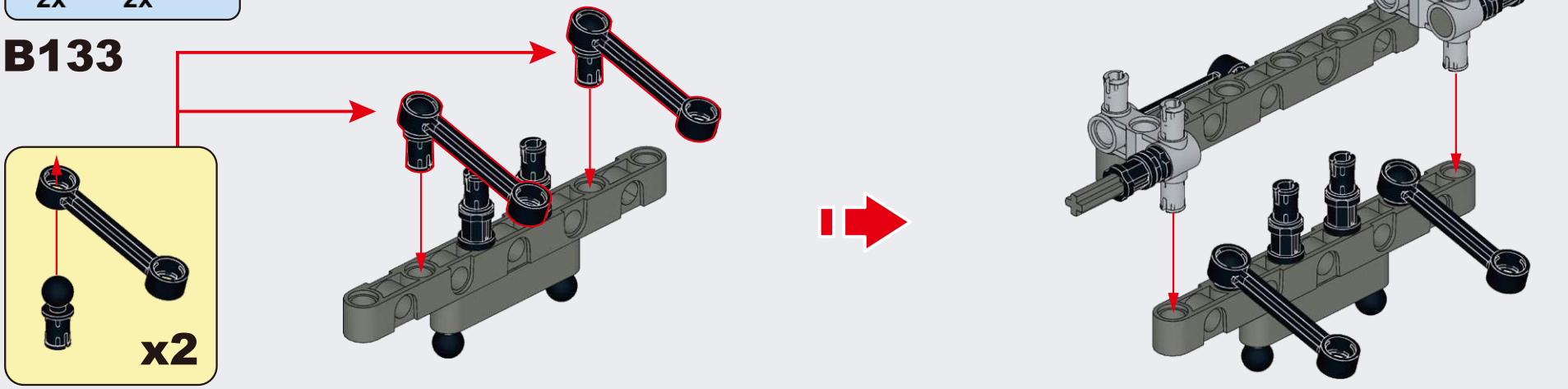

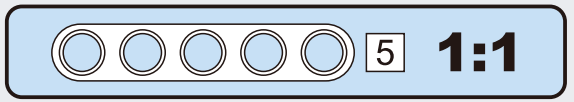

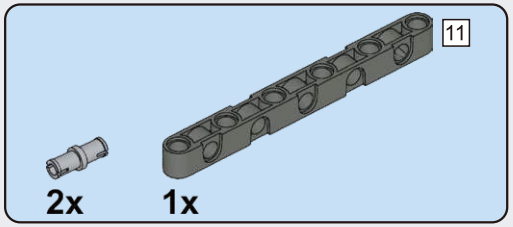

B134

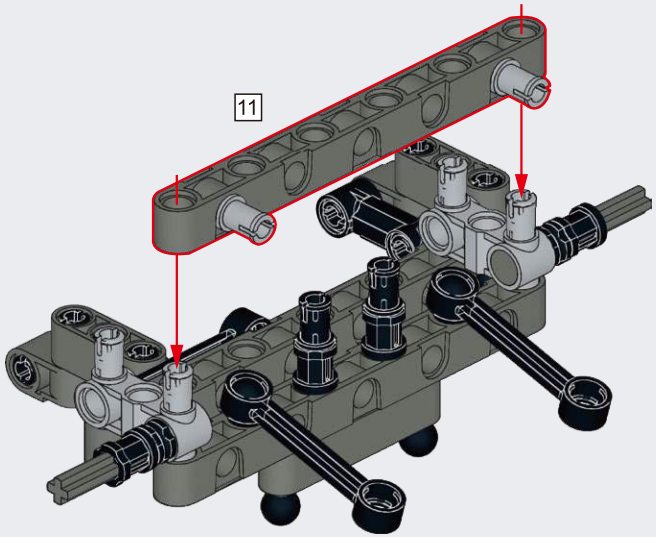

B135

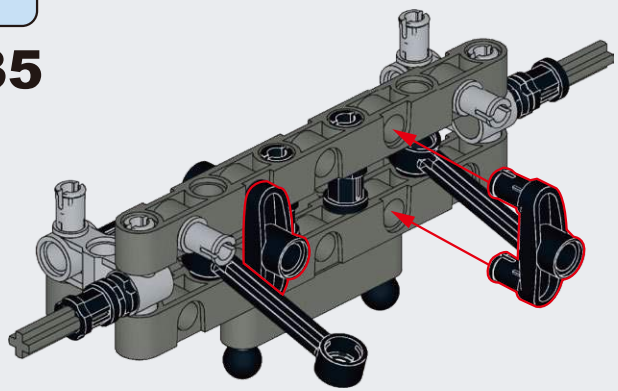

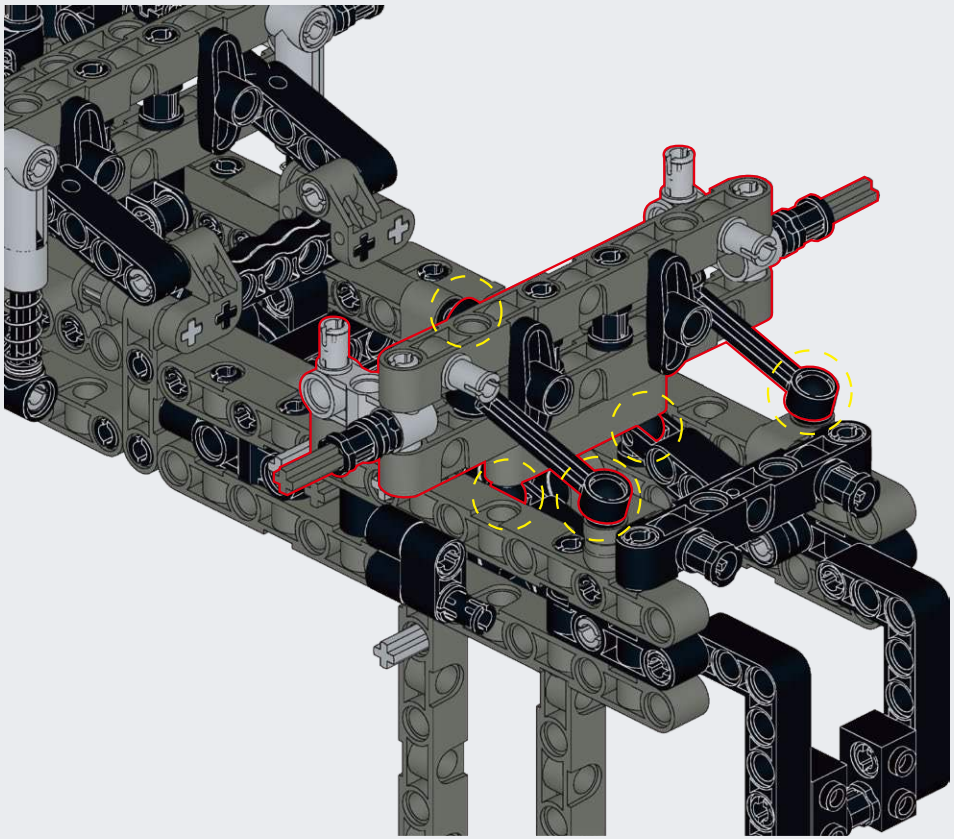

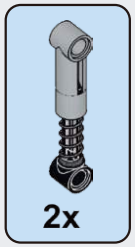

B136

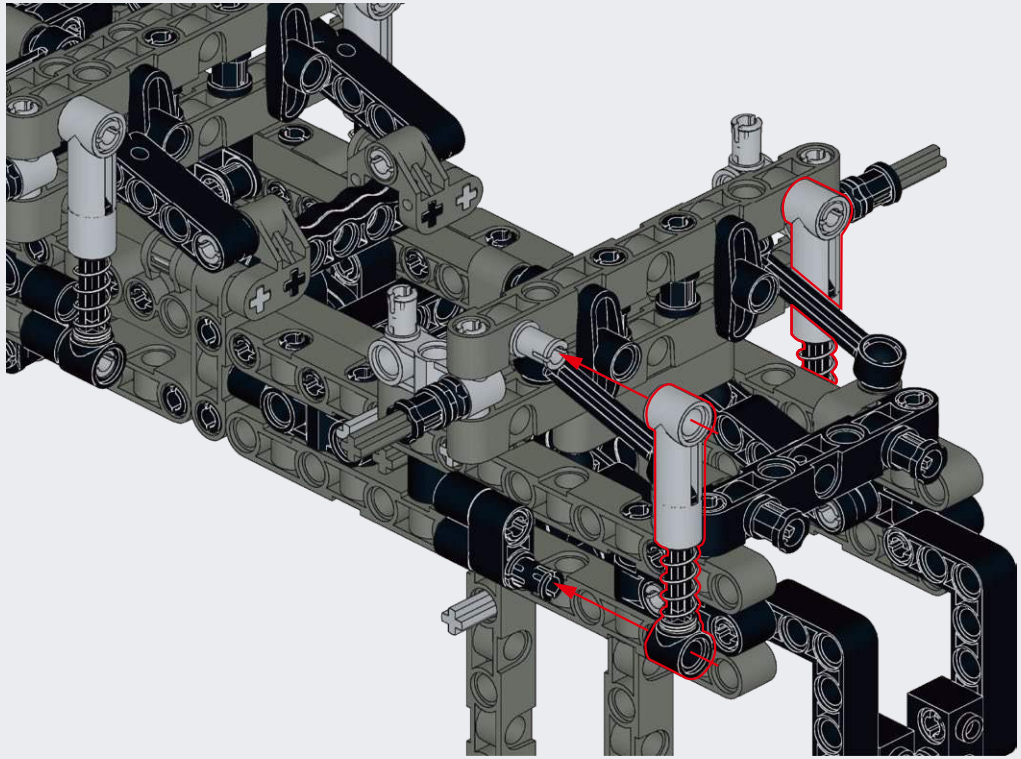

B137

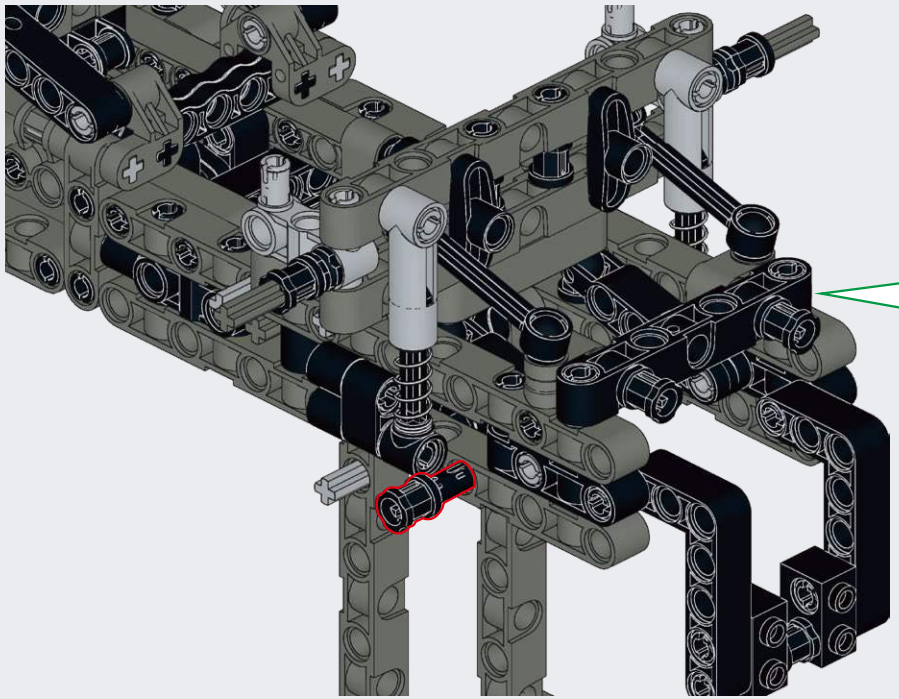

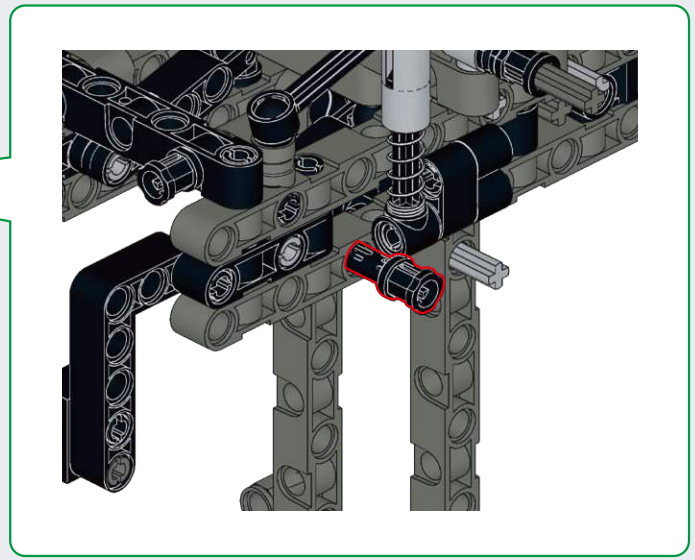

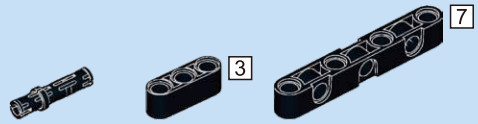

B138

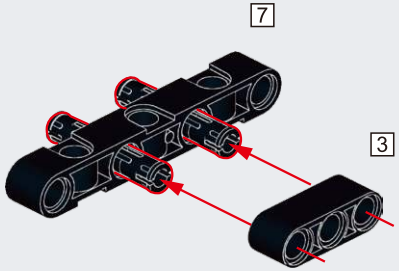

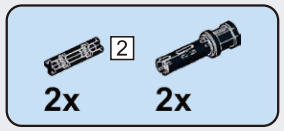

B139

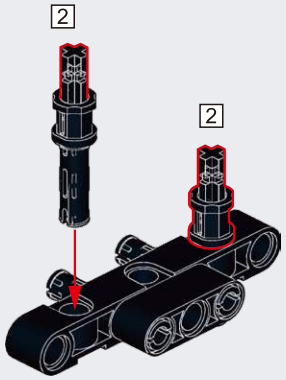

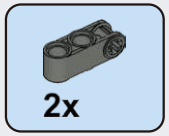

B140

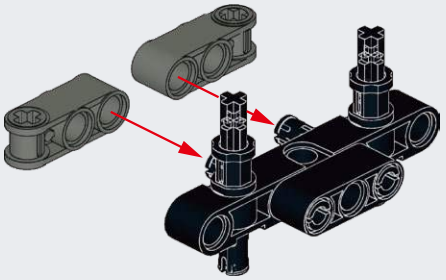

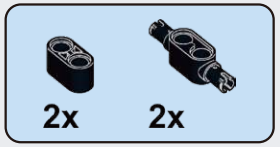

B141

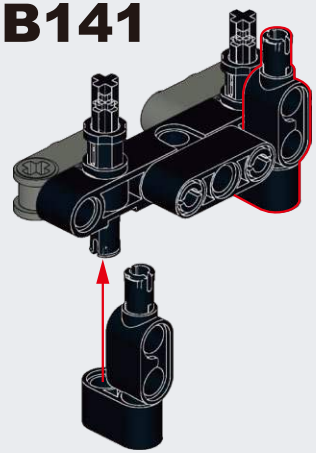

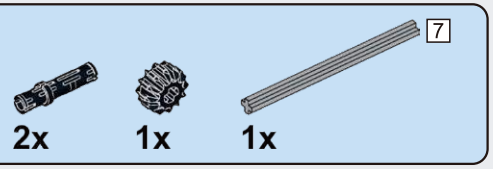

B142

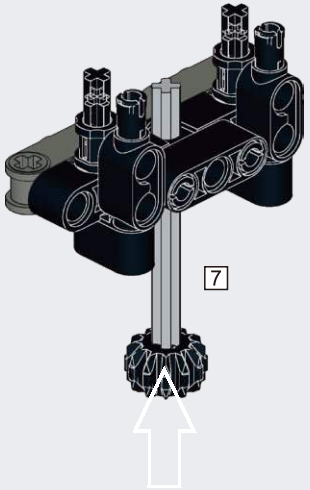

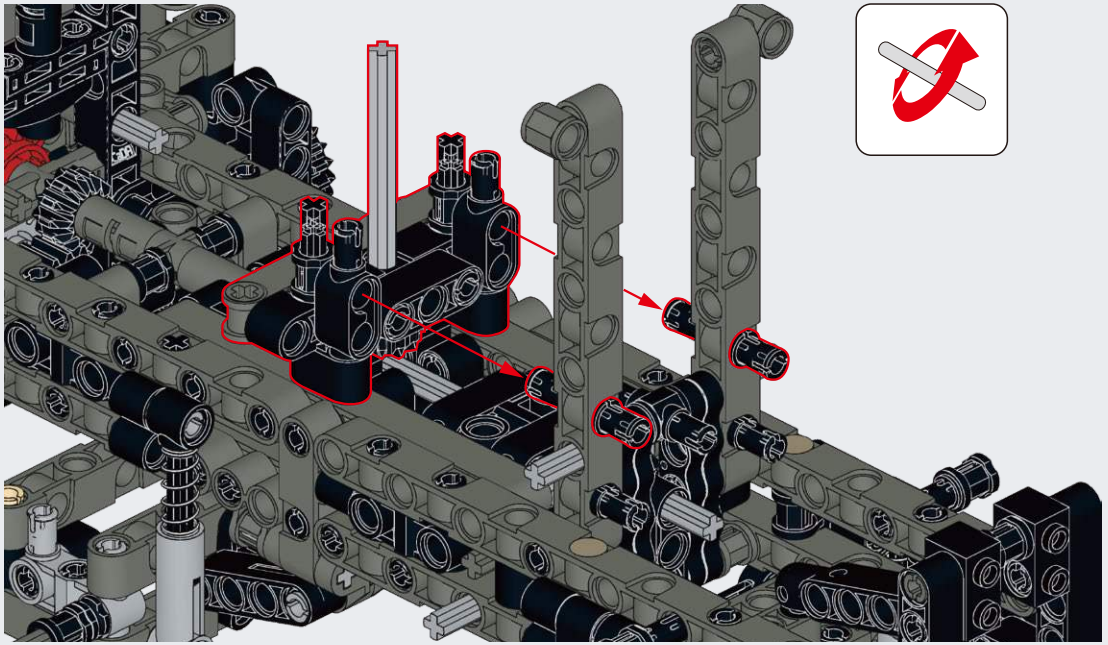

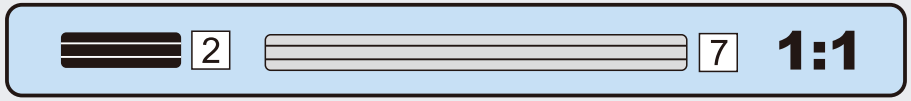

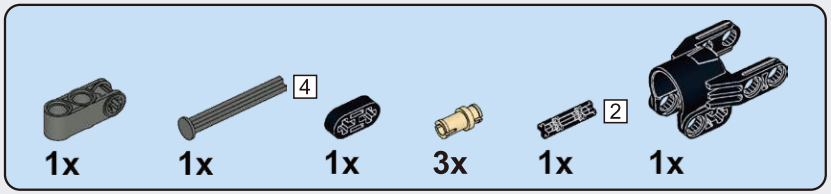

B143

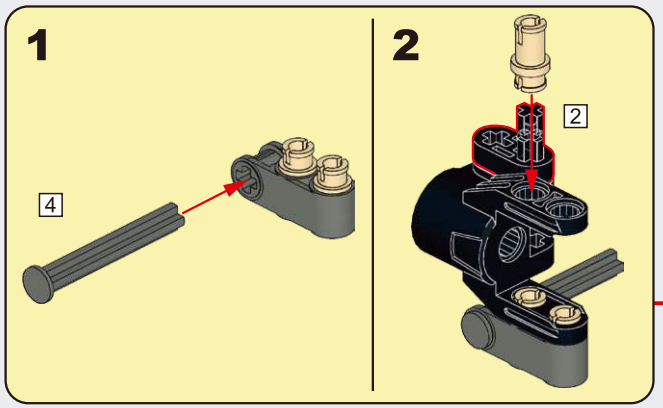

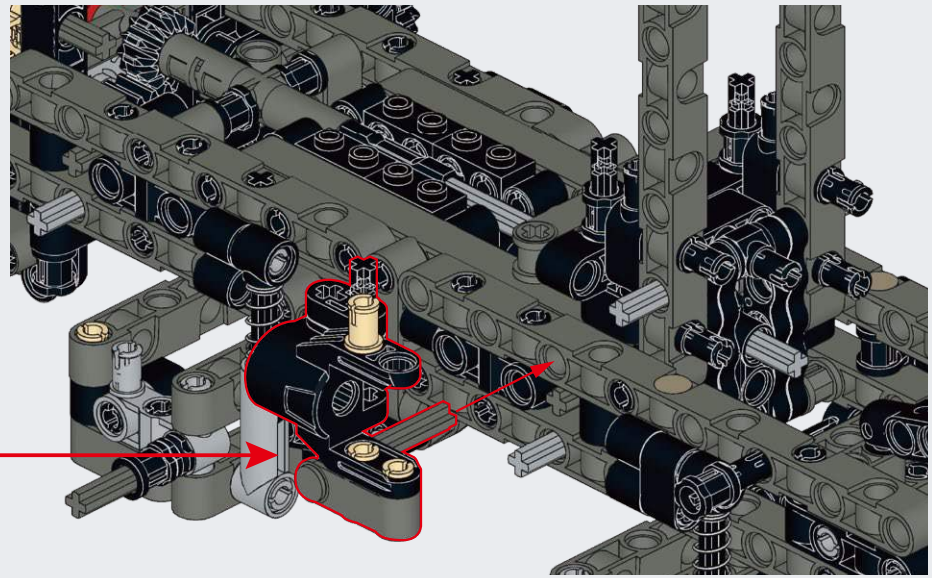

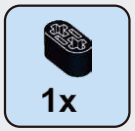

B144

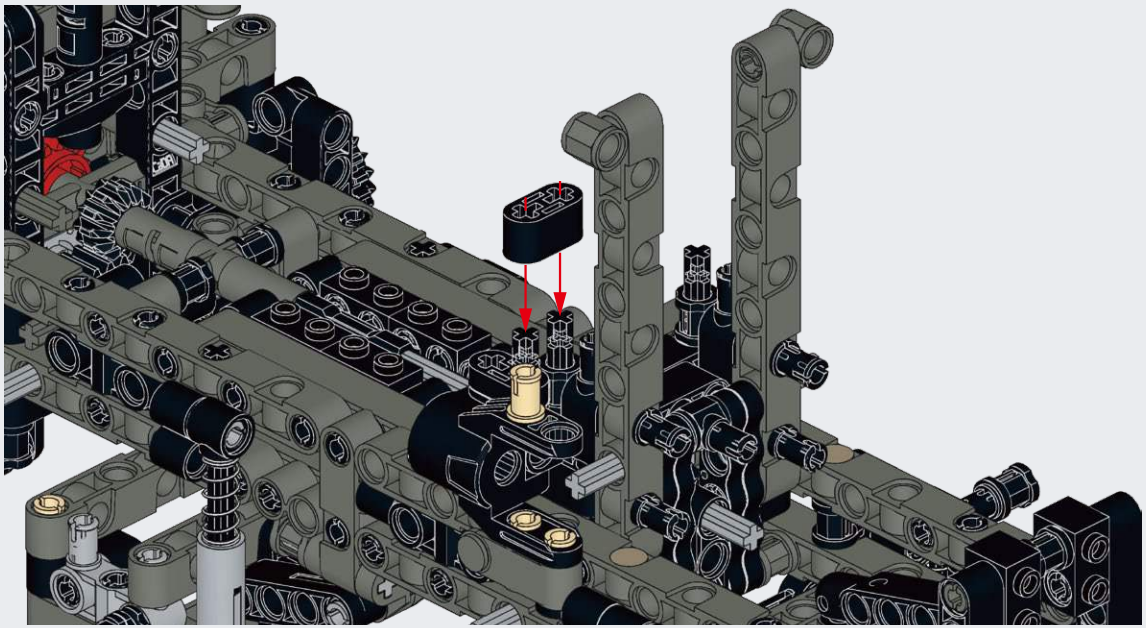

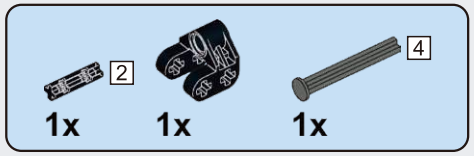

B145

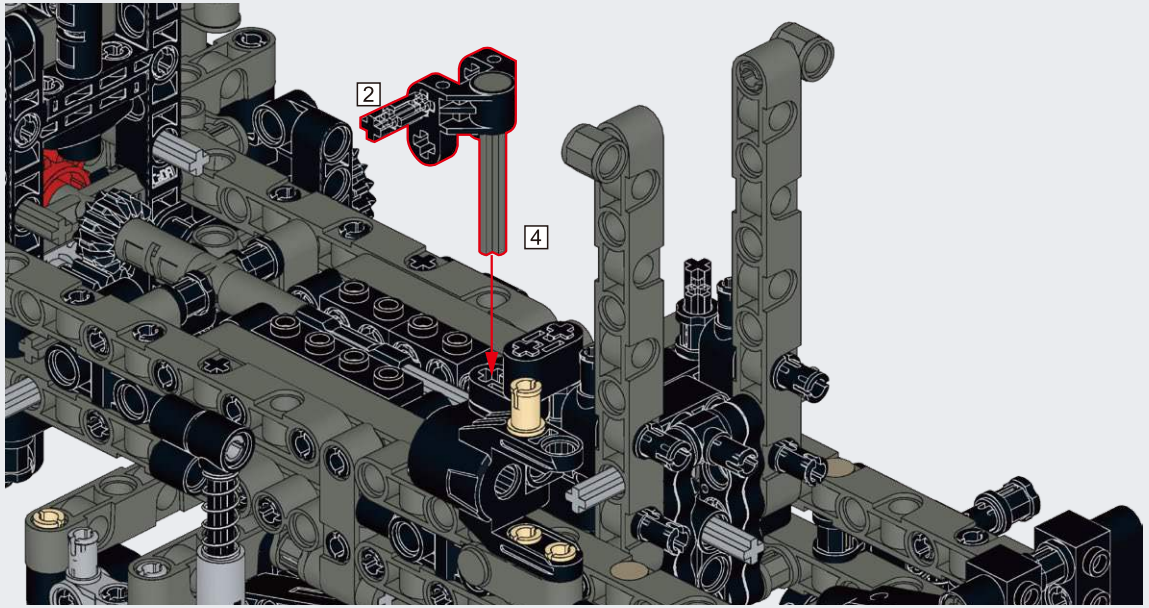

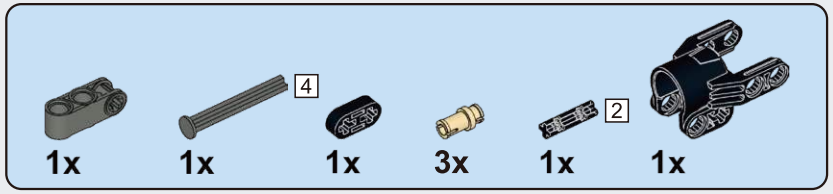

B146

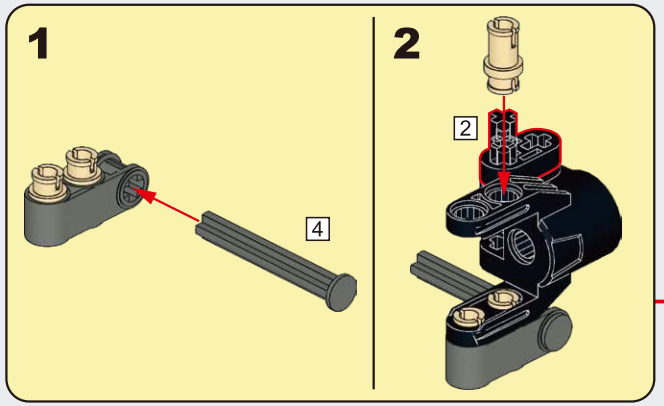

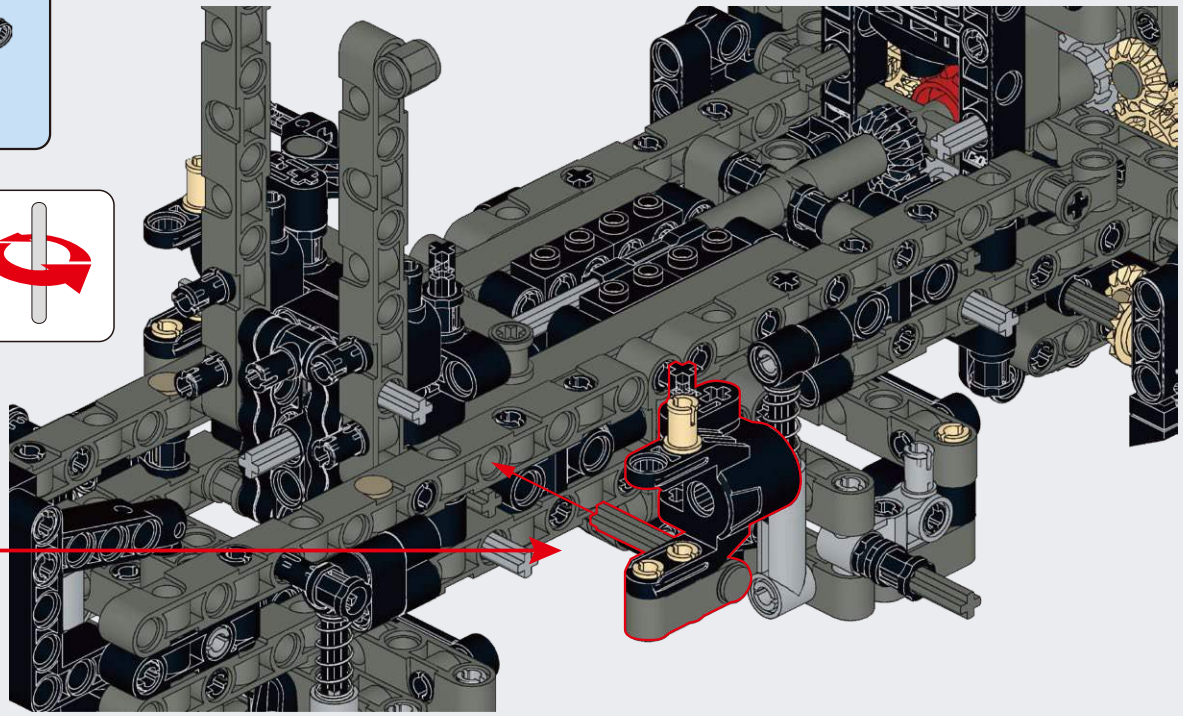

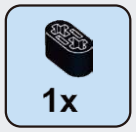

B147

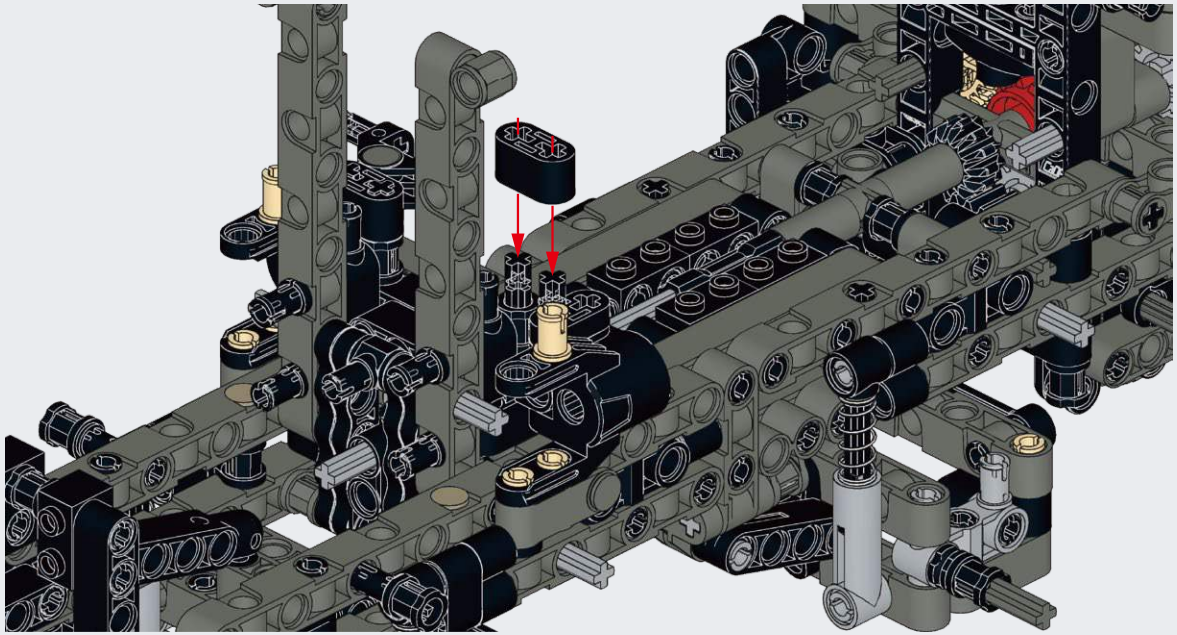

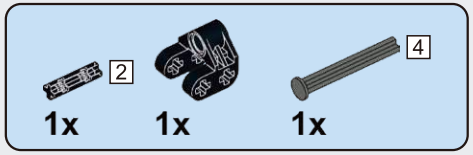

B148

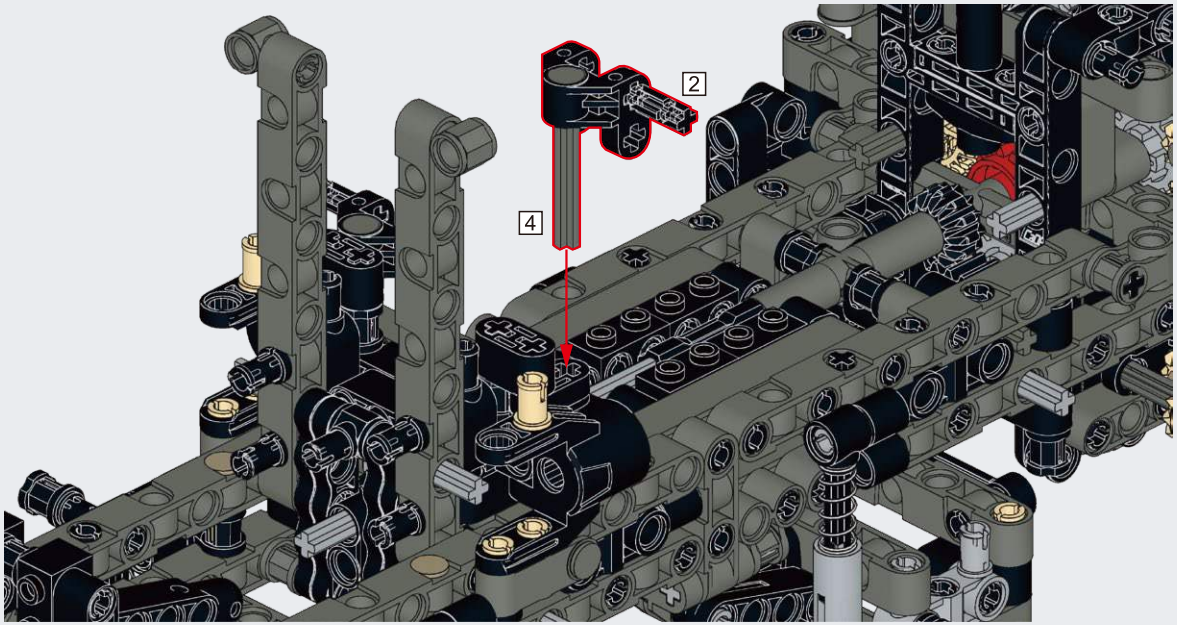

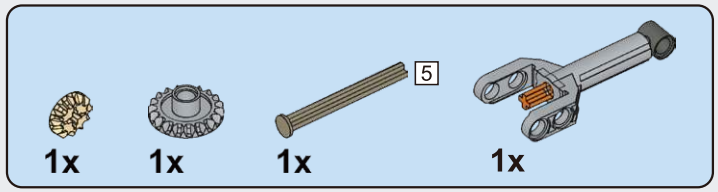

B149

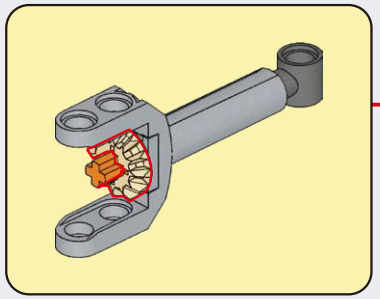

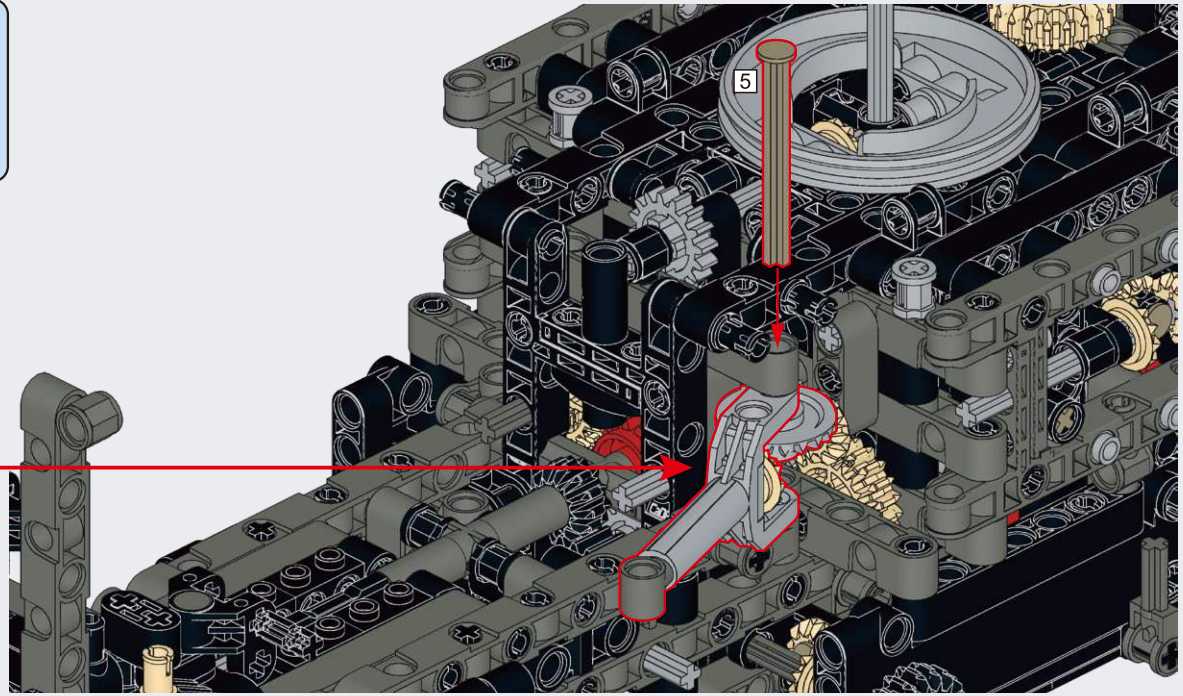

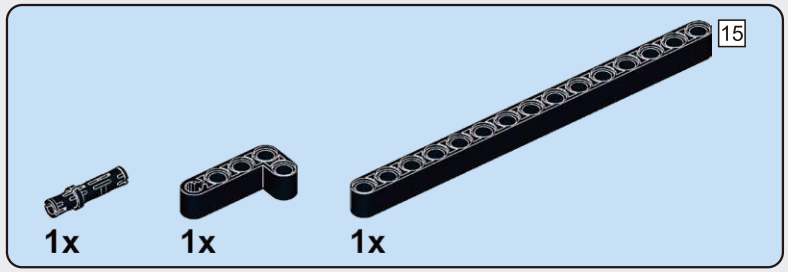

B150

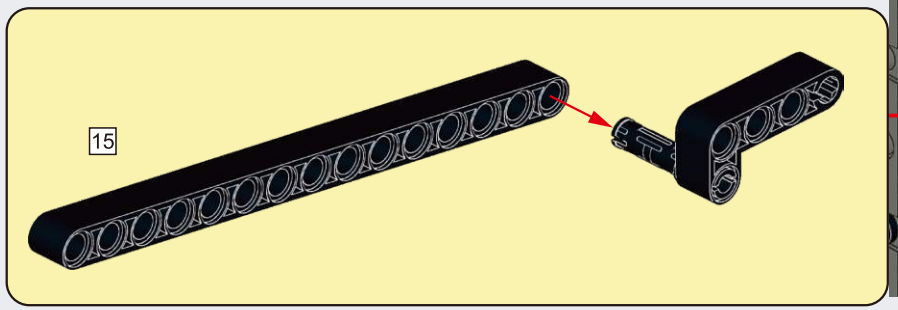

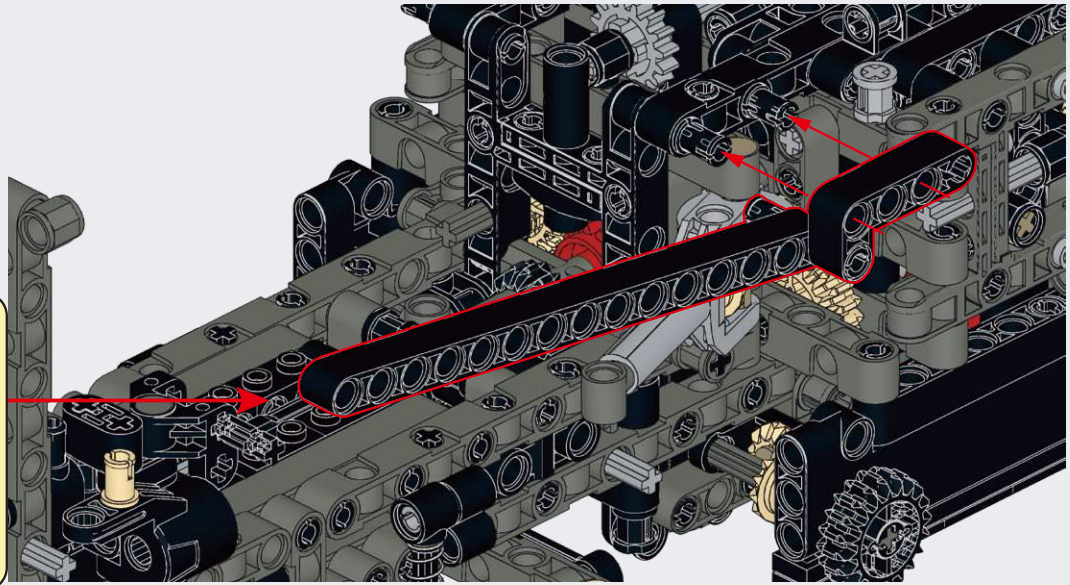

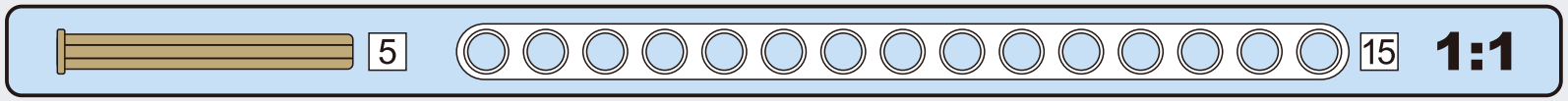

B151

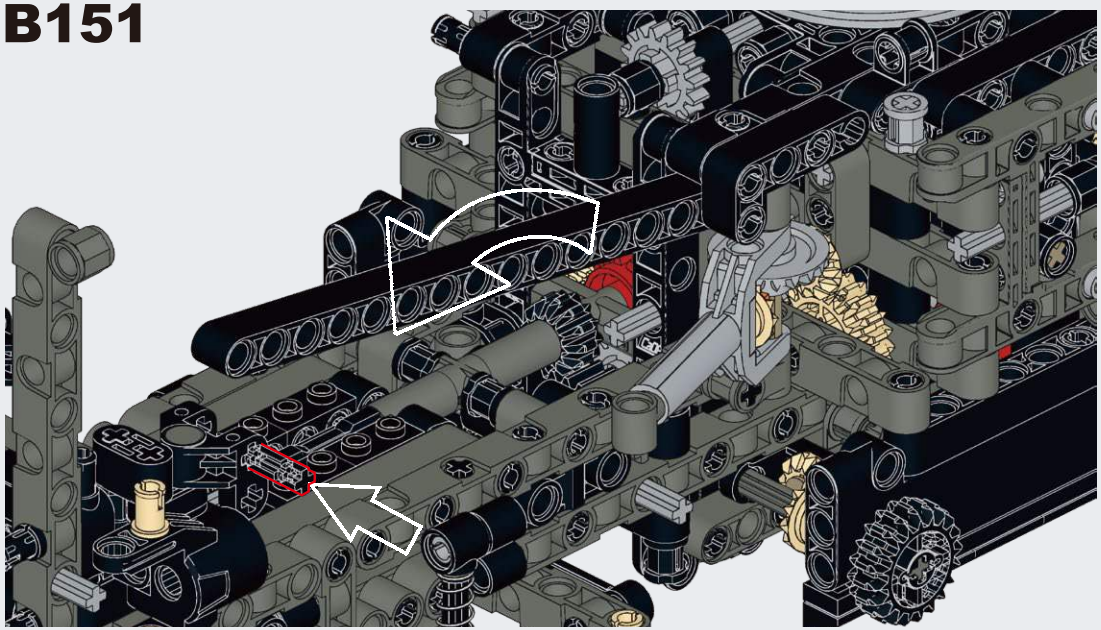

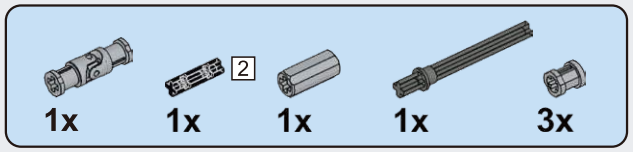

B152

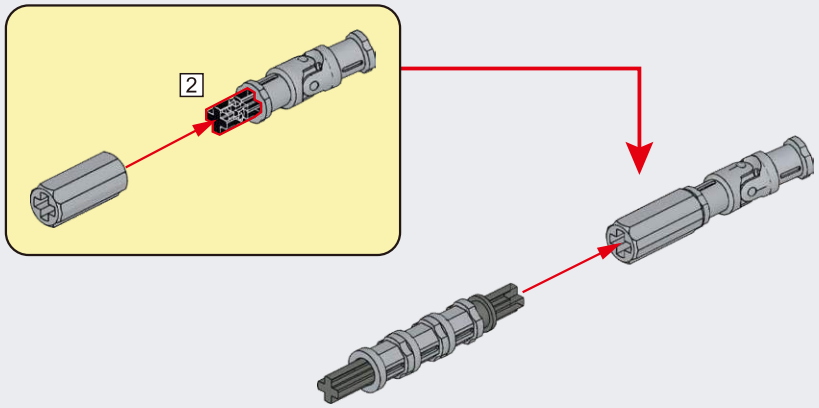

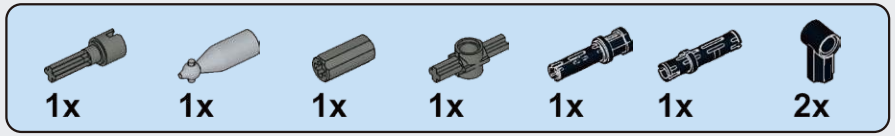

B153

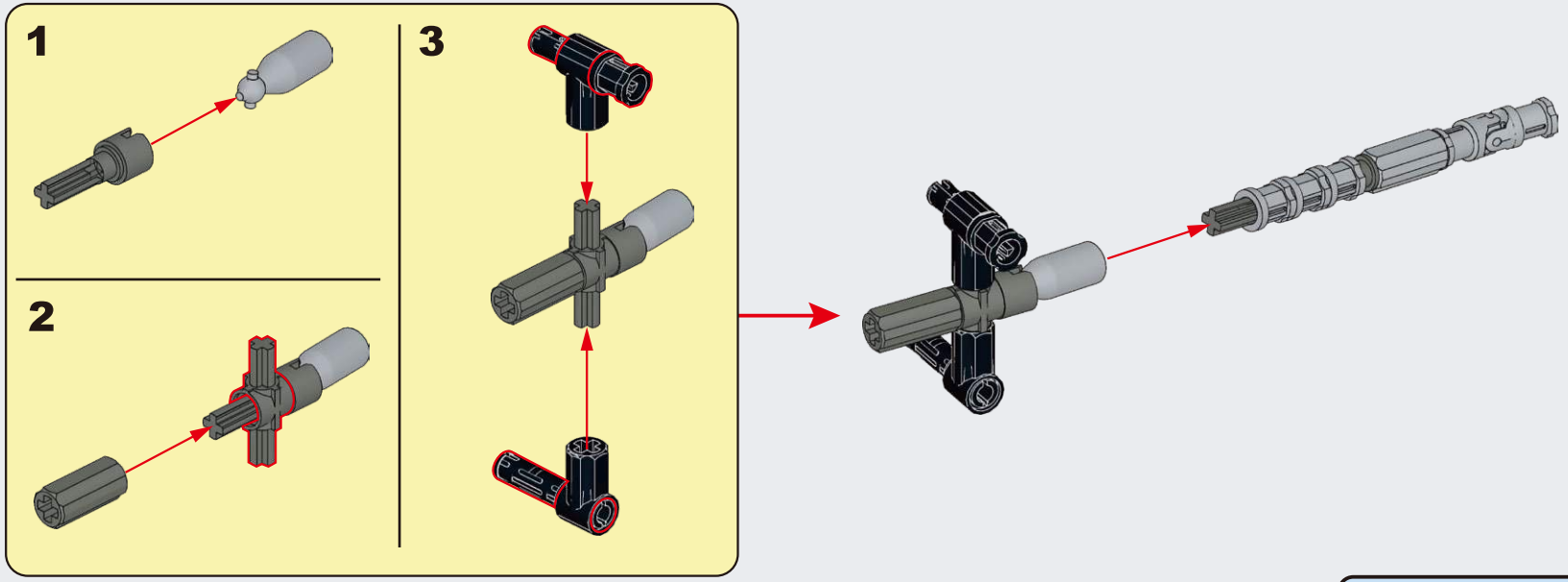

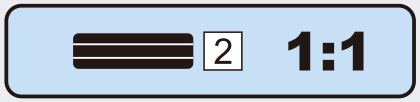

B154

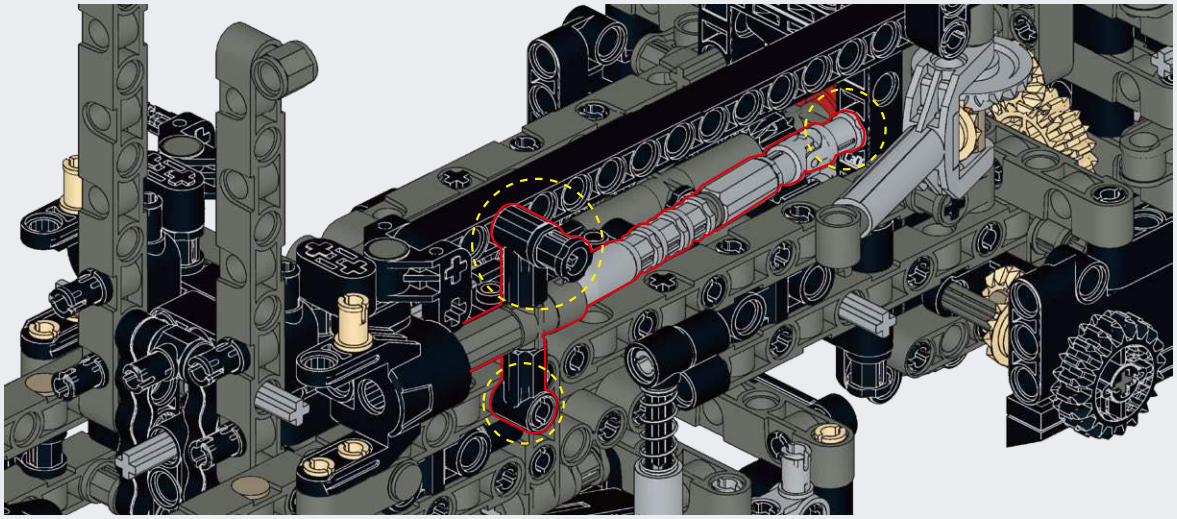

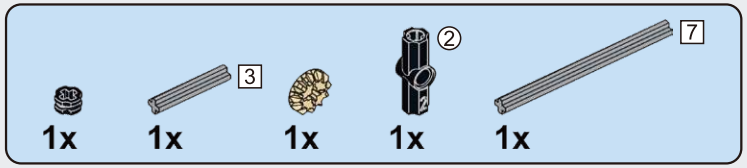

B155

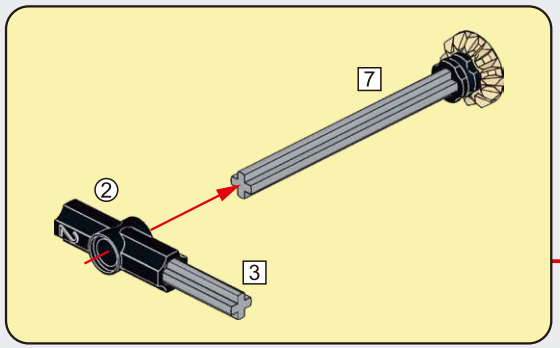

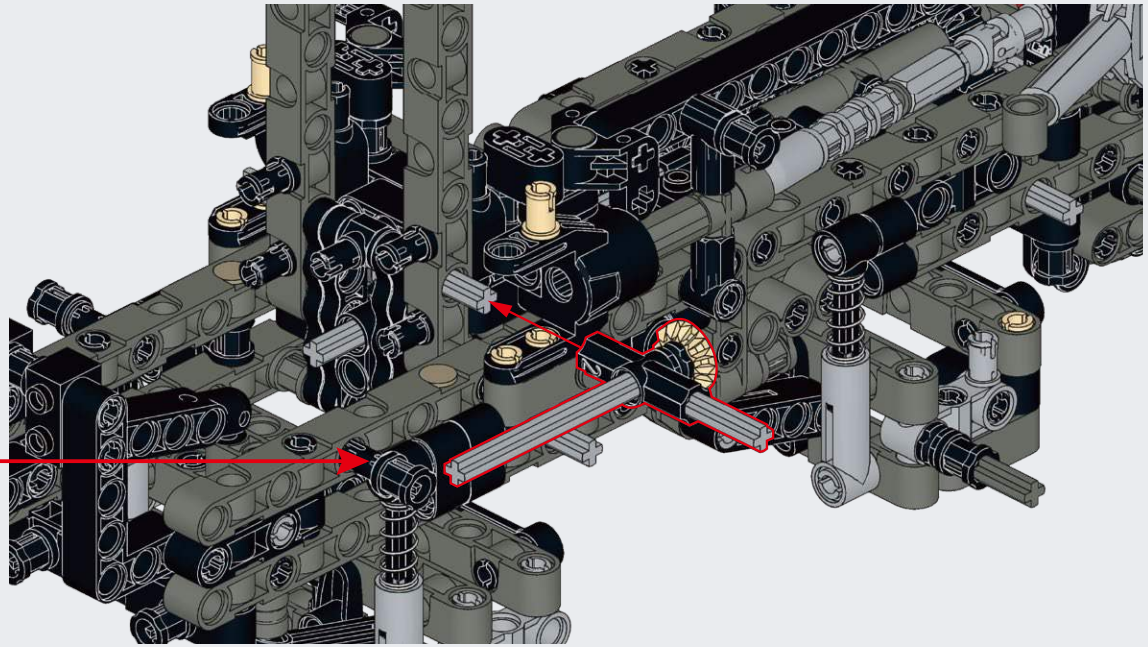

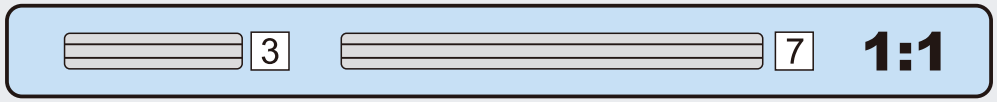

B156

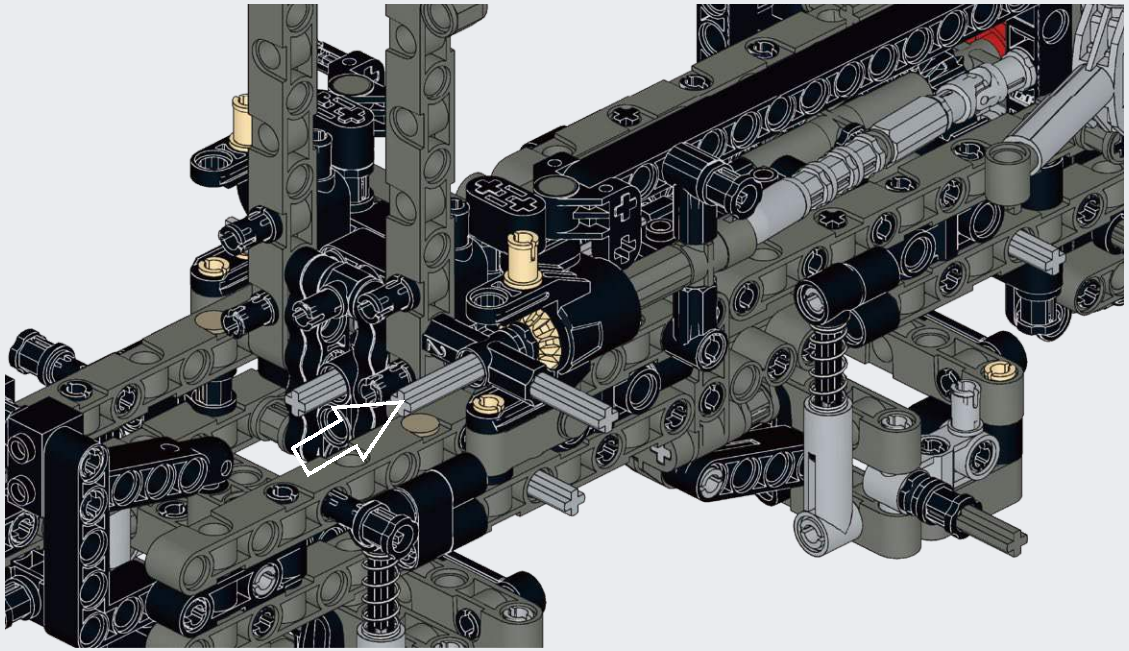

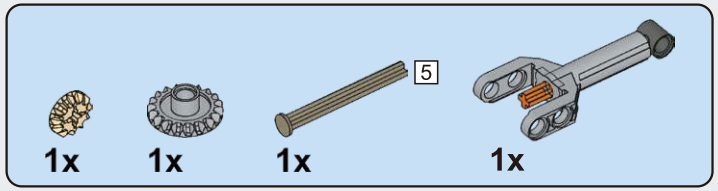

B157

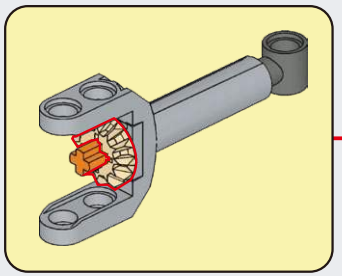

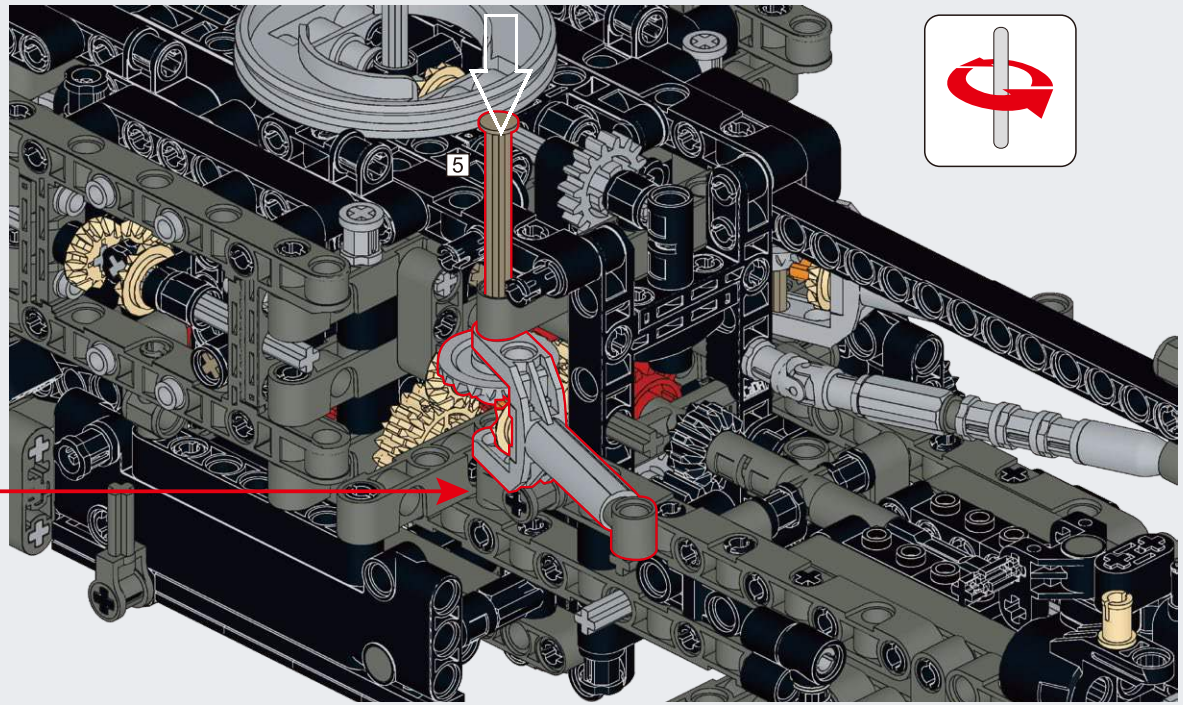

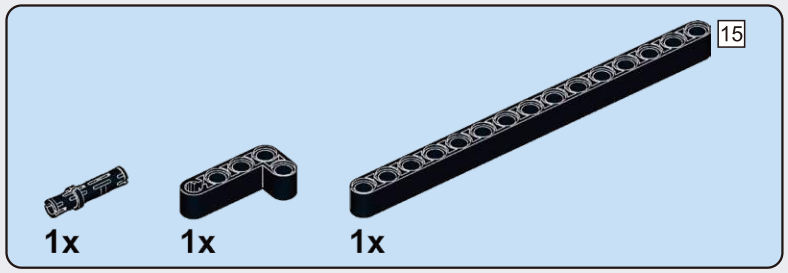

B158

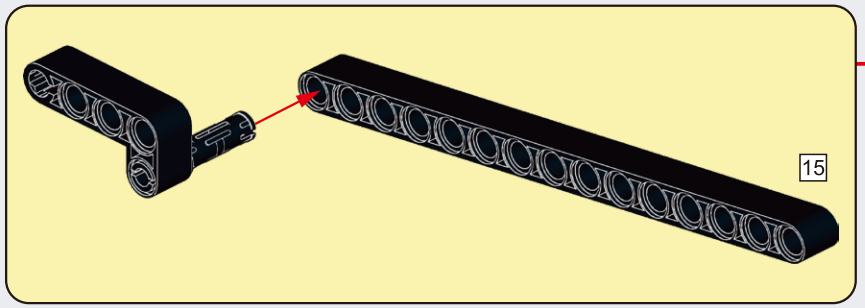

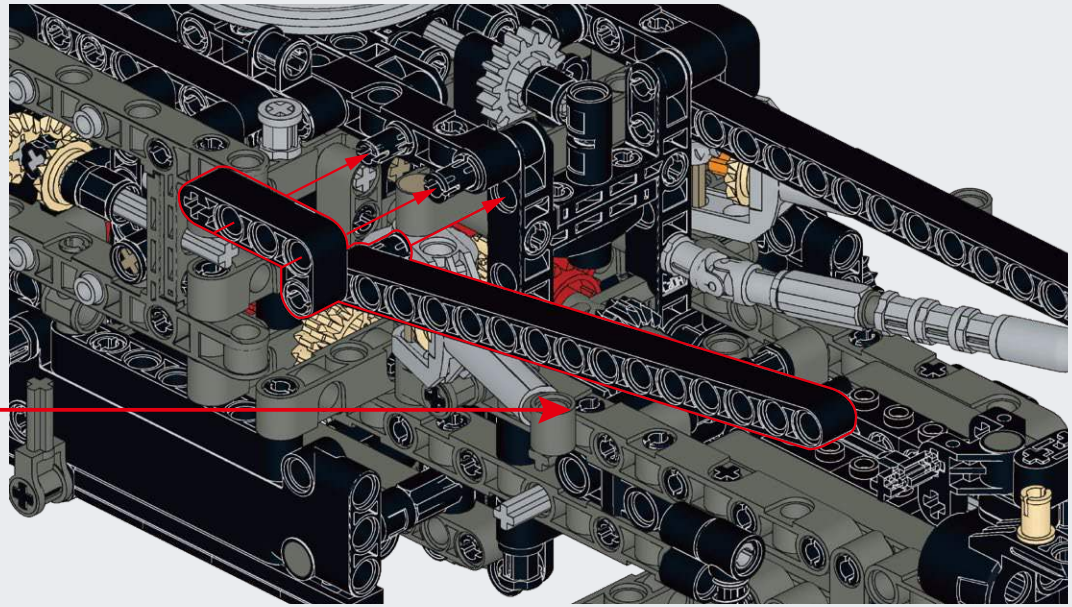

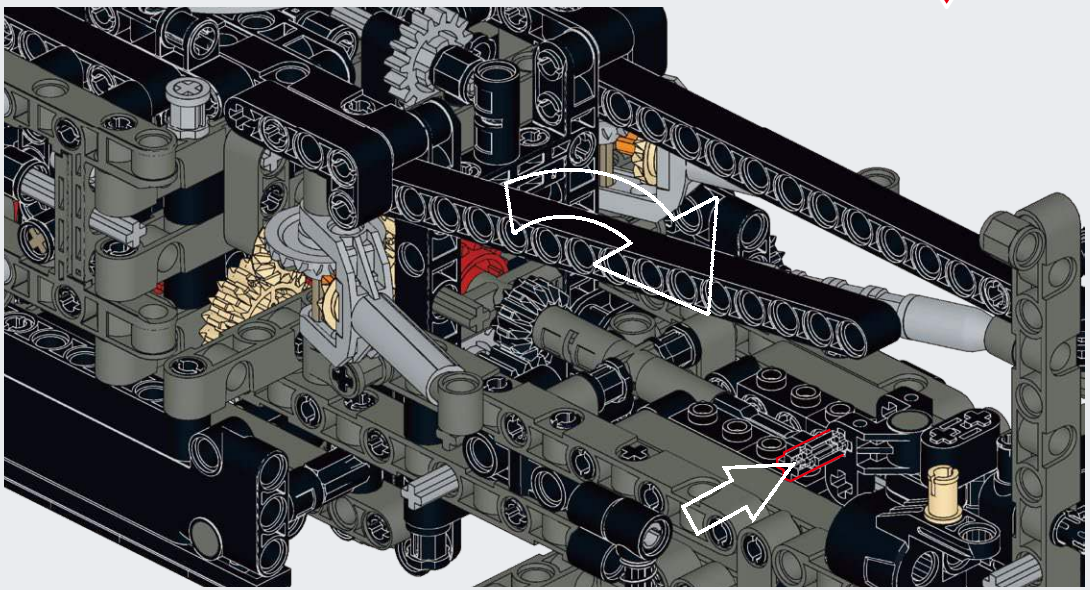

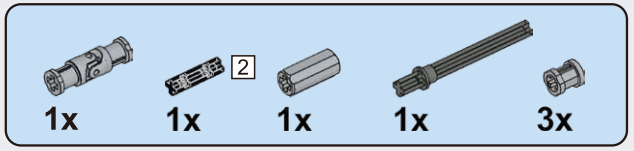

B159

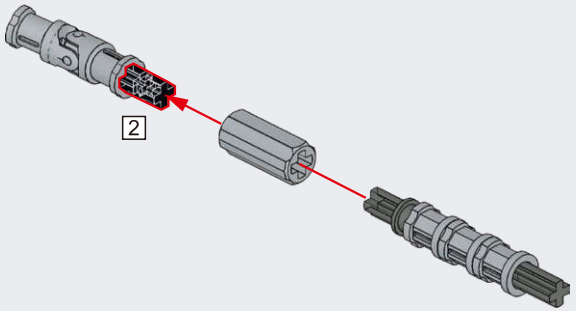

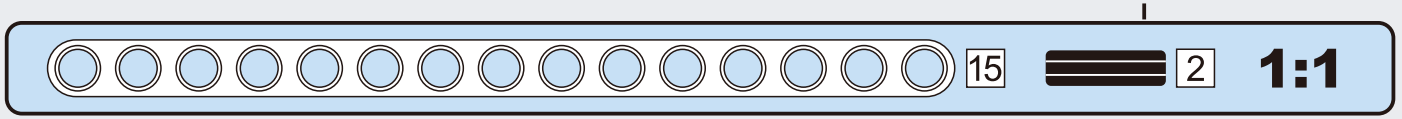

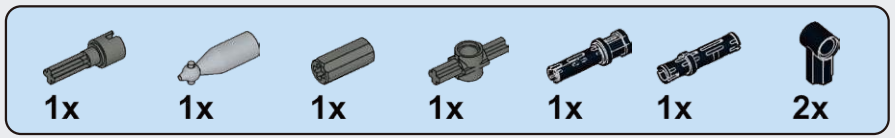

B160

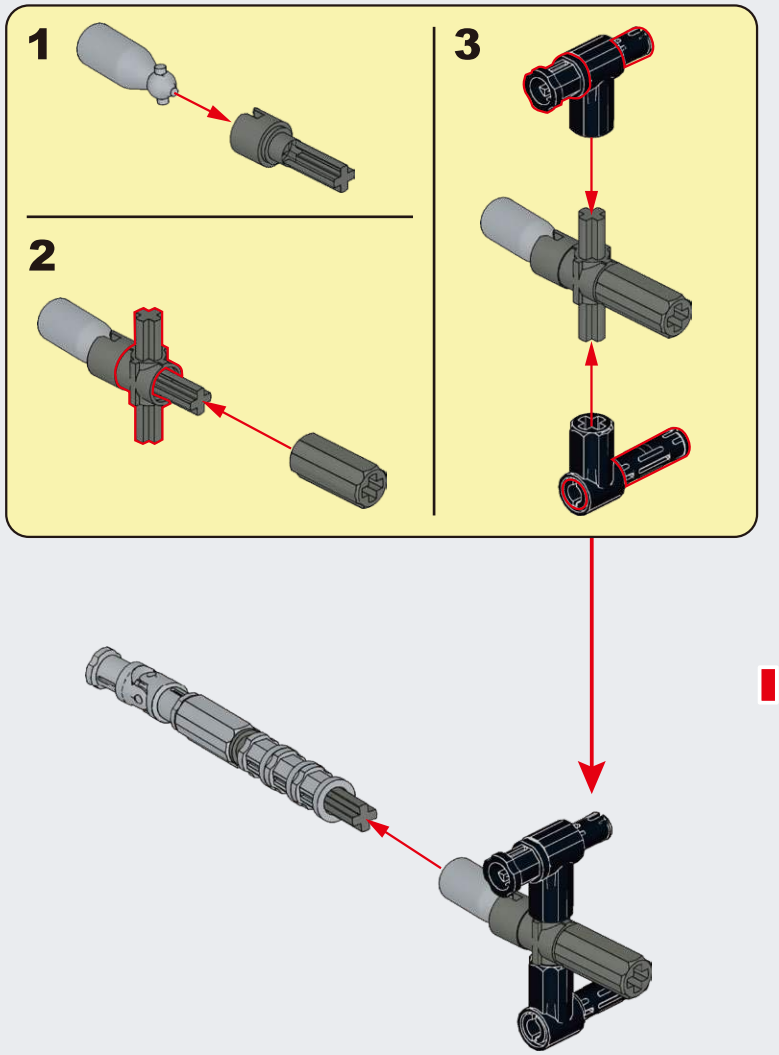

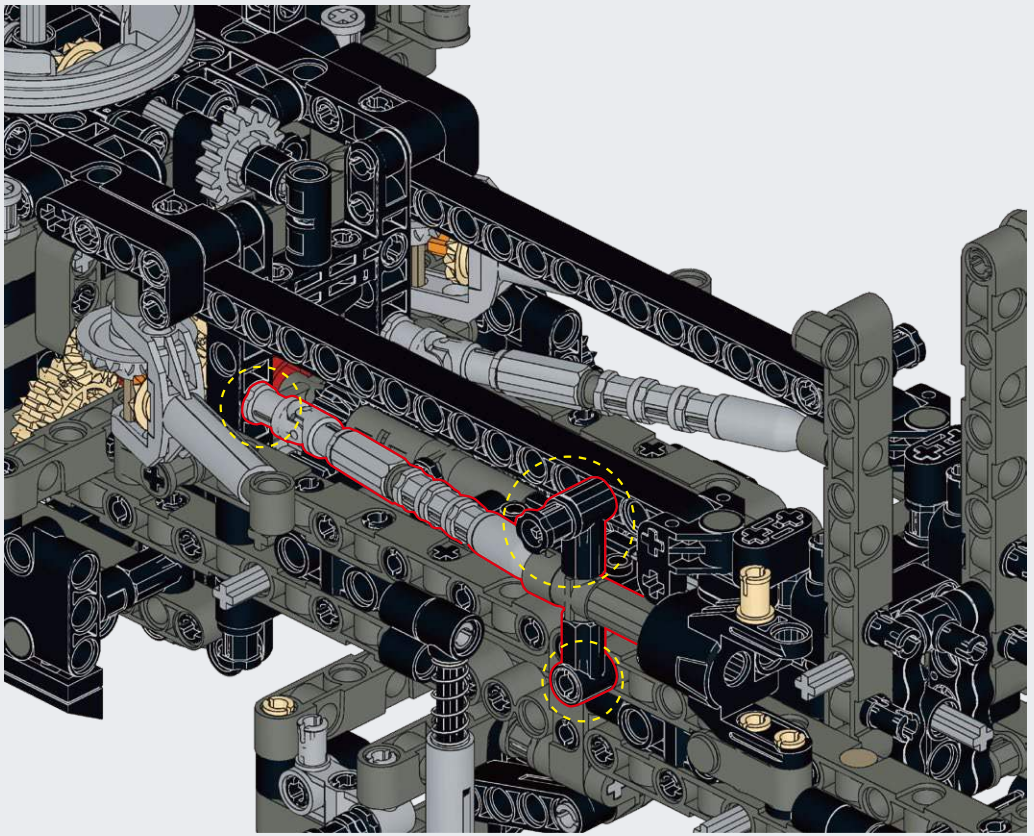

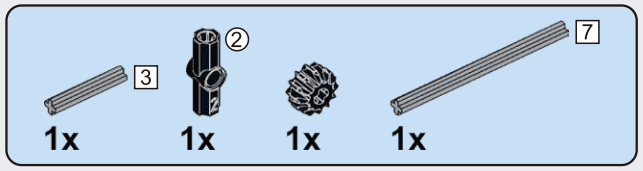

B161

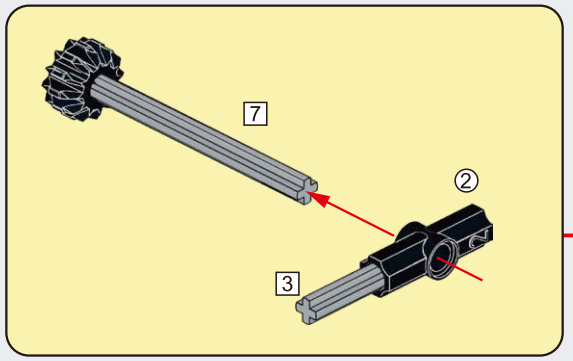

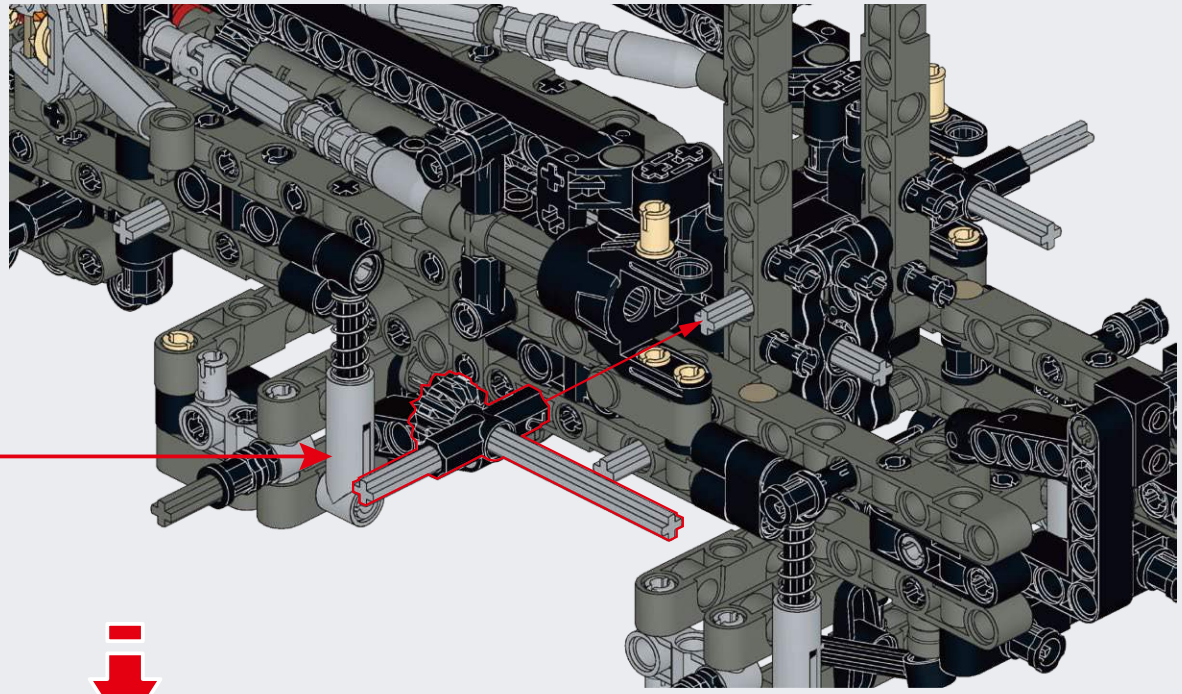

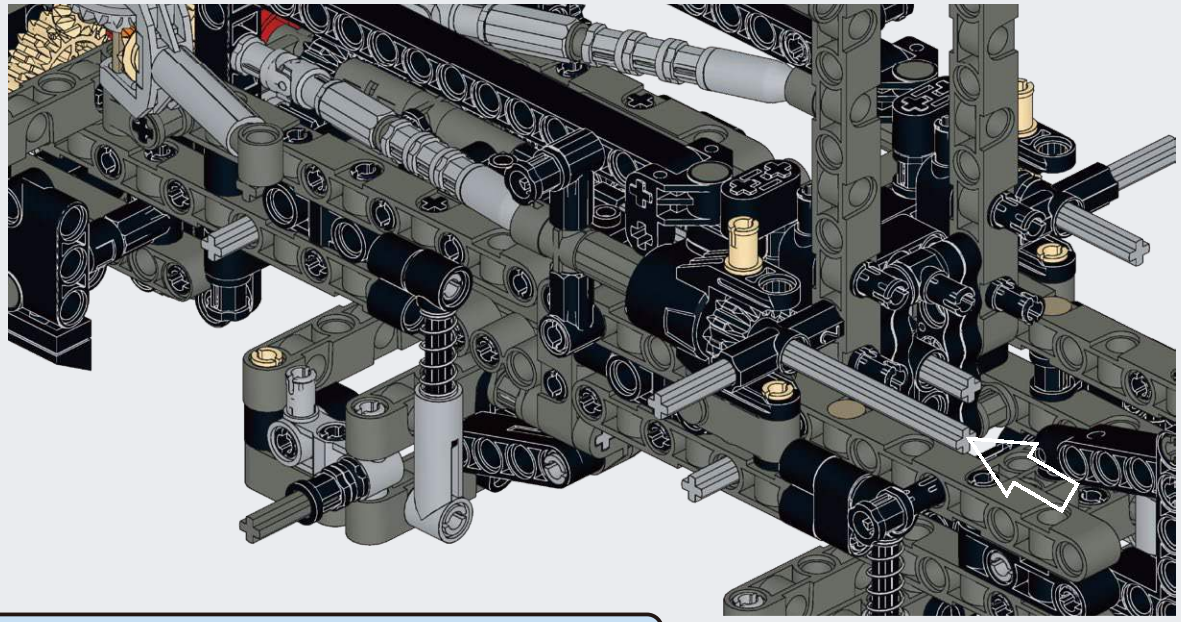

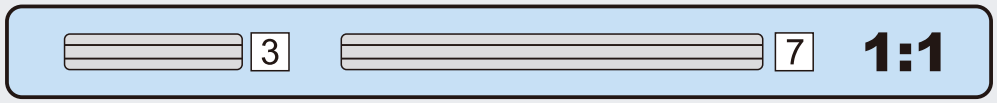

C

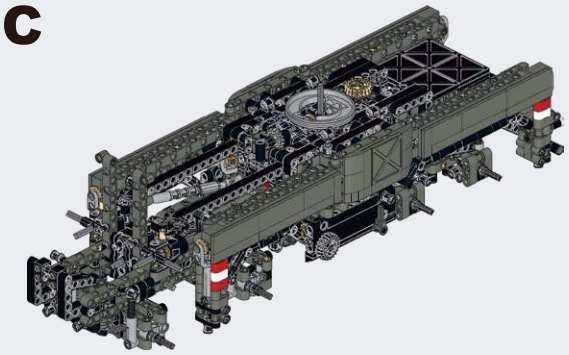

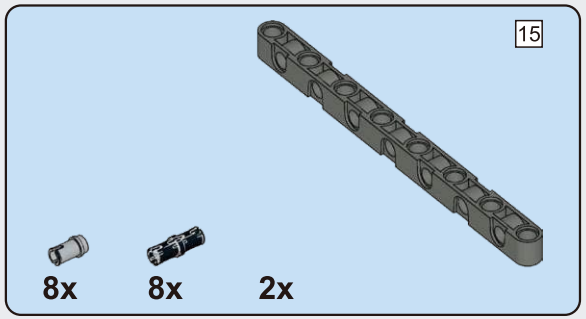

C1

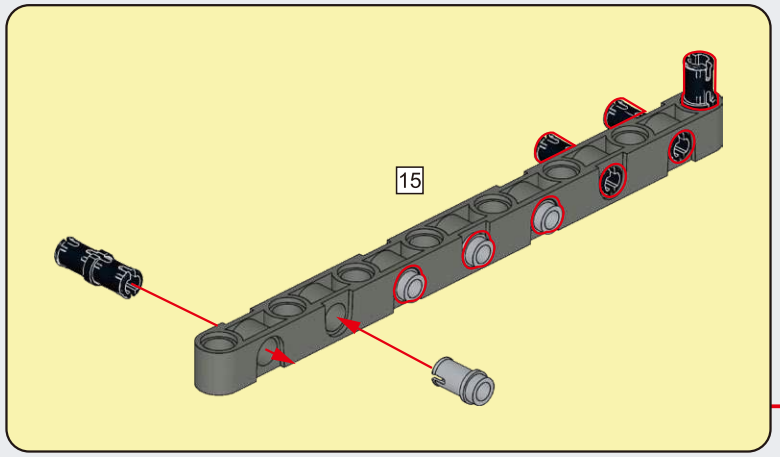

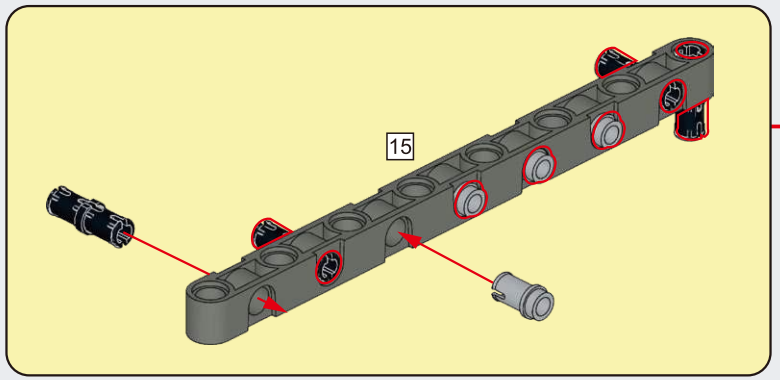

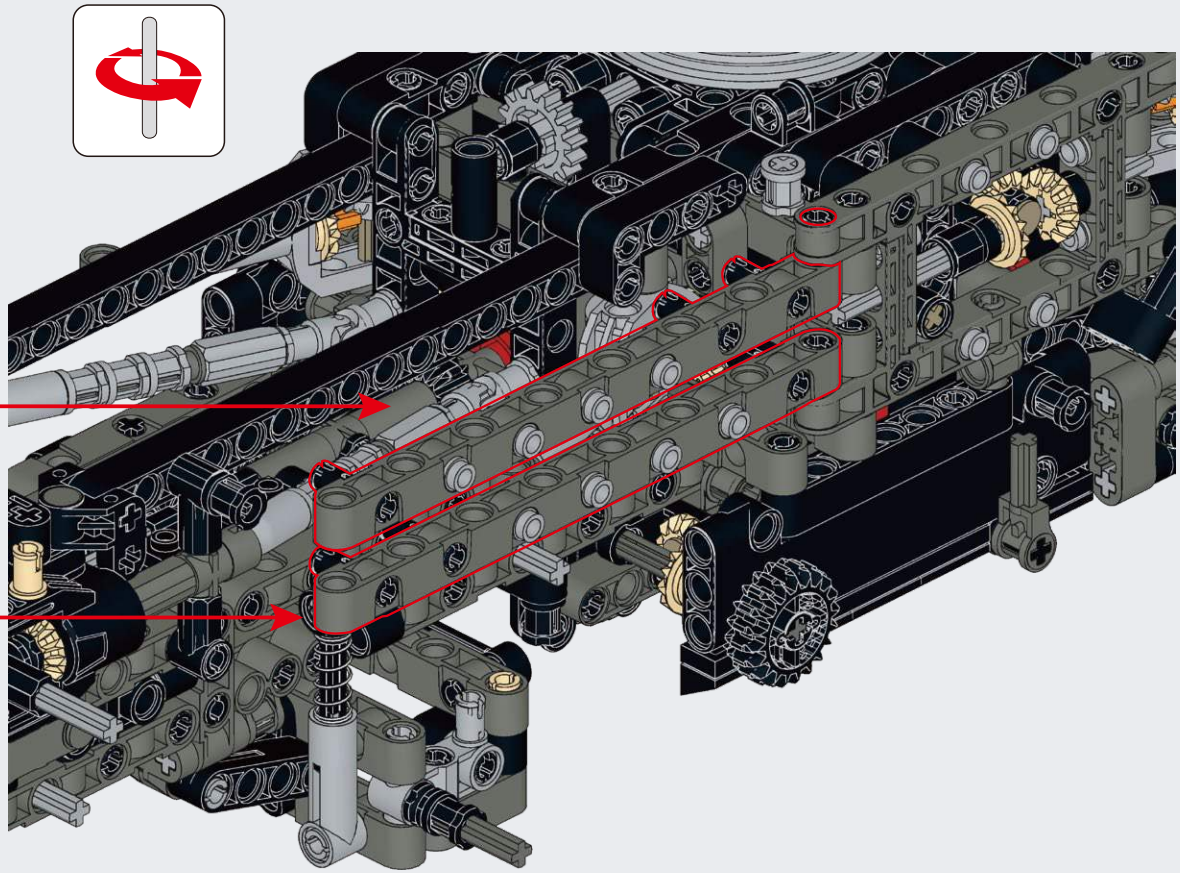

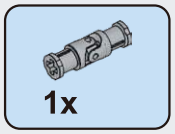

C2

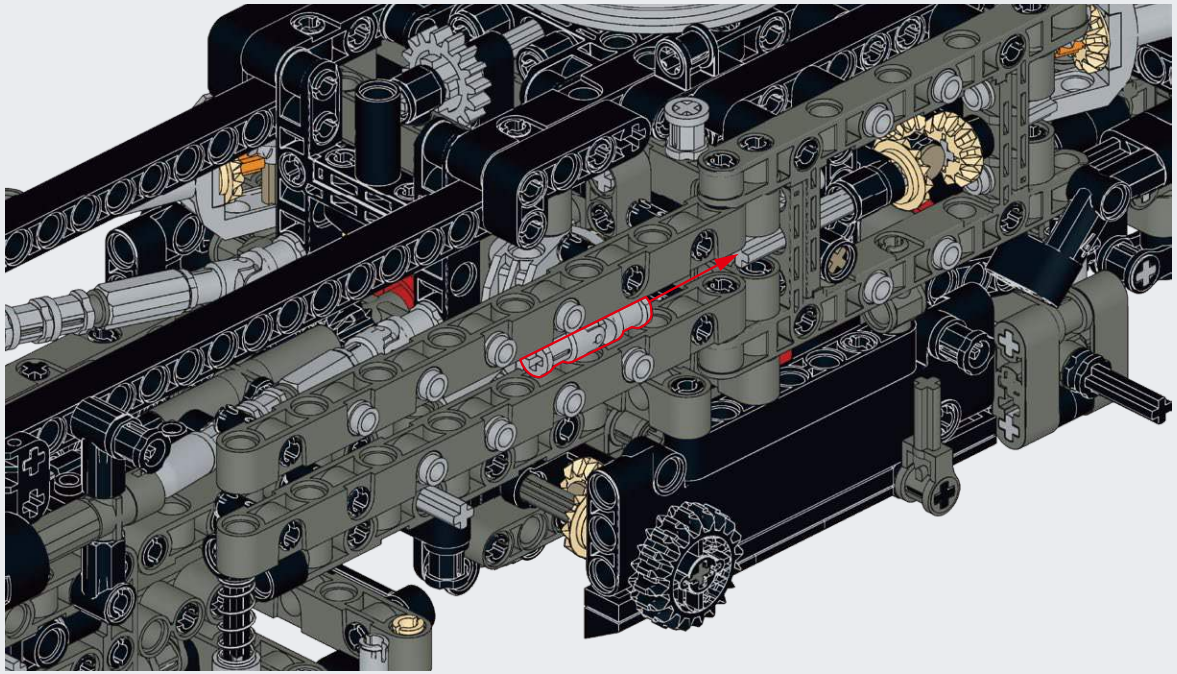

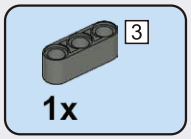

C3

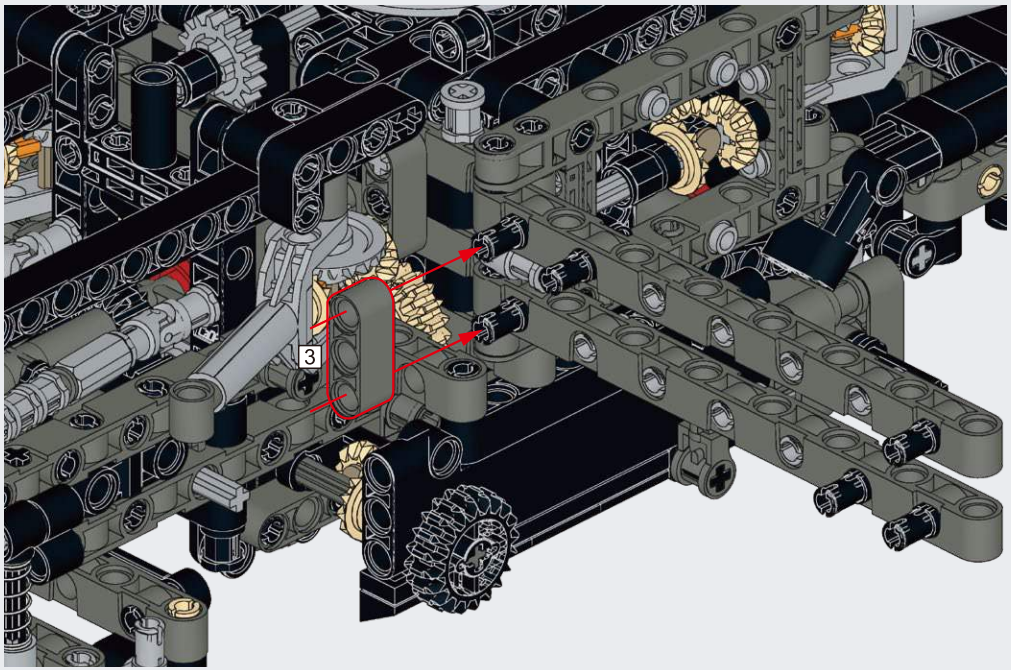

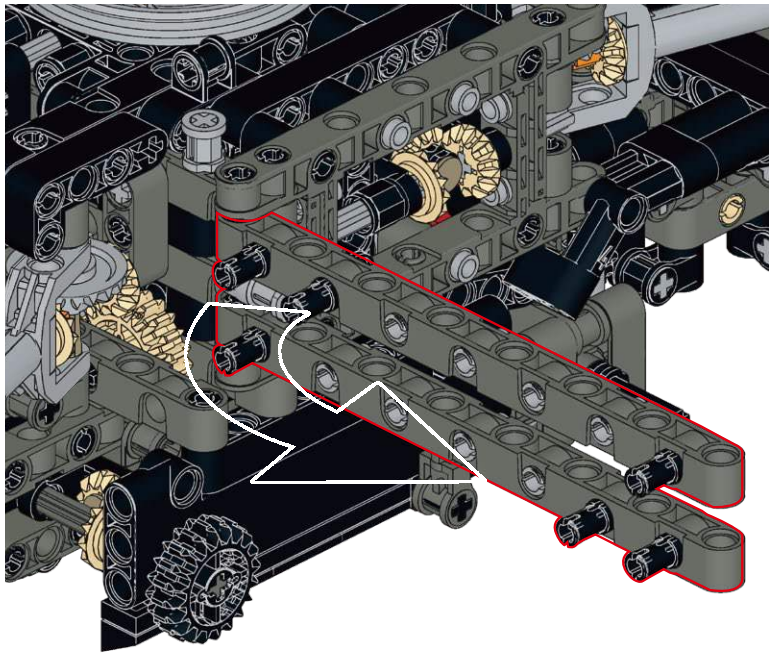

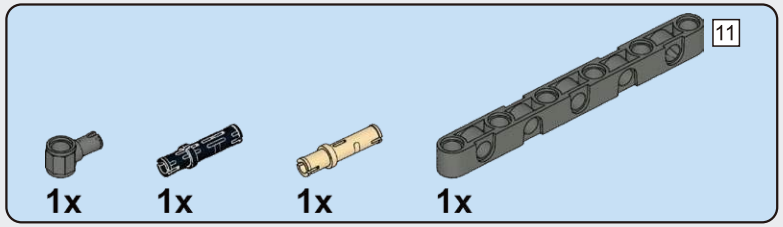

C4

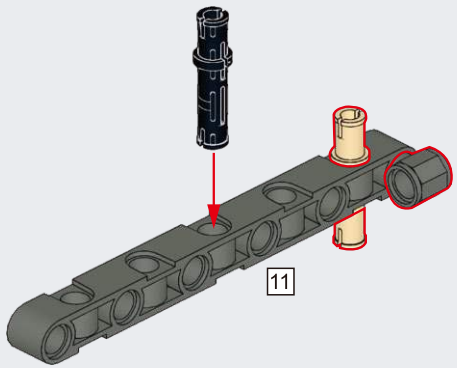

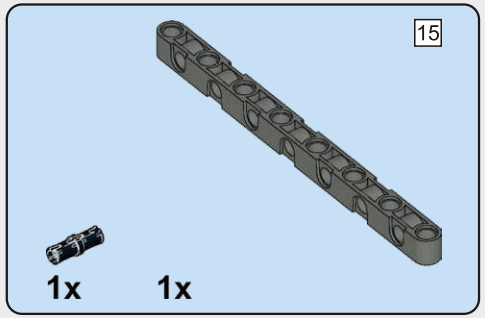

C5

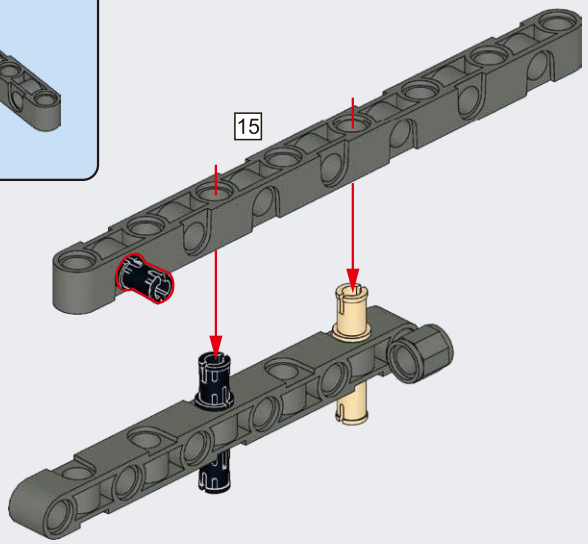

C6

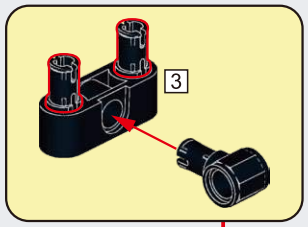

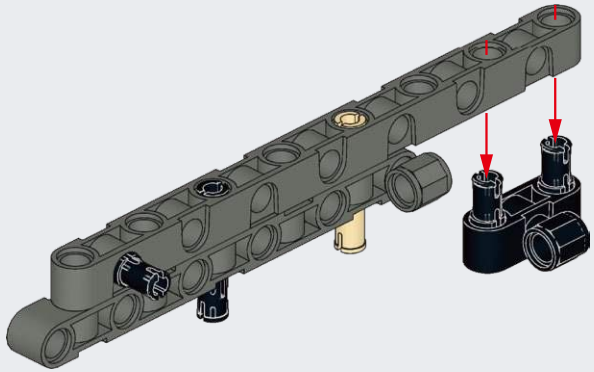

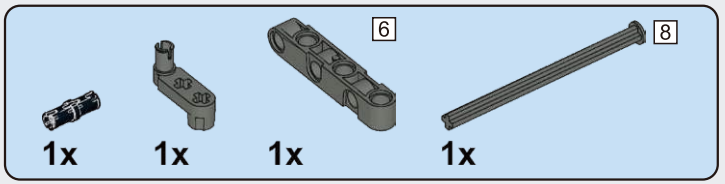

C7

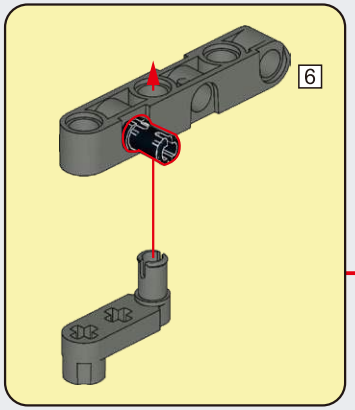

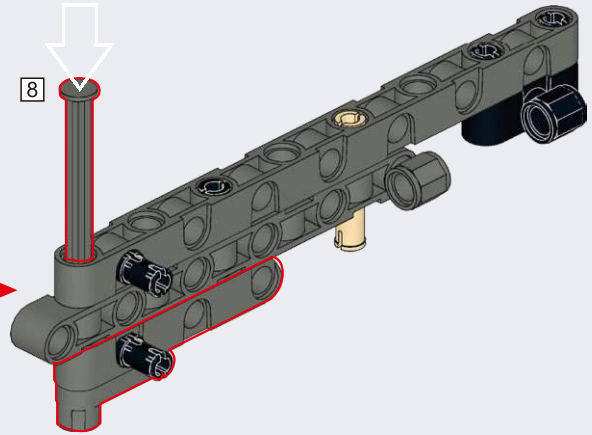

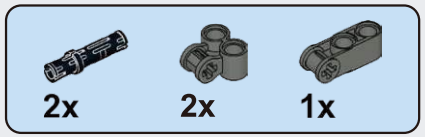

C8

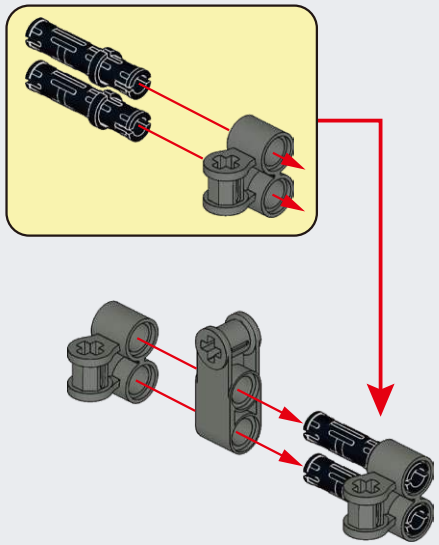

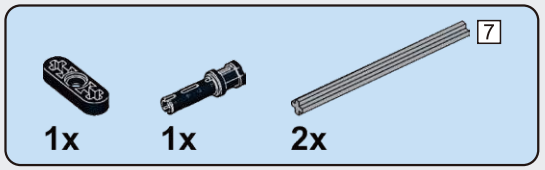

C9

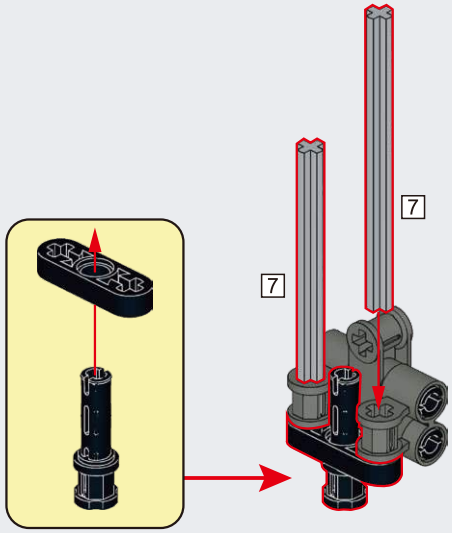

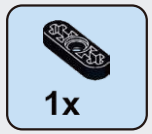

C10

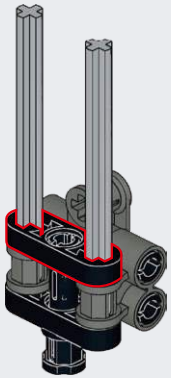

C11

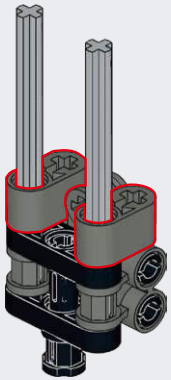

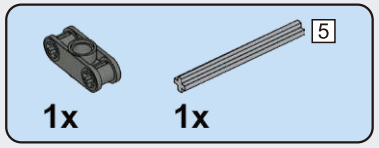

C12

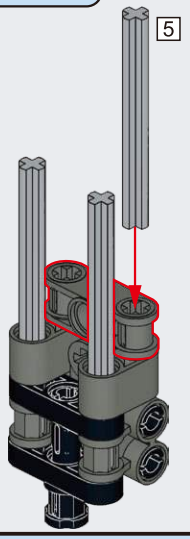

C13

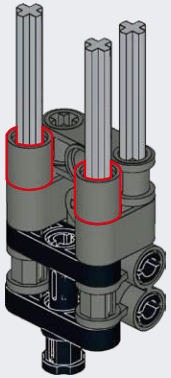

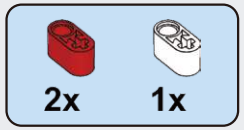

C14

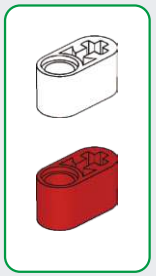

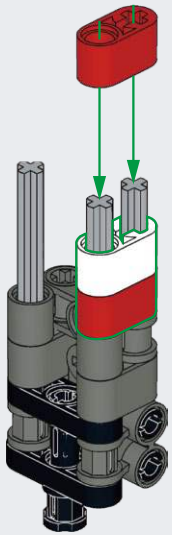

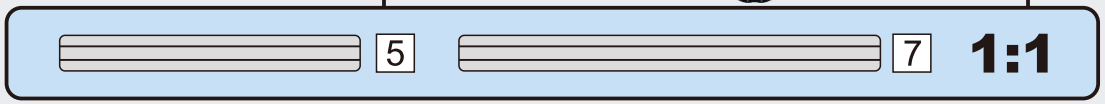

C15

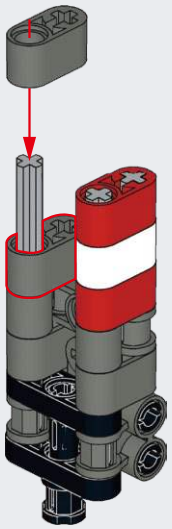

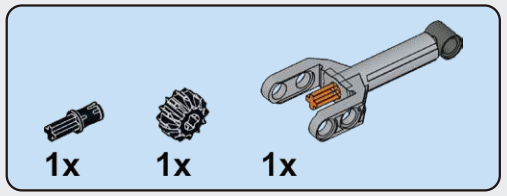

C16

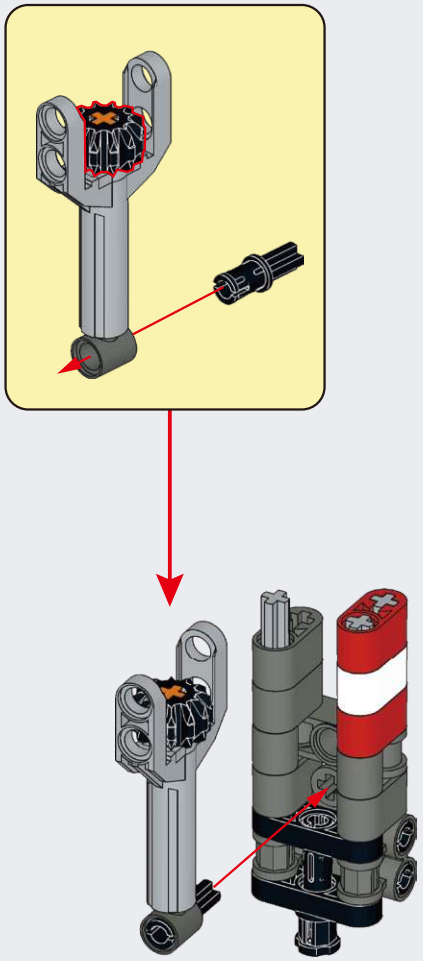

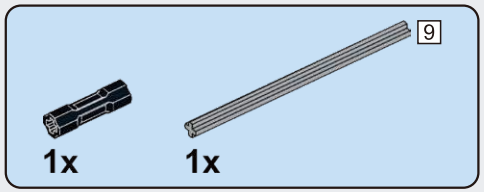

C17

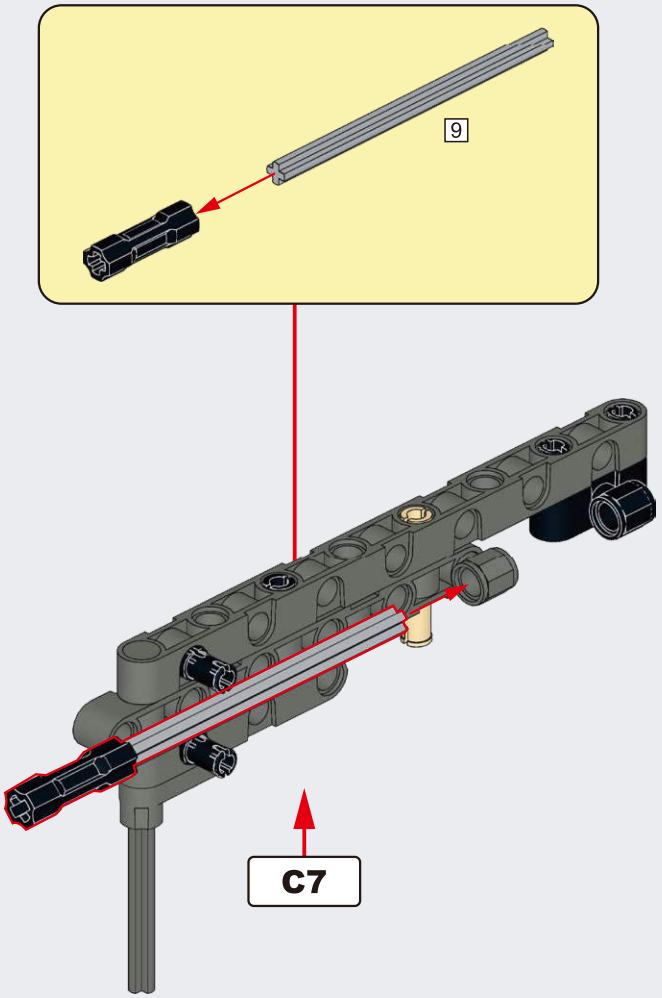

C18

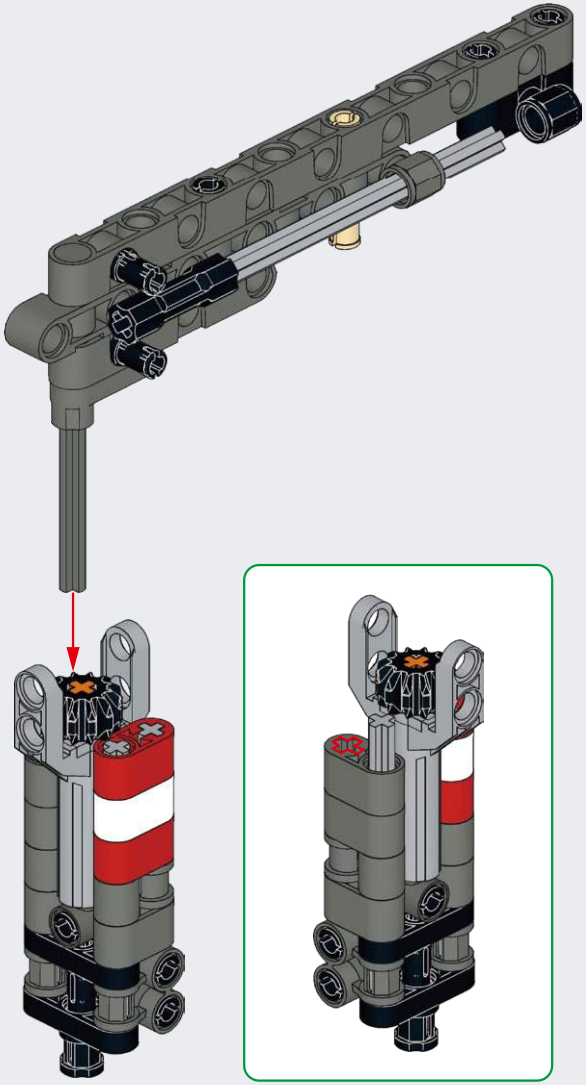

C19

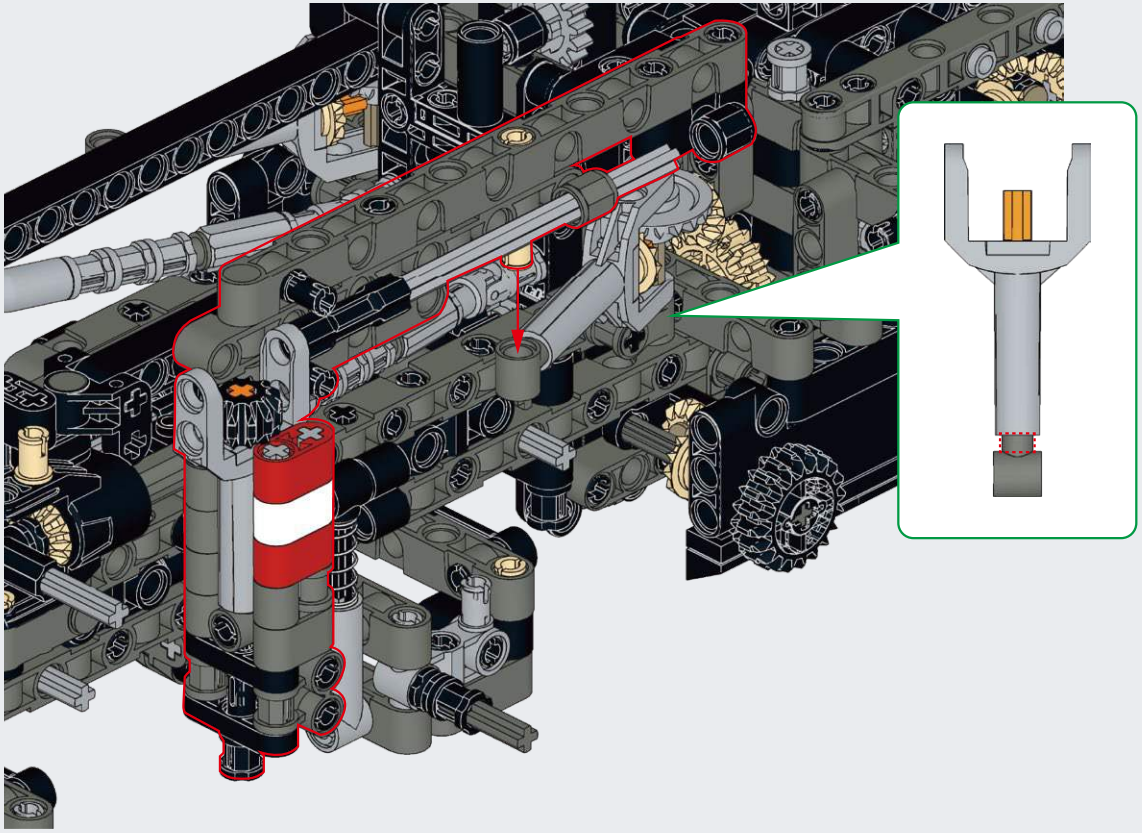

C20

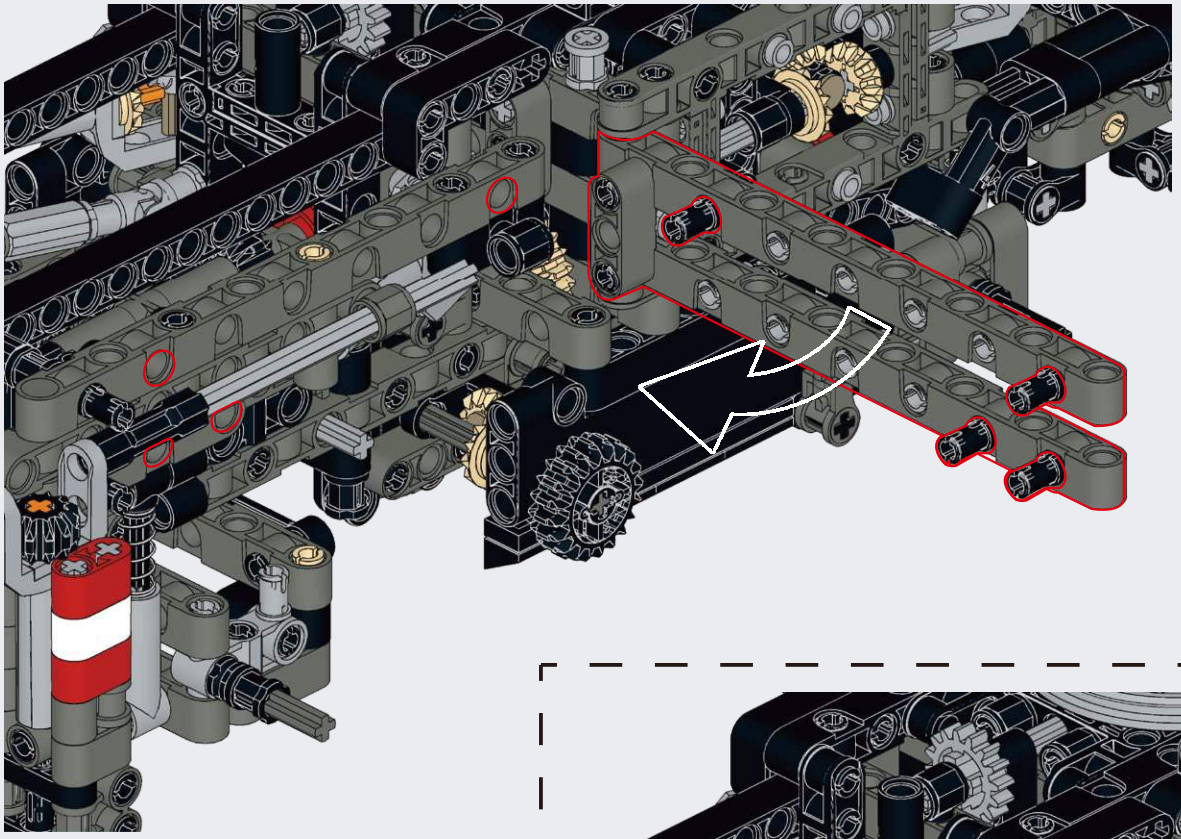

C21

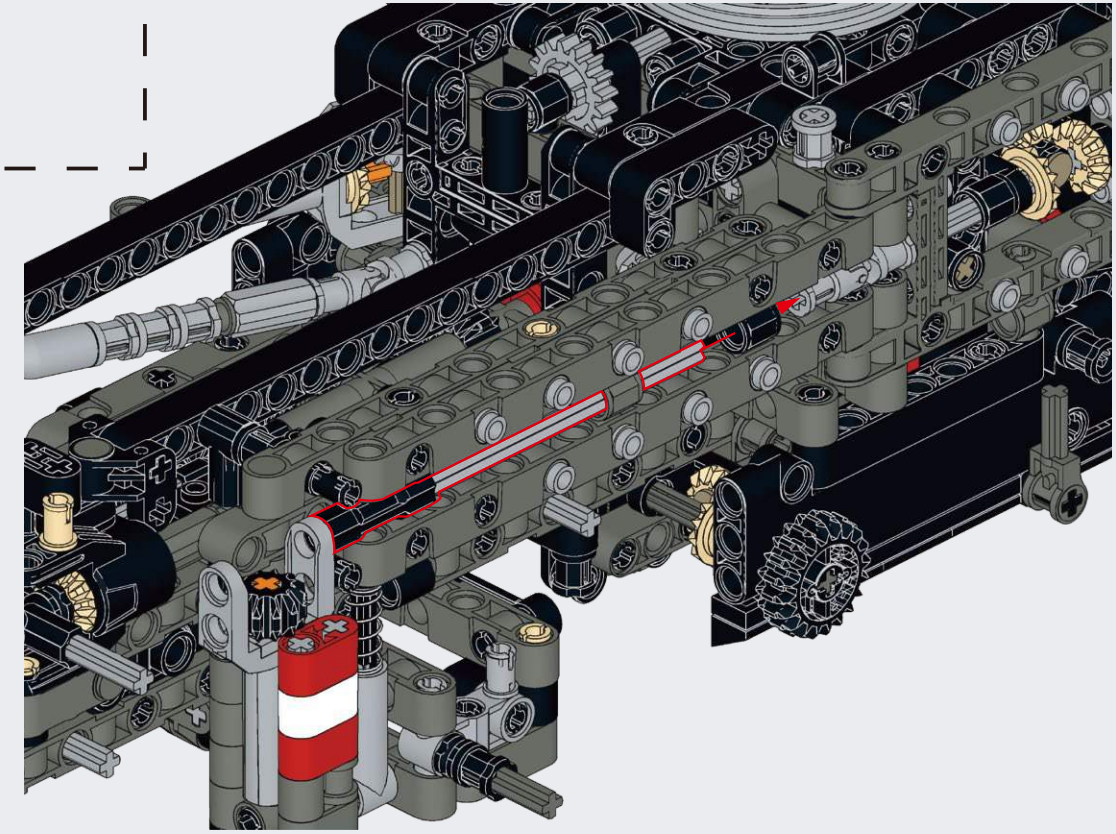

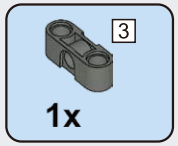

C22

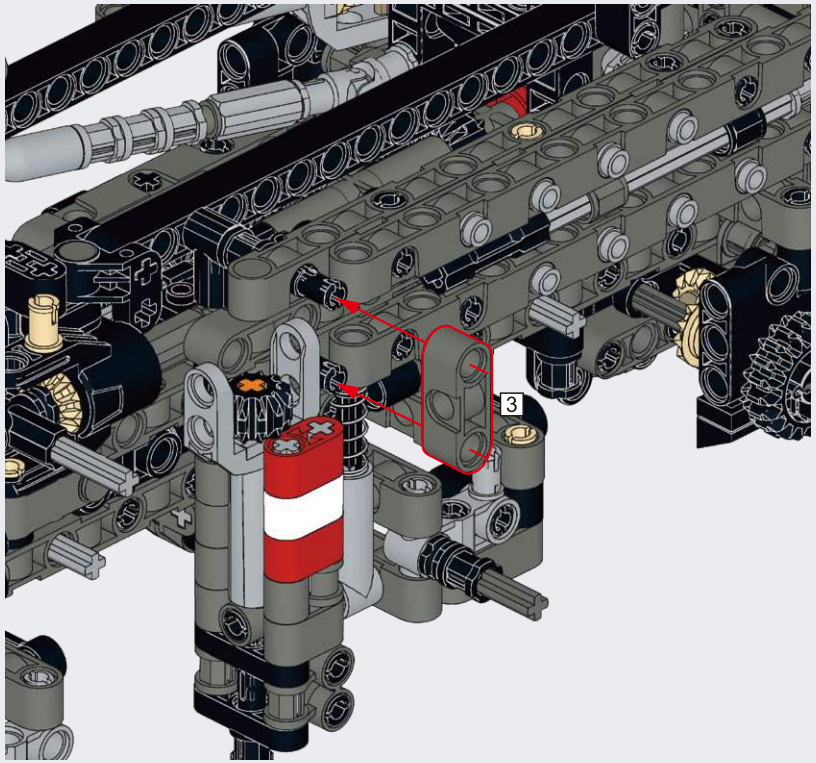

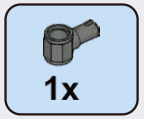

C23

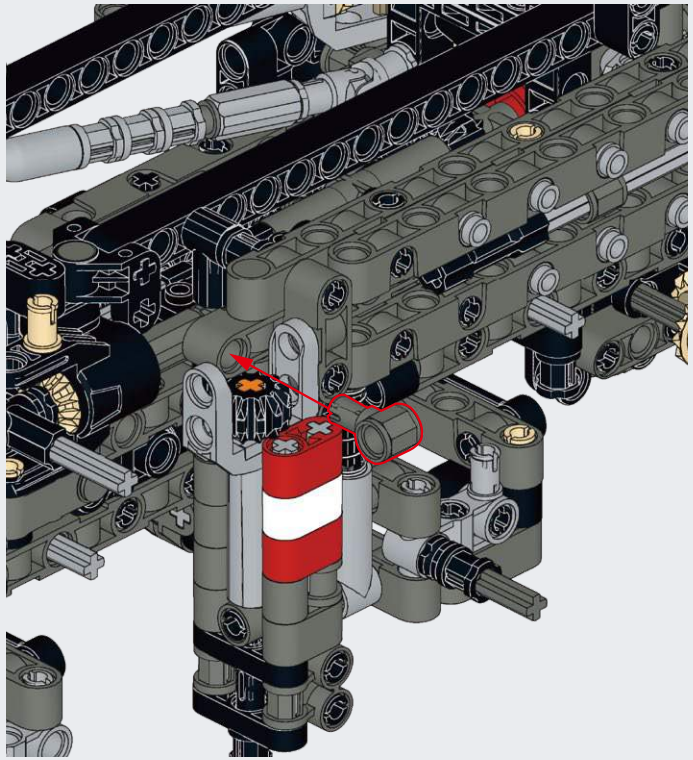

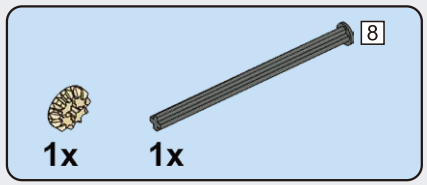

C24

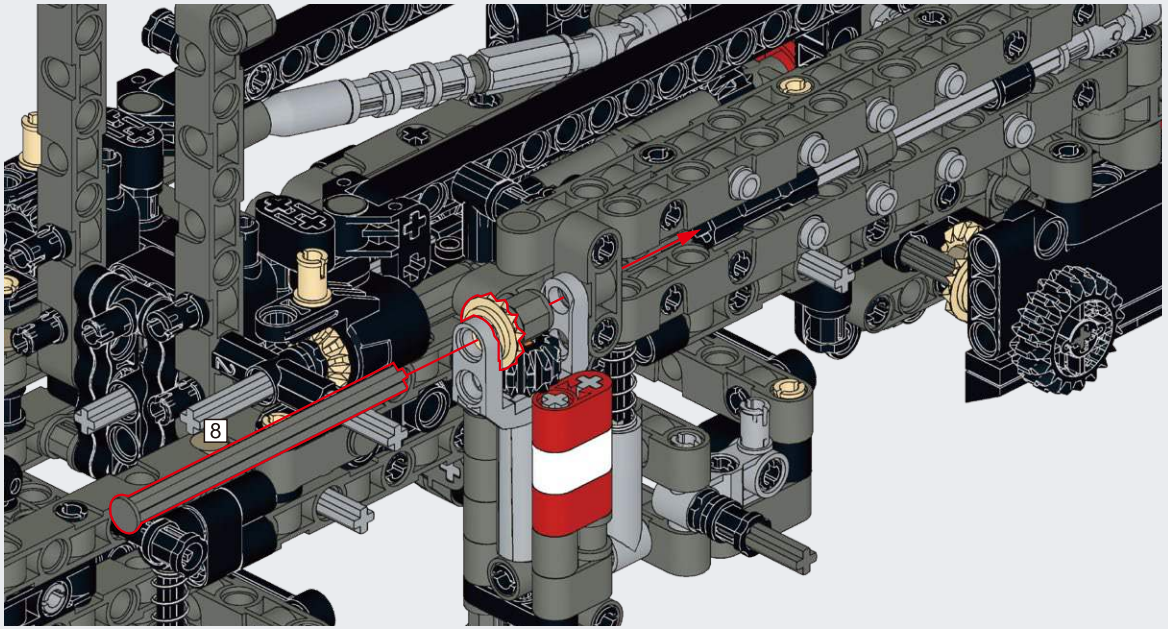

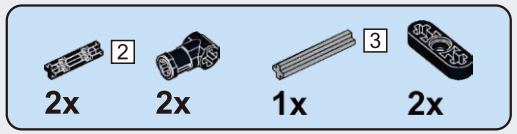

C25

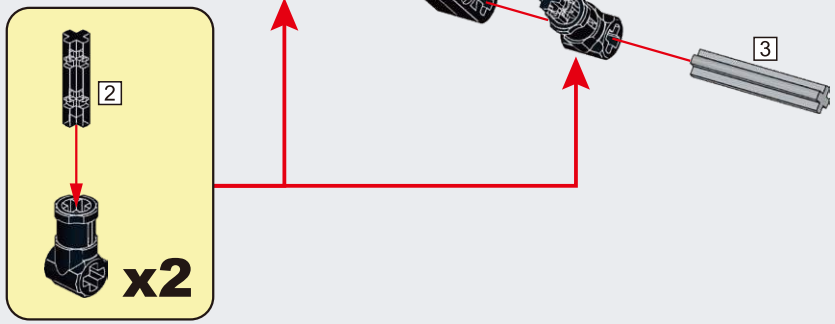

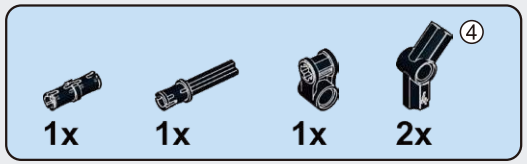

C26

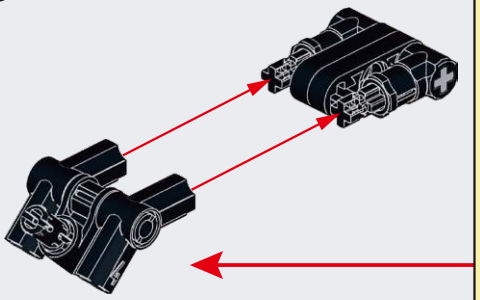

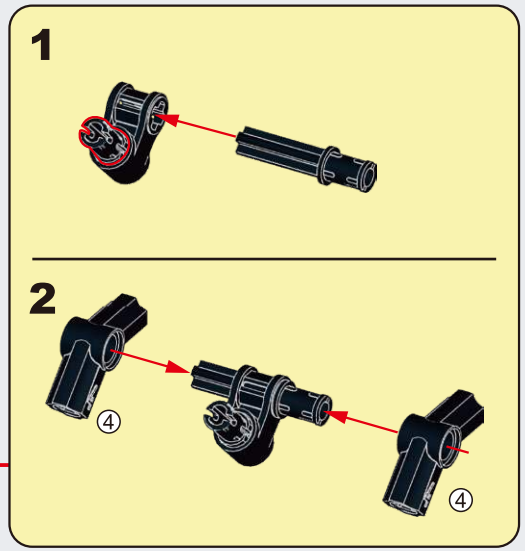

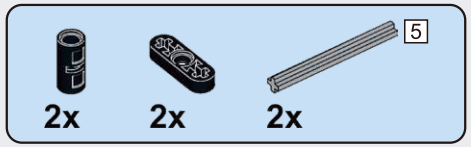

C27

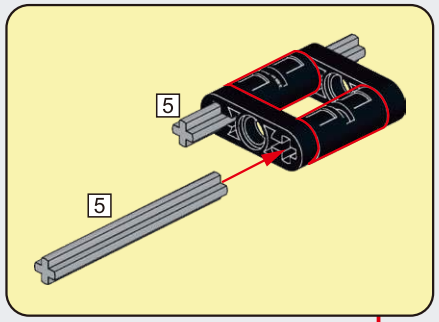

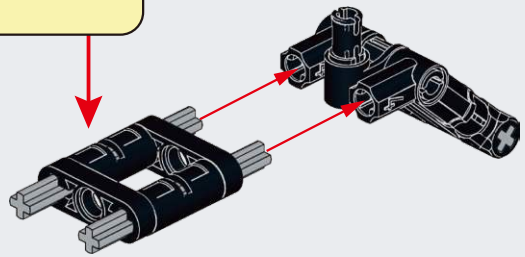

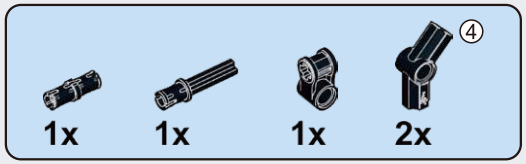

C28

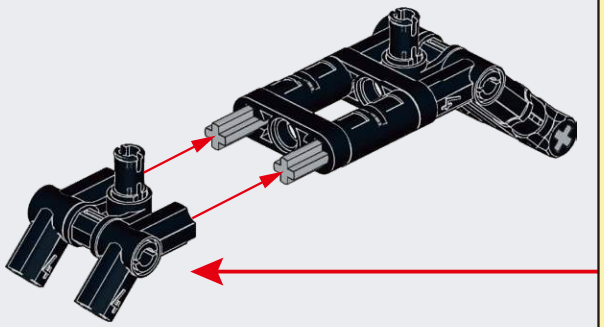

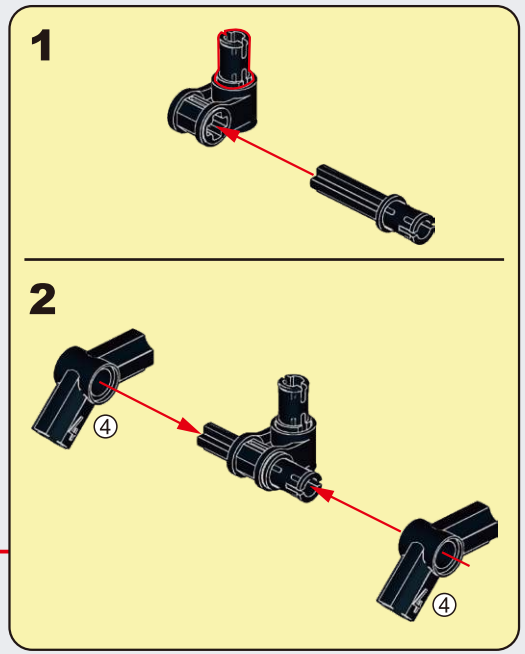

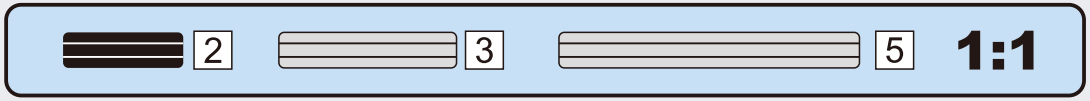

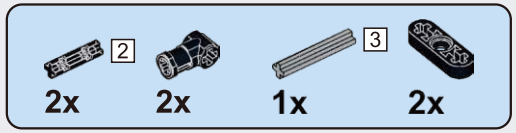

C29

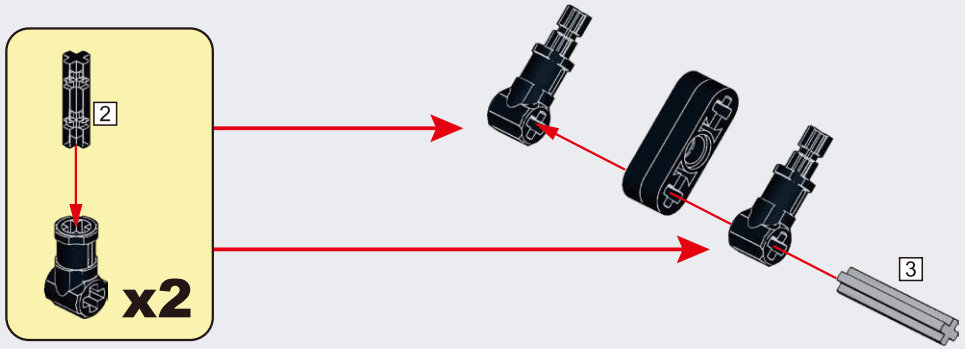

C30

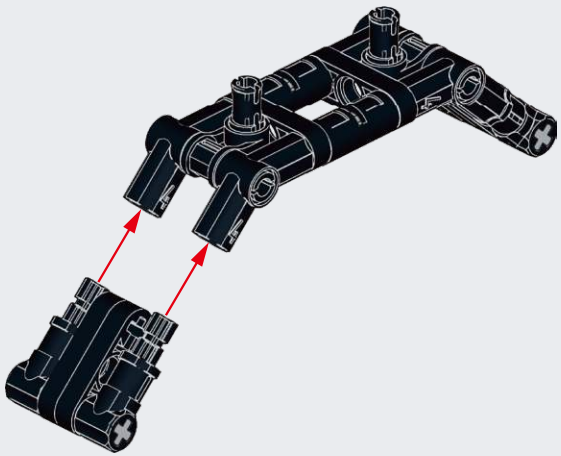

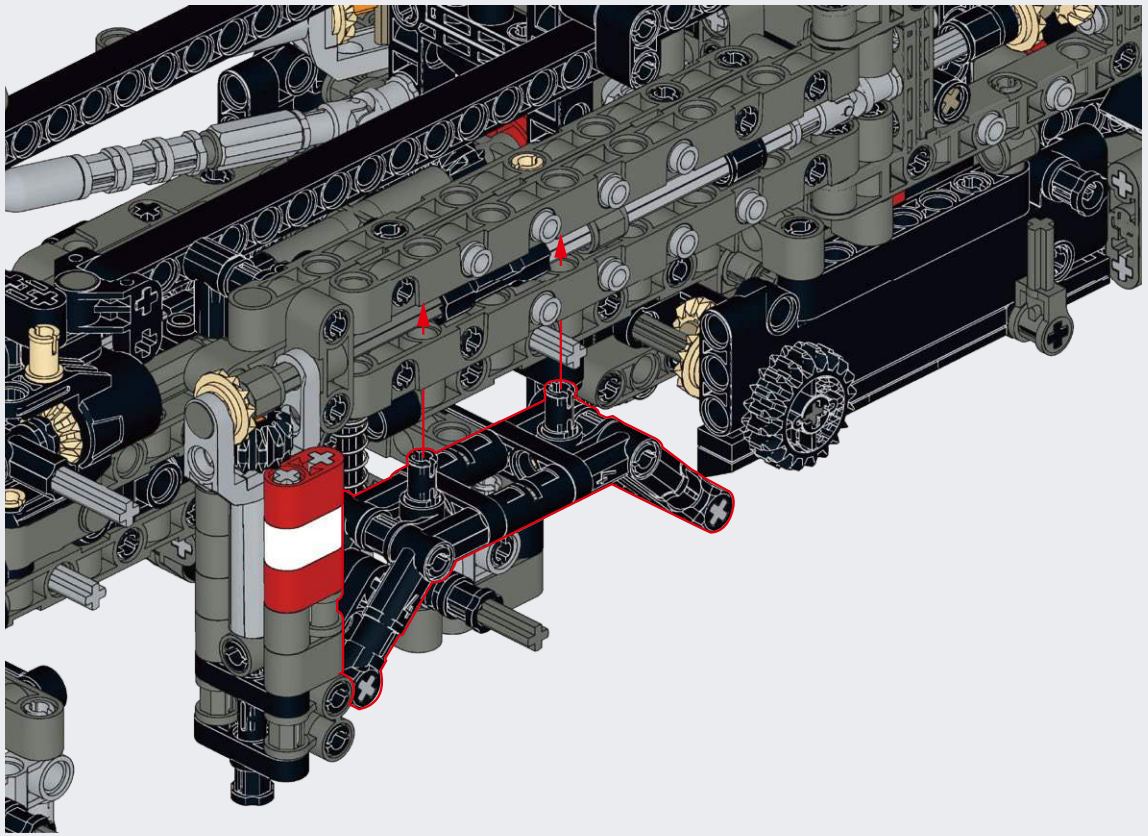

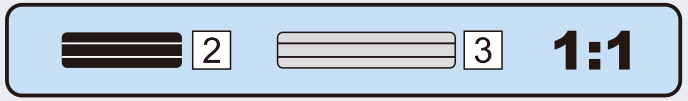

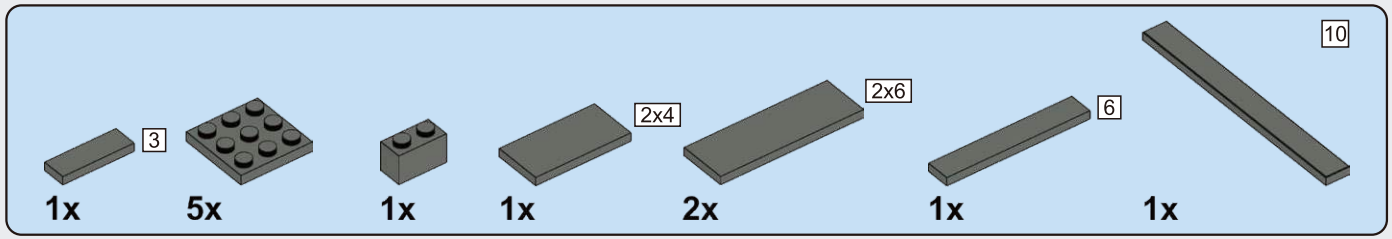

C31

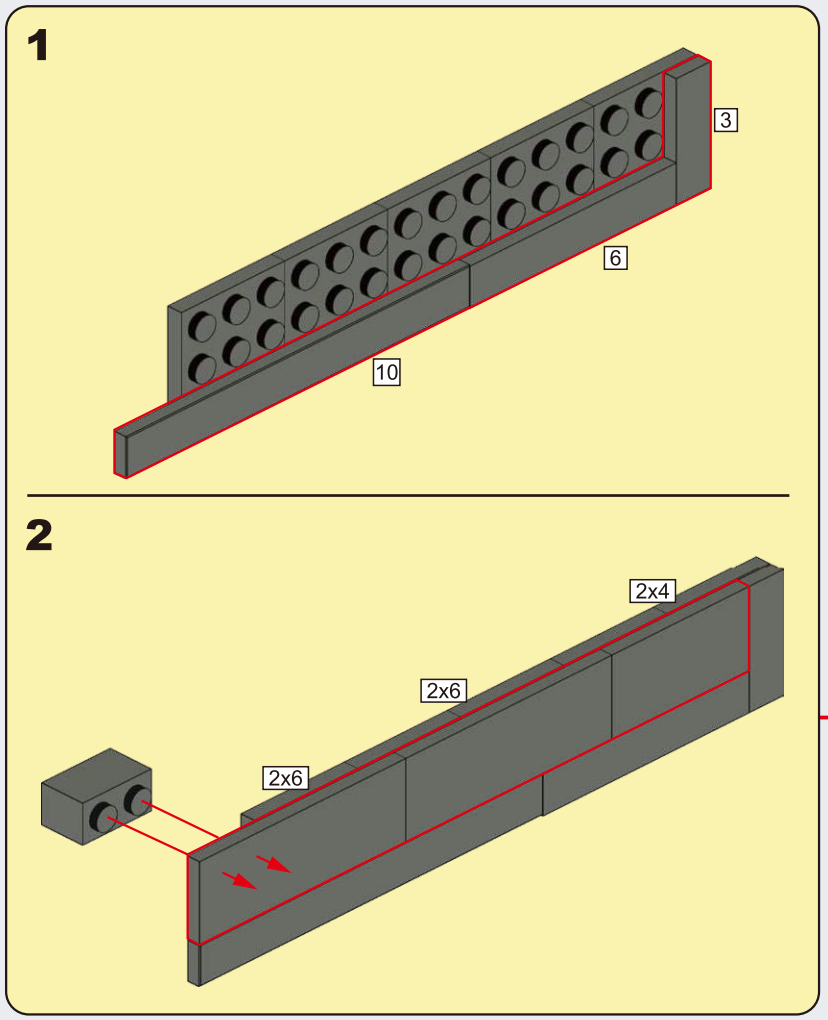

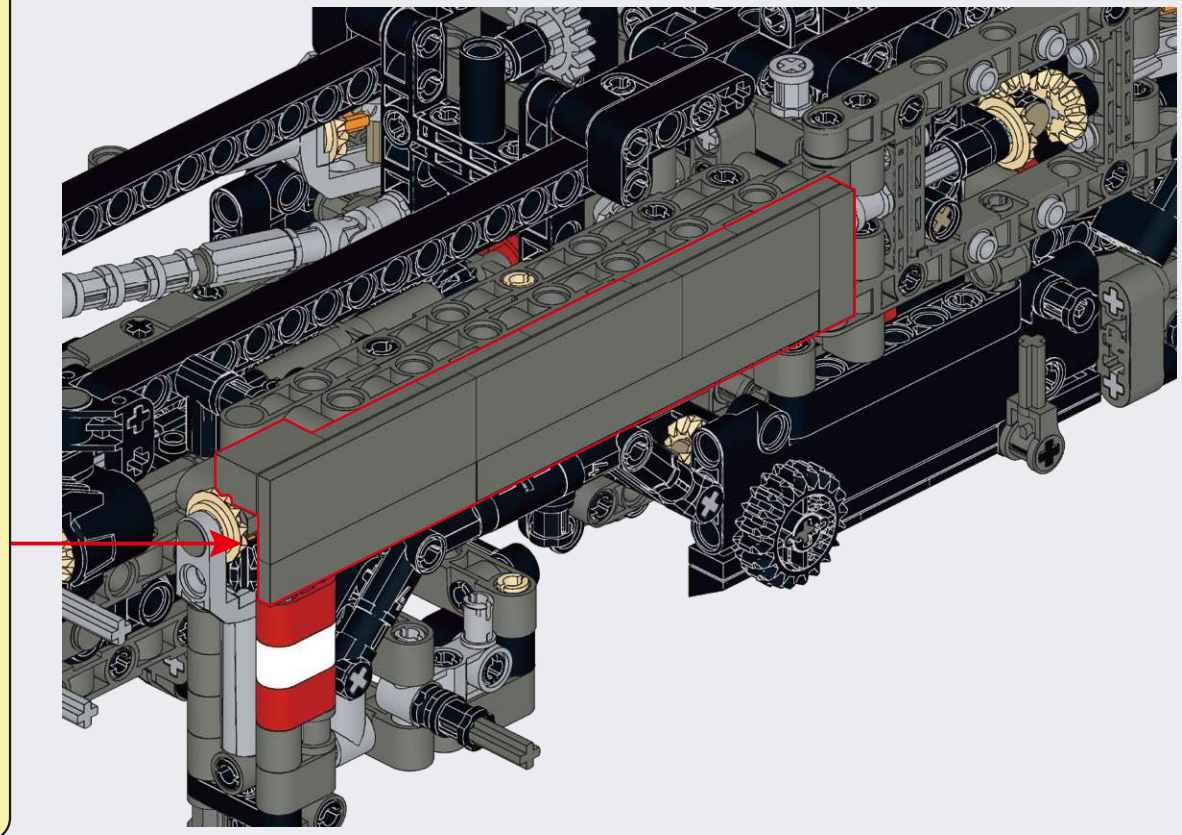

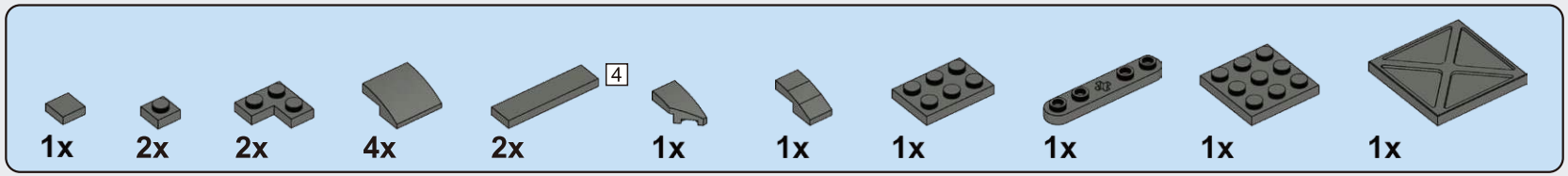

C32

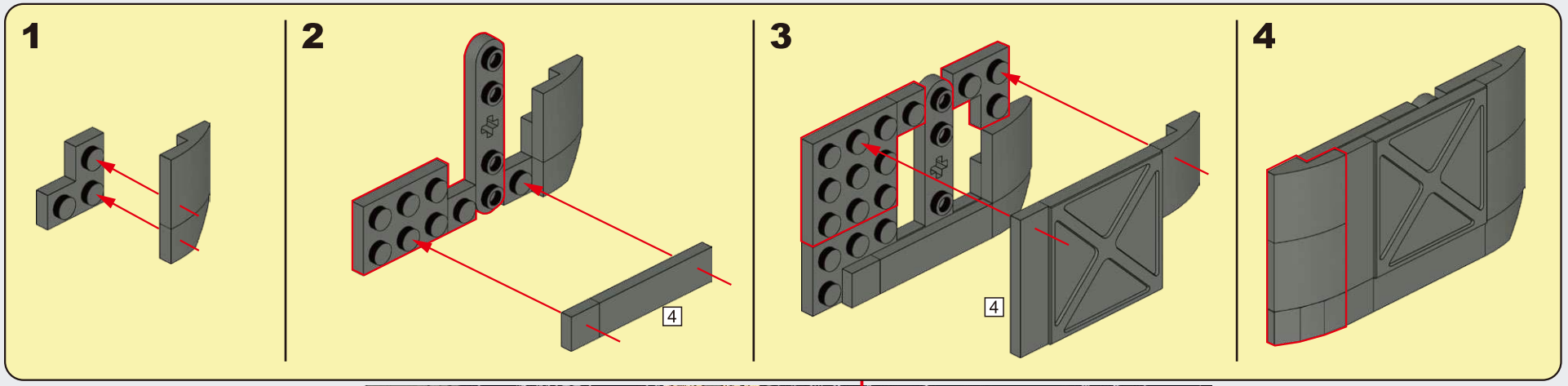

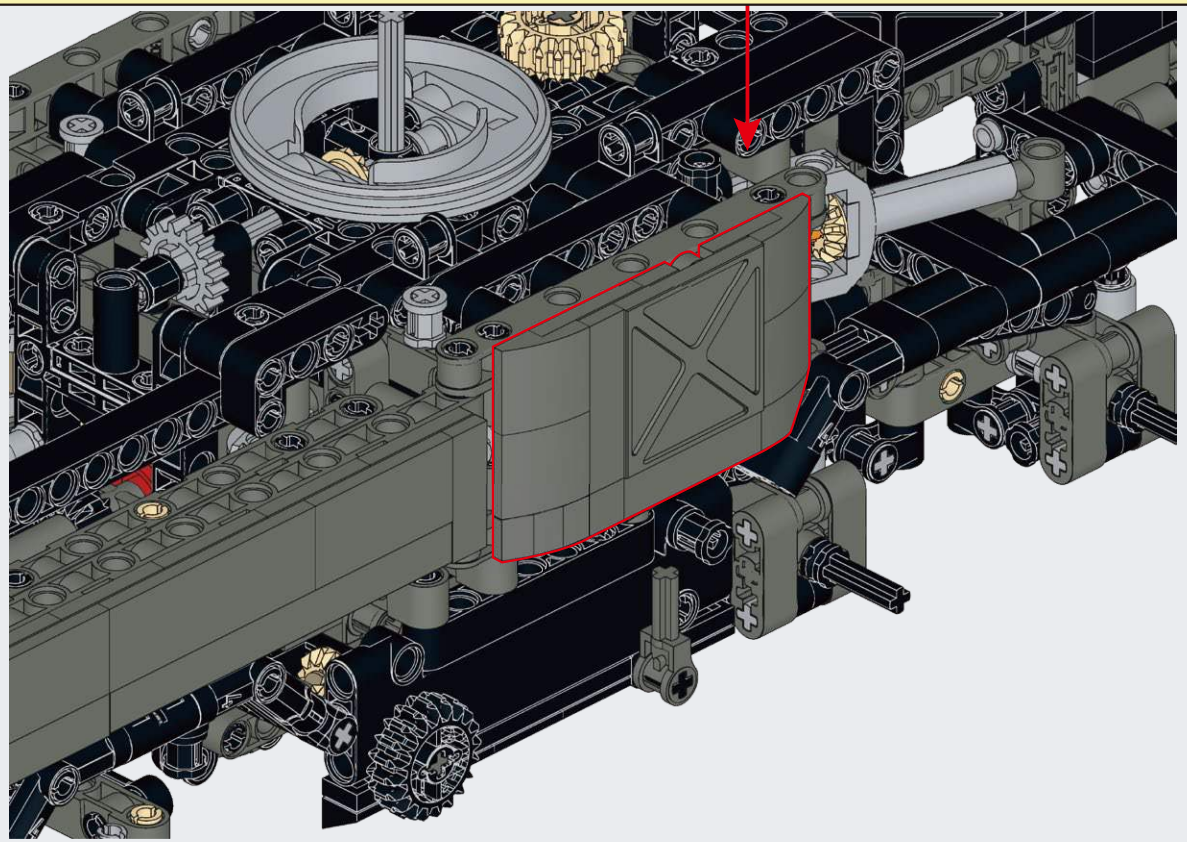

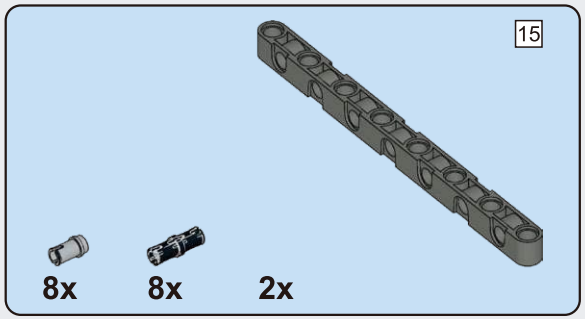

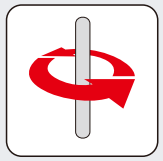

C33

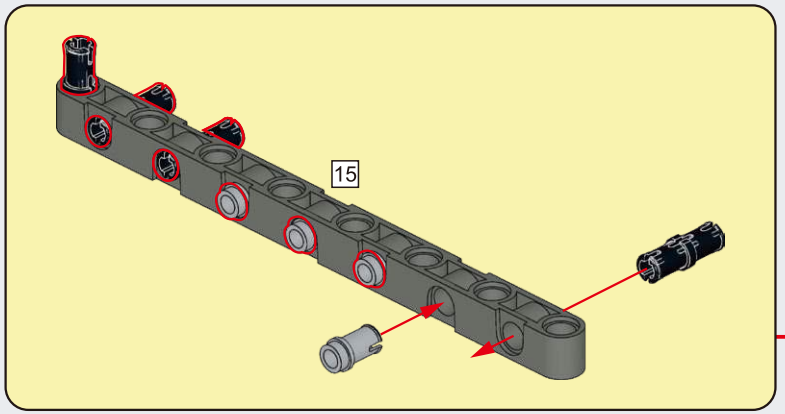

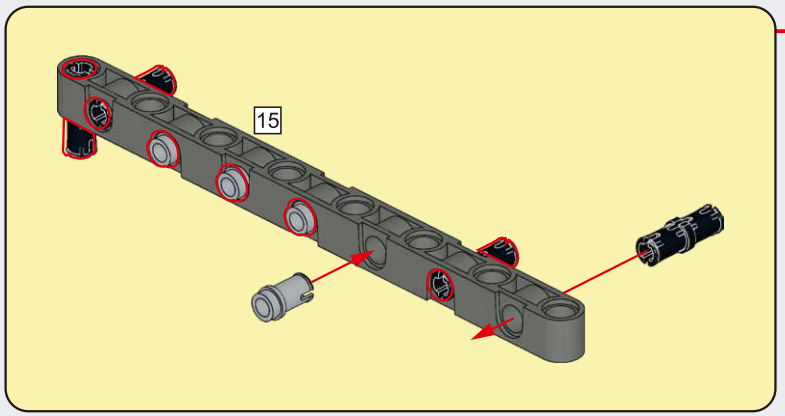

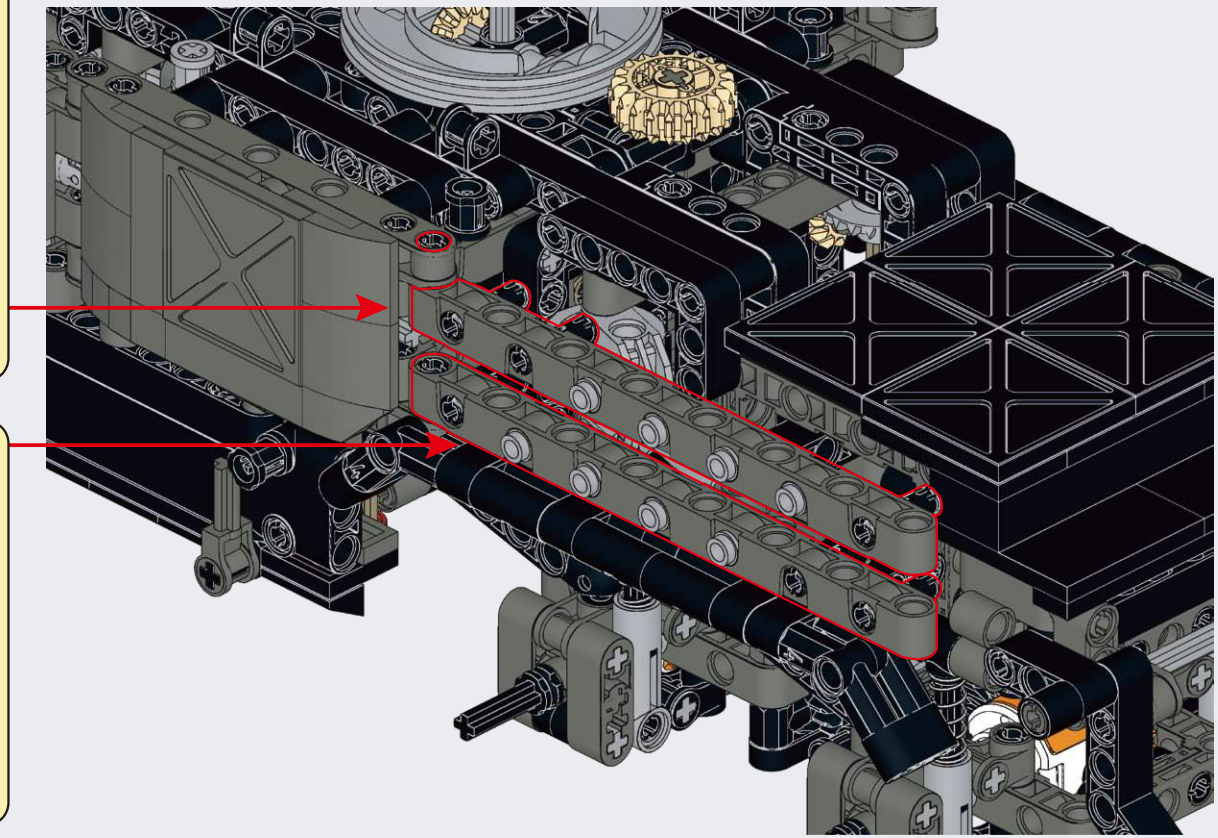

1x

C34

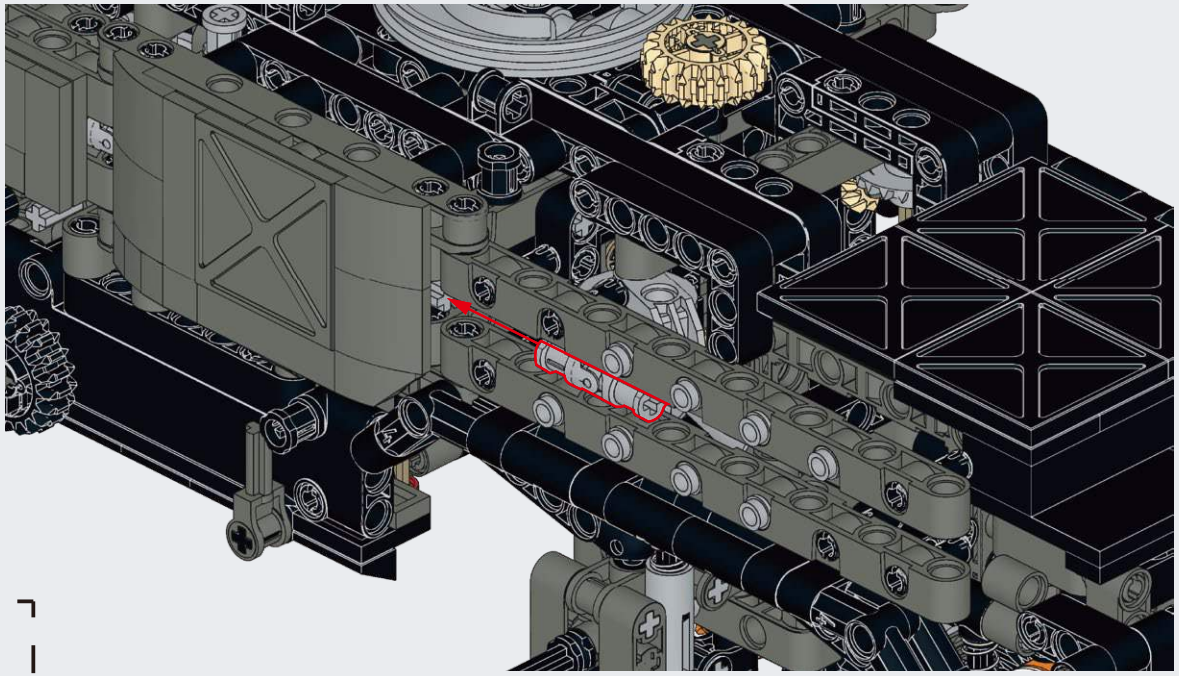

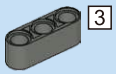

1x

C35

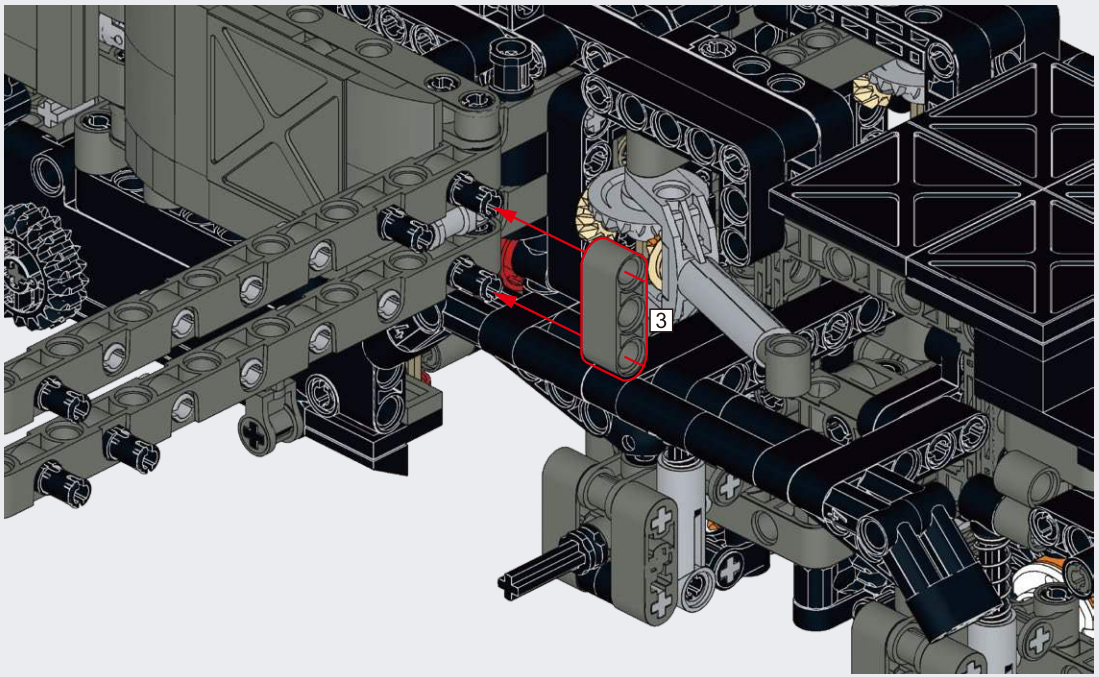

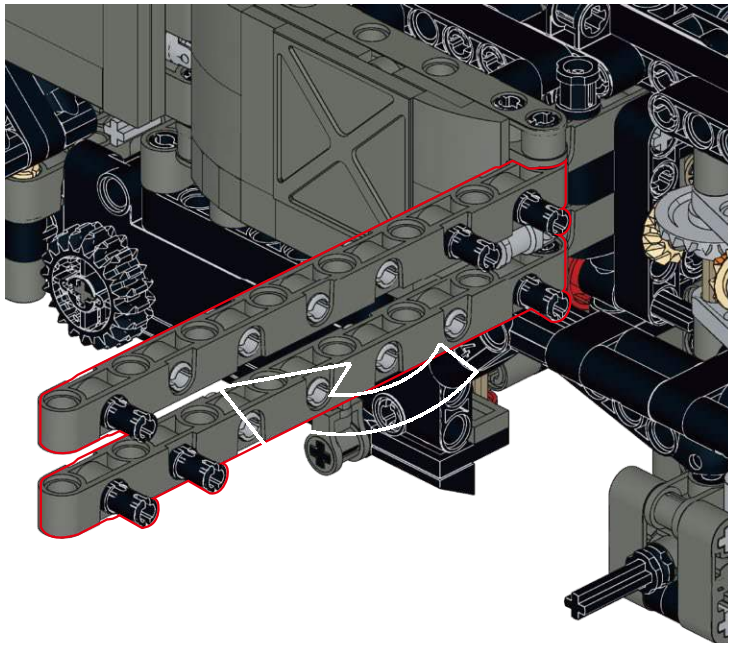

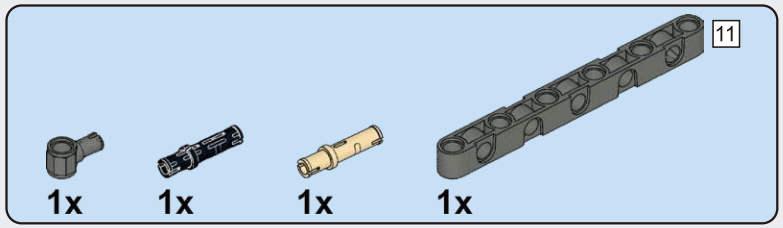

C36

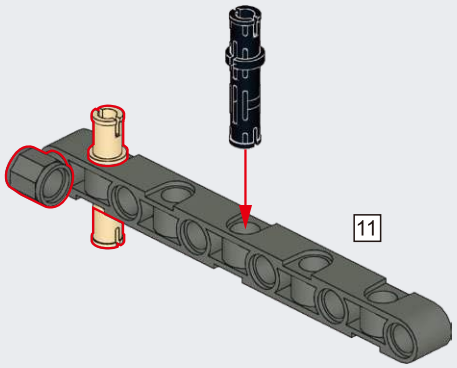

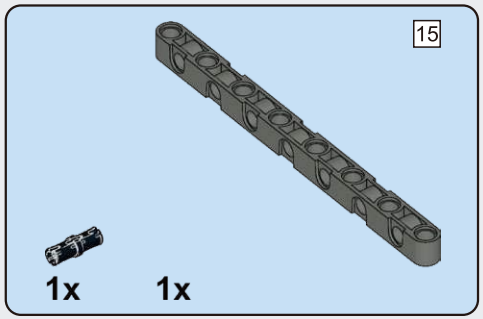

C37

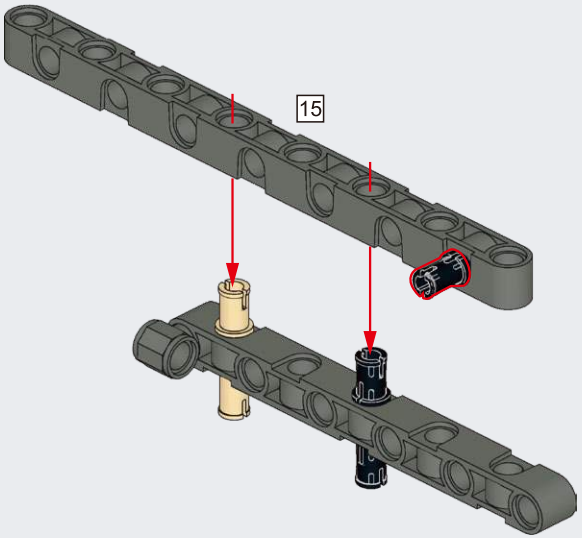

C38

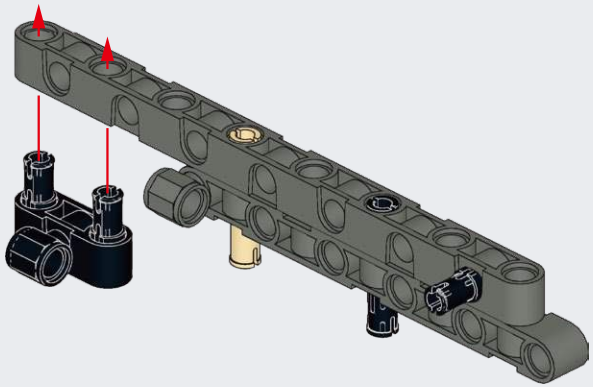

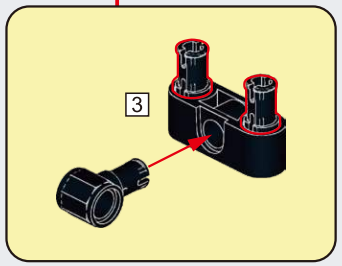

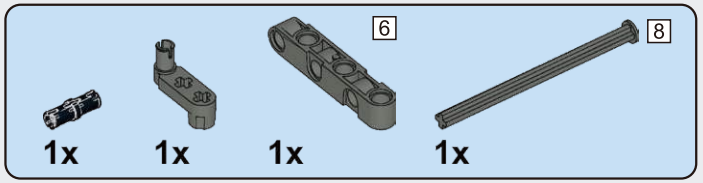

C39

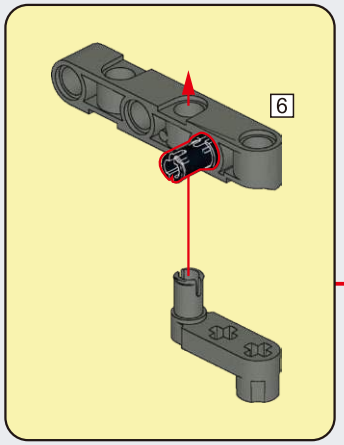

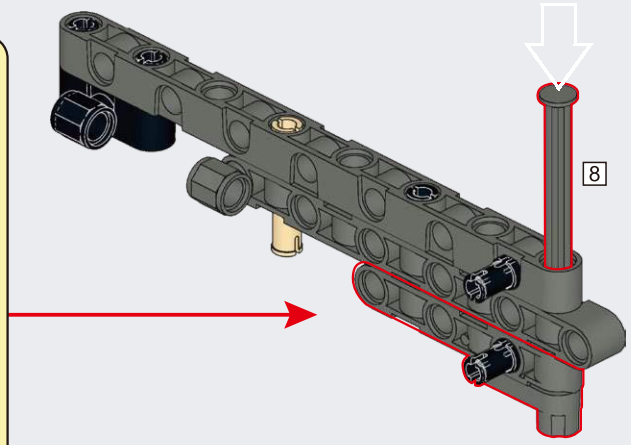

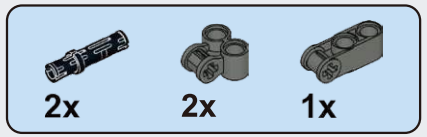

C40

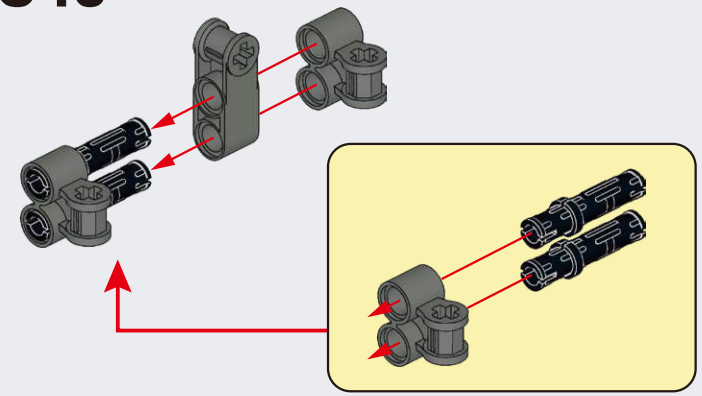

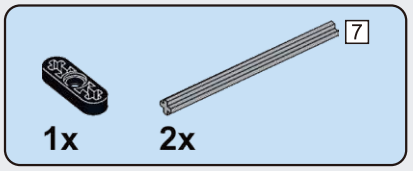

C41

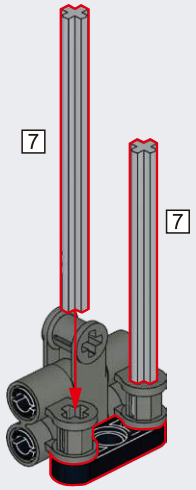

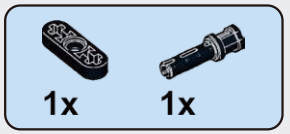

C42

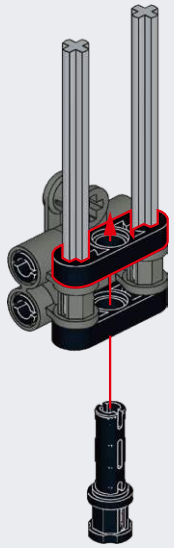

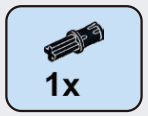

C43

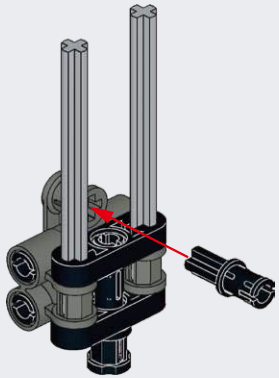

C44

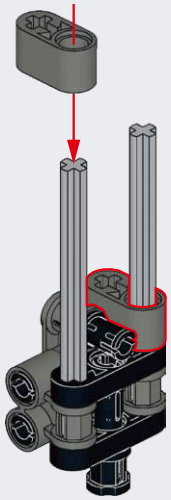

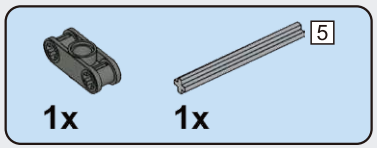

C45

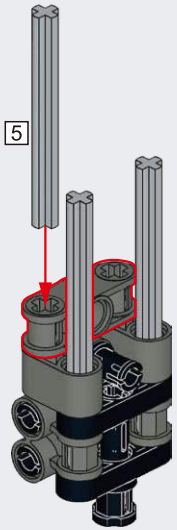

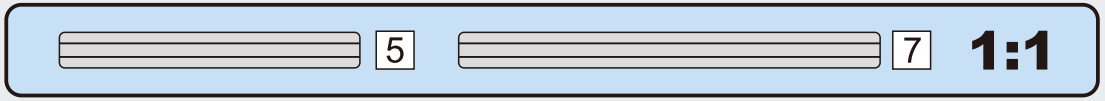

C46

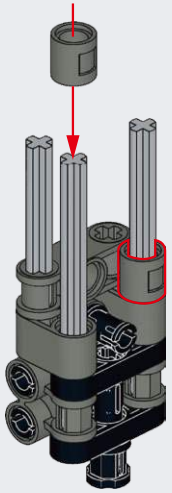

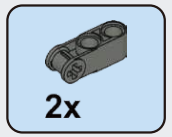

C47

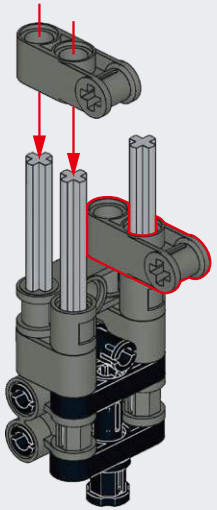

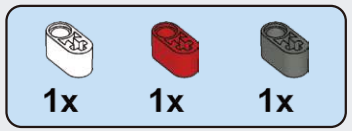

C48

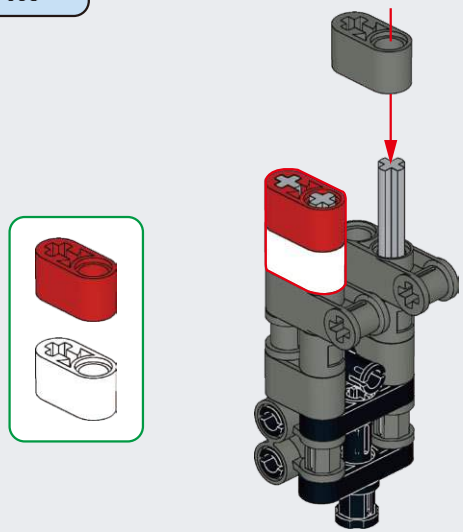

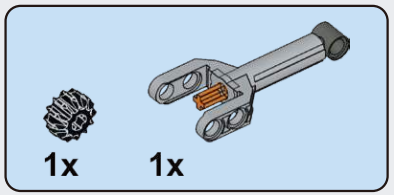

C49

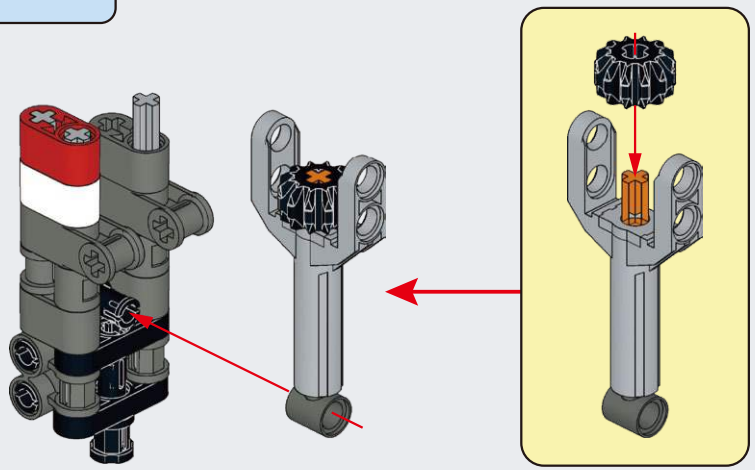

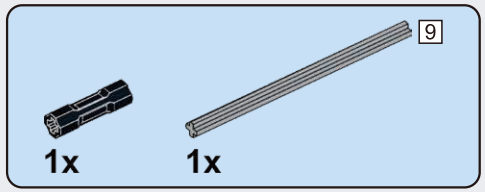

C50

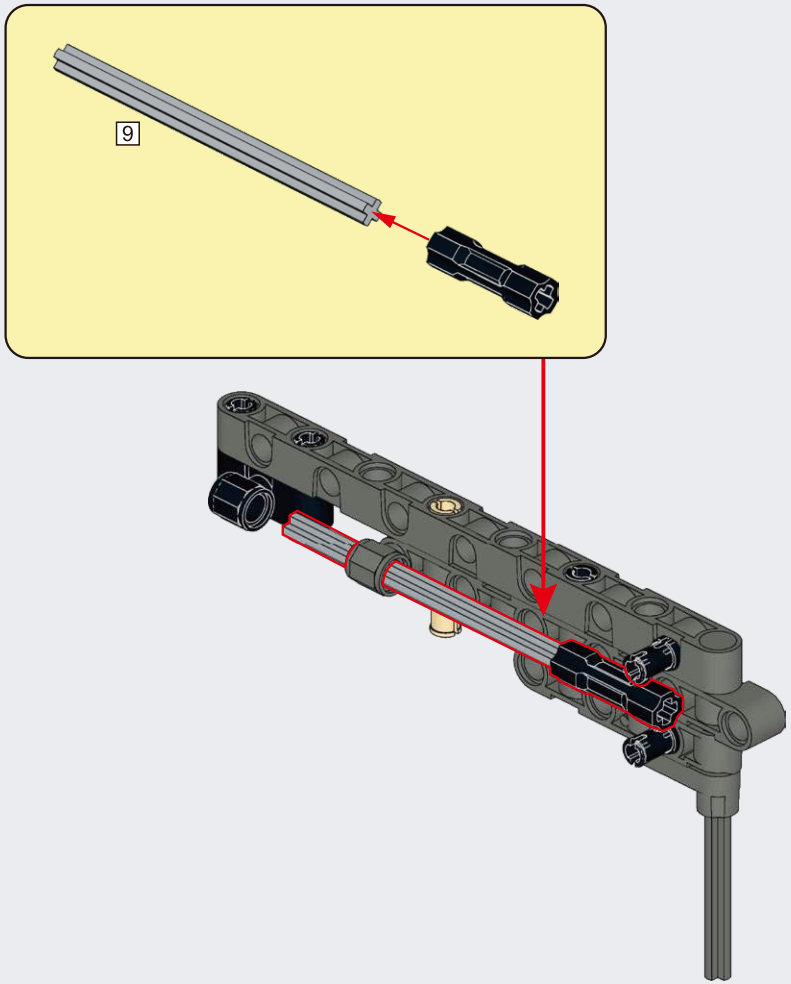

C51

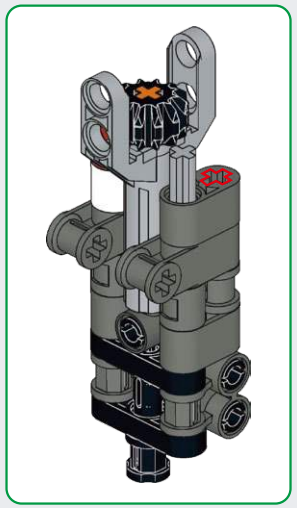

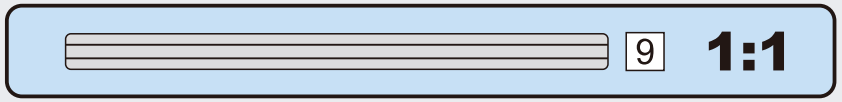

C52

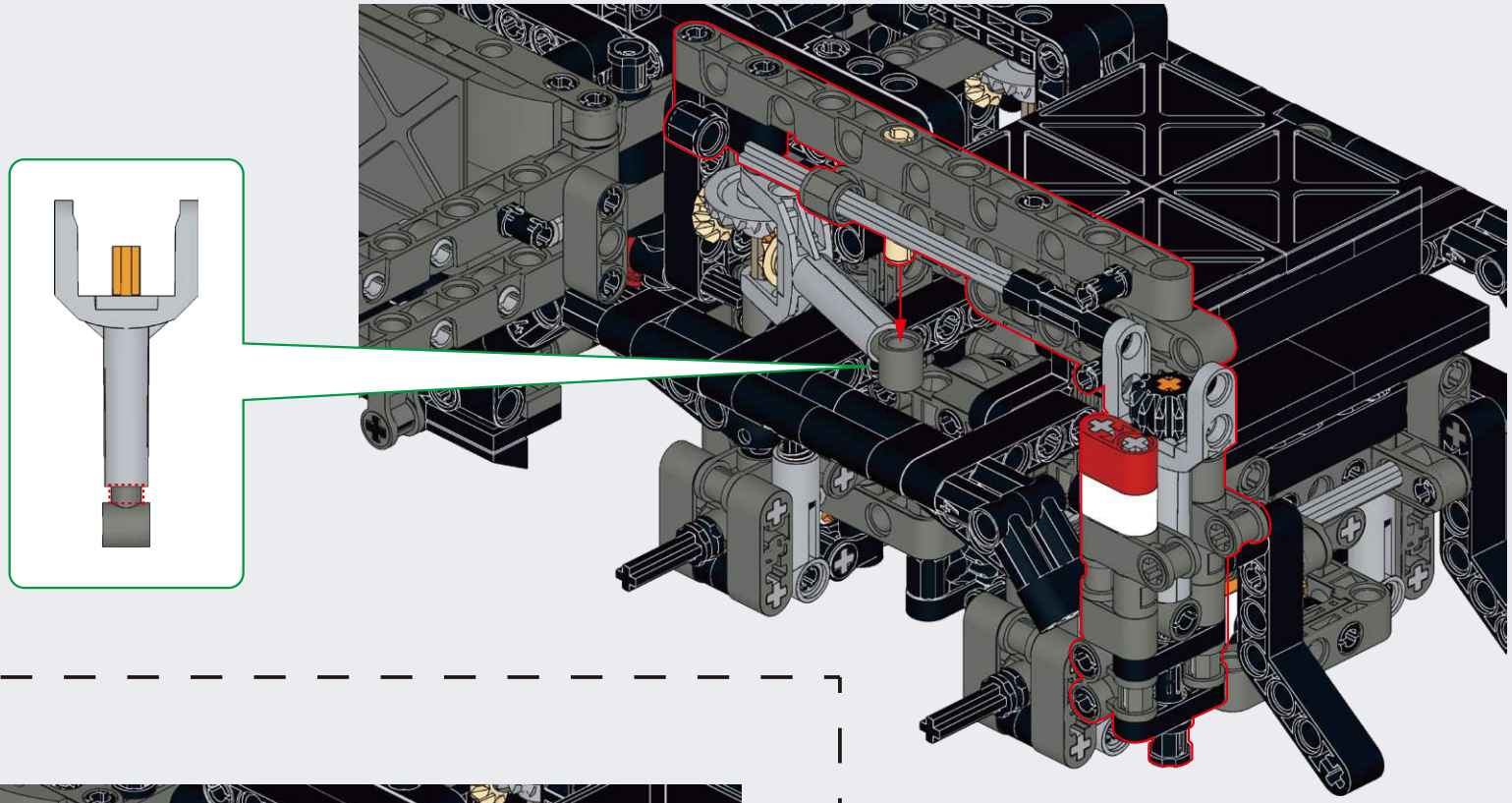

C53

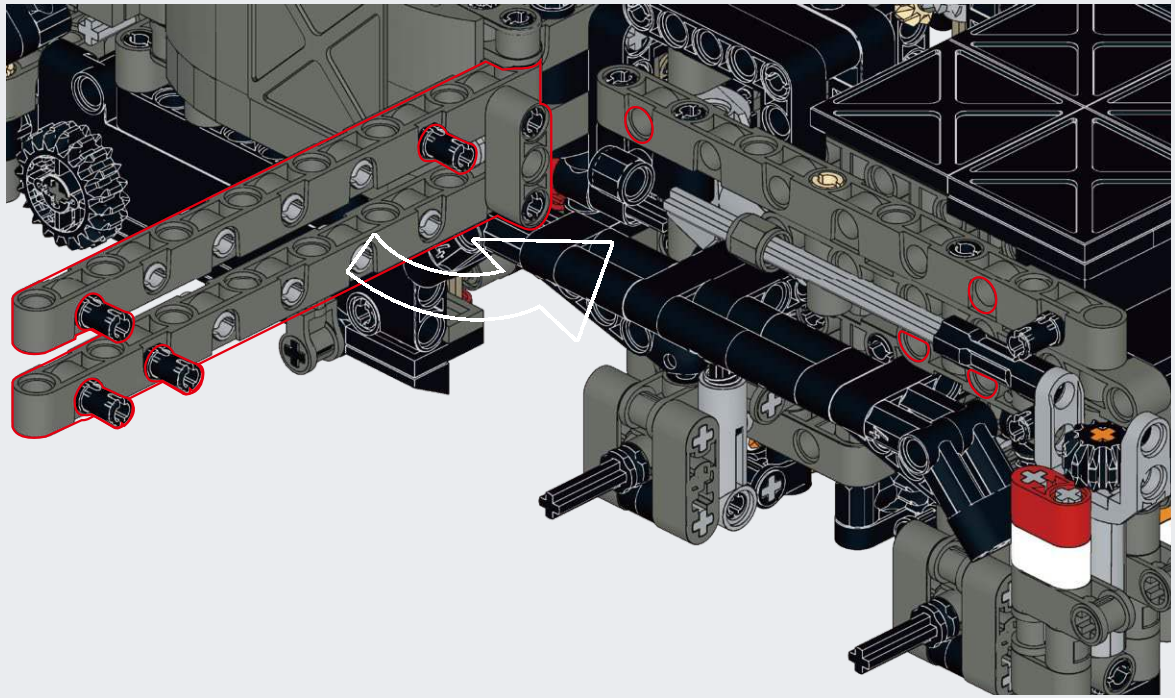

C54

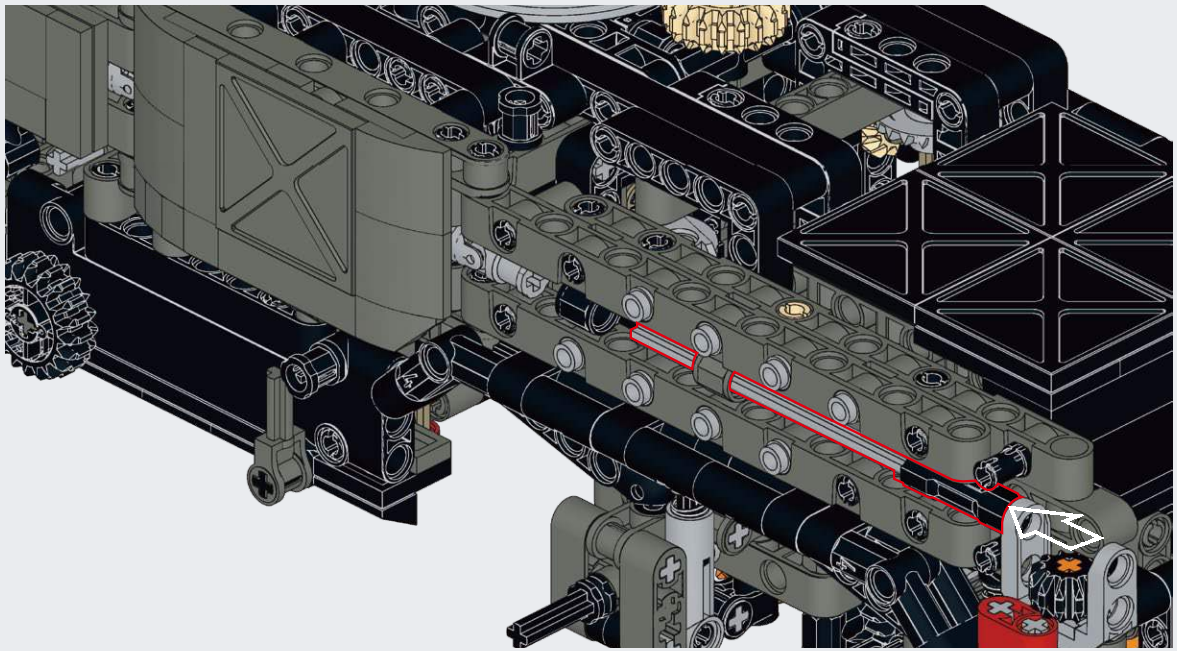

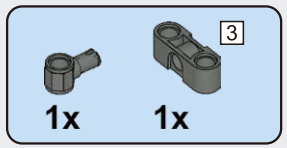

C55

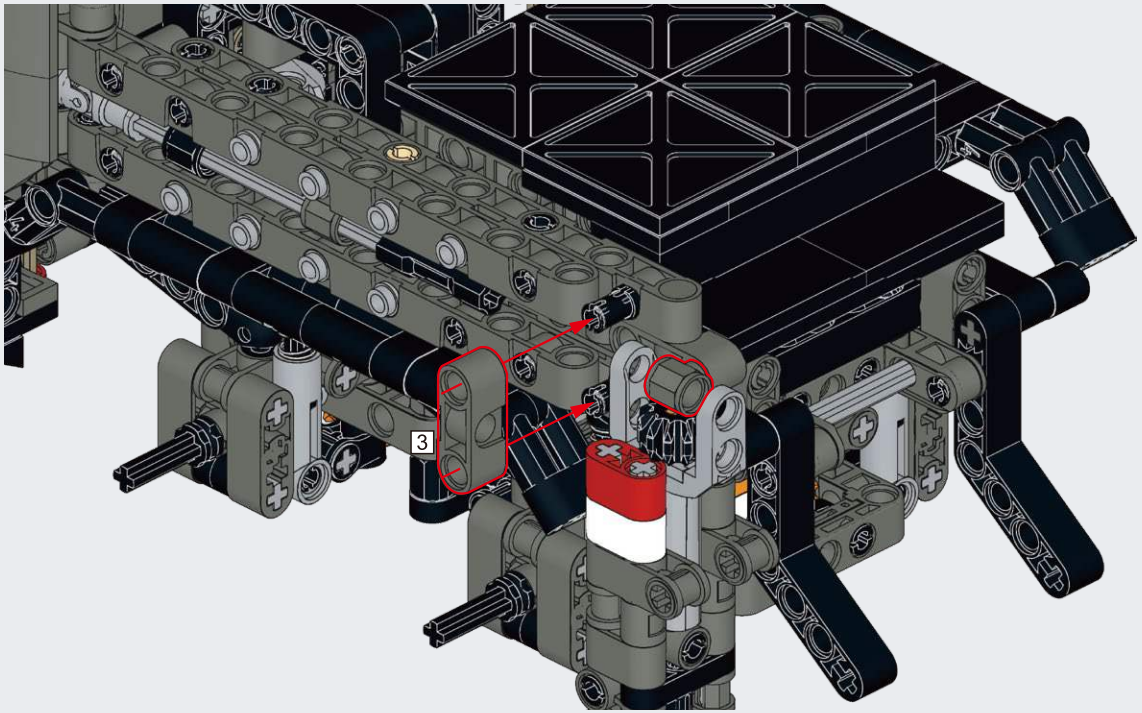

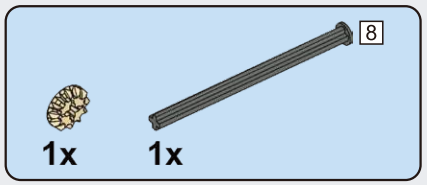

C56

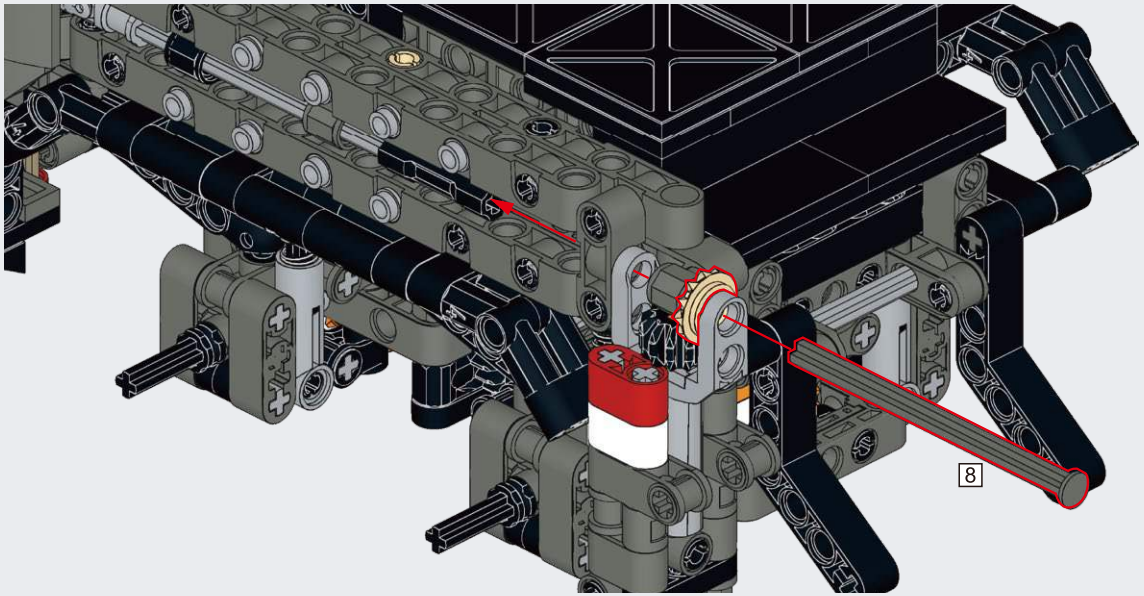

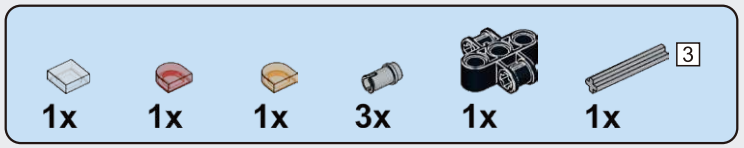

C57

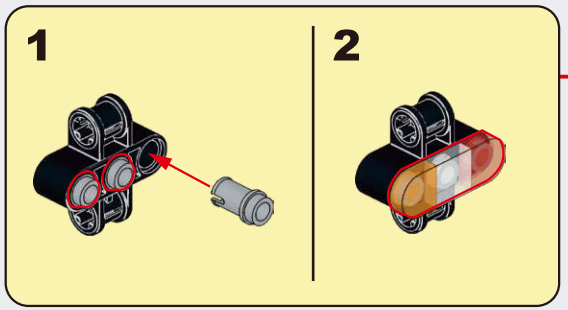

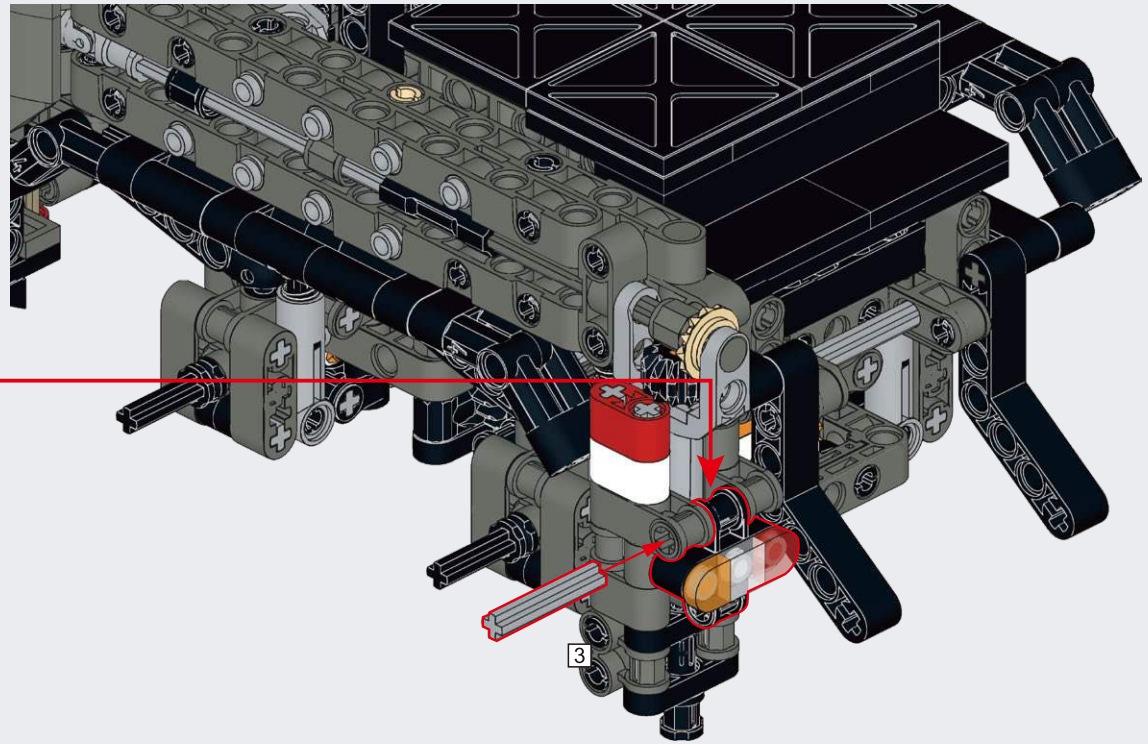

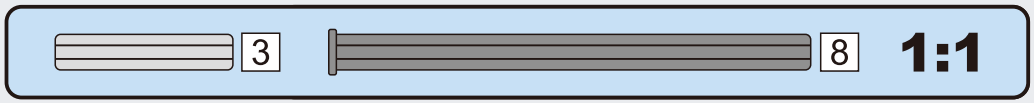

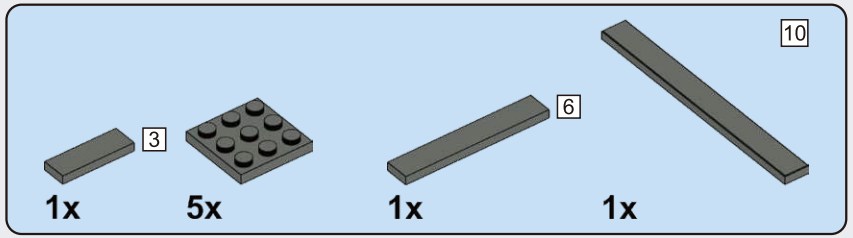

C58

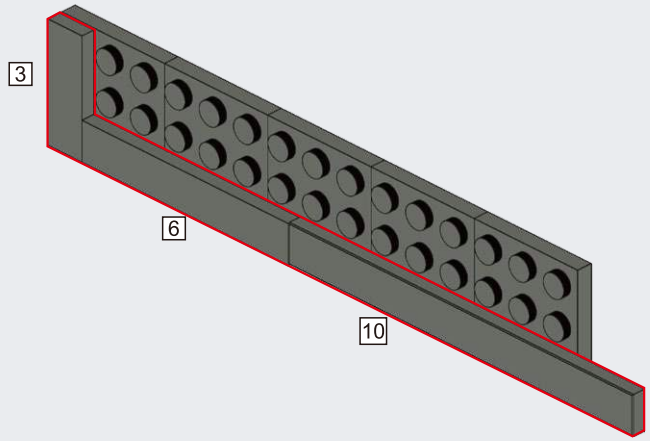

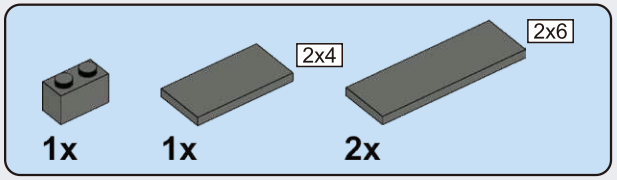

C59

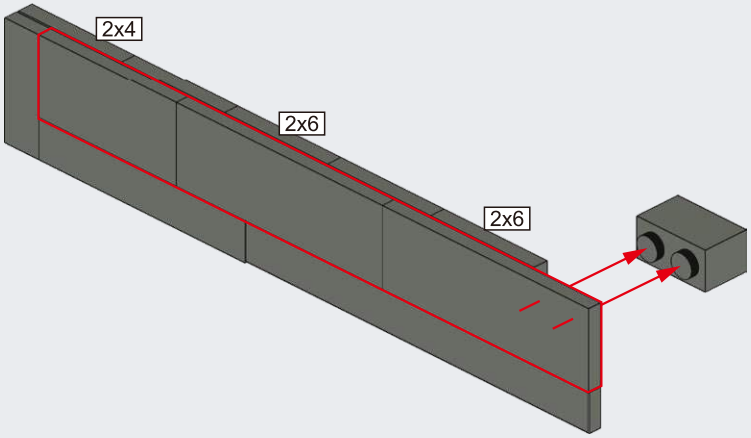

C60

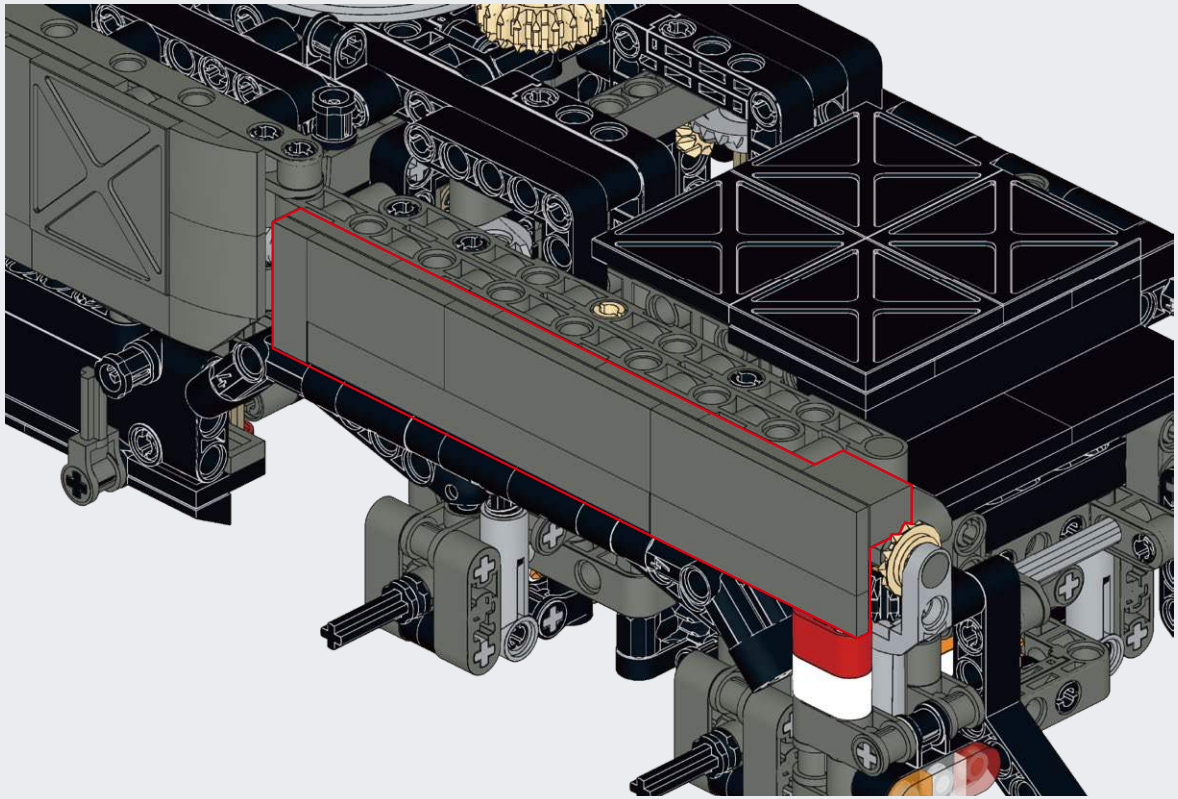

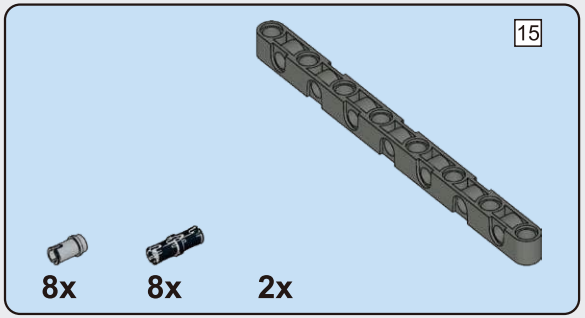

C61

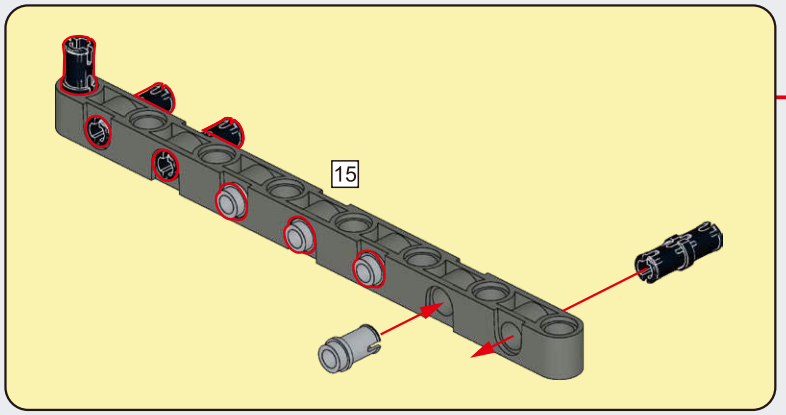

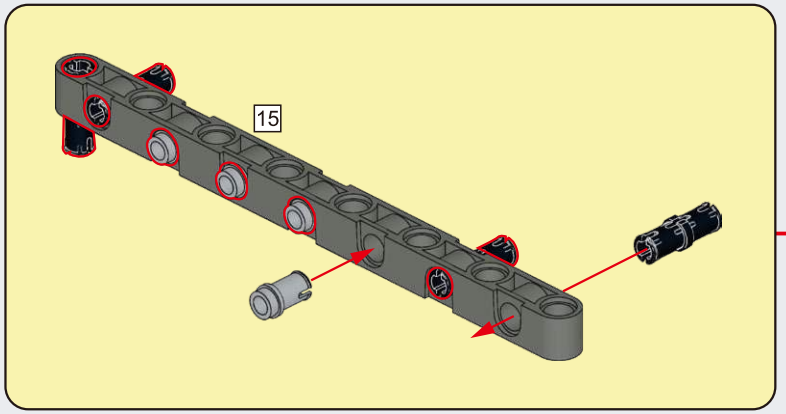

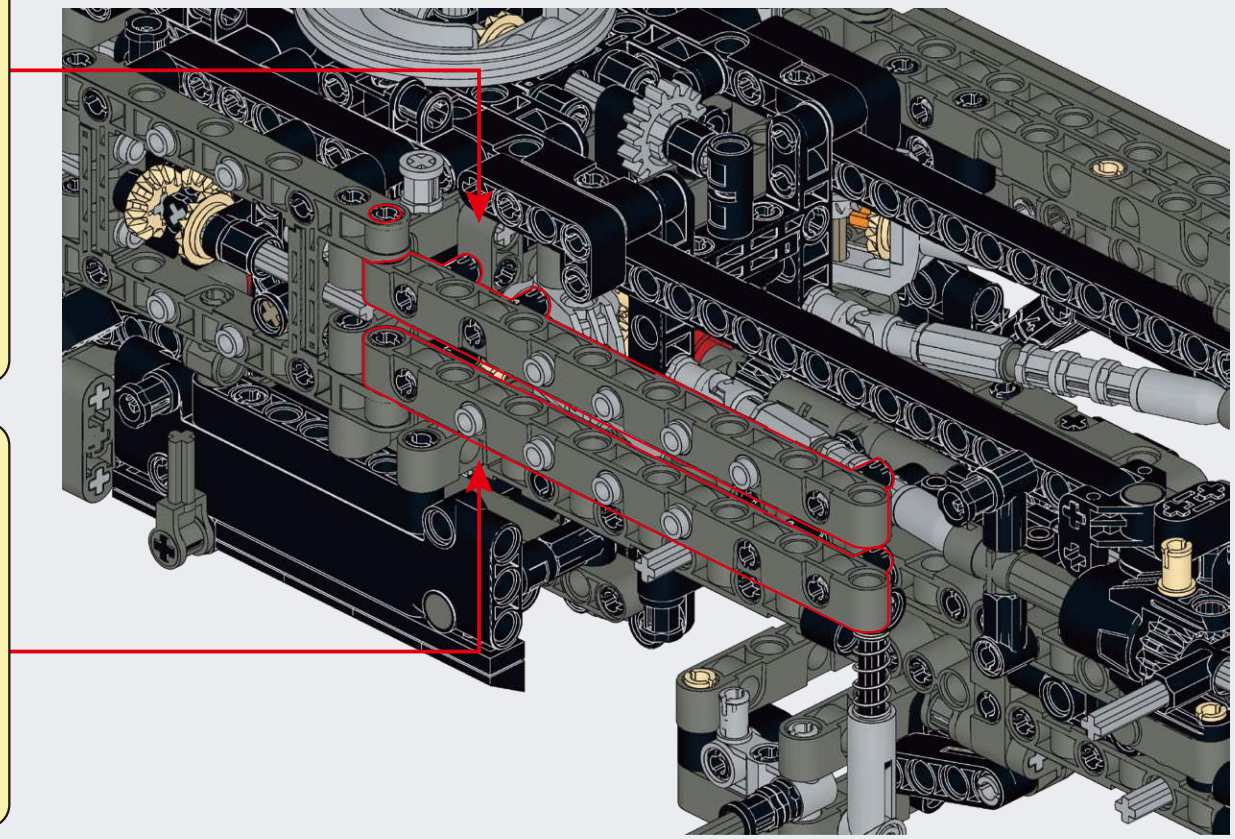

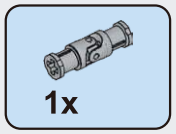

C62

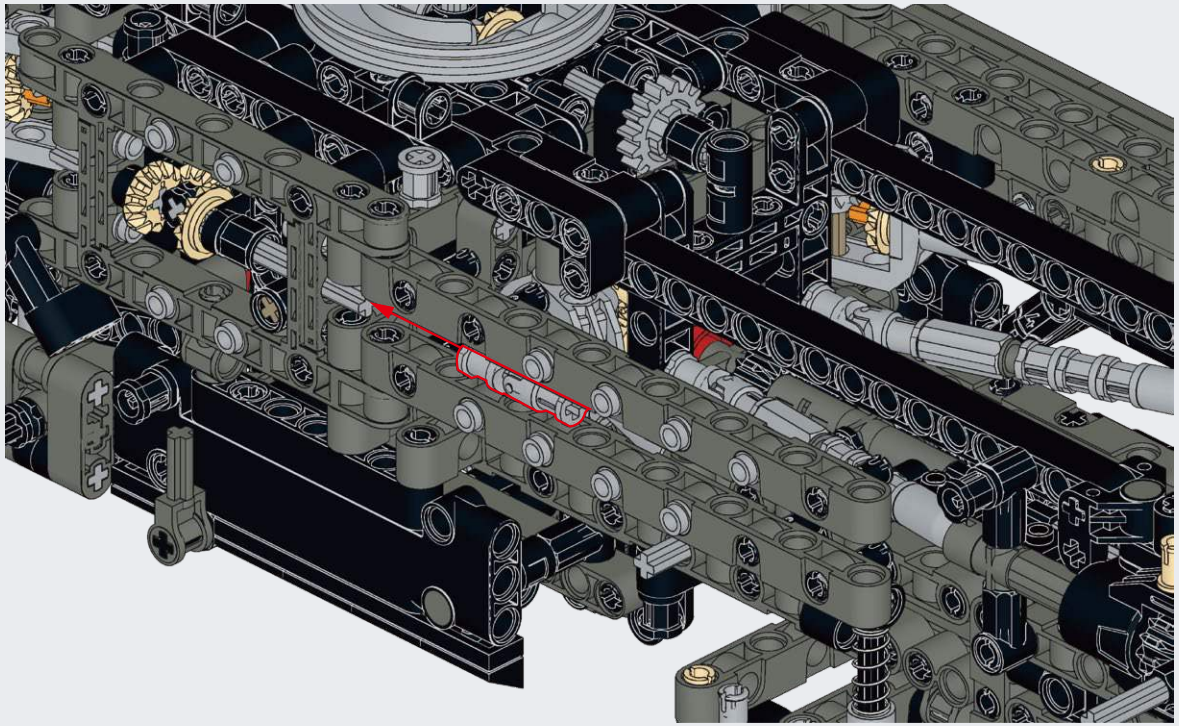

C63

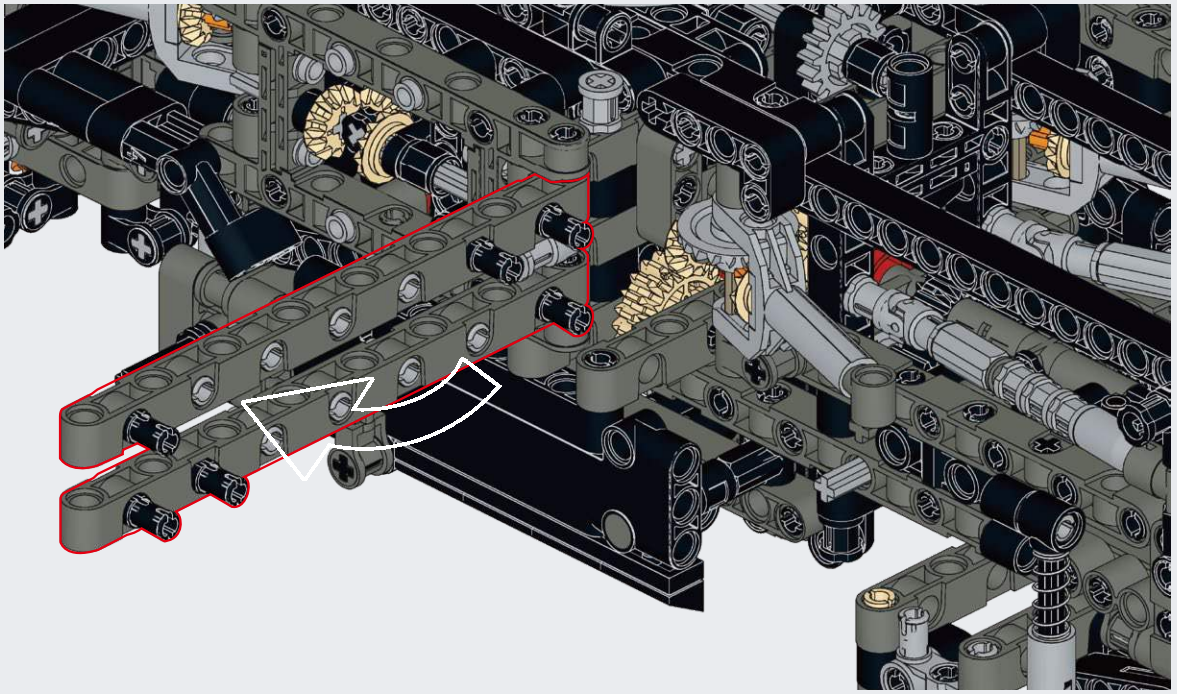

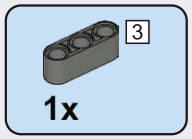

C64

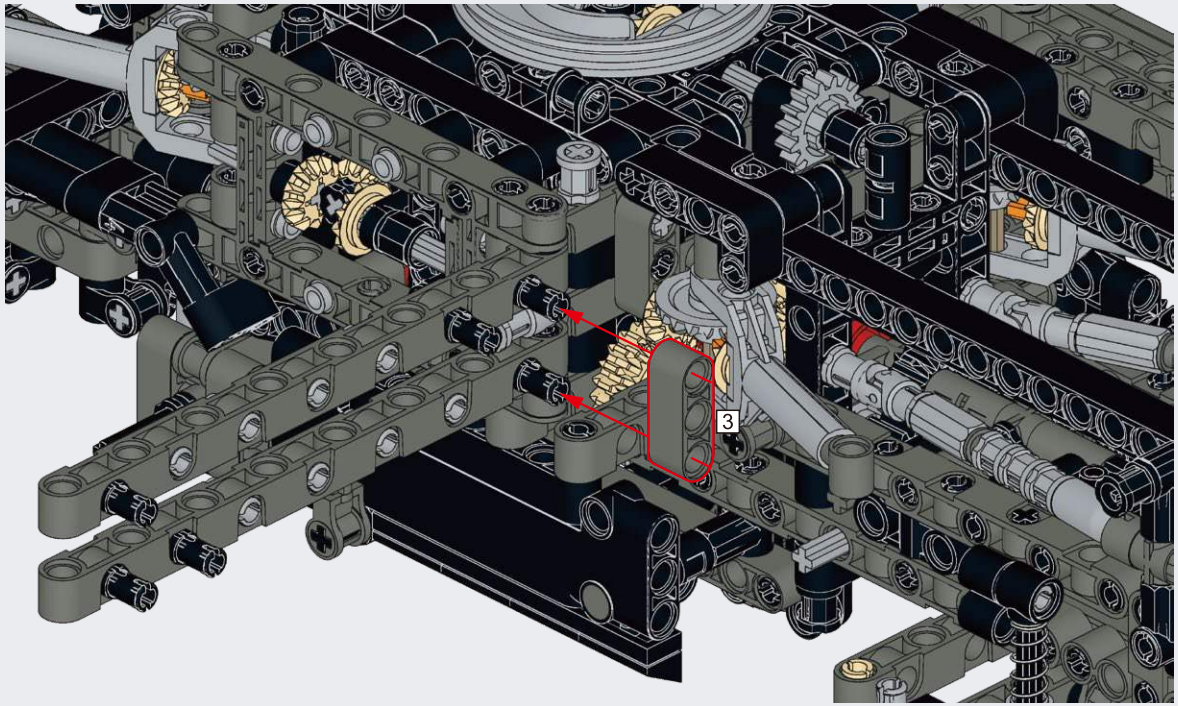

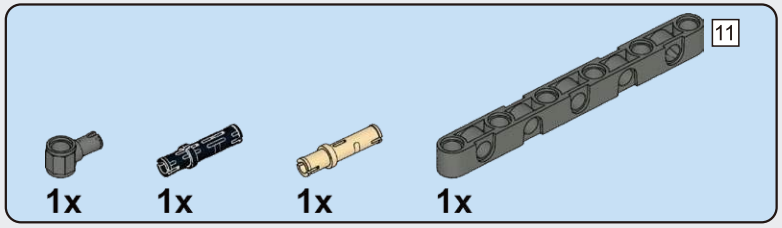

C65

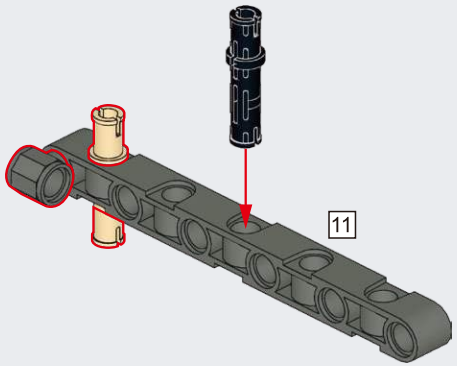

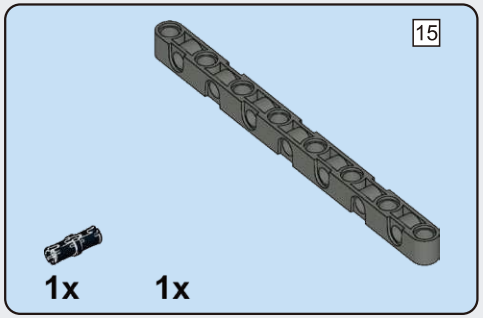

C66

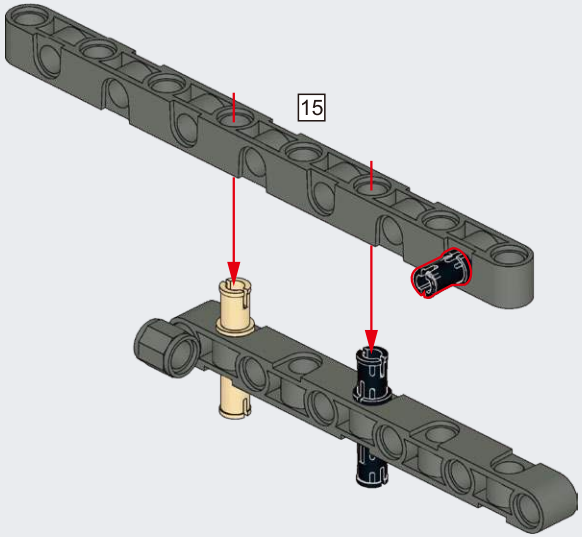

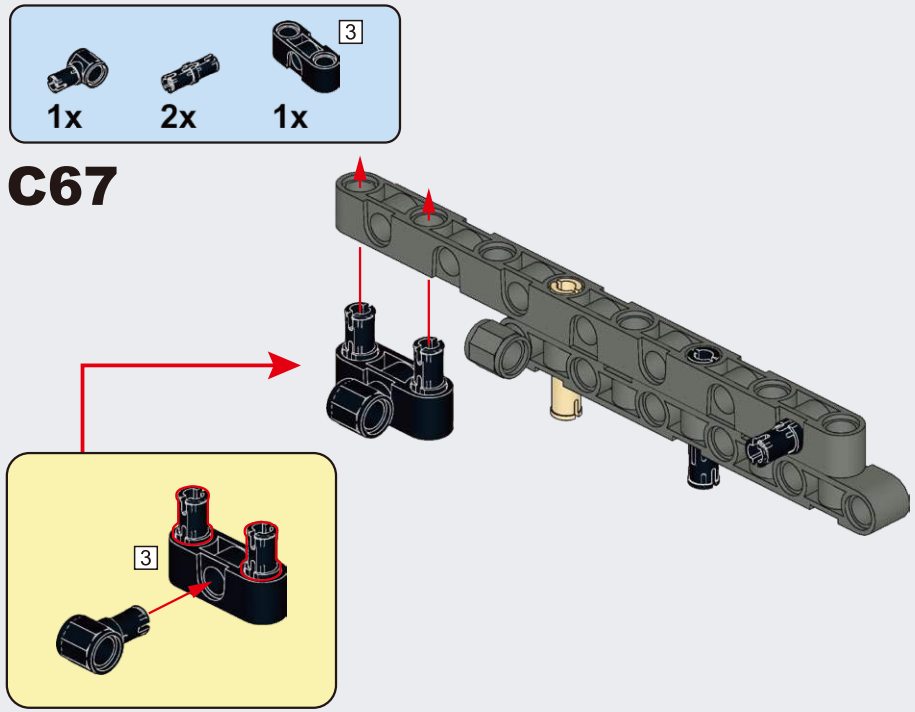
3
1x
2x
1x
C67
3

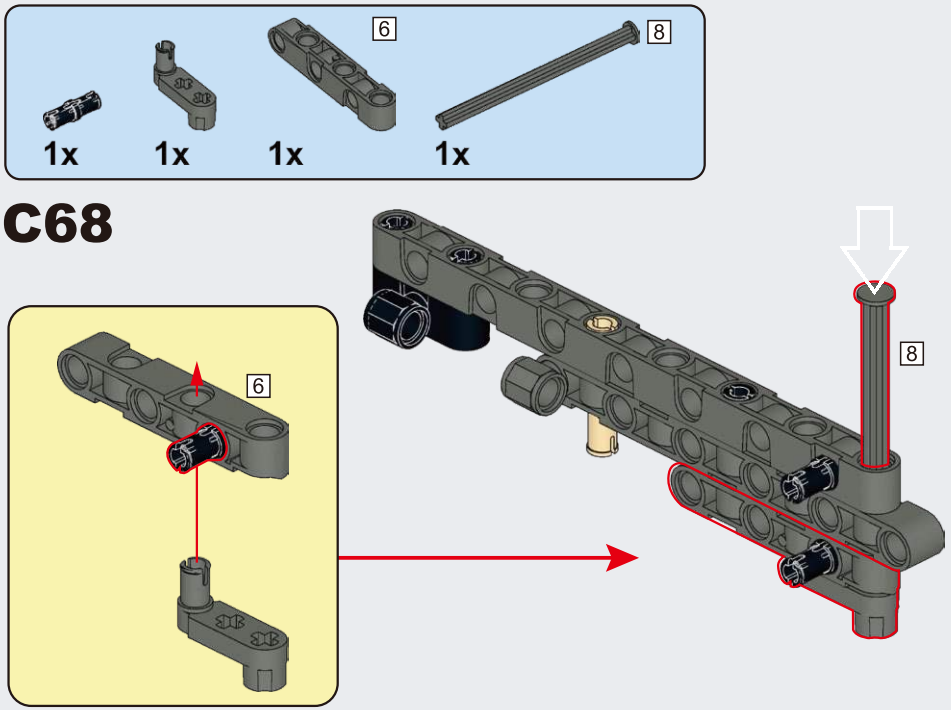
6
8
1x
1x
1x
1x
C68
6
8

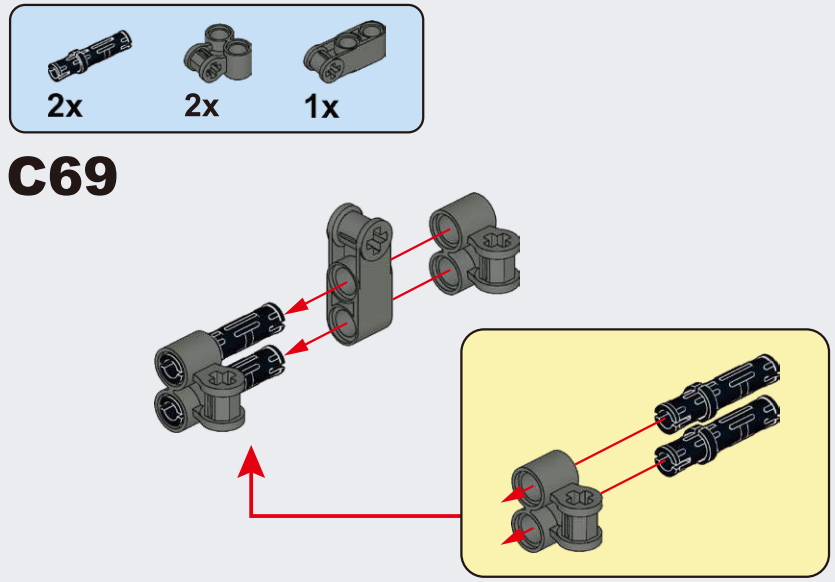
2x
2x
1x
C69

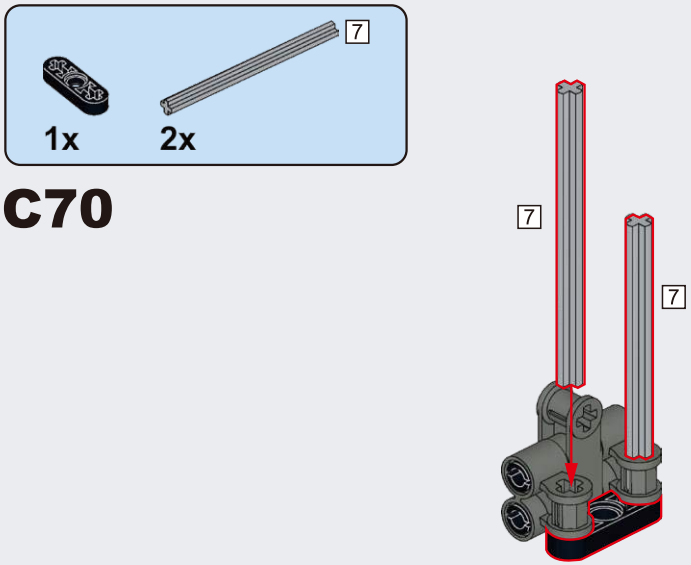
7
1x
2x
C70
7
7

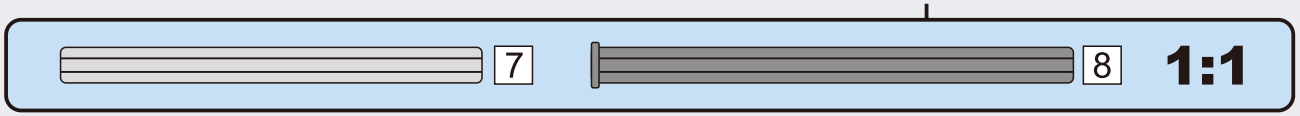
7
8
1:1

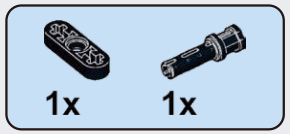

C71

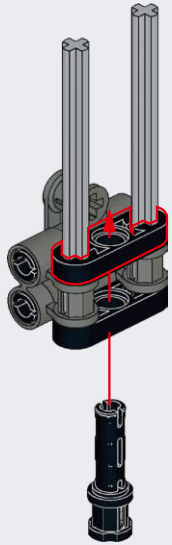

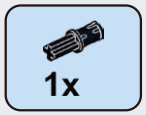

C72

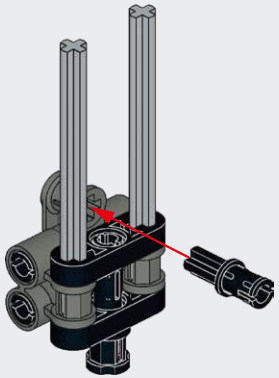

C73

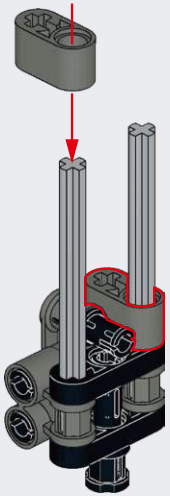

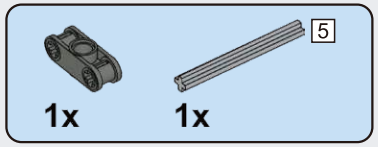

C74

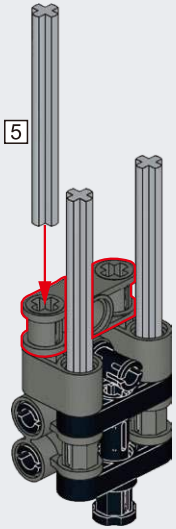

C75

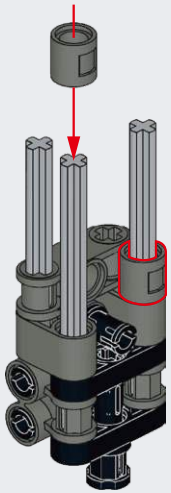

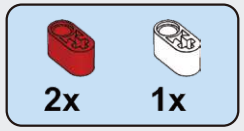

C76

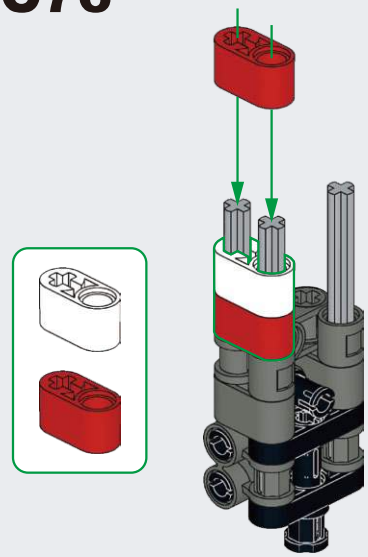

C77

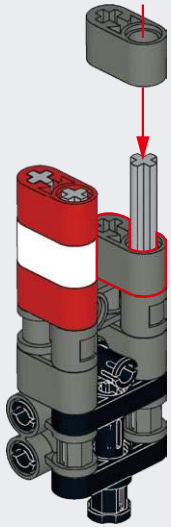

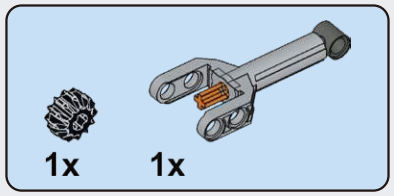

C78

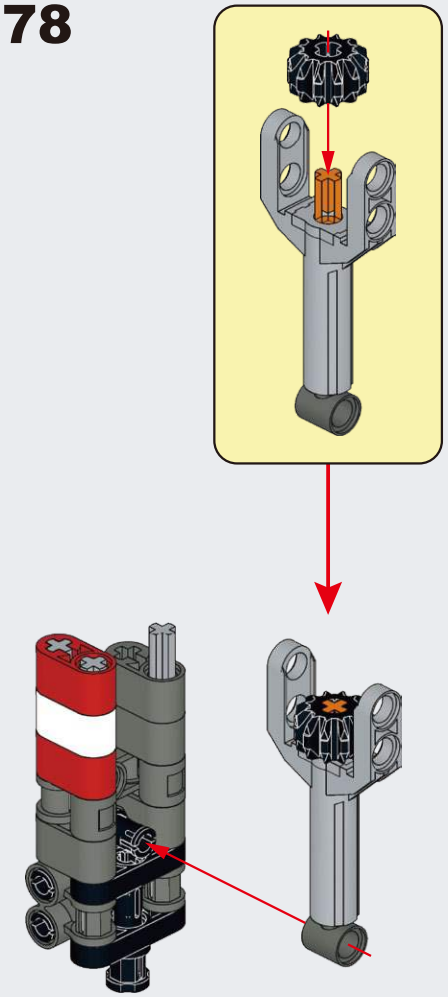

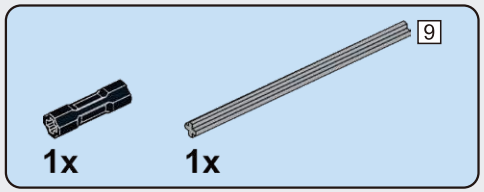

C79

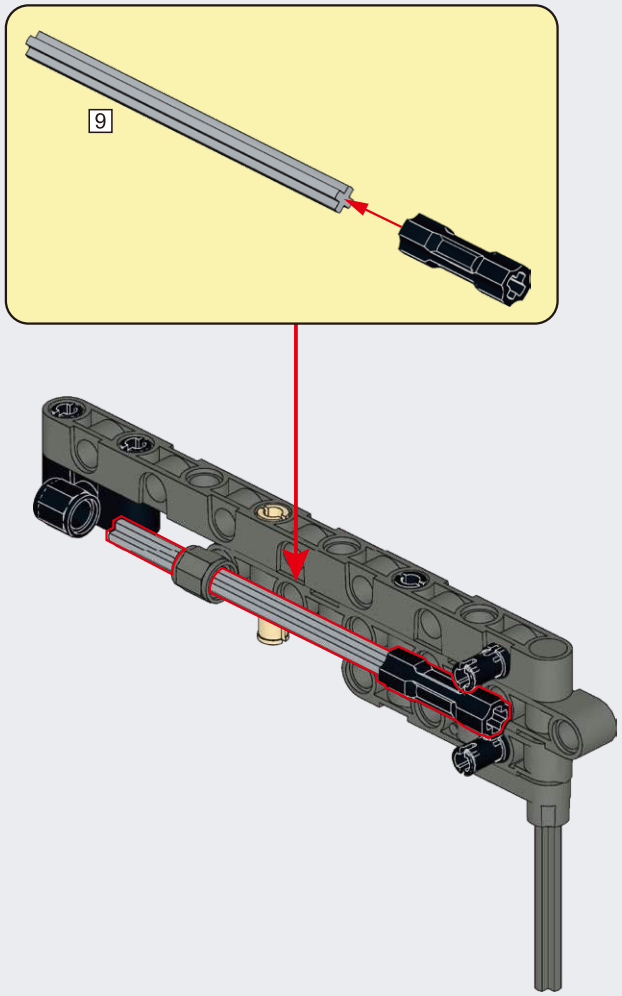

C80

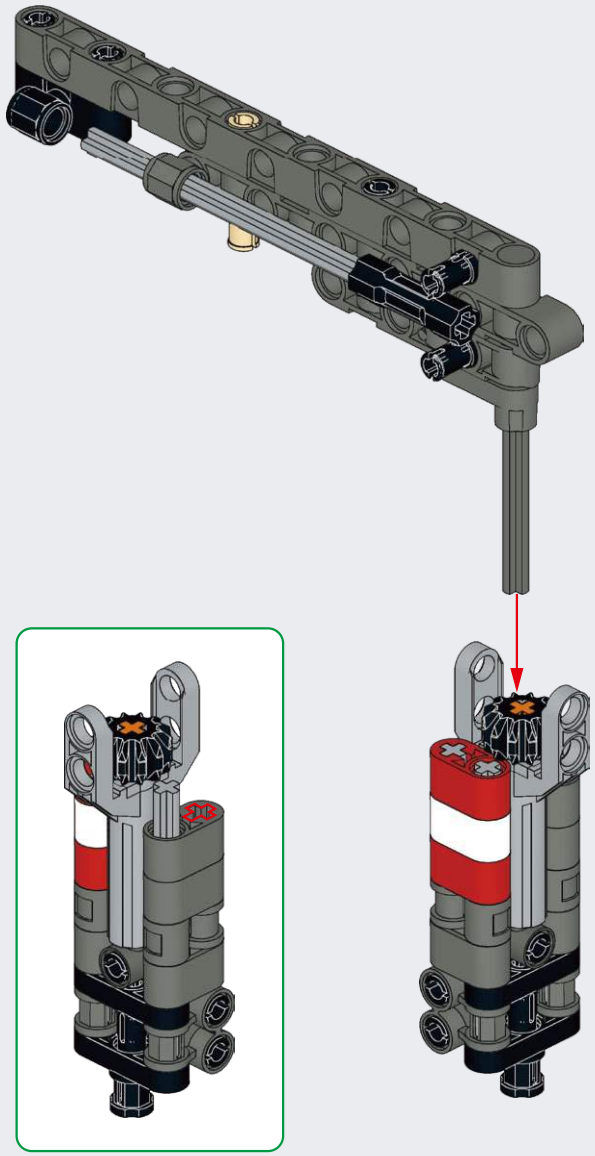

C81

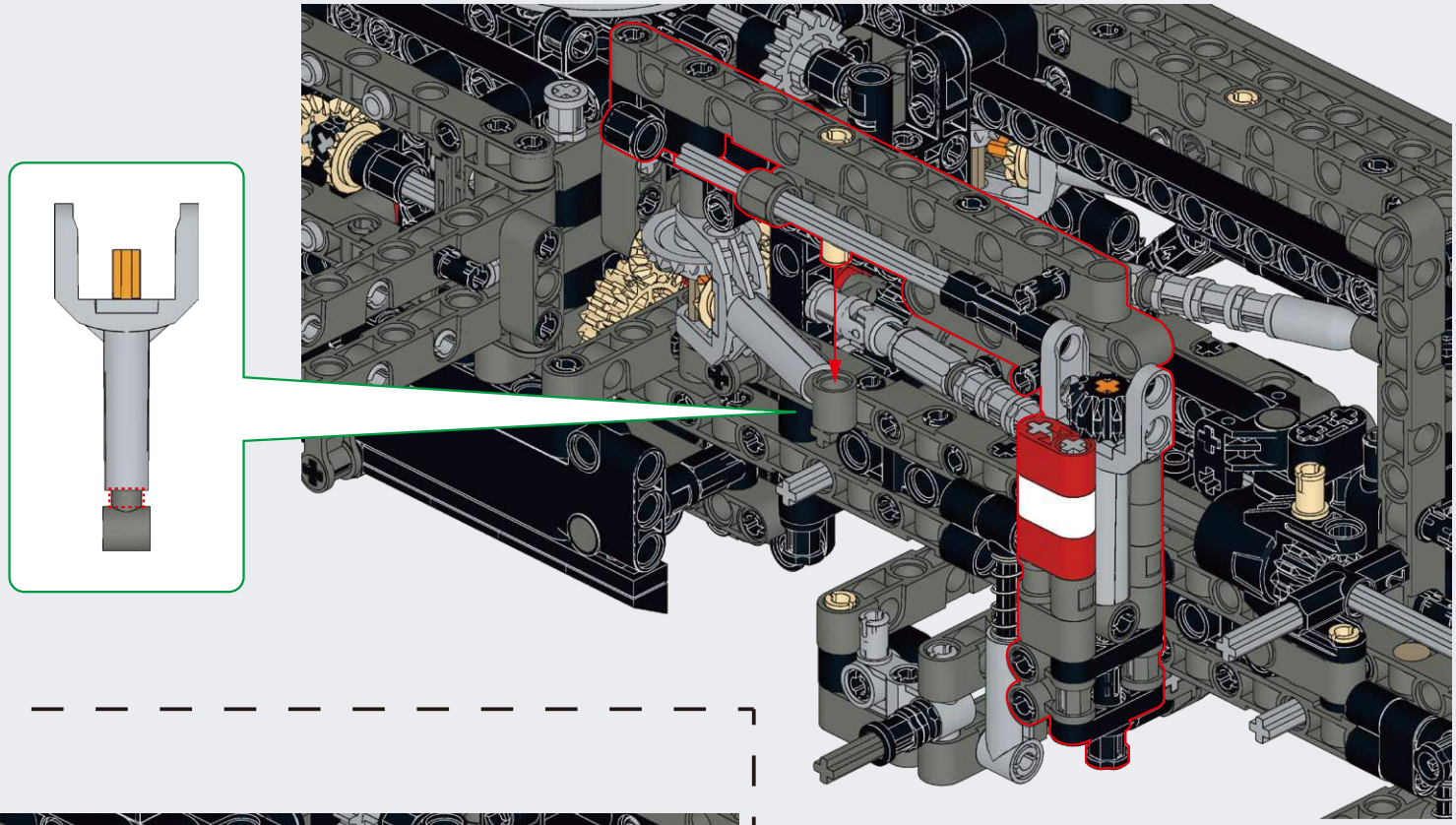

C82

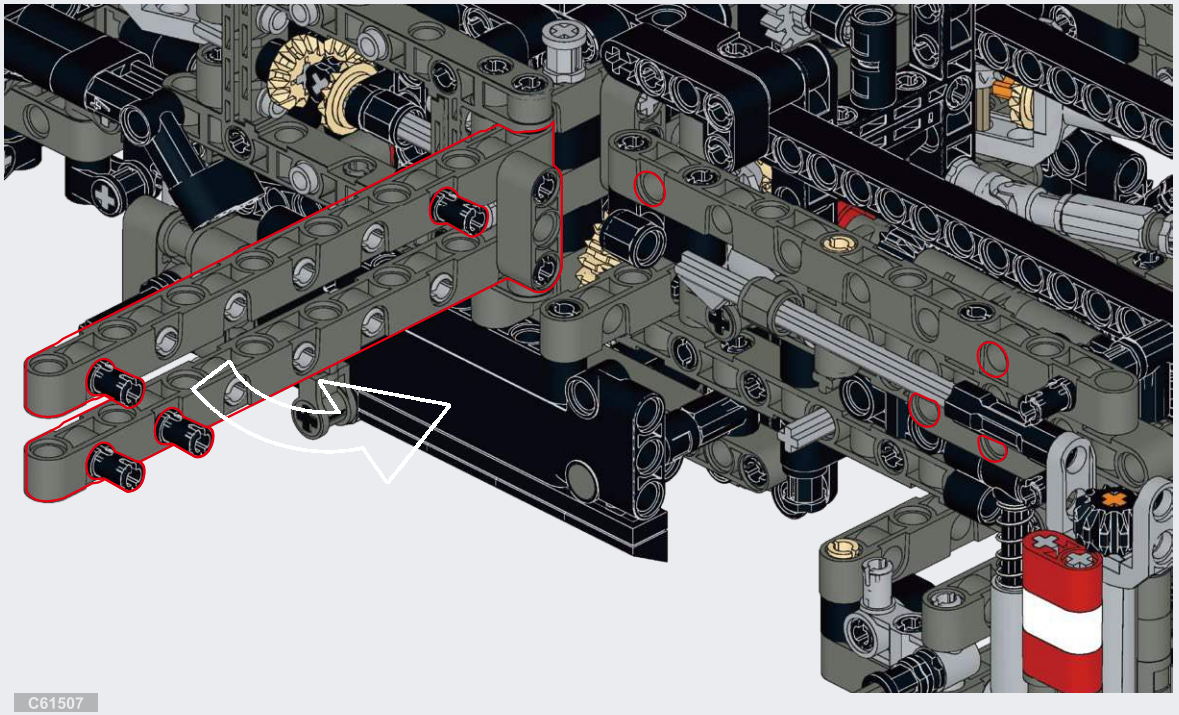

C83

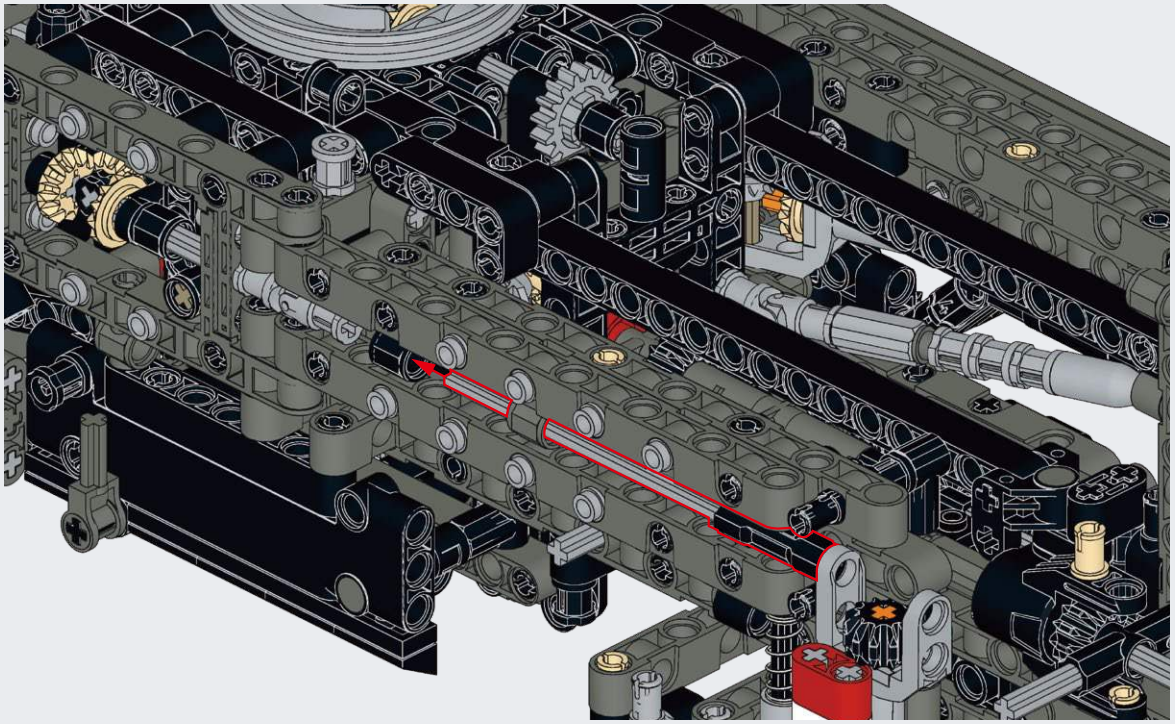

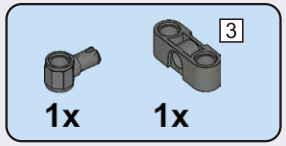

C84

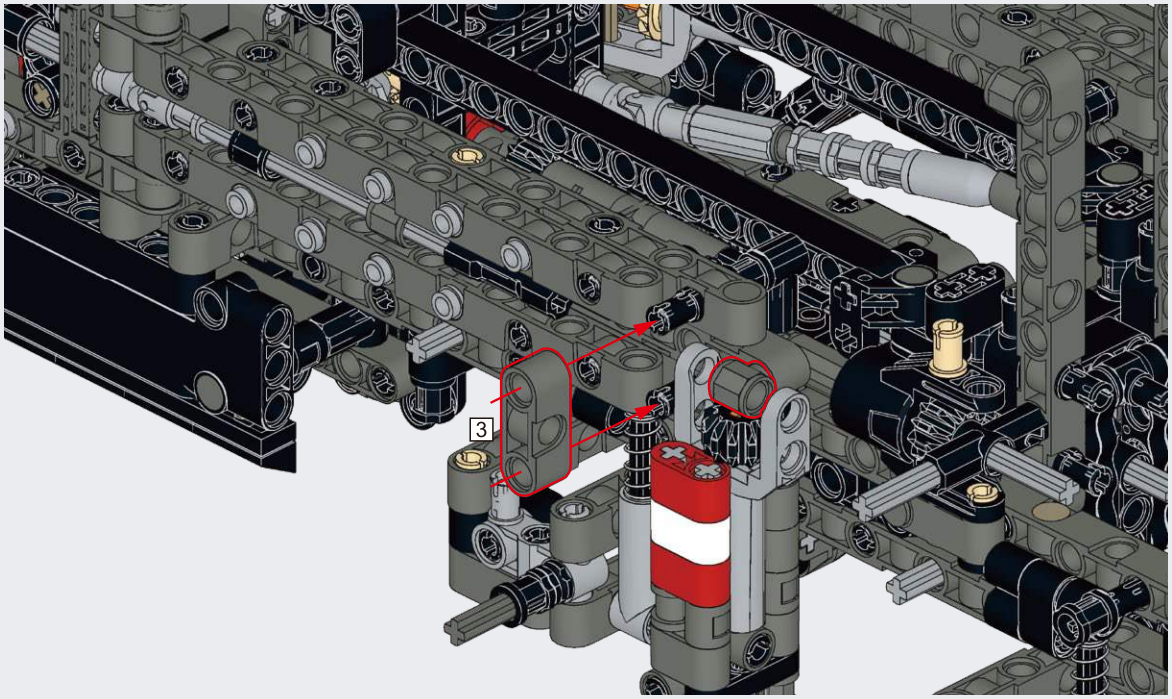

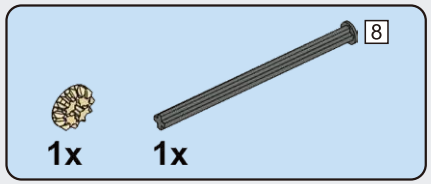

C85

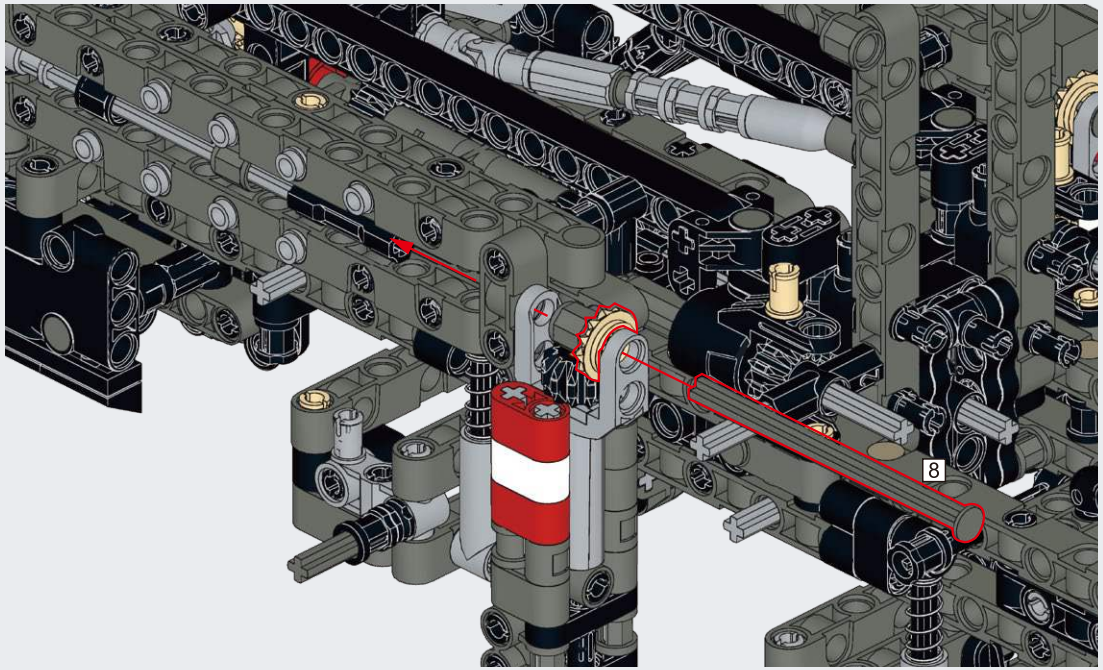

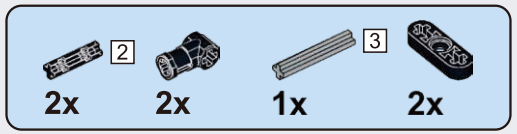

C86

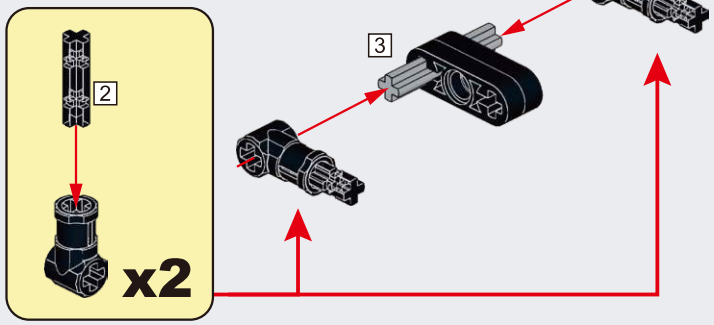

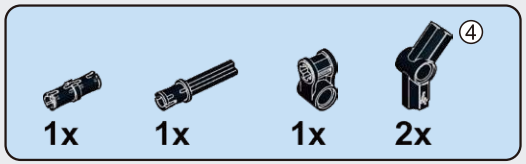

C87

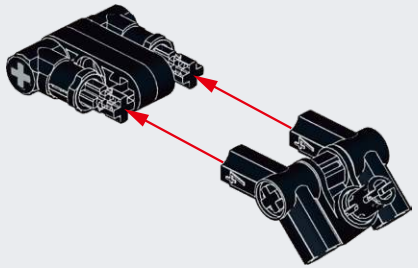

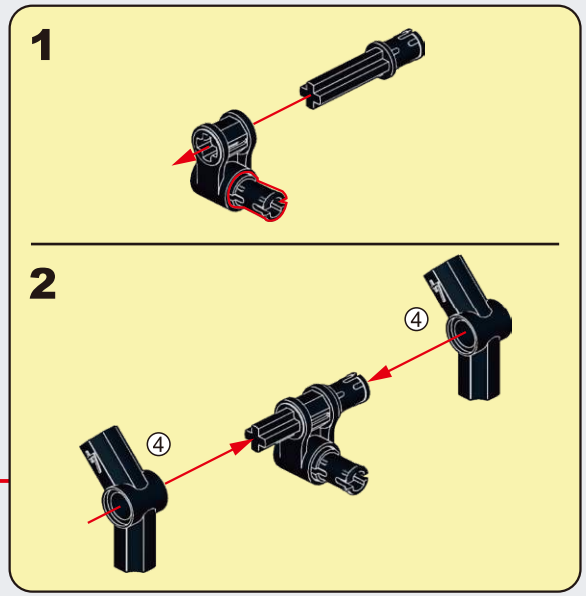

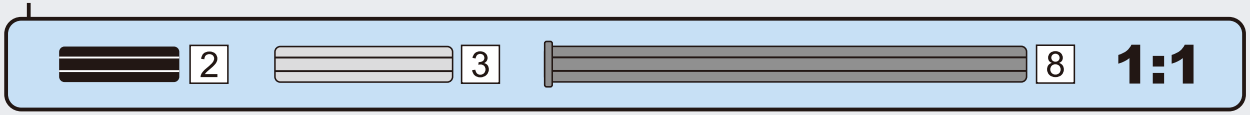

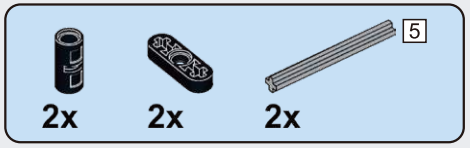

C88

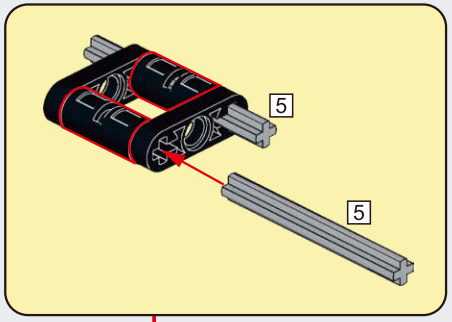

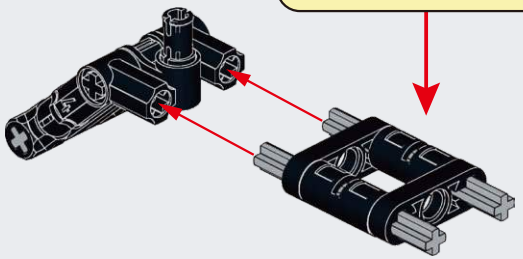

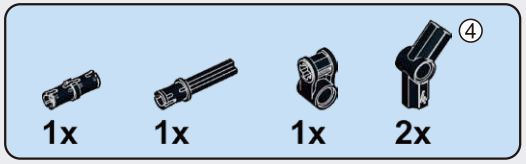

C89

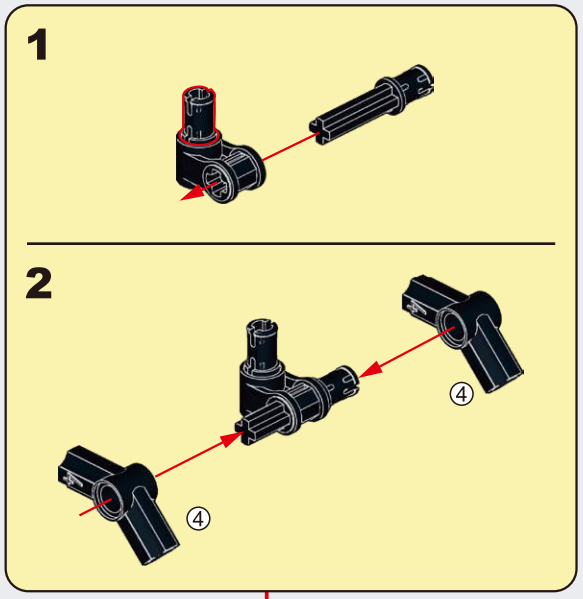

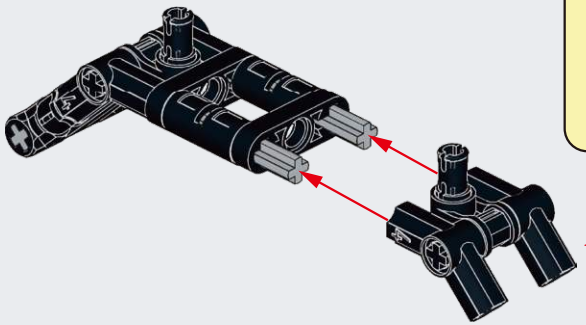

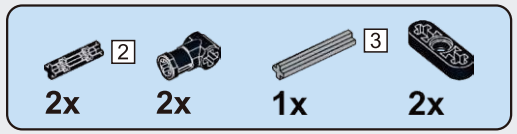

C90

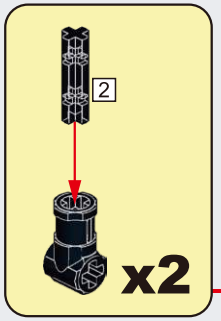

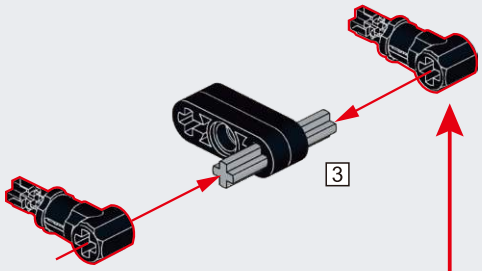

C91

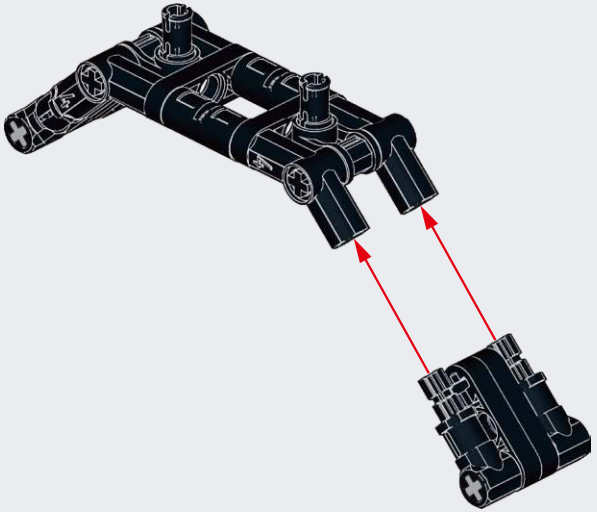

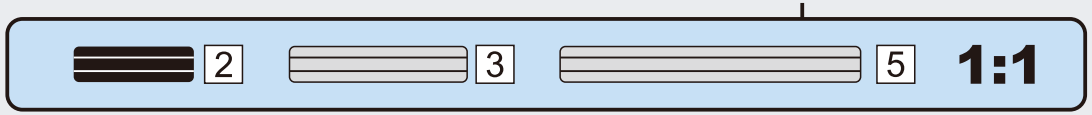

C92

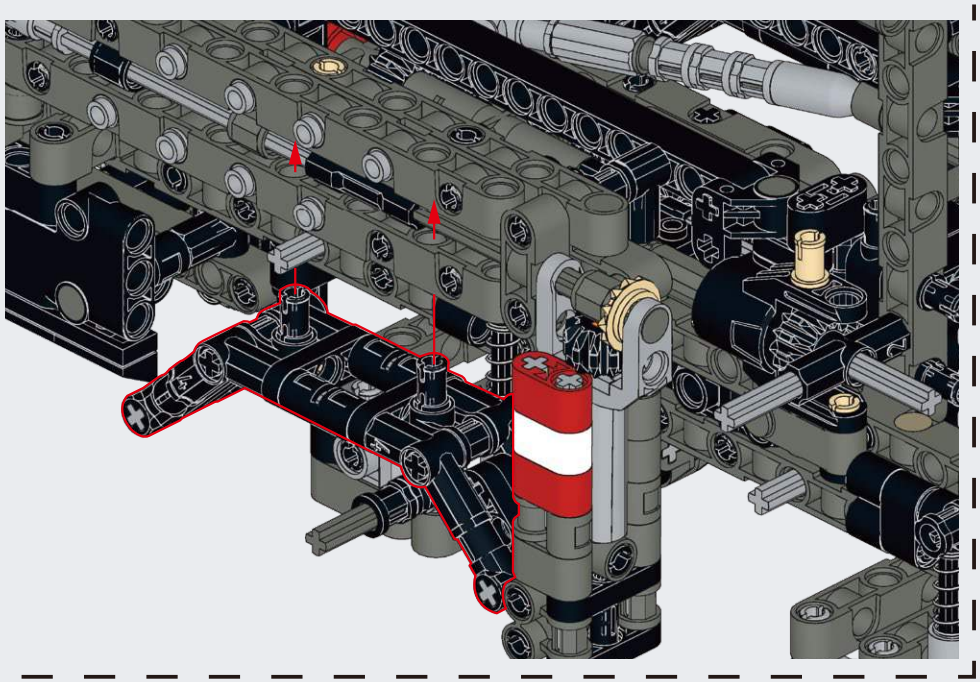

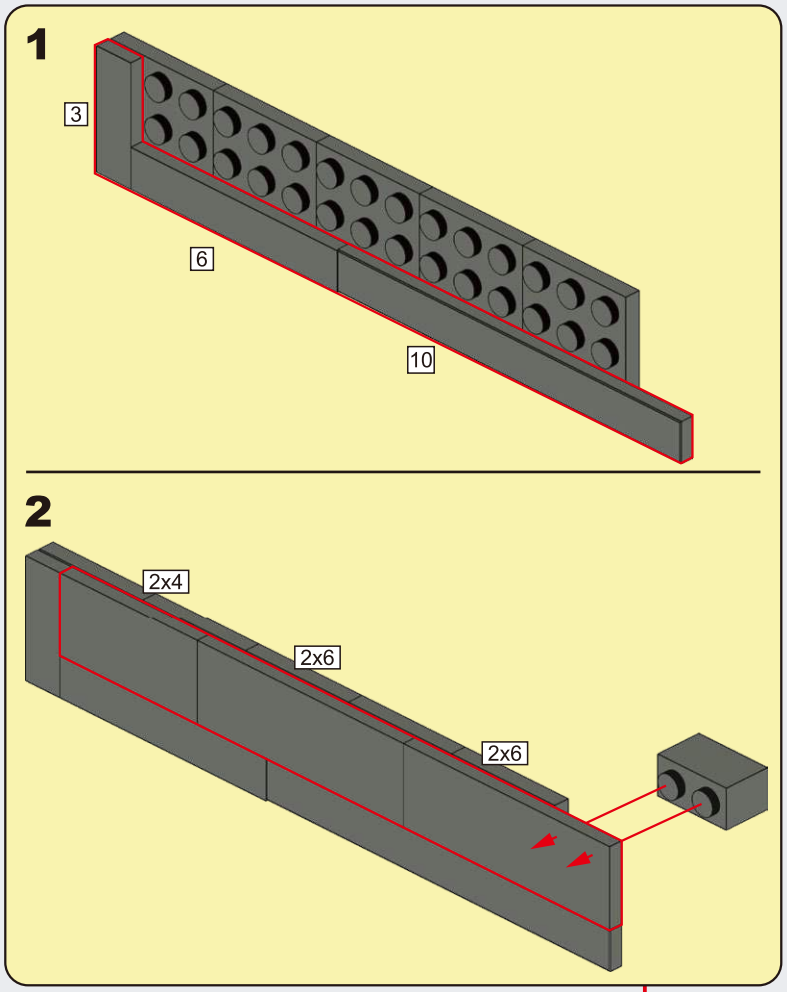

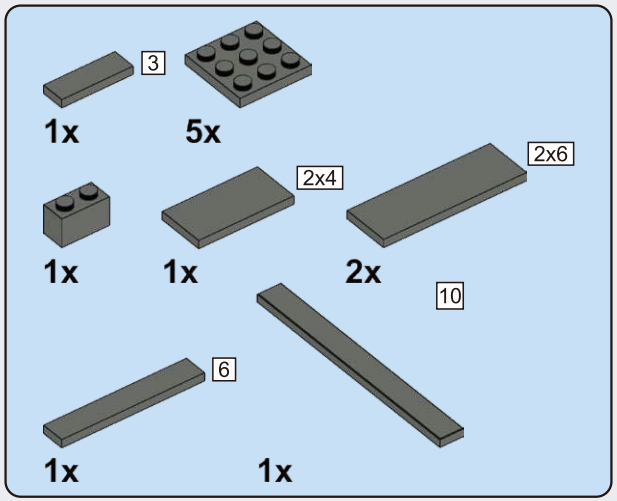

C93

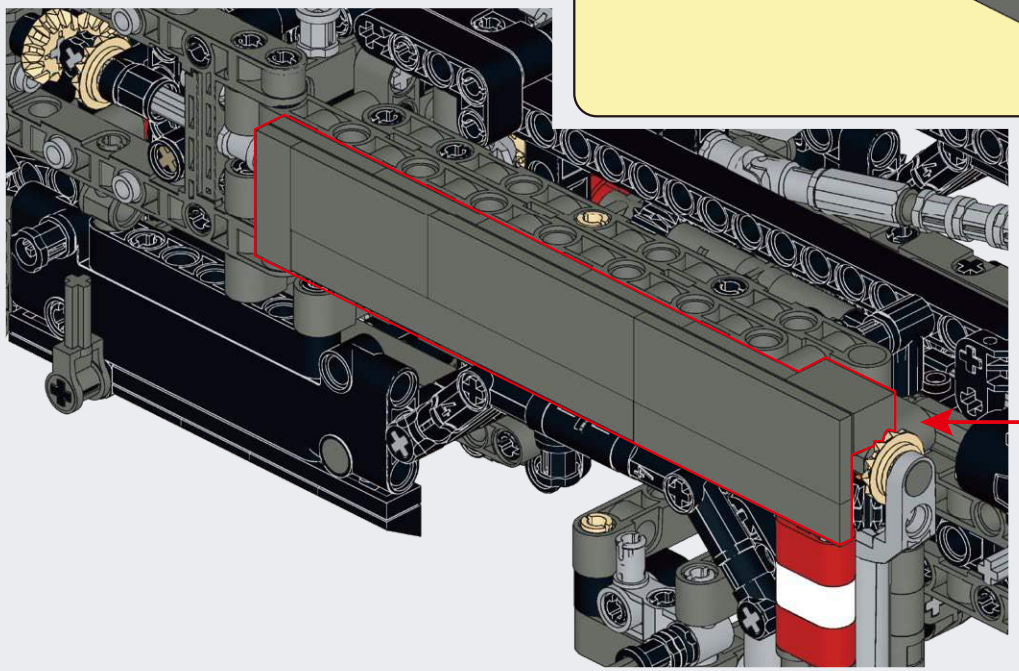

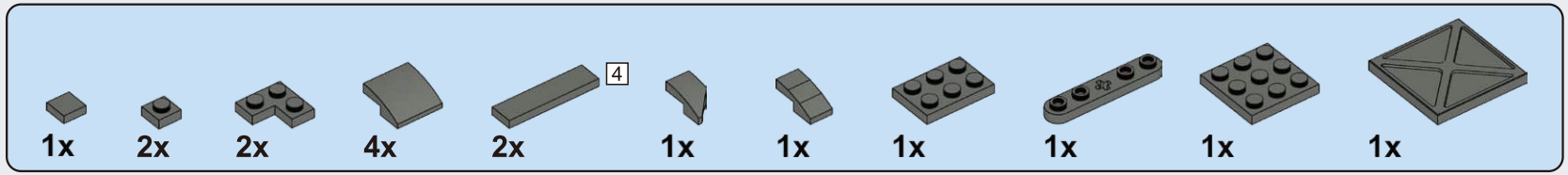

C94

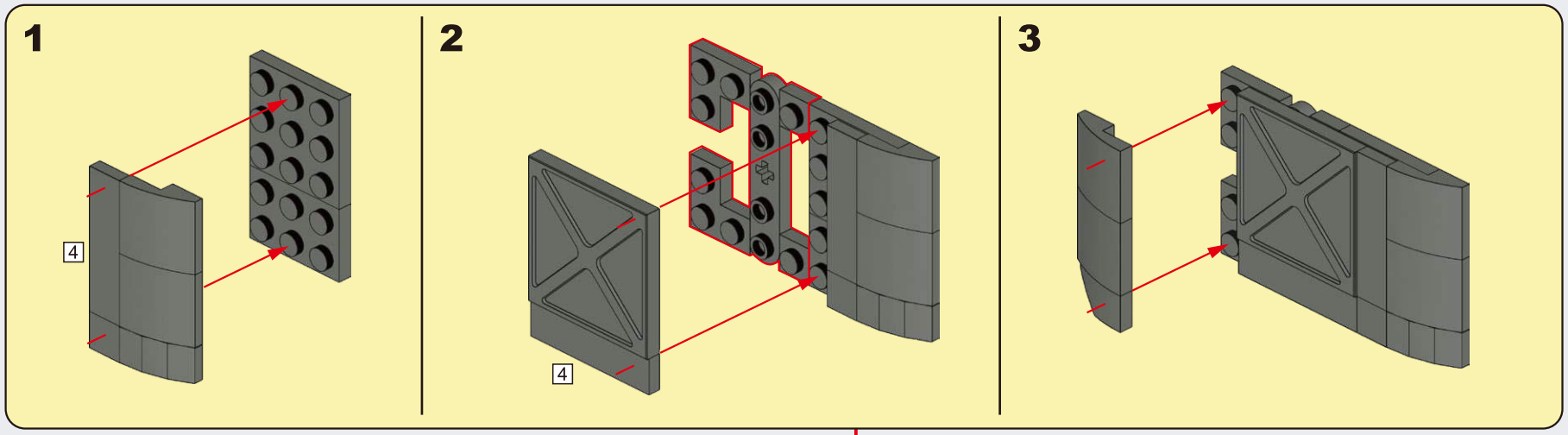

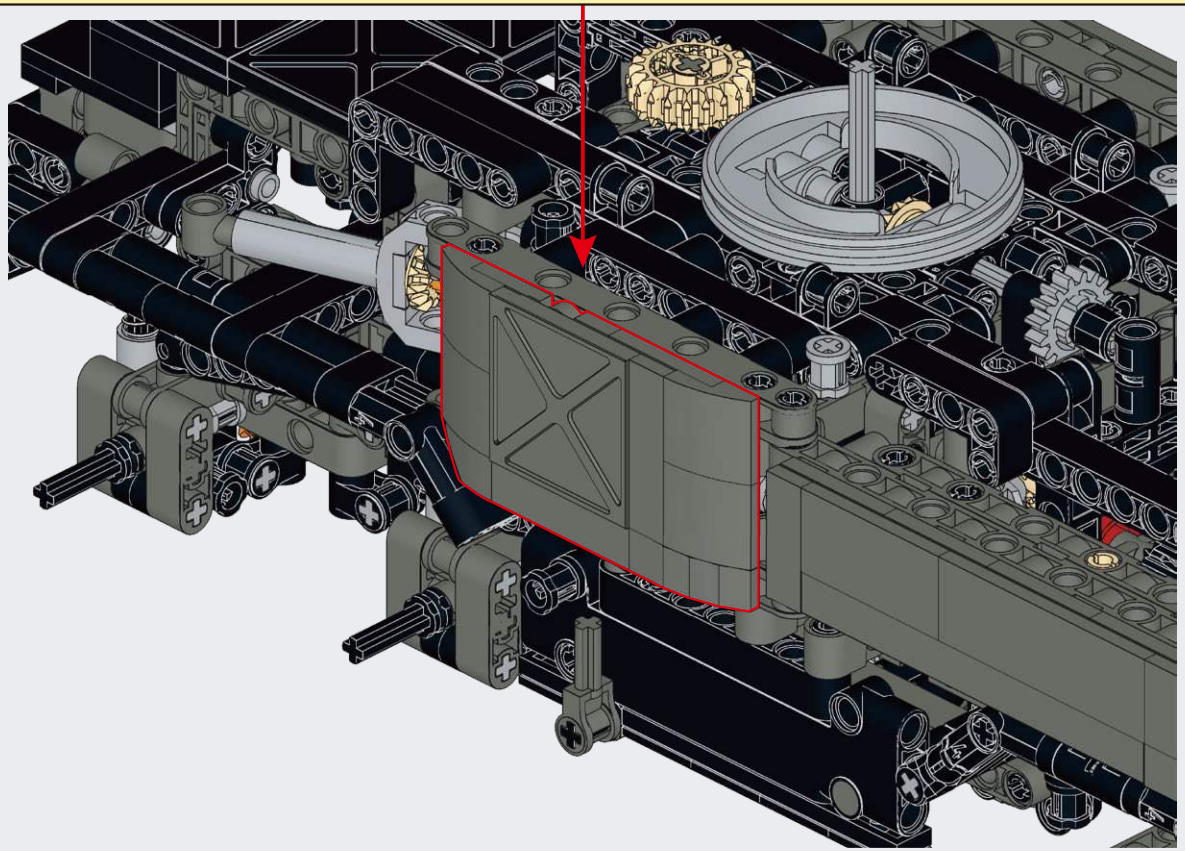

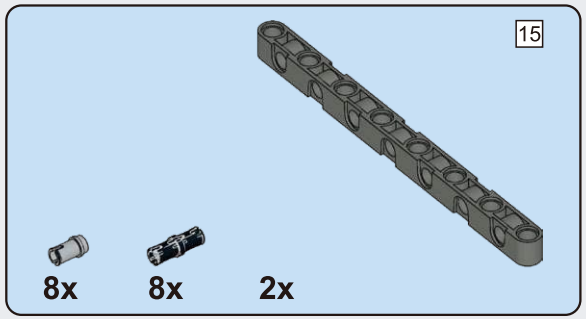

C95

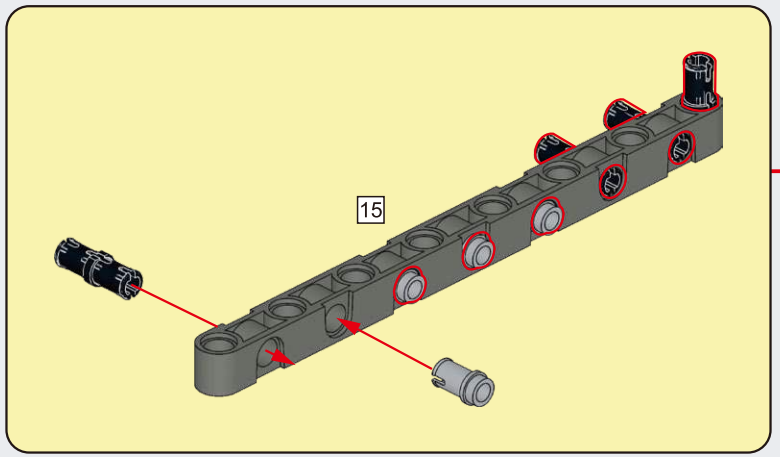

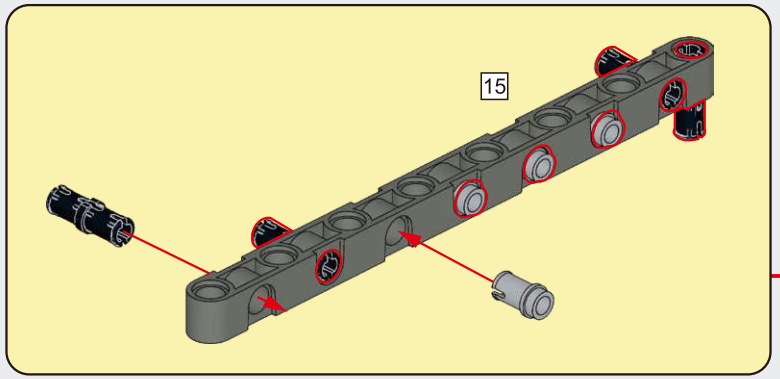

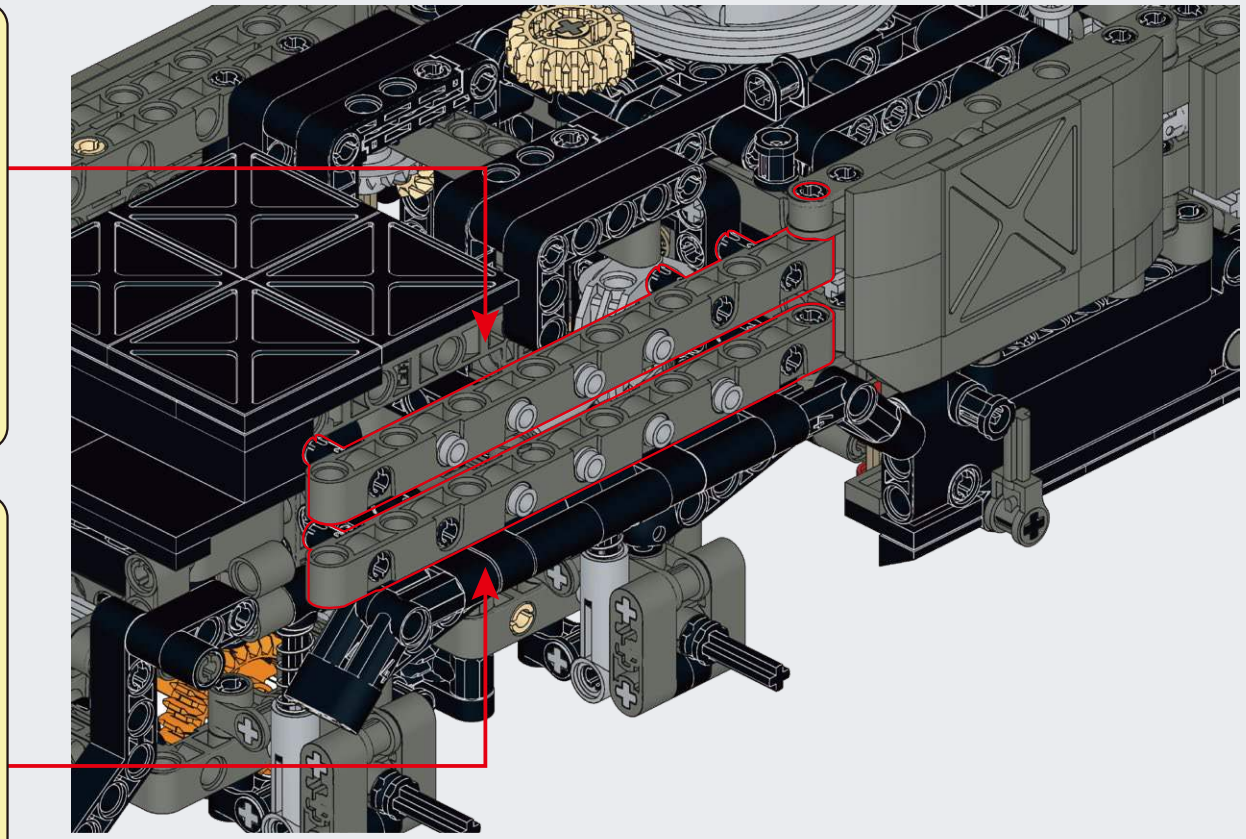

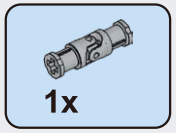

C96

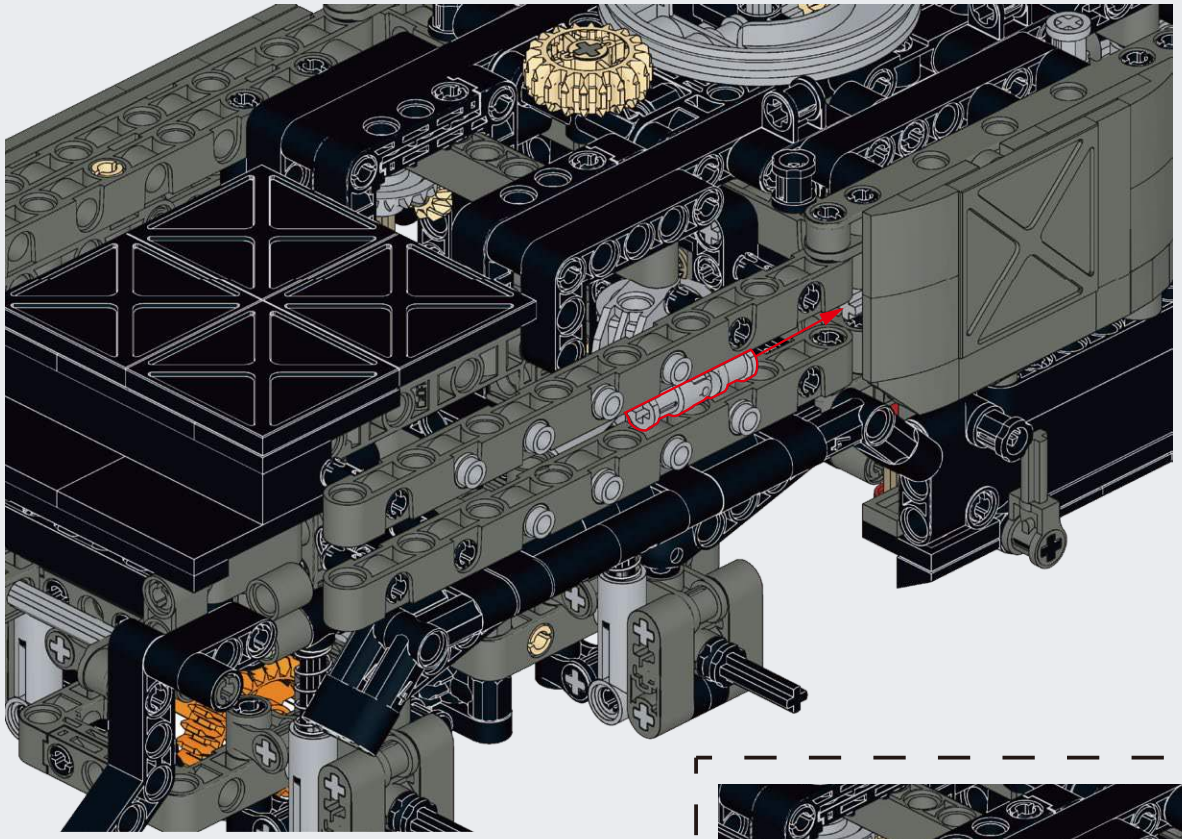

C97

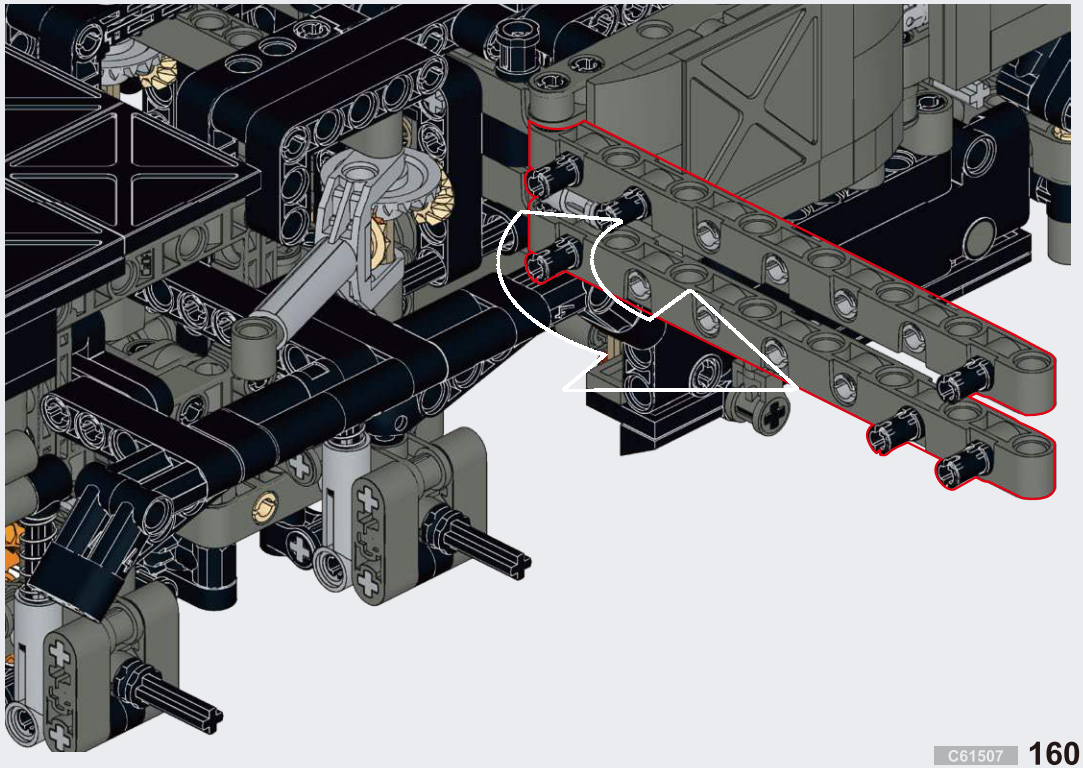

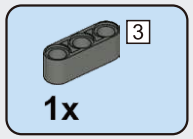

C98

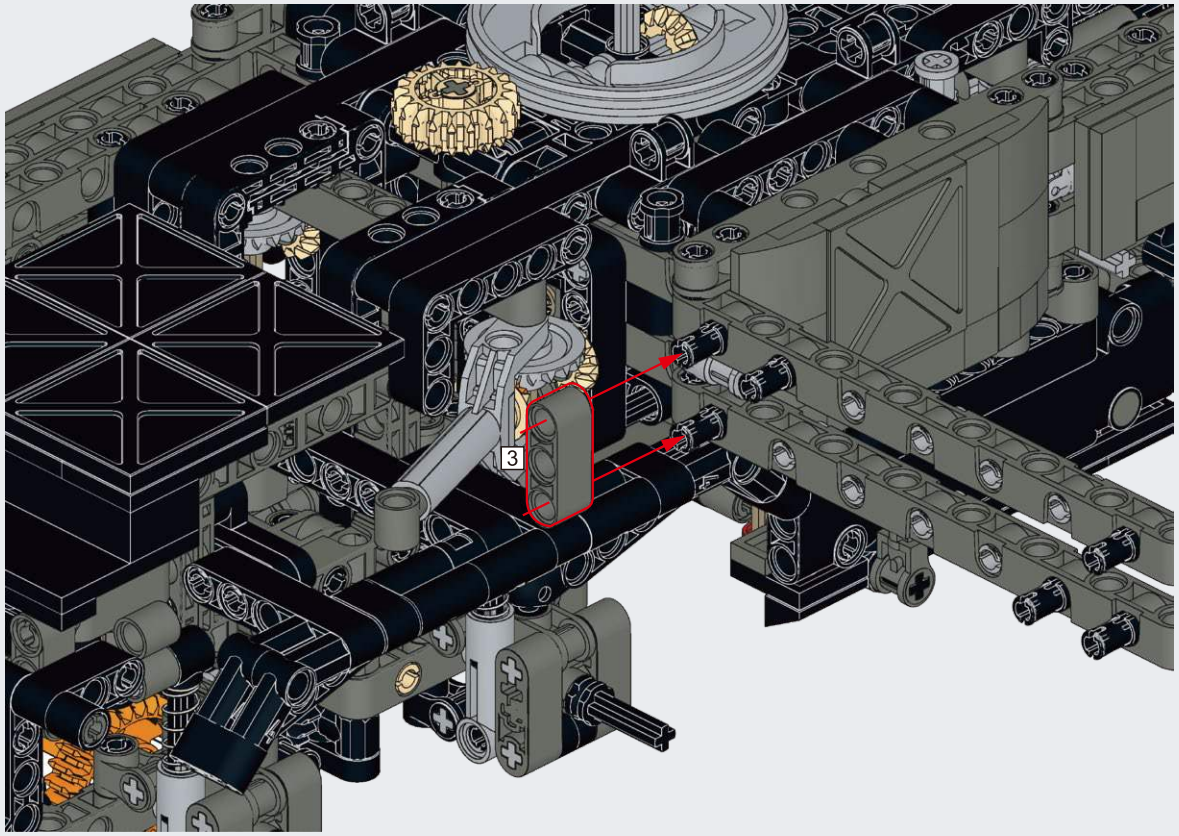

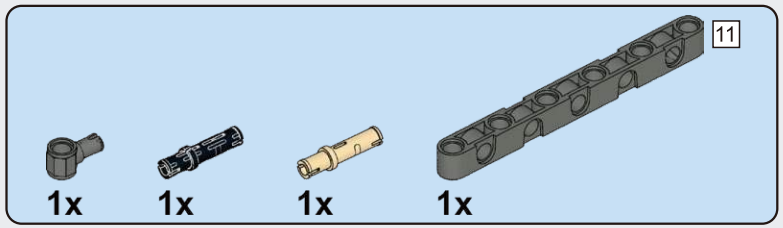

C99

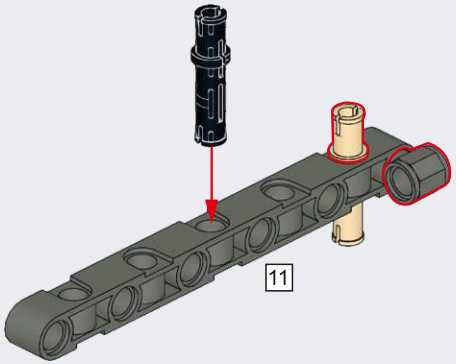

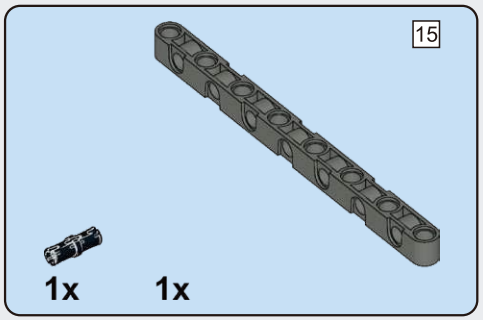

C100

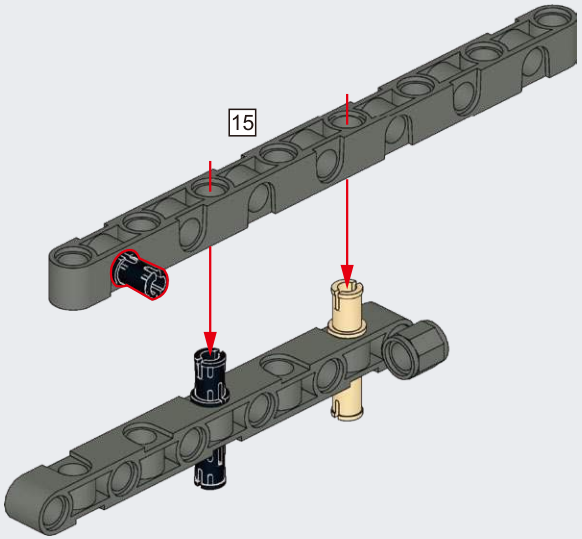

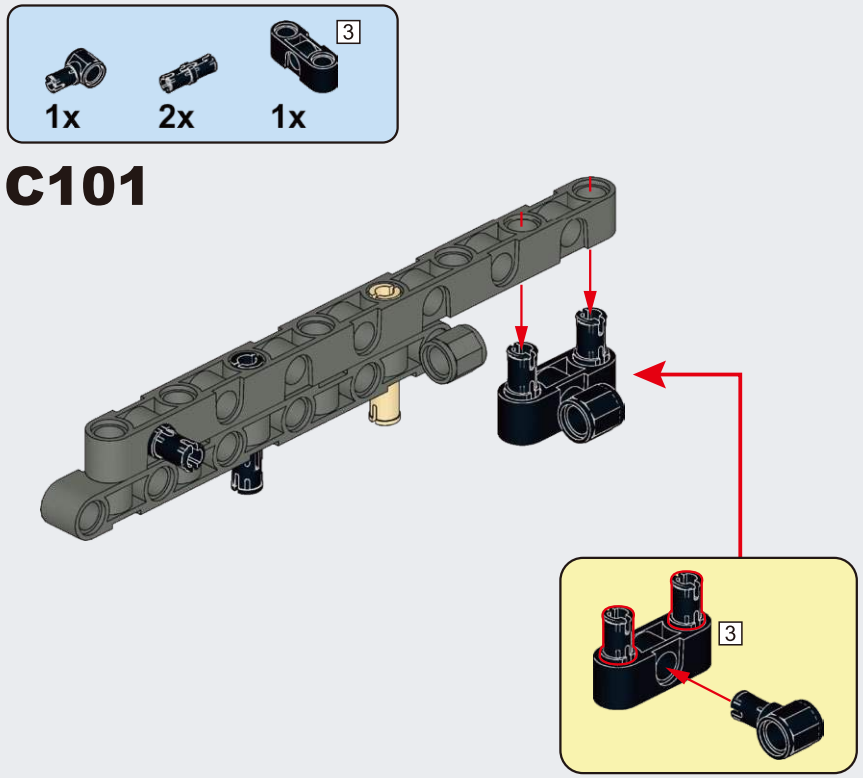
1x
2x
1x
3
C101
3

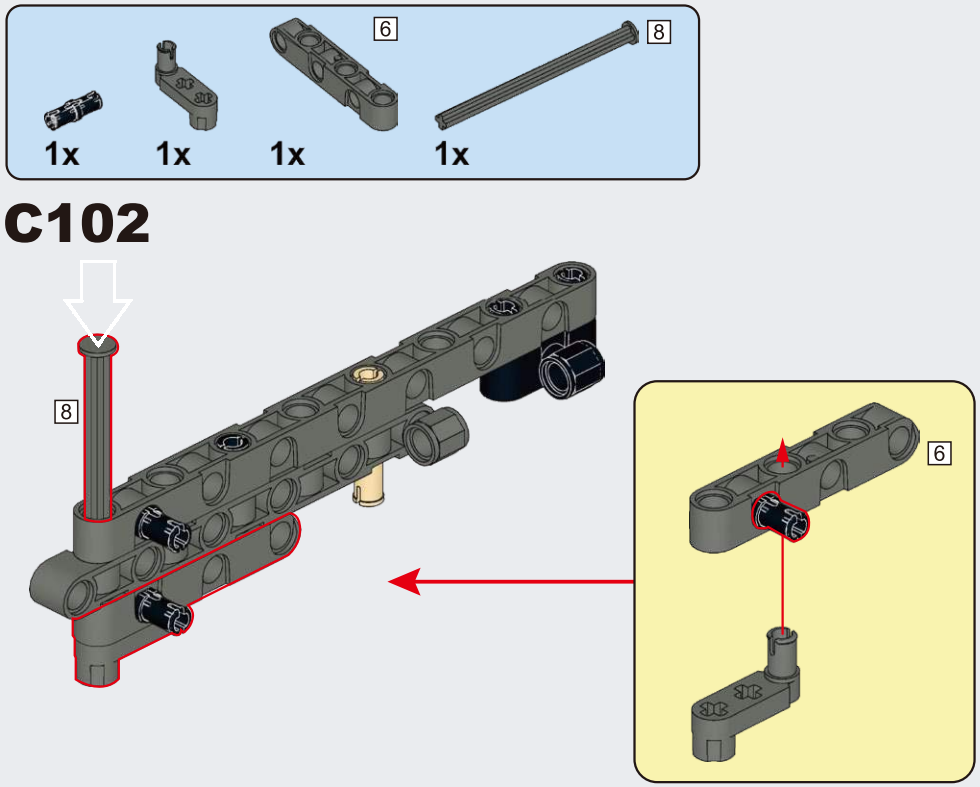
1x
1x
1x
1x
6
8
C102
8
6

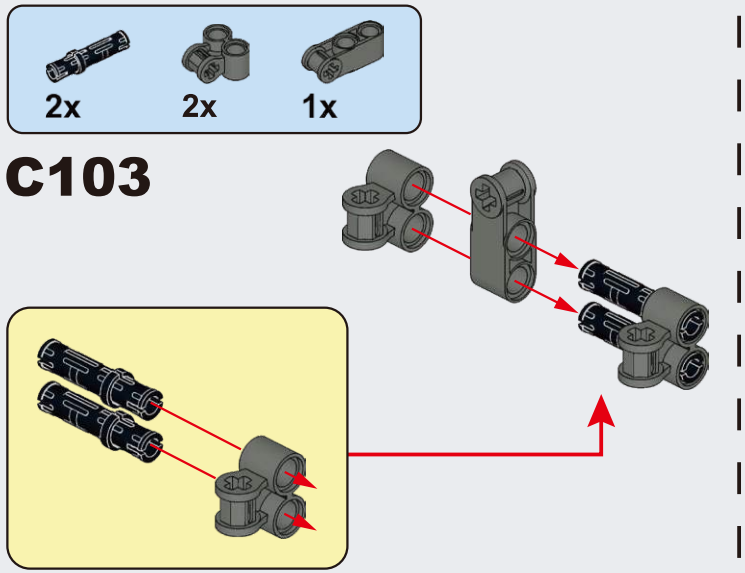
2x
2x
1x
C103

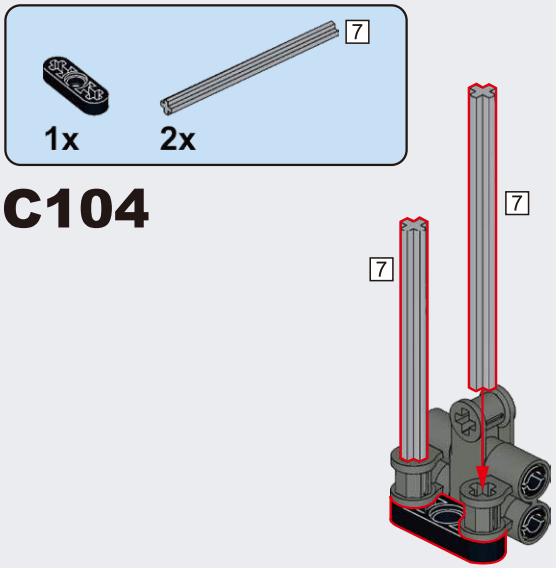
1x
2x
7
C104
7
7

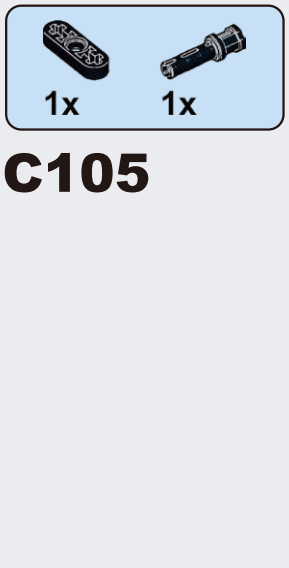
1x
1x
C105

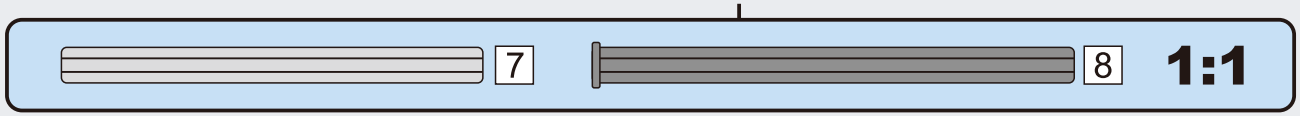
7
8
1:1

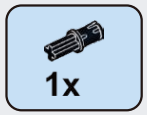

C106

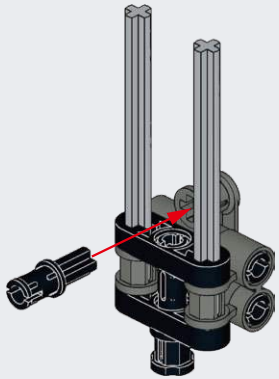

C107

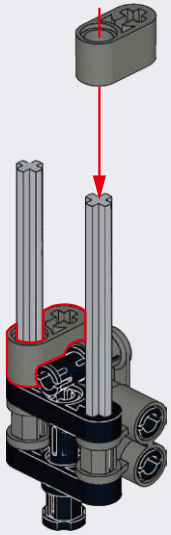

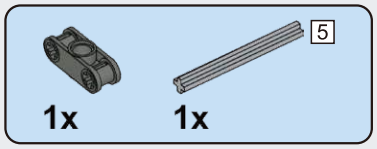

C108

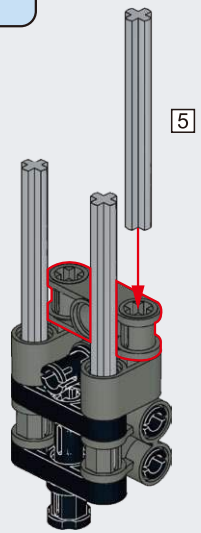

C109

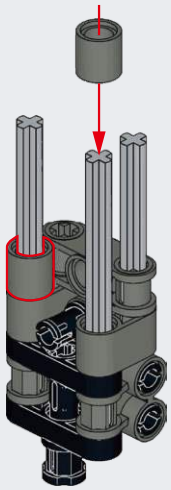

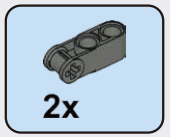

C110

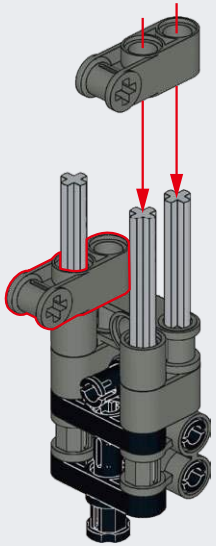

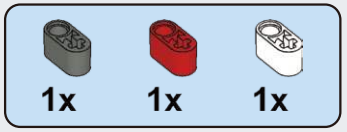

C111

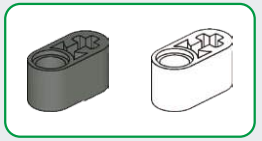

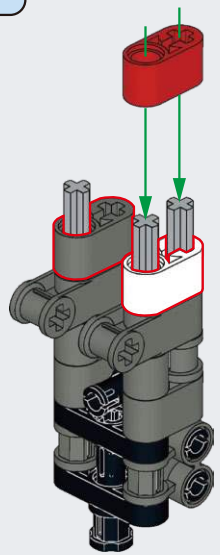

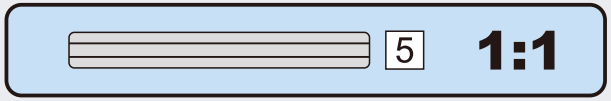

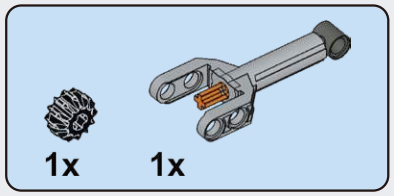

C112

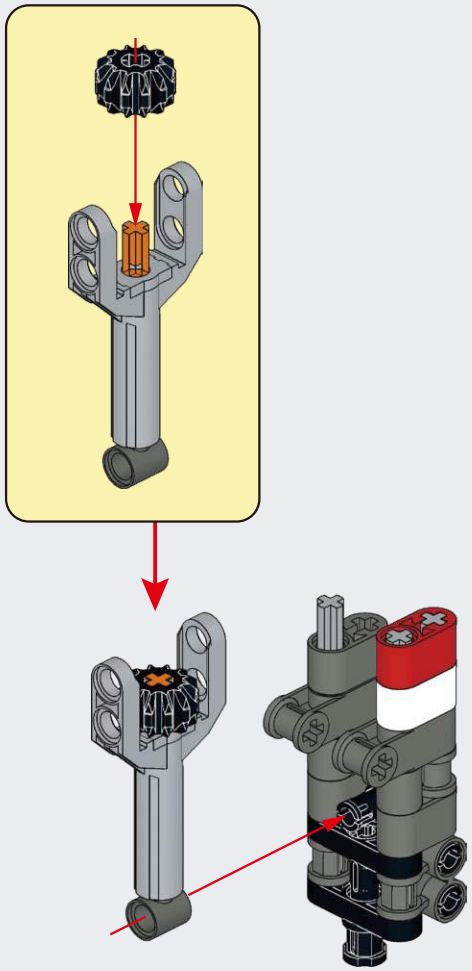

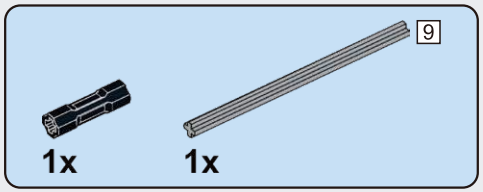

C113

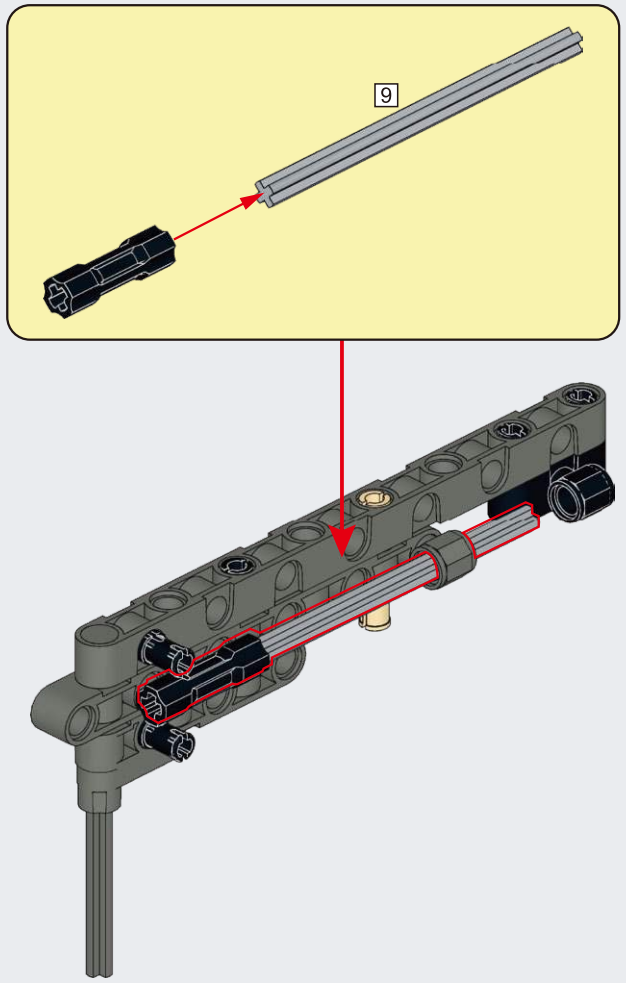

C114

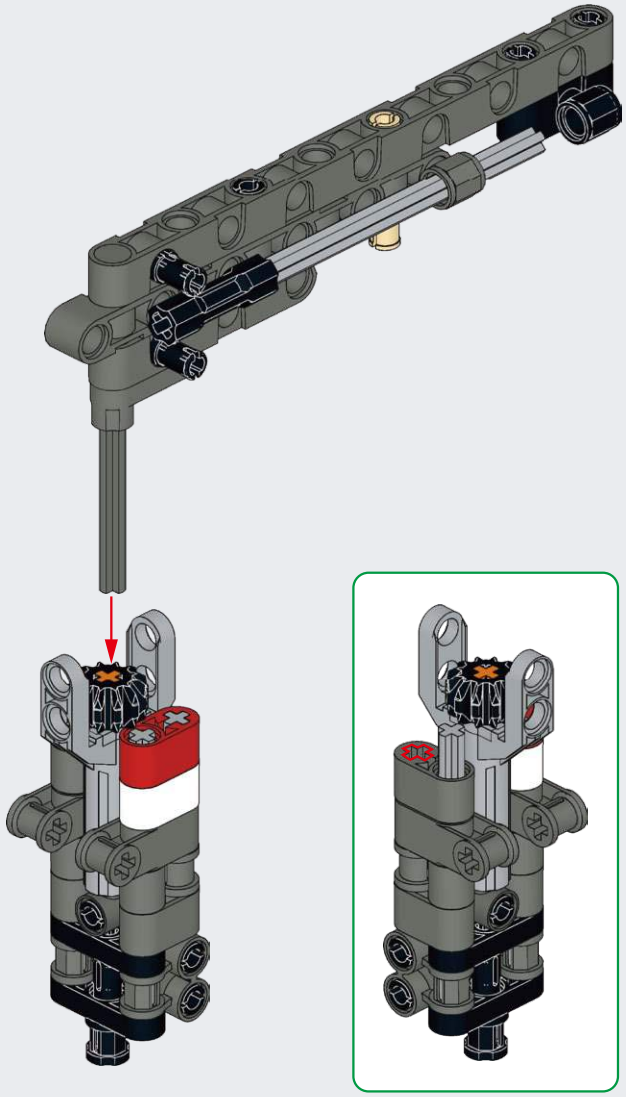

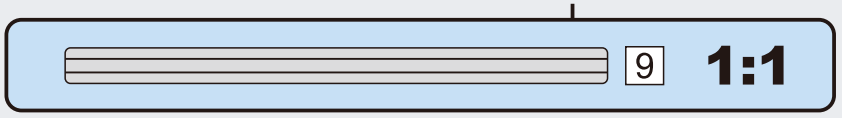

C115

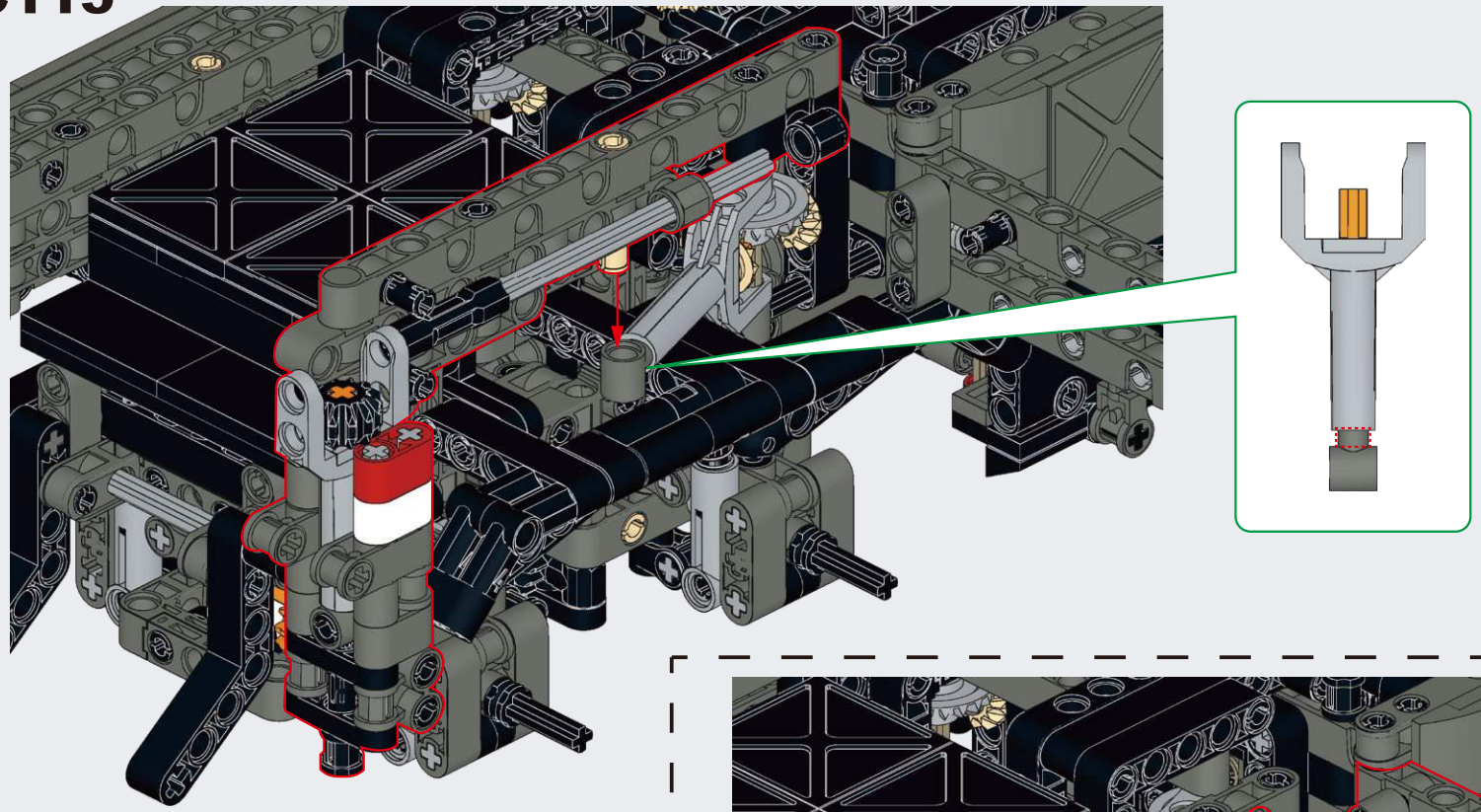

C116

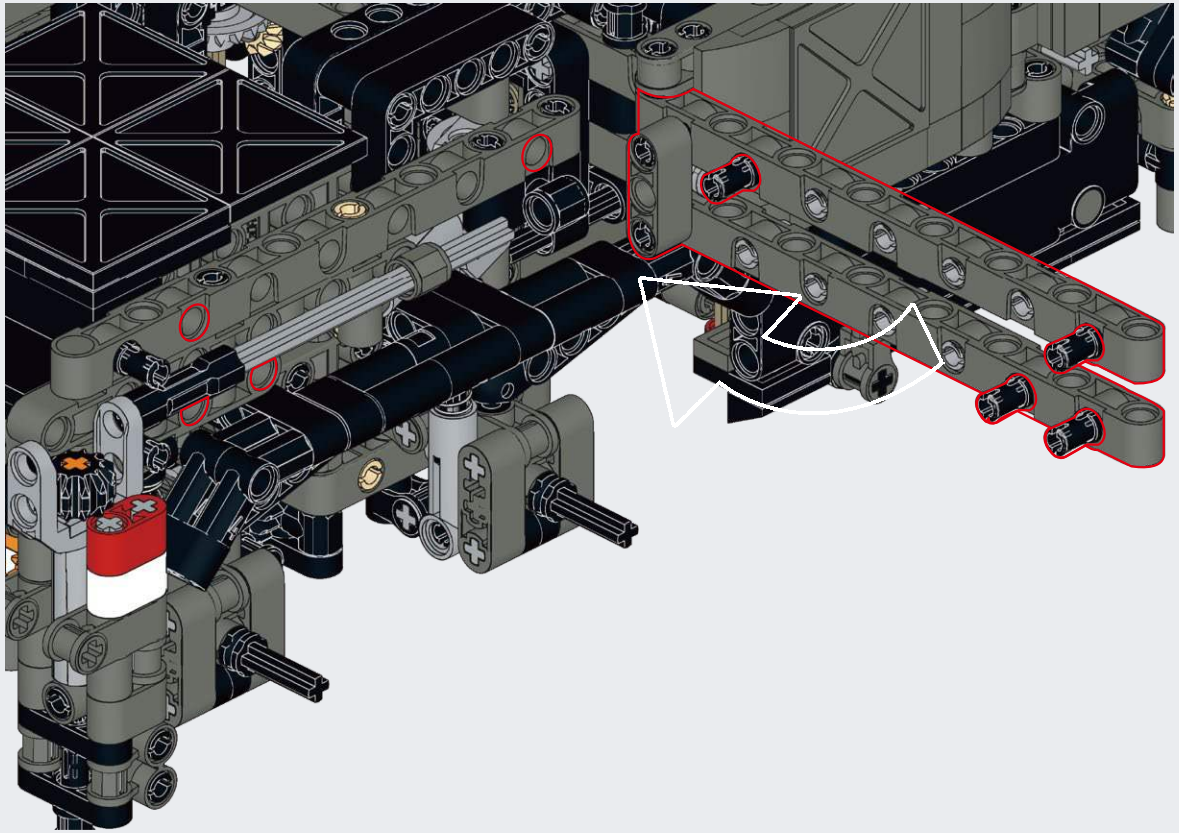

C117

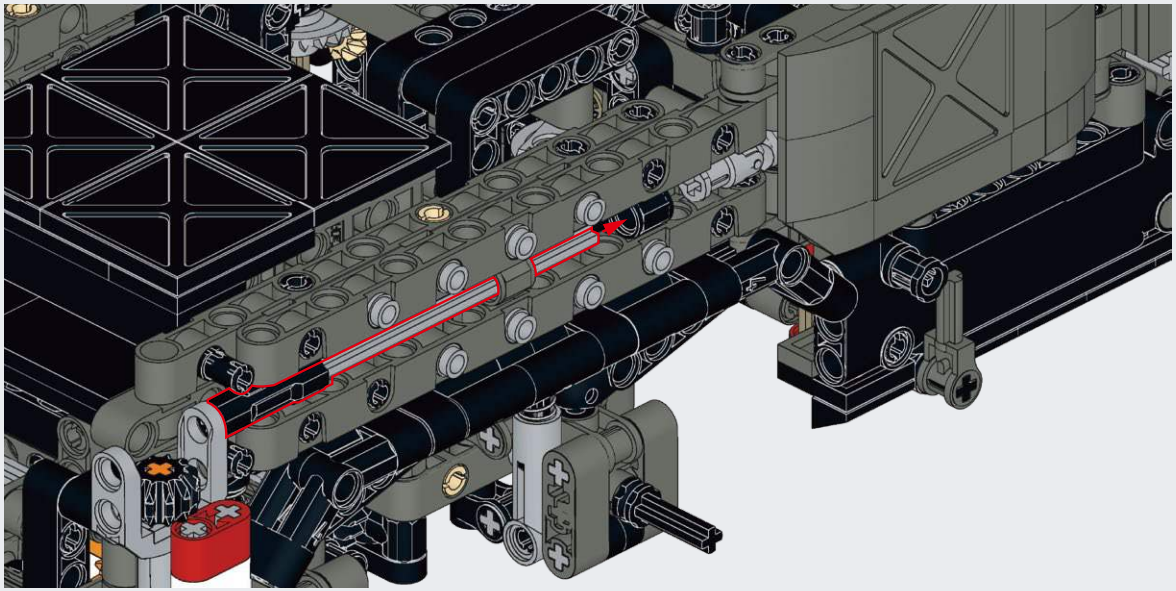

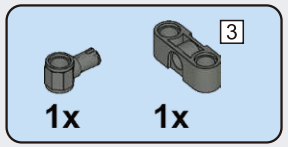

C118

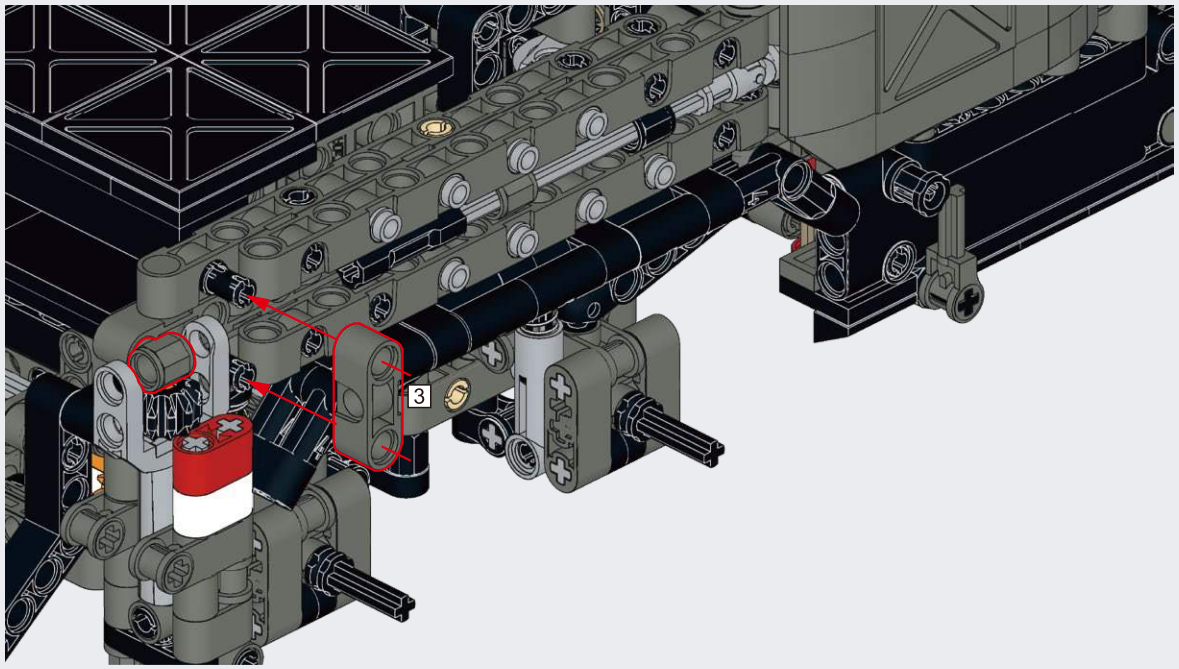

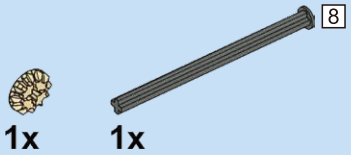

C119

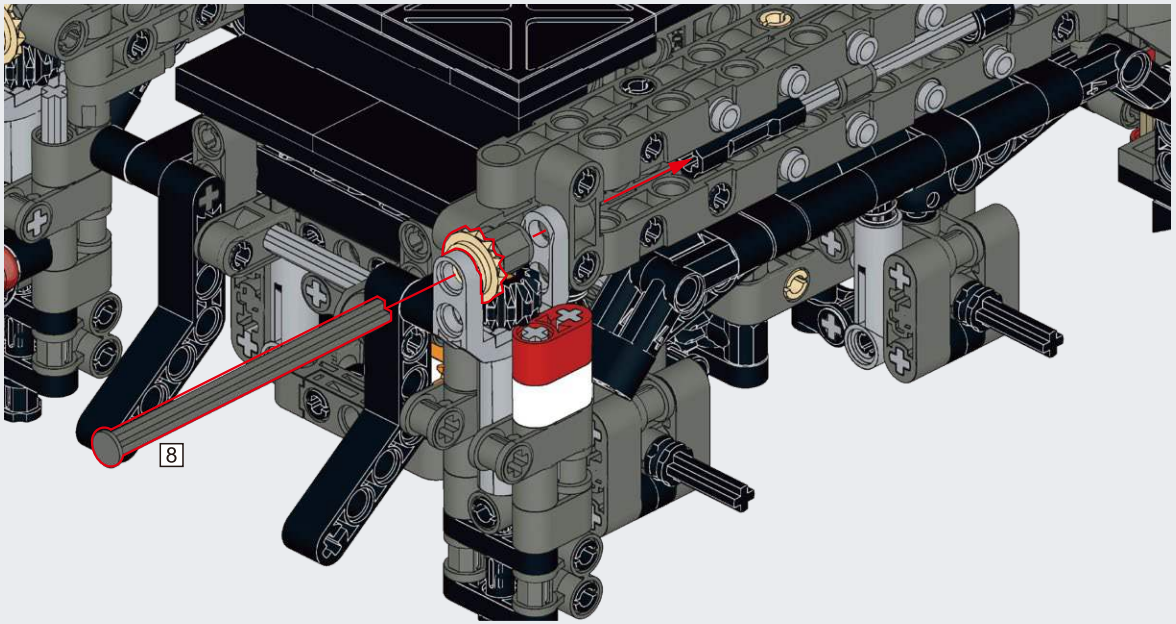

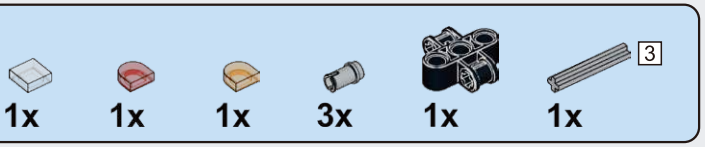

C120

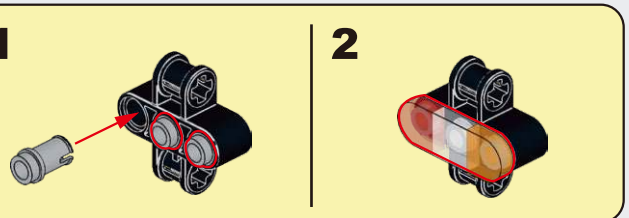

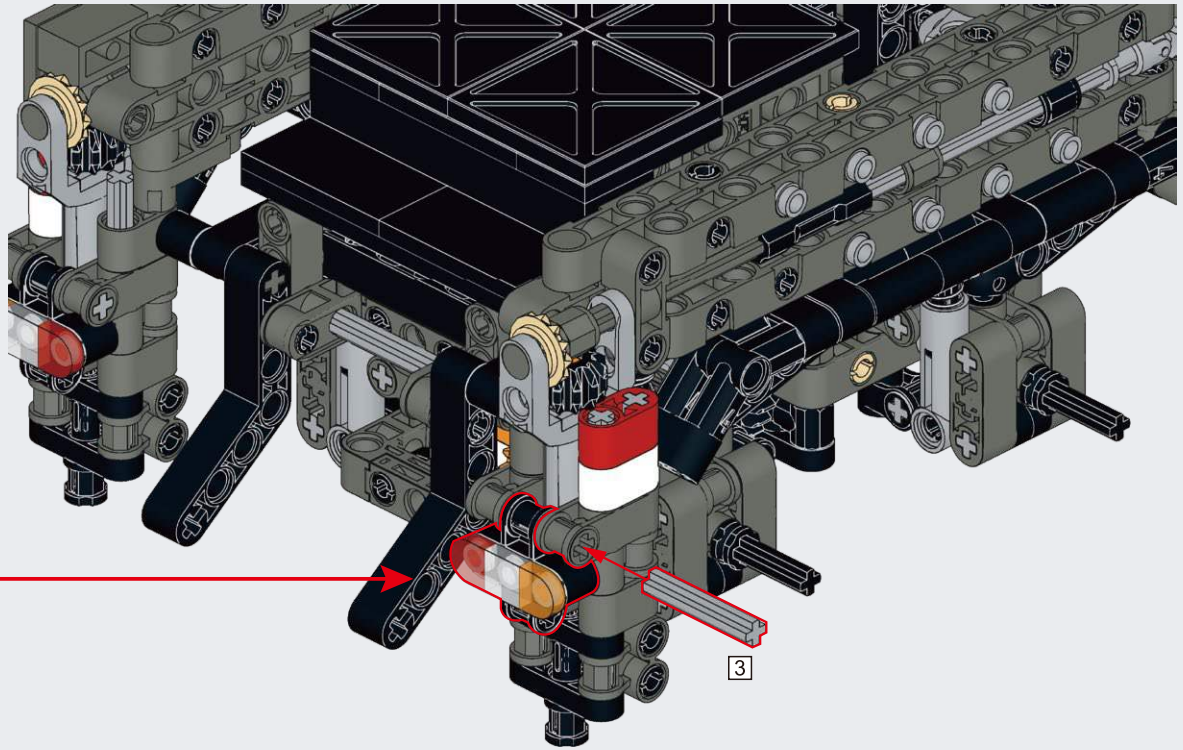

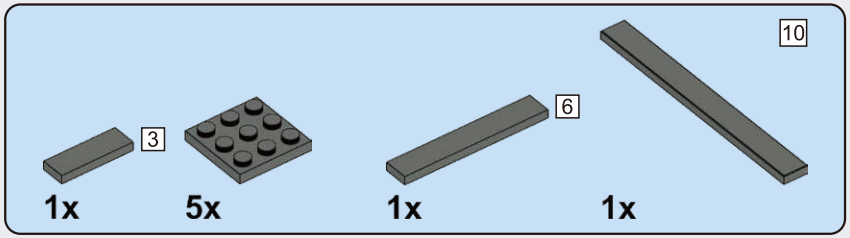

C121

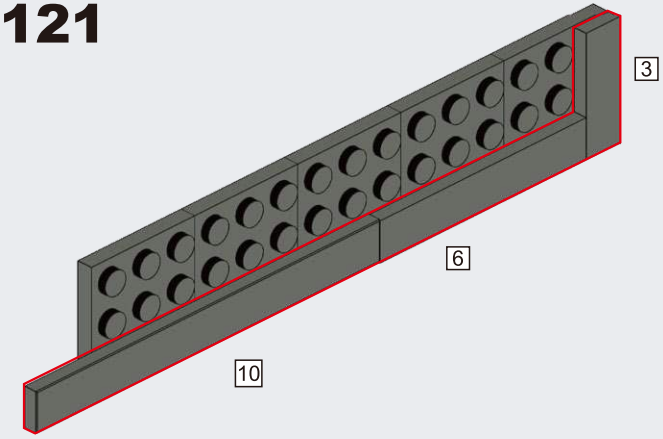

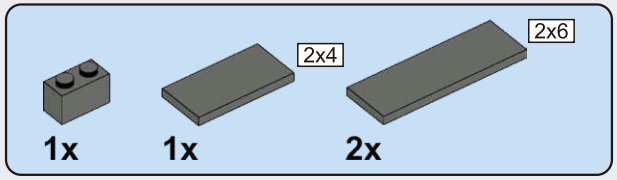

C122

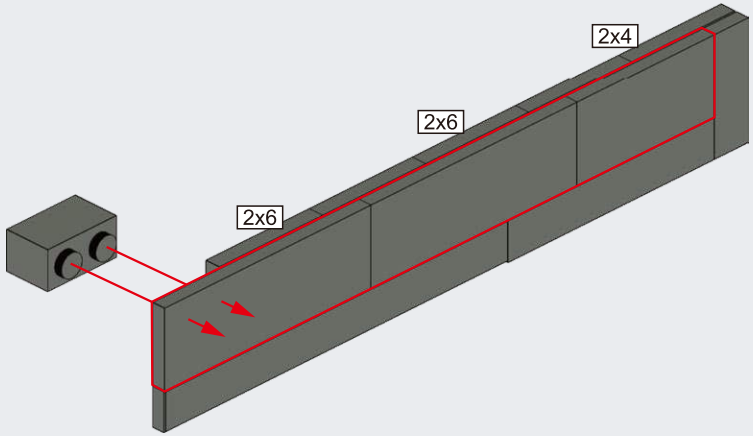

C123

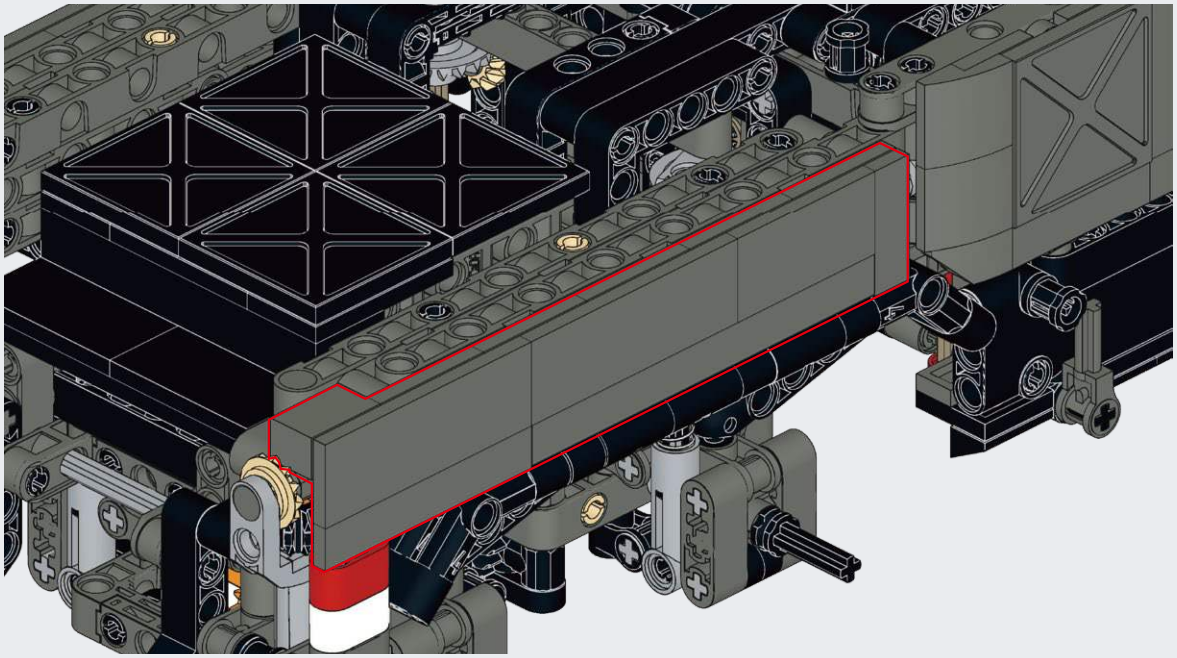

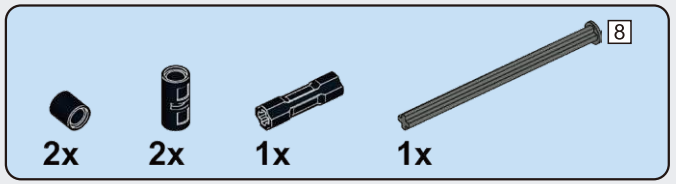

C124

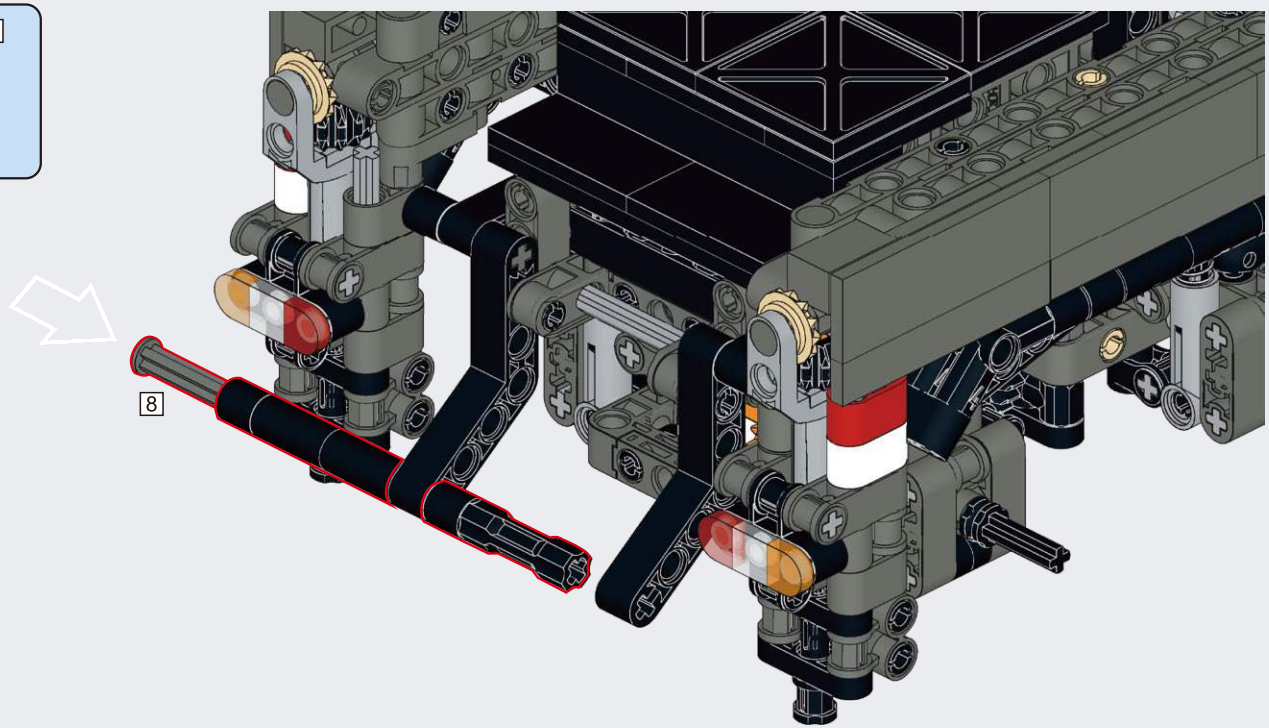

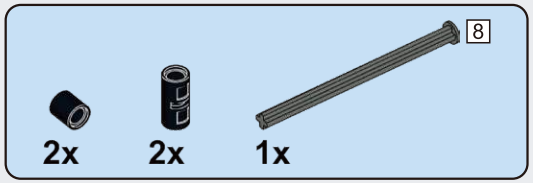

C125

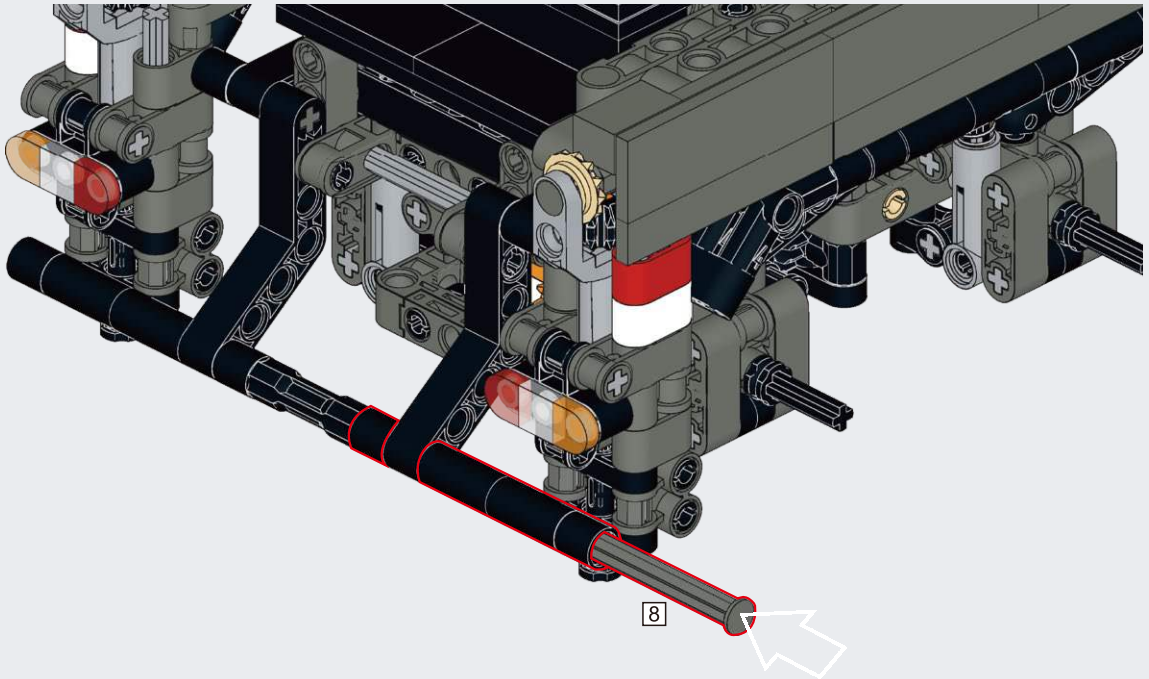

D

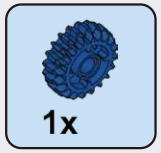

D1

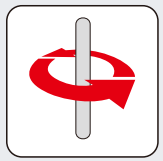

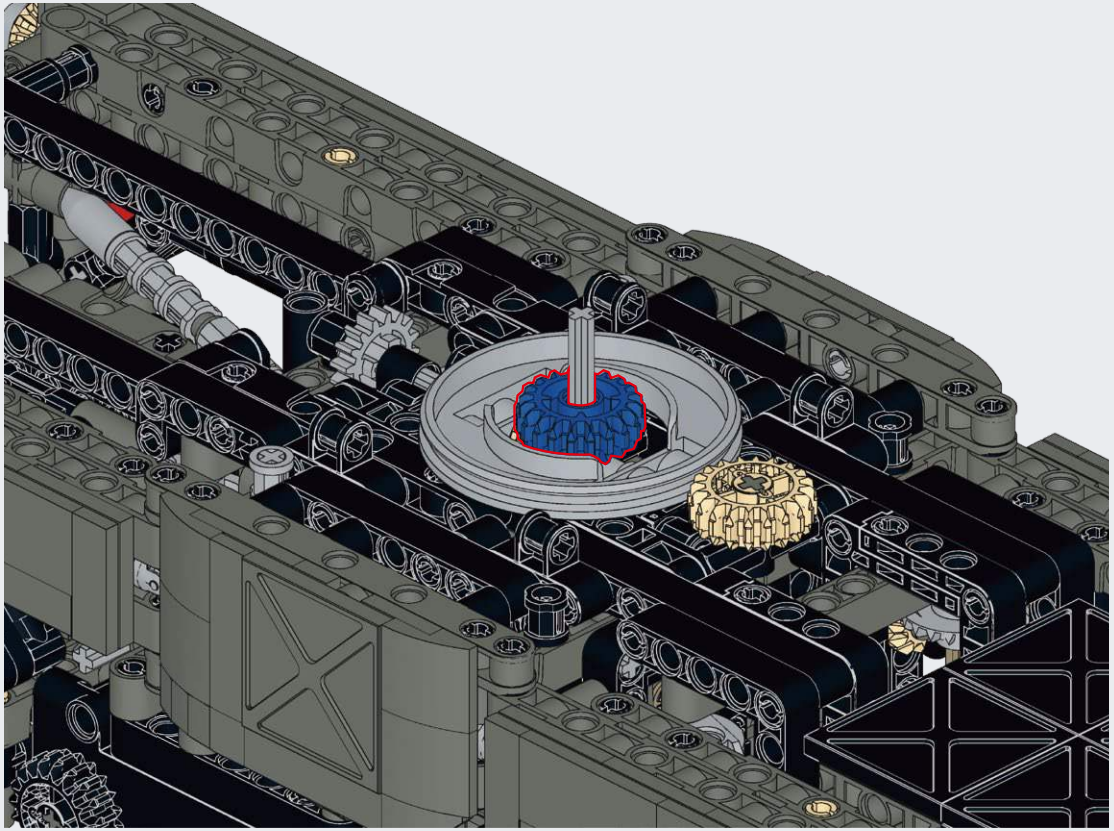

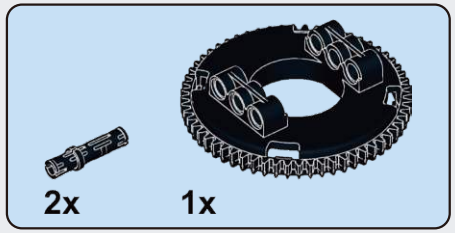

D2

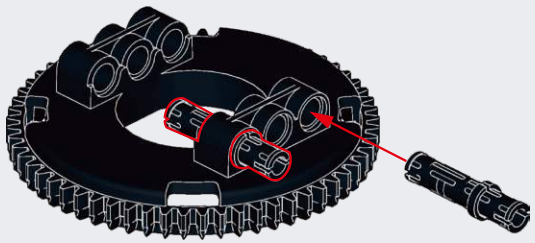

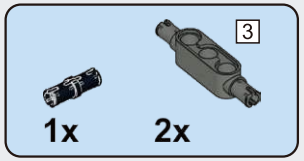

D3

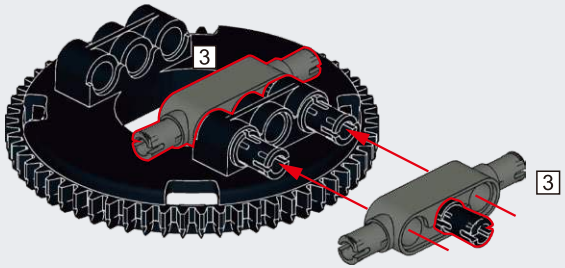

D4

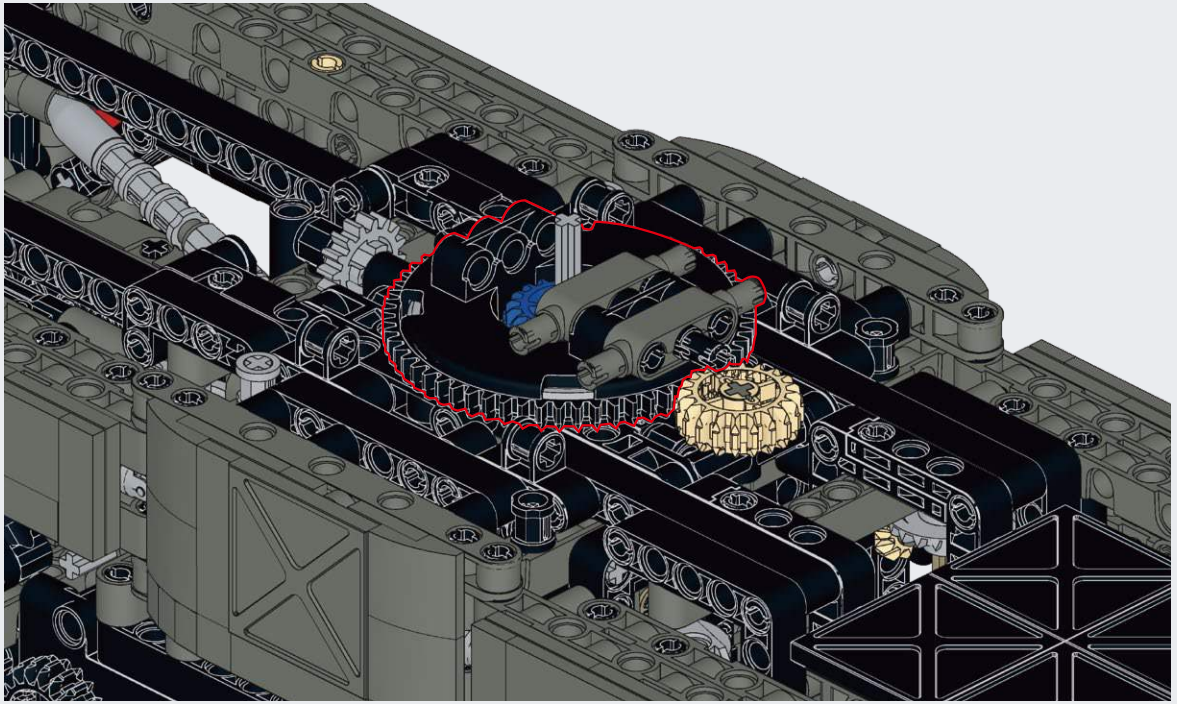

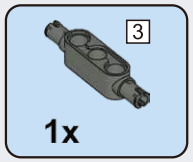

D5

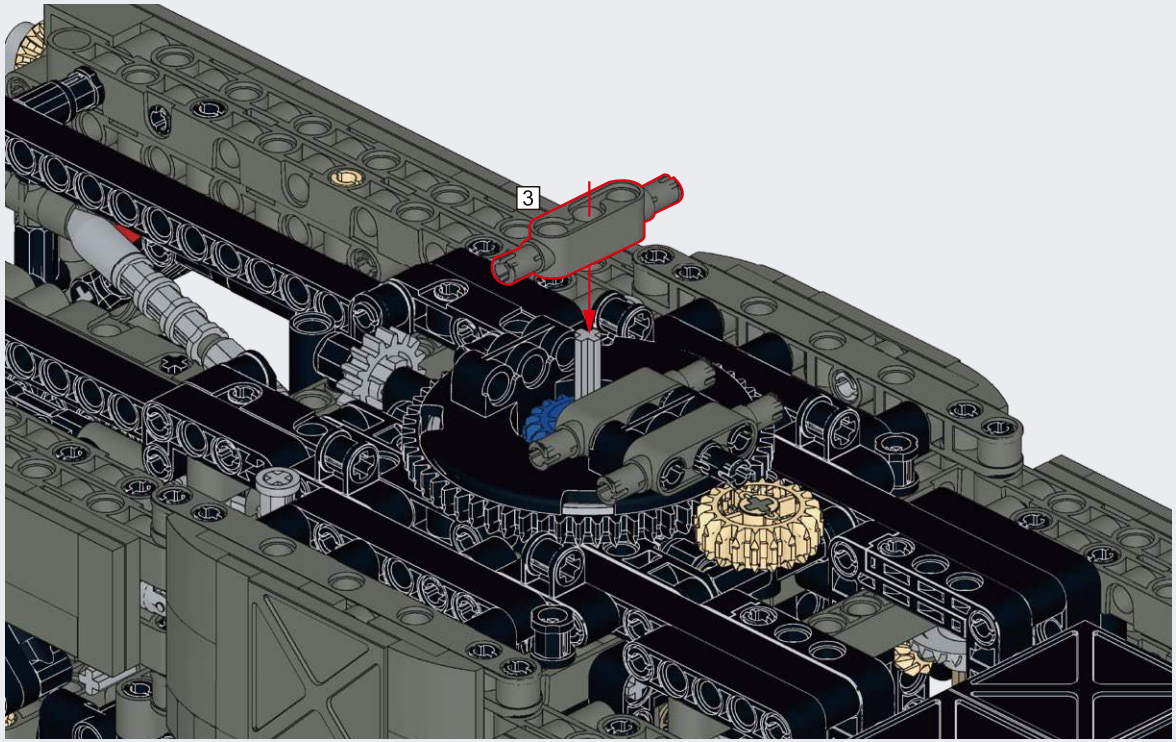

D6

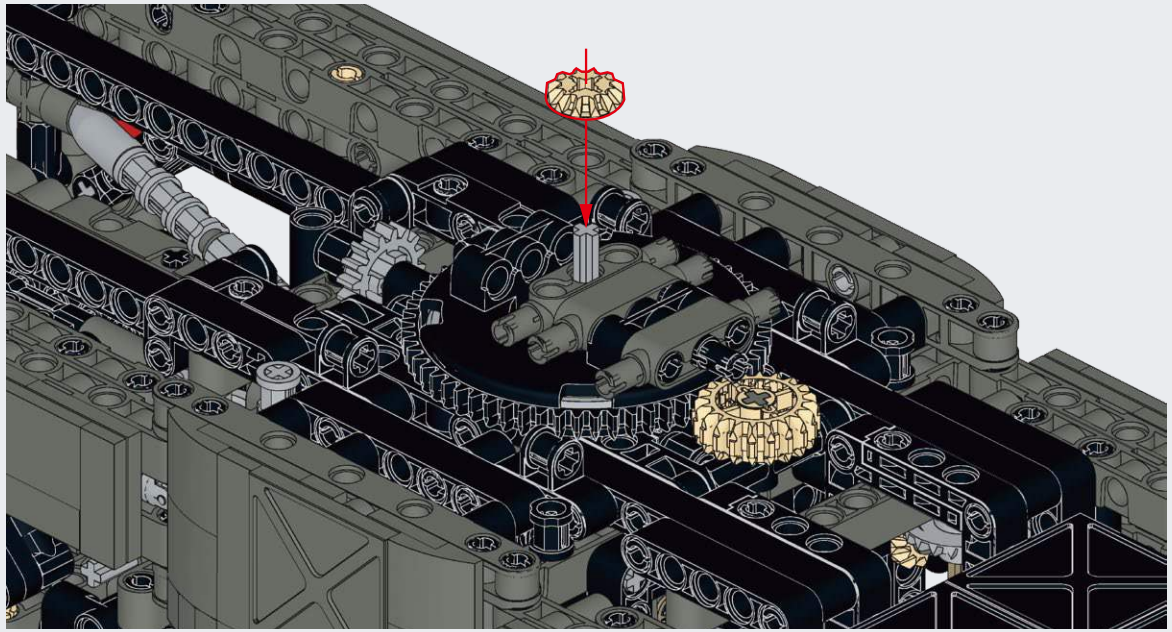

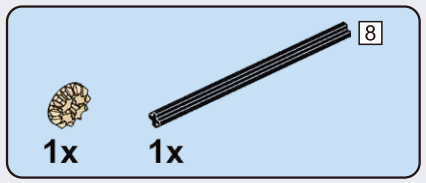

D7

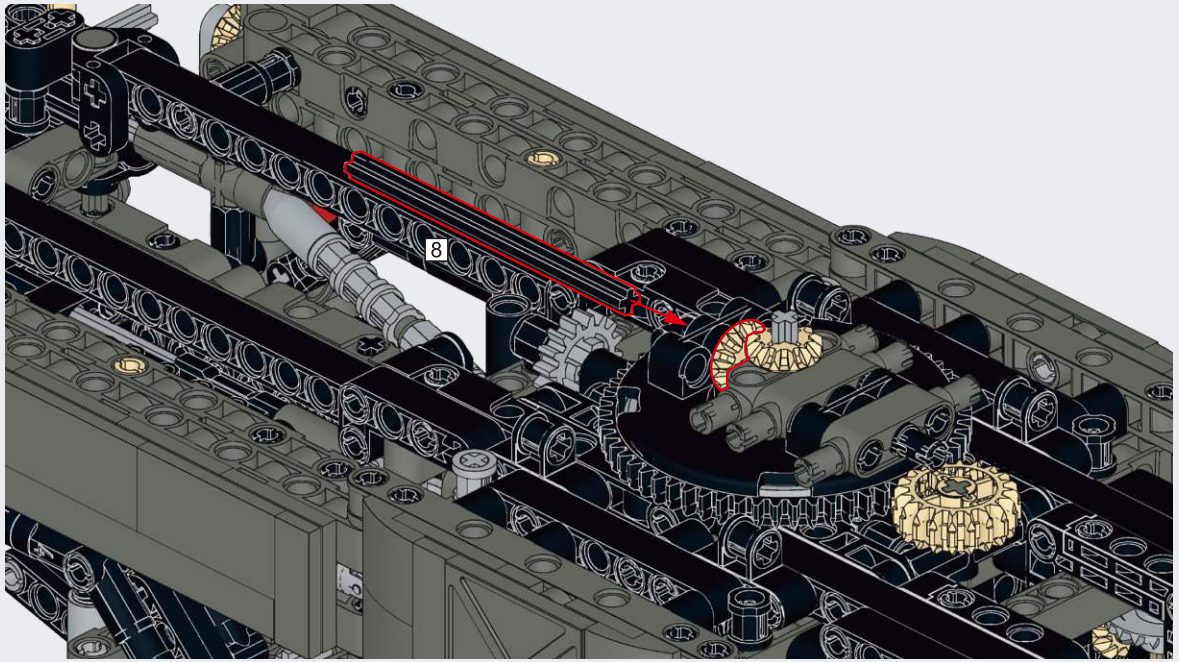

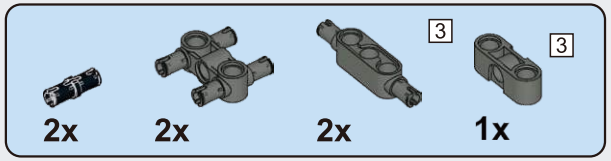

D8

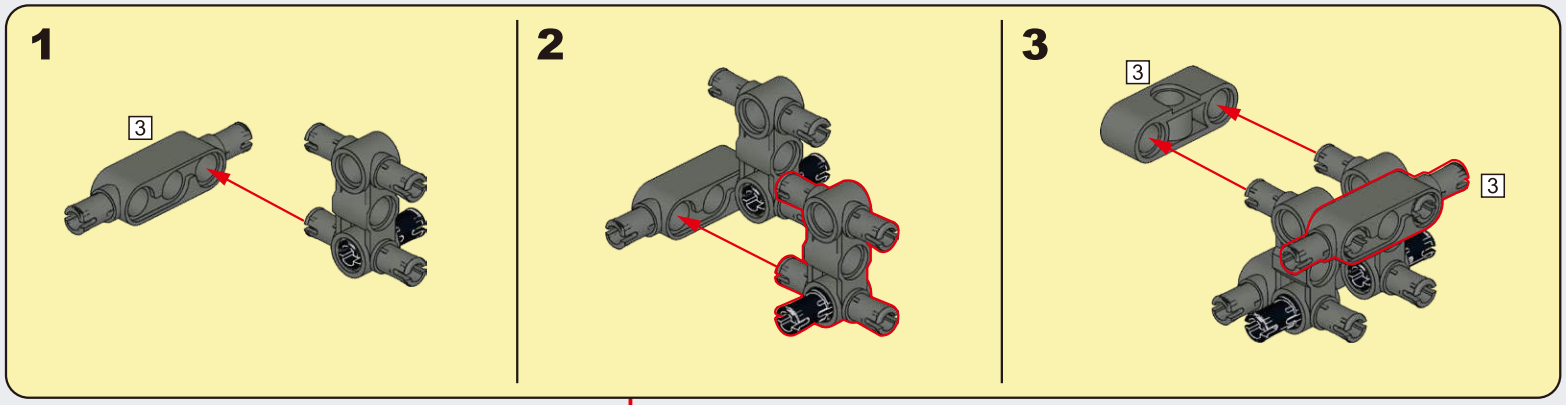

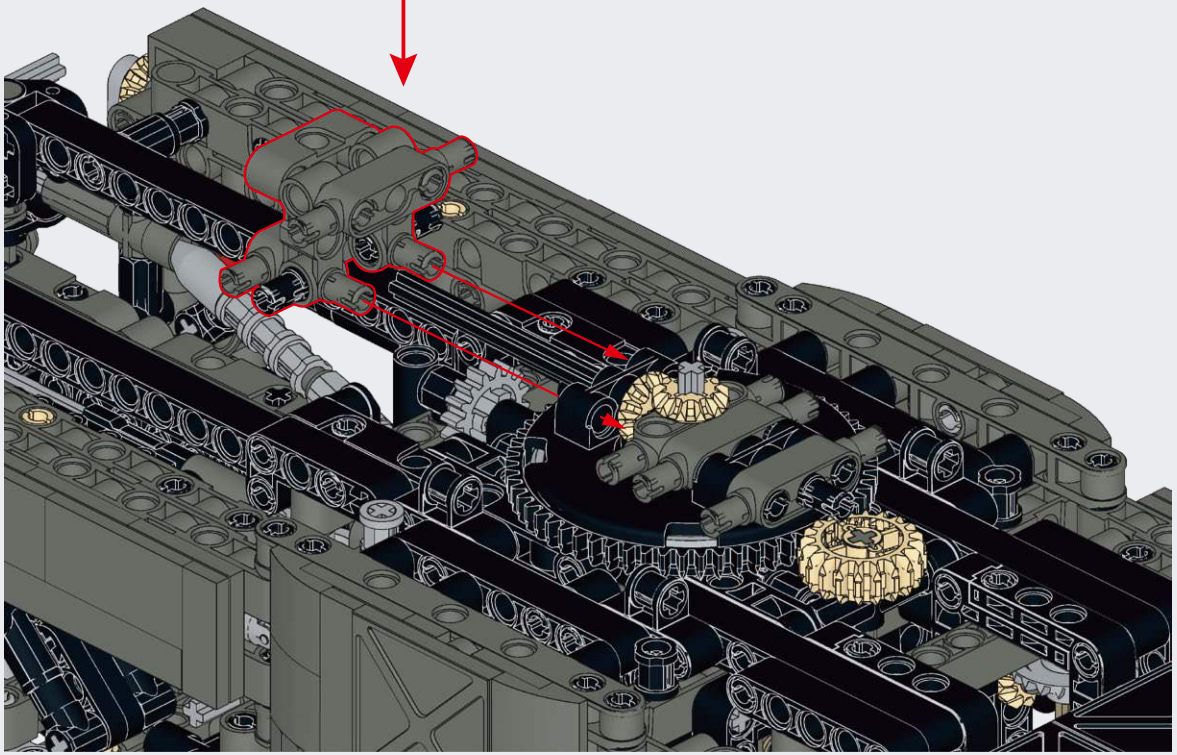

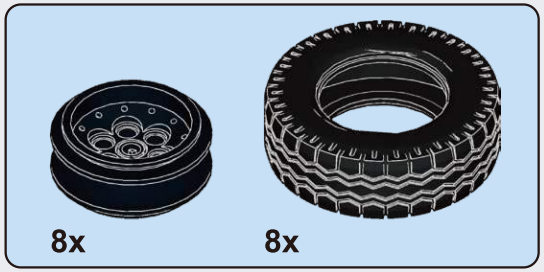

D9

D10

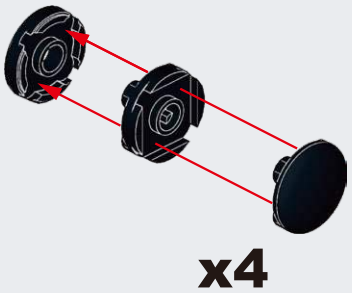

D11

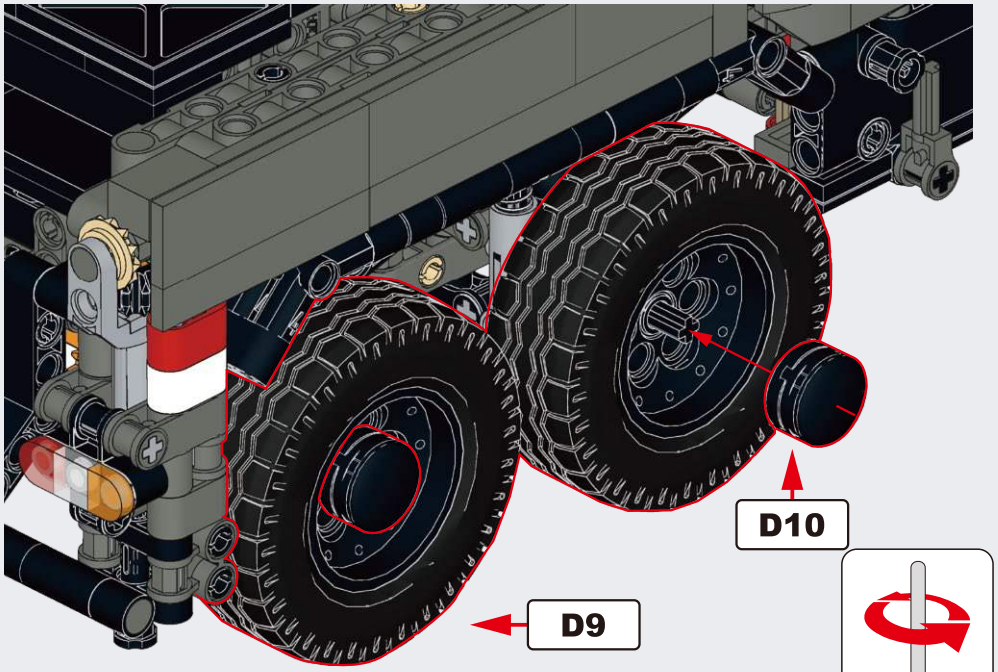

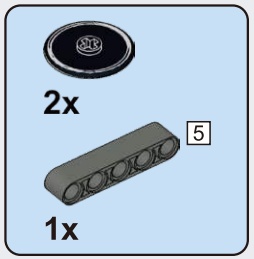

D12

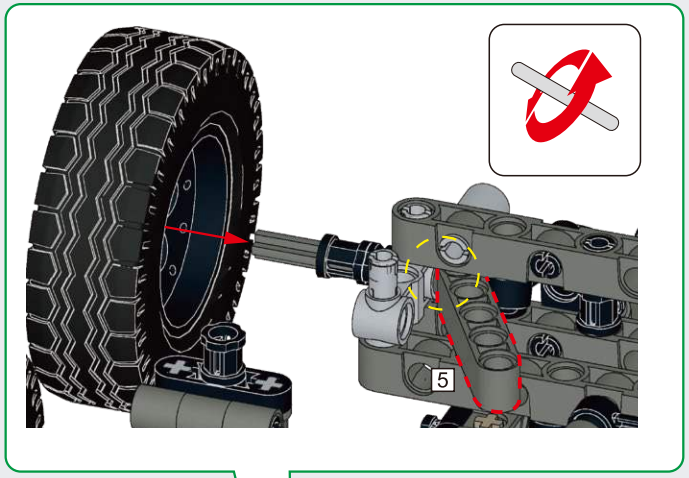

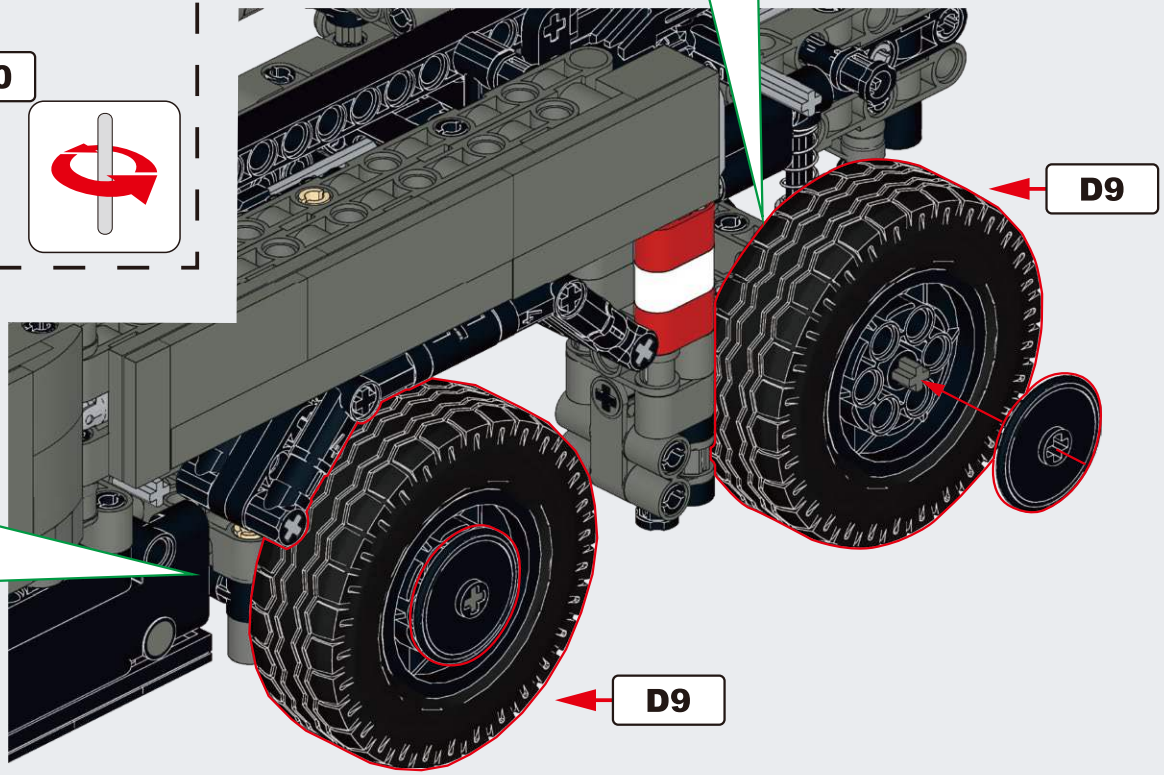

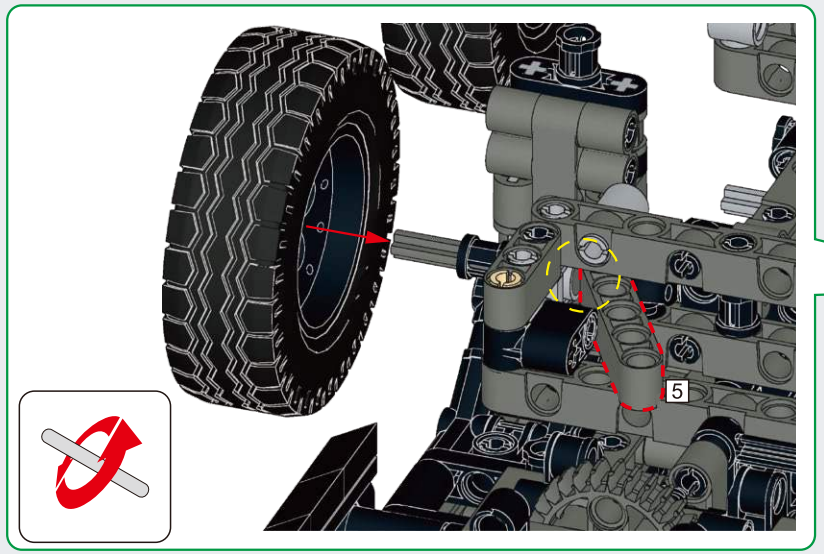

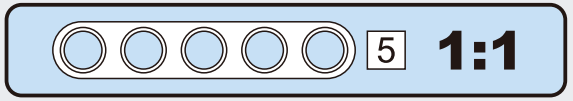

D13

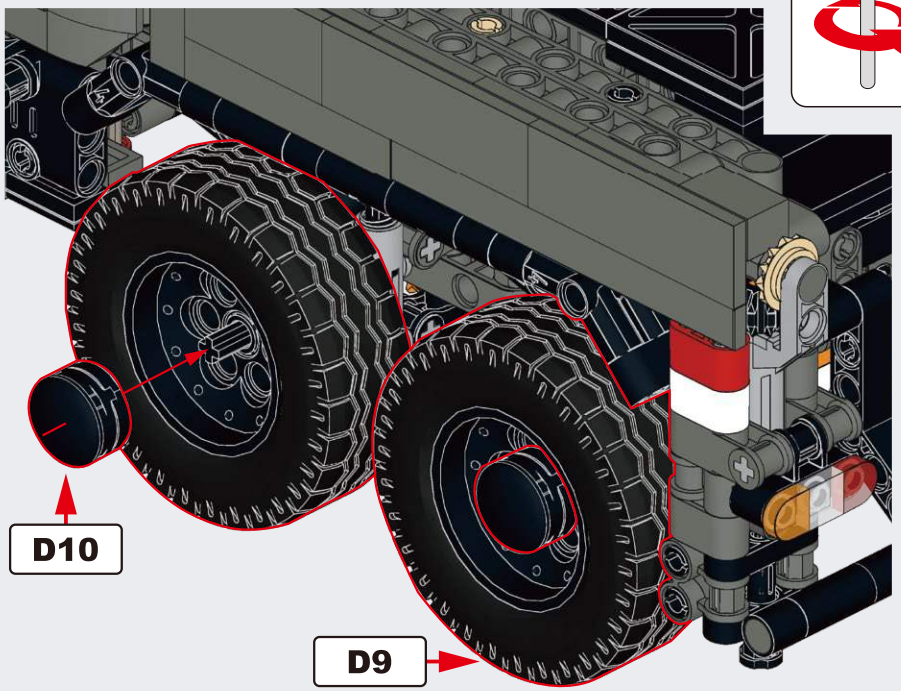

D14

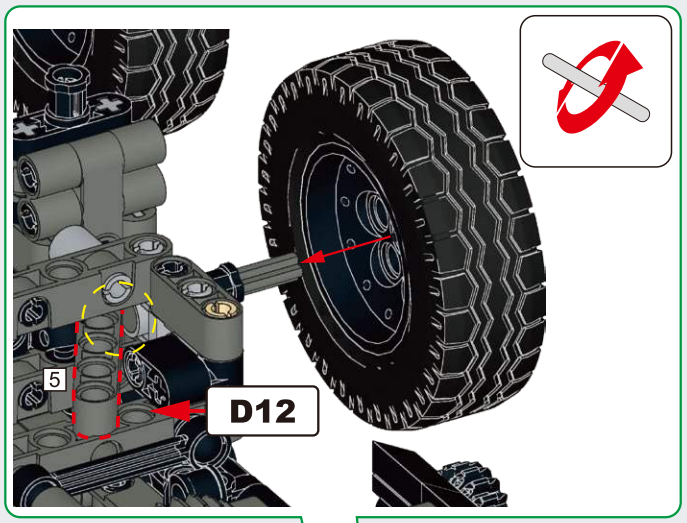

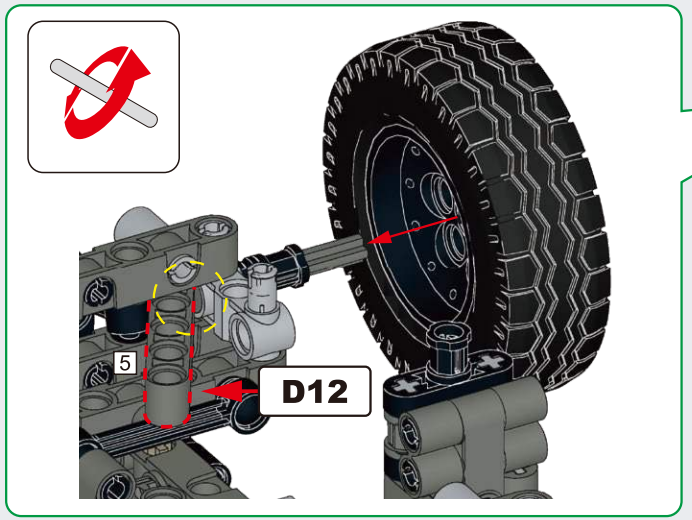

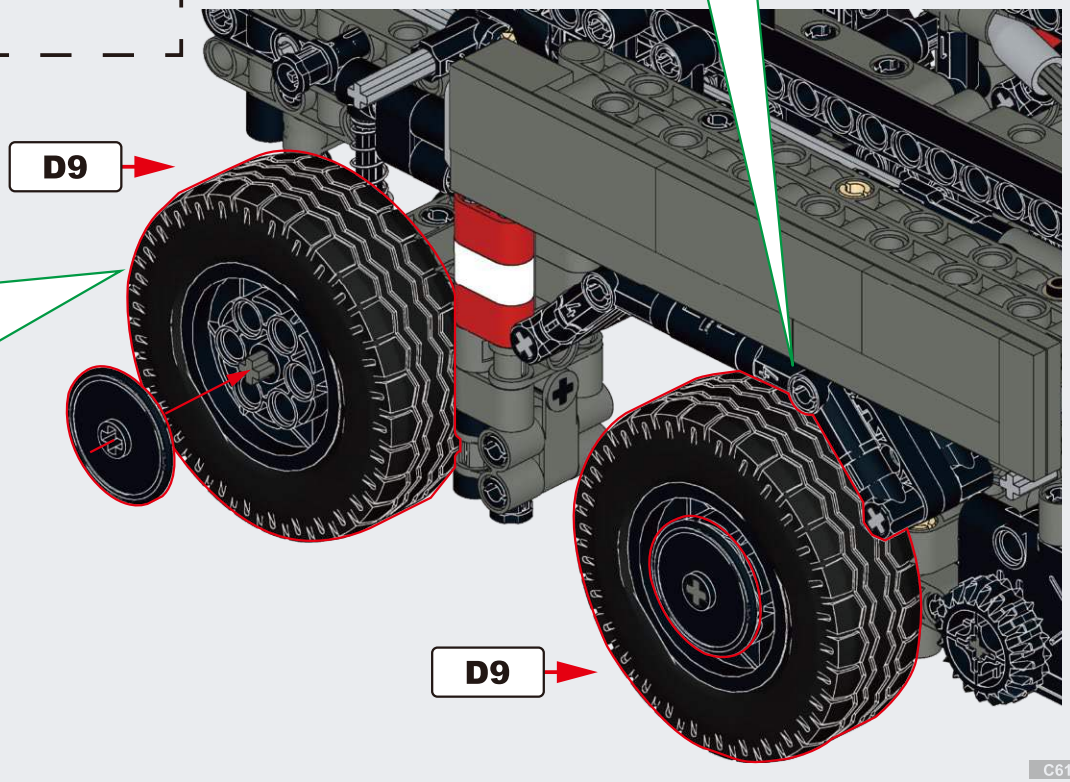

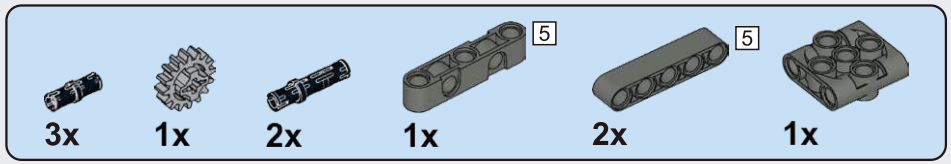

D15

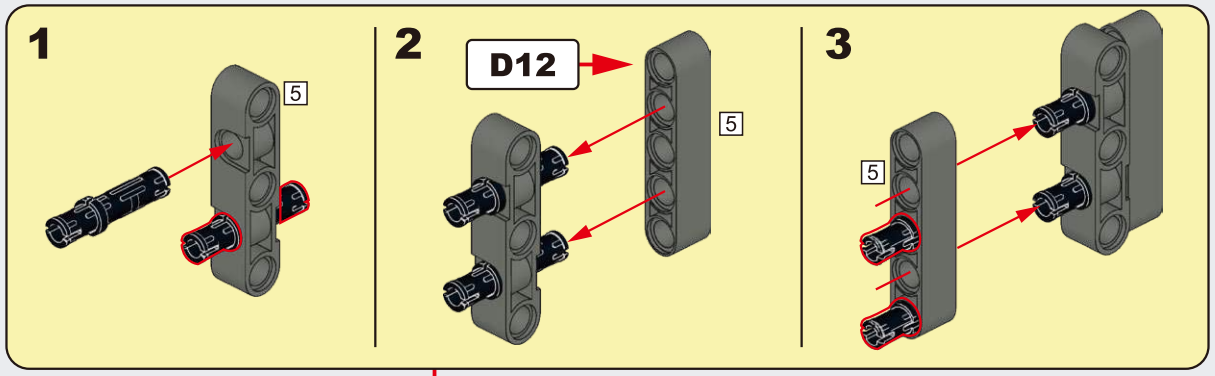

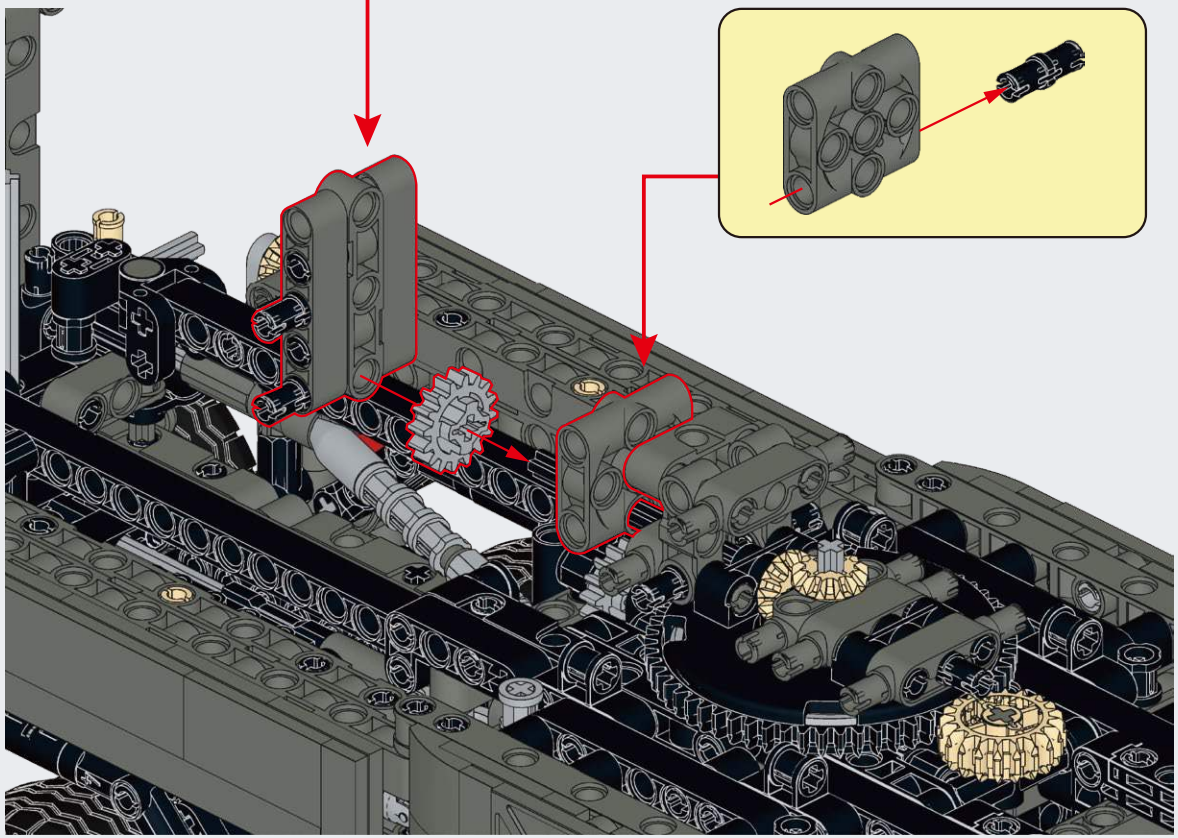

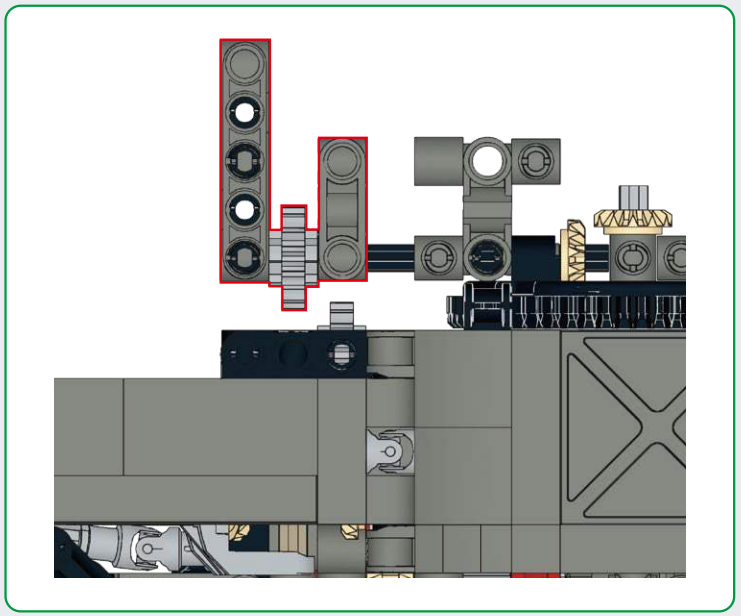

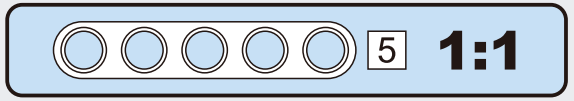

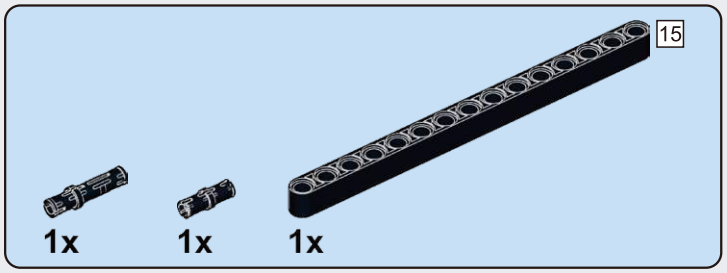

D16

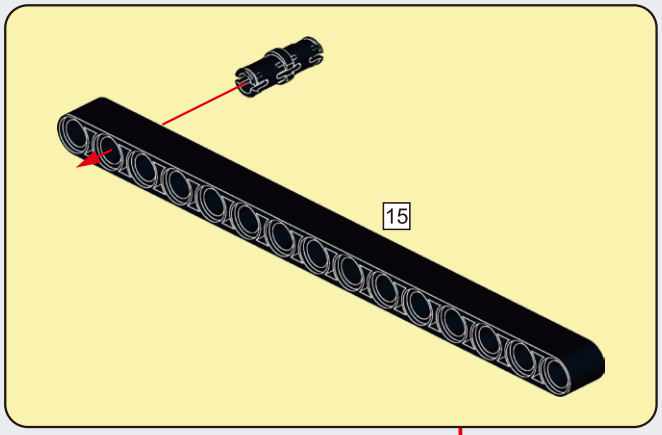

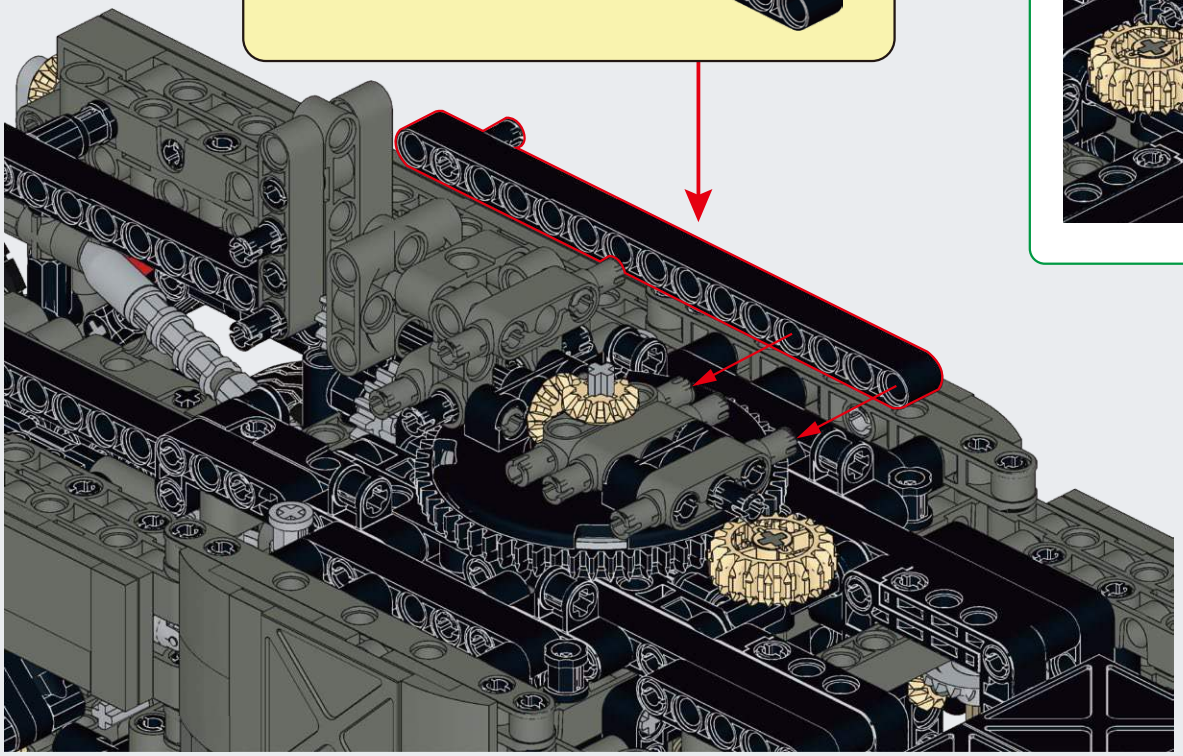

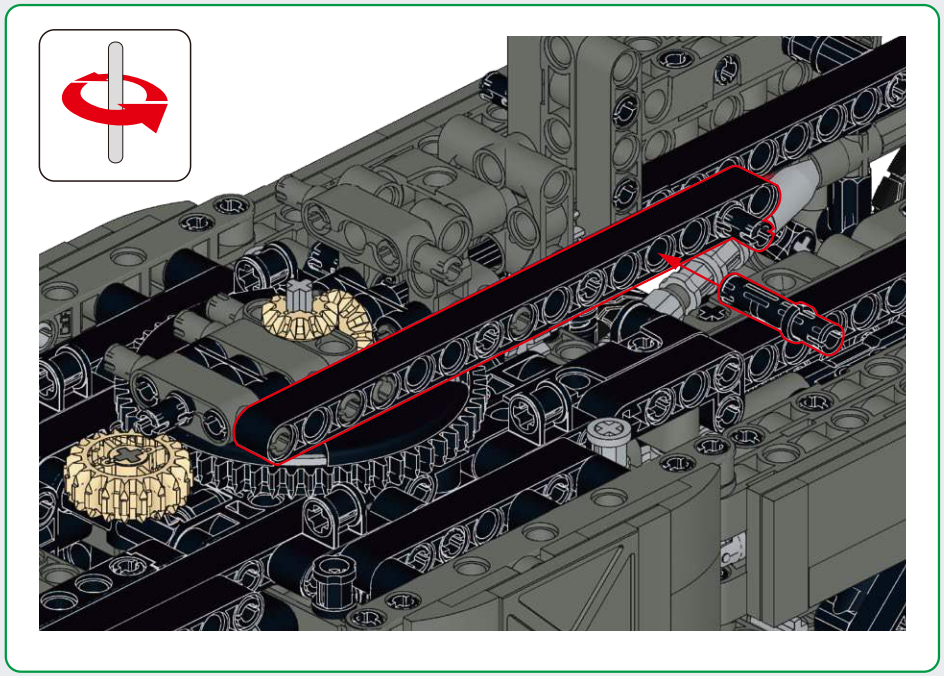

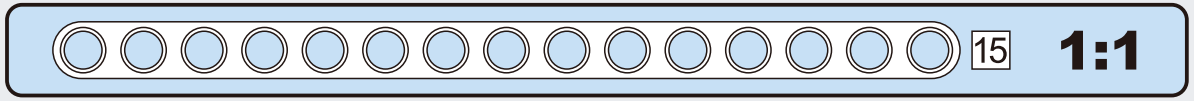

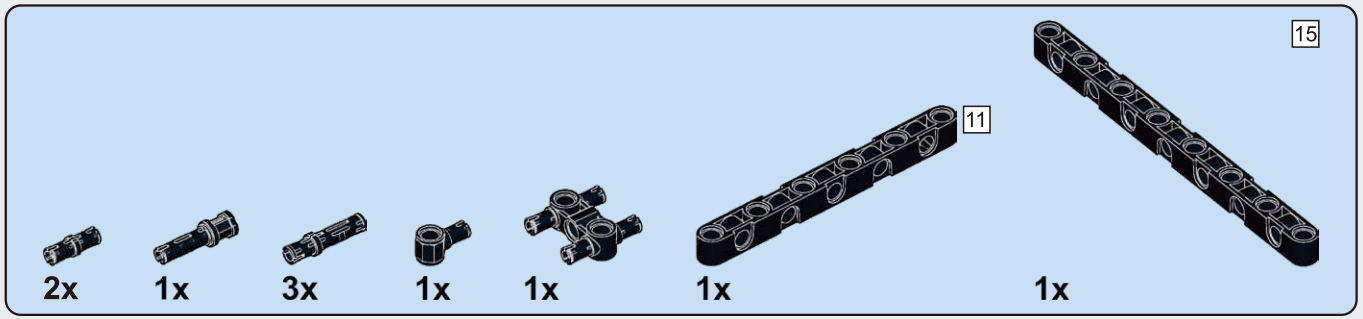

D17

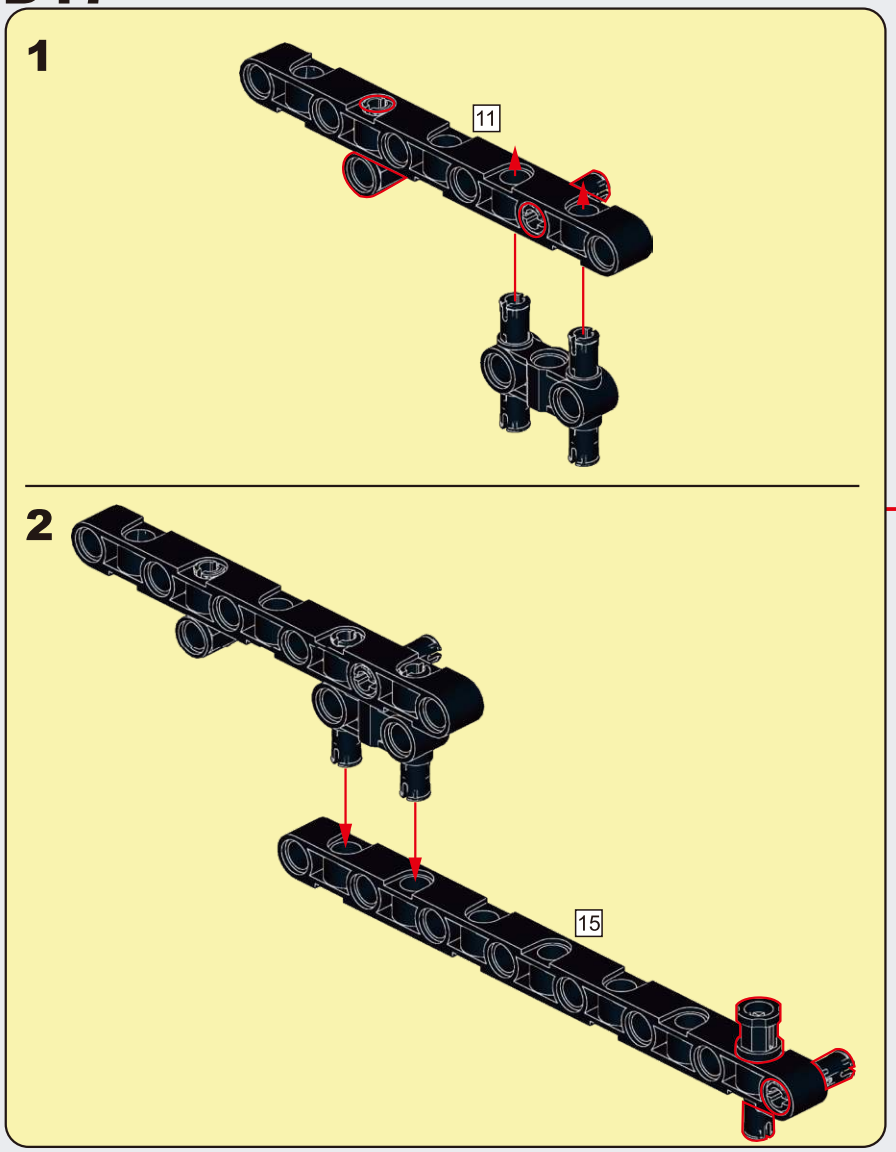

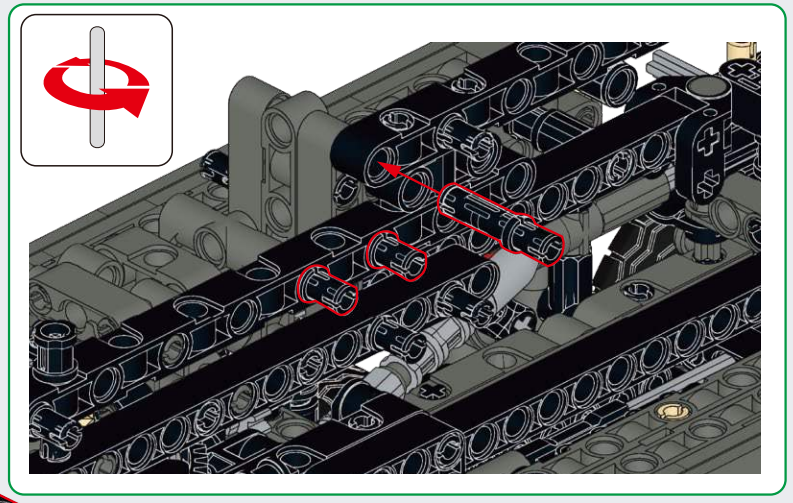

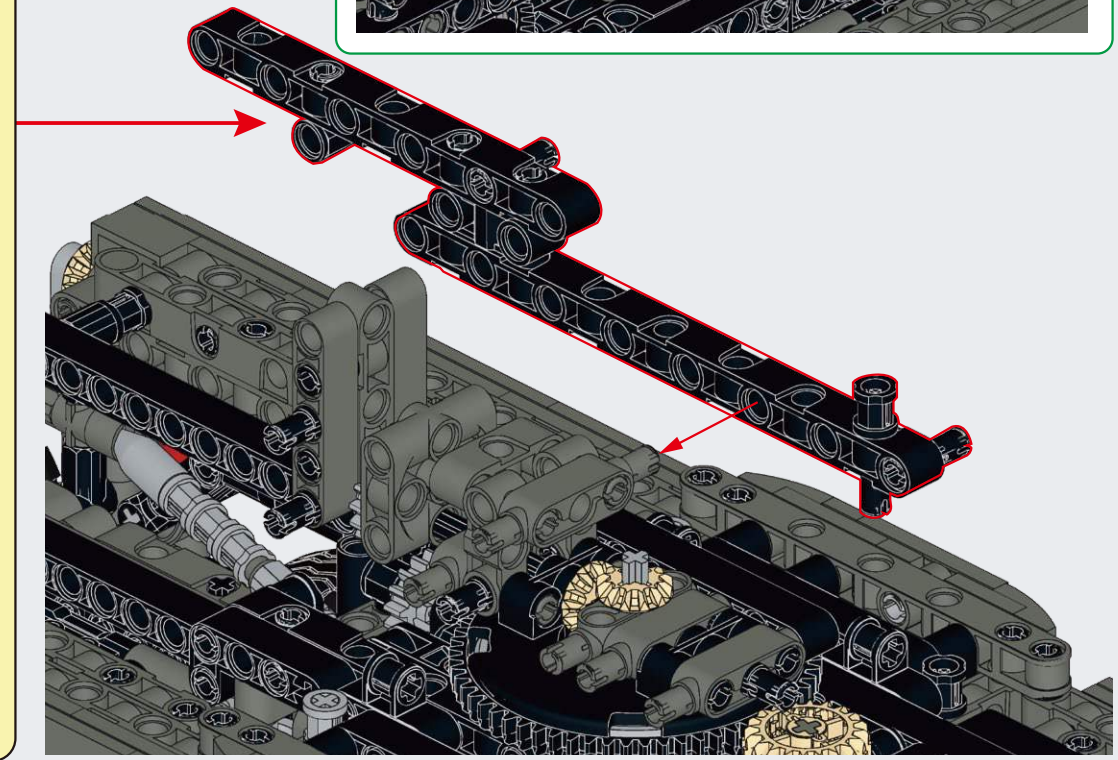

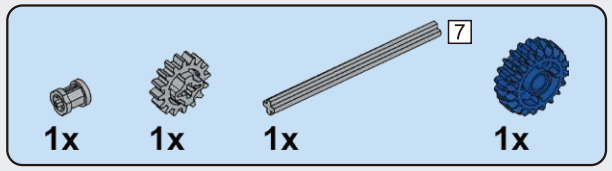

D18

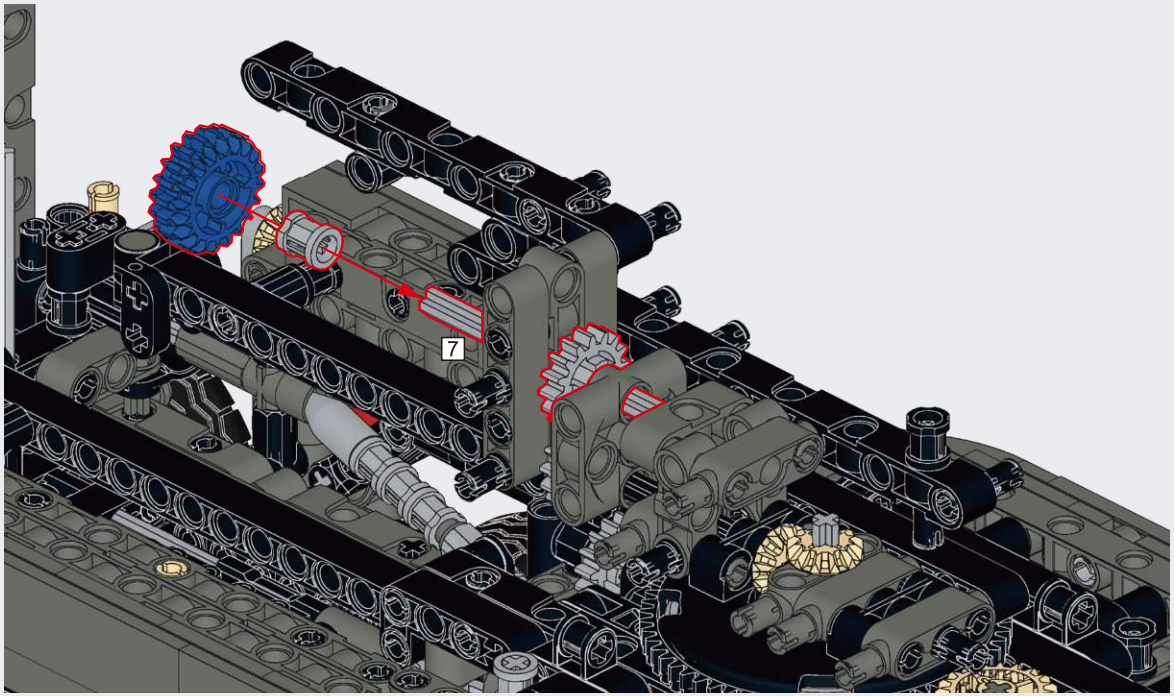

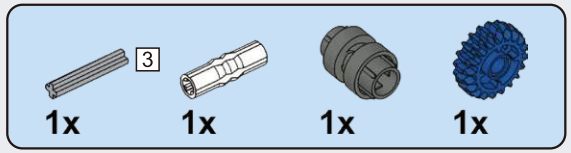

D19

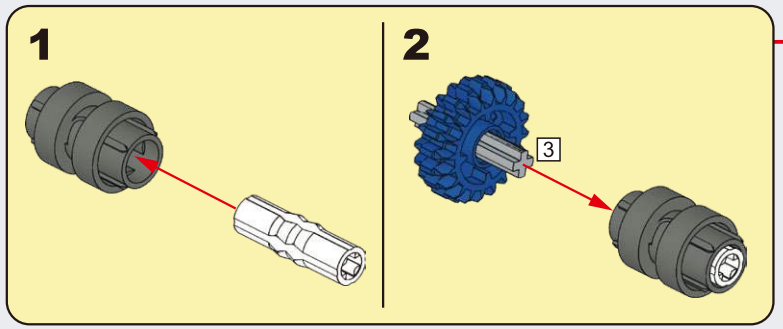

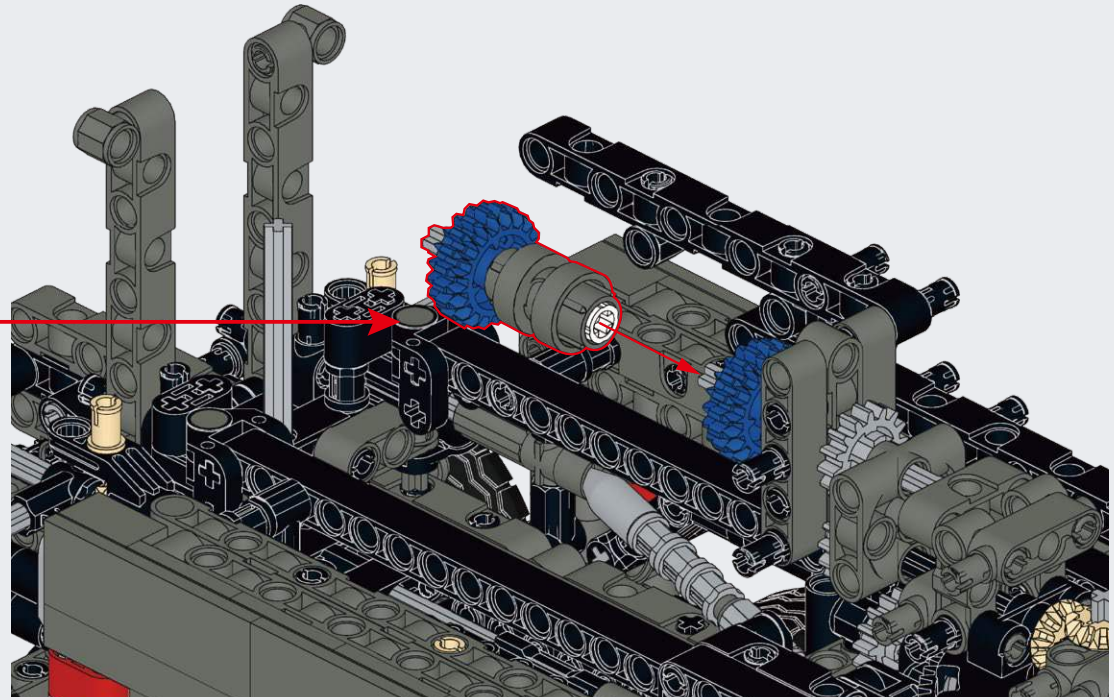

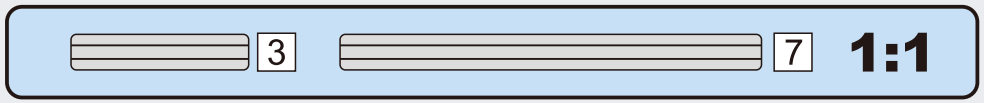

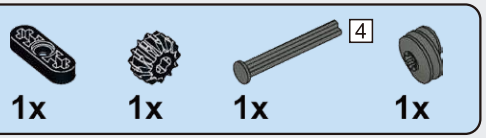

D20

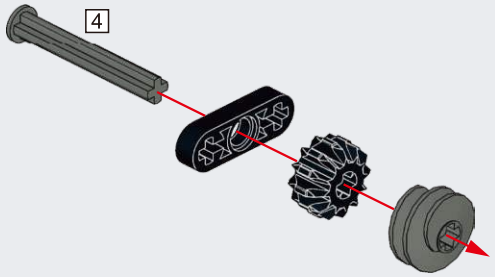

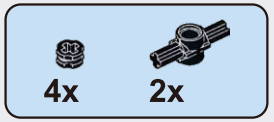

D21

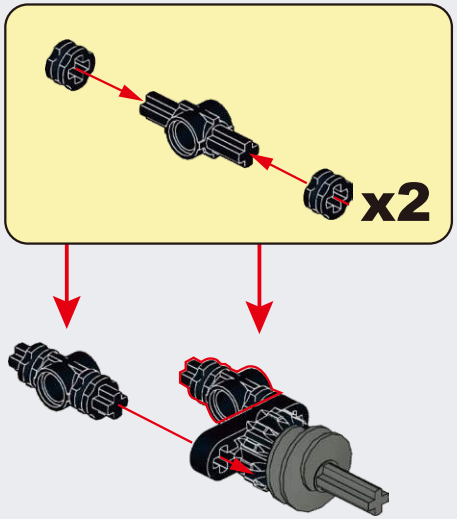

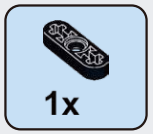

D22

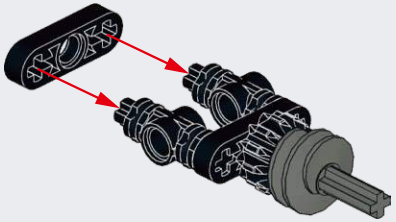

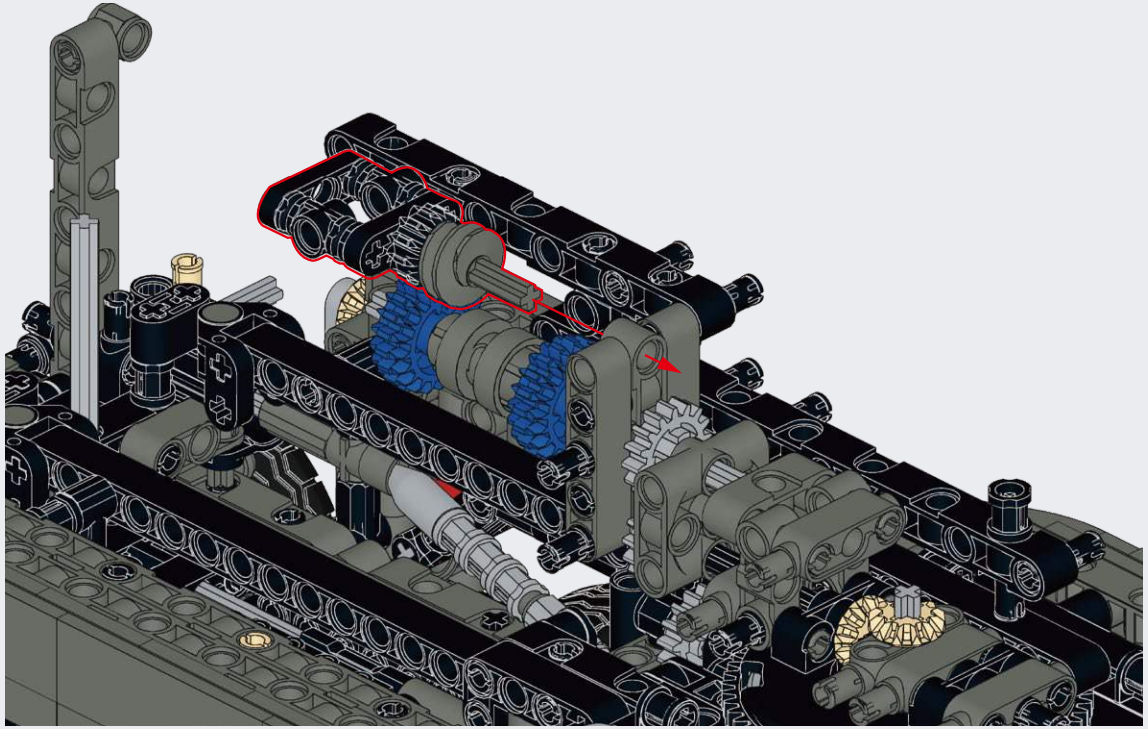

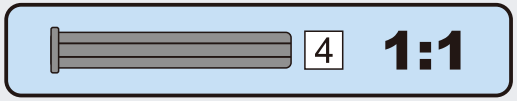

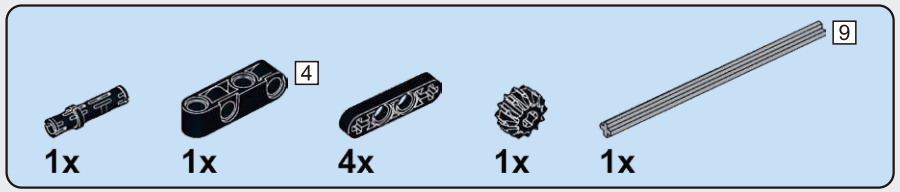

D23

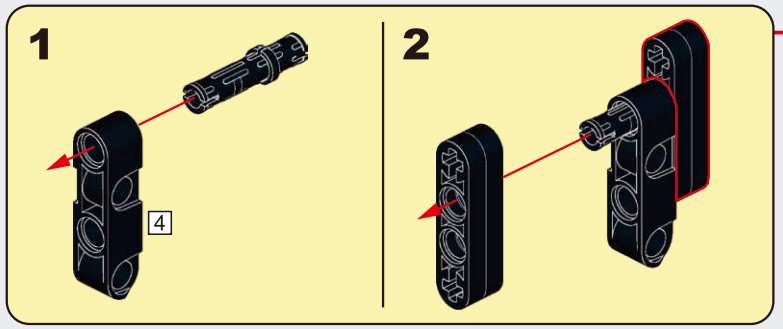

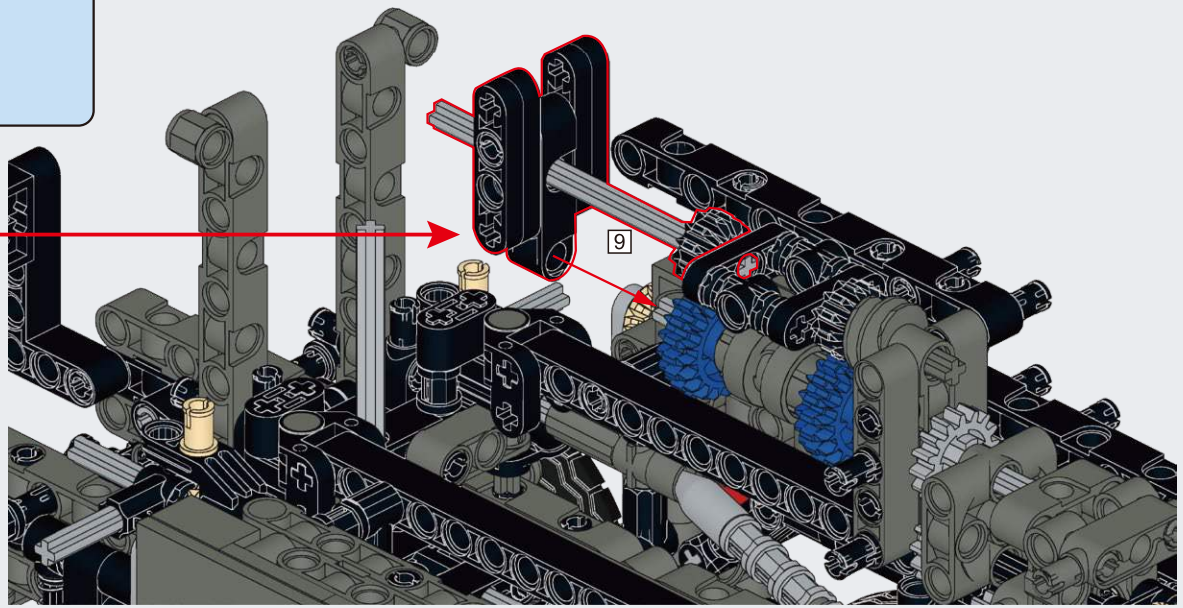

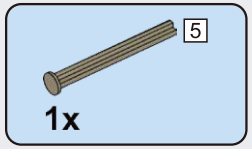

D24

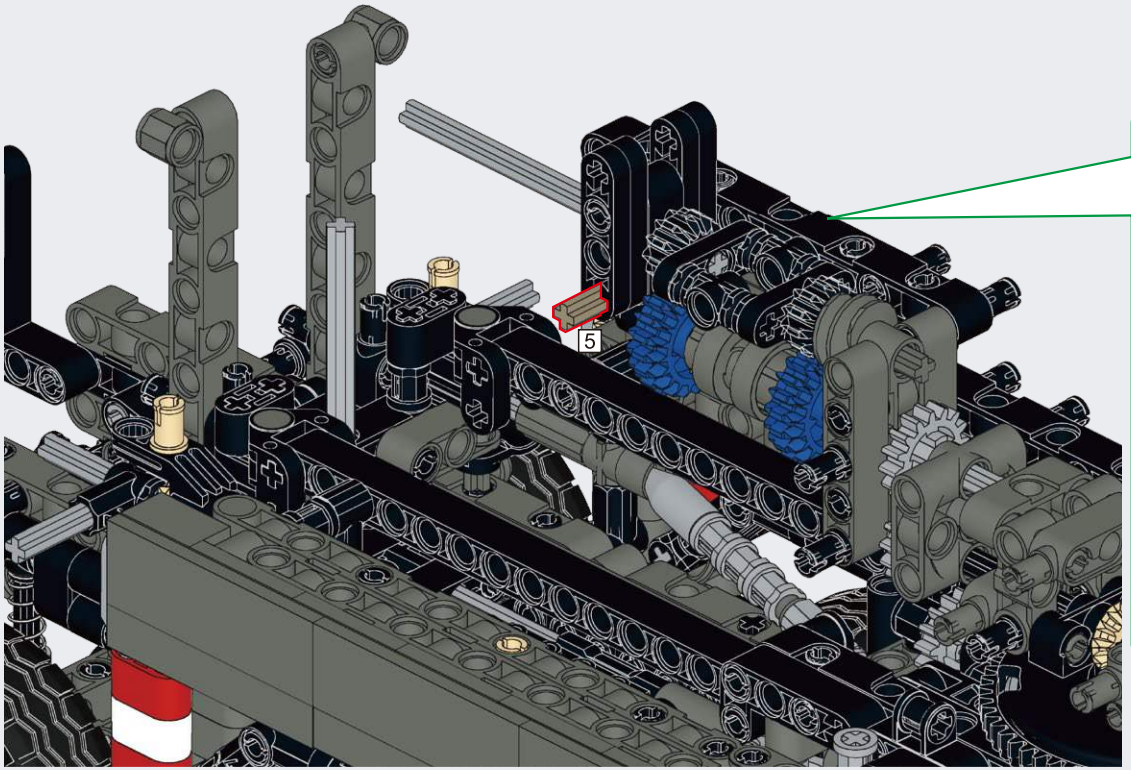

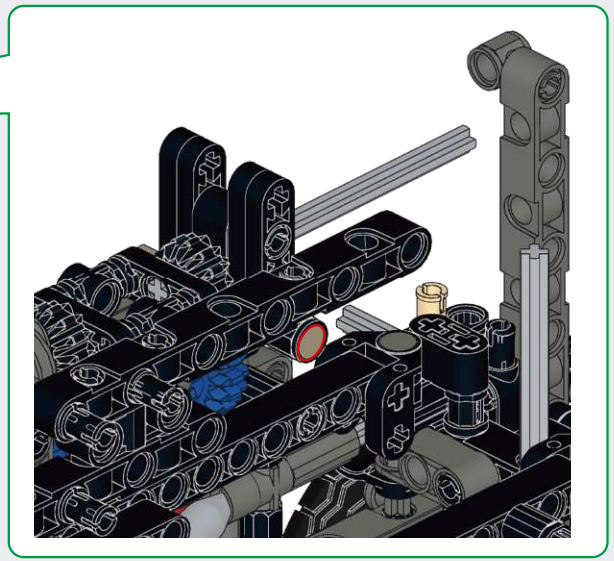

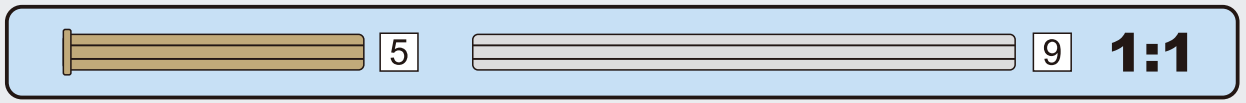

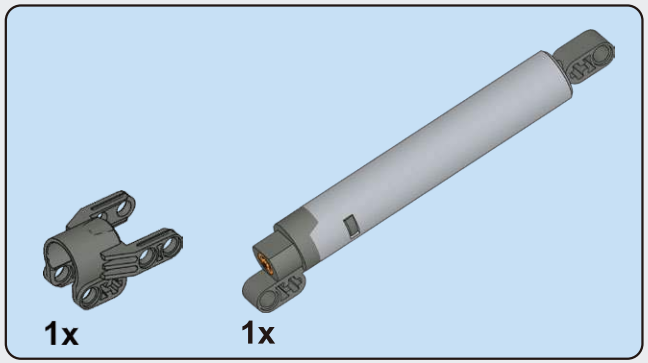

D25

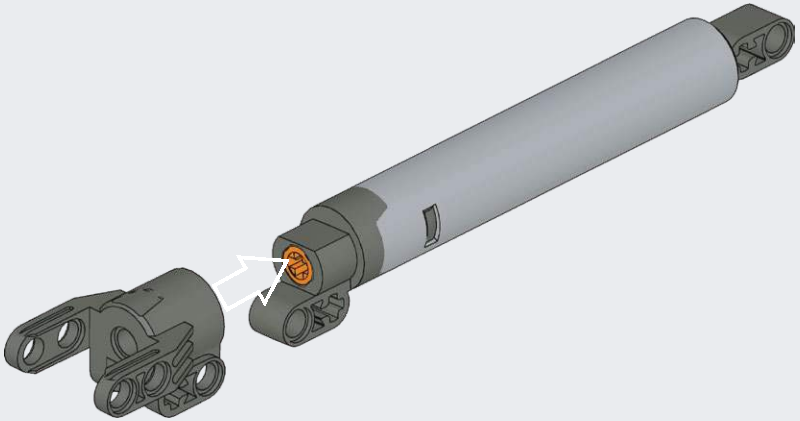

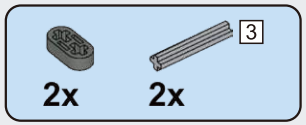

D26

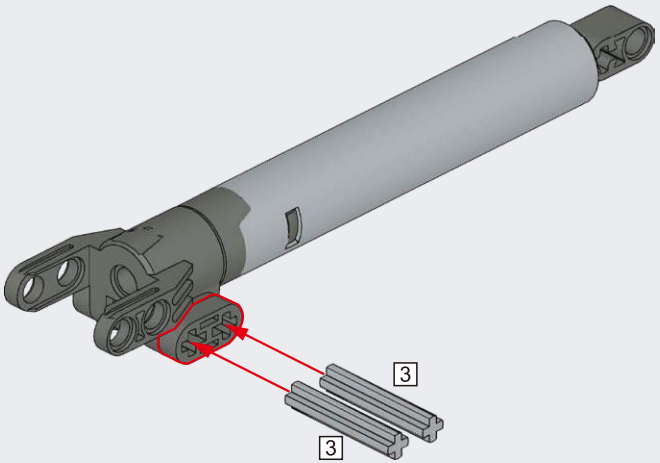

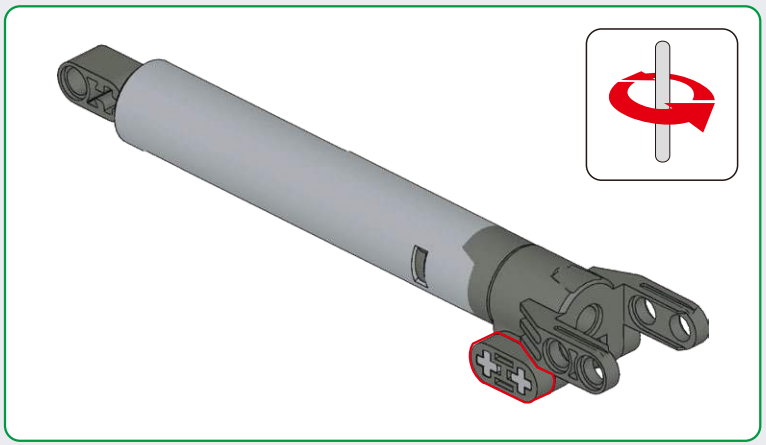

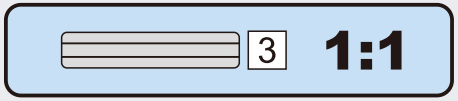

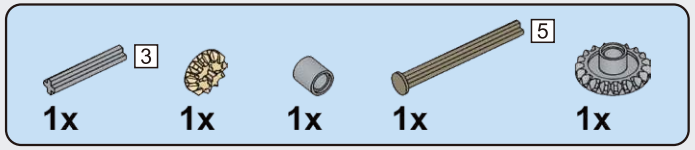

D27

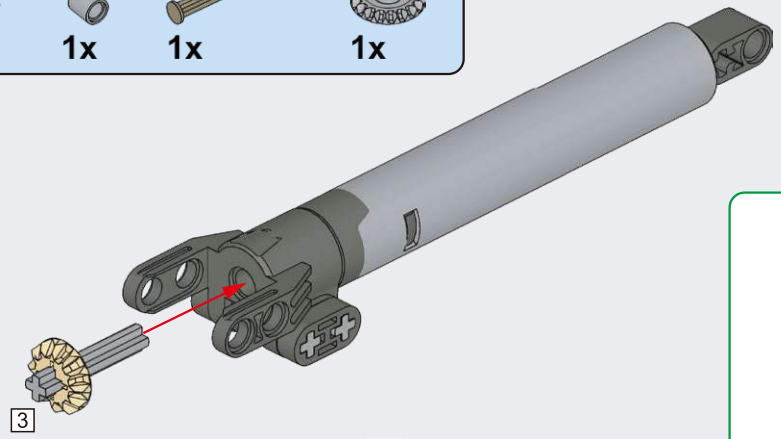

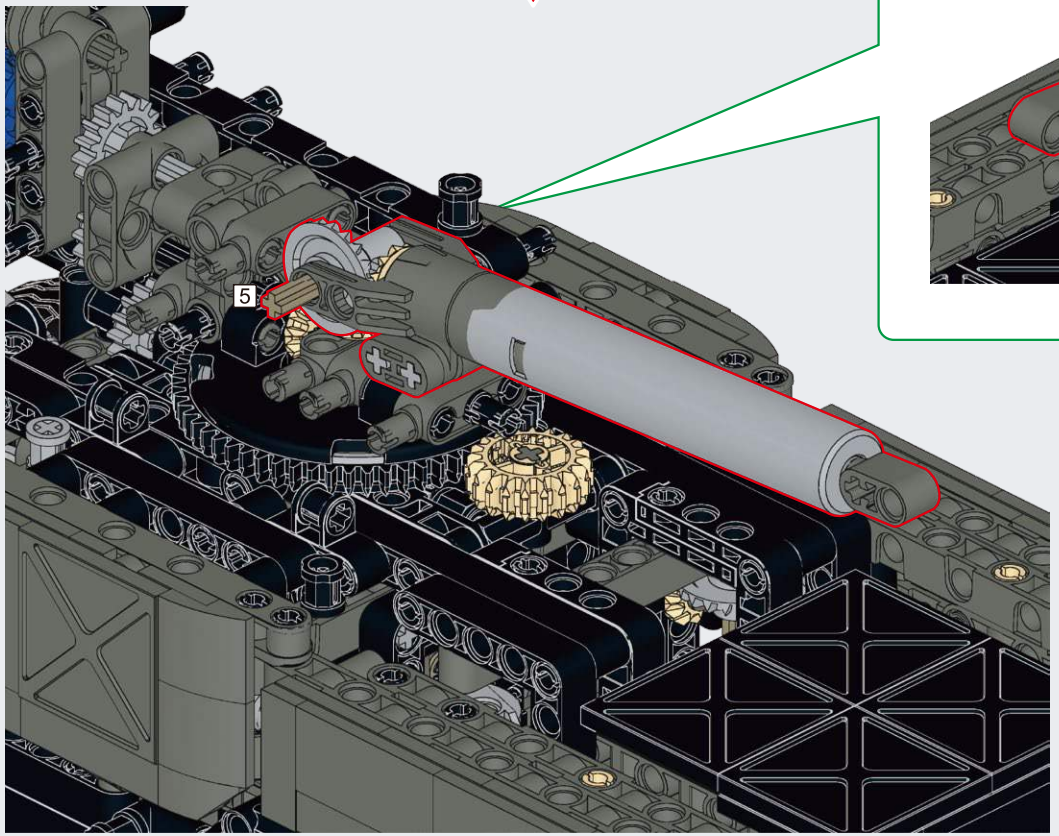

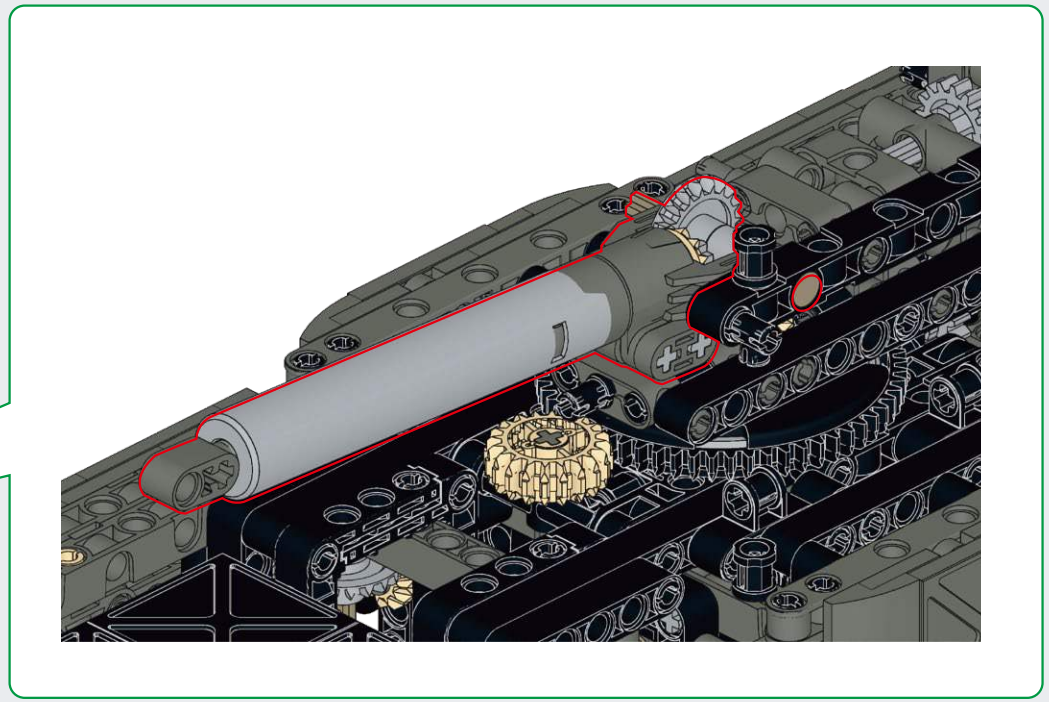

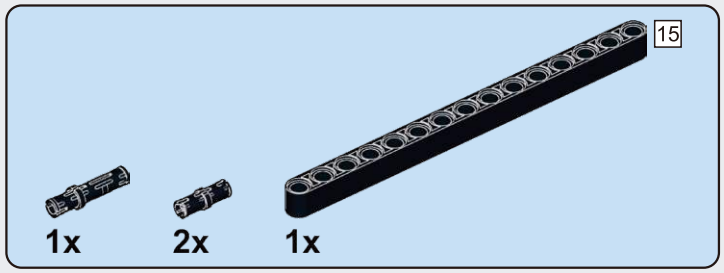

D28

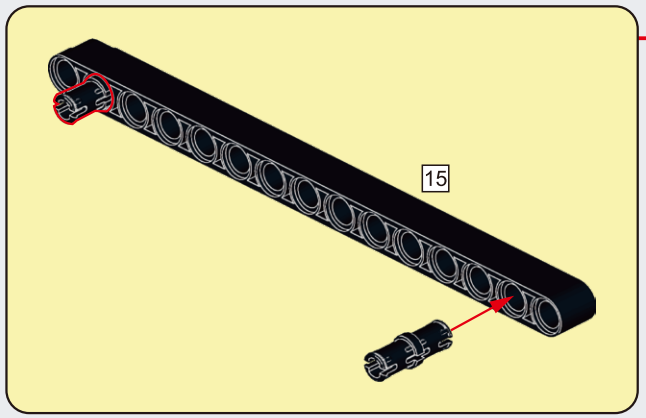

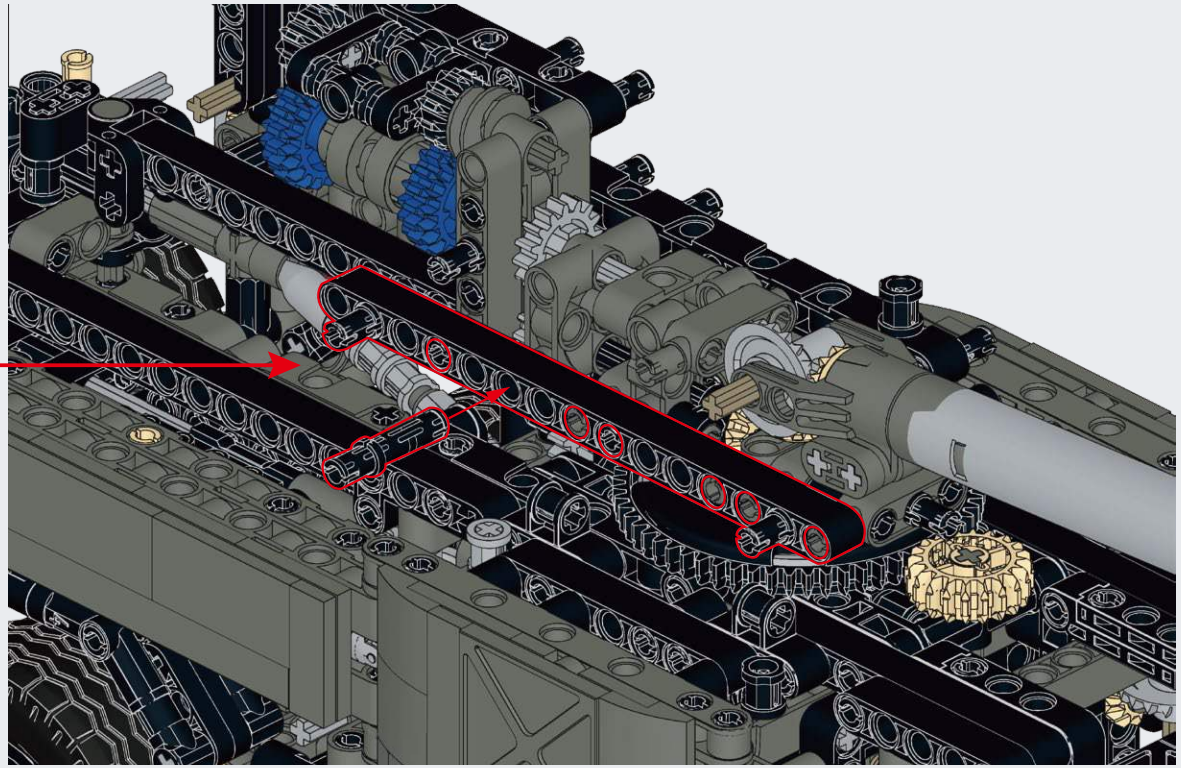

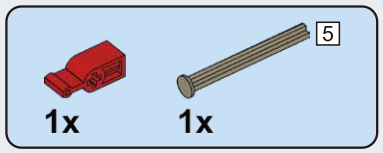

D29

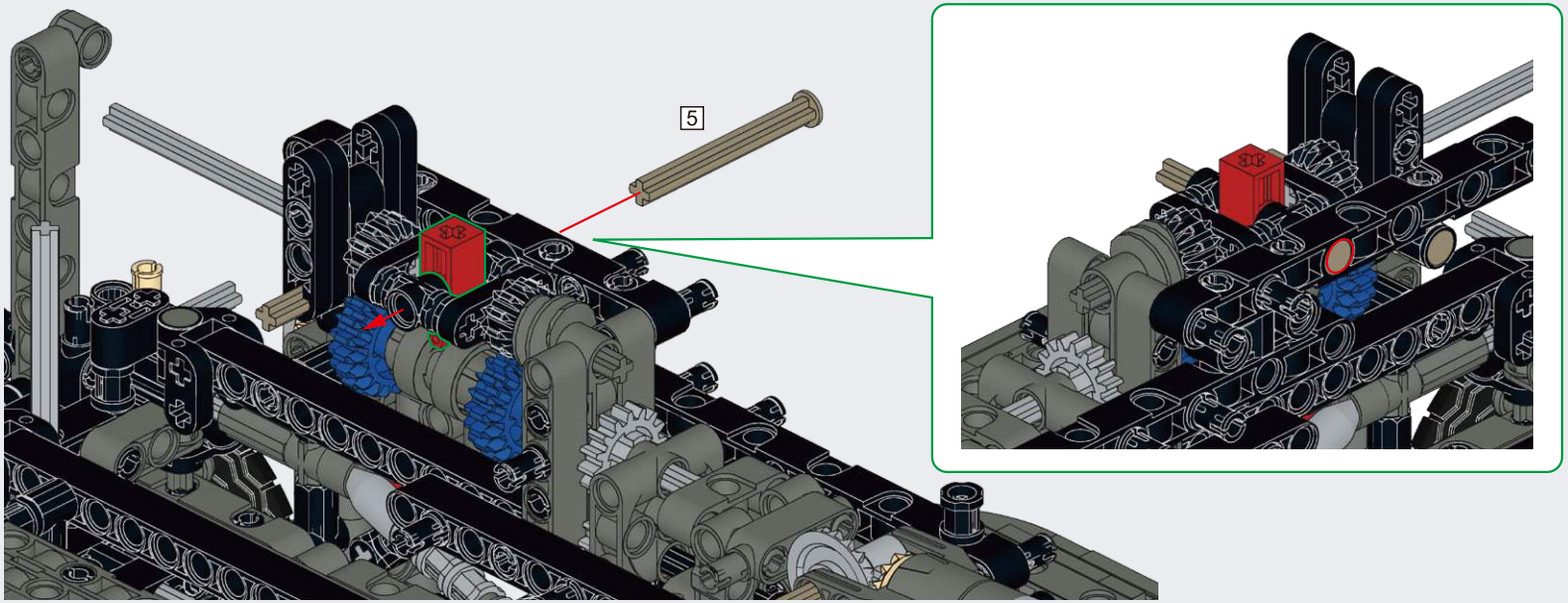

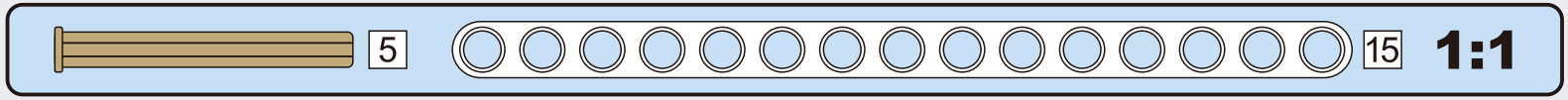

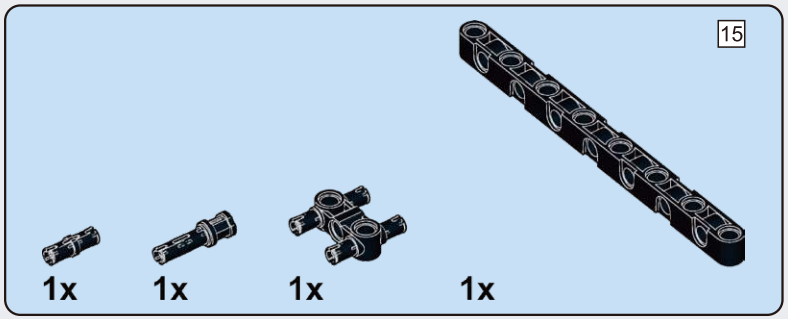

D30

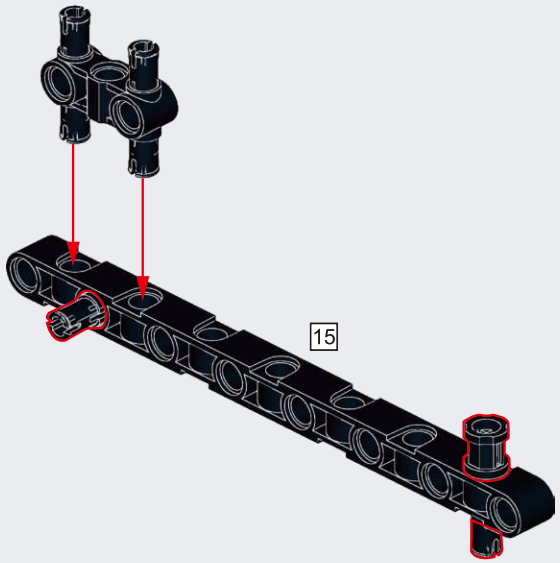

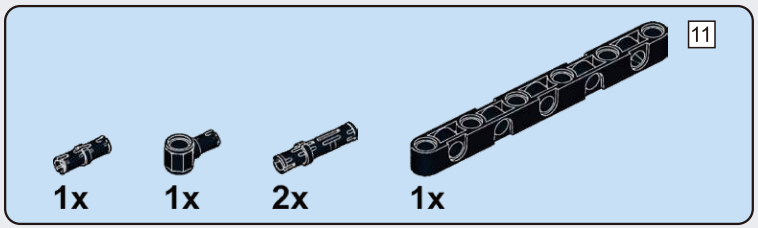

D31

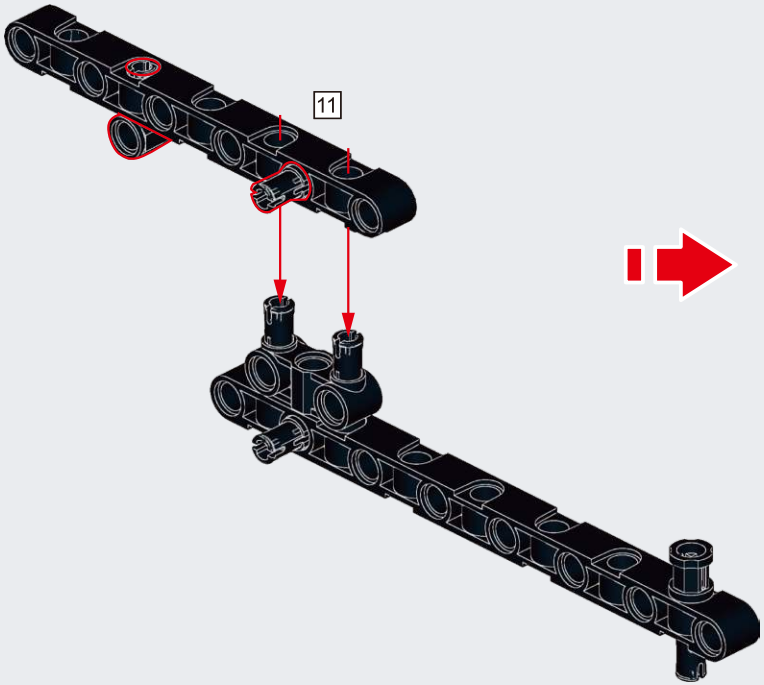

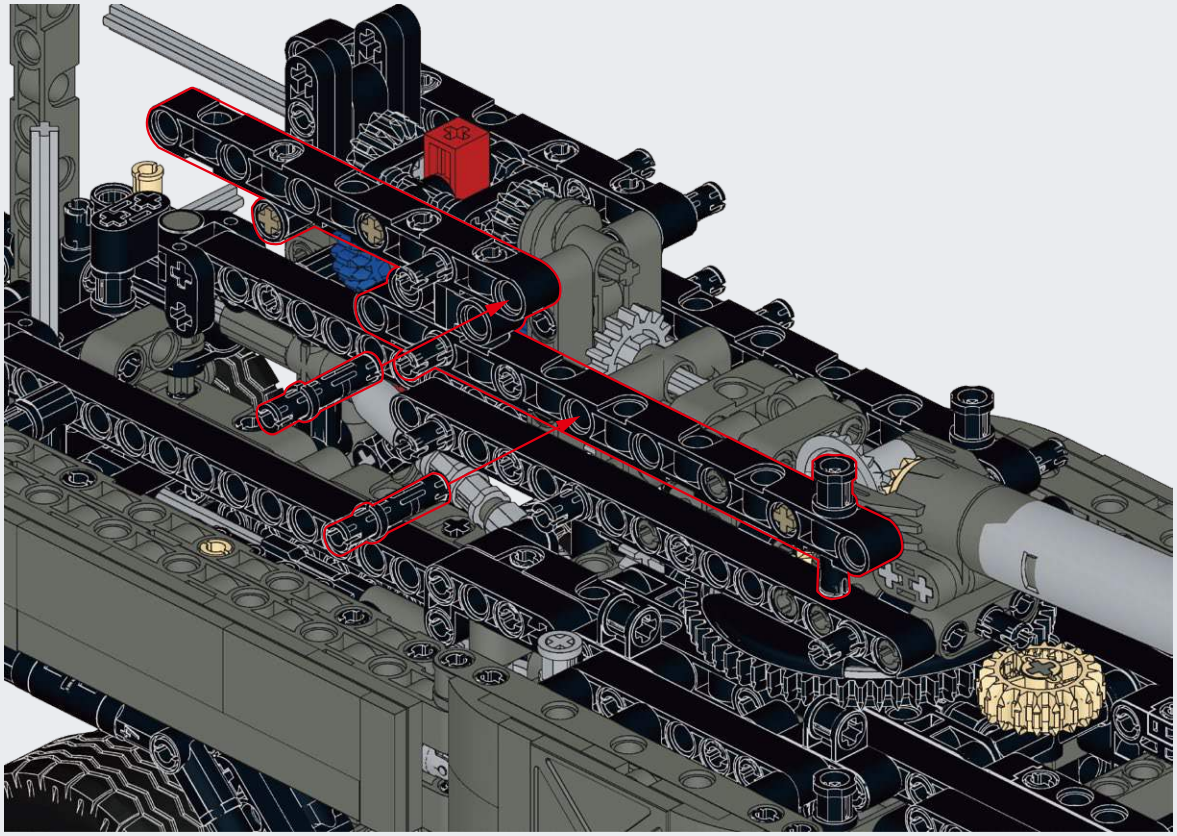

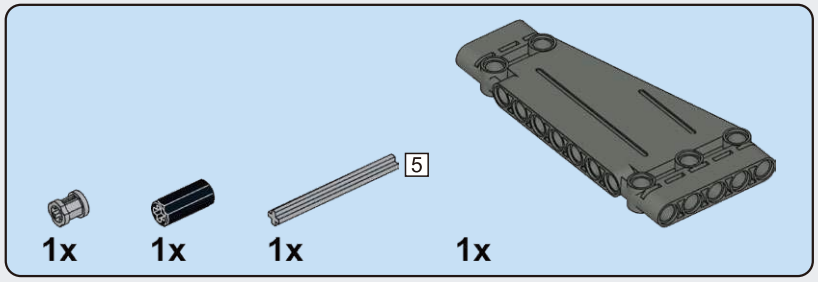

D32

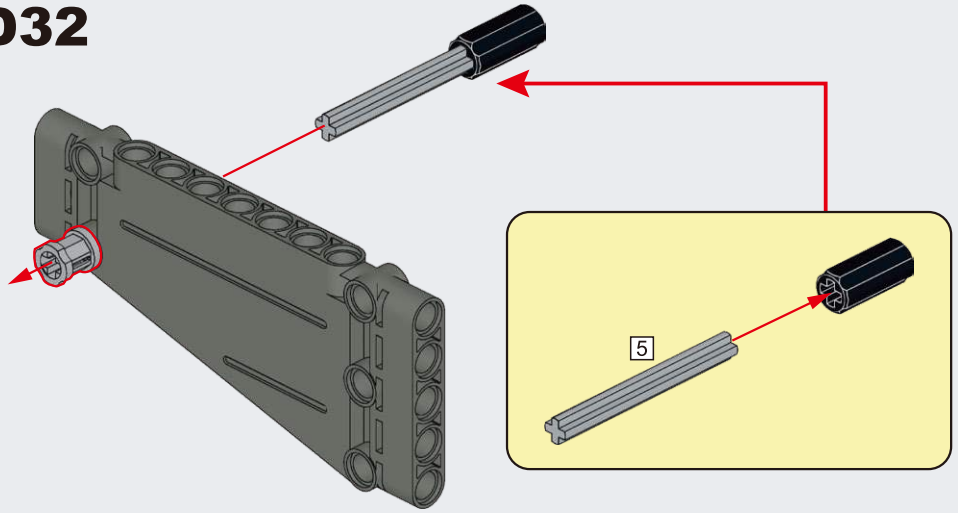

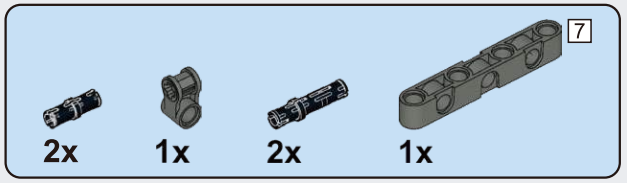

D33

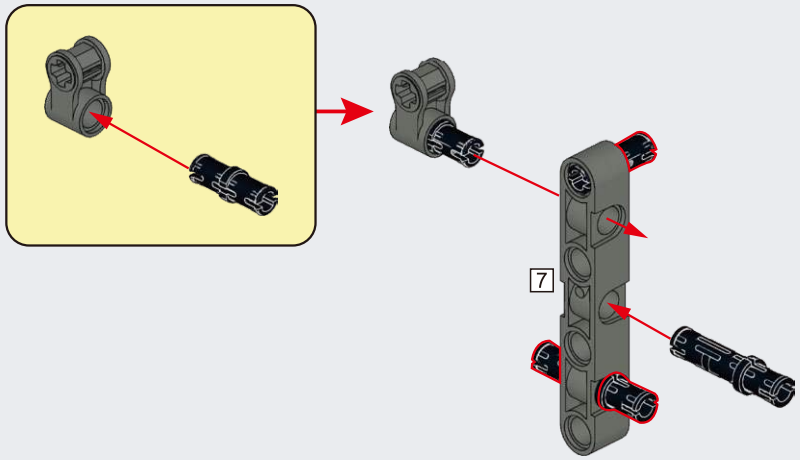

D34

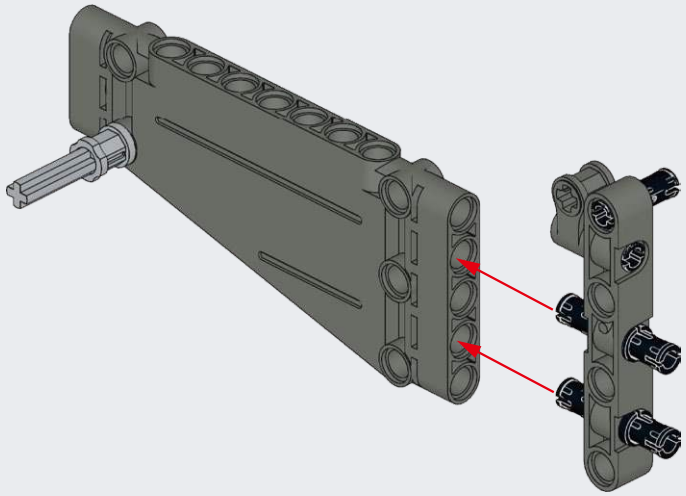

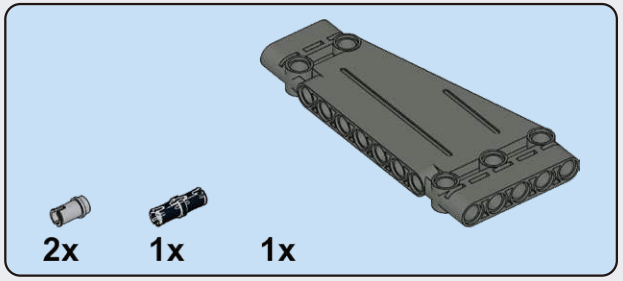

D35

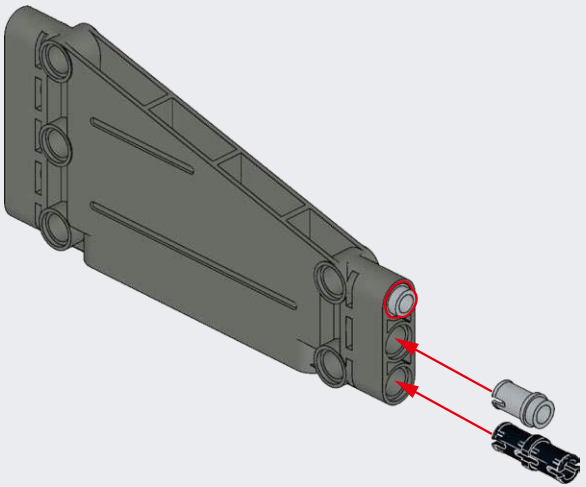

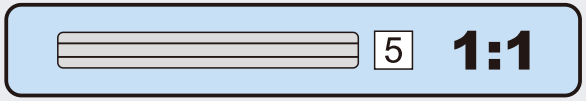

D36

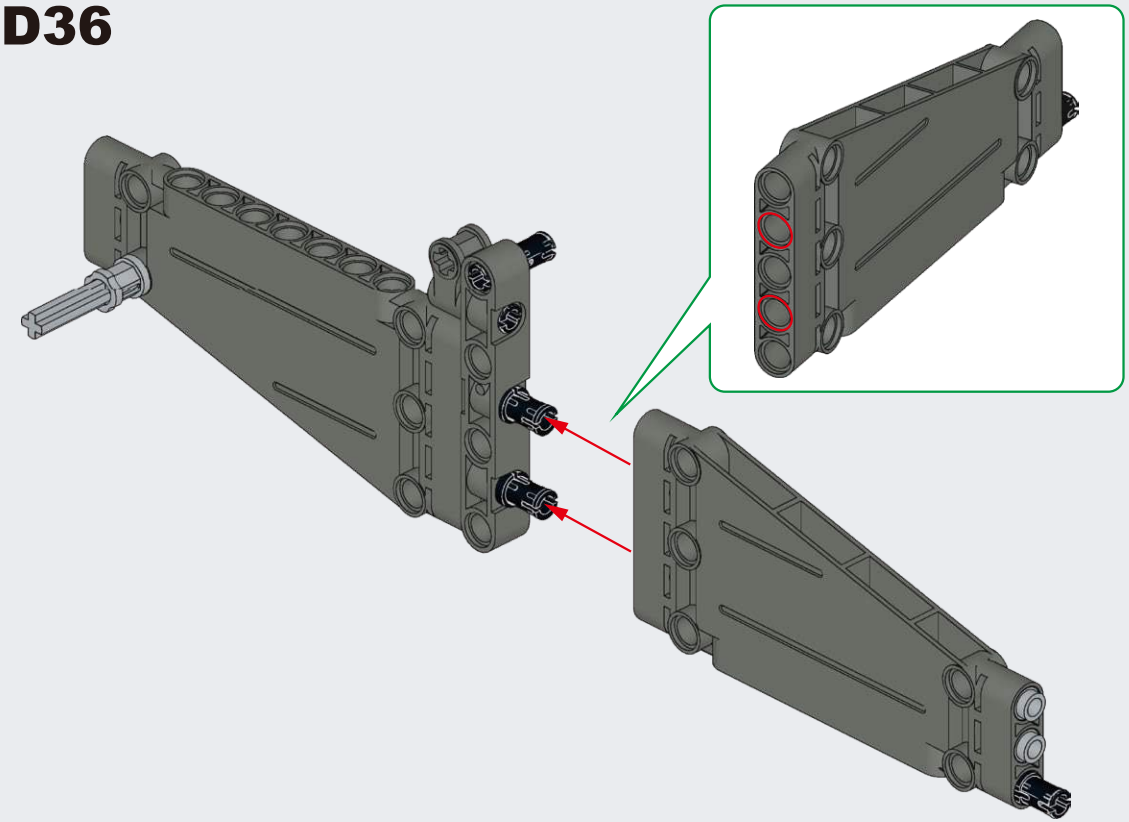

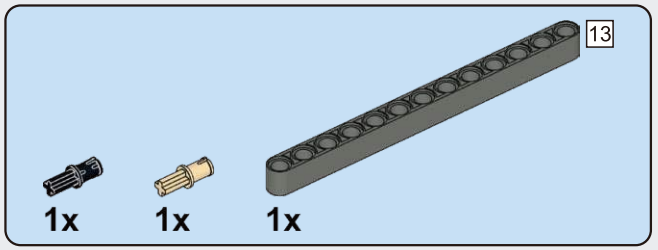

D37

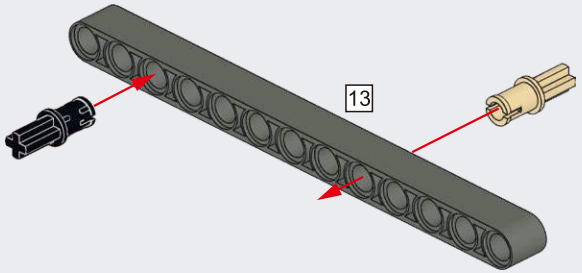

D38

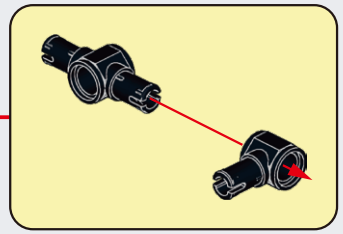

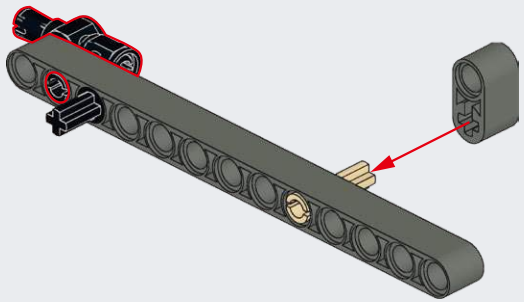

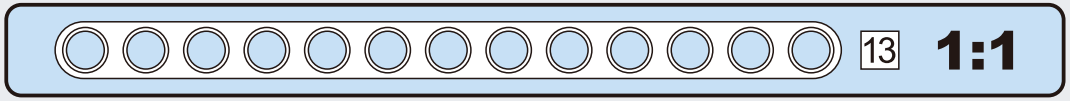

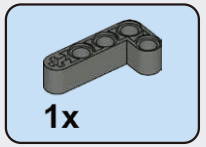

D39

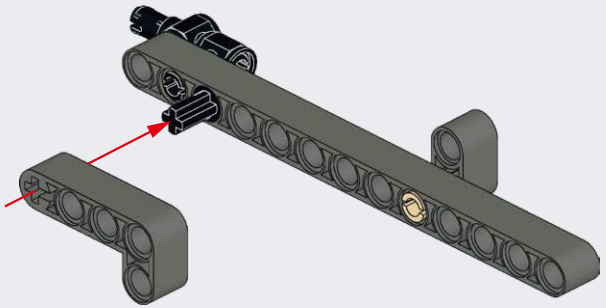

D40

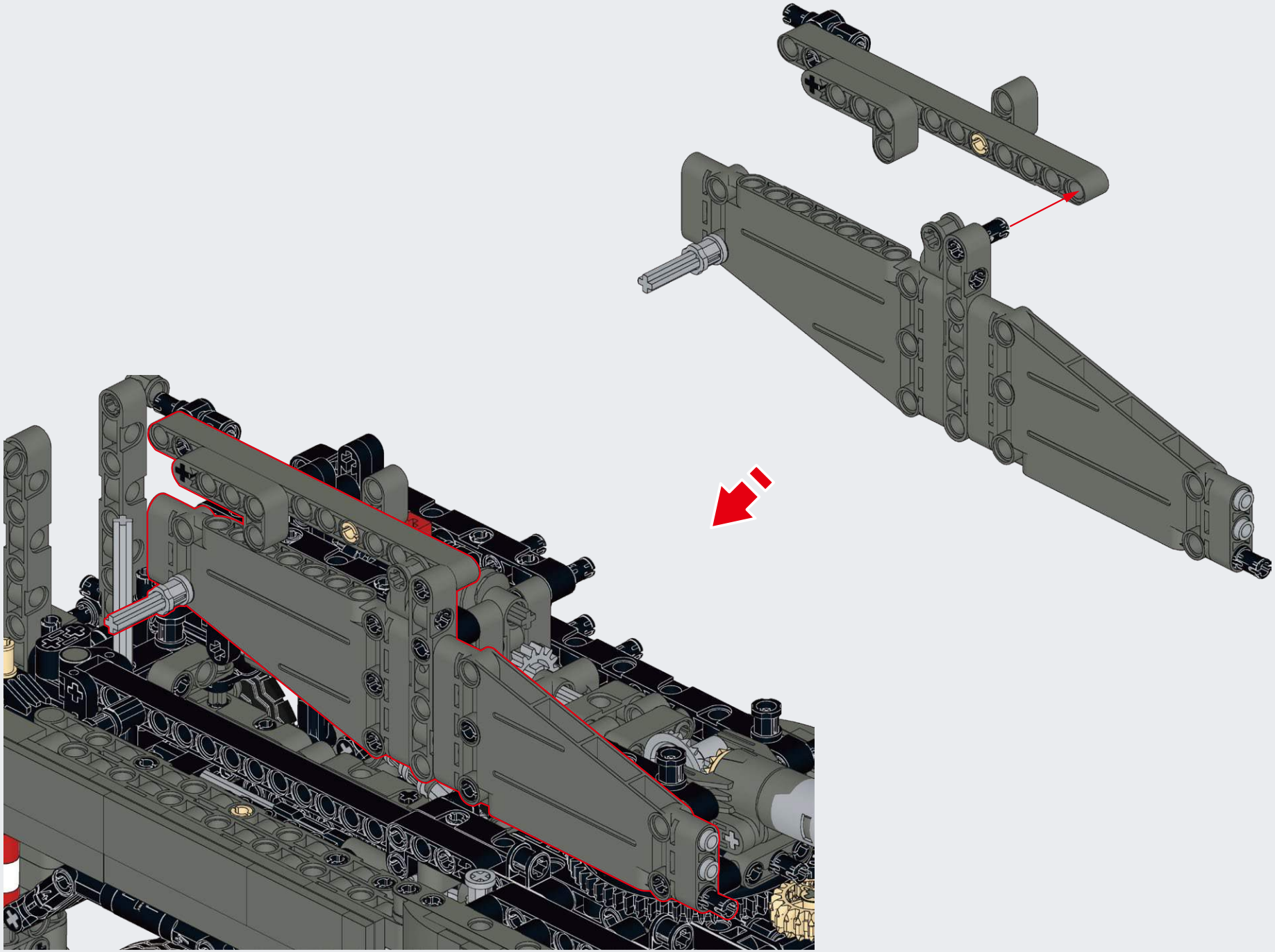

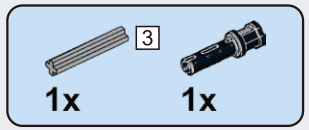

D41

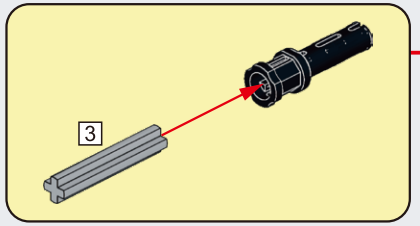

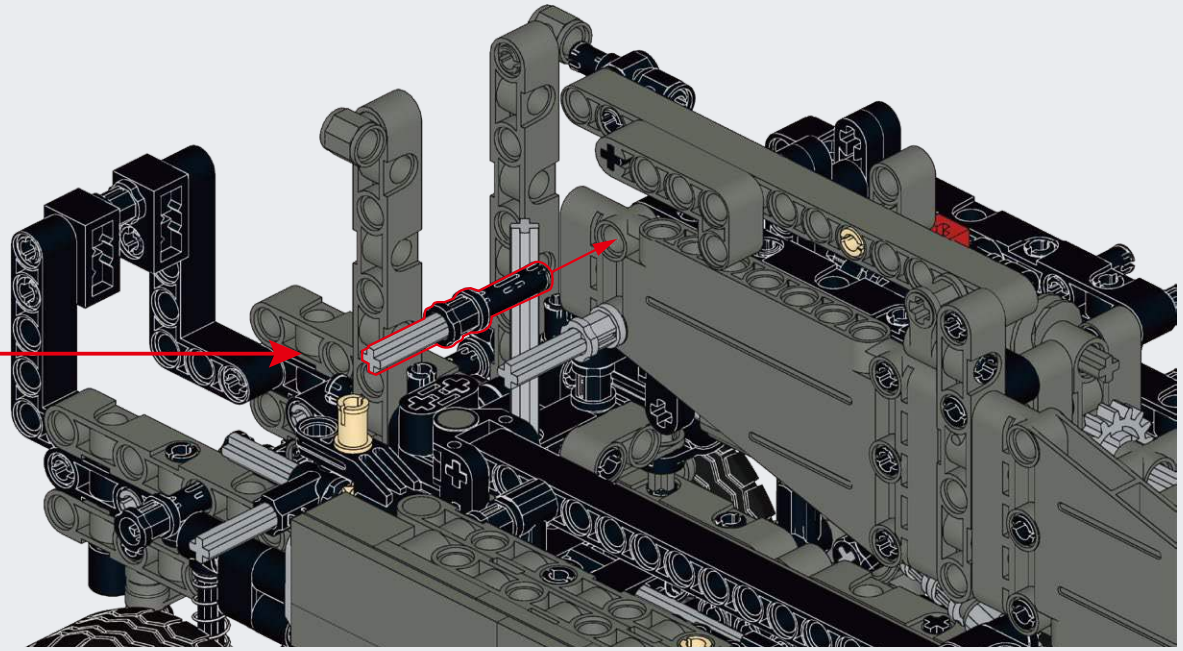

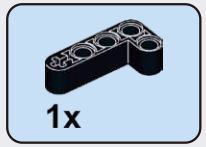

D42

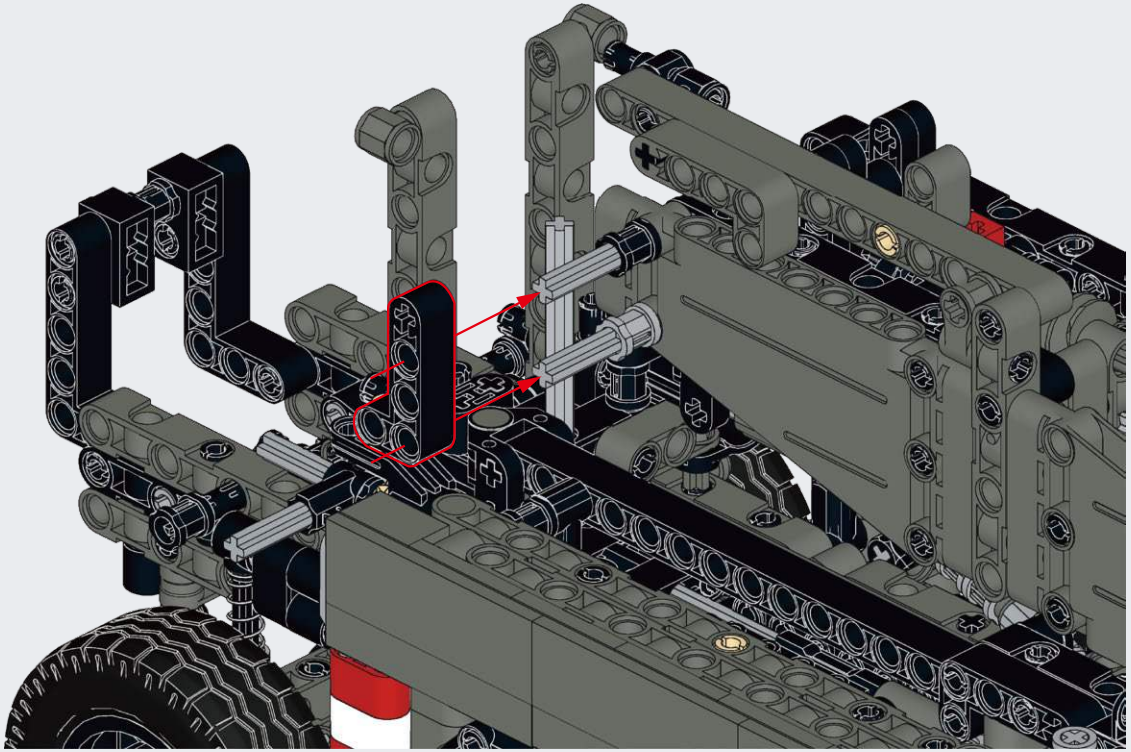

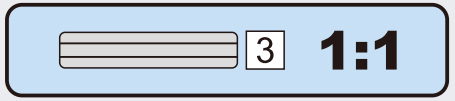

D43

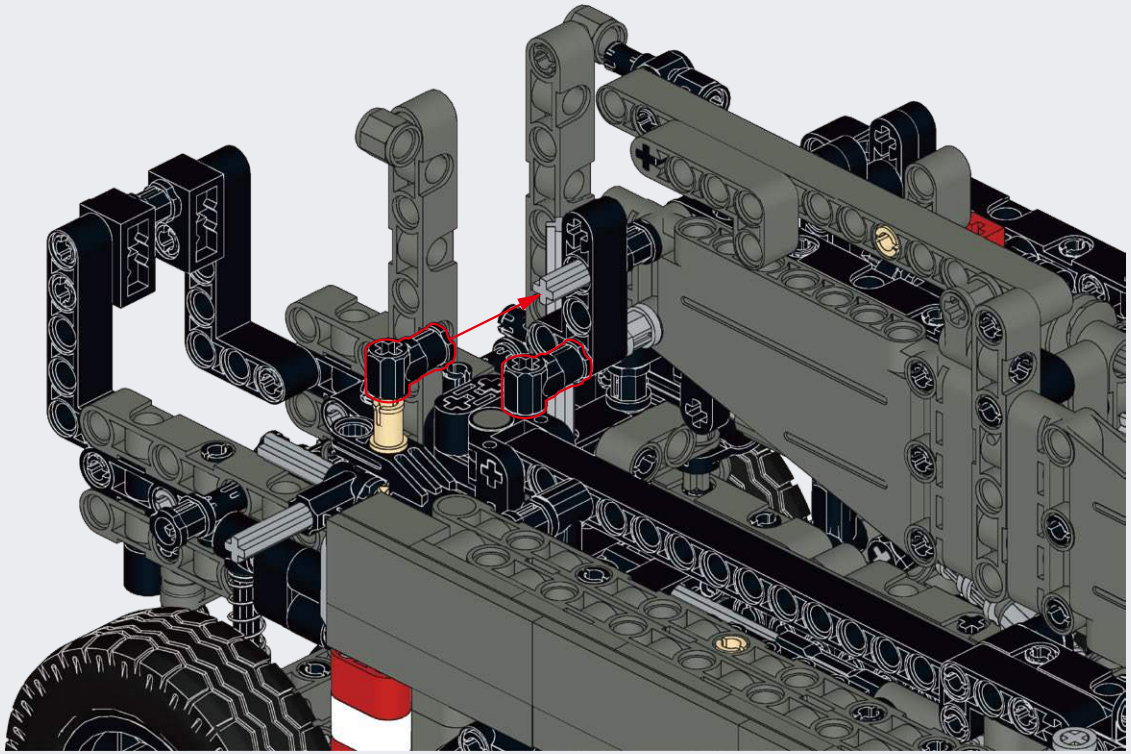

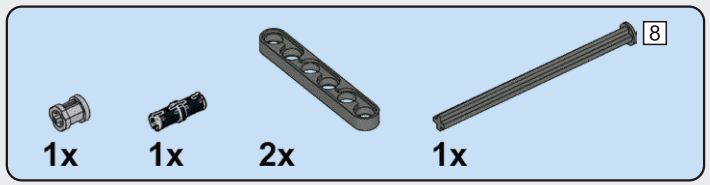

D44

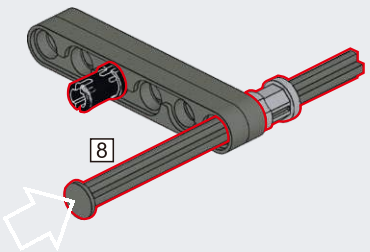

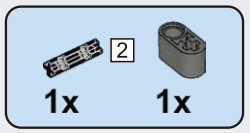

D45

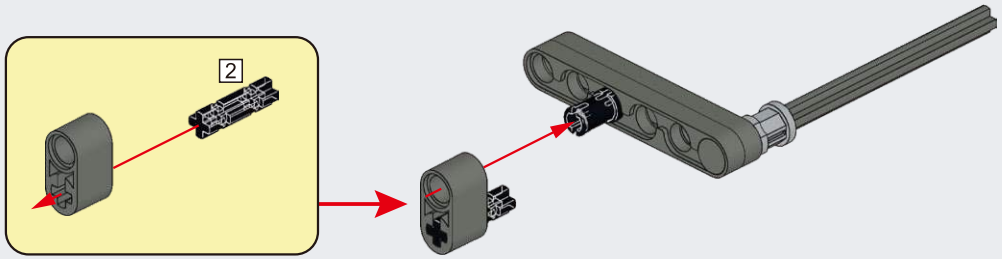

D46

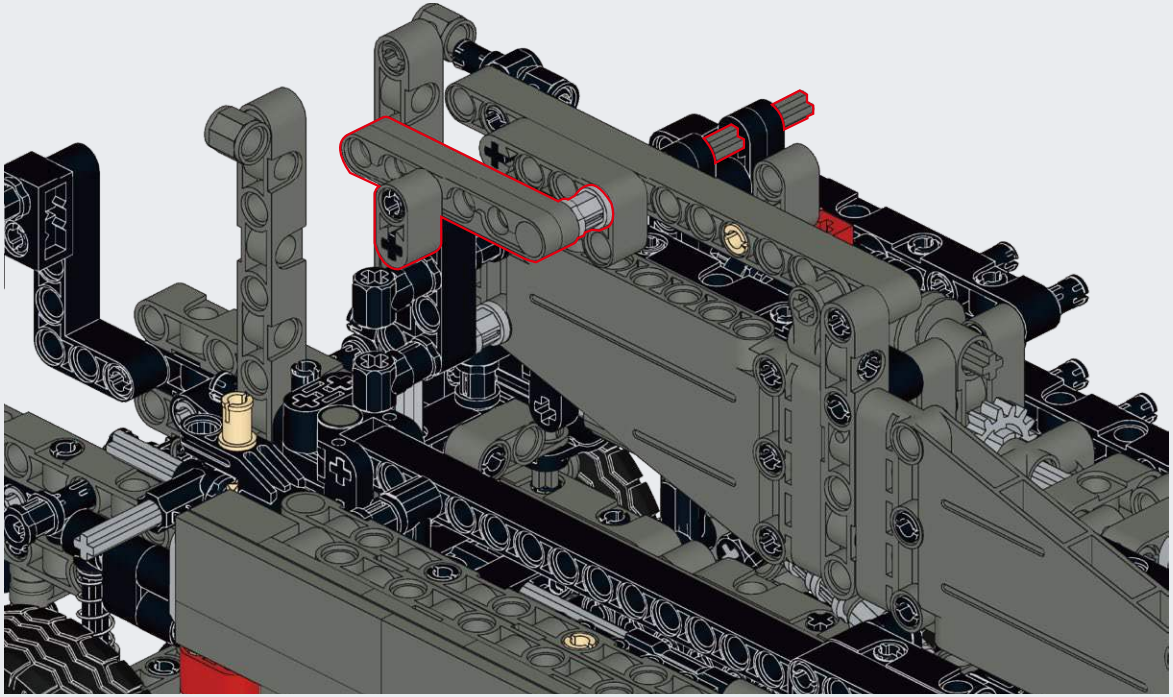

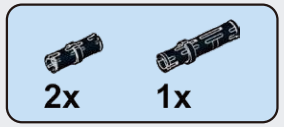

D47

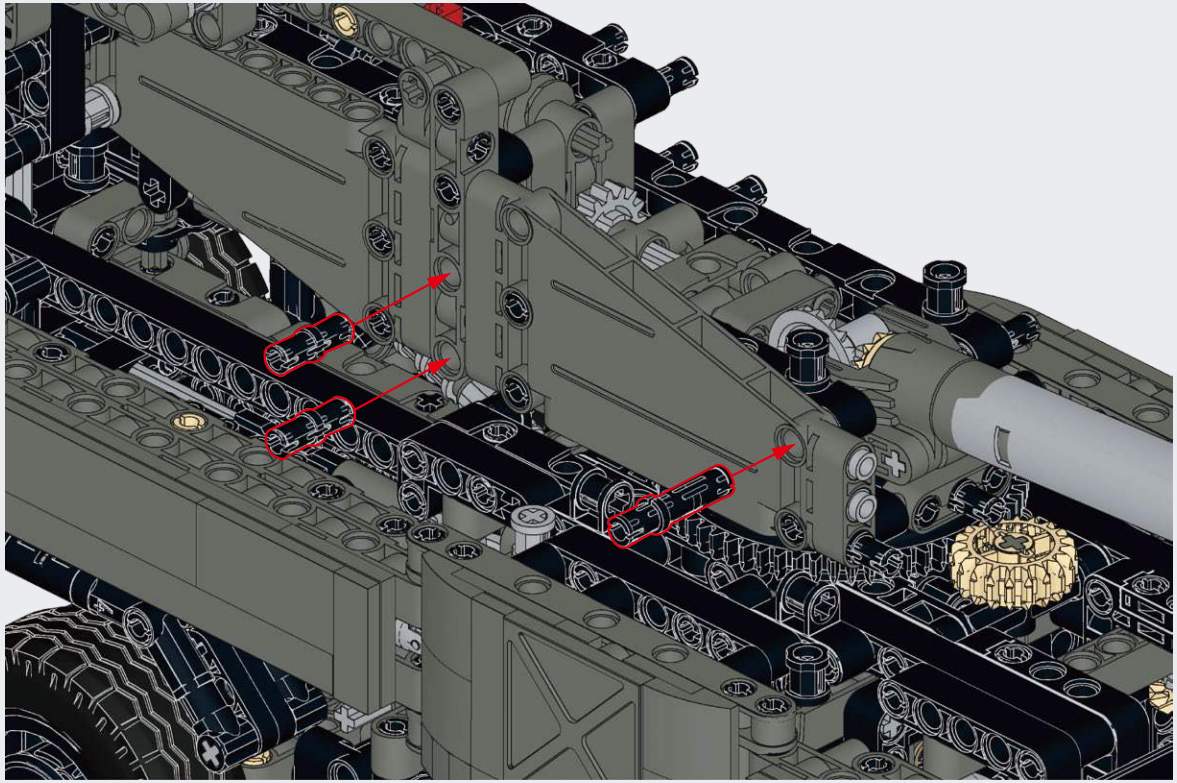

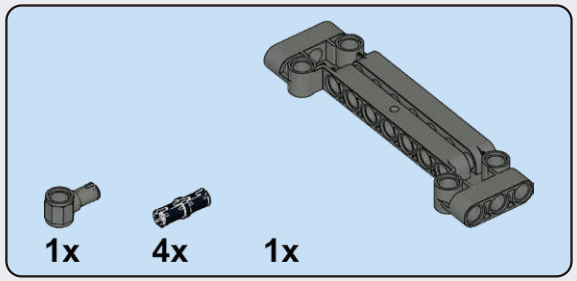

D48

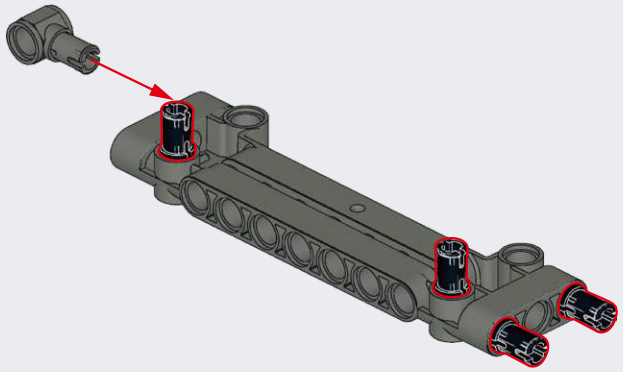

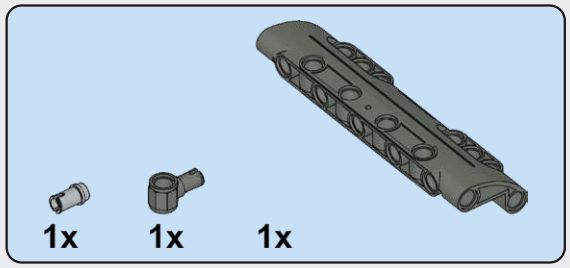

D49

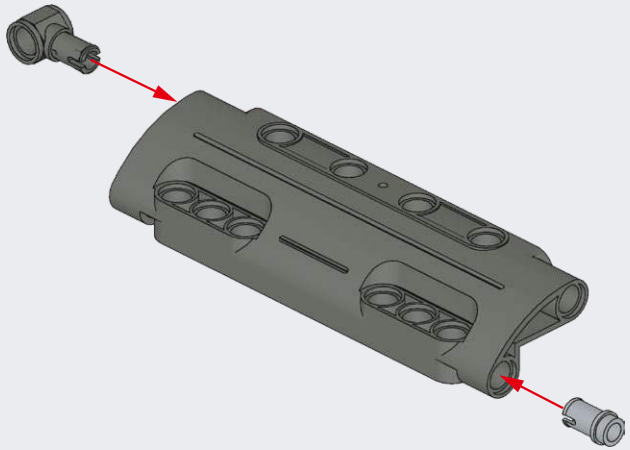

D50

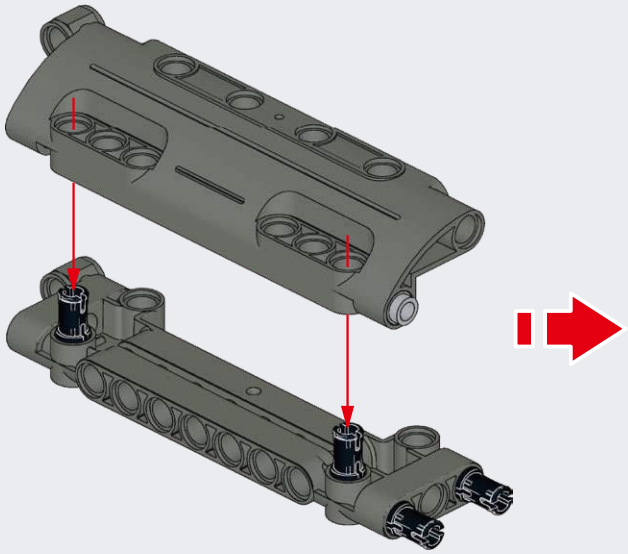

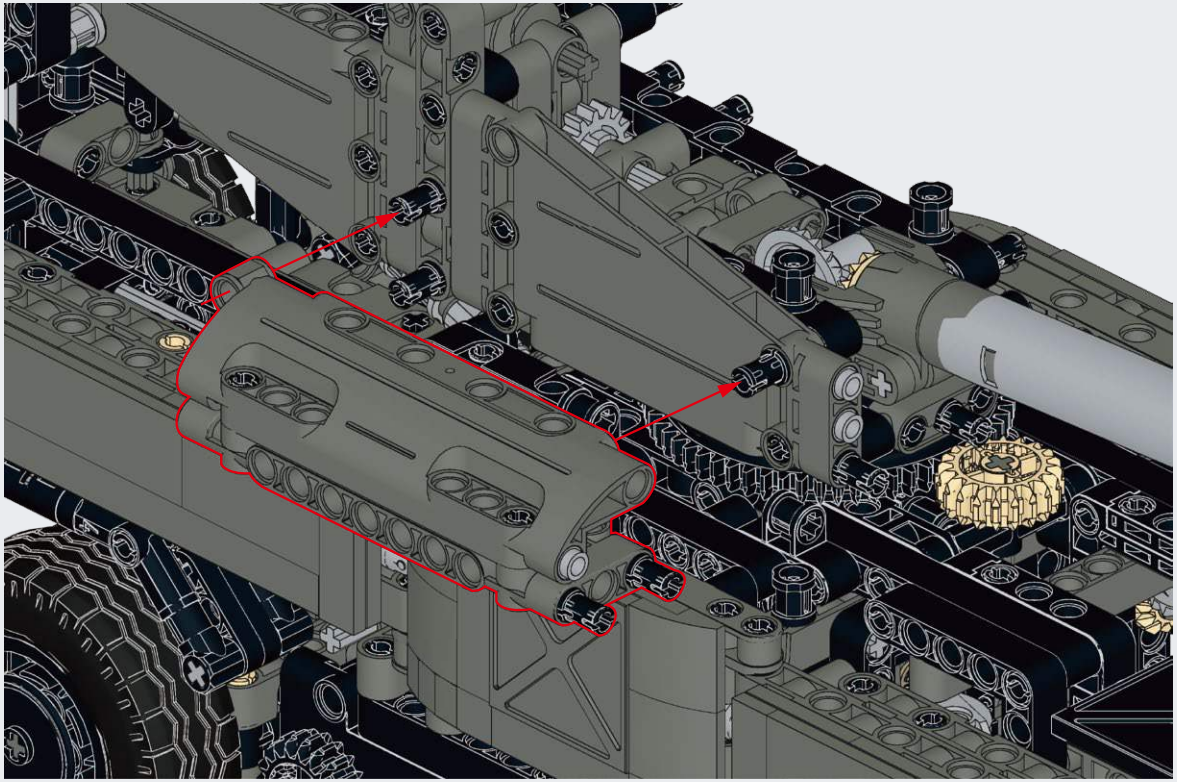

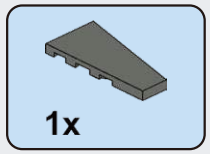

D51

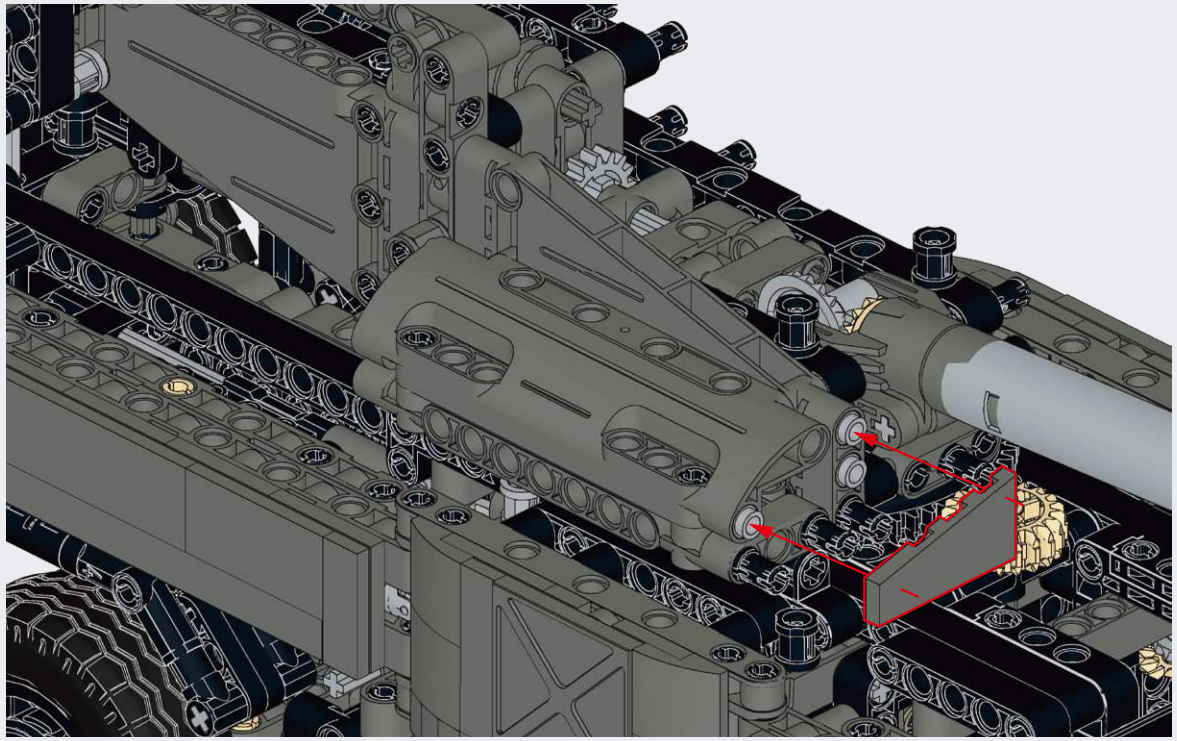

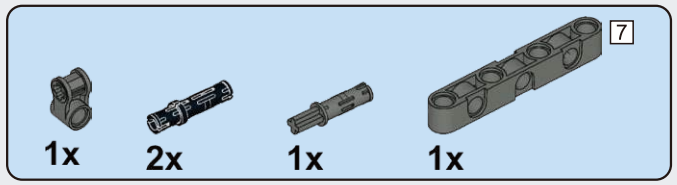

D52

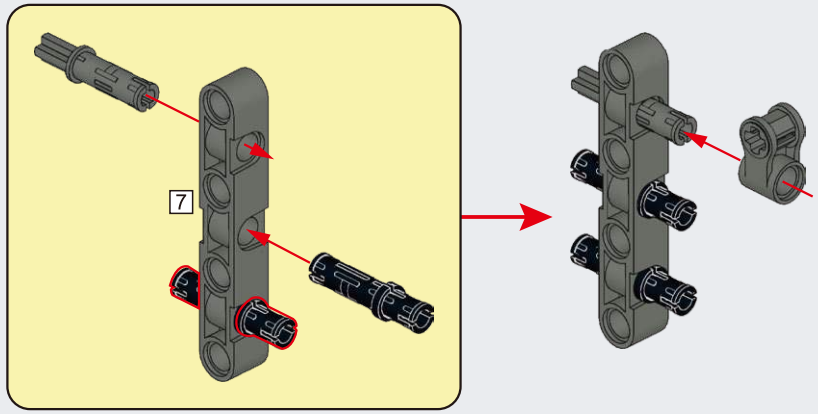

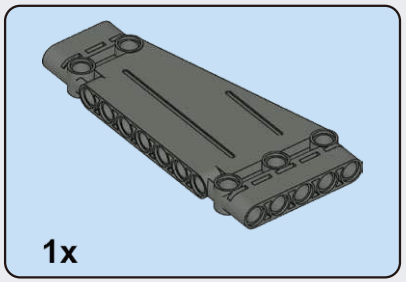

D53

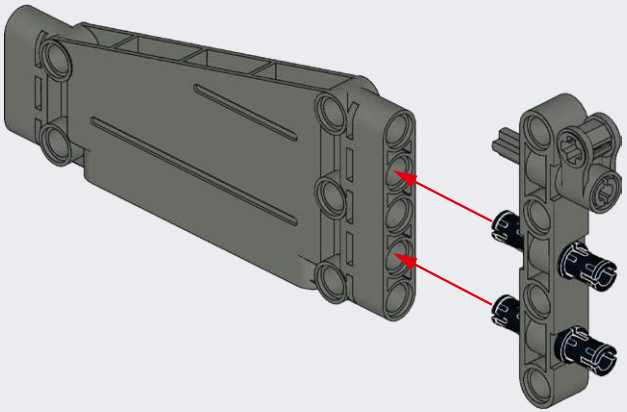

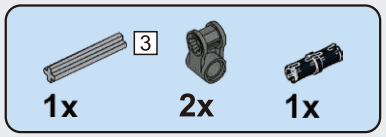

D54

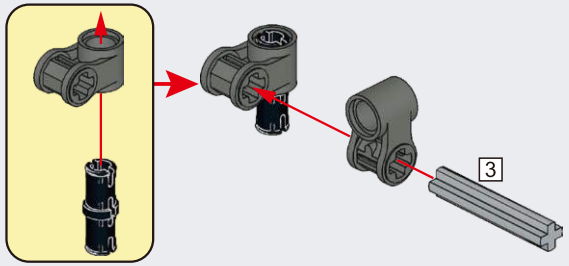

D55

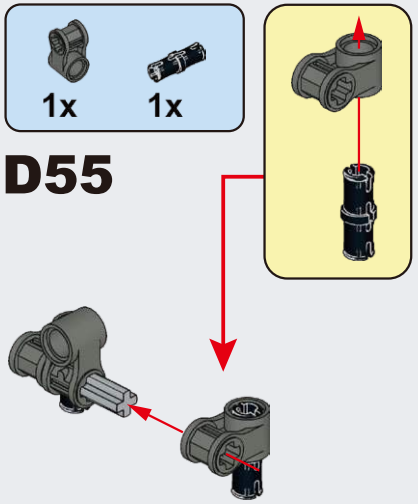

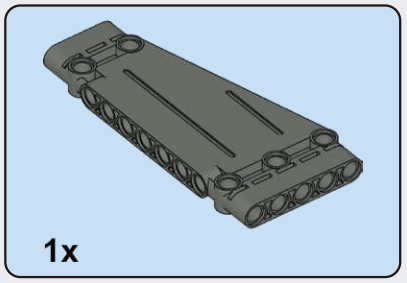

D56

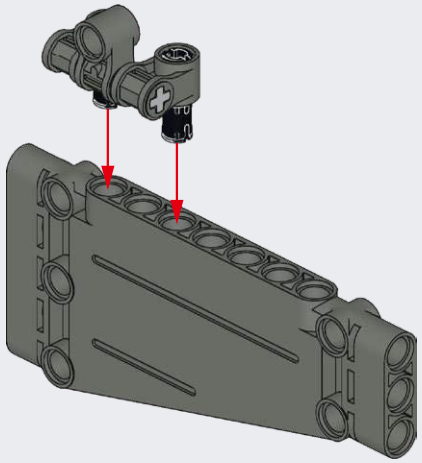

D57

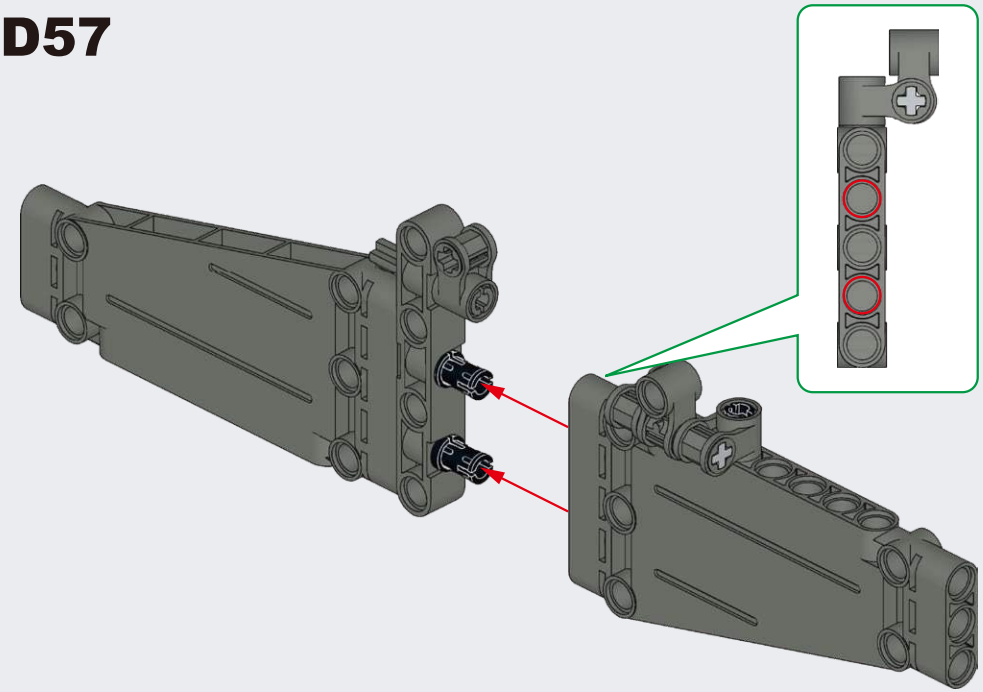

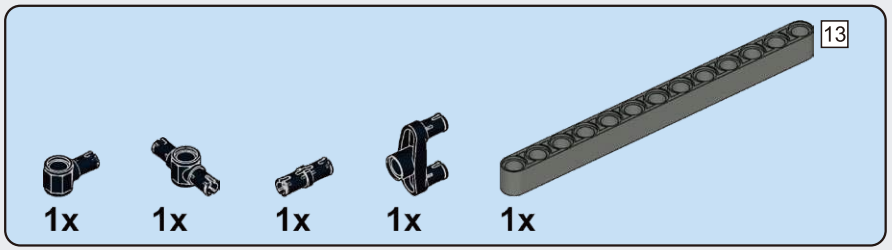

D58

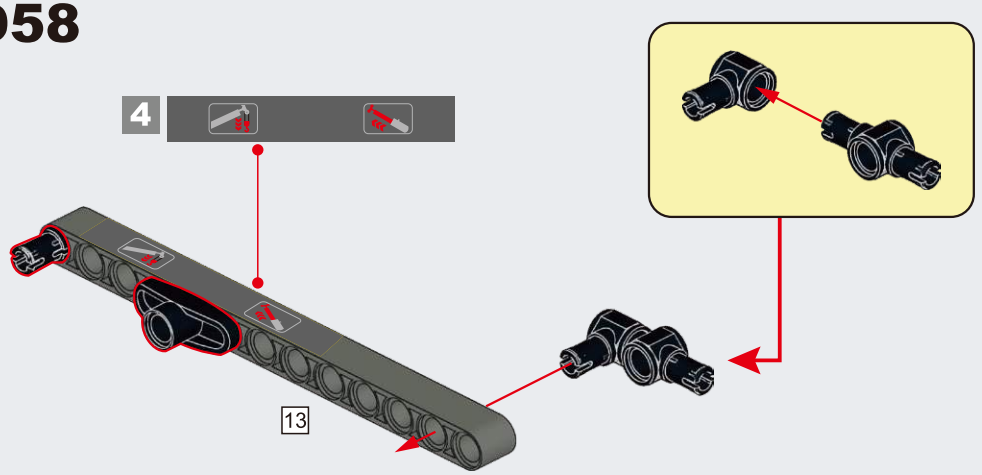

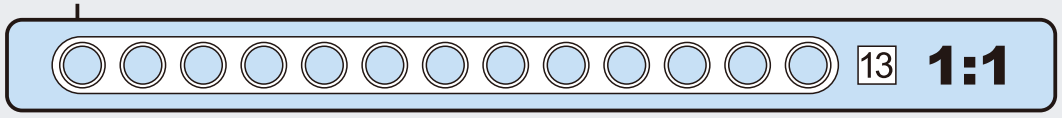

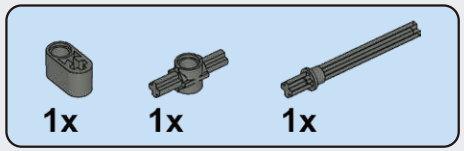

D59

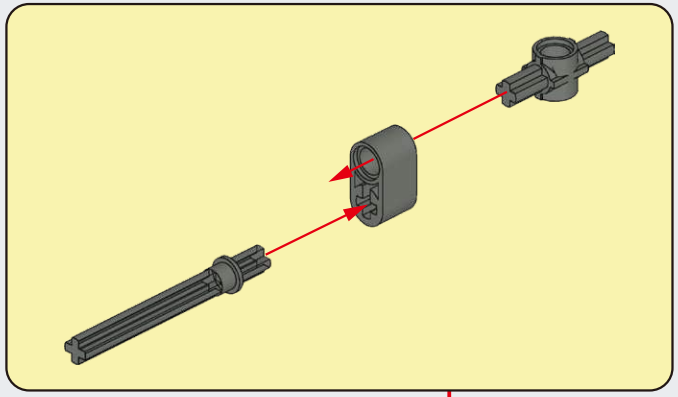

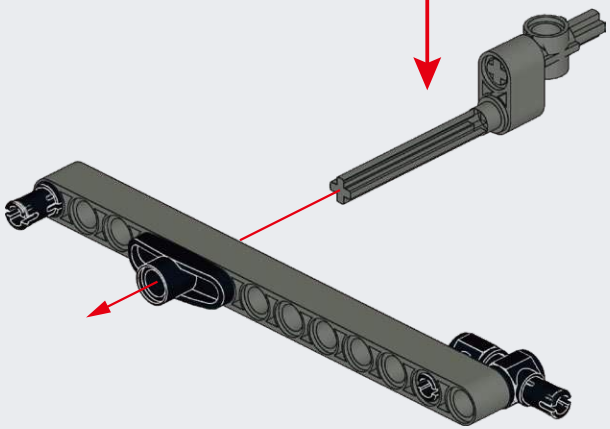

D60

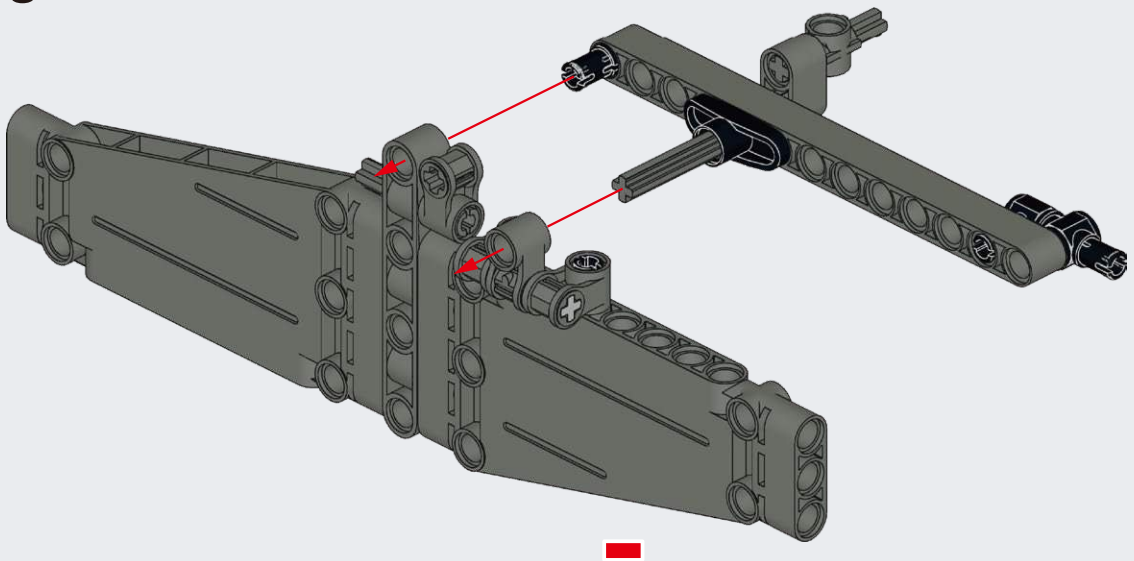

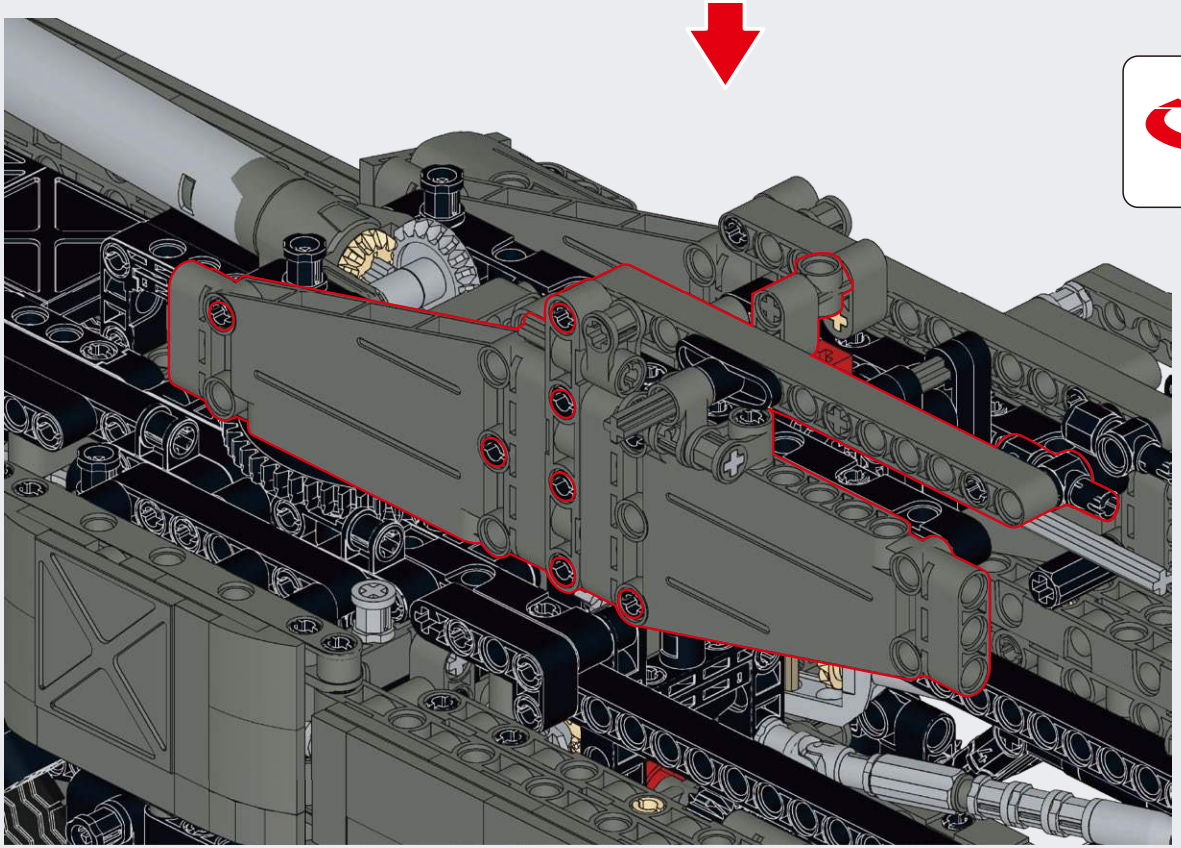

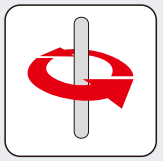

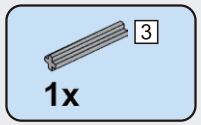

D61

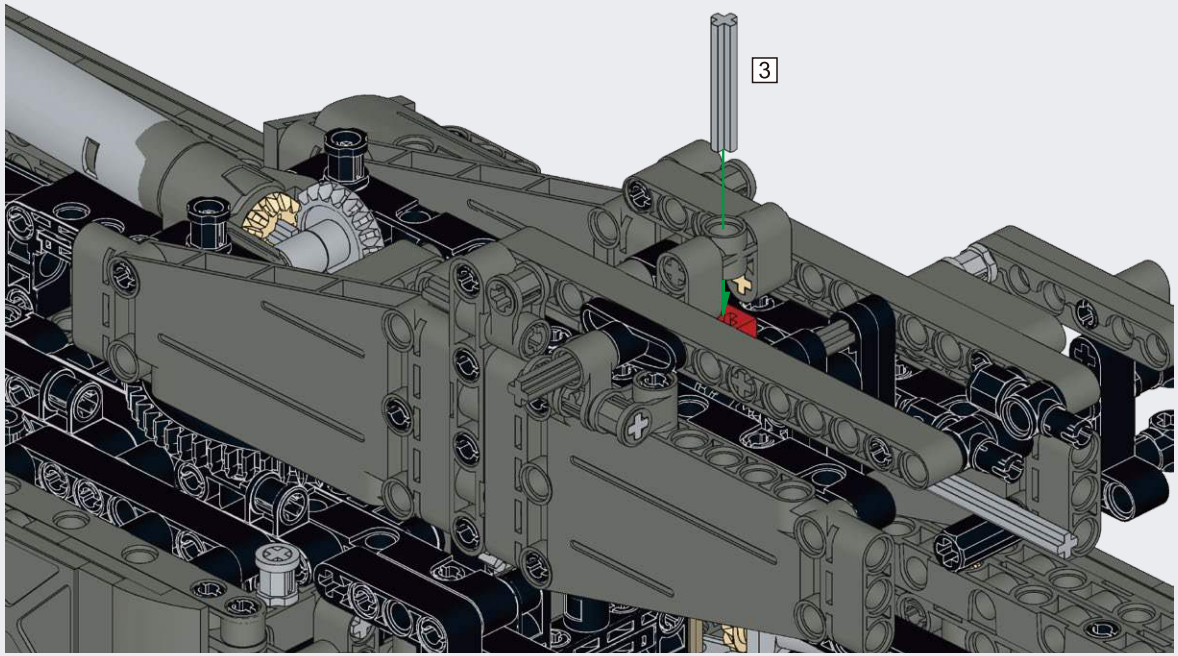

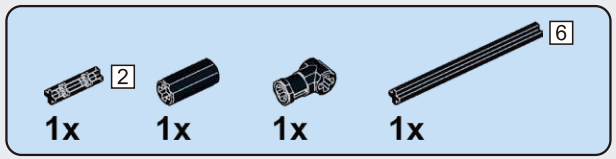

D62

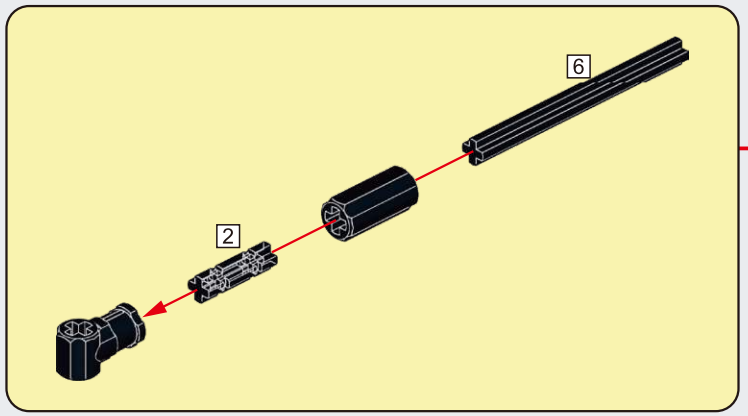

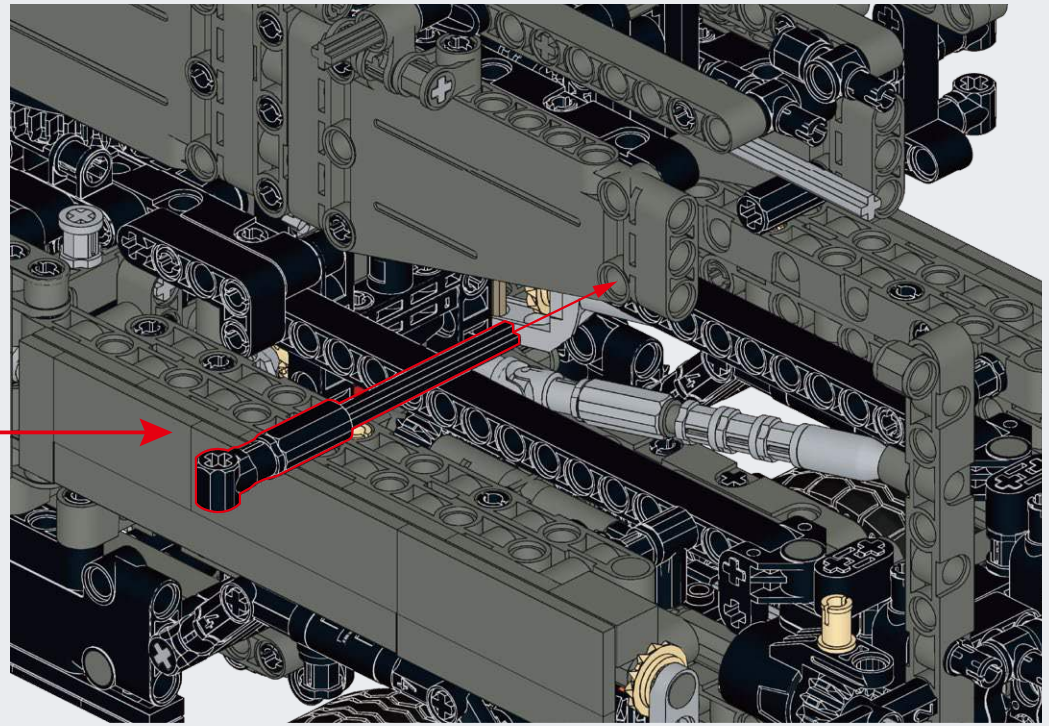

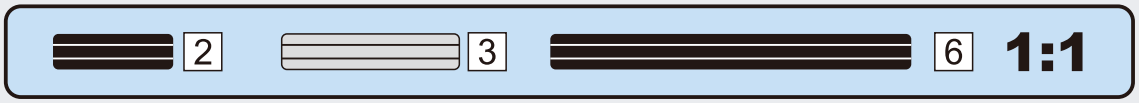

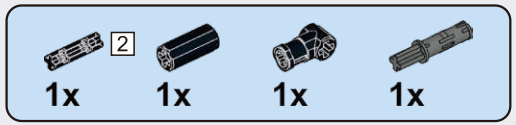

D63

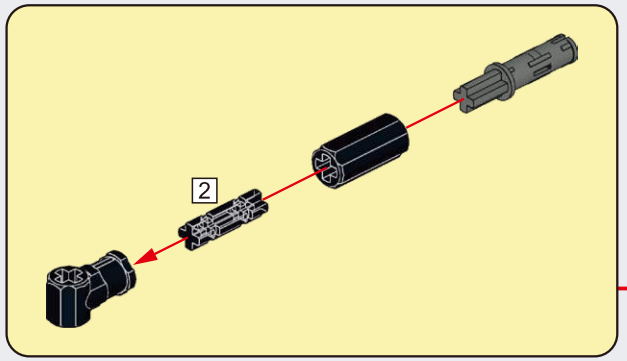

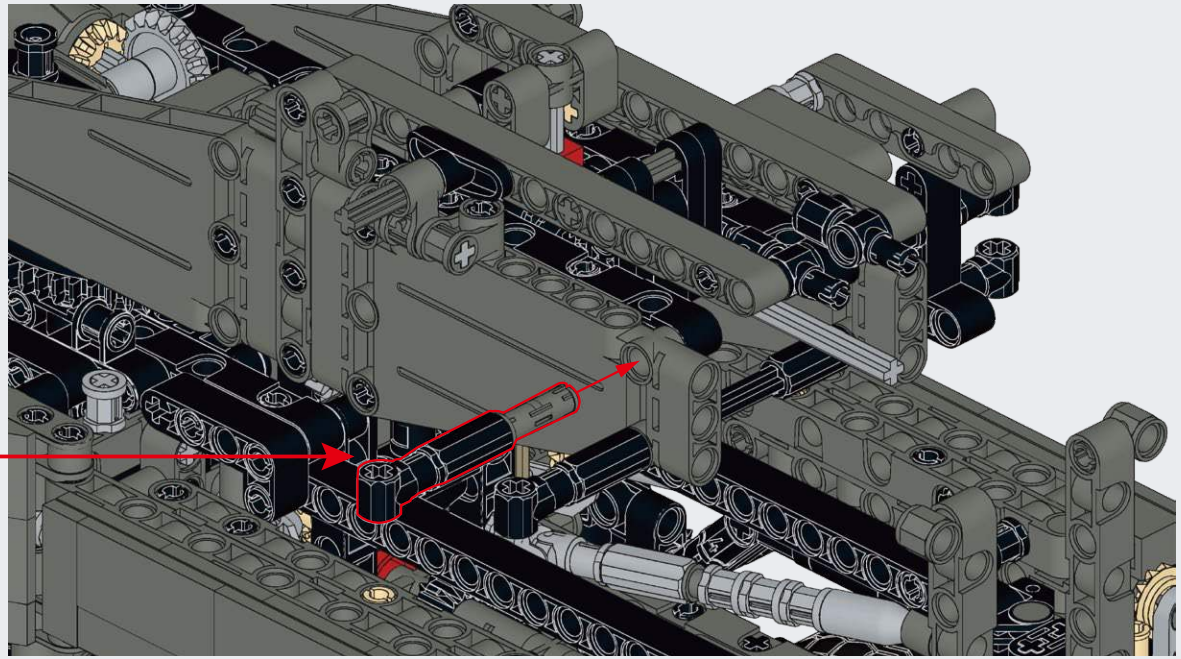

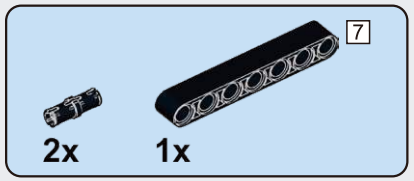

D64

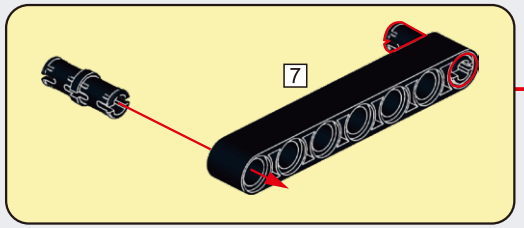

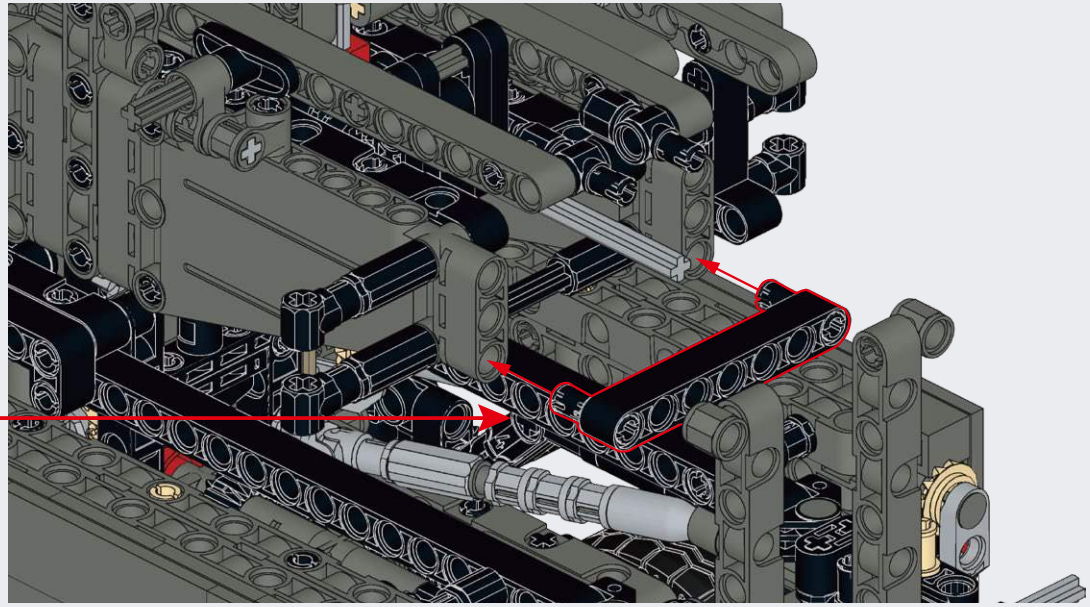

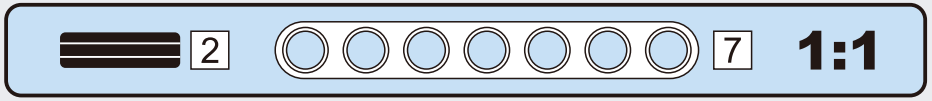

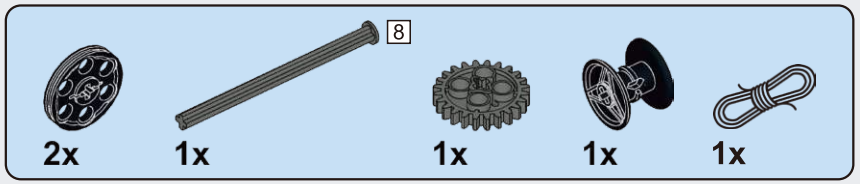

D65

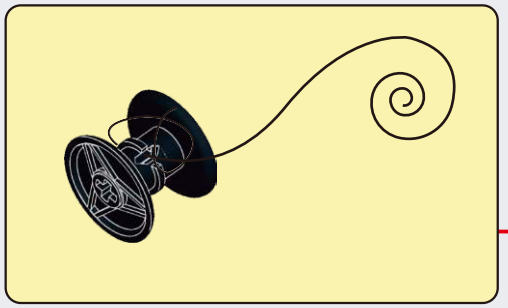

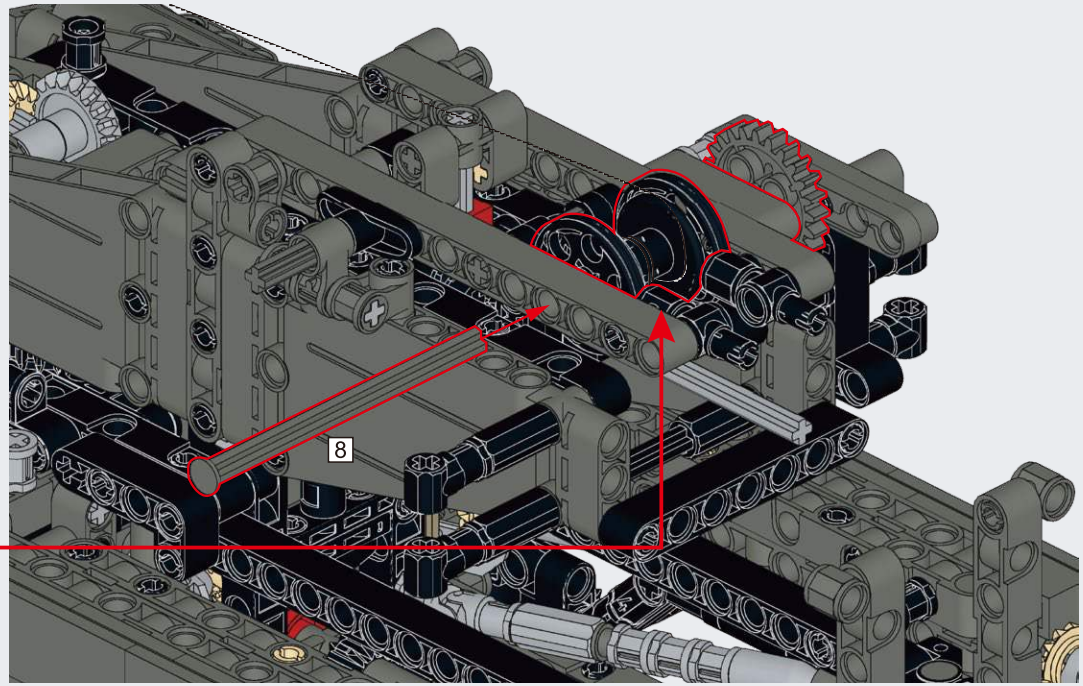

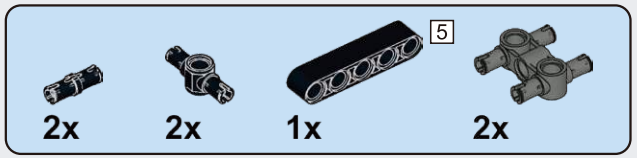

D66

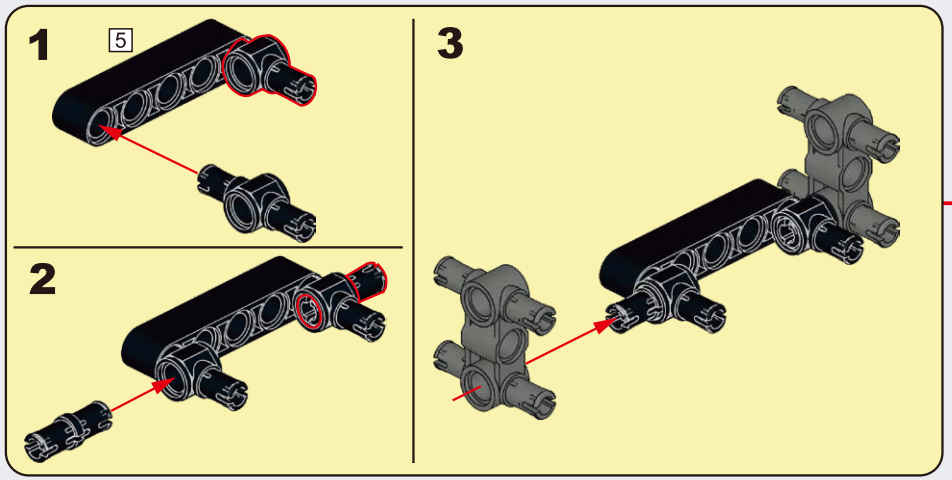

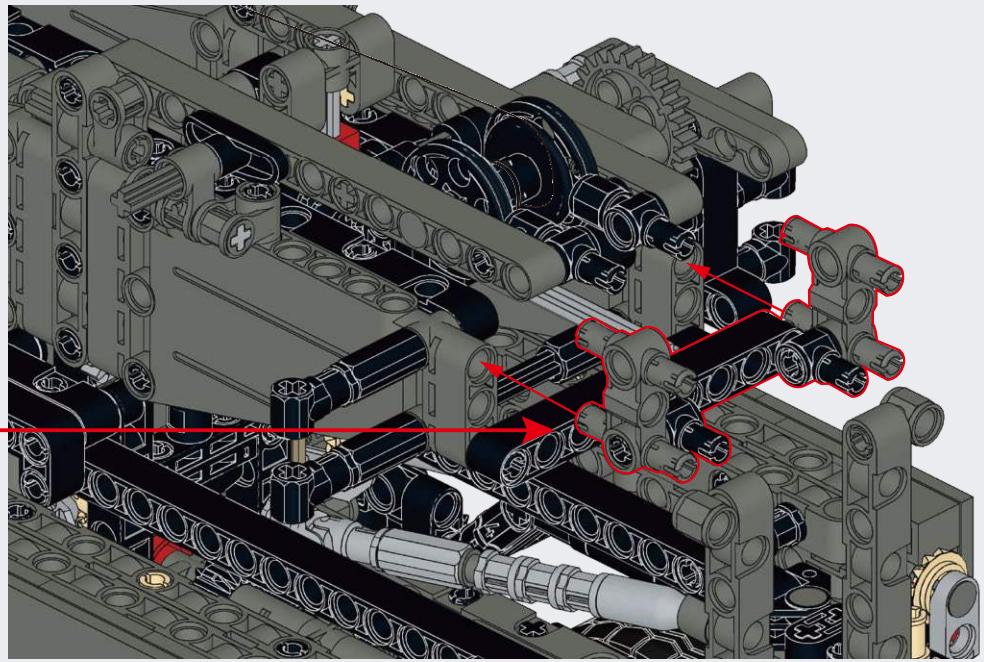

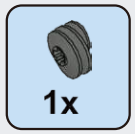

D67

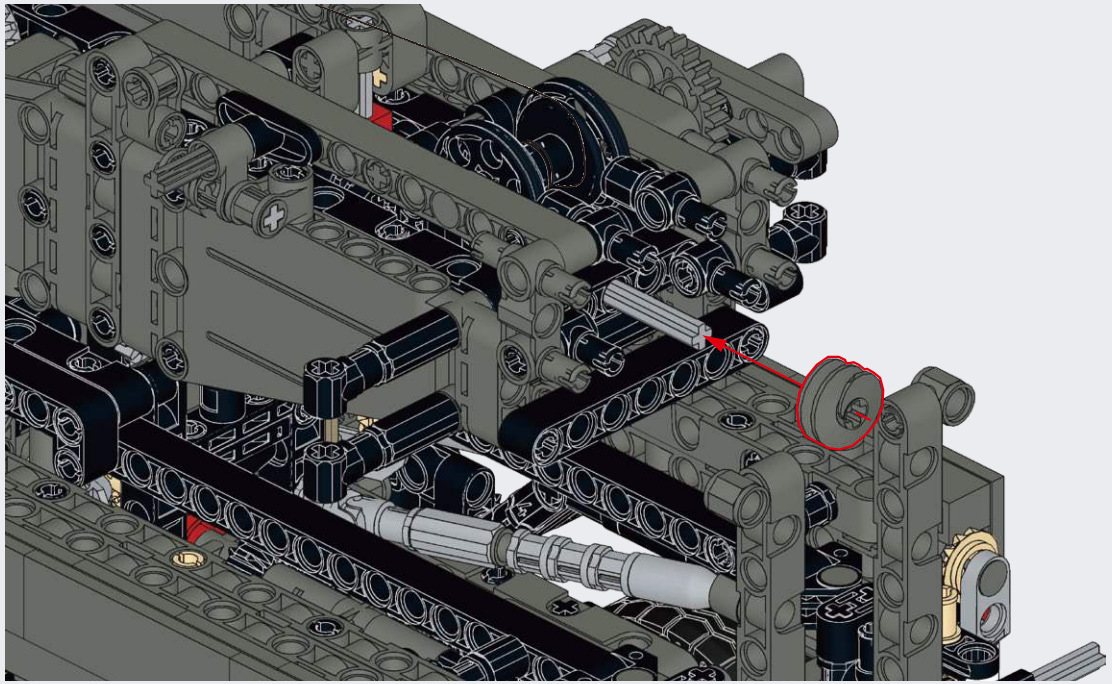

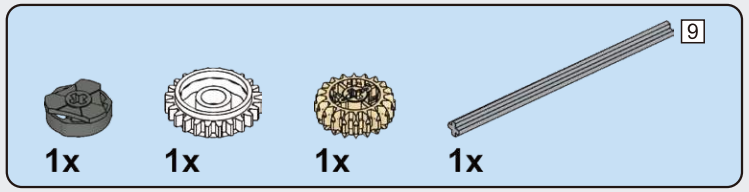

D68

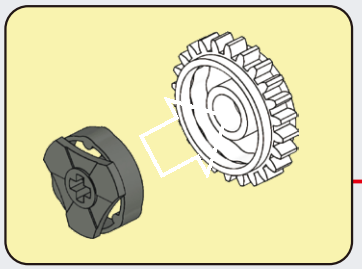

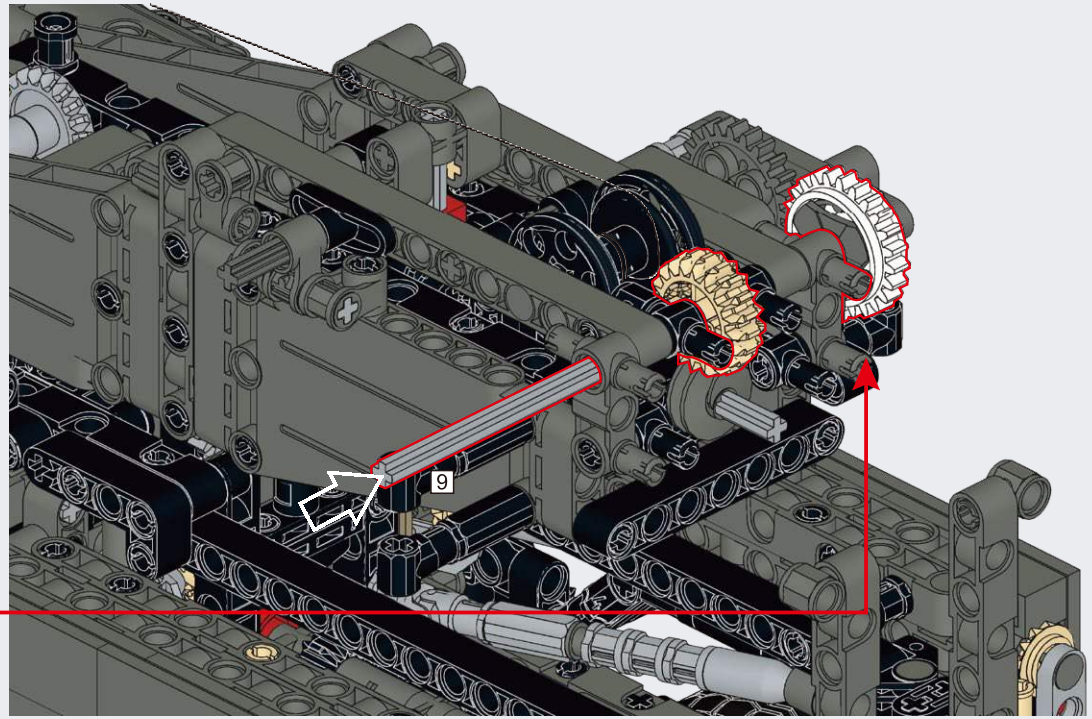

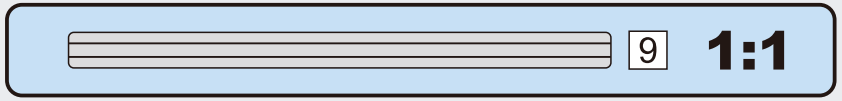

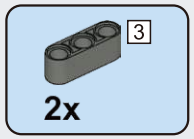

D69

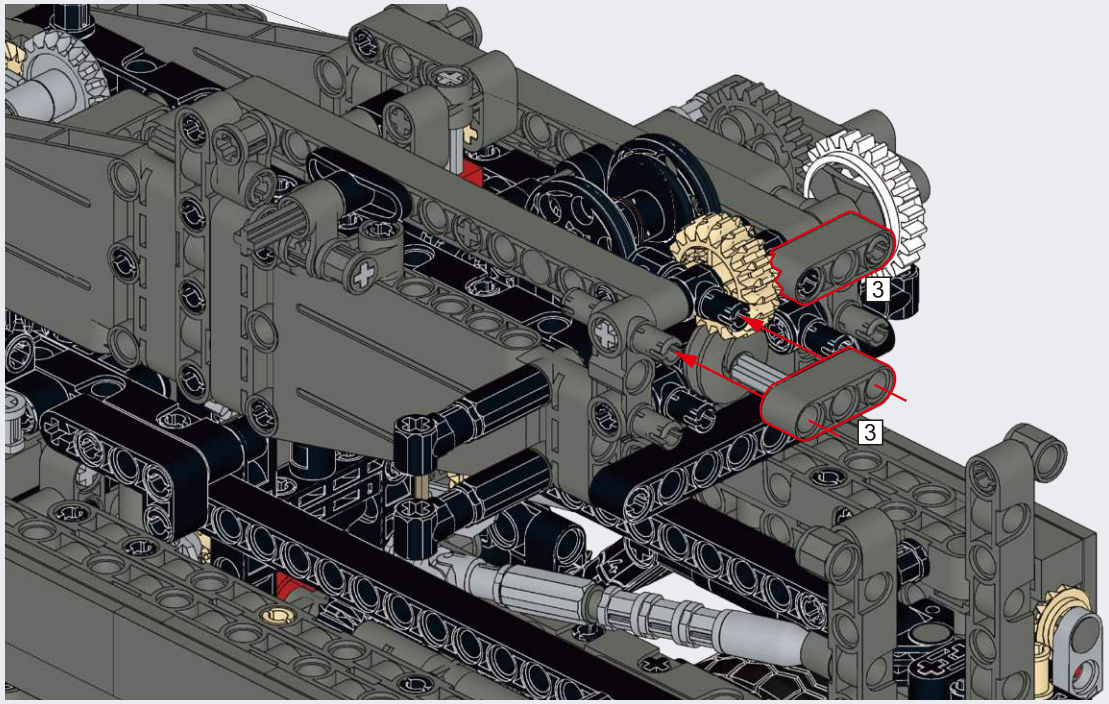

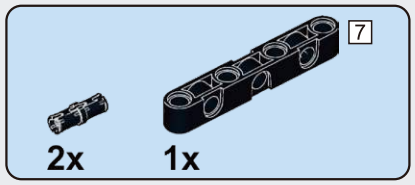

D70

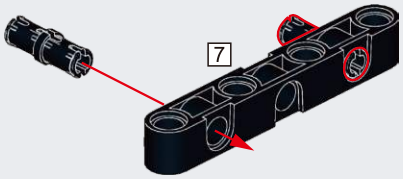

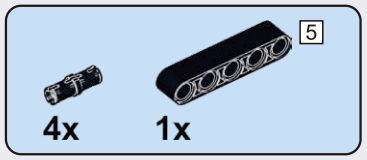

D71

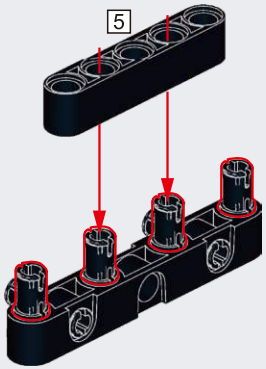

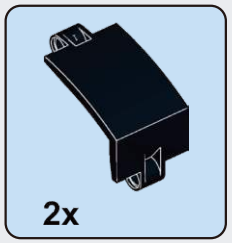

D72

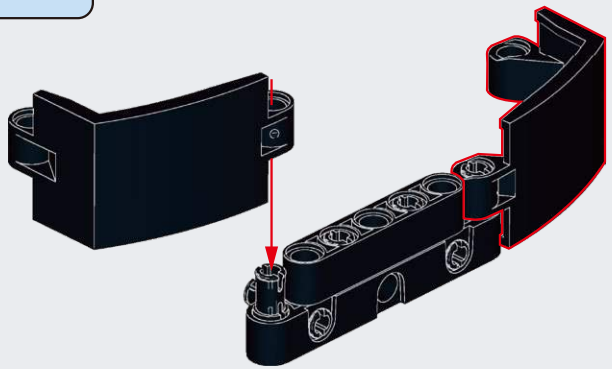

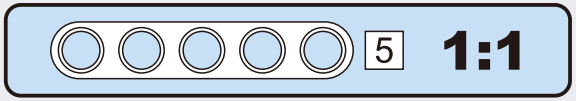

D73

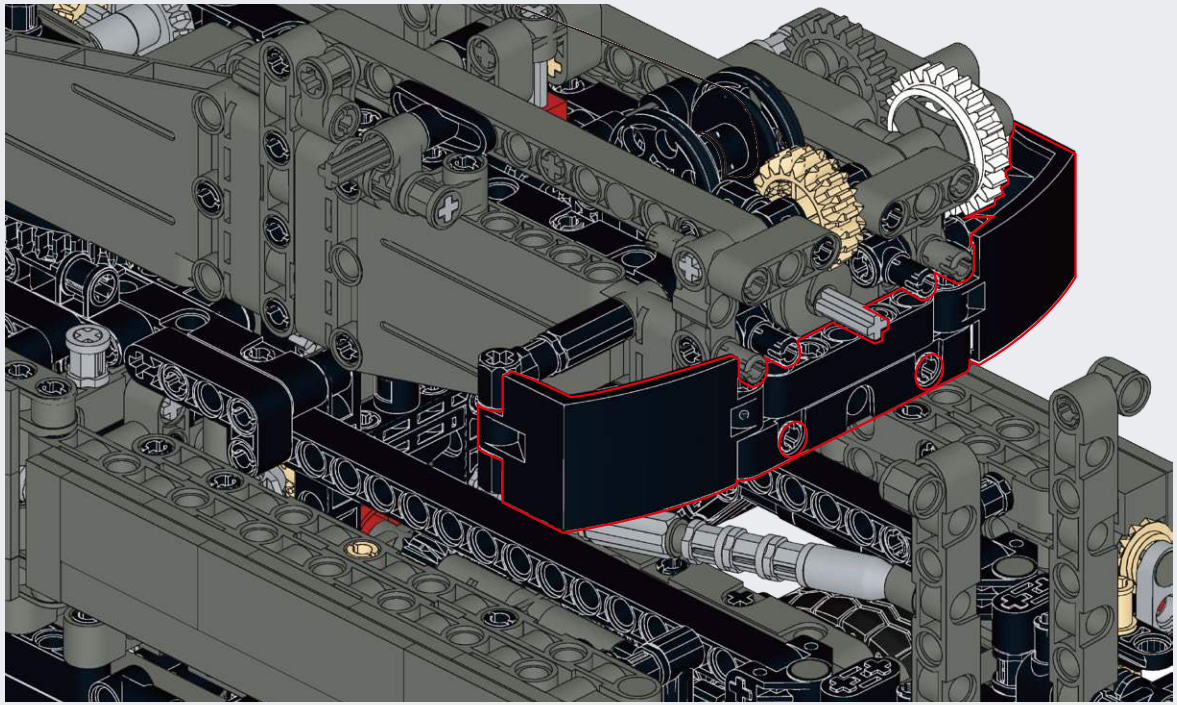

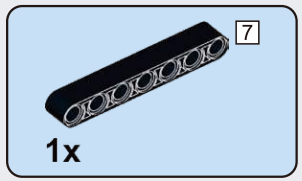

D74

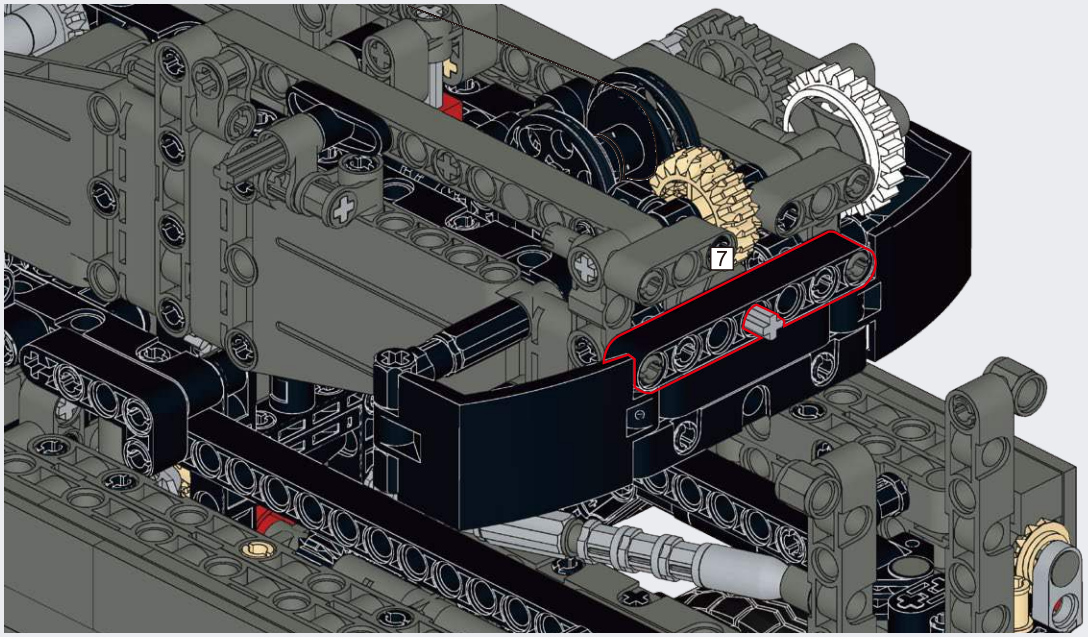

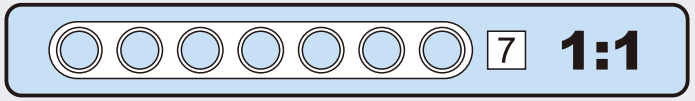

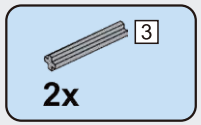

D75

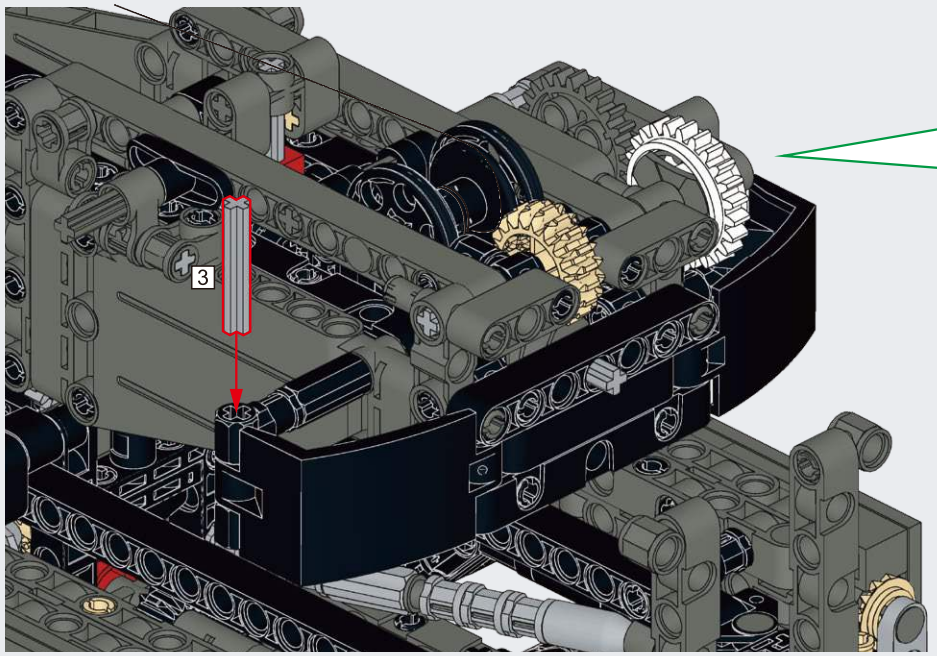

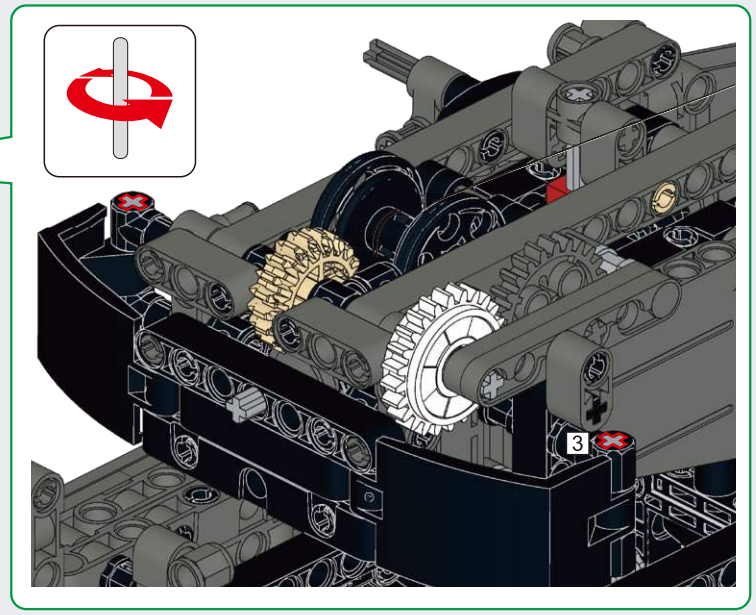

D76

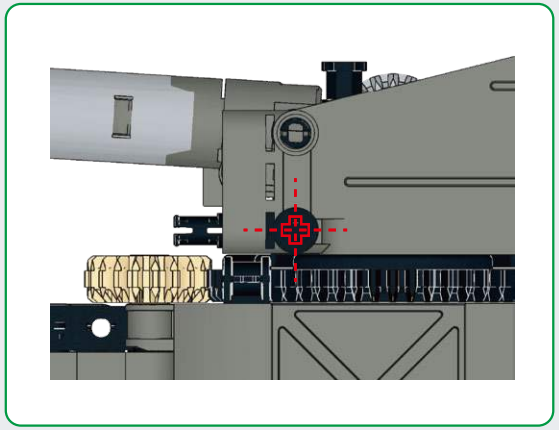

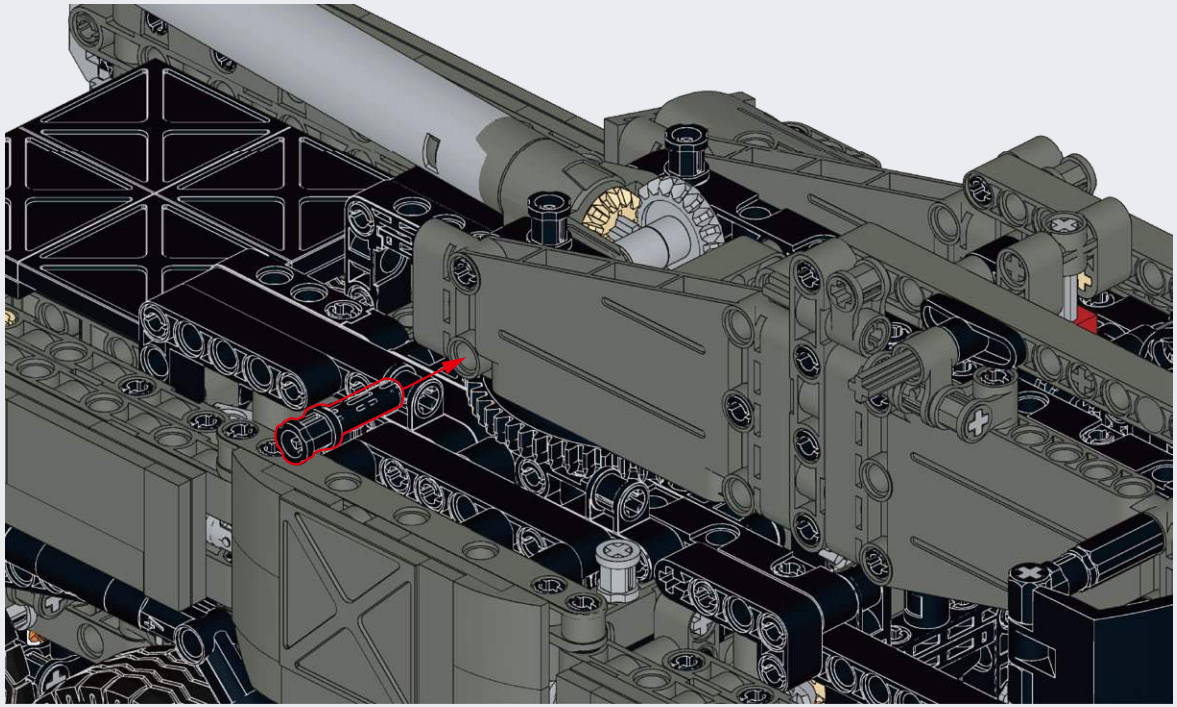

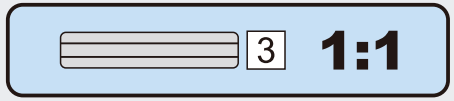

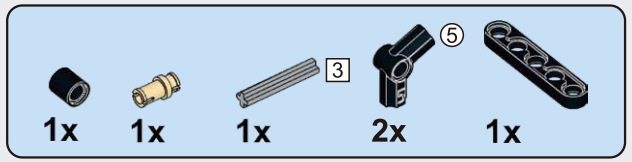

D77

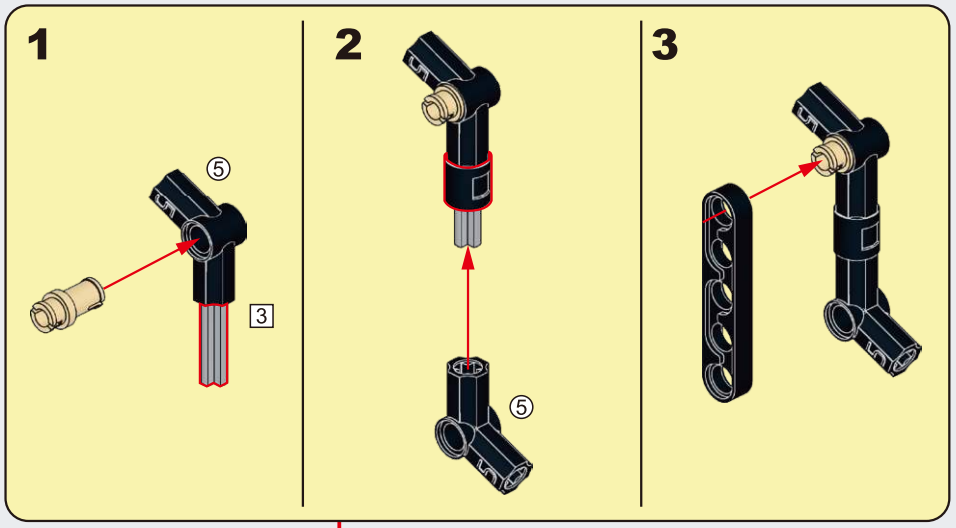

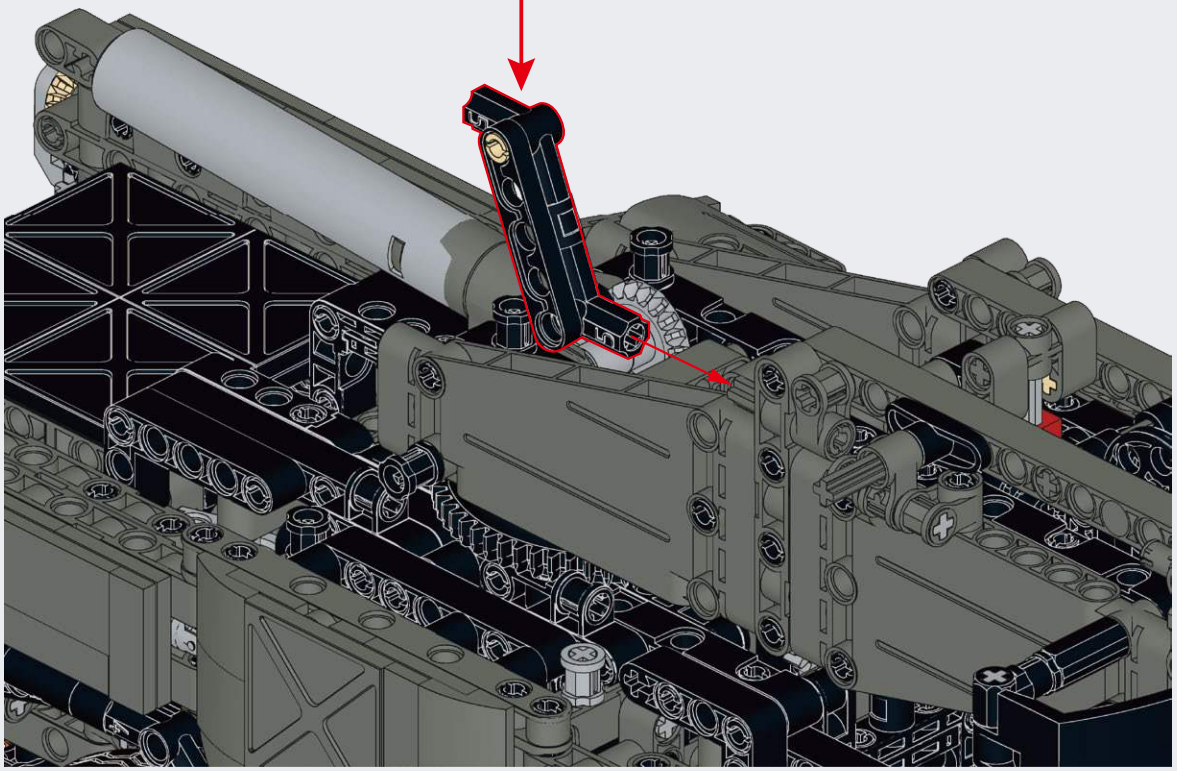

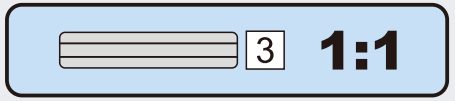

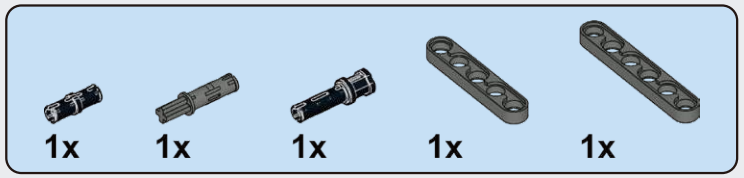

D78

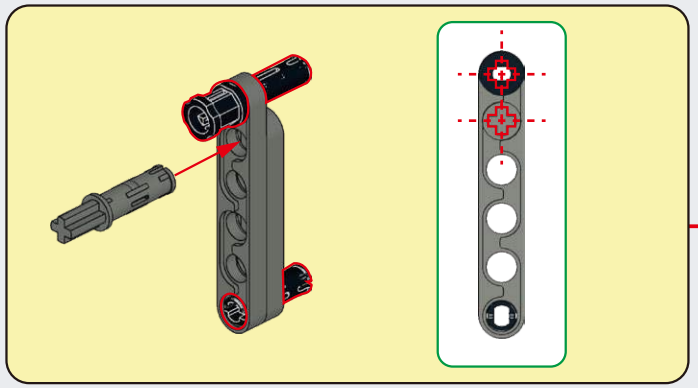

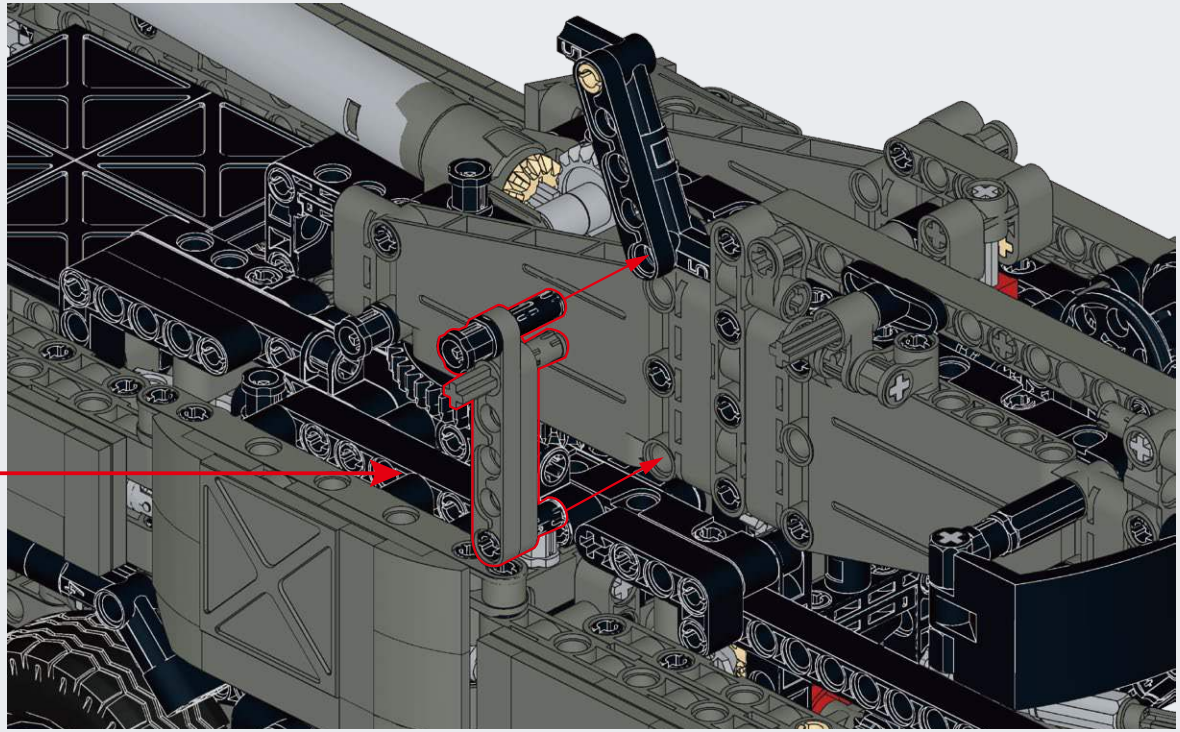

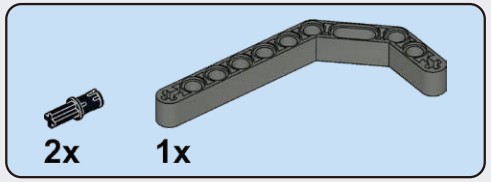

D79

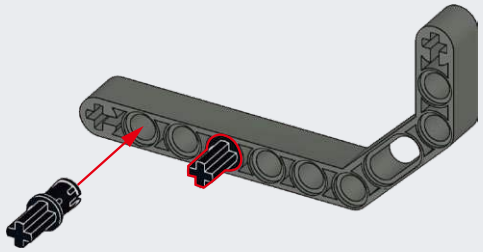

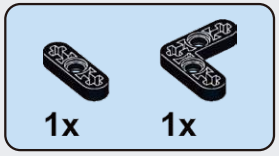

D80

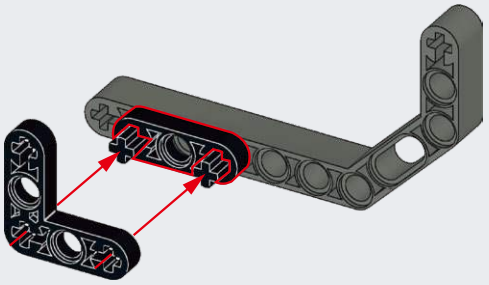

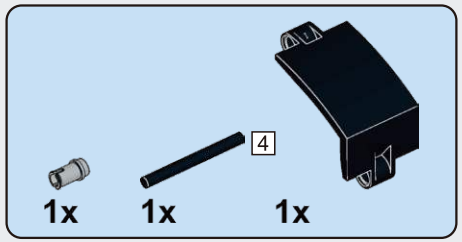

D81

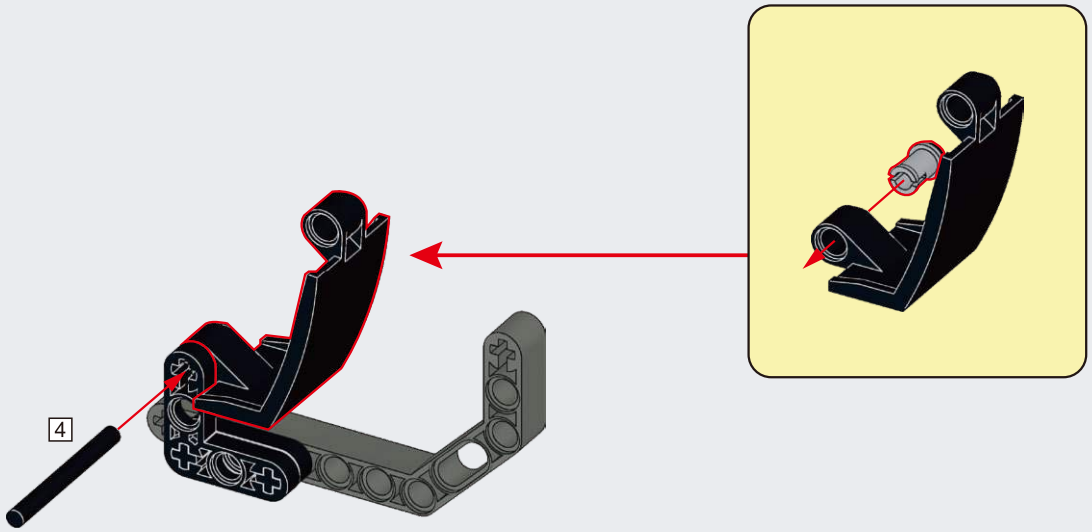

D82

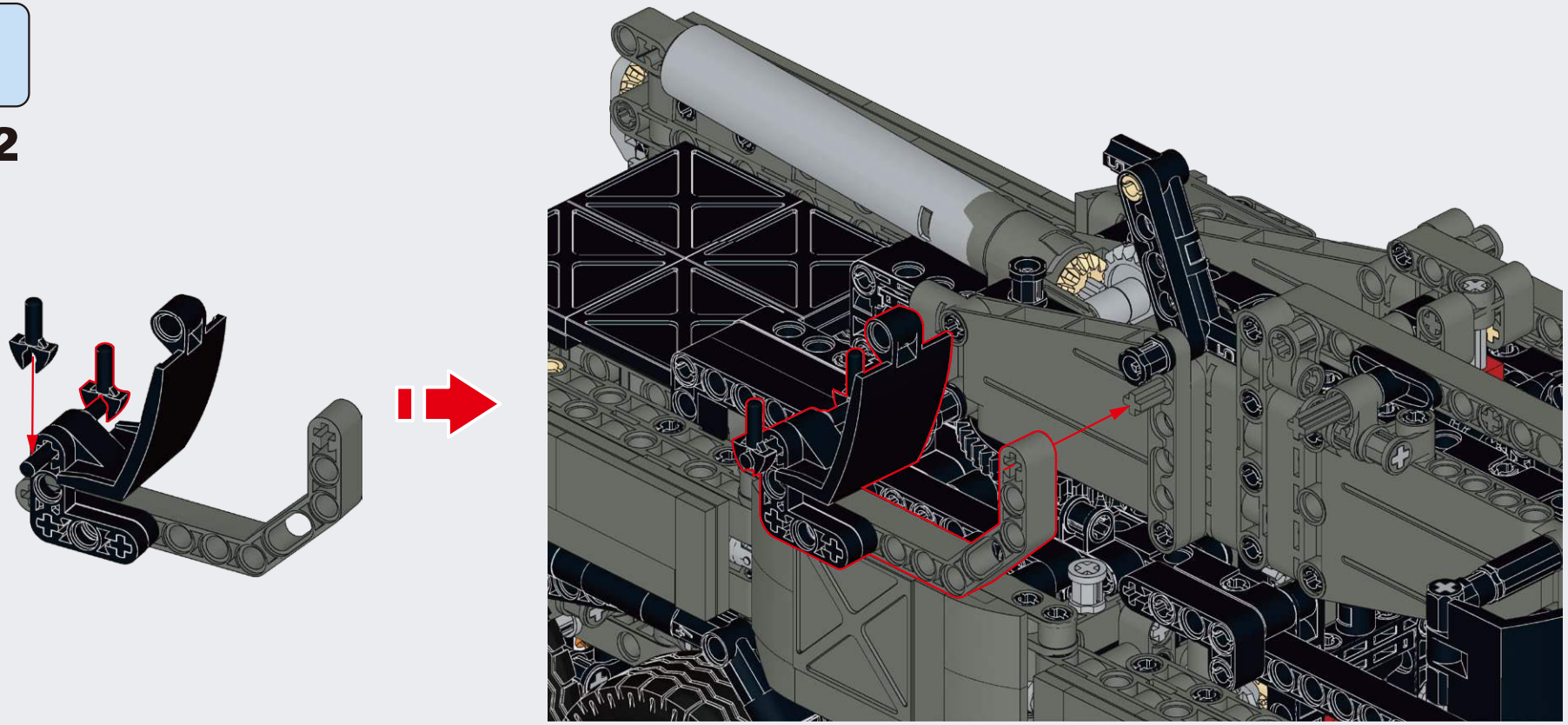

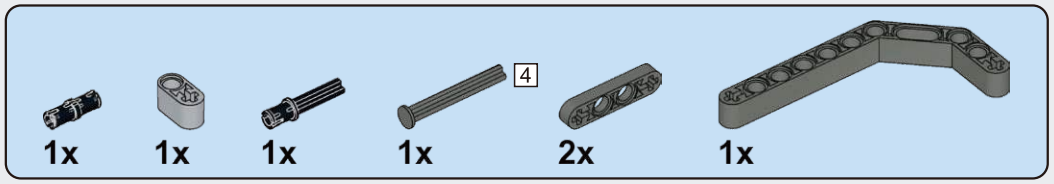

D83

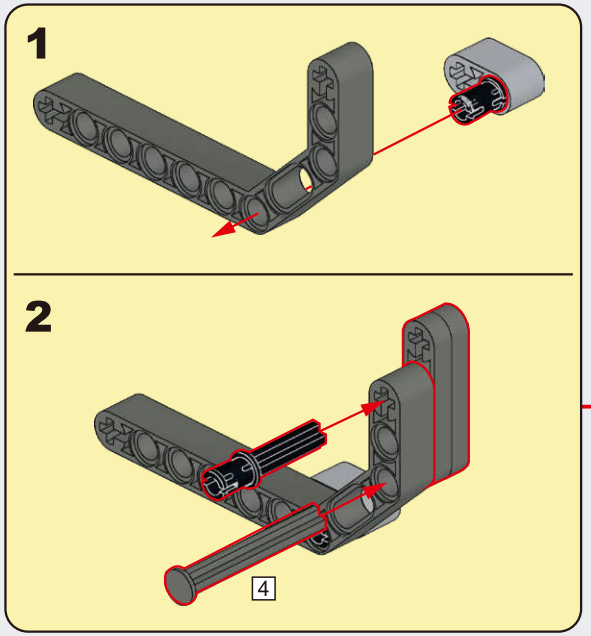

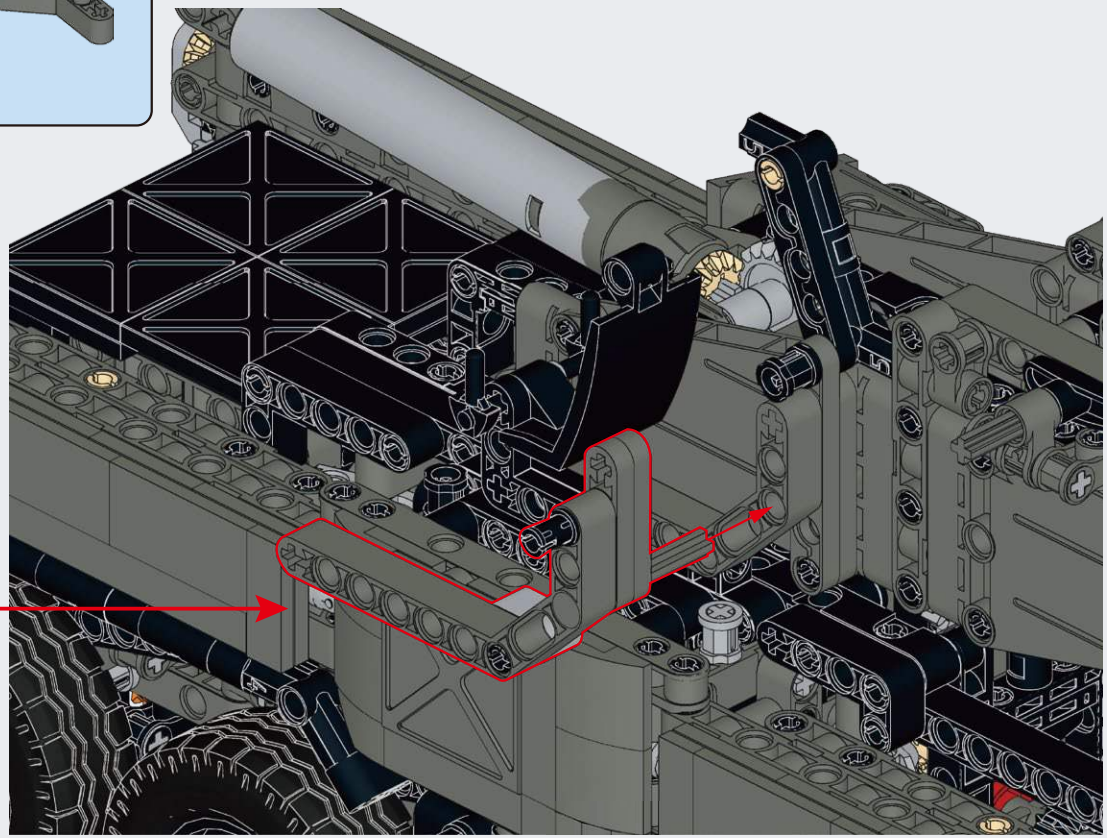

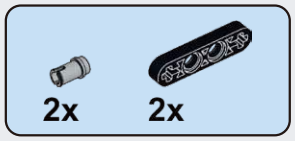

D84

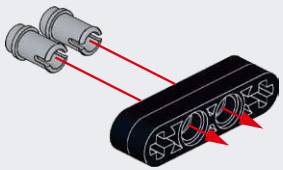

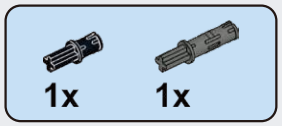

D85

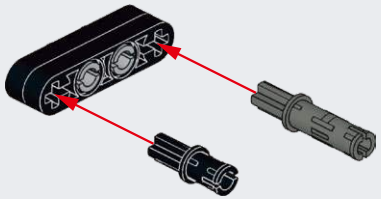

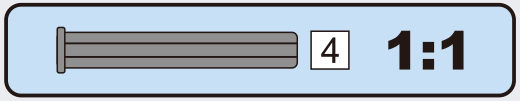

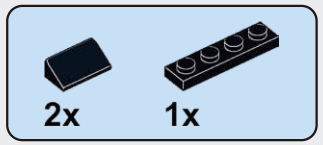

D86

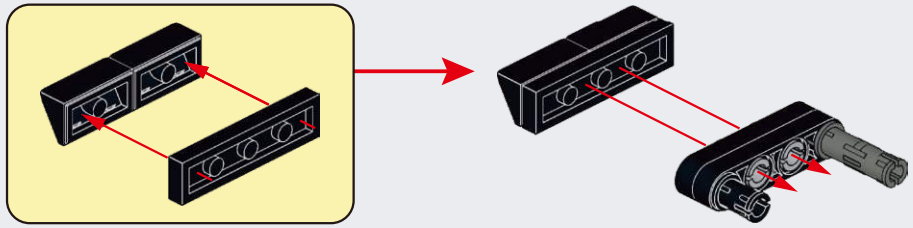

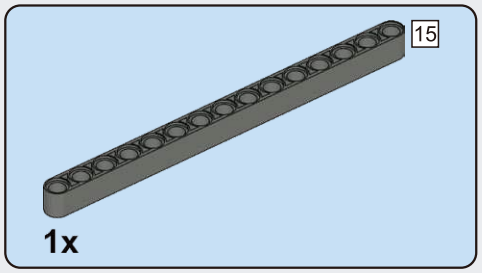

D87

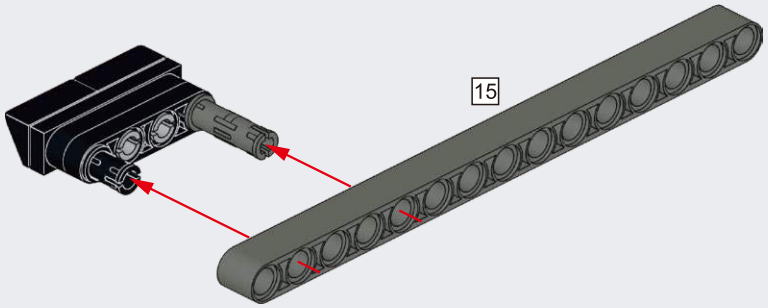

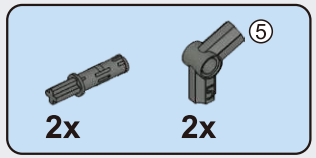

D88

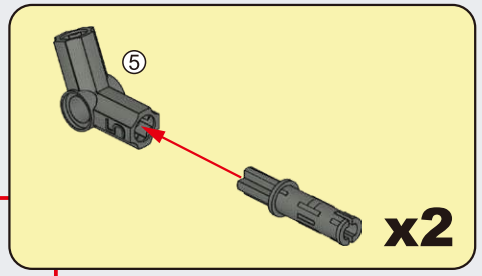

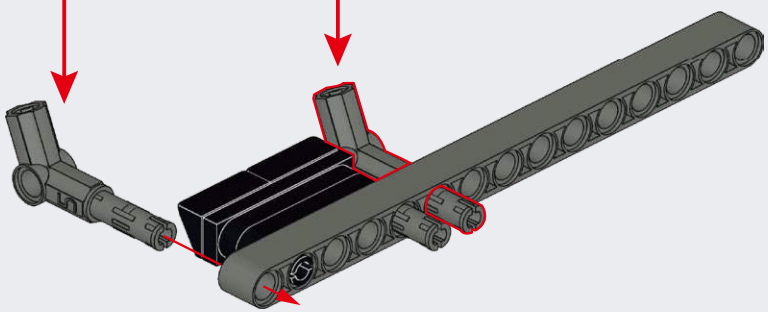

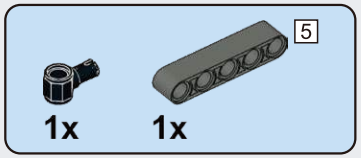

D89

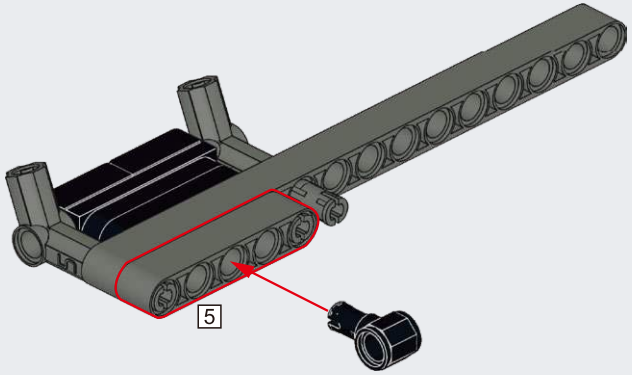

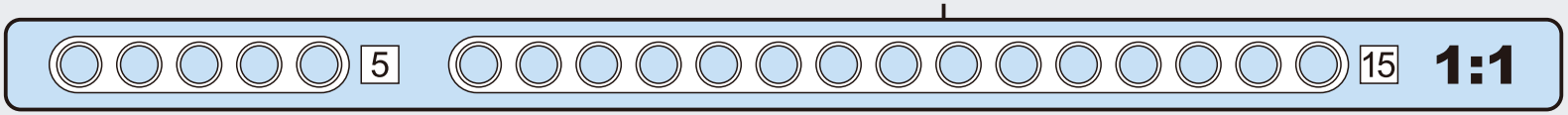

D90

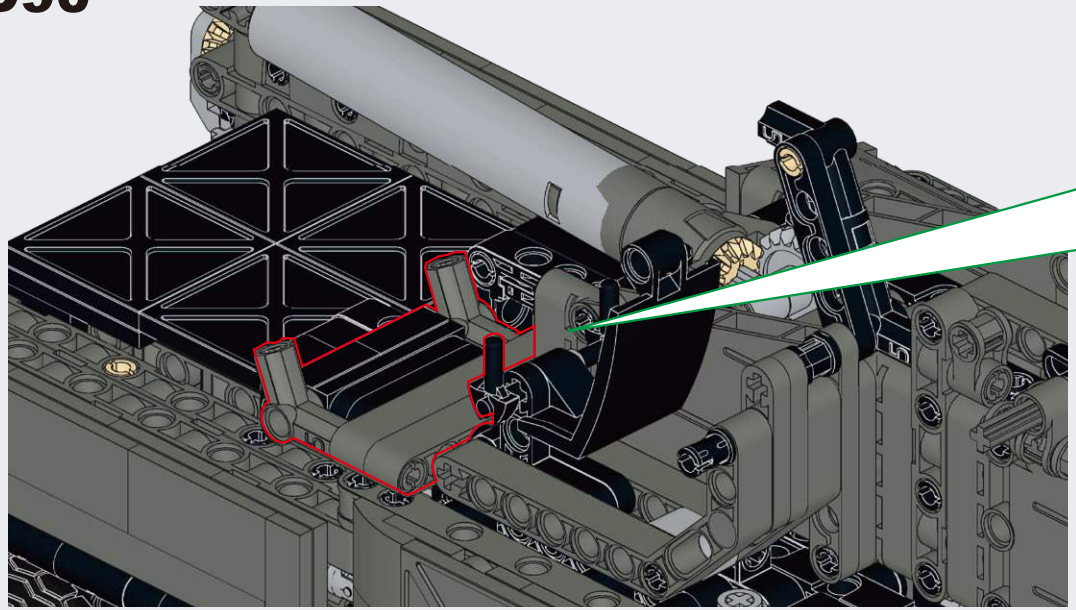

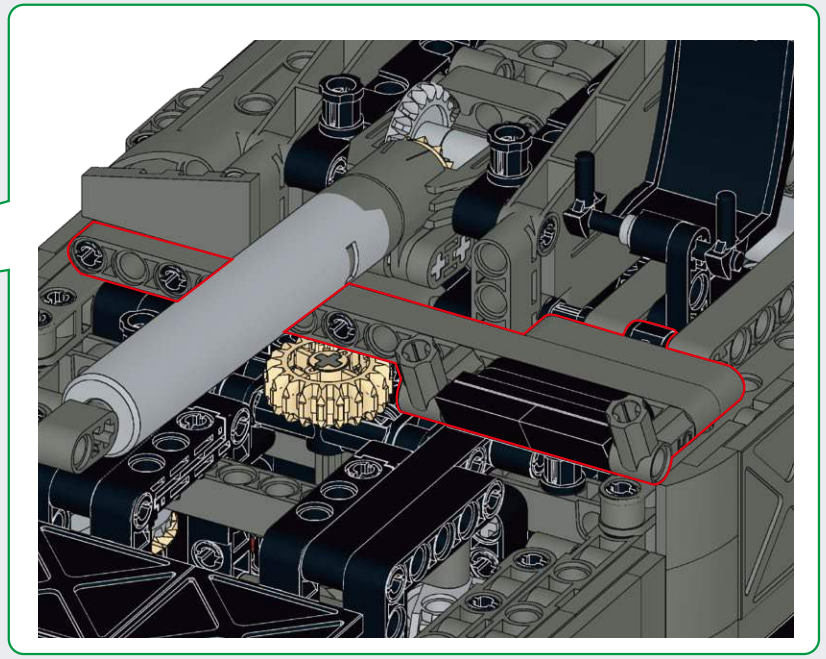

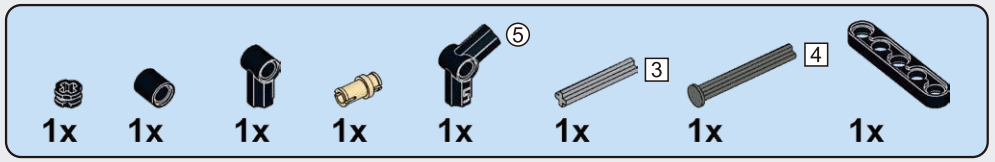

D91

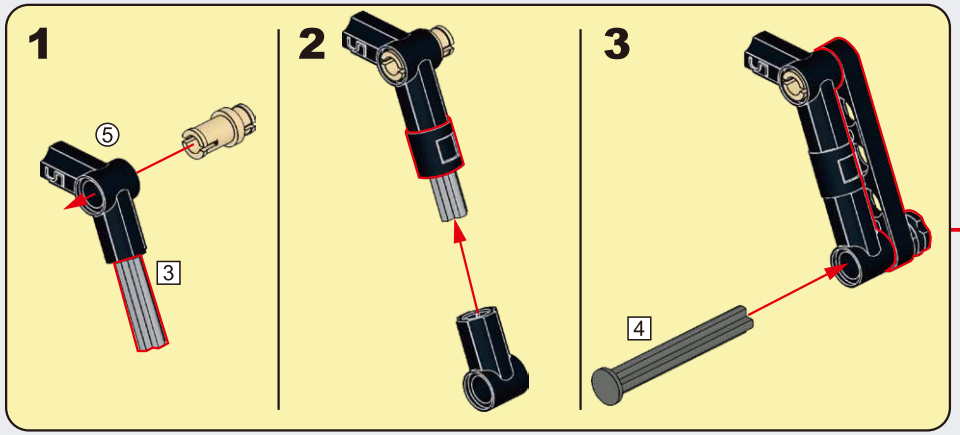

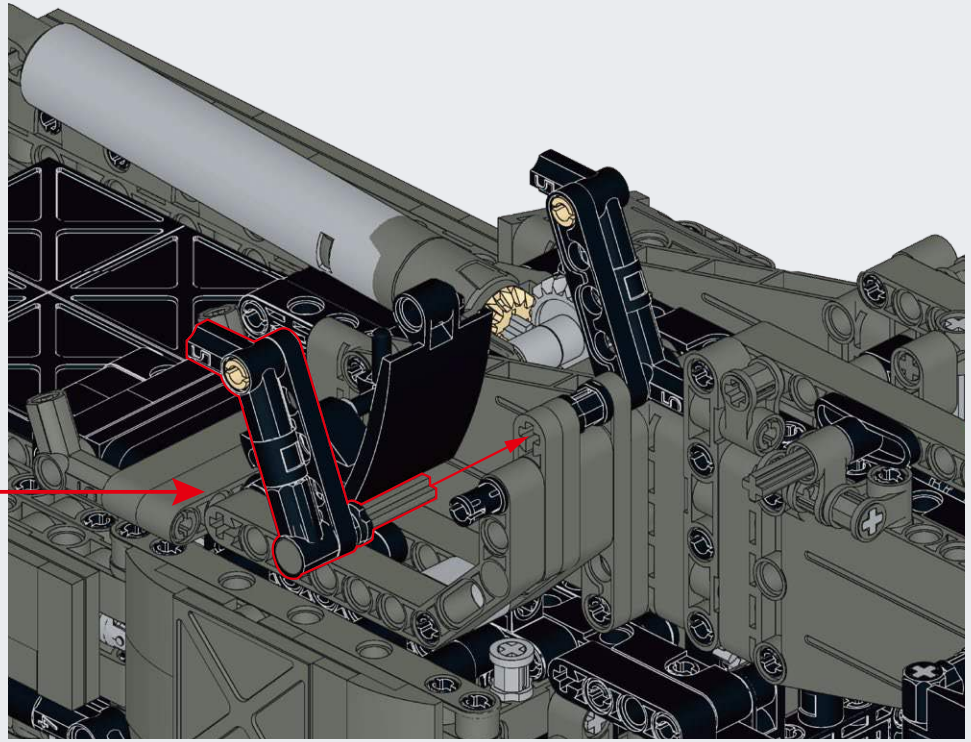

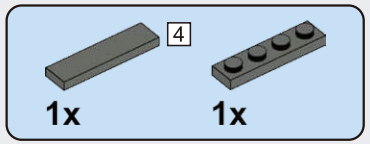

D92

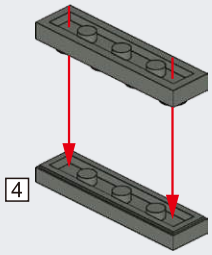

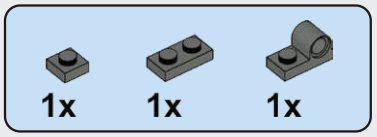

D93

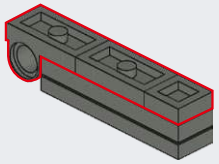

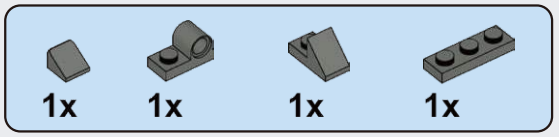

D94

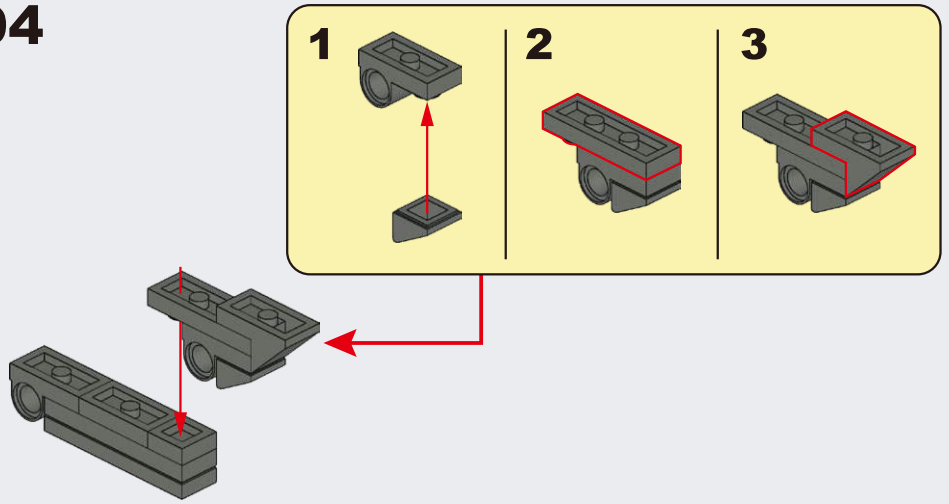

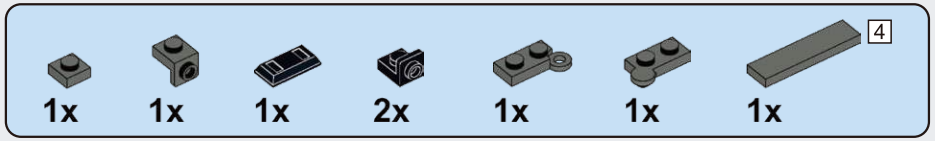

D95

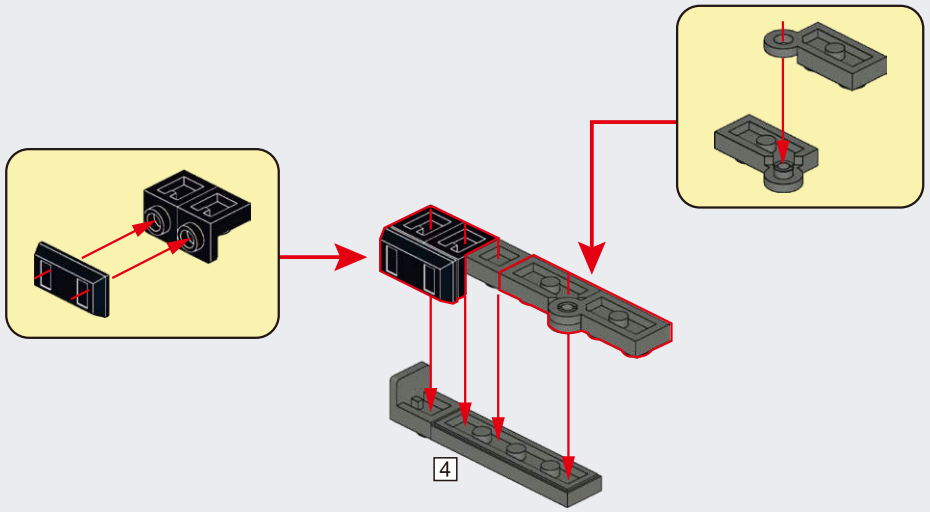

D96

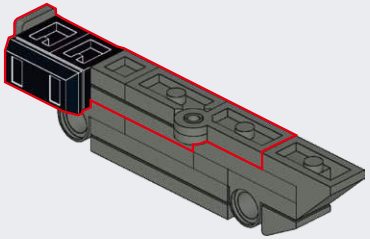

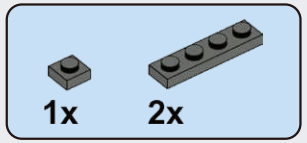

D97

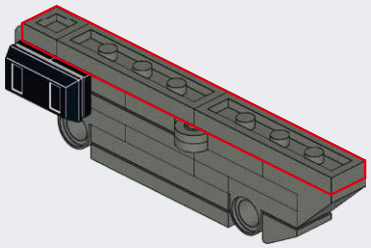

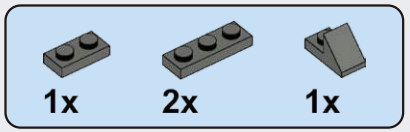

D98

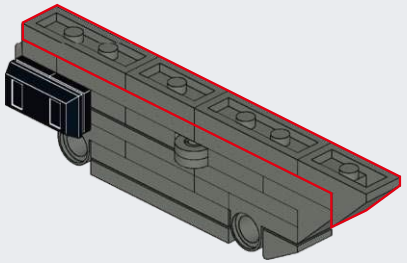

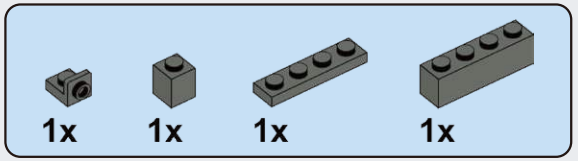

D99

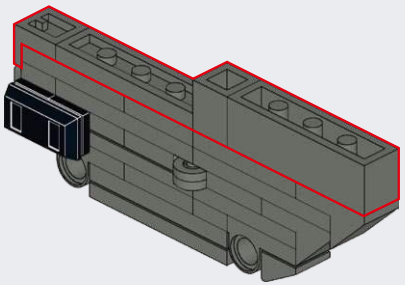

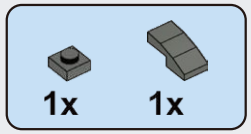

D100

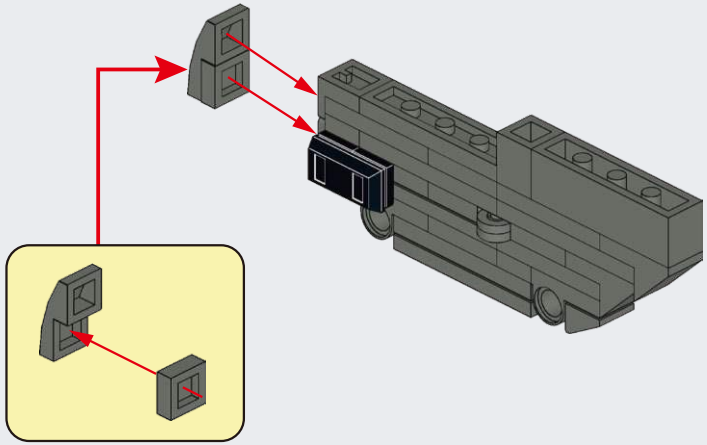

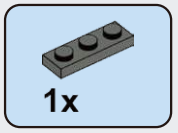

D101

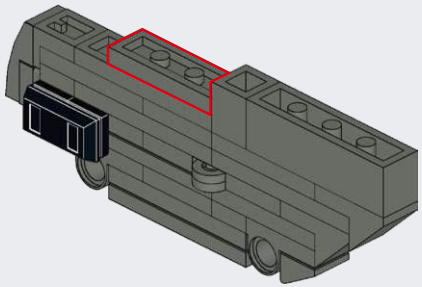

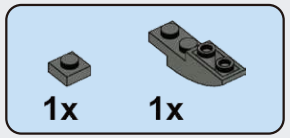

D102

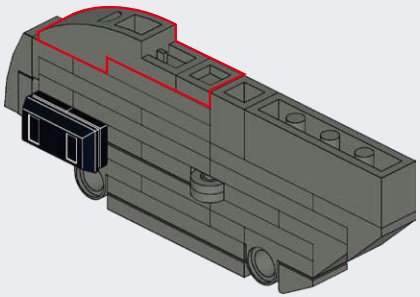

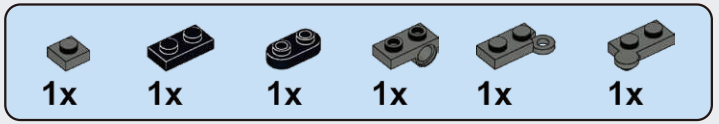

D103

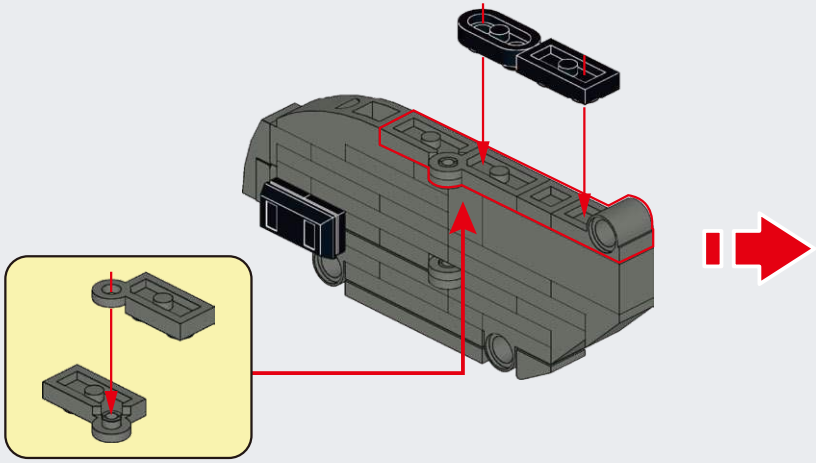

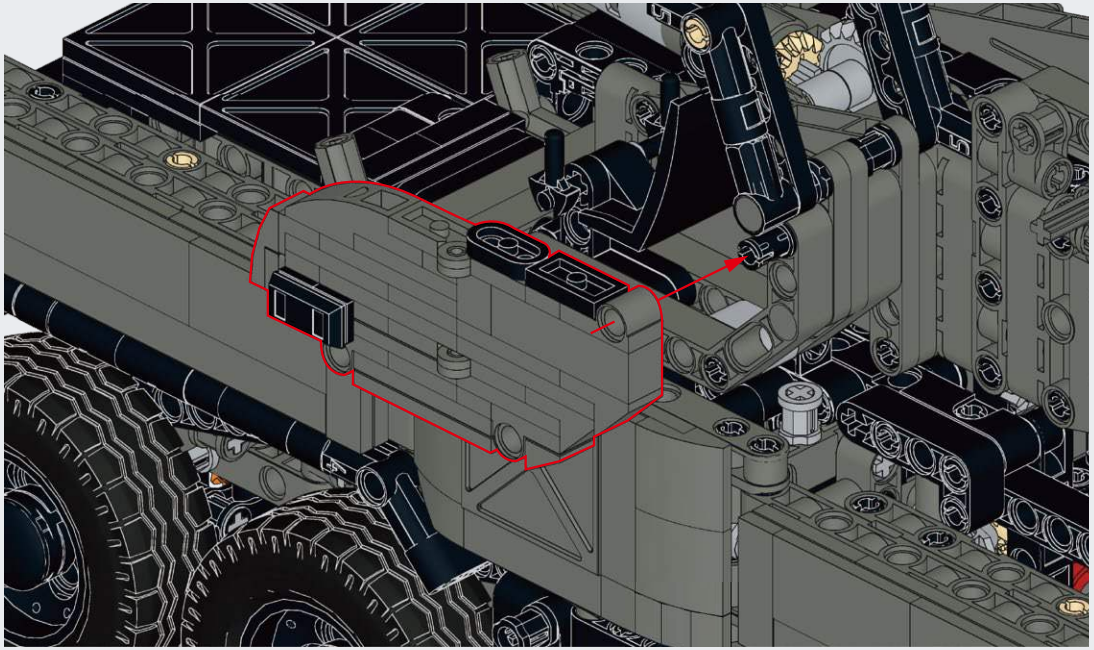

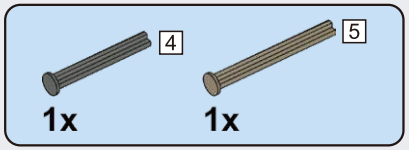

D104

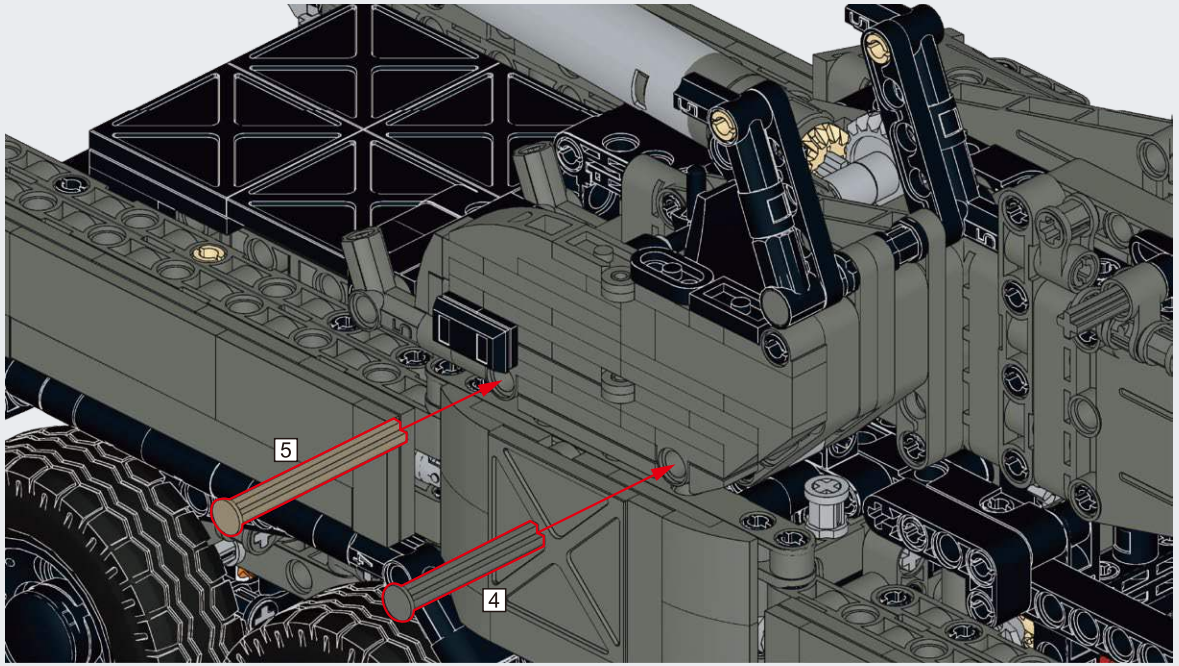

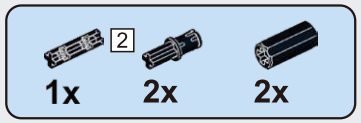

D105

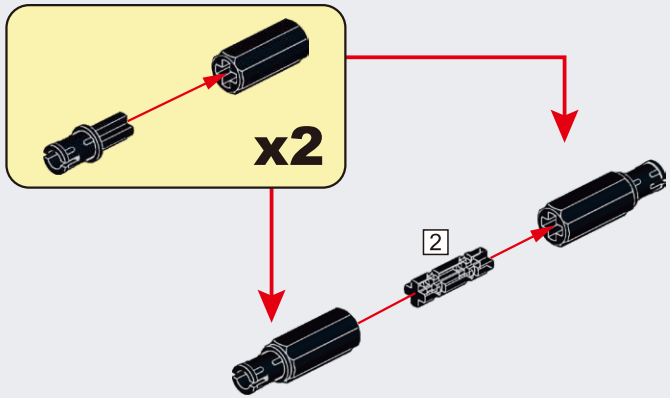

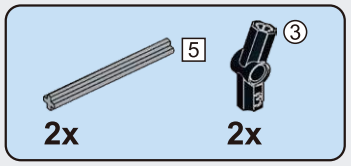

D106

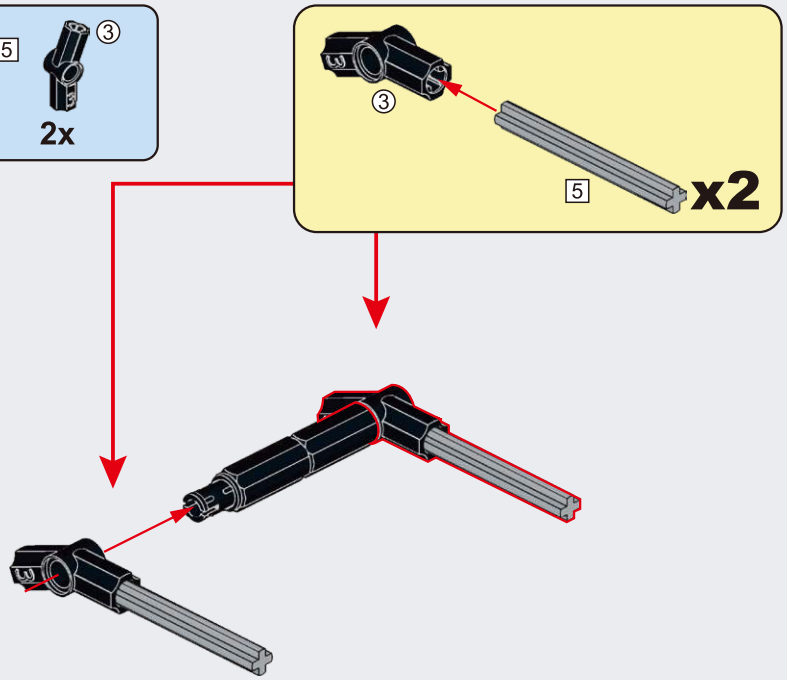

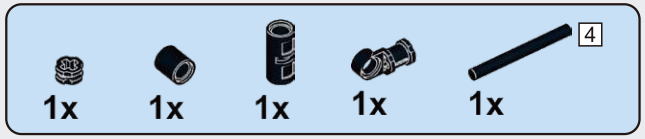

D107

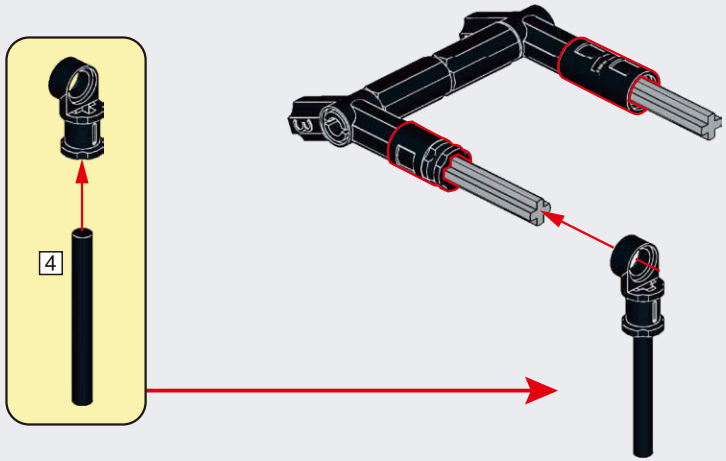

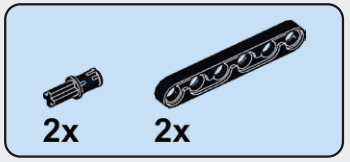

D108

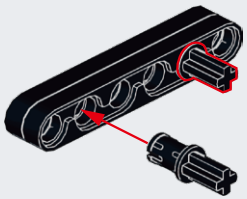

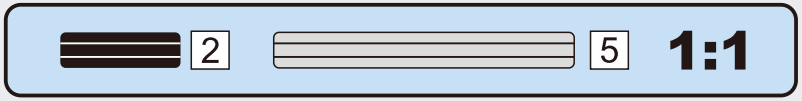

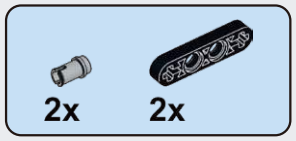

D109

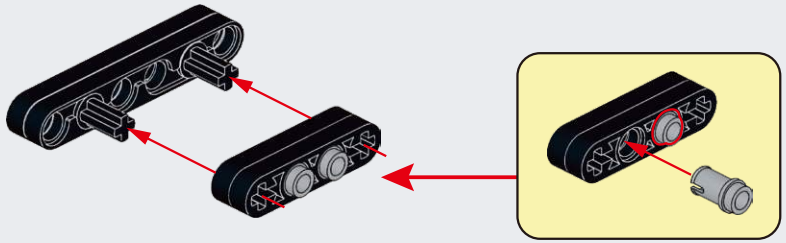

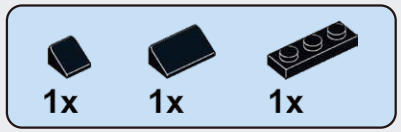

D110

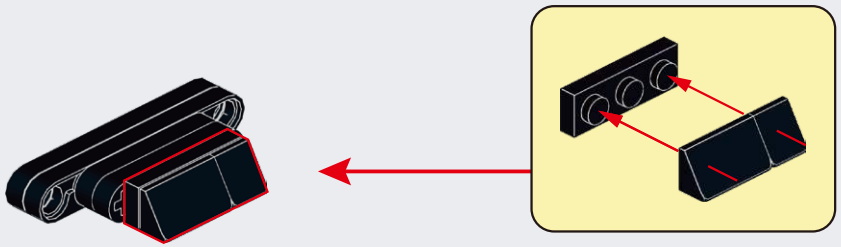

D111

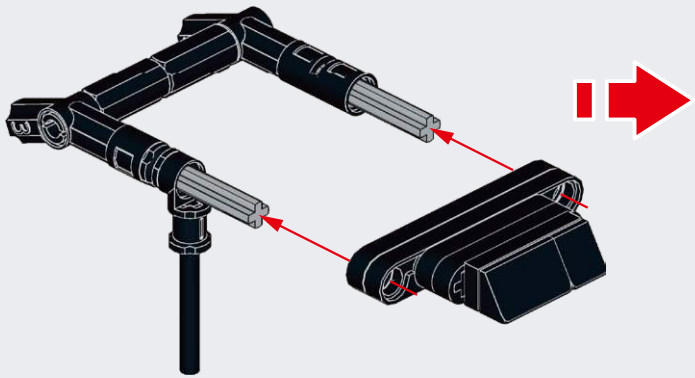

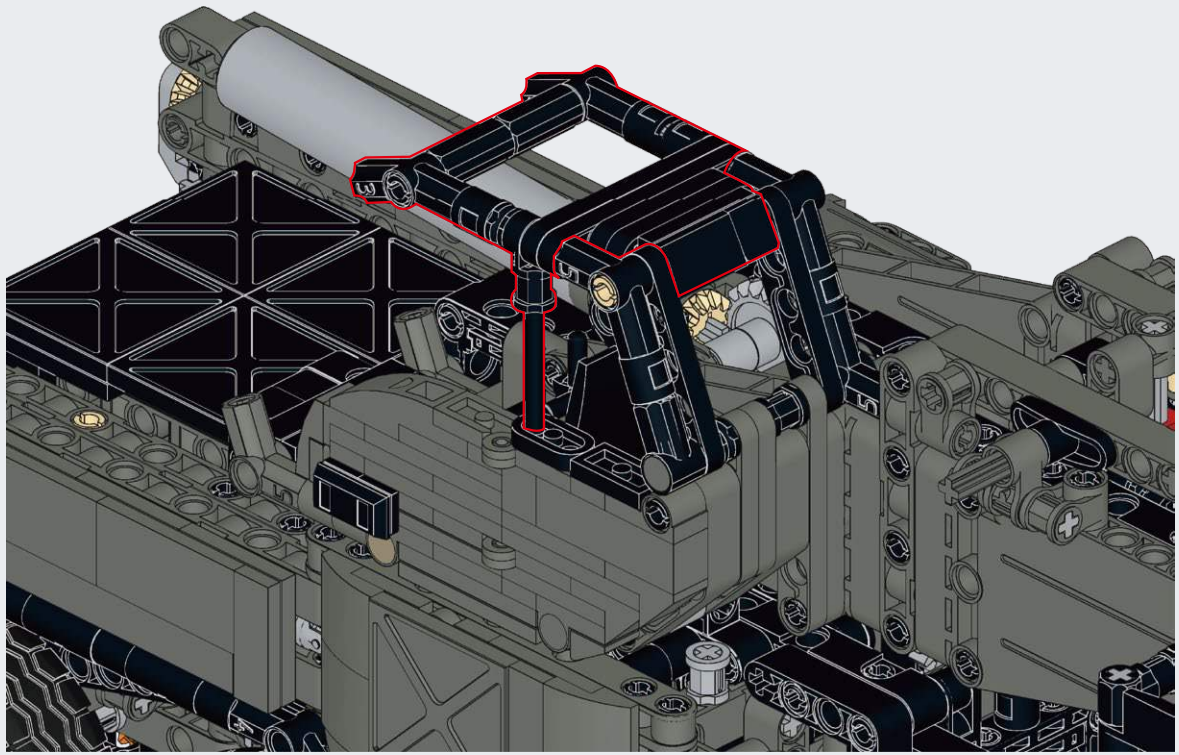

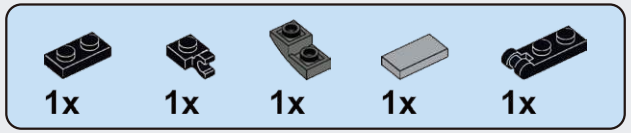

D112

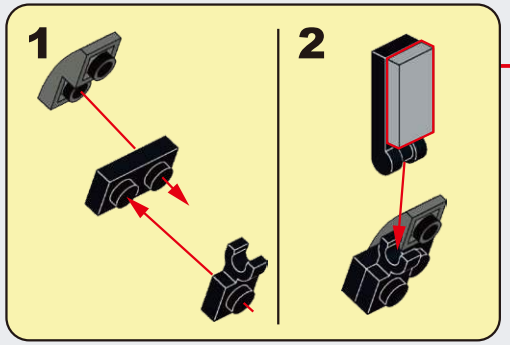

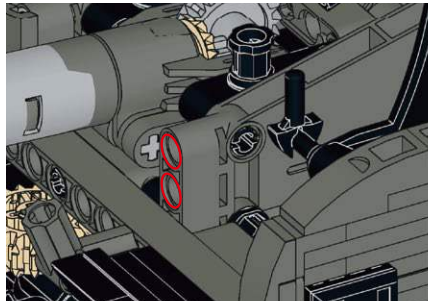

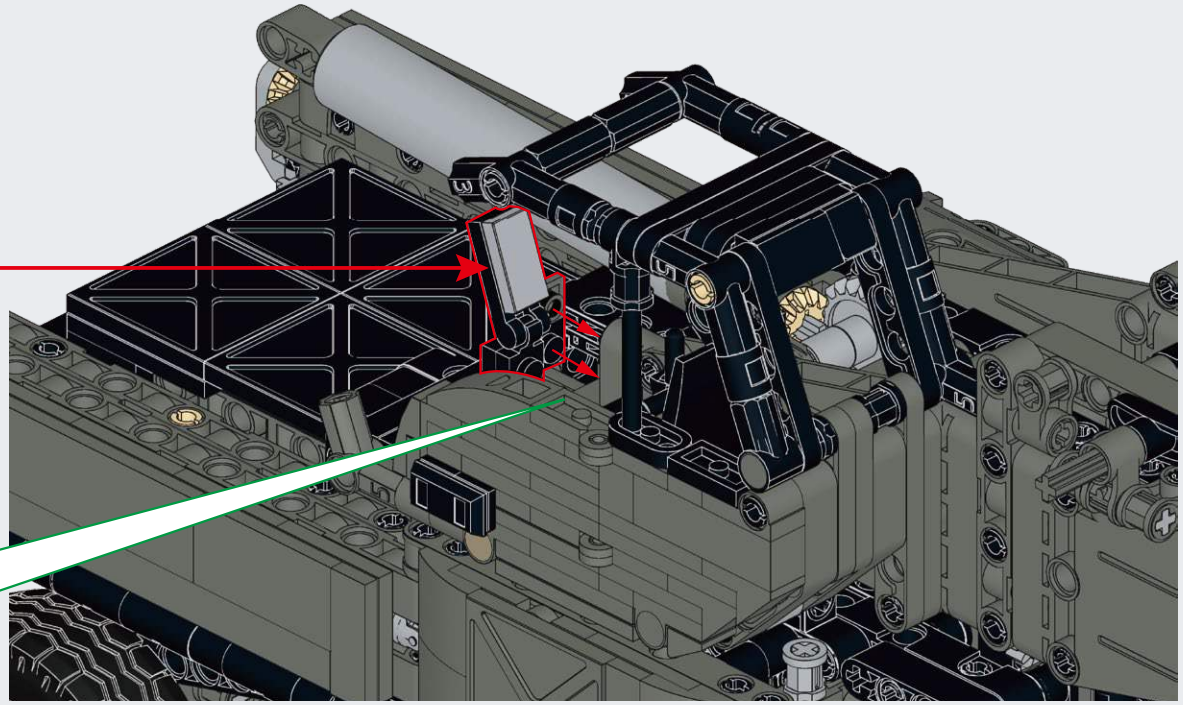

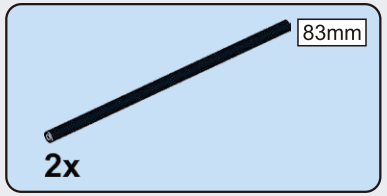

D113

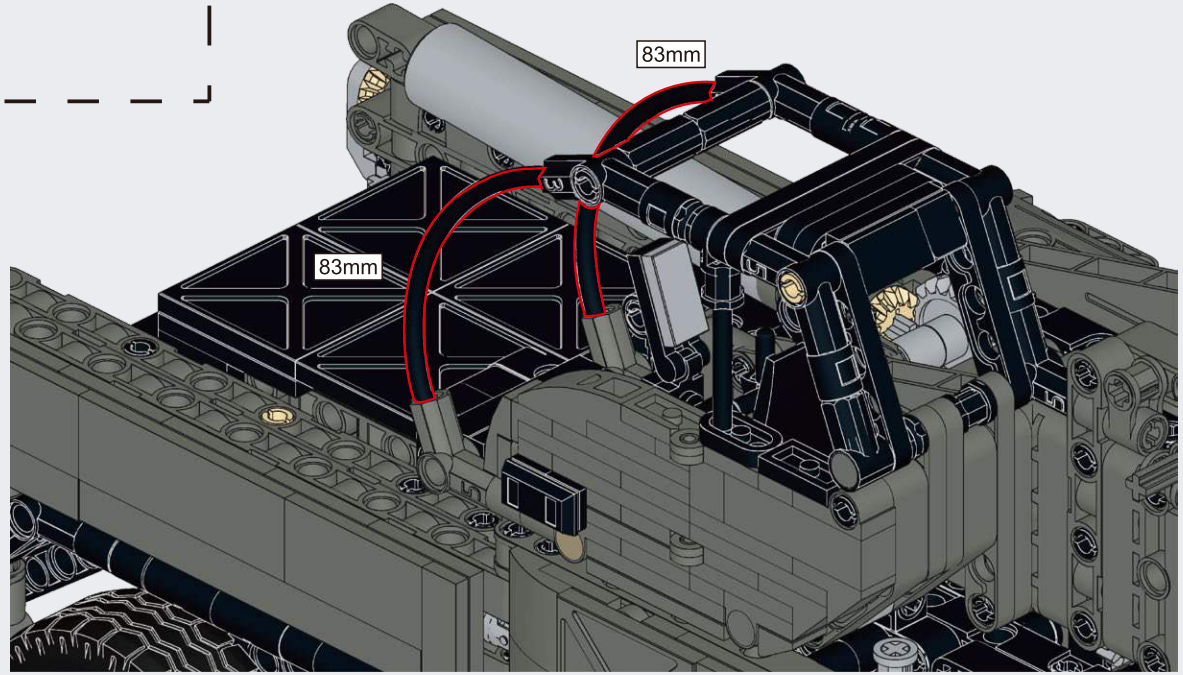

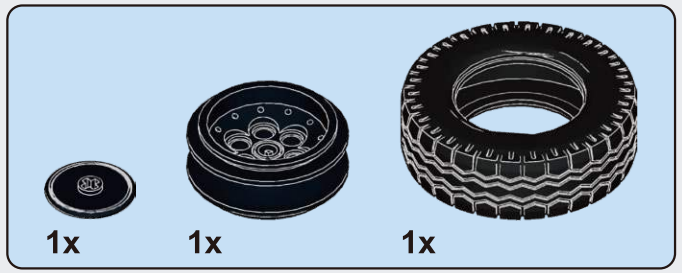

D114

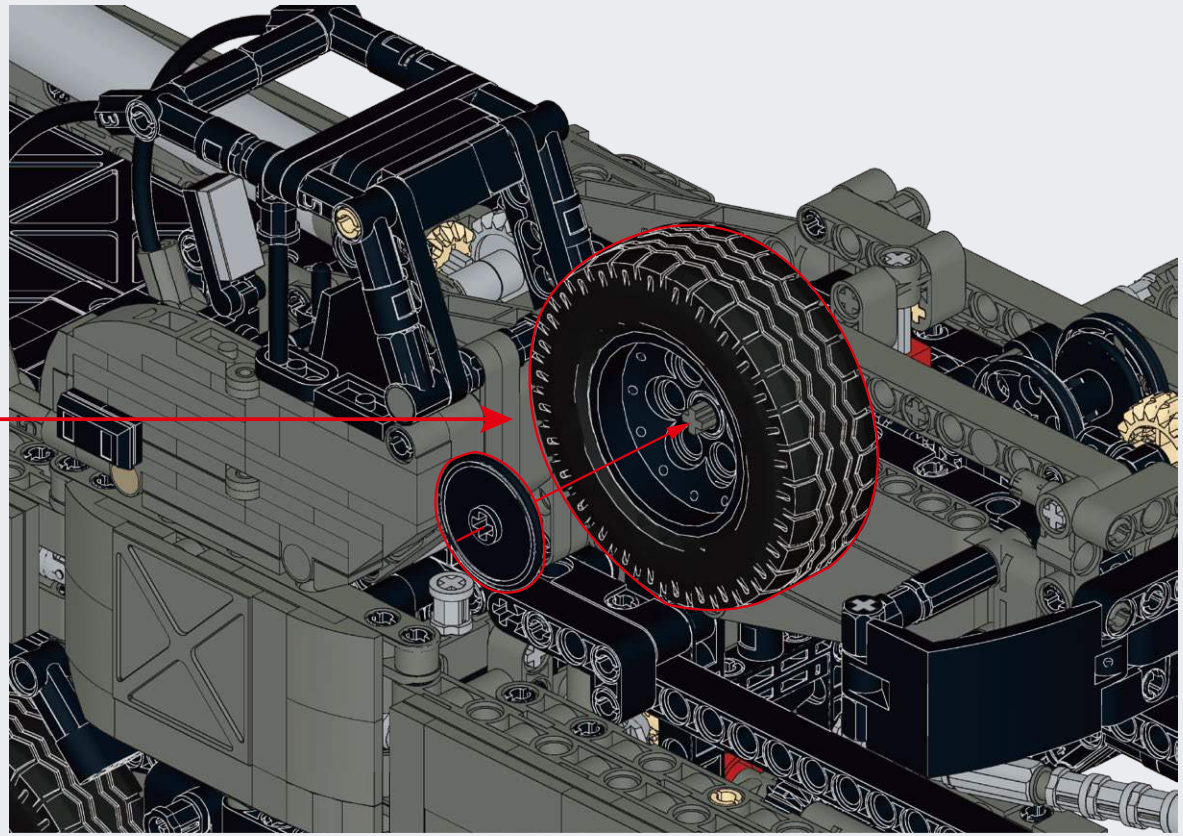

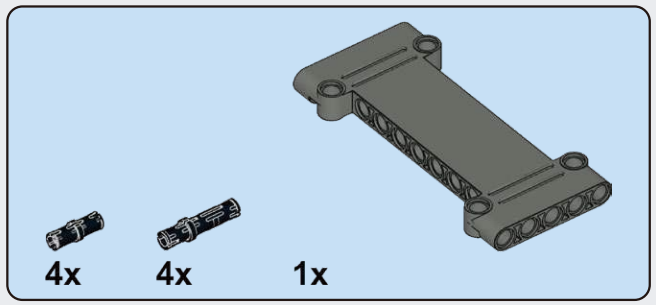

D115

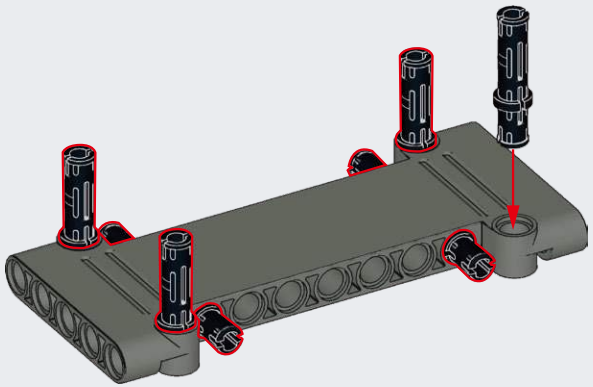

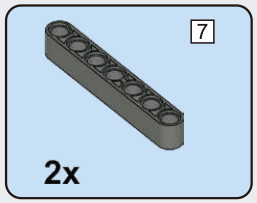

D116

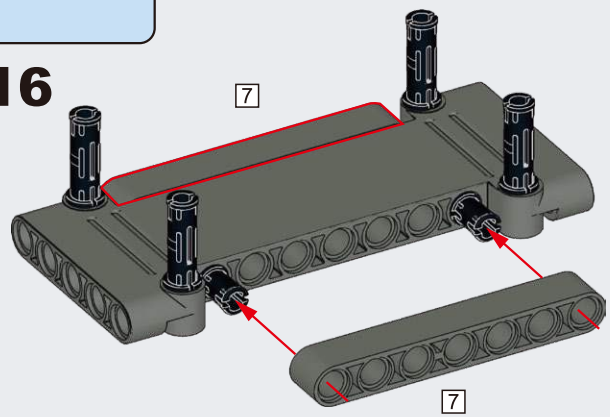

D117

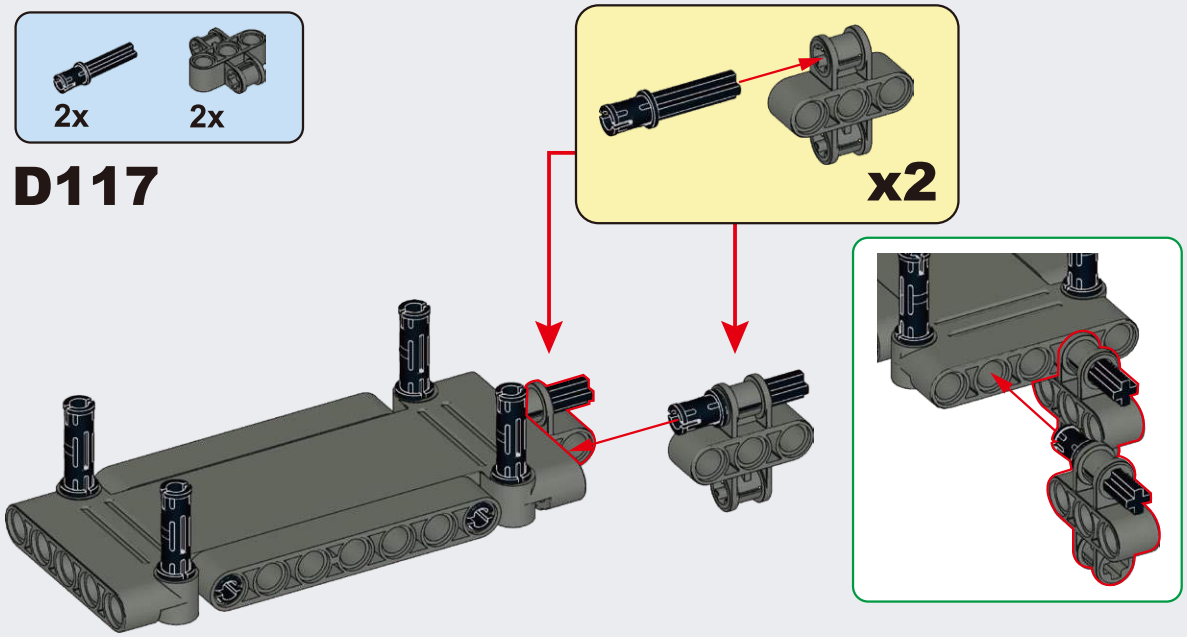

D118

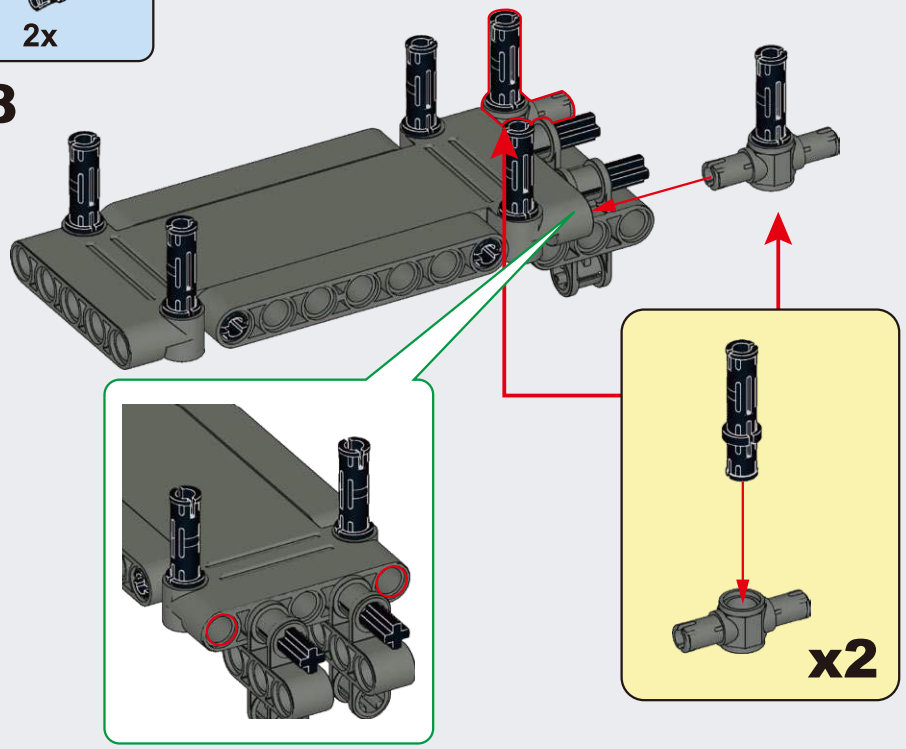

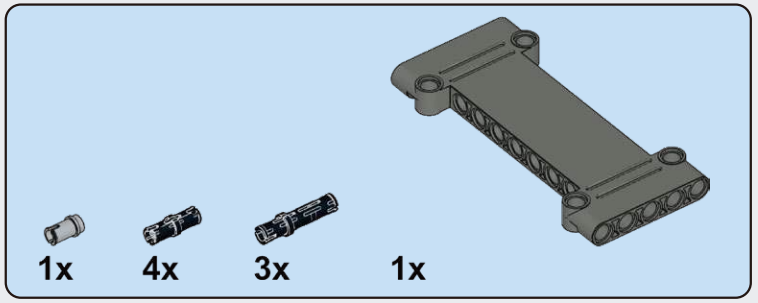

D119

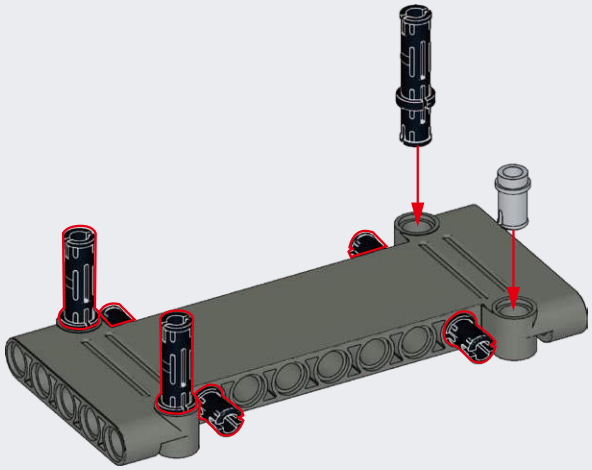

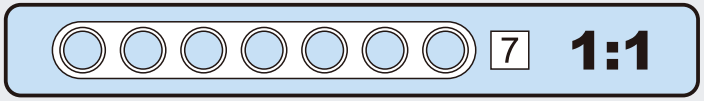

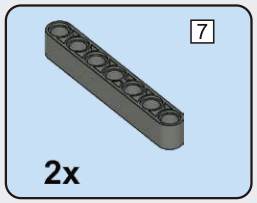

D120

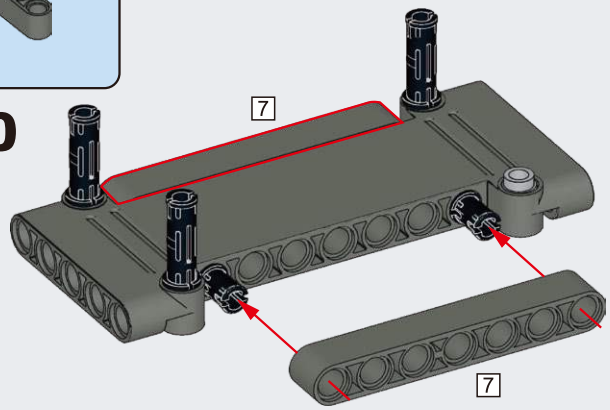

D121

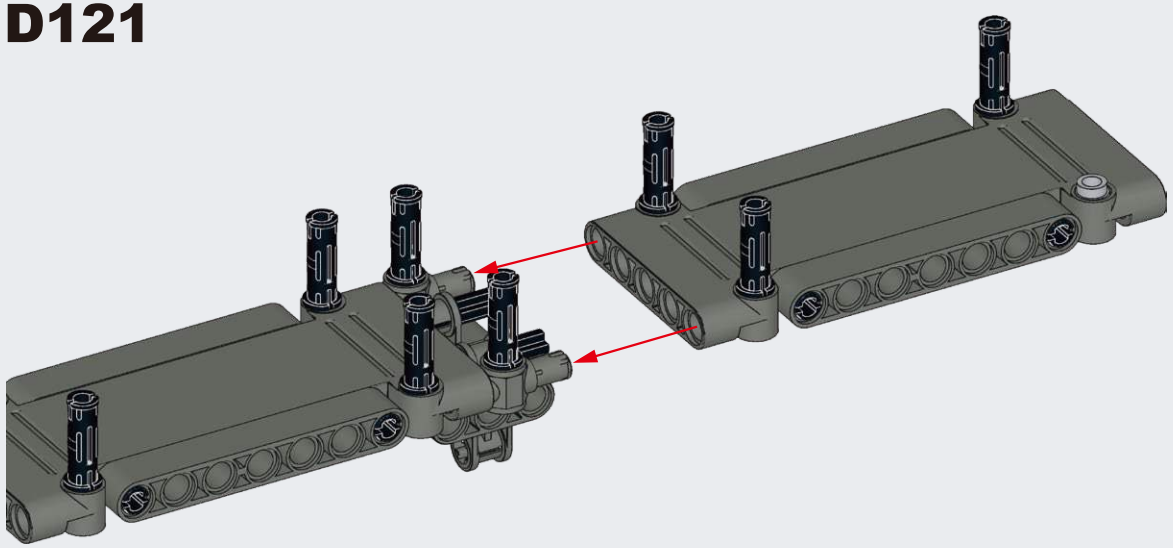

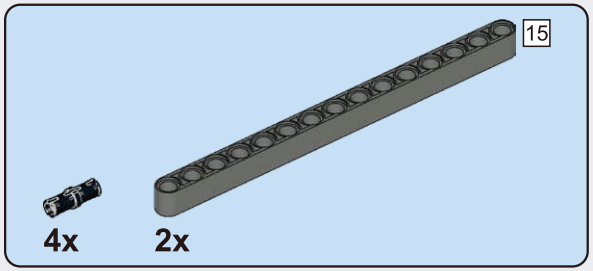

D122

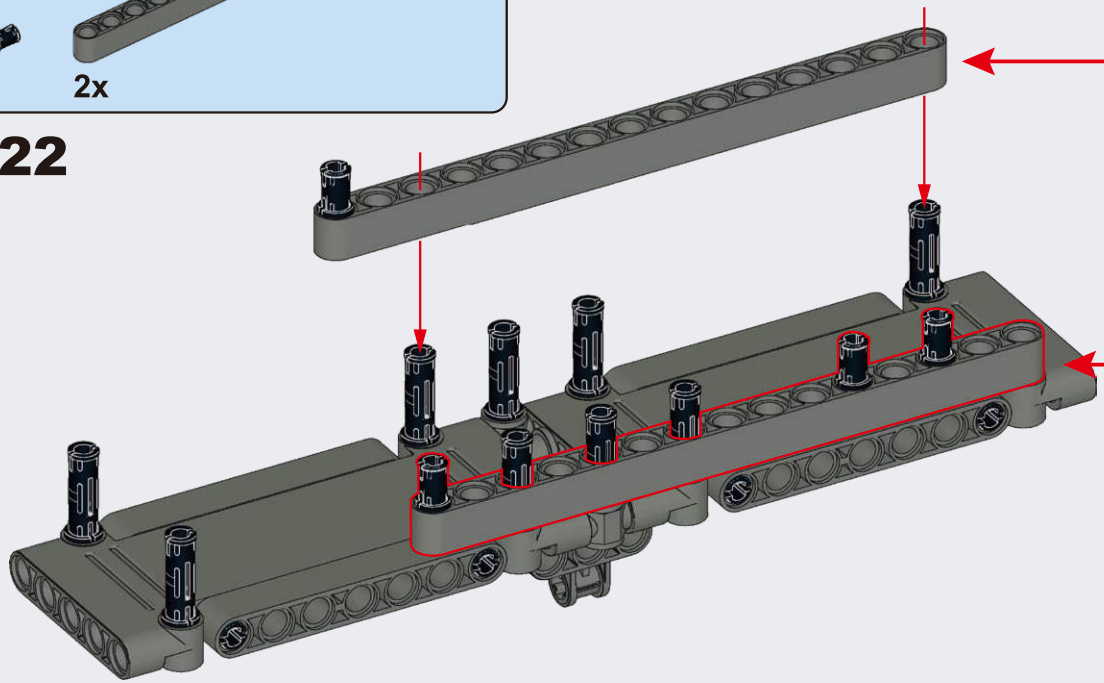

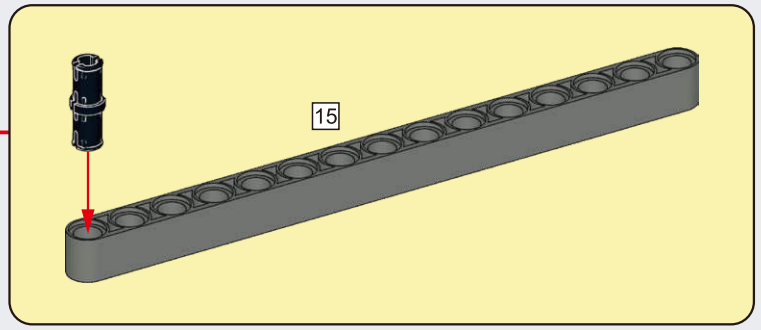

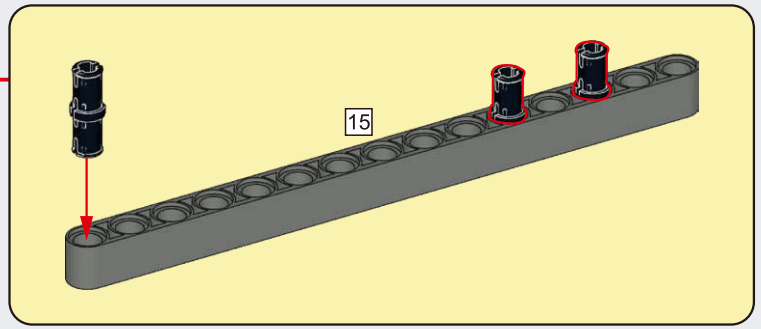

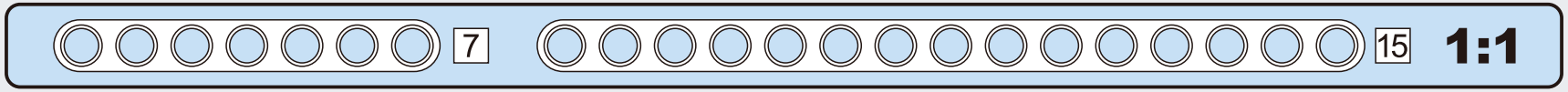

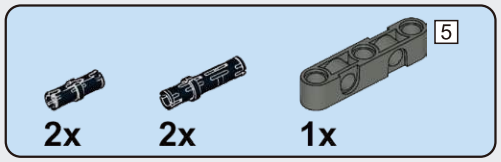

D123

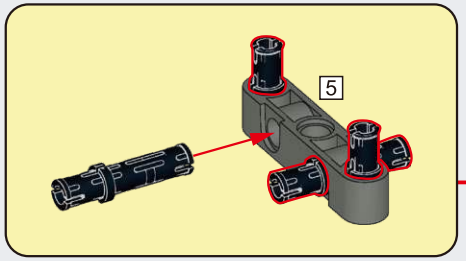

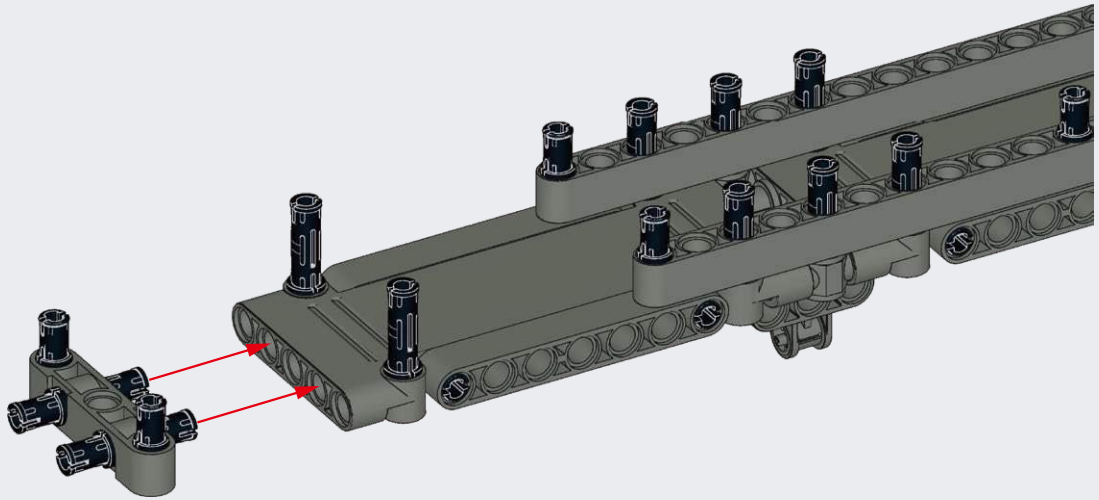

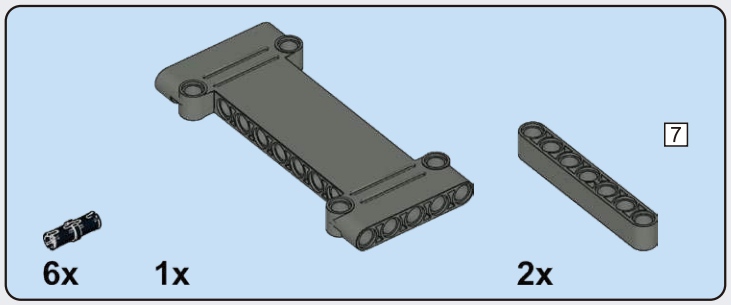

D124

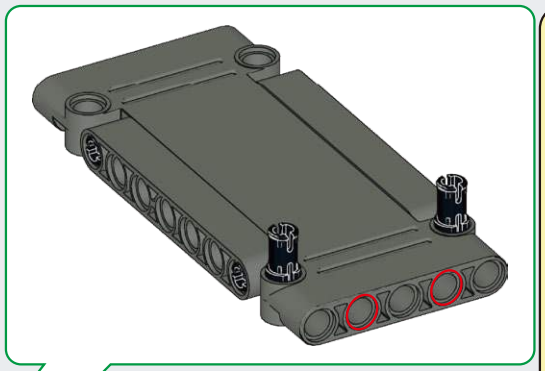

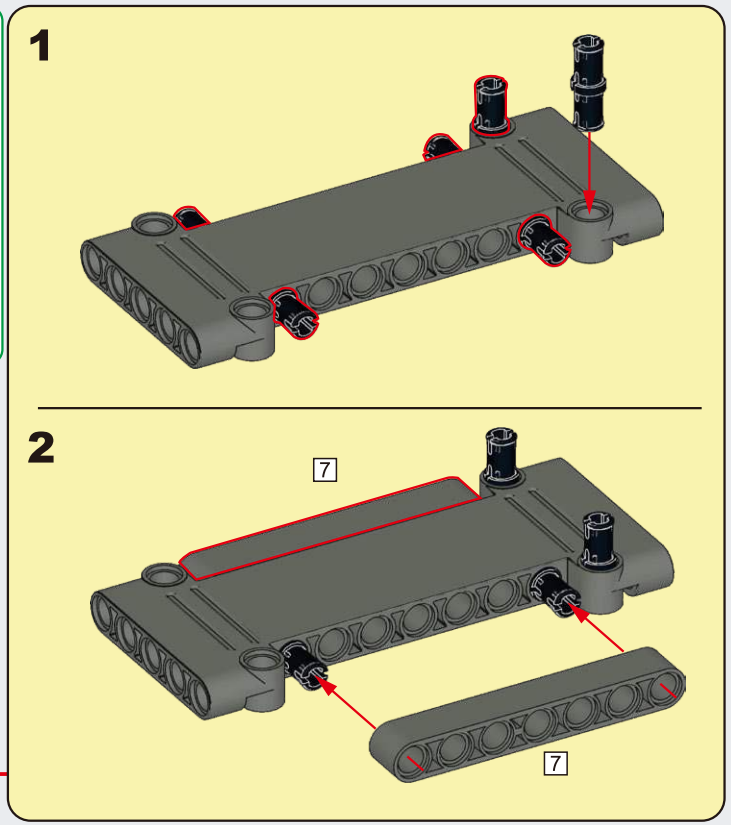

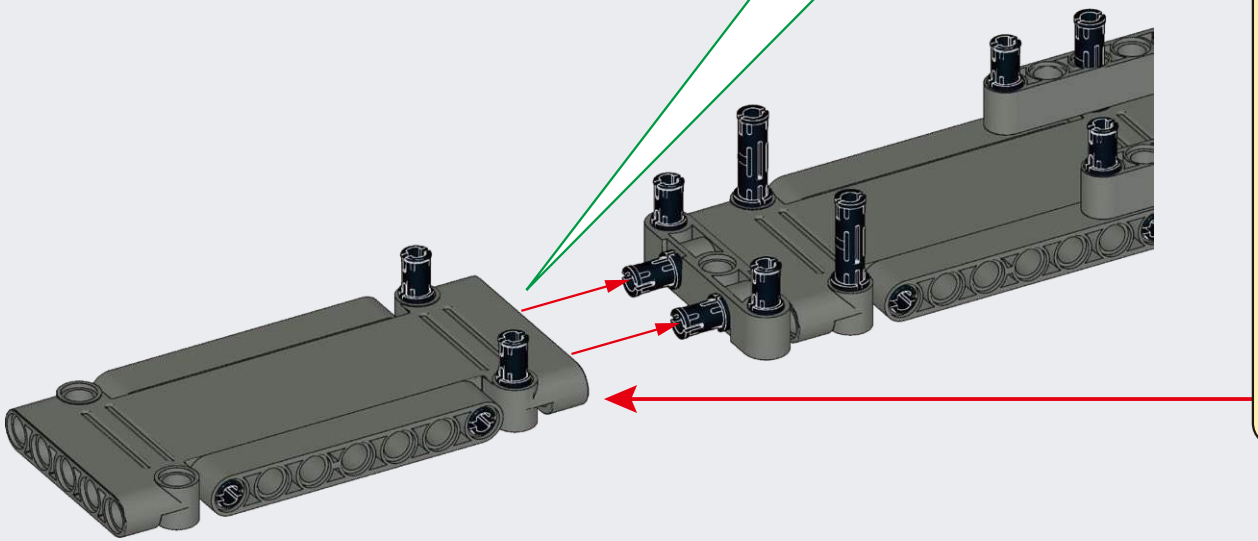

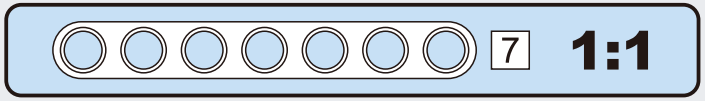

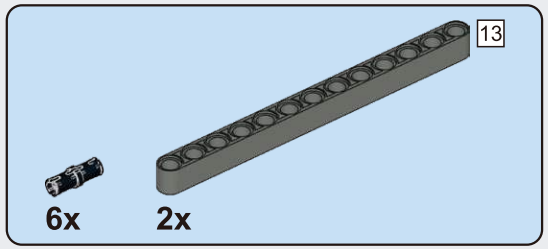

D125

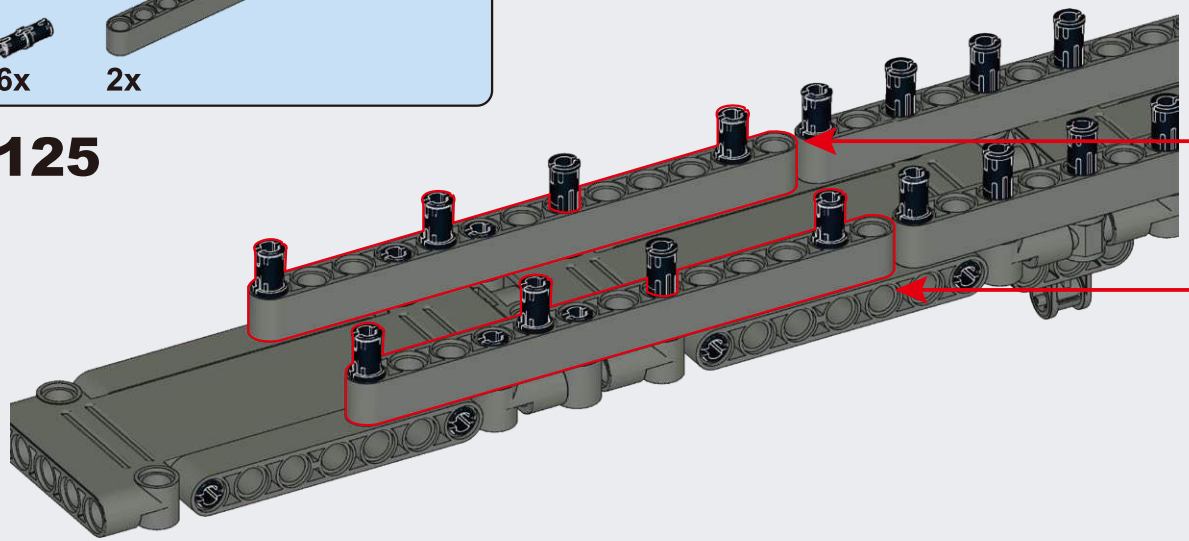

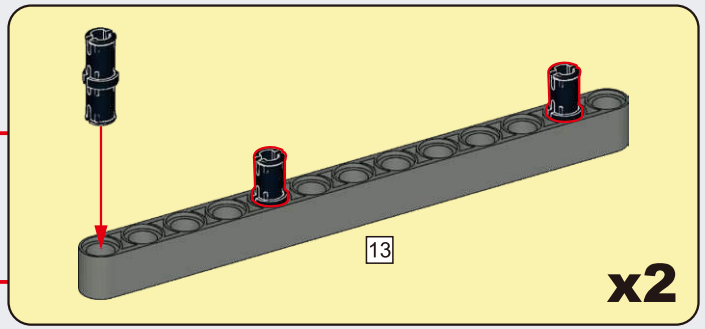

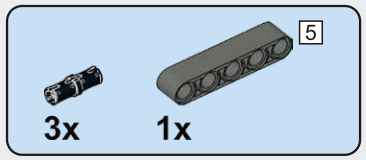

D126

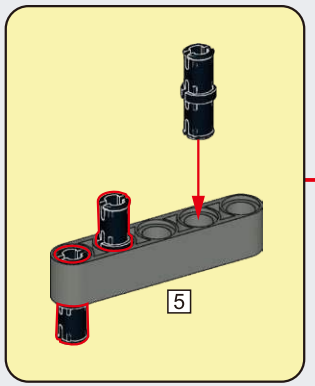

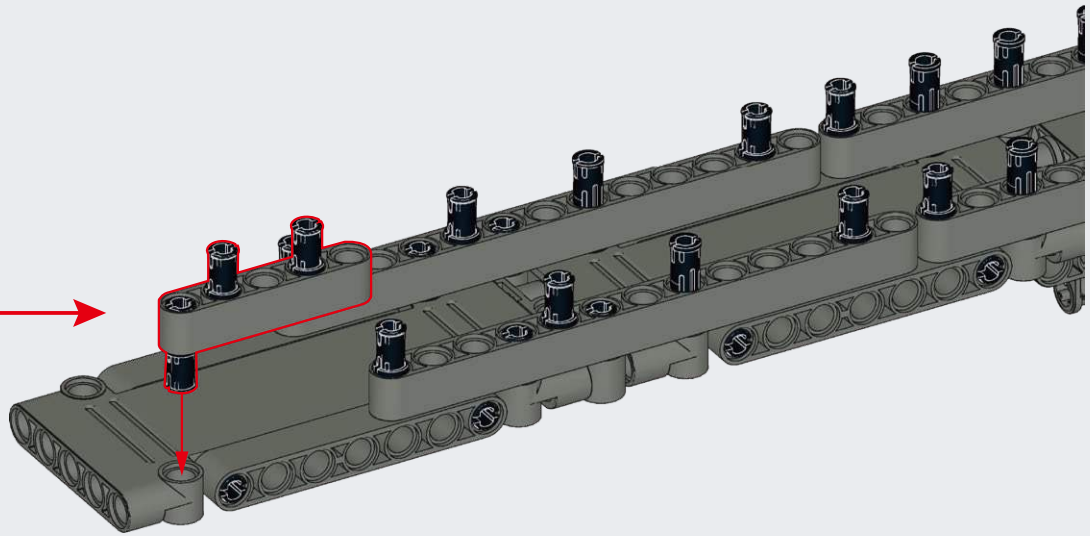

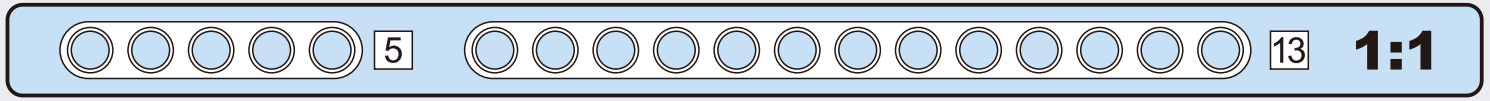

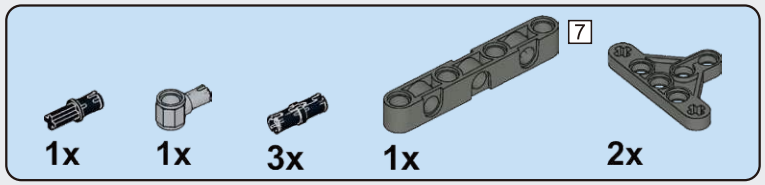

D127

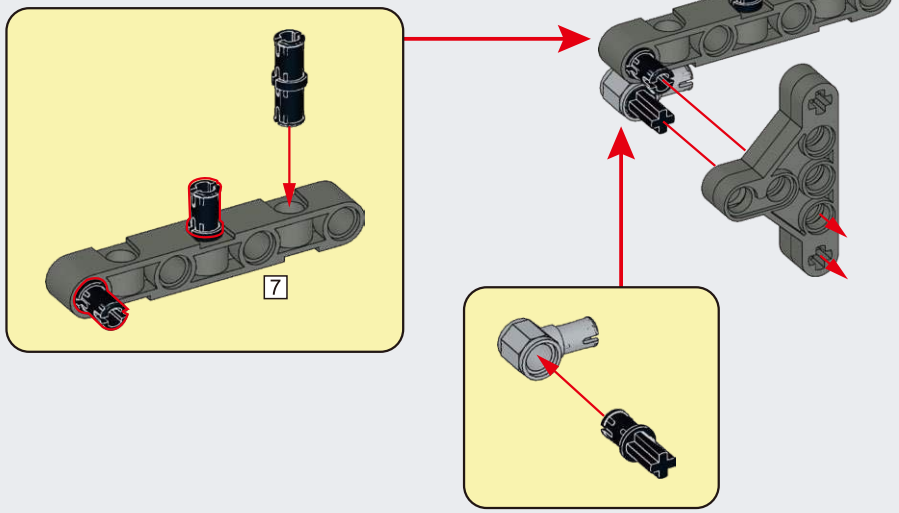

D128

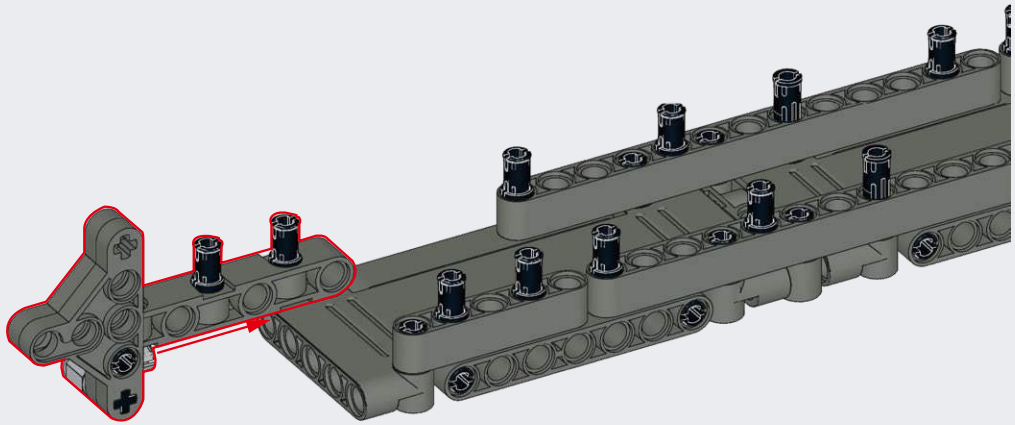

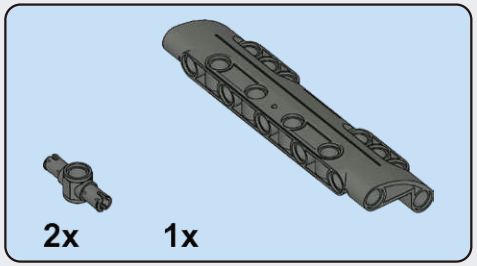

D129

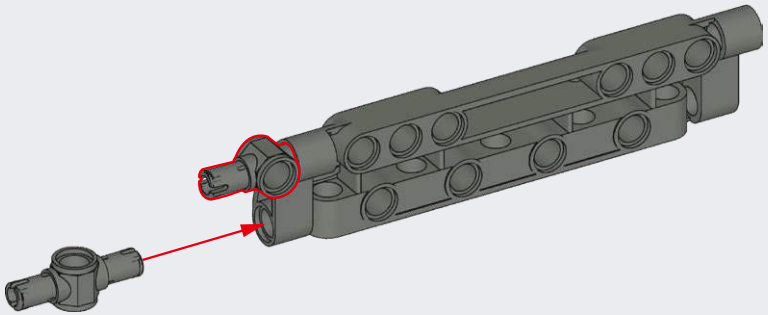

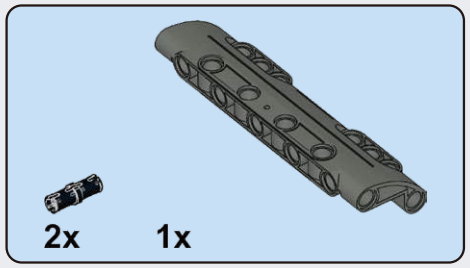

D130

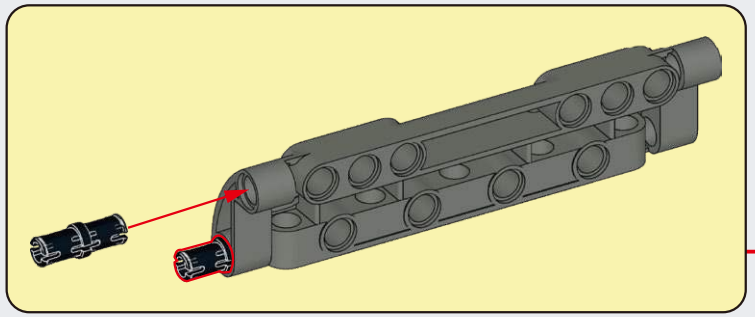

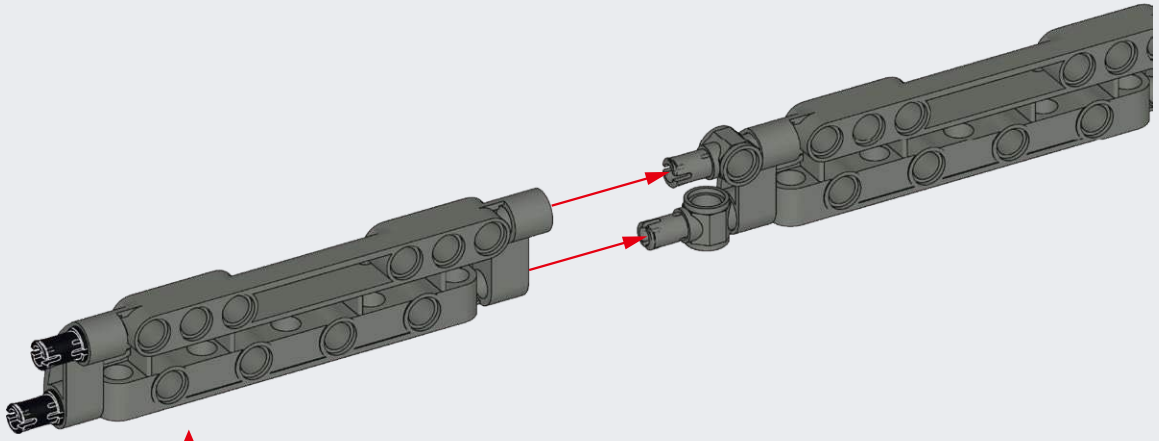

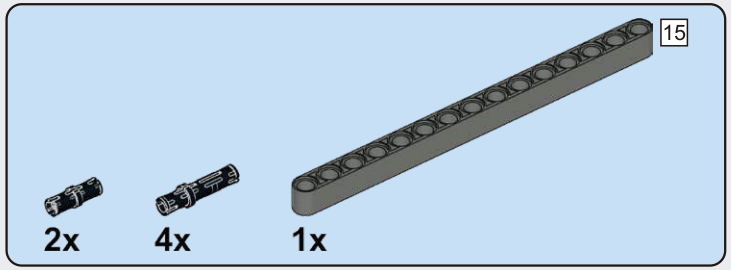

D131

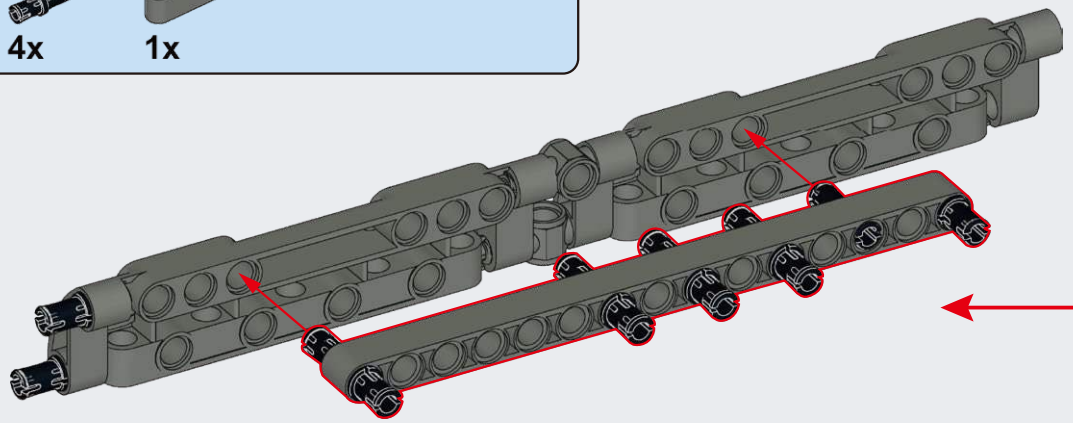

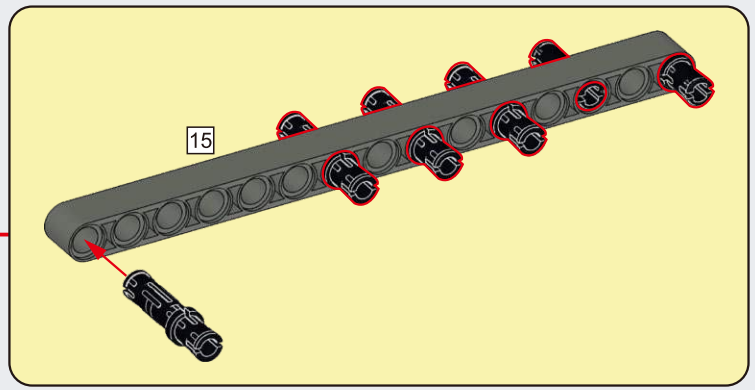

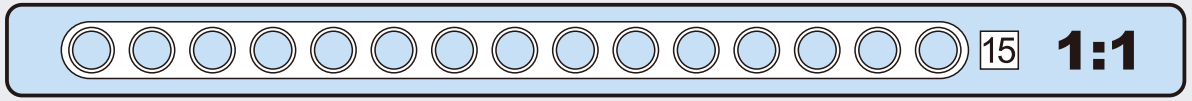

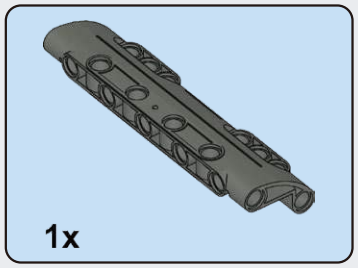

D132

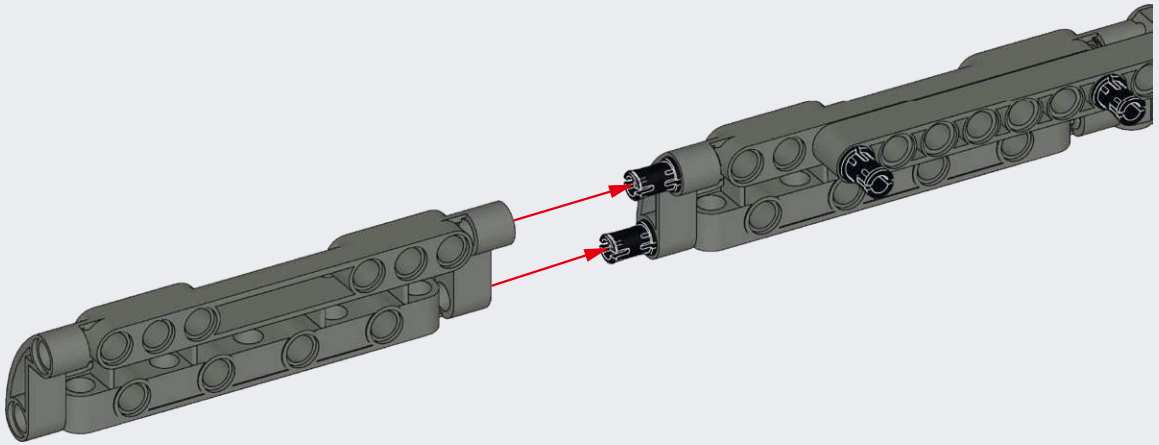

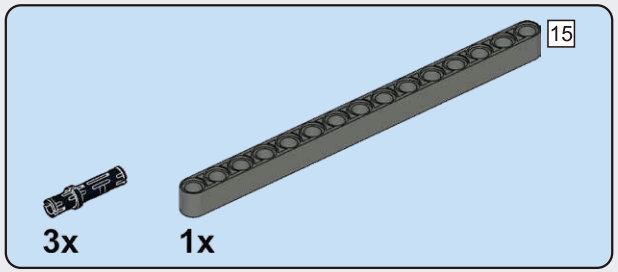

D133

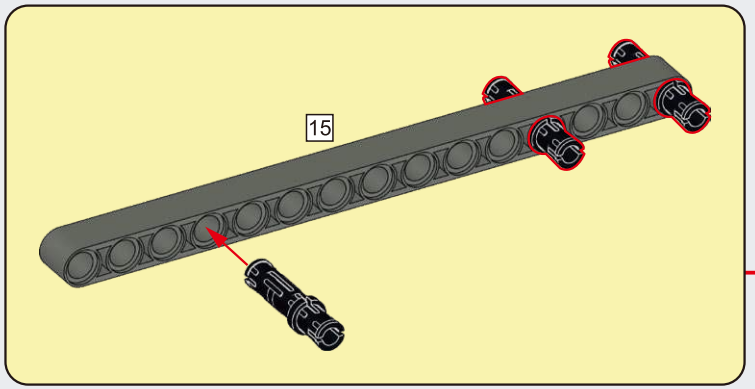

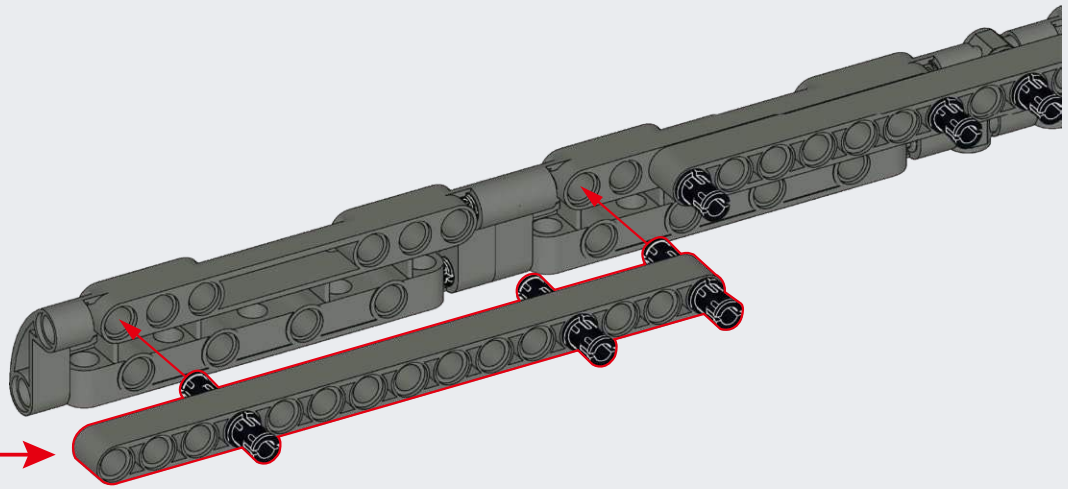

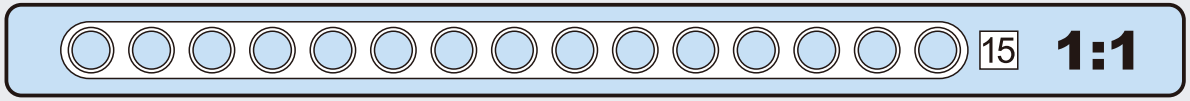

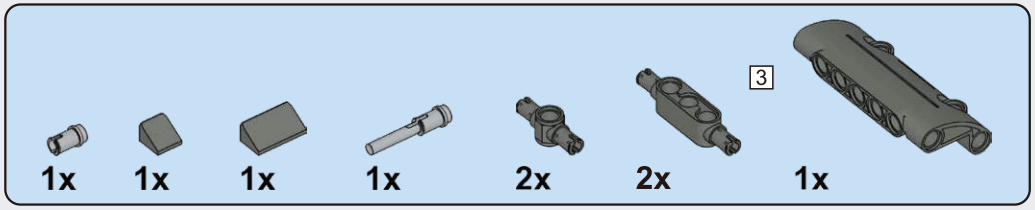

D134

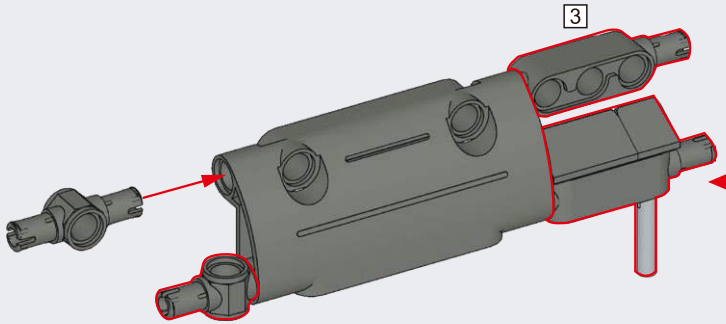

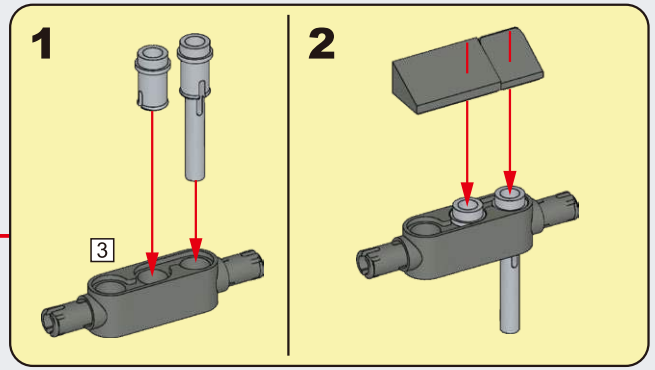

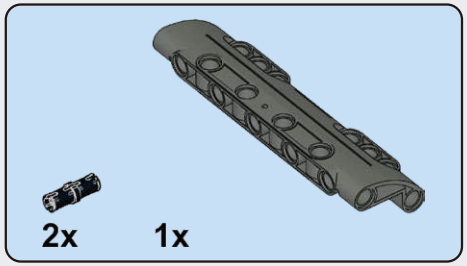

D135

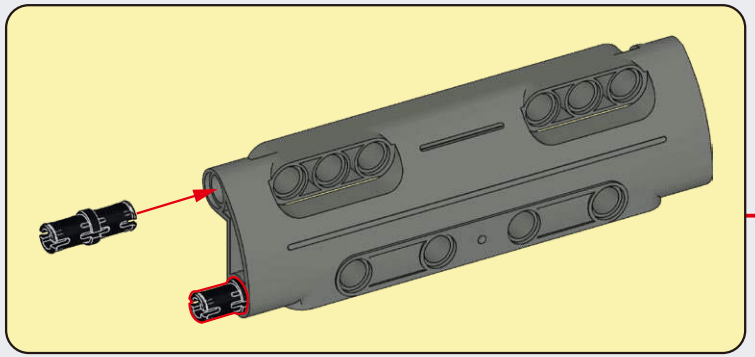

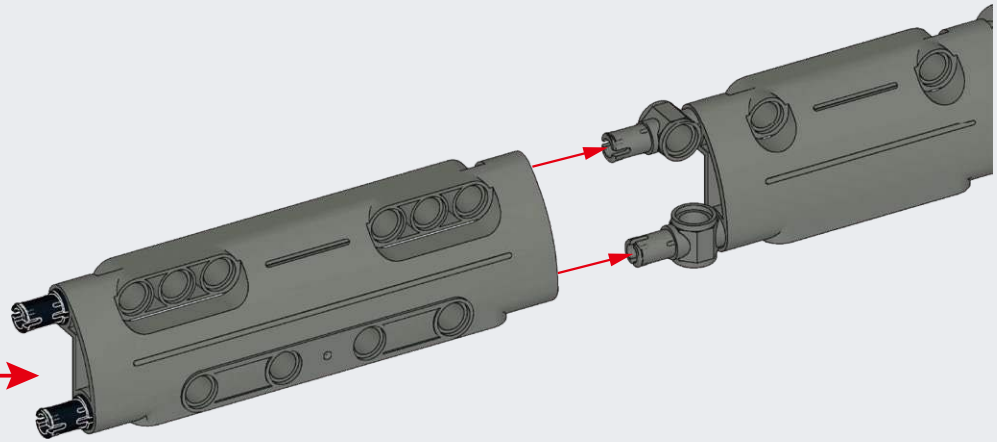

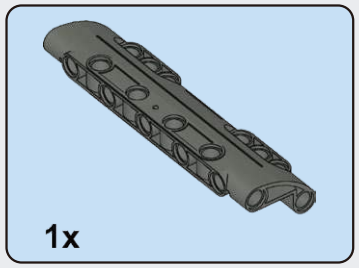

D136

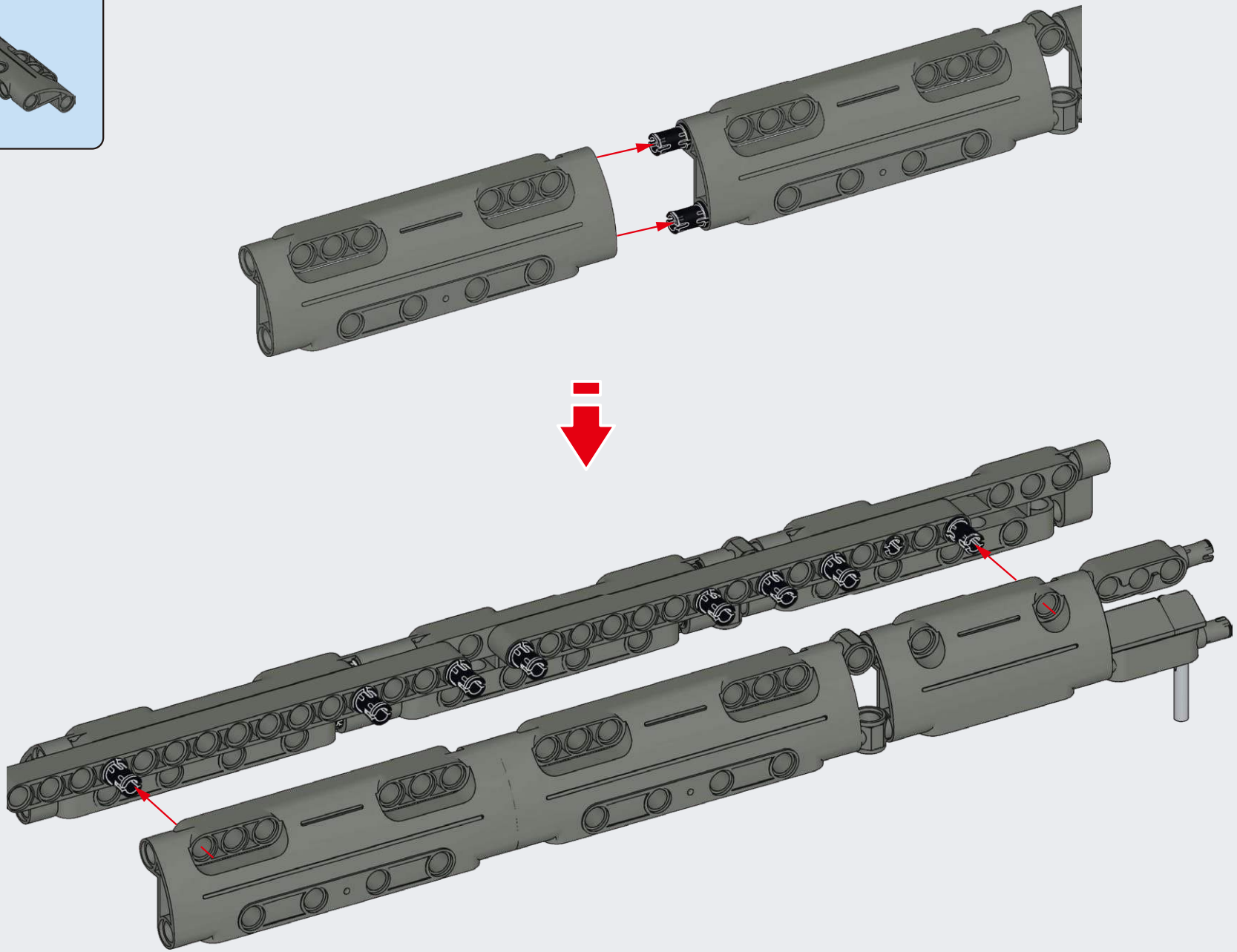

D137

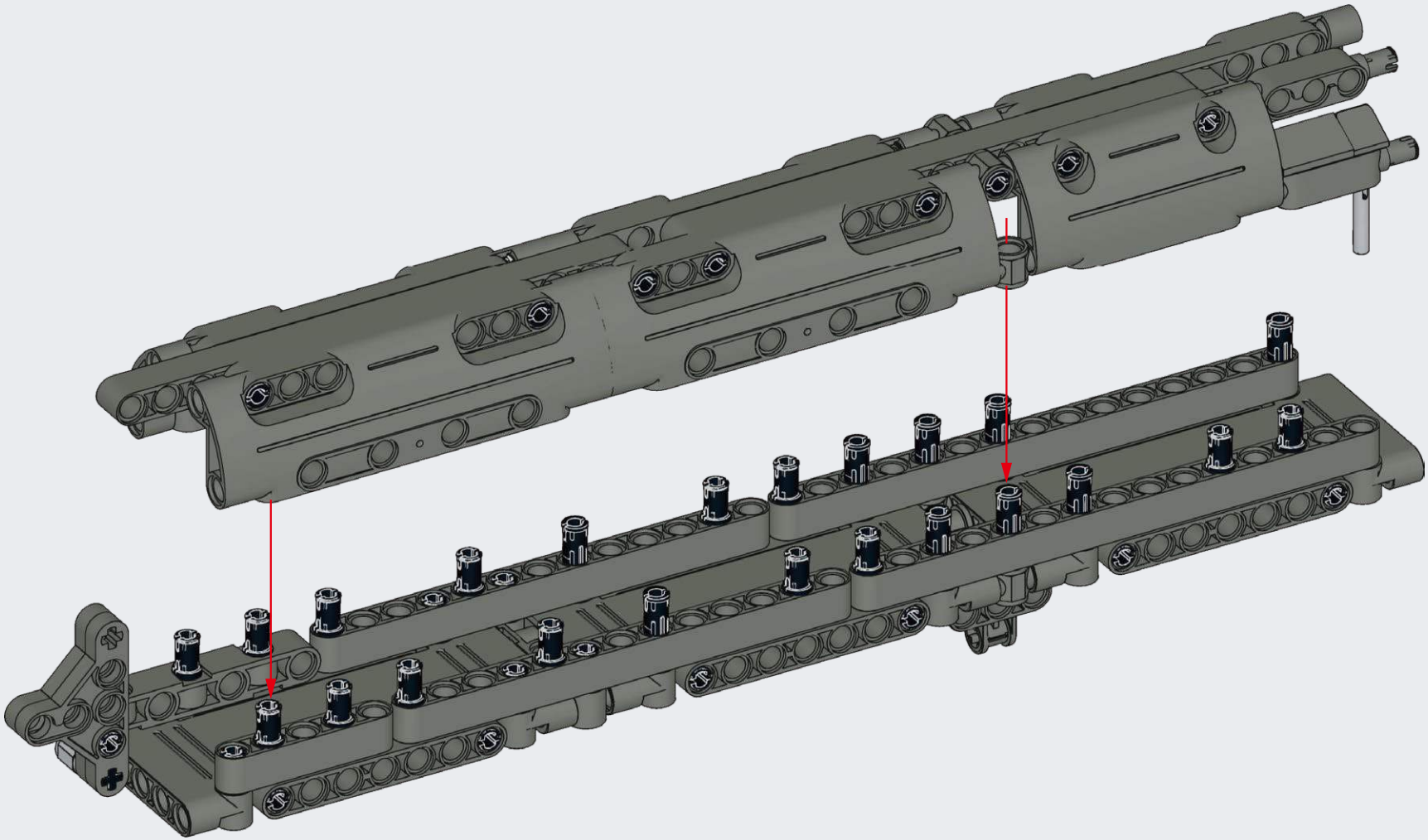

D138

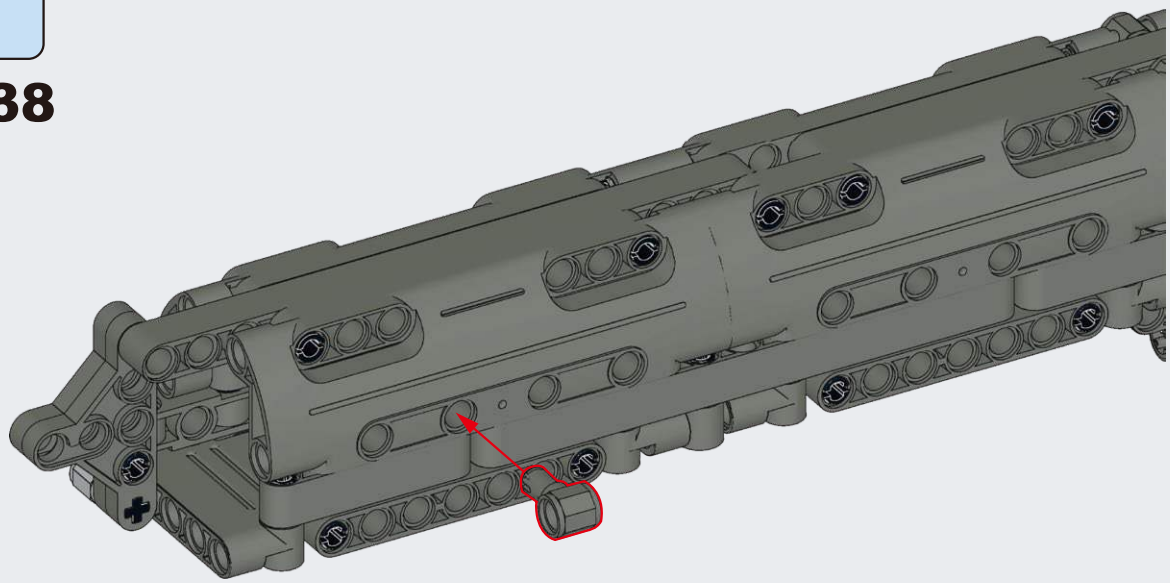

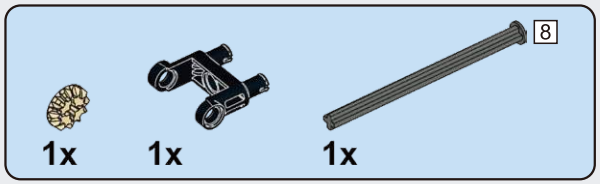

D139

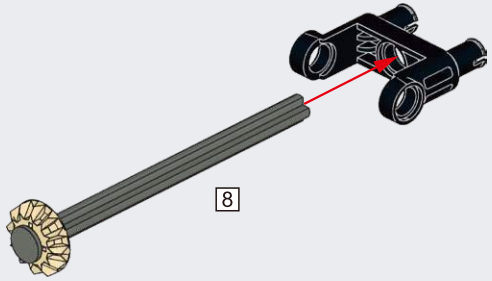

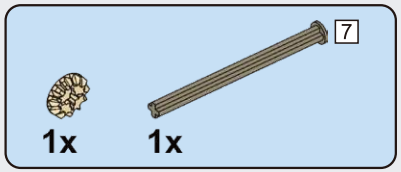

D140

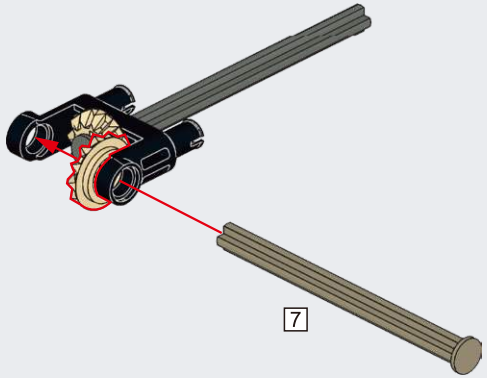

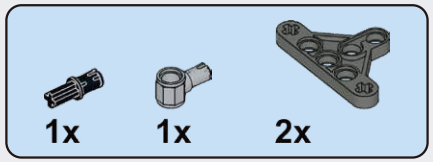

D141

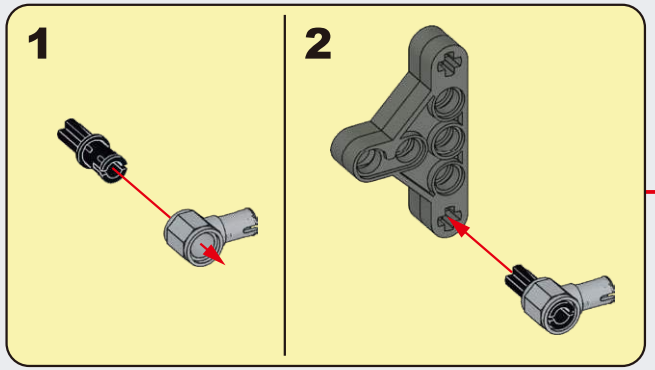

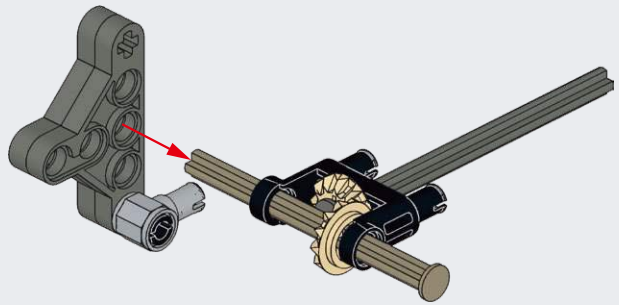

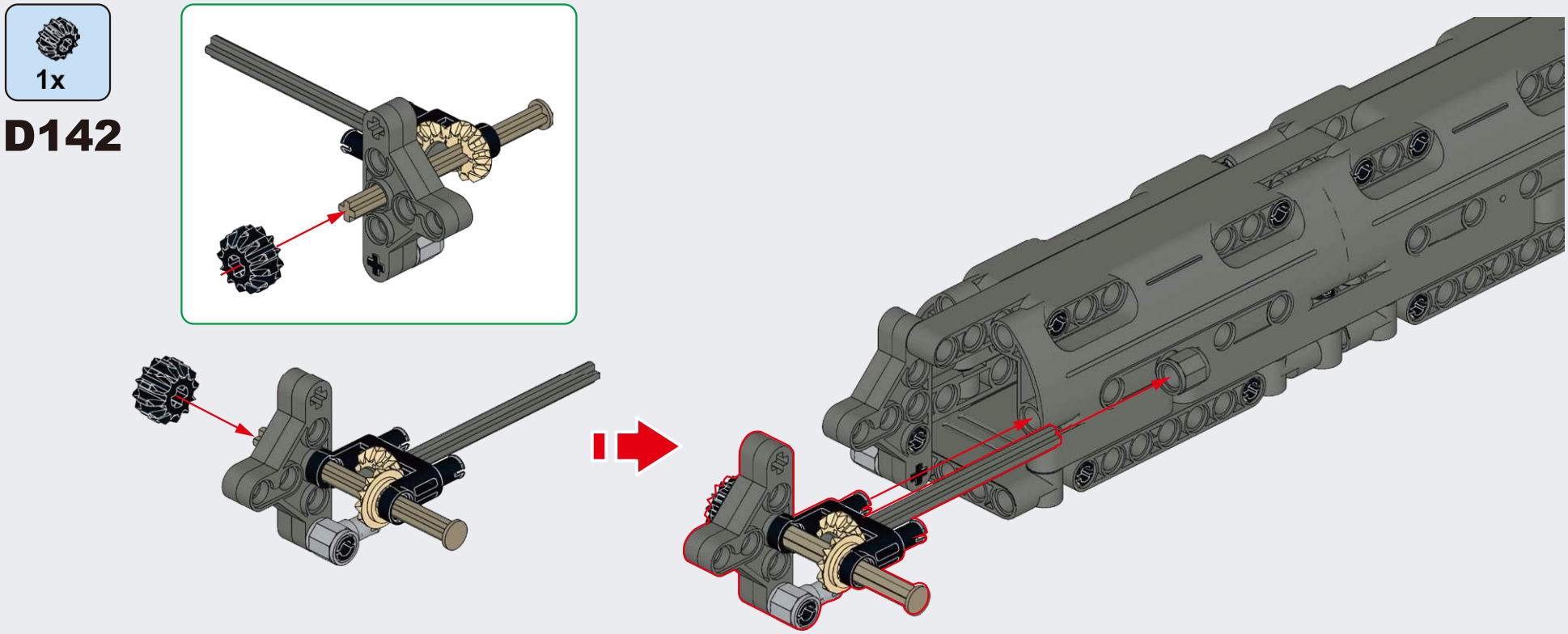

D142

D143

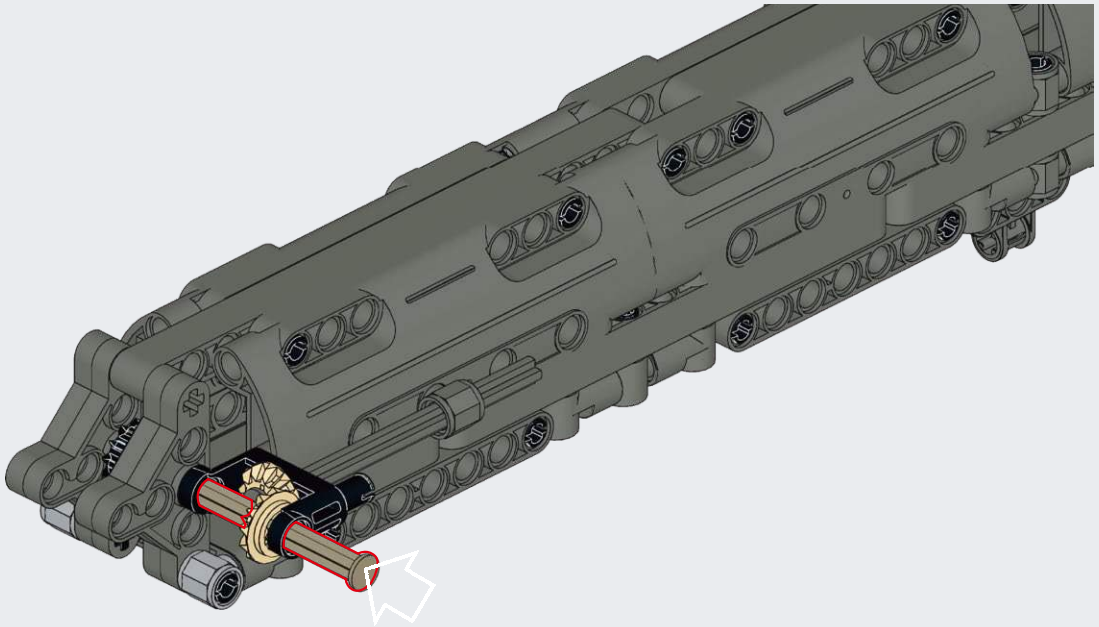

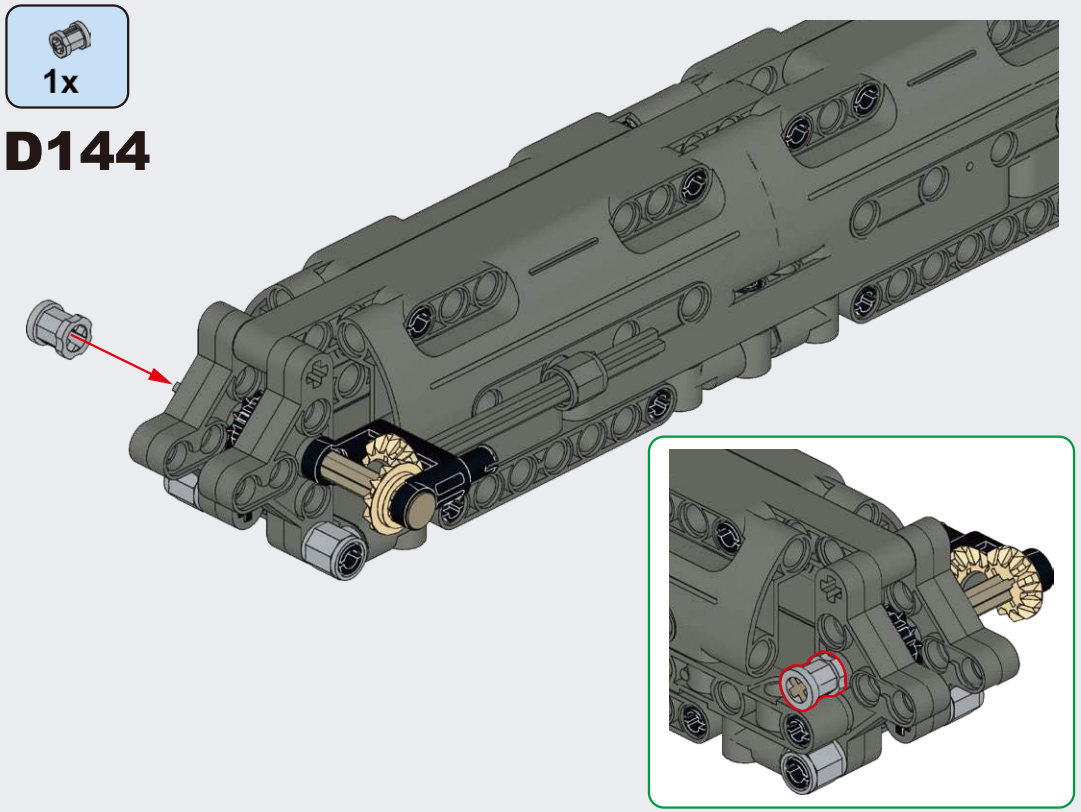
1x
D144

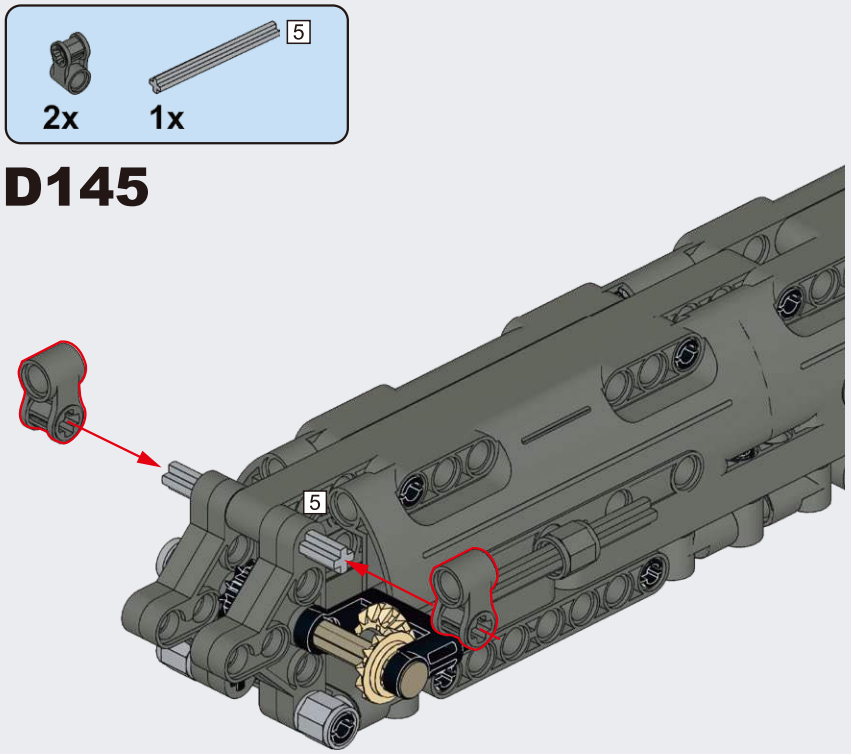
2x
1x
5
D145
5

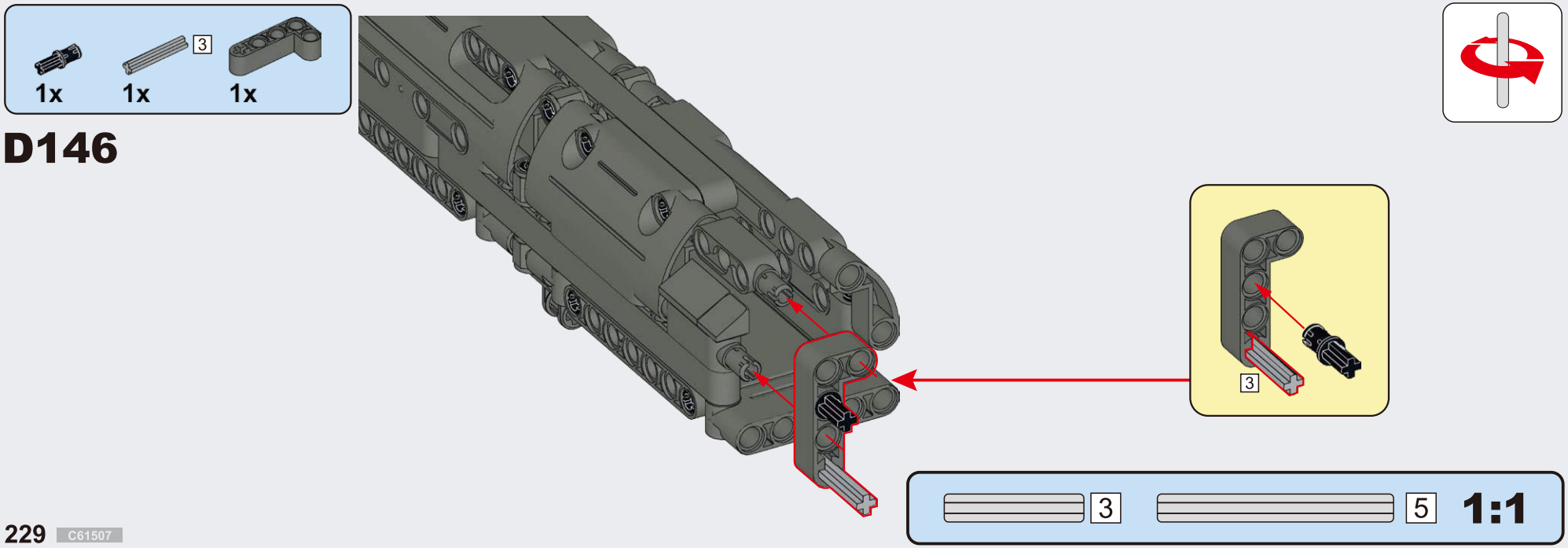
1x
1x
3
1x
D146
3
3
5
1:1

D147

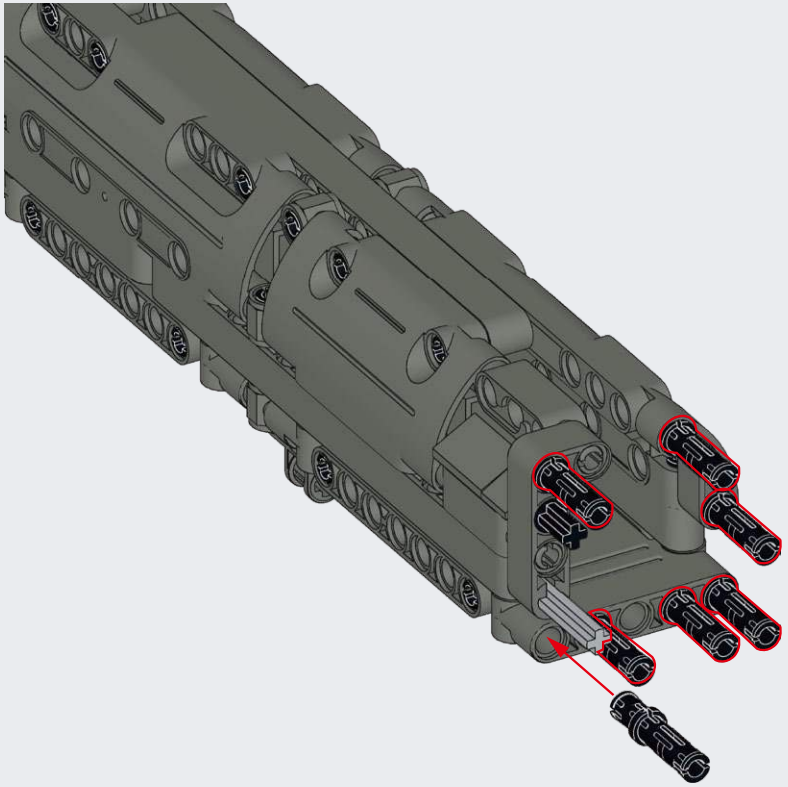

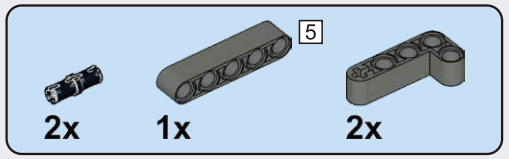

D148

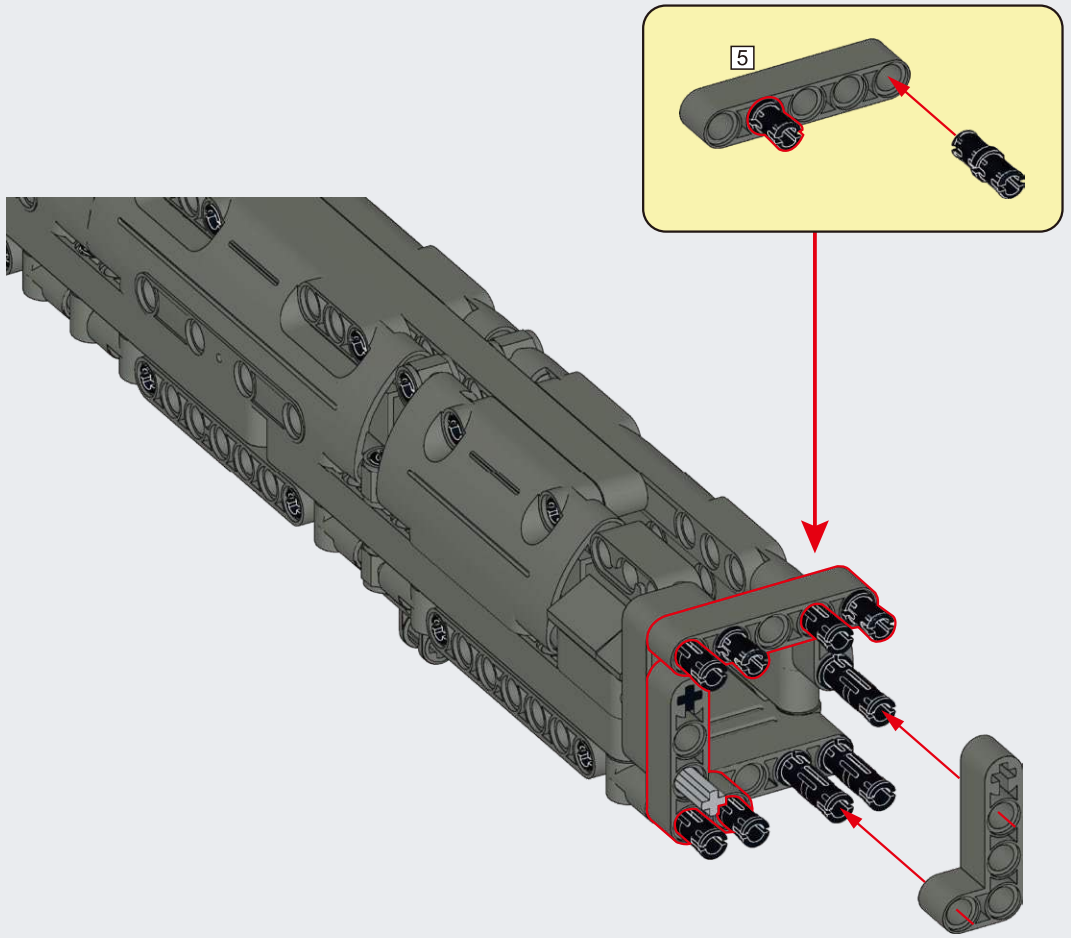

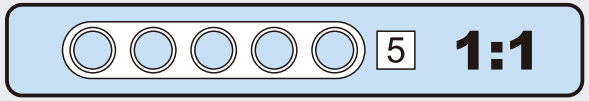

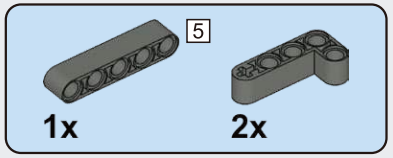

D149

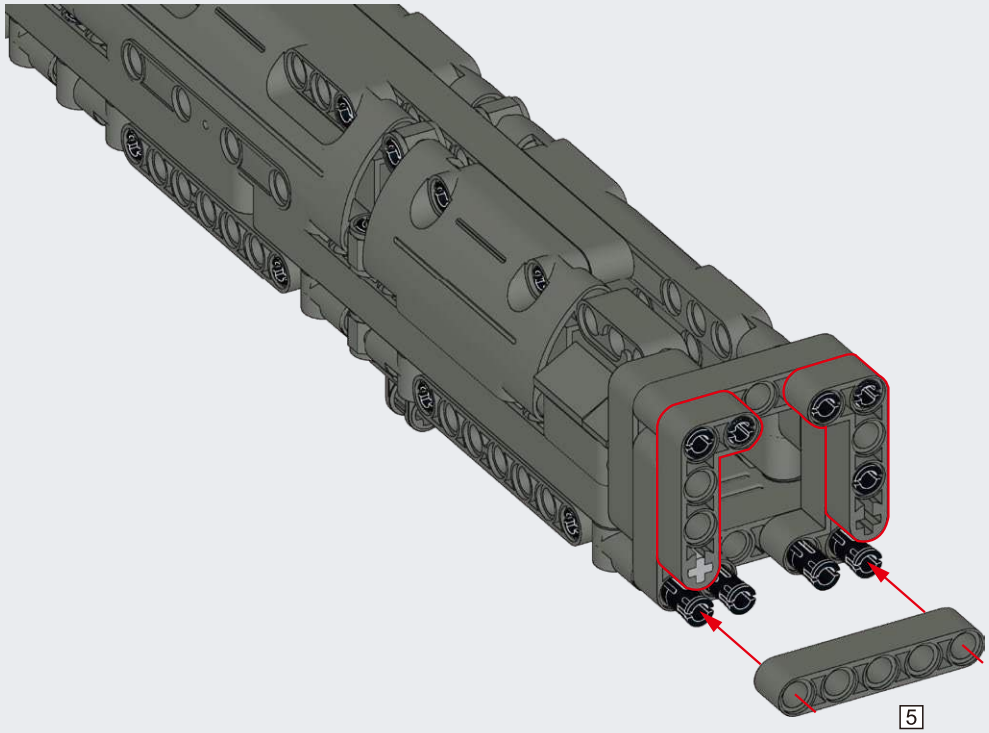

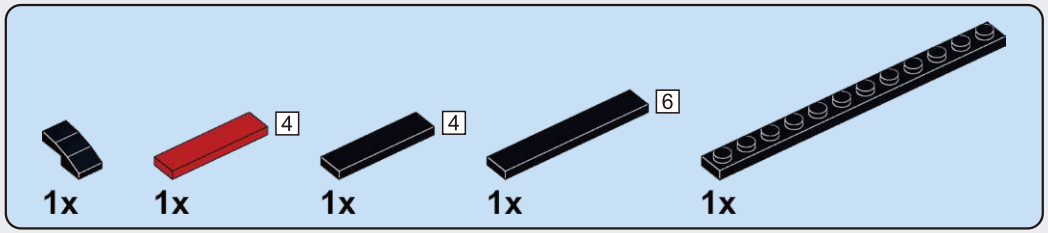

D150

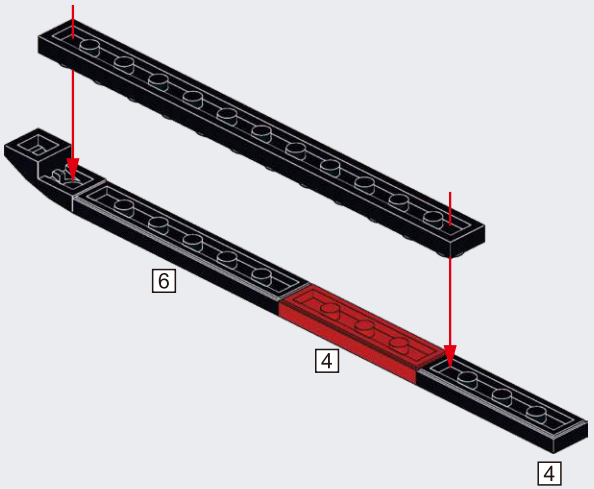

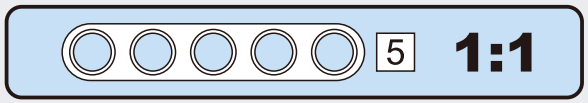

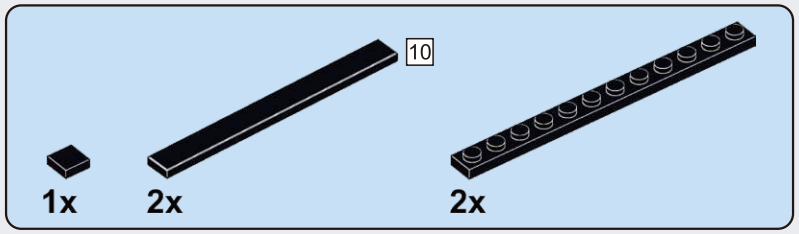

D151

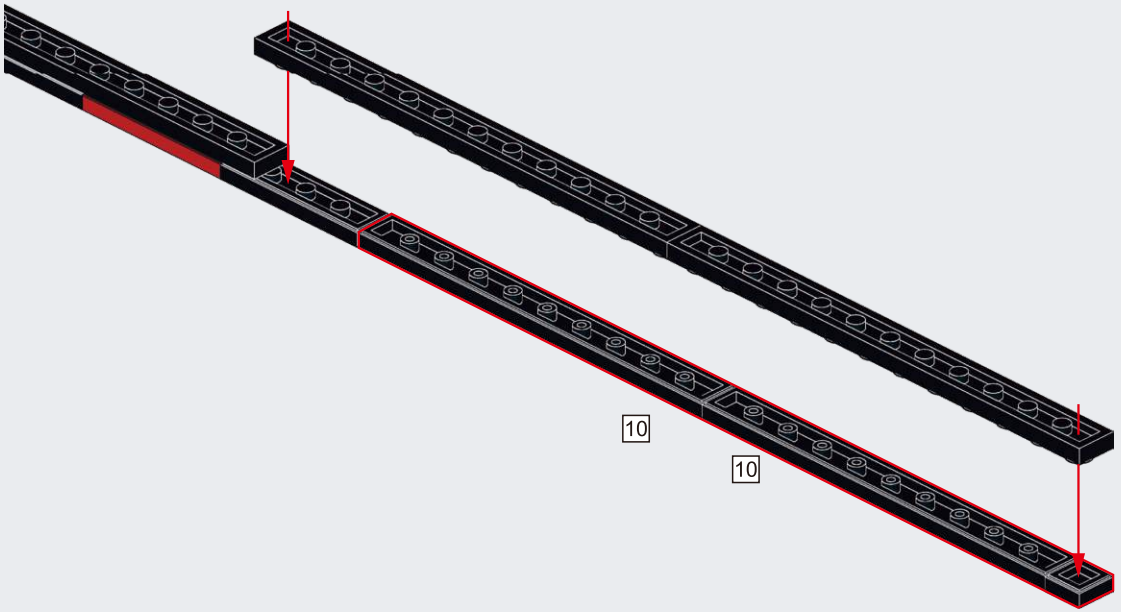

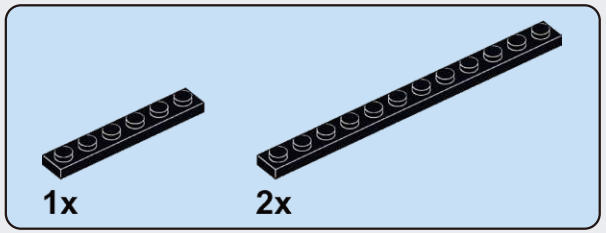

D152

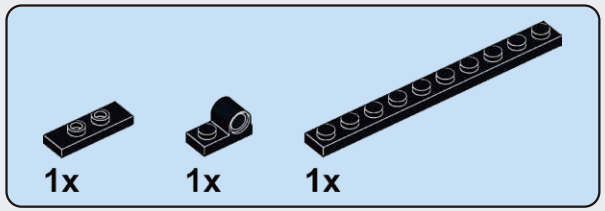

D153

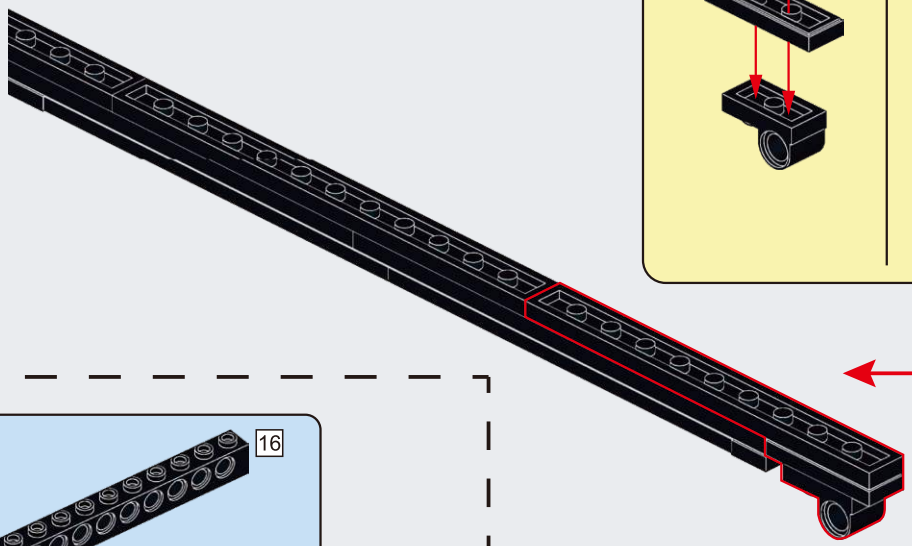

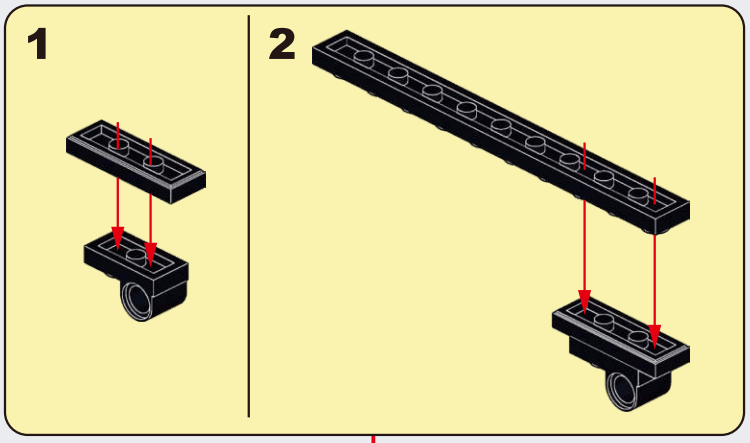

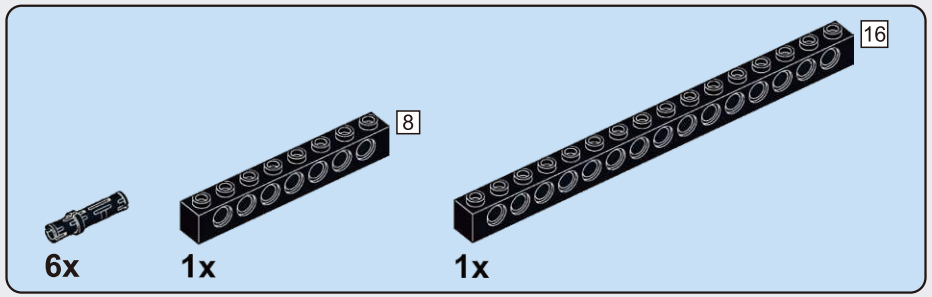

D154

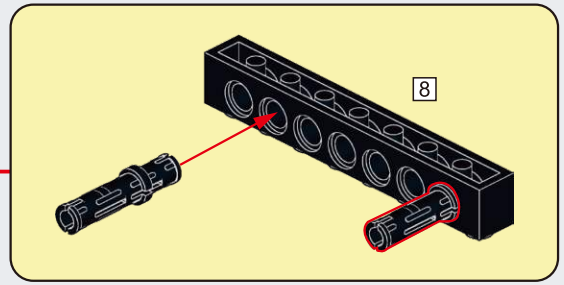

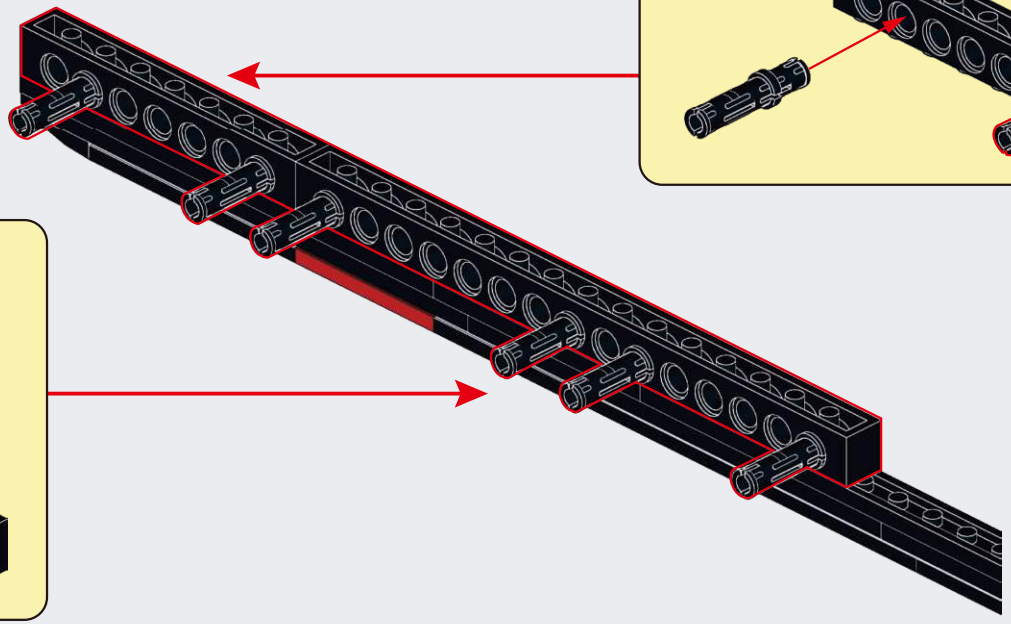

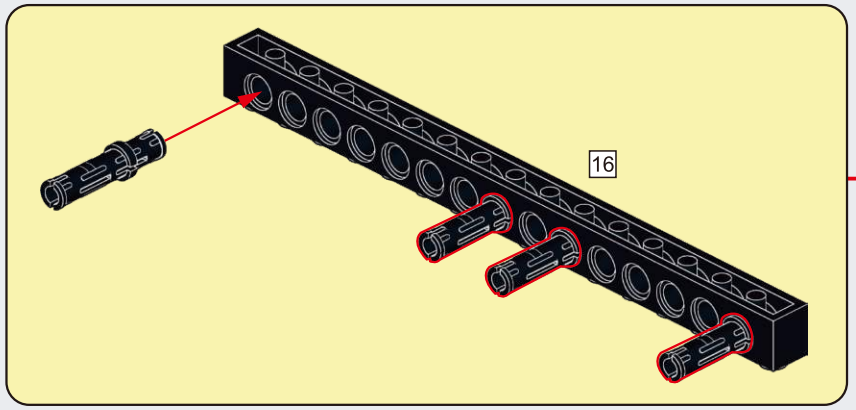

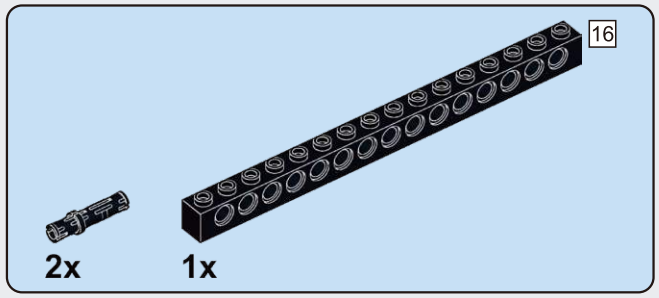

D155

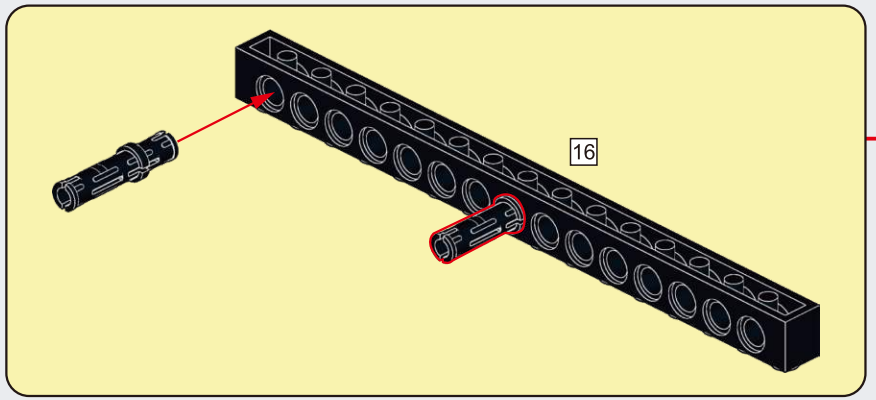

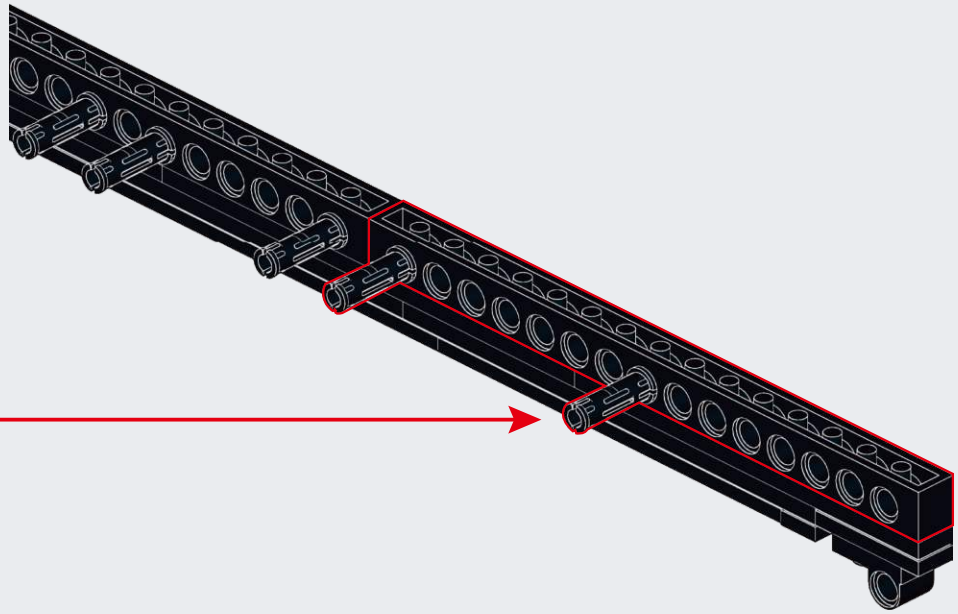

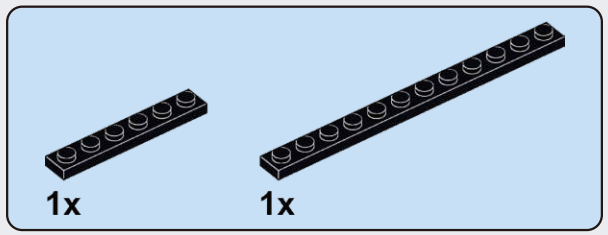

D156

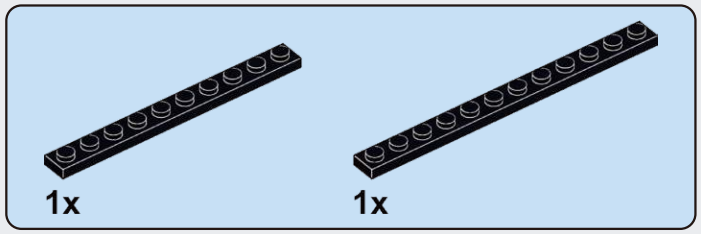

D157

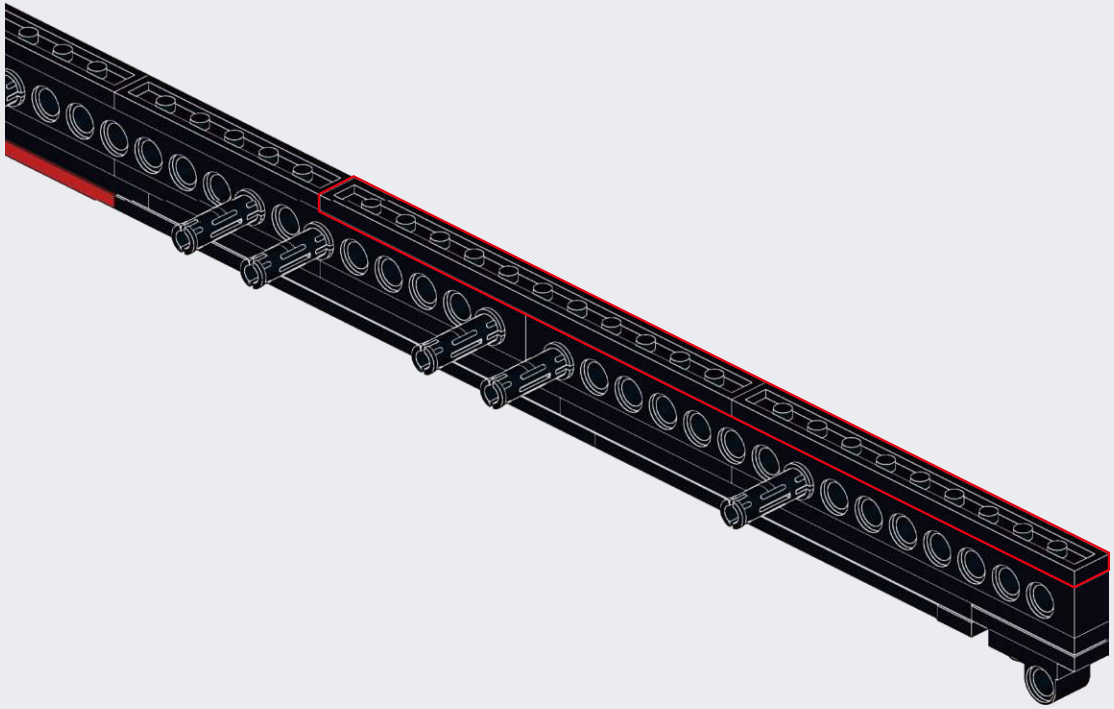

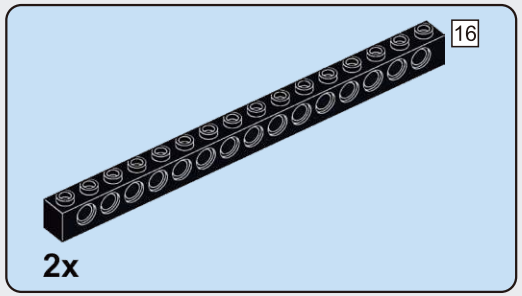

D158

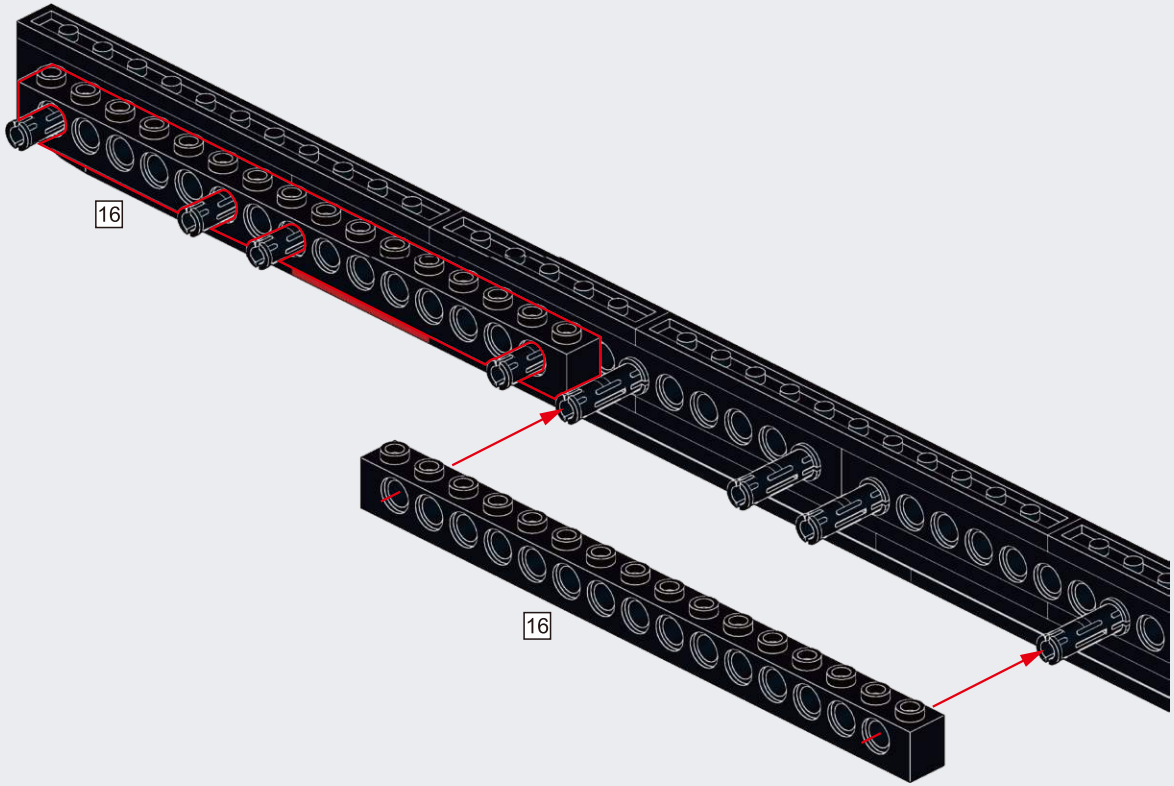

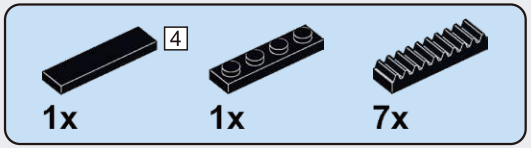

D159

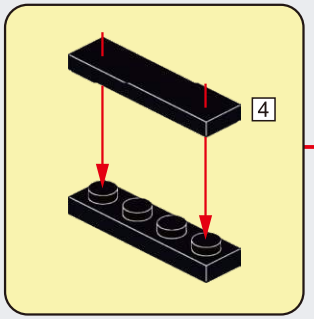

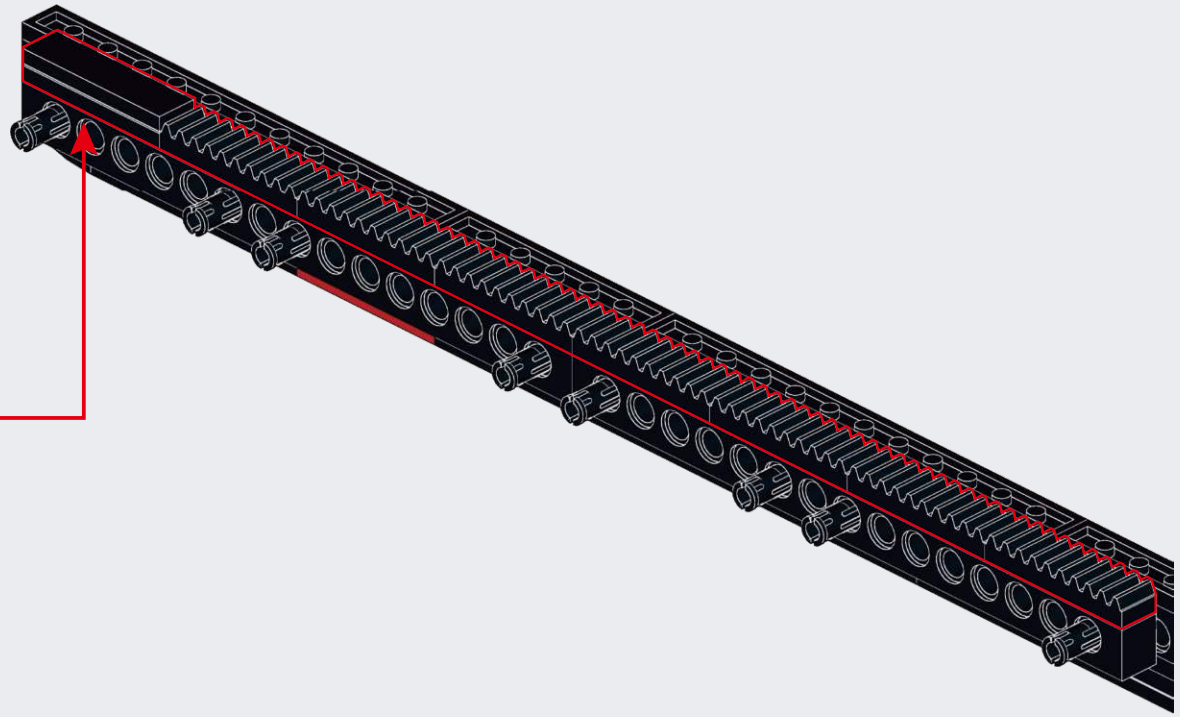

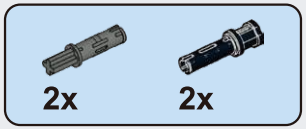

D160

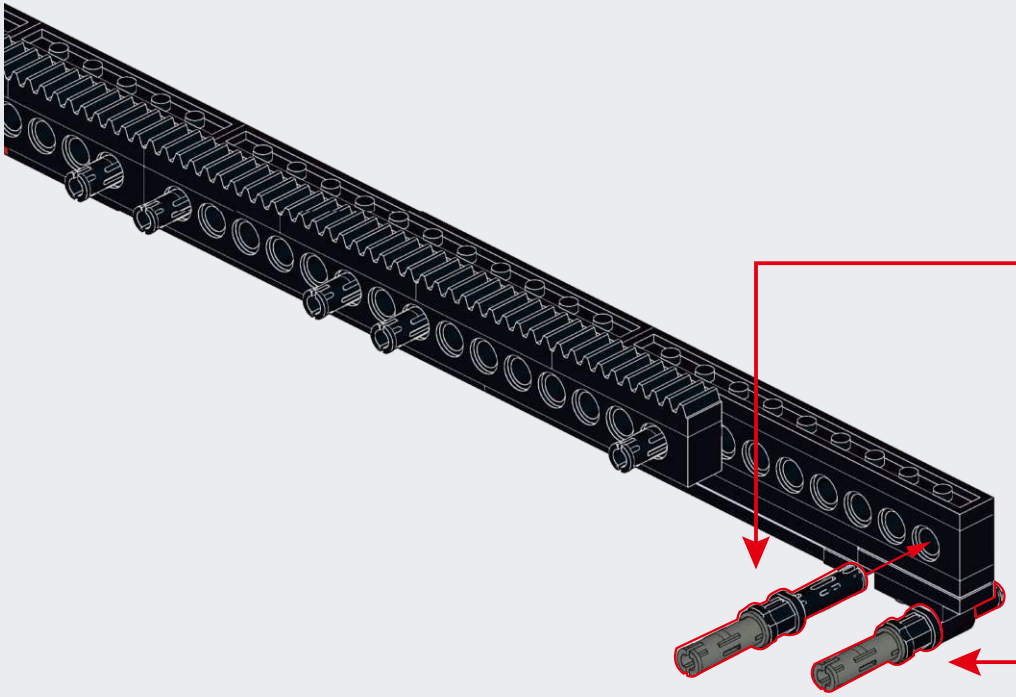

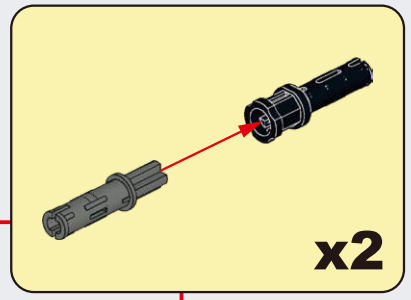

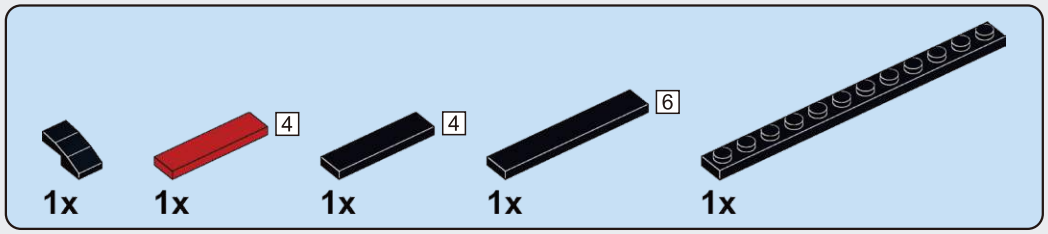

D161

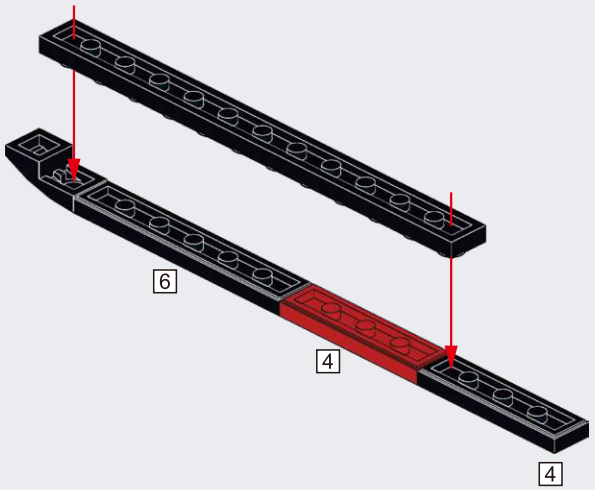

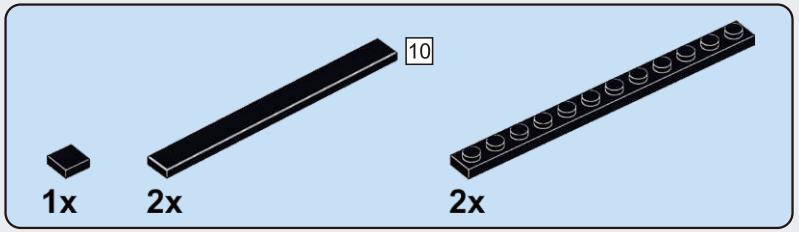

D162

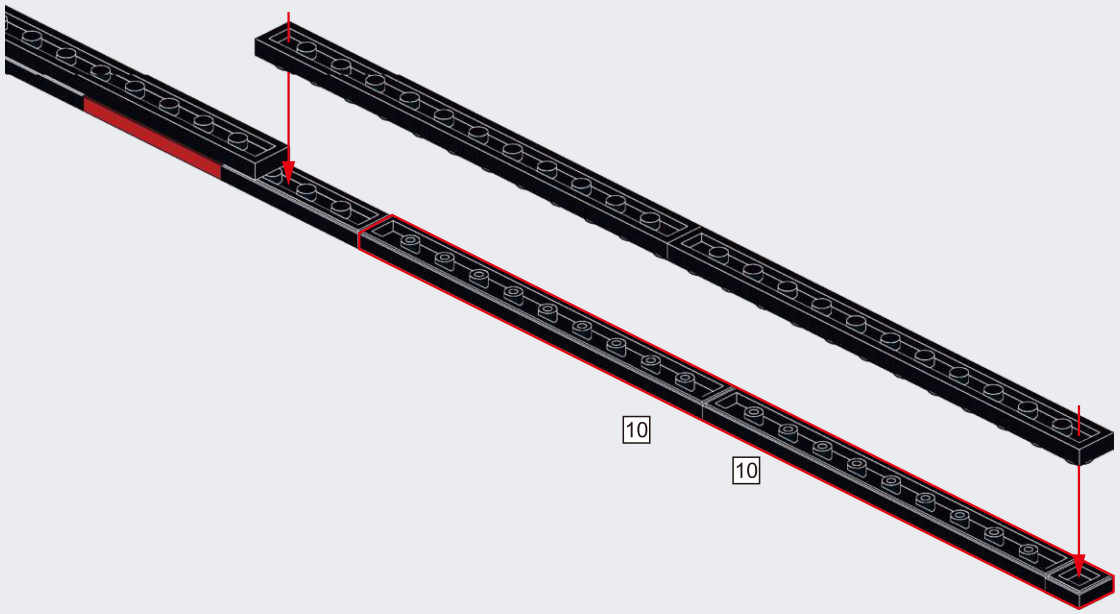

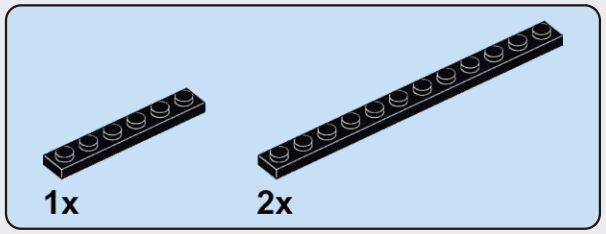

D163

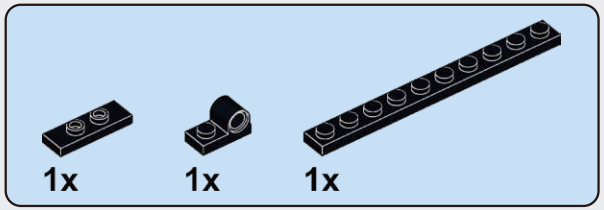

D164

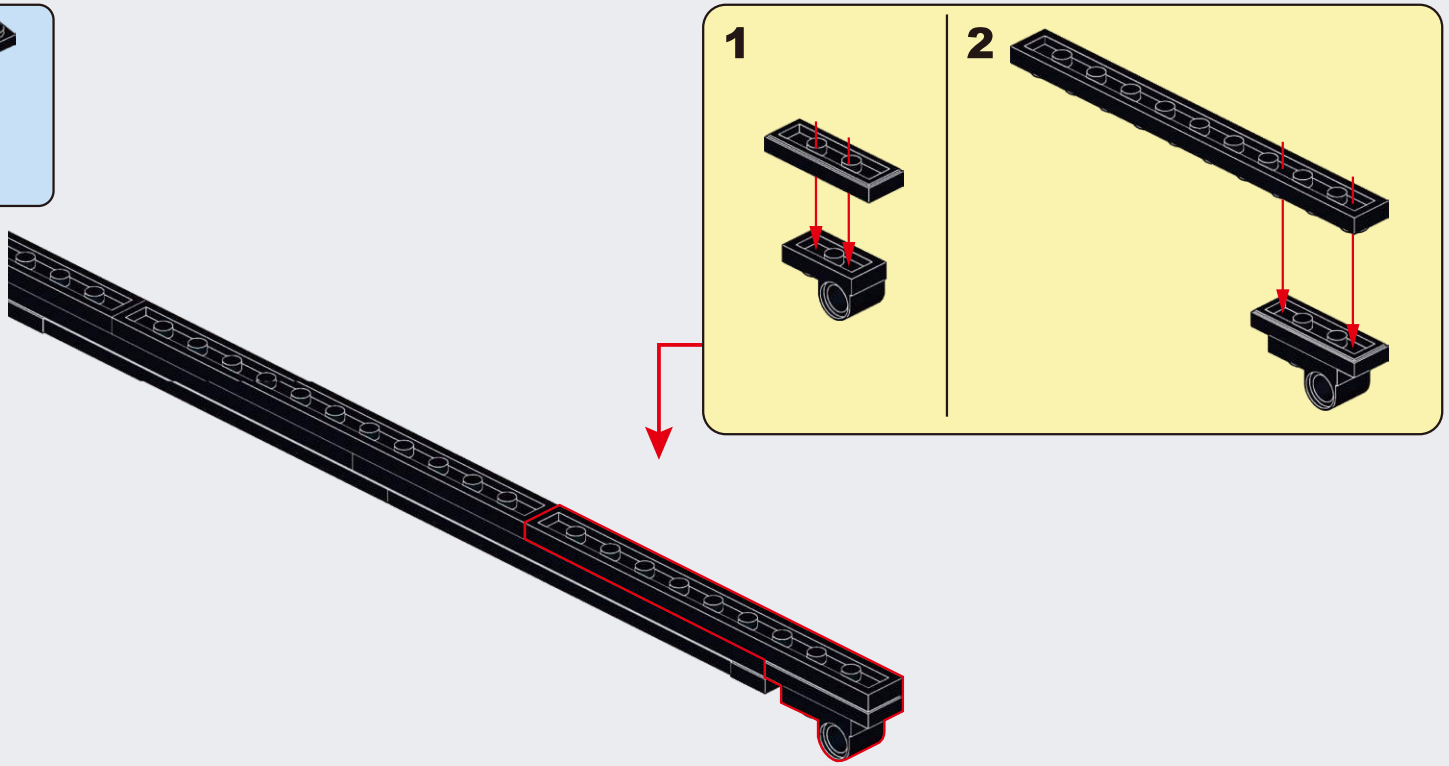

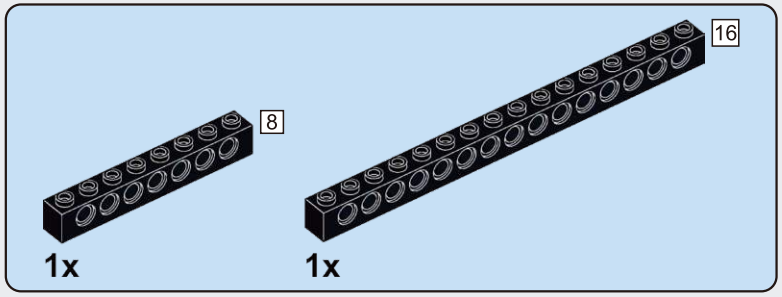

D165

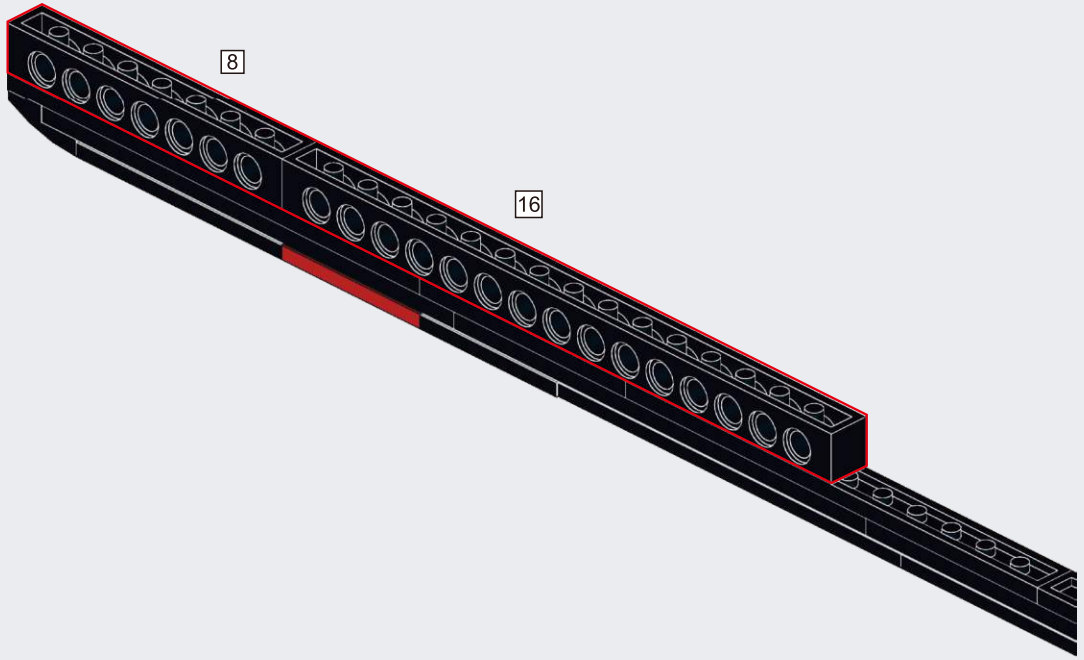

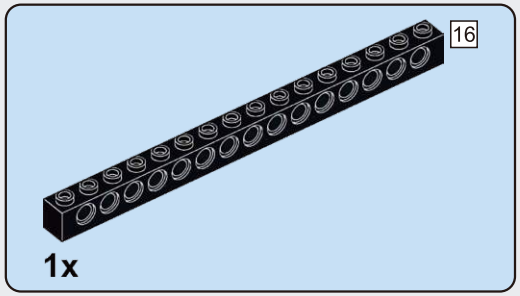

D166

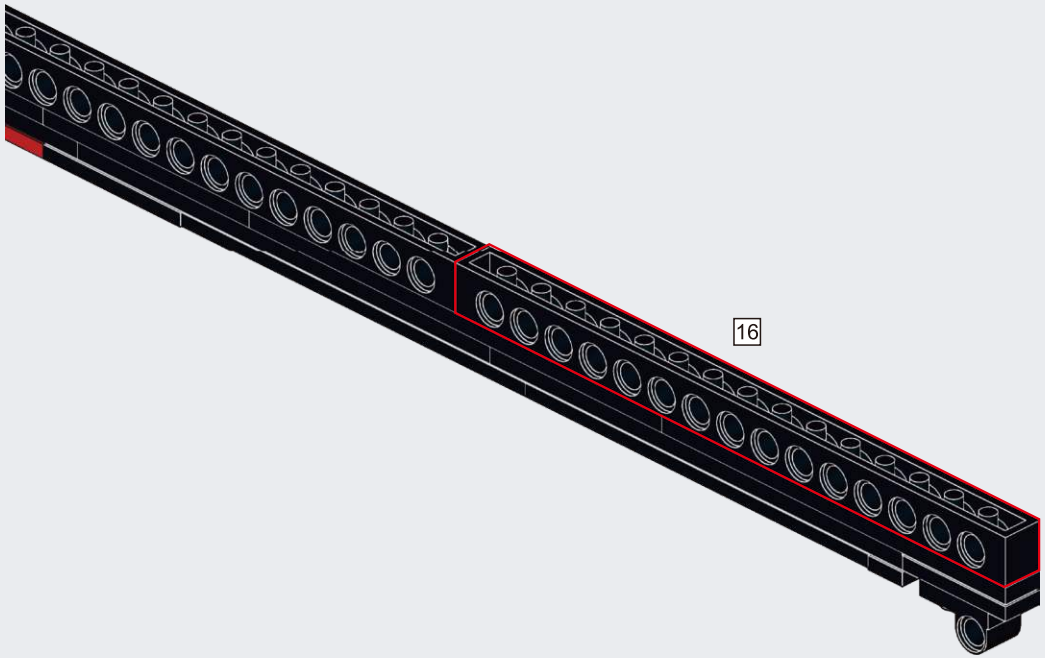

D167

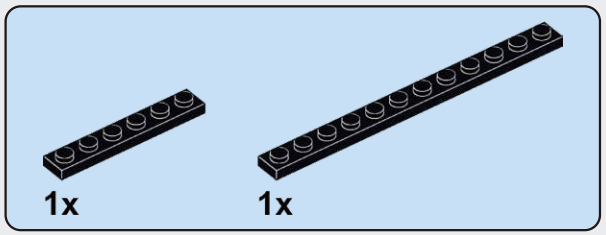

D168

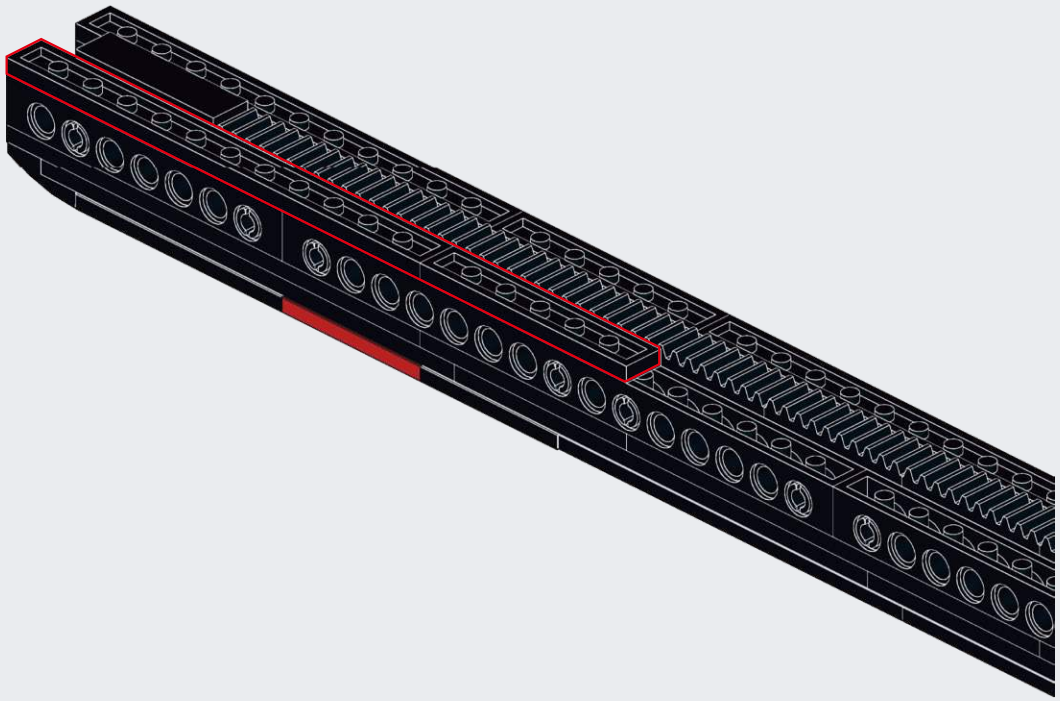

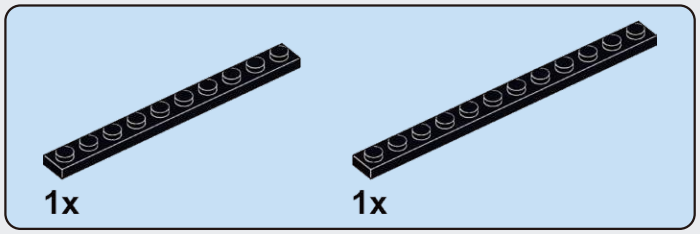

D169

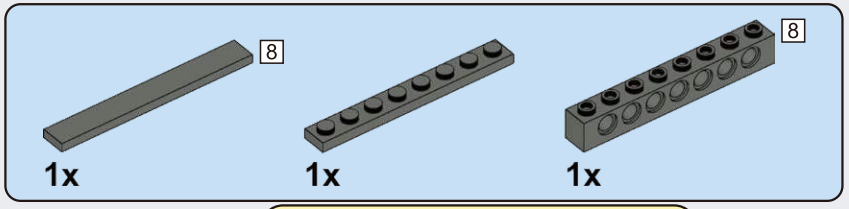

D170

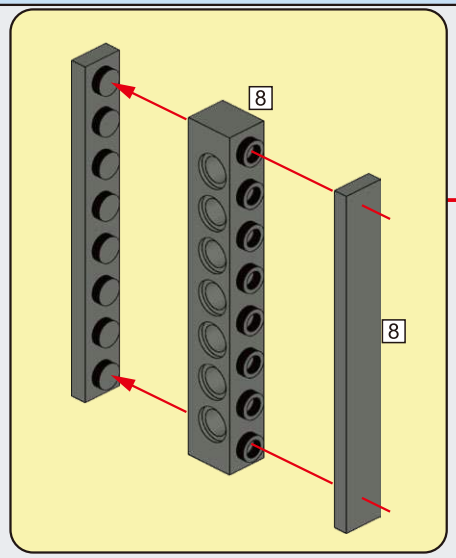

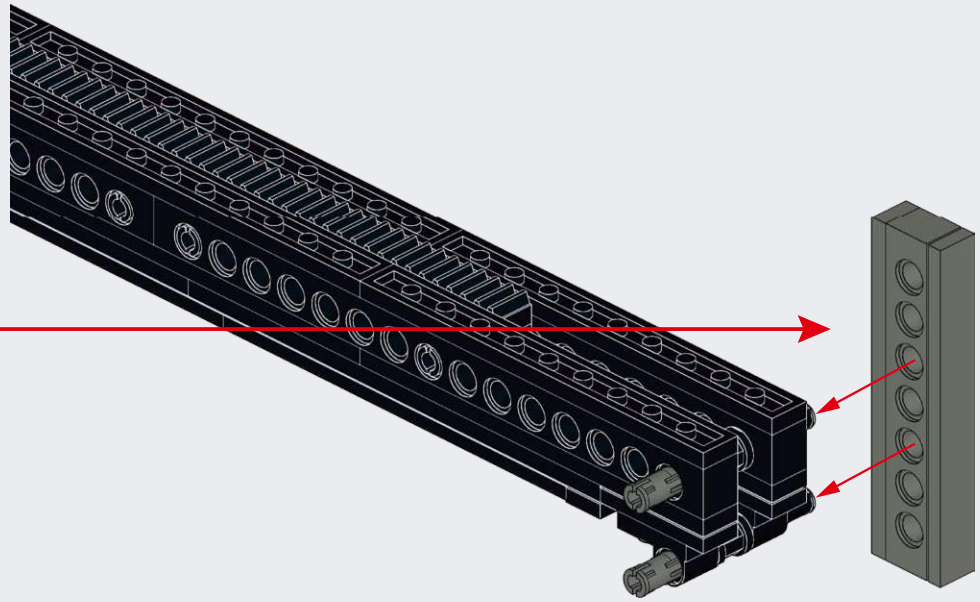

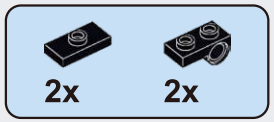

D171

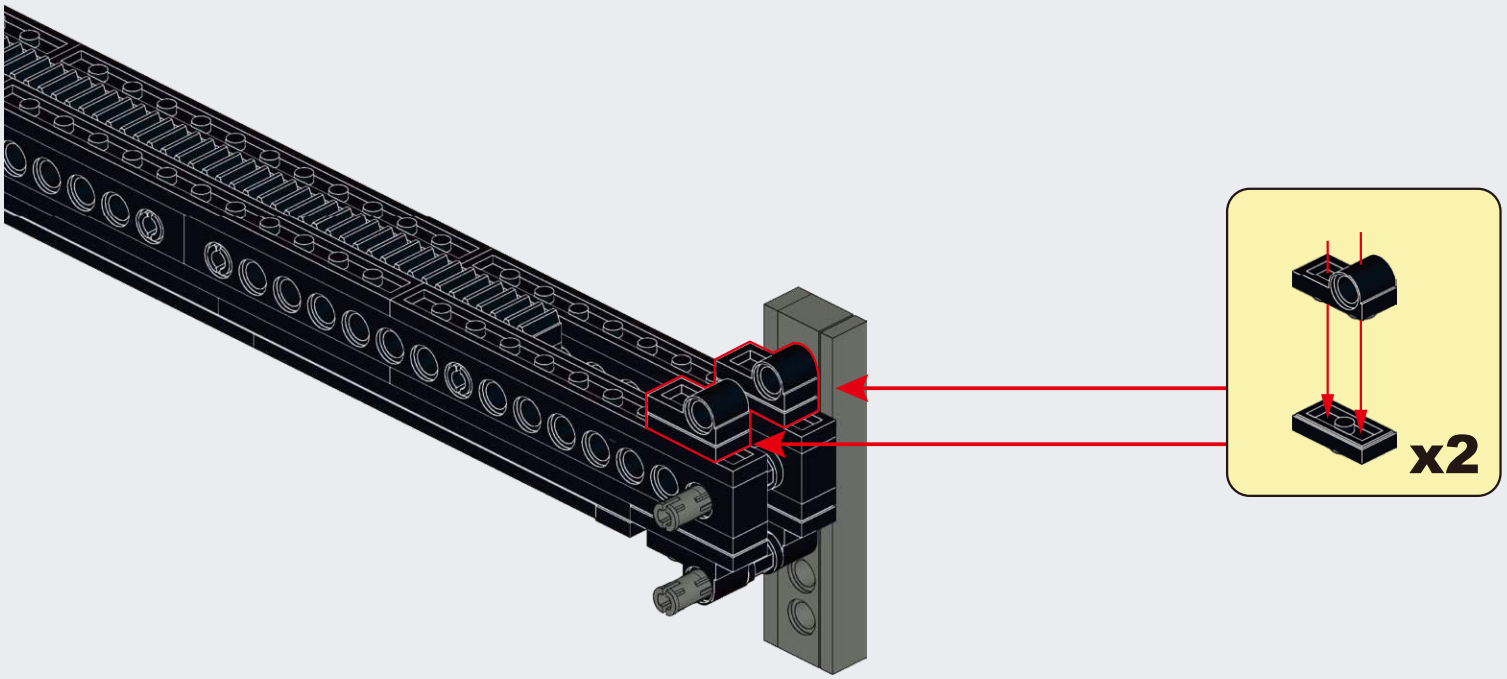

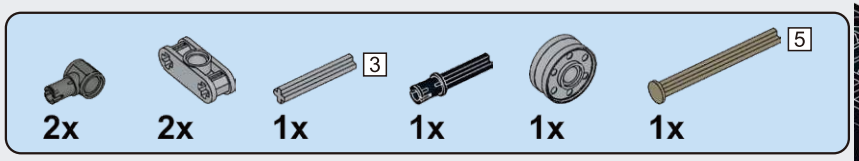

D172

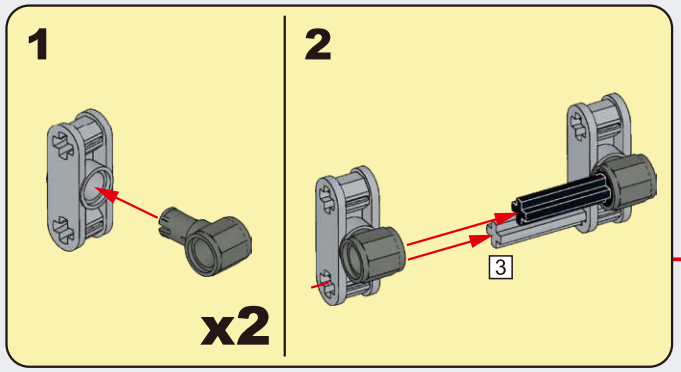

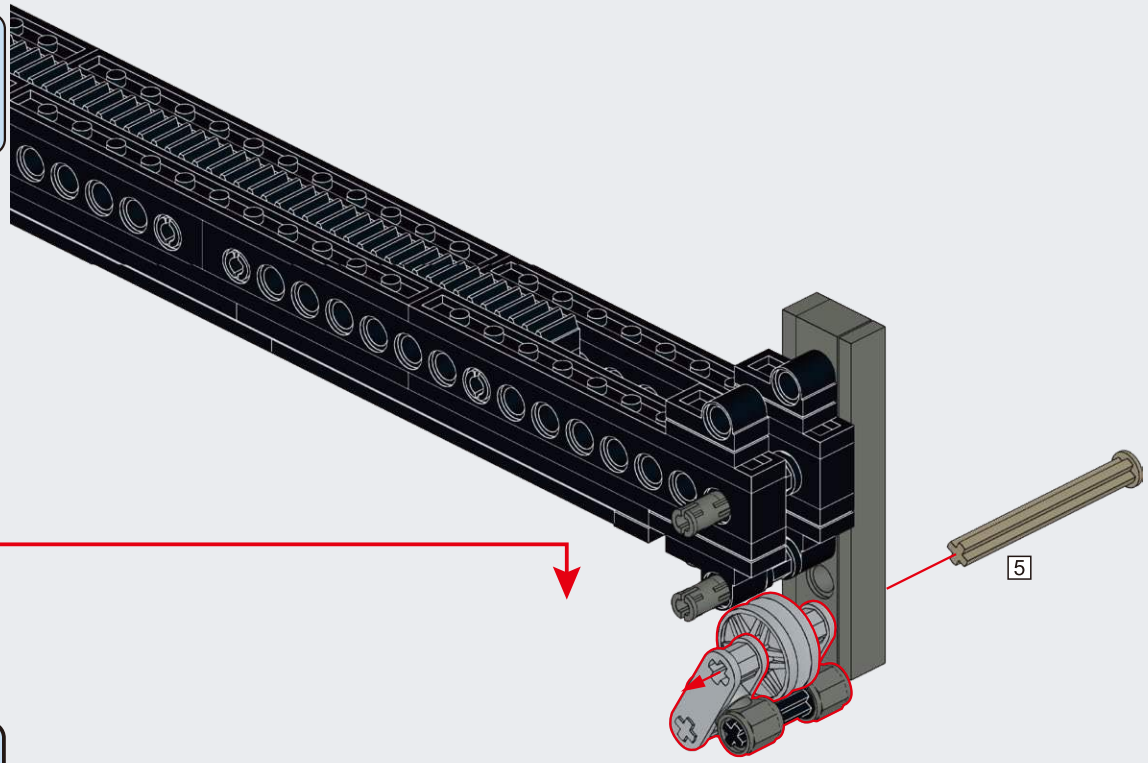

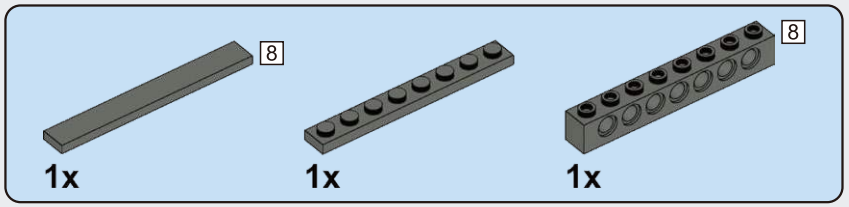

D173

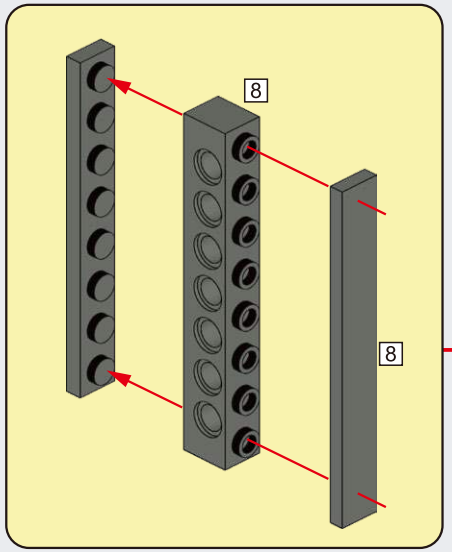

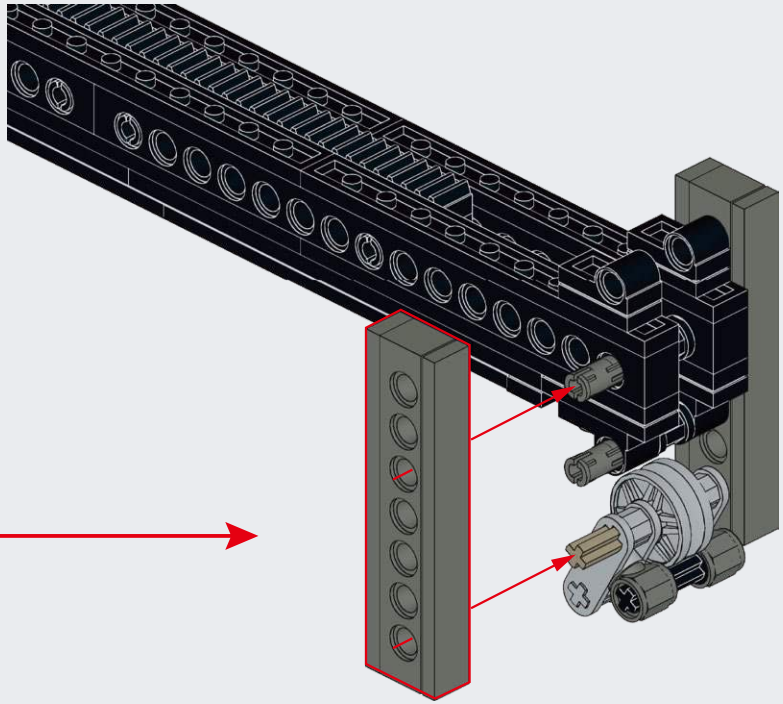

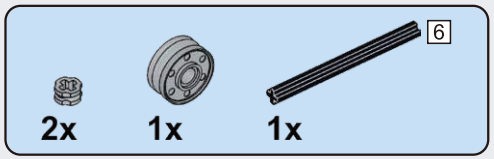

D174

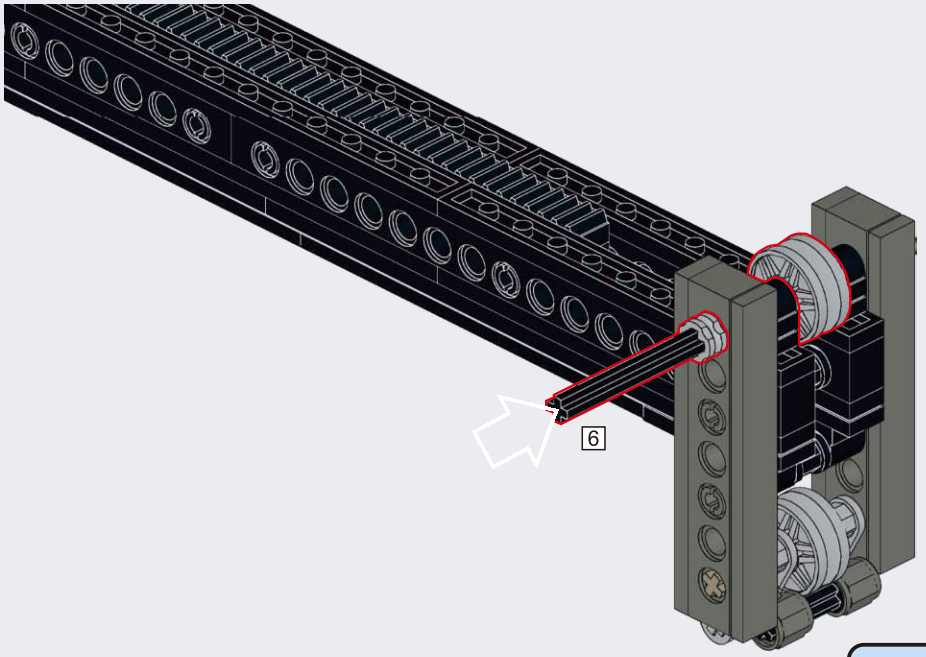

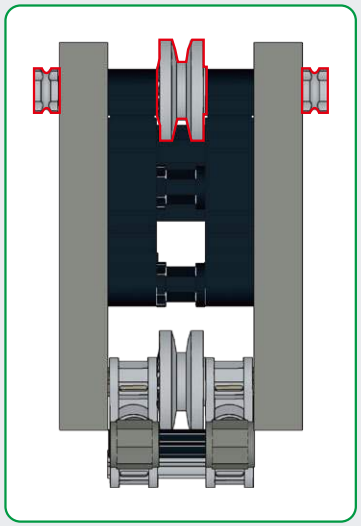

D175

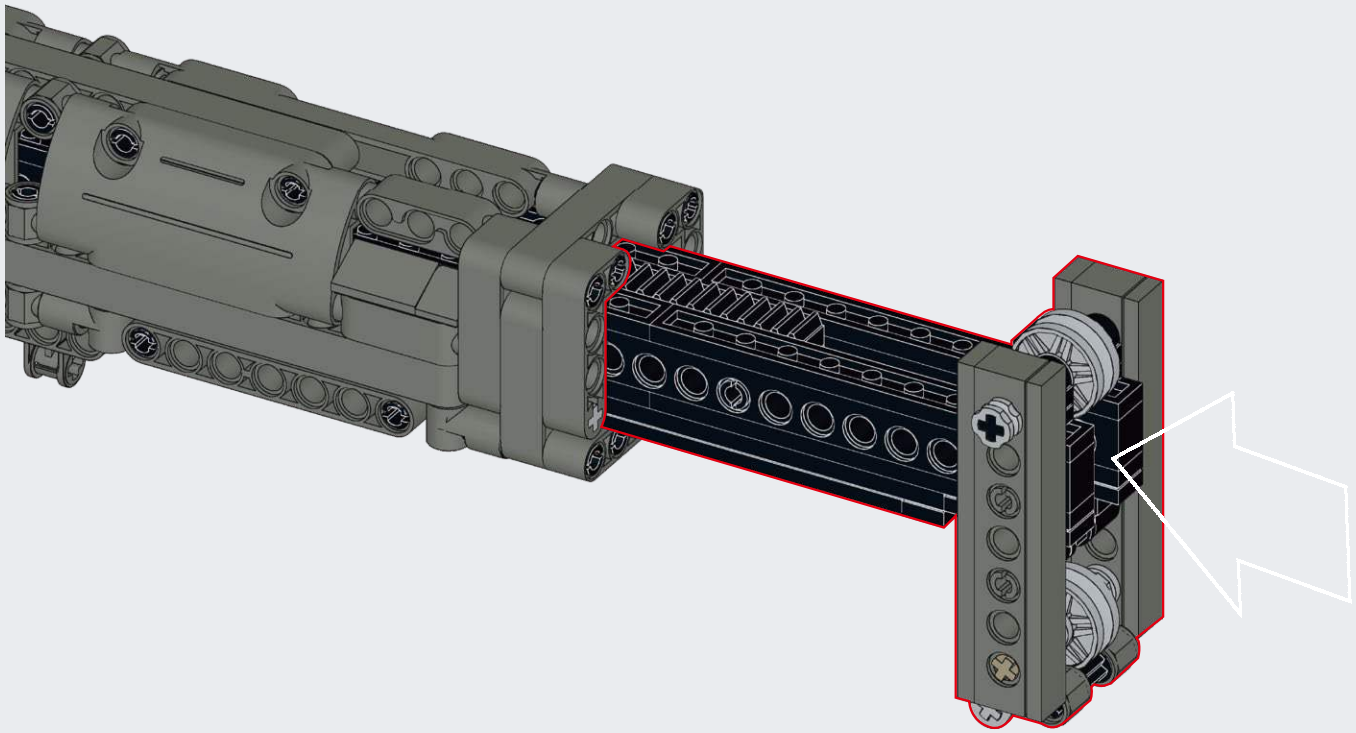

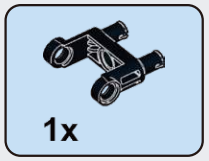

D176

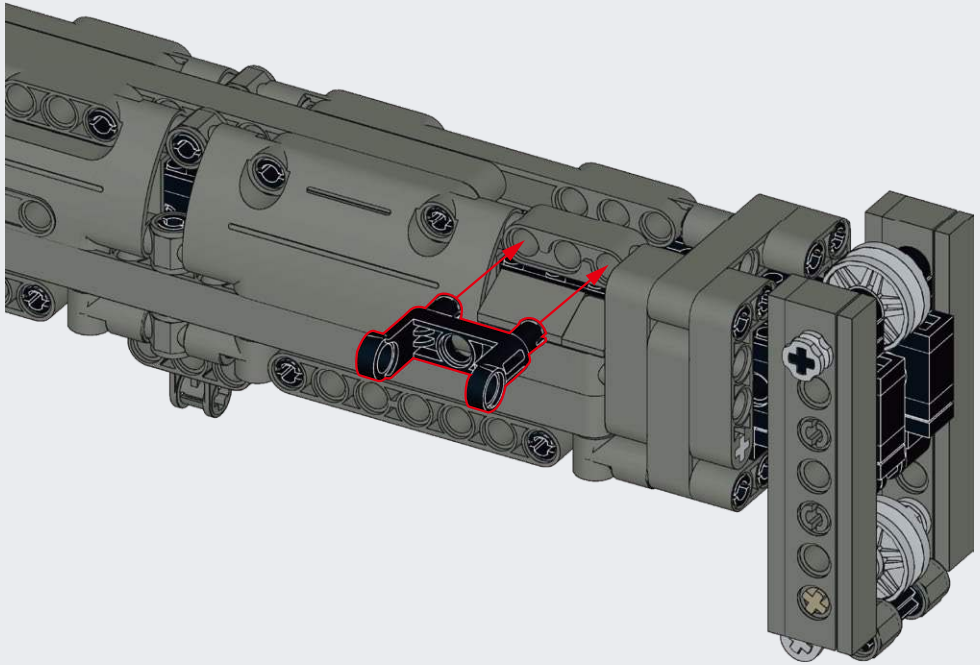

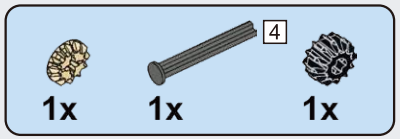

D177

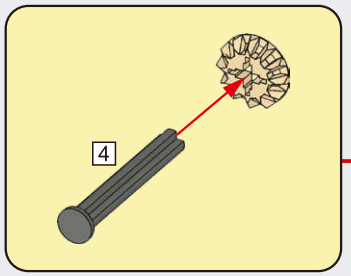

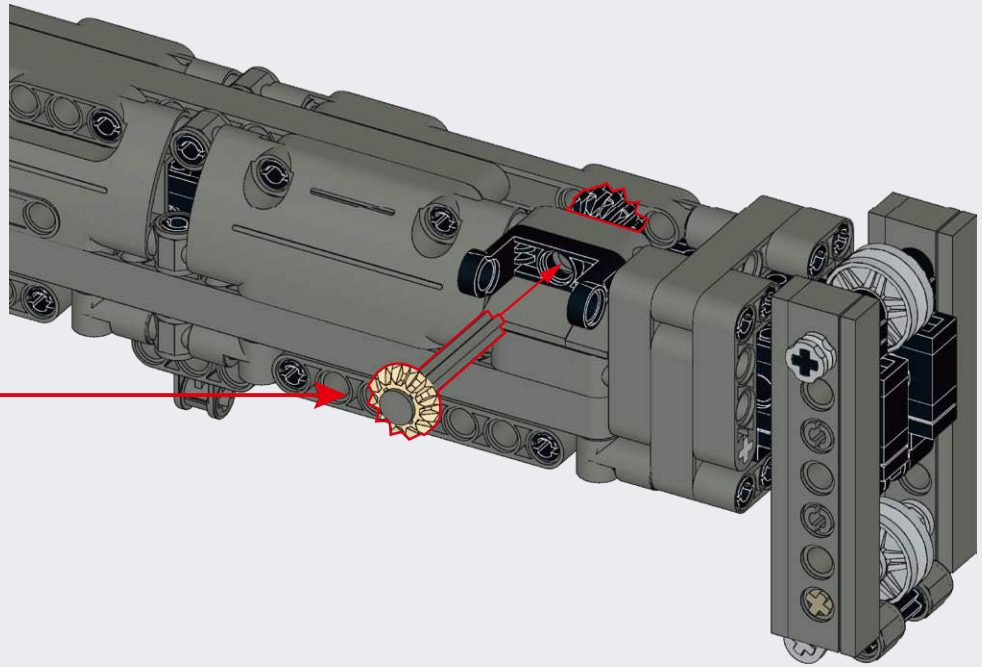

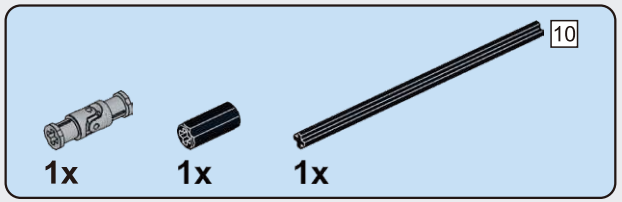

D178

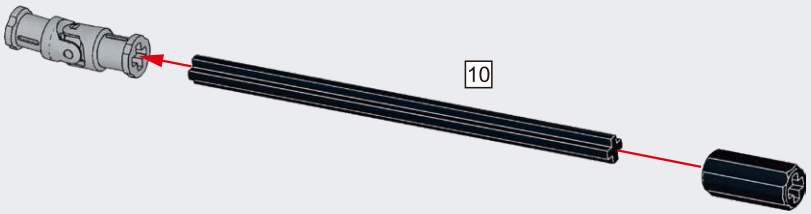

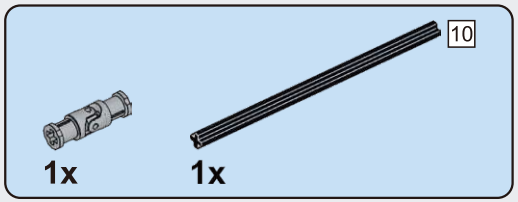

D179

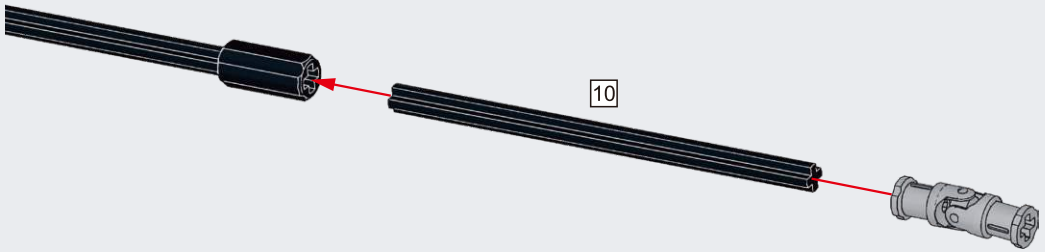

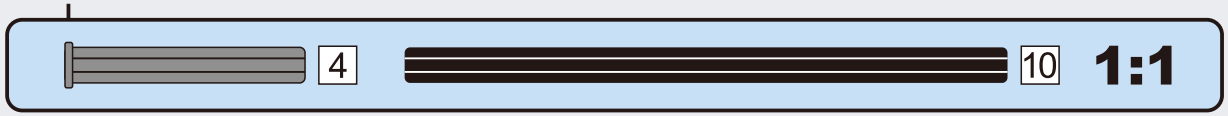

D180

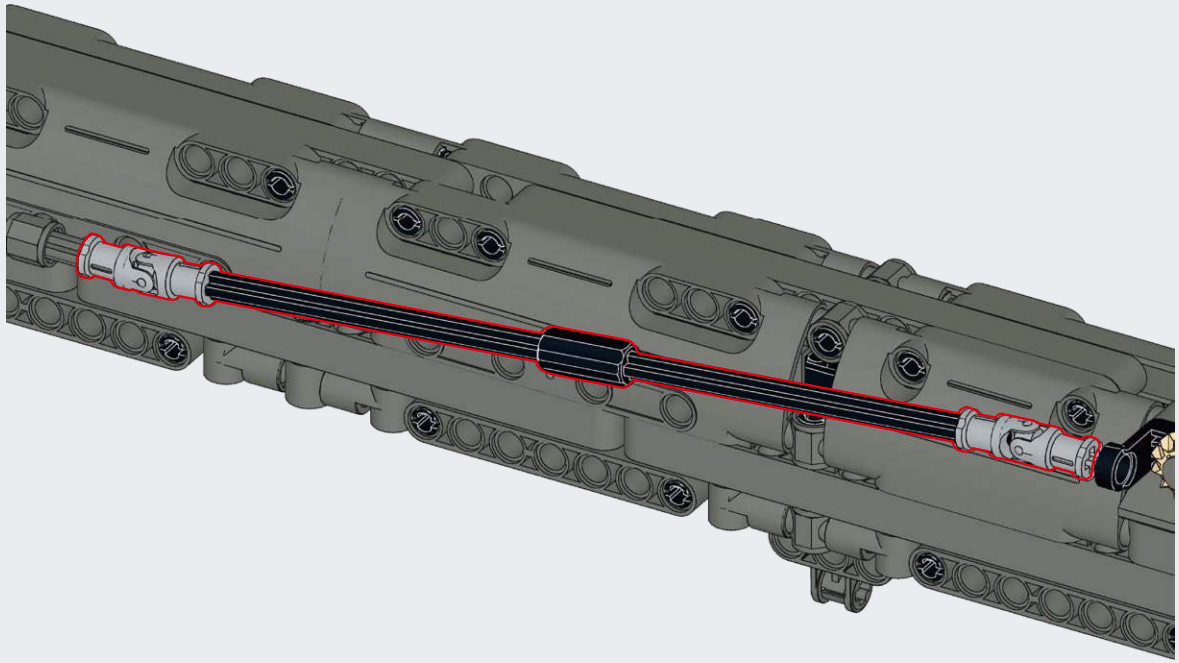

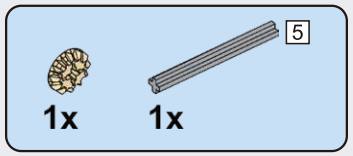

D181

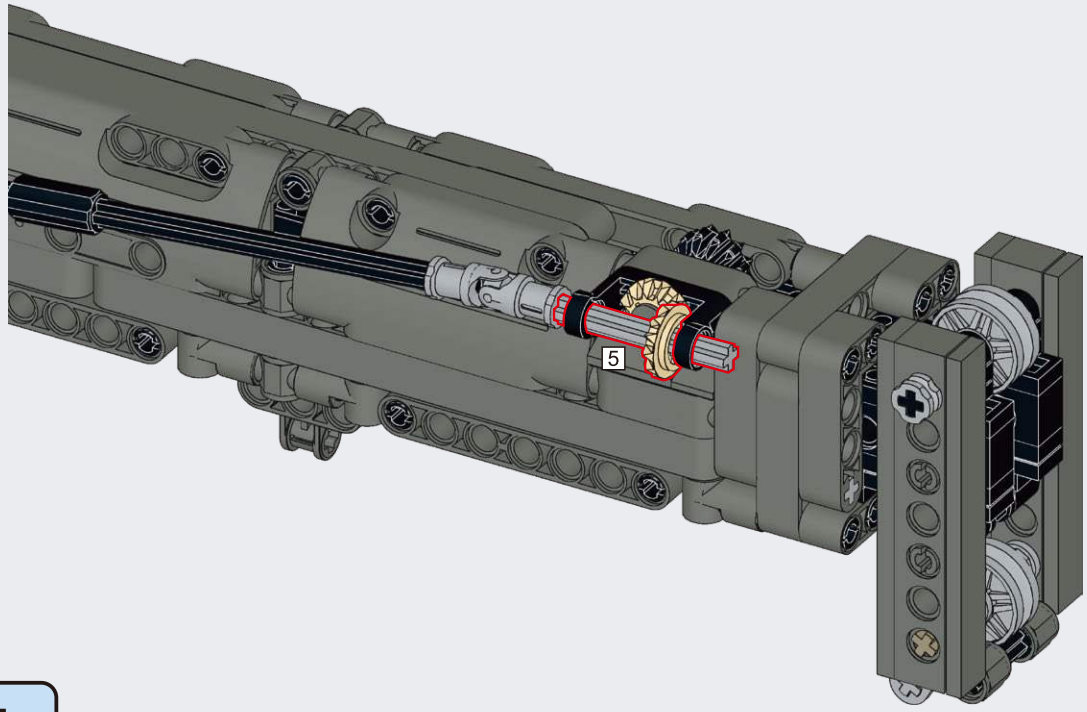

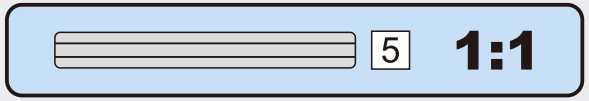

D182

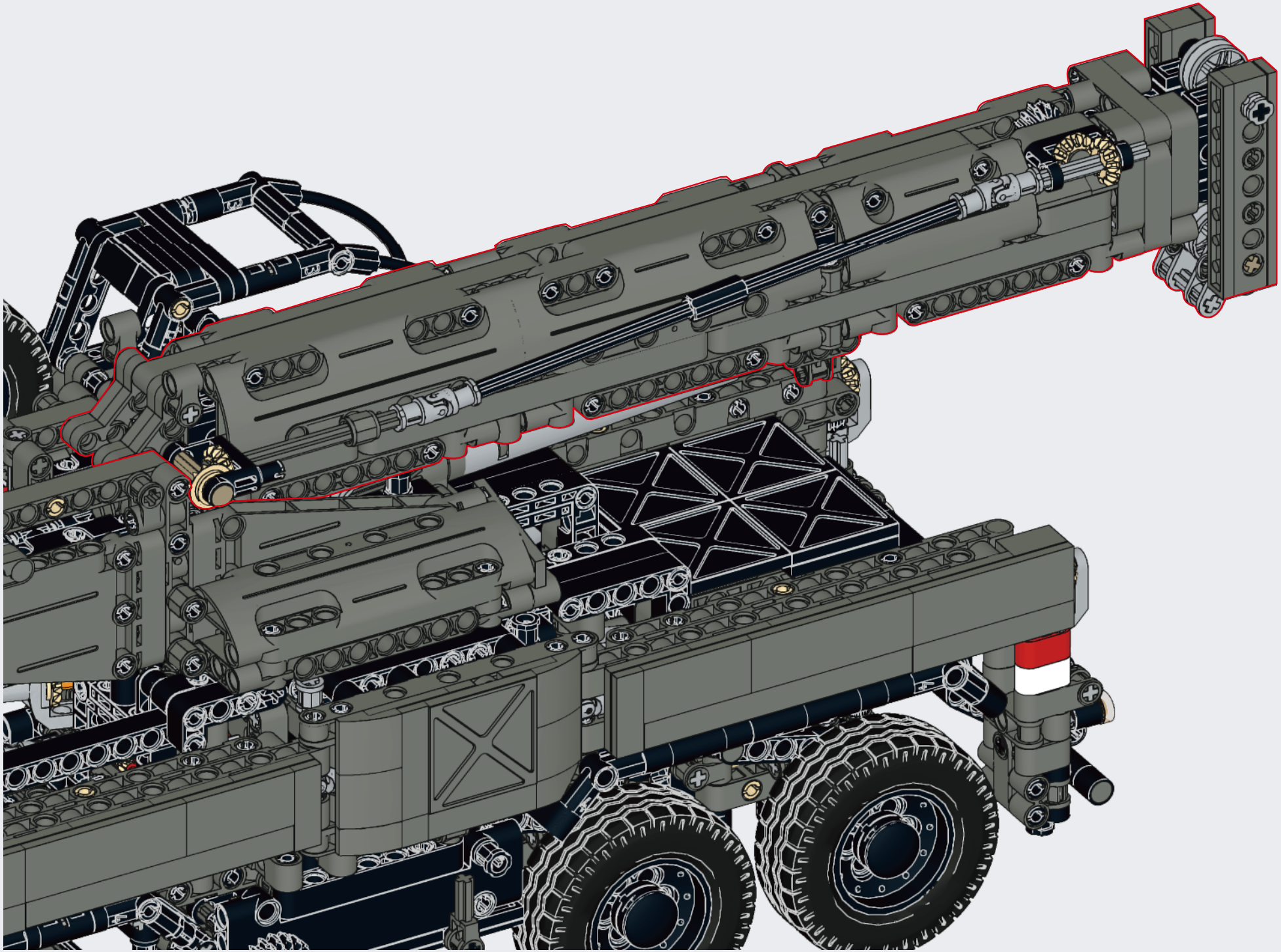

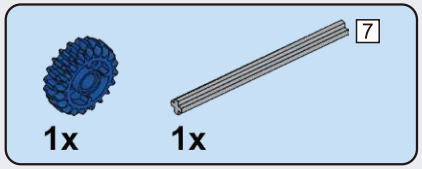

D183

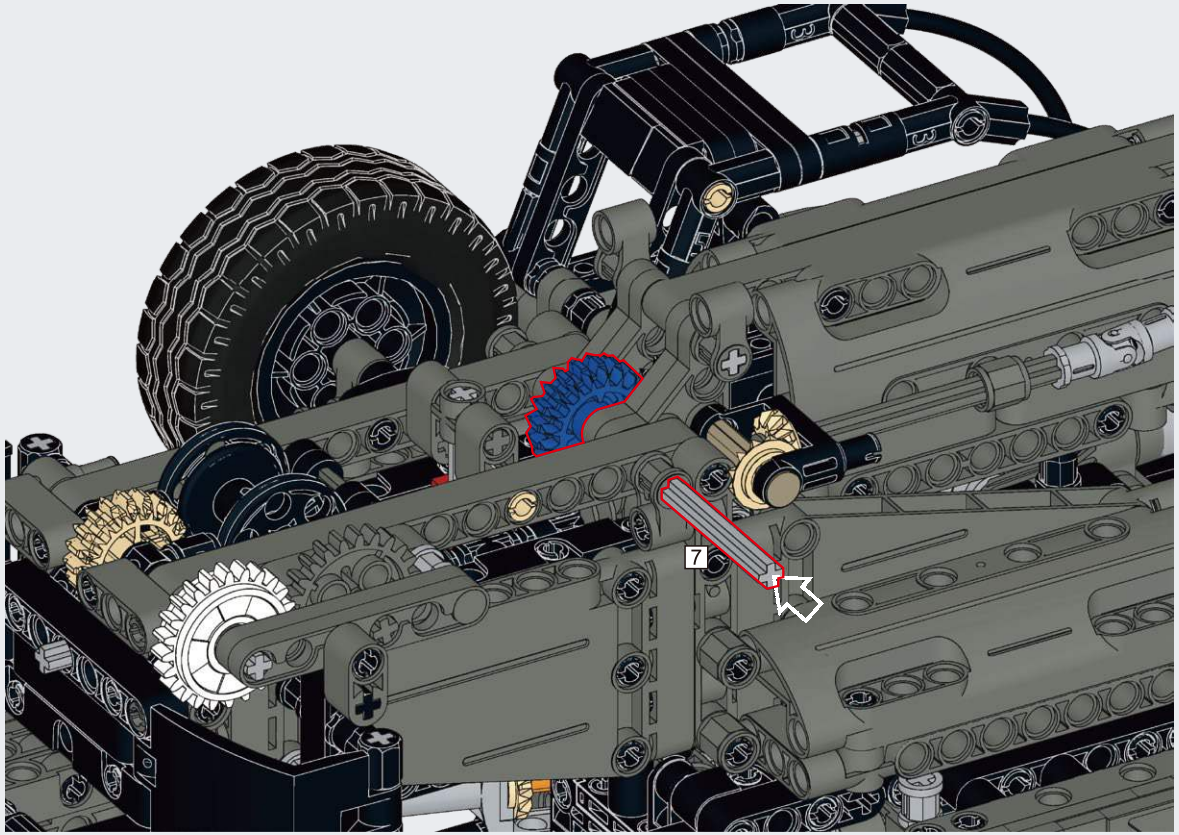

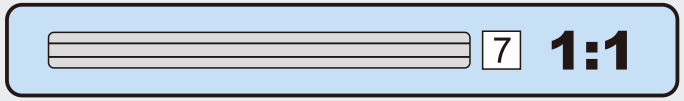

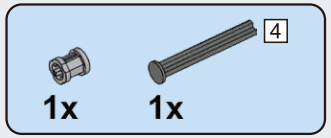

D184

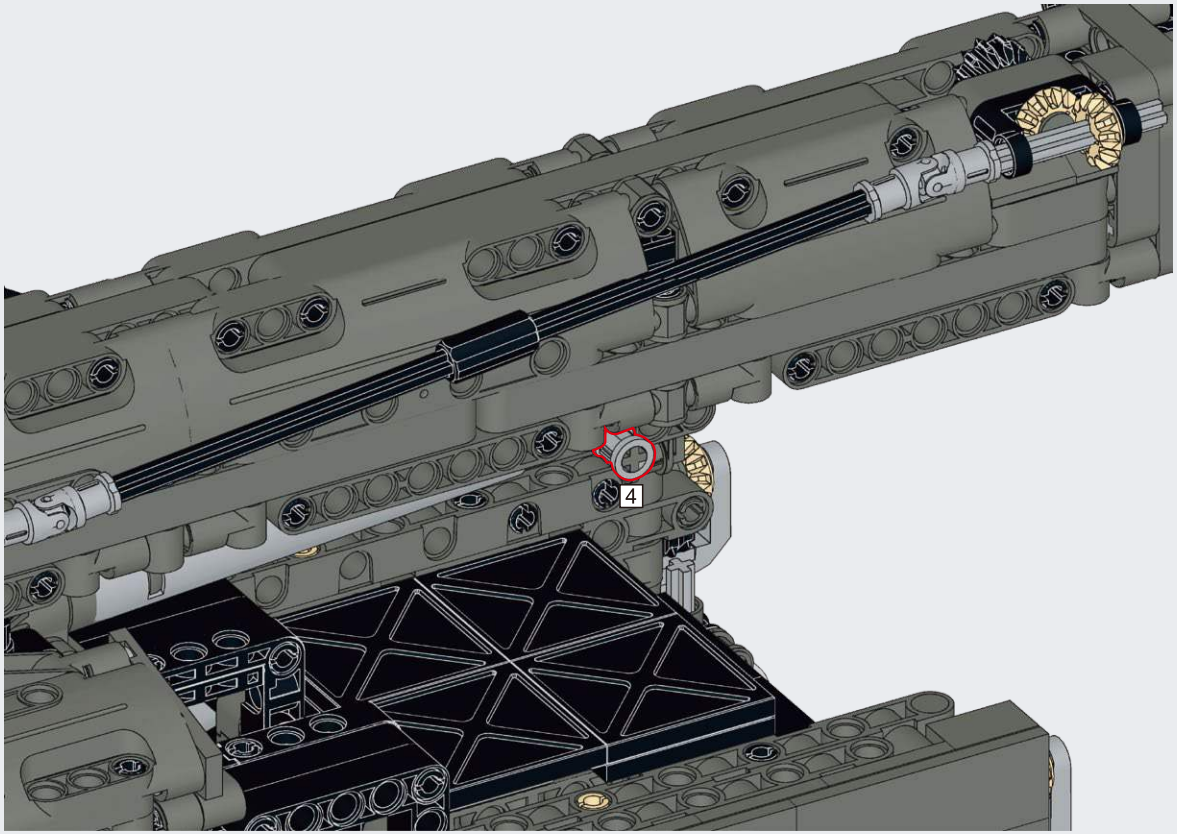

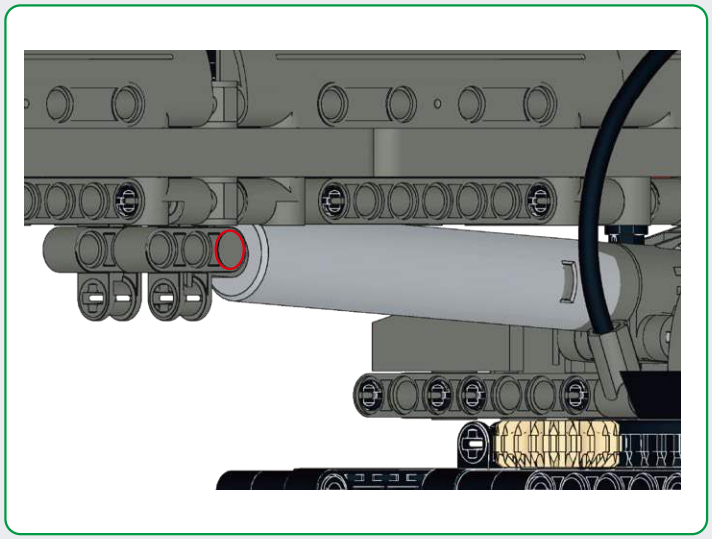

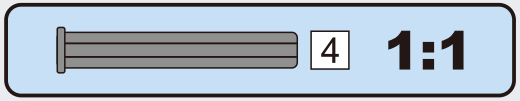

E

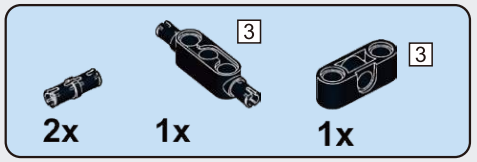

E1

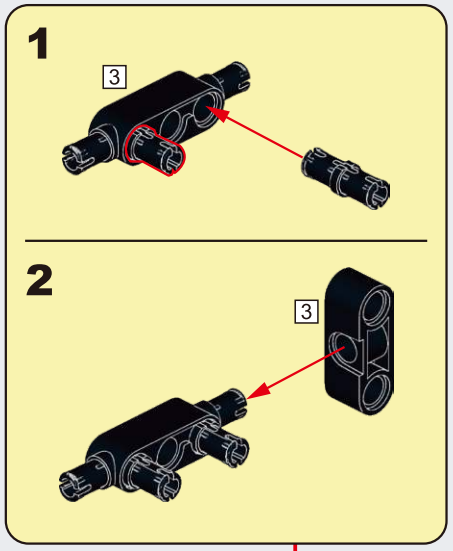

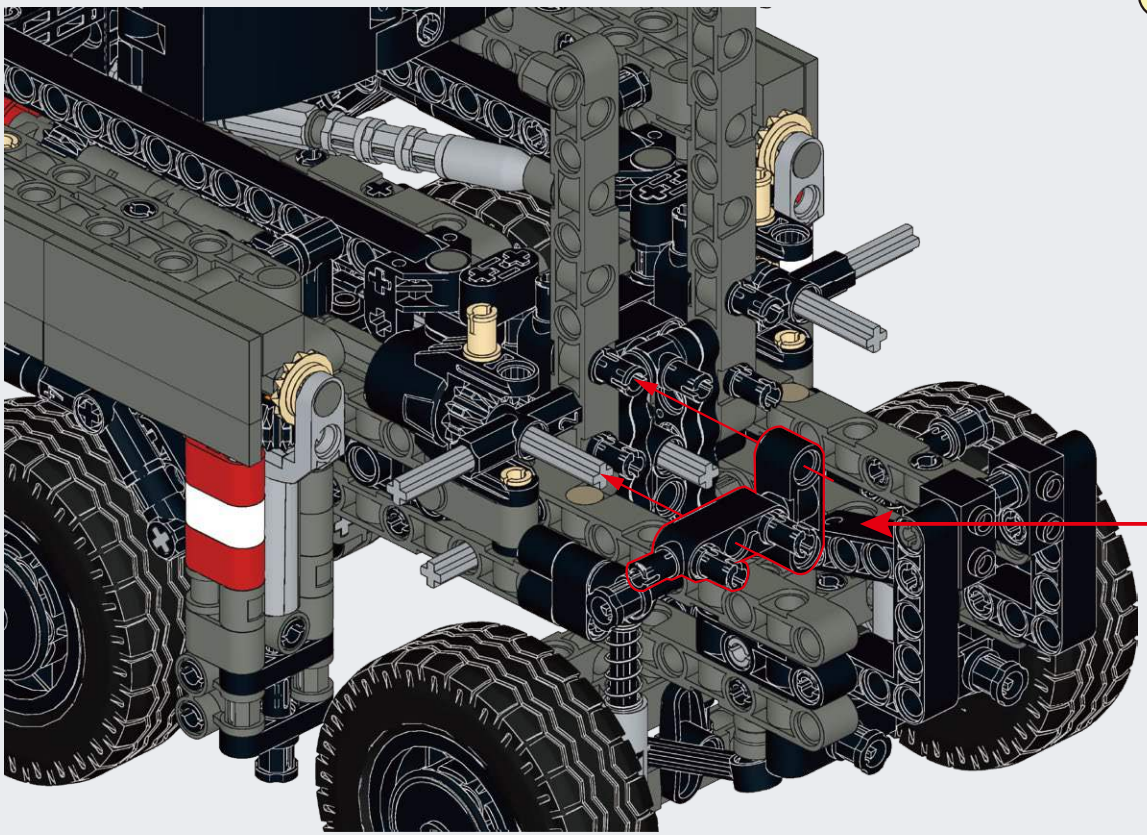

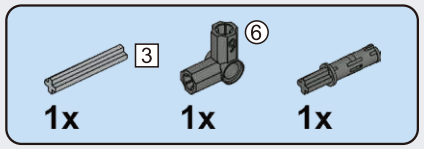

E2

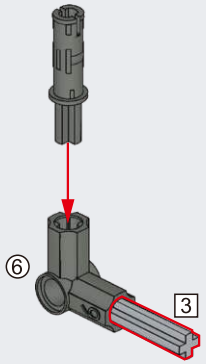

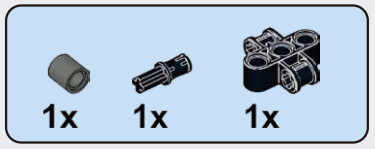

E3

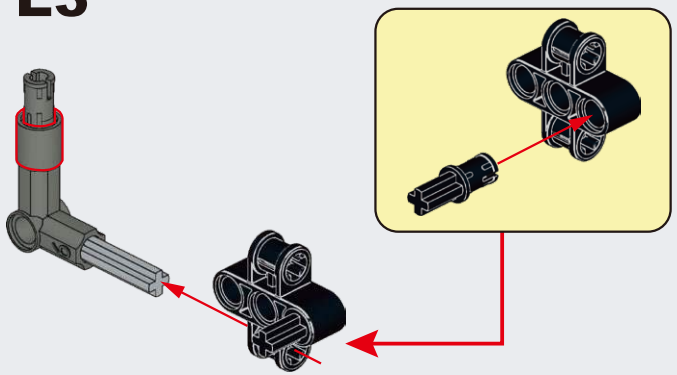

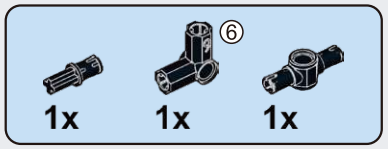

E4

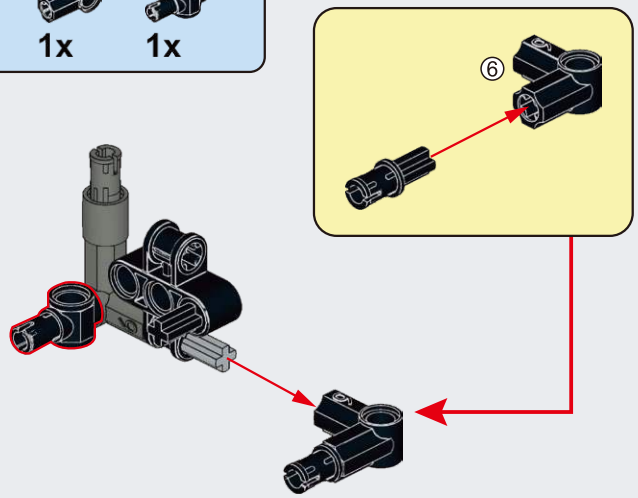

E5

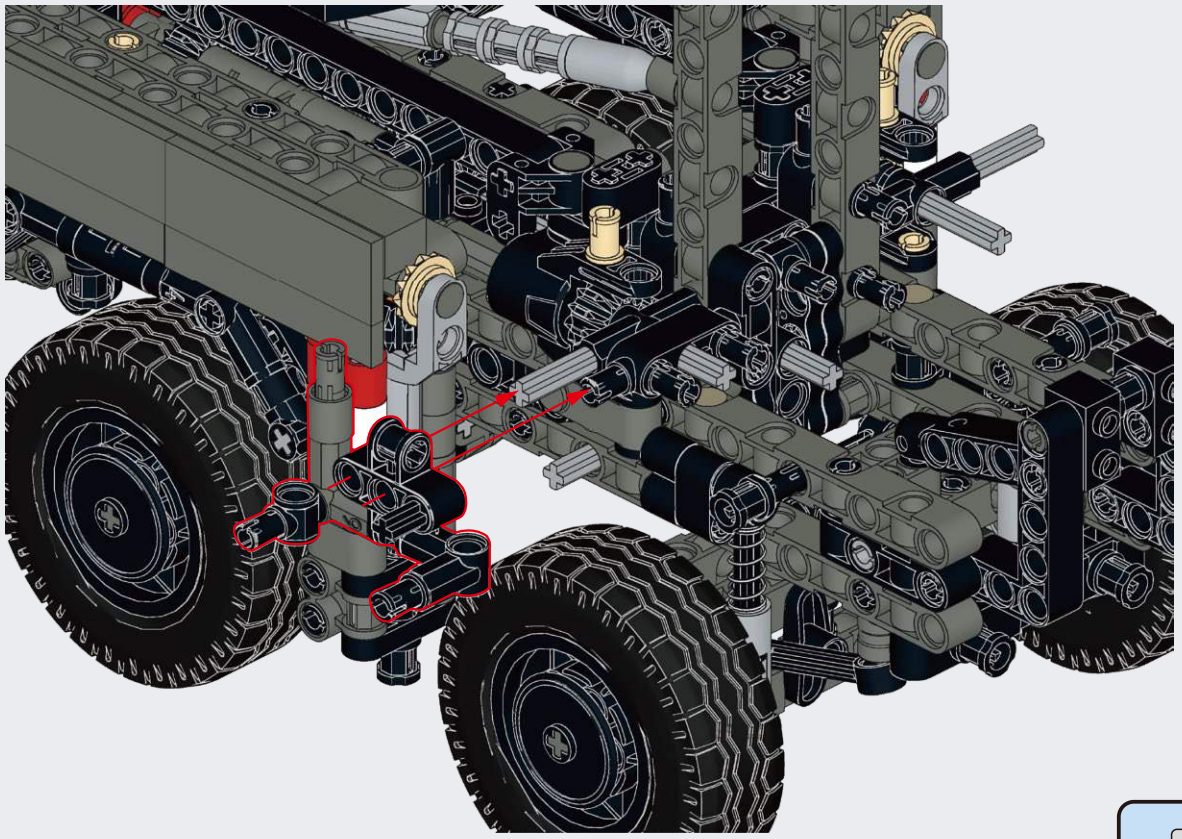

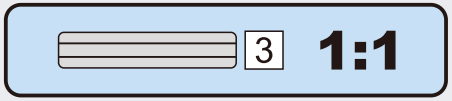

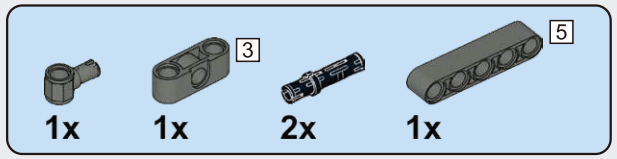

E6

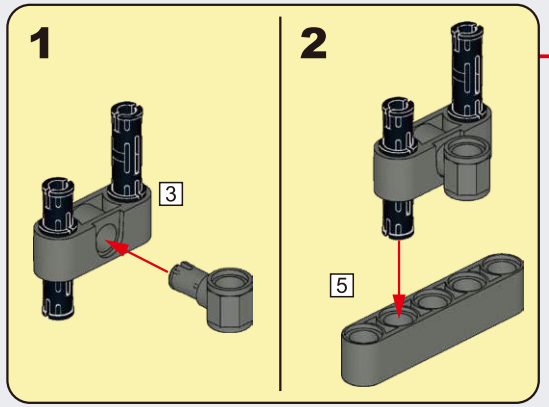

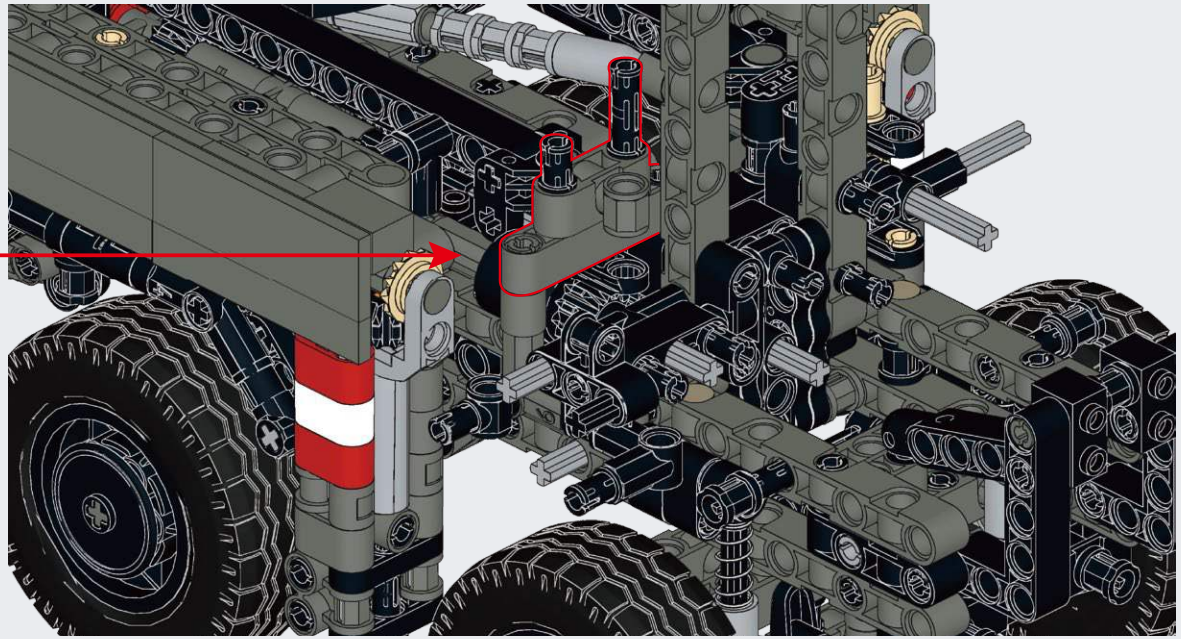

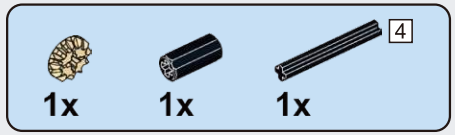

E7

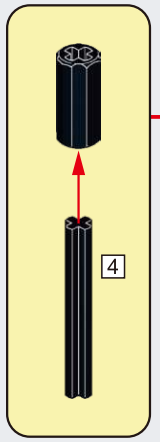

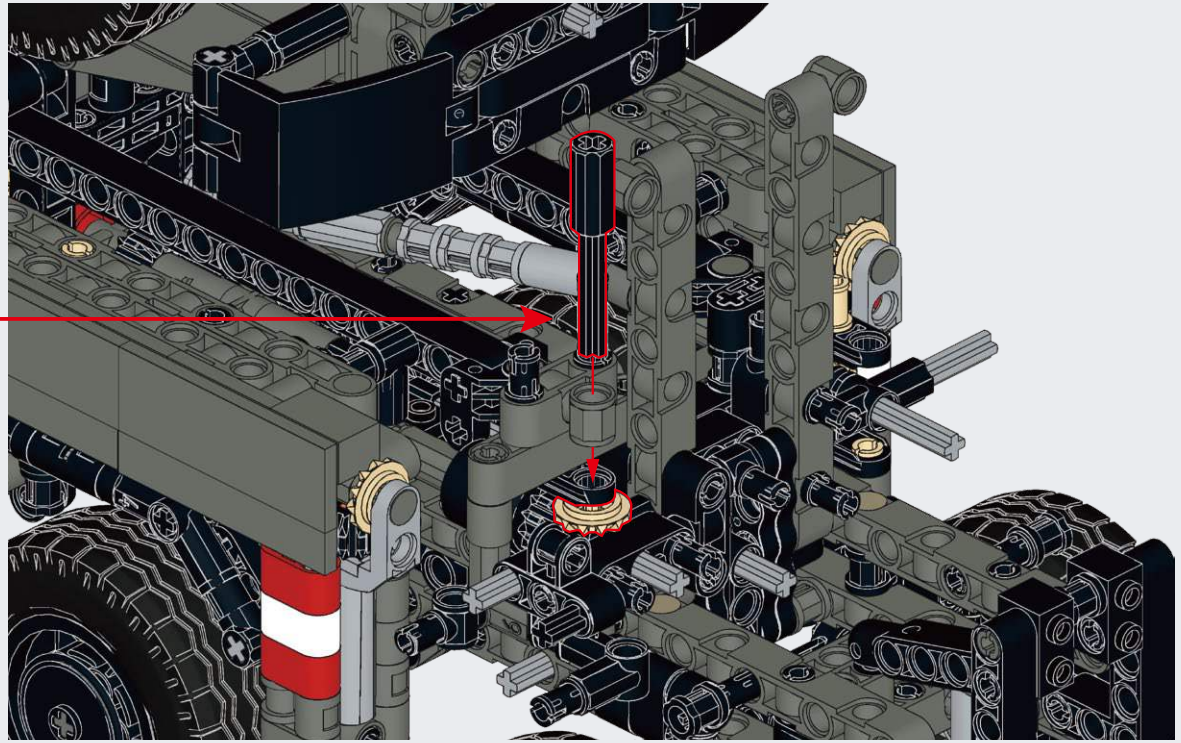

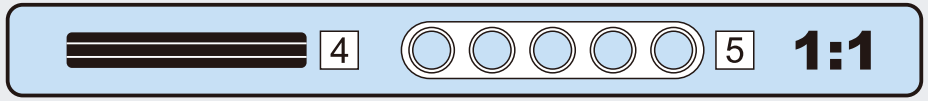

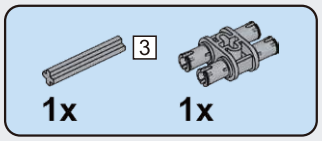

E8

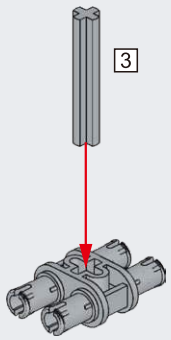

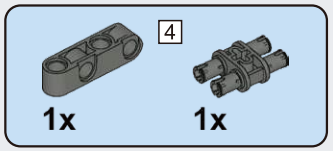

E9

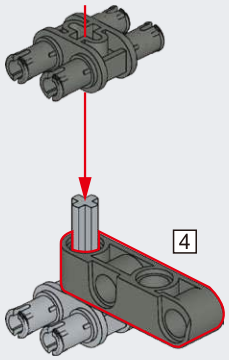

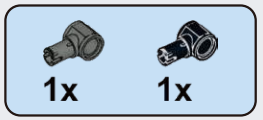

E10

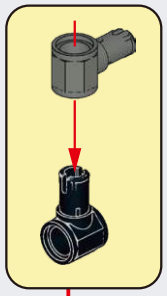

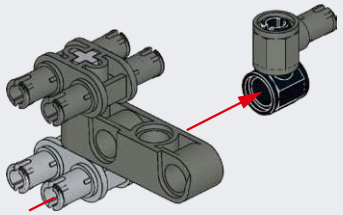

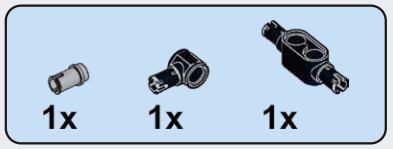

E11

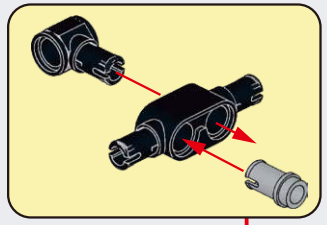

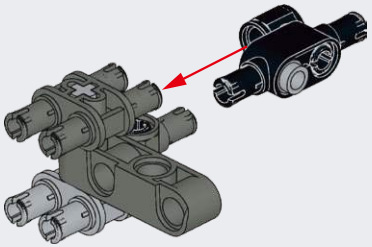

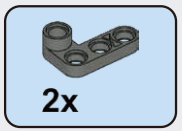

E12

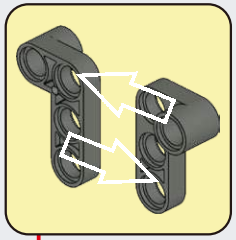

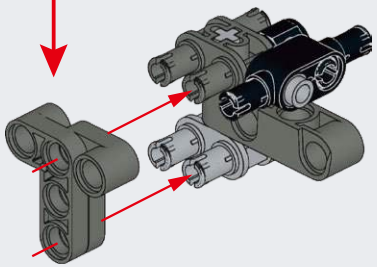

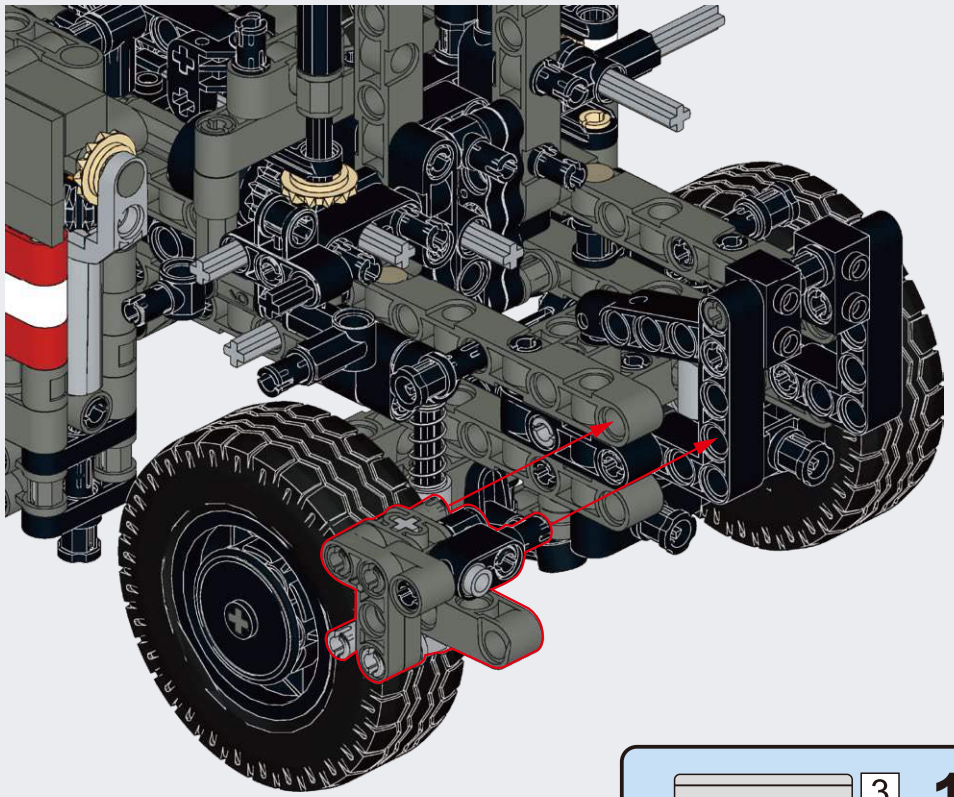

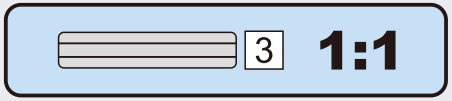

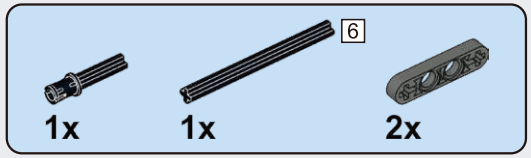

E13

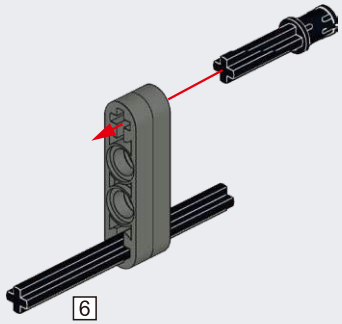

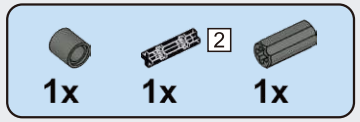

E14

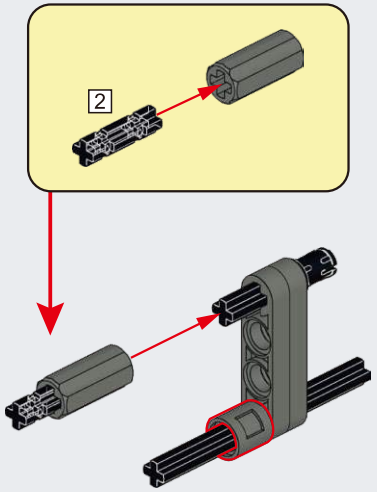

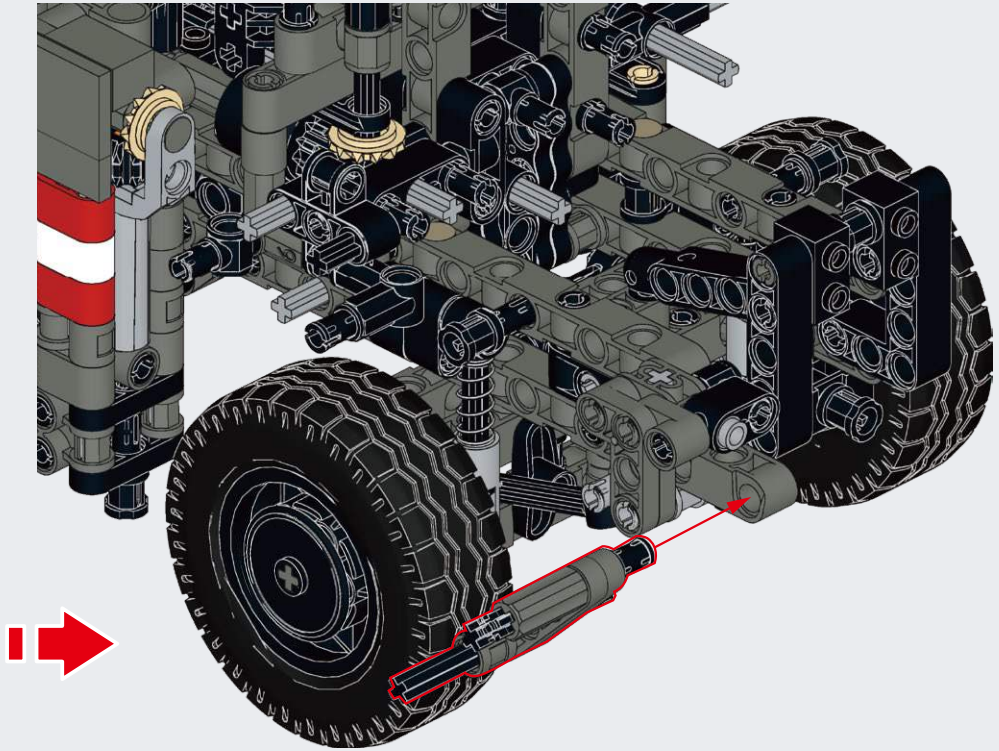

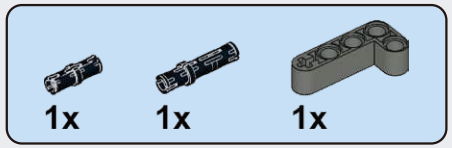

E15

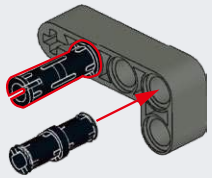

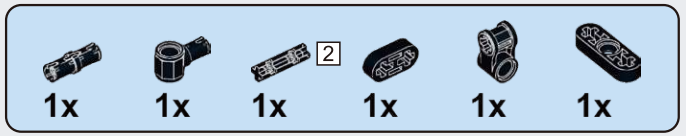

E16

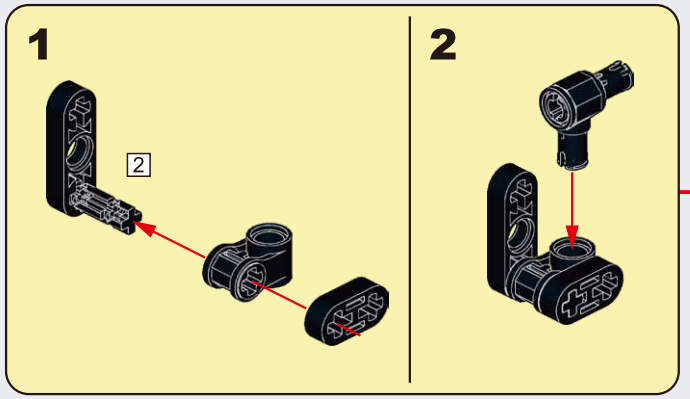

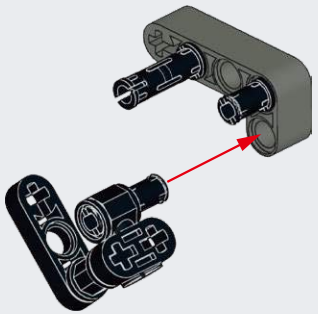

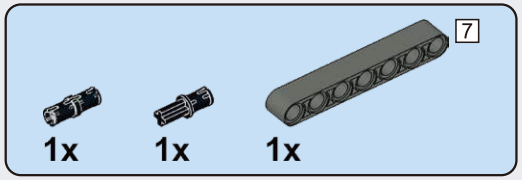

E17

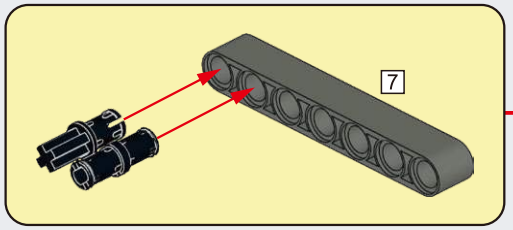

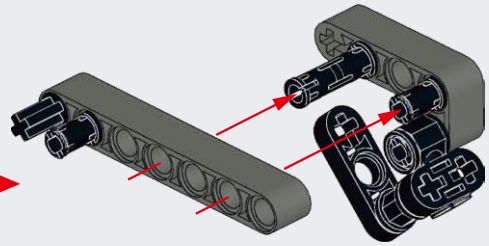

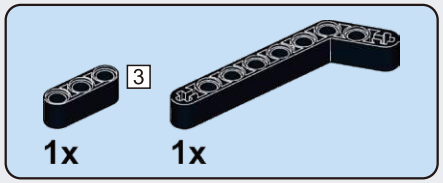

E18

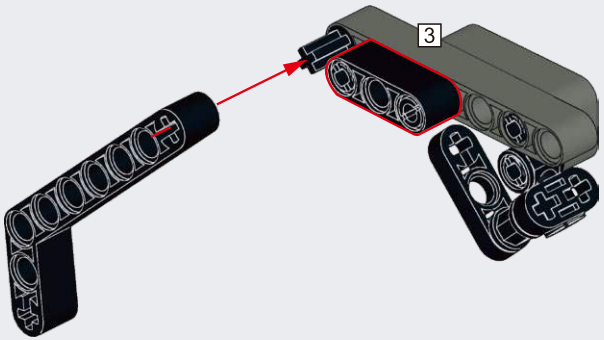

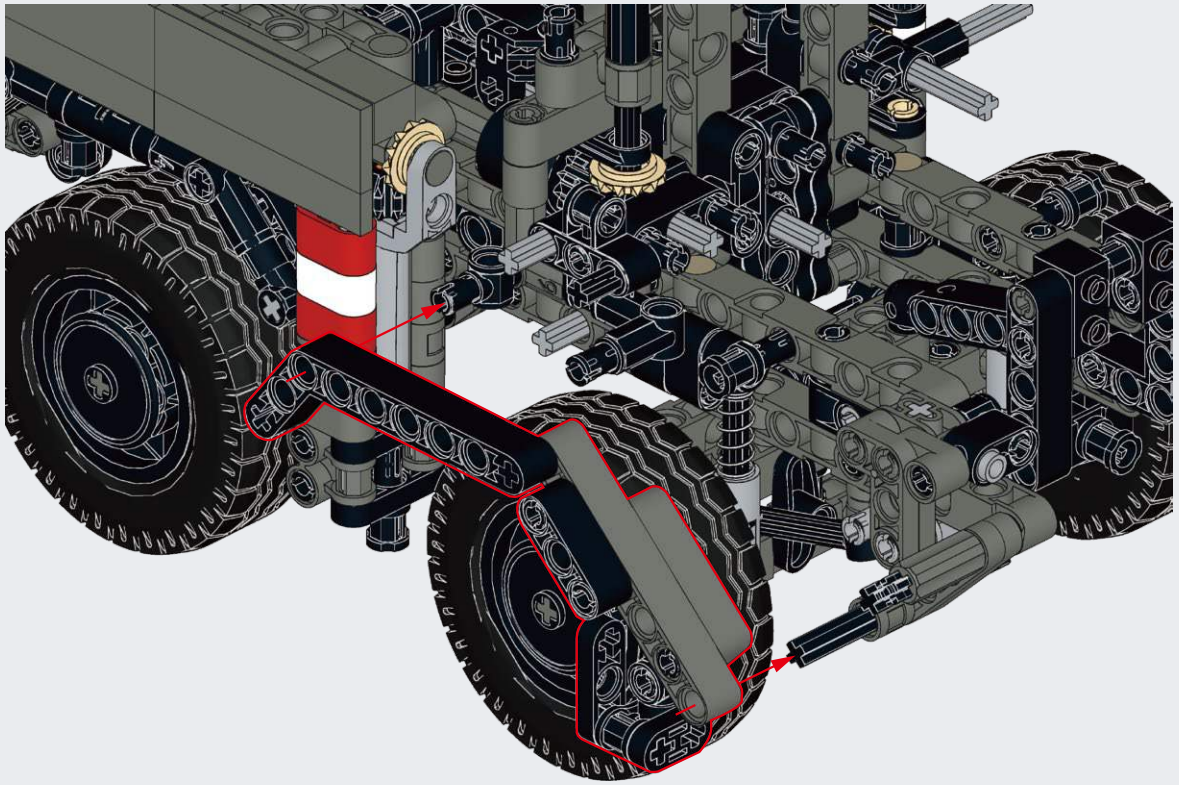

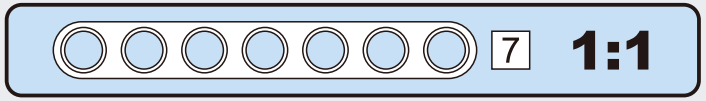

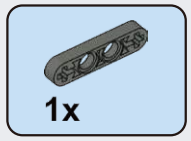

E19

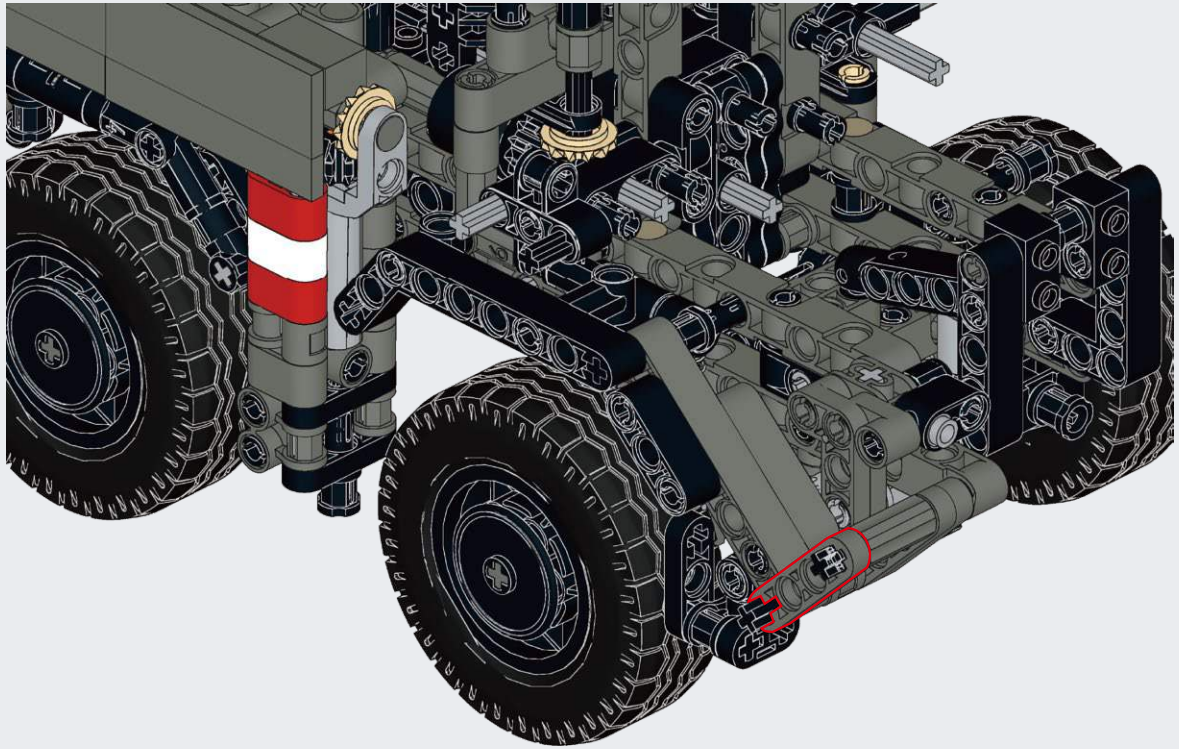

E20

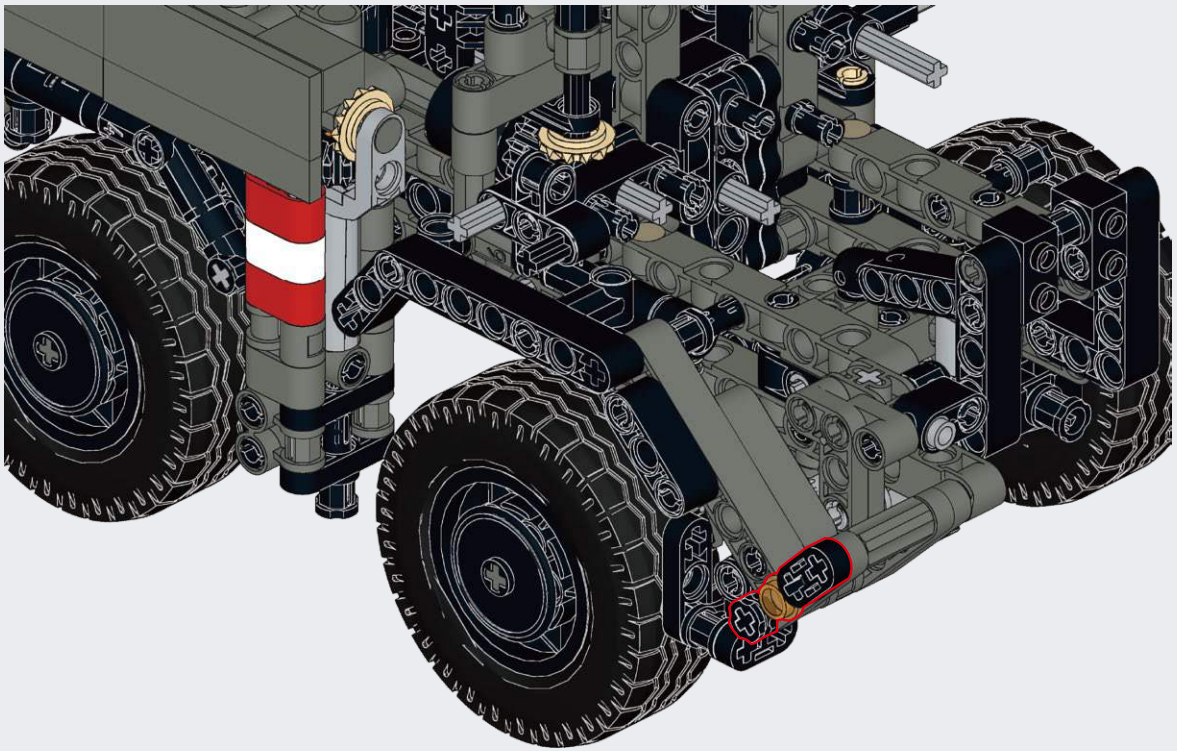

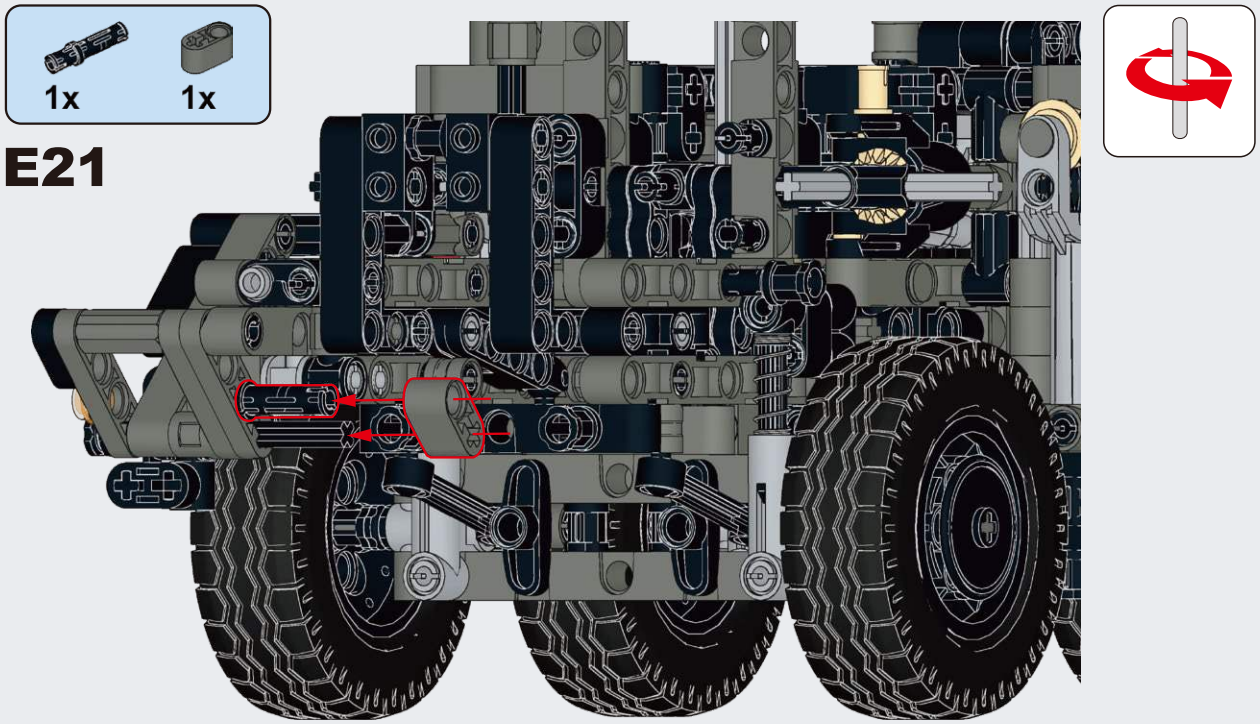

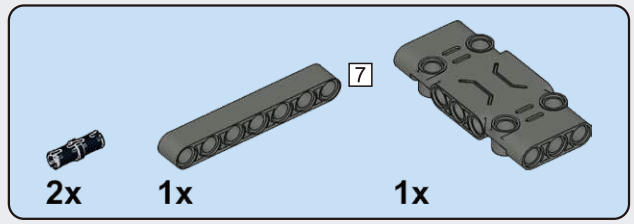

E22

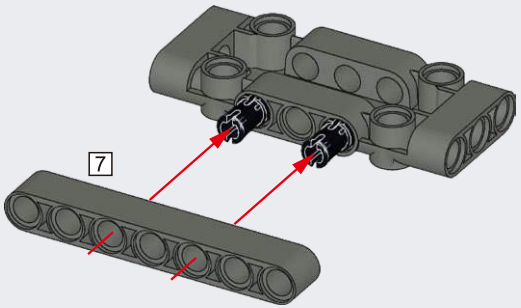

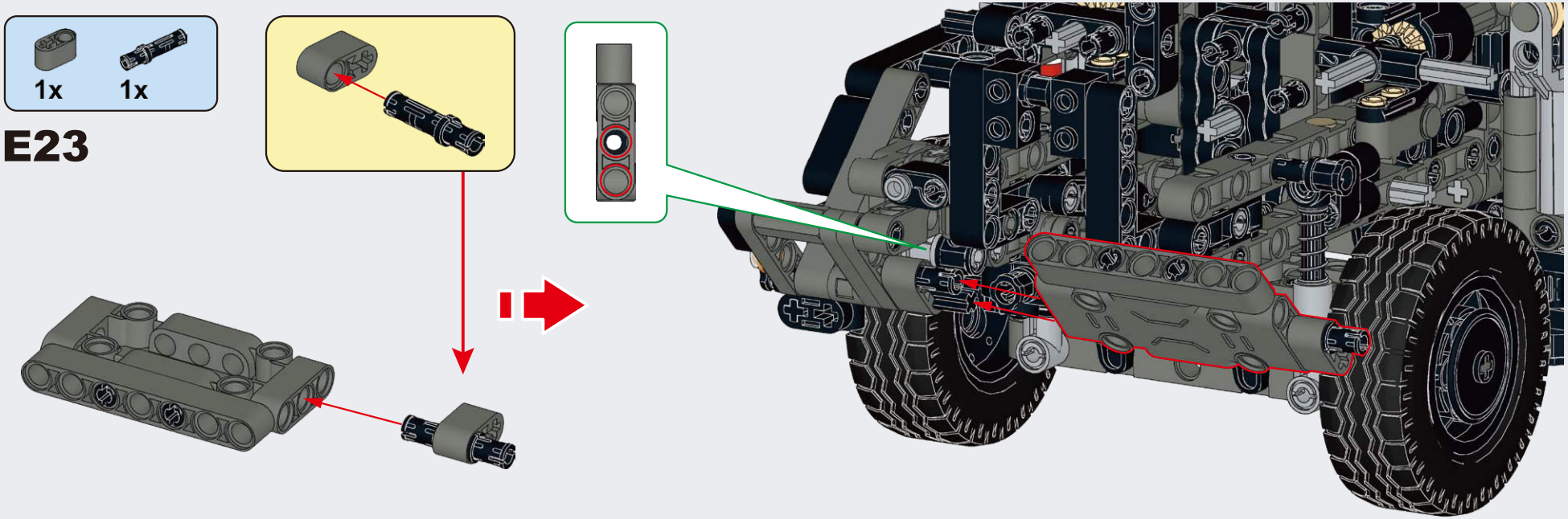

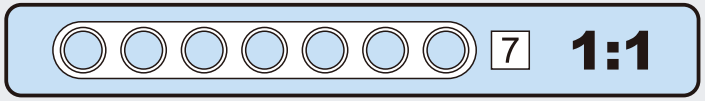

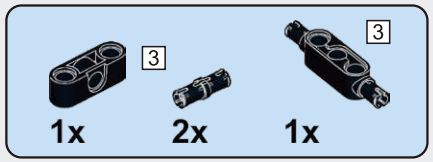

E24

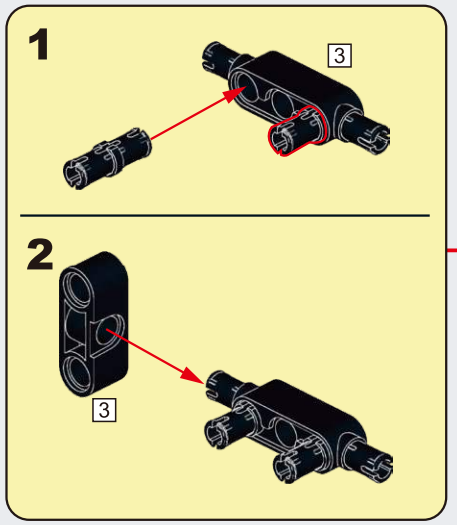

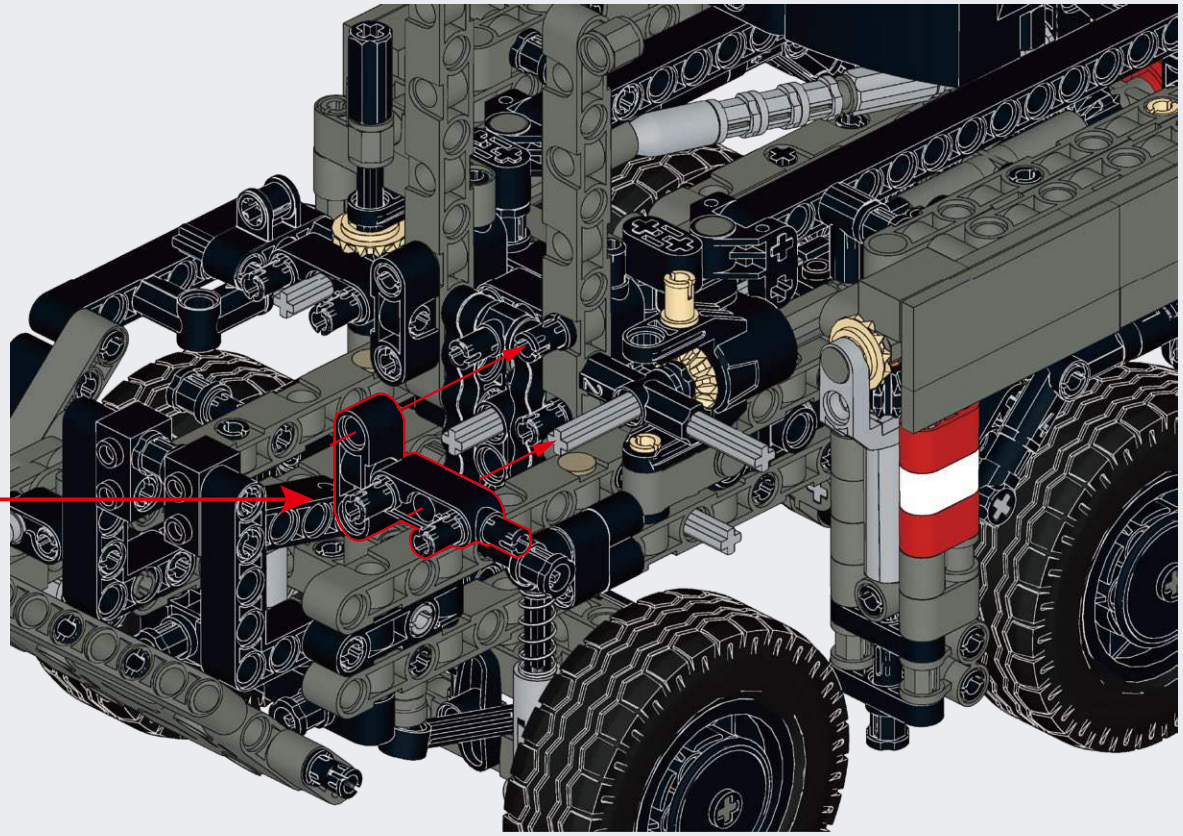

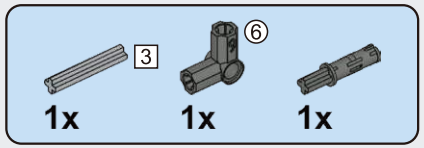

E25

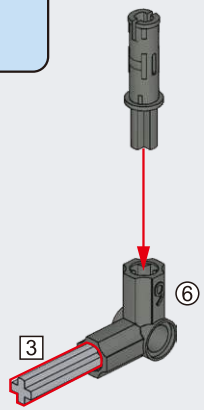

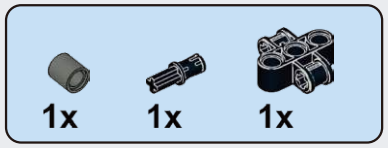

E26

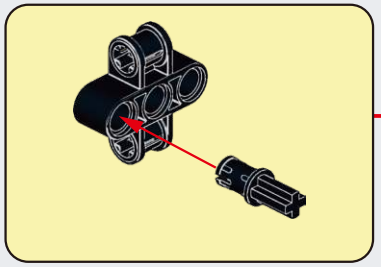

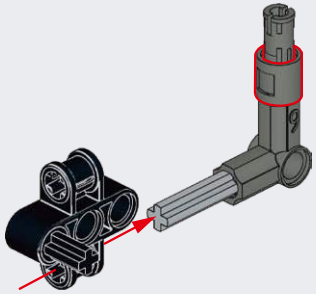

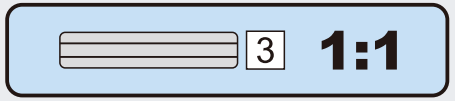

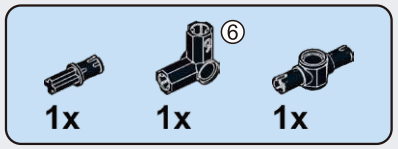

E27

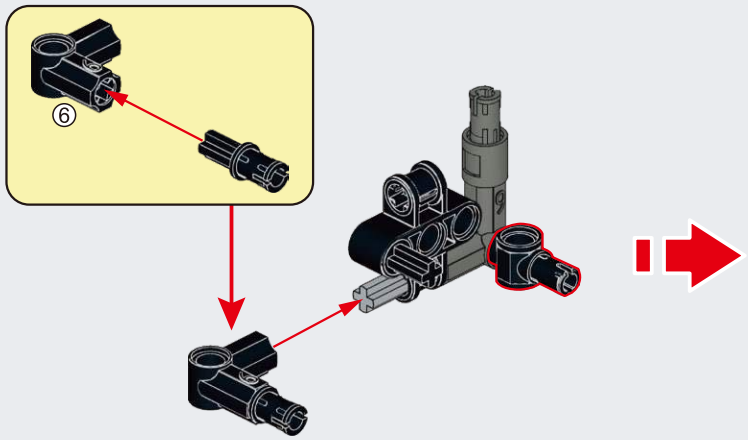

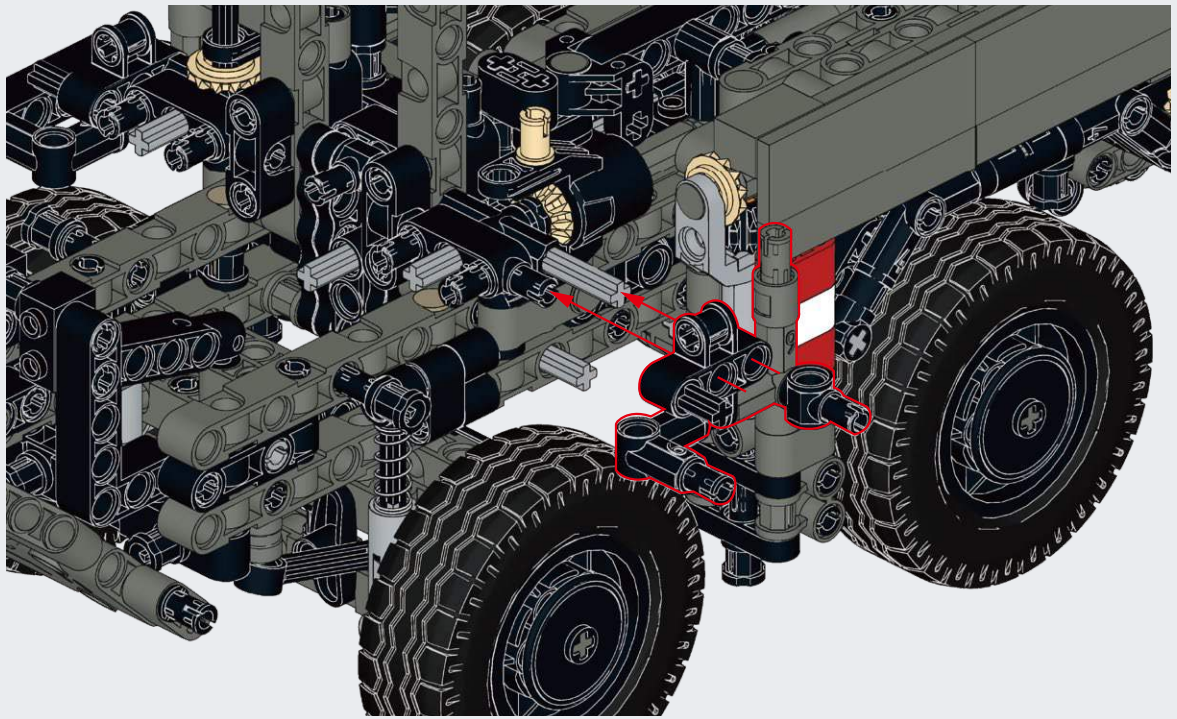

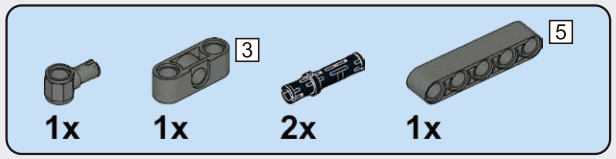

E28

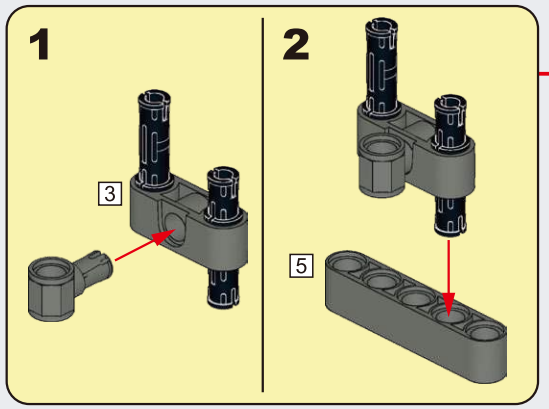

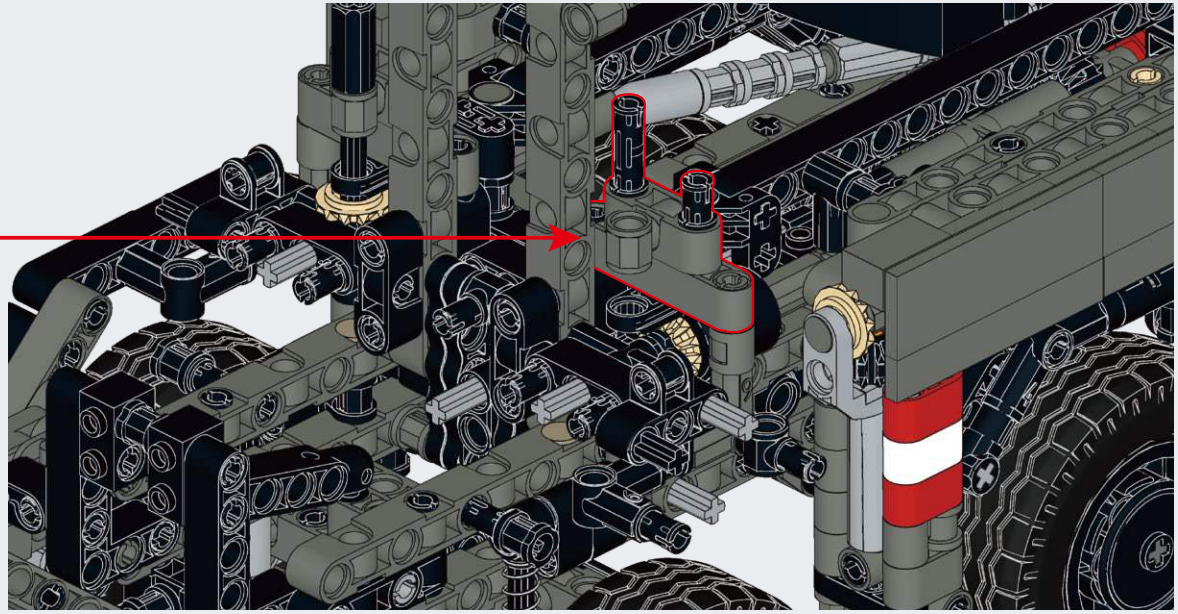

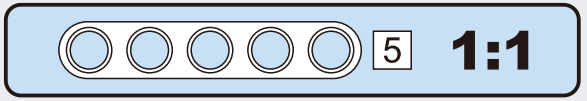

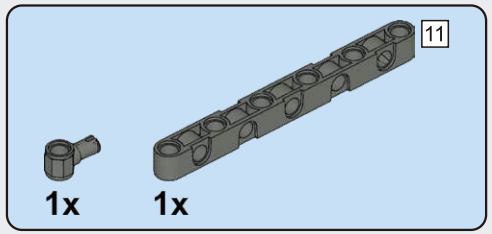

E29

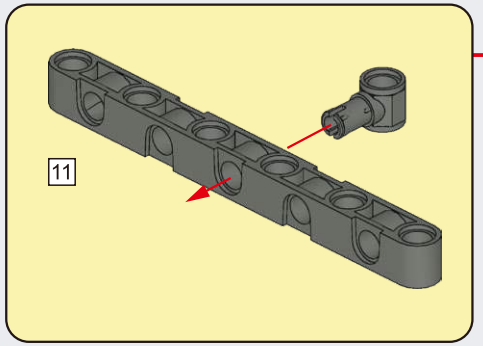

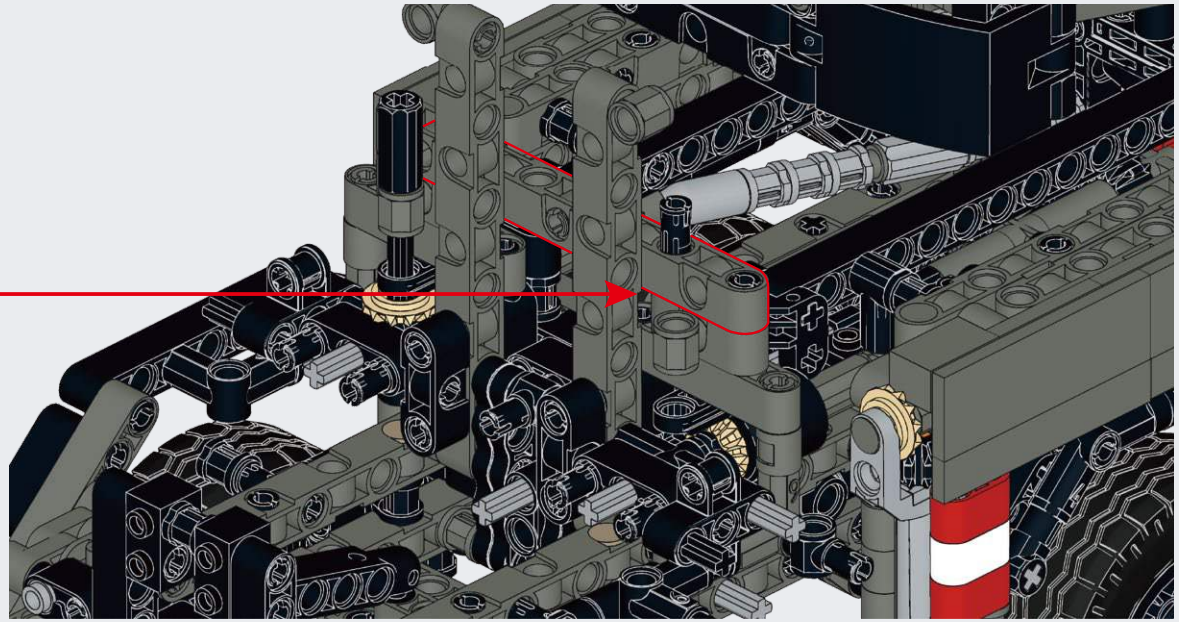

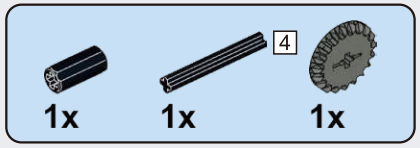

E30

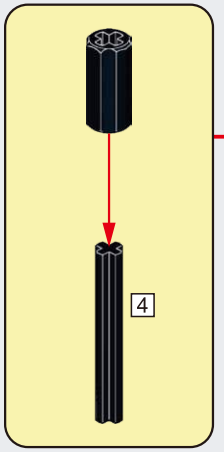

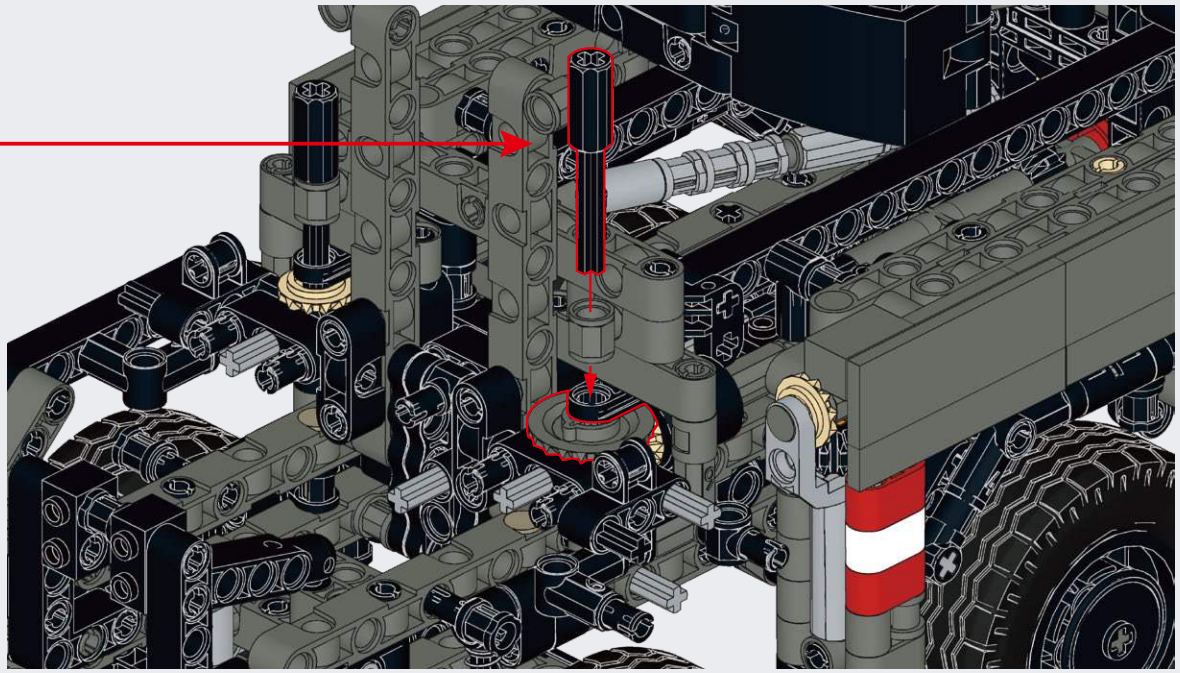

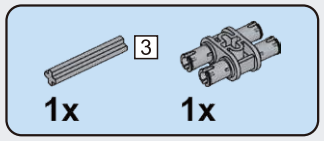

E31

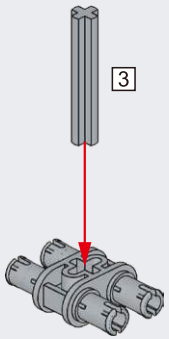

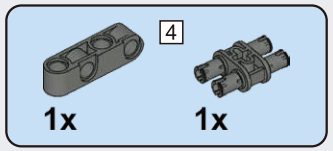

E32

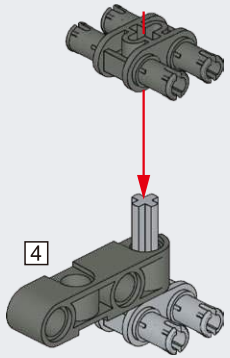

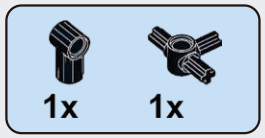

E33

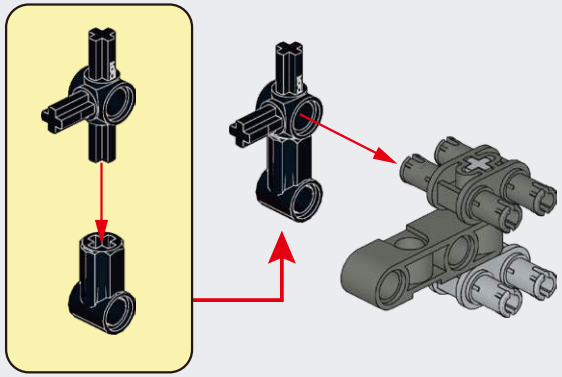

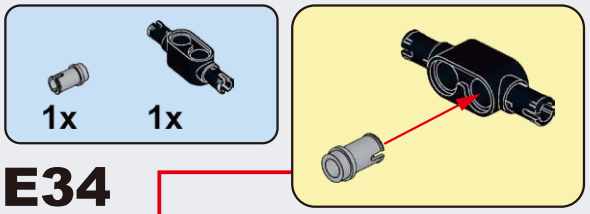

E34

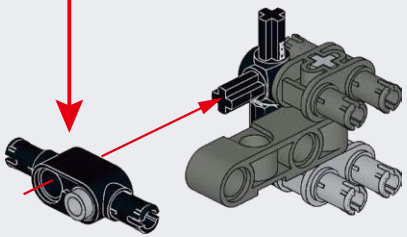

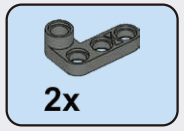

E35

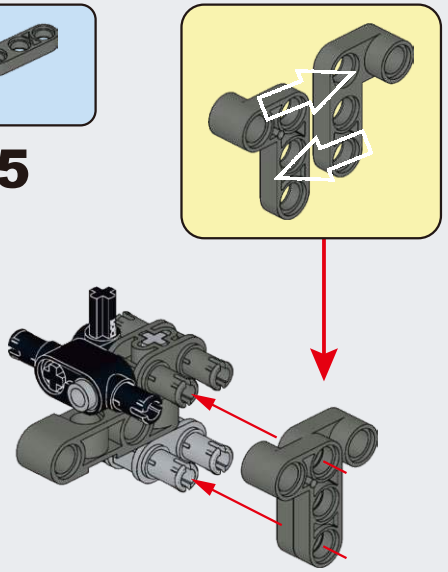

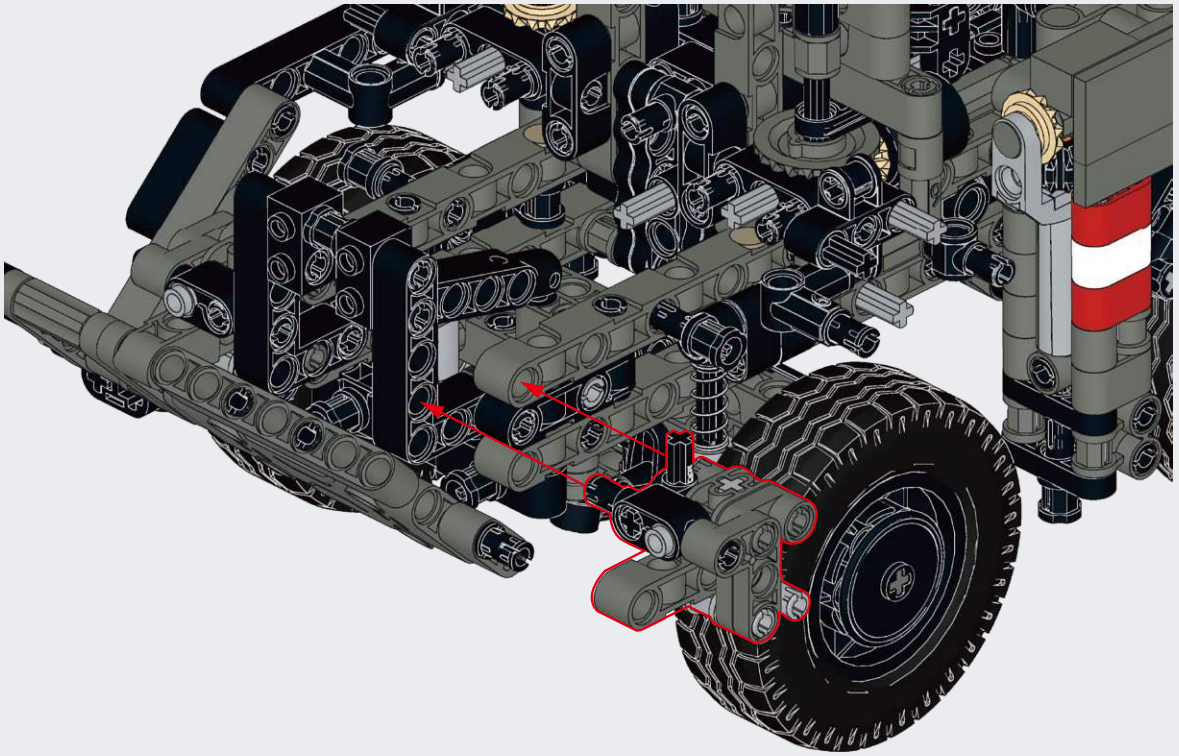

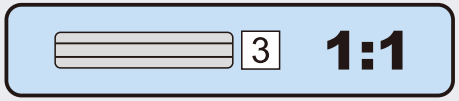

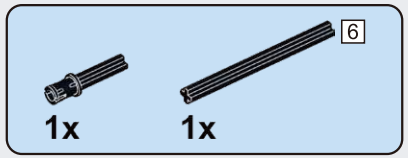

E36

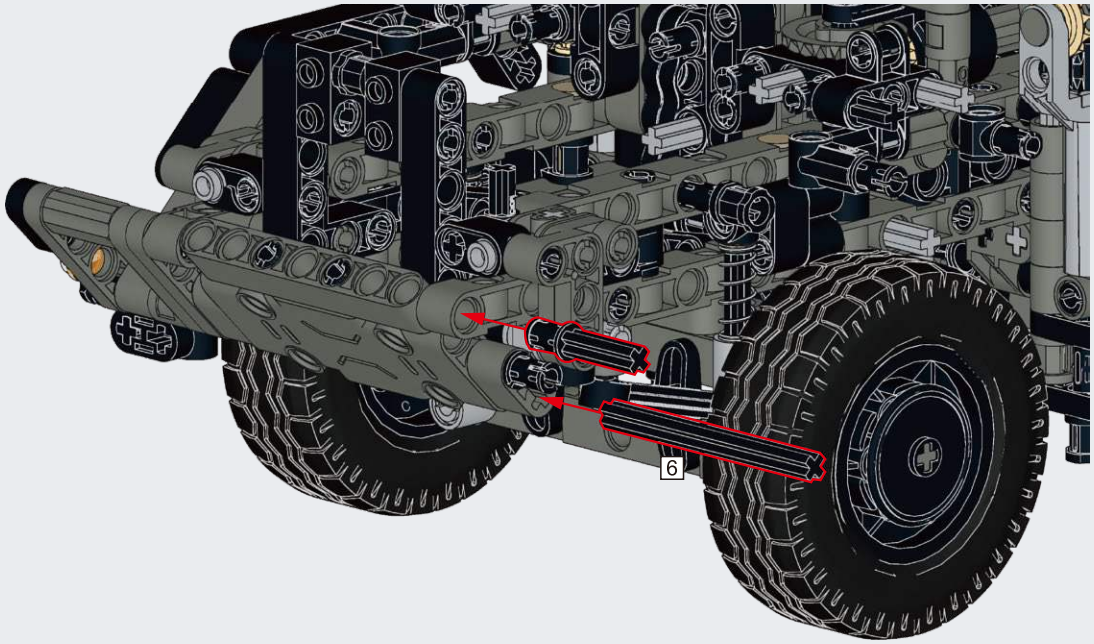

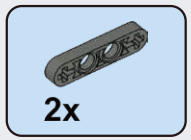

E37

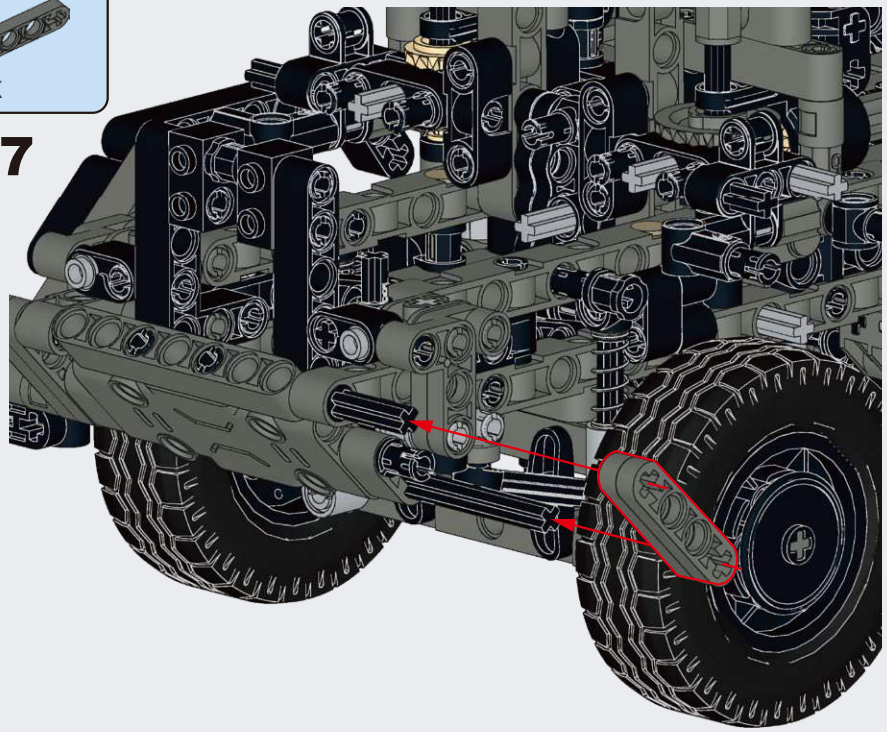

E38

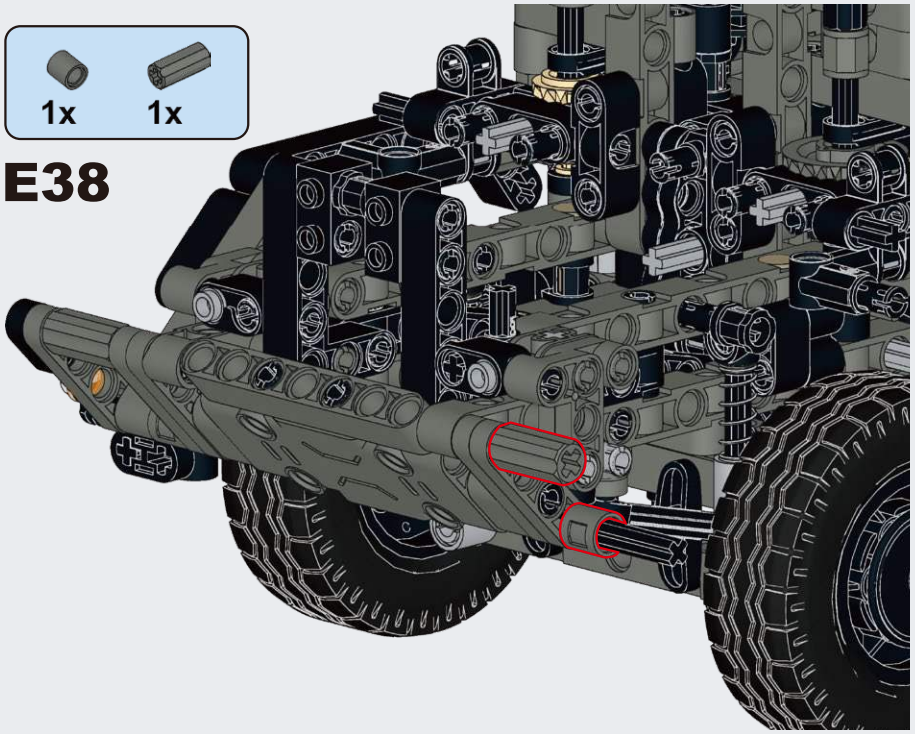

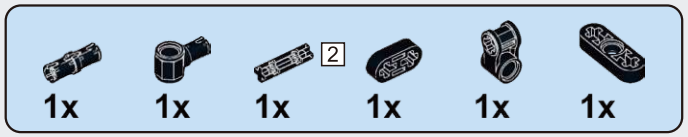

E39

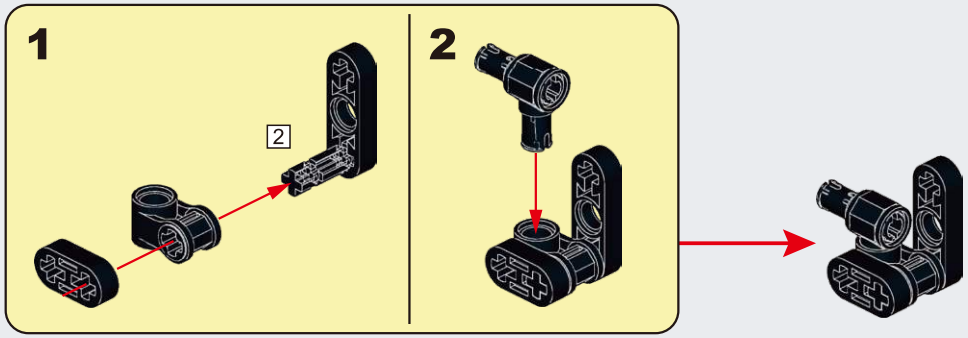

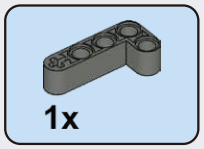

E40

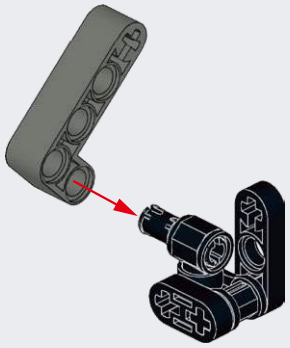

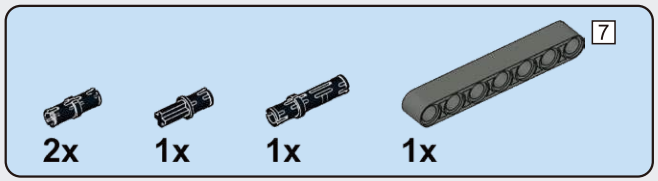

E41

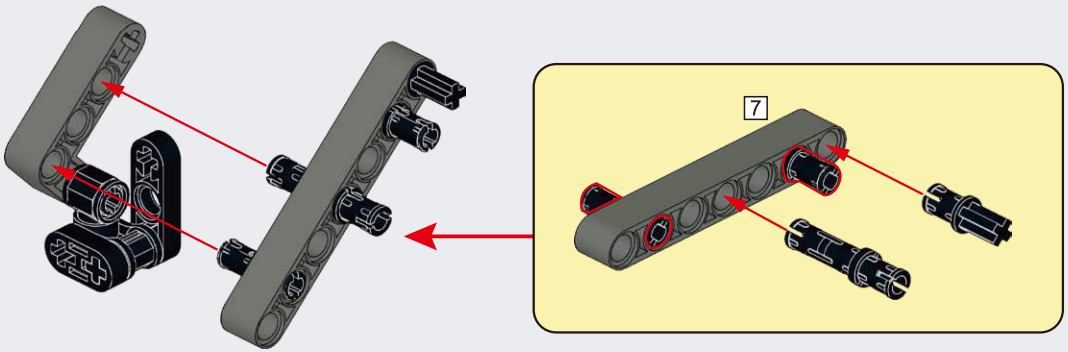

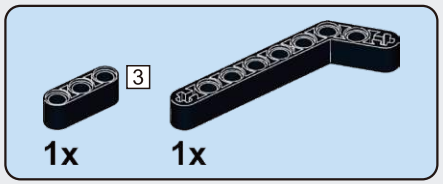

E42

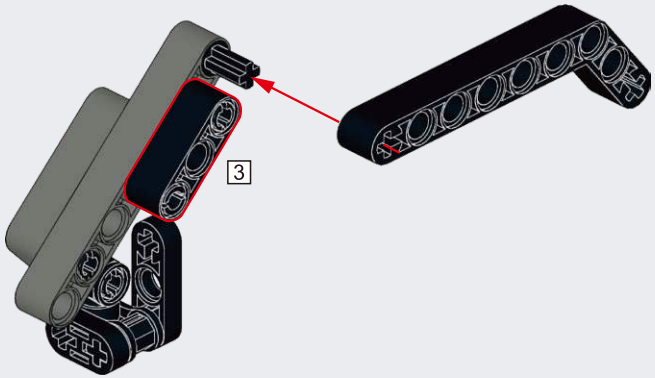

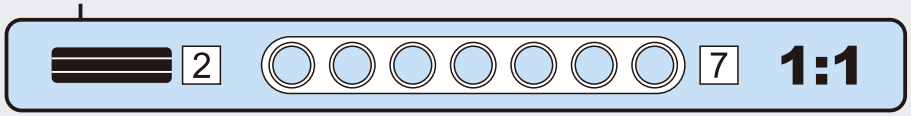

E43

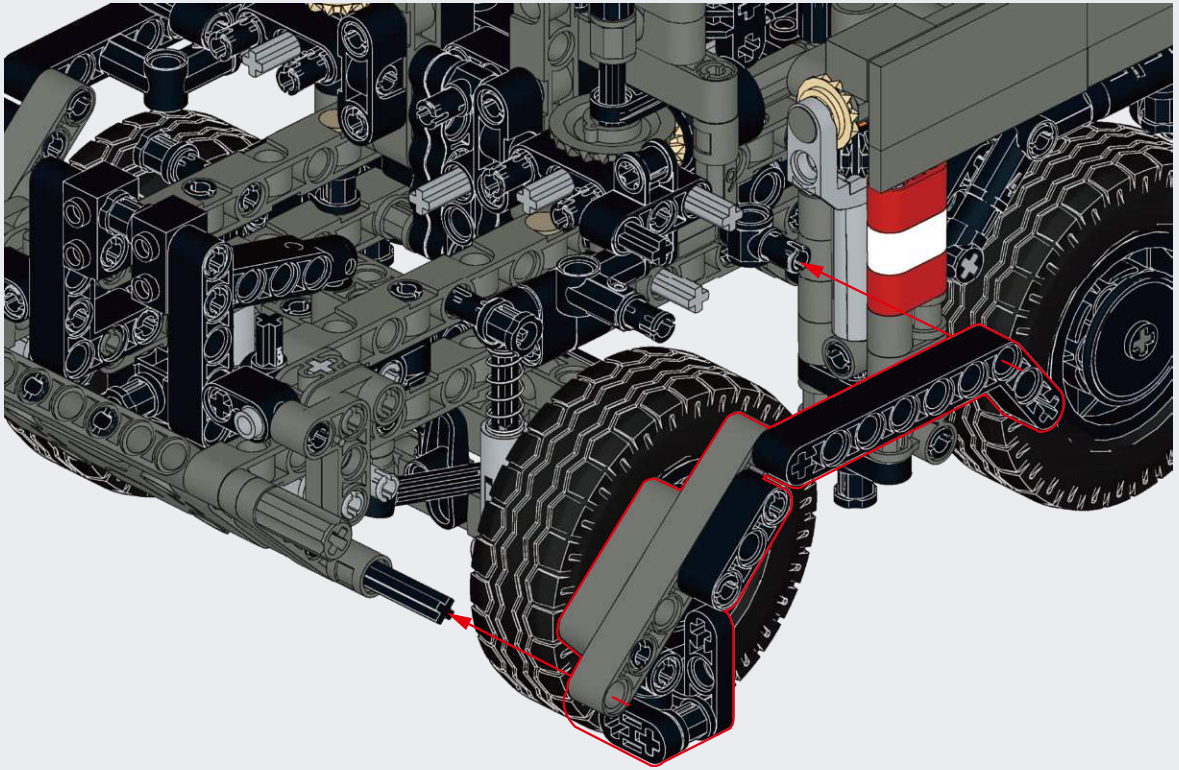

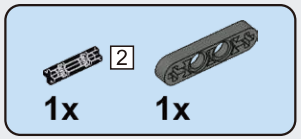

E44

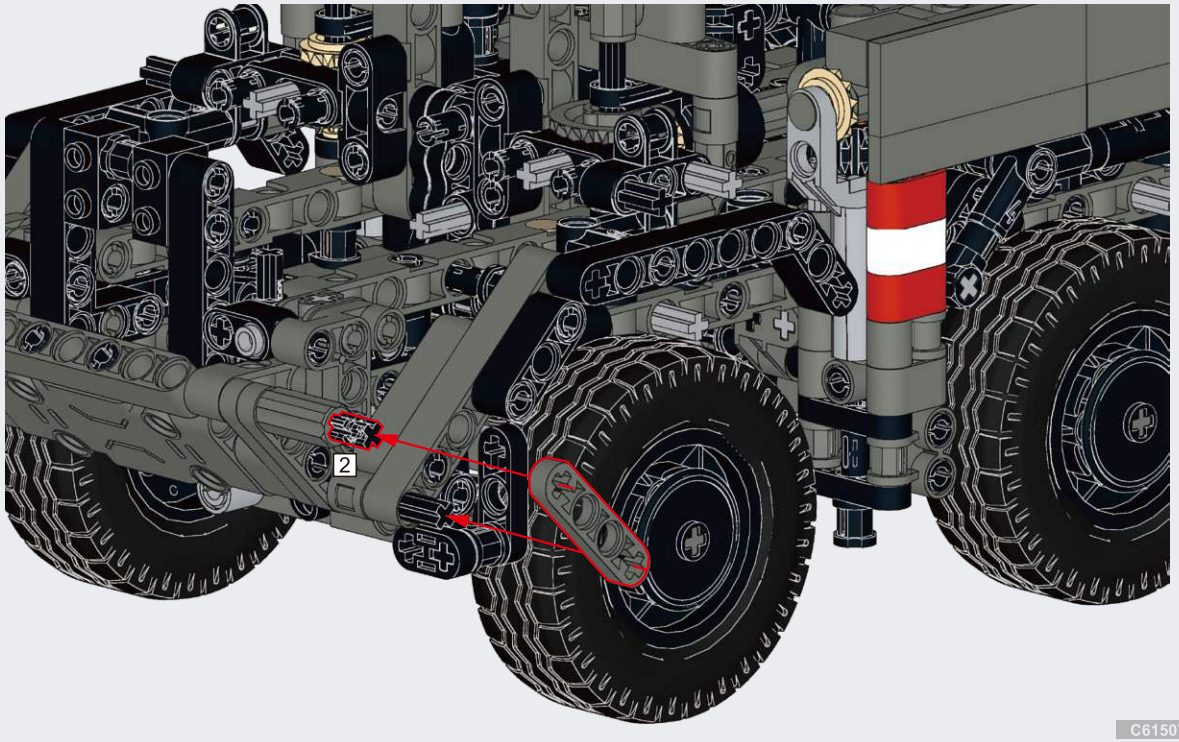

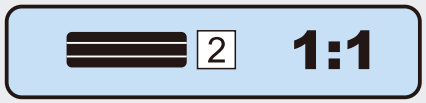

E45

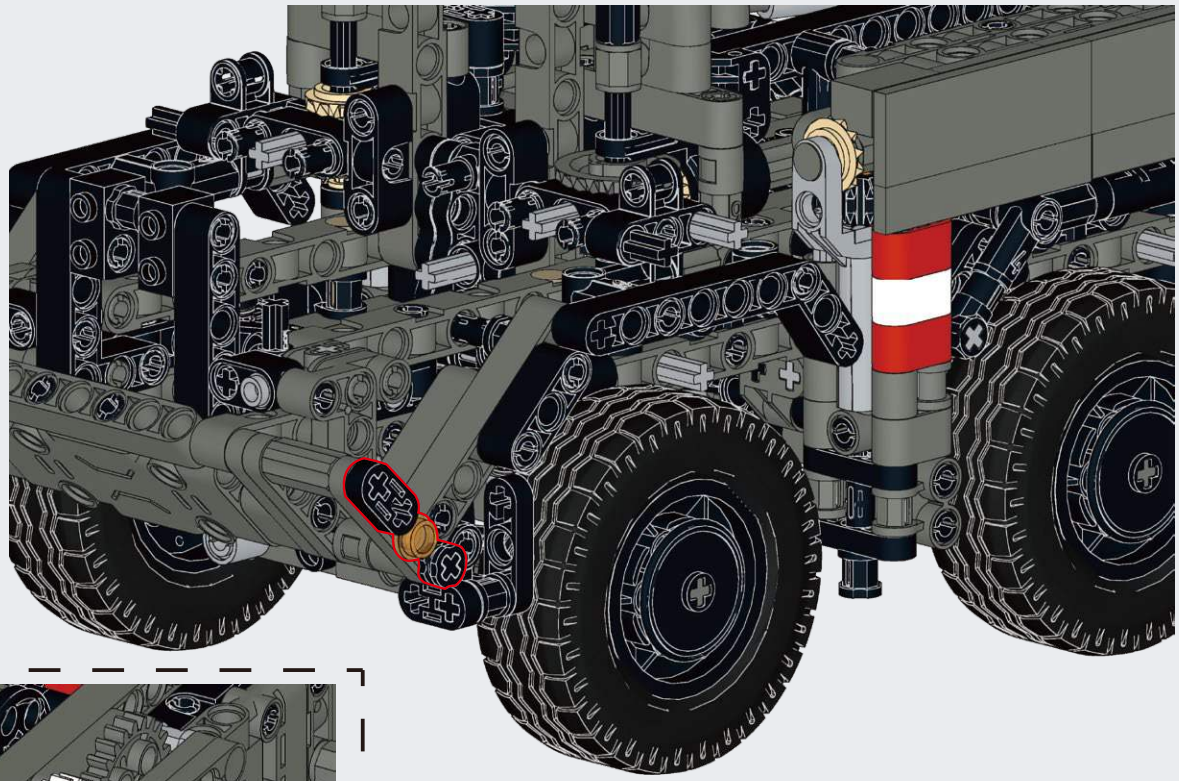

E46

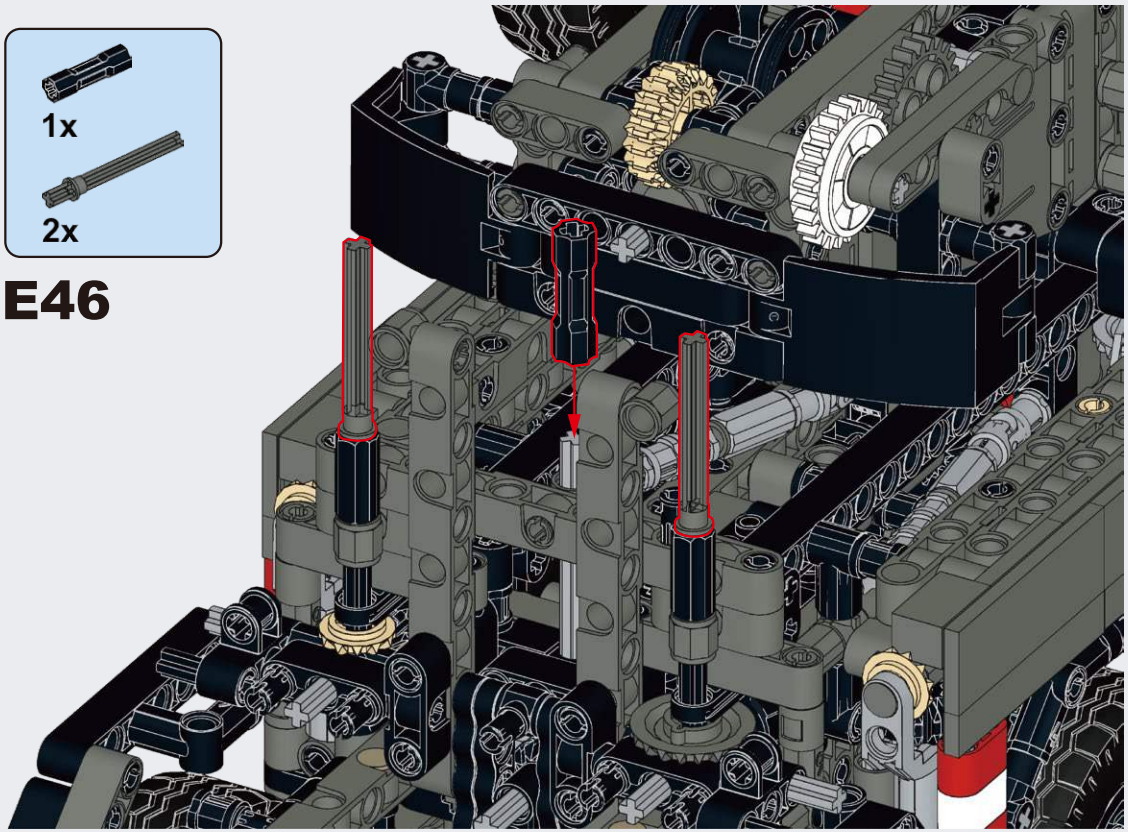

E47

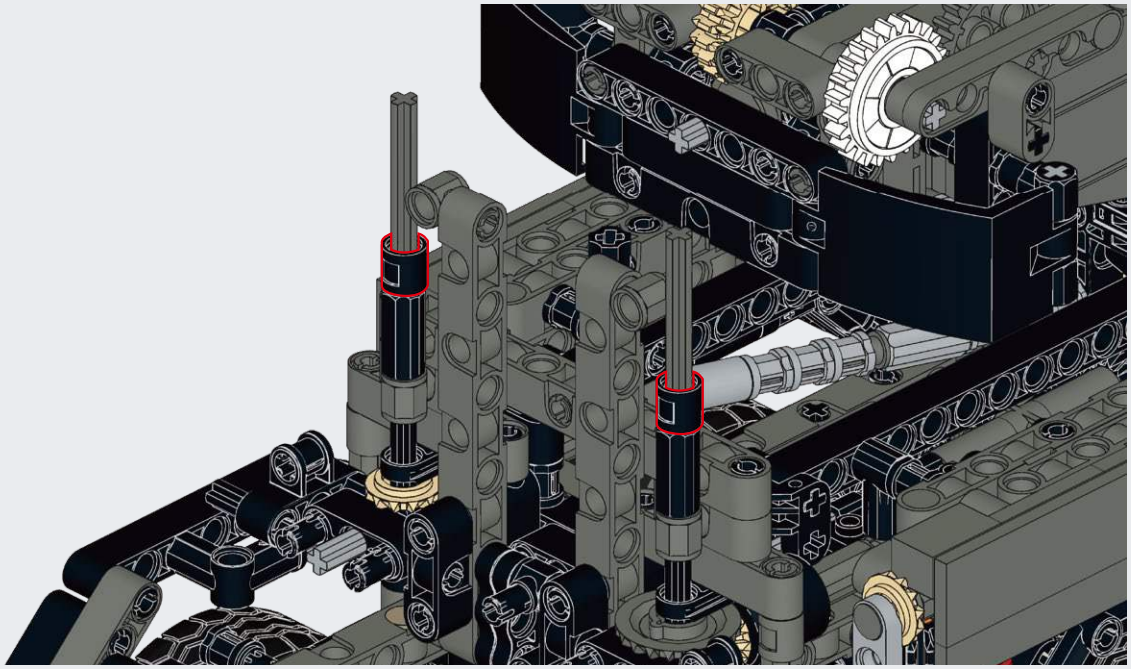

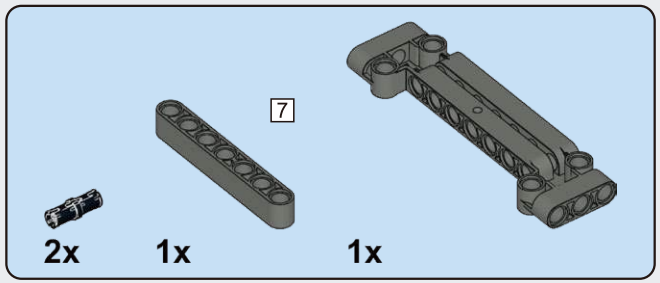

E48

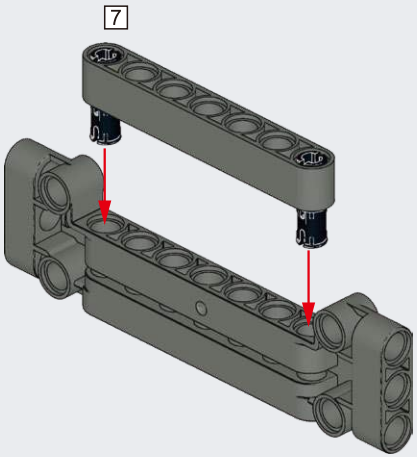

E49

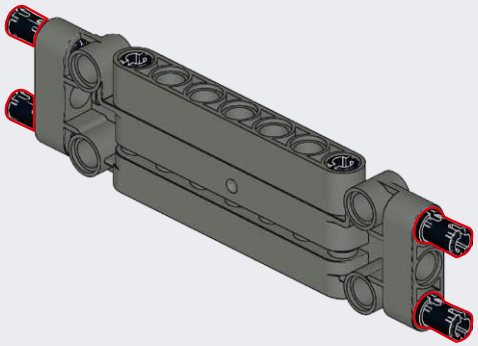

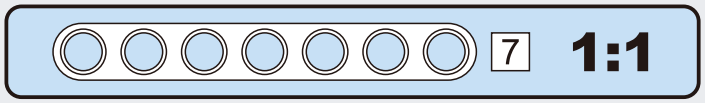

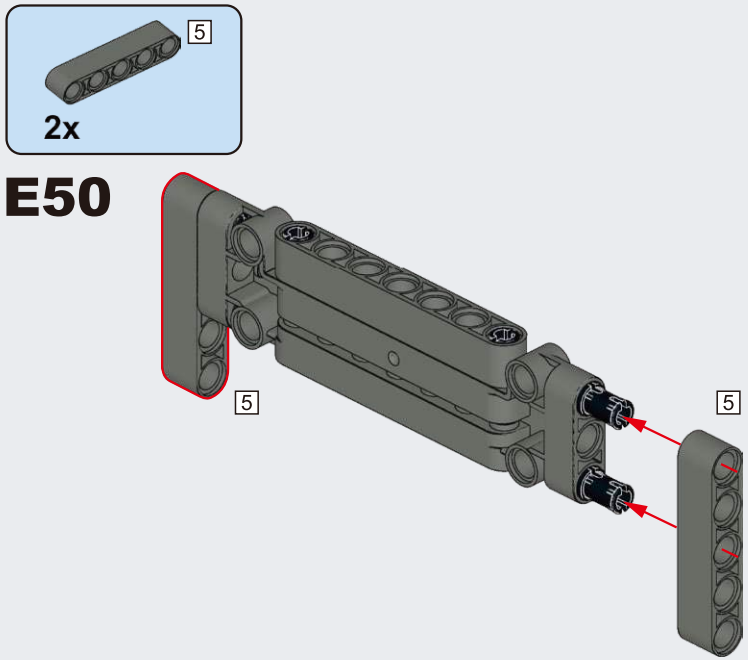
5
2x
E50
5
5

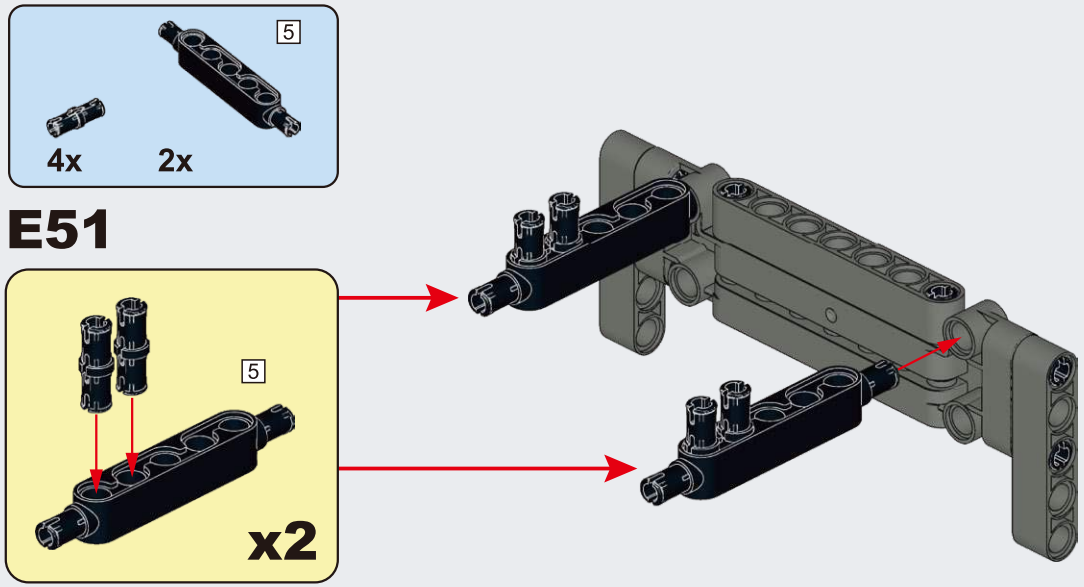
5
4x
2x
E51
5
x2

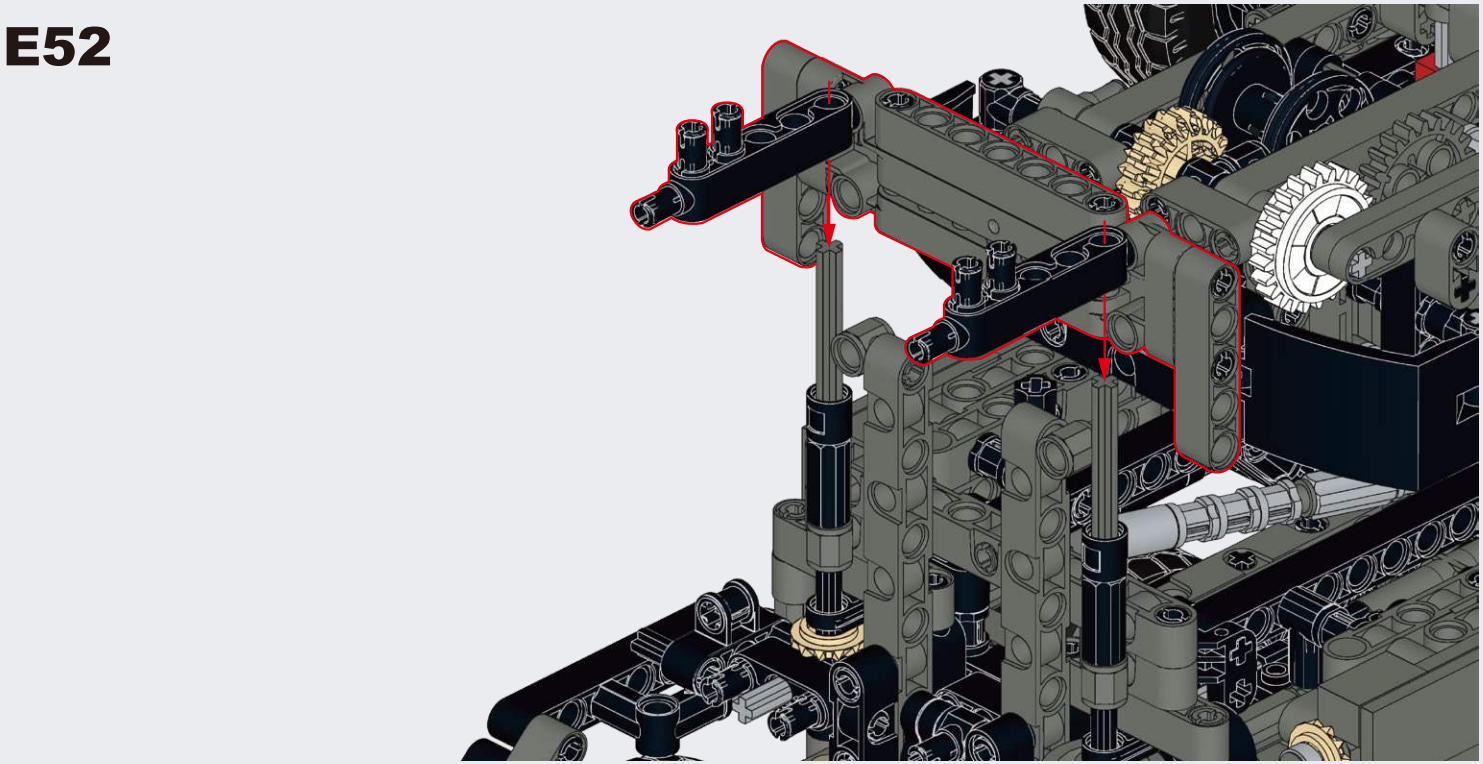
E52

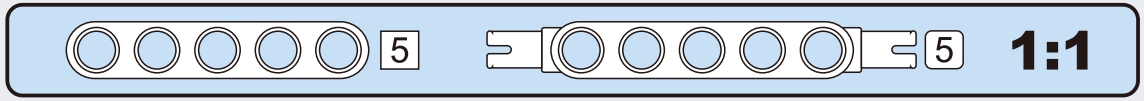
5
5
1:1

E53

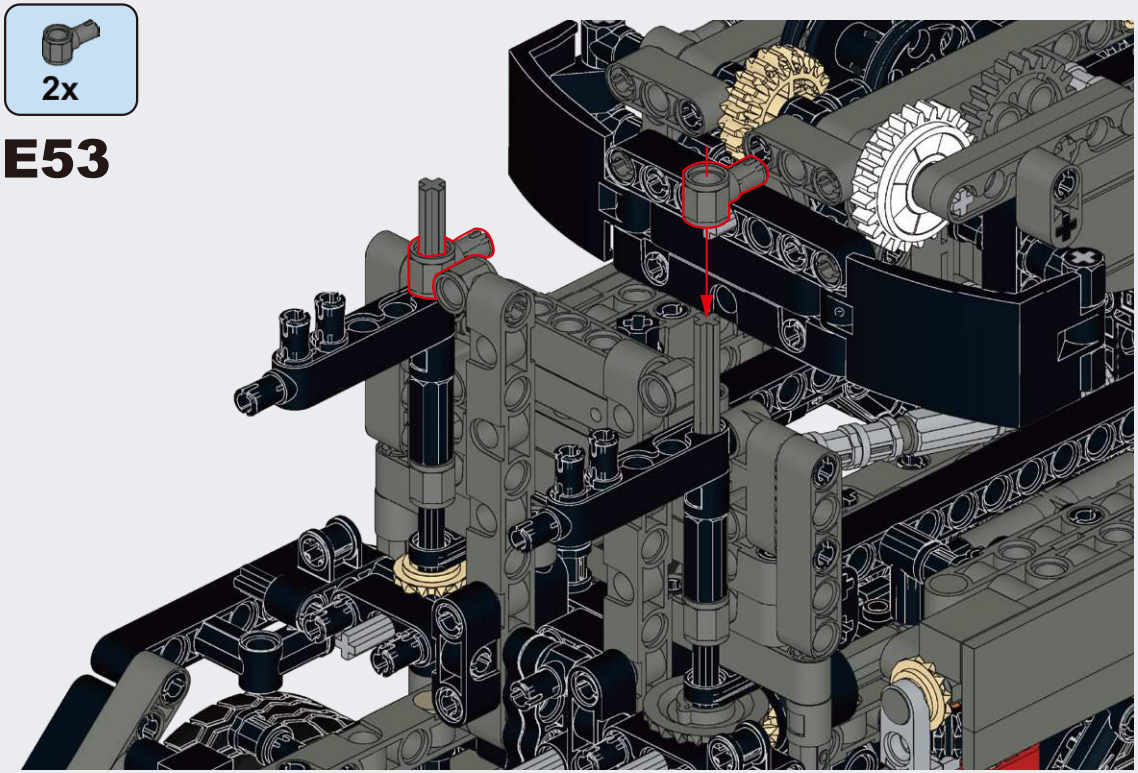

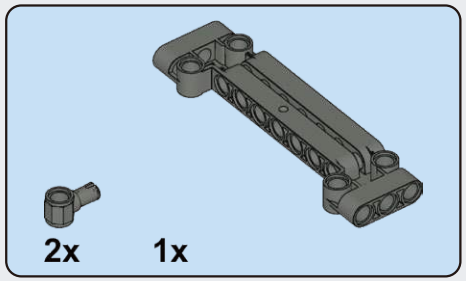

E54

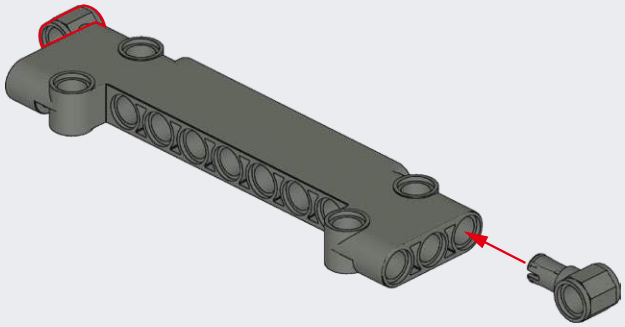

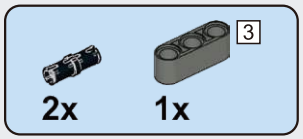

E55

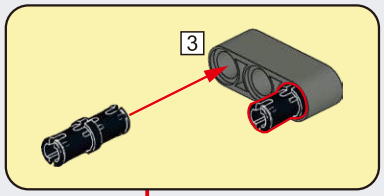

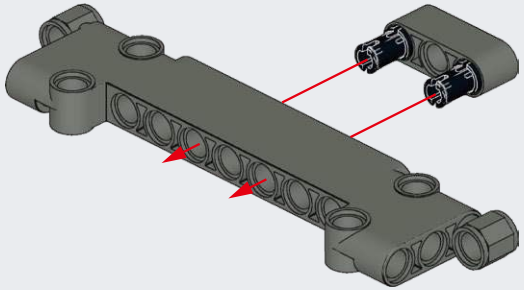

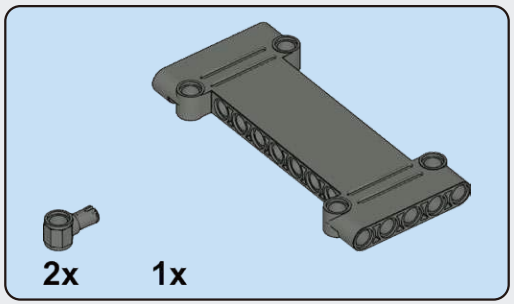

E56

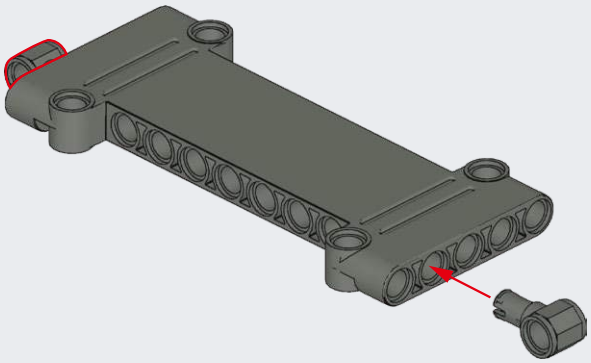

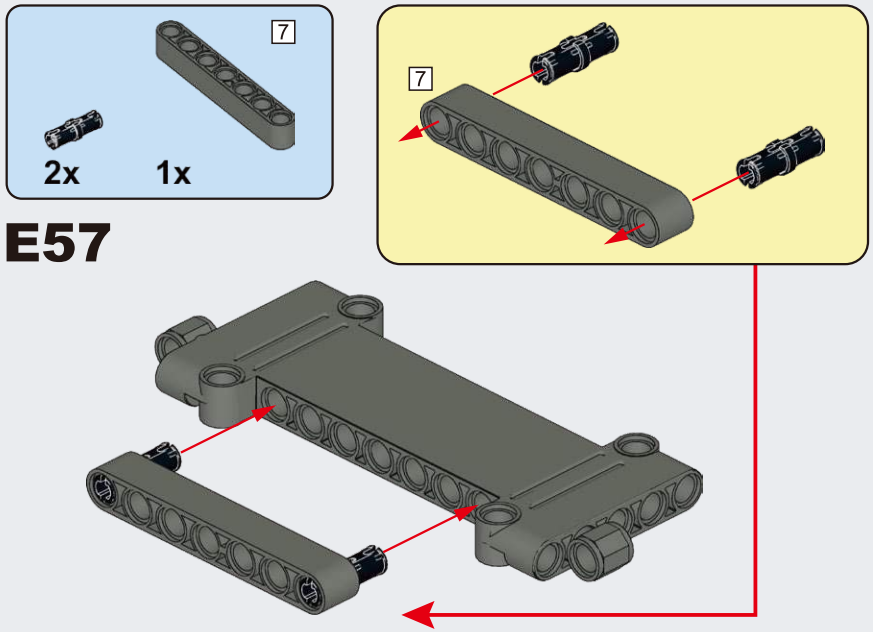

E57

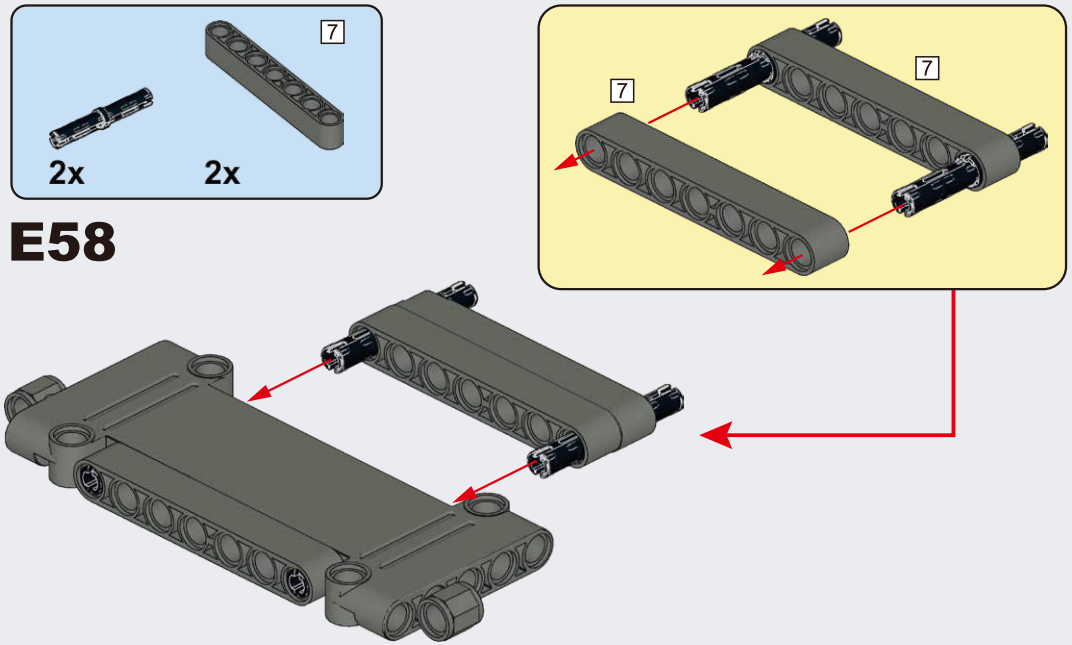

E58

E59

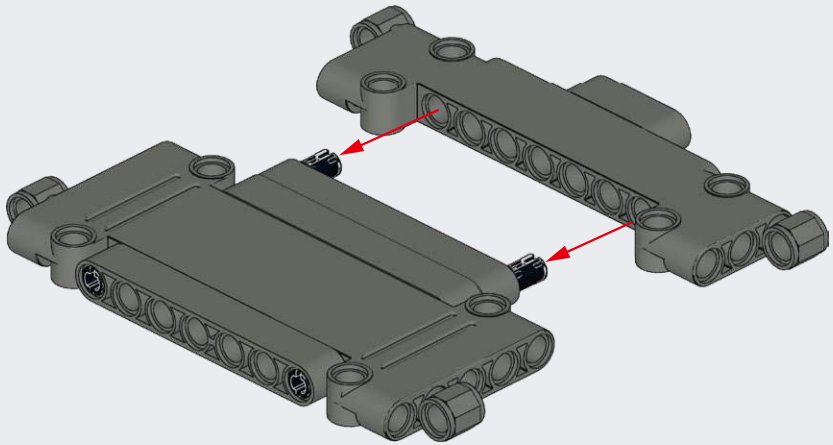

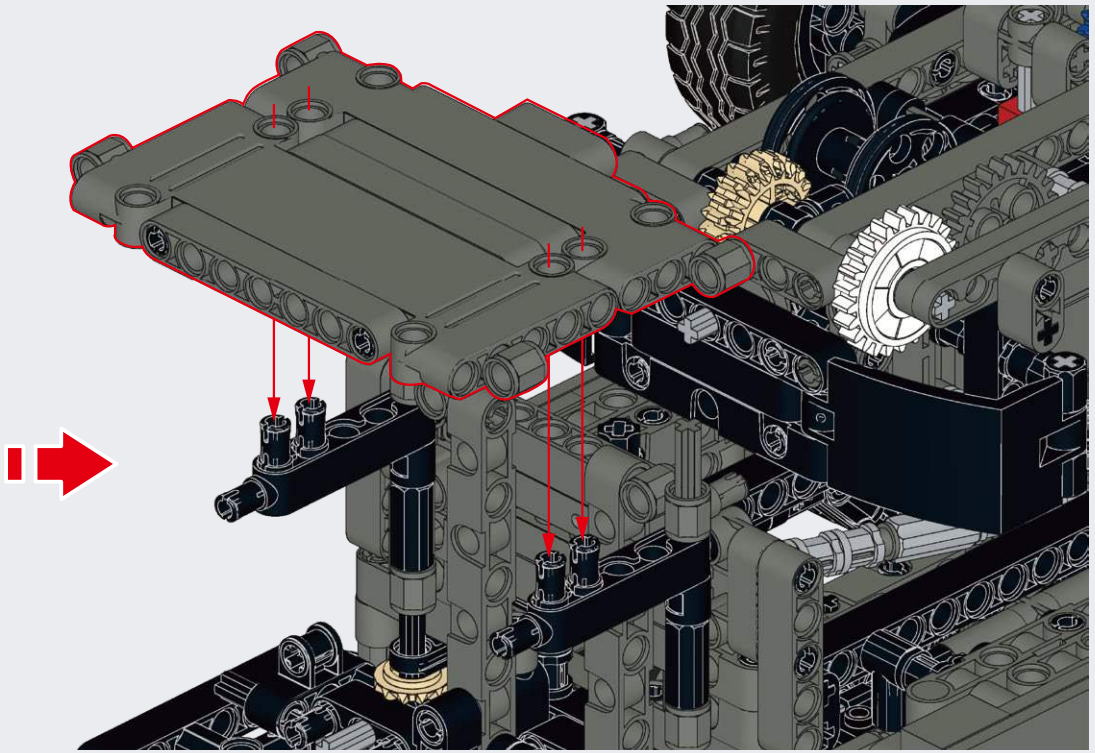

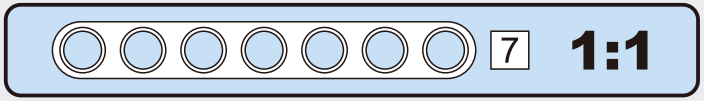

2x

E60

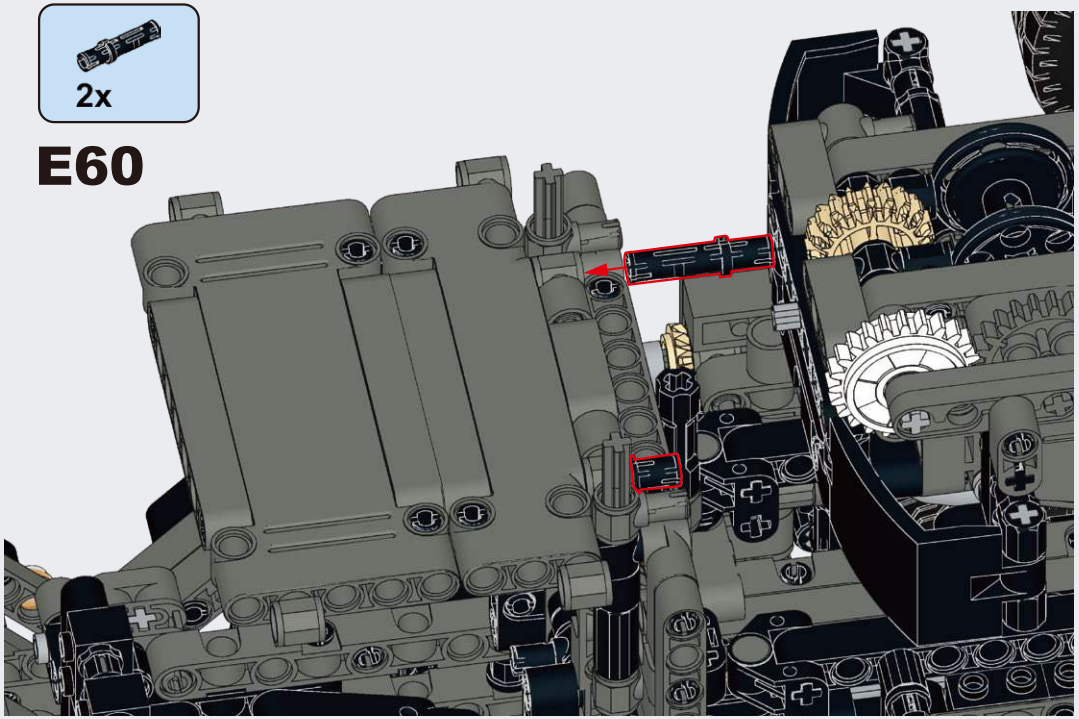

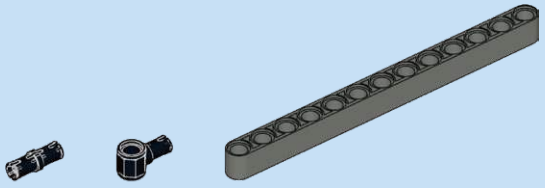

2x 1x 1x

E61

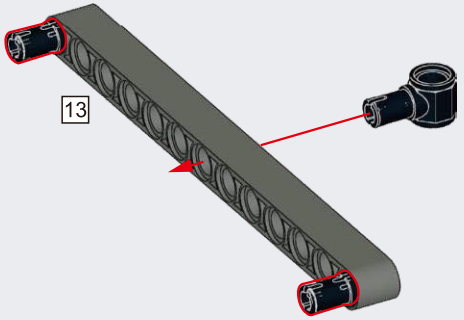

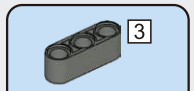

2x

E62

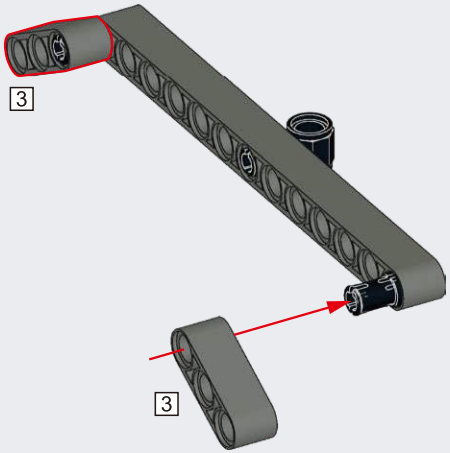

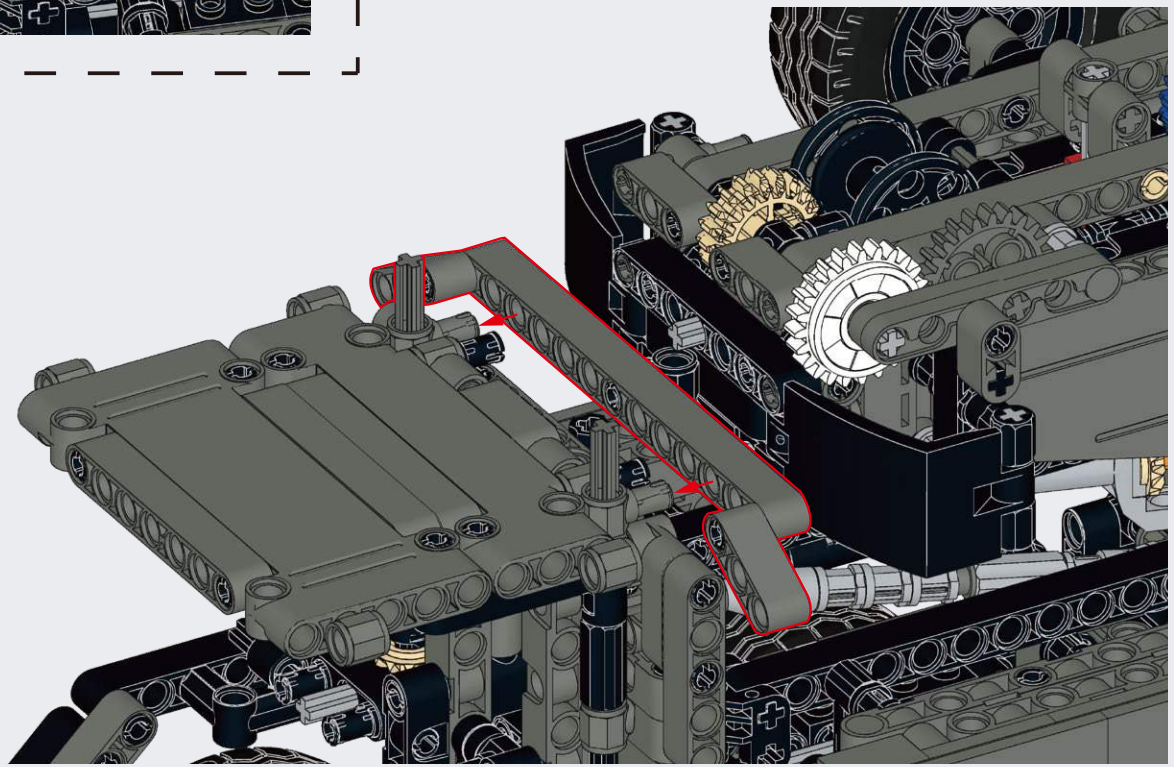

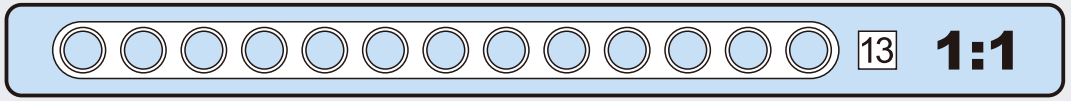

2x

E63

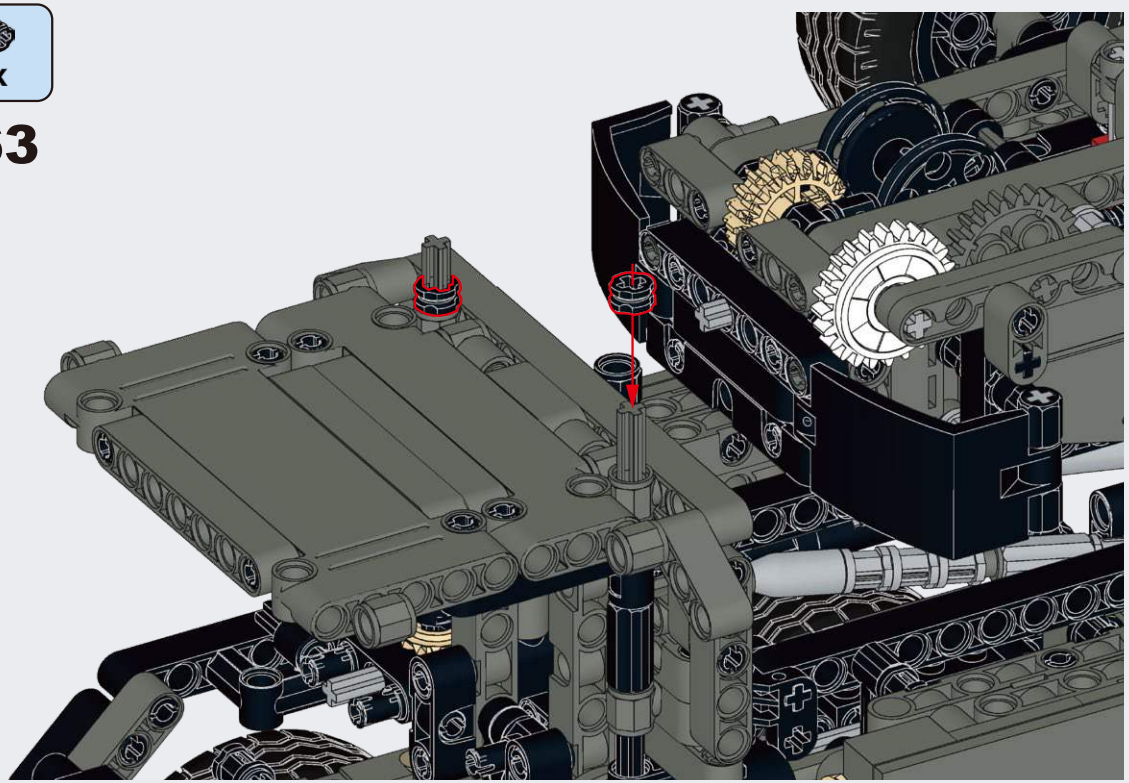

1x 1x

E64

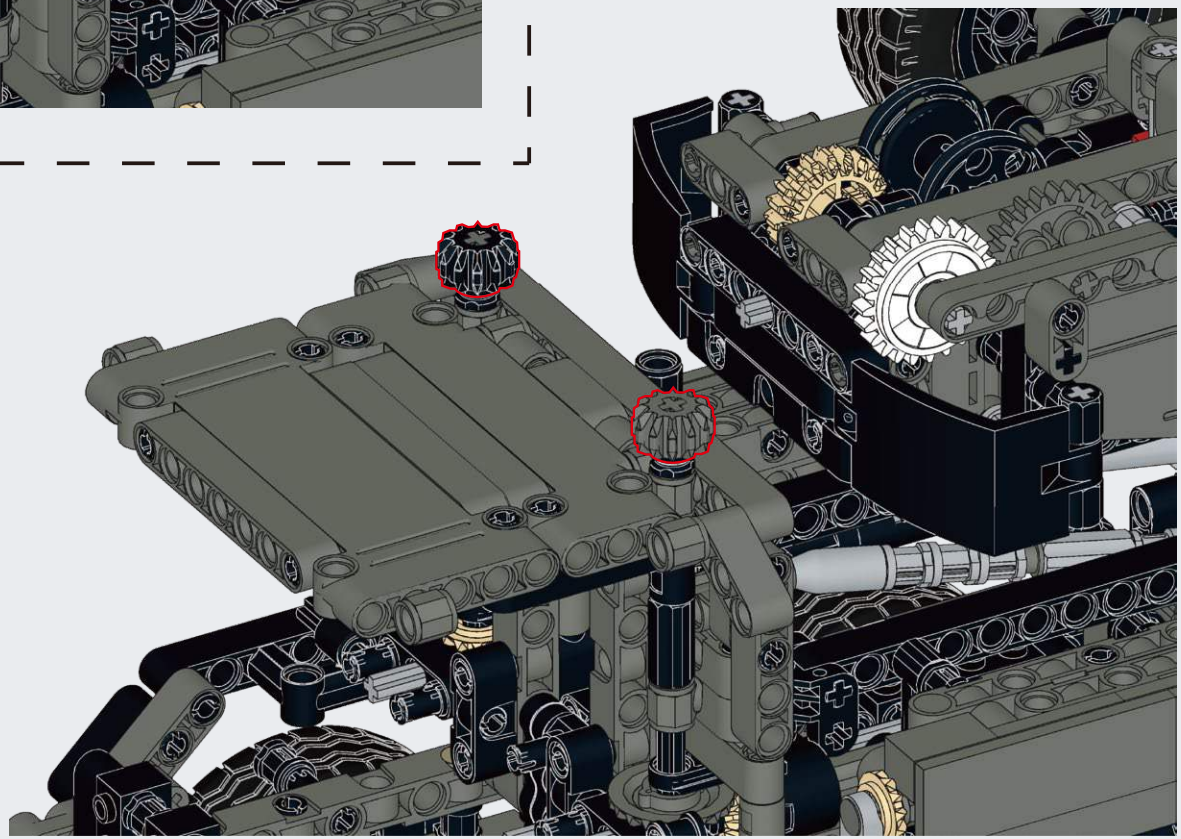

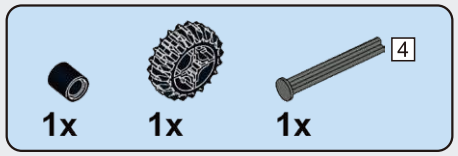

E65

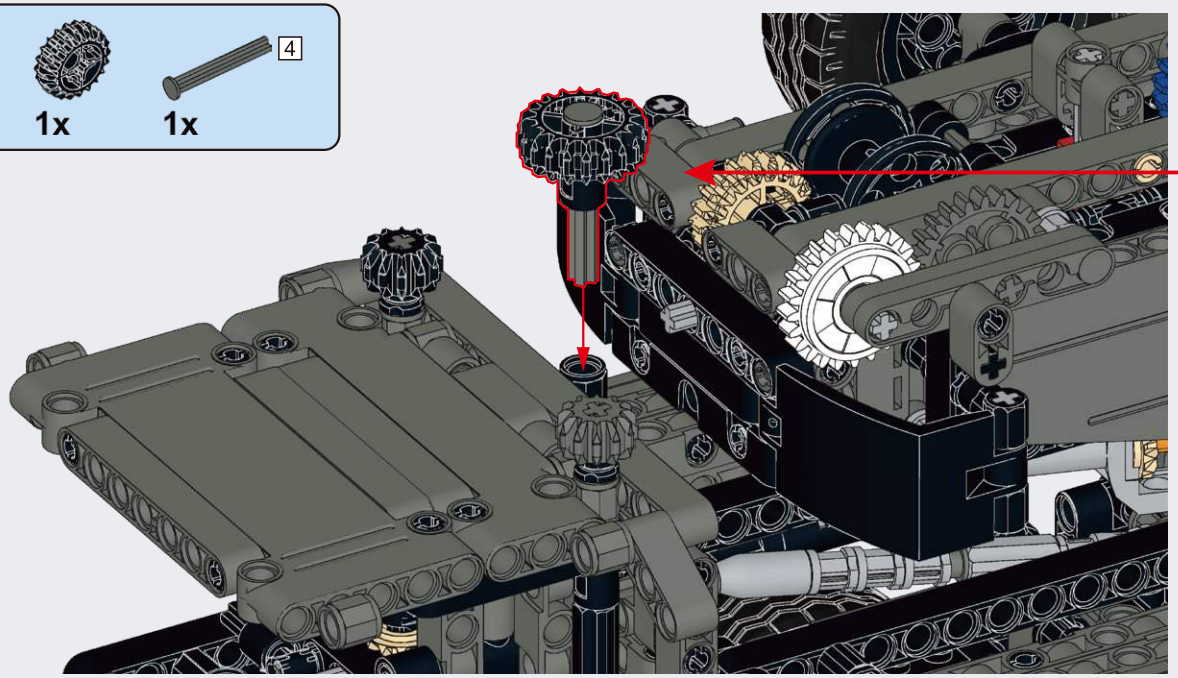

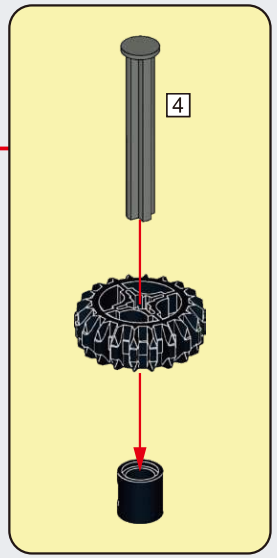

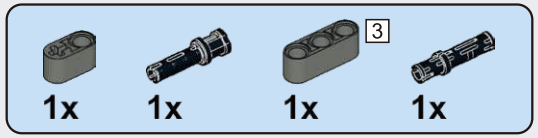

E66

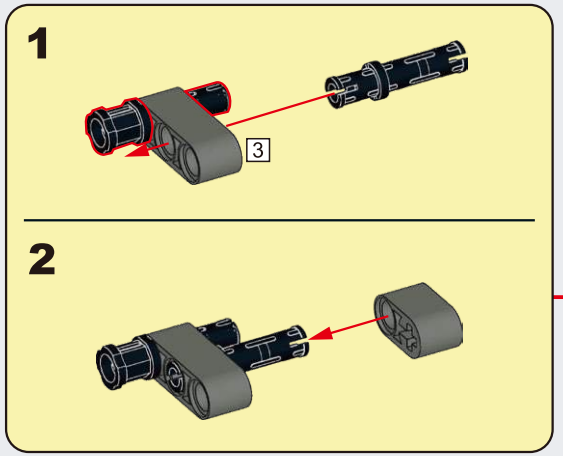

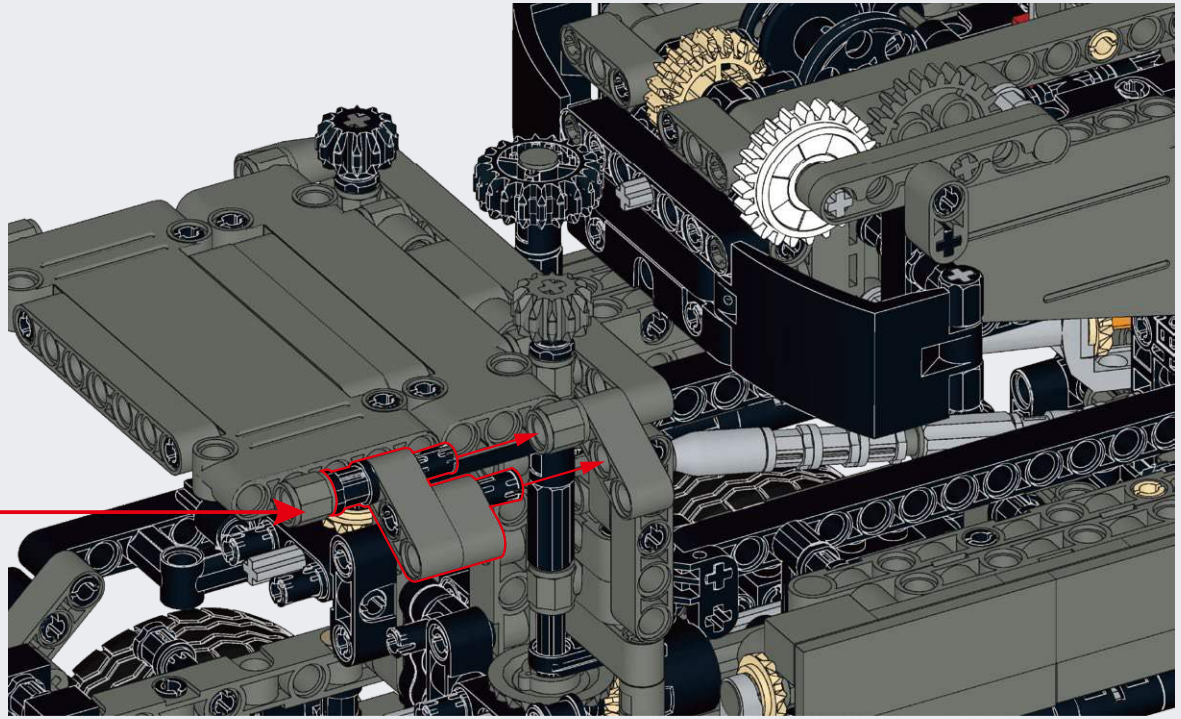

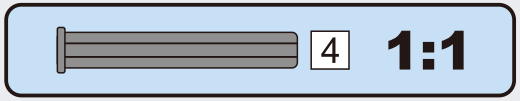

E67

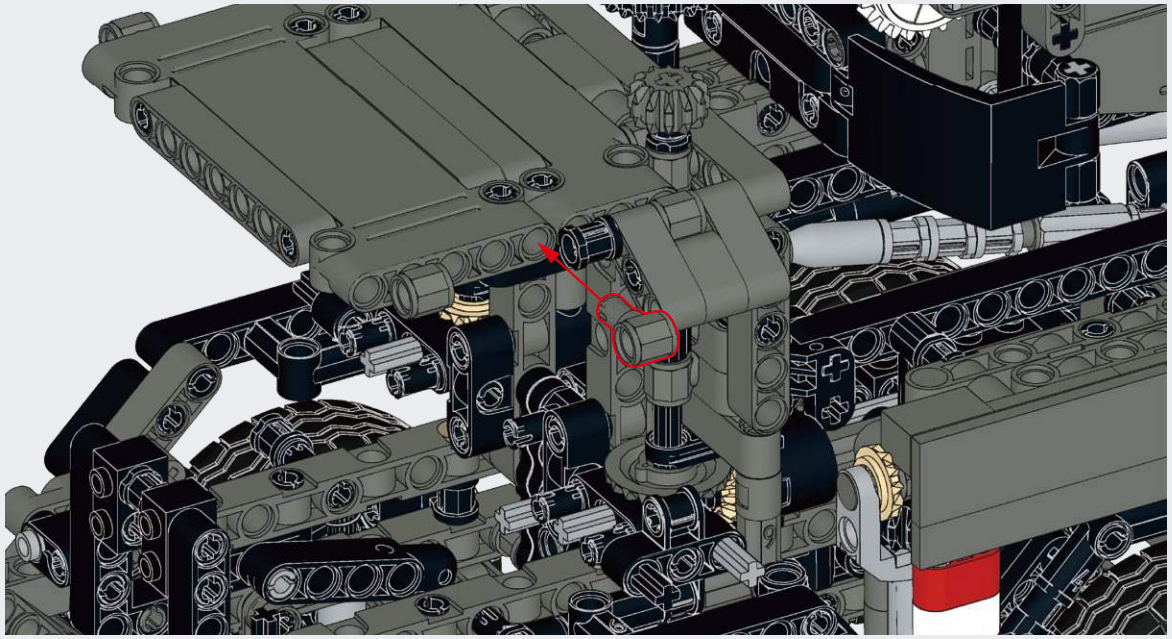

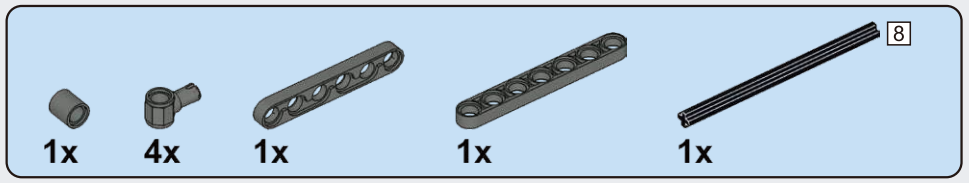

E68

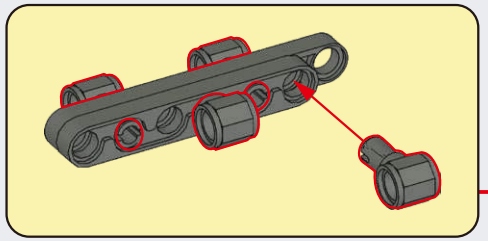

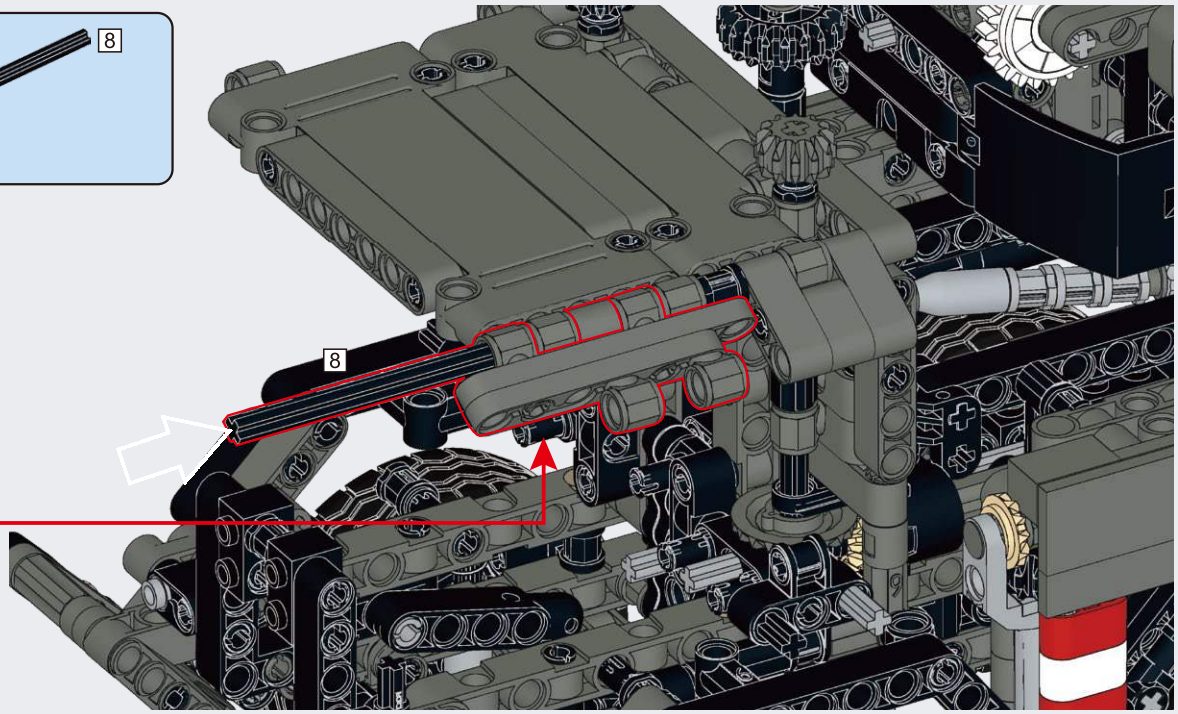

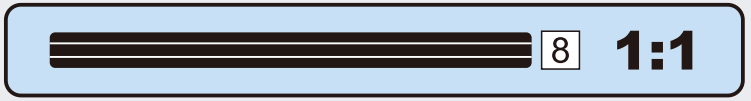

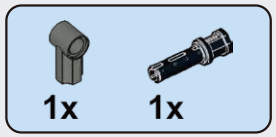

E69

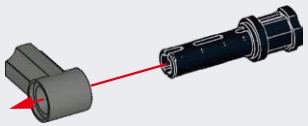

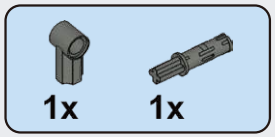

E70

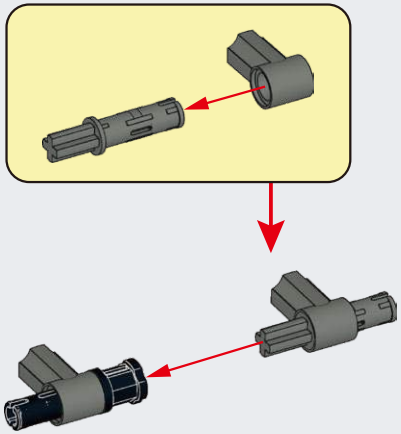

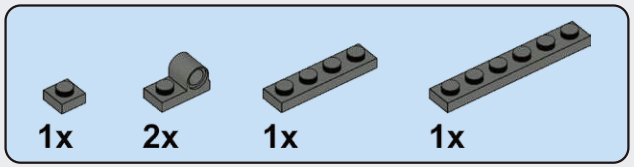

E71

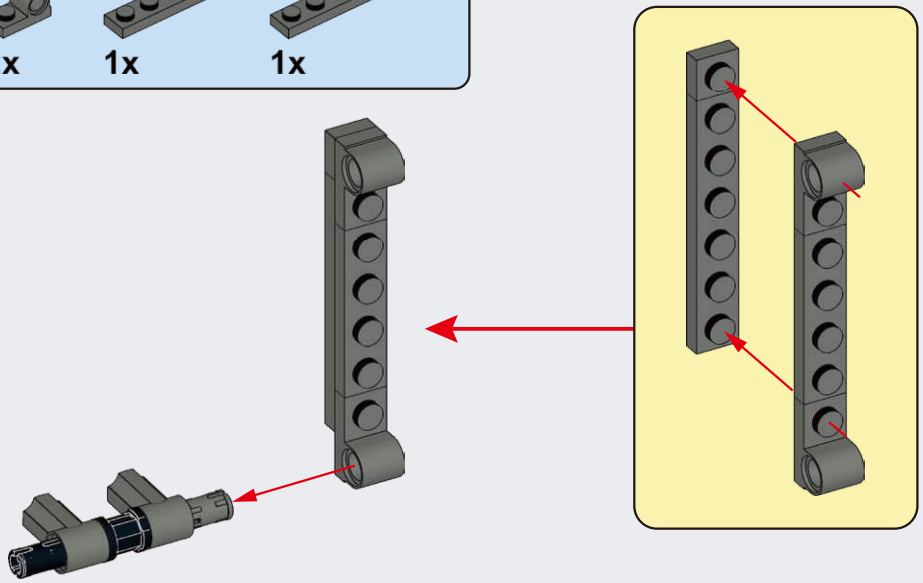

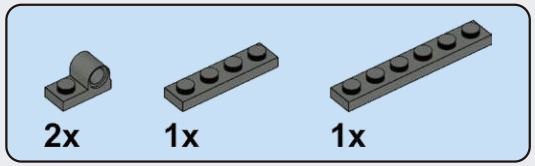

E72

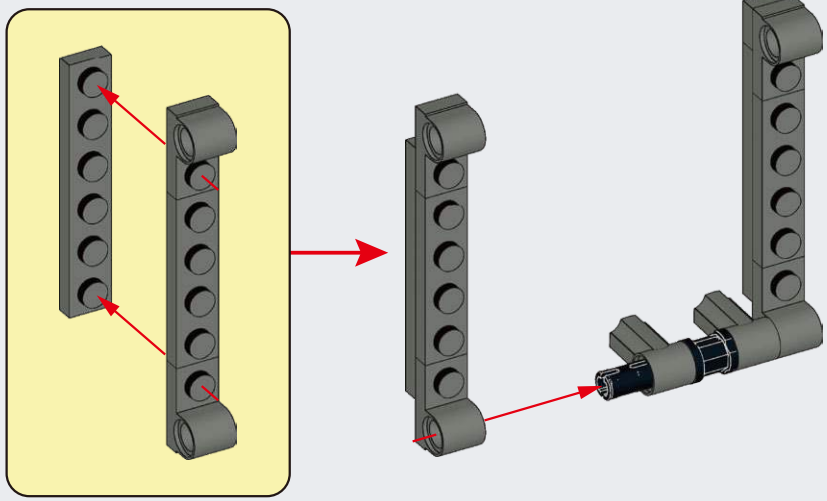

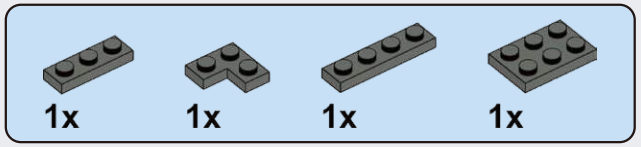

E73

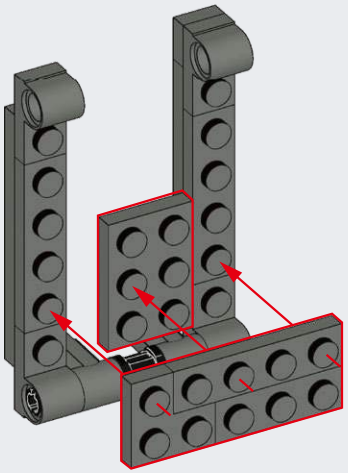

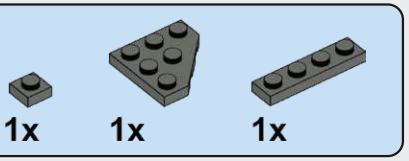

E74

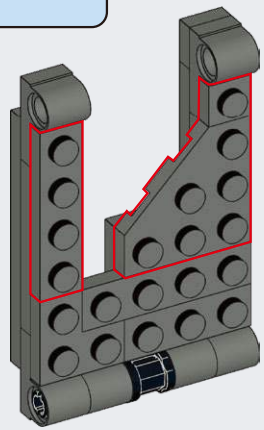

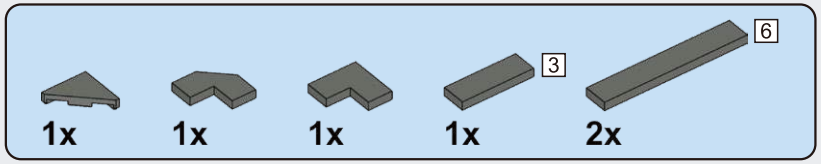

E75

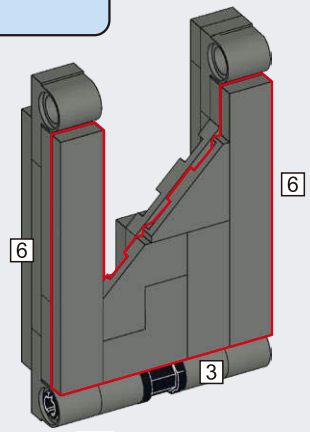

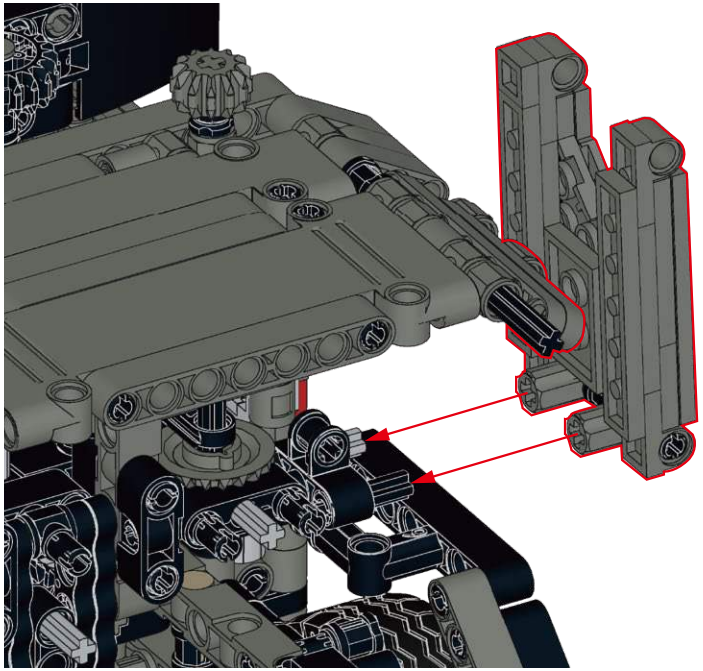

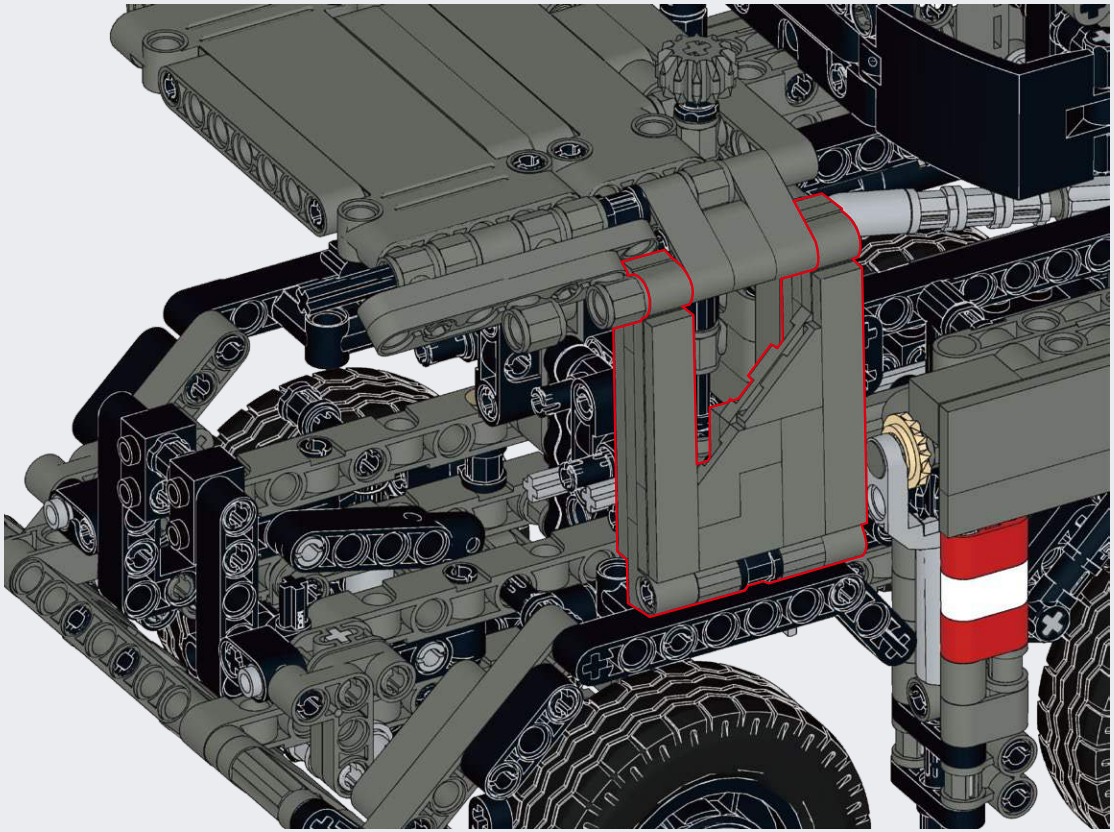

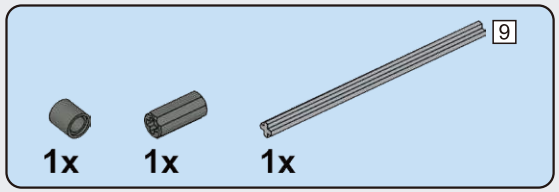

E76

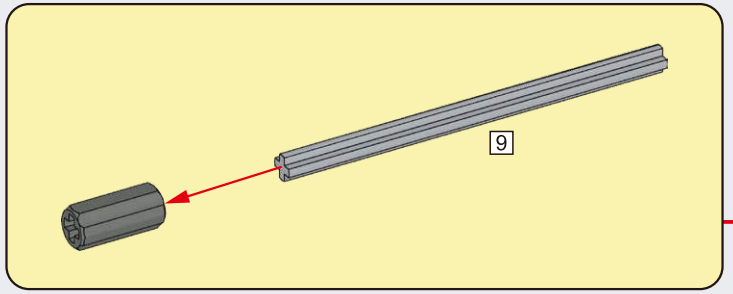

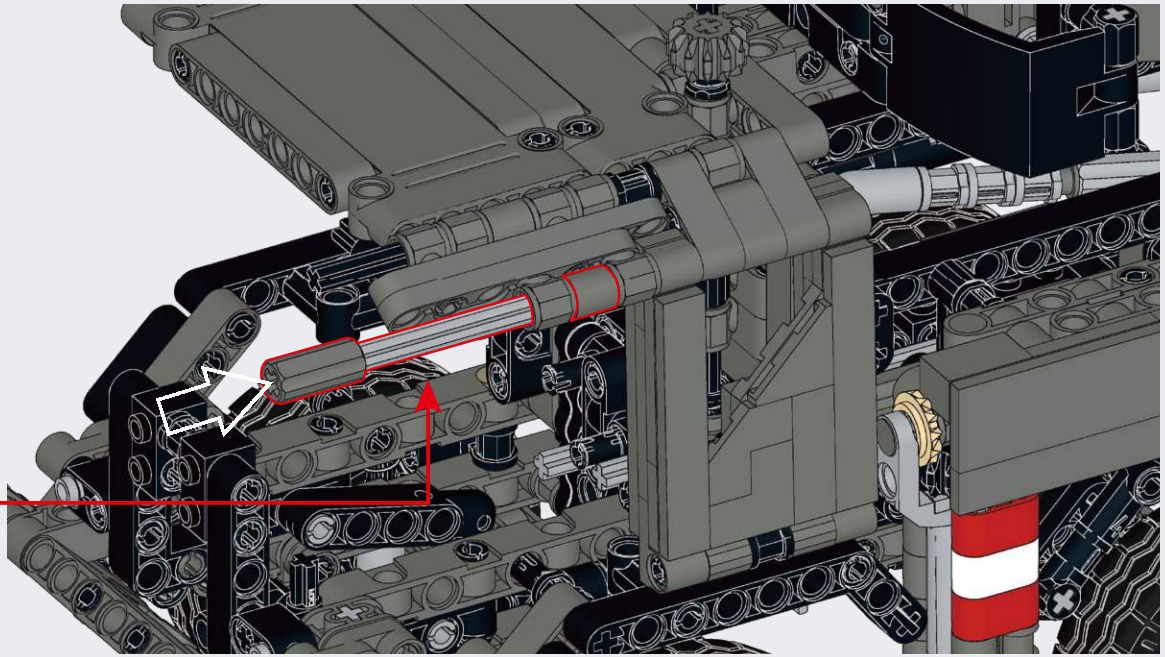

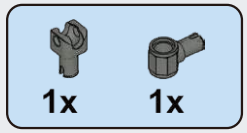

E77

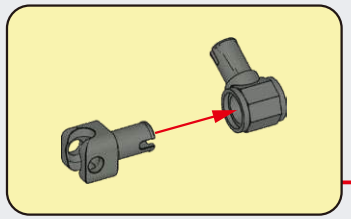

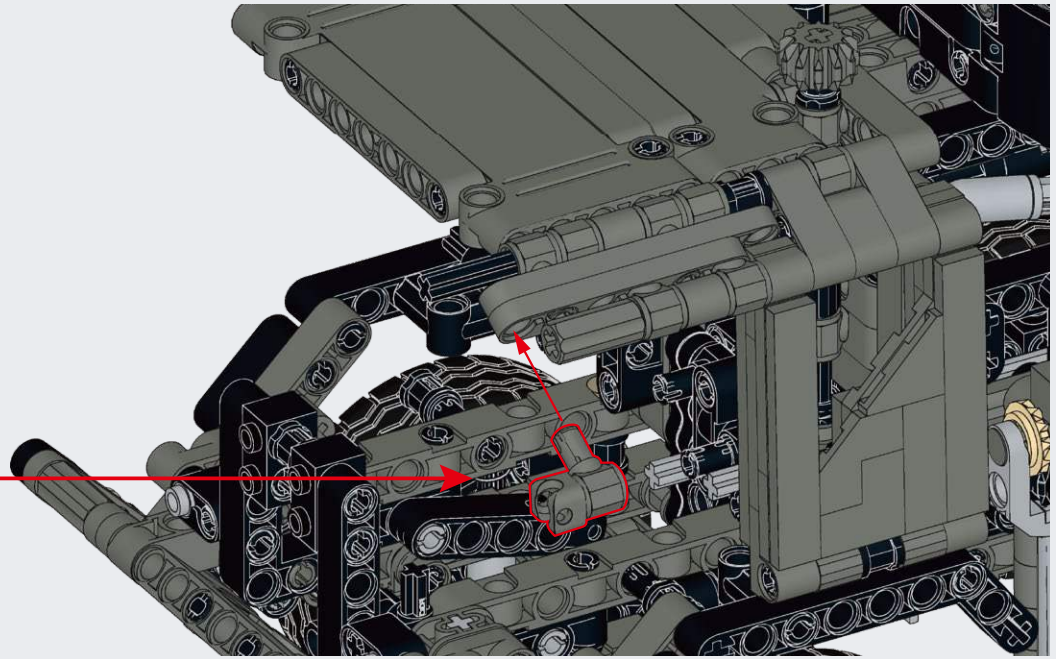

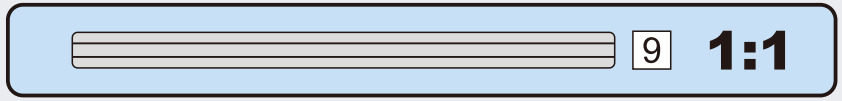

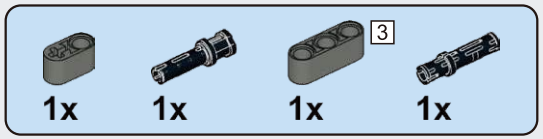

E78

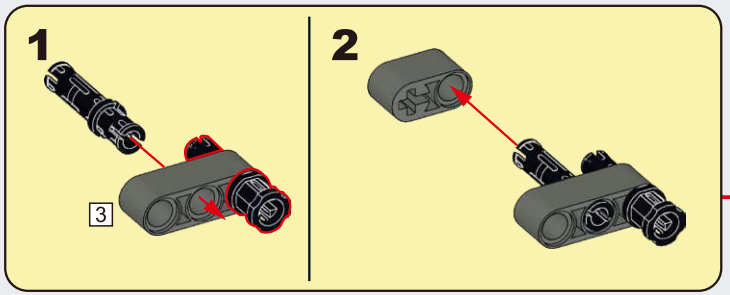

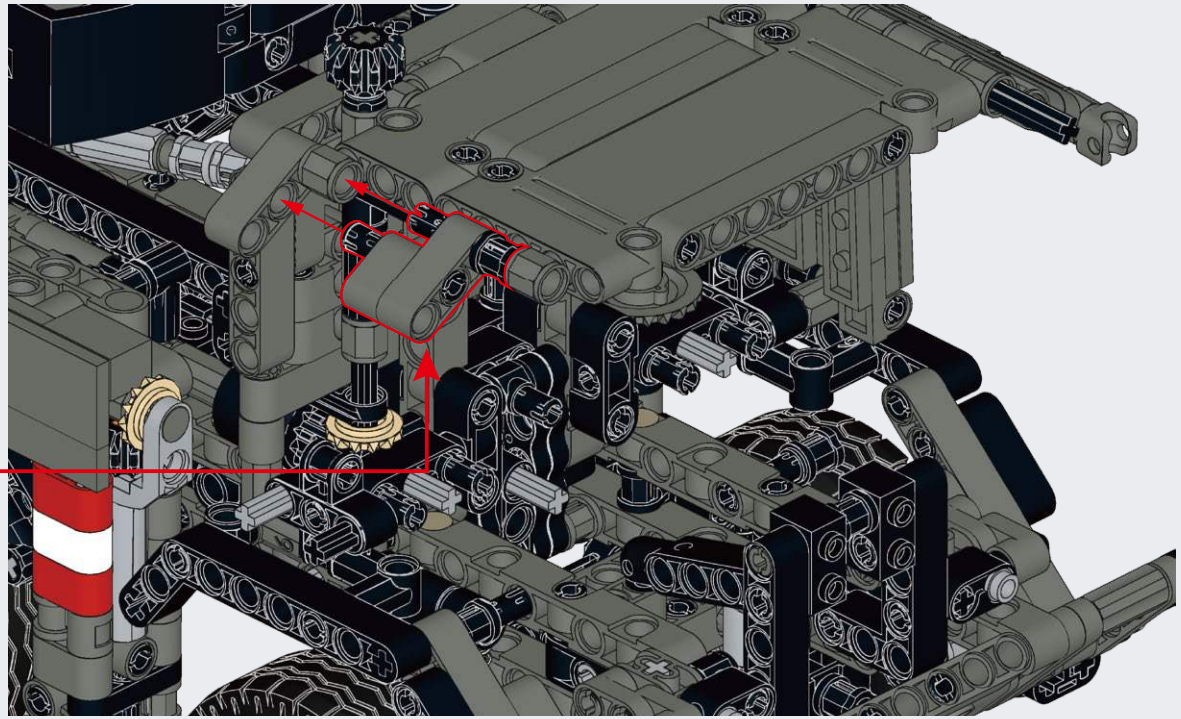

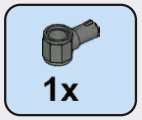

E79

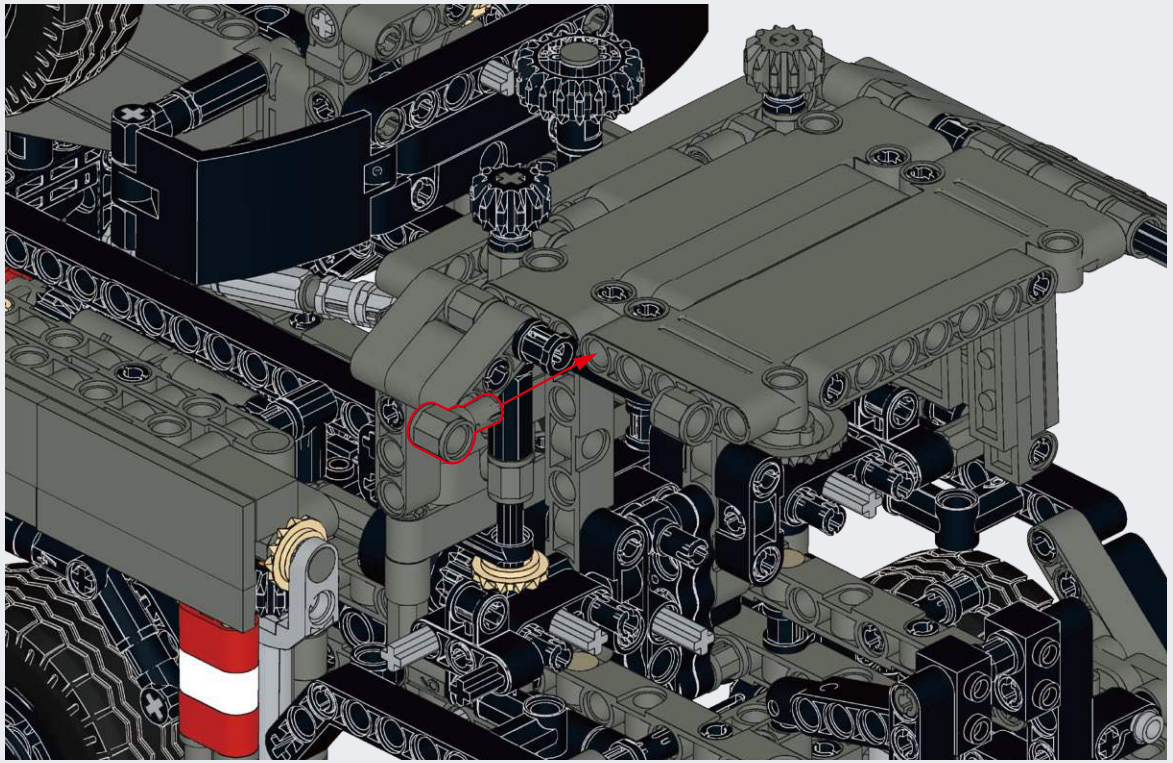

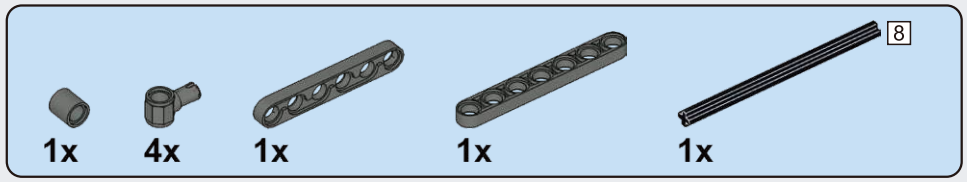

E80

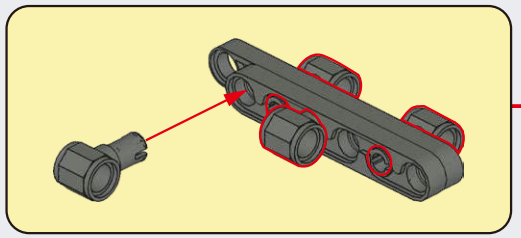

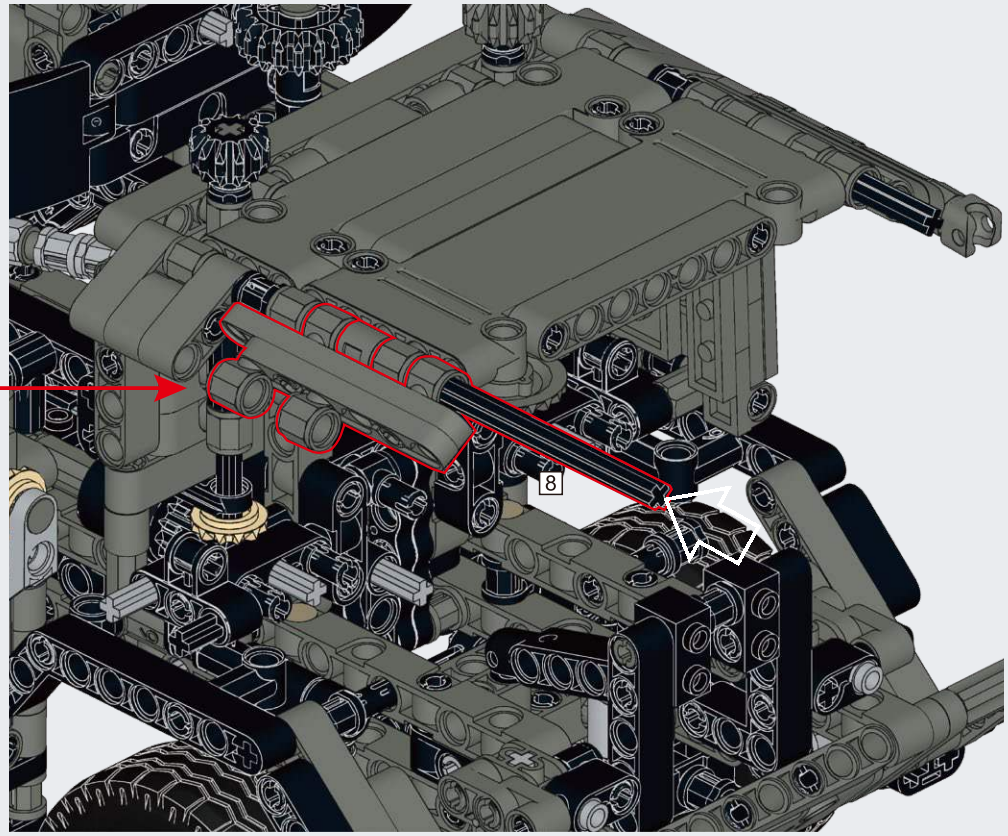

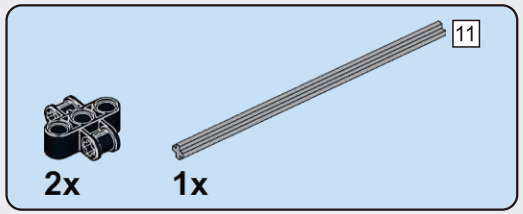

E81

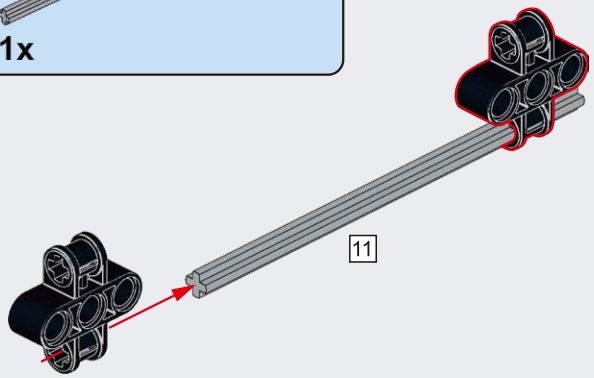

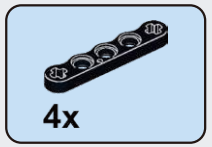

E82

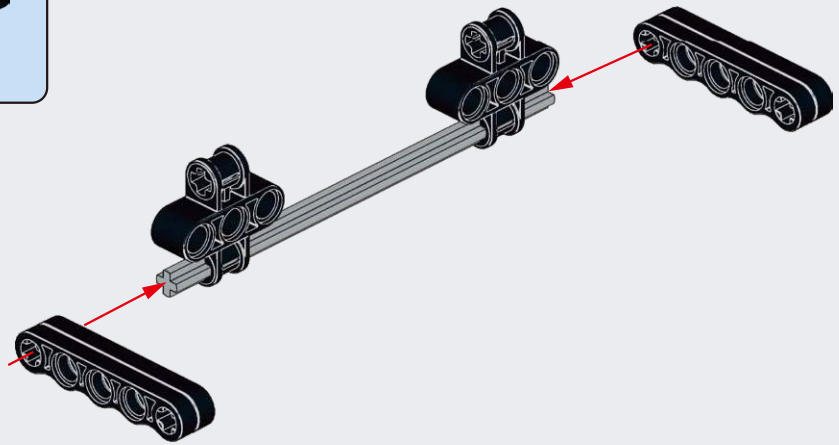

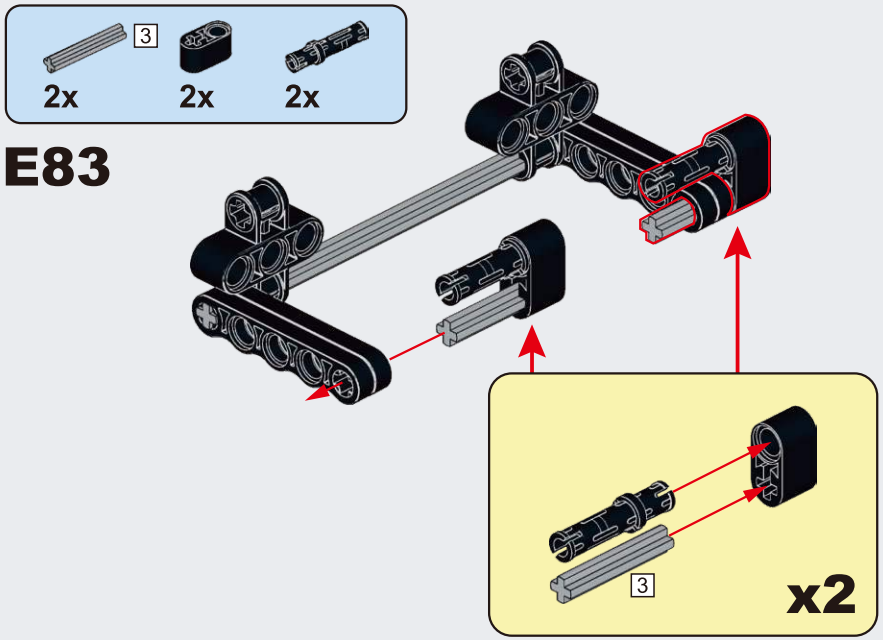
3
2x
2x
2x
E83
3
x2

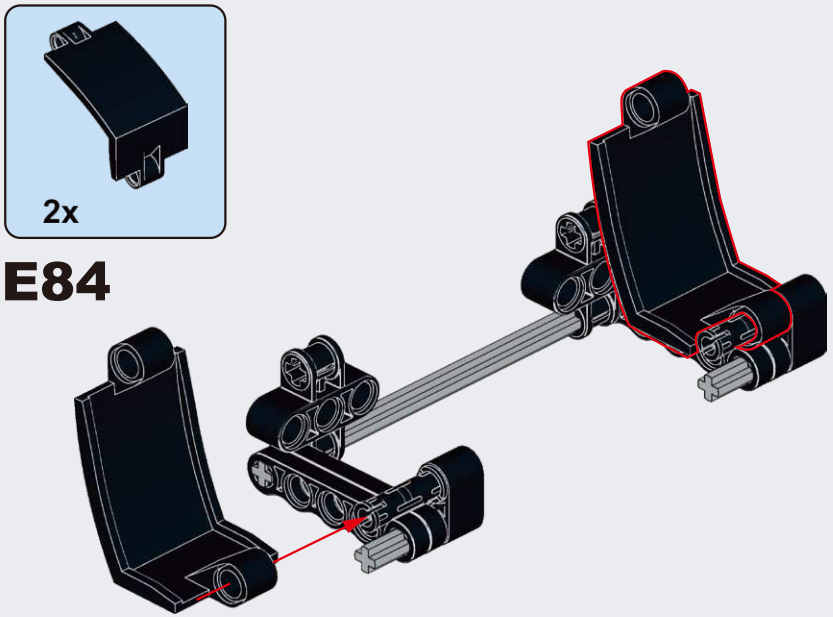
2x
E84

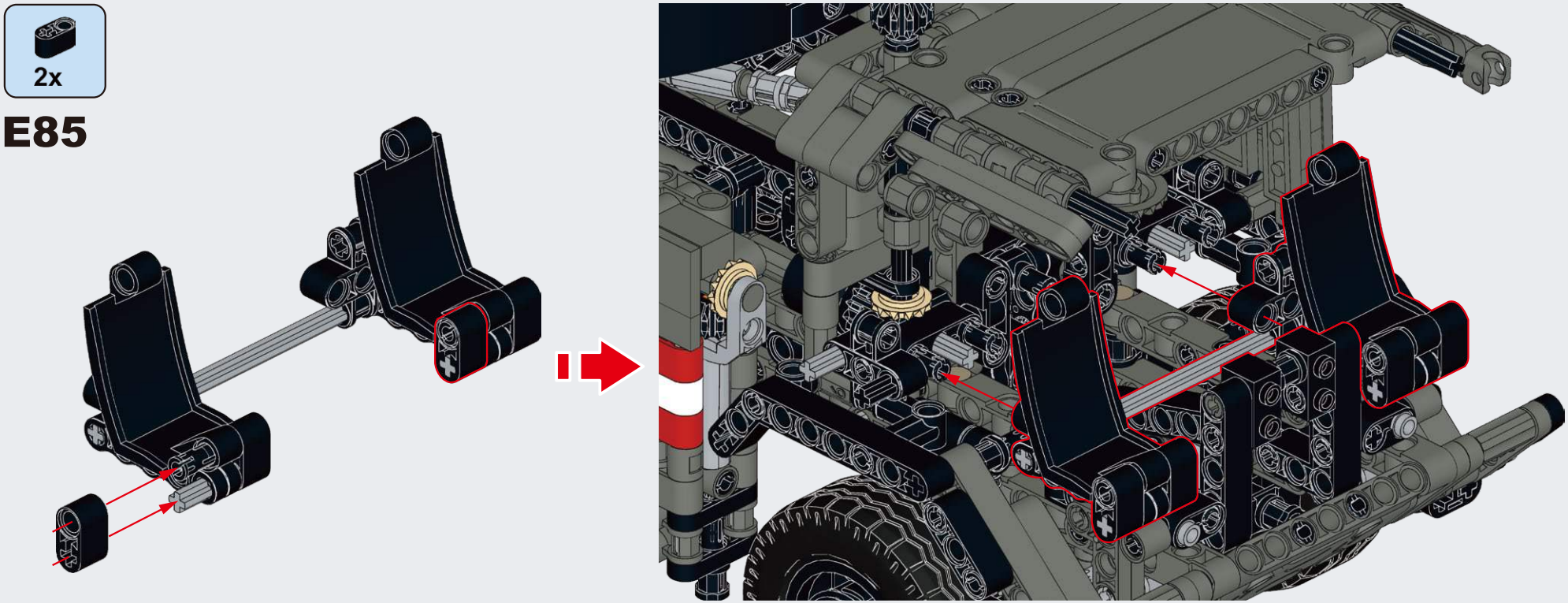
2x
E85

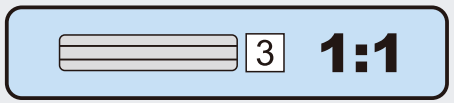
3
1:1

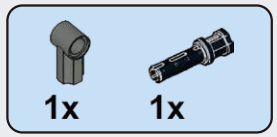

E86

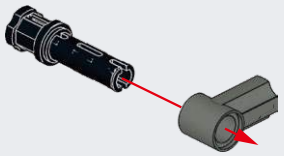

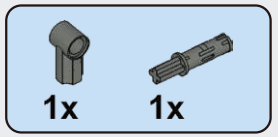

E87

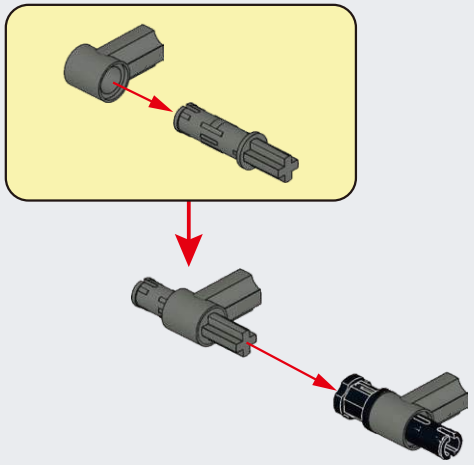

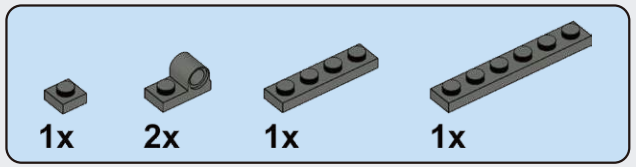

E88

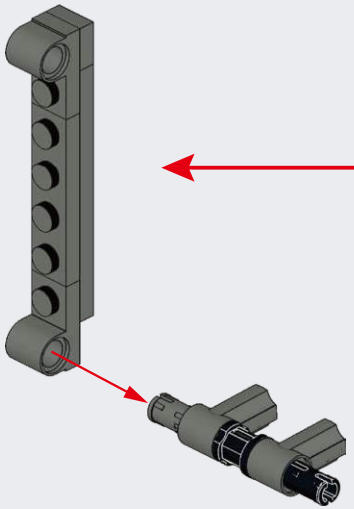

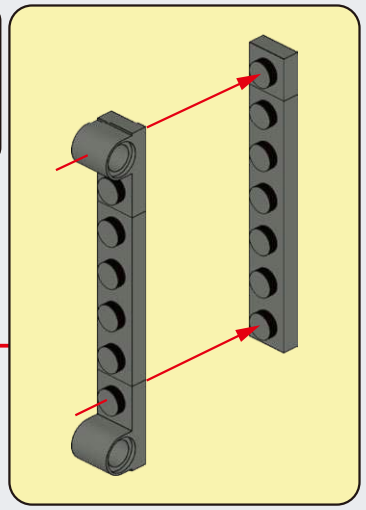

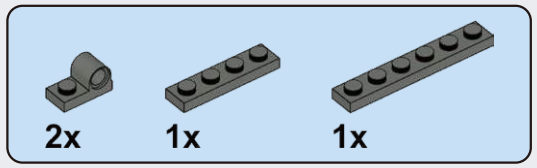

E89

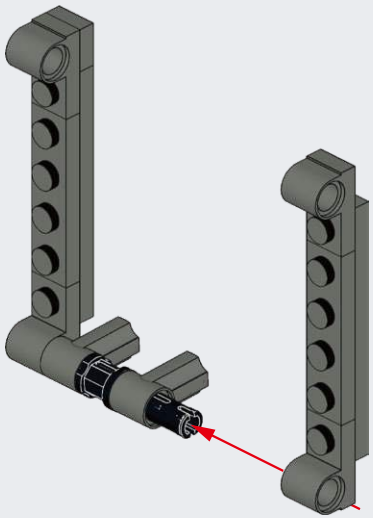

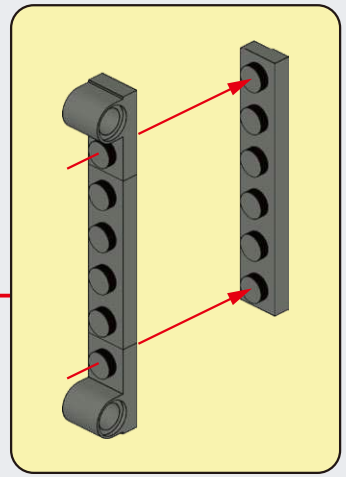

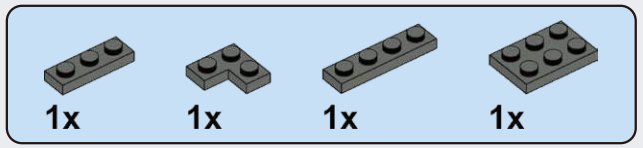

E90

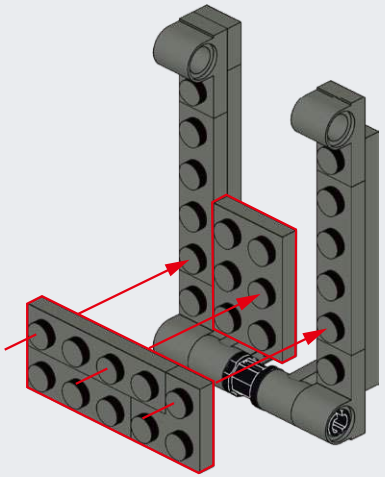

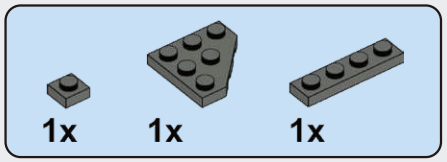

E91

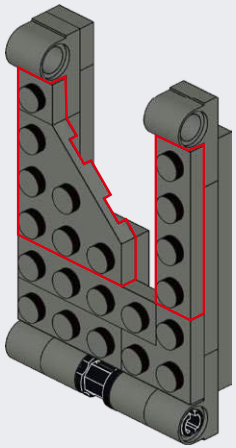

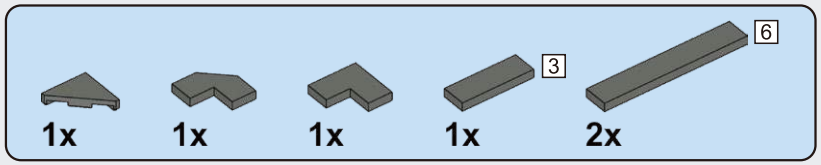

E92

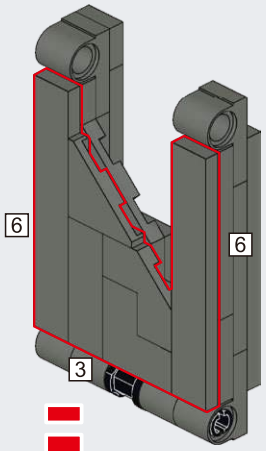

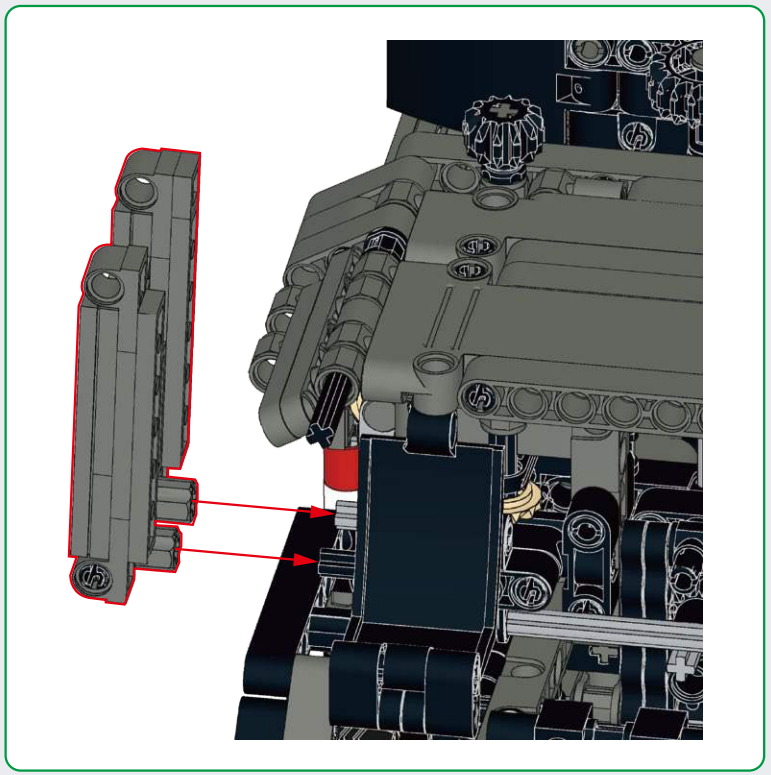

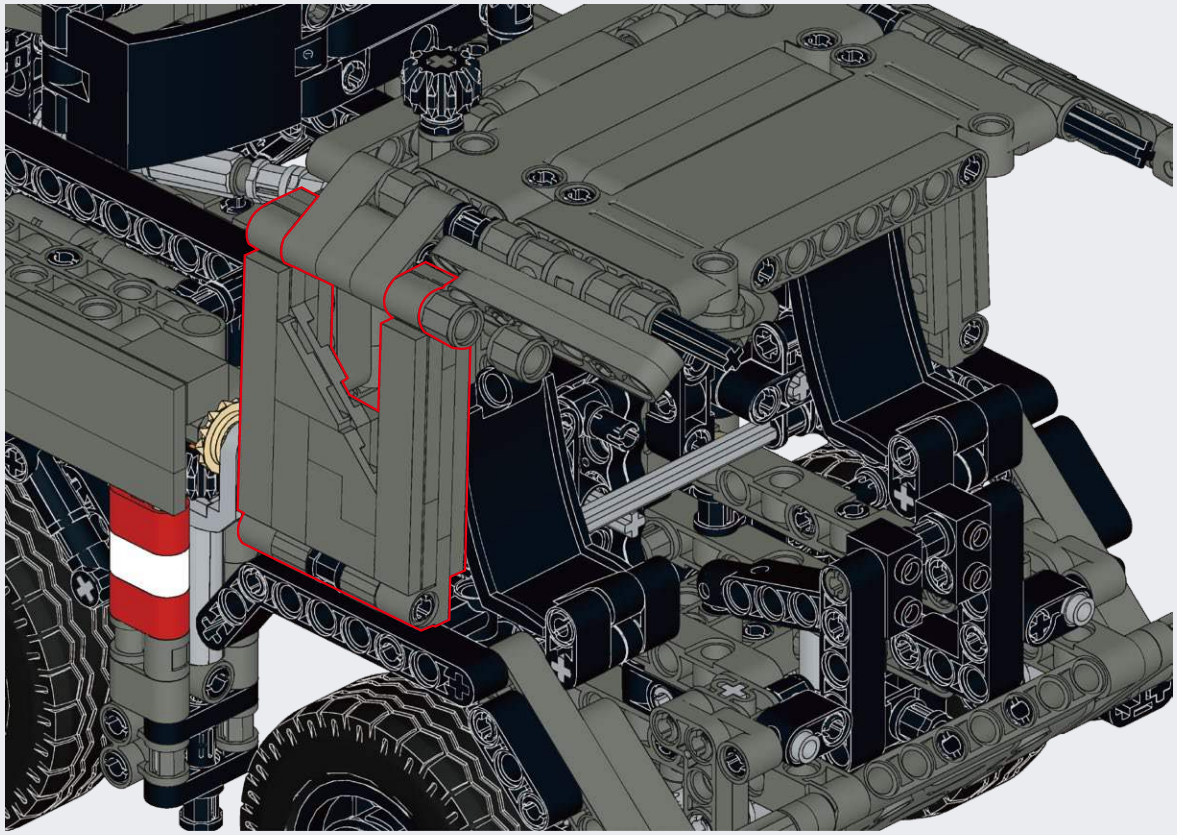

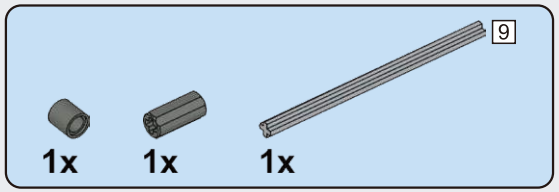

E93

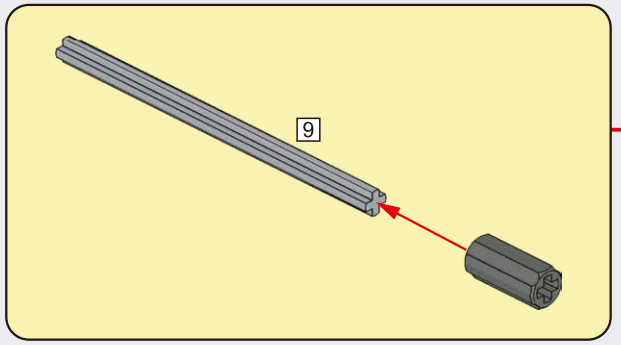

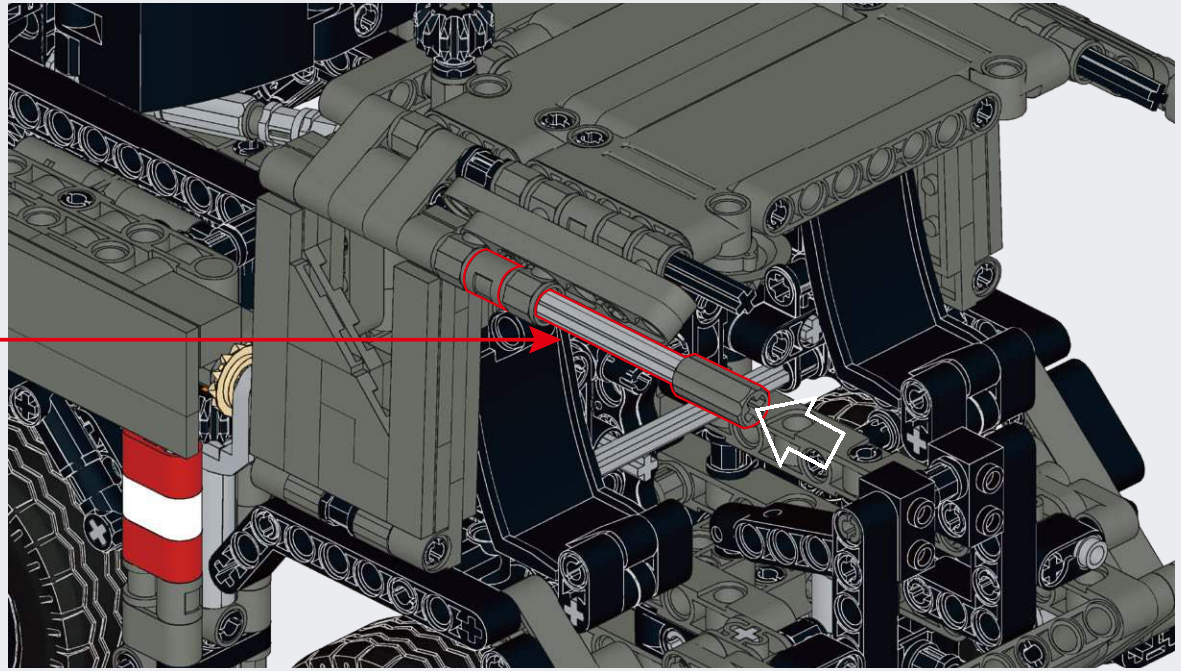

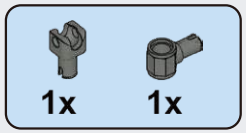

E94

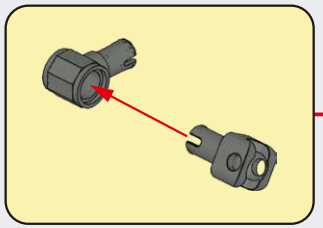

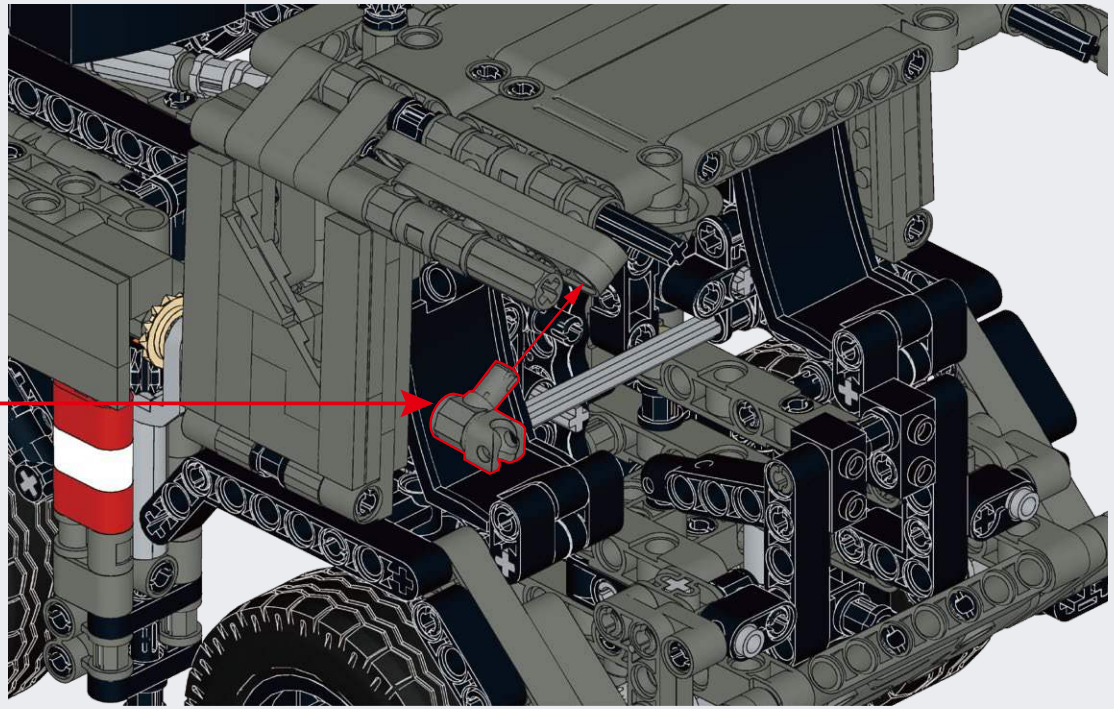

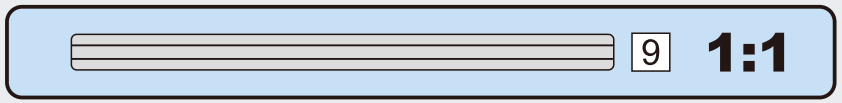

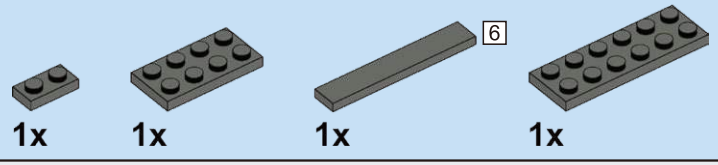

E95

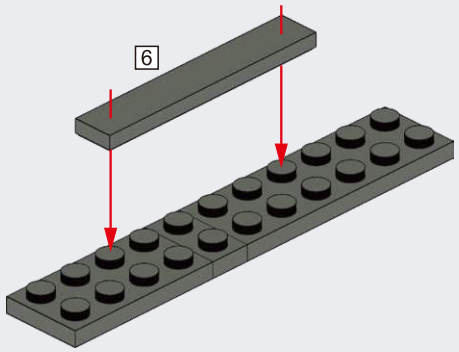

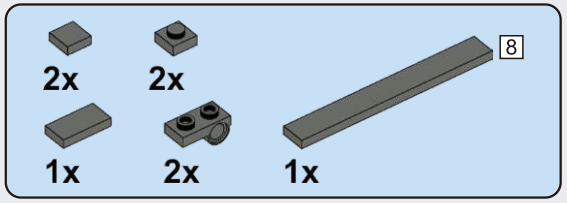

E96

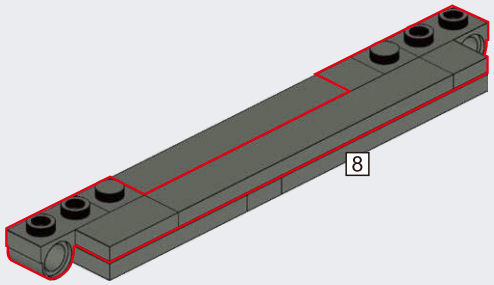

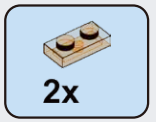

E97

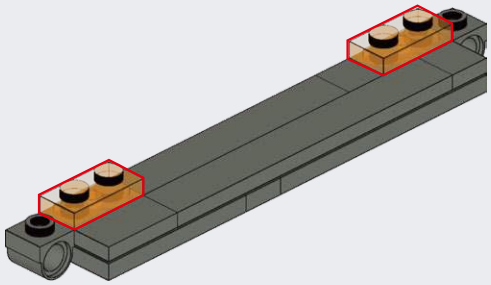

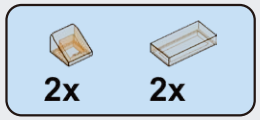

E98

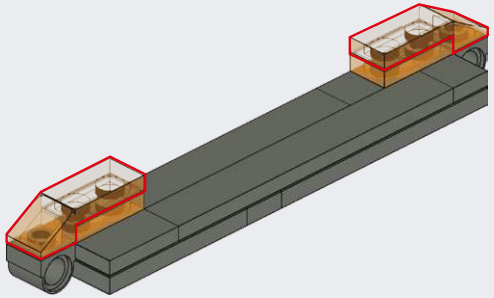

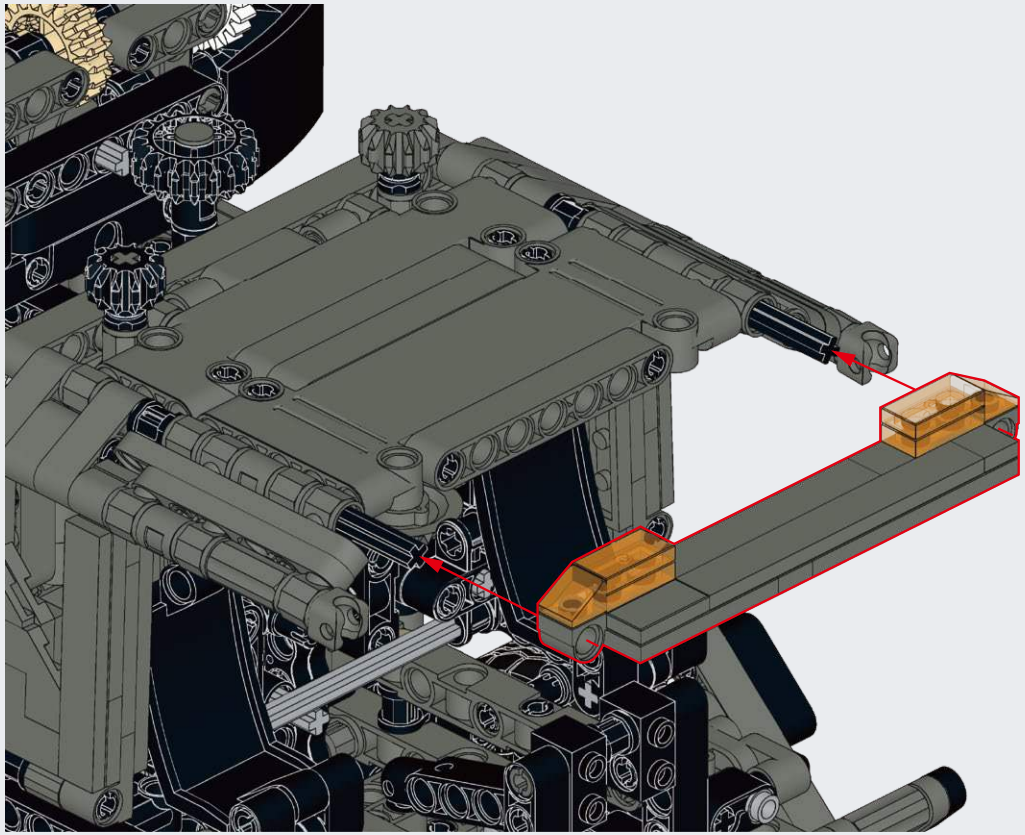

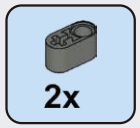

E99

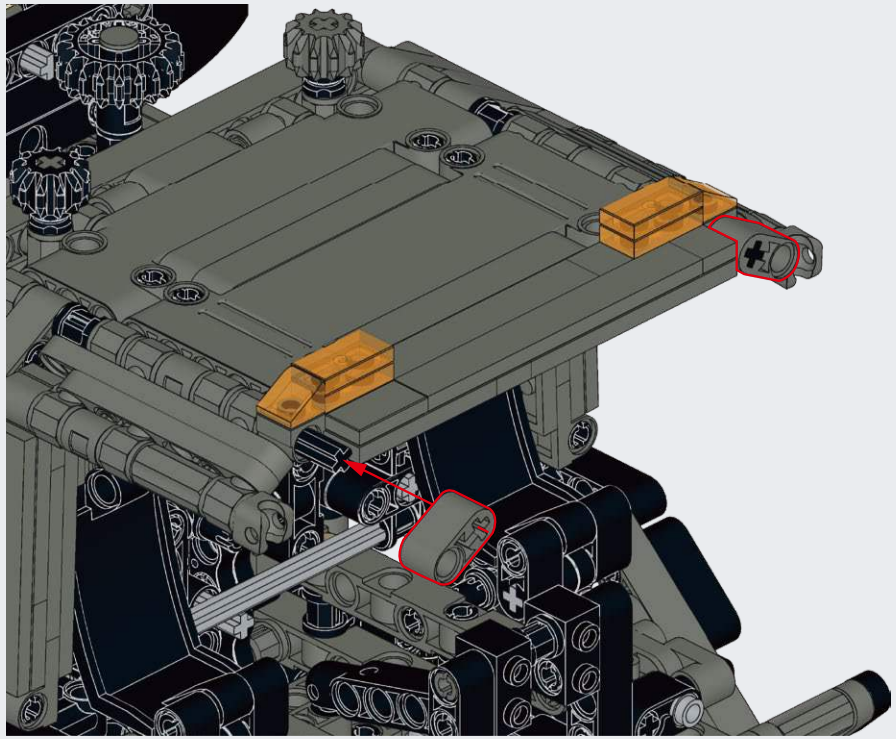

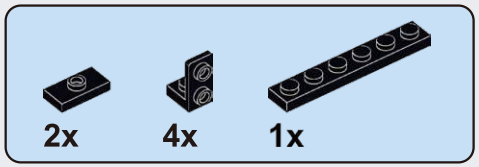

E100

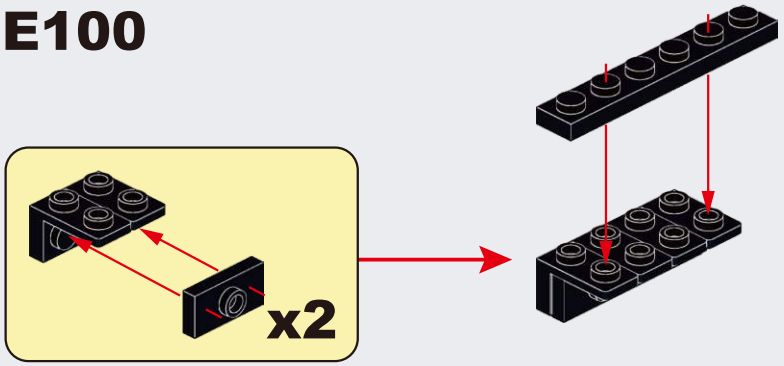

E101

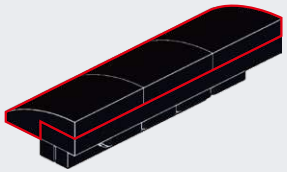

E102

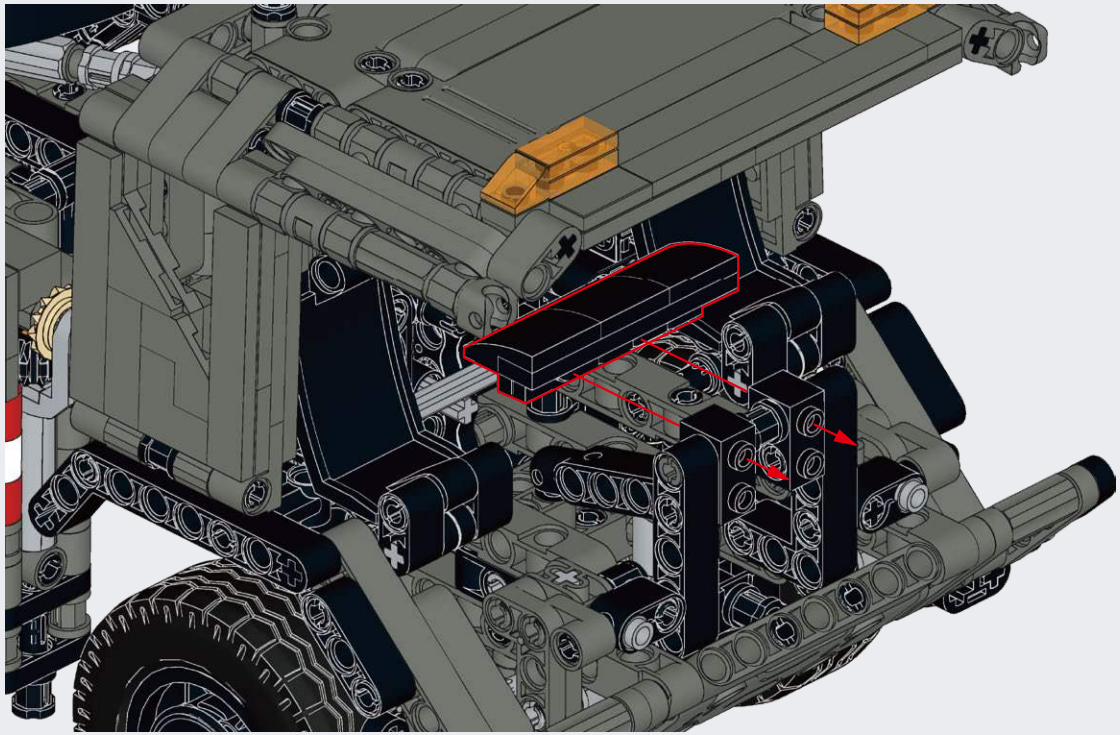

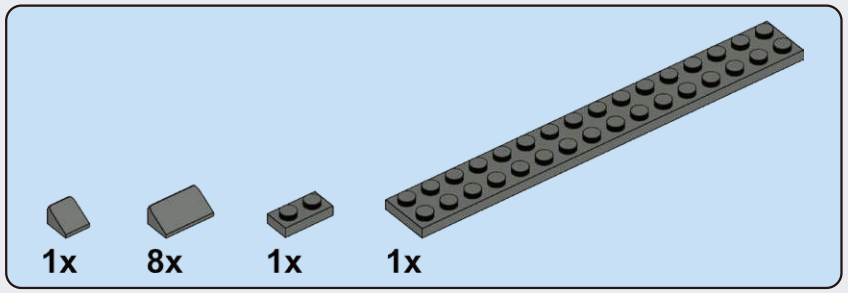

E103

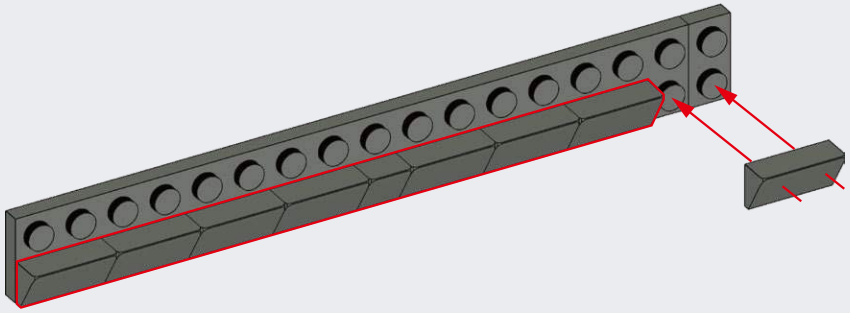

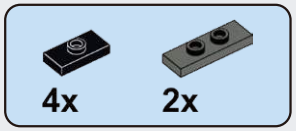

E104

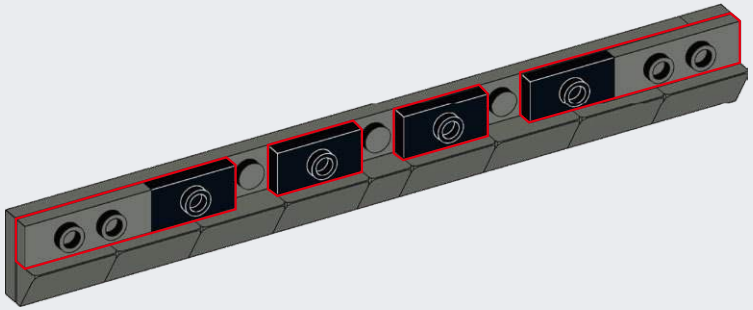

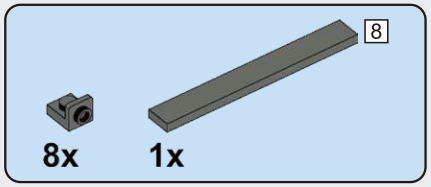

E105

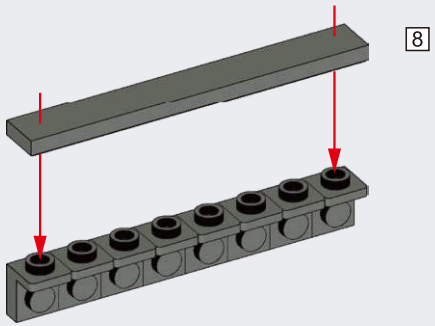

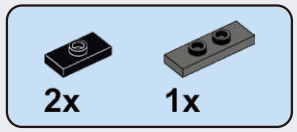

E106

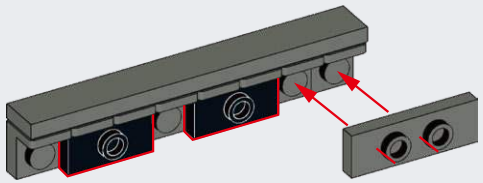

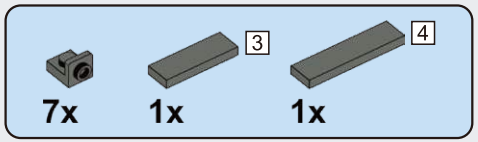

E107

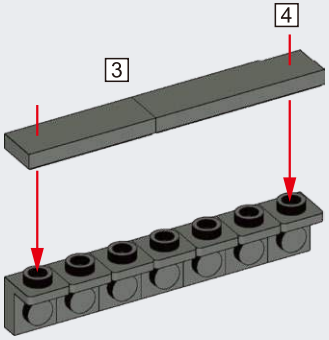

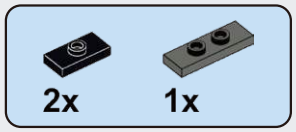

E108

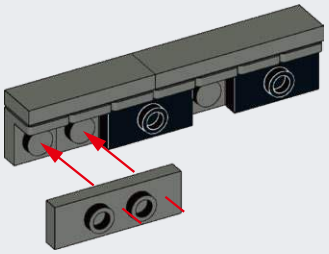

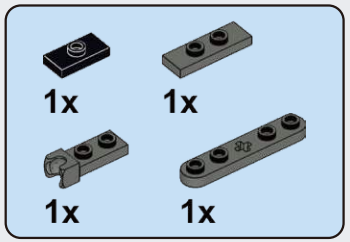

E109

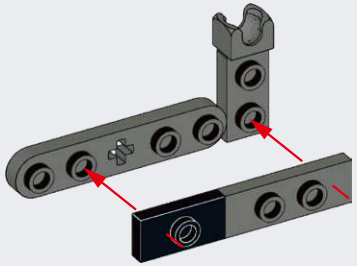

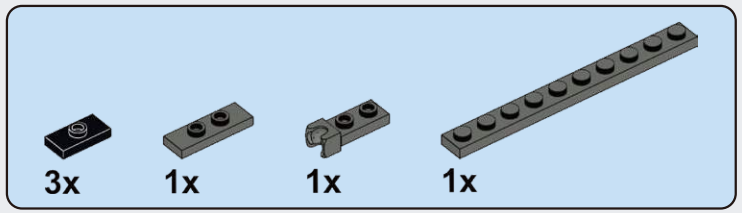

E110

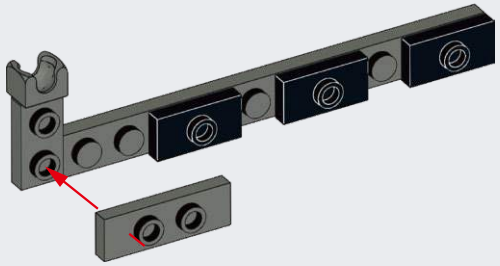

E111

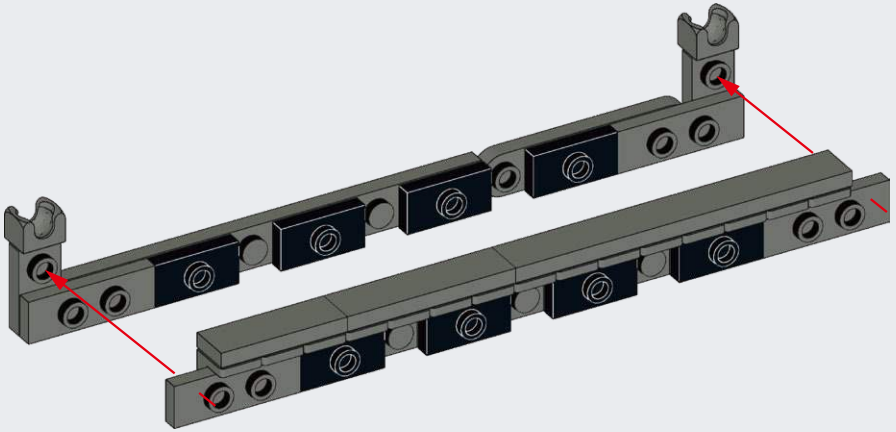

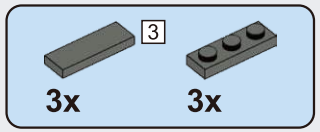

E112

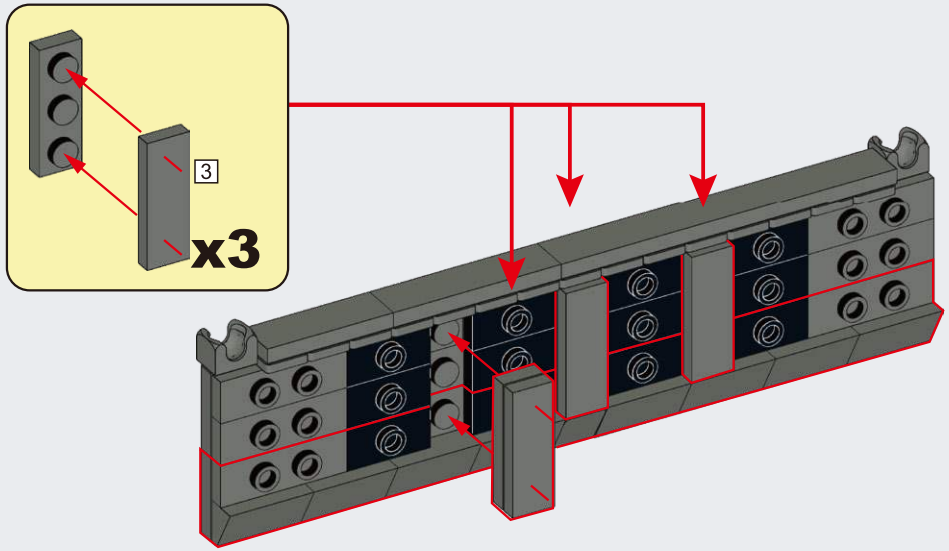

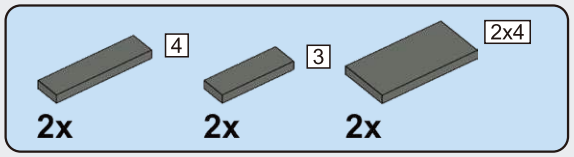

E113

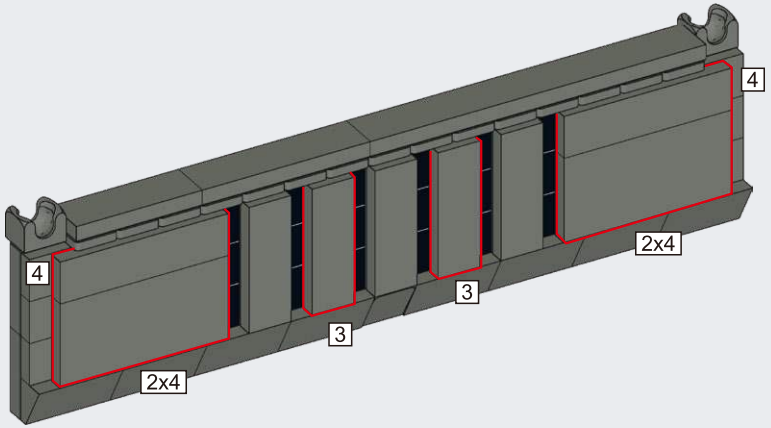

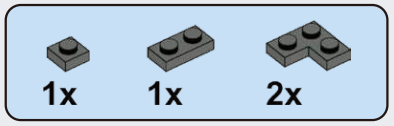

E114

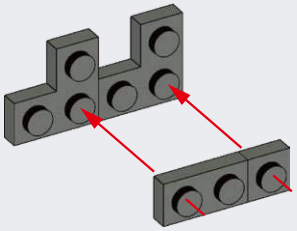

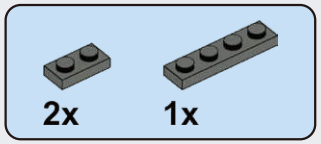

E115

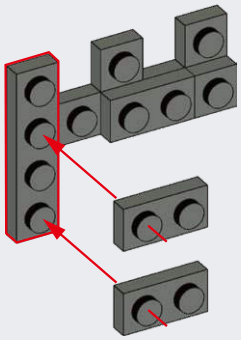

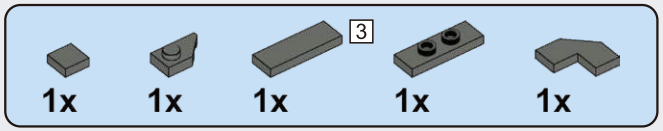

E116

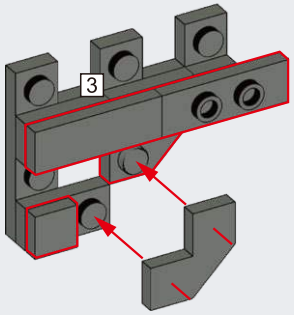

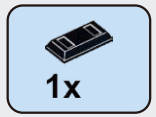

E117

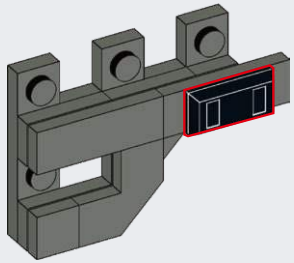

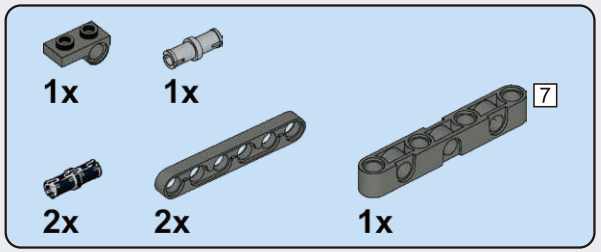

E118

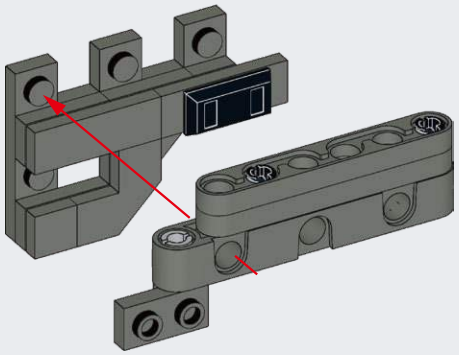

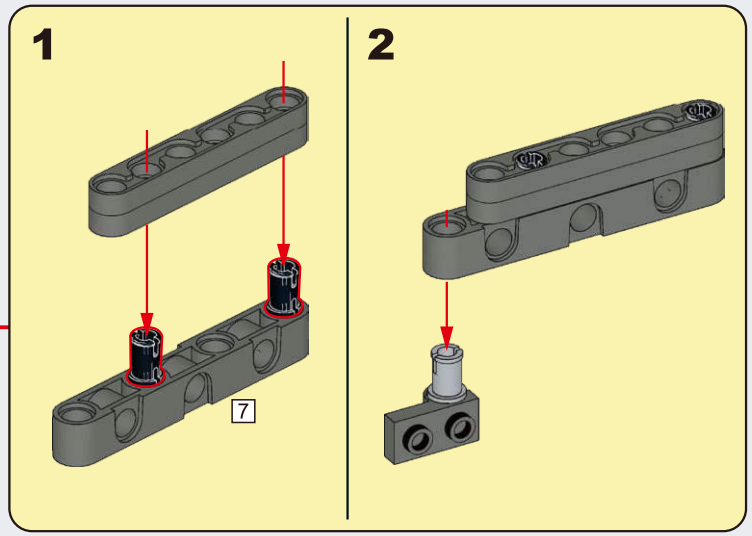

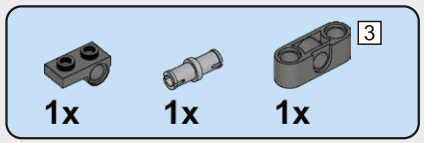

E119

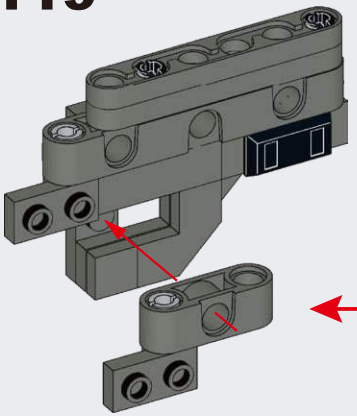

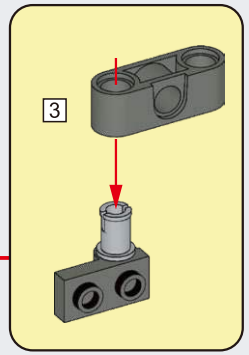

E120

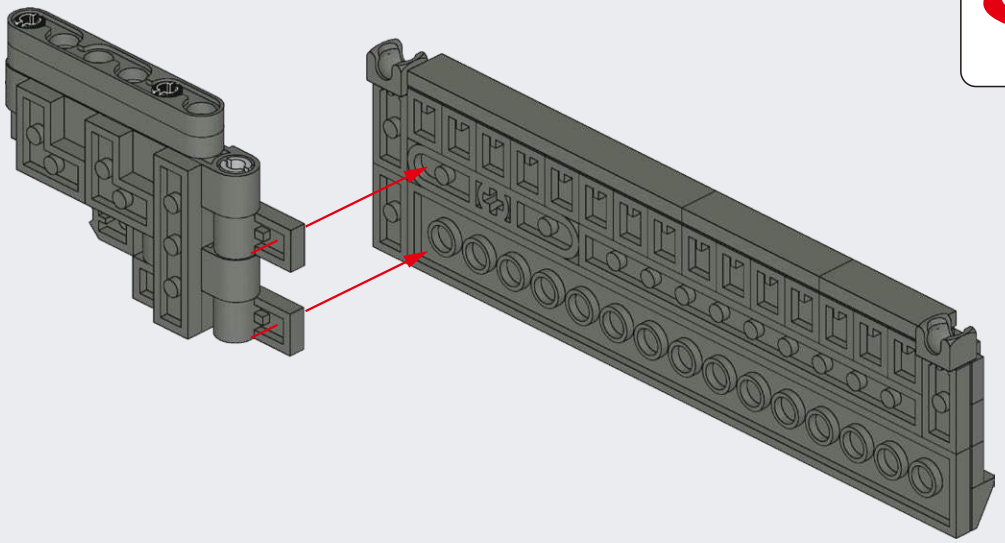

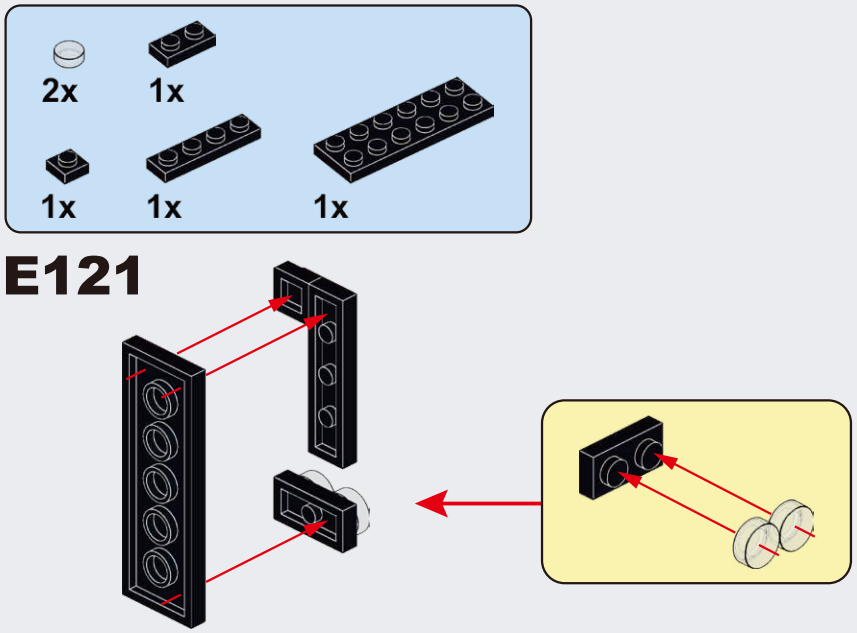

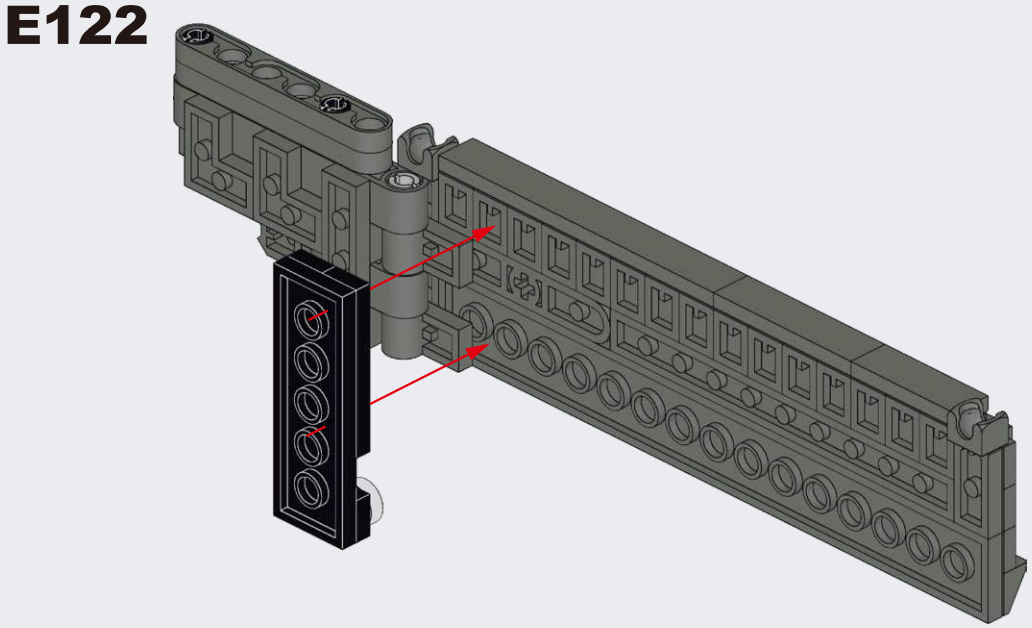

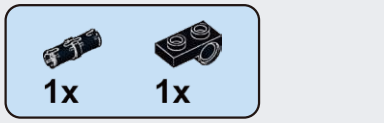

E123

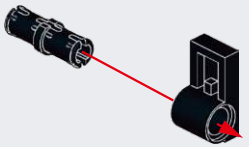

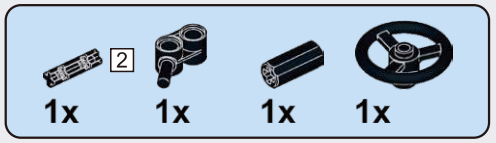

E124

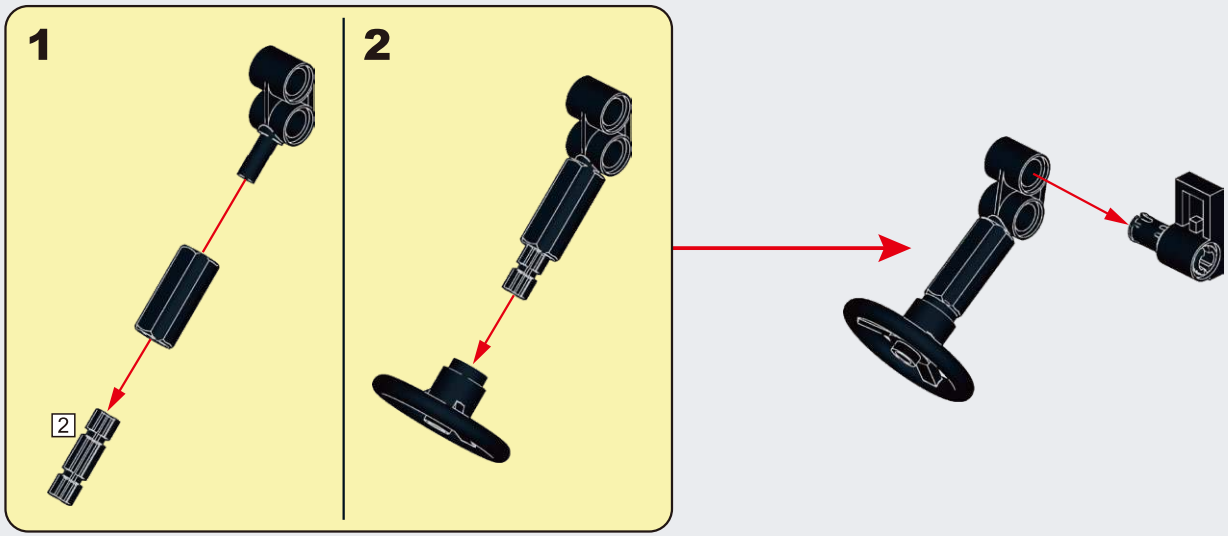

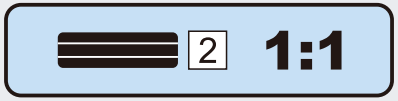

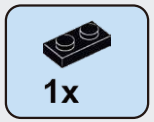

E125

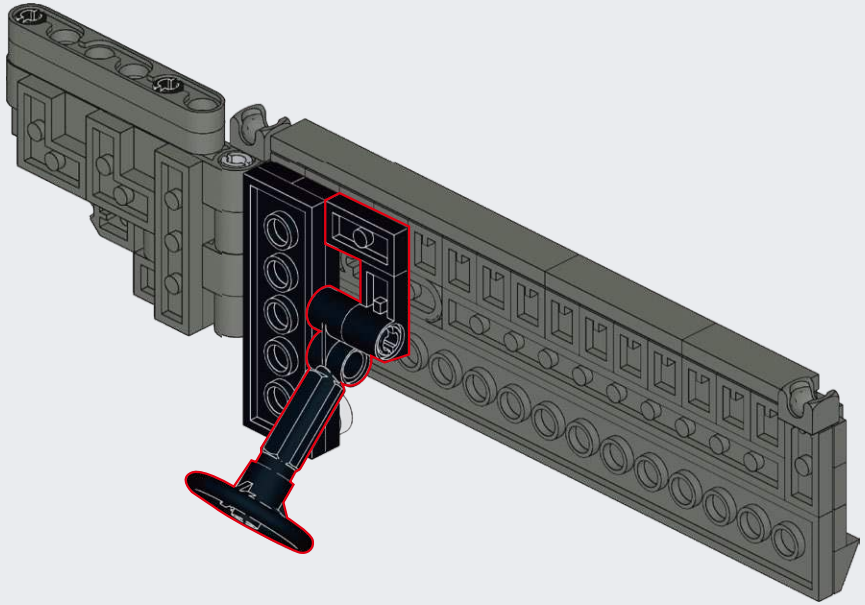

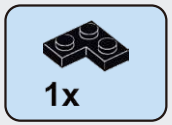

E126

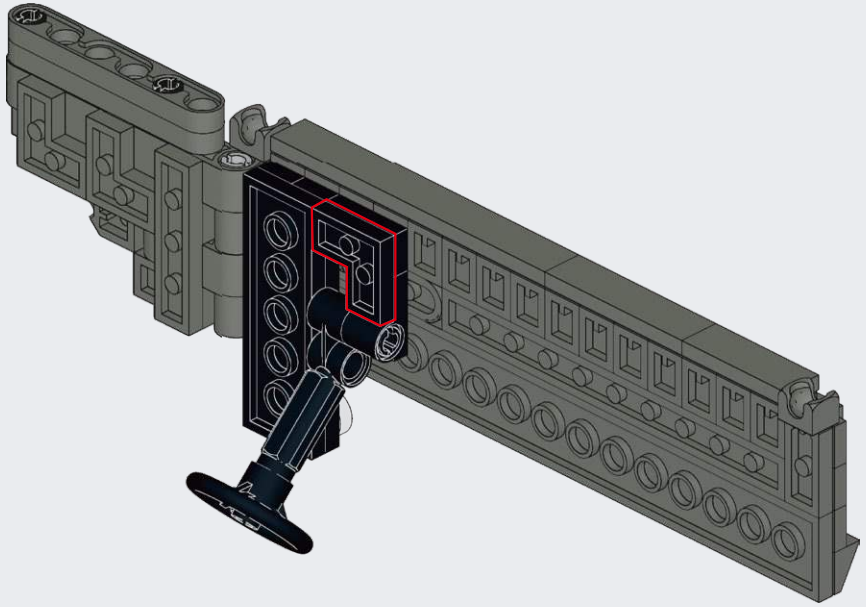

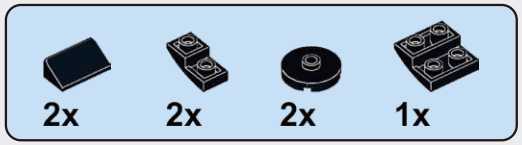

E127

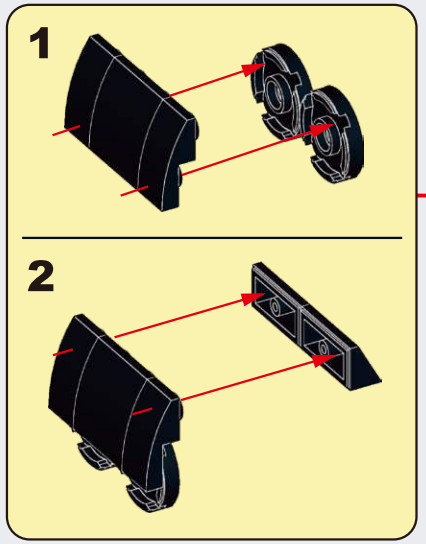

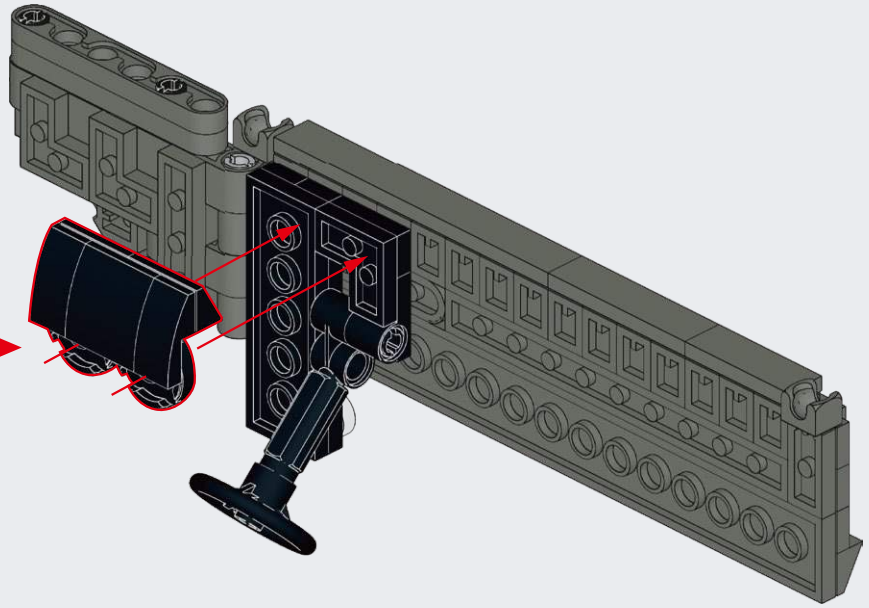

E128

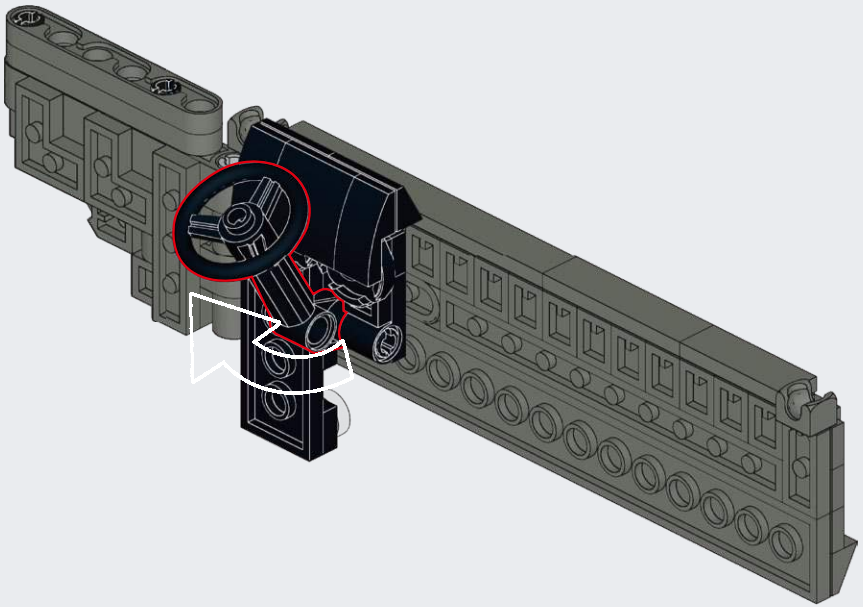

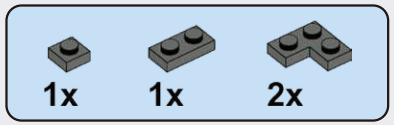

E129

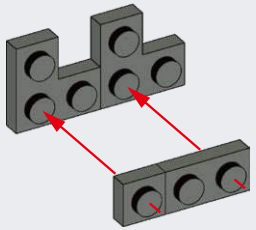

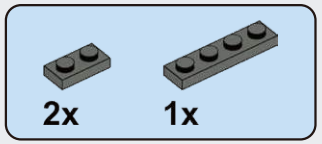

E130

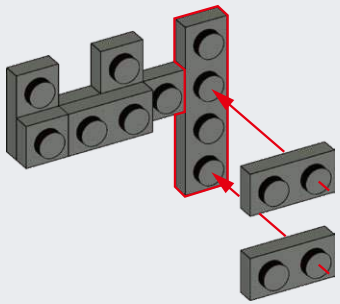

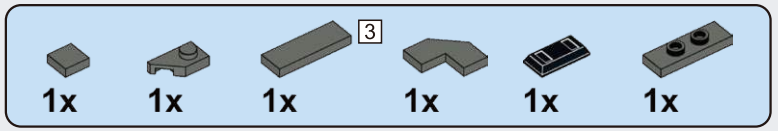

E131

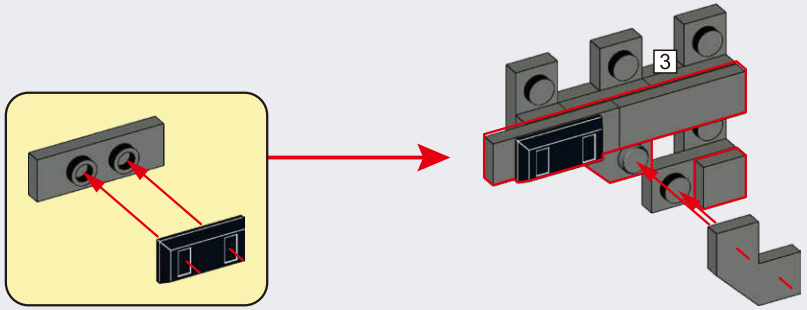

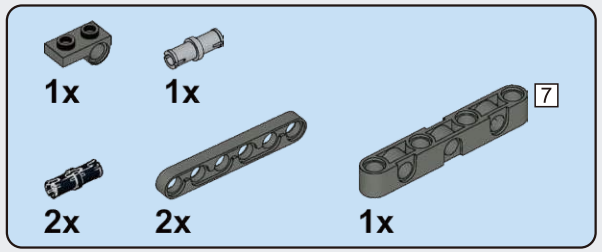

E132

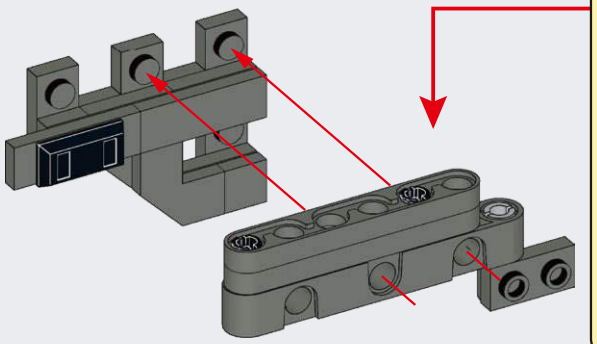

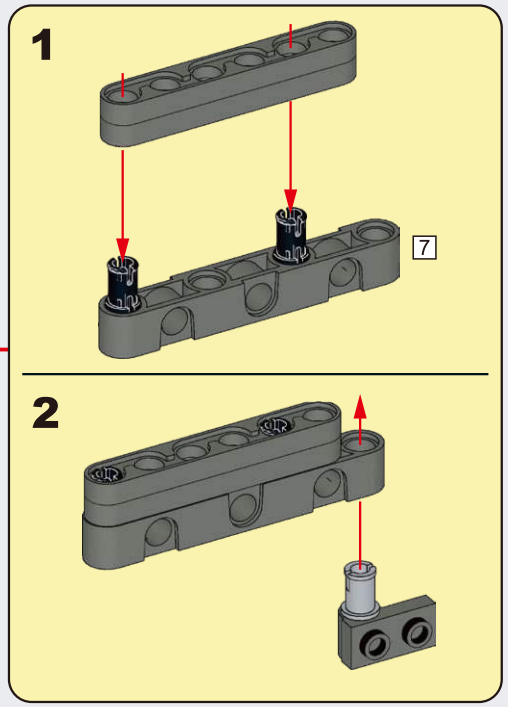

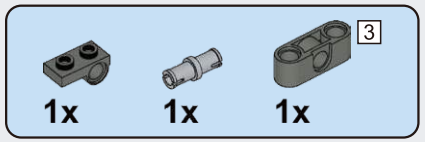

E133

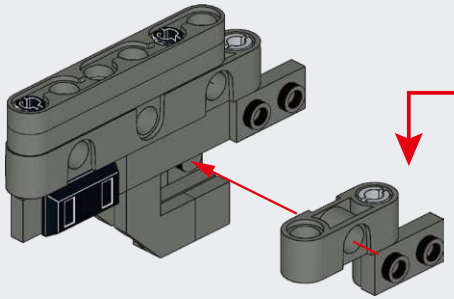

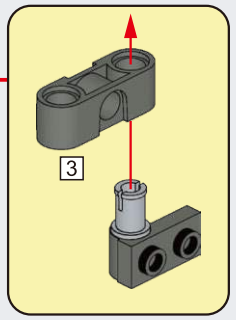

E134

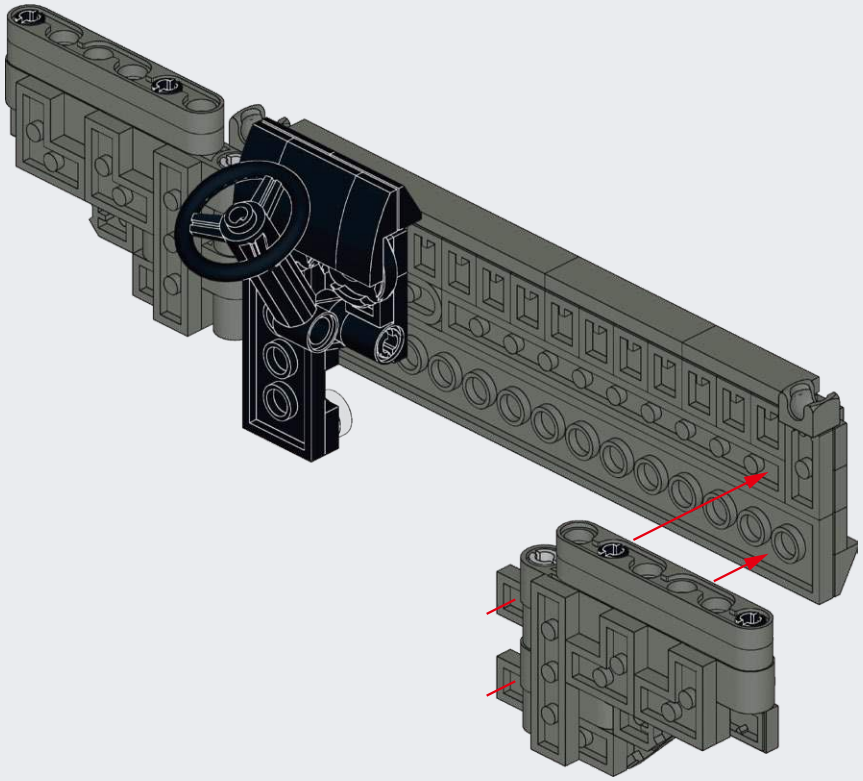

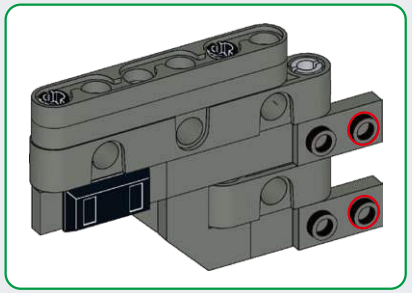

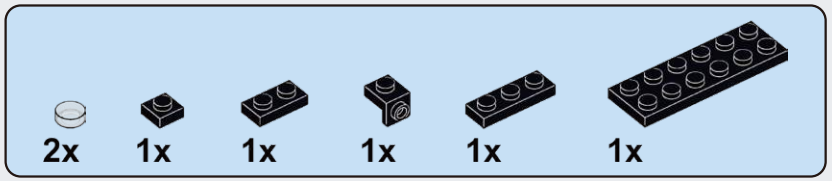

E135

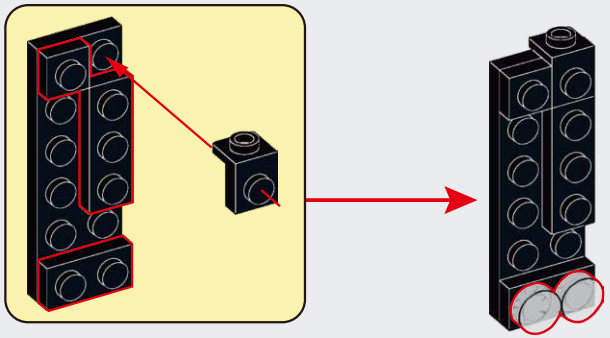

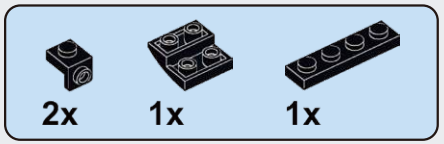

E136

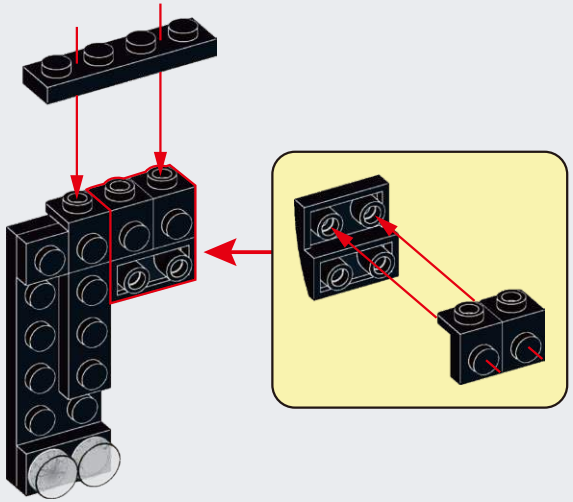

E137

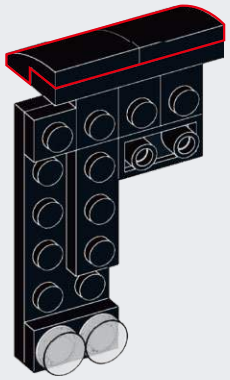

E138

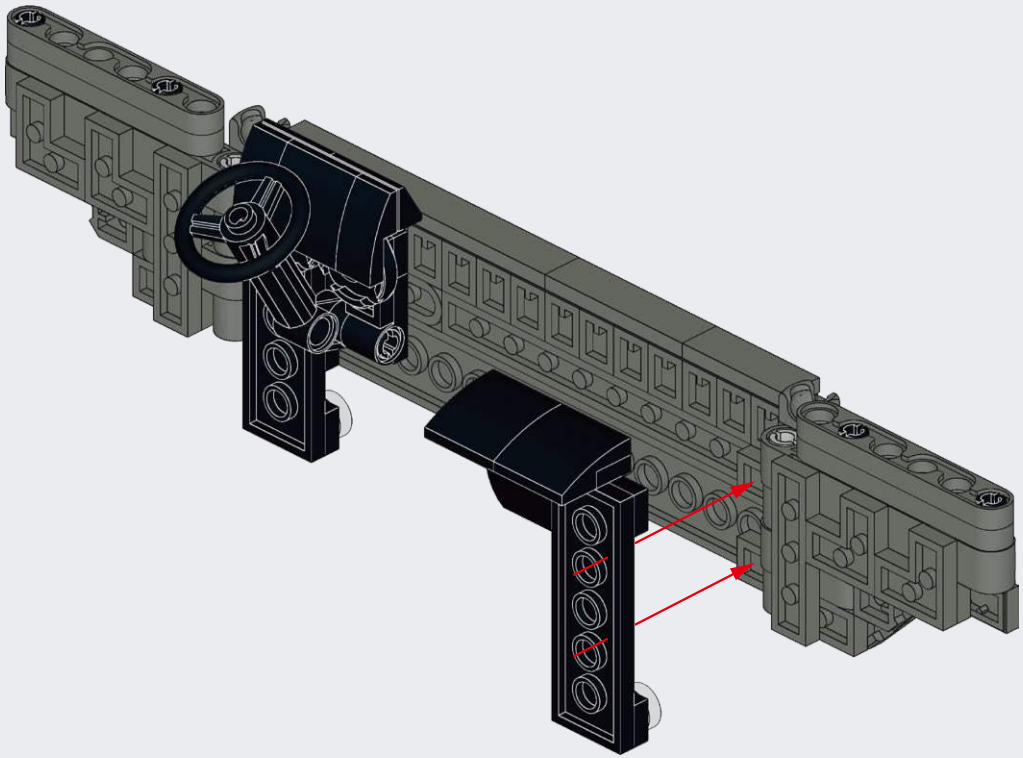

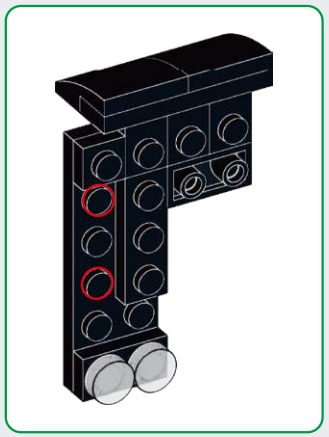

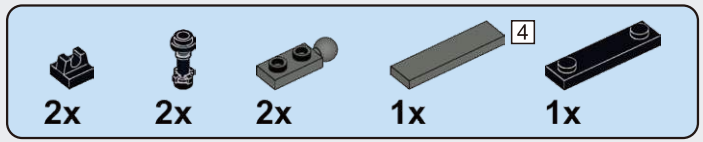

E139

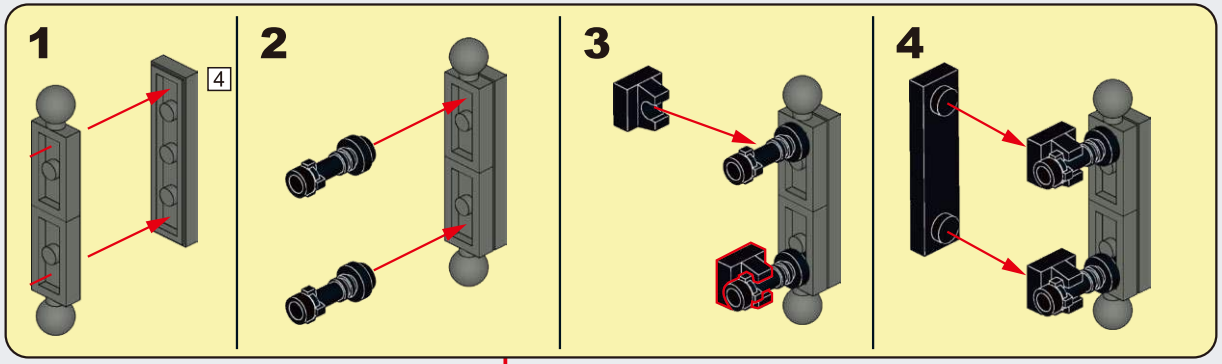

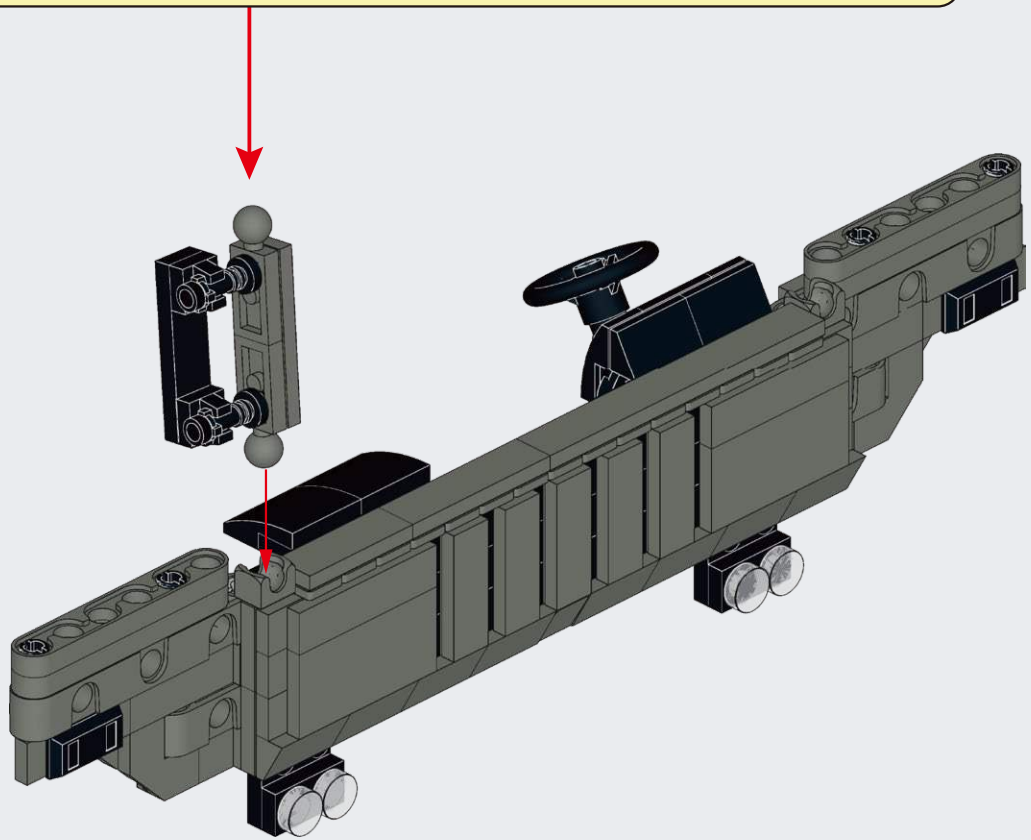

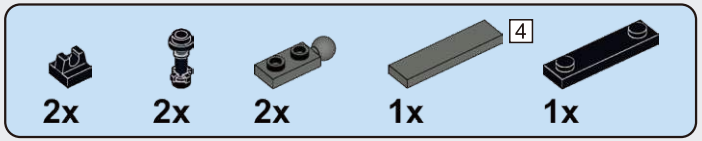

E140

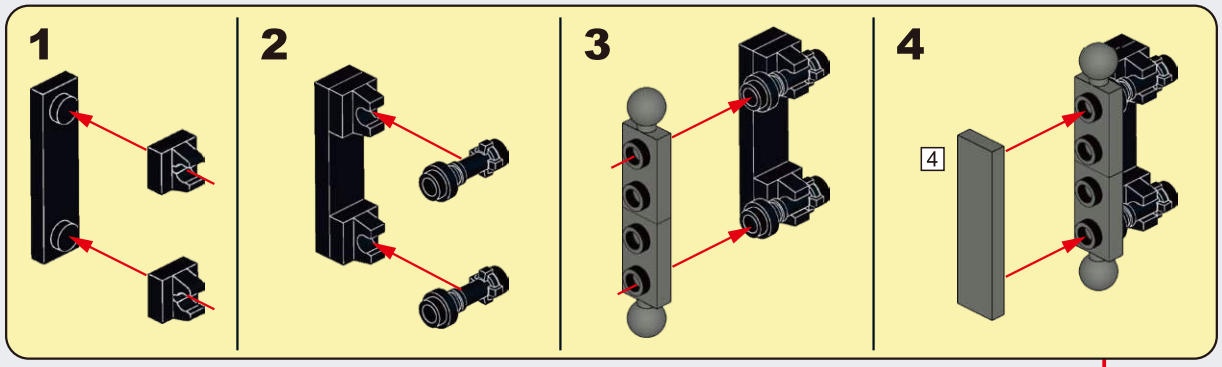

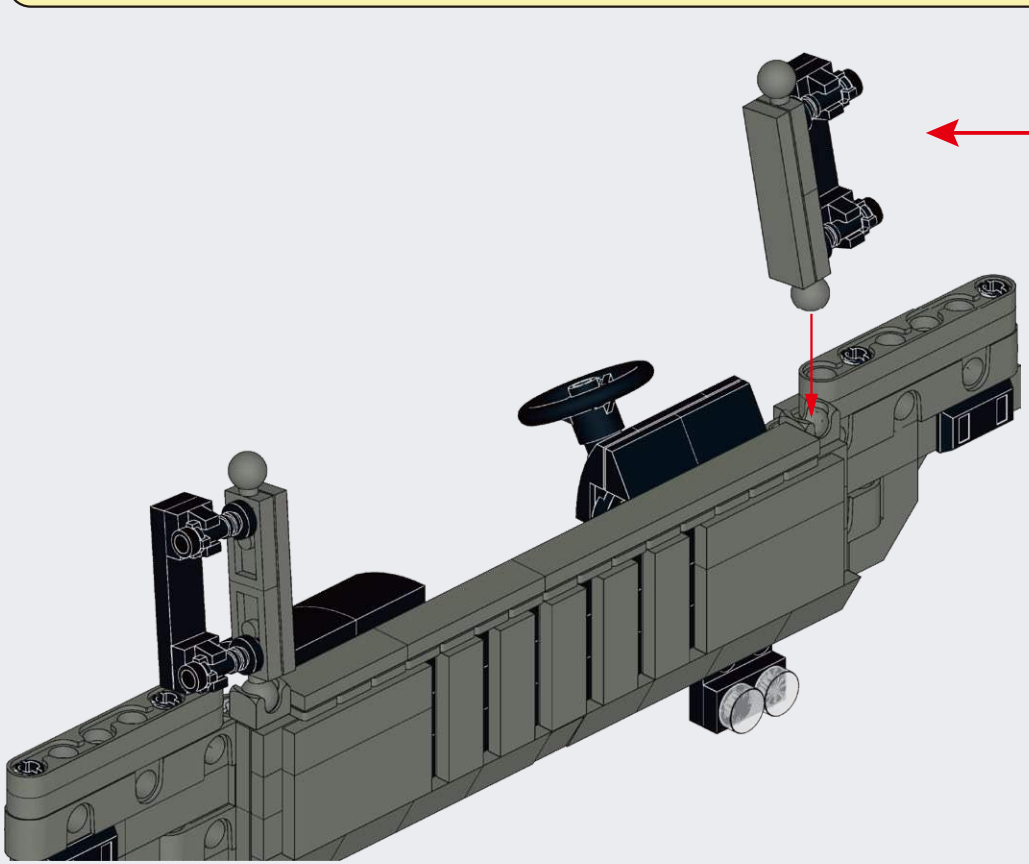

E141

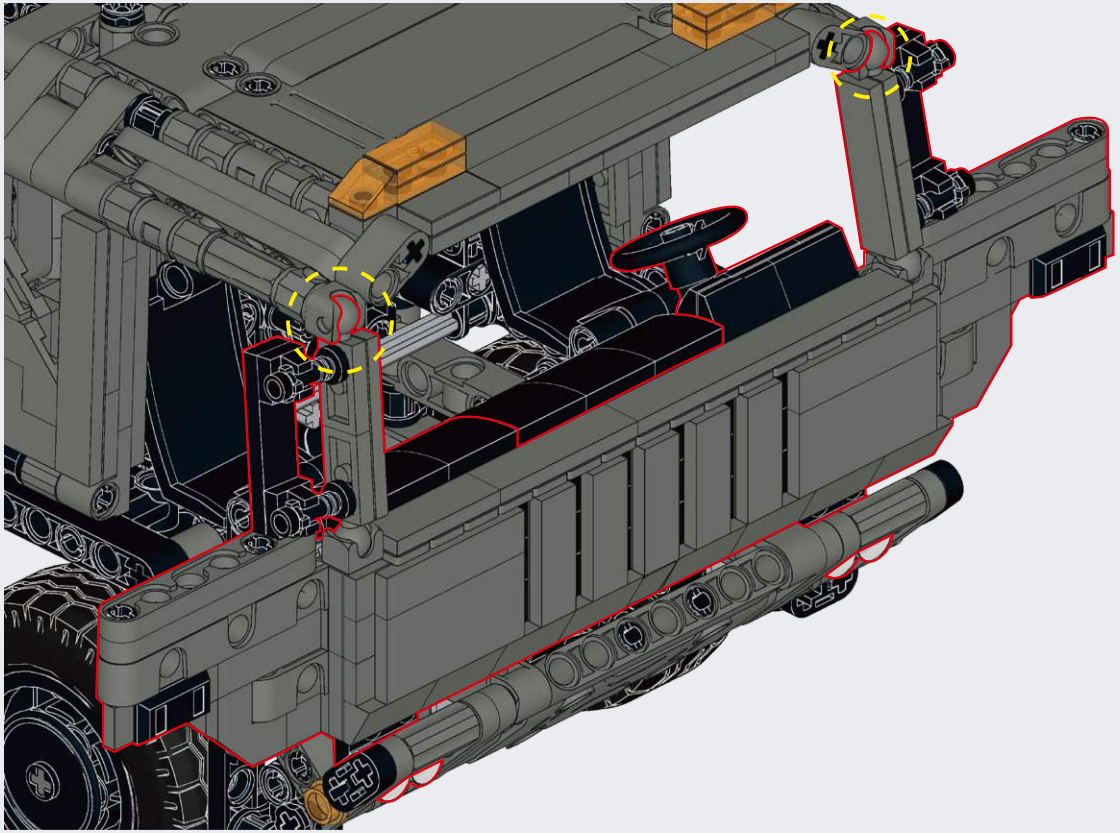

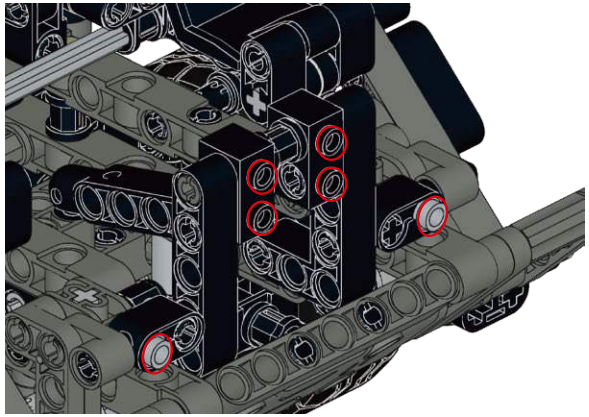

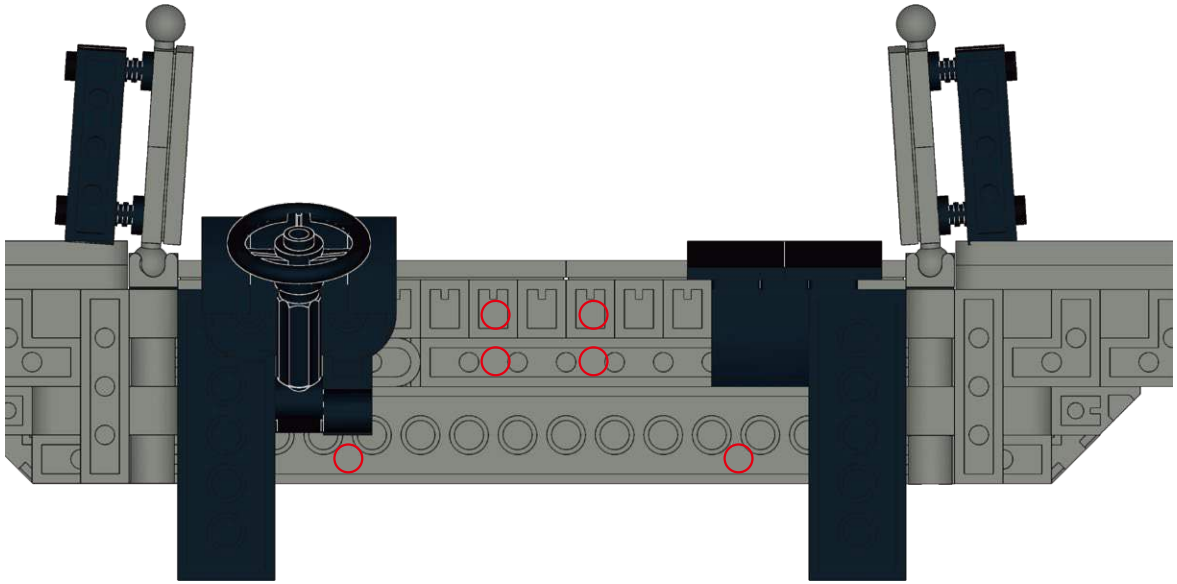

E142

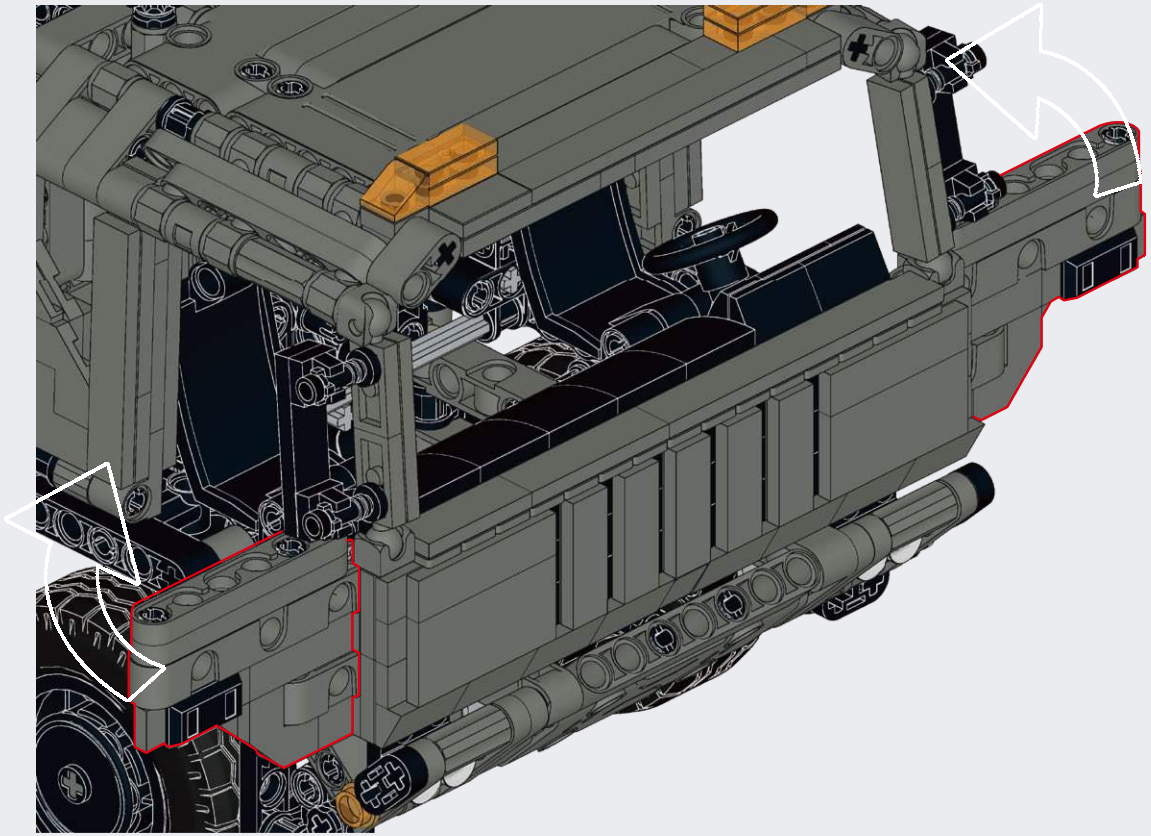

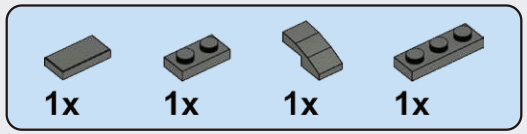

E143

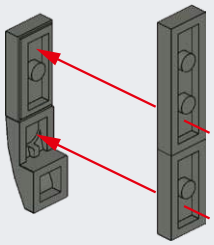

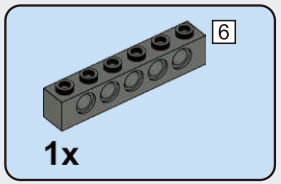

E144

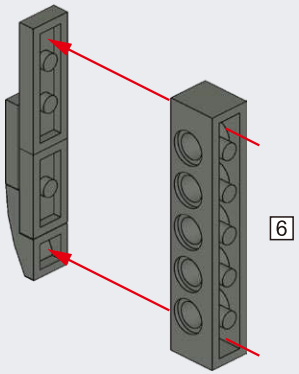

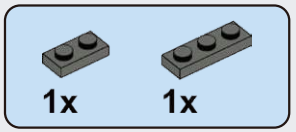

E145

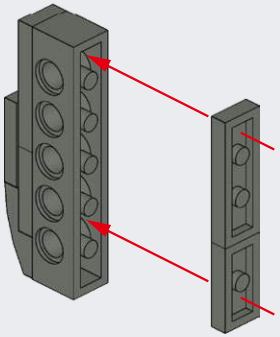

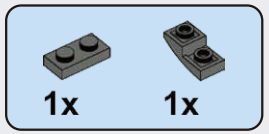

E146

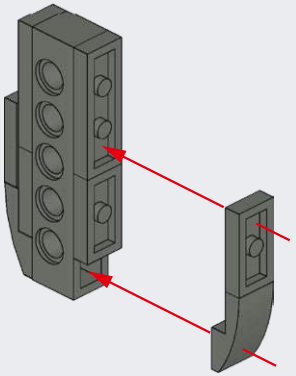

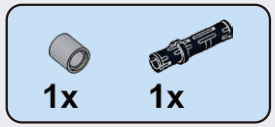

E147

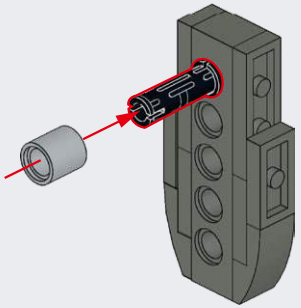

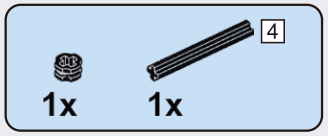

E148

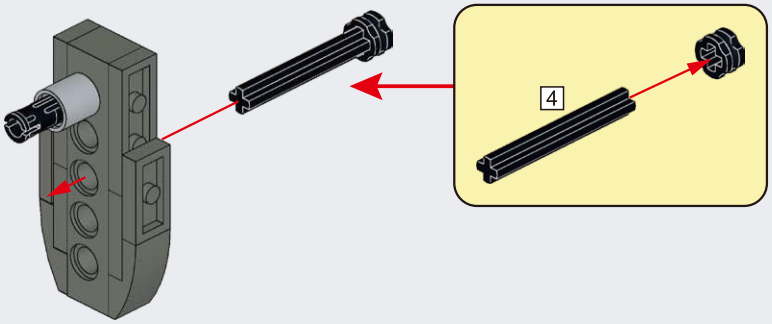

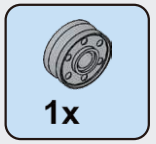

E149

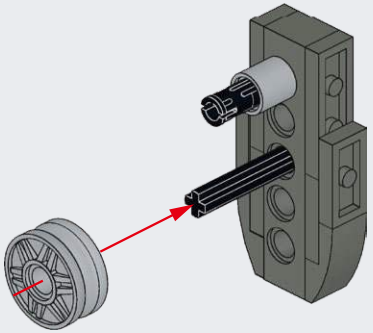

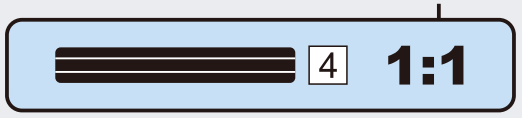

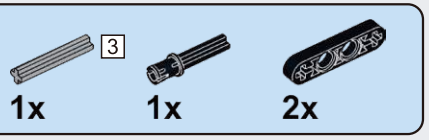

E150

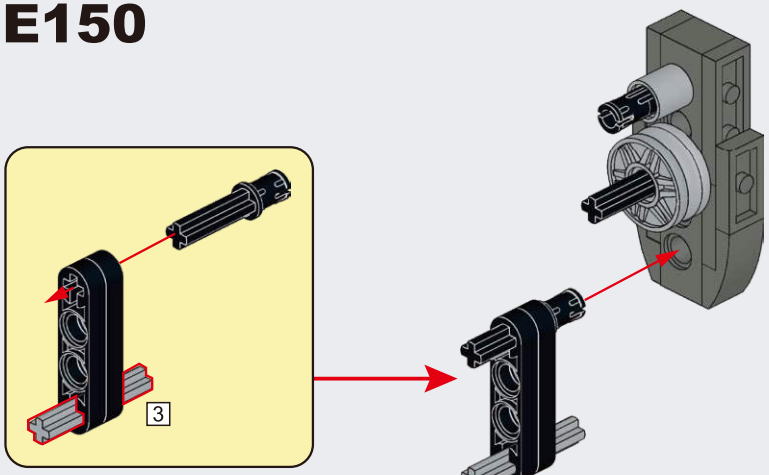

E151

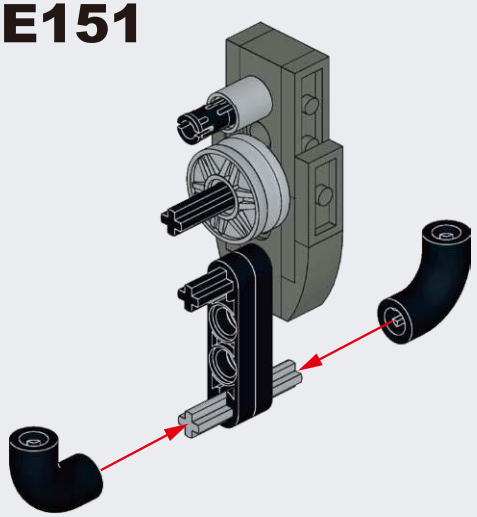

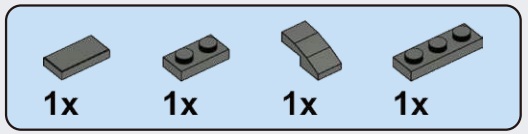

E152

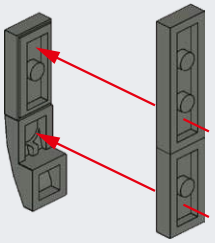

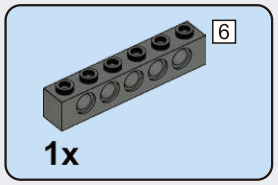

E153

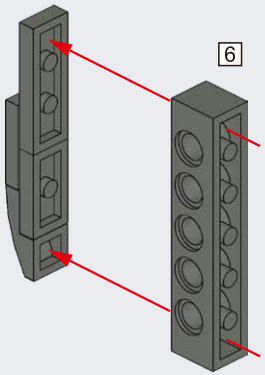

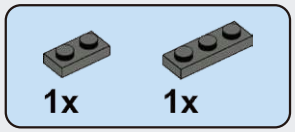

E154

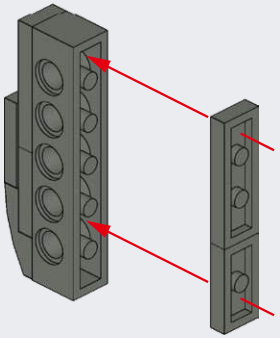

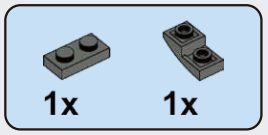

E155

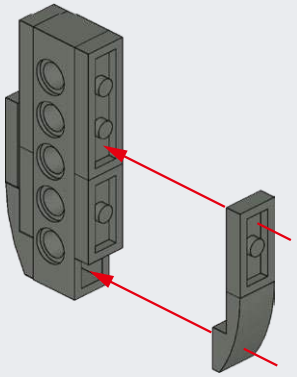

E156

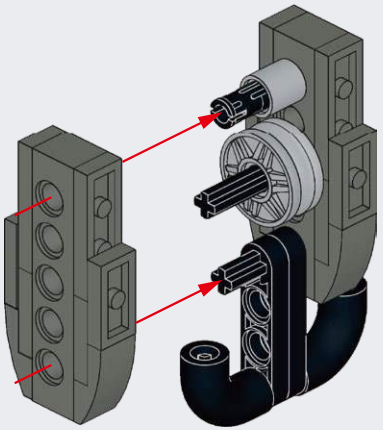

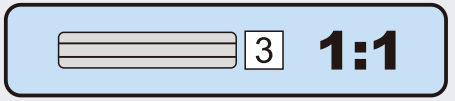

1x

E157

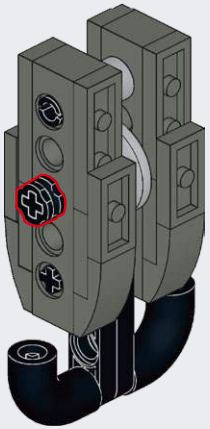

E158

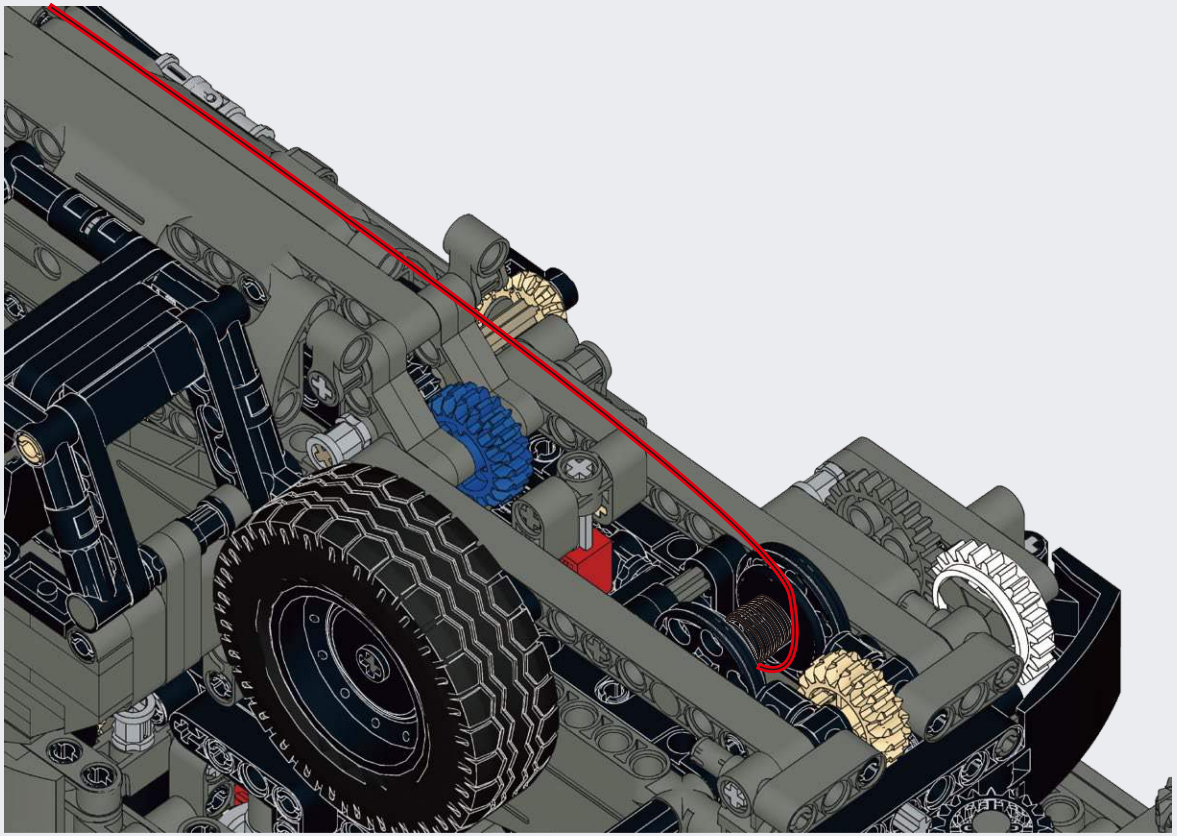

E159

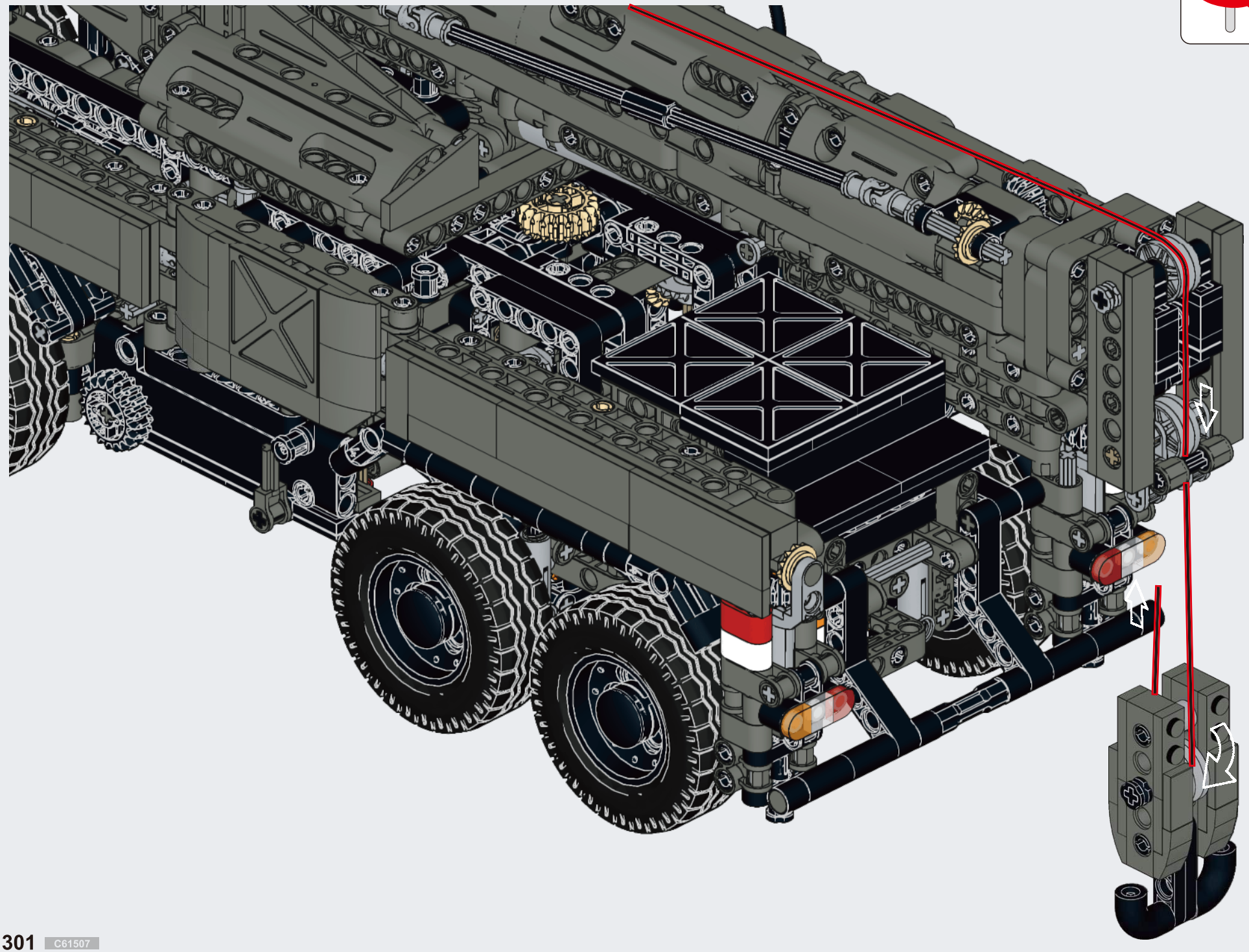

E160

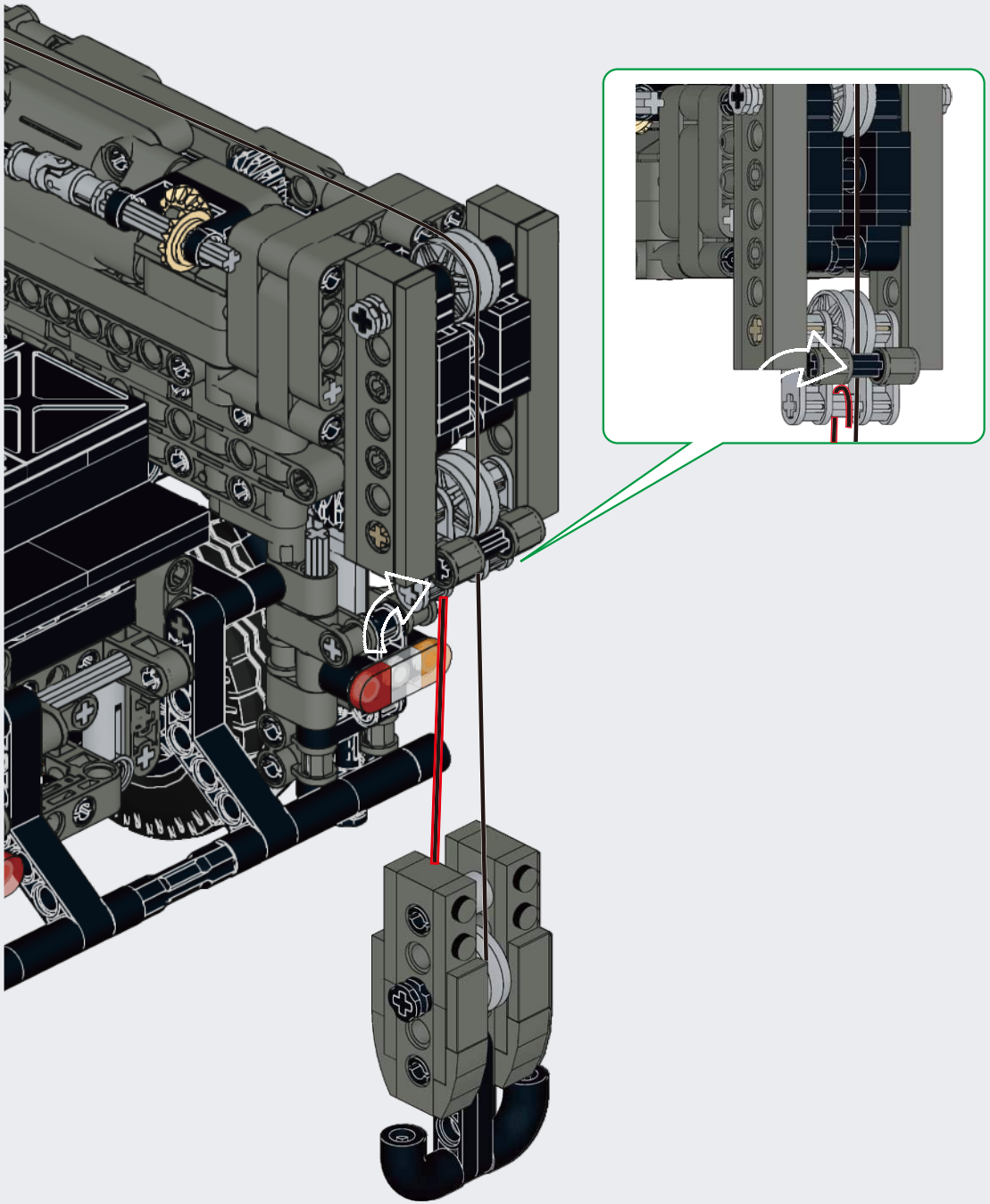

E161

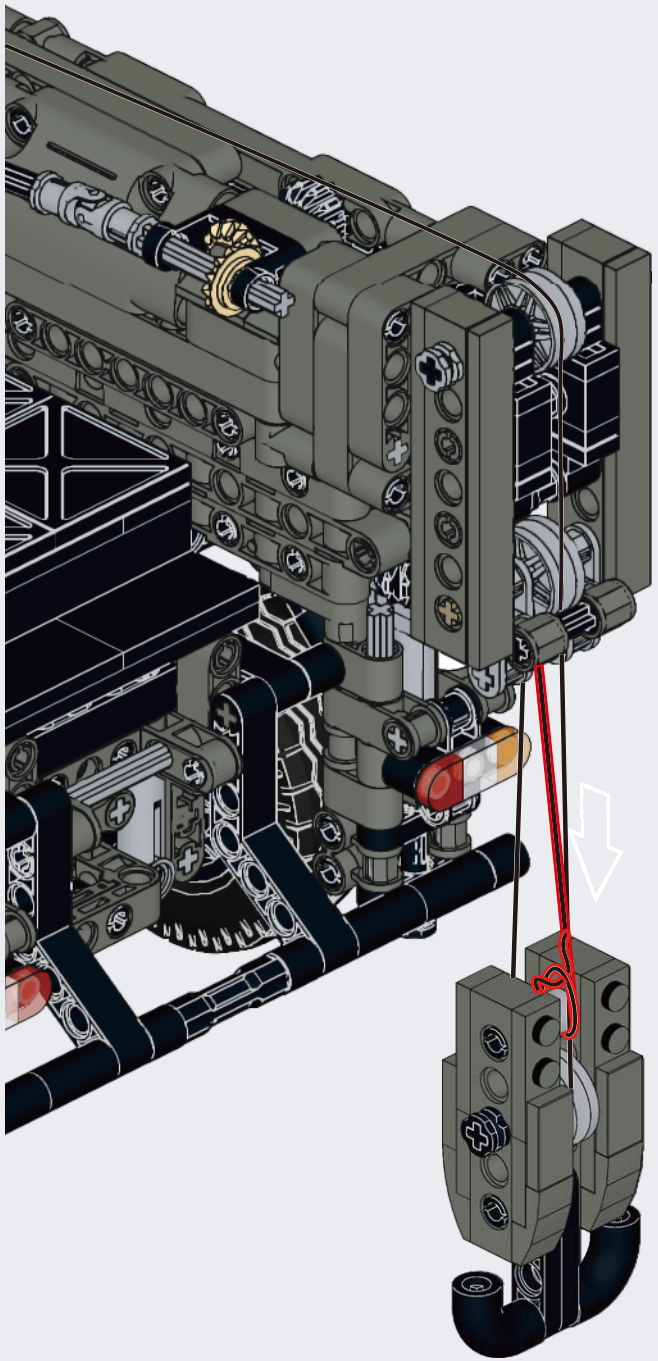

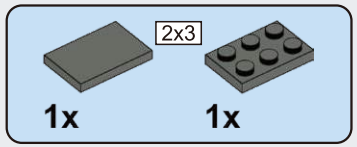

E162

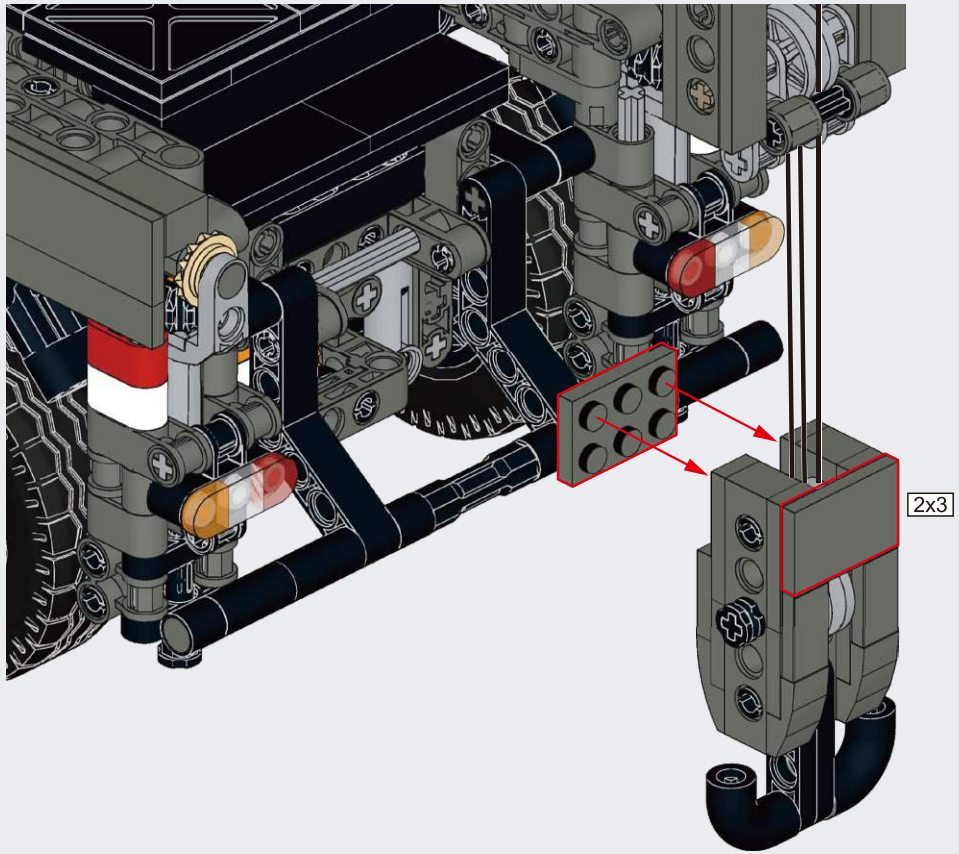

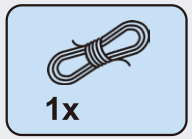

E163

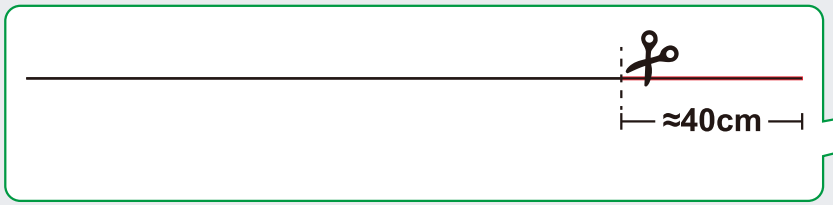

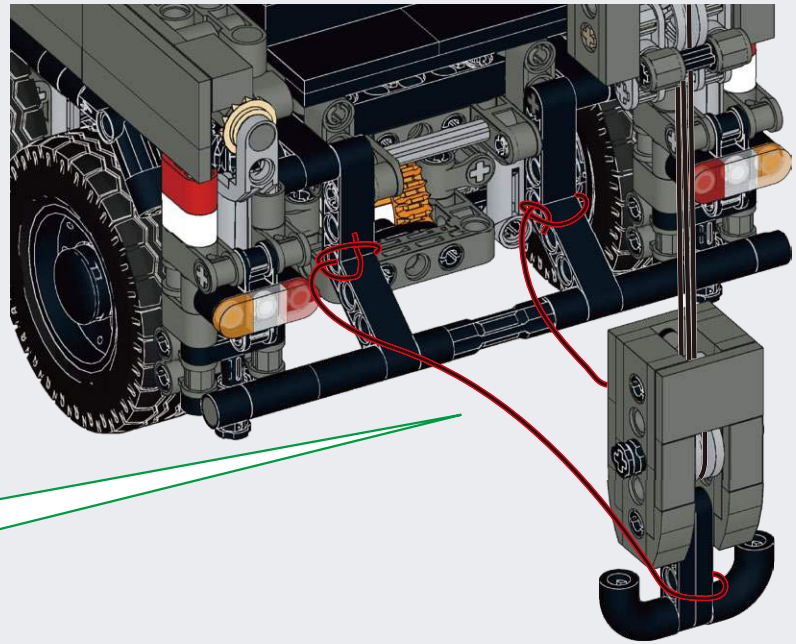

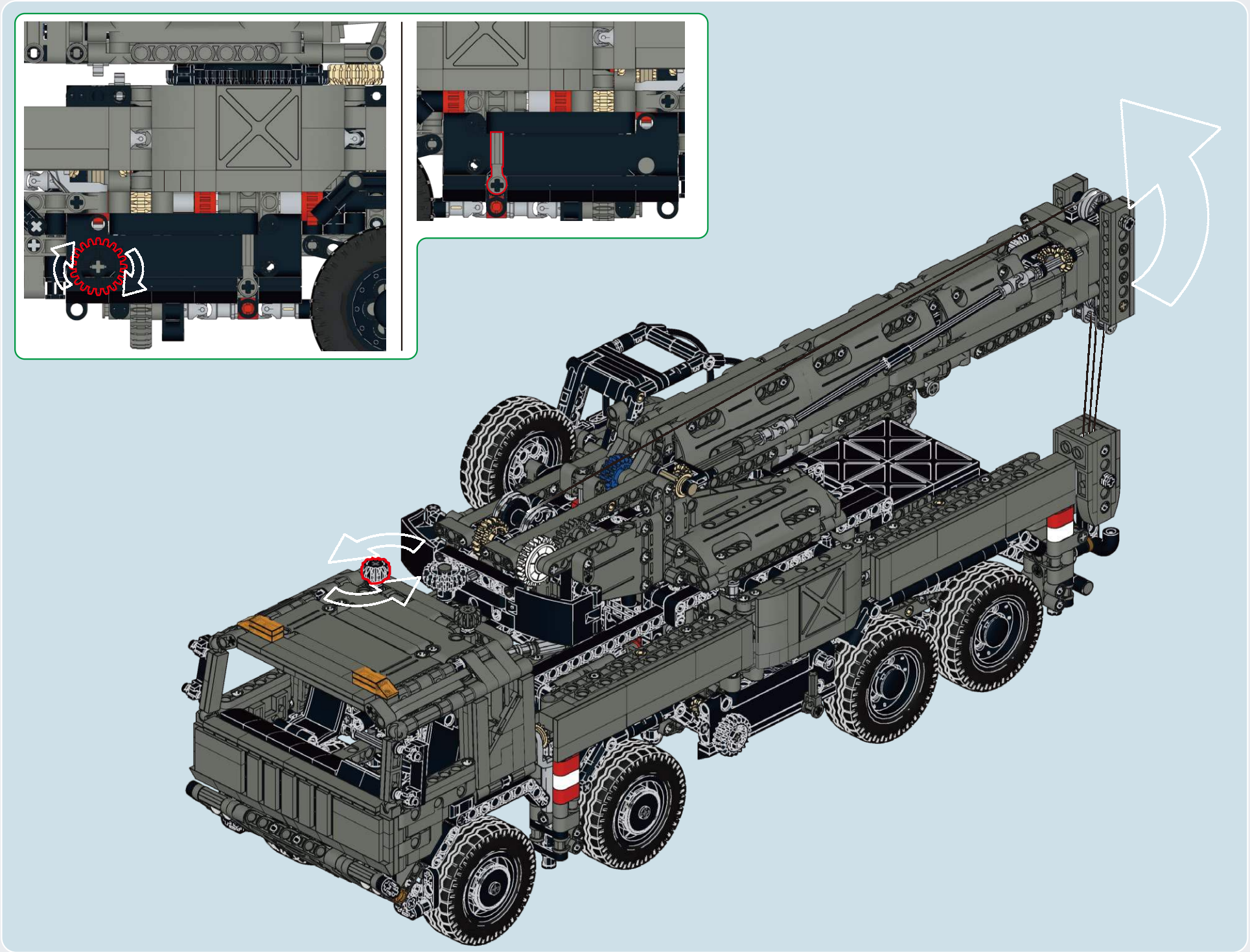

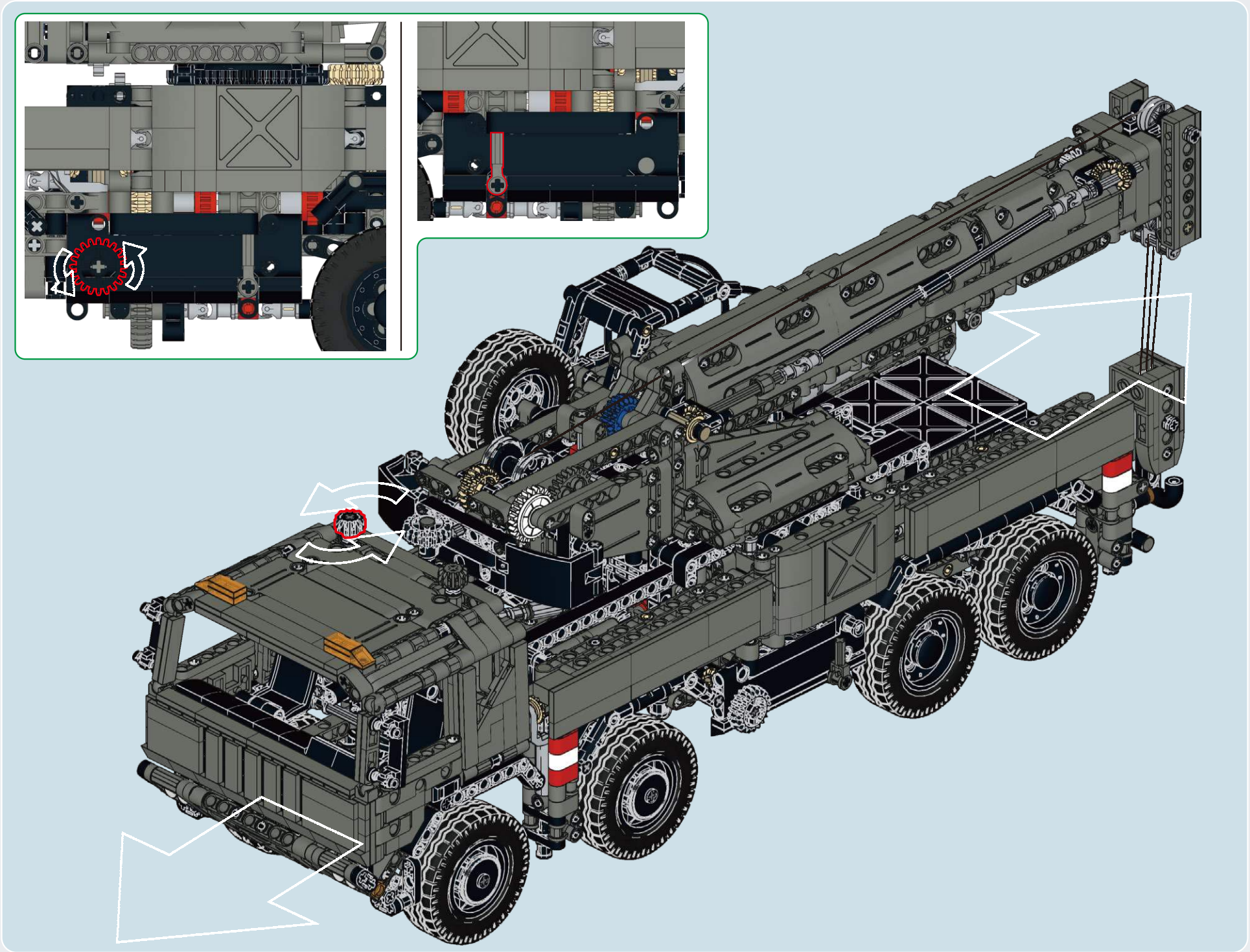

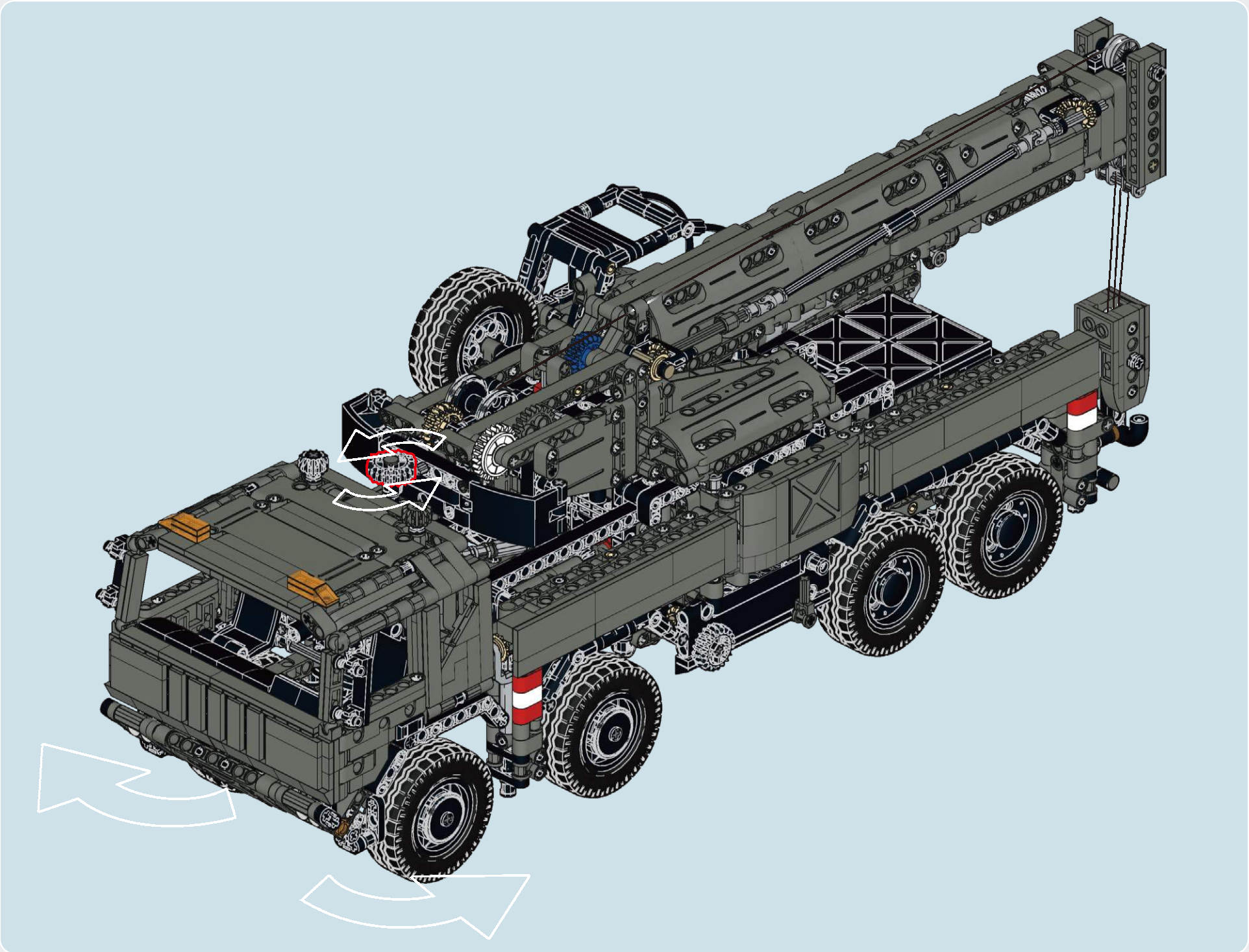

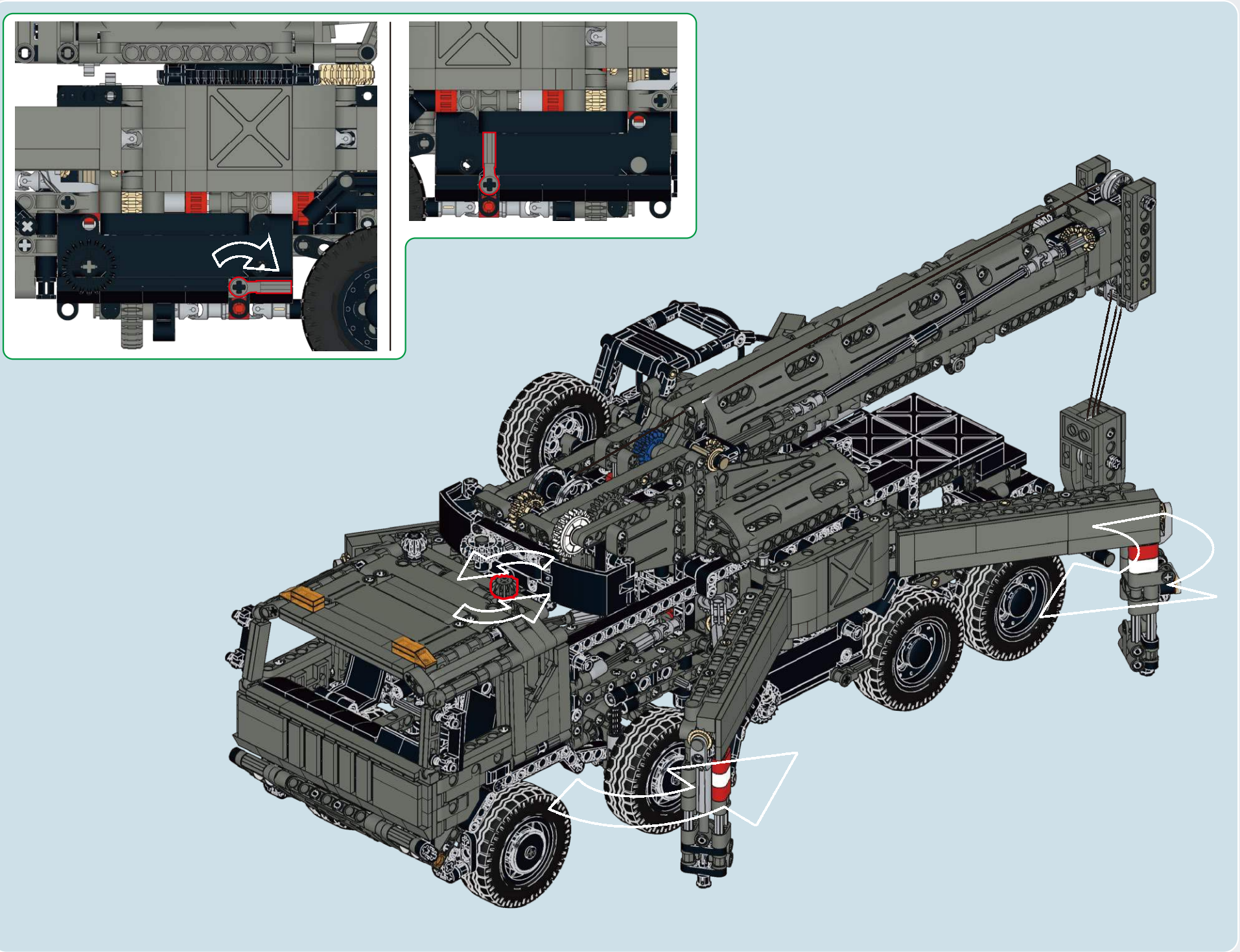

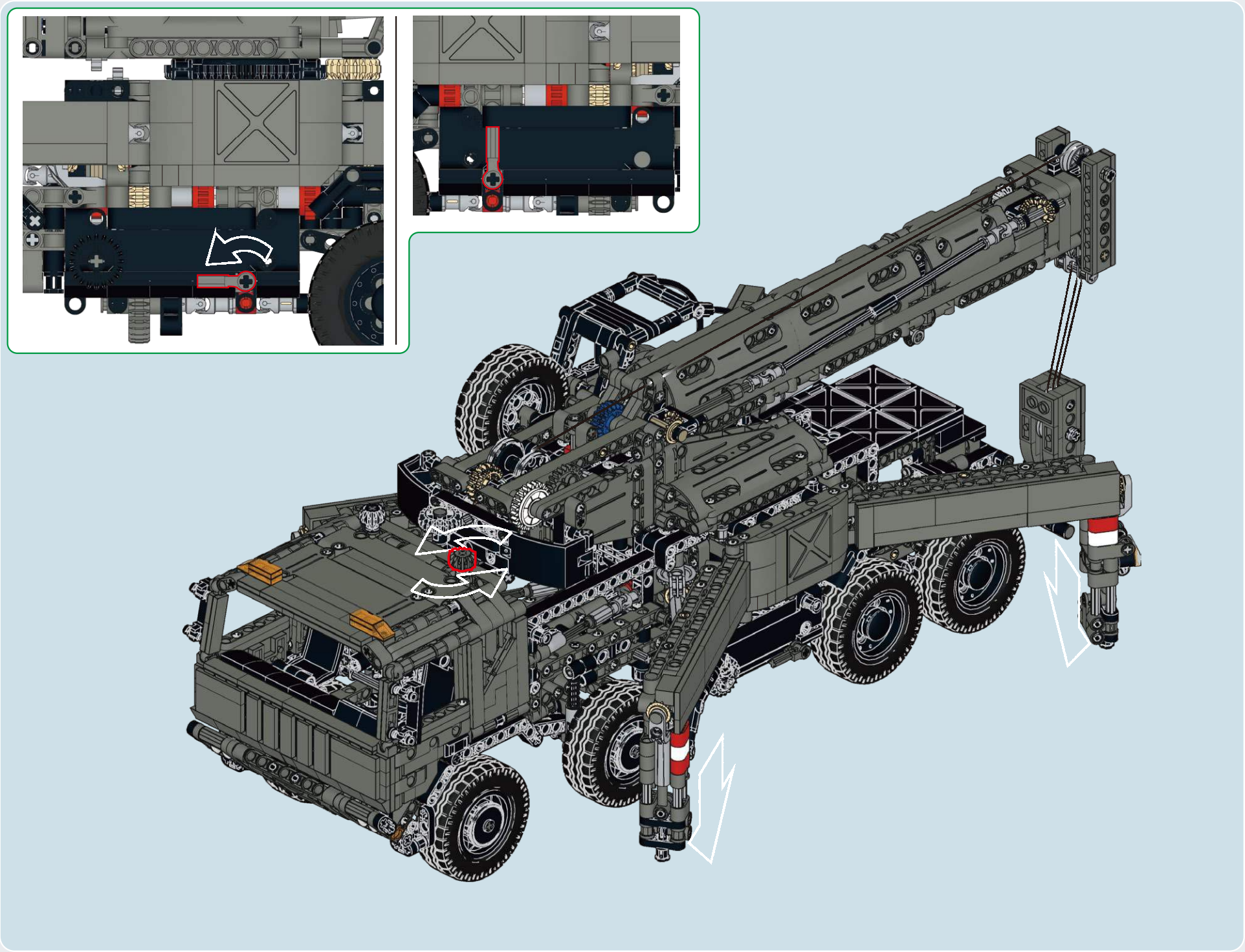

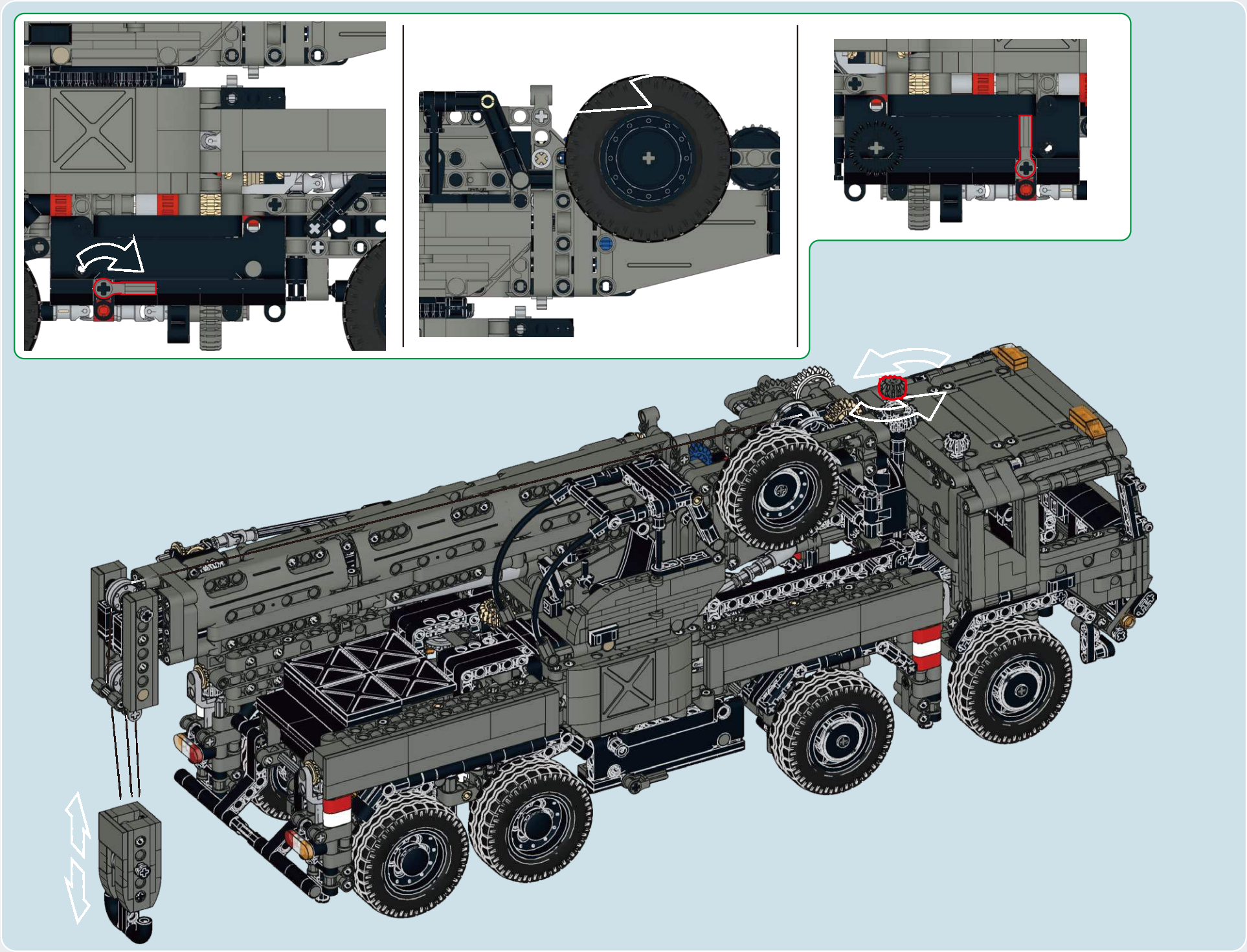

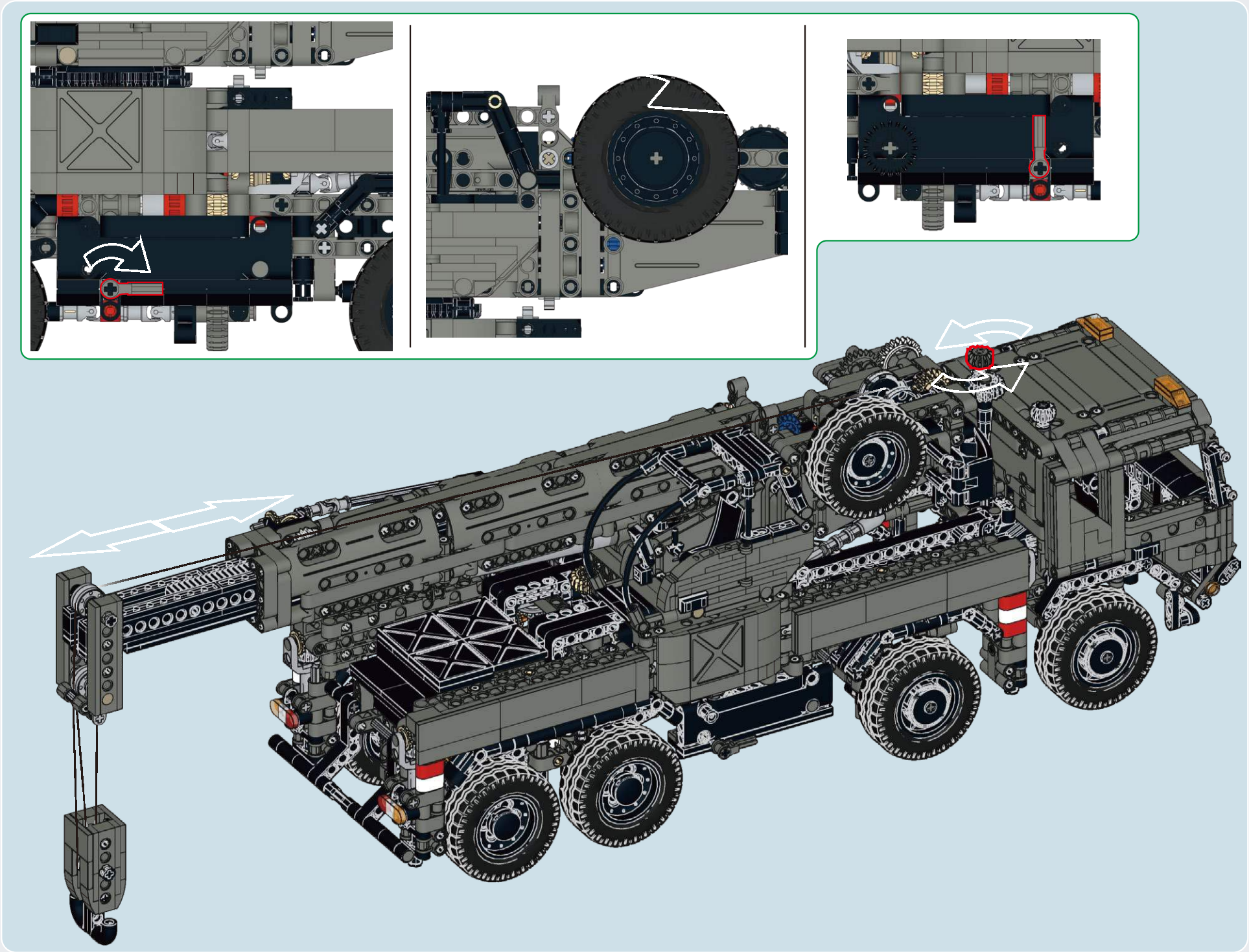

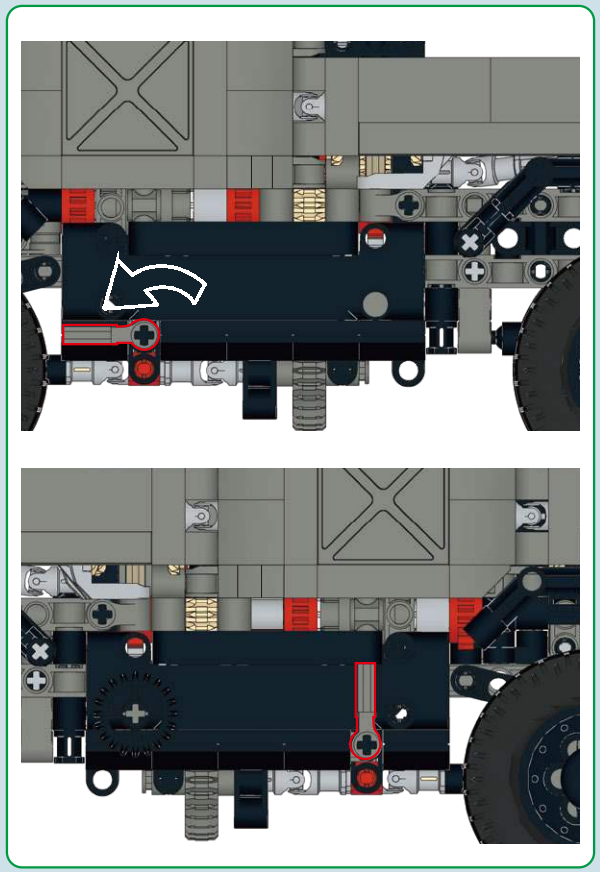

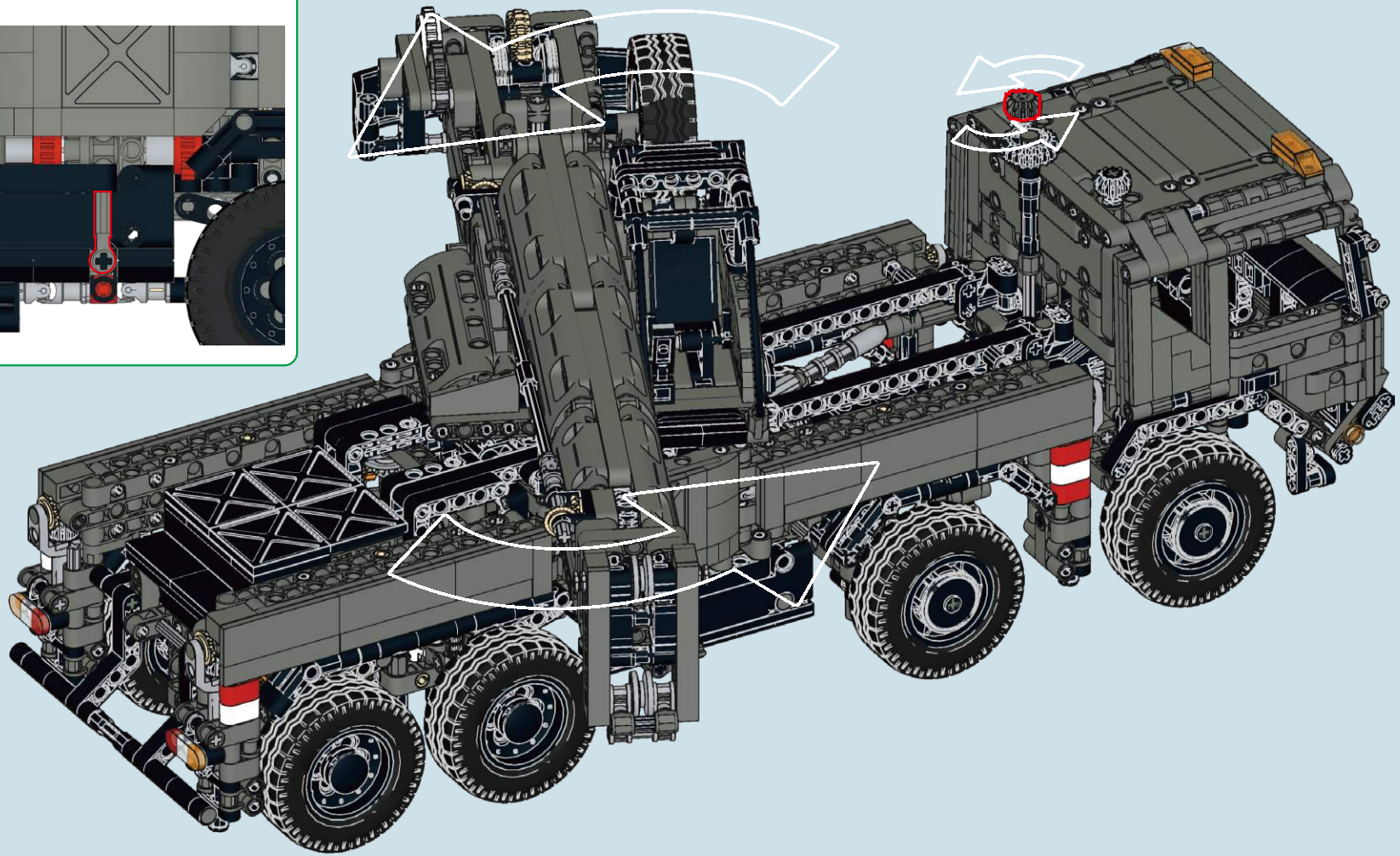

CaDA® MASTER

2.4GHz Rechargeable Battery Box x1
M-motor Pro x1
Steering Motor Pro x1
L-motor Pro x1
Remote Control x1
OPTIONAL MOTORISATION POWER PACK SOLD SEPARATELY

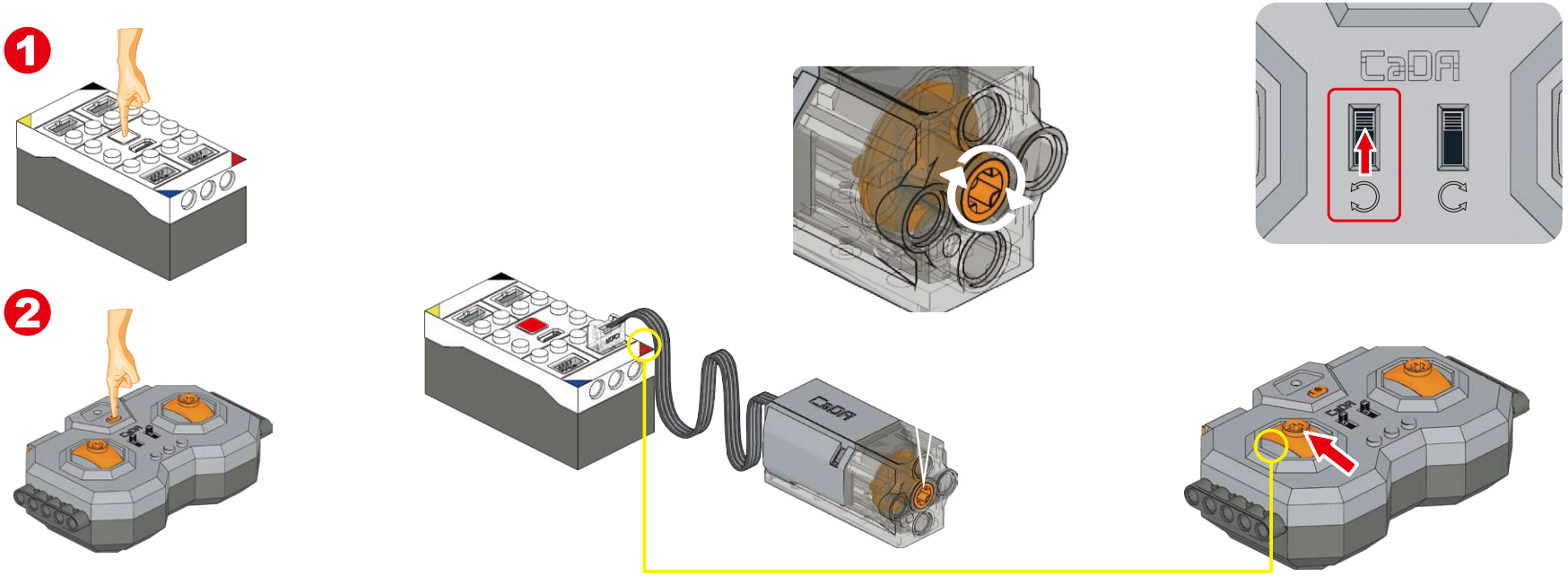
1
2
CaDA

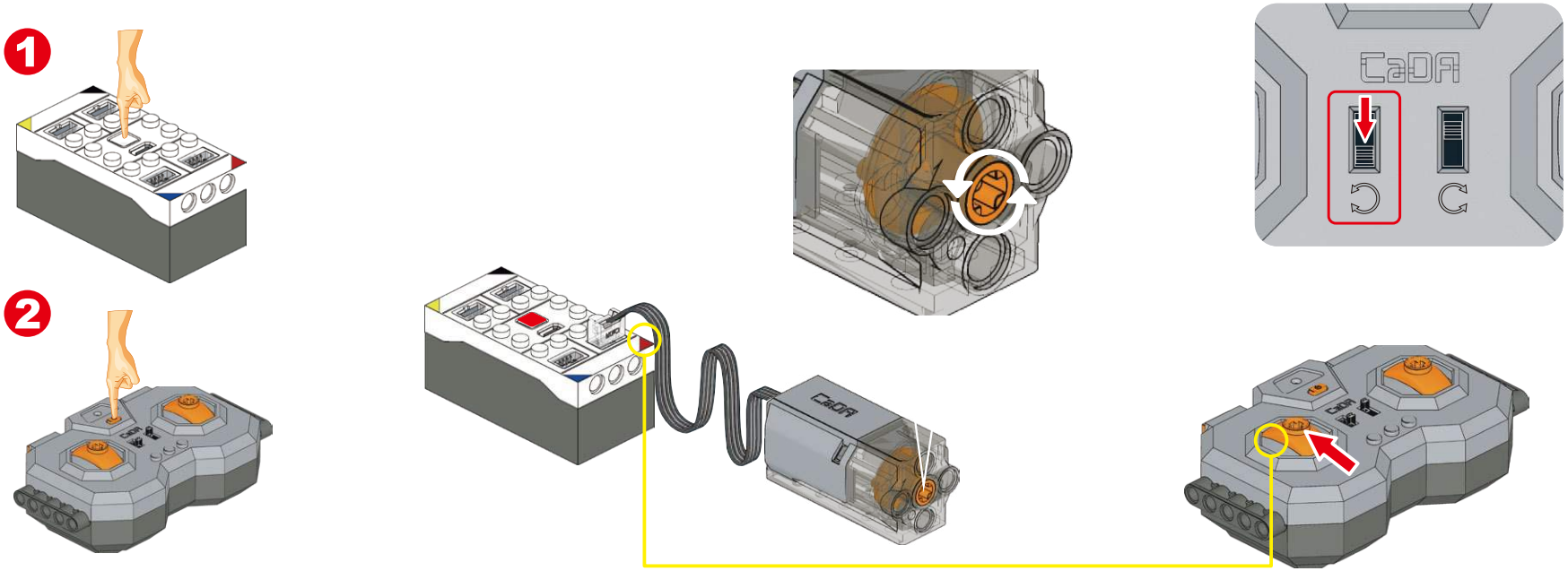
1
2
CaDA

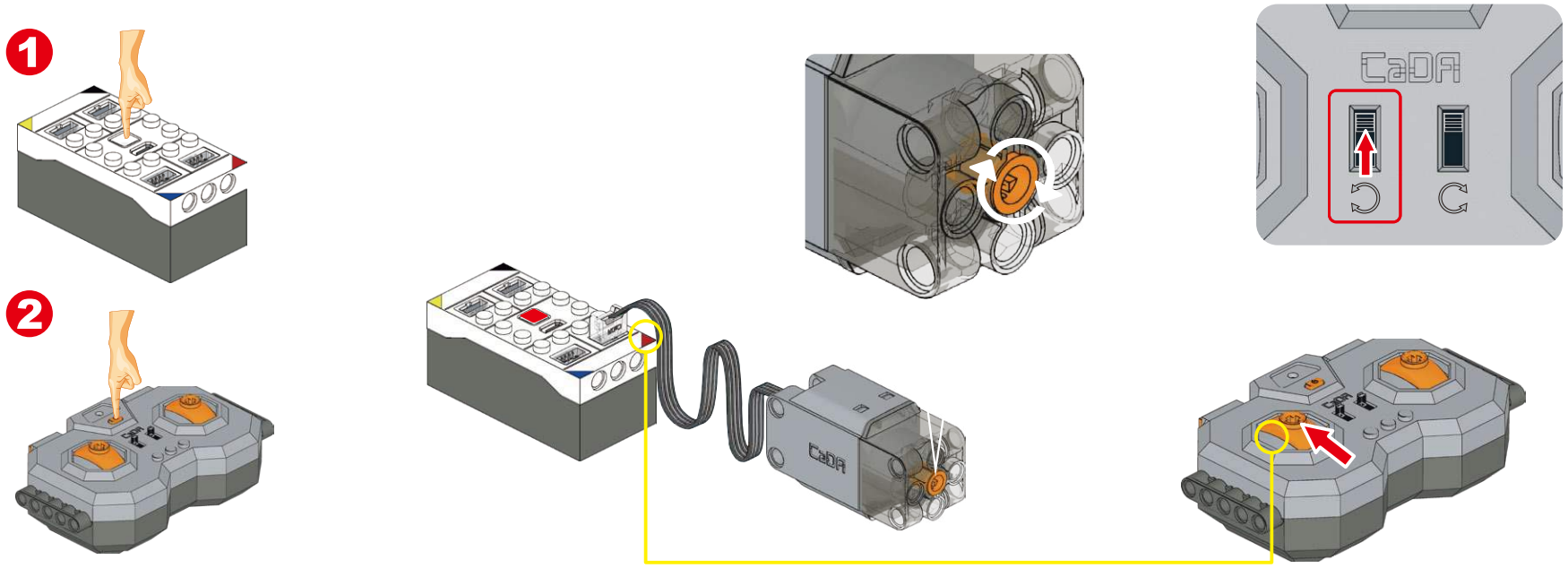
1
2
CaDA

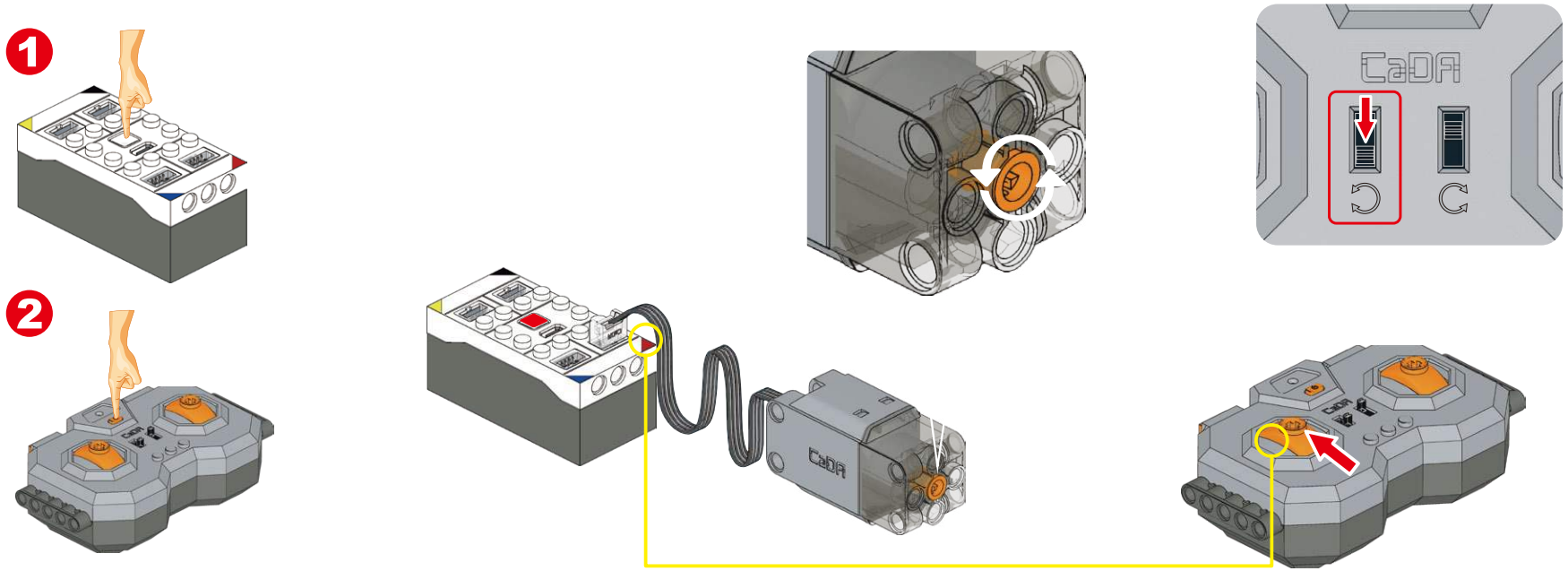
1
2
CaDA

1

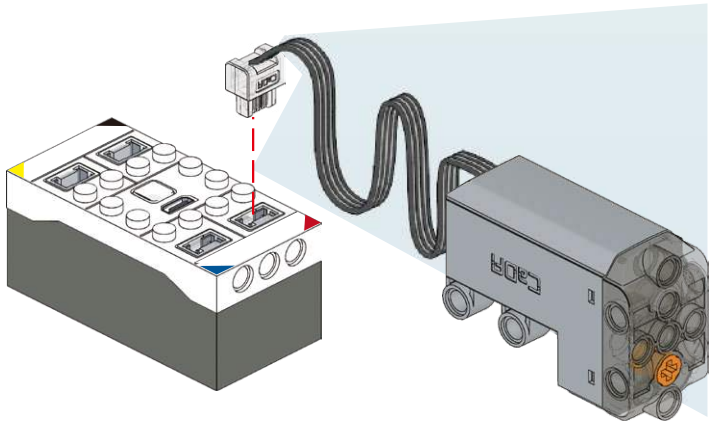

2

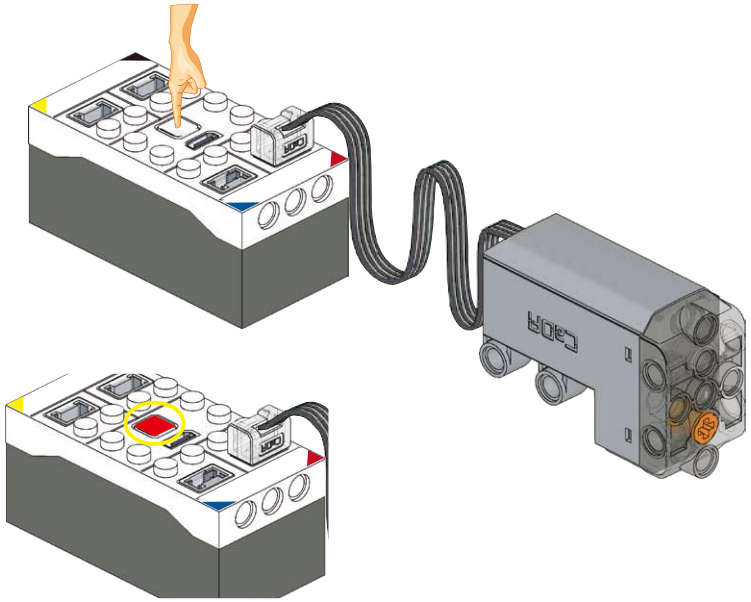

3

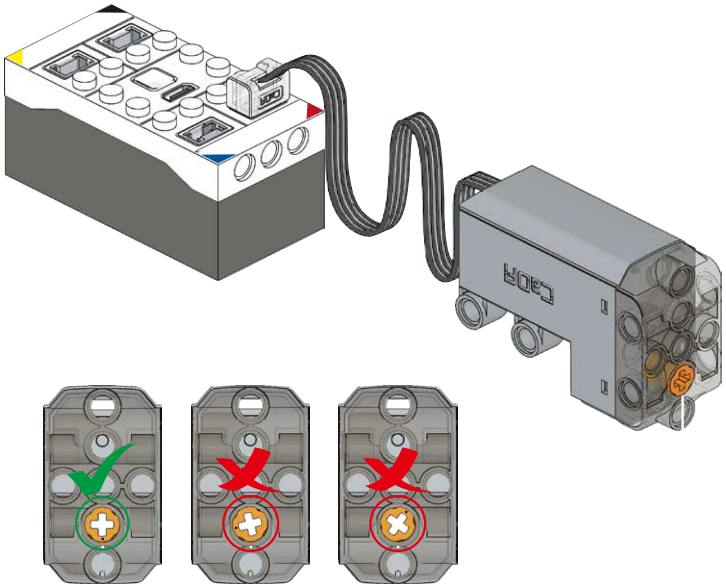

4

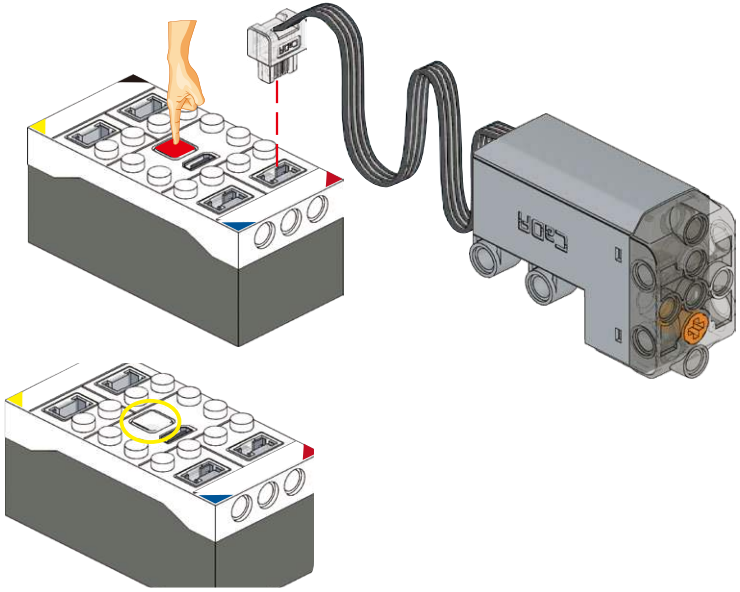

F1

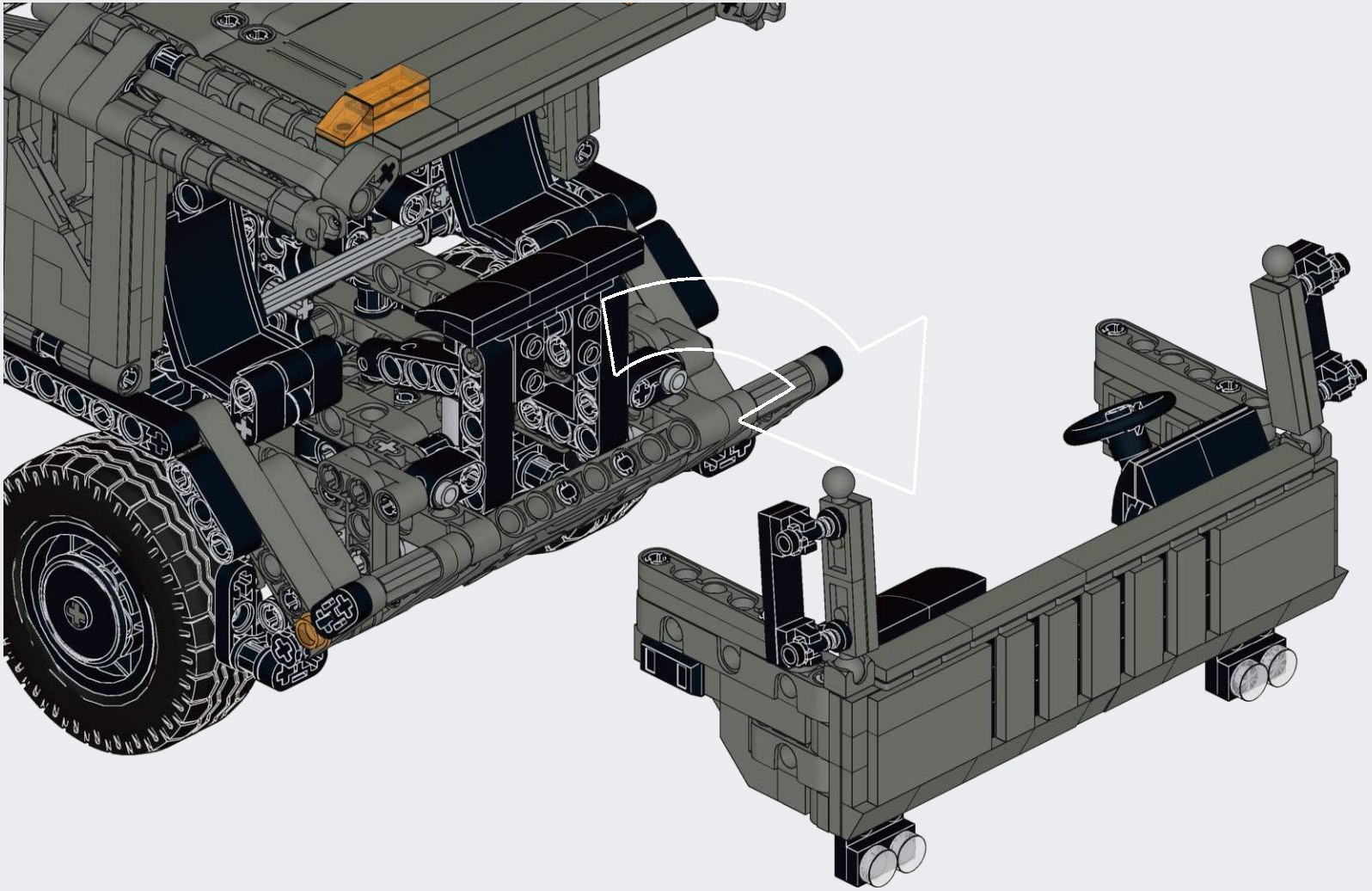

F2

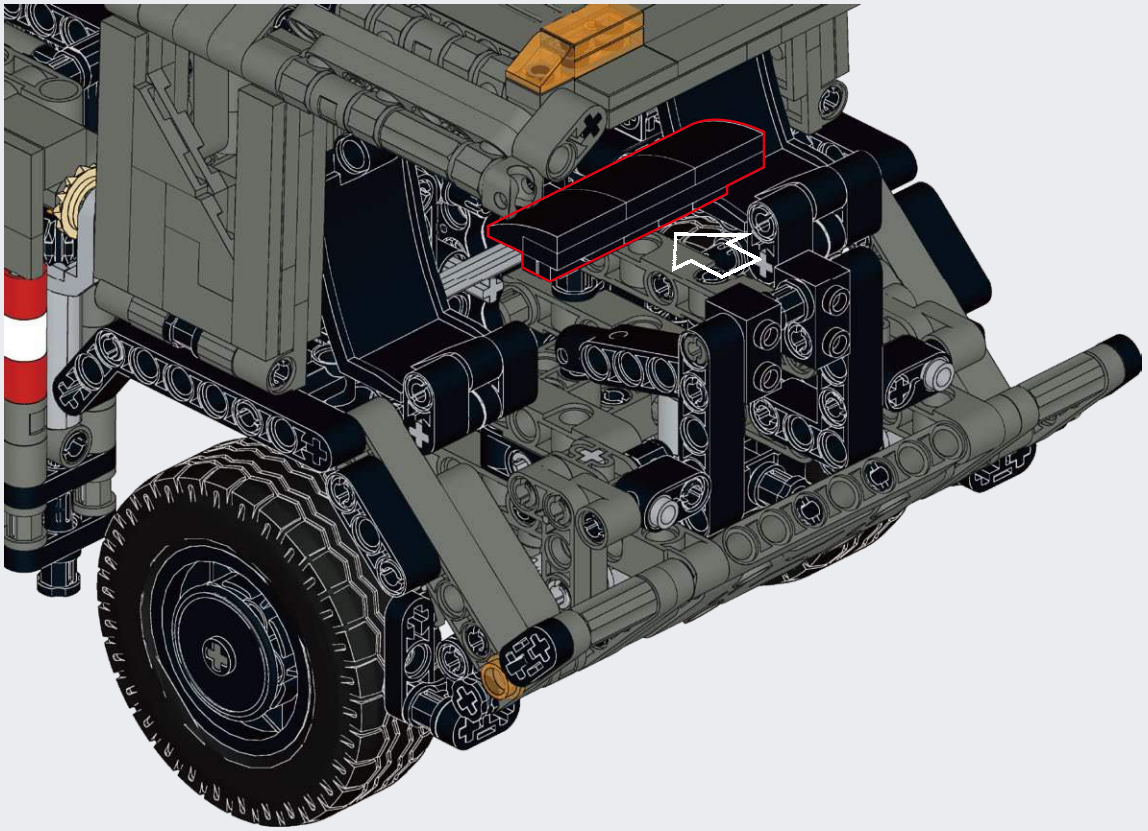

F3

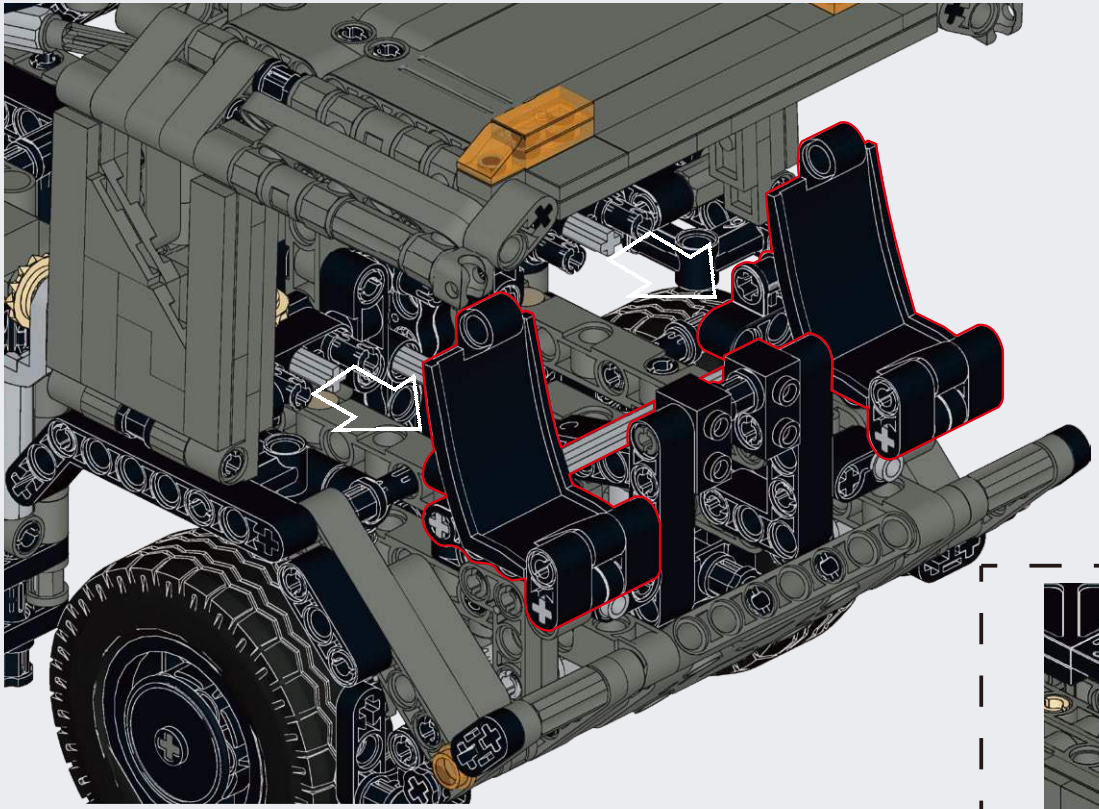

F4

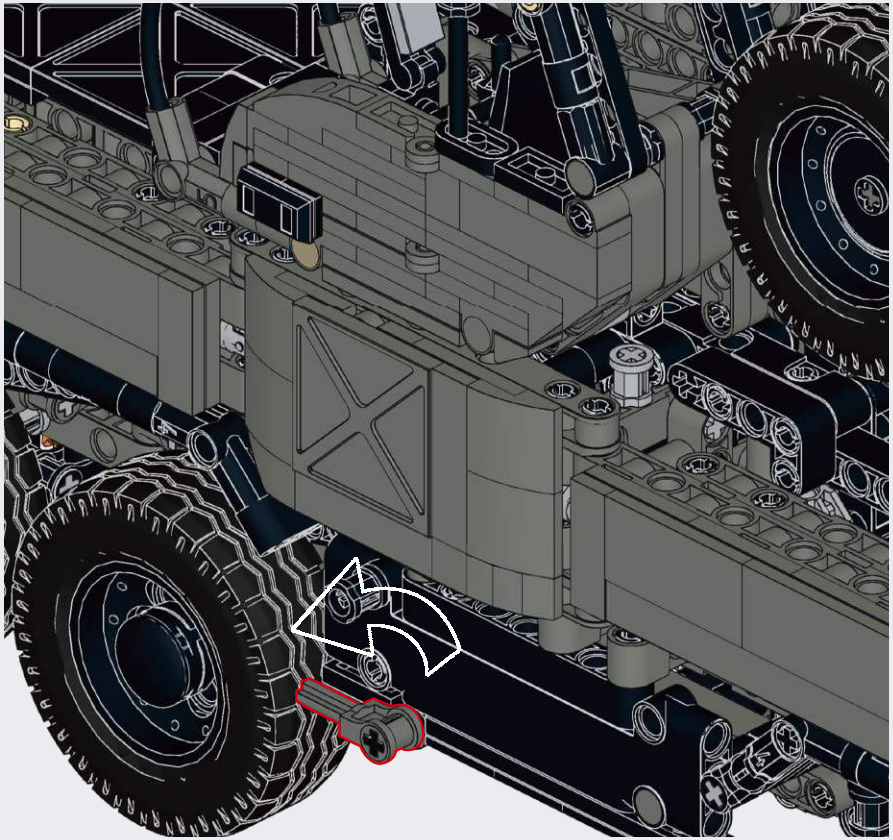

F5

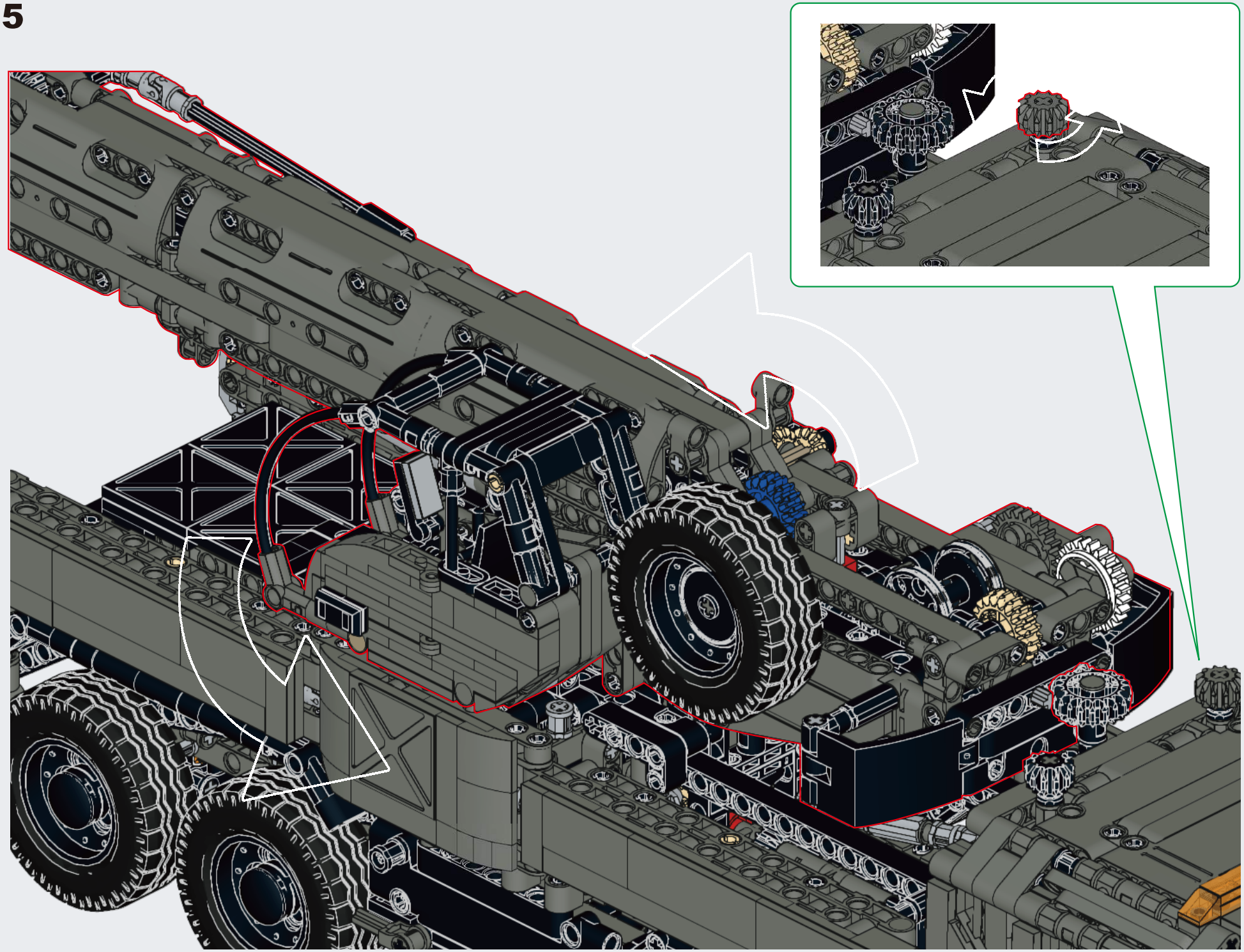

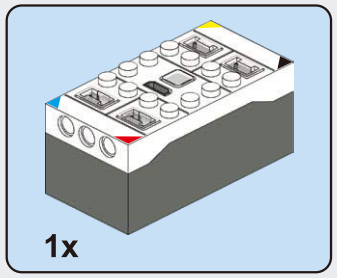

F6

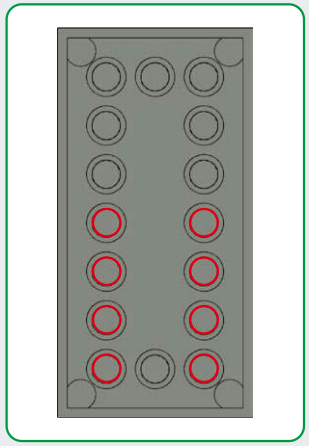

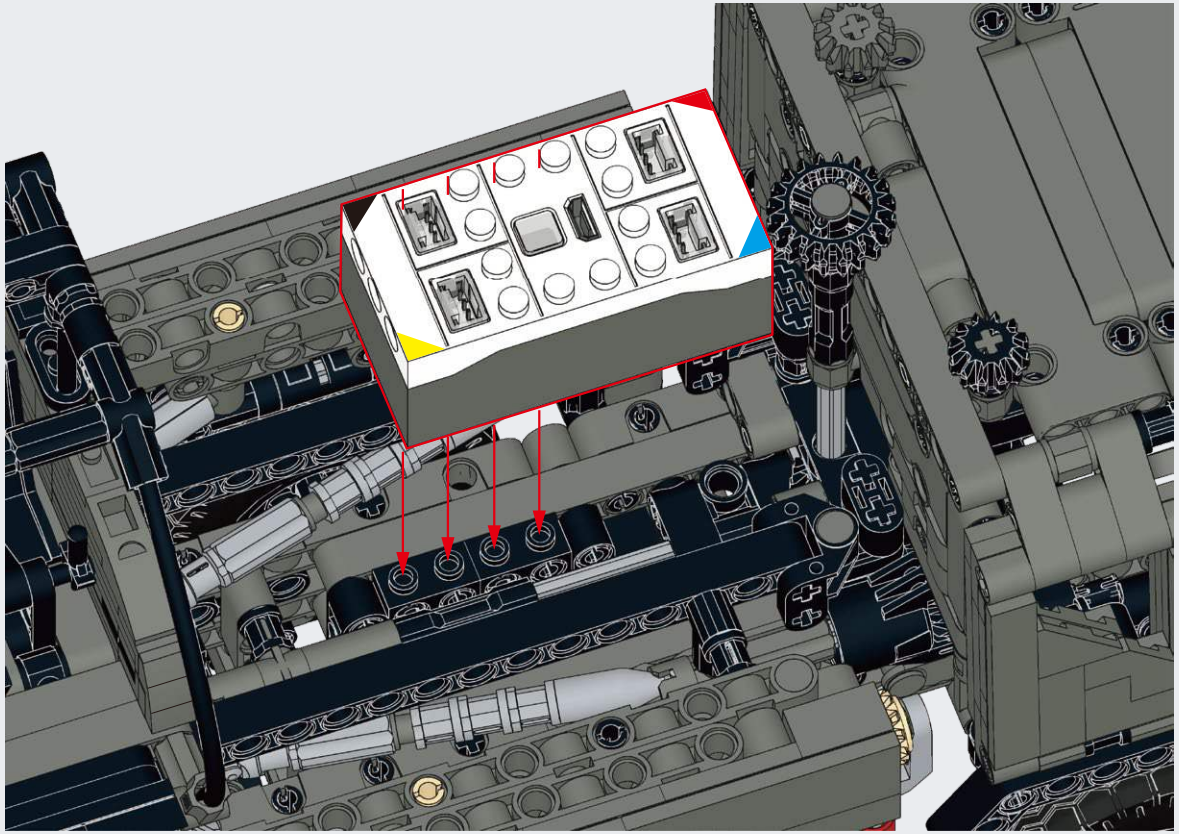

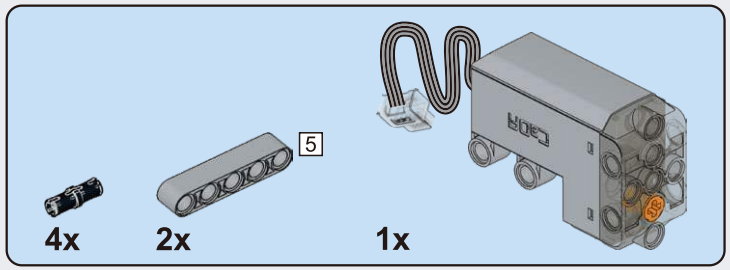

F7

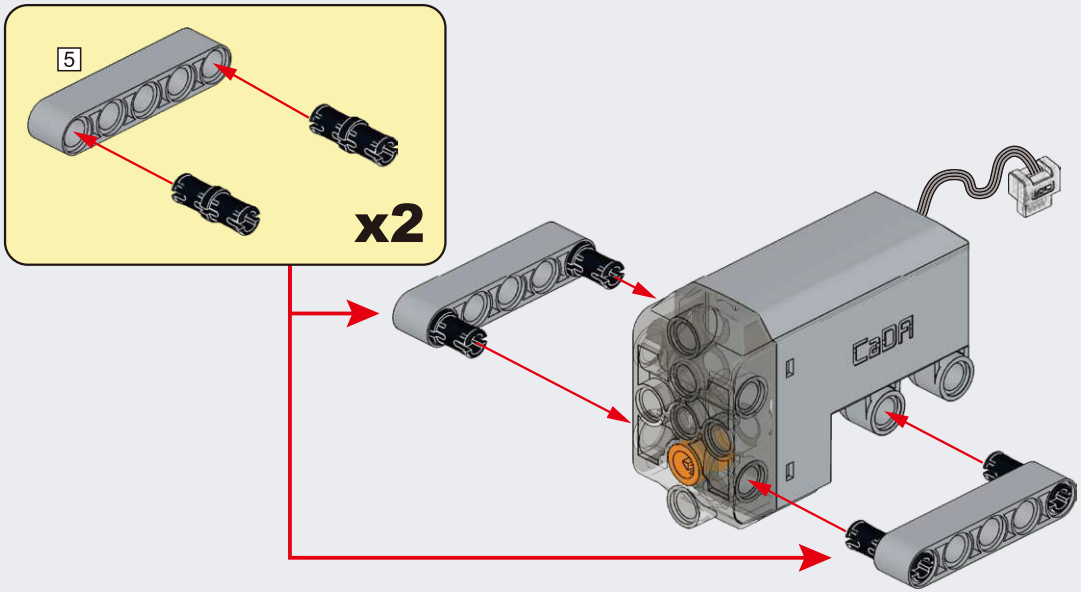

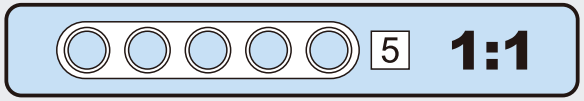

F8

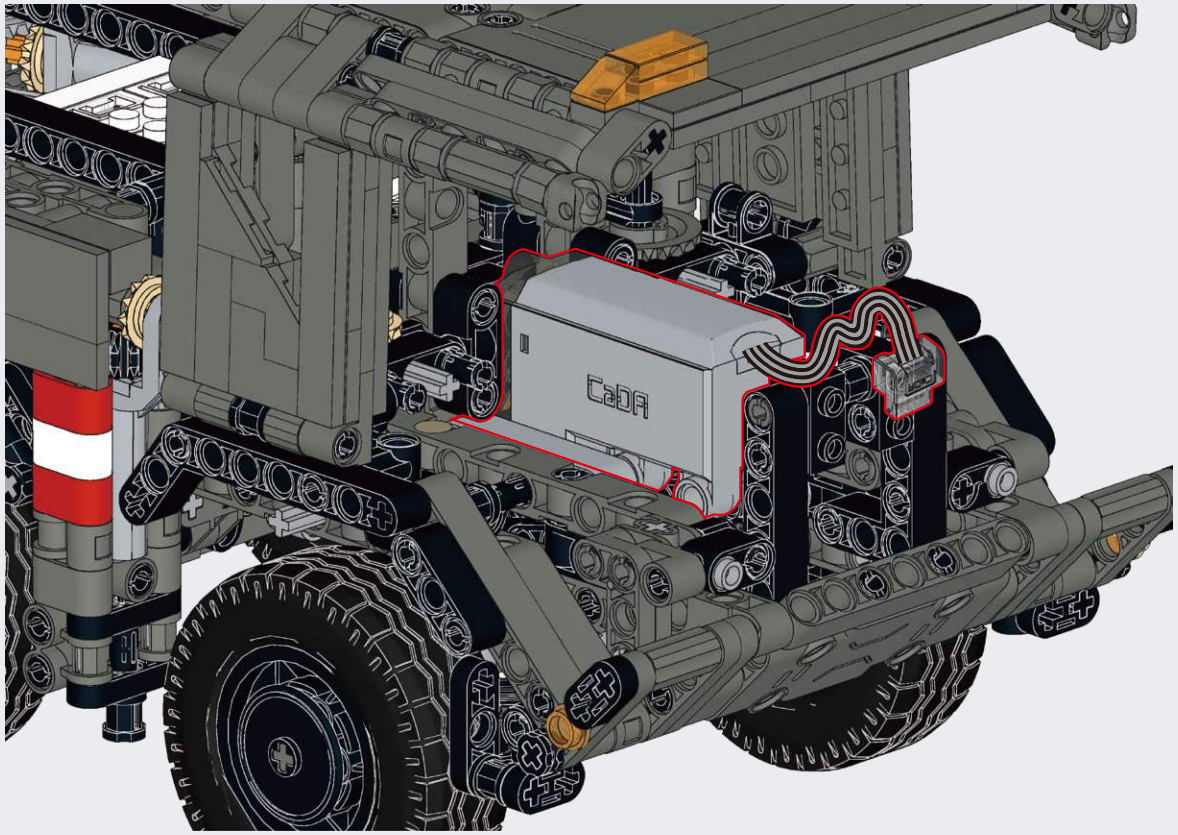

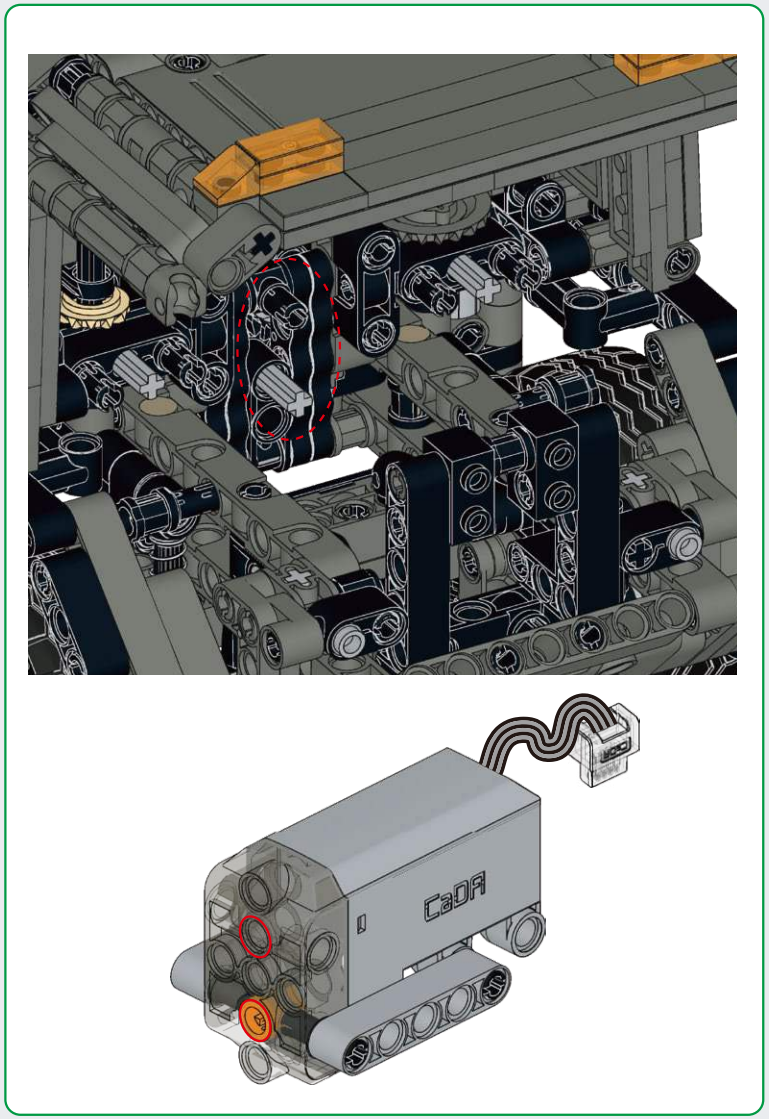

F9

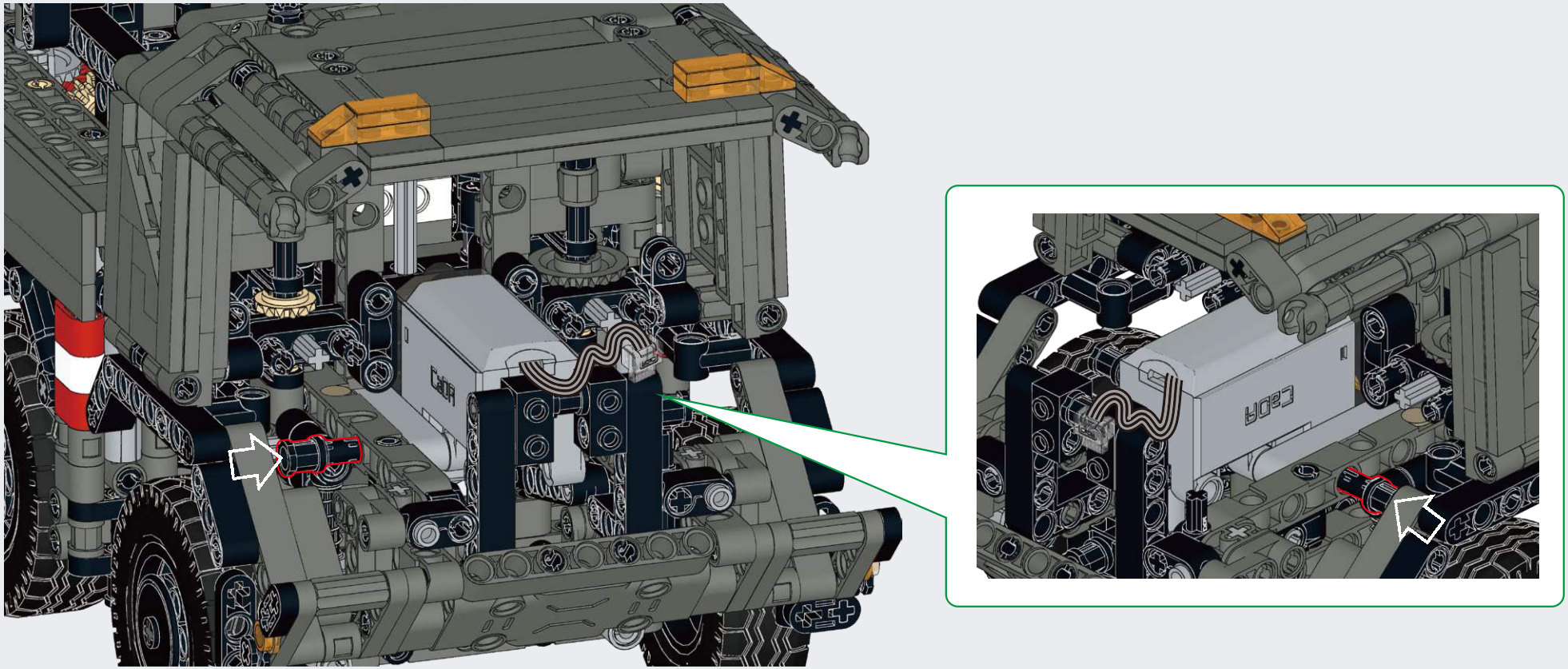

F10

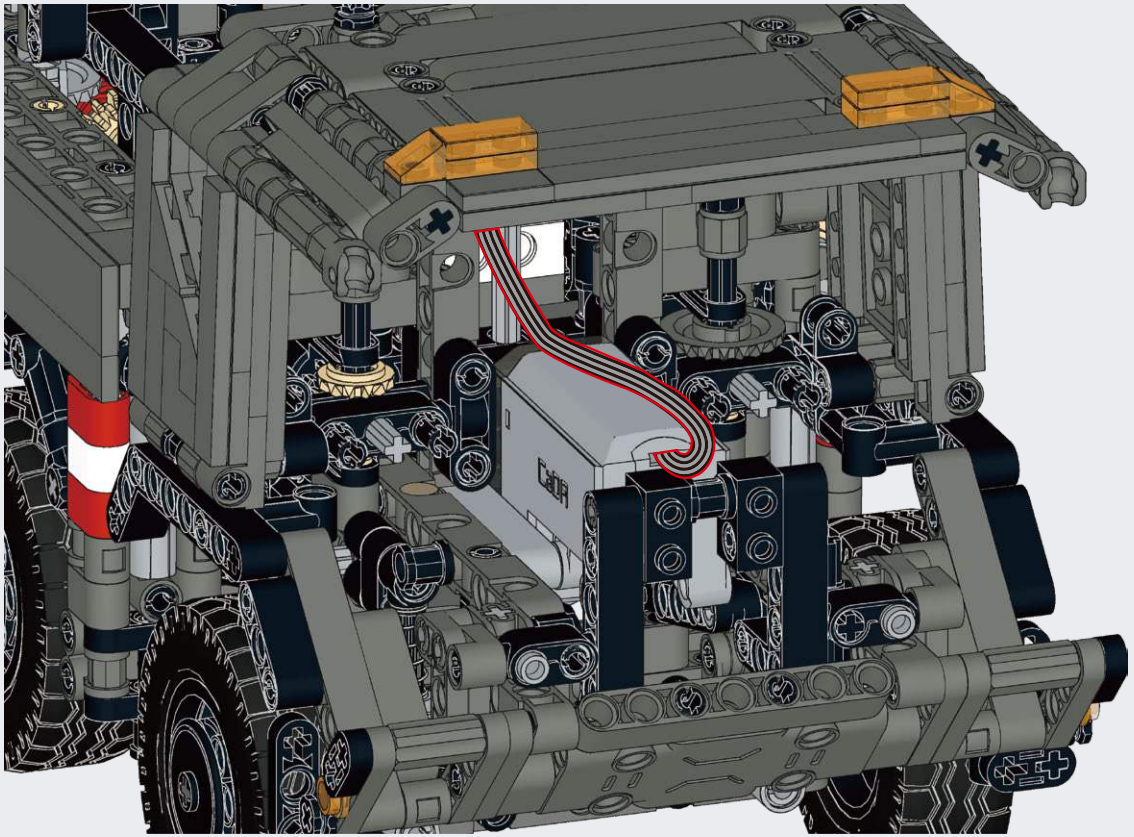

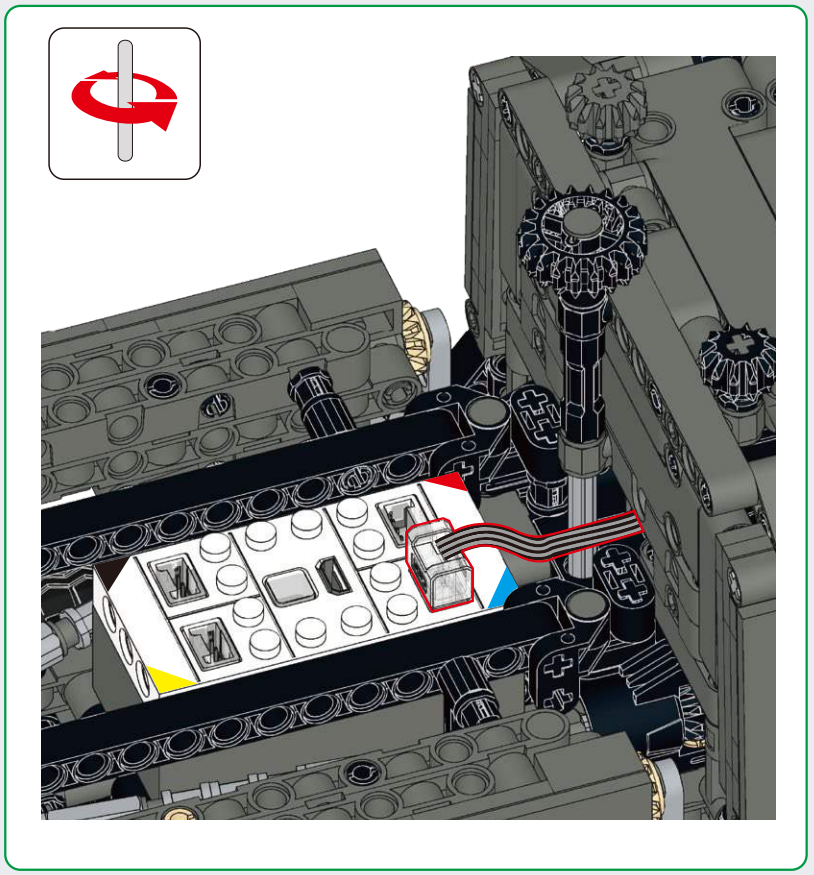

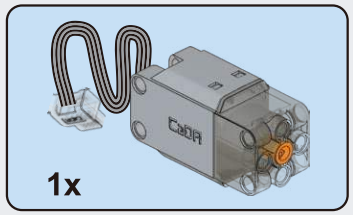

F11

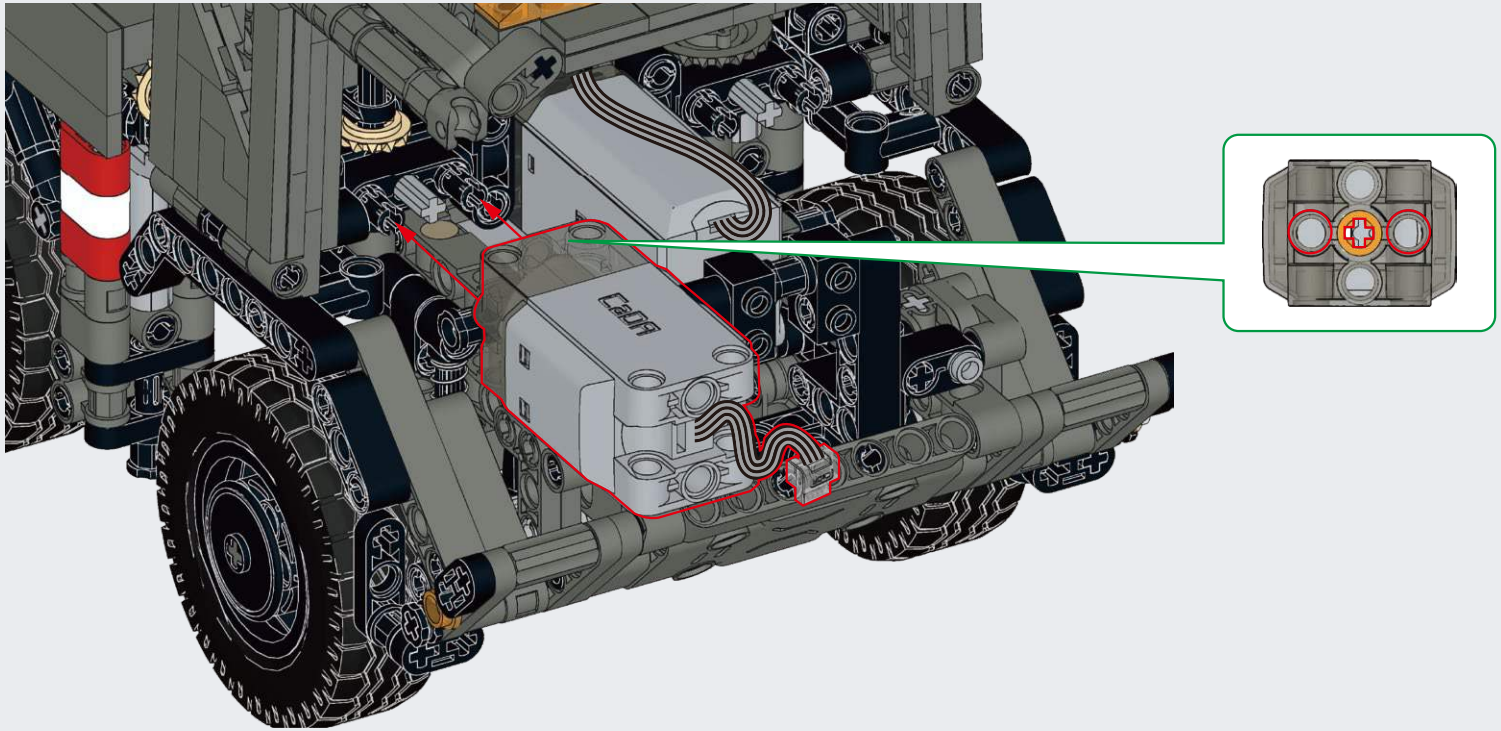

F12

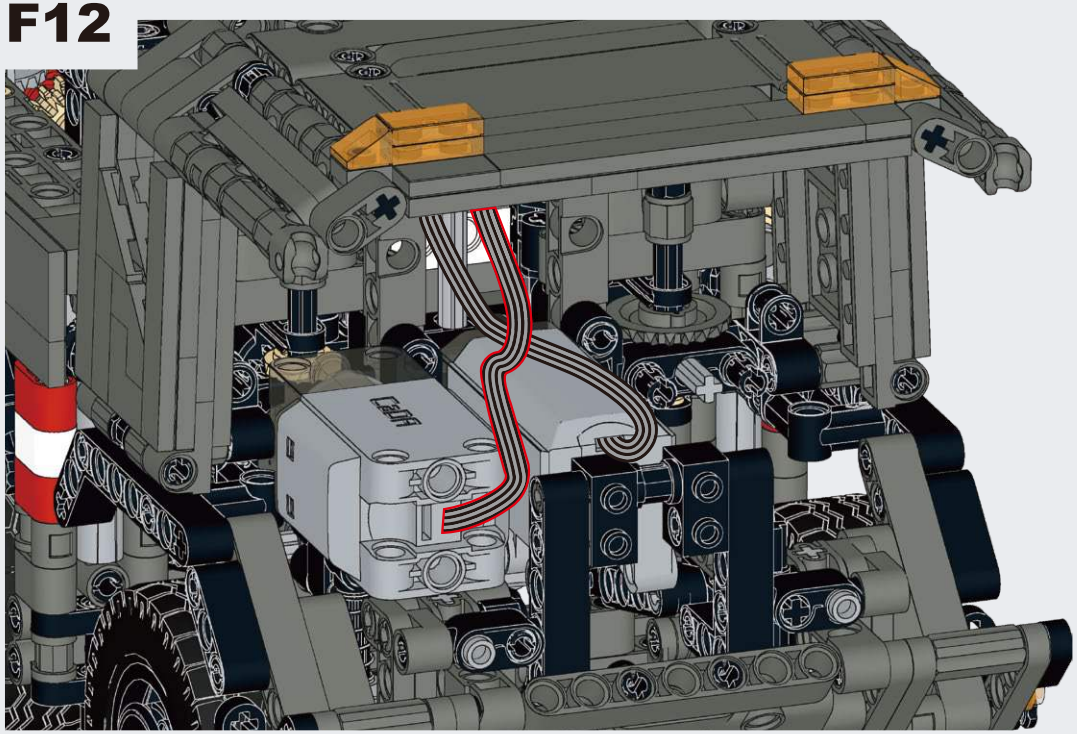

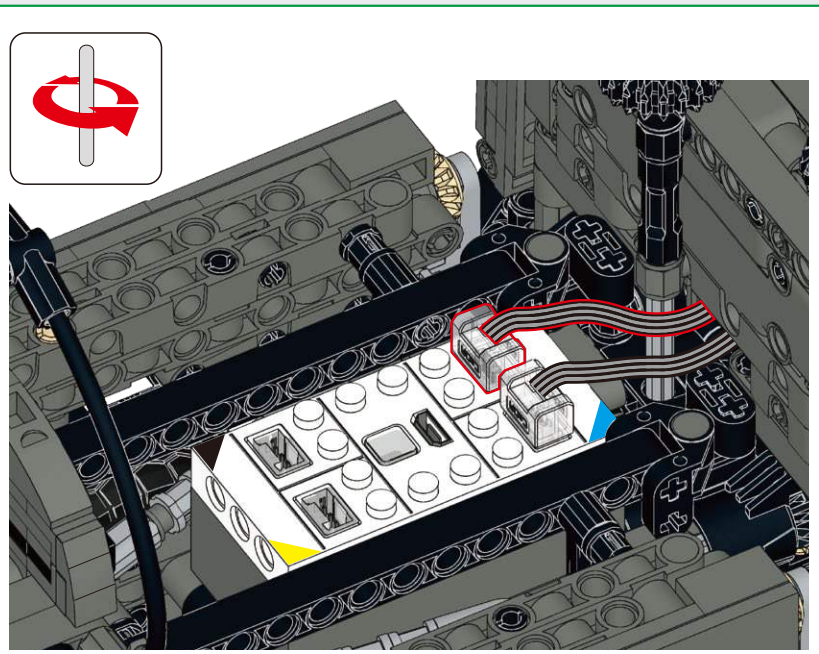

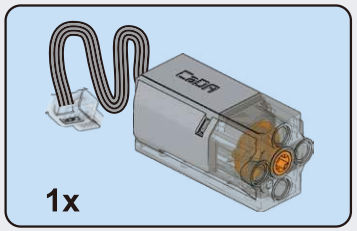

F13

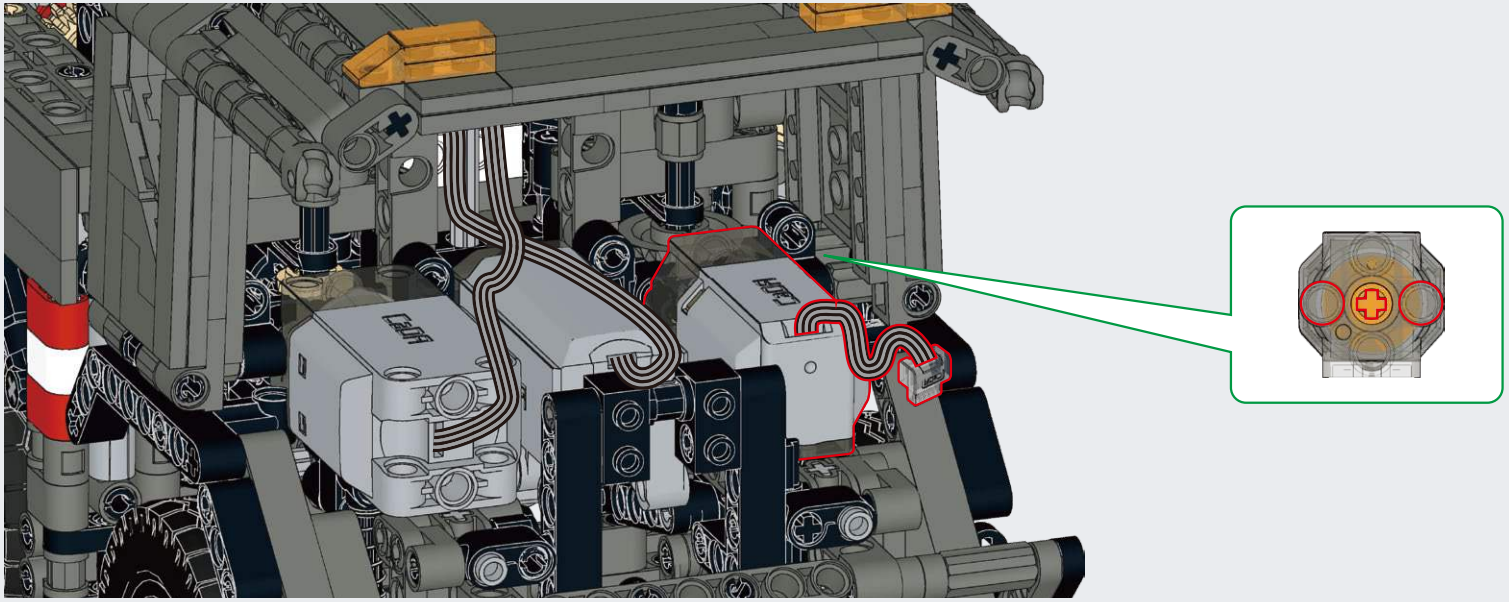

F14

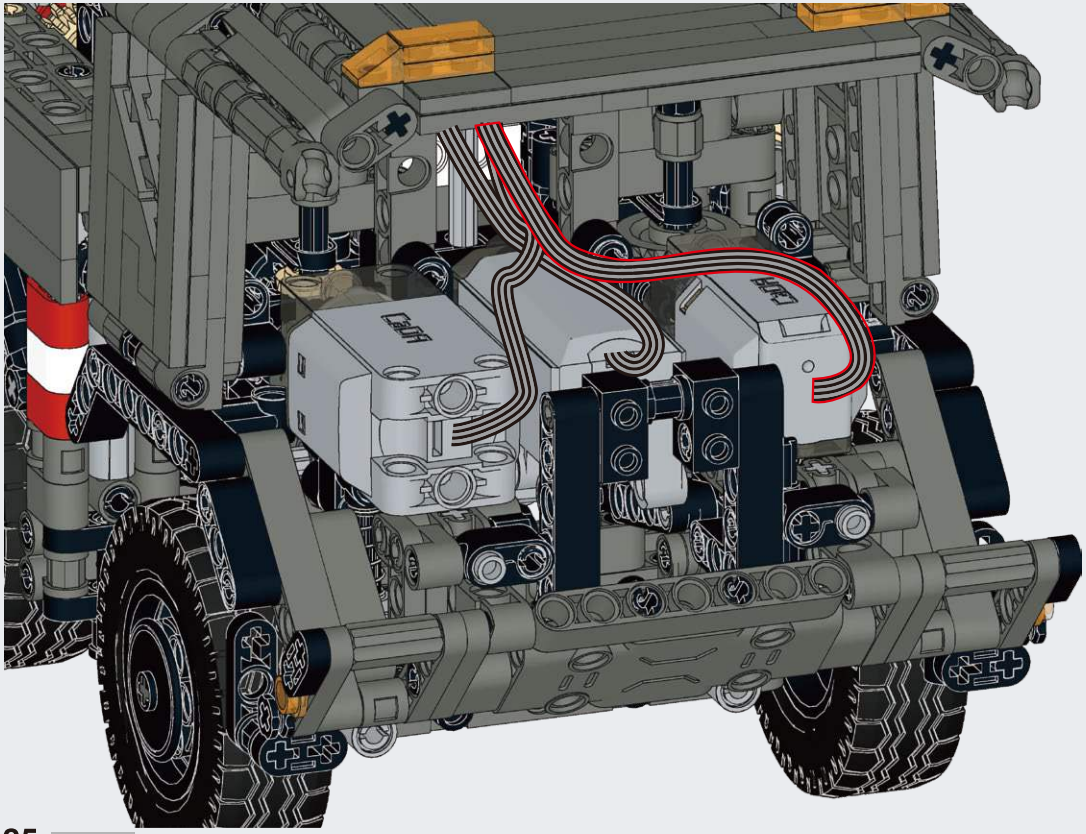

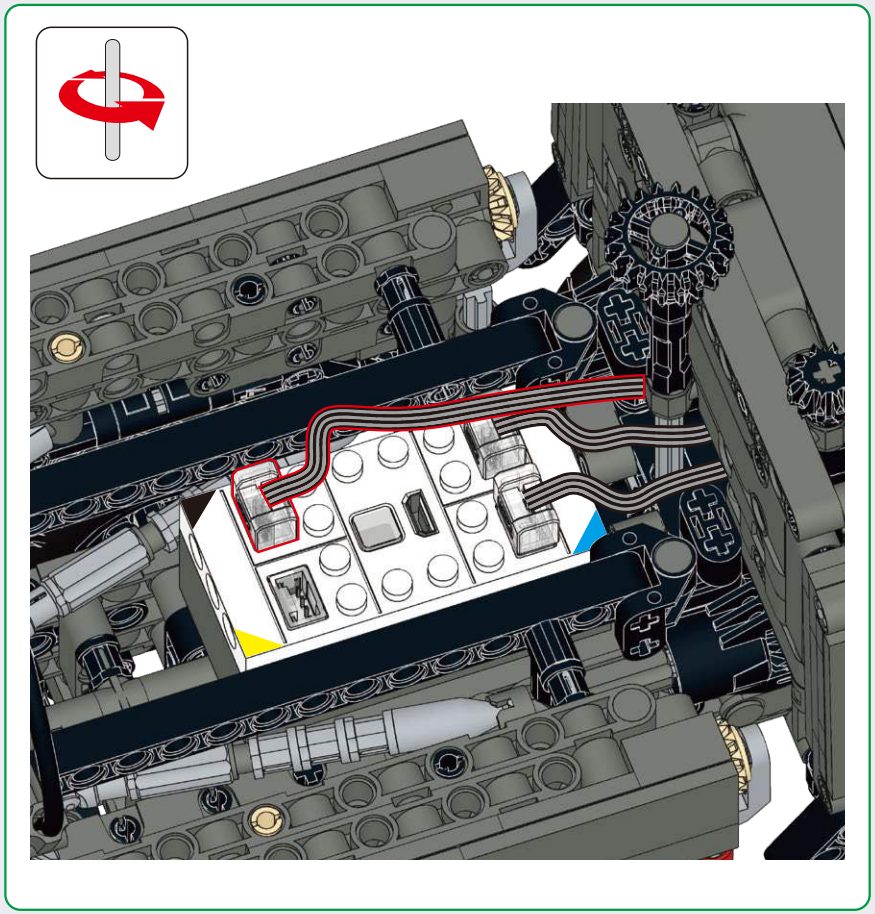

F15

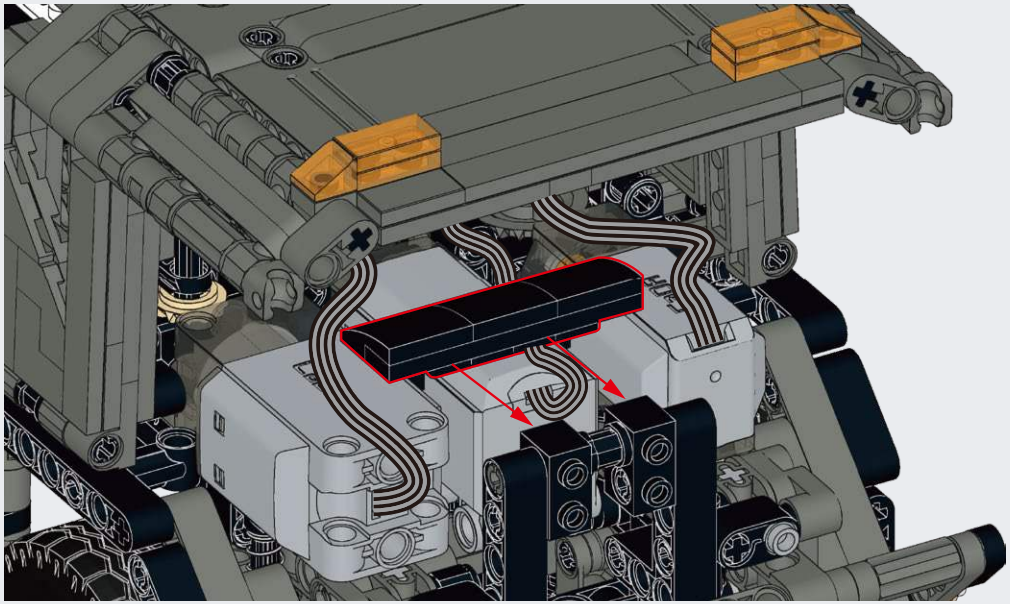

F16

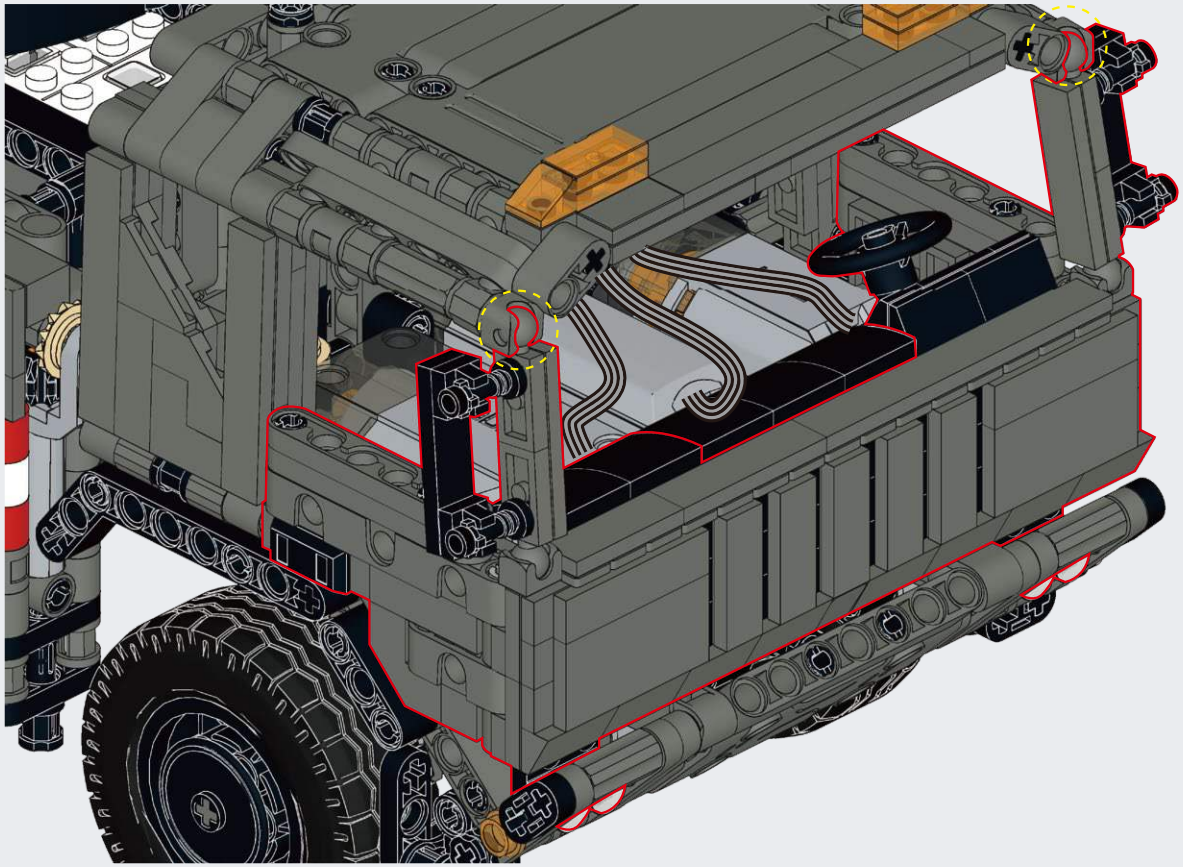

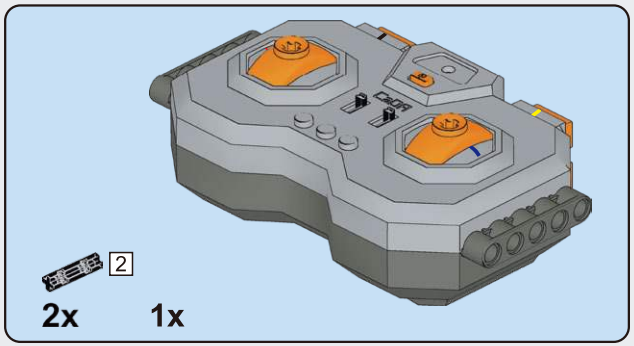

F17

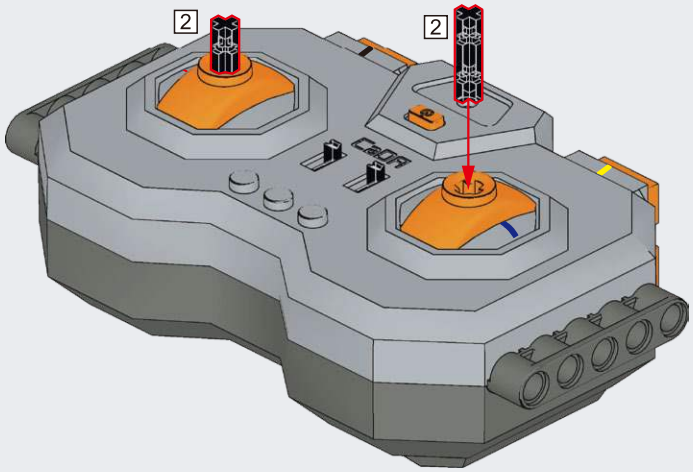

2 1:1

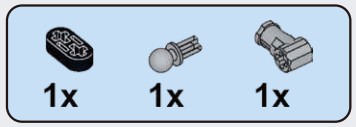

F18

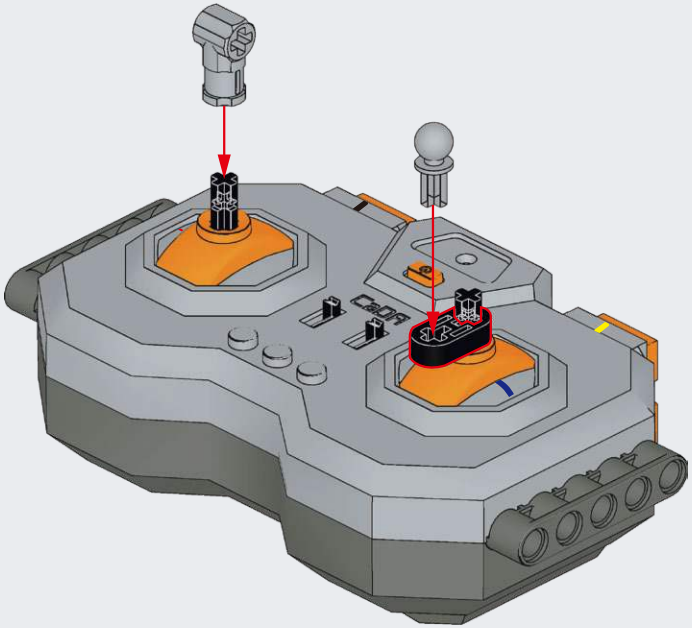

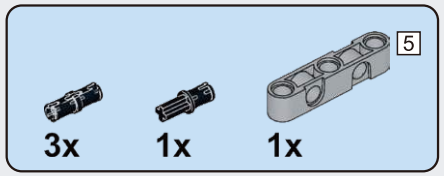

F19

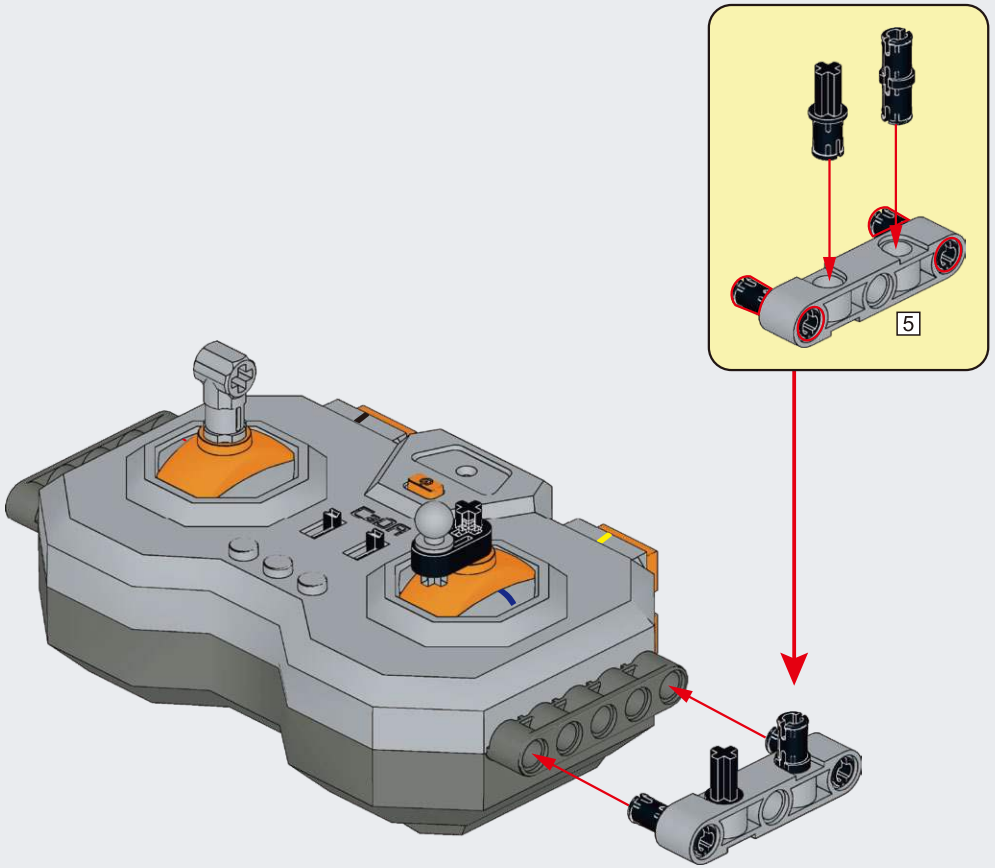

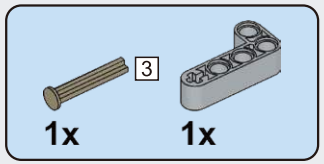

F20

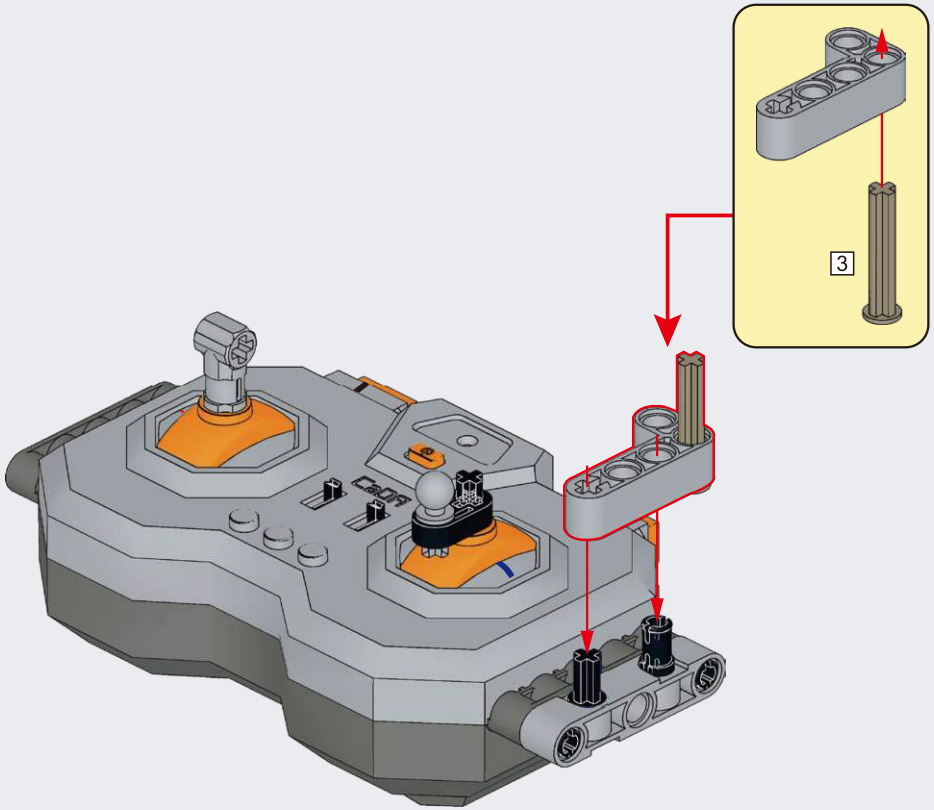

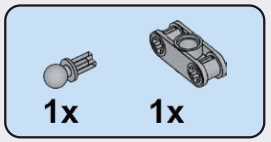

F21

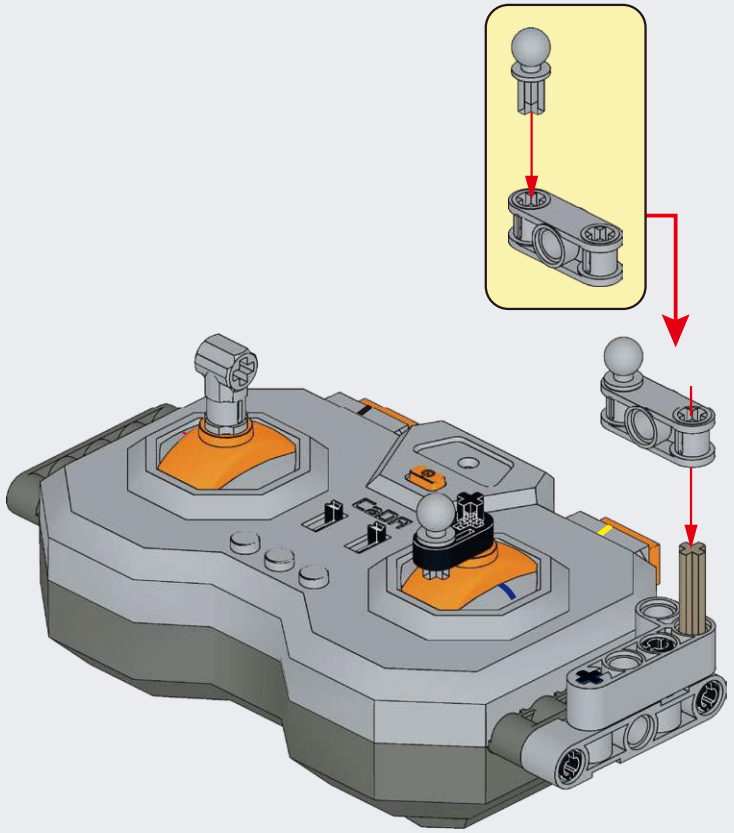

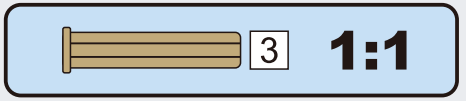

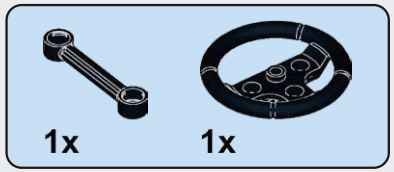

F22

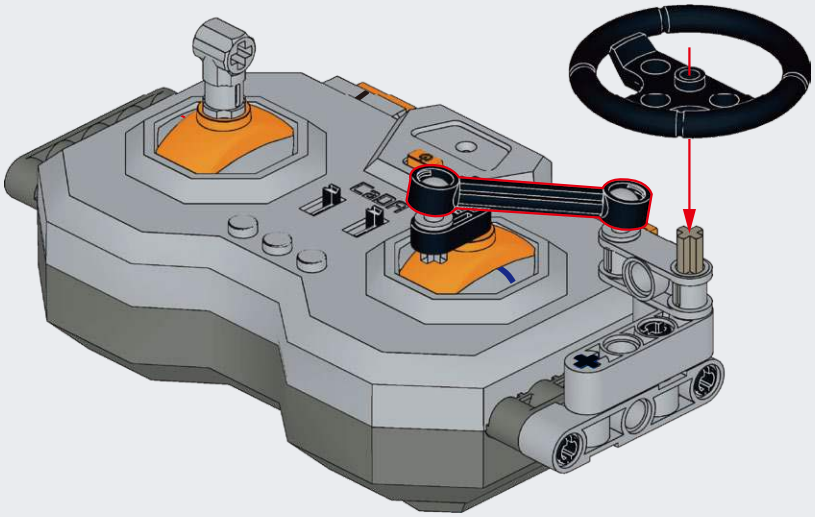

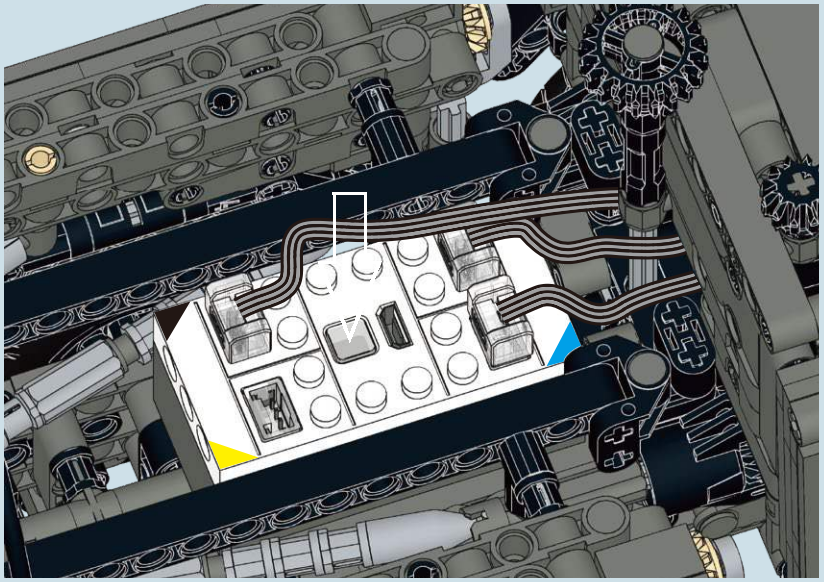

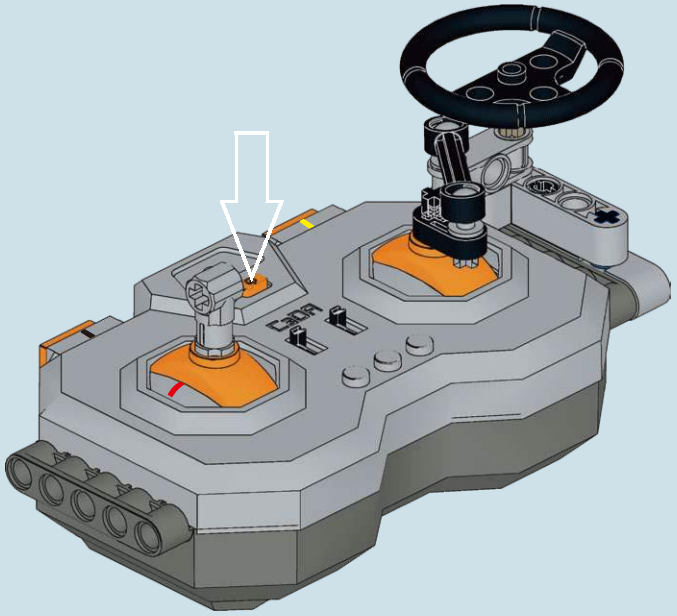

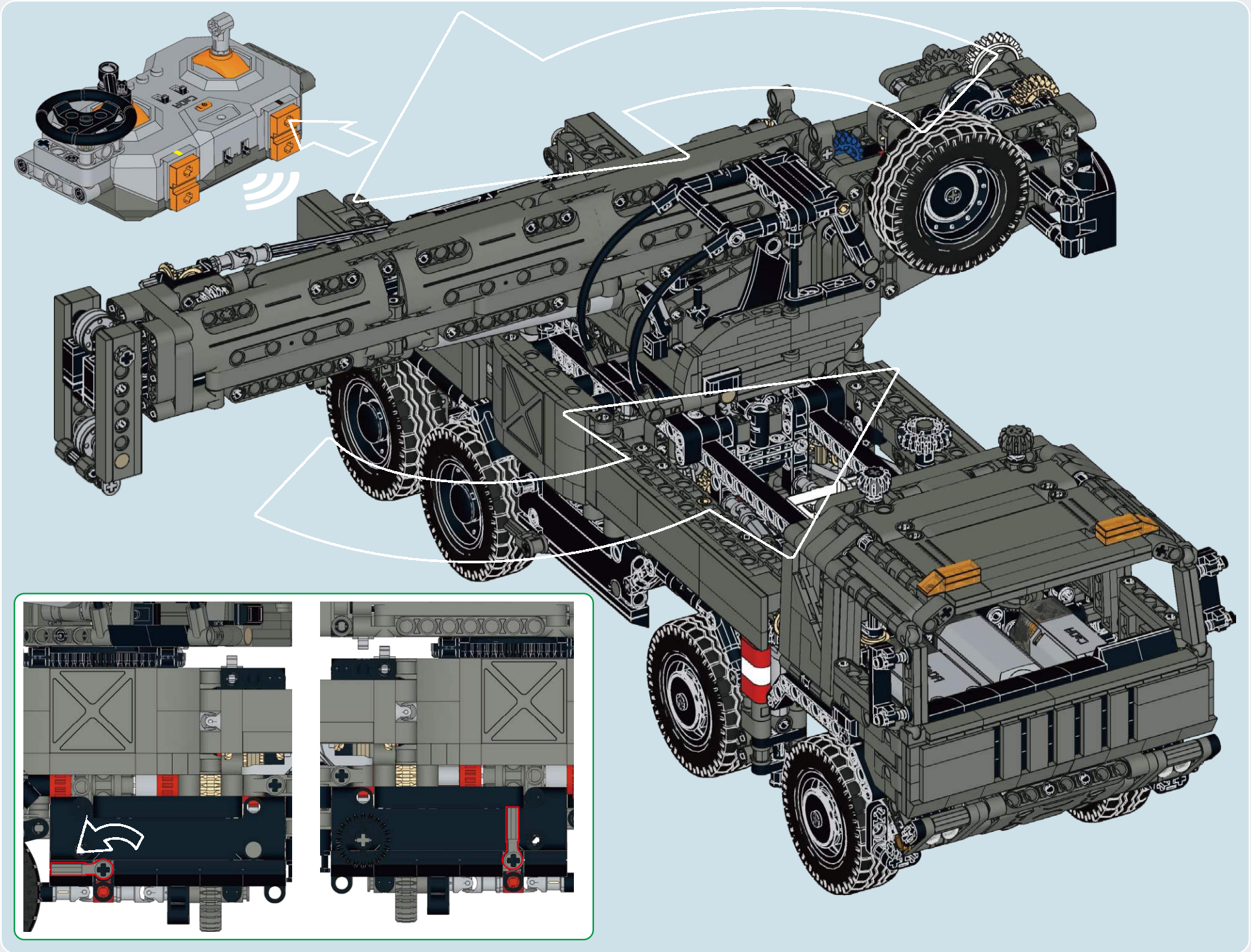

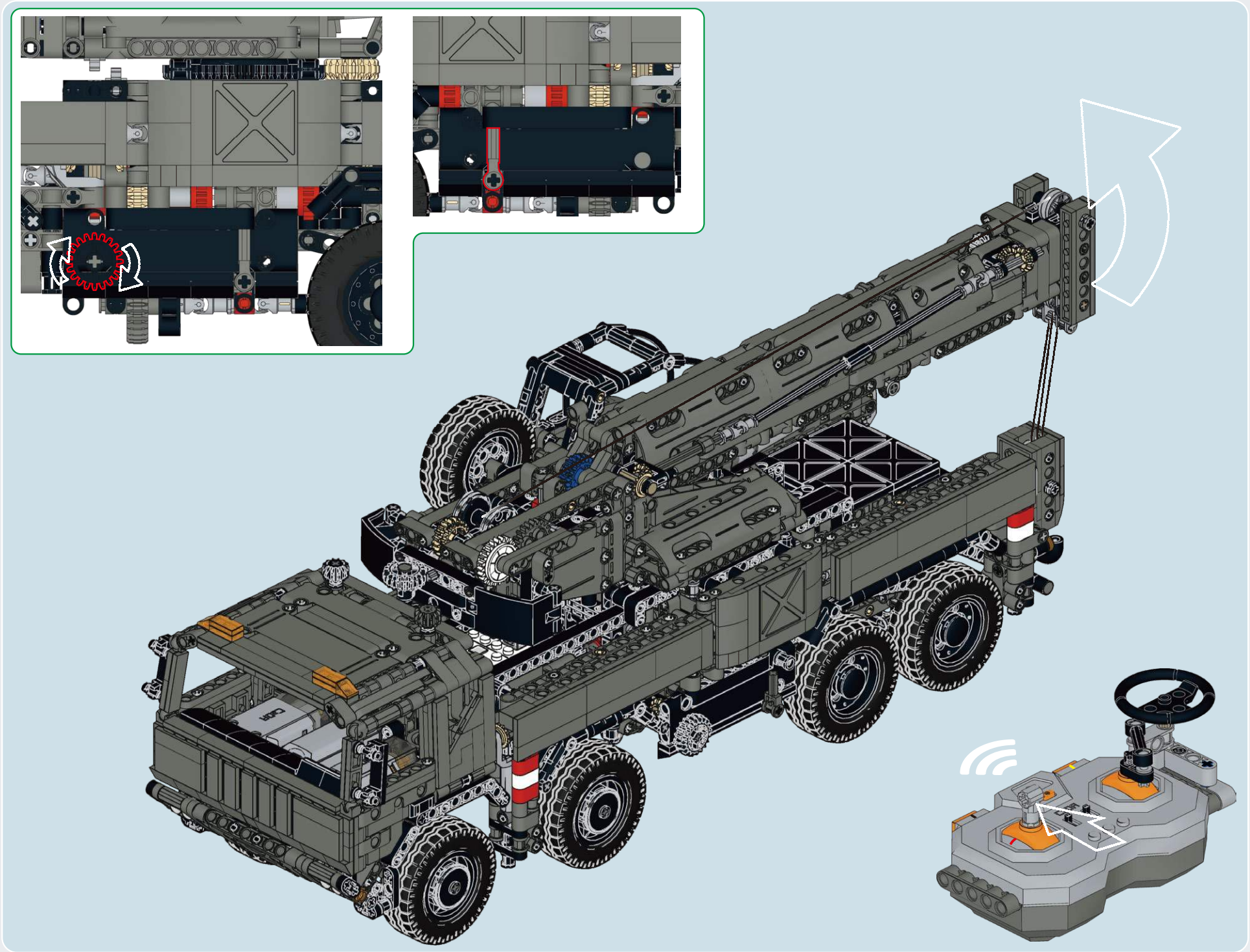

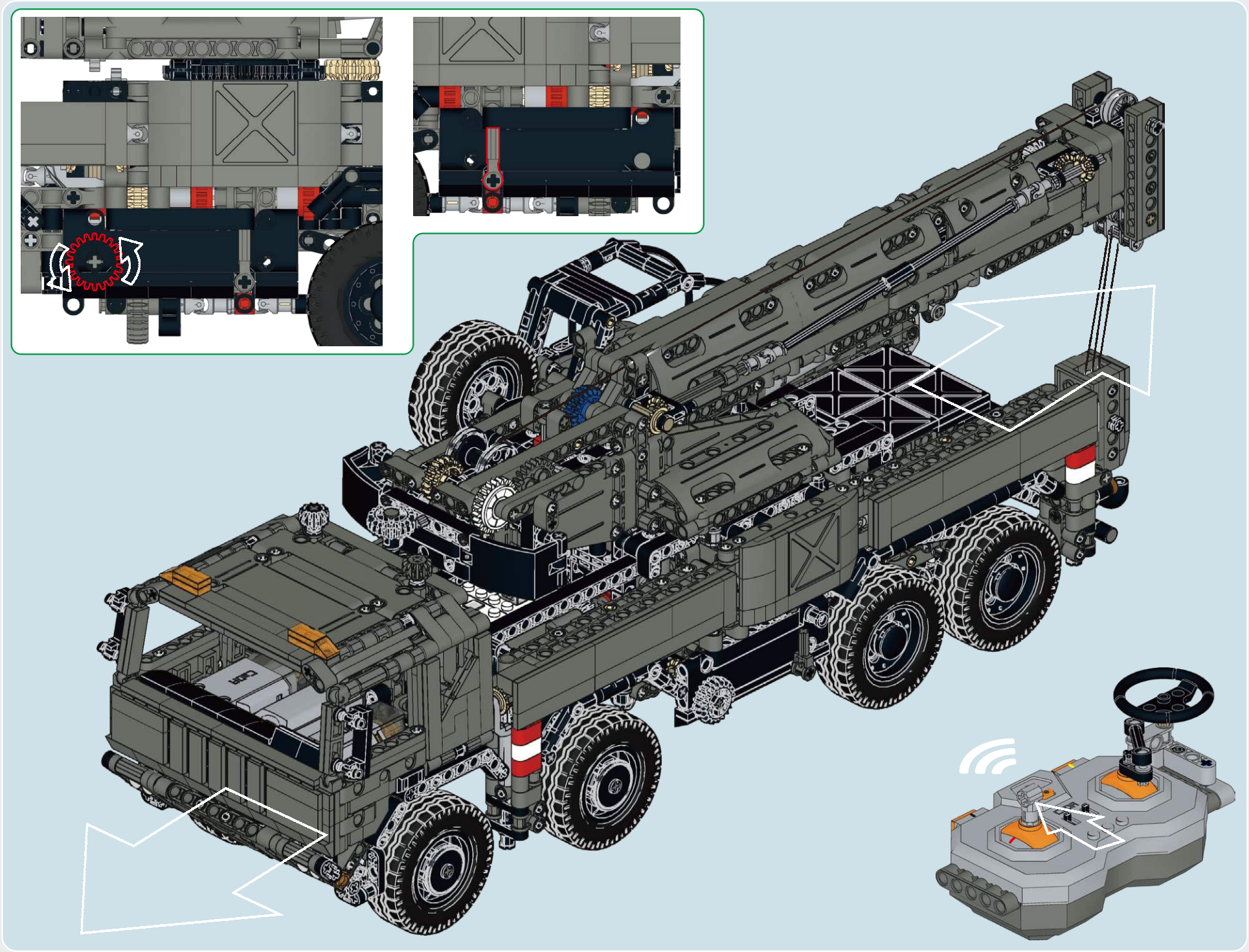

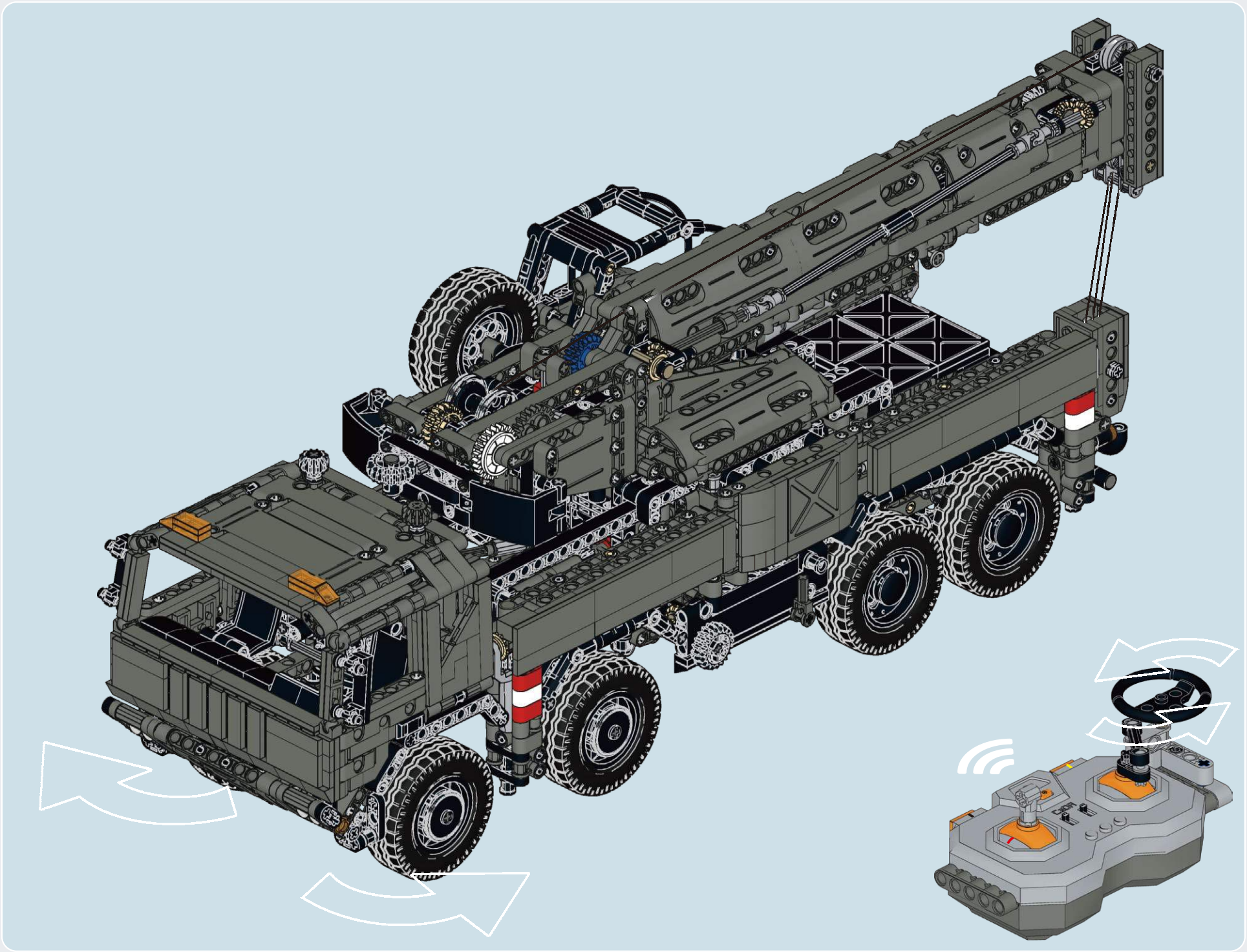

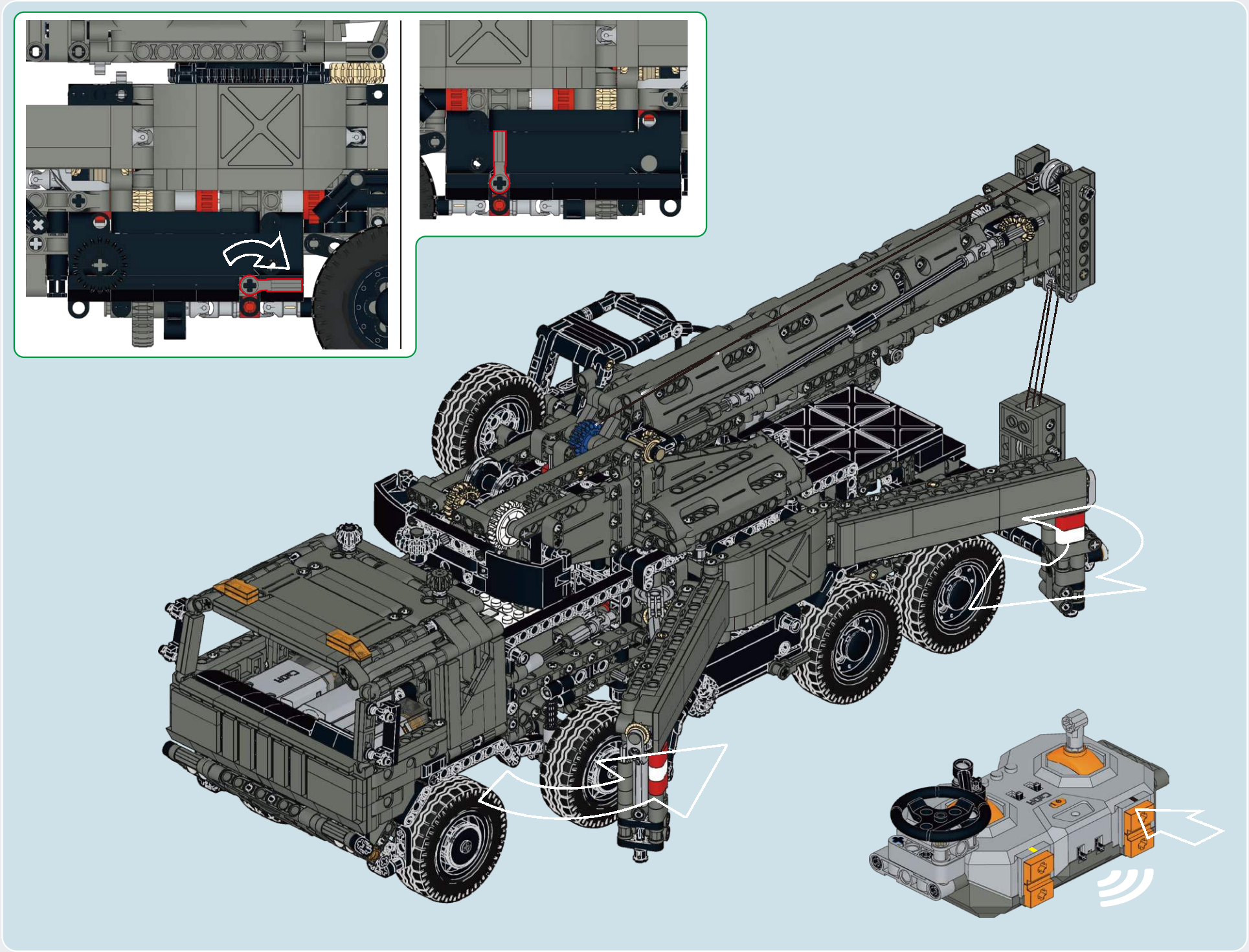

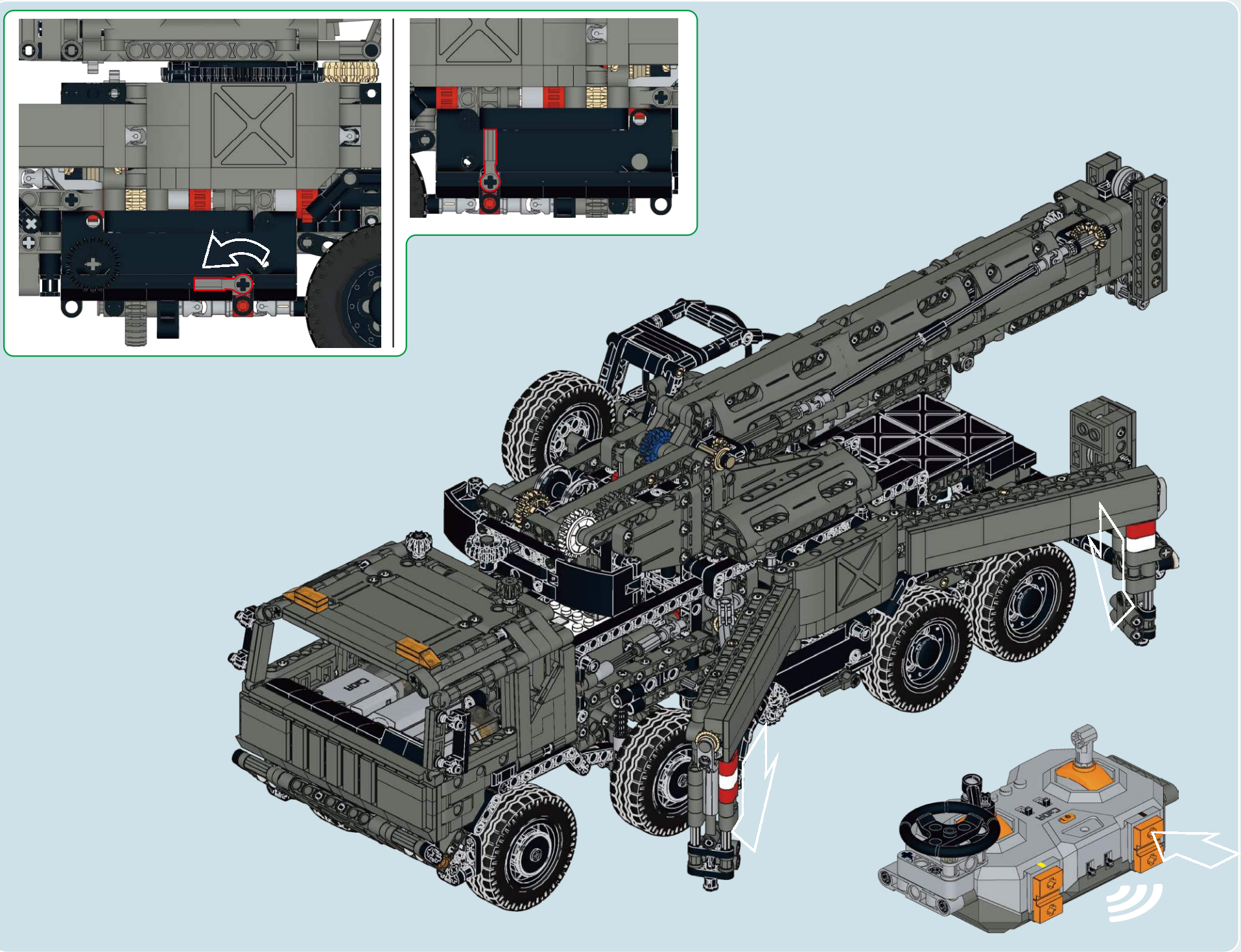

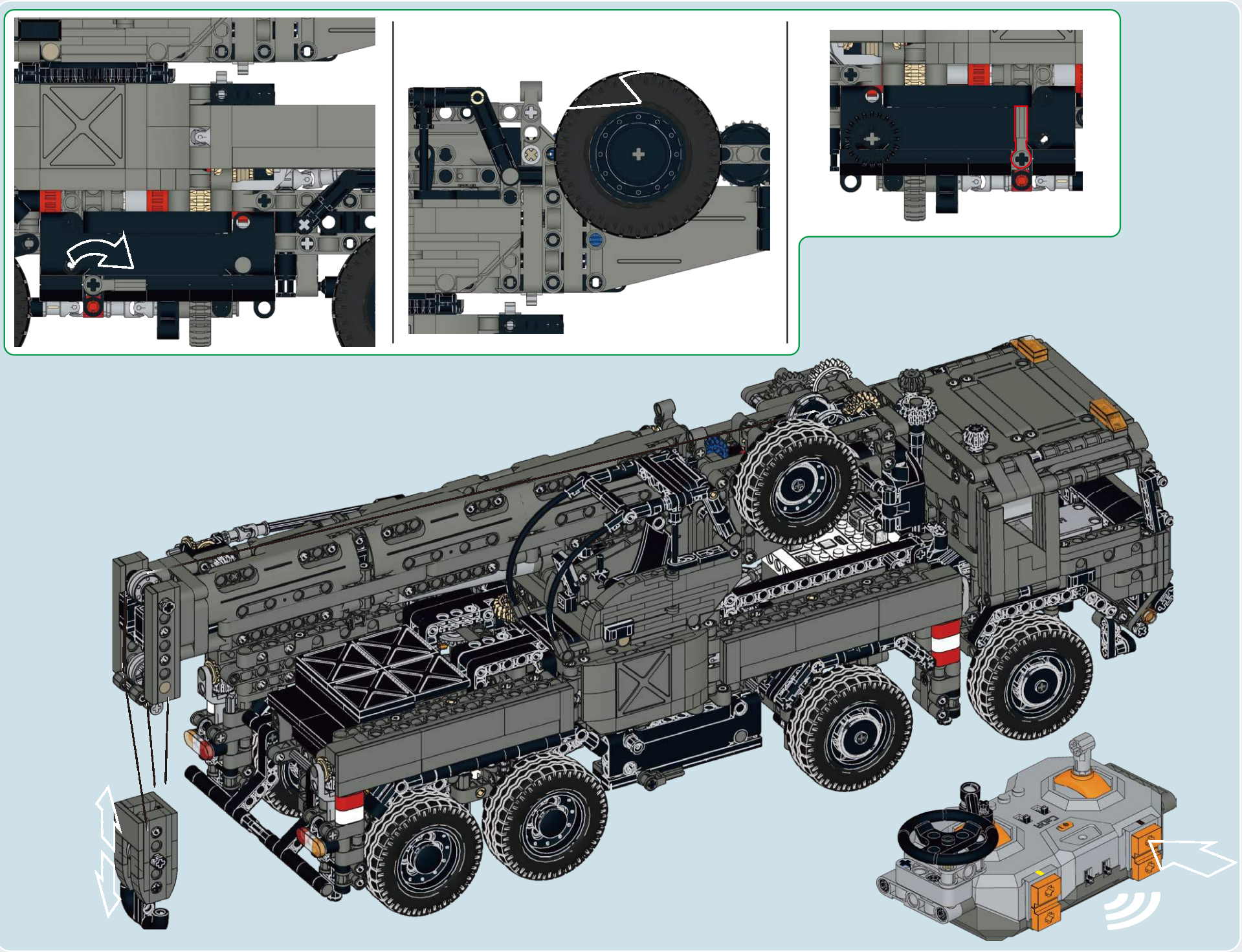

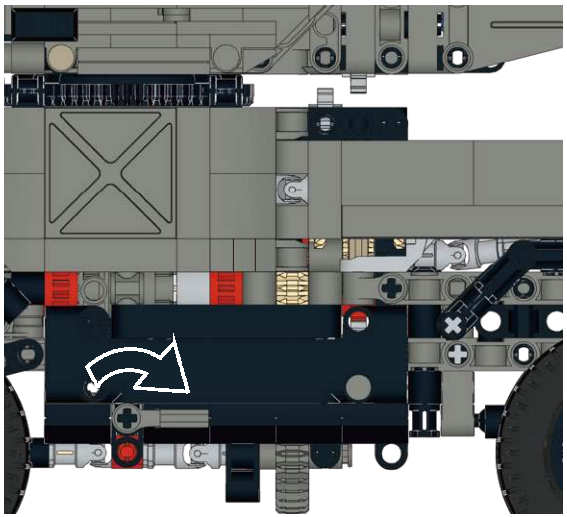

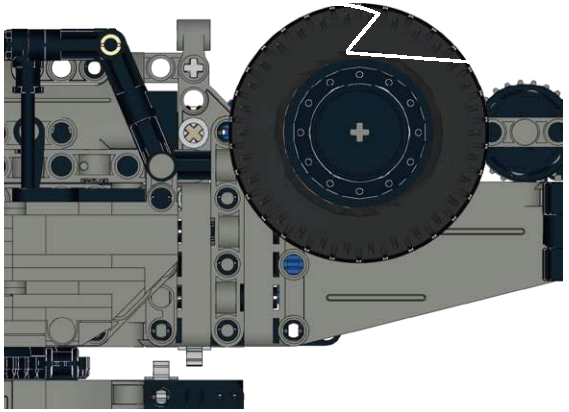

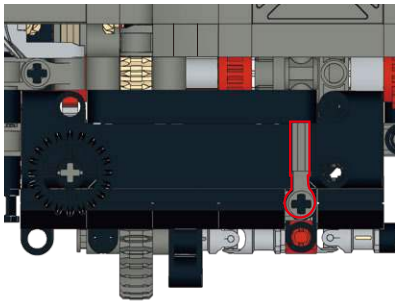

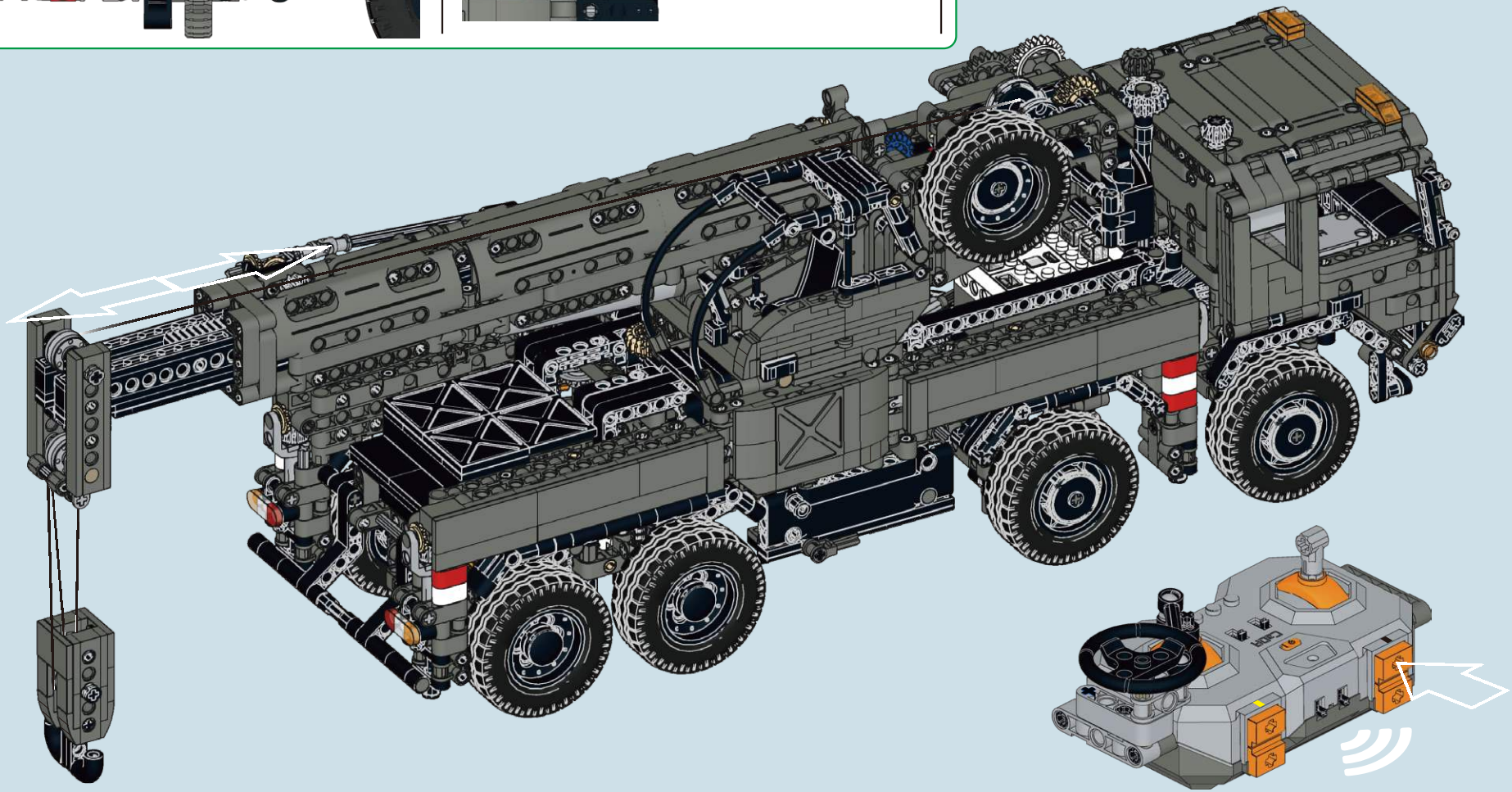

4x JB10160006
2x JB10010011
2x JA30590017
2x JA30590018
27x JH10180006
4x JH10180001
74x JH20150001
25x JH10170001
2x JH10790008
16x JH10790006
4x JH10170002
16x JH10790001
2x JA30280009
6x JA30280012
18x JA10150004
2x JA30280016
2x JA10150009
1x JF20260001
4x JF20110001
2x JF00820004
3x JF00810002
16x JF00820008
1x JF00810004
2x JD10010015
3x JD10010010
1x JD10010005
1x JM00100001
48x JM00170001
2x JH50540004
2x JX80750001
37x JH00110001 (2)
1x JE90220006
7x JJ40220001
17x JF30440001
306x JH20250001
30x JH50010002
2x JF30520001
2x JH50320006
18x JH20240001
2x JH10190006
28x JJ60180007
1x JA20170013
1x JC00110005
1x JC00100005
16x JA10140010
4x JA20180013
3x JA30290014
2x JJ40220002
3x JH50860007
2x JH40230004
6x JH10190004
9x JD10020006
1x JA30290009
1x JH40230002
1x JJ60180002
1x JM00150002
3x JM00790001
39x JH50320008
9x JF80720006
10x JF80730004
2x JF60750006
2x JF60740007
4x JA30490007
10x JE30150010
2x JA30780001
2x JH90770002
2x JH60390002
4x JX80830004
11x JH10190002
21x JH30210002
3x JH30210007
2x JH50860002
7x JH50260001
4x JH50260006
2x JF40450004
18x JH50410001
24x JH50410004
13x JH20140001
1x JH50780001
2x JH50320007
29x JH50320001
5x JA10140001
16x JA40360001
3x JX81000008
5x JJ60030003
15x JD10020001
2x JC00380005
5x JC00380007
2x JD20360007
3x JC00150005
2x JC00150002
2x JA30290021
1x JM90510001
14x JJ60180004
2x JA10140019
3x JH40220007
10x JJ60190001
4x JJ60180010
6x JJ60180005
1x JH60270003 (2)
4x JH60270001 (2)
5x JH60270006 (2)
1x JH90730004
1x JM00110001
4x JB10190002
19x JM00150001
6x JJ00200001
3x JF80720002
2x JF80730002
14x JH40230001
2x JA30680005
4x JF11220002
4x JB40150009
4x JB10120005
2x JB10200003
1x JE20640017
1x JE20630017
2x JH40870002
1x JE30150002
1x JH60510001
6x JH60400001
13x JH60400005
2x JH60280001 (6)
2x JH60280012 (6)
12x JM00130001
2x JM90980001
3x JM40800001
5x JM00210001

2x
JH60310001

14x
JH60300001

3x
JH60290001

2x
JH60290013

7x
JM00440001

2x
JA40770003

1x
JM00200006

2x
JM00180001

1x
JM90520001

3x
JH60500010

1x
JF10890013

12x
JH00630001

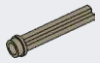
2x
JH50450001

53x
JH00130001

5x
JH20550005

2x
JH90800001

7x
JH20430001

156x
JH20160002

20x
JH50440001

17x
JH50640001

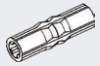
3x
JM90410001

9x
JH60850003

45x
JH50200002

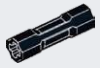
7x
JM90420002

4x
JF30980002

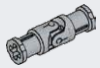
15x
2050JH90560001

2x
JF40970005

3x
JM90430001

1x
JF10040001

2x
JA40480005

8x
JA40480004

4x
JA40480002

14x
JA30300016

2x
JA10130002

13x
JA10130015

6x
JJ60310002

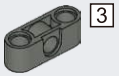

9x
JJ60310004

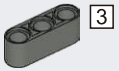

18x
JJ60040006

10x
JJ60040001

8x
JJ60590010

1x
JH60390001

17x
JH60390005

2x
JC00410002

8x
JC00080007

5x
JC00080003

33x
JJ40250002

2x
JH60380002

3x
JH60380001

8x
JH60380005

2x
JH60650004

1x
JH61080001

4x
JH61080005

8x
JH60480001

8x
JH60480003

12x
JH60990002

4x
JH60820002

4x
JH60850002

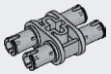
2x
JH60360002

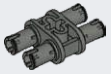
2x
JH60360003

6x
JJ70820001

4x
JJ70820006

3x
JH60650002

3x
JM90400001

1x
JJ50710001

1x
JJ50260001

2x
JH60490001

2x
JM00160002

7x
JM00160001

8x
JM00660001

5x
JM30080001

11x
JH61070001

5x
JH61070005

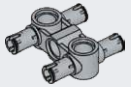
4x
JH60970001

8x
JH60350001

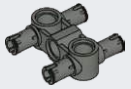
4x
JH60350004

2x
JM30090004

1x
JX00410001

2x
JE40110009

22x
JA10160008

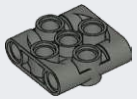
2x
JJ20640002

8x
2050JH80670005

5x
JA10070011

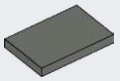
1x
JA30350010

1x
JM90640003

1x
JM00970001

1x
JM00120001

1x
JM00230001

1x
JM00200001

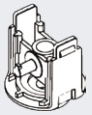
2x
JM00960001

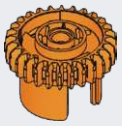
2x
JM00950001

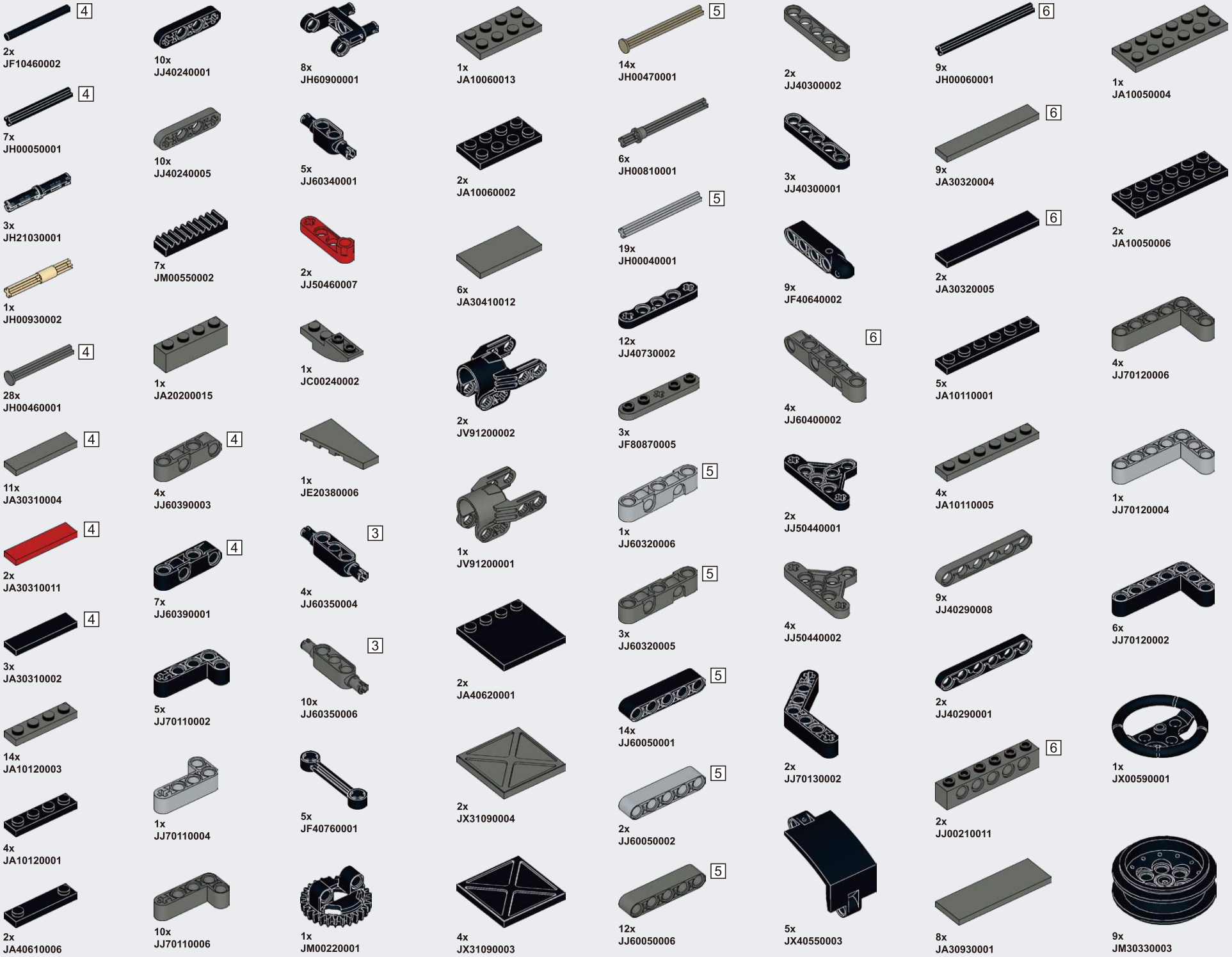
4
2x
JF10460002
4
7x
JH00050001
3x
JH21030001
1x
JH00930002
4
28x
JH00460001
4
11x
JA30310004
4
2x
JA30310011
4
3x
JA30310002
14x
JA10120003
4x
JA10120001
2x
JA40610006
10x
JJ40240001
10x
JJ40240005
7x
JM00550002
1x
JA20200015
4
4x
JJ60390003
4
7x
JJ60390001
5x
JJ70110002
1x
JJ70110004
10x
JJ70110006
8x
JH60900001
5x
JJ60340001
2x
JJ50460007
1x
JC00240002
1x
JE20380006
3
4x
JJ60350004
3
10x
JJ60350006
5x
JF40760001
1x
JM00220001
1x
JA10060013
2x
JA10060002
6x
JA30410012
2x
JV91200002
1x
JV91200001
2x
JA40620001
2x
JX31090004
4x
JX31090003
5
14x
JH00470001
6x
JH00810001
5
19x
JH00040001
12x
JJ40730002
3x
JF80870005
5
1x
JJ60320006
5
3x
JJ60320005
5
14x
JJ60050001
5
2x
JJ60050002
5
12x
JJ60050006
2x
JJ40300002
3x
JJ40300001
9x
JF40640002
6
4x
JJ60400002
2x
JJ50440001
4x
JJ50440002
2x
JJ70130002
5x
JX40550003
6
9x
JH00060001
6
9x
JA30320004
6
2x
JA30320005
5x
JA10110001
4x
JA10110005
9x
JJ40290008
2x
JJ40290001
6
2x
JJ00210011
8x
JA30930001
1x
JA10050004
2x
JA10050006
4x
JJ70120006
1x
JJ70120004
6x
JJ70120002
1x
JX00590001
9x
JM30330003

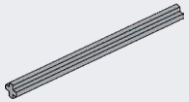
7
21x
JH00070001

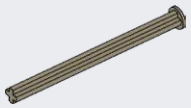
7
1x
JH00620001

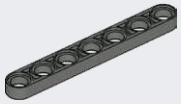
2x
JJ40280007

2x
JM00340001

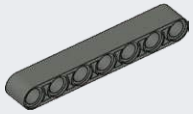
7
14x
JJ60060006

7
7x
JJ60060001

7
5x
JJ60330001

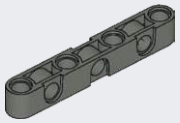
7
5x
JJ60330002

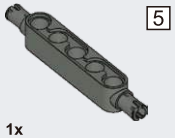
5
1x
JJ60360009

5
2x
JJ60360003

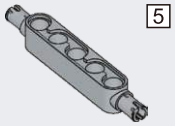
5
1x
JJ60360012

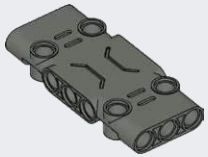
1x
JX41120002

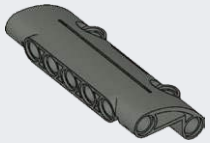
1x
JX40540013

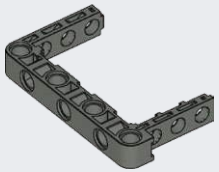
8x
JJ20760006

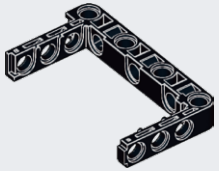
4x
JJ20760002

8
7x
JH00080001

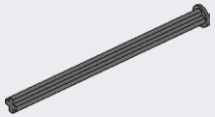
8
18x
JH00610001

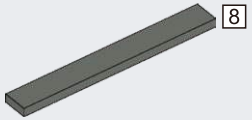
8
4x
JA30330003

2x
JA10100001

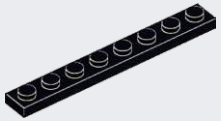
3x
JA10100003

8
2x
JJ00430009

8
2x
JJ00430005

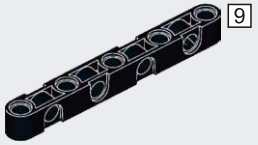
9
2x
JJ60380004

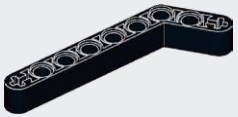
2x
JJ70150002

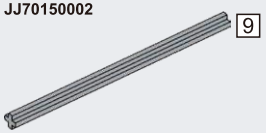
9
14x
JH00090001

9
2x
JJ60070001

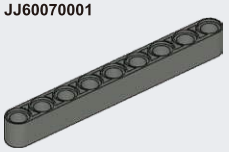
9
7x
JJ60070006

83mm
2x
206RJT10020027

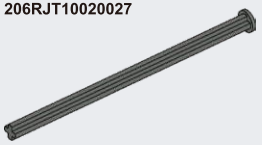
10
1x
JH00600001

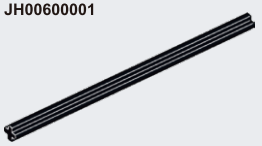
10
2x
JH00100001

1x
JA10090008

4x
JA10090004

7
1x
JJ60370001

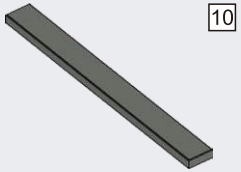
10
4x
JA30380011

10
4x
JA30380005

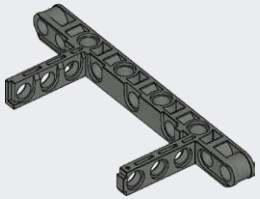
6x
JJ20770004

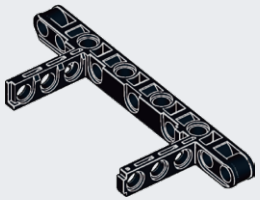
4x
JJ20770003

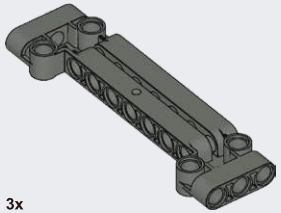
3x
JX41930003

1x
JA20270001

1x
JA10420008

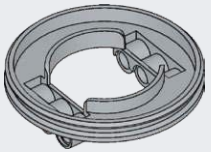
1x
JM00830001

1x
JM00840001

9x
JR40140001

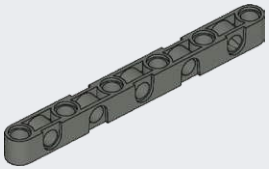
11
15x
JJ60500008

5x
JJ60500001

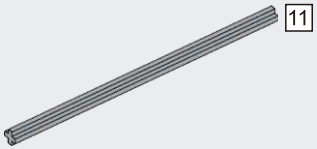

4x
JH00940001

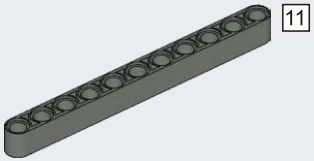

2x
JJ60080006

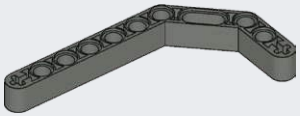

2x
JJ70160003

4x
JH00120001

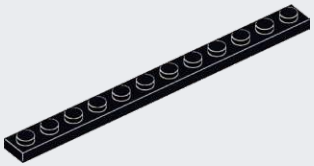

14x
JA10660001

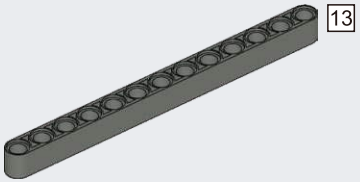

5x
JJ60090005

5x
JJ60100003

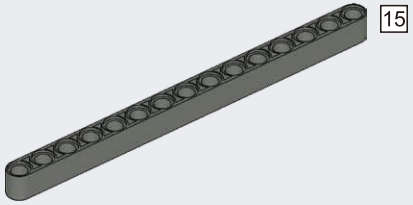

5x
JJ60100005

6x
JJ00560004

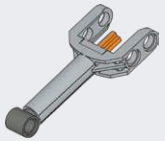

8x
2050JH80700001

1x
205RJV90340001

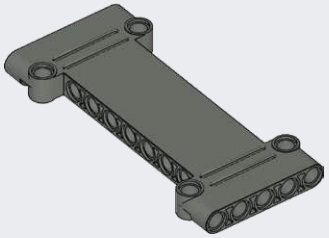

4x
JX41610004

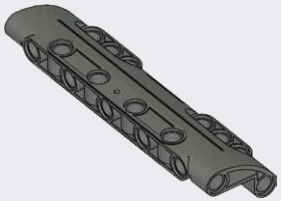

6x
JX40400003

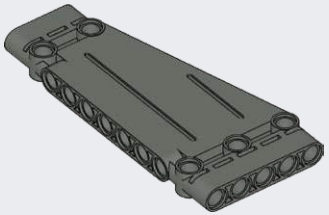

4x
JX40630005

2x
406AR0000000063

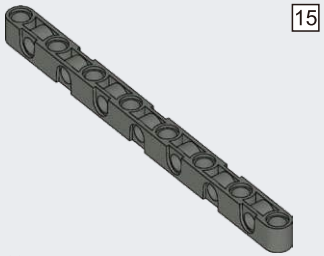

26x
JJ60790002

2x
JJ60790001

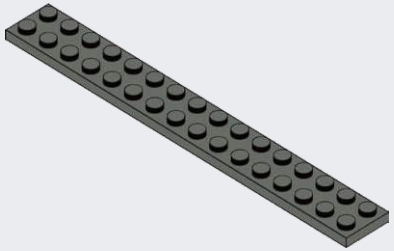

1x
JA10840002

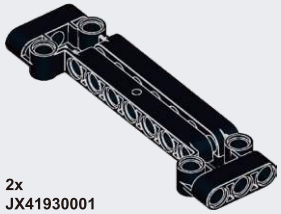

2x
JX41930001

CaDA® MASTER

www.doubleeagle-group.com

403ARC615070005