CaDA® MASTER

AMG

BOOK ONE

The Mercedes-AMG GT3 is synonymous for competitiveness. Week after week, it is proving its qualities in the world's hardest-fought customer sports series. Utmost reliability, impressive performance, excellent driveability and benchmark-setting safety have been among its characteristics ever since.

Motorsport is the battle against an opponent that refuses to stand still – time. Only those who keep moving and continue developing can stand the test of time. This is also the underlying philosophy of the Mercedes-AMG Customer Racing programme. Developing the finest vehicles, offering the most comprehensive programme and providing maximum support is not enough. Mercedes-AMG strives every single day to surpass themselves and to make their customers winners.

Mercedes-AMG GT3

Acceleration
3.0 s from 0 to 100 km/h

Output
404 kW/550 hp

Torque
650 Nm

AMG

AFFALTERBACH
AMG
MICHELIN

CaDA® MASTER

AMG

AFFALTERBACH
AMG
AMG
AMG

BUILT FOR MORE THAN JUST DISPLAY

Handcrafted
by
Torsten Oelschlager
Mercedes-AMG
Germany

AMG

AMG
AMG

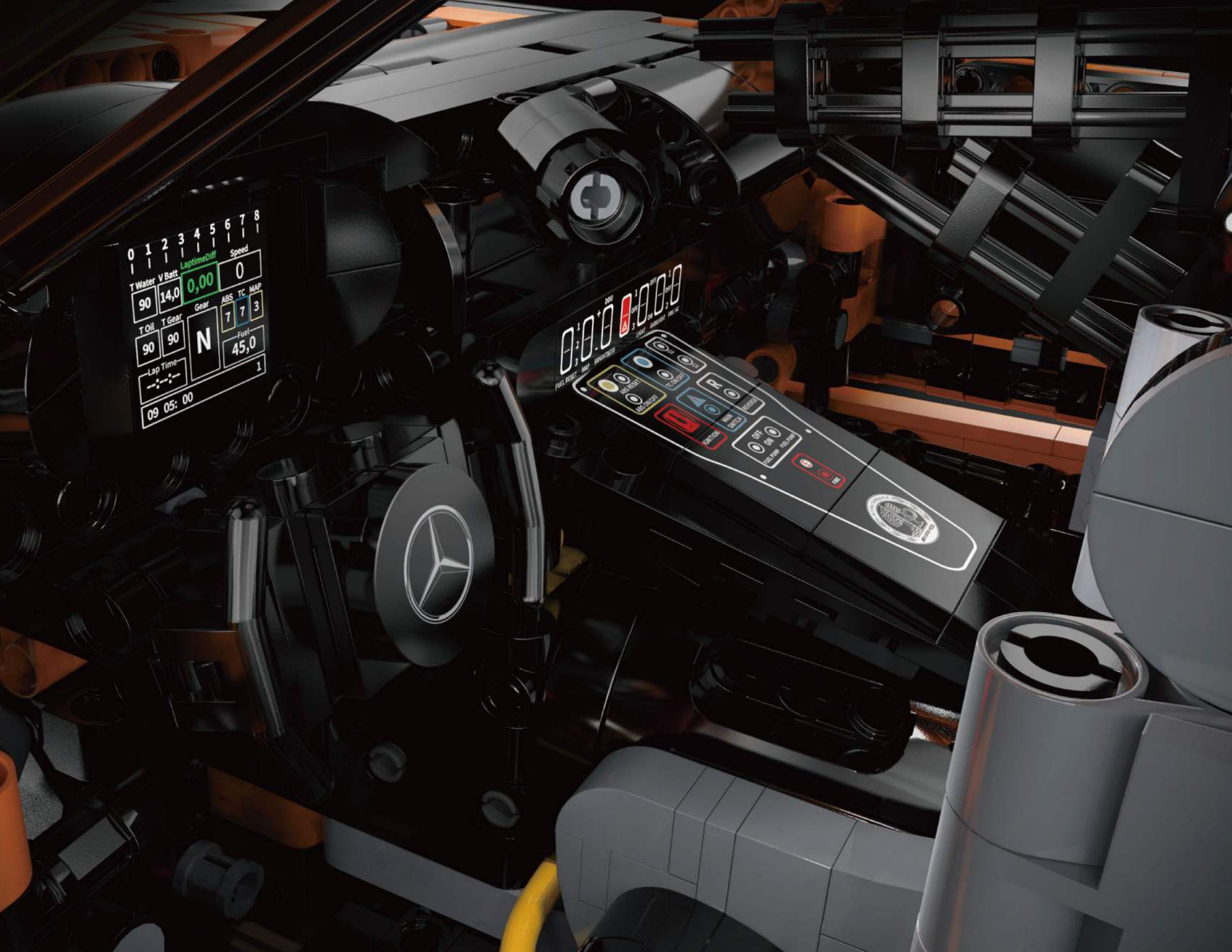
0 1 2 3 4 5 6 7 8
LaptimeDiff
Speed
T Water
V Batt
0,00
0
90
14,0
ABS
TC
MAP
7
7
3
Gear
T Oil
T Gear
90
90
N
Fuel
45,0
Lap Time
1
09 05: 00
FUEL RESET
MAP
BRIGHTNESS
DOU
OFF
ON
LIGHT
MAIN SWITCH
FUEL PUMP
IGNITION
TC ON/OFF
ABS RESET
ABS ON/OFF
PASSES
OFF
ON
FUEL PUMP
FUEL PUMP

T Water
42
V Batt
13.1
LaptimeDiff
0.00
Speed
0
T Oil
23
T Gear
19
Gear
N
ABS
6
TC
6
MAP
3
Lap Time
01:52:97
Fuel
1.91
DDU 9
RADIO
DRINK
NEUTRAL
CHRONO
SCHROTH

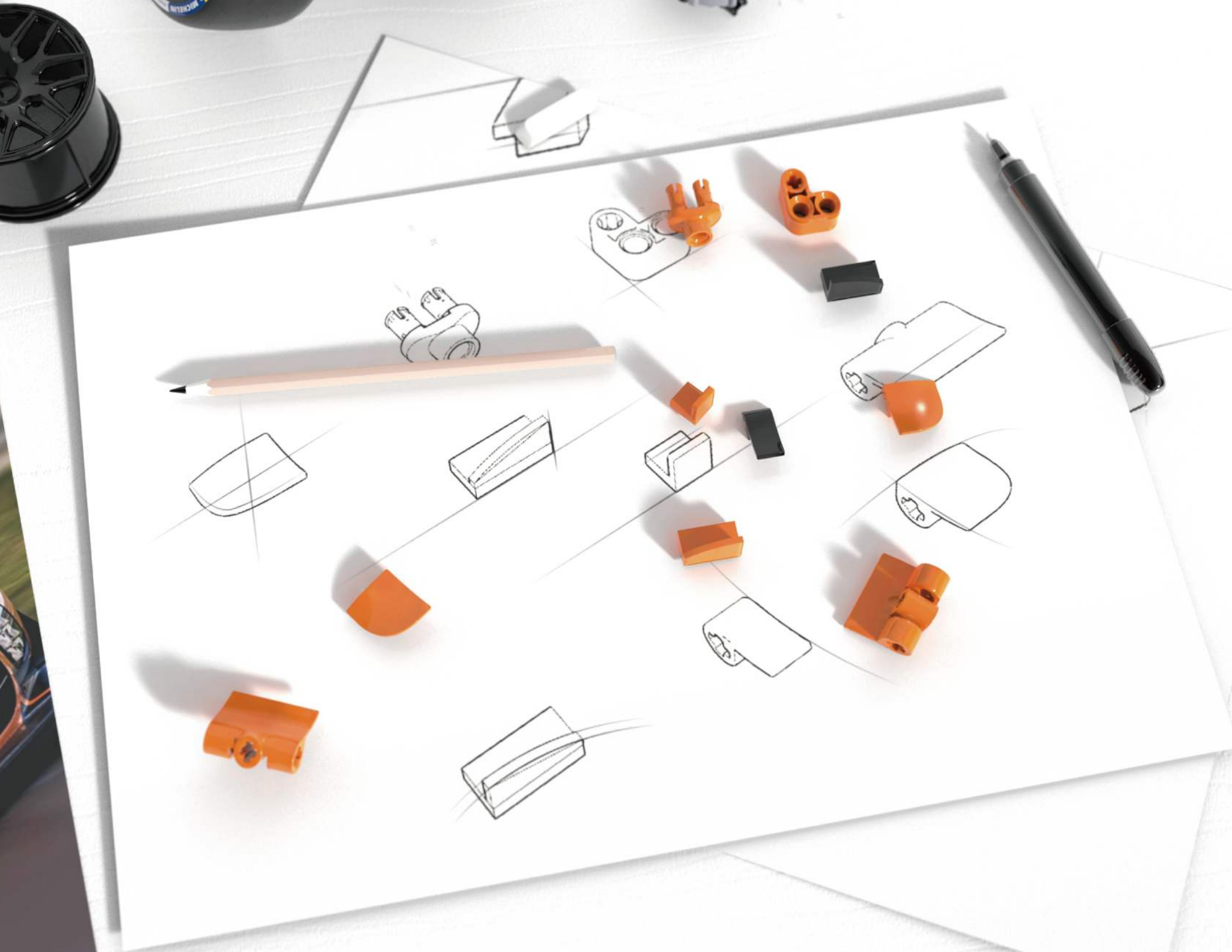

MICHELIN
PILOT SPORT

CENTRAL LOCK

CRAFTED FOR LIFELIKE DETAIL

PNEUMATIC AIR LIFTING SYSTEM

A functional pneumatic air lifting system is integrated into the model, allowing the car to be elevated just like in real-life racing, enabling tire changes to be simulated with the same precision seen during GT3 racing events.

STEERING COLUMN ADJUSTMENT

6 - SPEED RACING GEARBOX

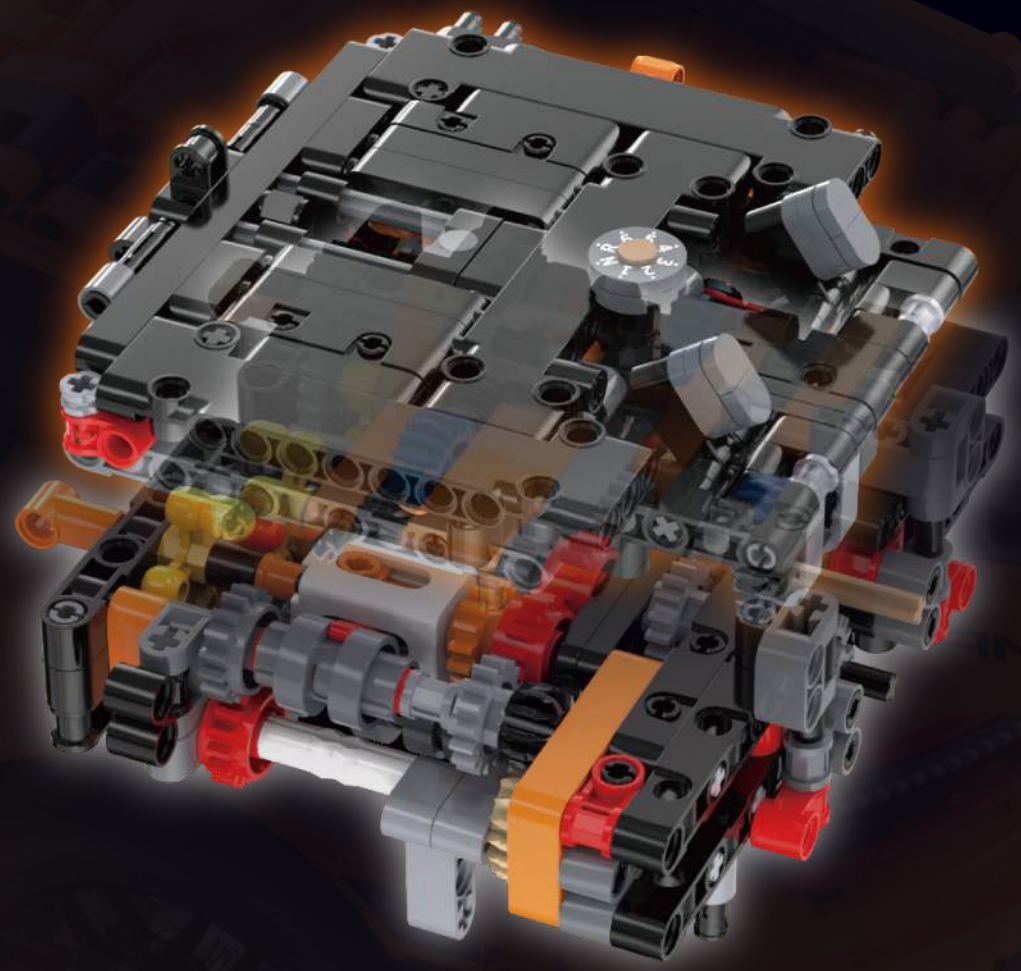

DEVELOPERS' APPROACH

When CaDA R&D embarked on this project, the goal was to create a model that not only provides an enjoyable building experience but also offers users an introductory understanding of automotive structure and engineering principles.

In designing its appearance, CaDA Team prioritized accurately replicating the iconic shape of the Mercedes-AMG GT3, ensuring the key characteristics of the car are preserved while maintaining balanced proportions. Special attention was given to detailed elements such as the Mercedes-AMG GT3's characteristic grille, body contours, and taillights, all thoughtfully rendered in the form of building blocks.

The design meticulously mirrors the layout of the real Mercedes-AMG GT3, with key components faithfully reproduced, including the rear gearbox, front mid-mounted engine, racing seats, tires, and even functional air jacks, mirroring the pneumatic air lifting system used during GT3 racing events.

AMG
MICHELIN

AMG

AMG
AMG
AMG
MICHELIN
MICHELIN

AMG
AMG
X40
p Wasser
Handcrafted
by
Torsten Oberhänger
Mercedes-AMG
Germany
07/2016

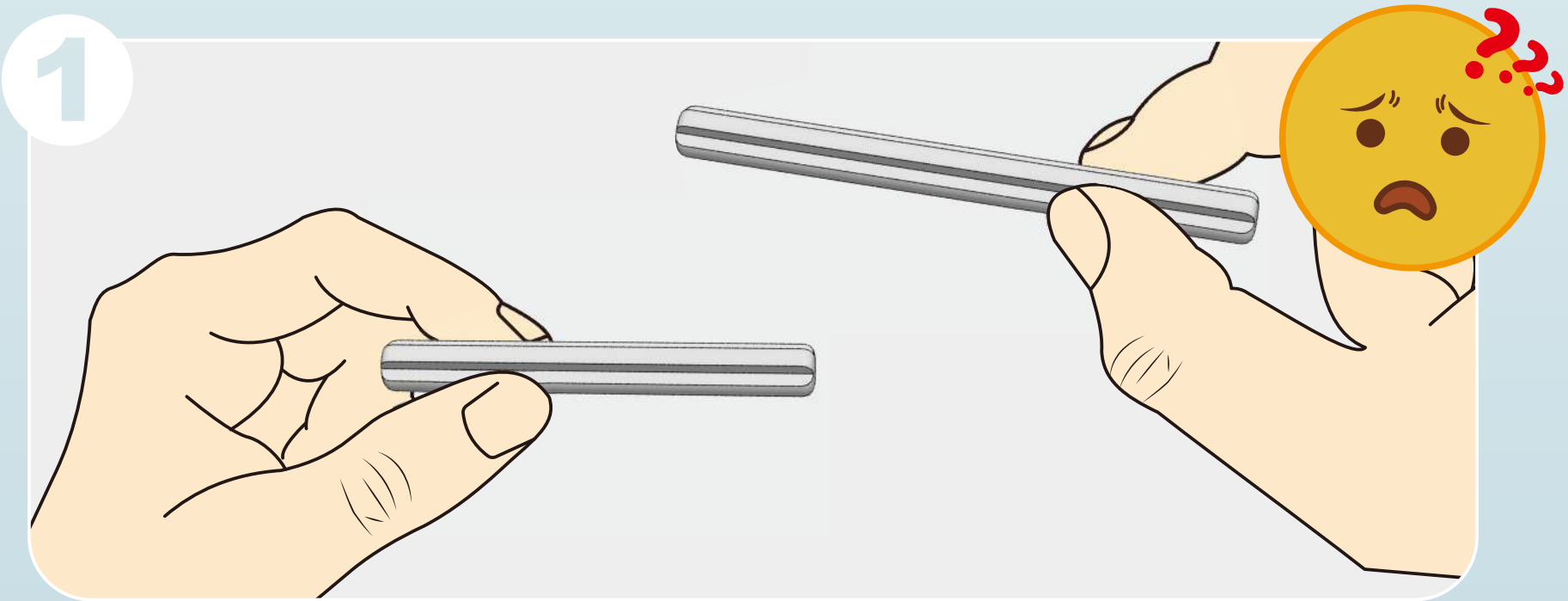
1

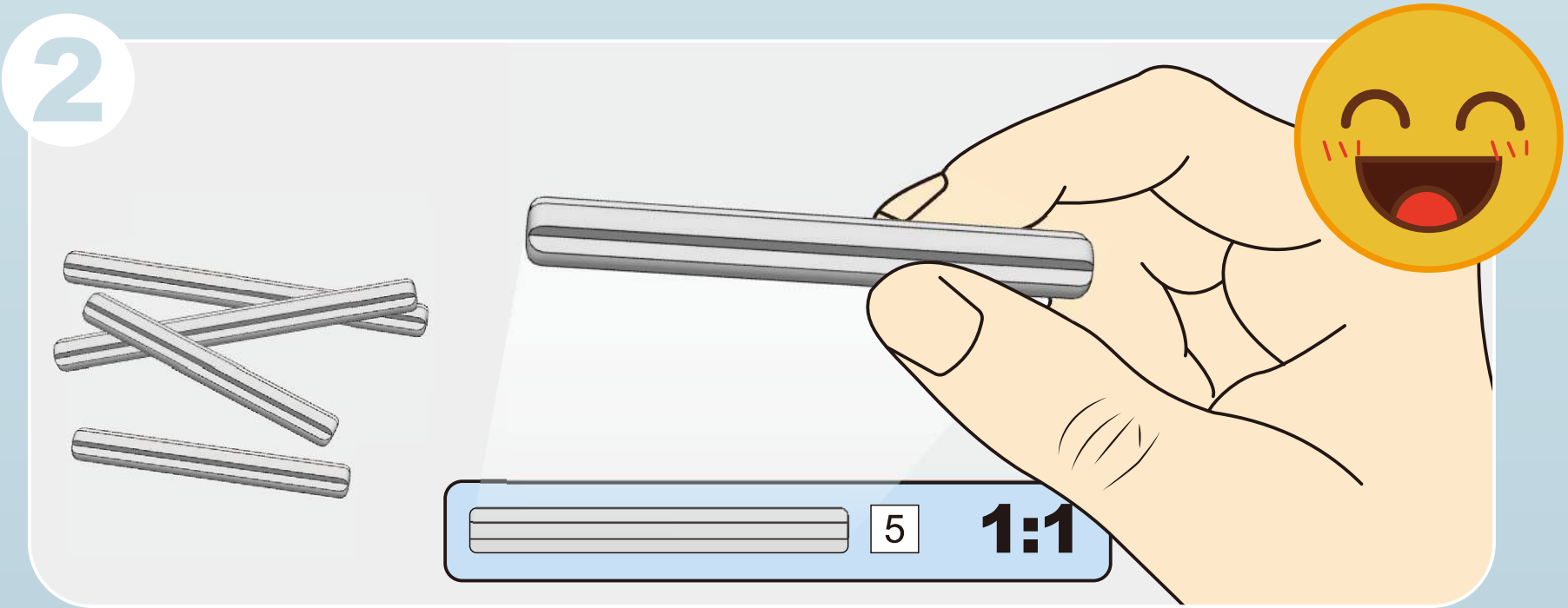
2
5
1:1

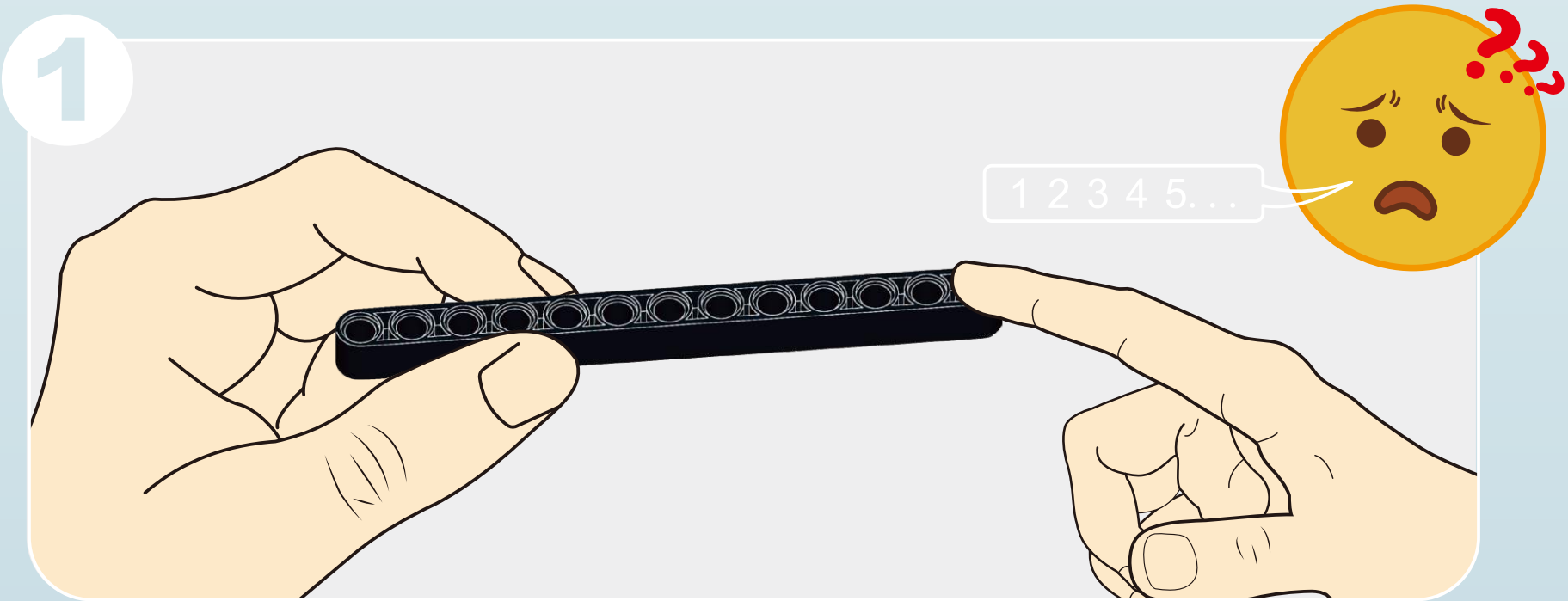
1
1 2 3 4 5. . .

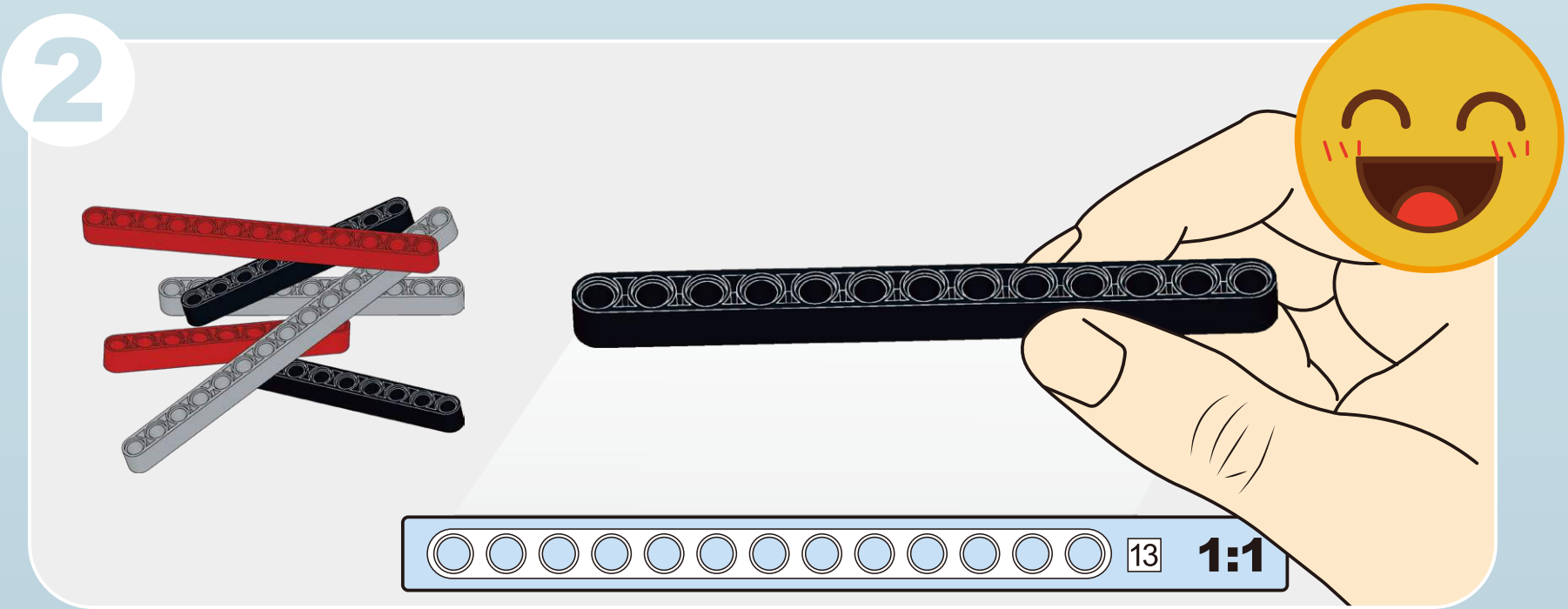
2
13
1:1

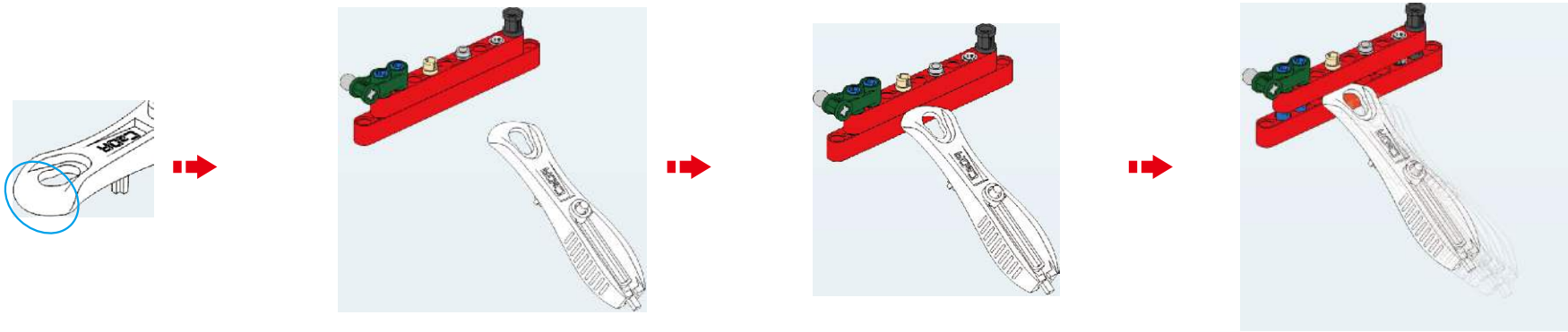

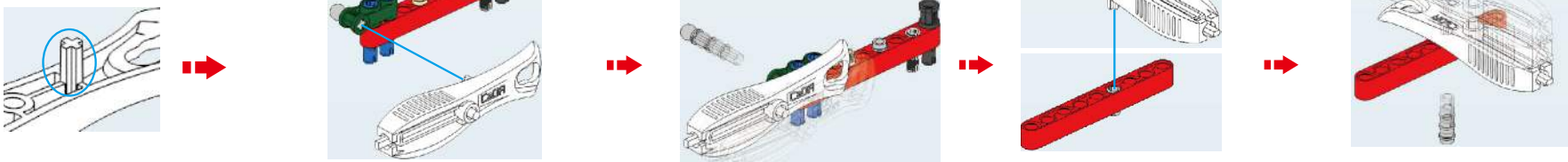

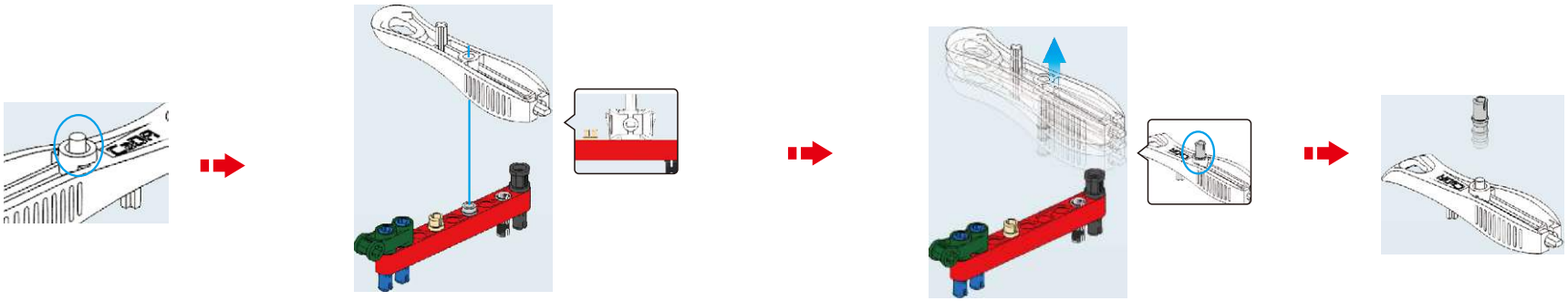

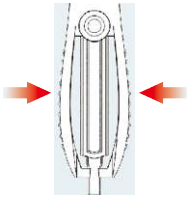

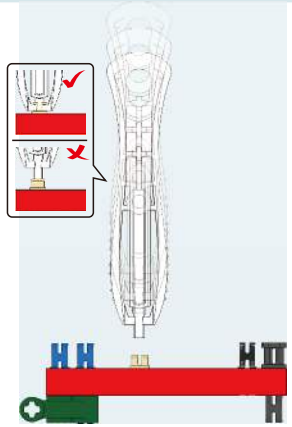

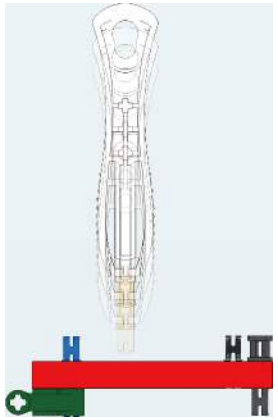

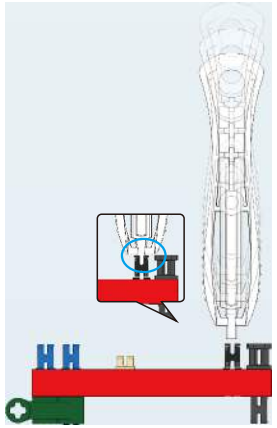

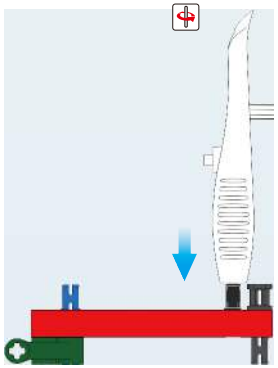

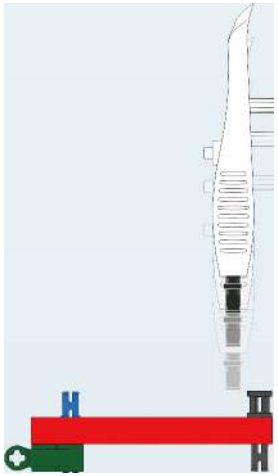

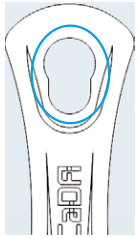

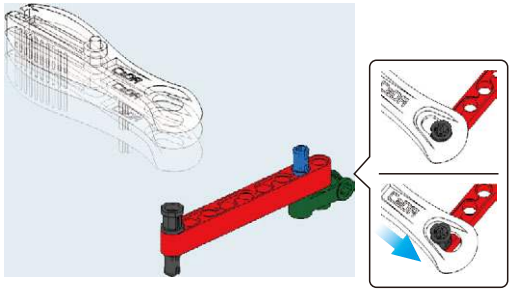

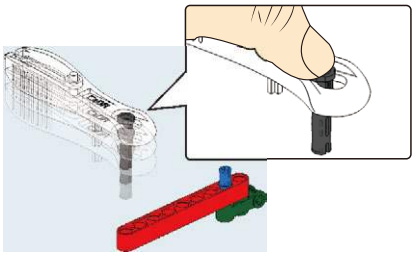

A

BOX 1 / BAG 1

1

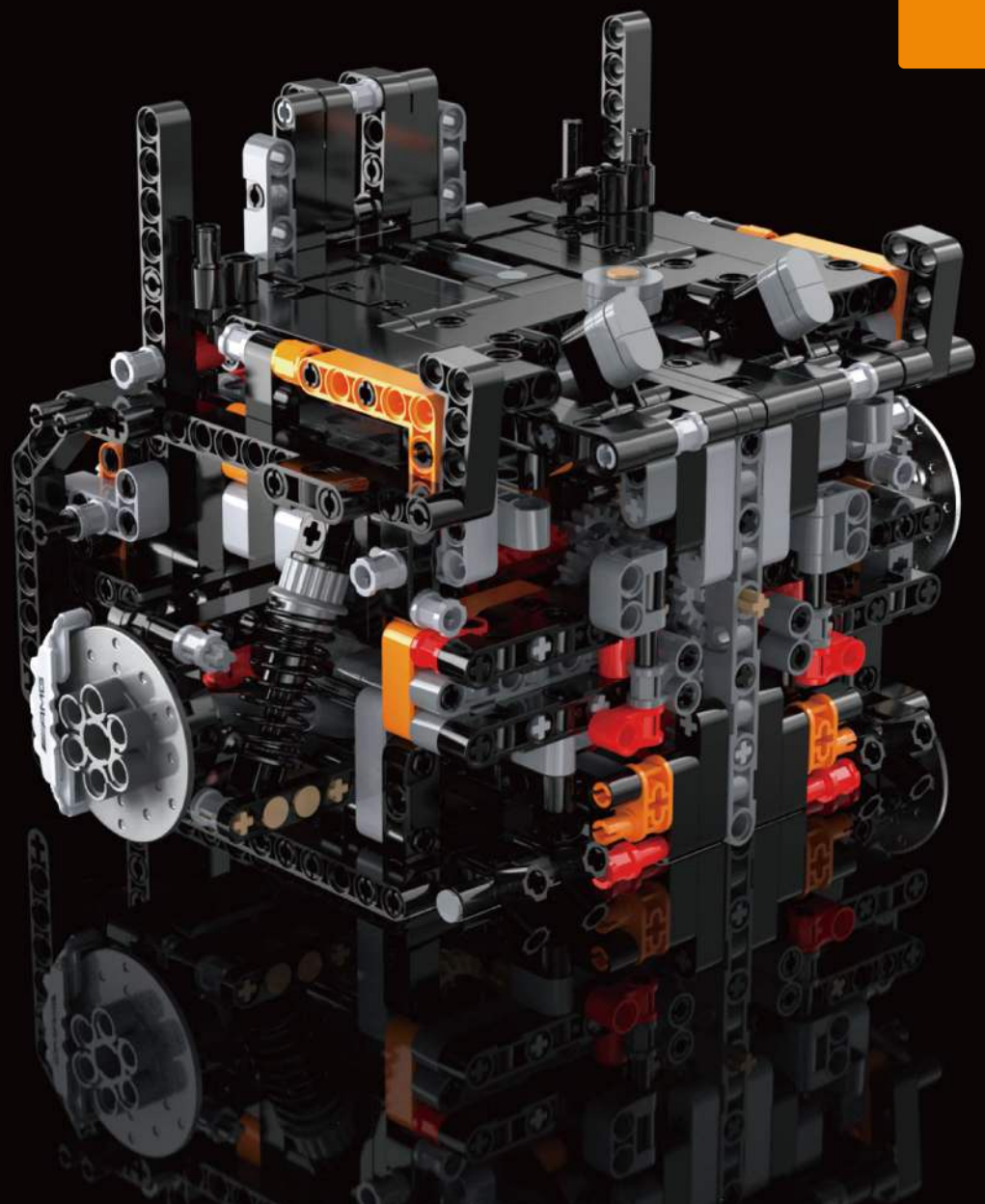

A

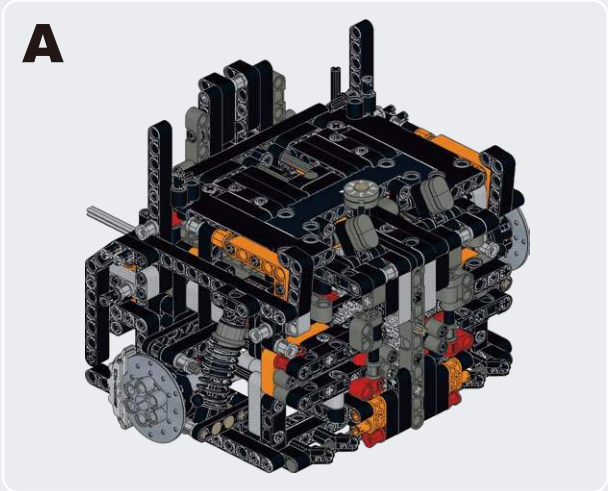

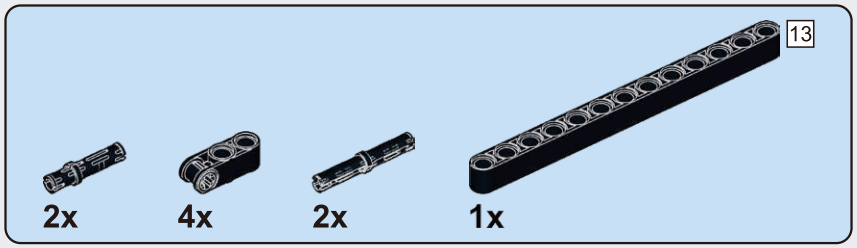

A1

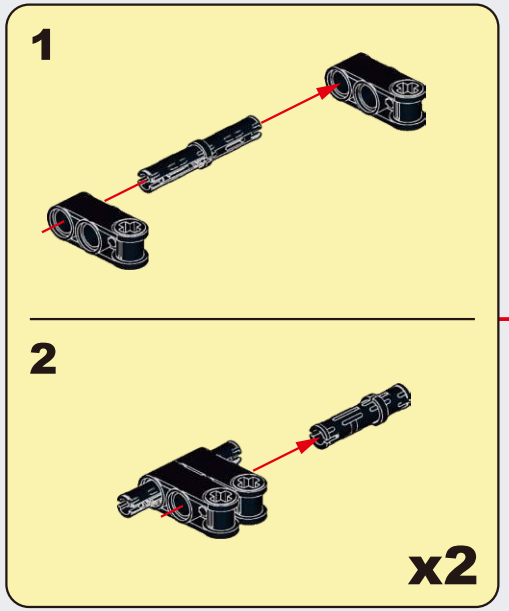

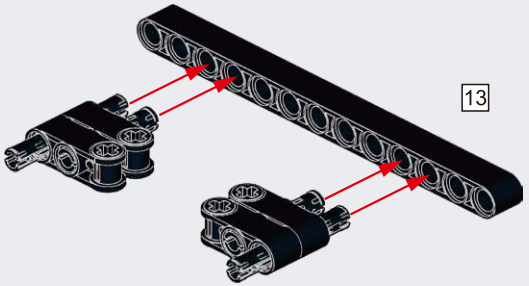

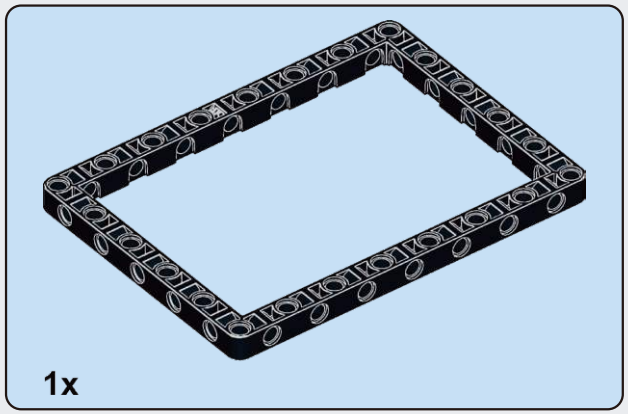

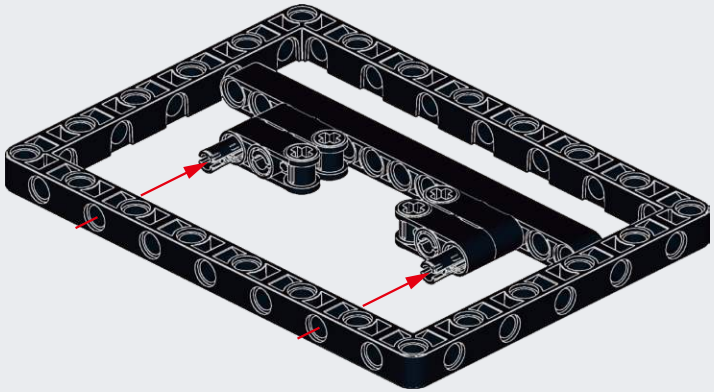

A2

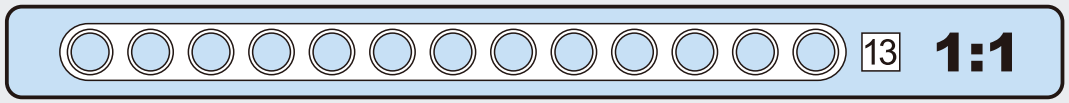

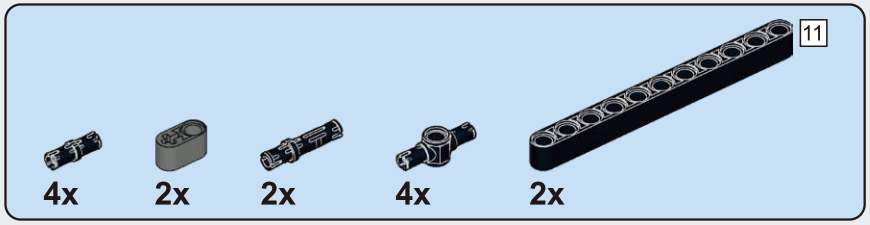

A3

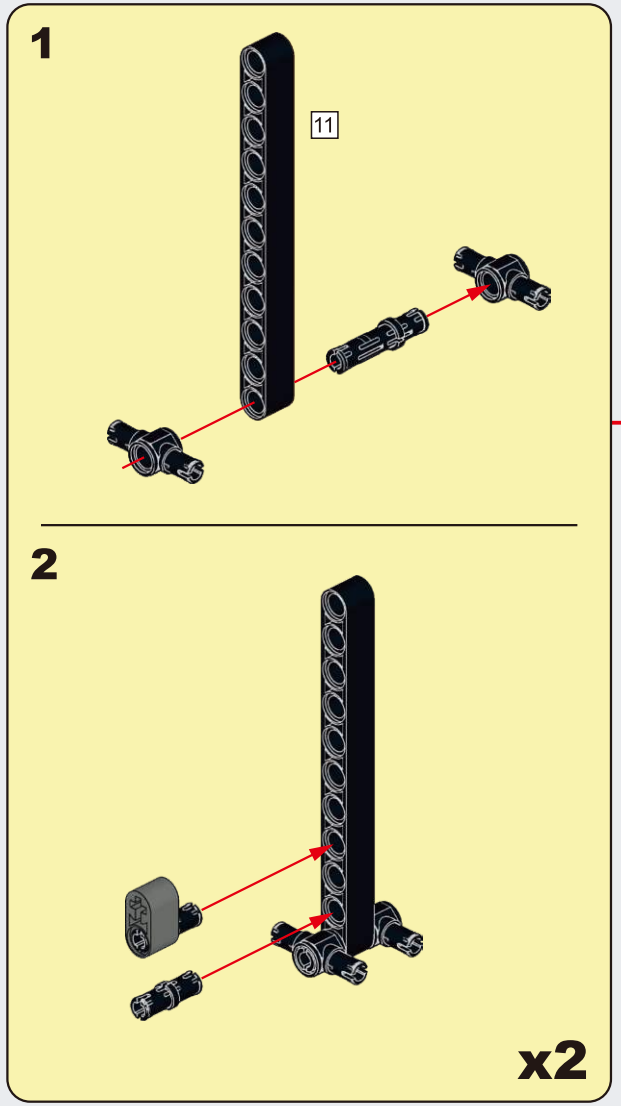

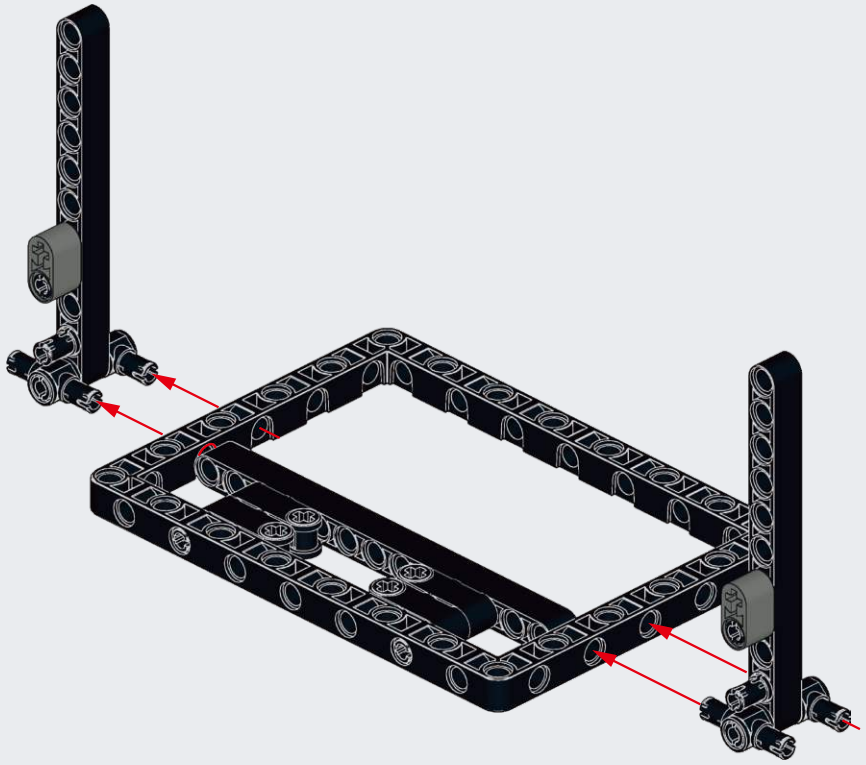

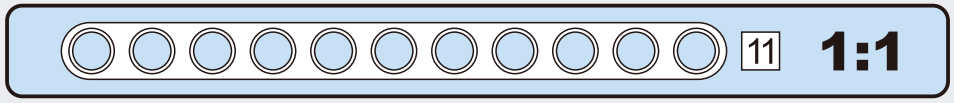

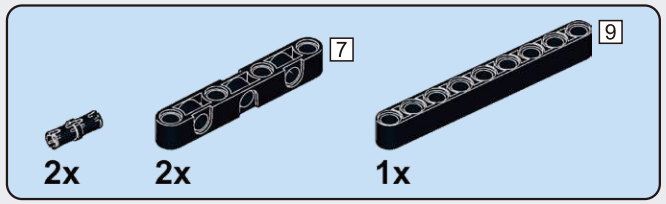

A4

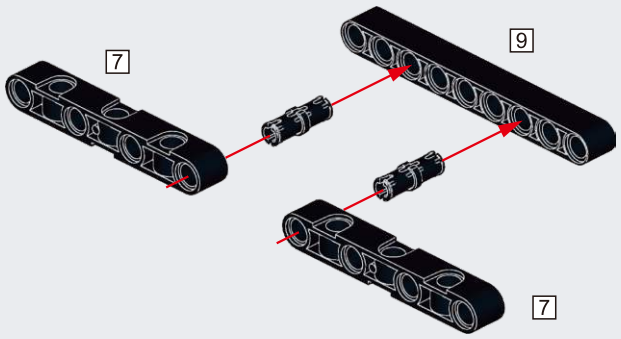

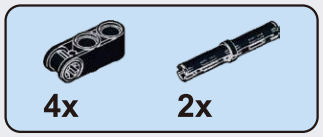

A5

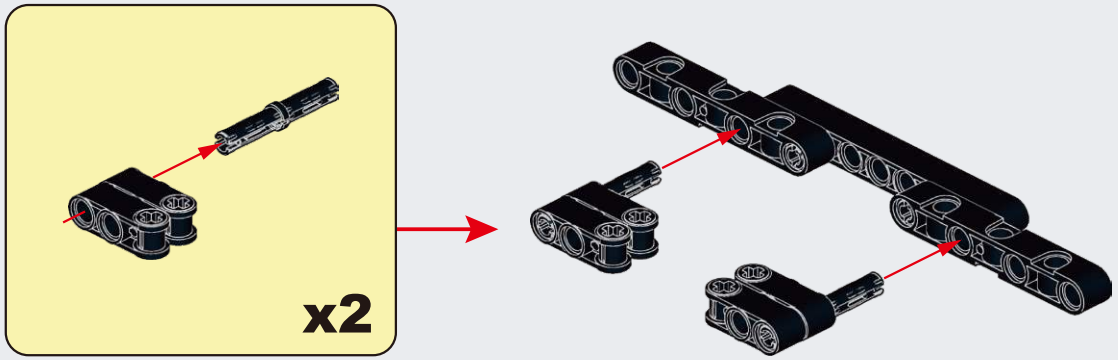

A6

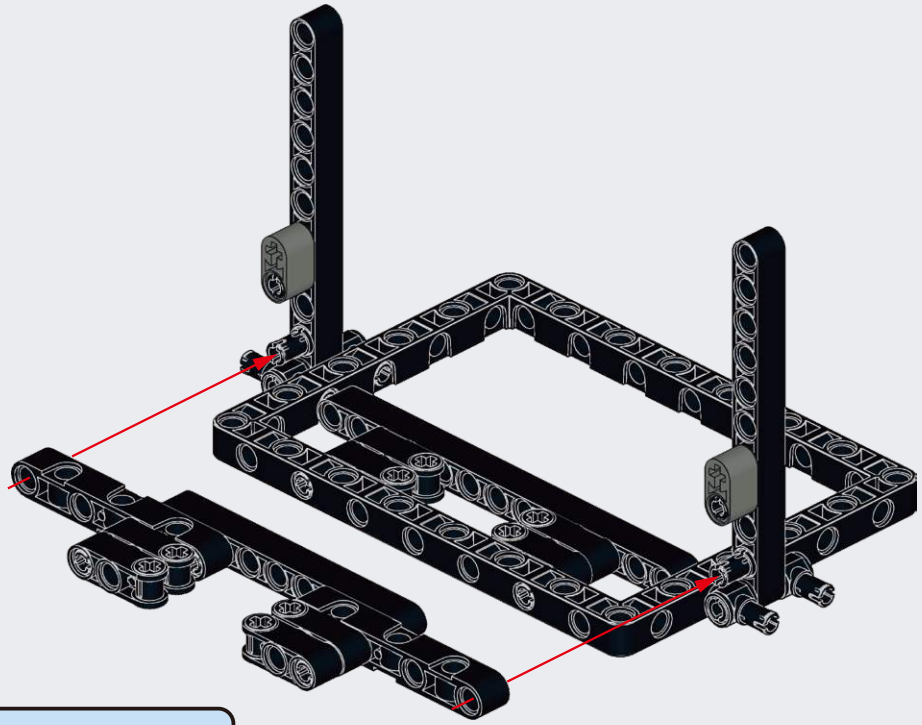

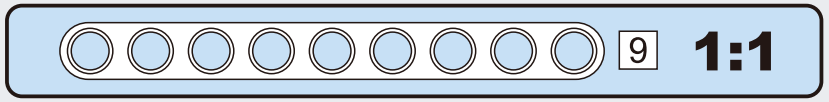

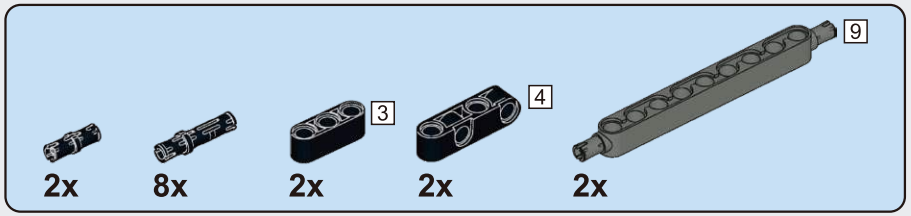

A7

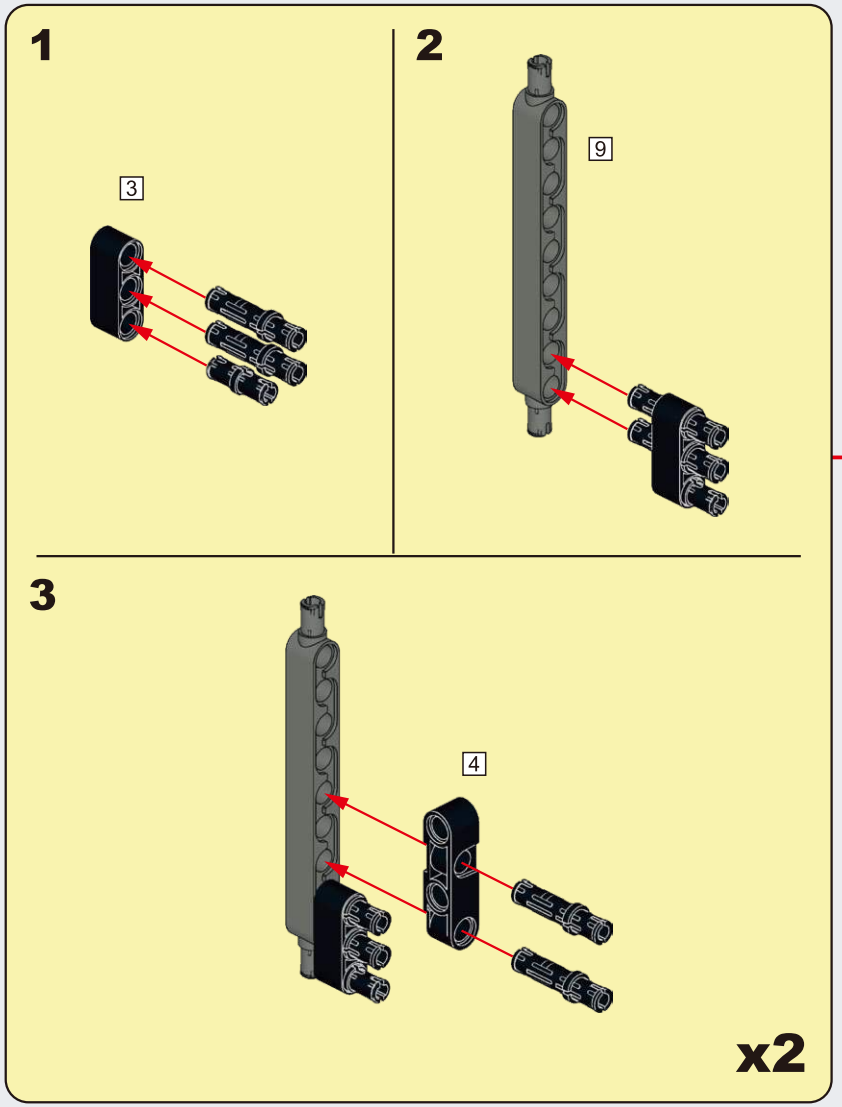

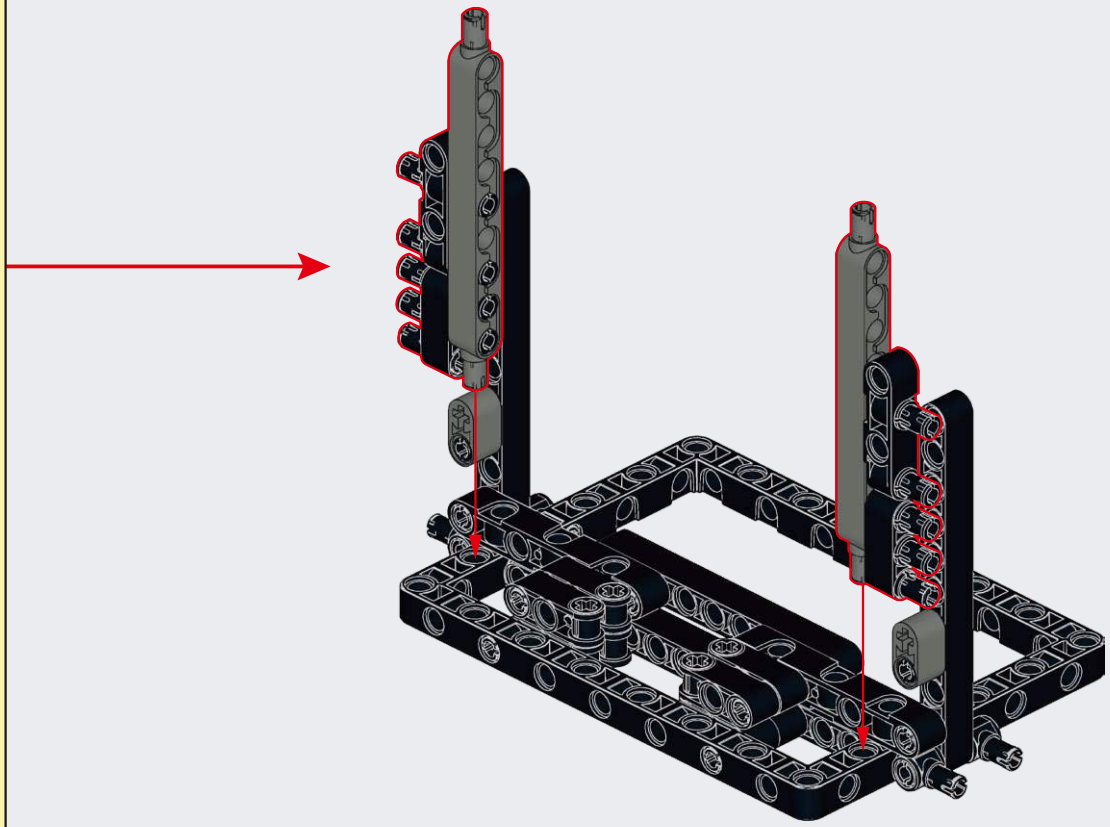

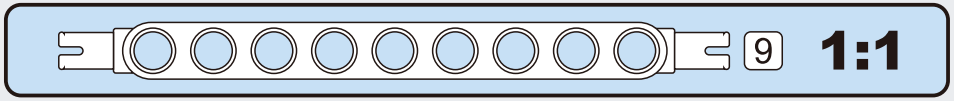

A8

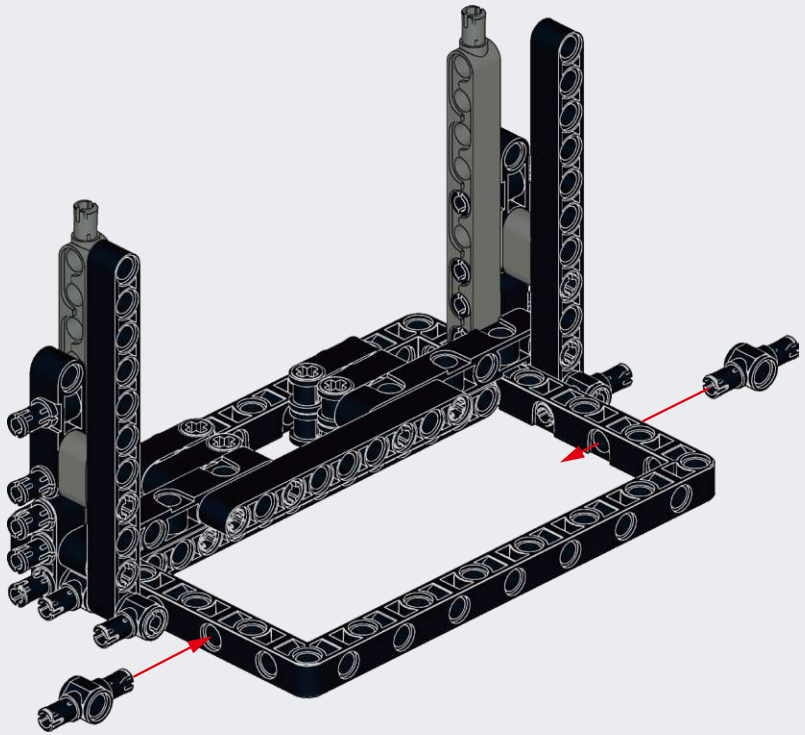

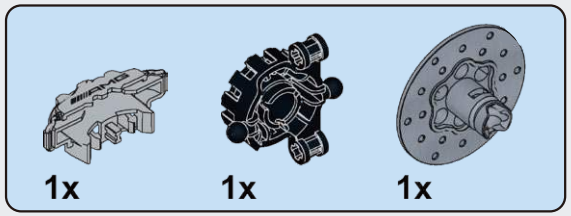

A9

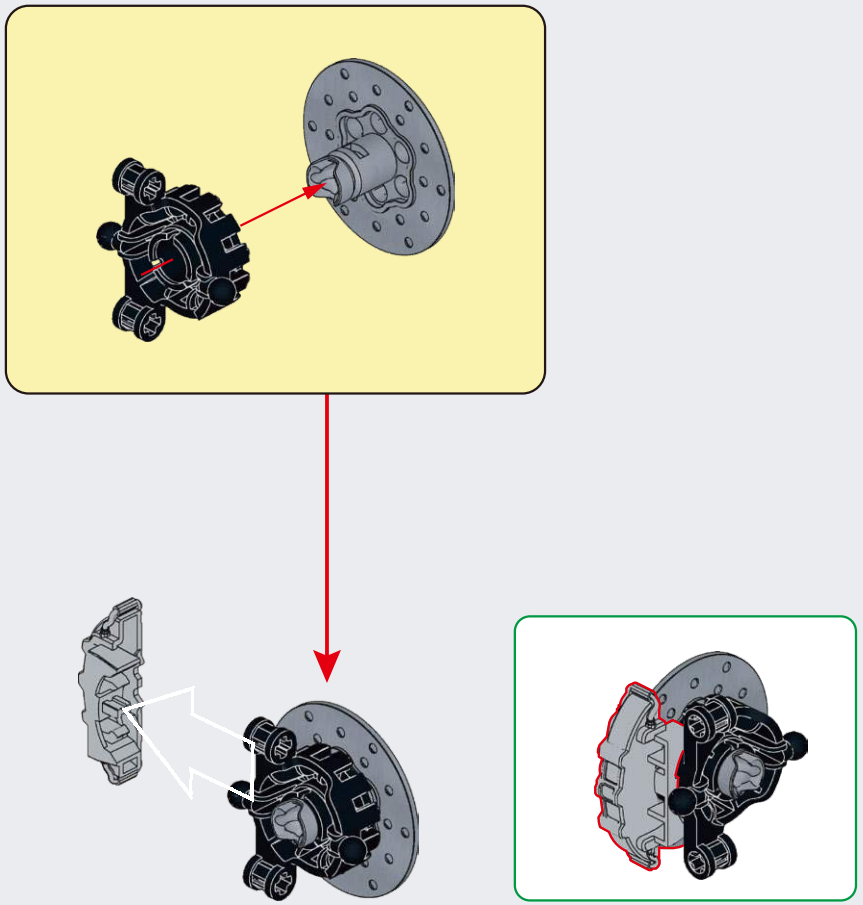

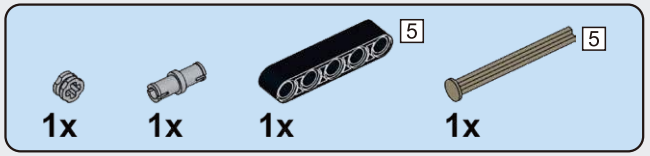

A10

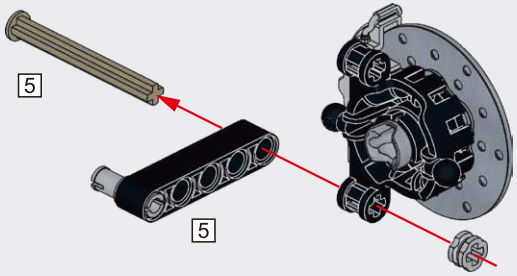

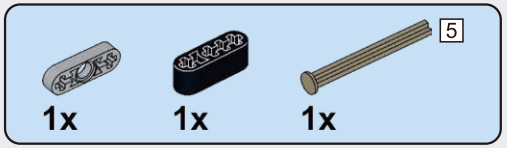

A11

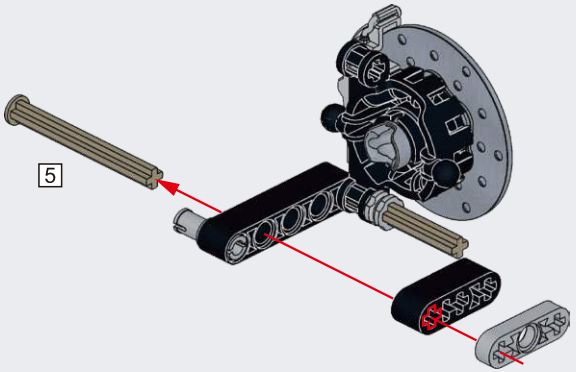

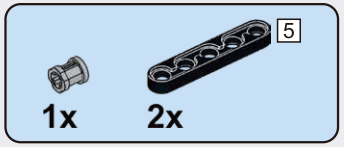

A12

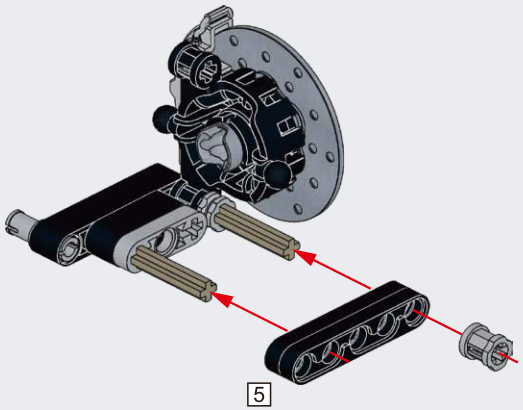

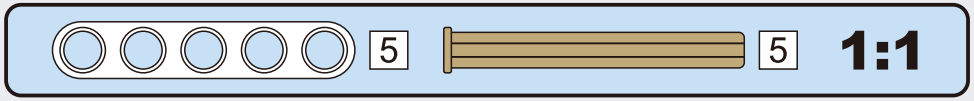

A13

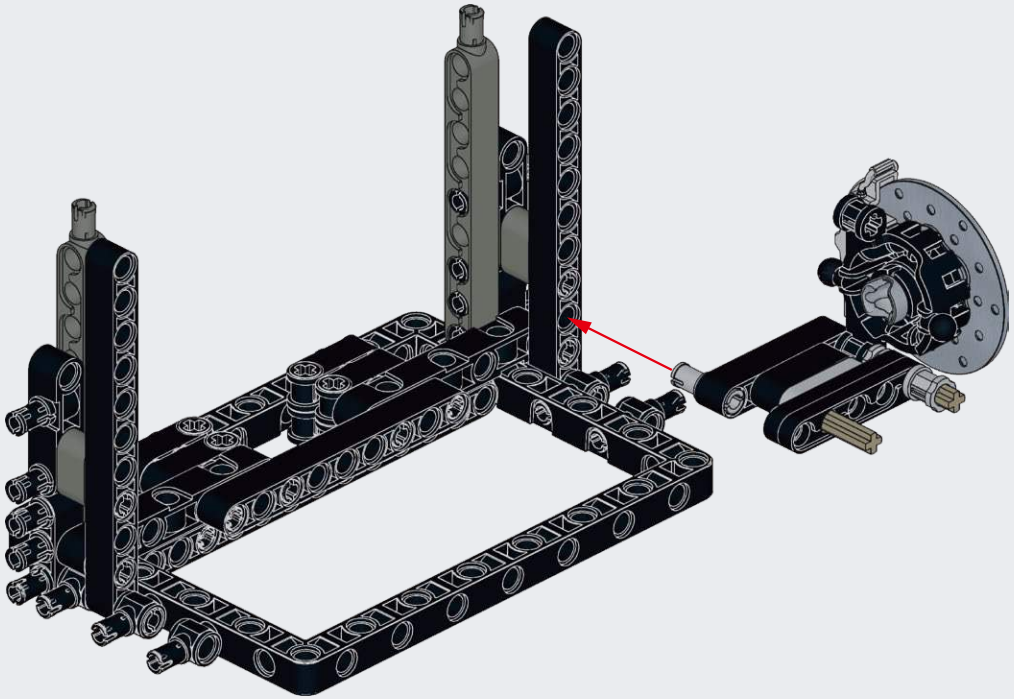

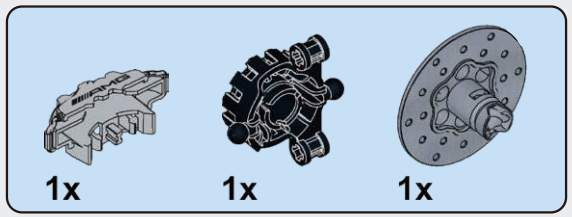

A14

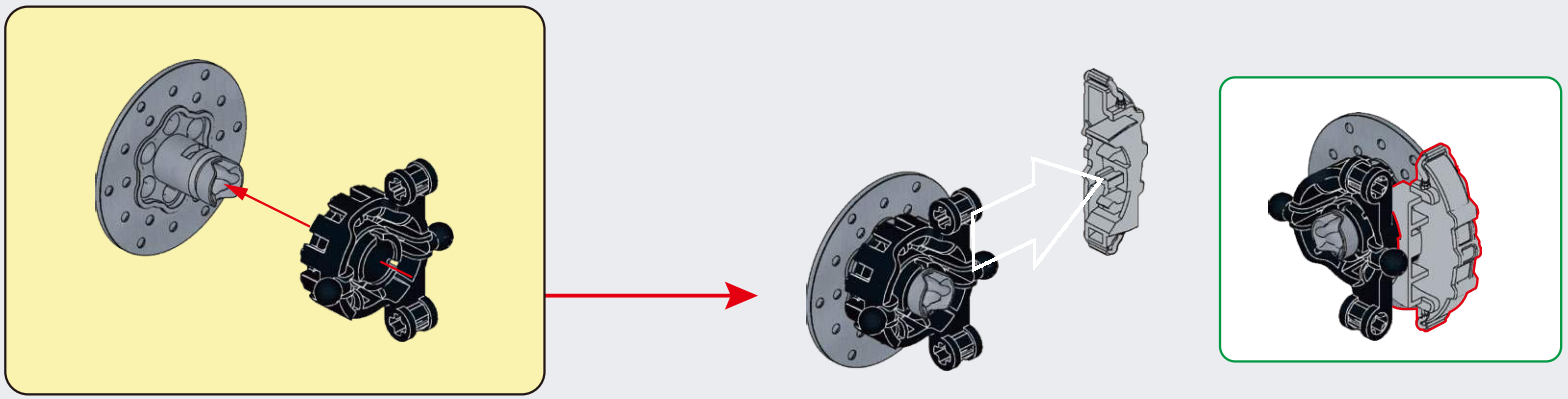

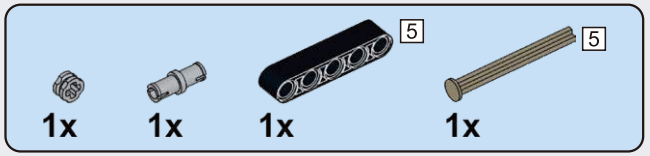

A15

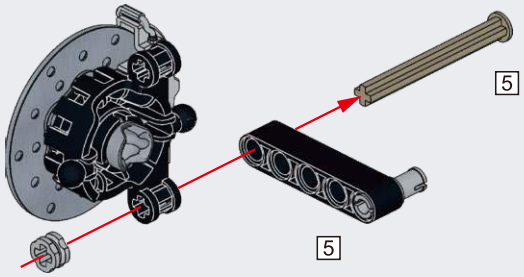

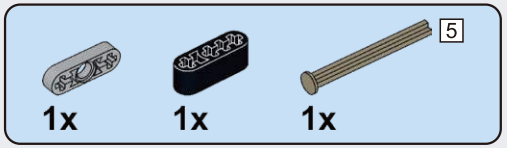

A16

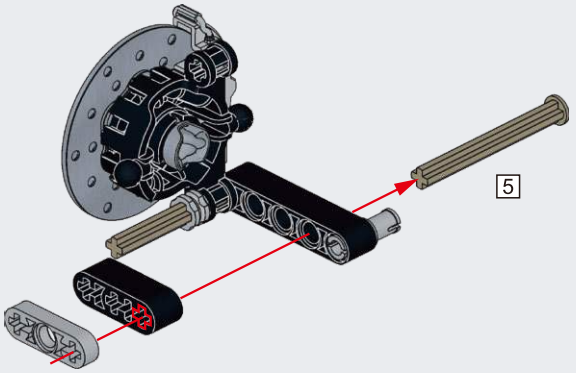

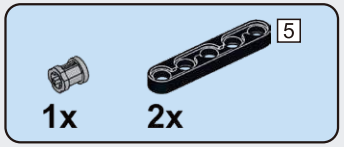

A17

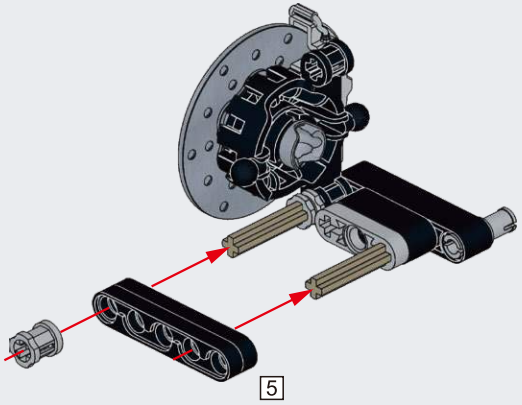

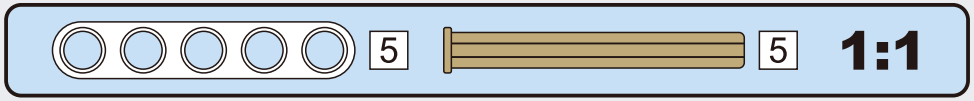

A18

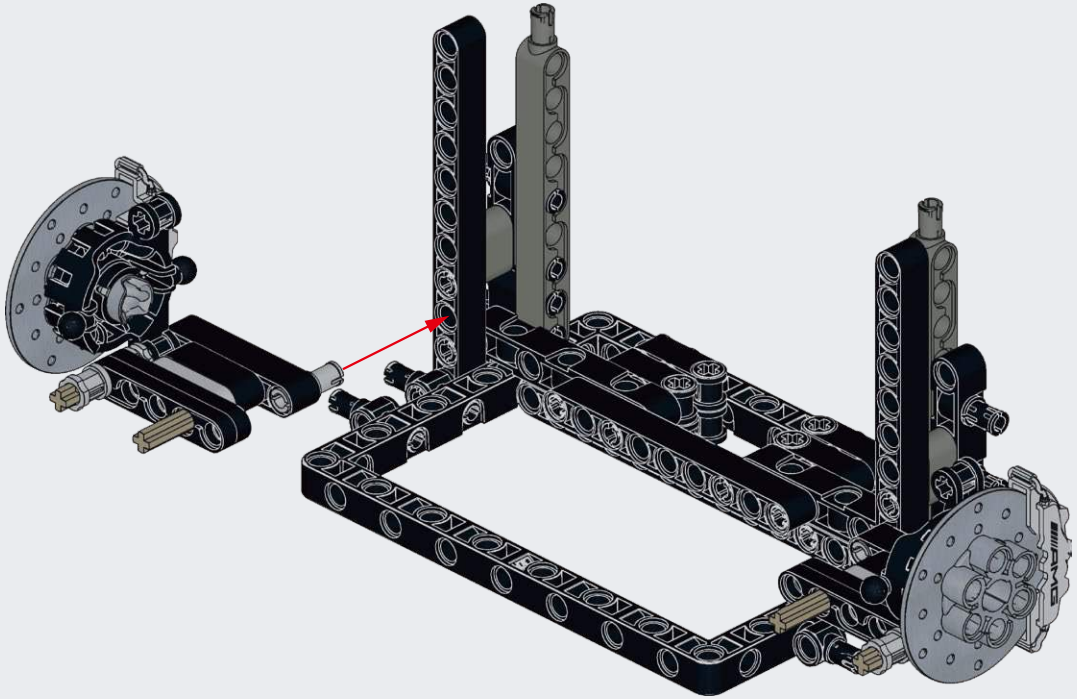

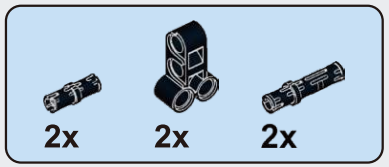

A19

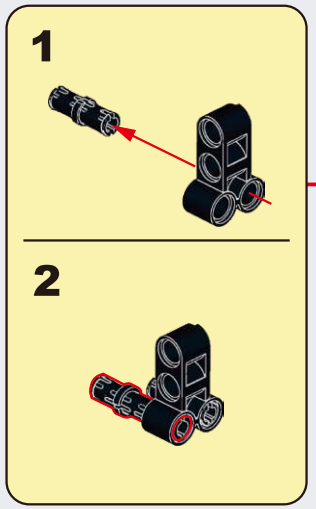

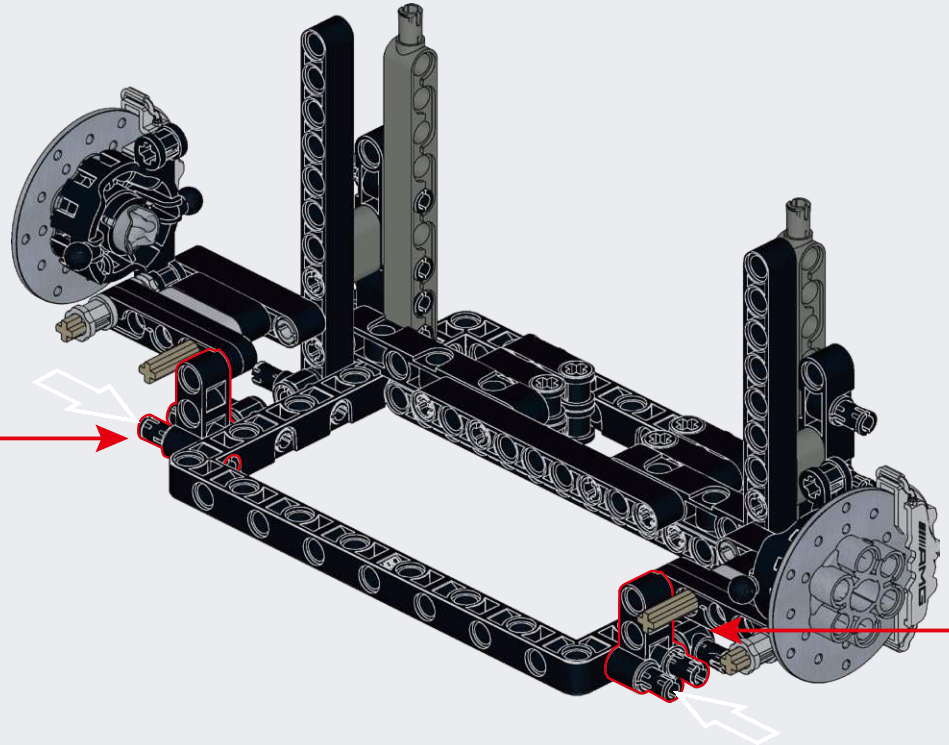

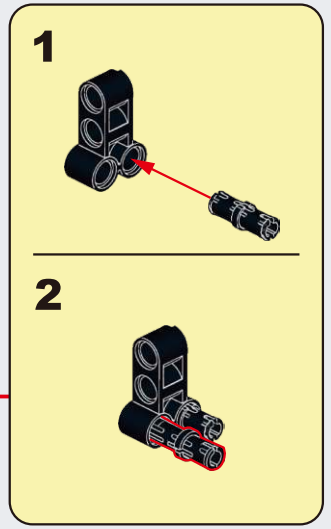

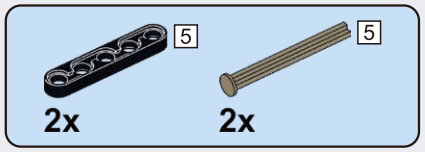

A20

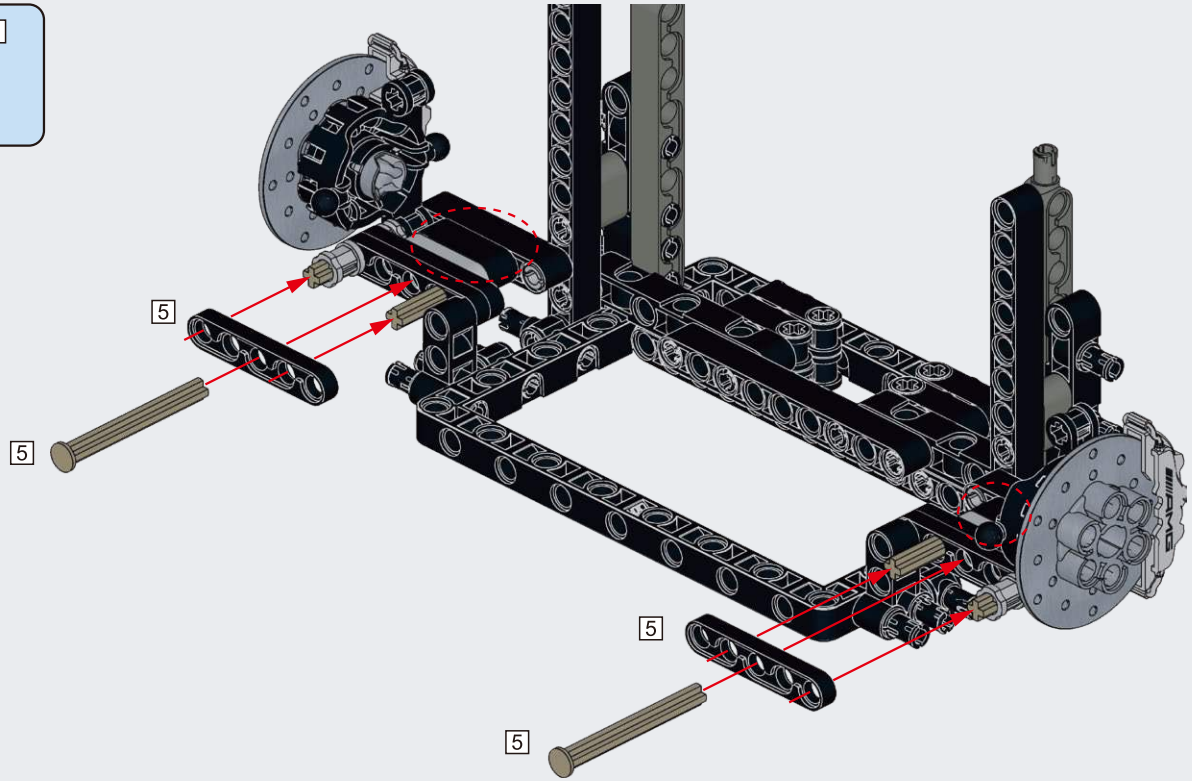

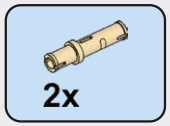

A21

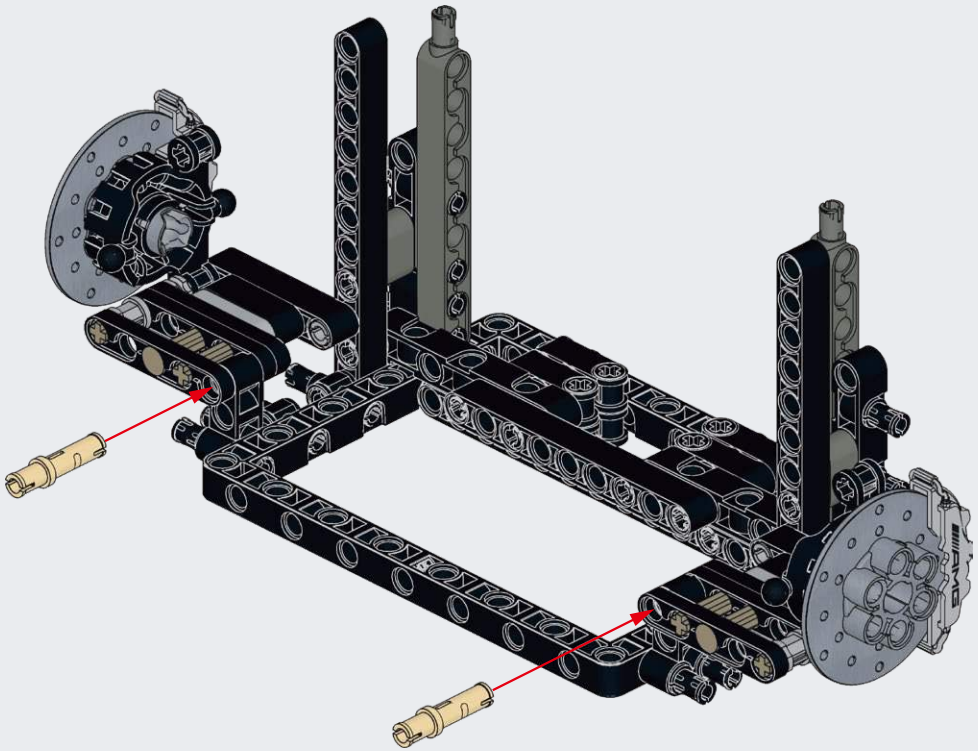

A22

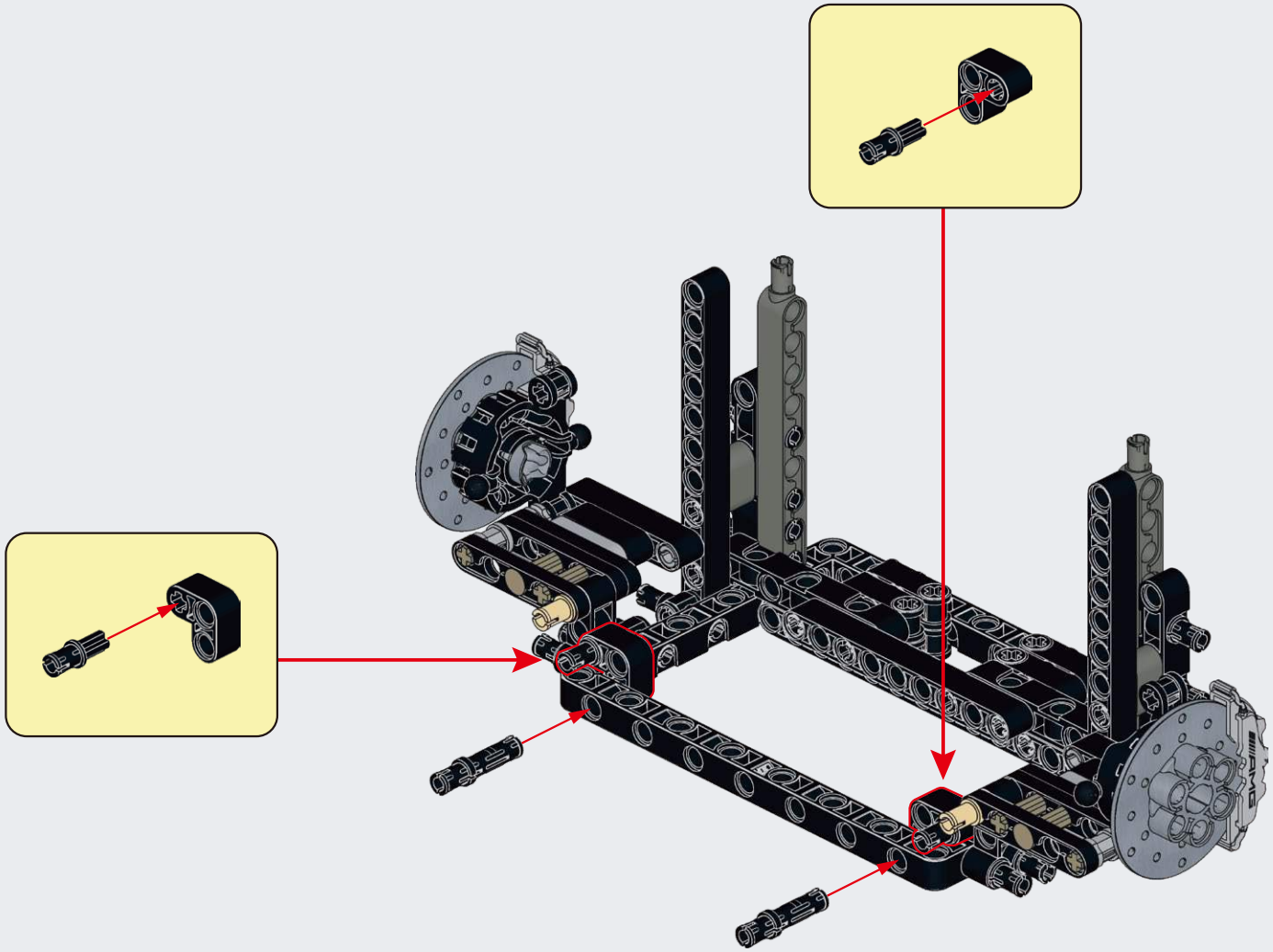

A23

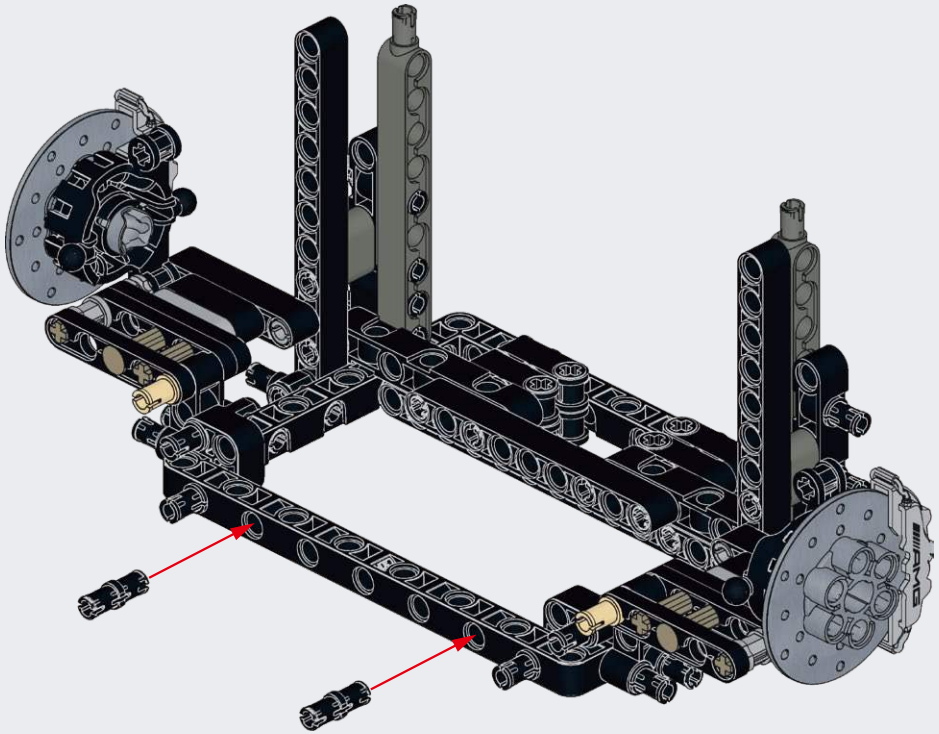

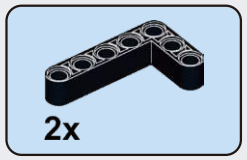

A24

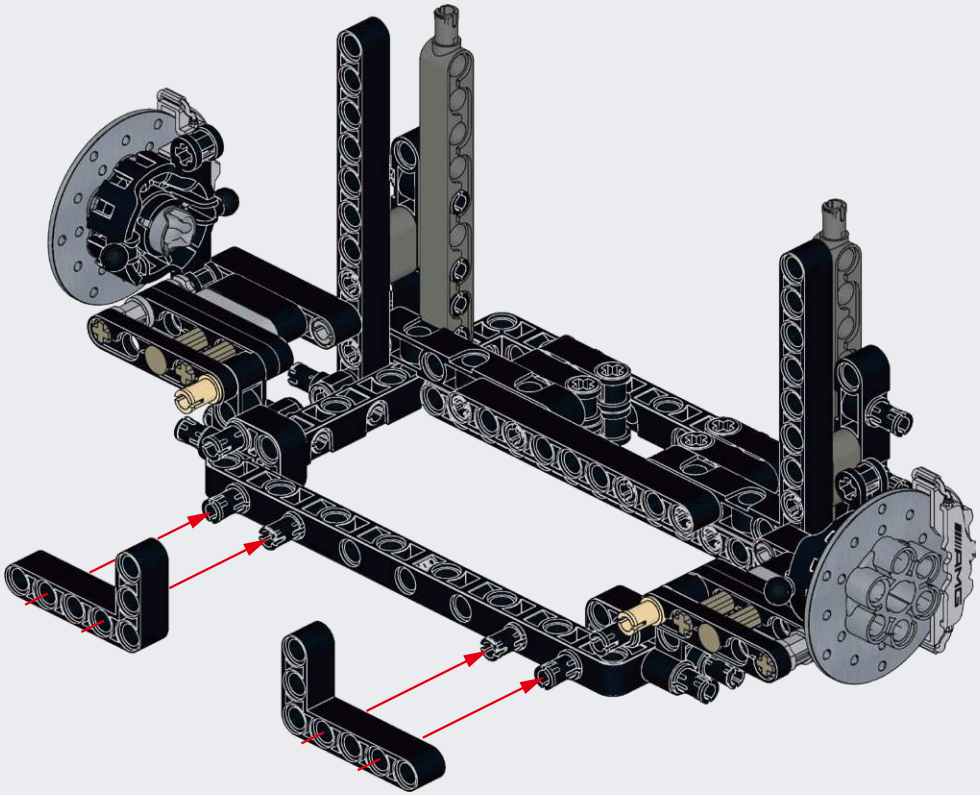

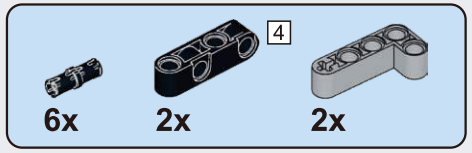

A25

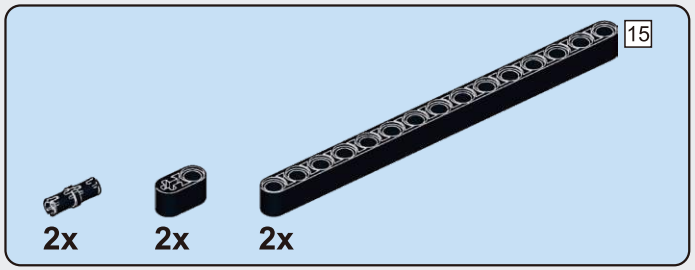

A26

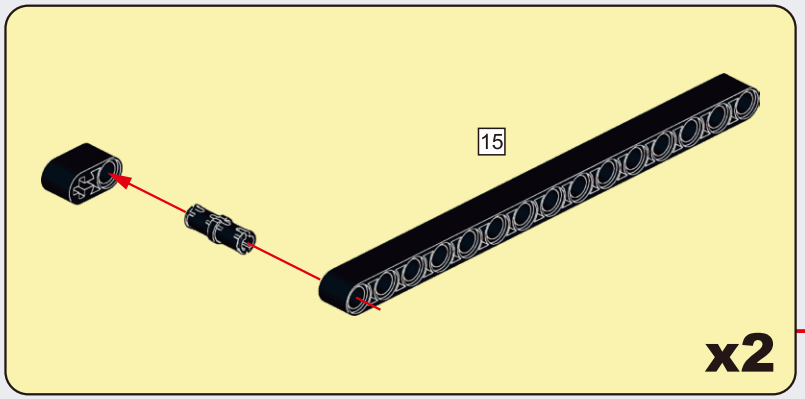

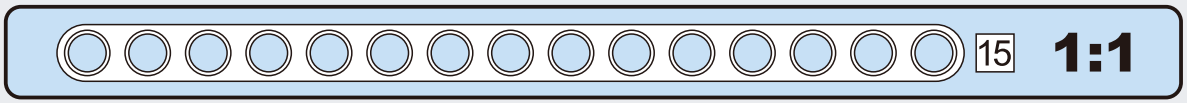

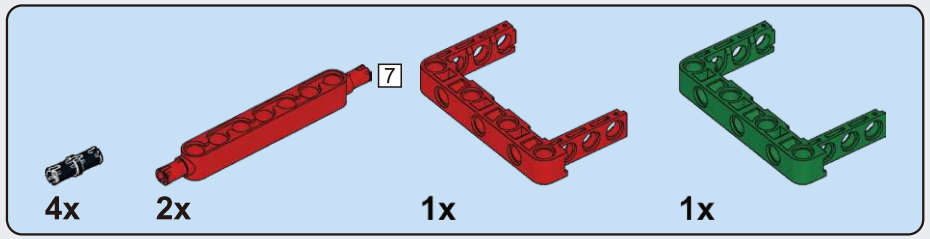

A27

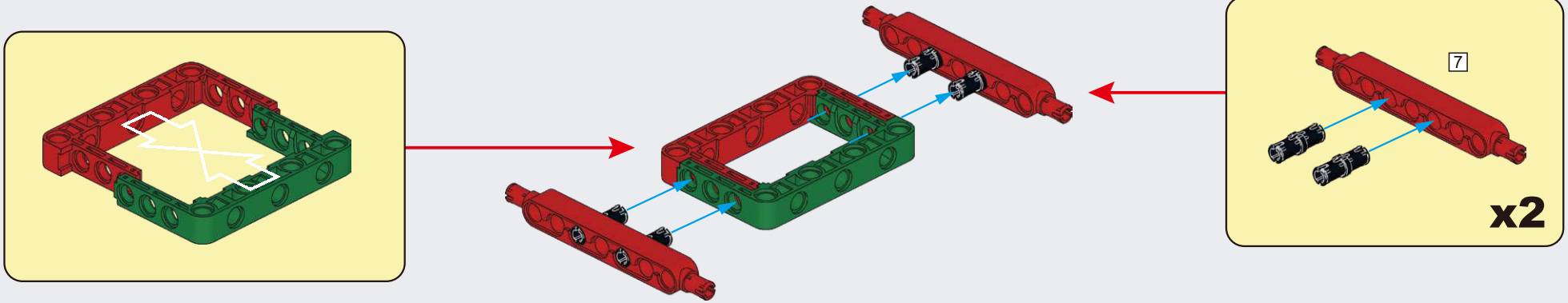

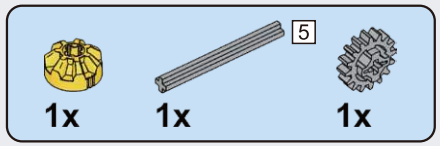

A28

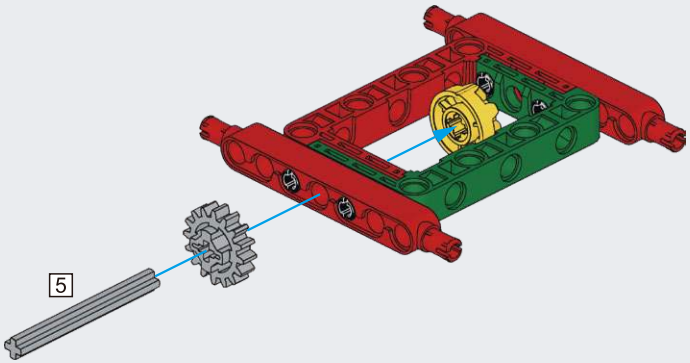

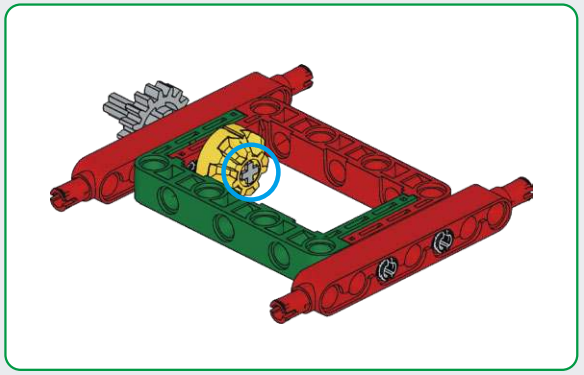

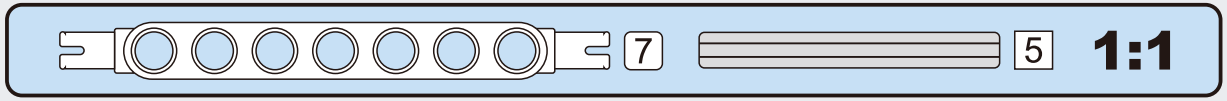

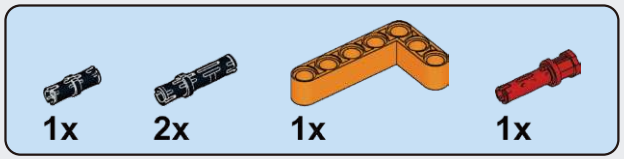

A29

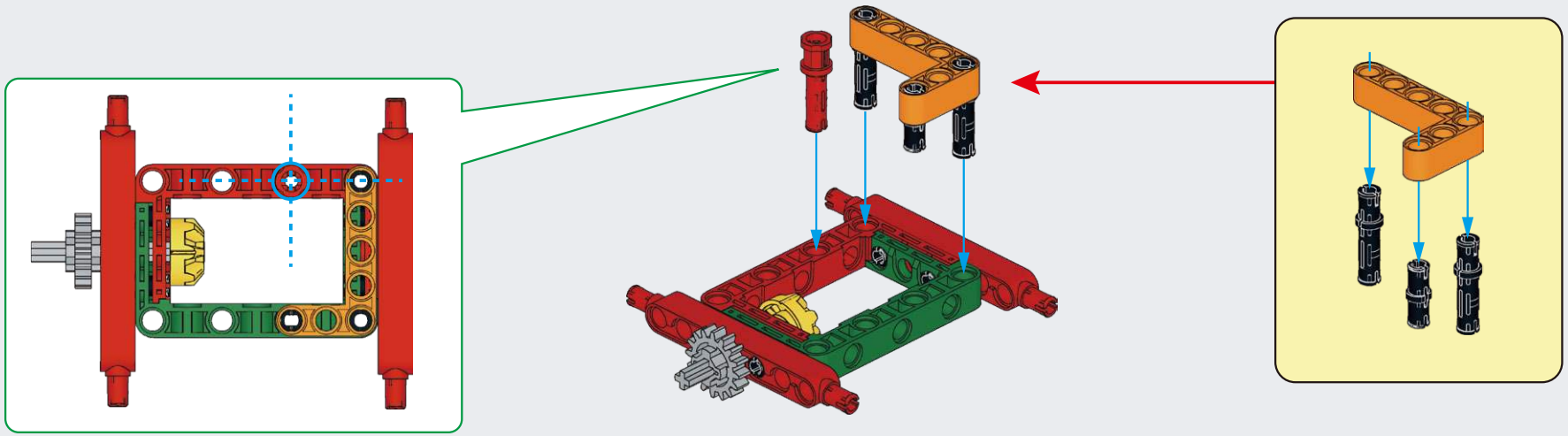

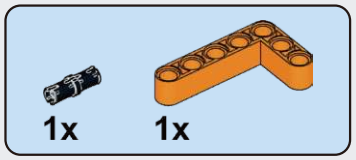

A30

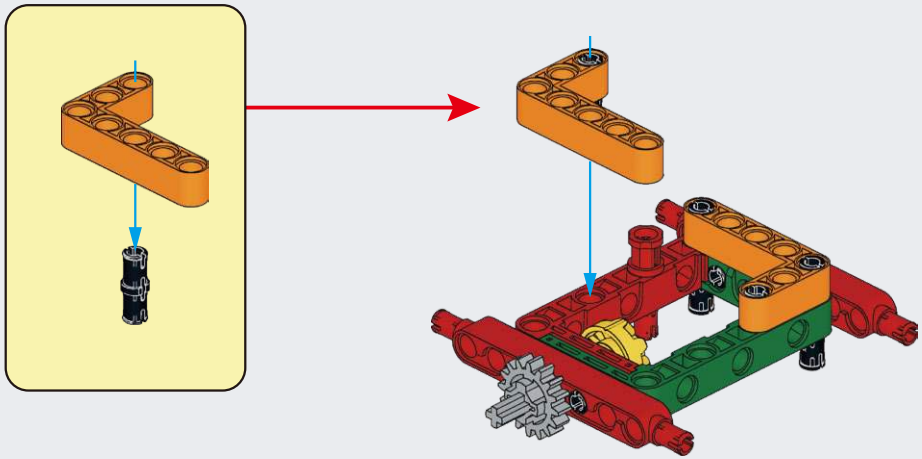

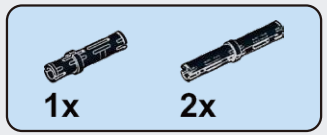

A31

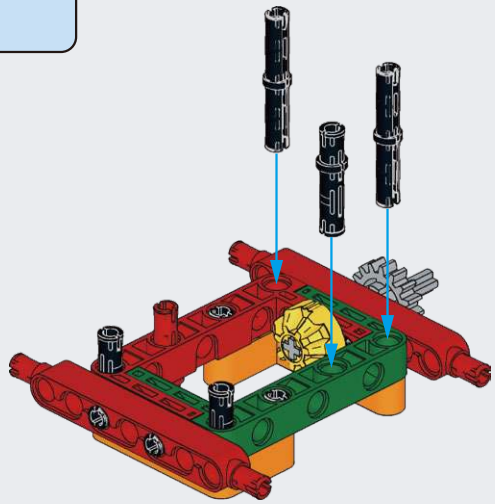

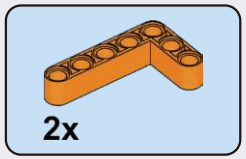

A32

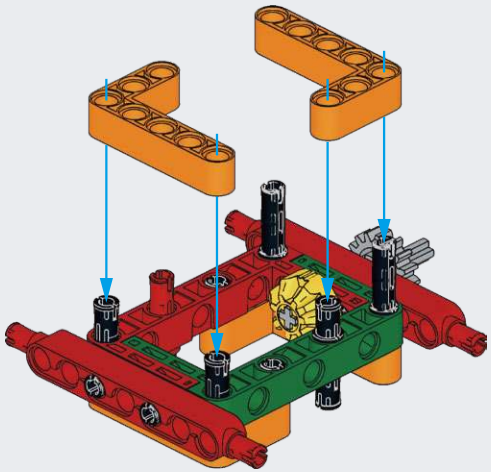

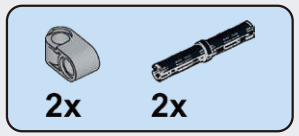

A33

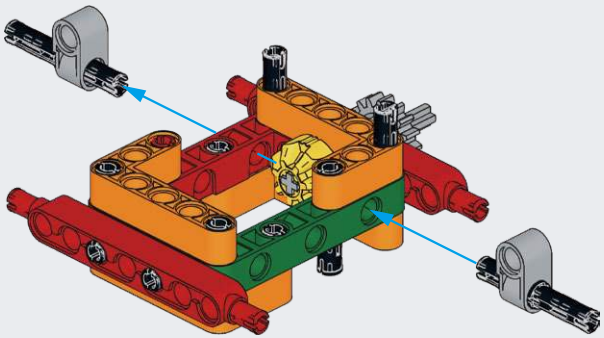

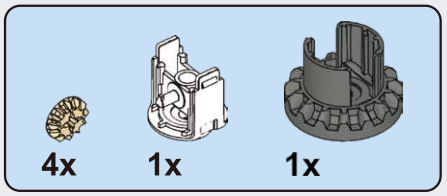

A34

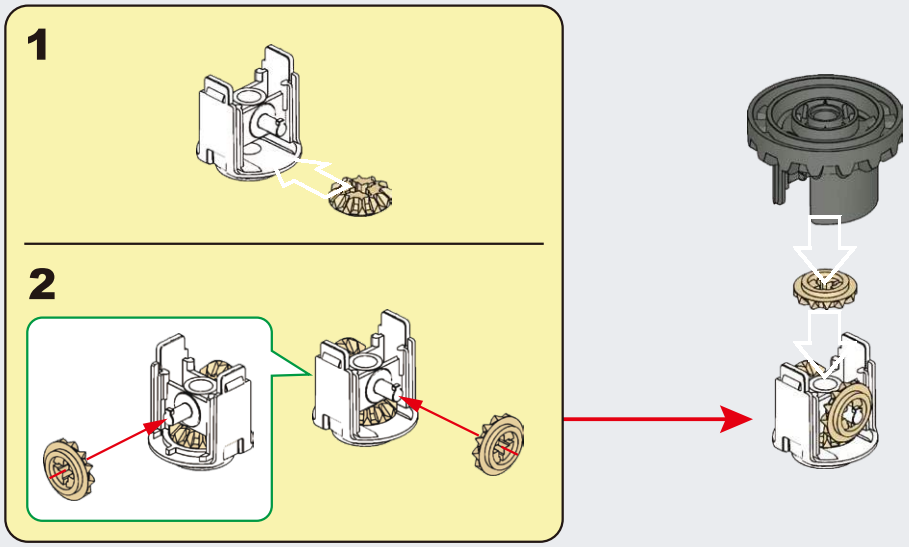

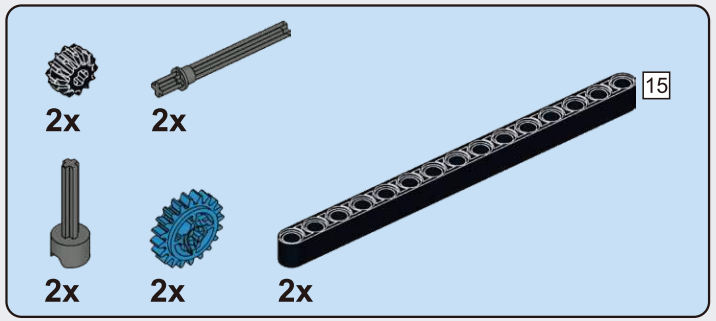

A35

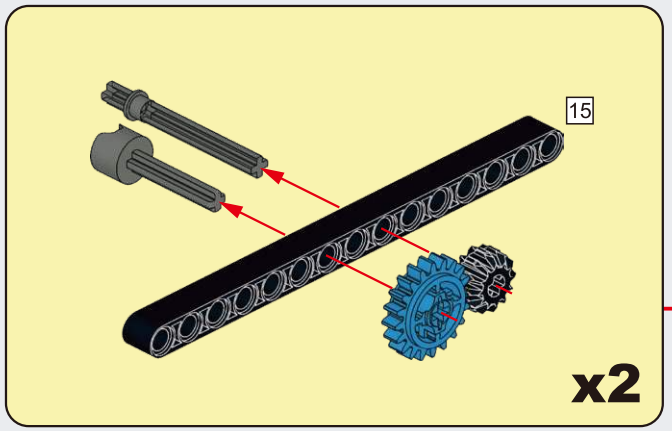

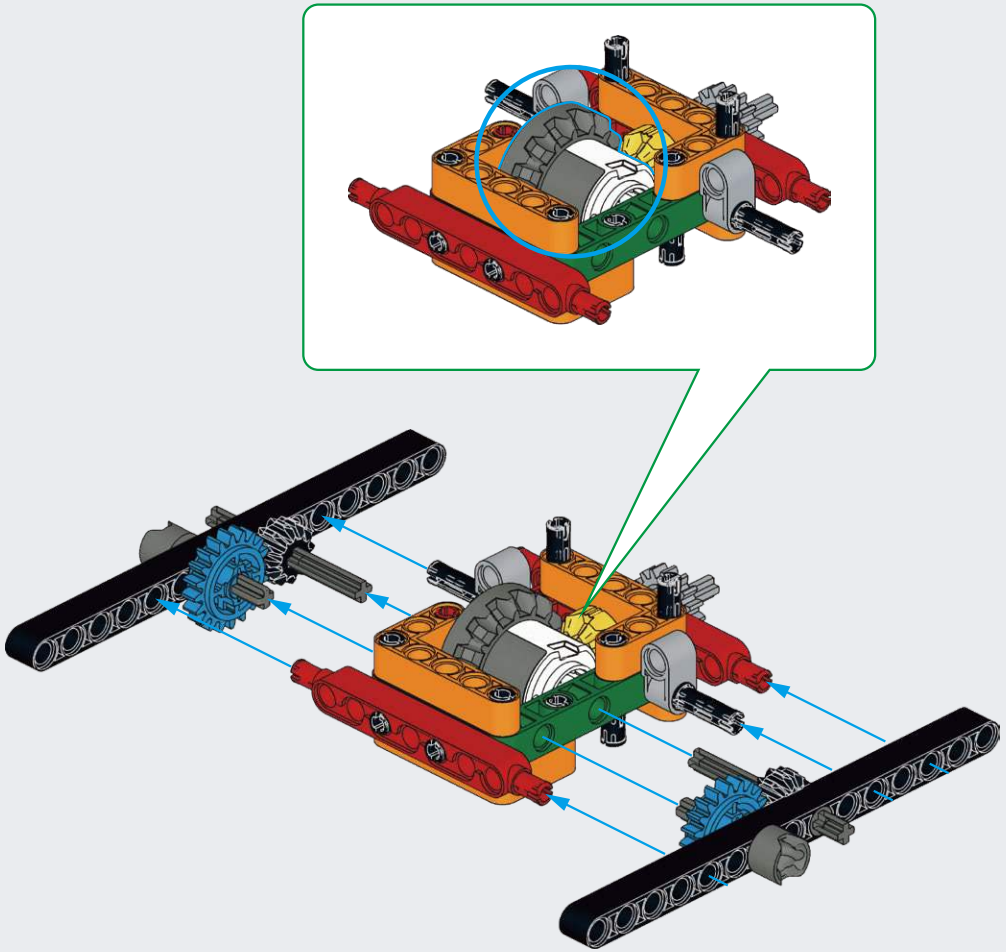

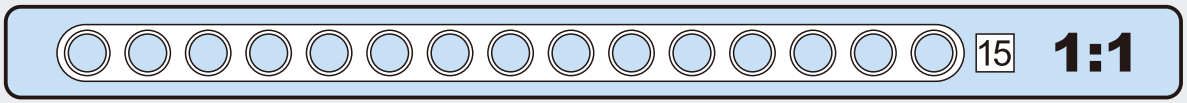

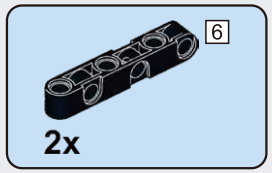

A36

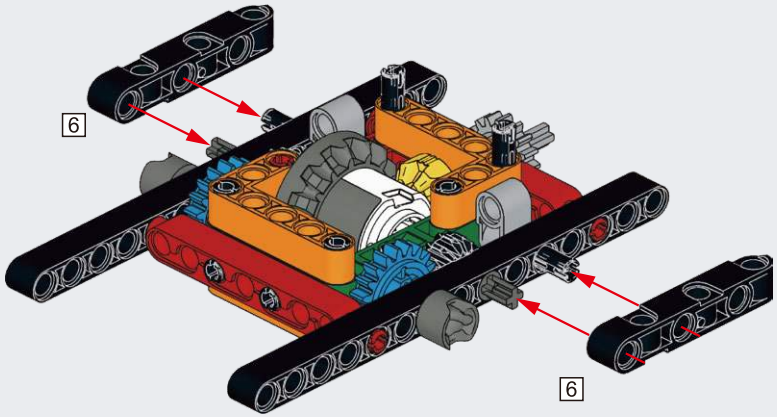

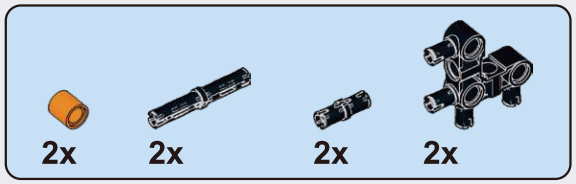

A37

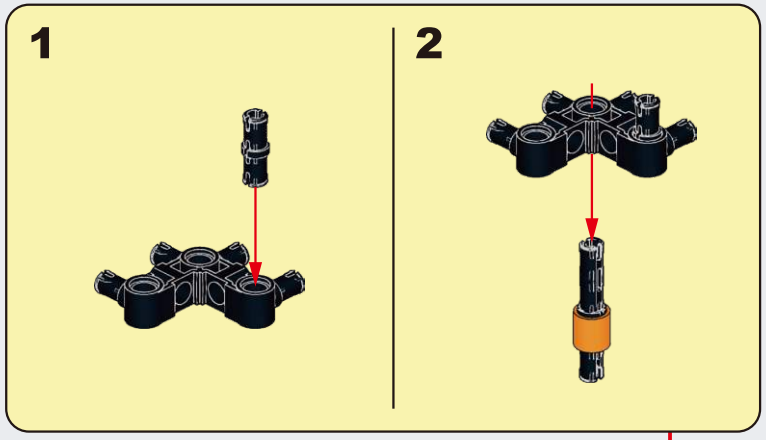

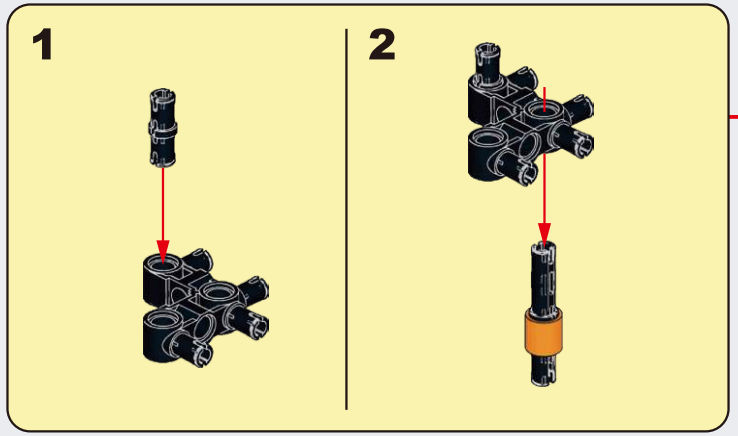

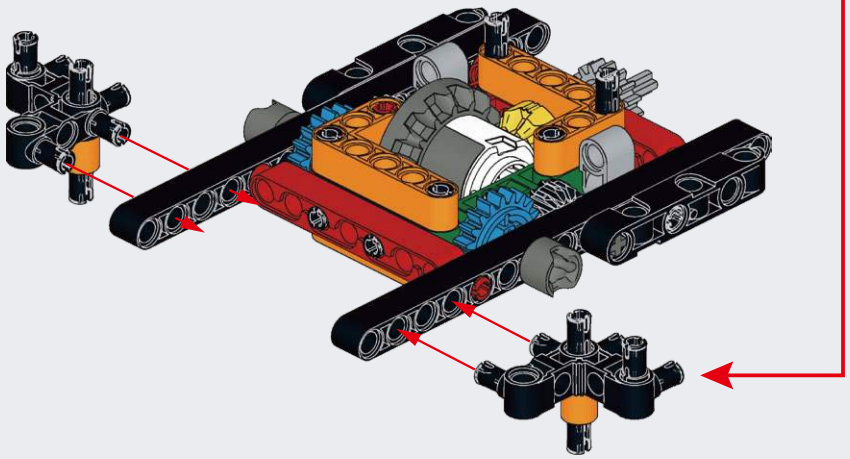

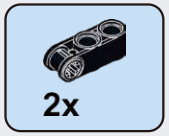

A38

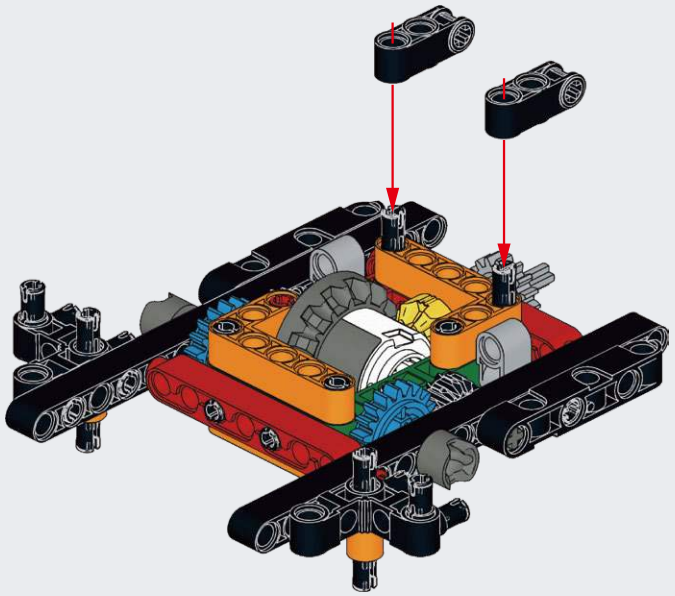

A39

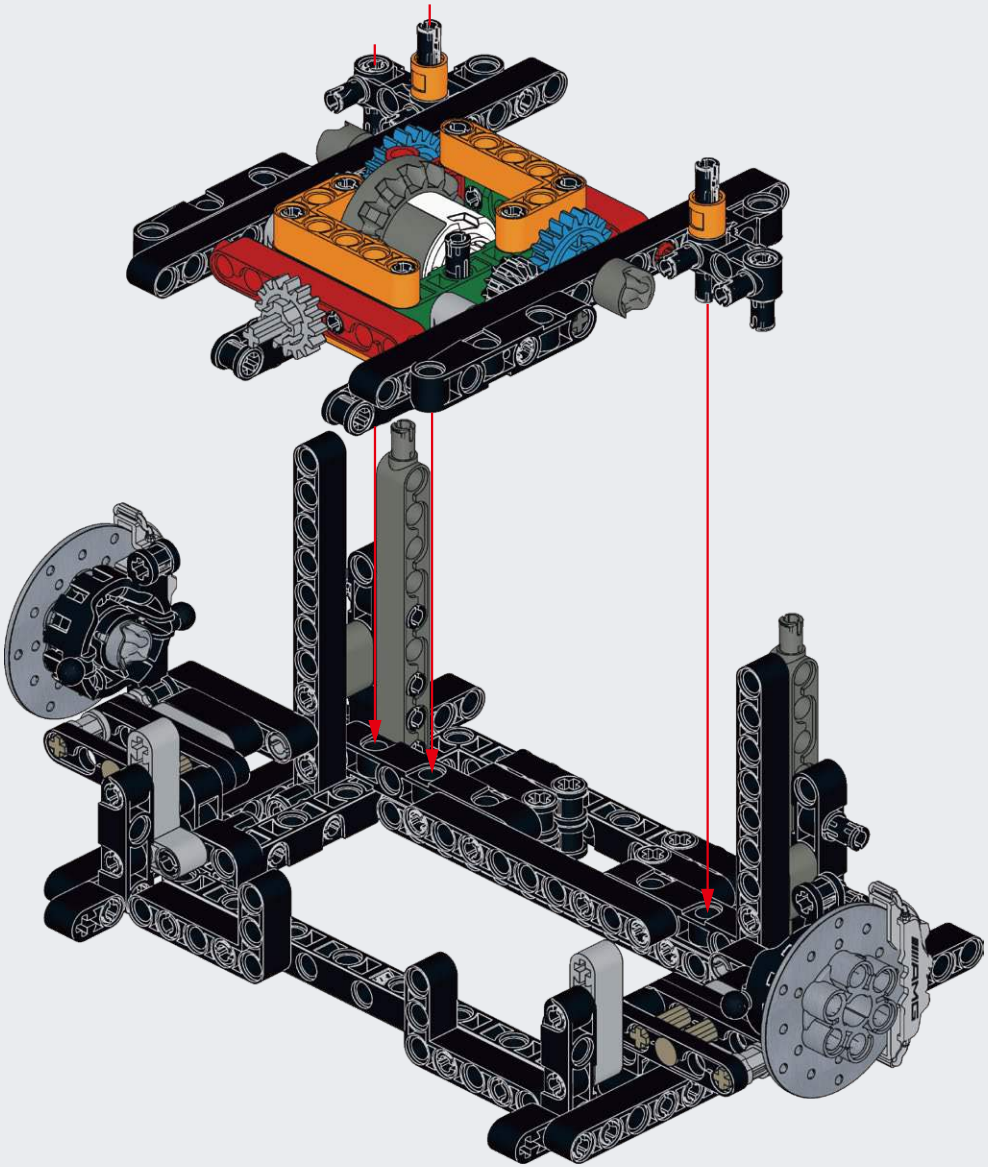

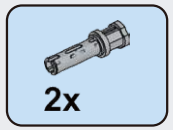

A40

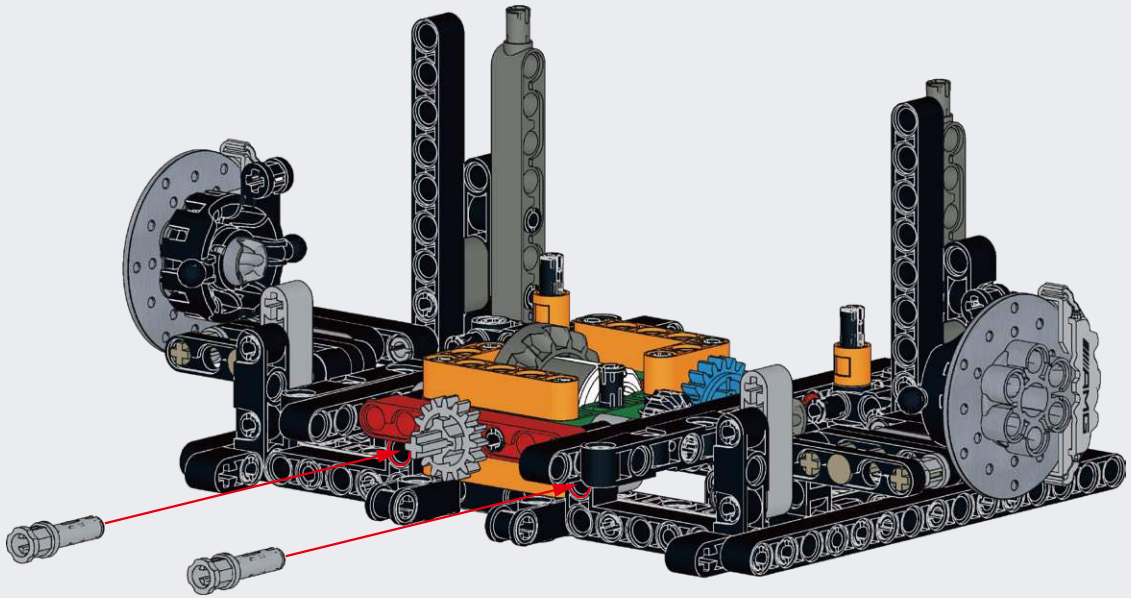

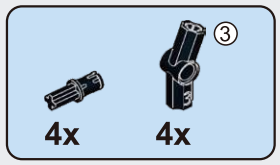

A41

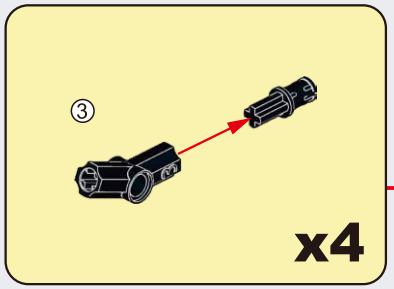

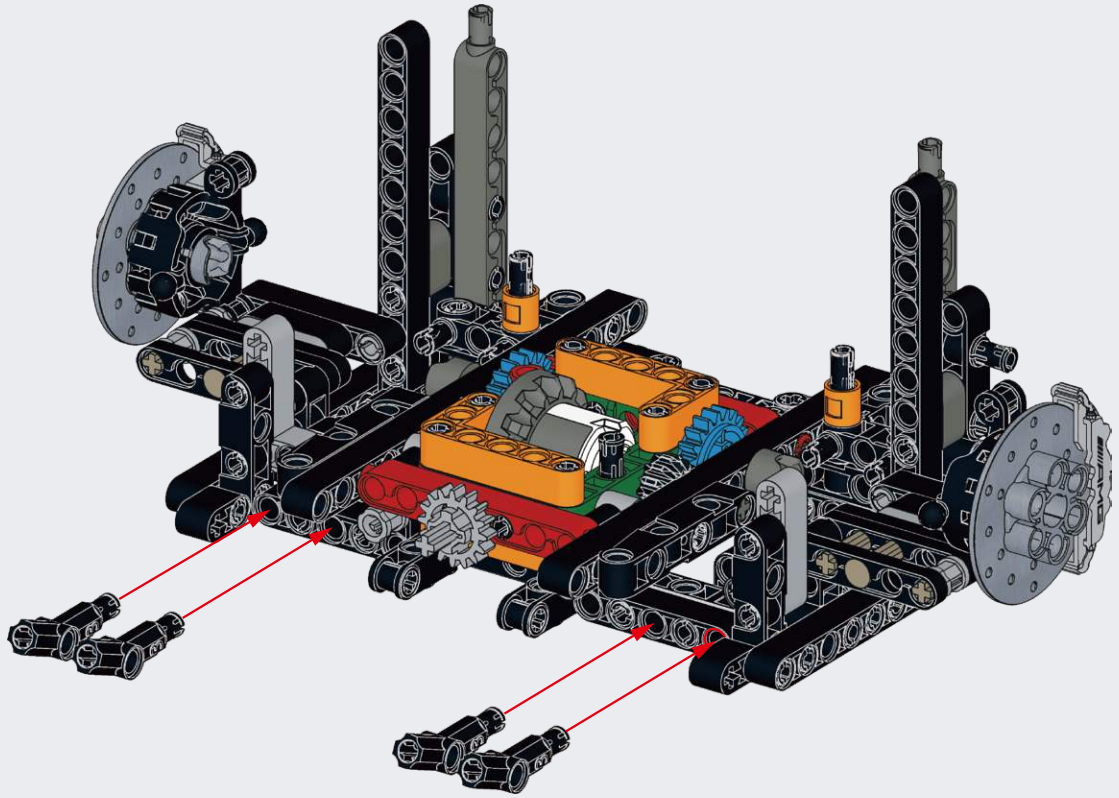

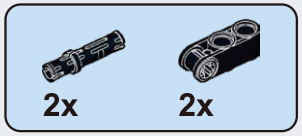

A42

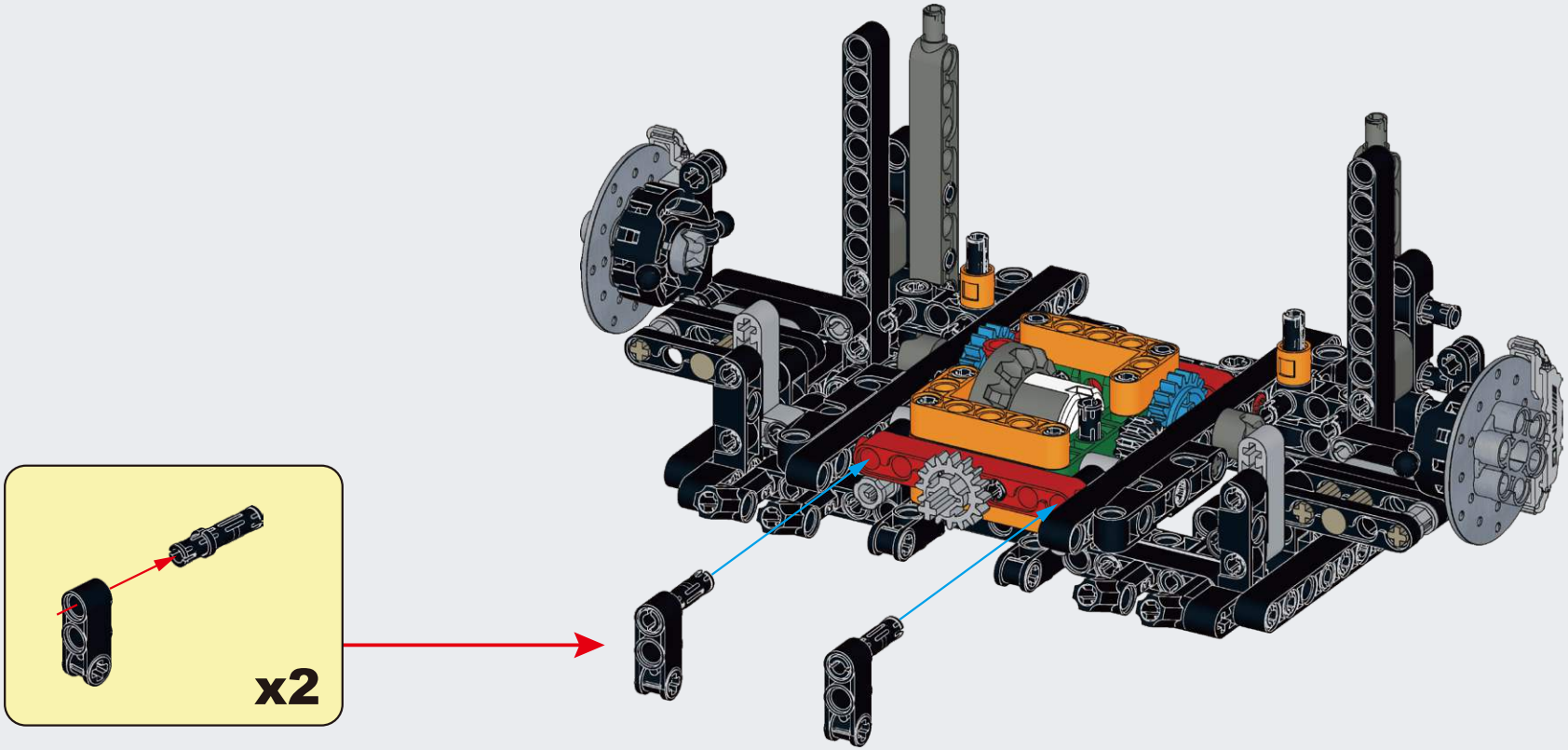

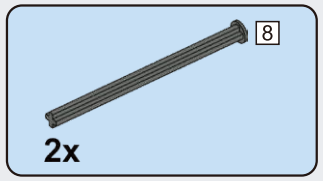

A43

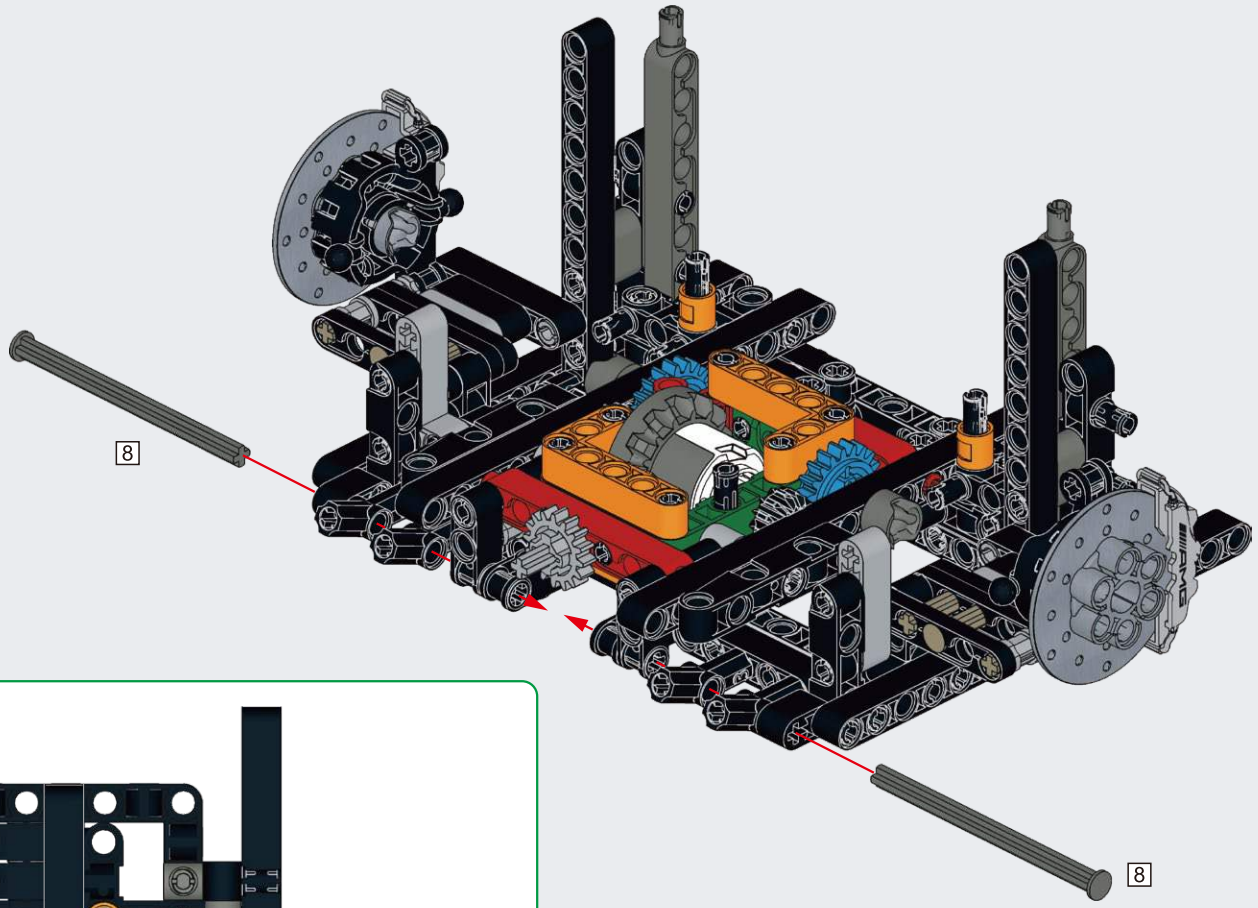

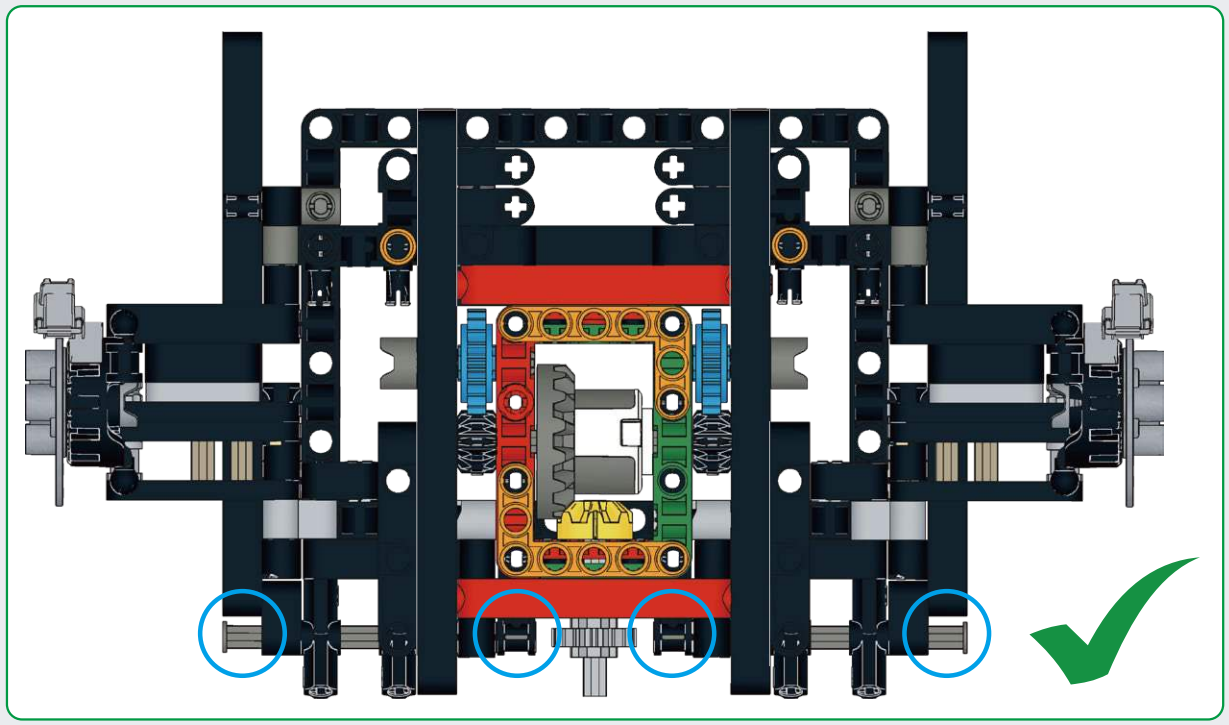

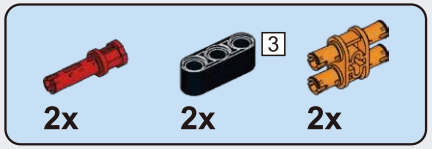

A44

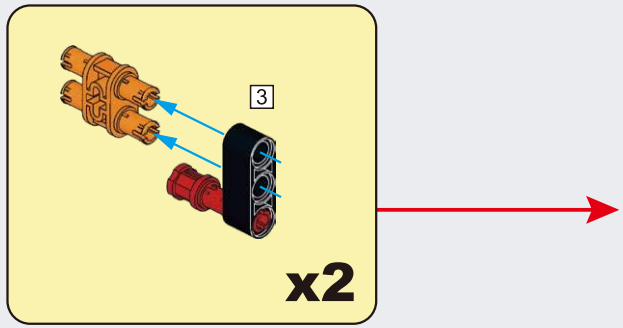

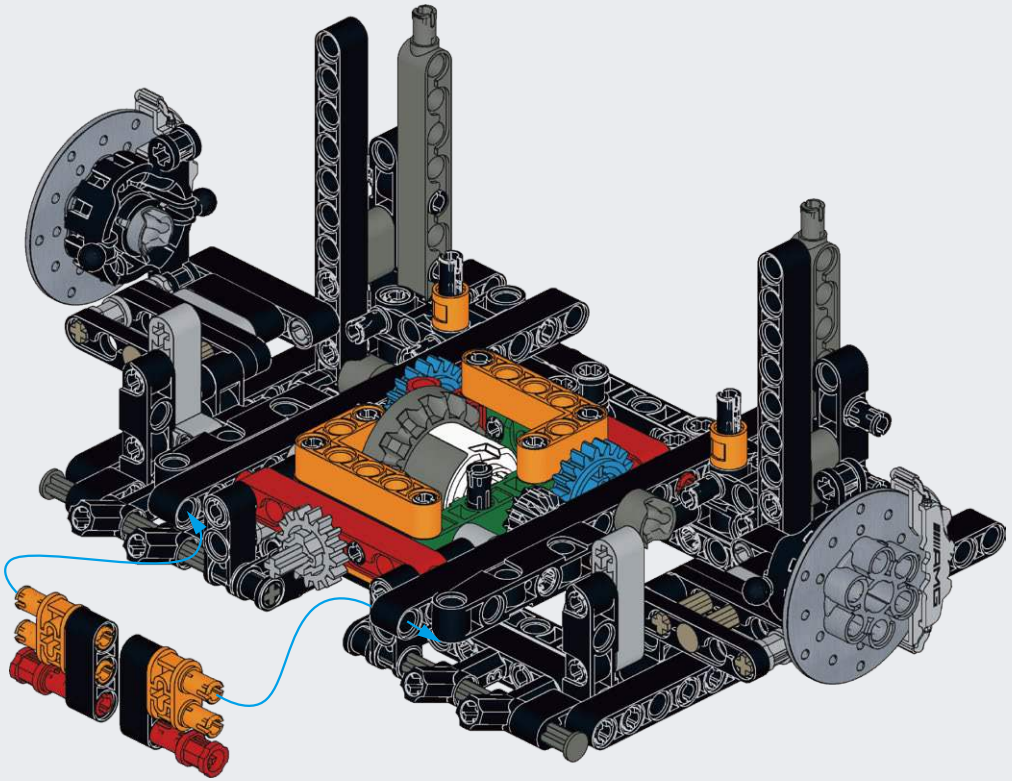

A45

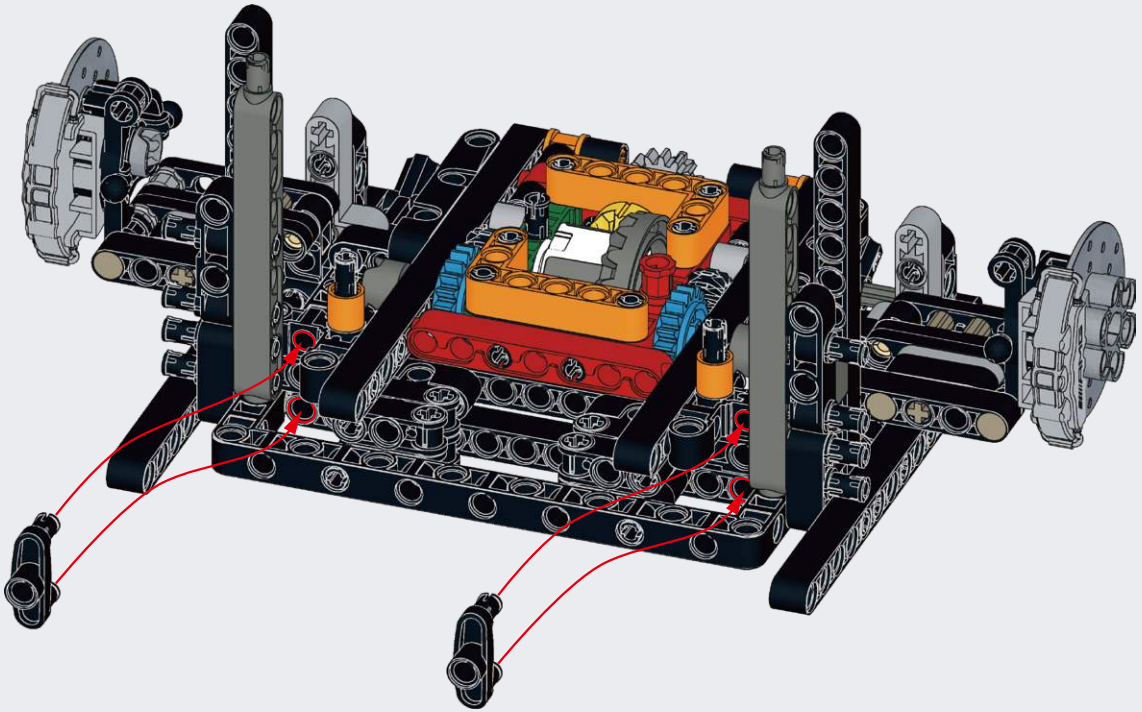

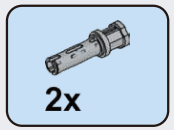

A46

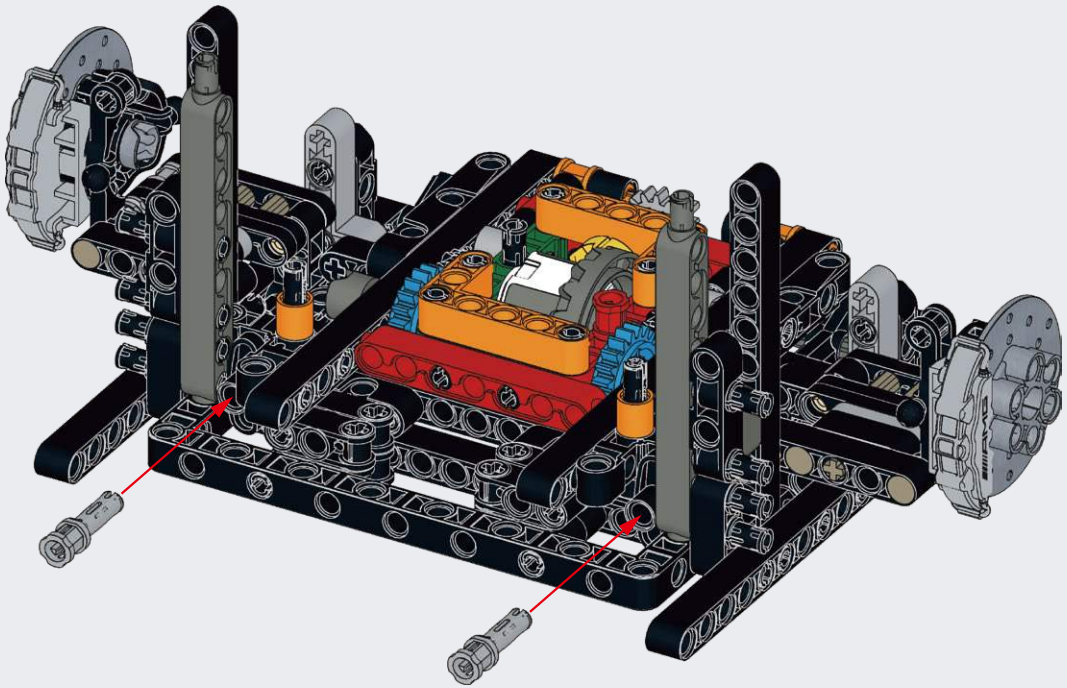

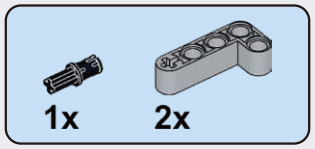

A47

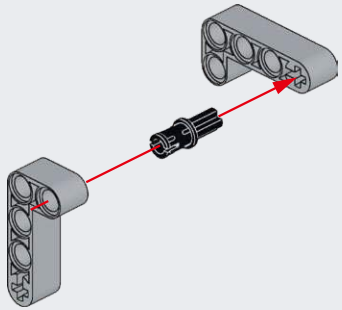

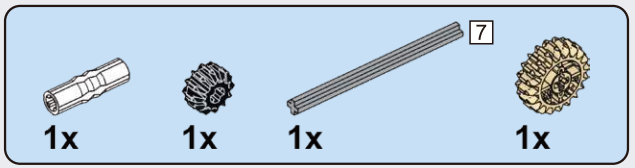

A48

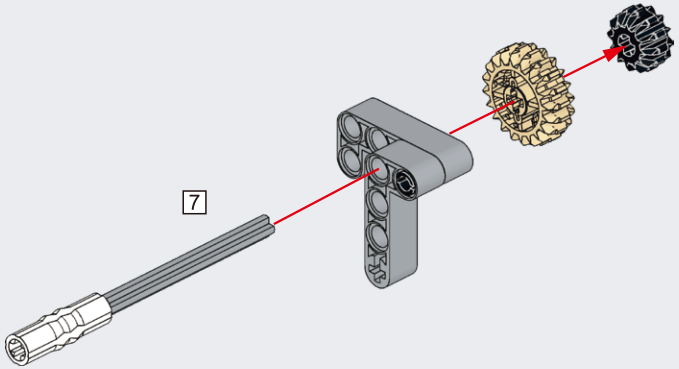

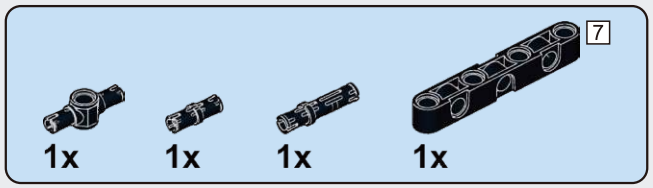

A49

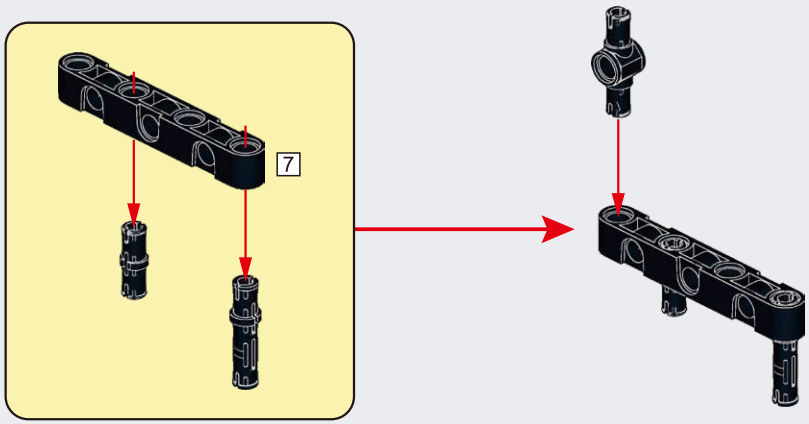

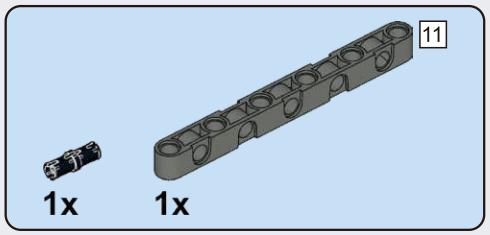

A50

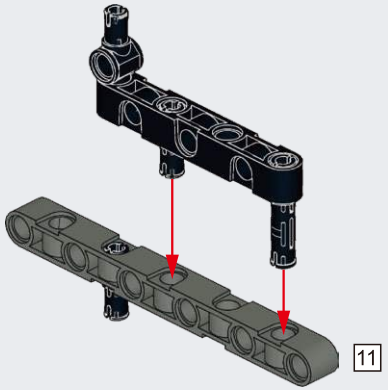

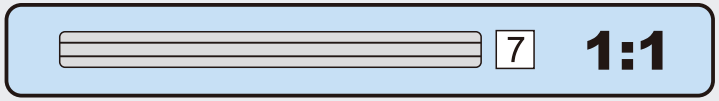

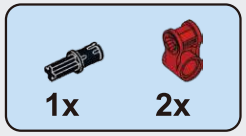

A51

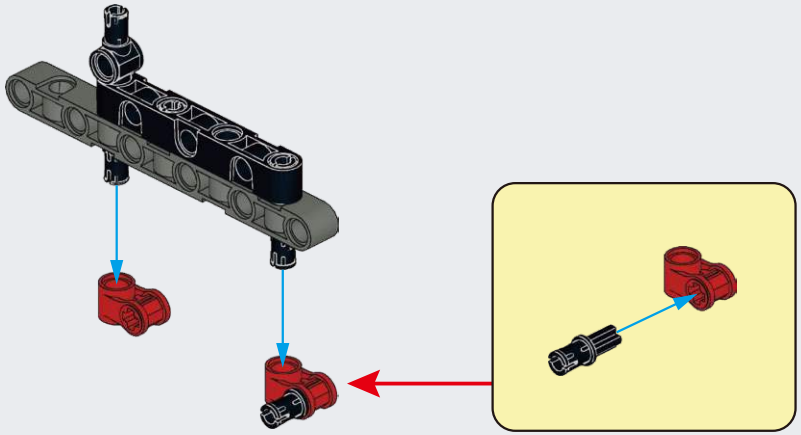

A52

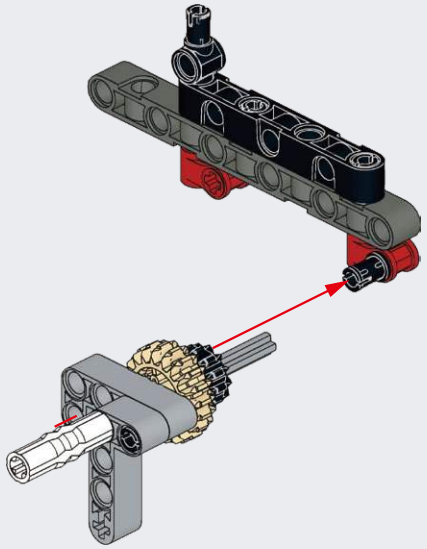

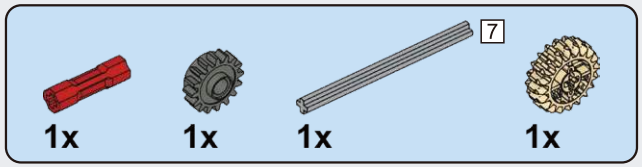

A53

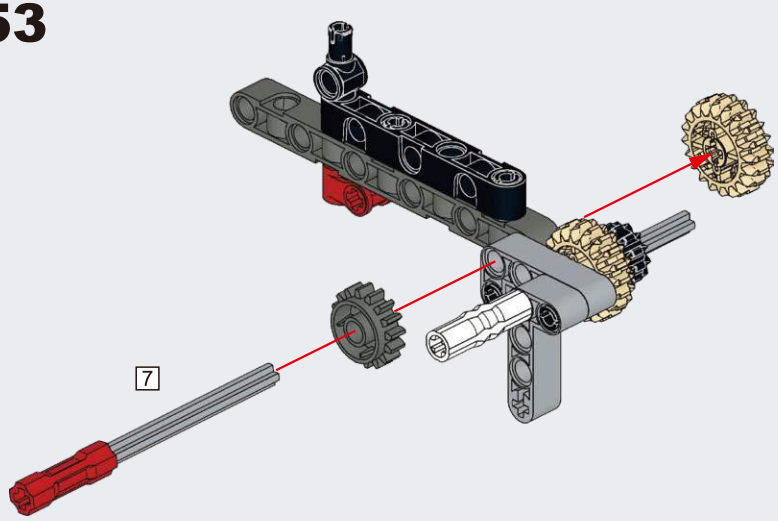

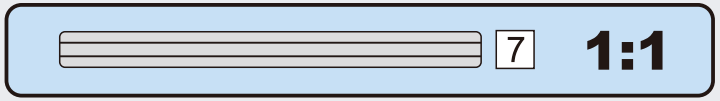

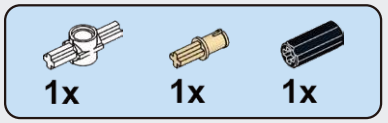

A54

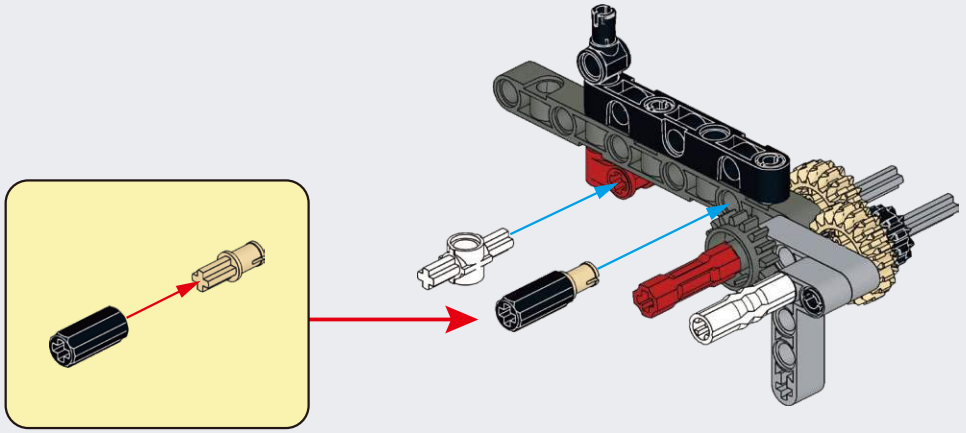

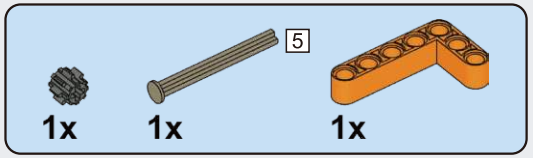

A55

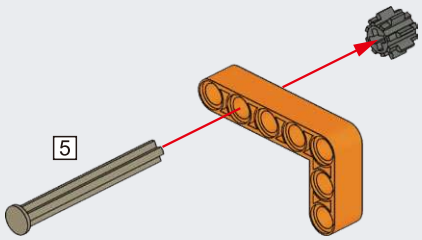

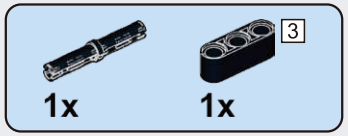

A56

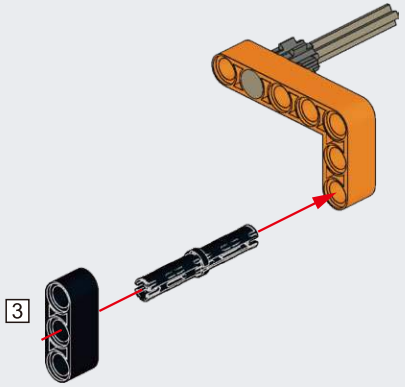

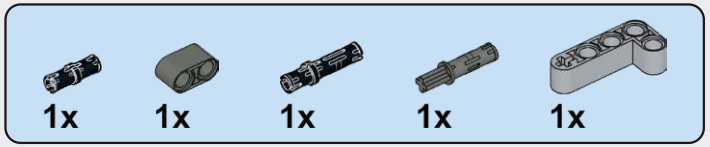

A57

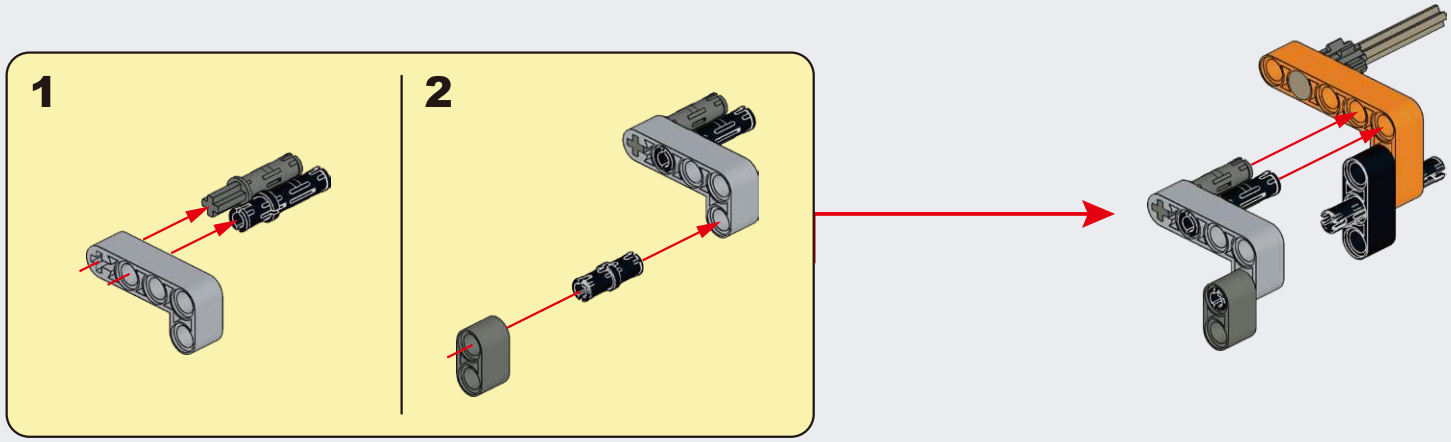

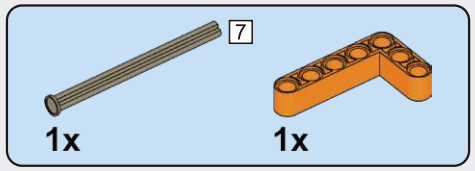

A58

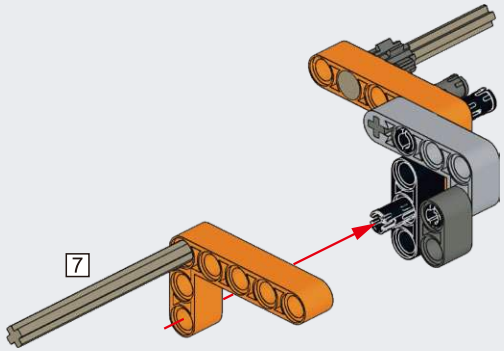

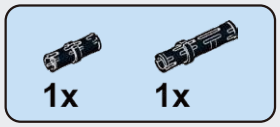

A59

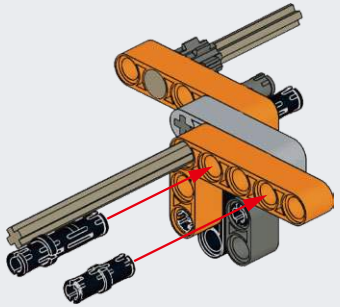

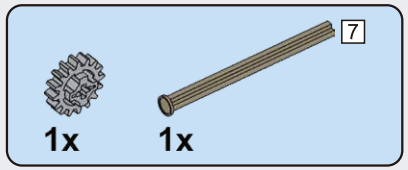

A60

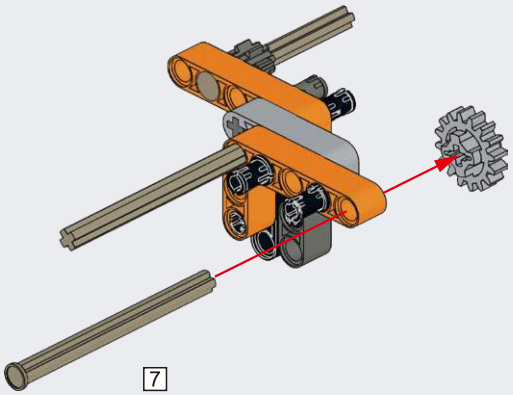

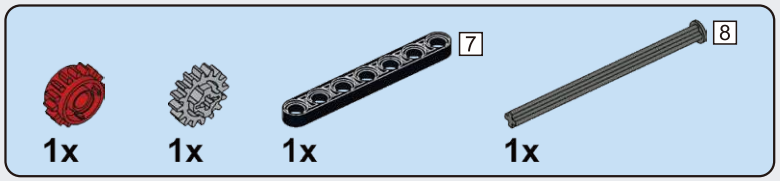

A61

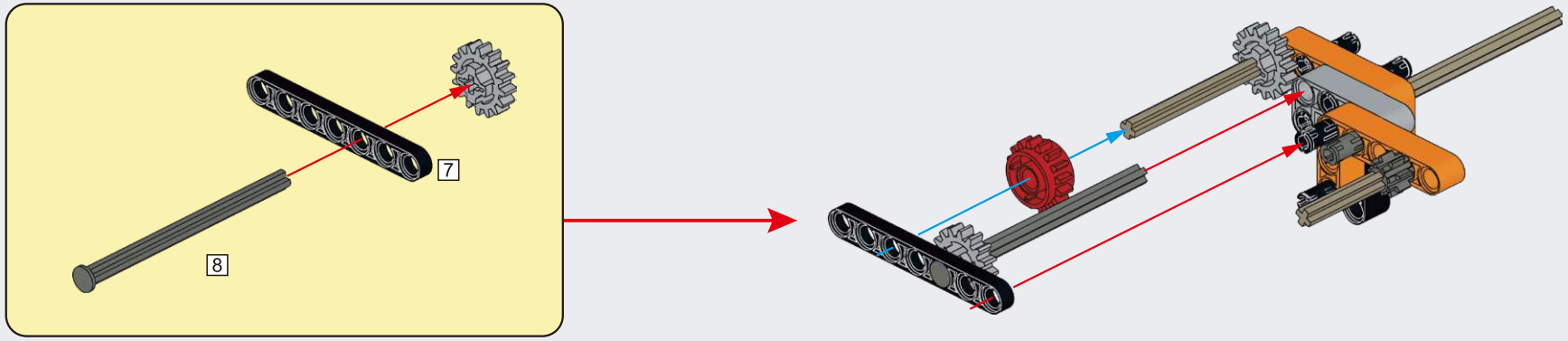

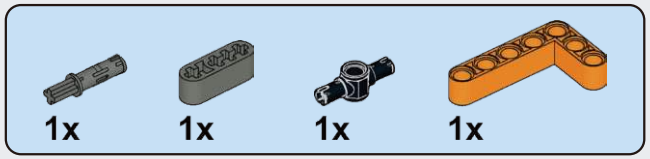

A62

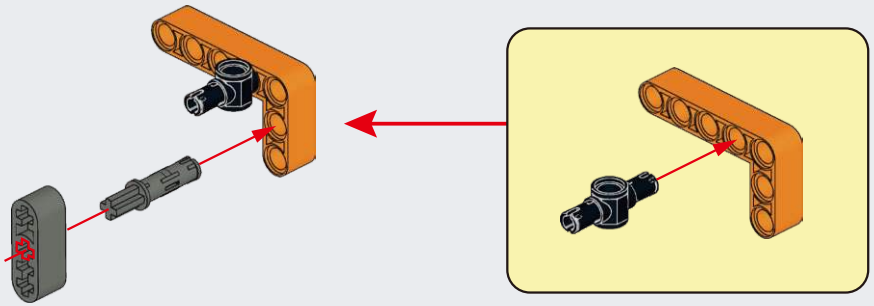

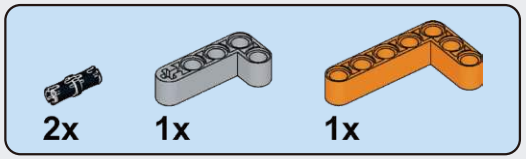

A63

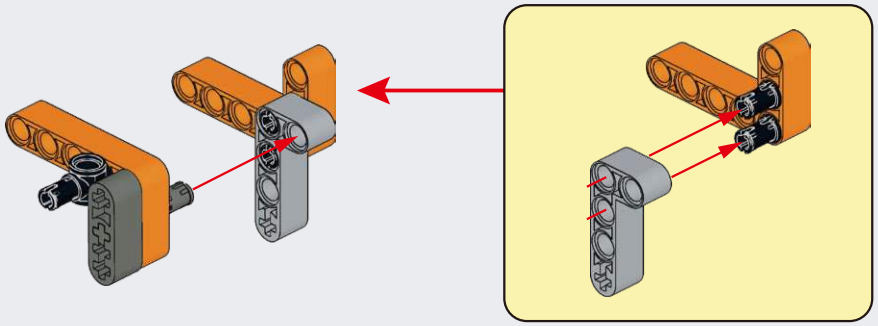

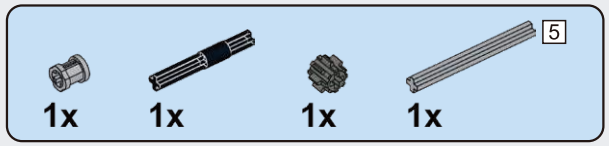

A64

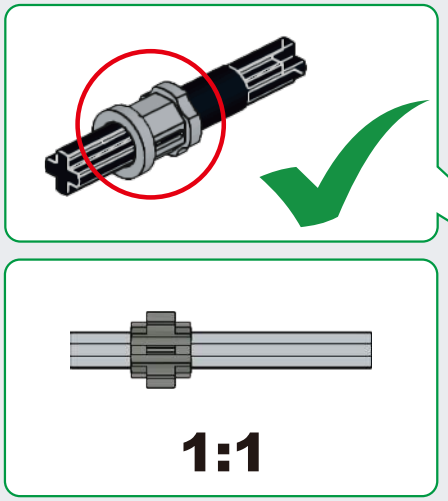

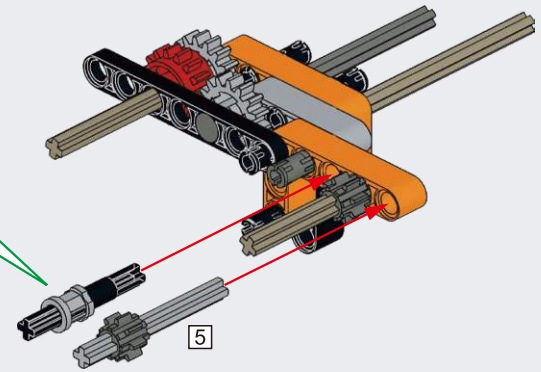

A65

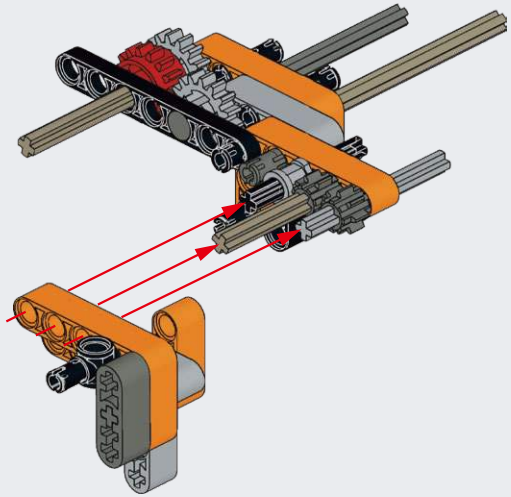

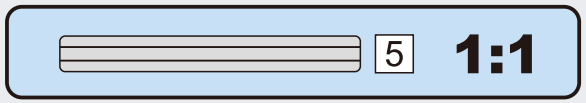

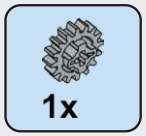

A66

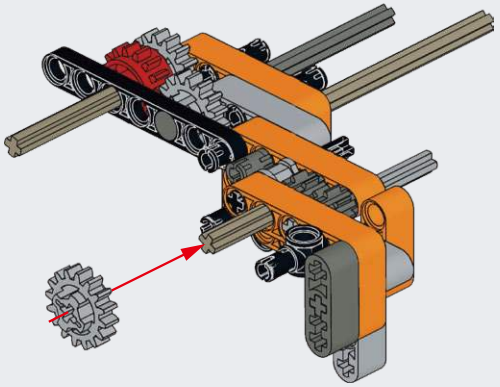

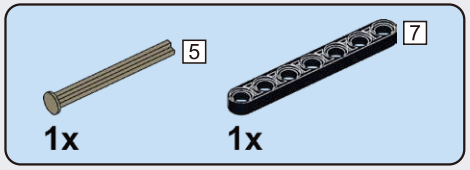

A67

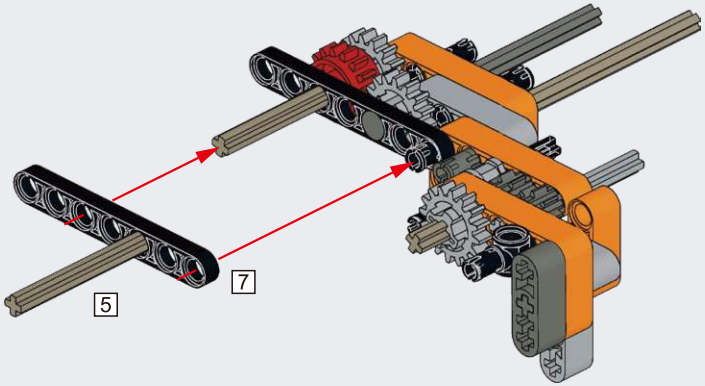

A68

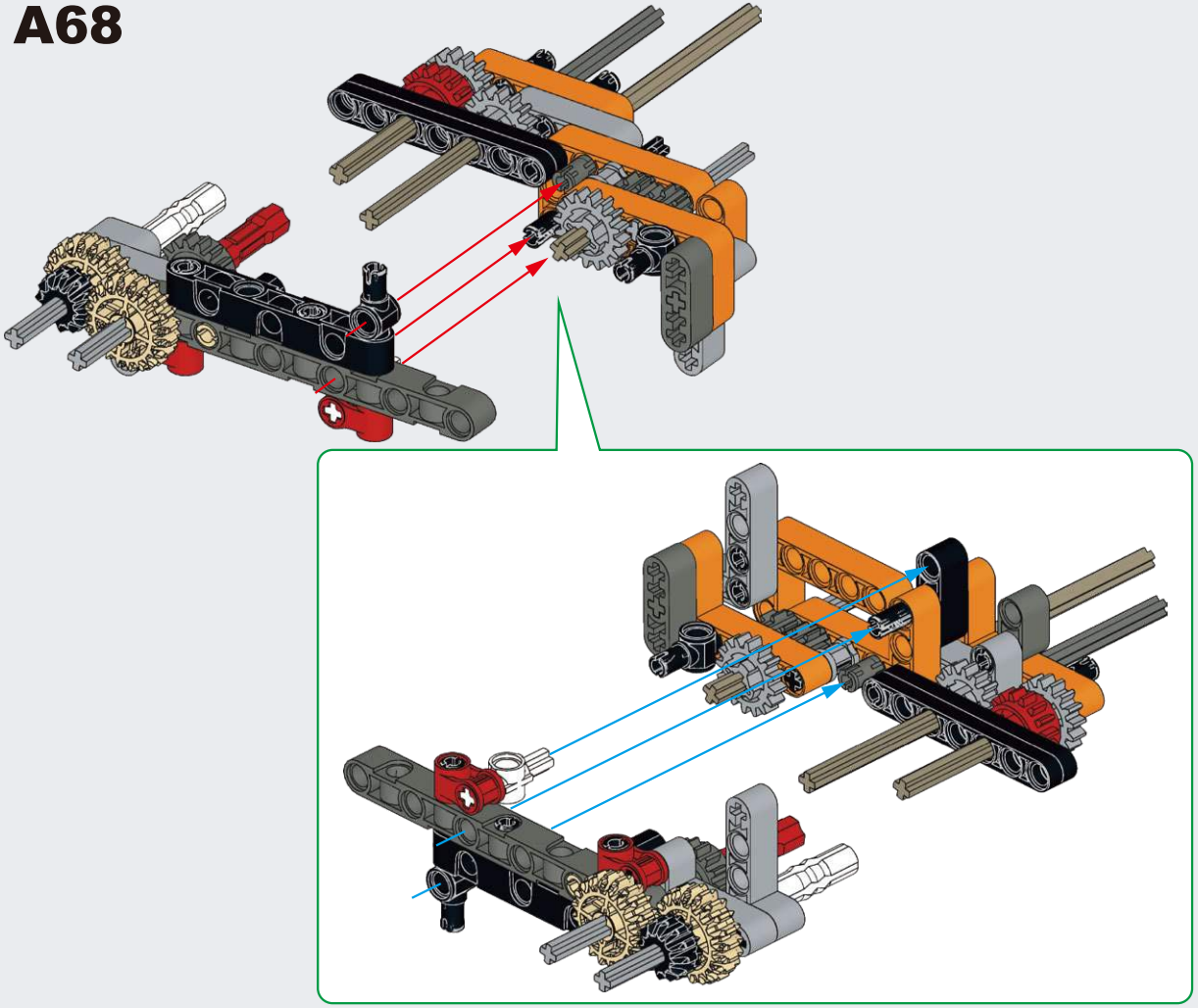

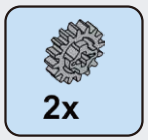

A69

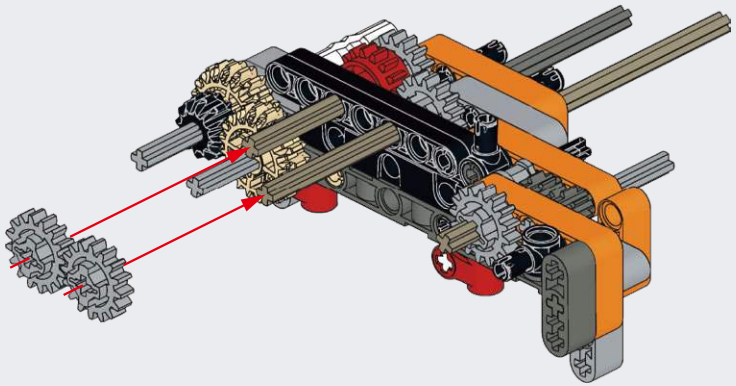

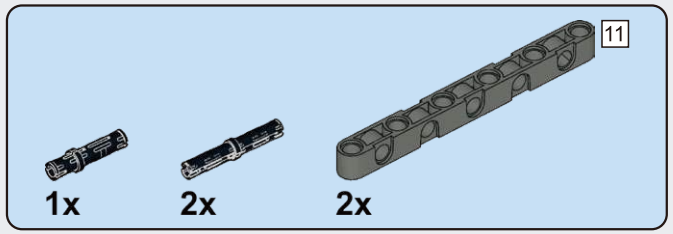

A70

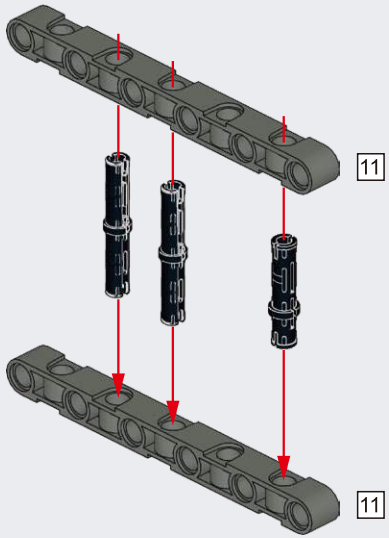

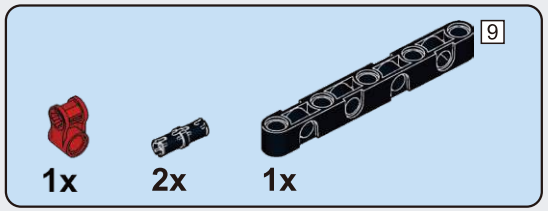

A71

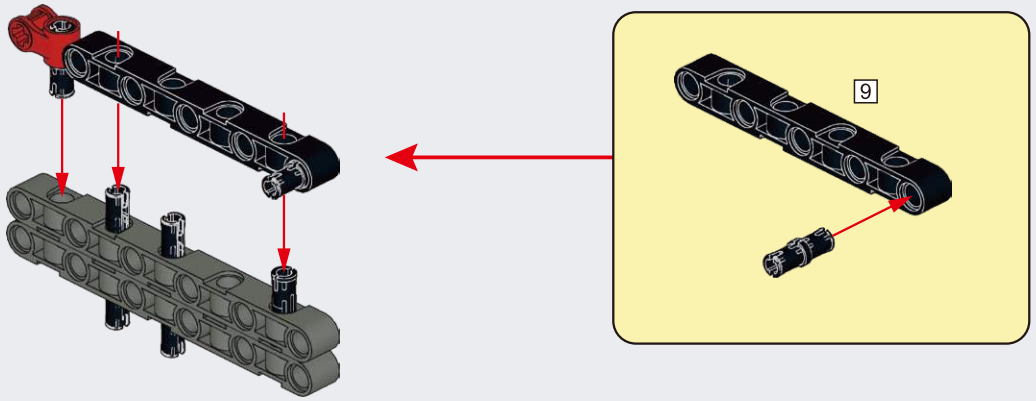

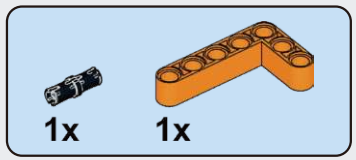

A72

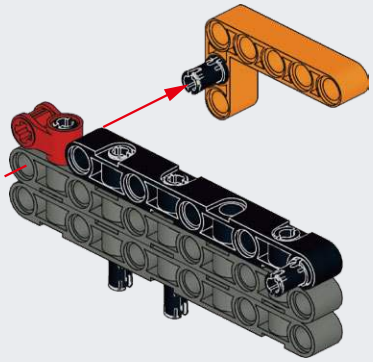

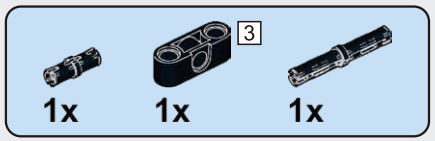

A73

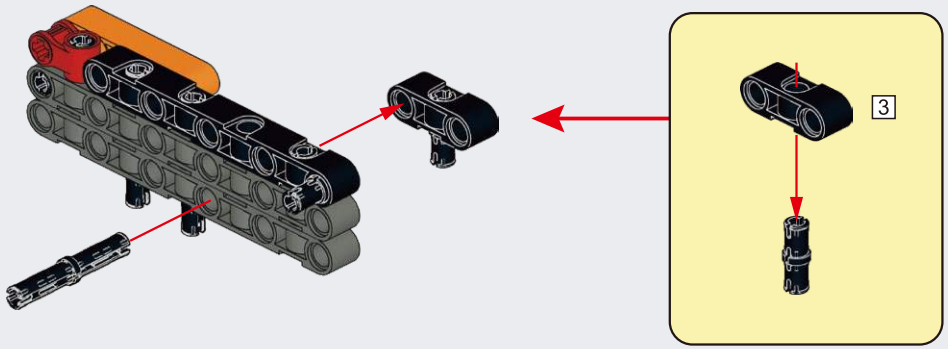

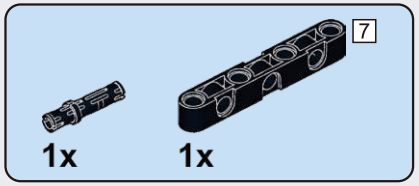

A74

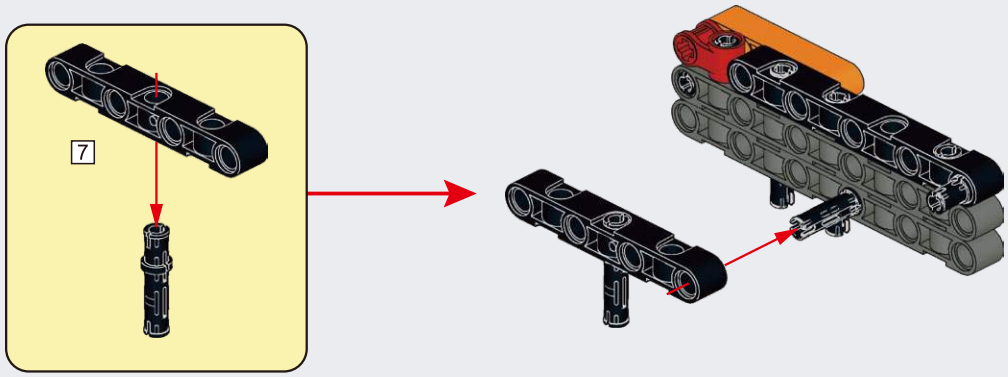

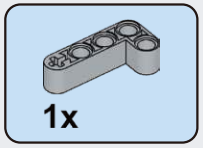

A75

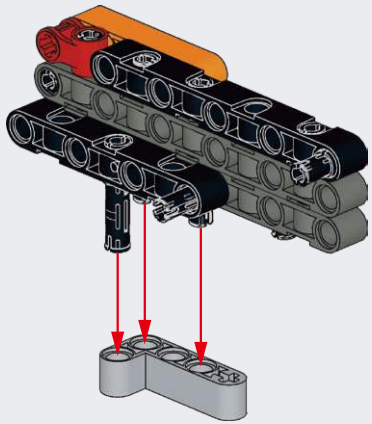

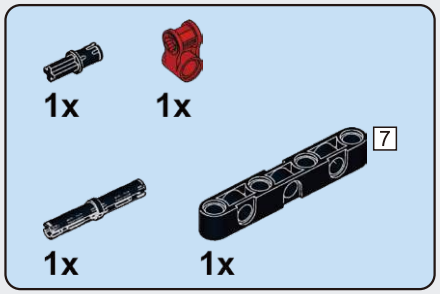

A76

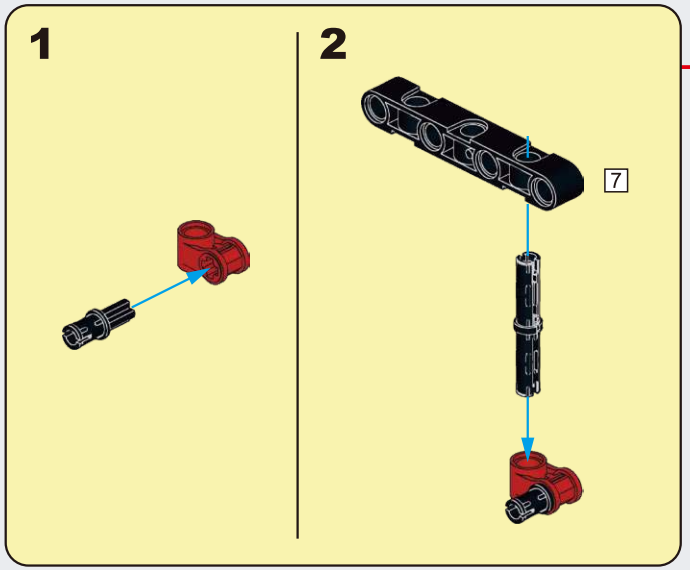

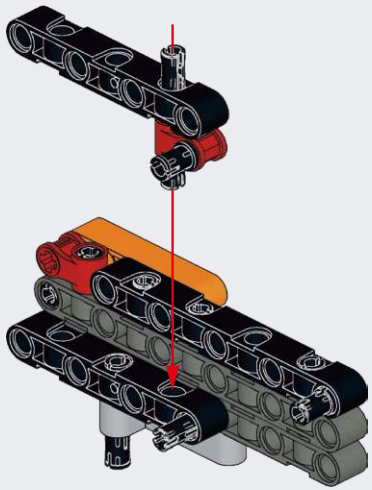

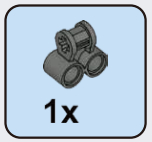

A77

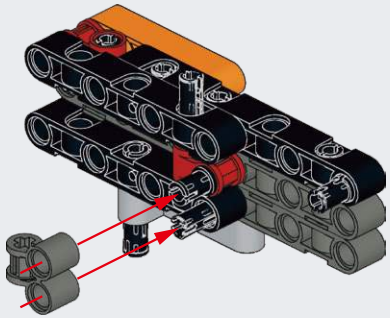

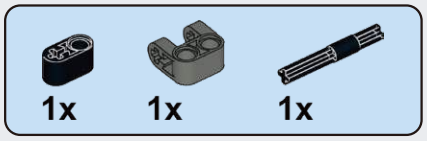

A78

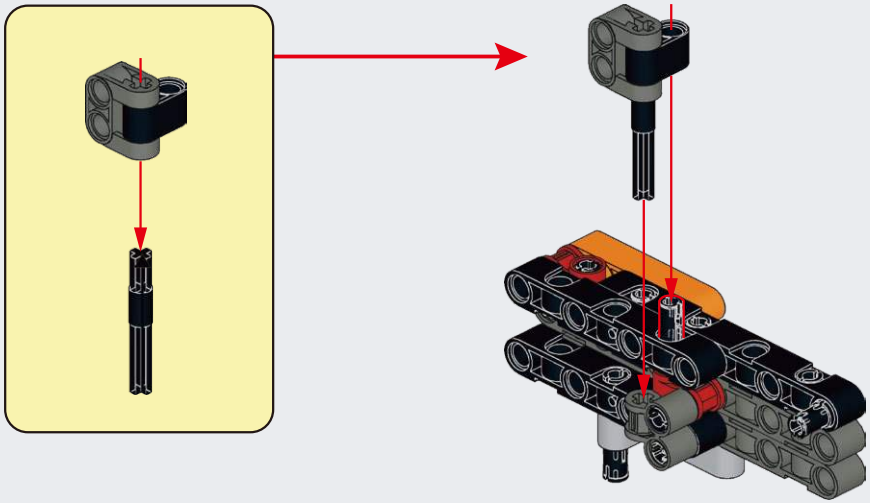

A79

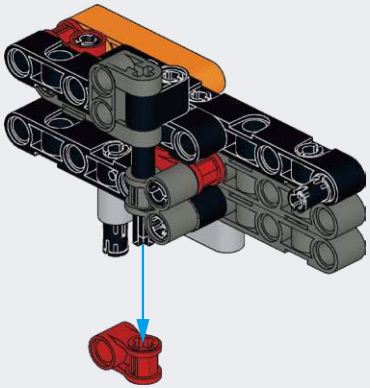

A80

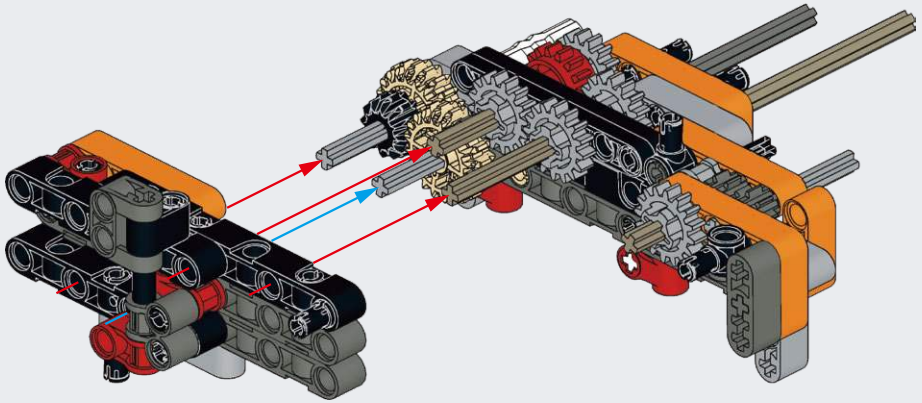

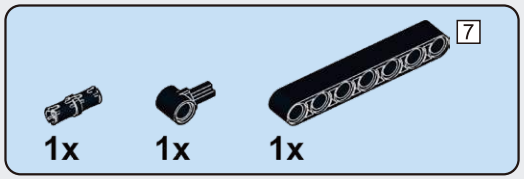

A81

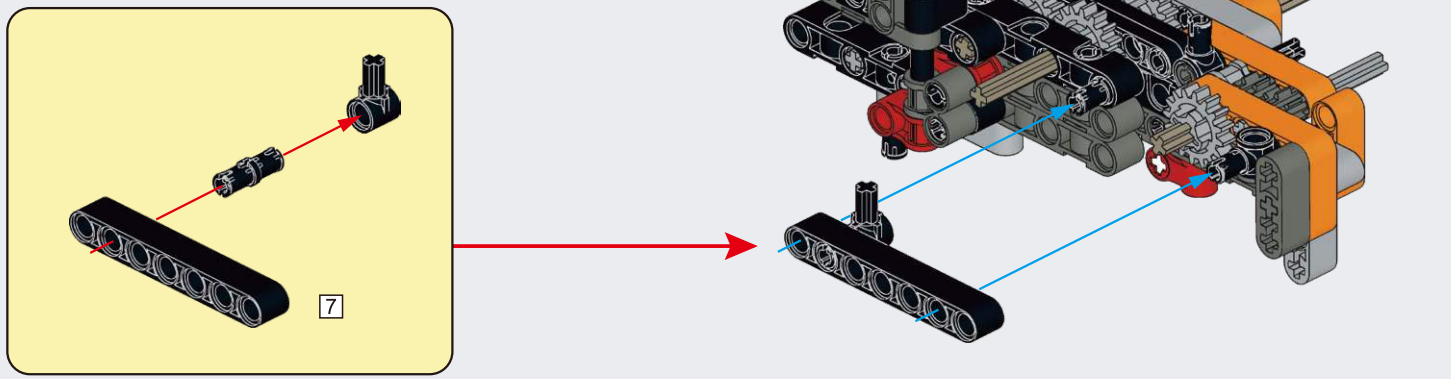

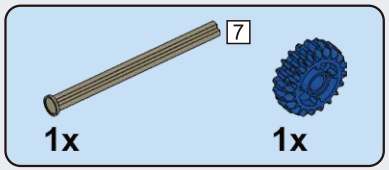

A82

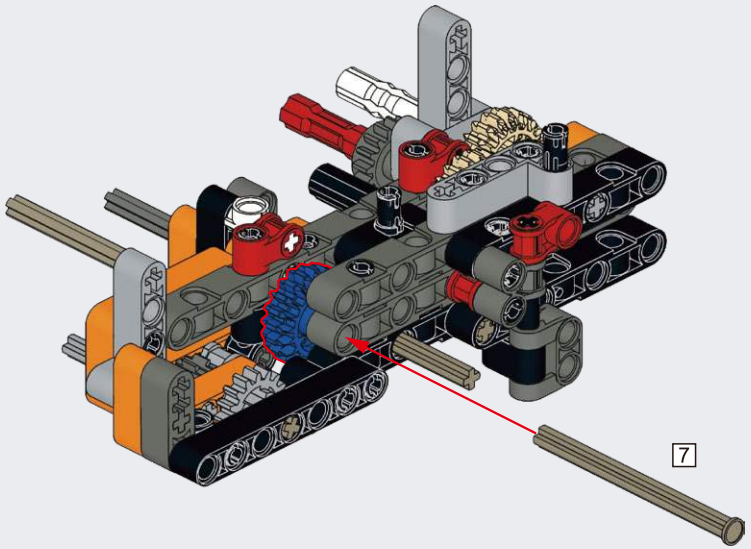

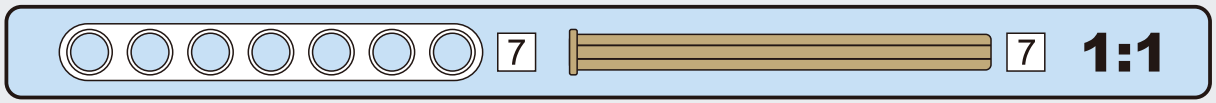

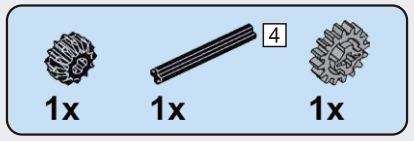

A83

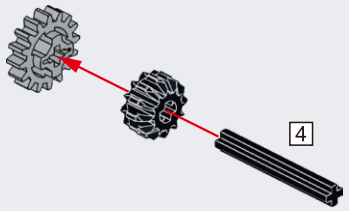

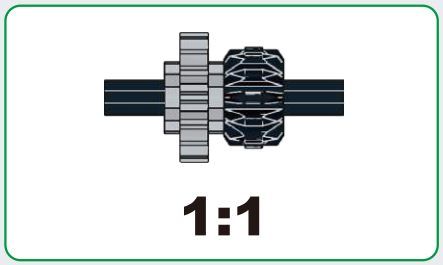

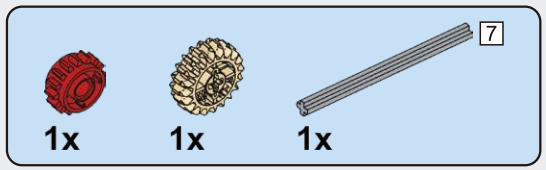

A84

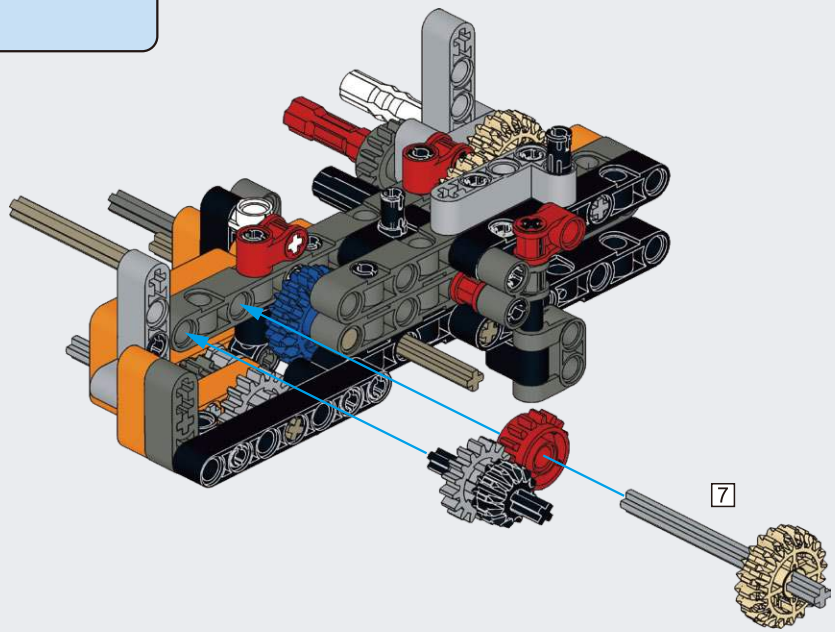

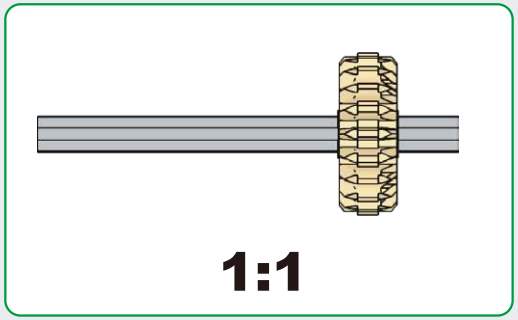

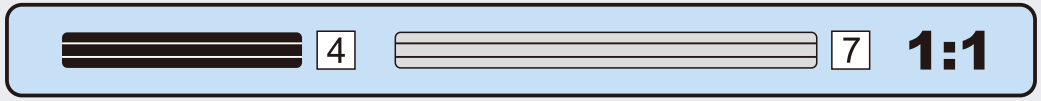

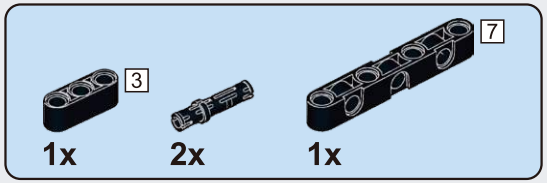

A85

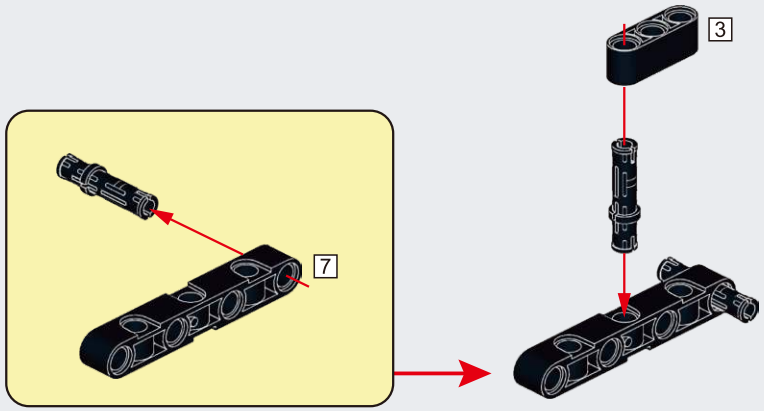

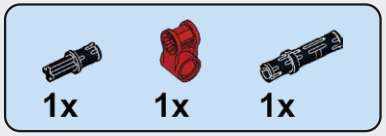

A86

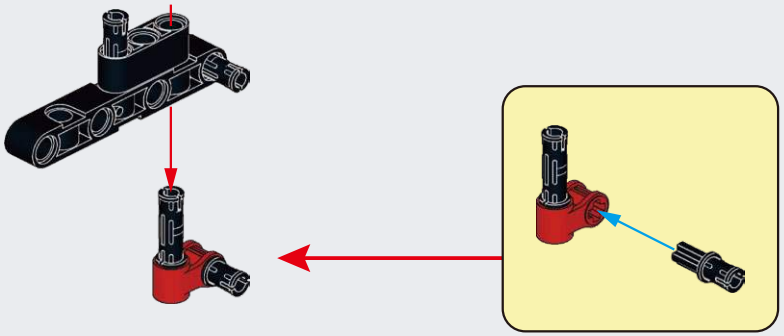

A87

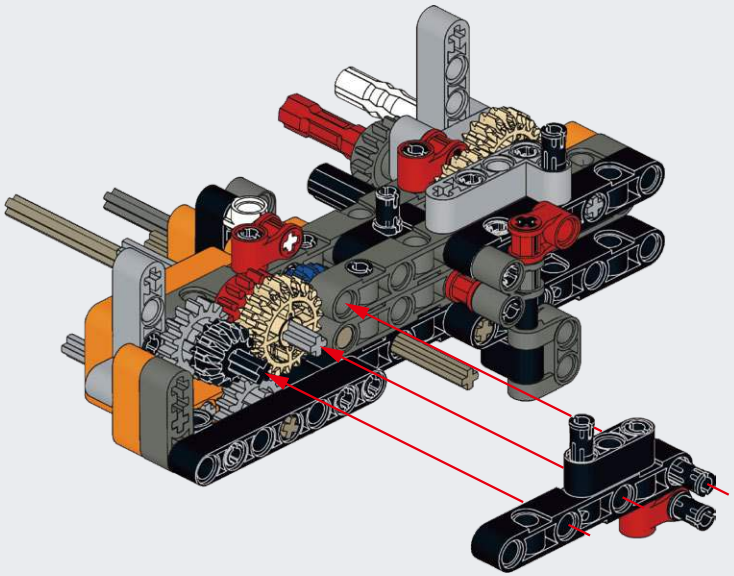

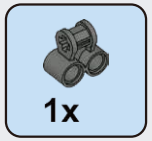

A88

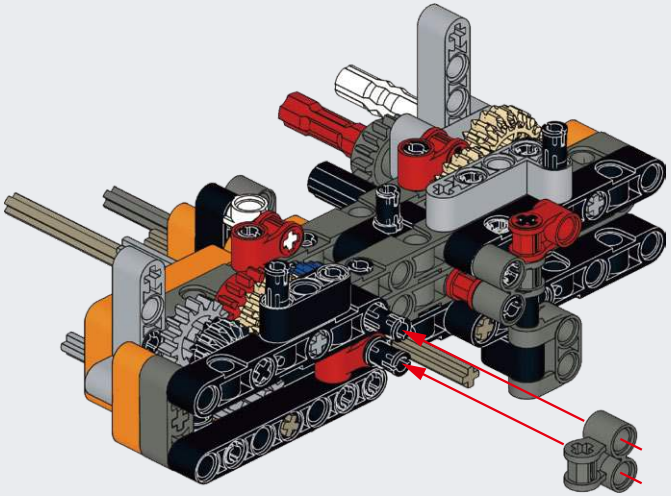

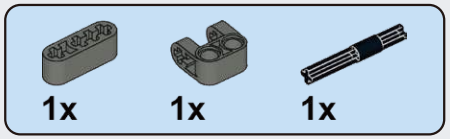

A89

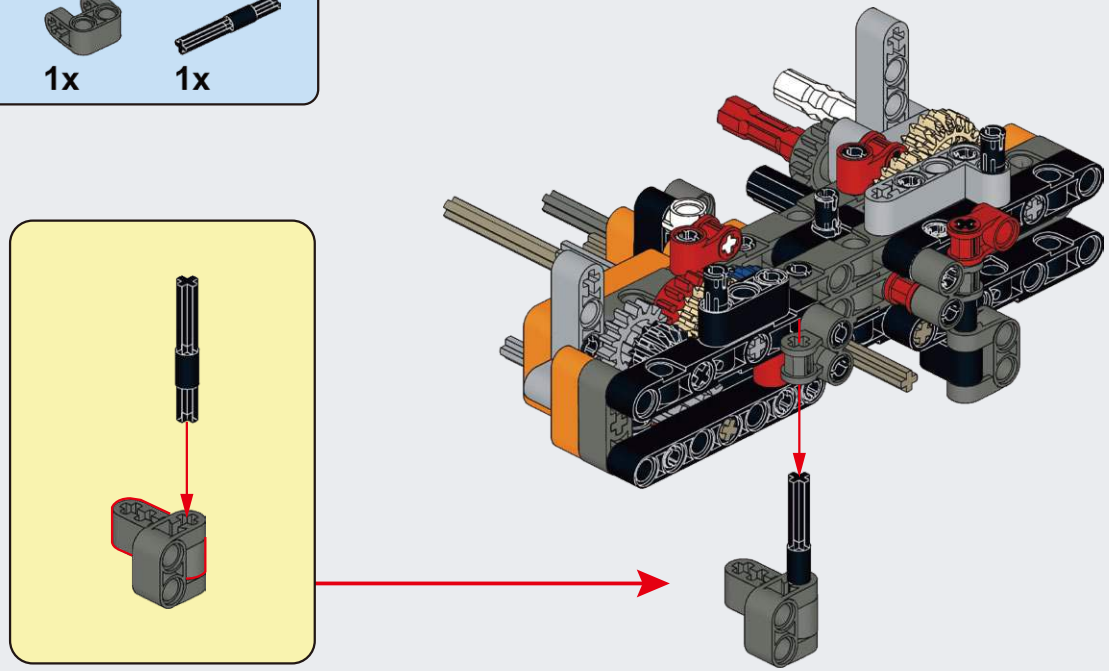

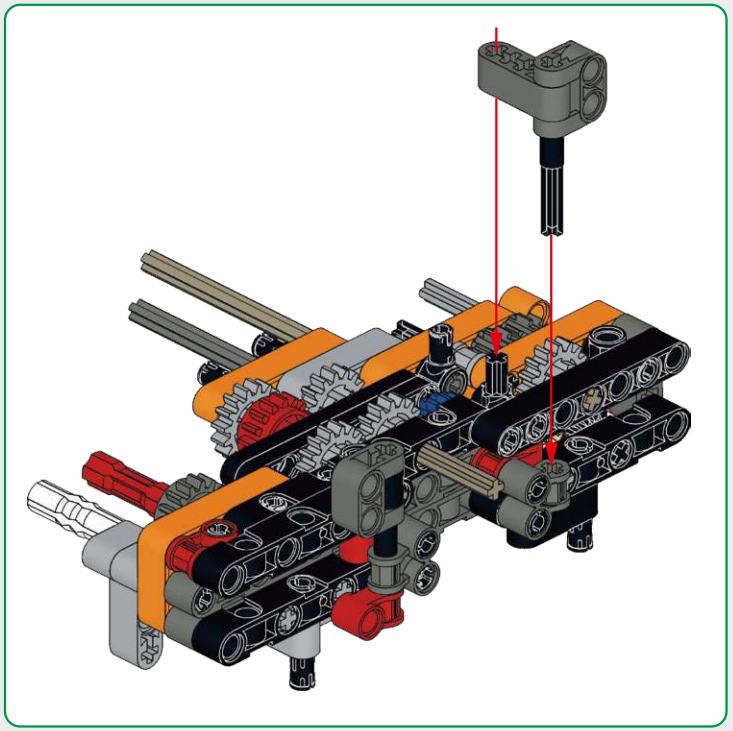

A90

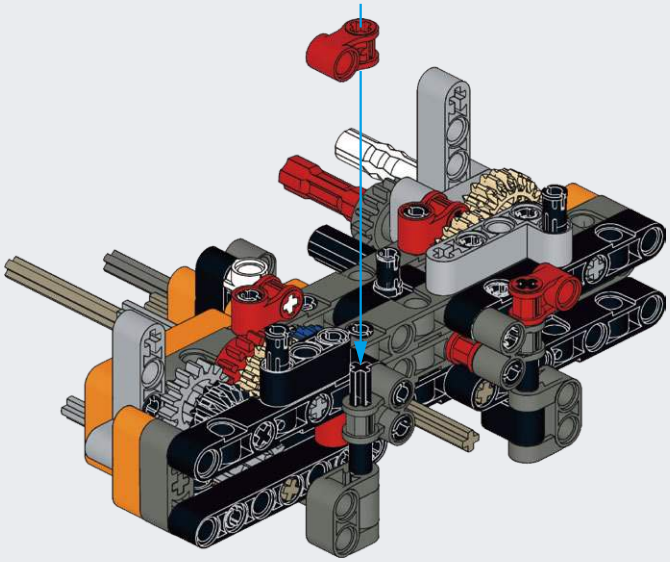

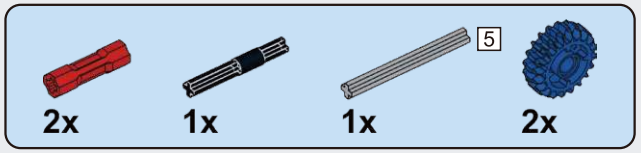

A91

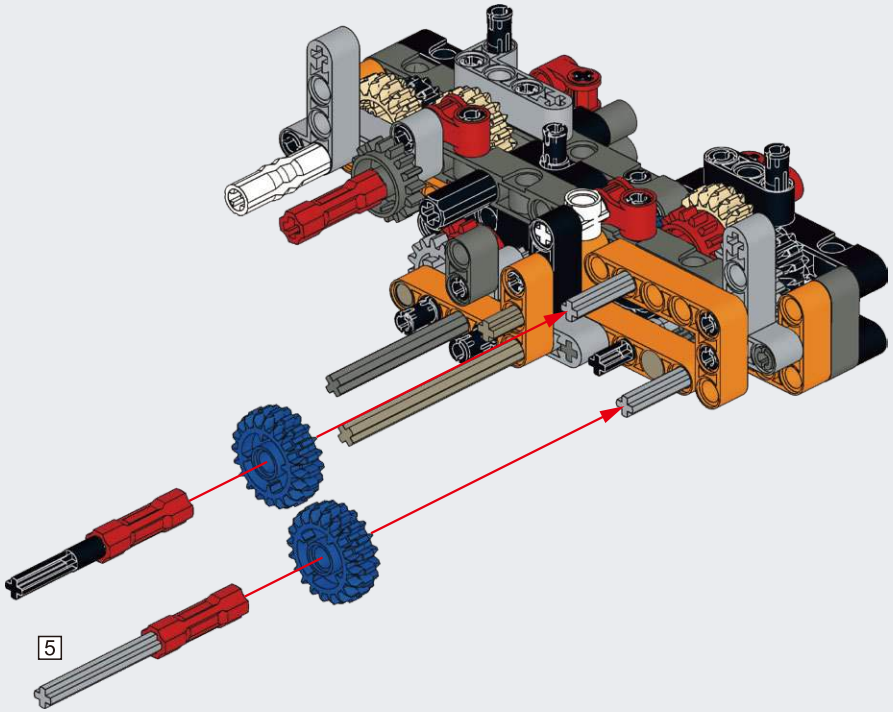

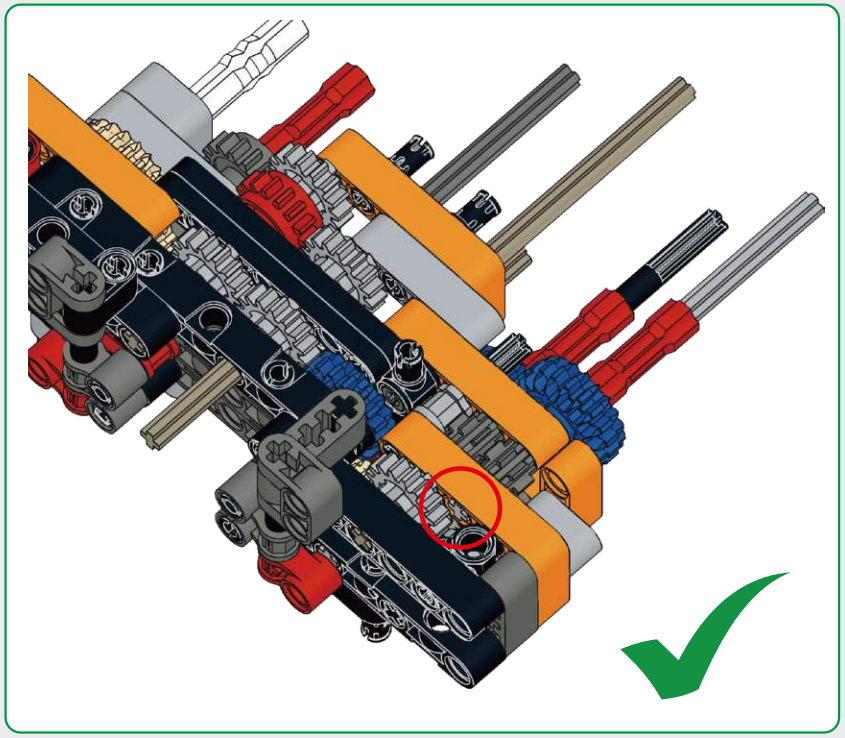

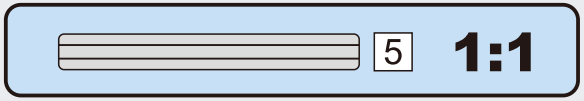

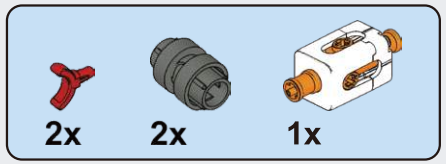

A92

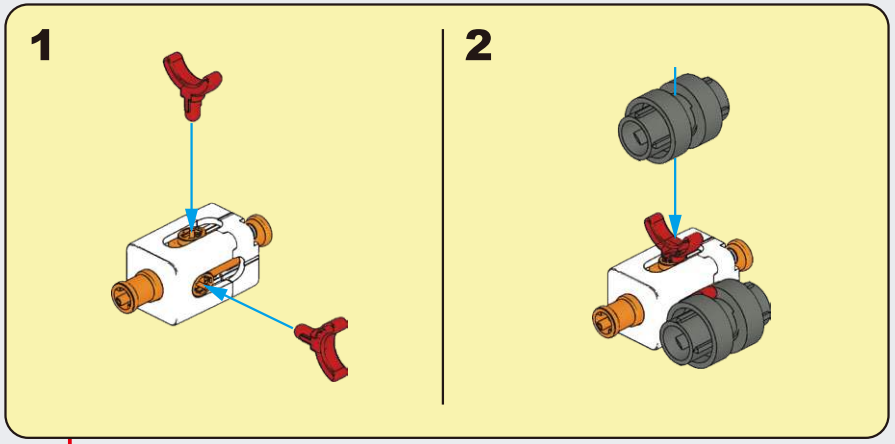

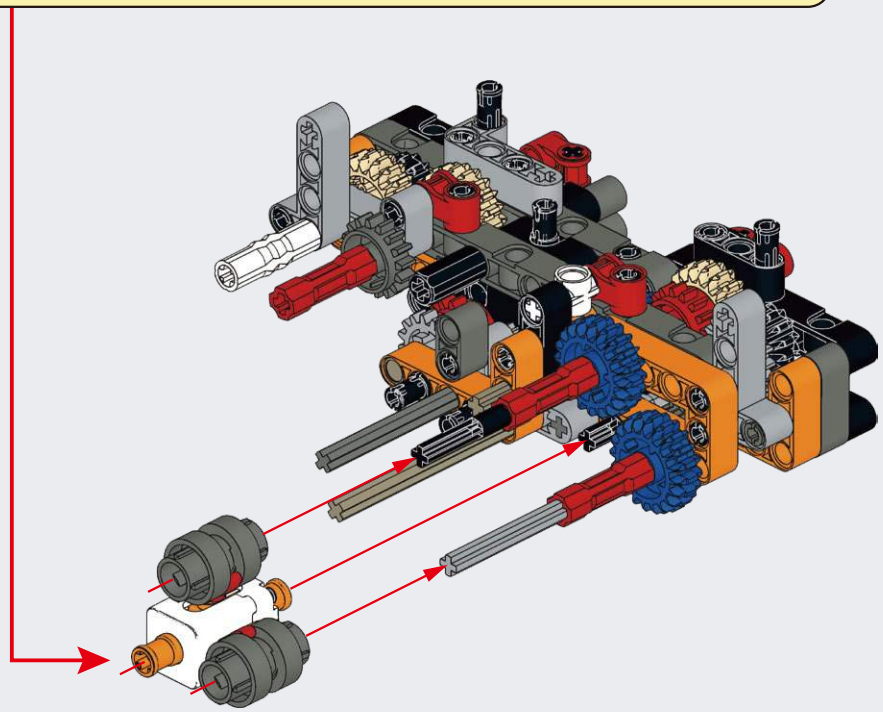

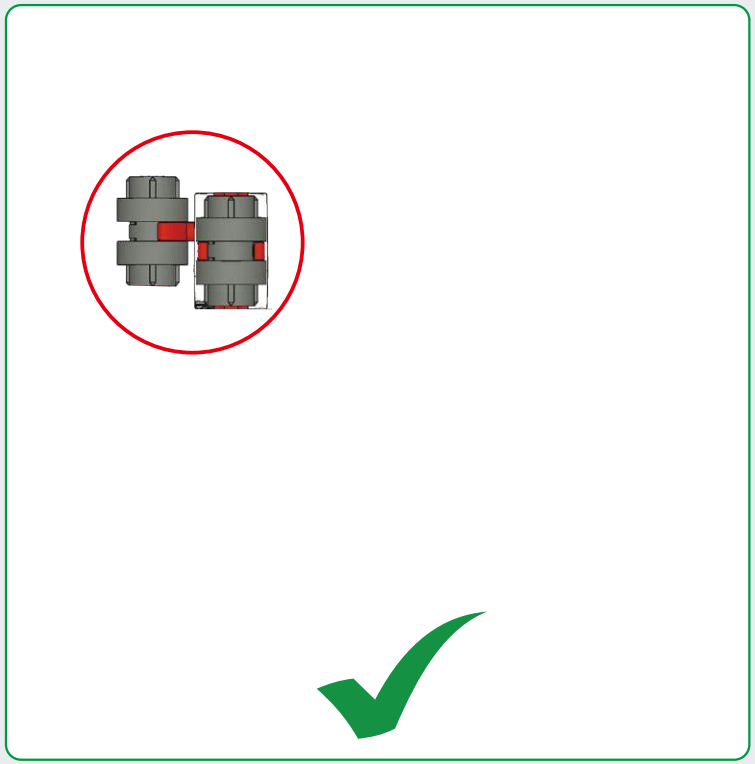

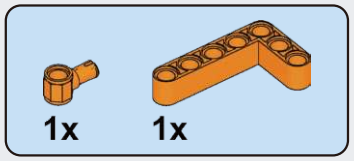

A93

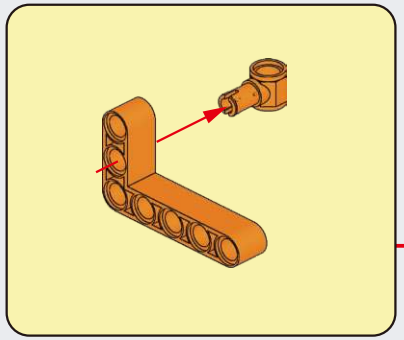

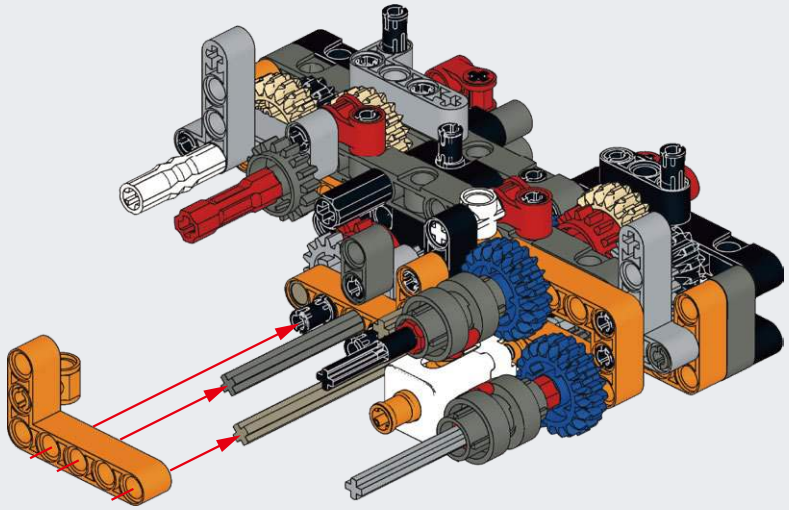

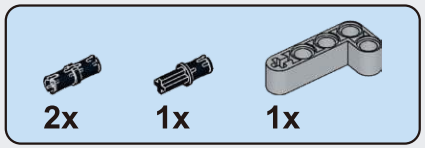

A94

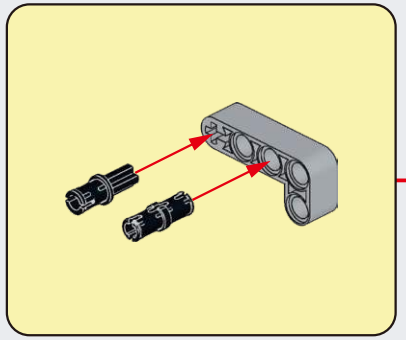

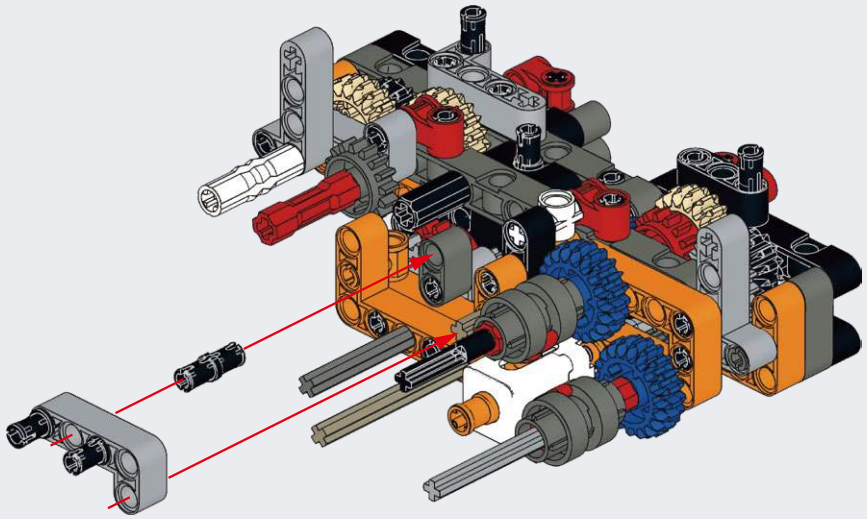

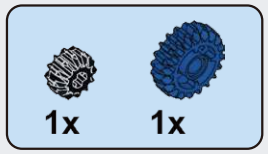

A95

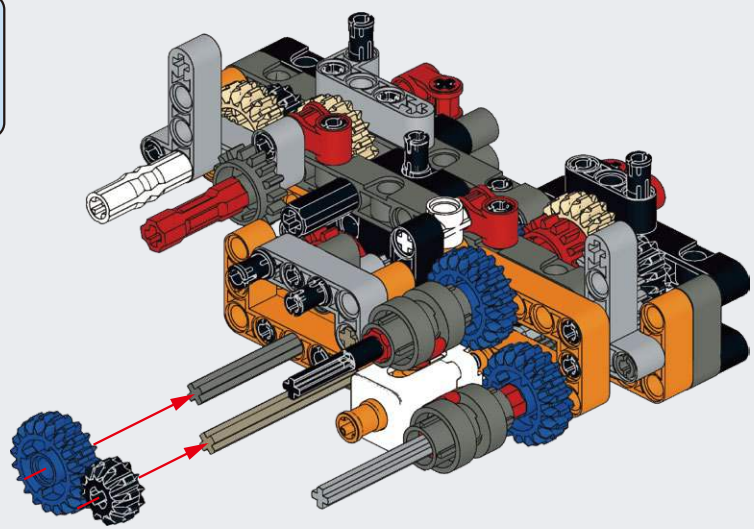

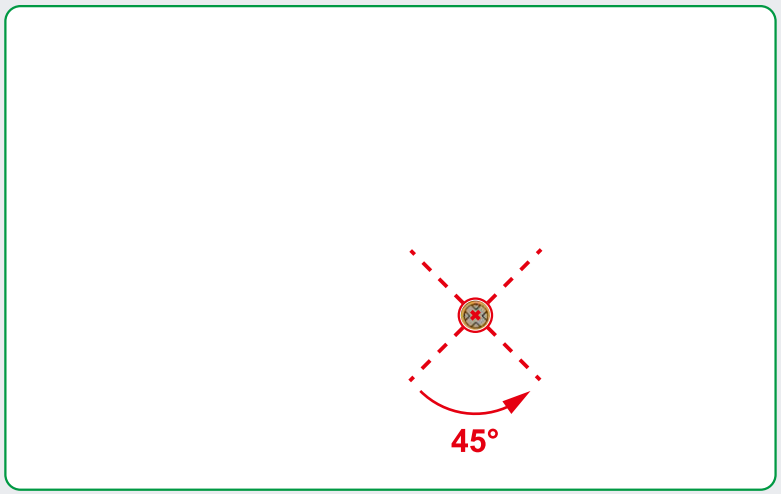

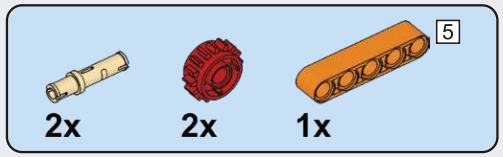

A96

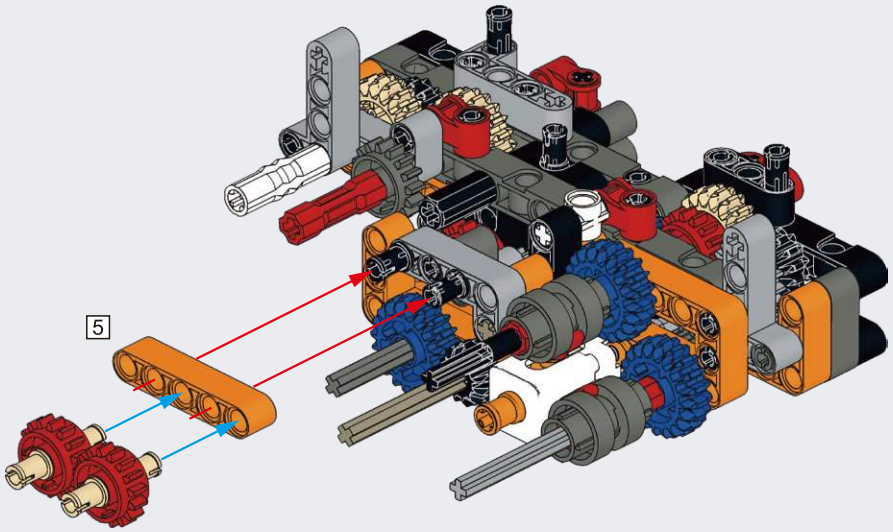

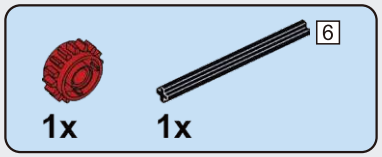

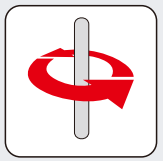

A97

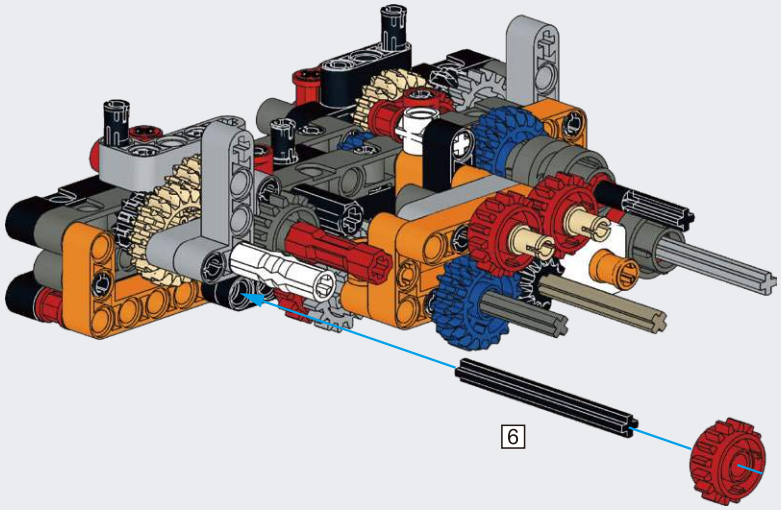

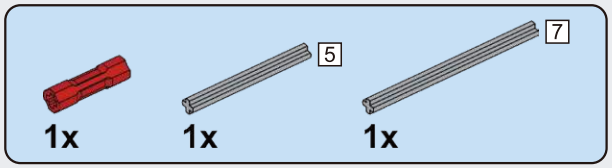

A98

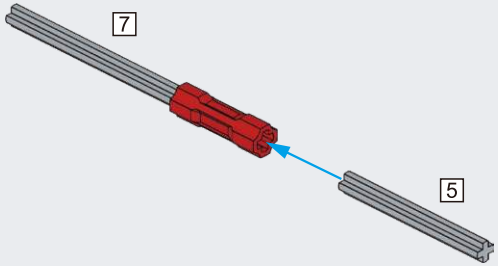

A99

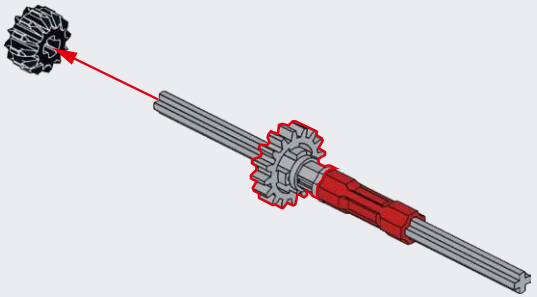

A100

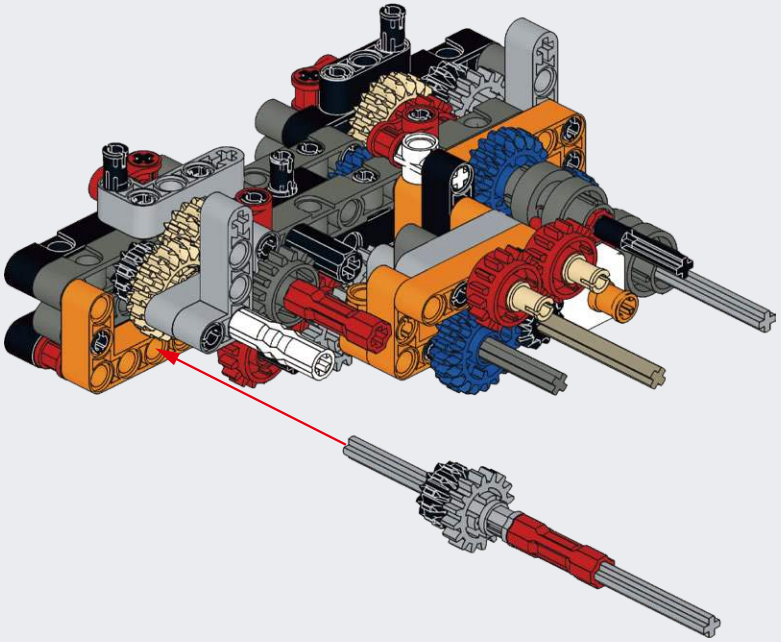

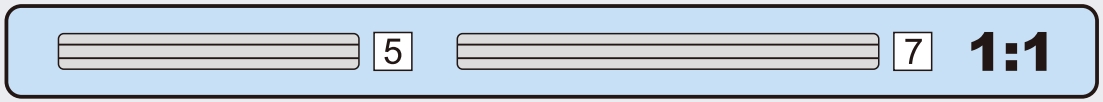

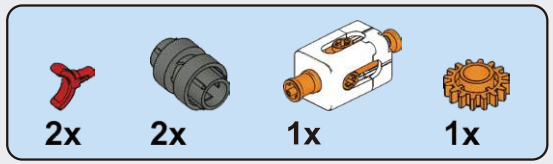

A101

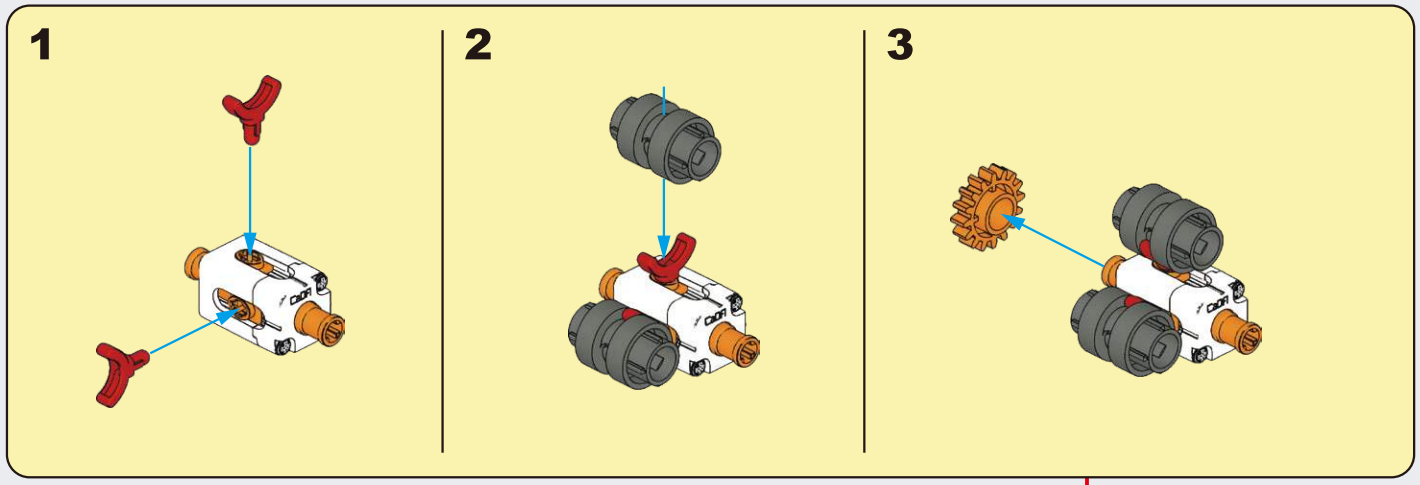

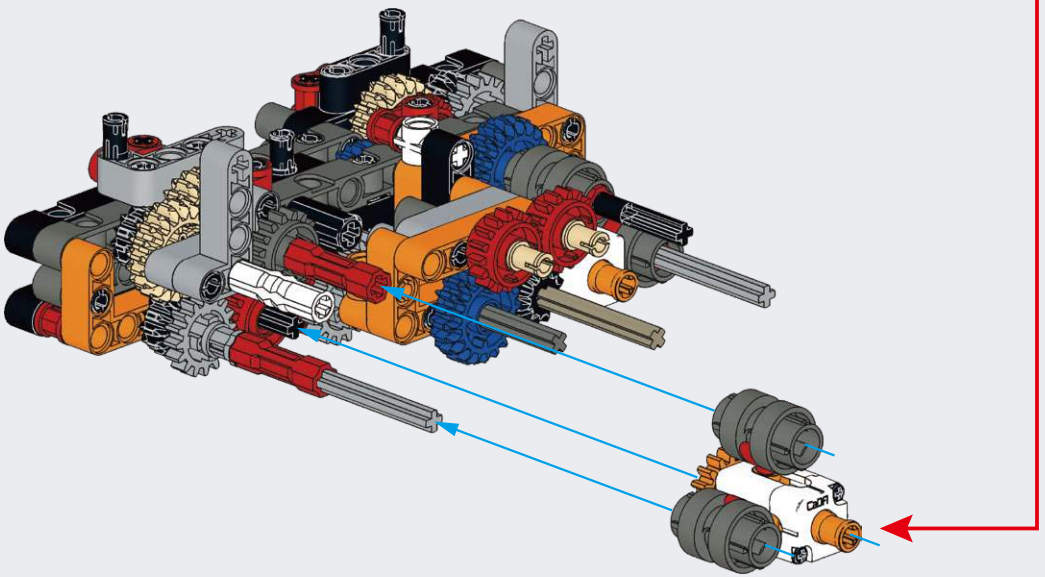

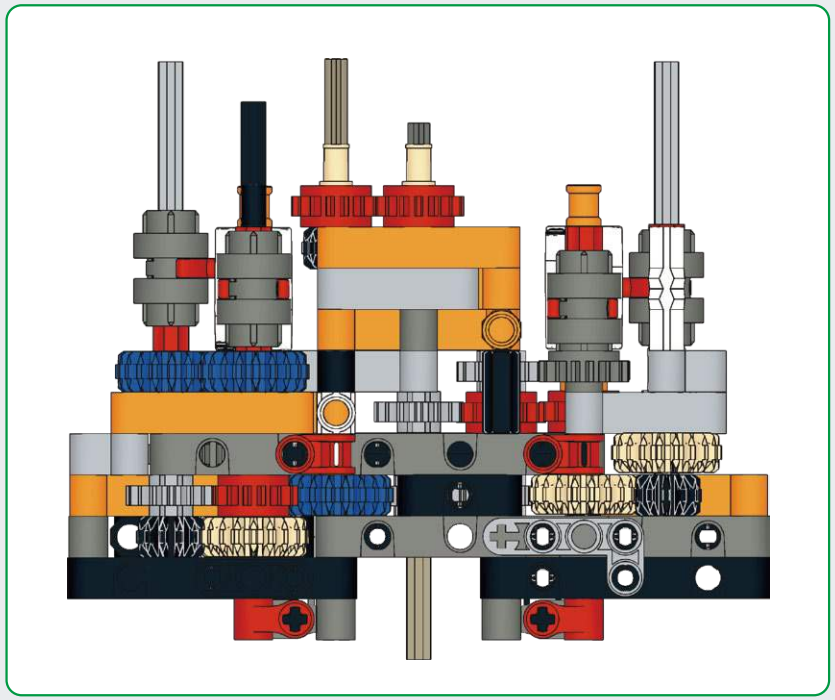

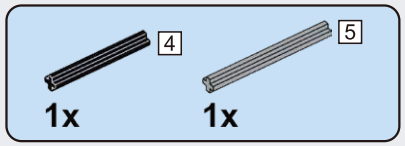

A102

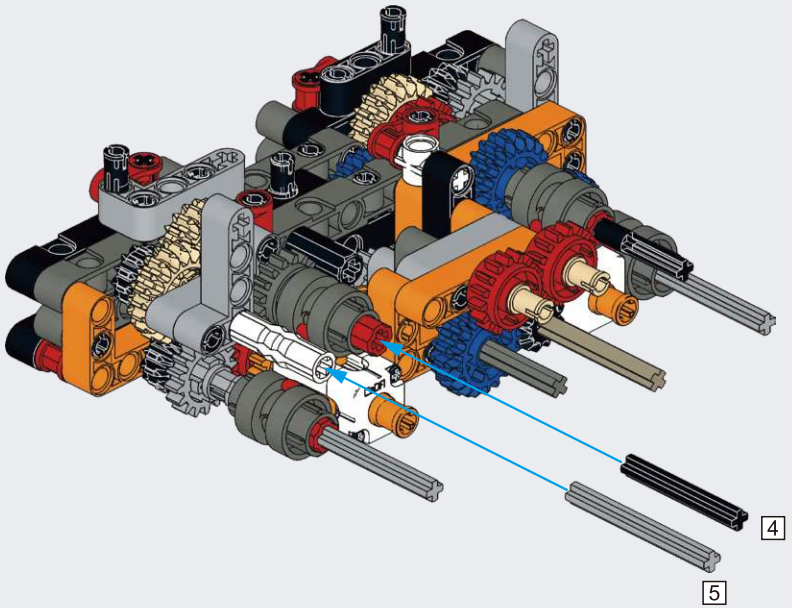

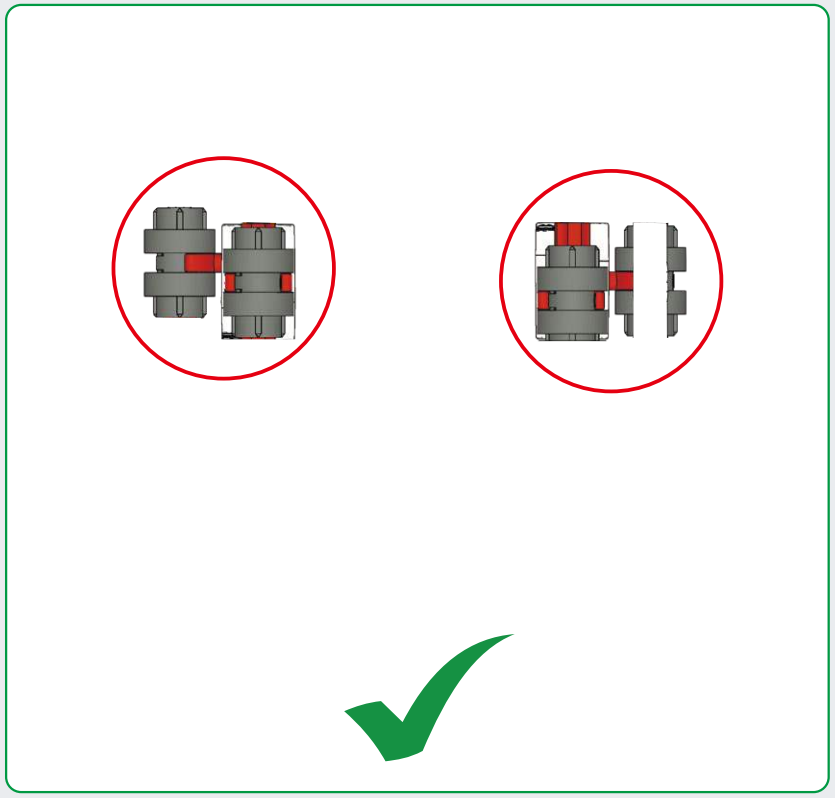

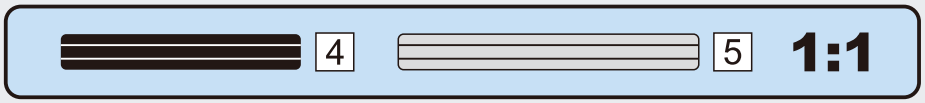

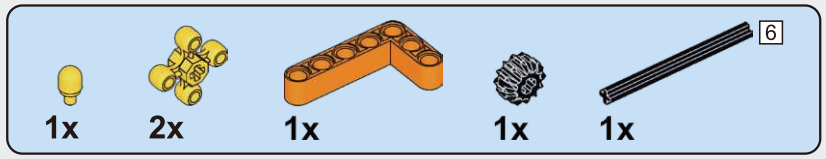

A103

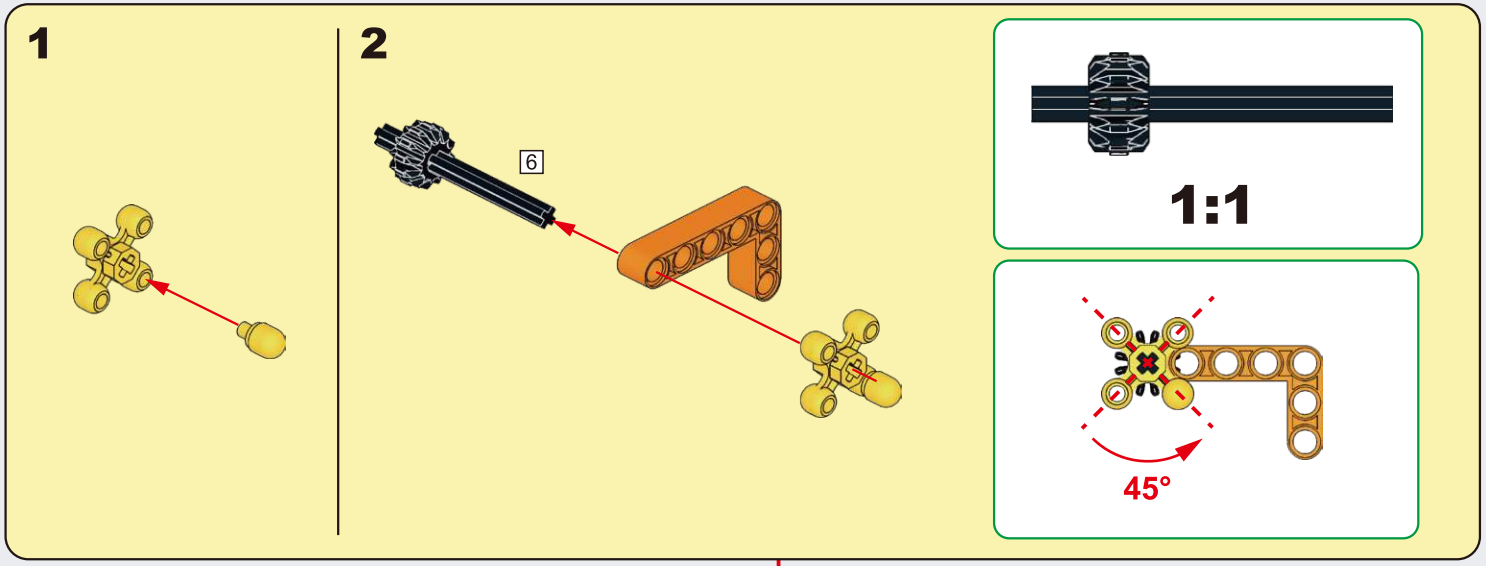

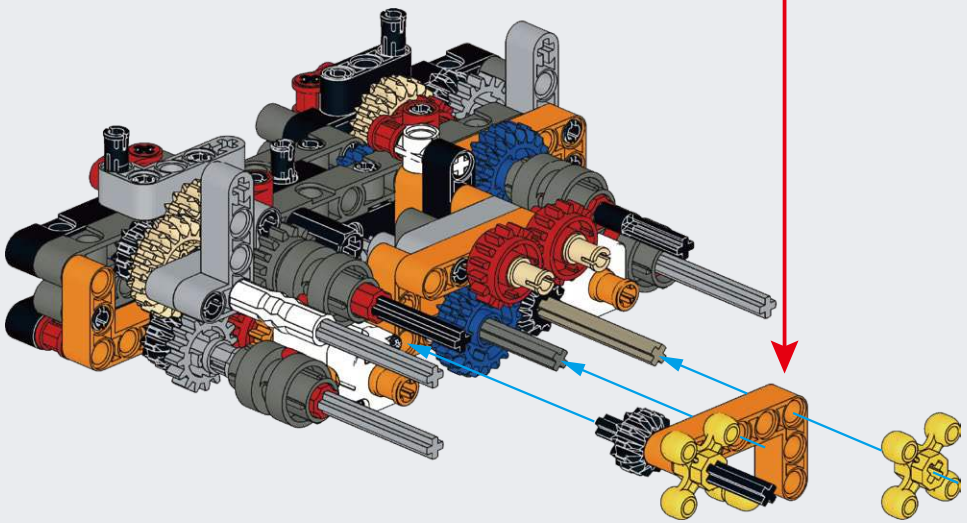

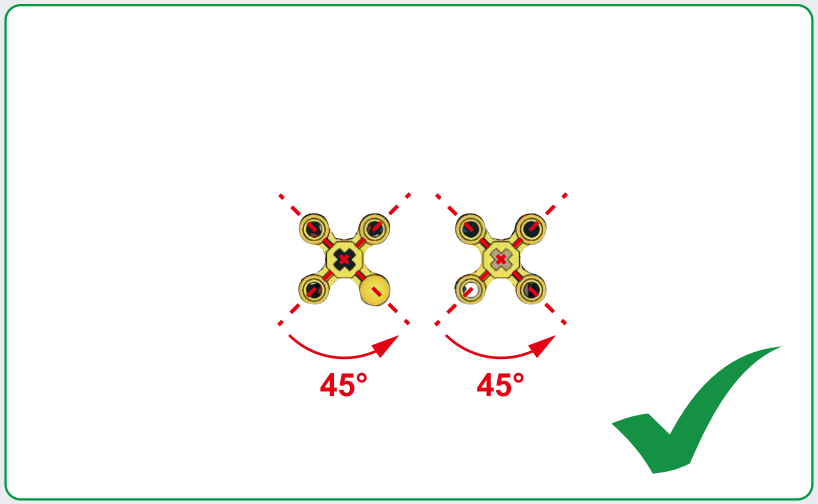

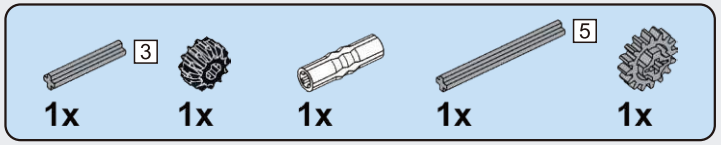

A104

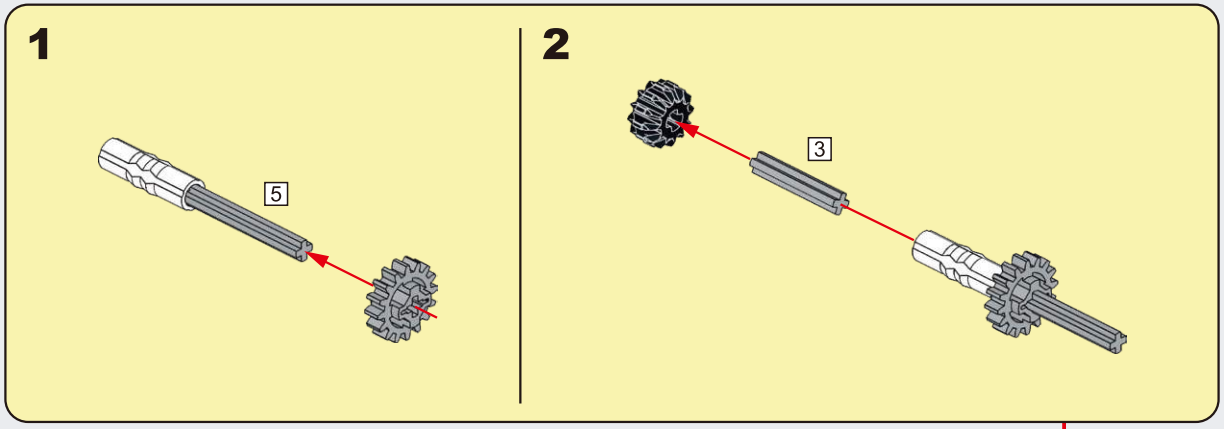

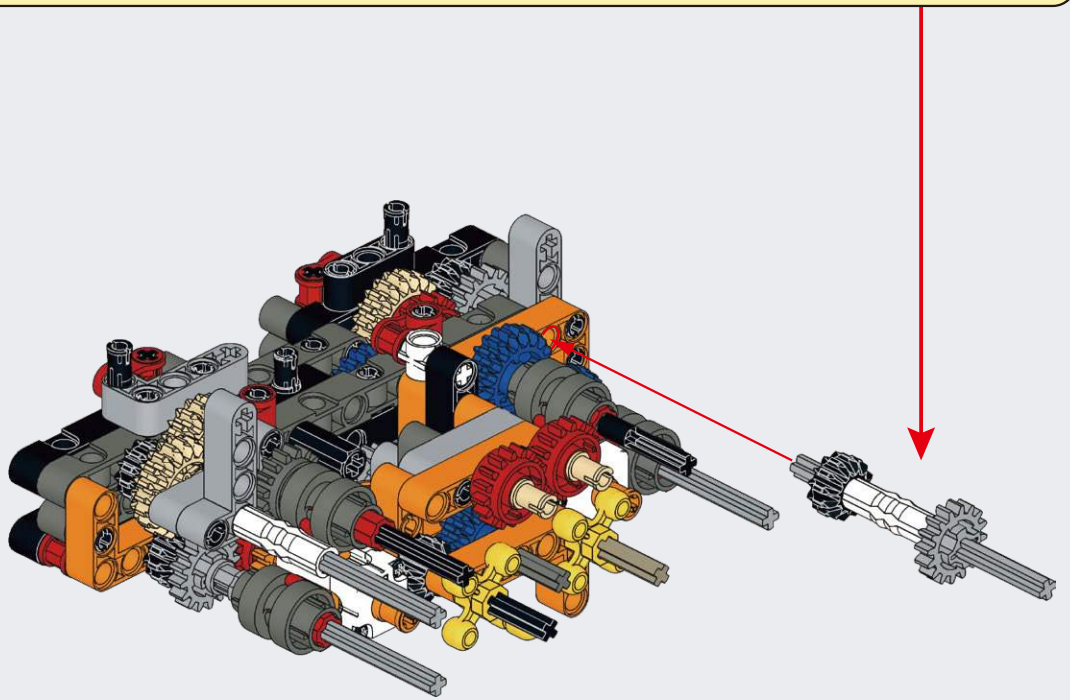

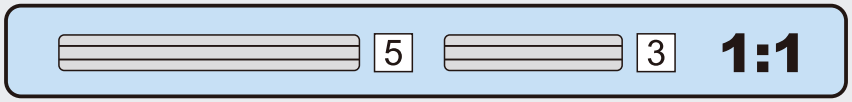

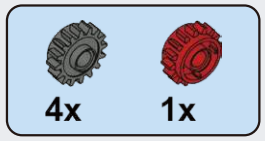

A105

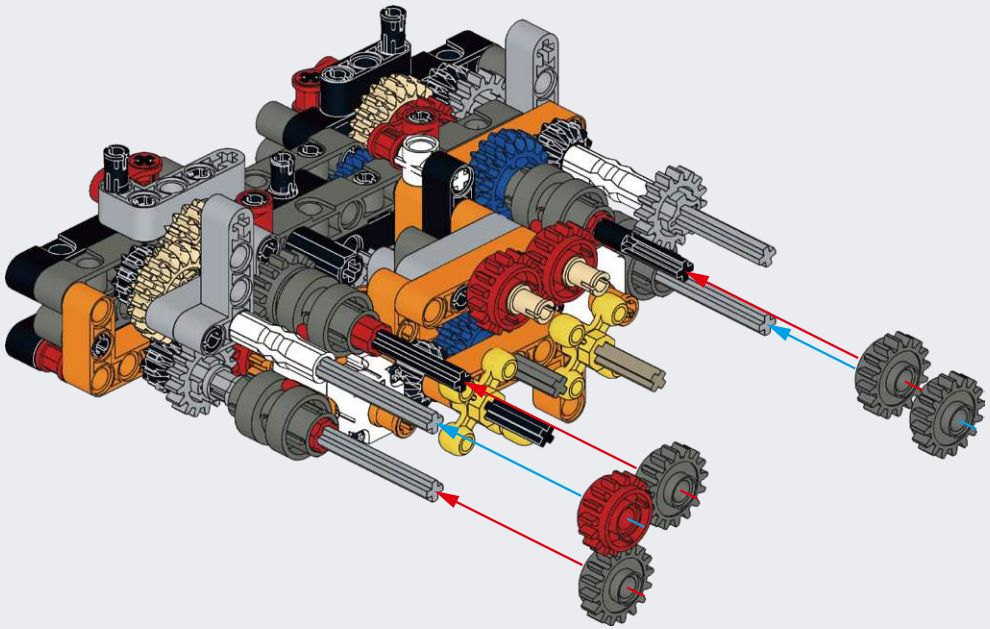

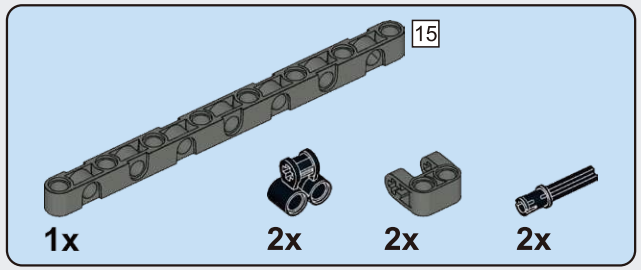

A106

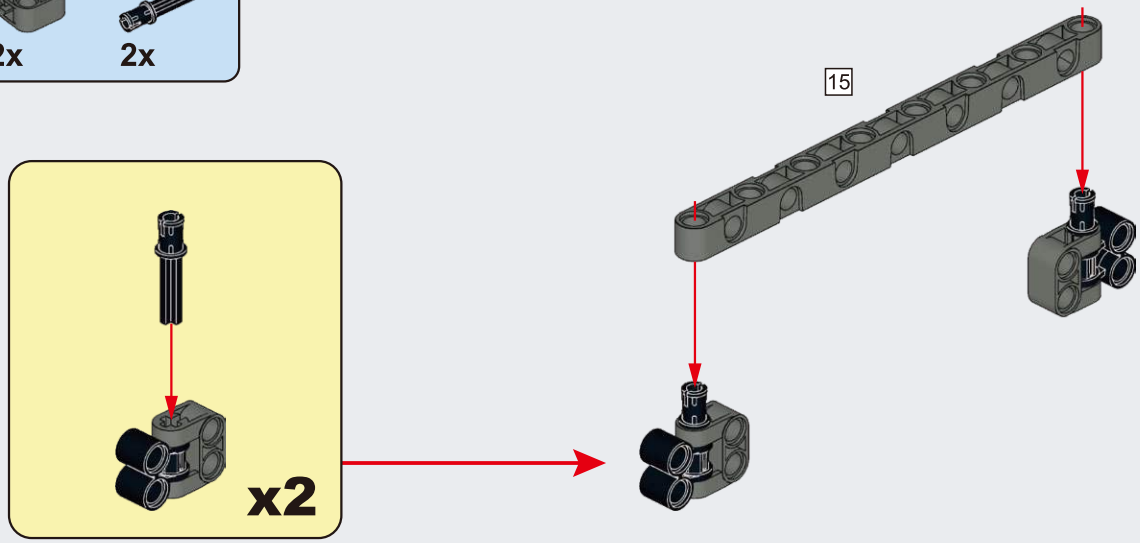

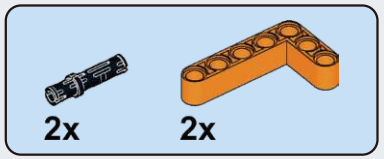

A107

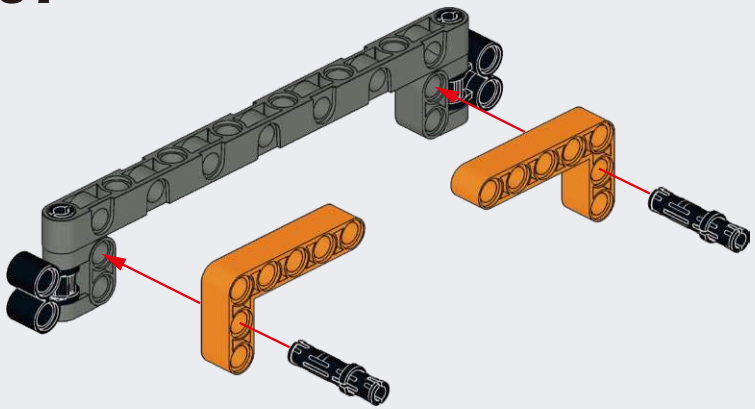

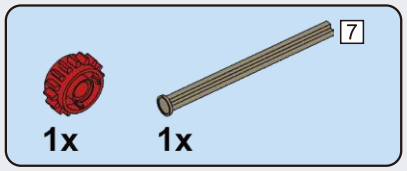

A108

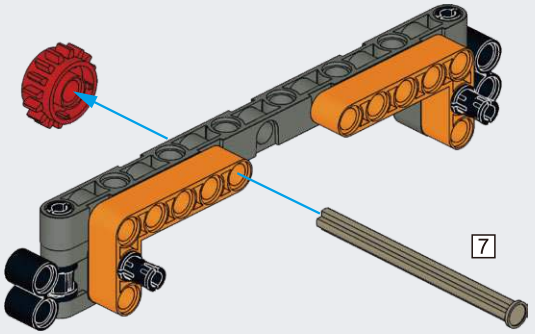

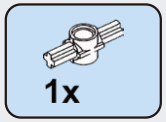

A109

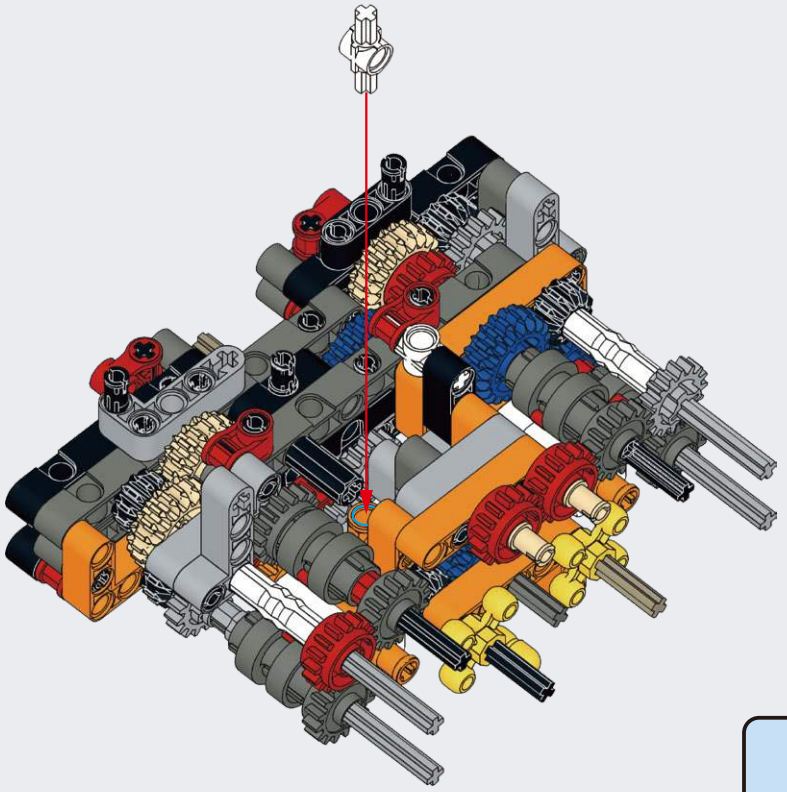

A110

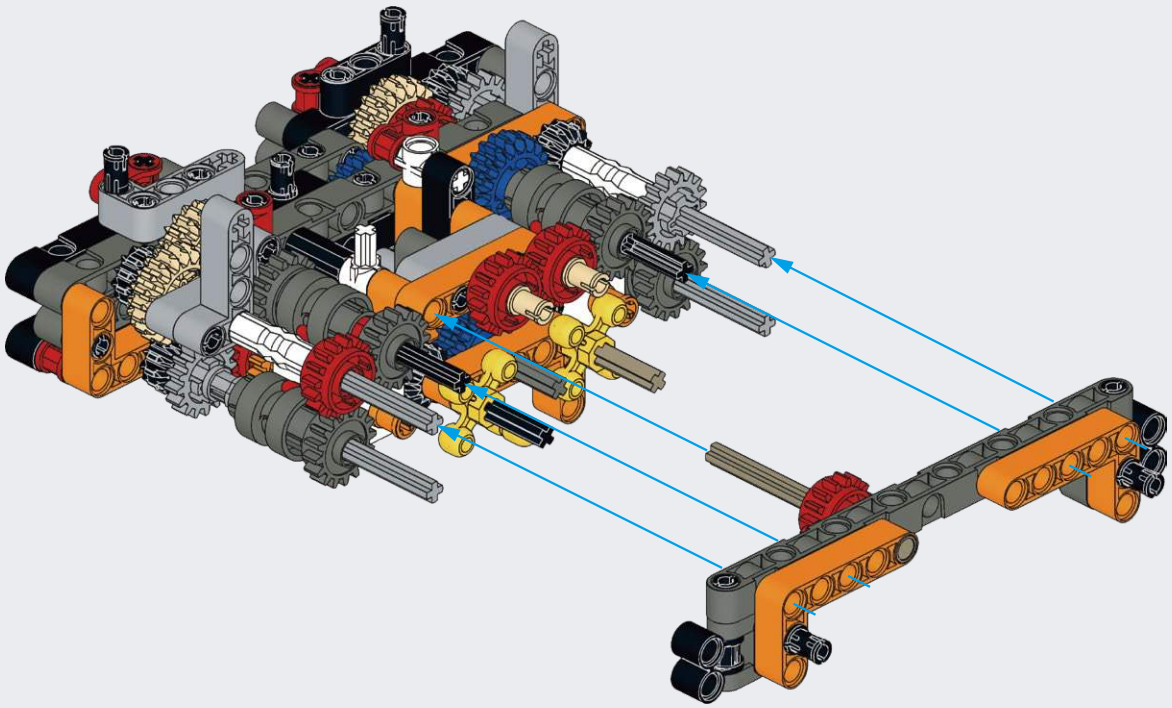

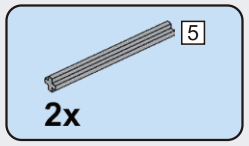

A111

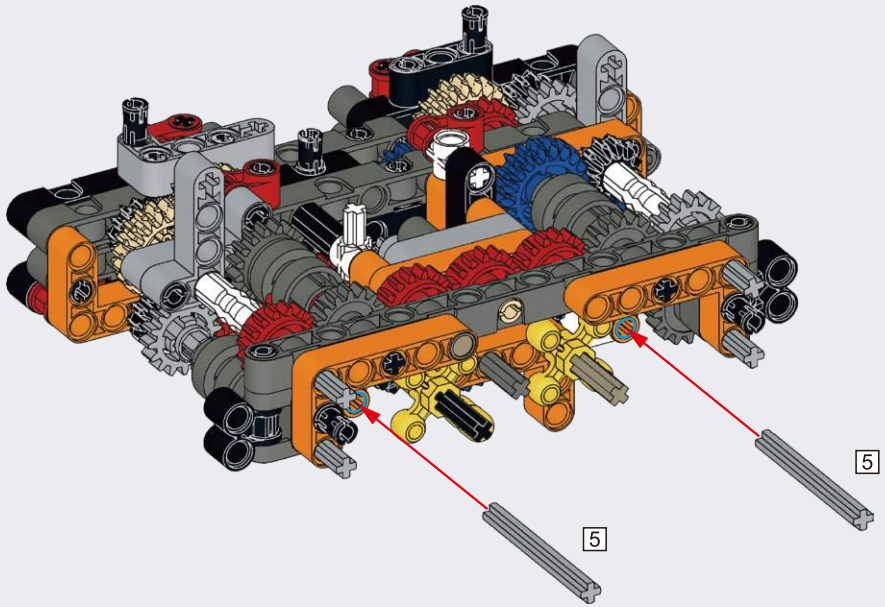

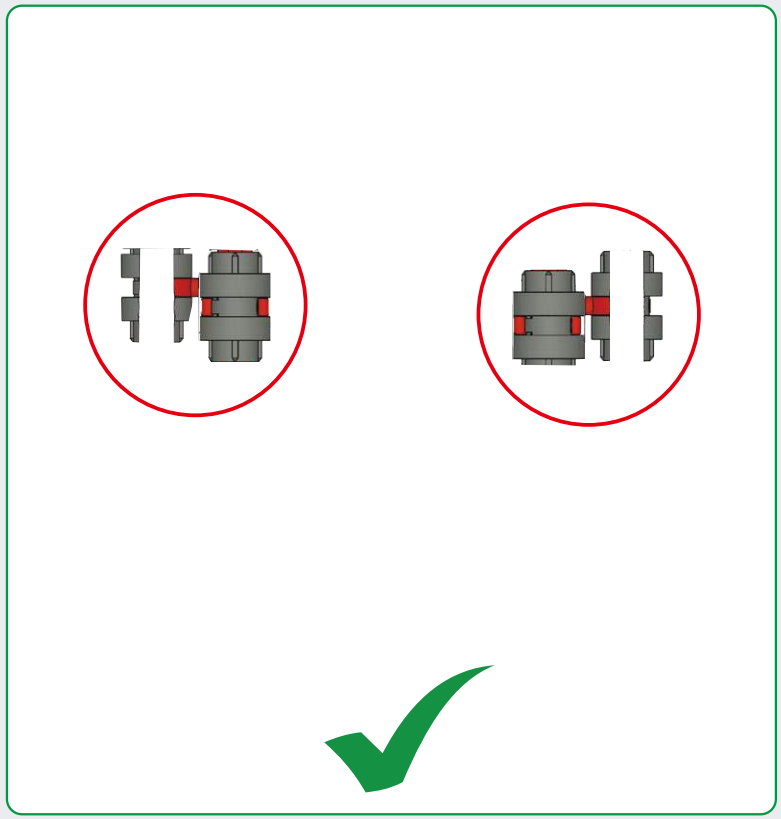

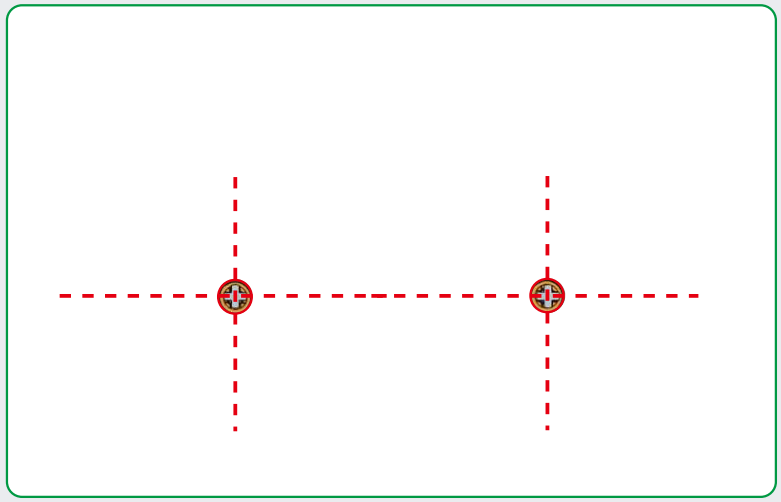

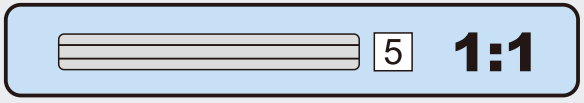

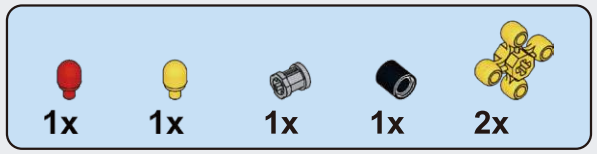

A112

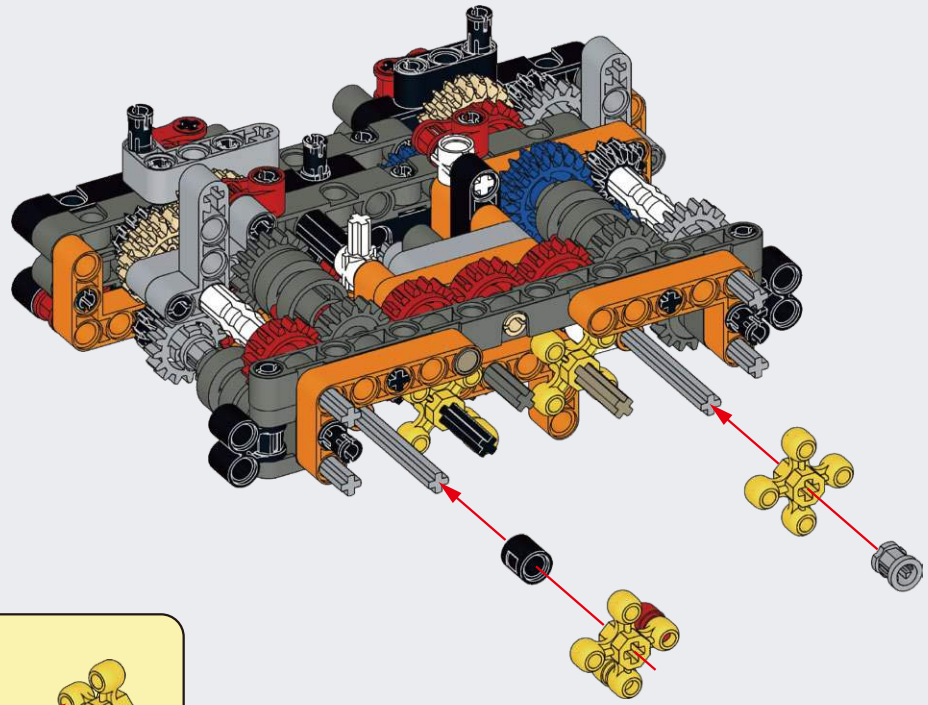

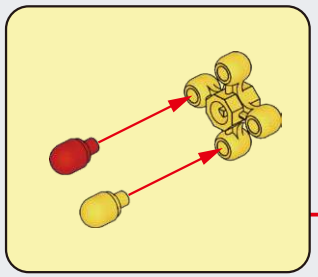

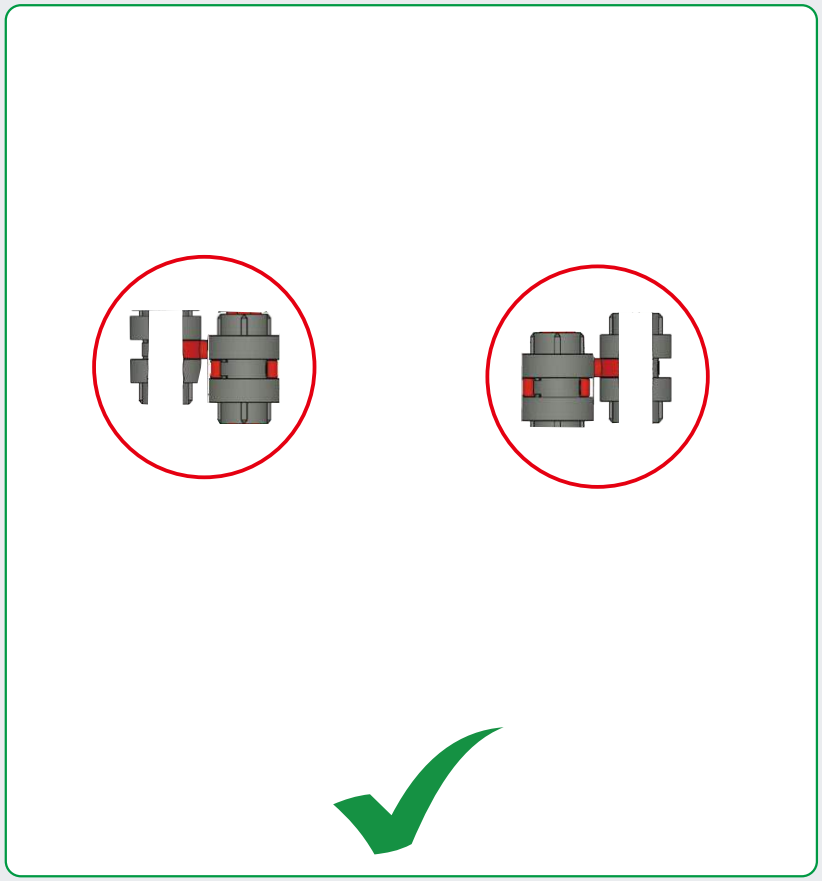

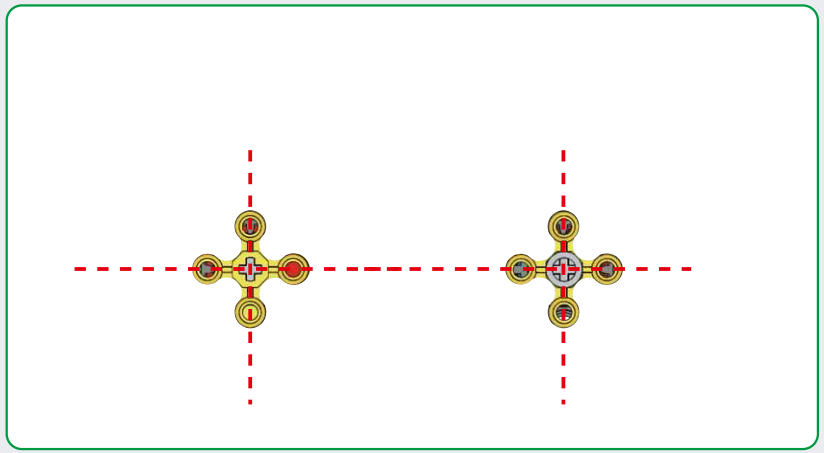

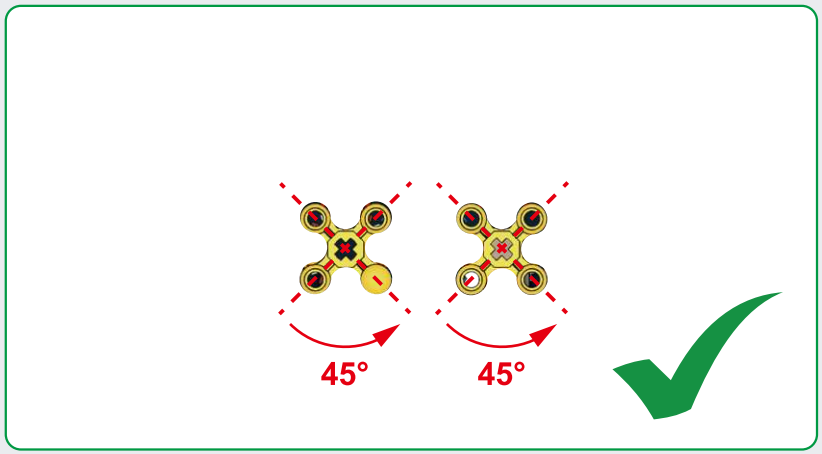

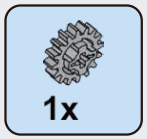

A113

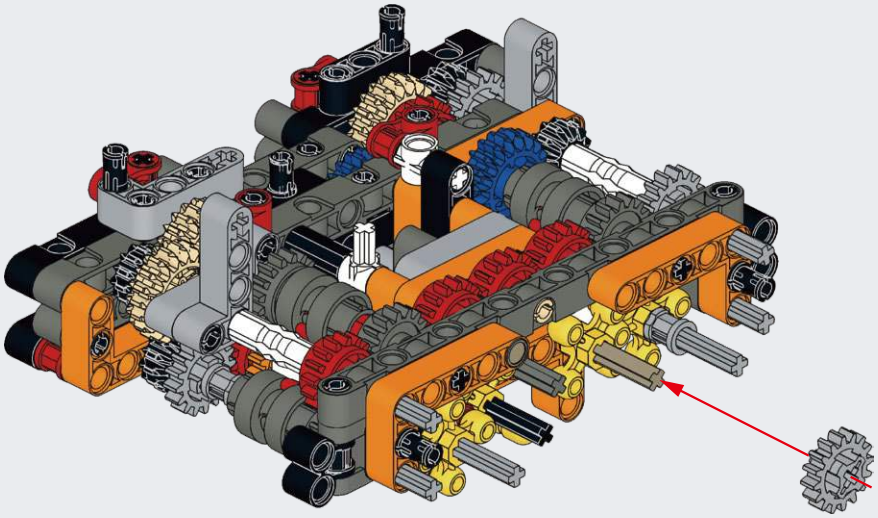

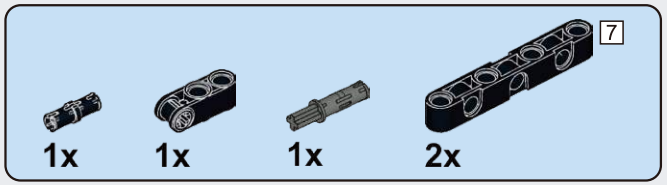

A114

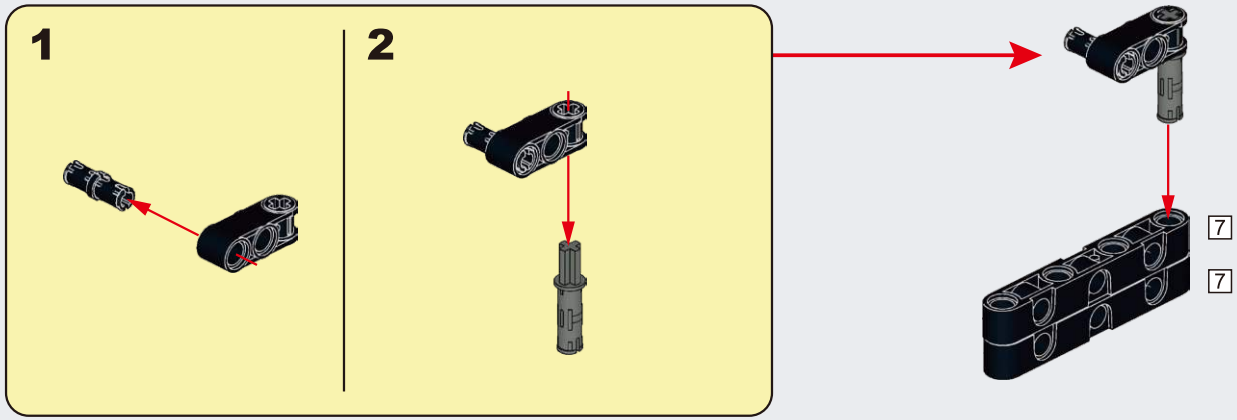

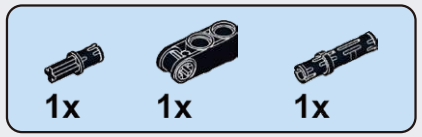

A115

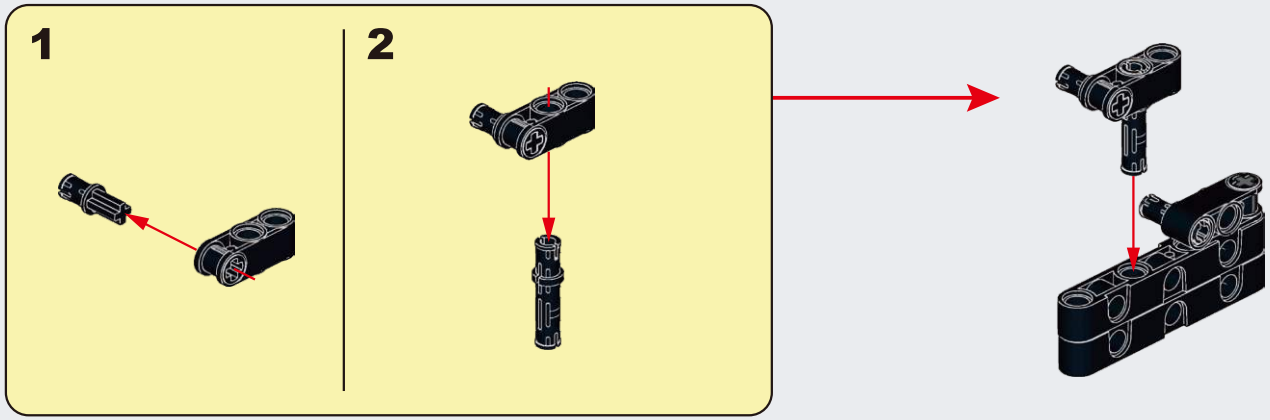

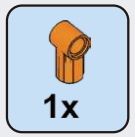

A116

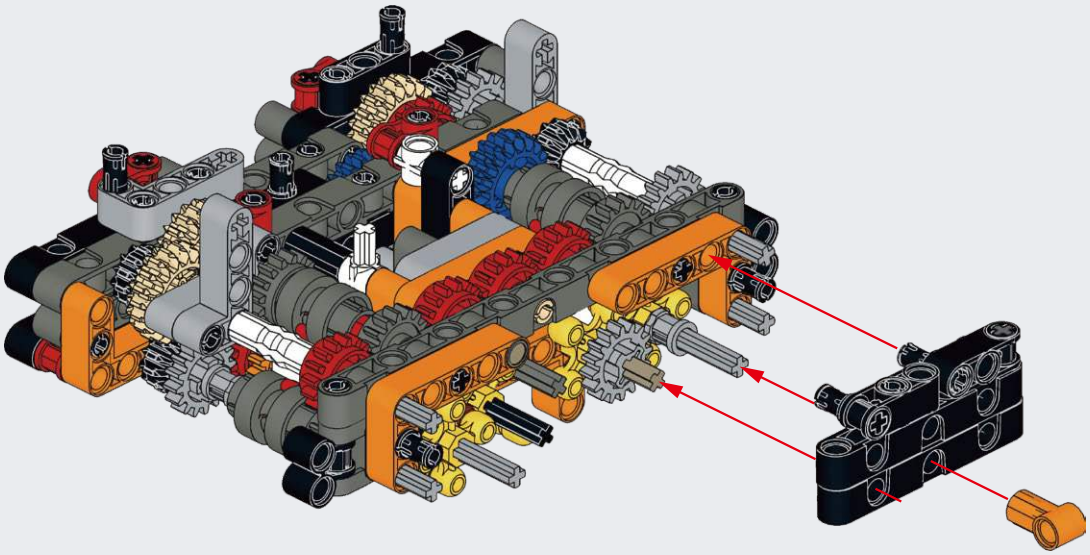

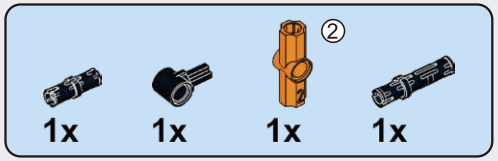

A117

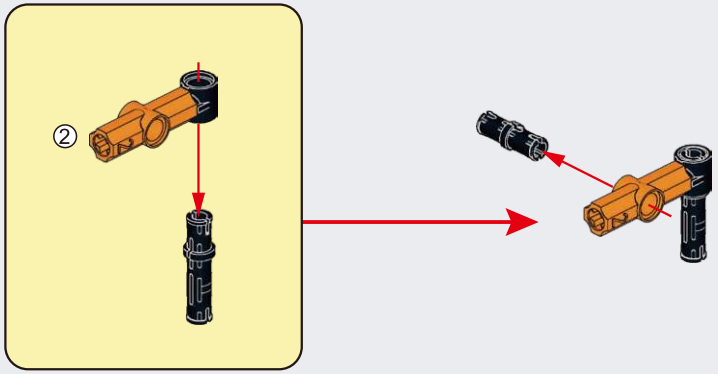

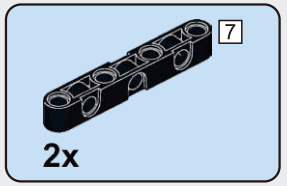

A118

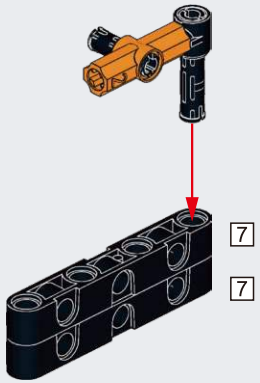

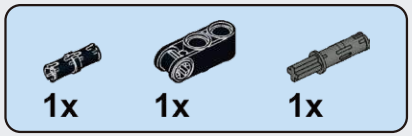

A119

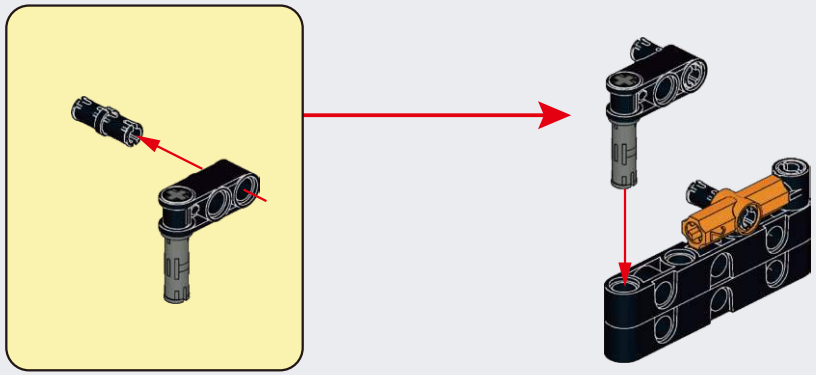

A120

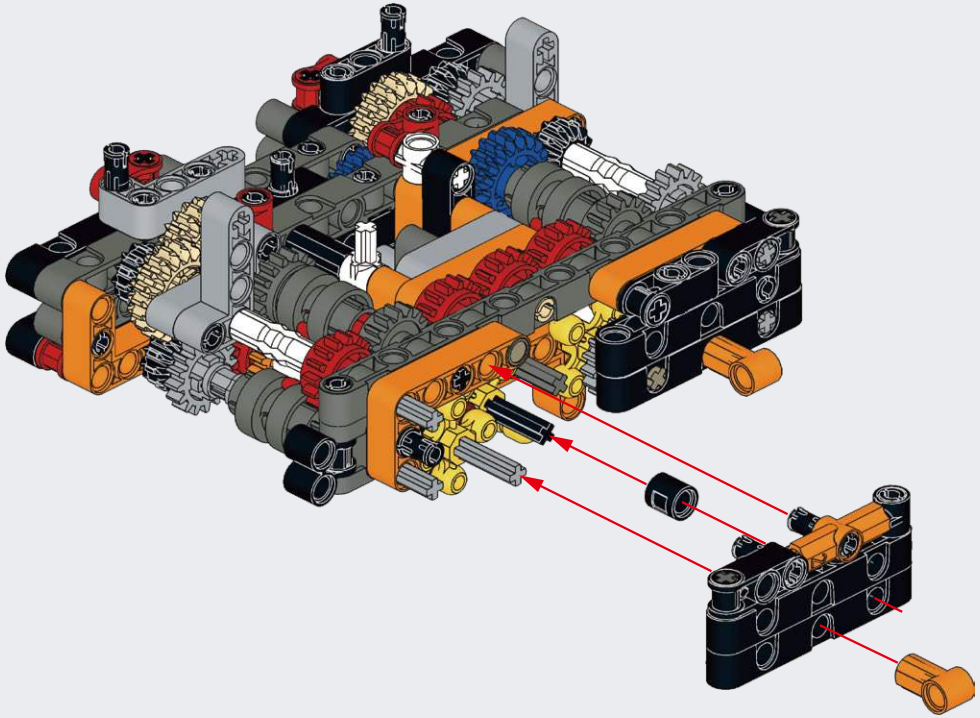

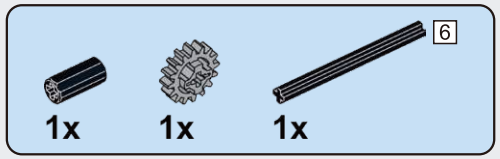

A121

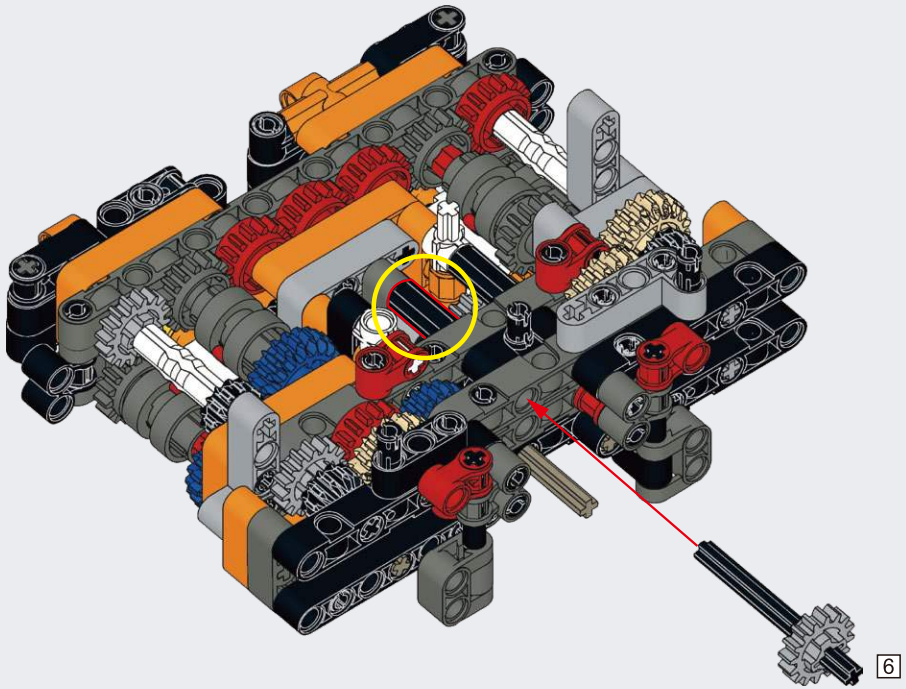

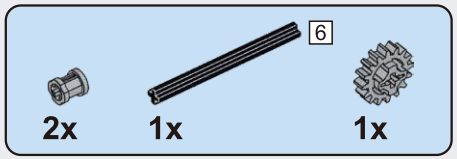

A122

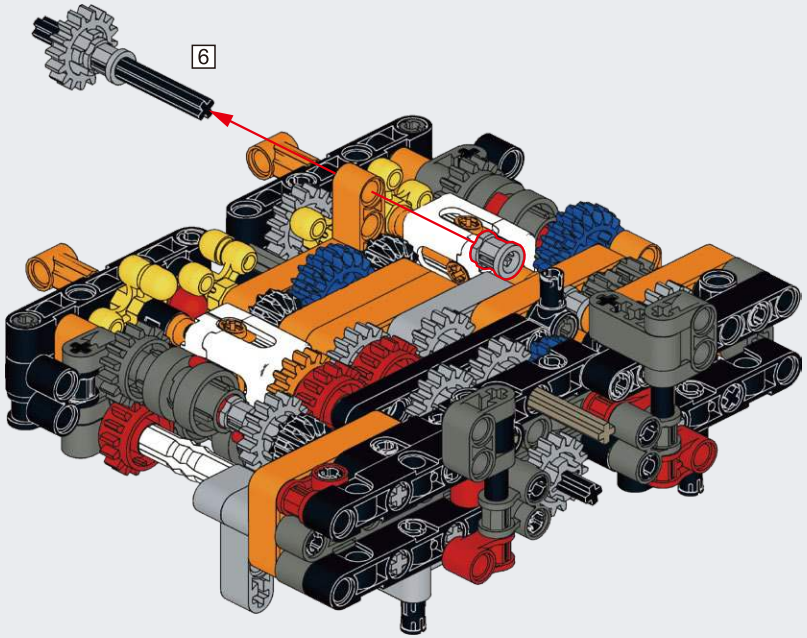

A123

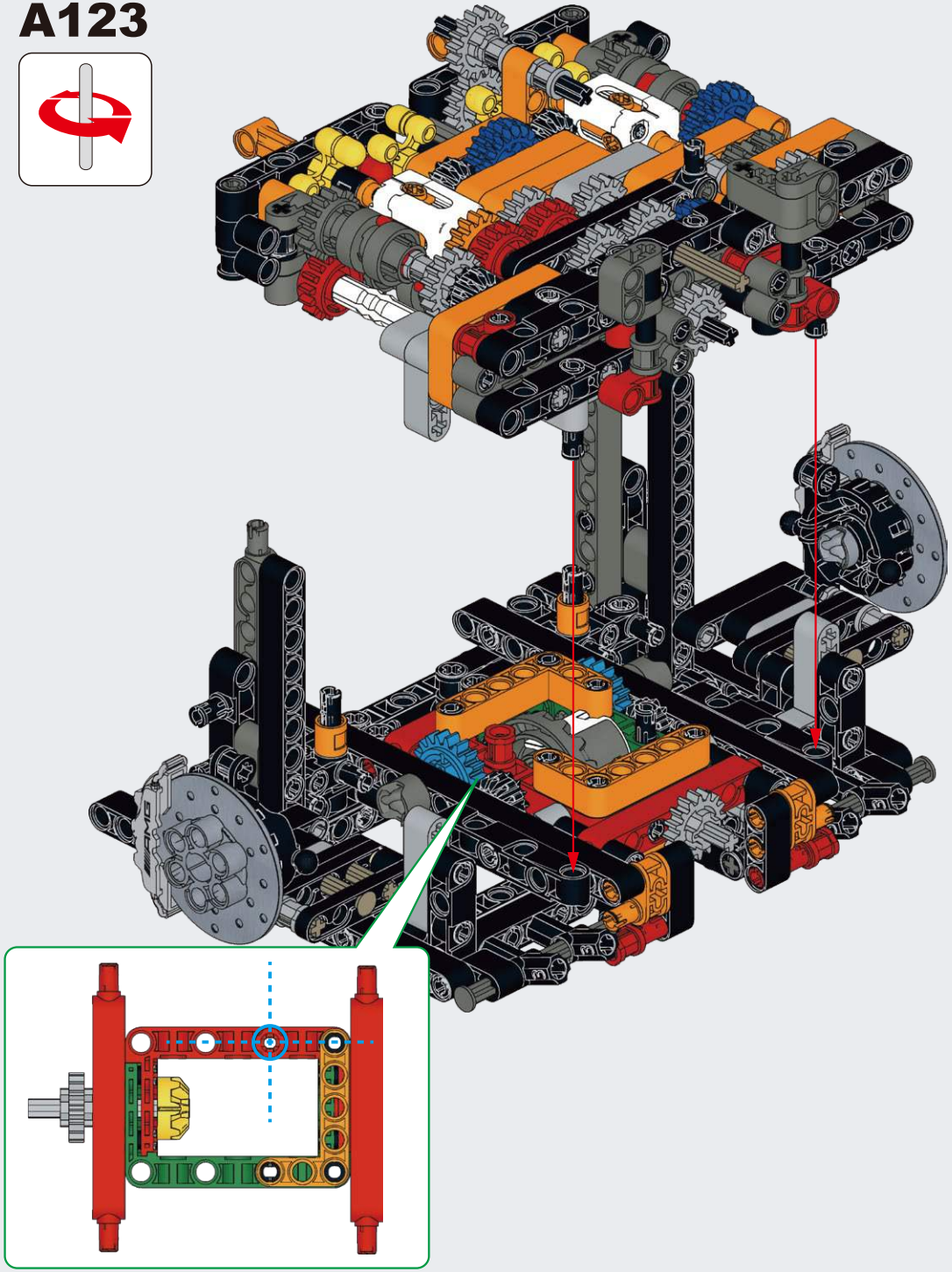

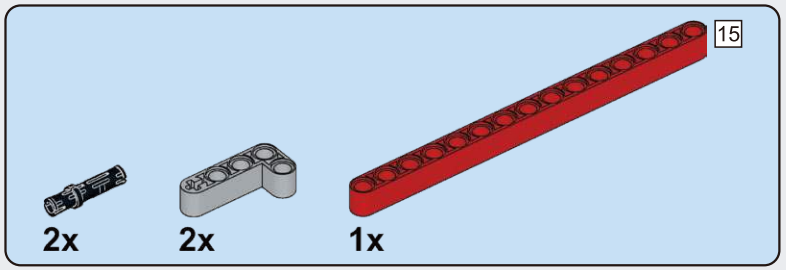

A124

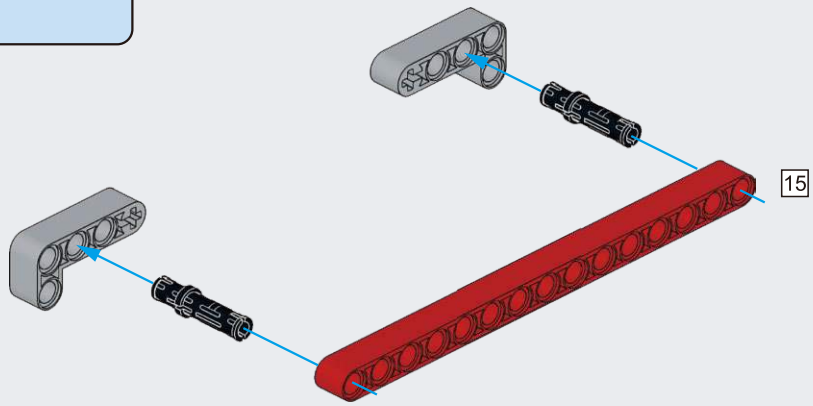

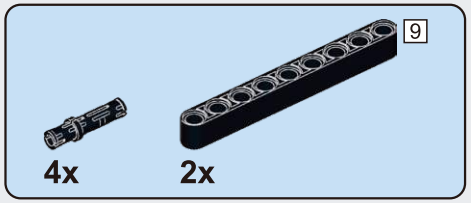

A125

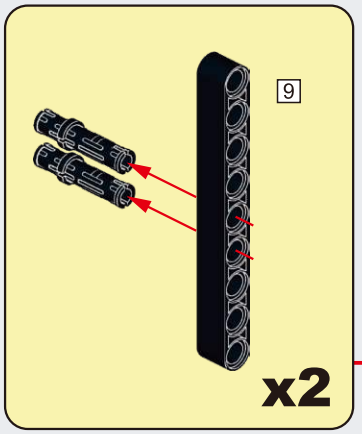

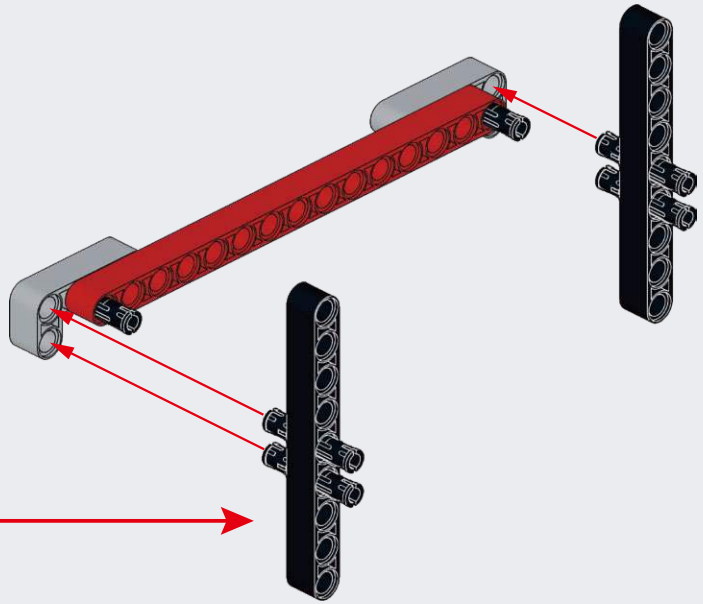

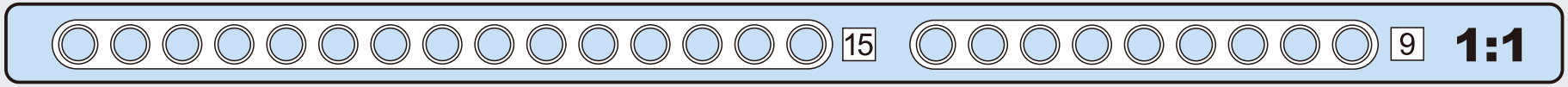

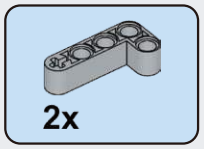

A126

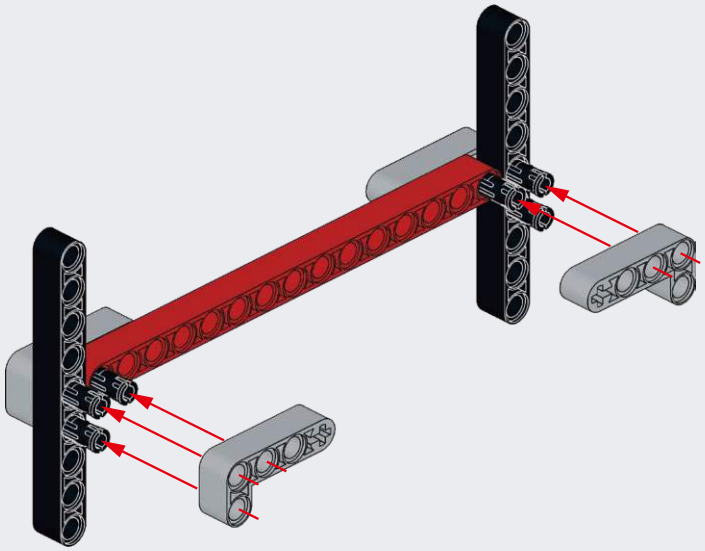

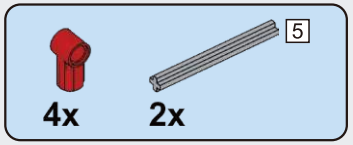

A127

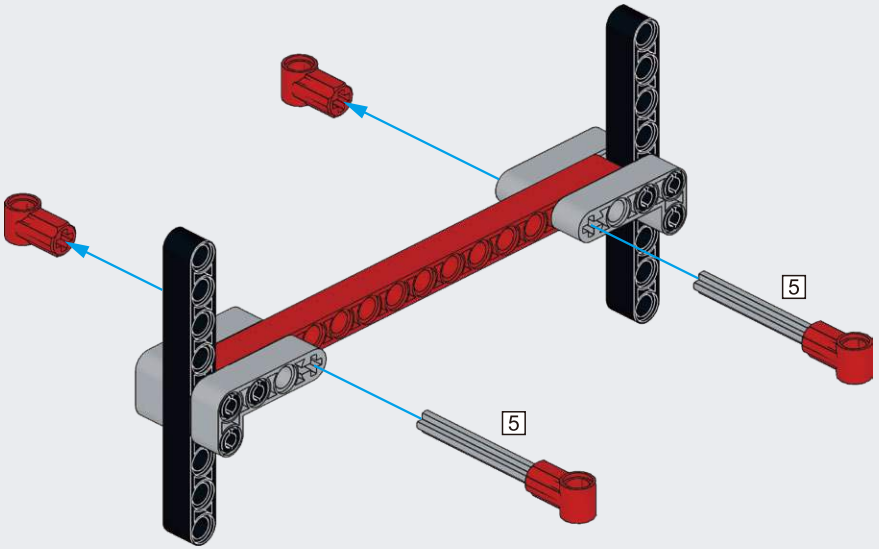

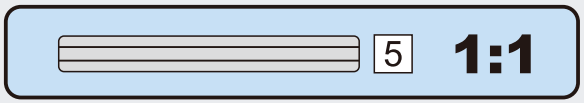

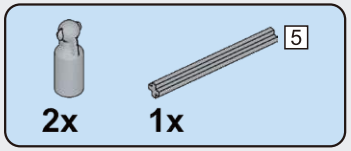

A128

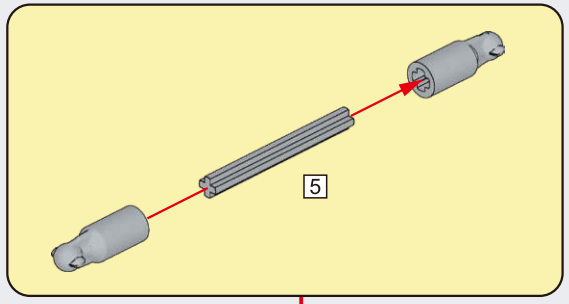

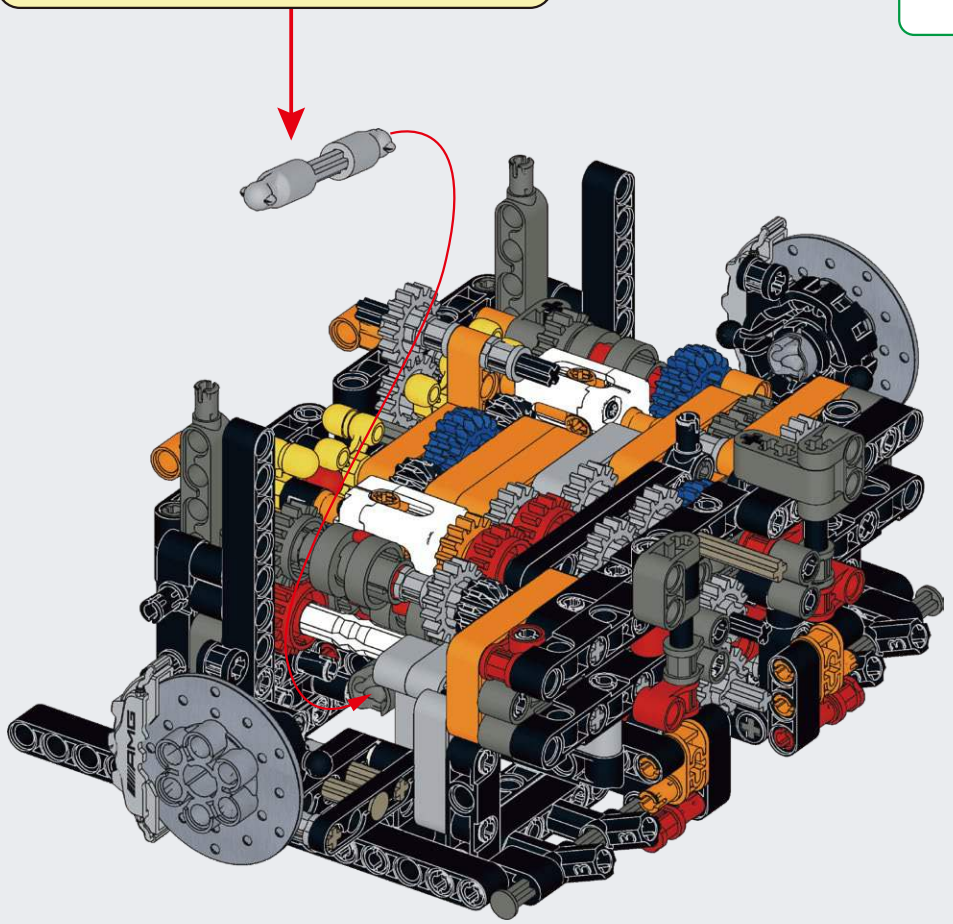

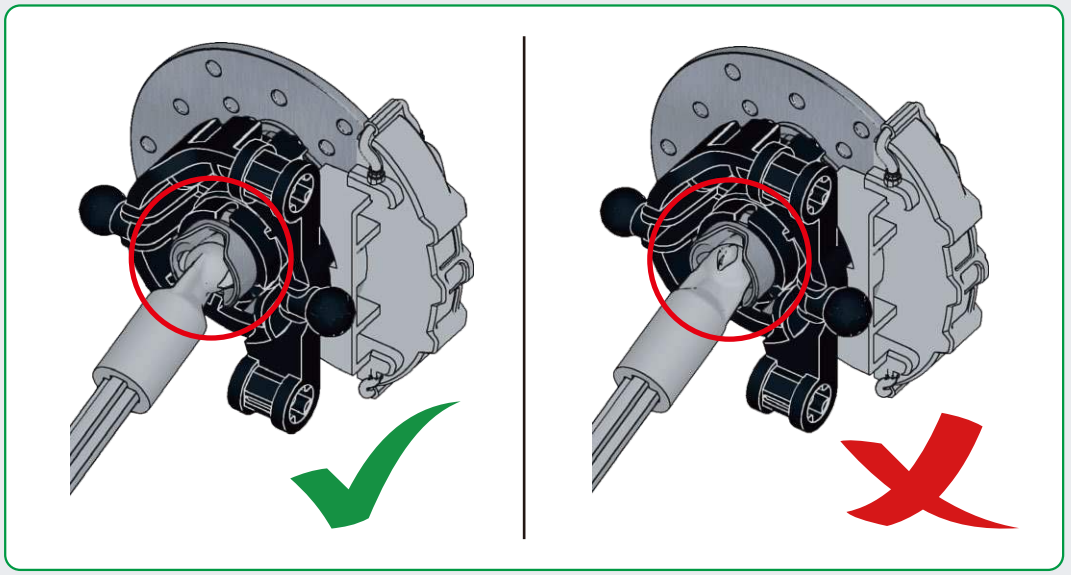

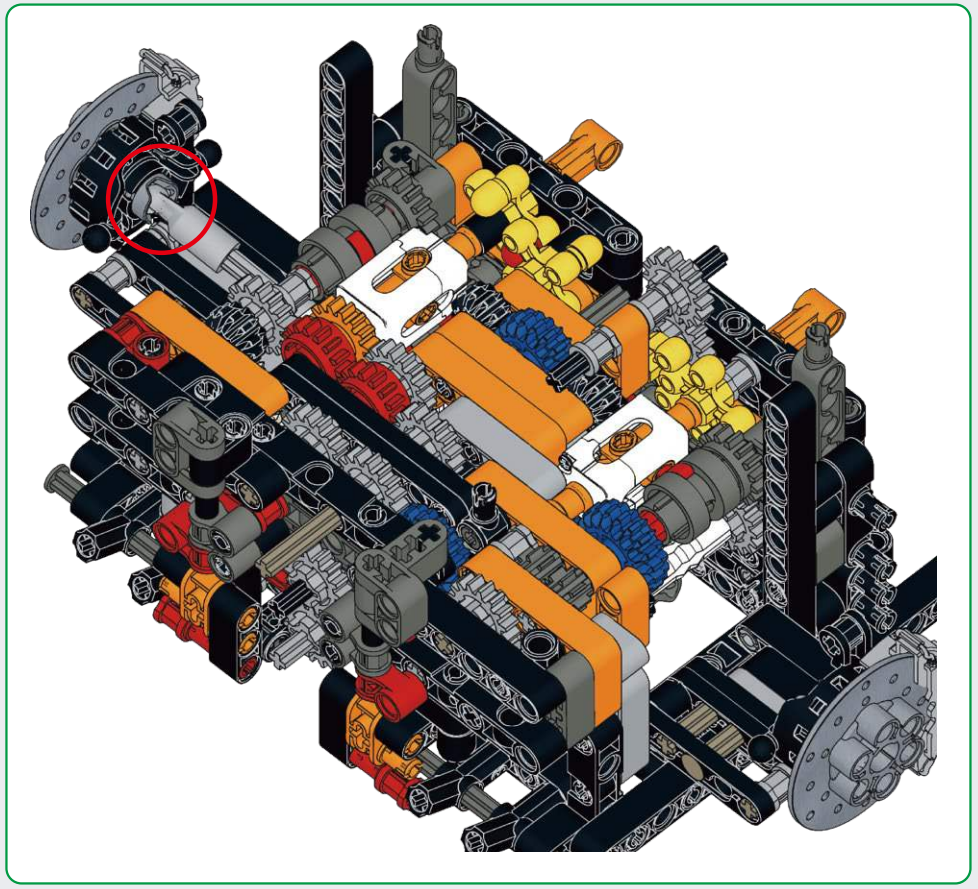

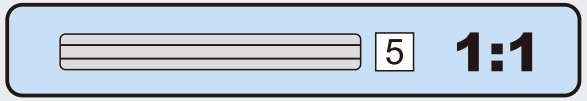

A129

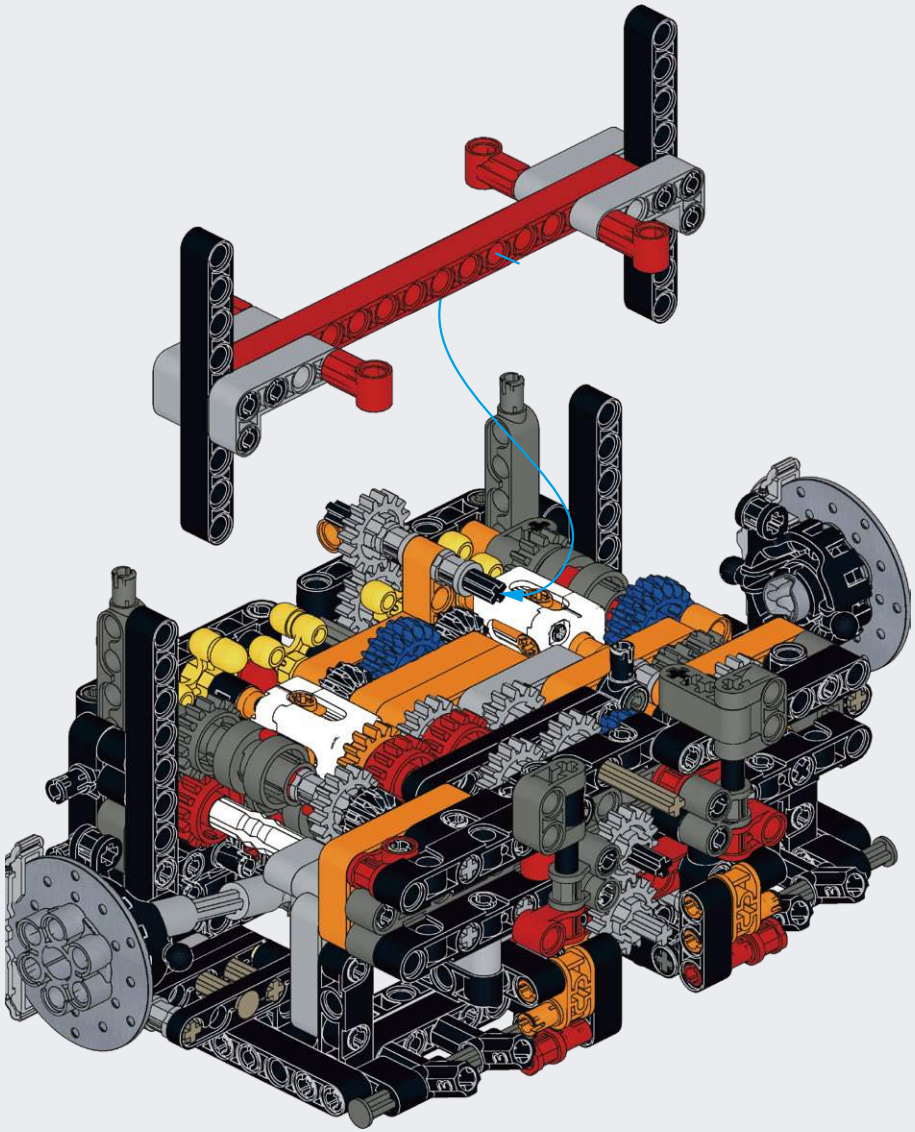

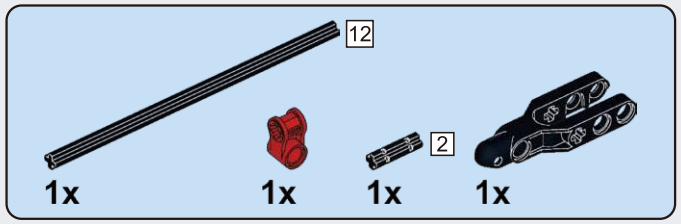

A130

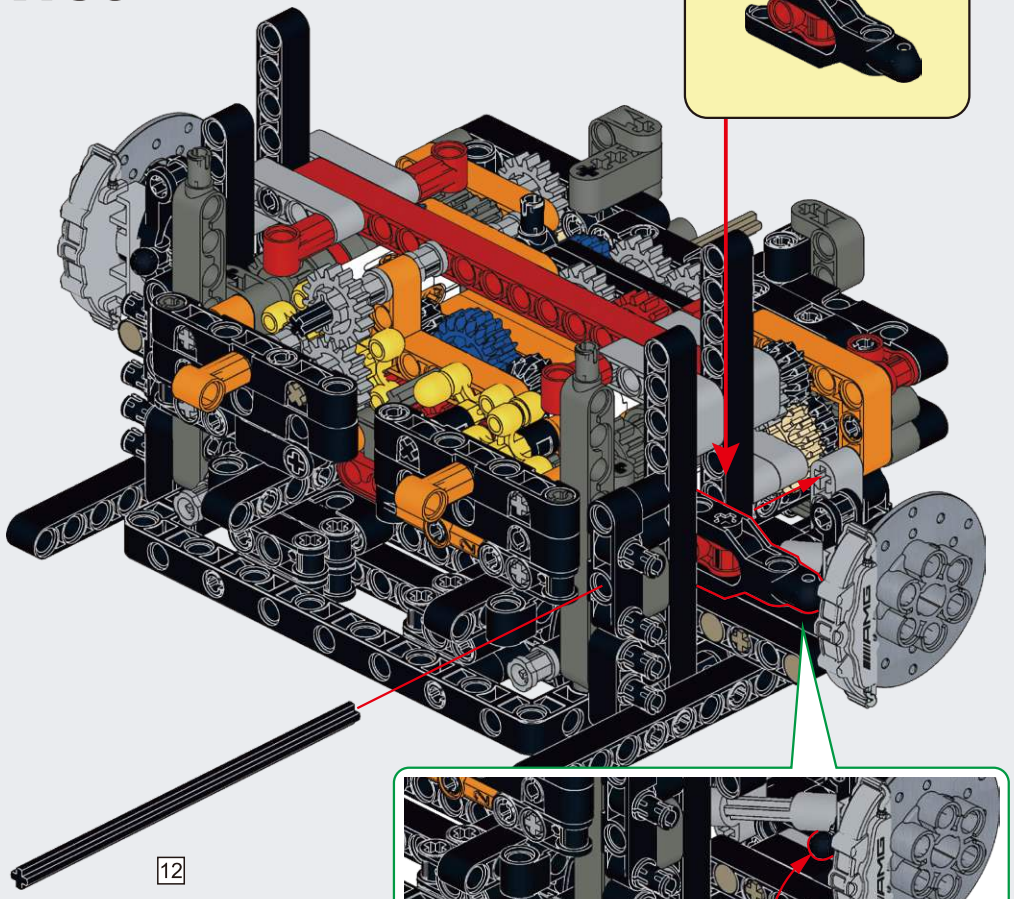

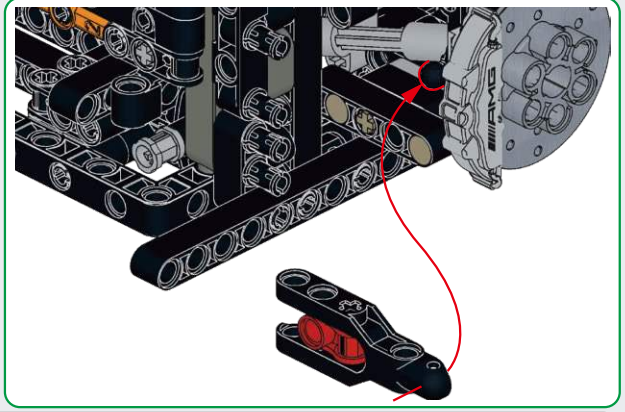

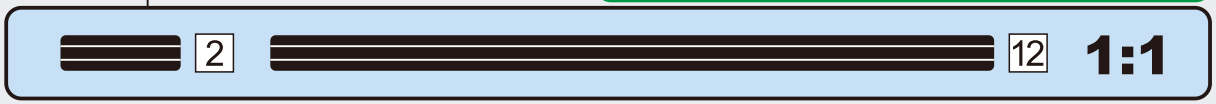

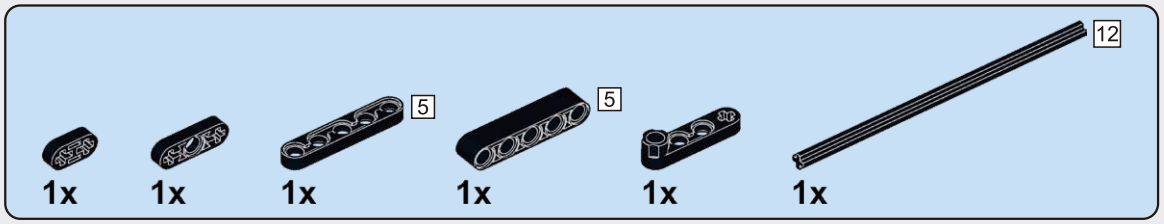

A131

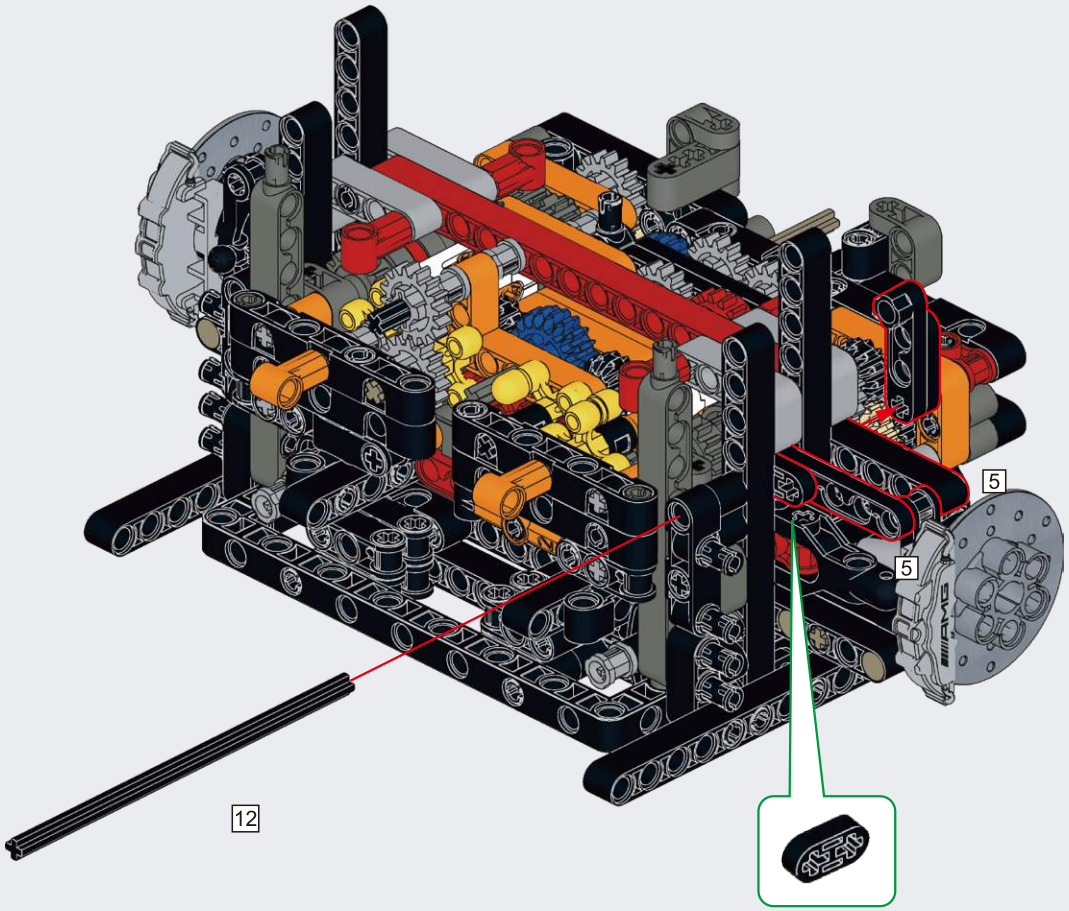

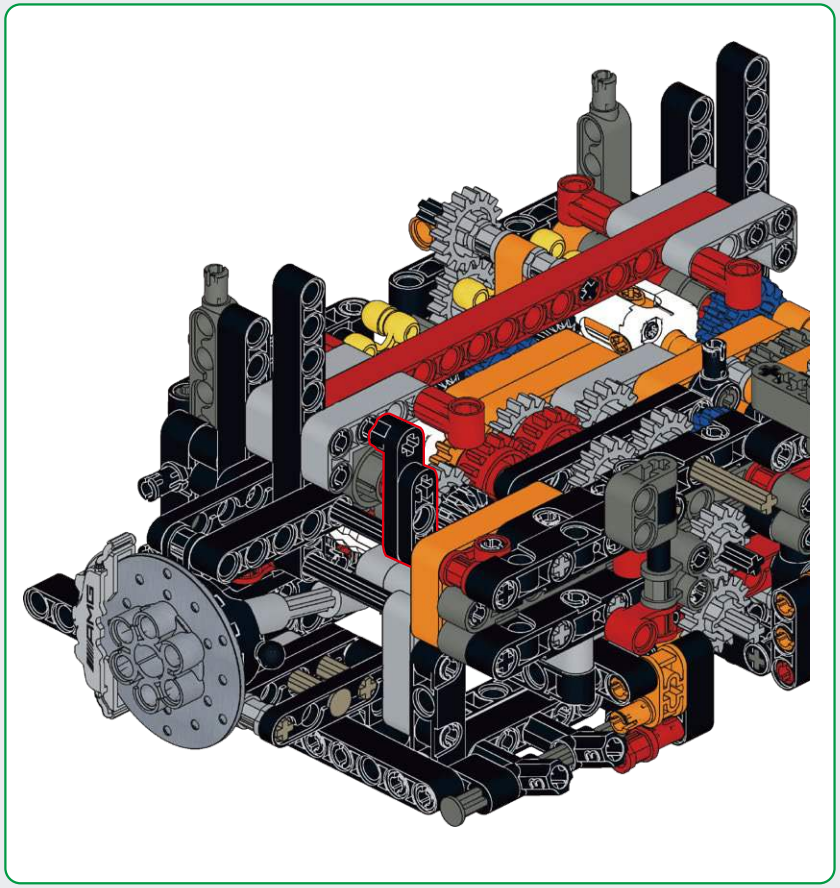

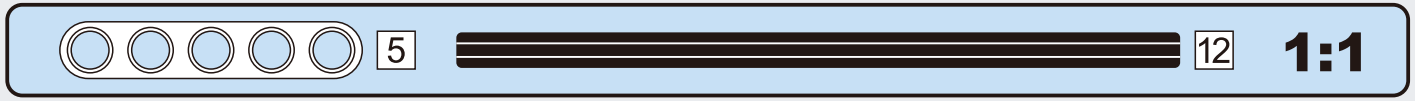

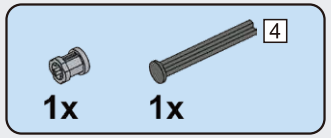

A132

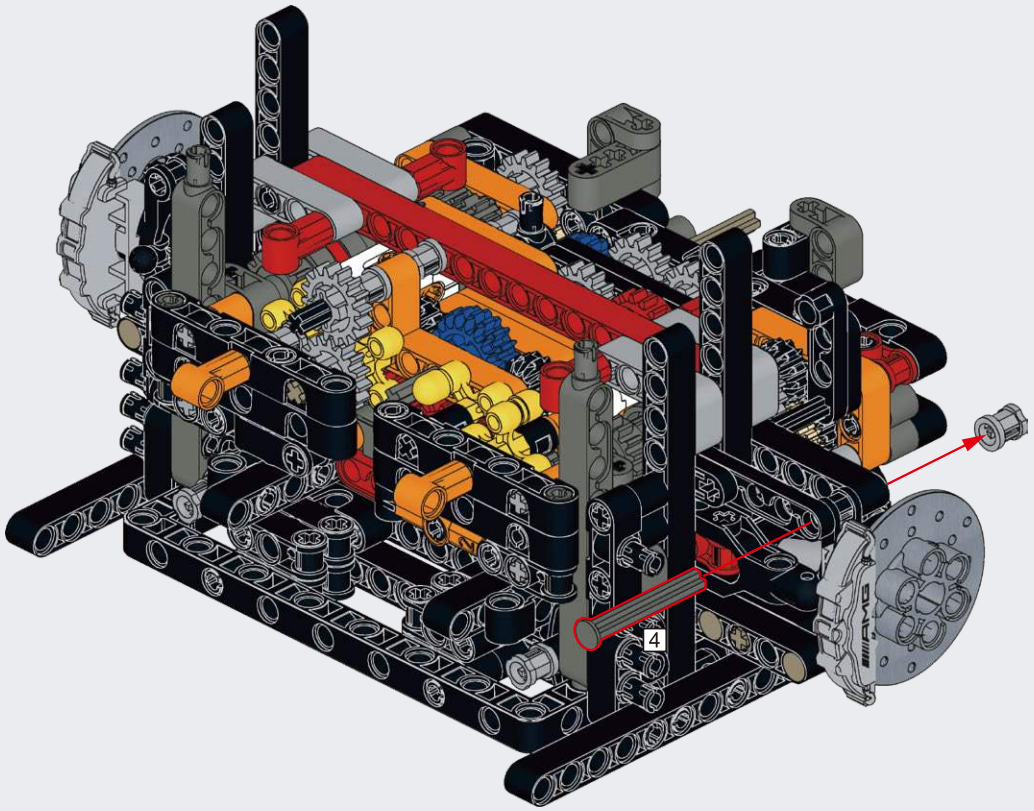

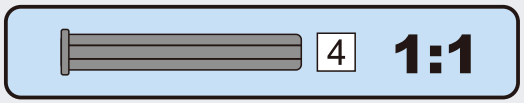

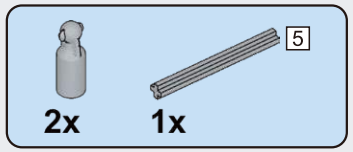

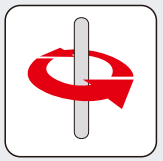

A133

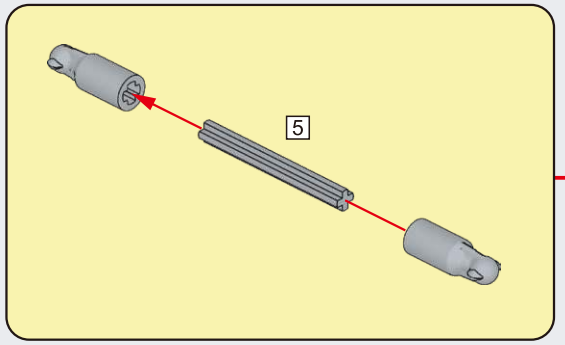

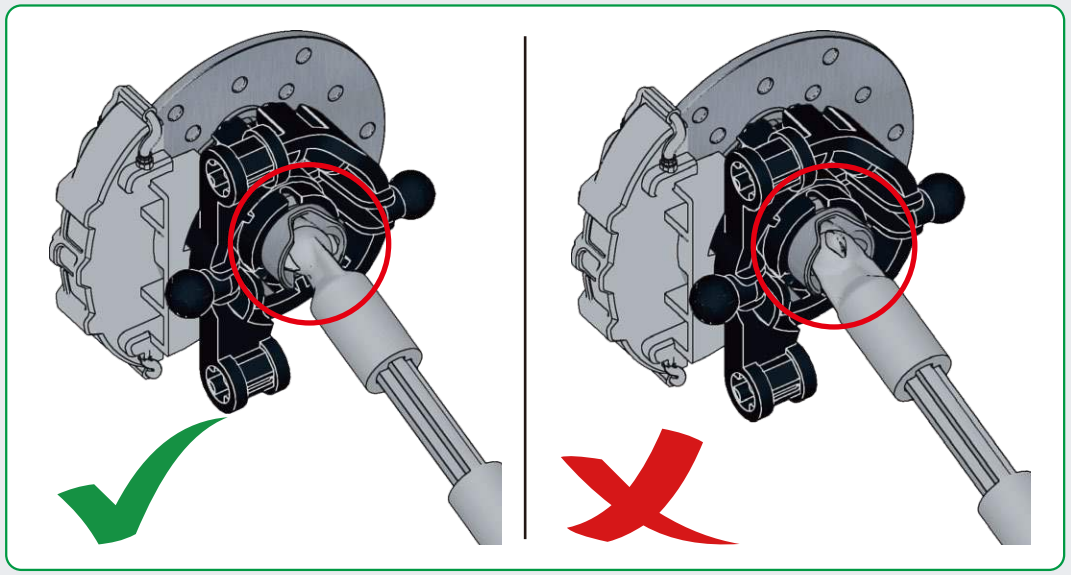

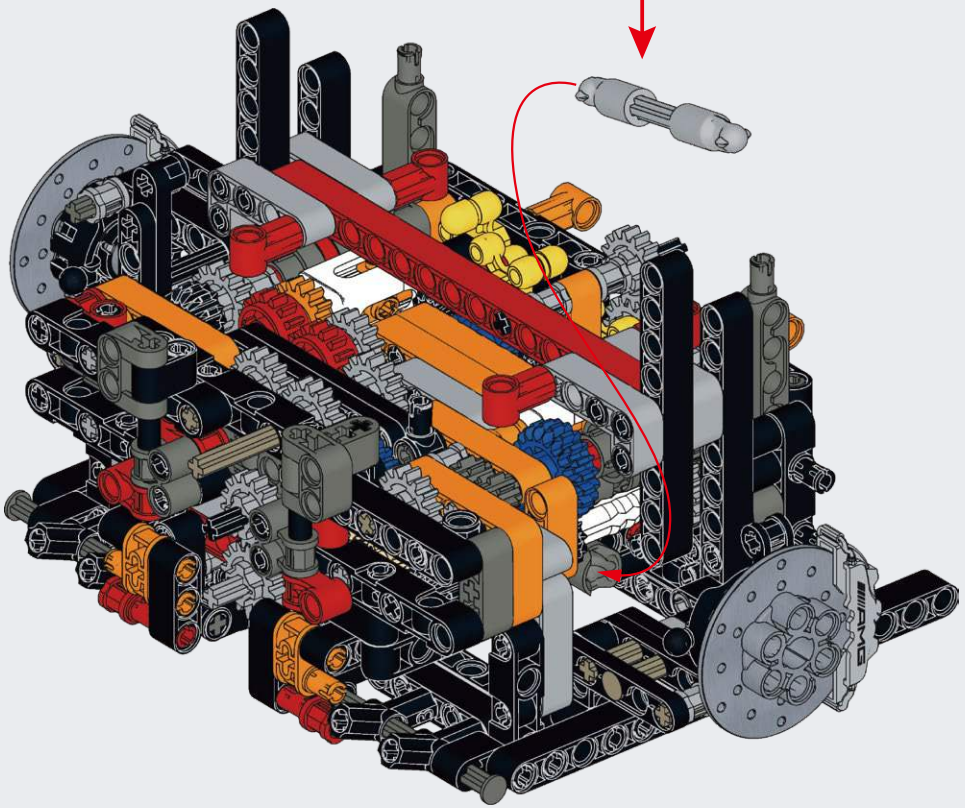

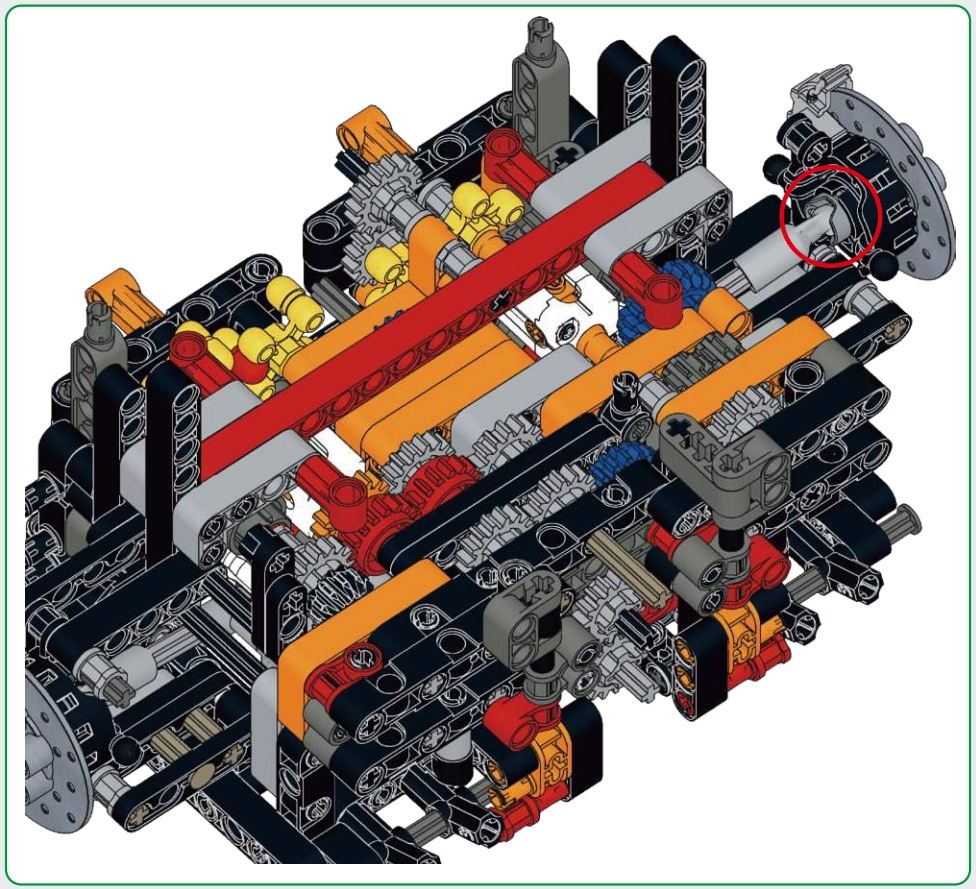

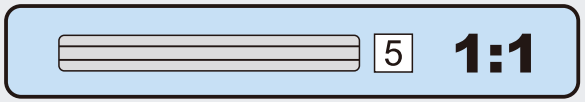

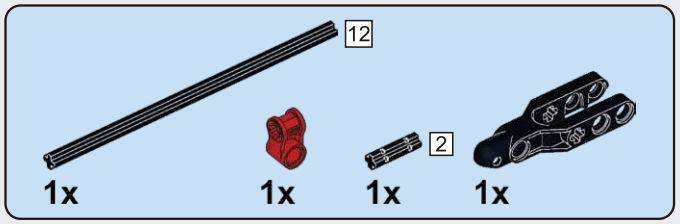

A134

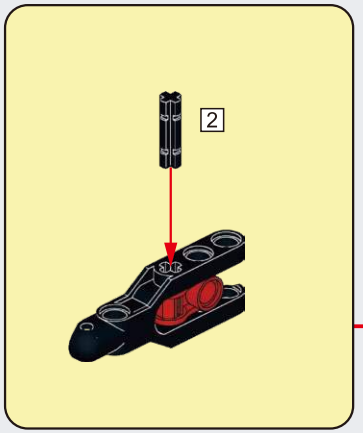

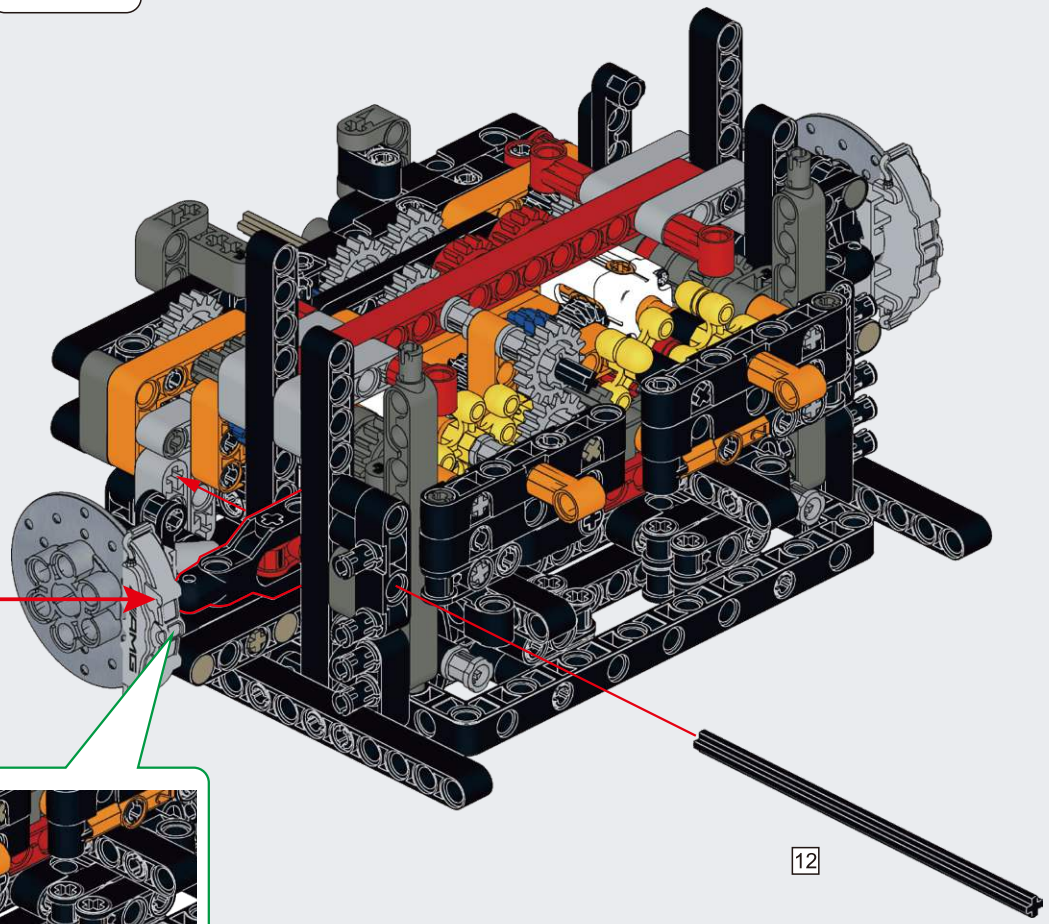

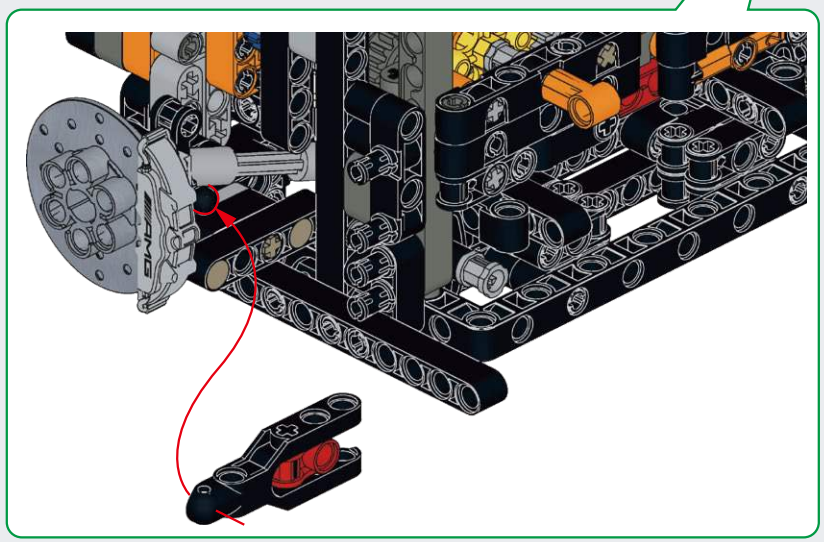

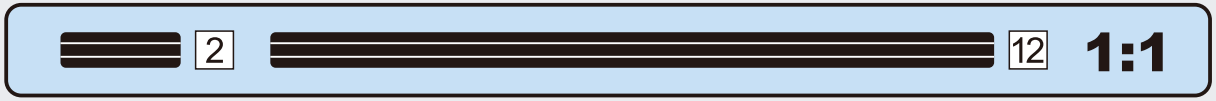

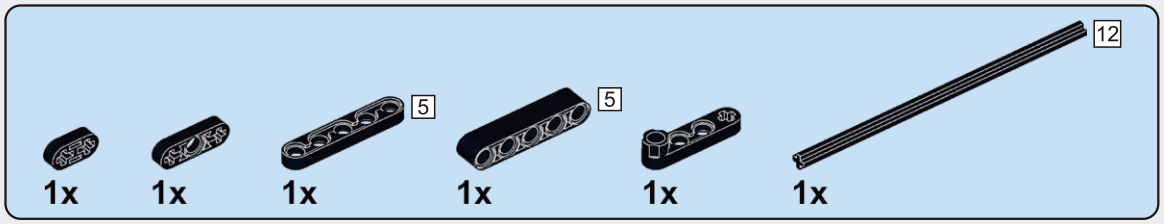

A135

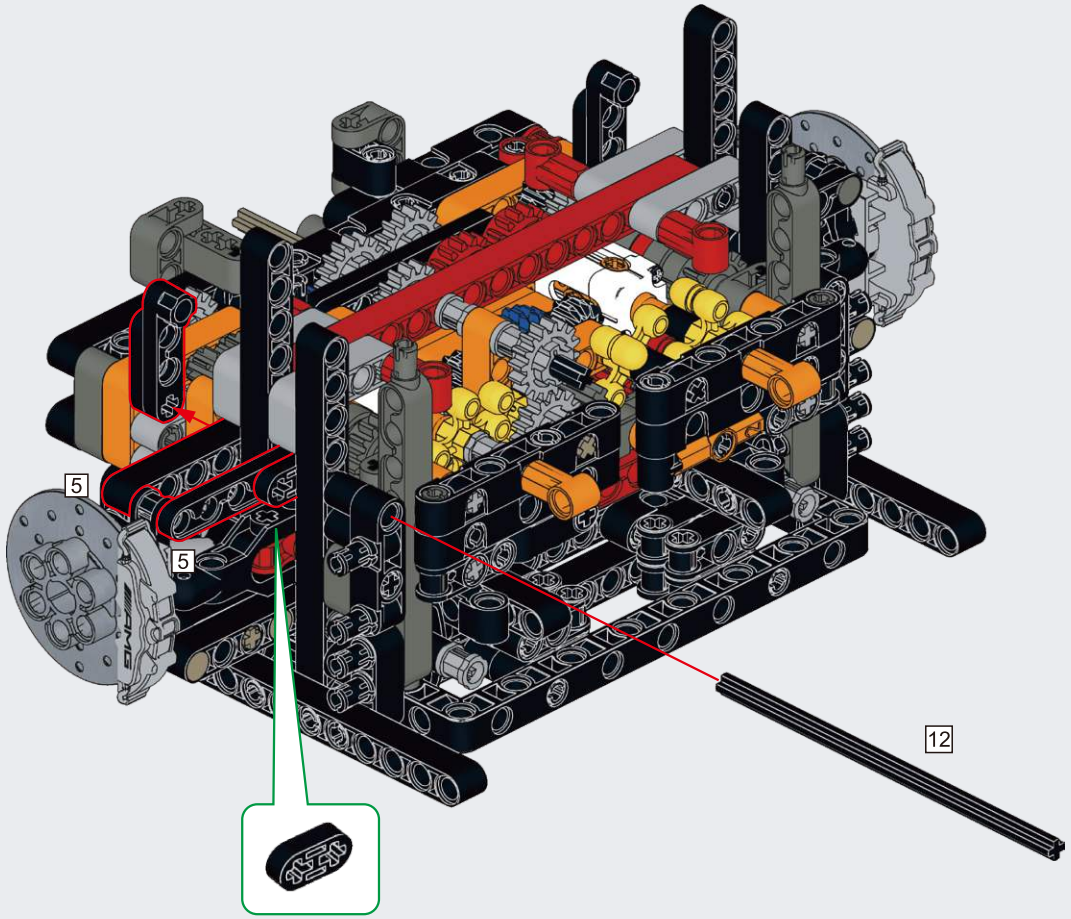

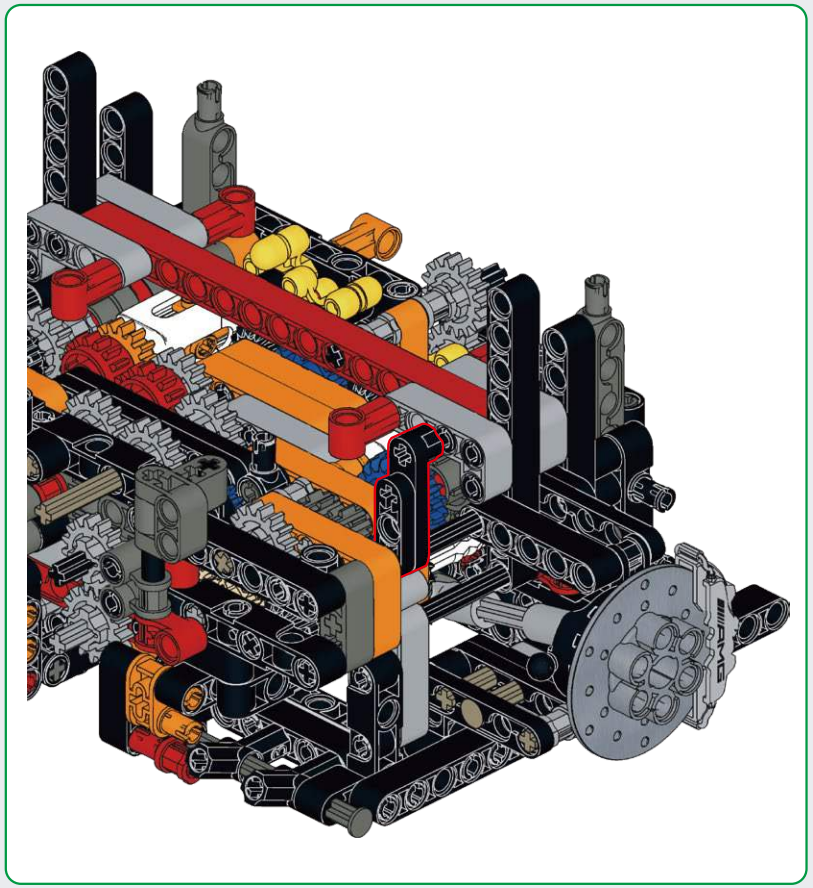

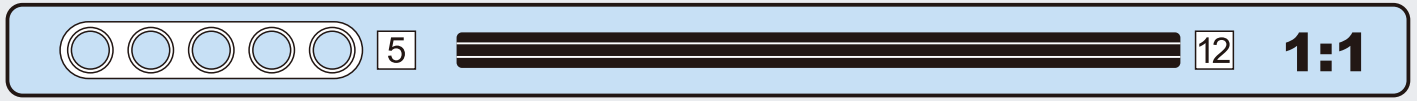

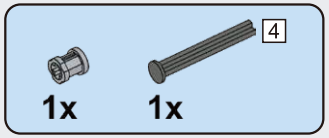

A136

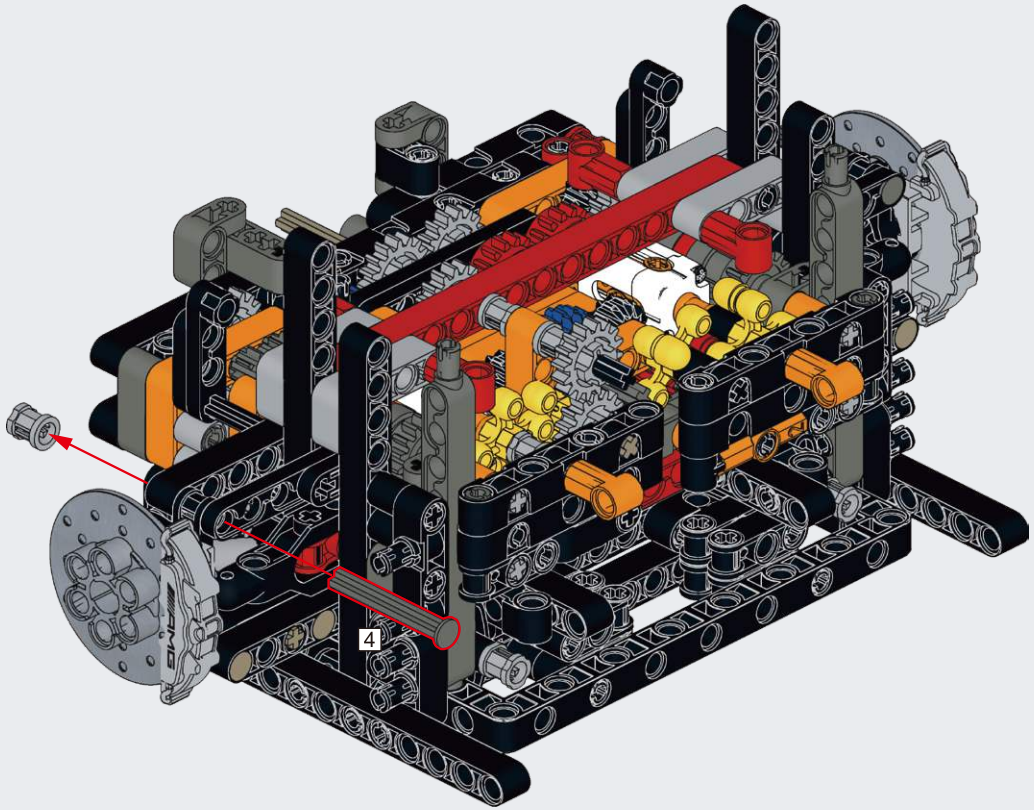

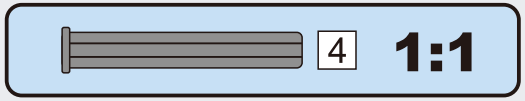

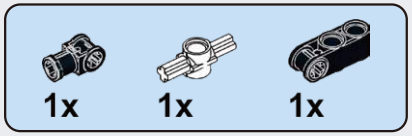

A137

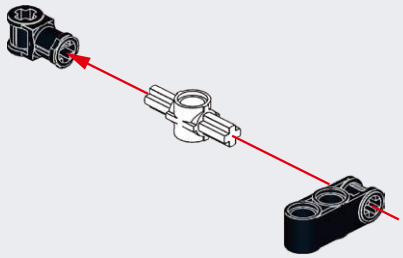

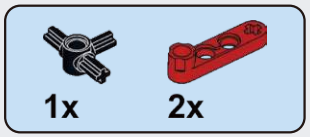

A138

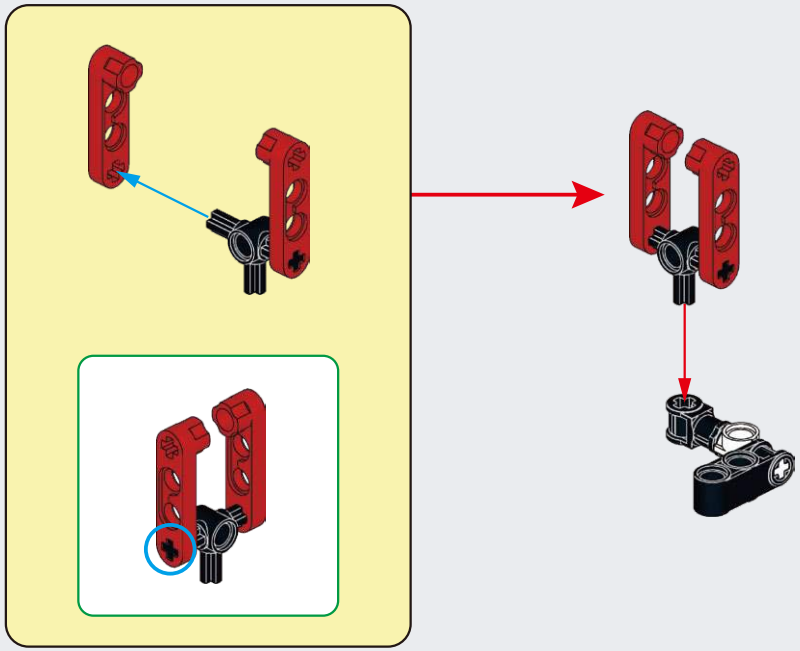

A139

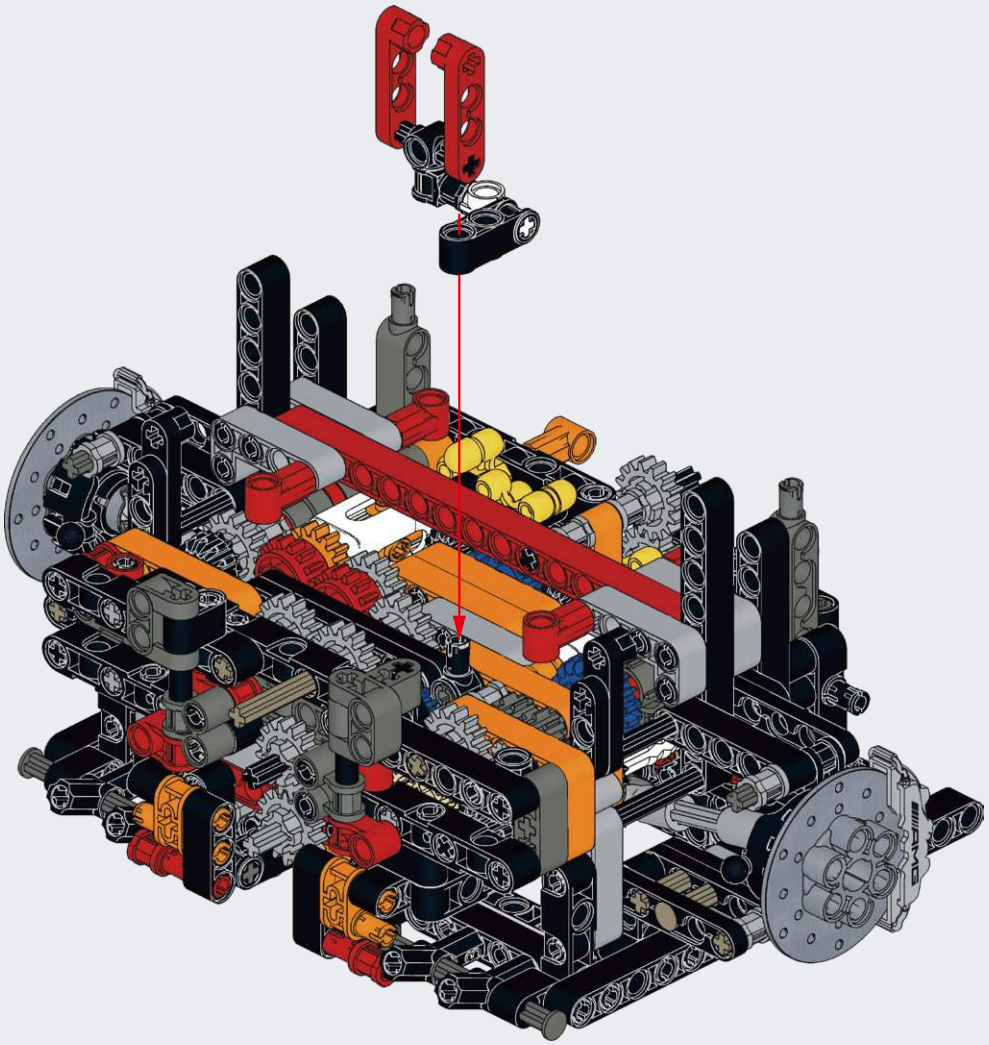

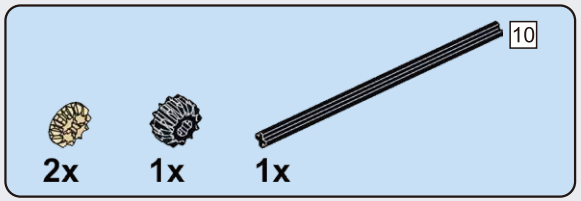

A140

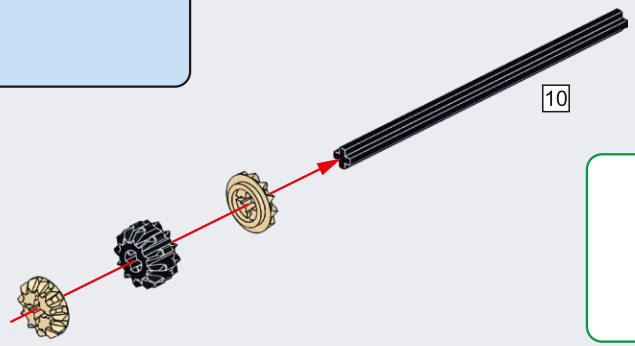

A141

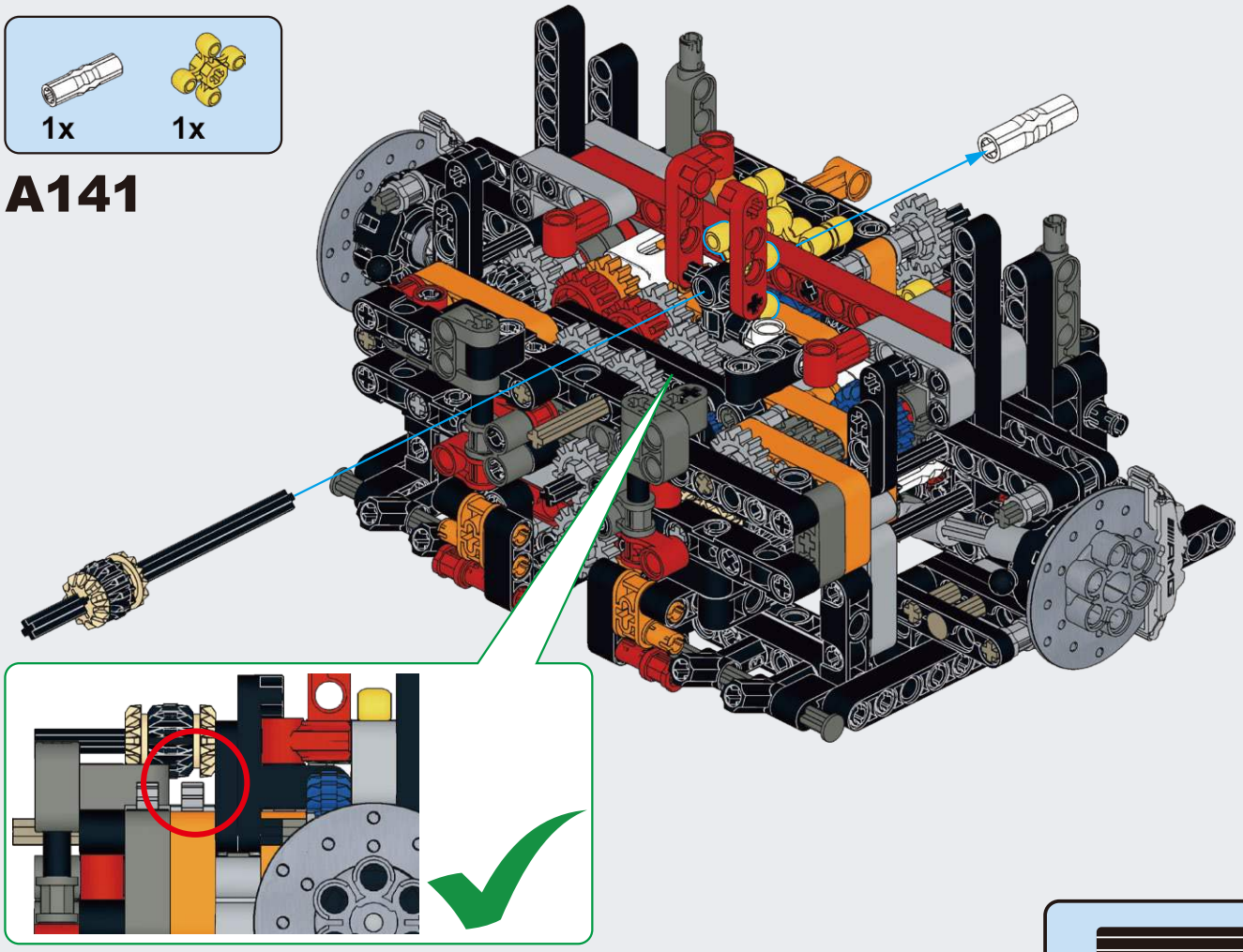

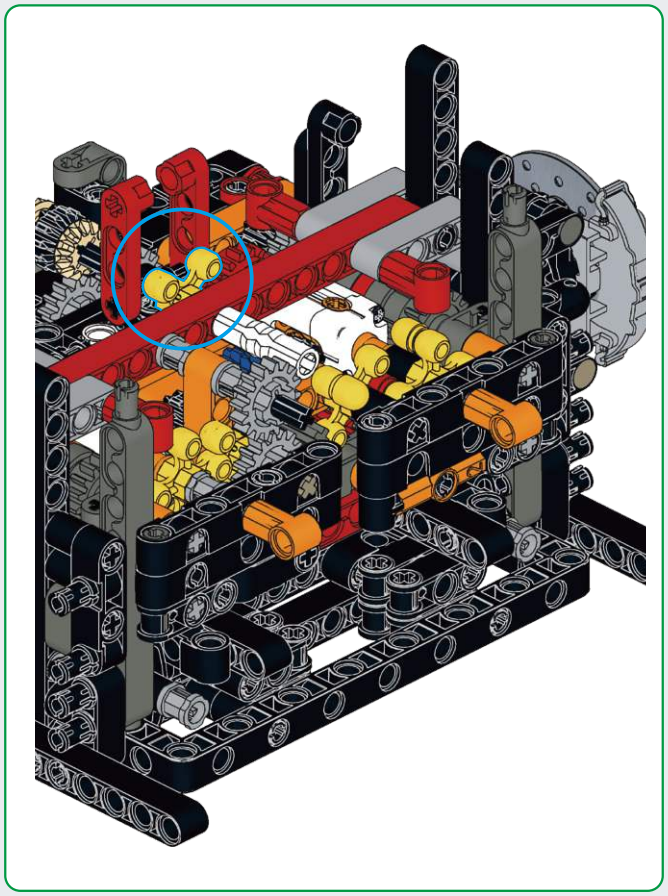

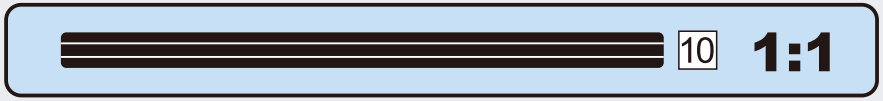

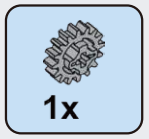

A142

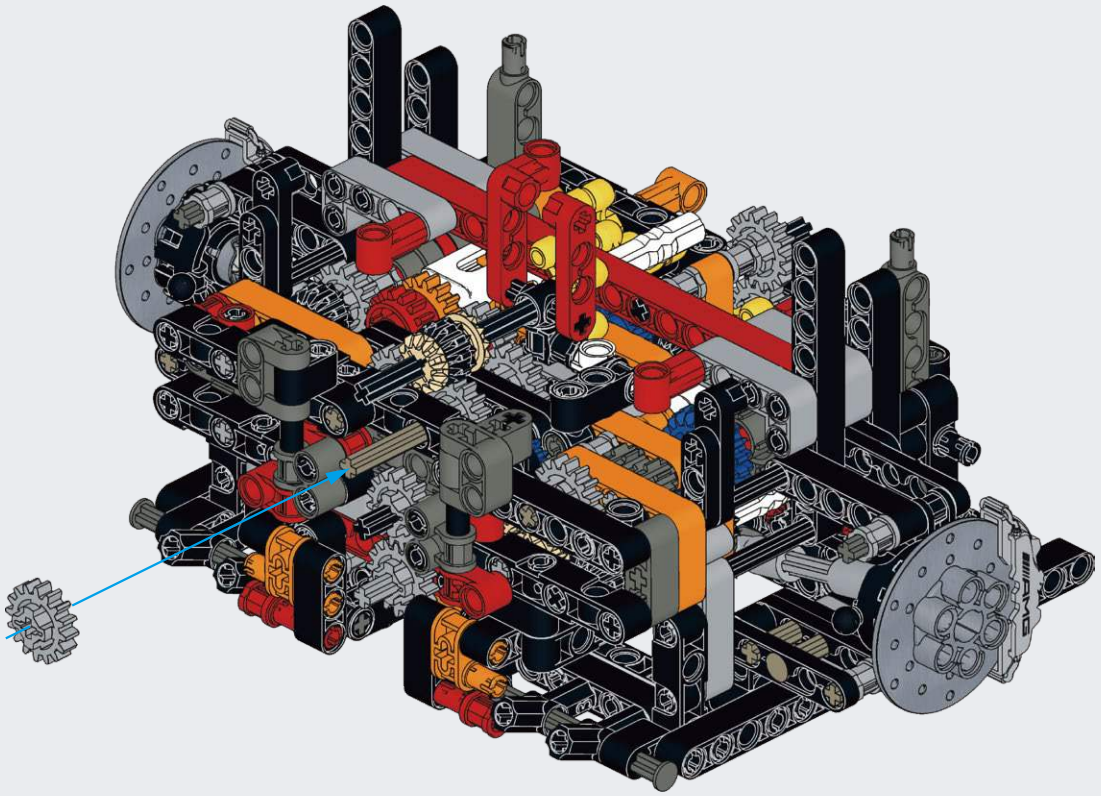

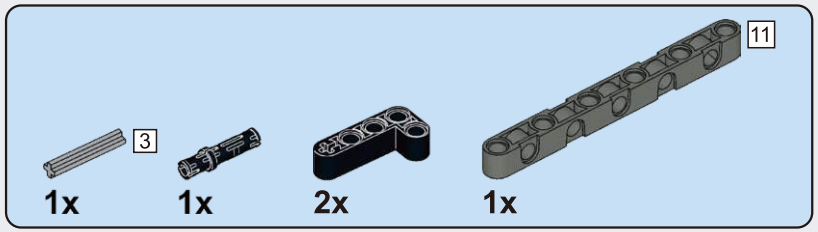

A143

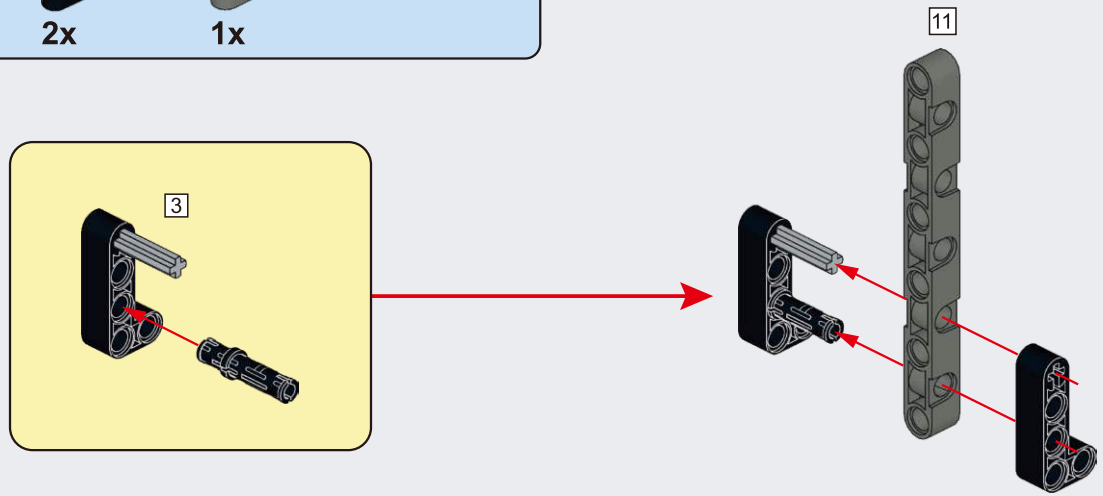

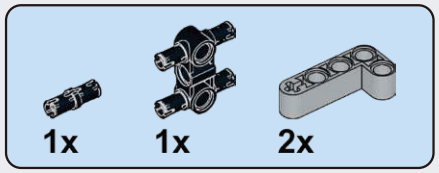

A144

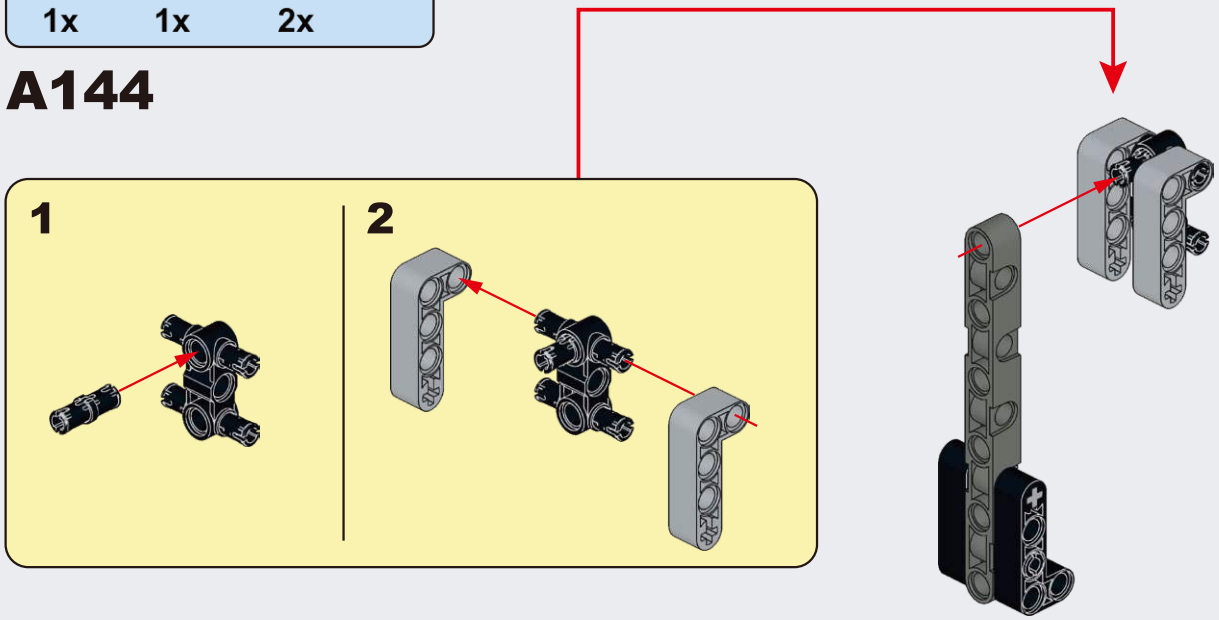

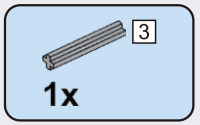

A145

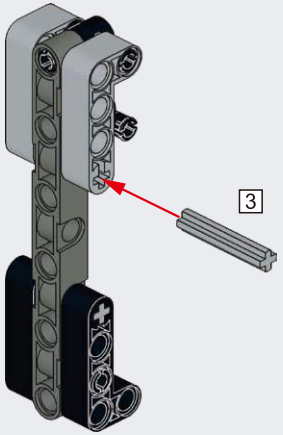

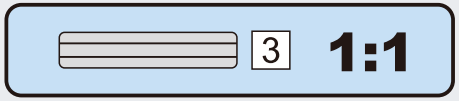

A146

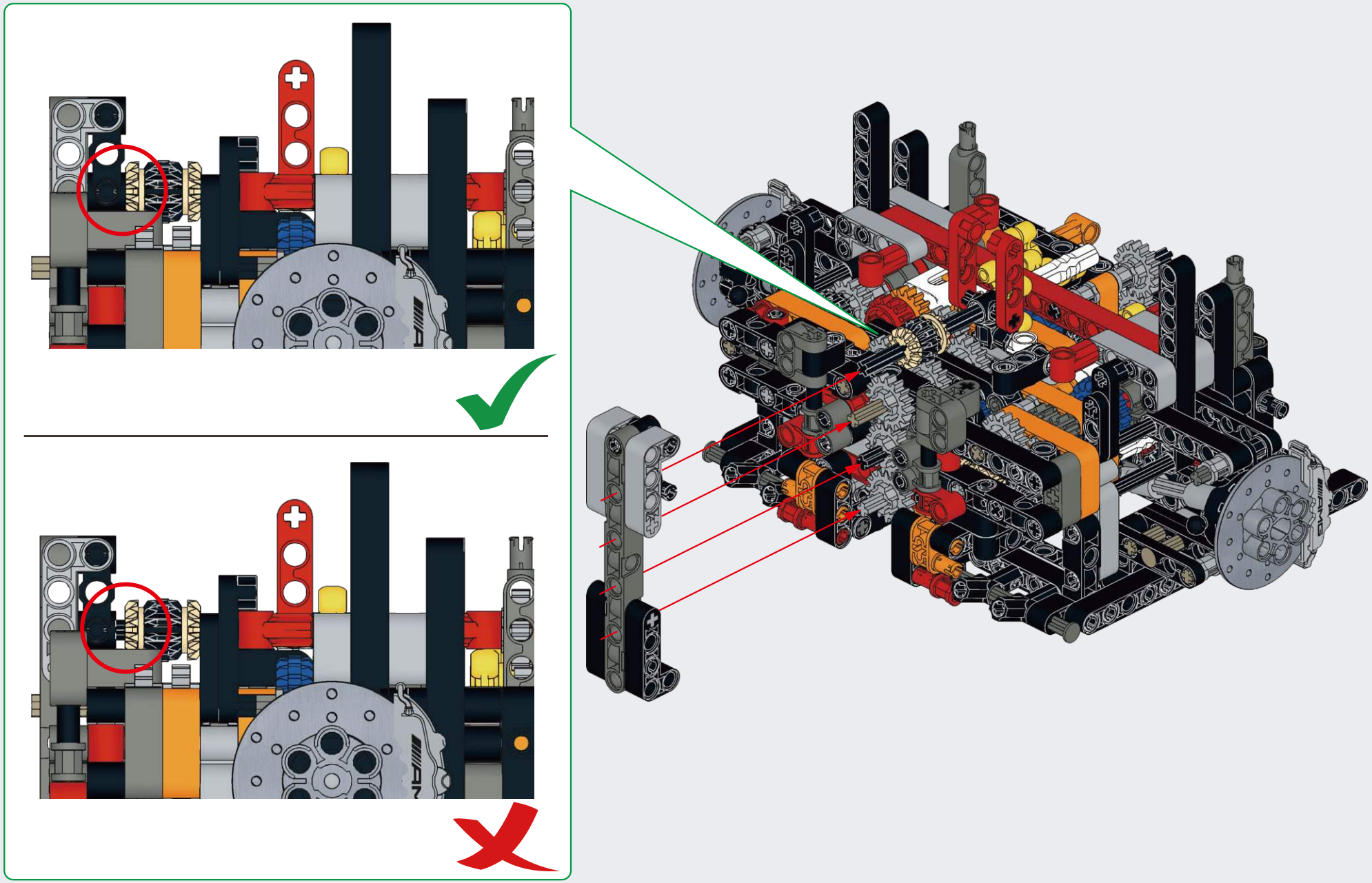

A147

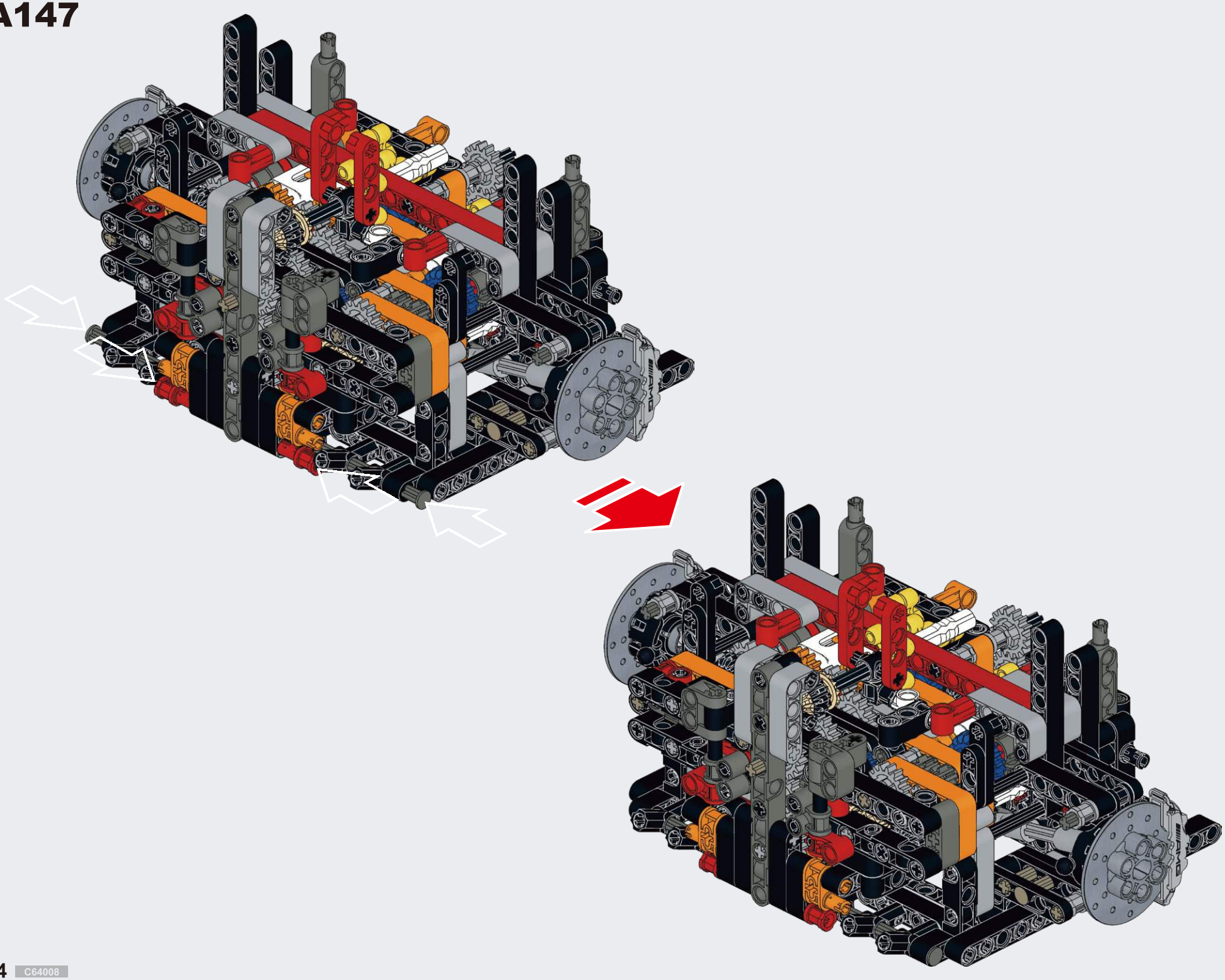

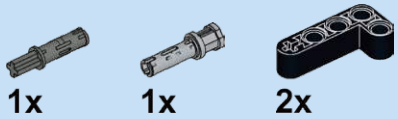

A148

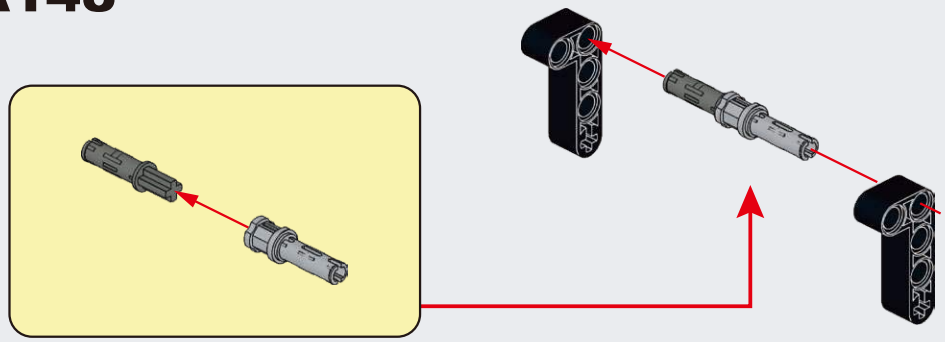

A149

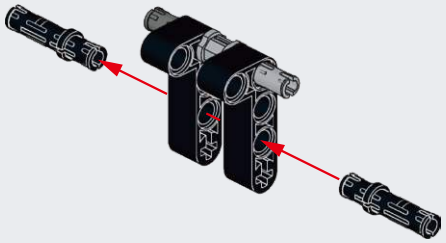

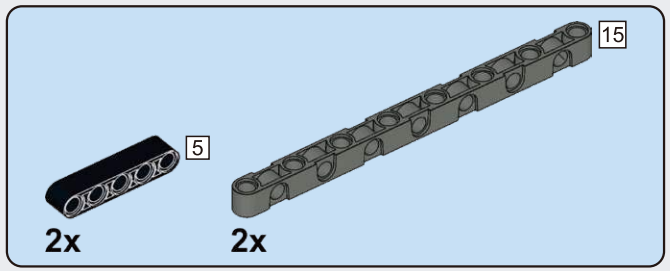

A150

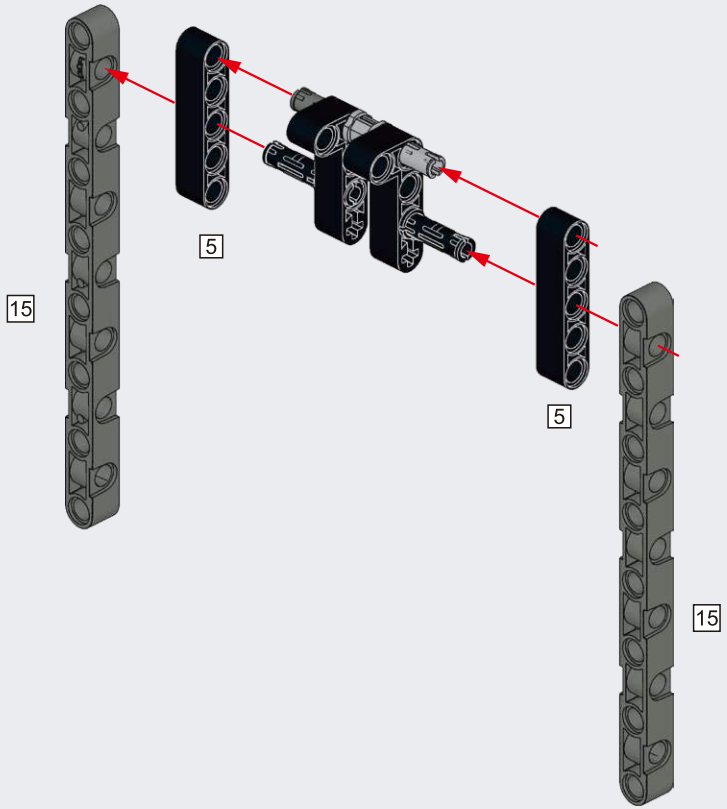

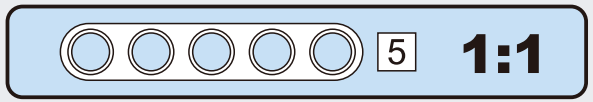

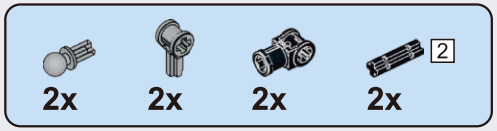

A151

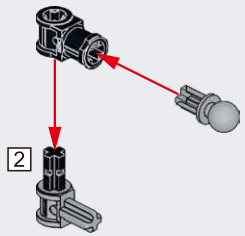

x2

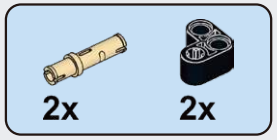

A152

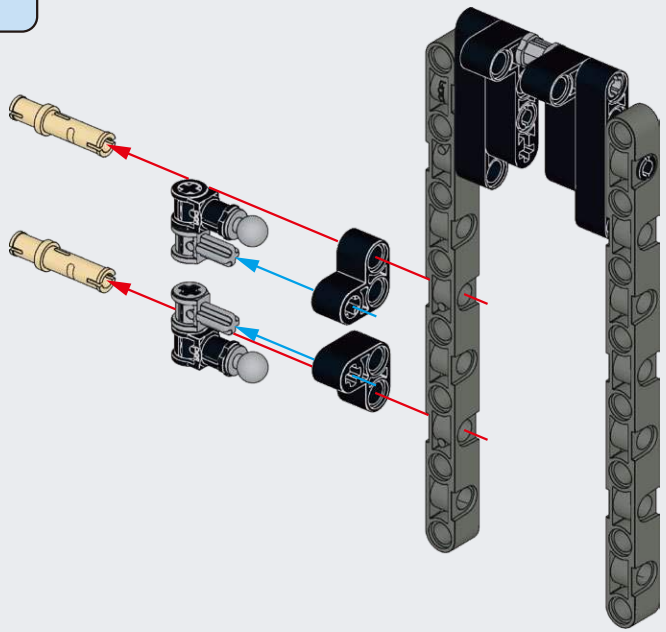

A153

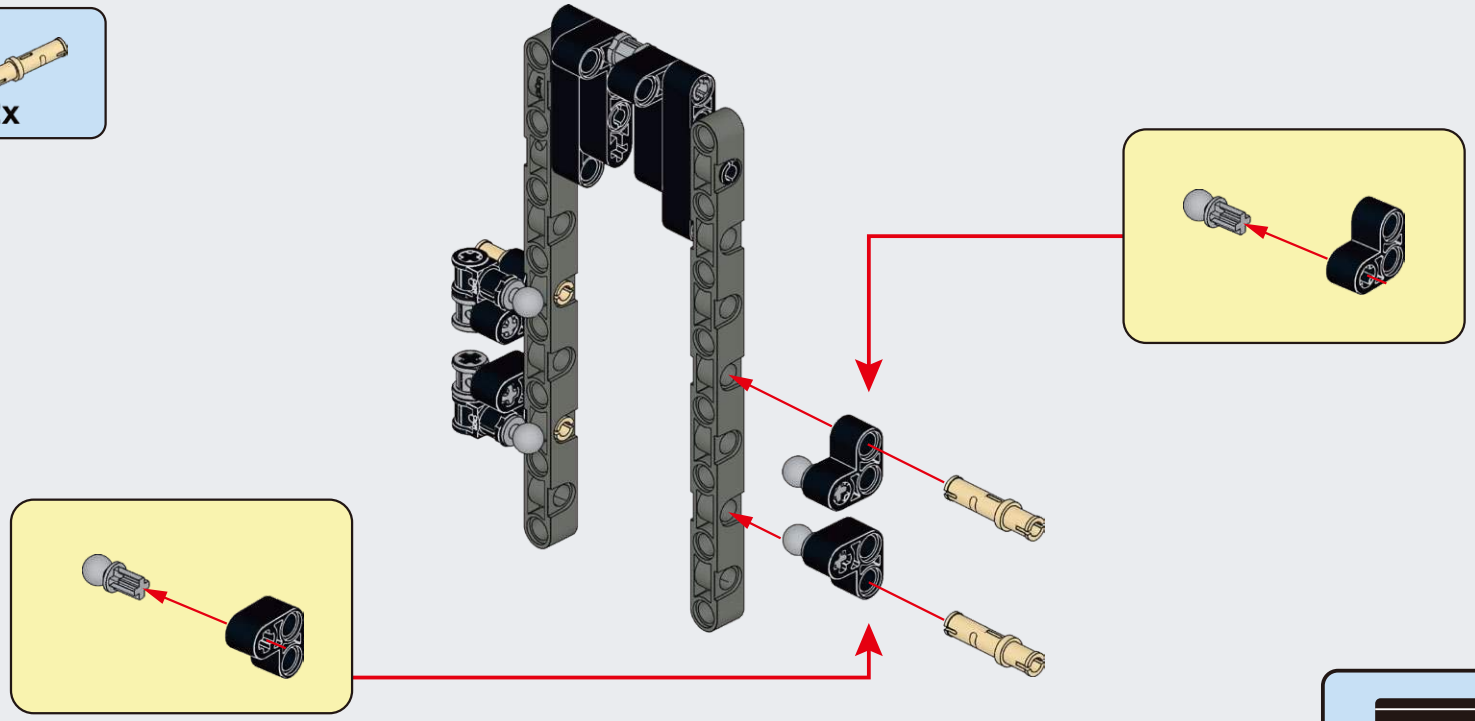

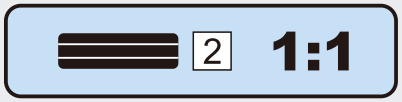

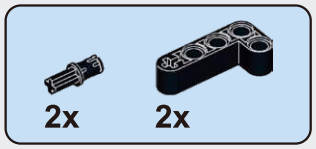

A154

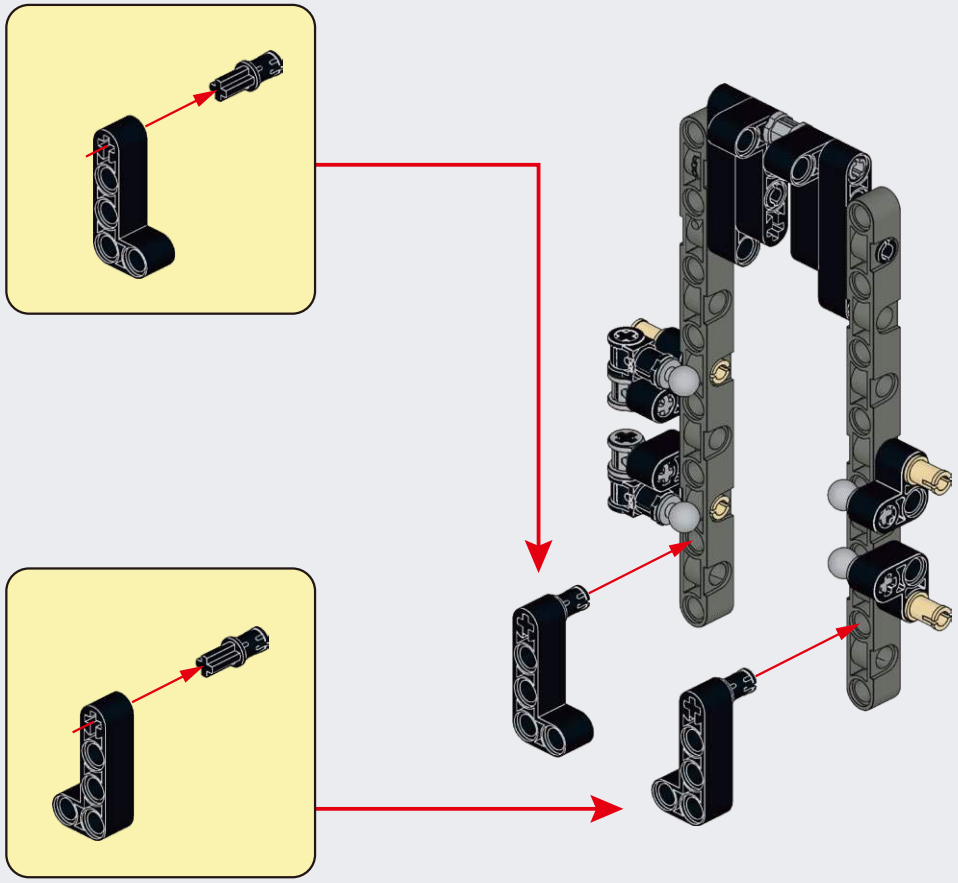

A155

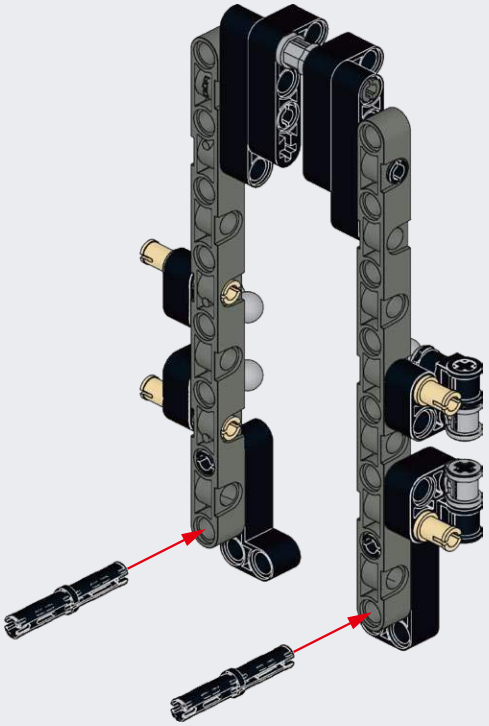

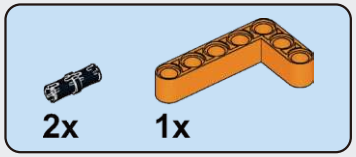

A156

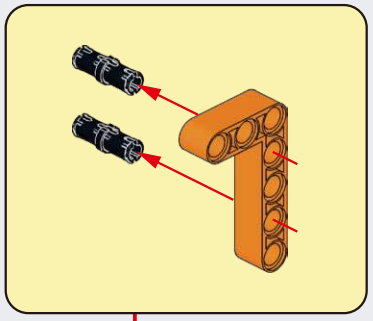

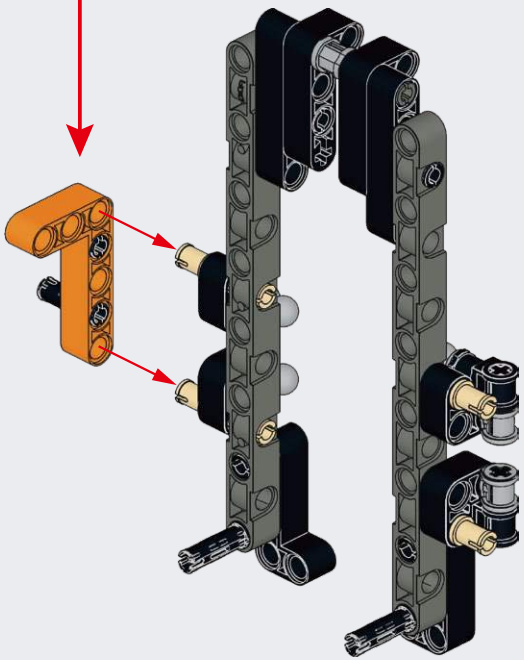

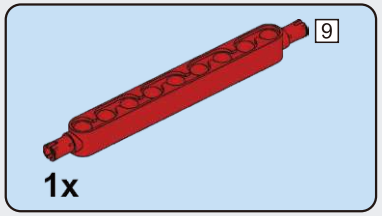

A157

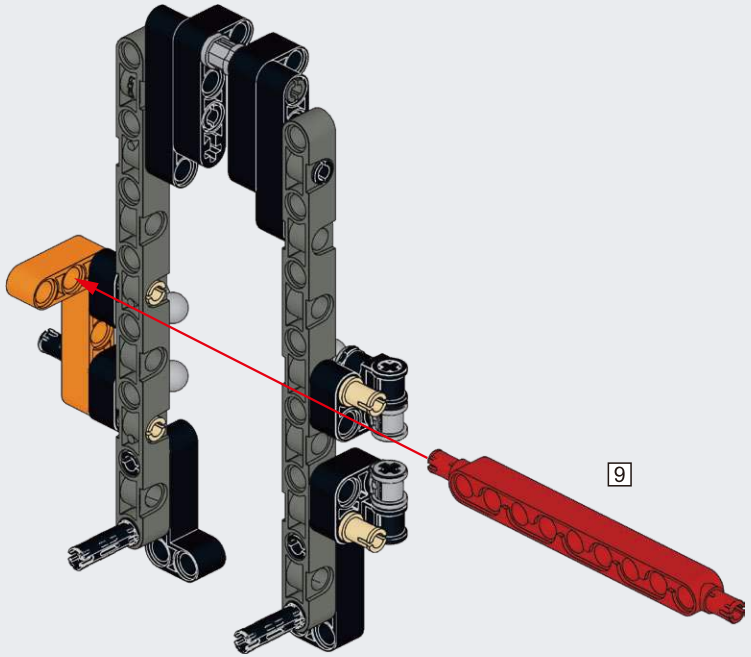

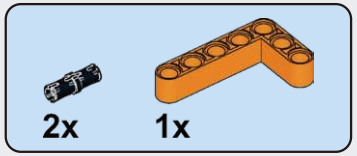

A158

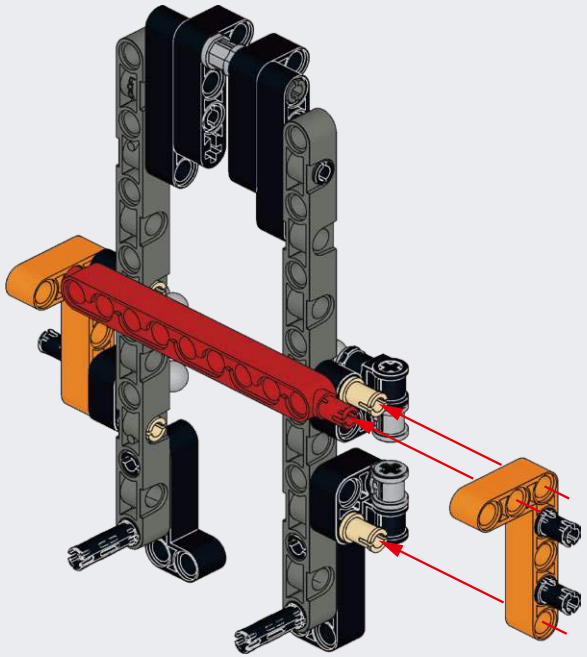

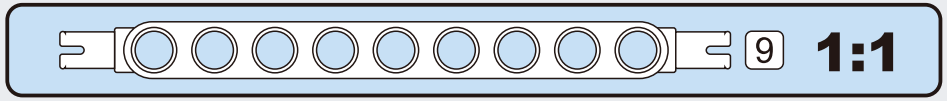

A159

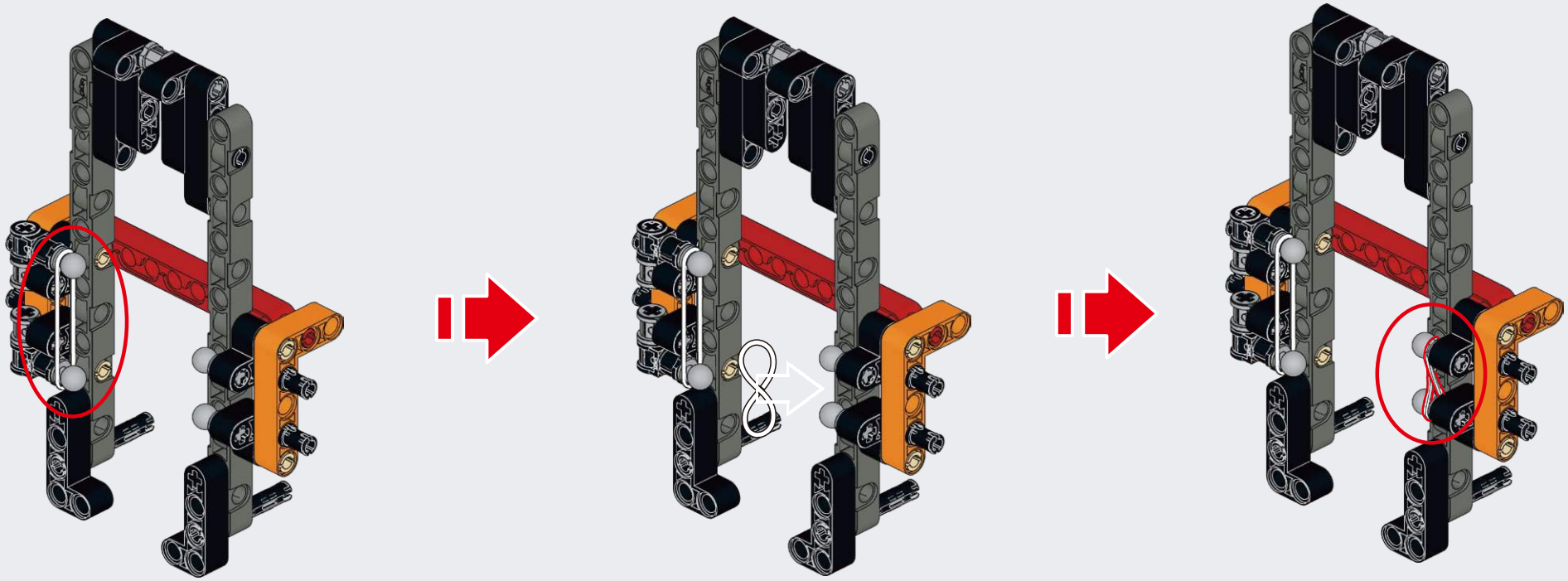

A160

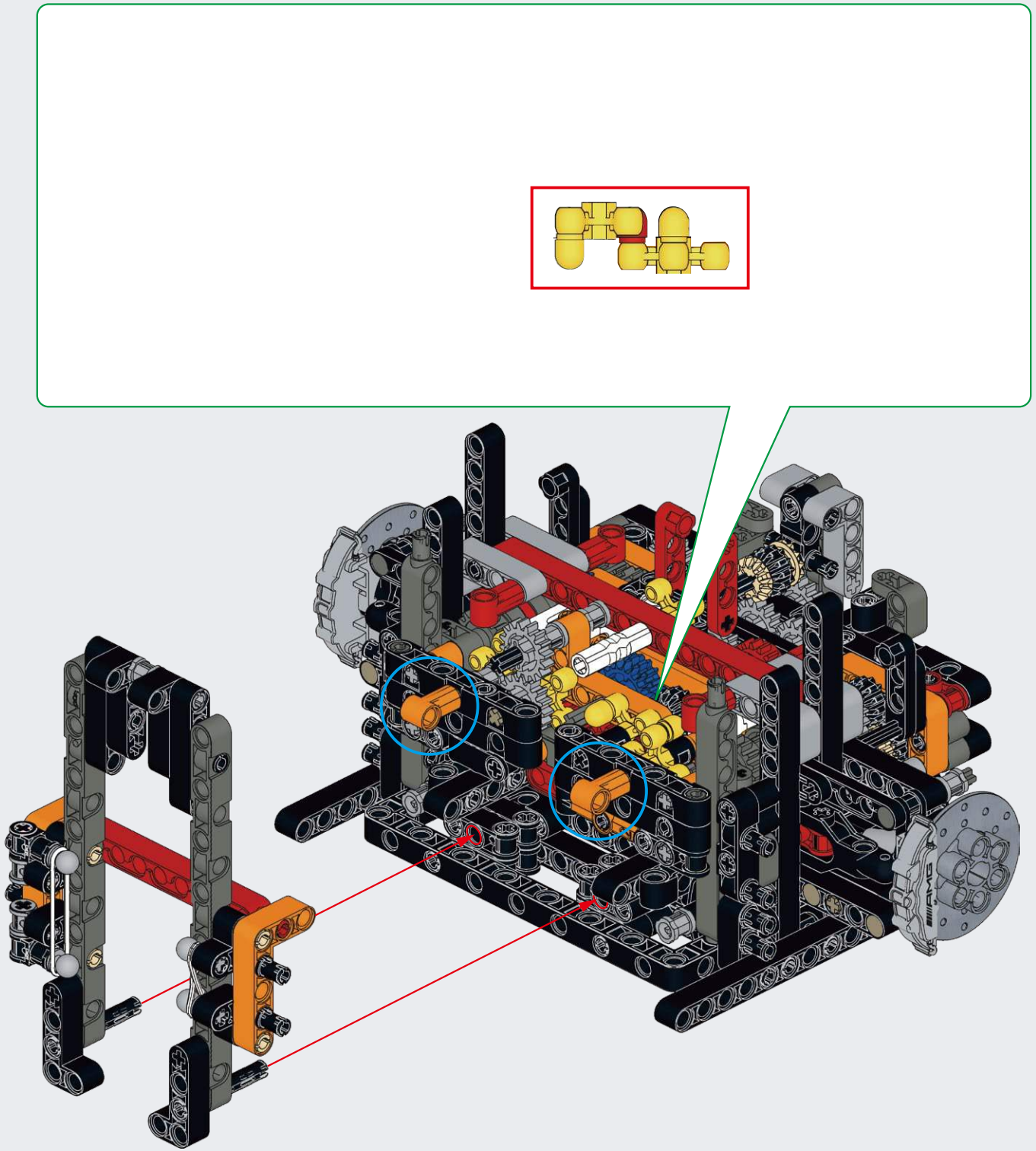

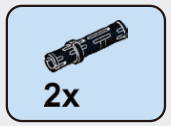

A161

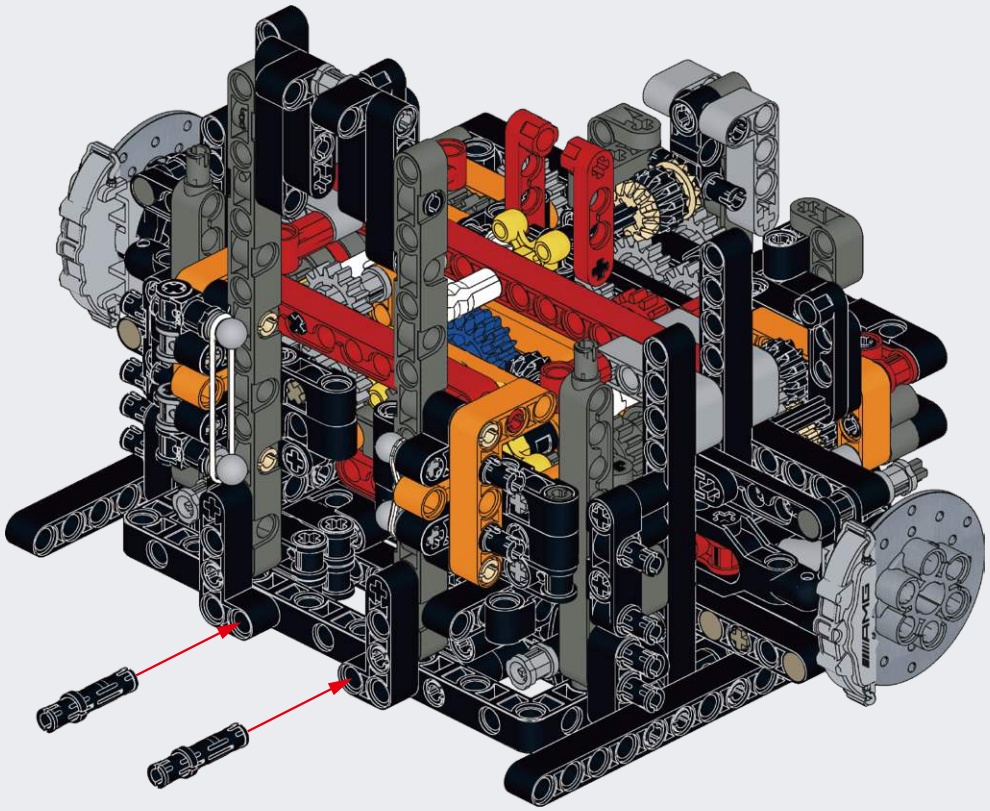

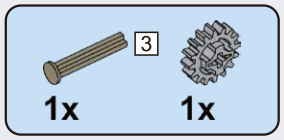

A162

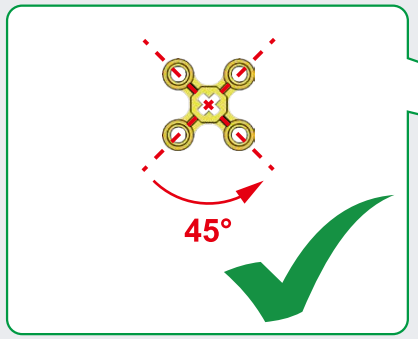

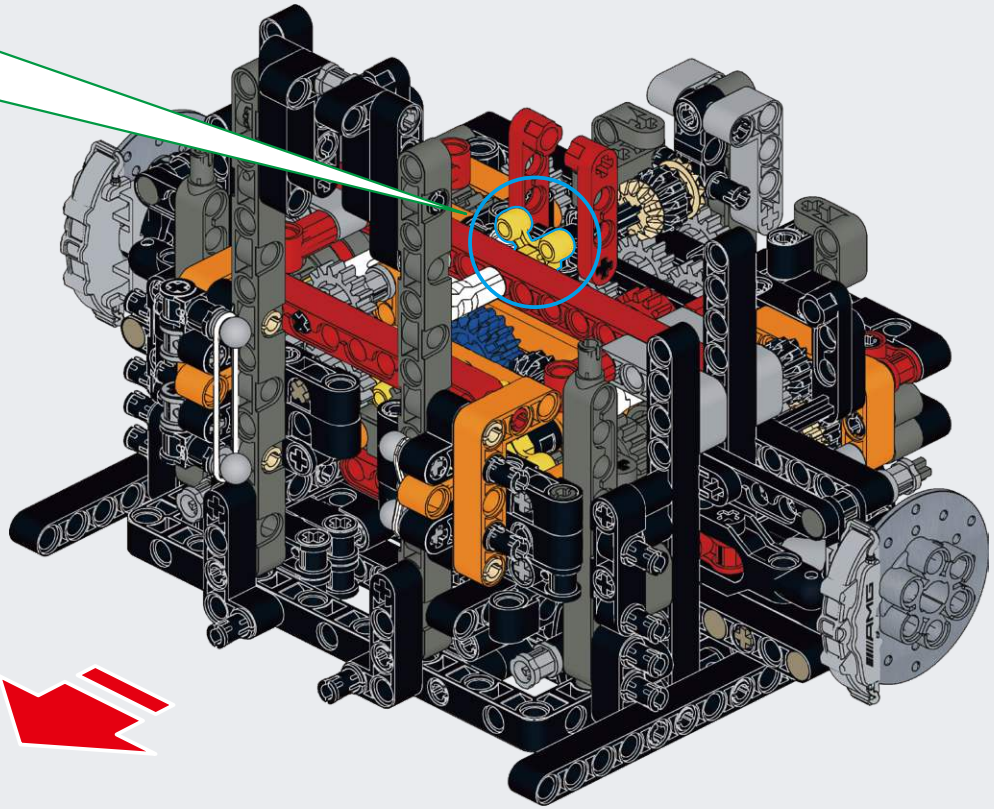

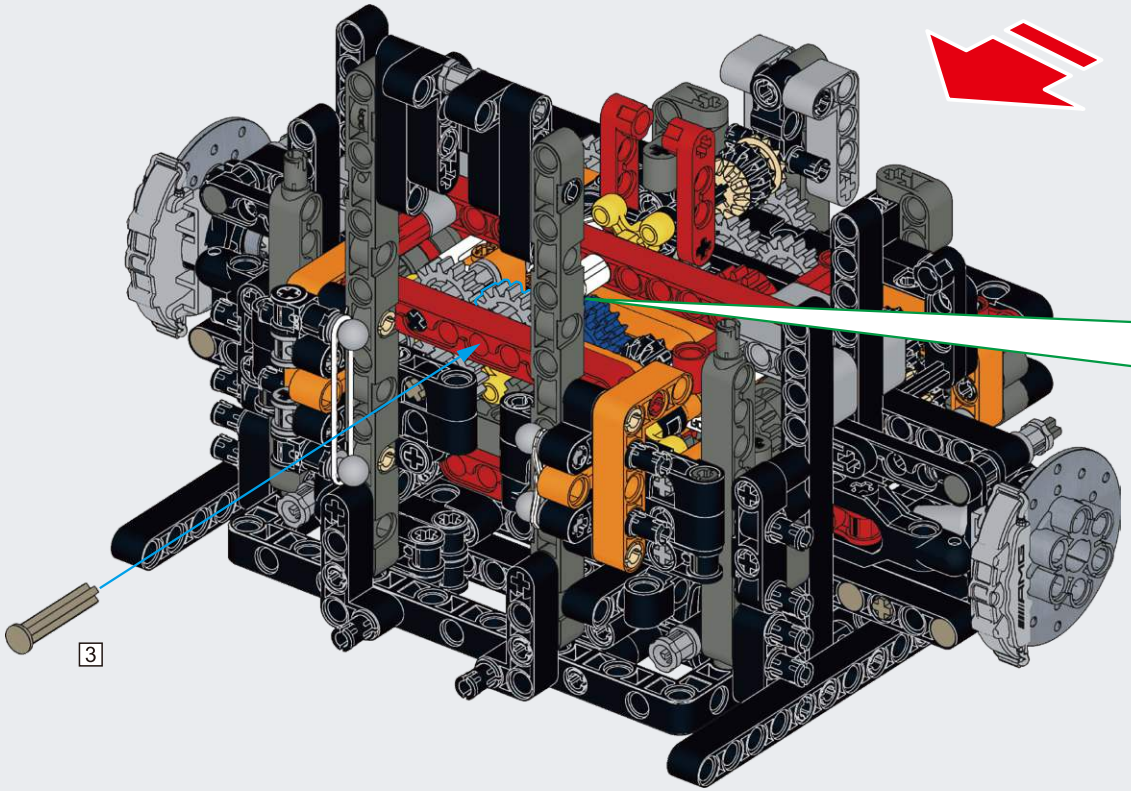

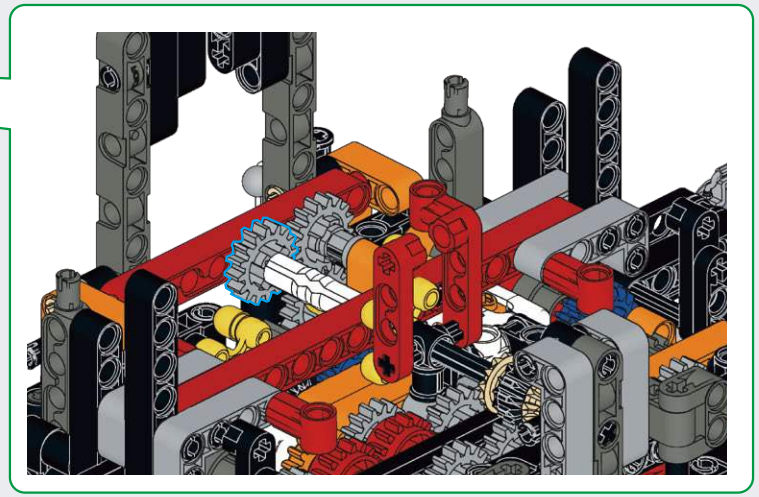

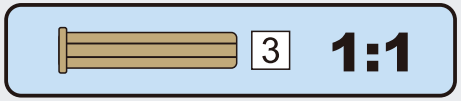

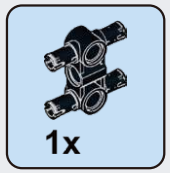

A163

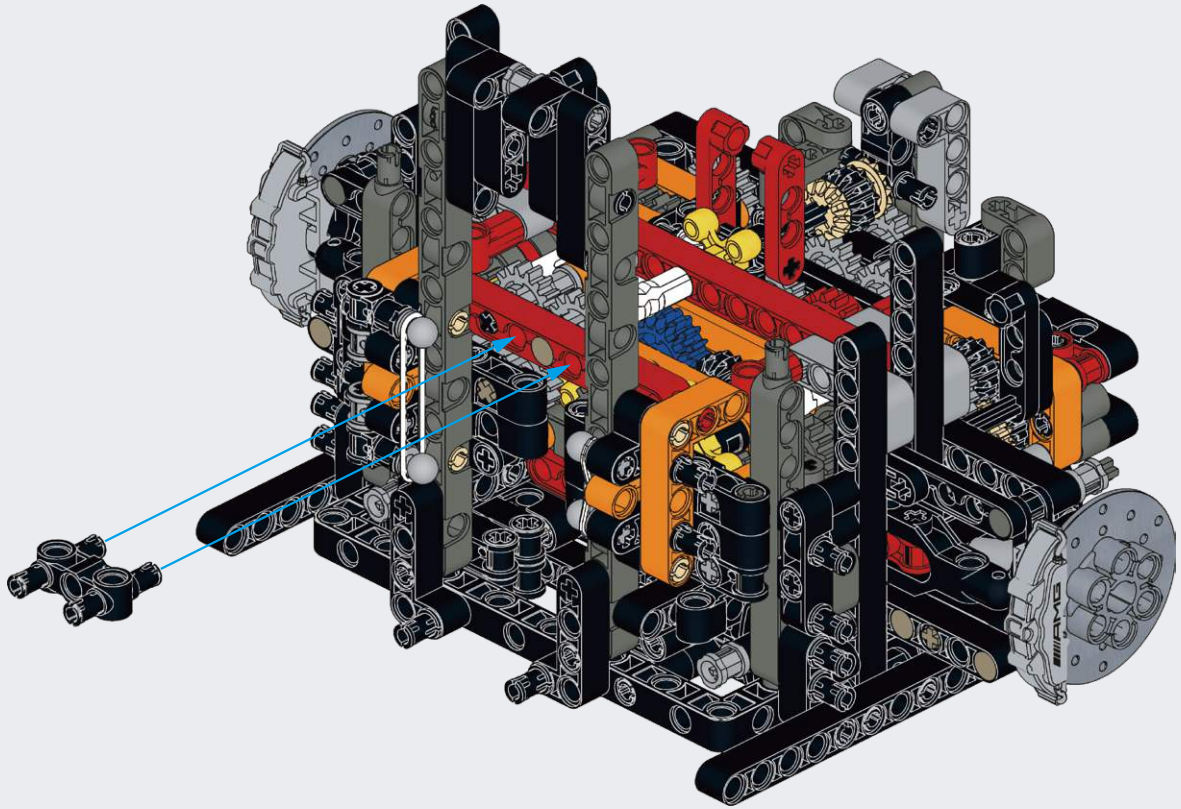

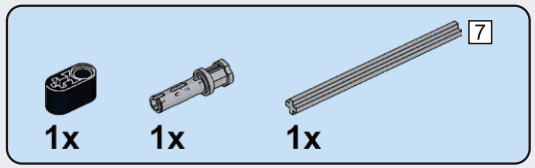

A164

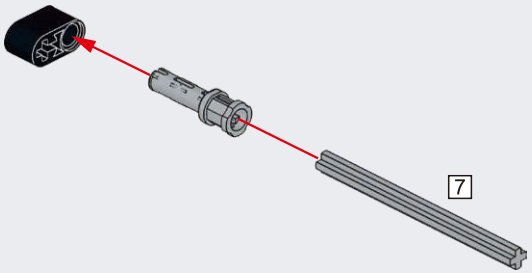

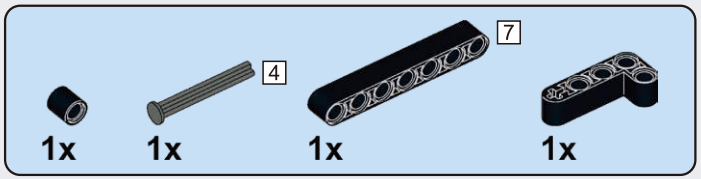

A165

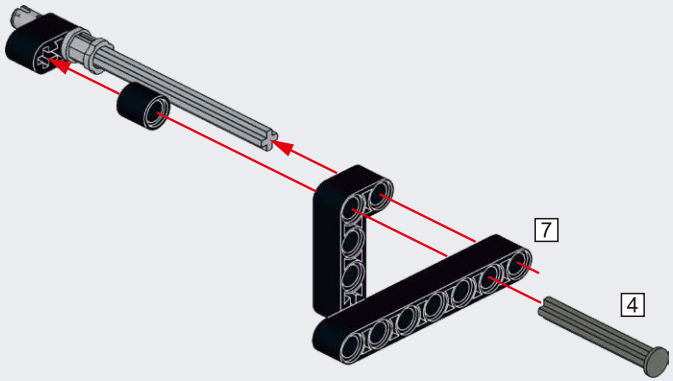

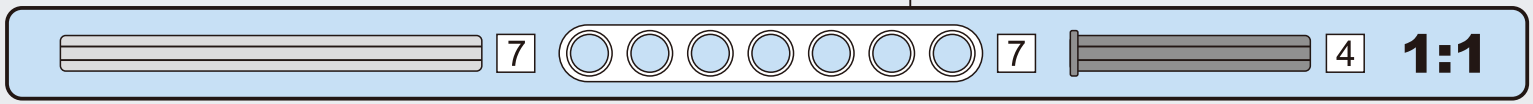

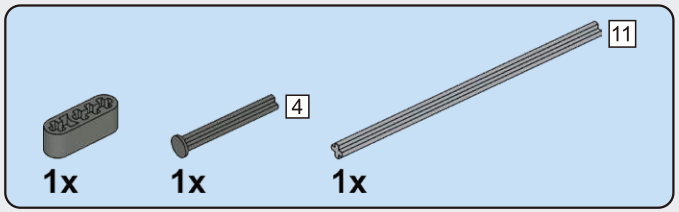

A166

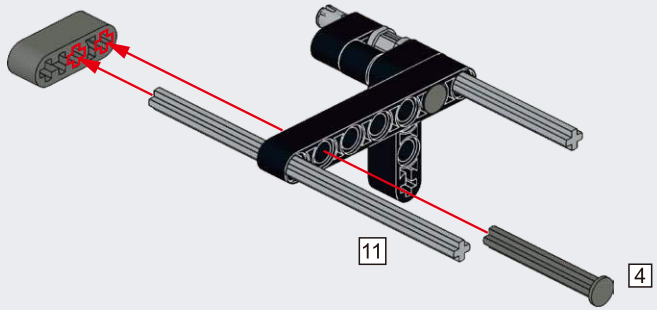

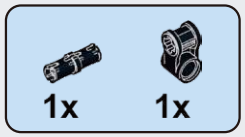

A167

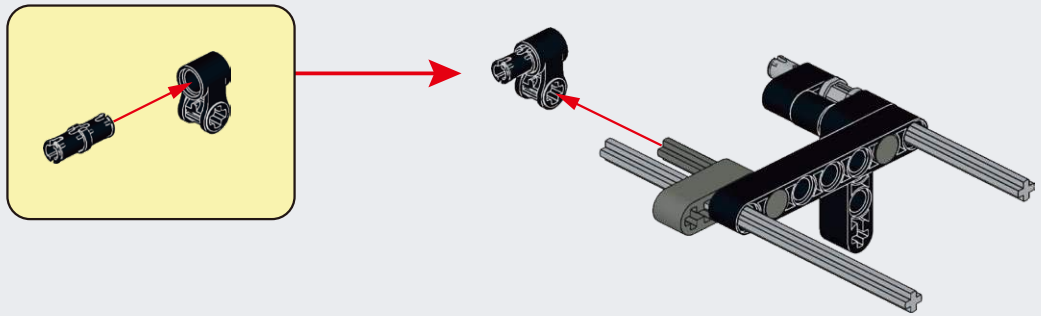

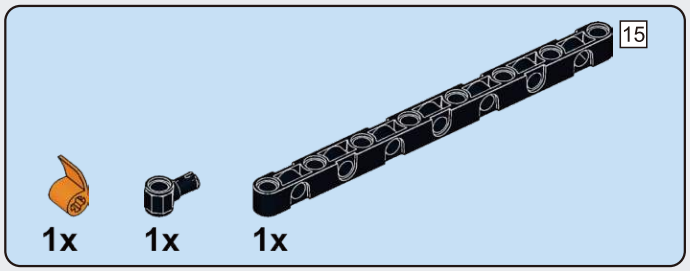

A168

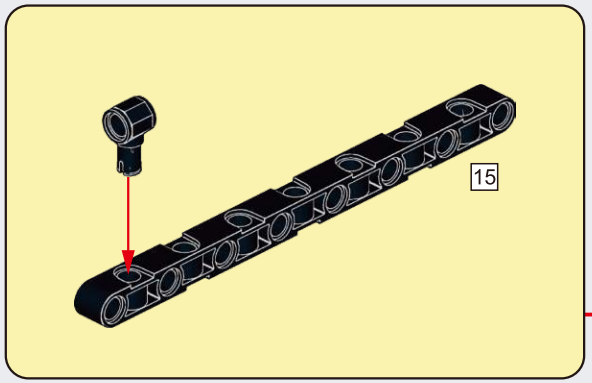

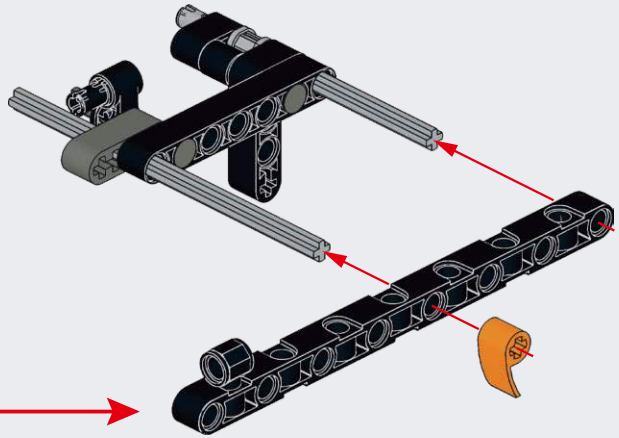

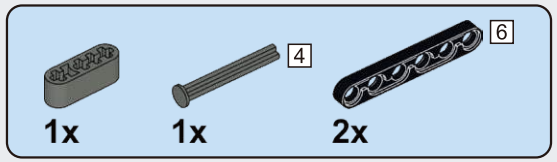

A169

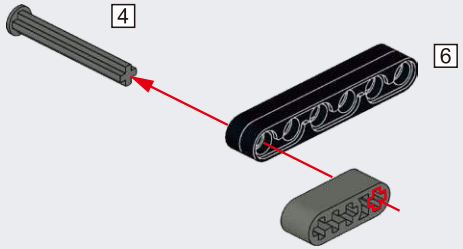

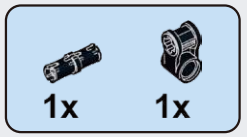

A170

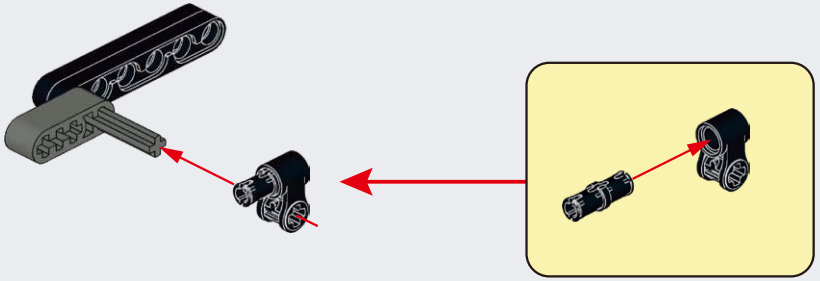

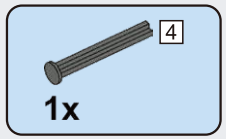

A171

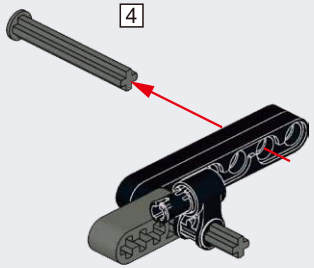

A172

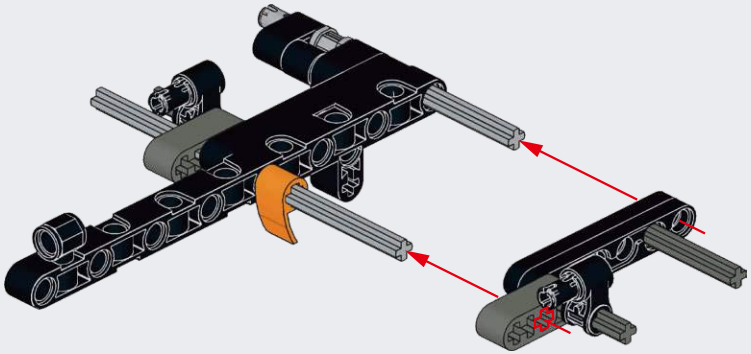

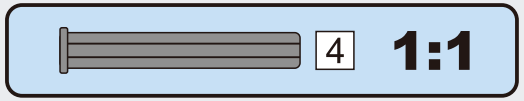

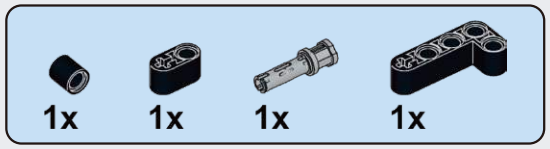

A173

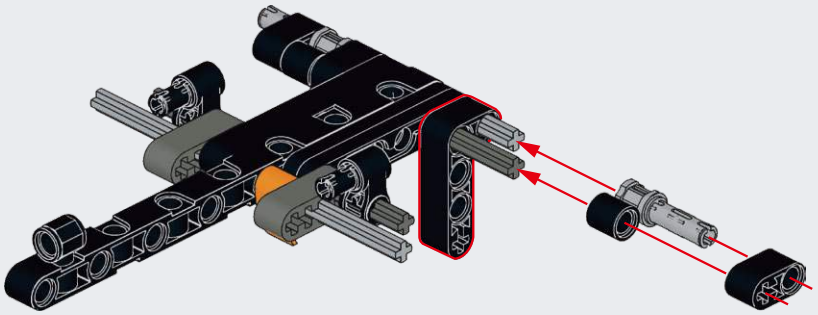

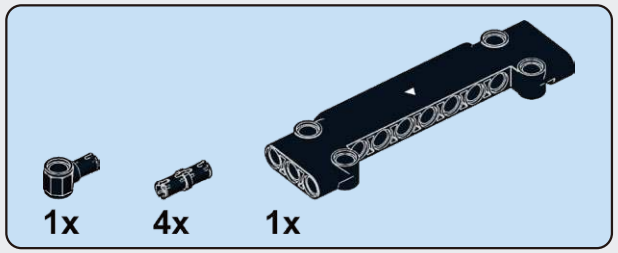

A174

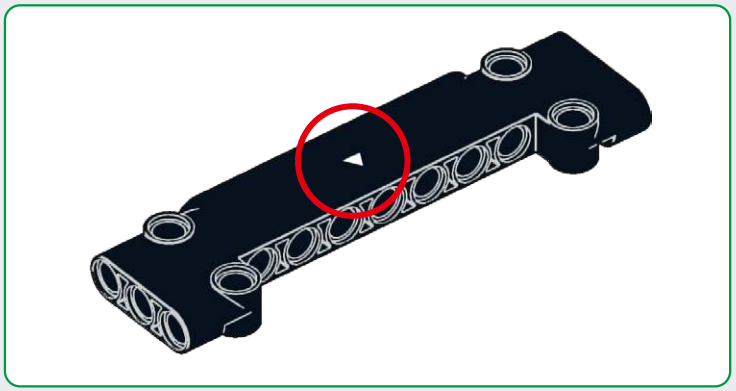

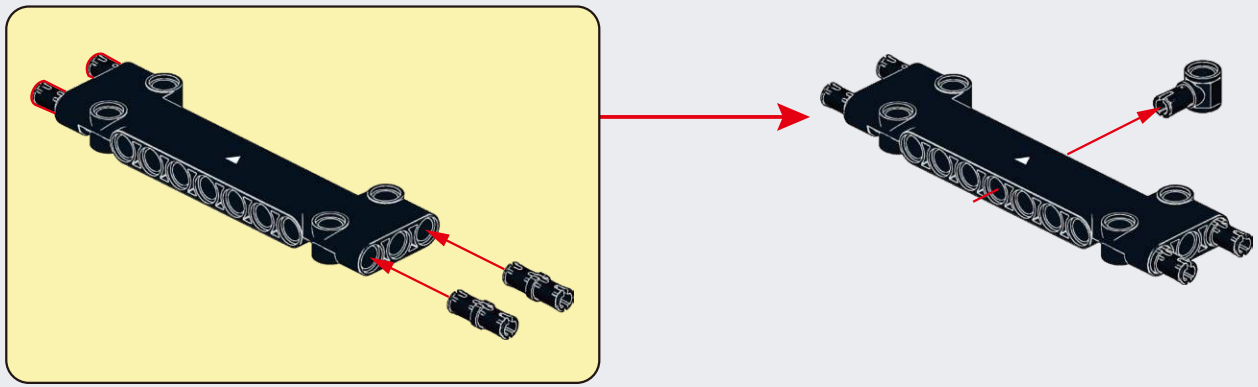

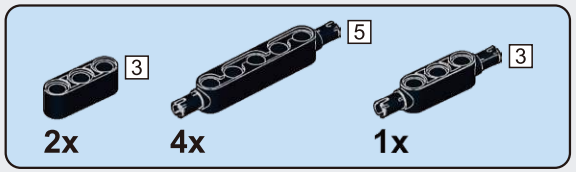

A175

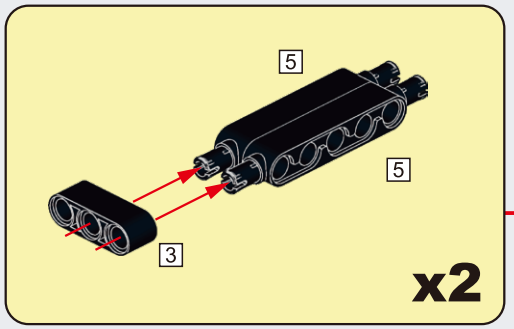

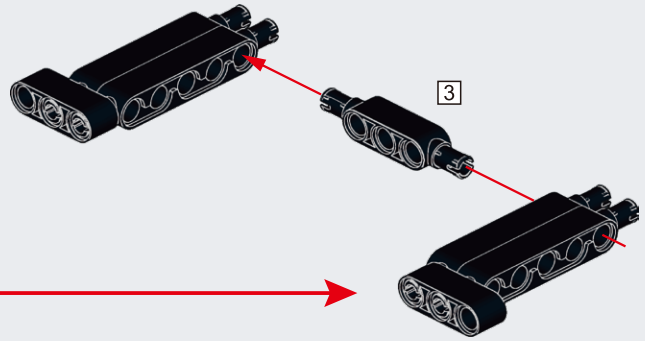

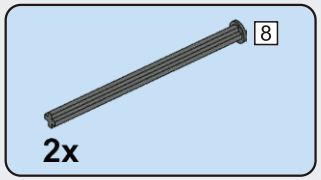

A176

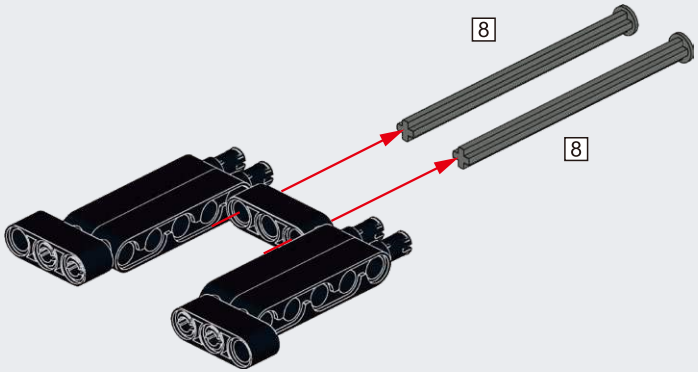

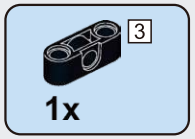

A177

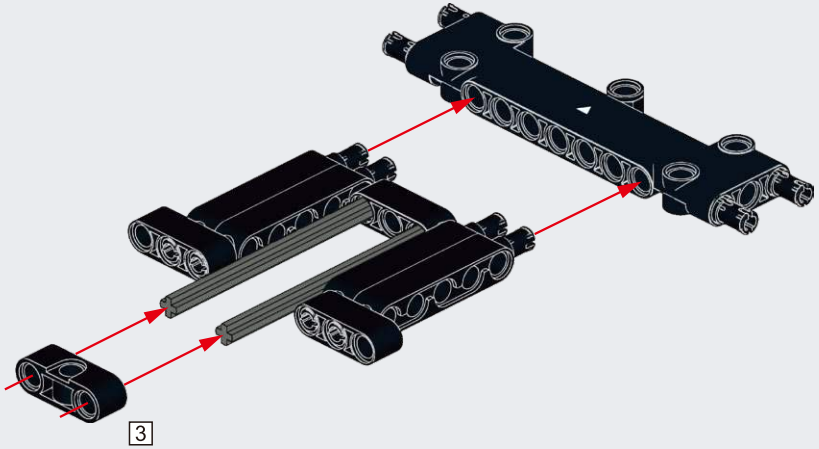

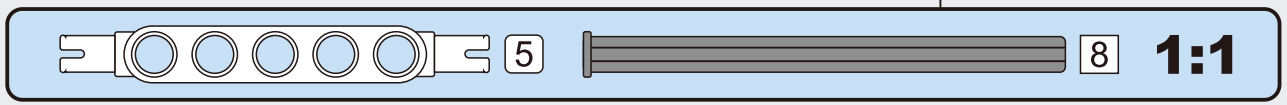

A178

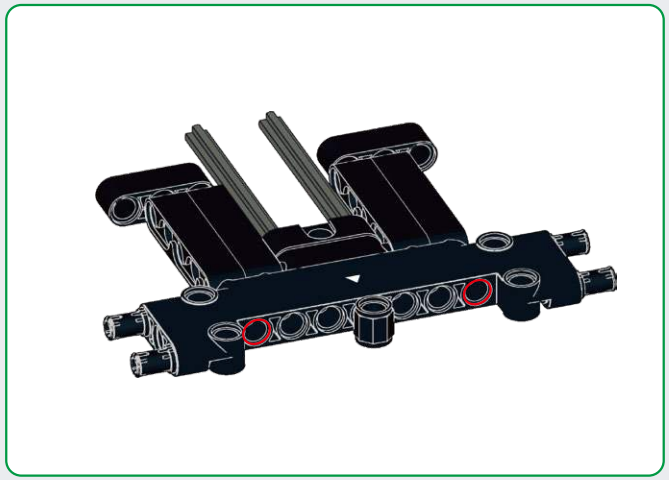

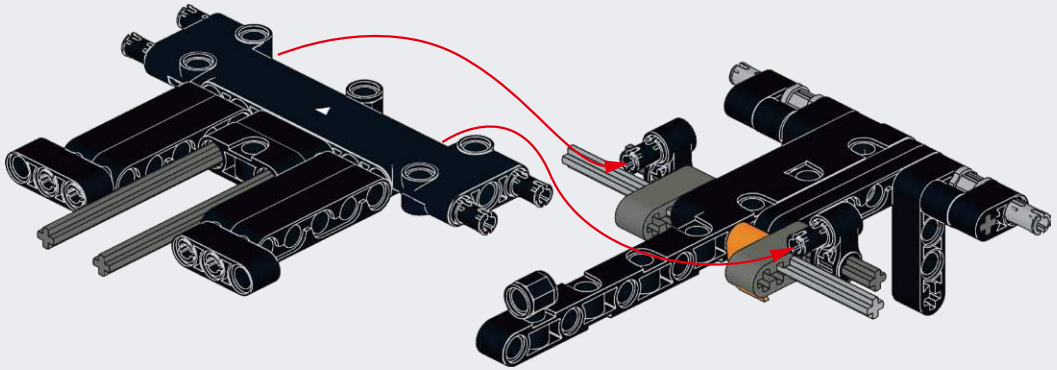

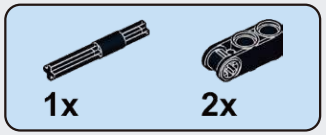

A179

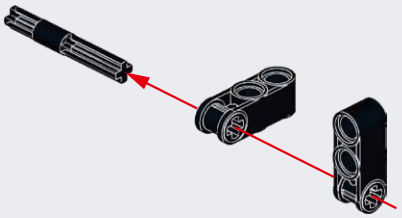

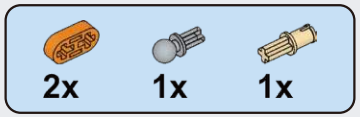

A180

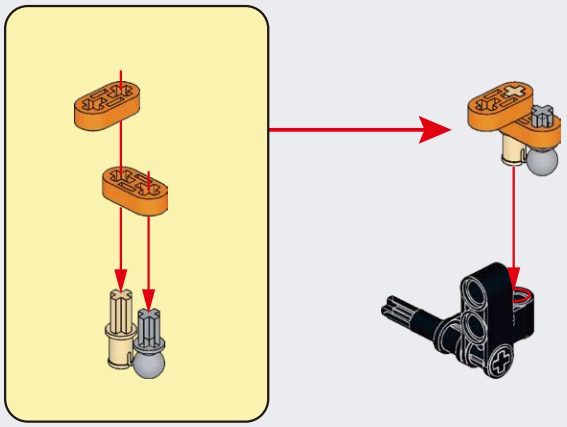

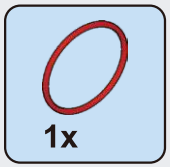

A181

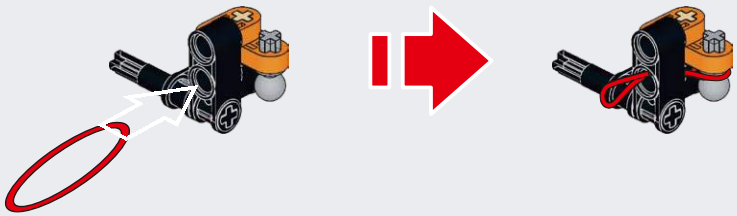

A182

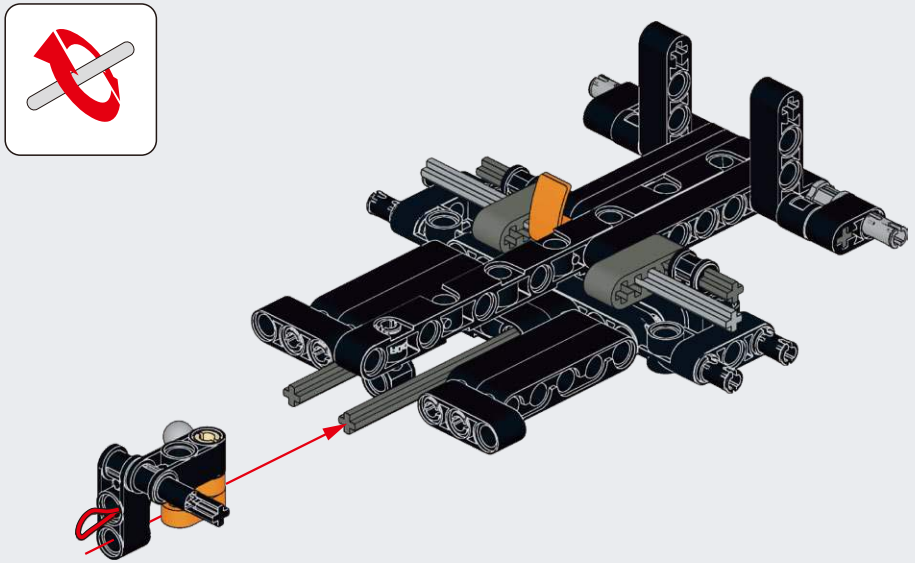

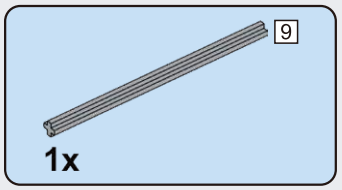

A183

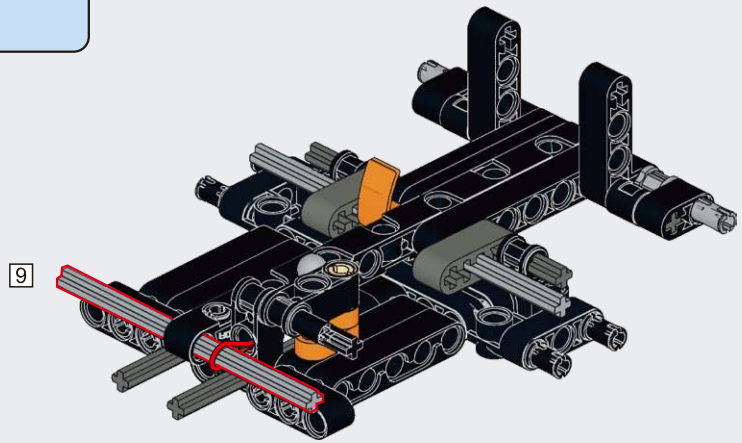

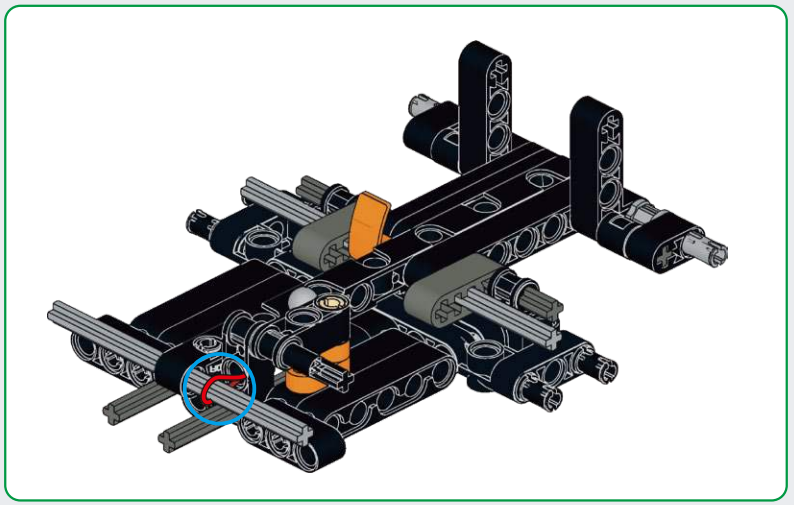

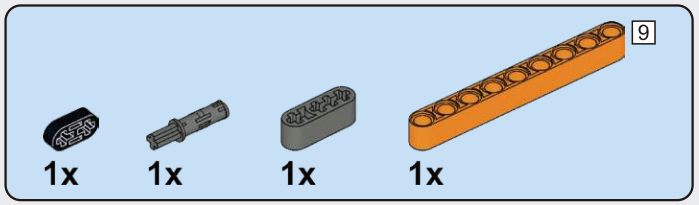

A184

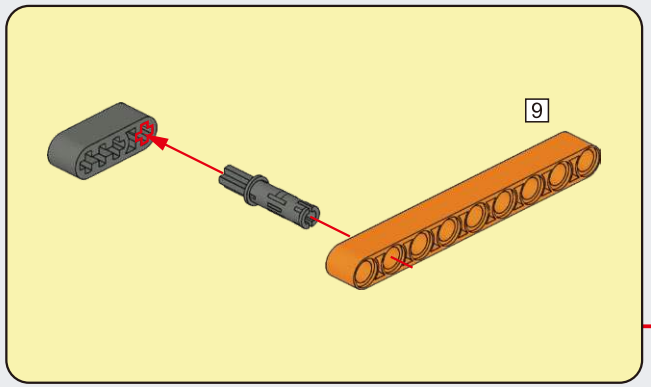

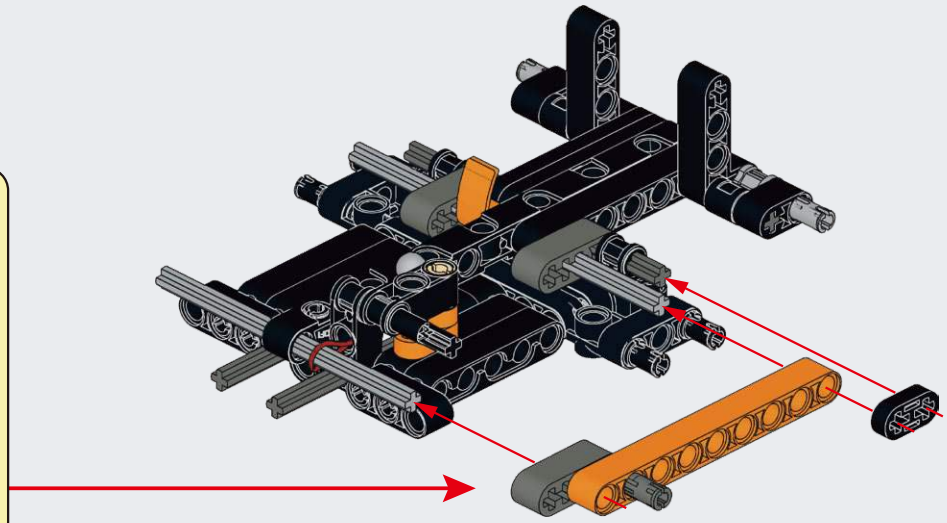

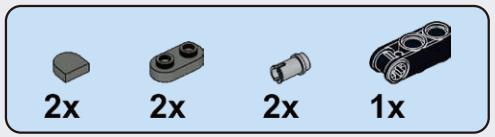

A185

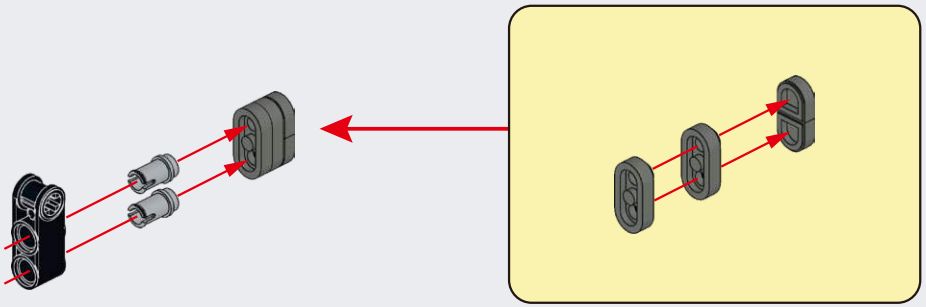

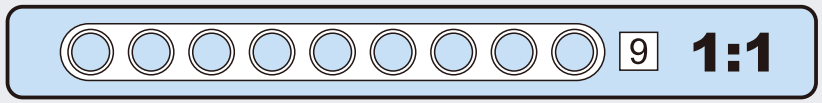

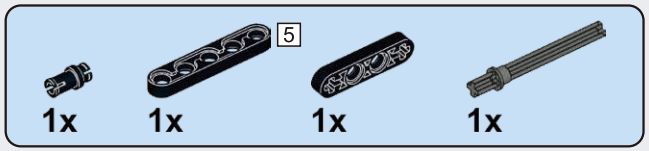

A186

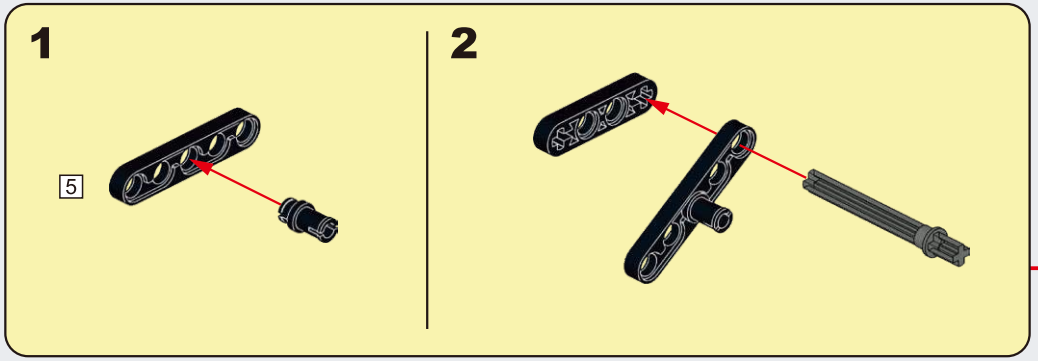

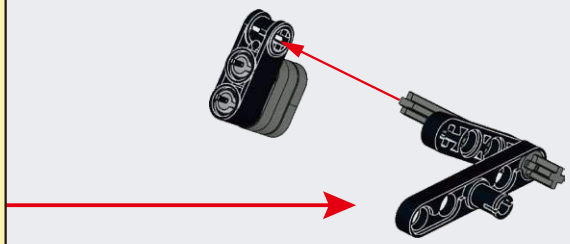

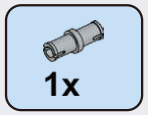

A187

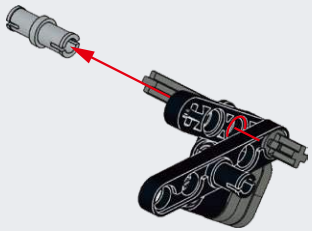

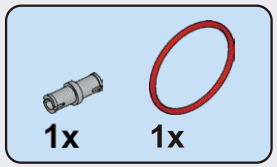

A188

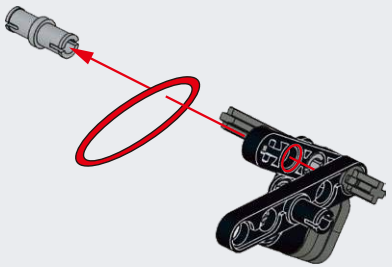

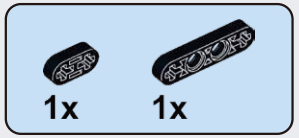

A189

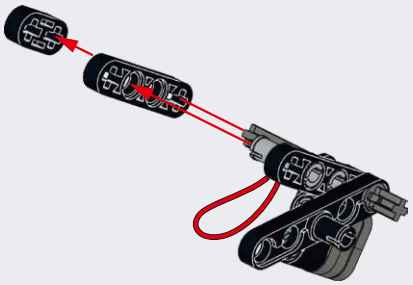

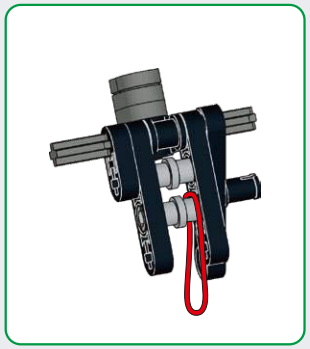

A190

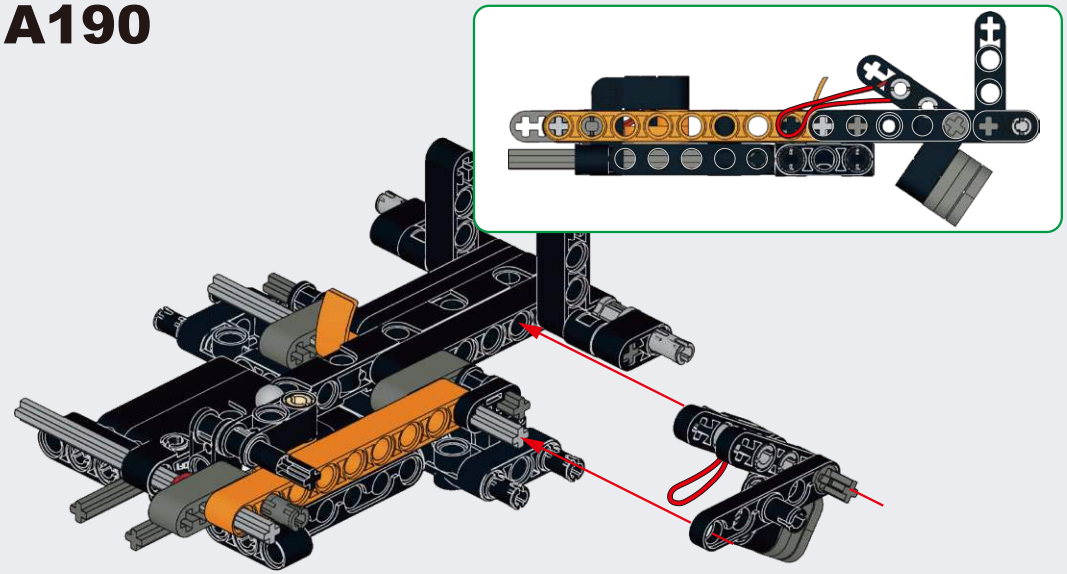

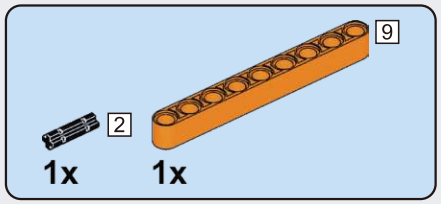

A191

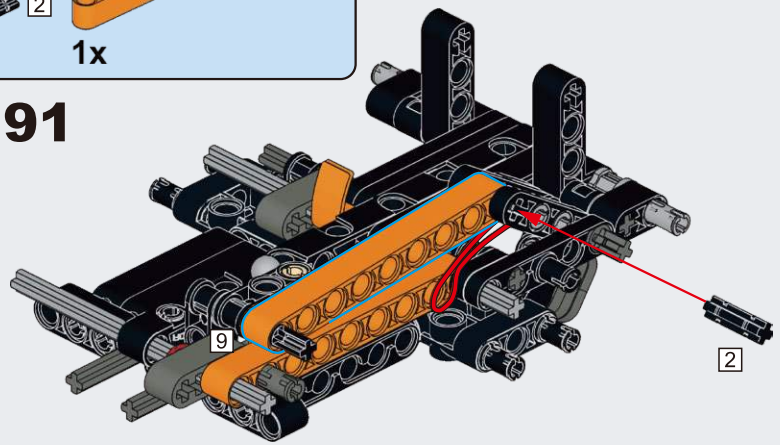

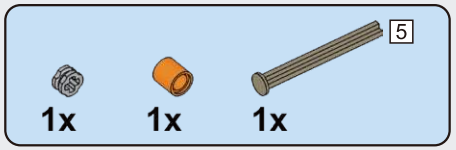

A192

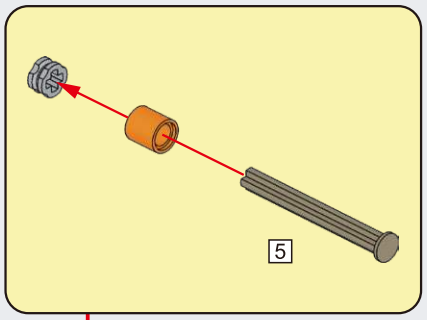

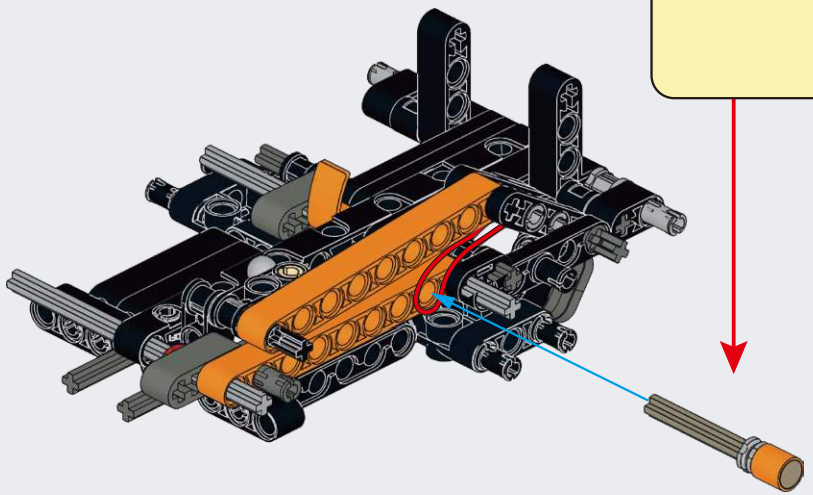

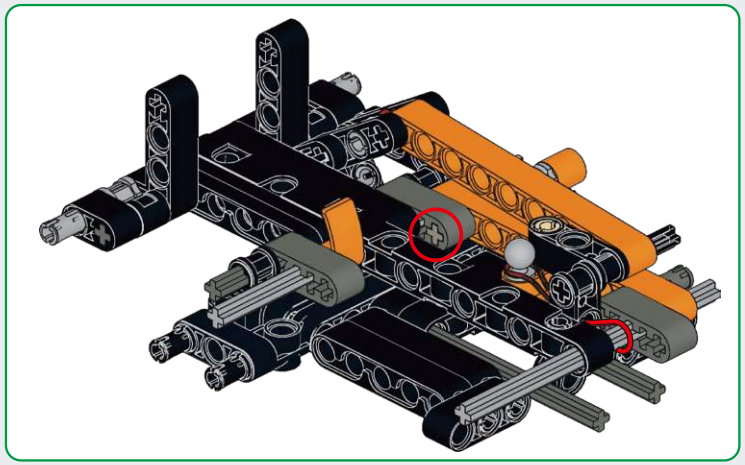

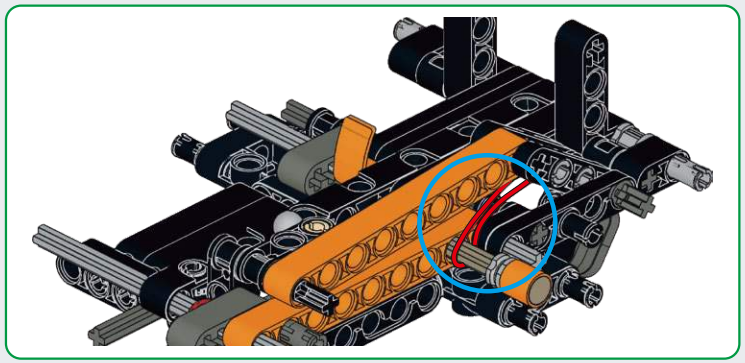

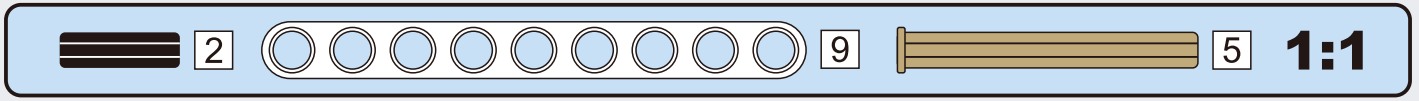

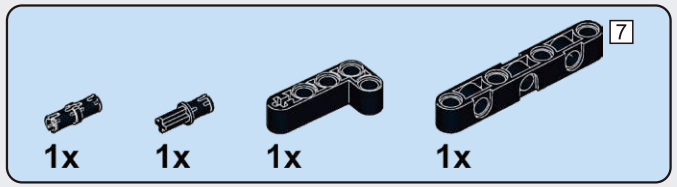

A193

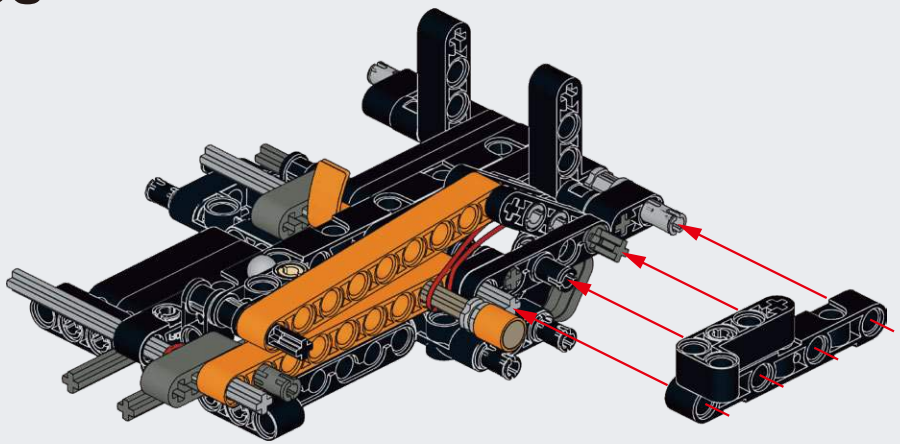

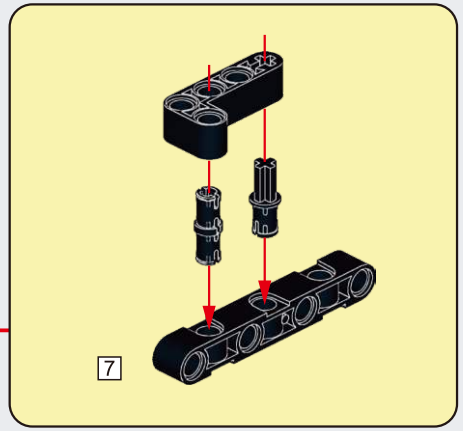

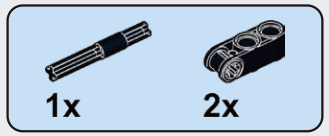

A194

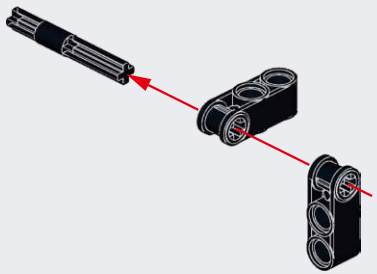

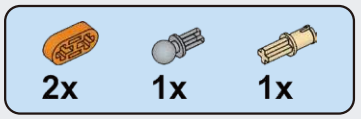

A195

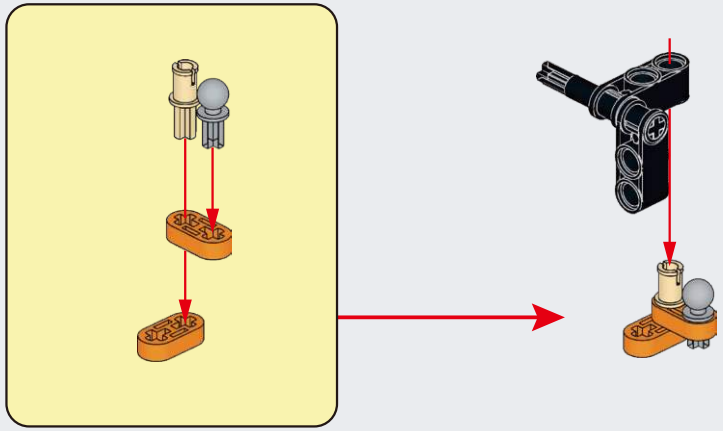

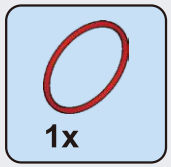

A196

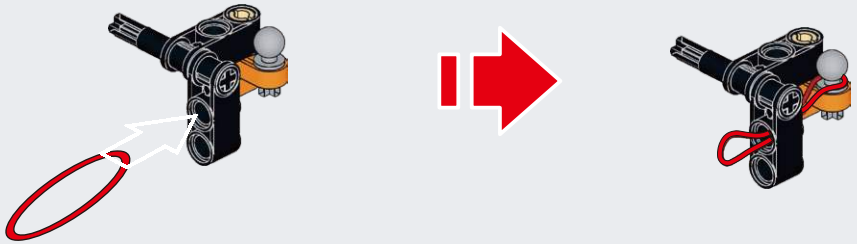

A197

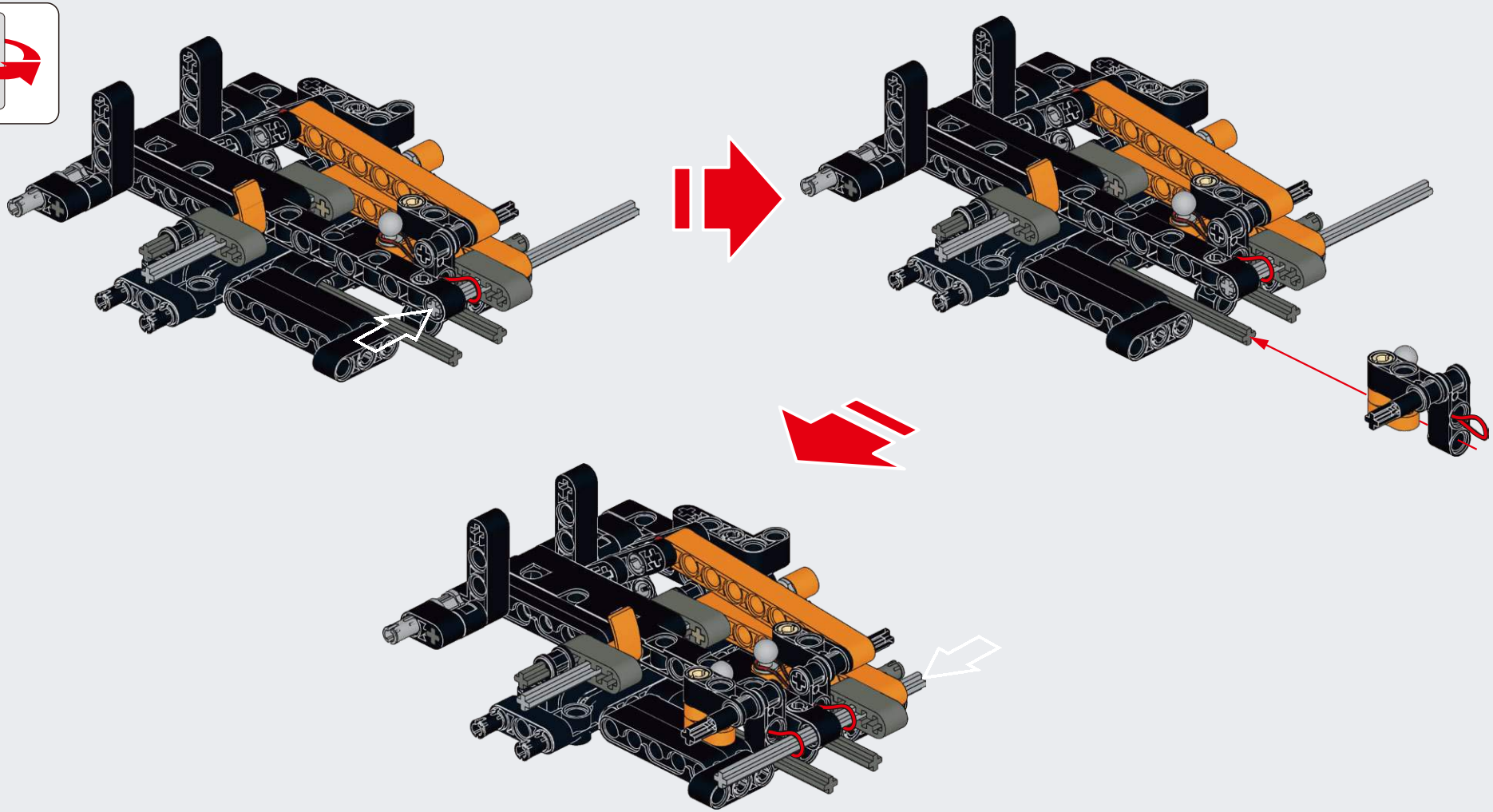

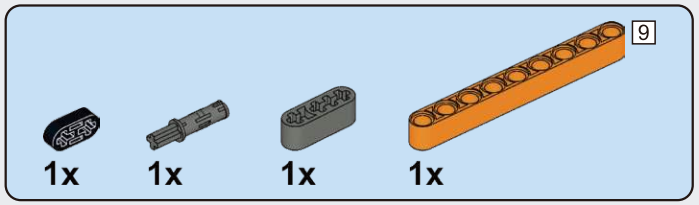

A198

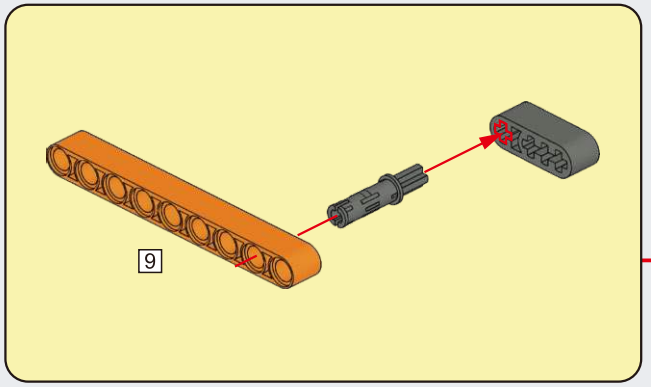

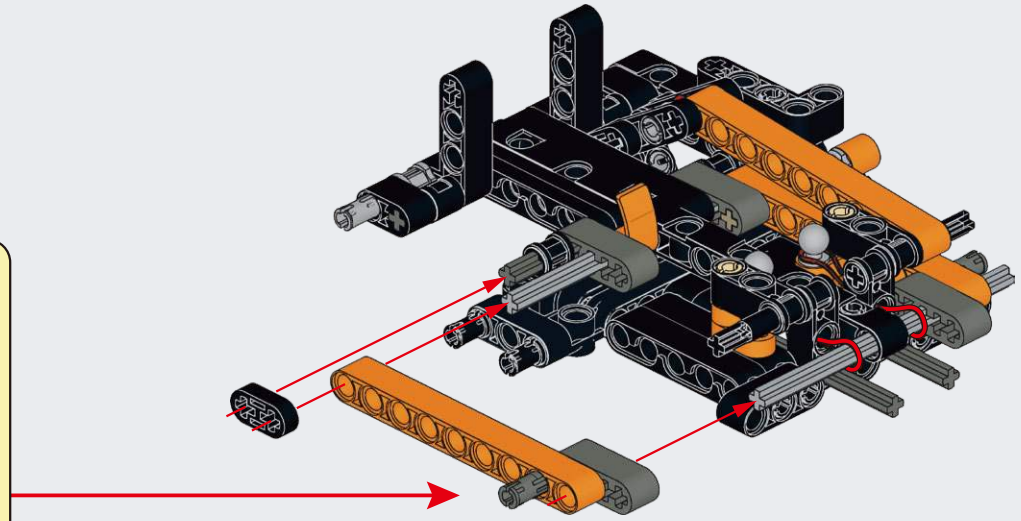

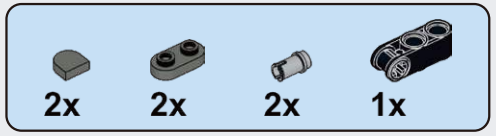

A199

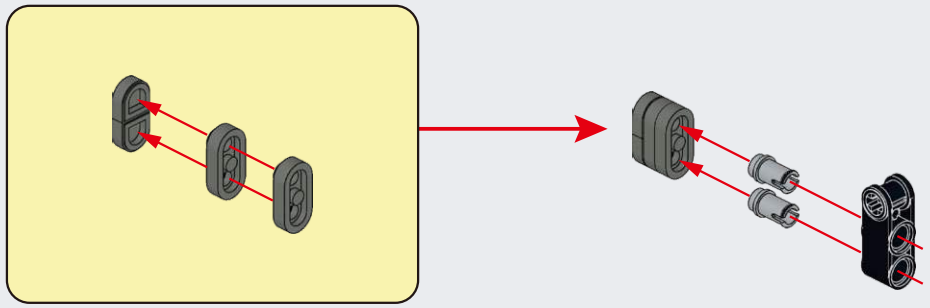

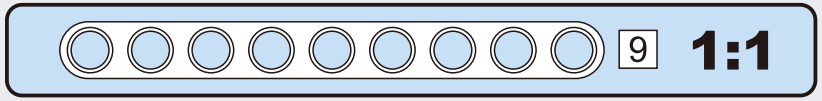

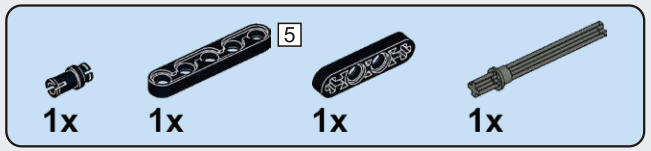

A200

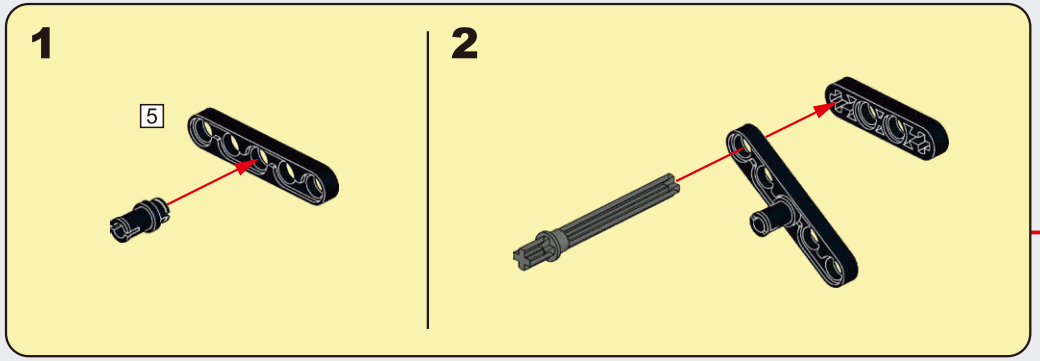

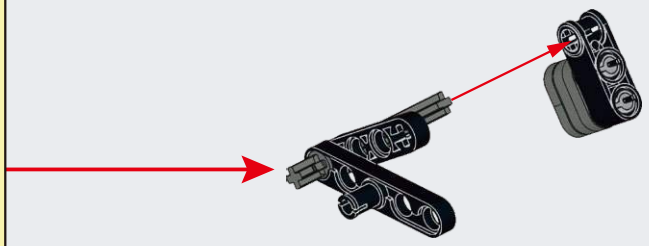

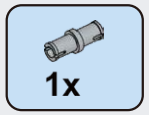

A201

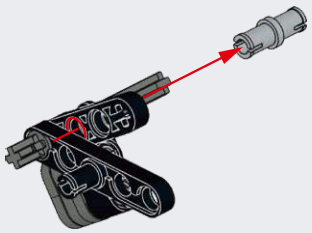

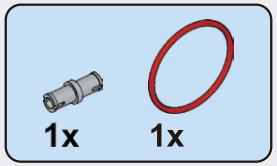

A202

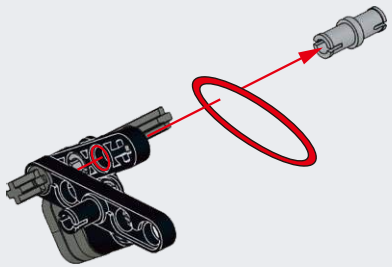

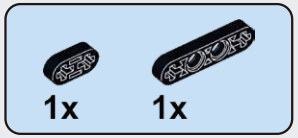

A203

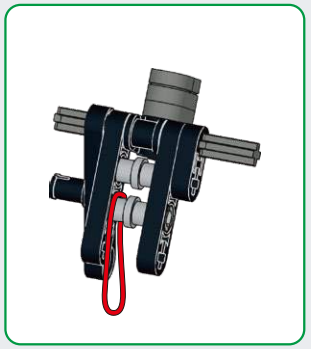

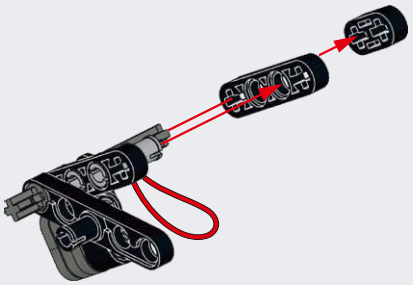

A204

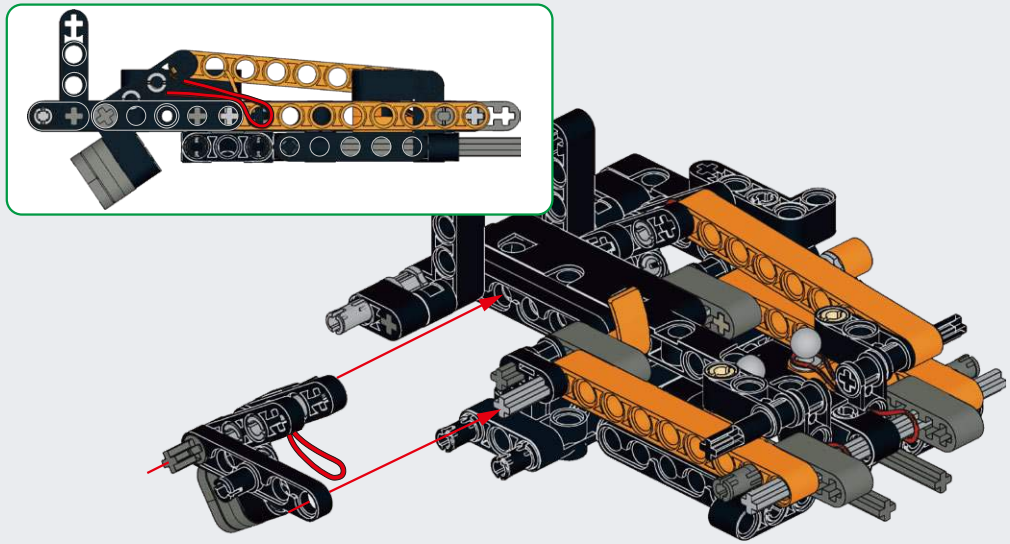

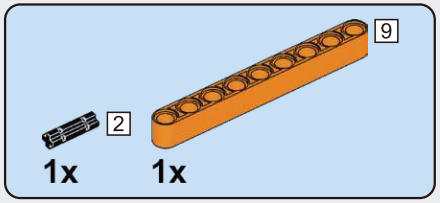

A205

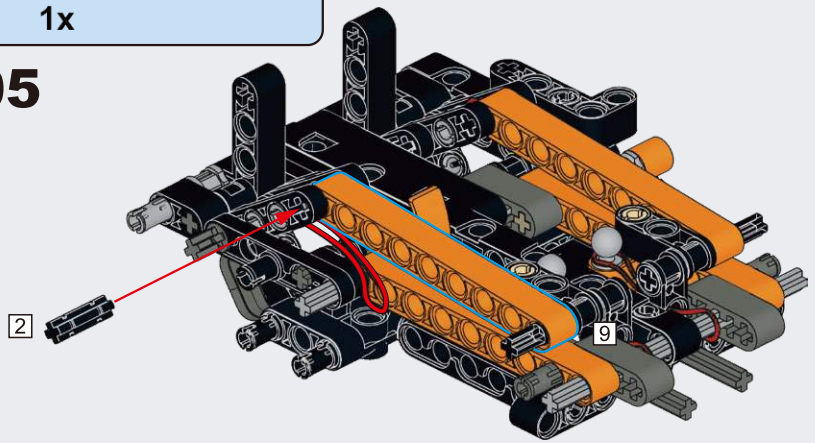

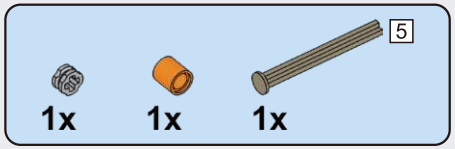

A206

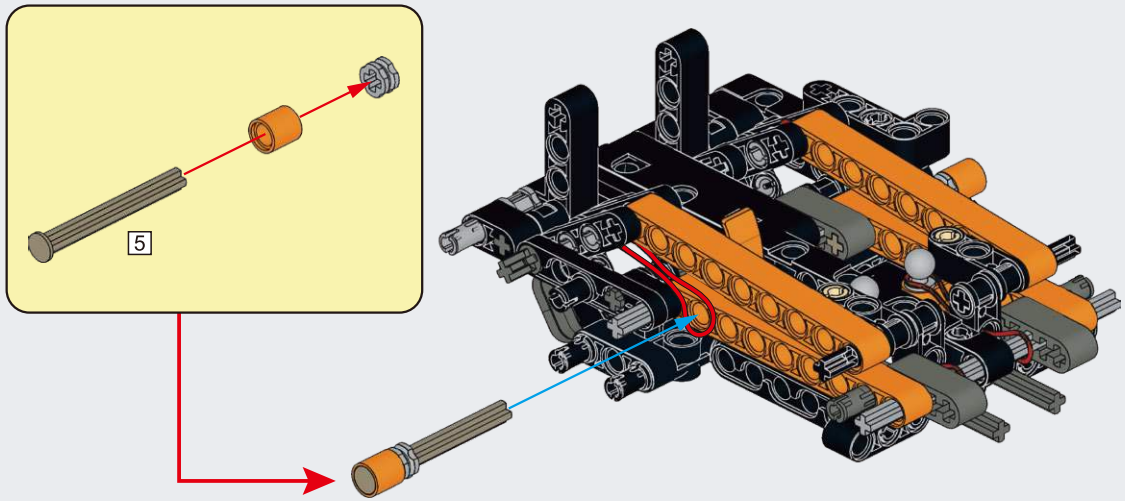

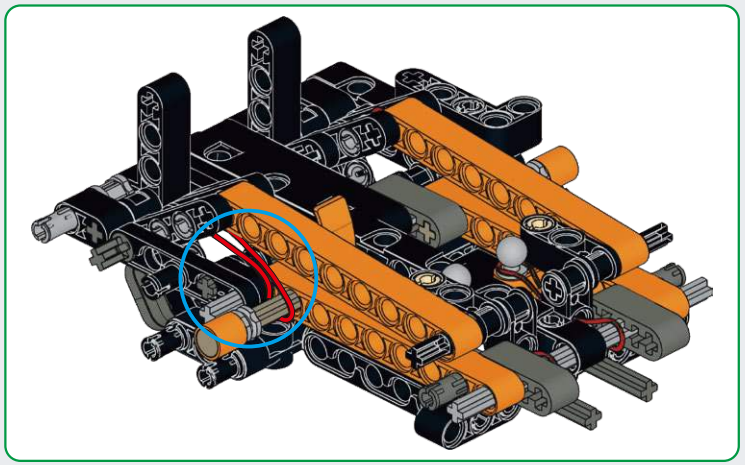

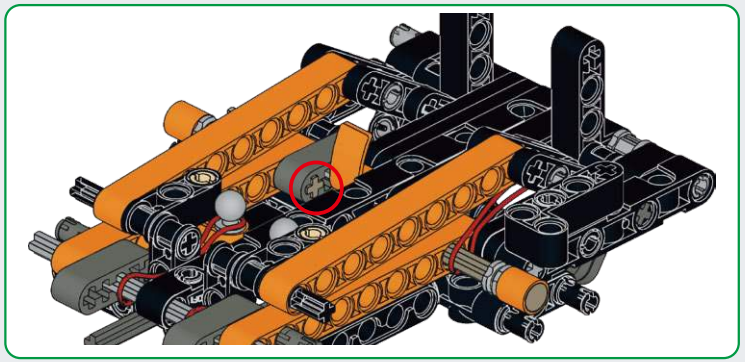

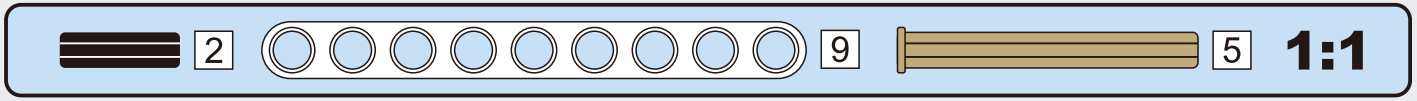

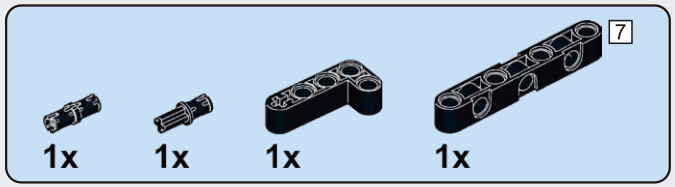

A207

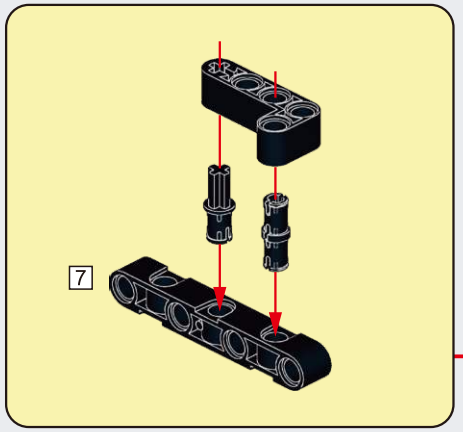

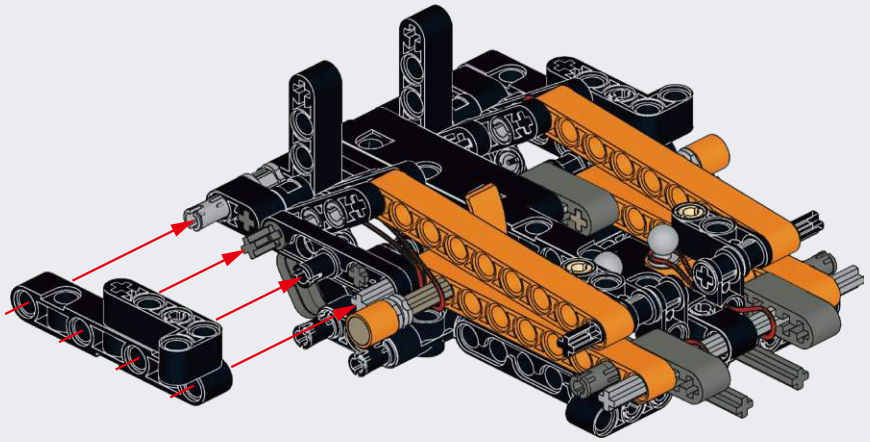

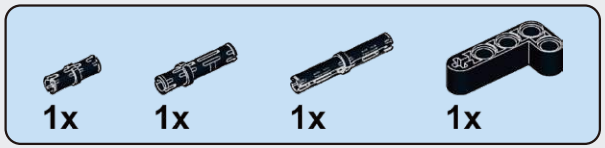

A208

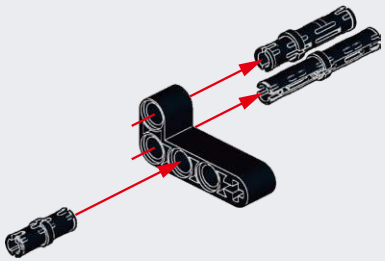

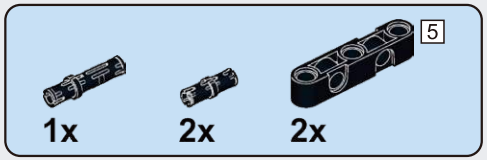

A209

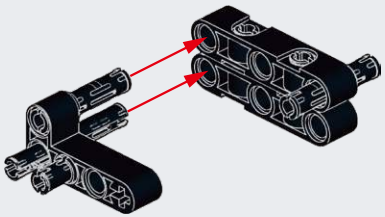

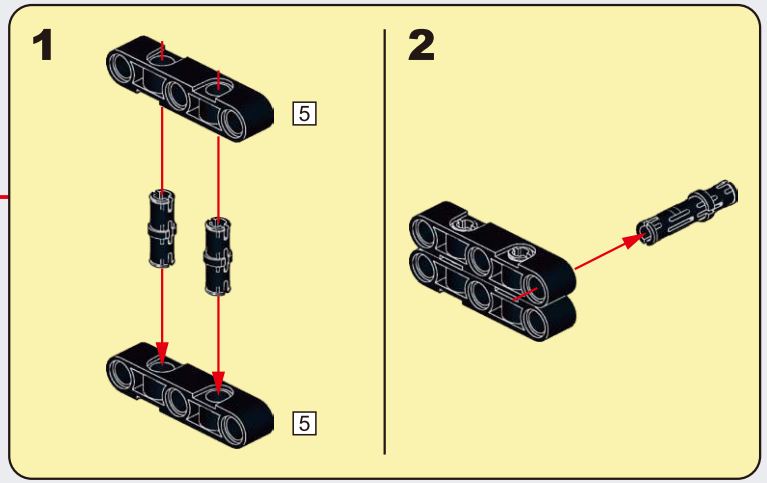

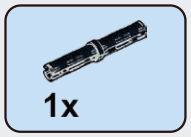

A210

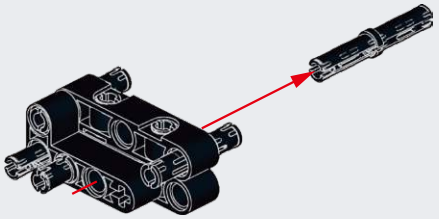

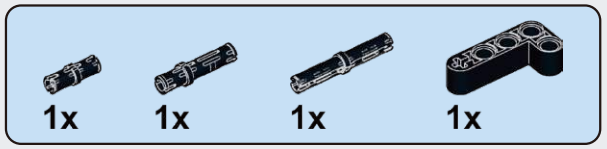

A211

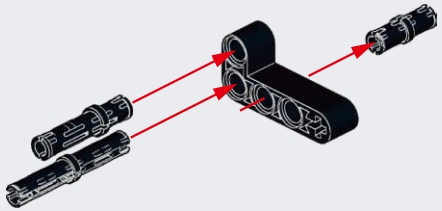

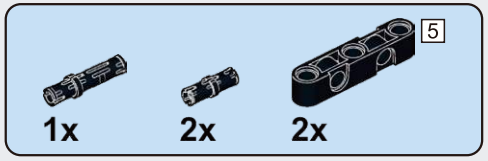

A212

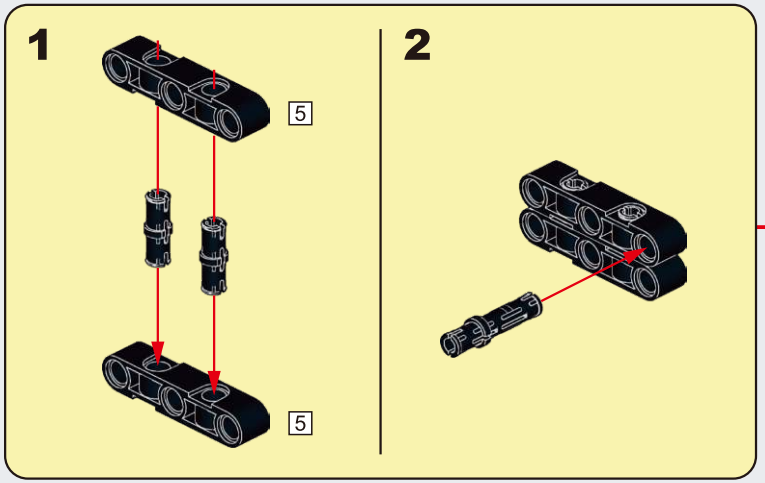

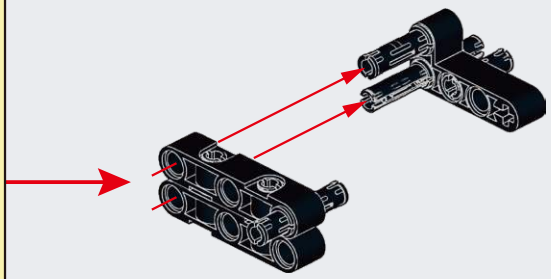

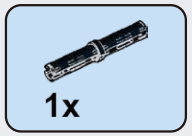

A213

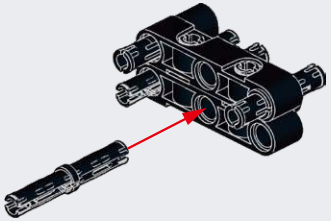

A214

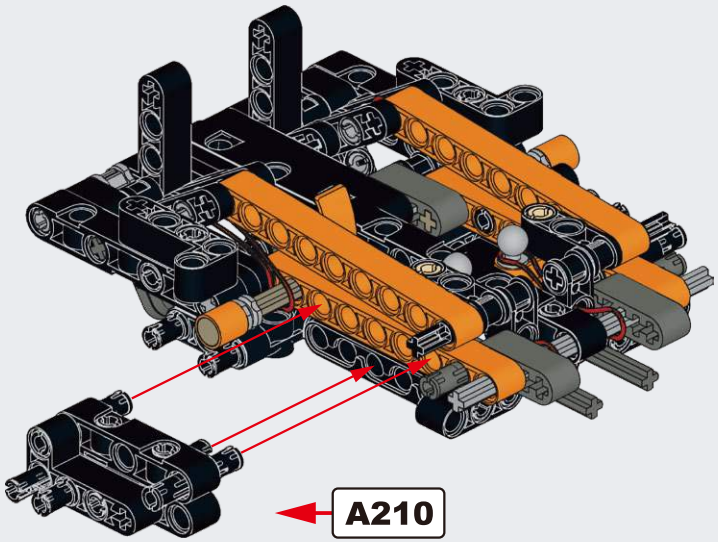

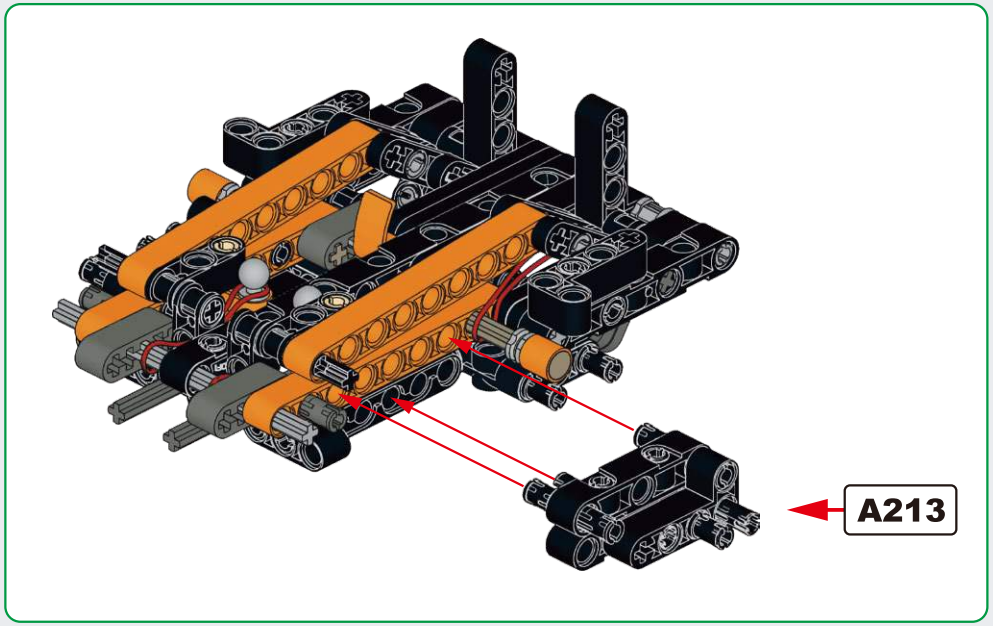

A215

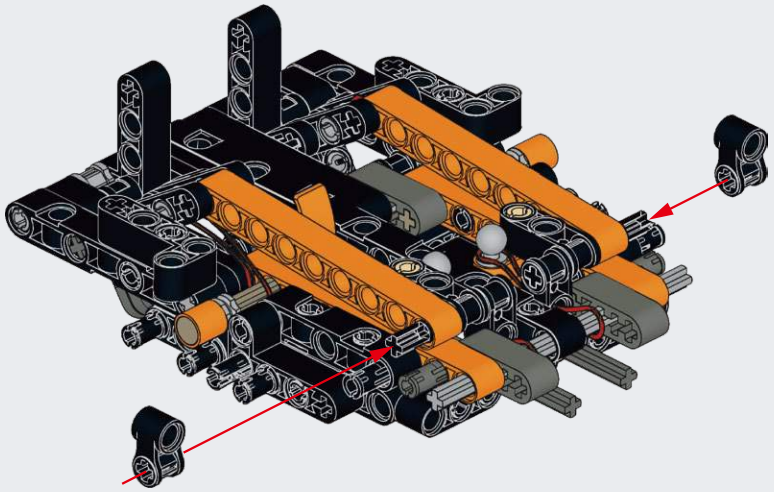

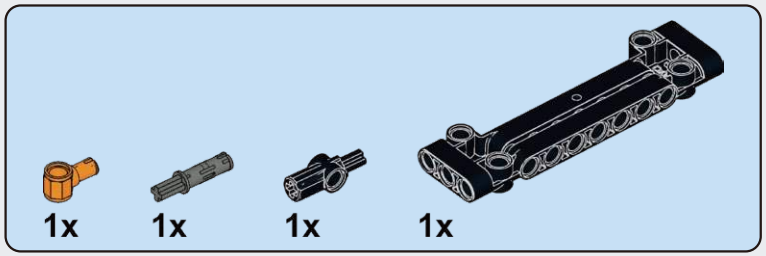

A216

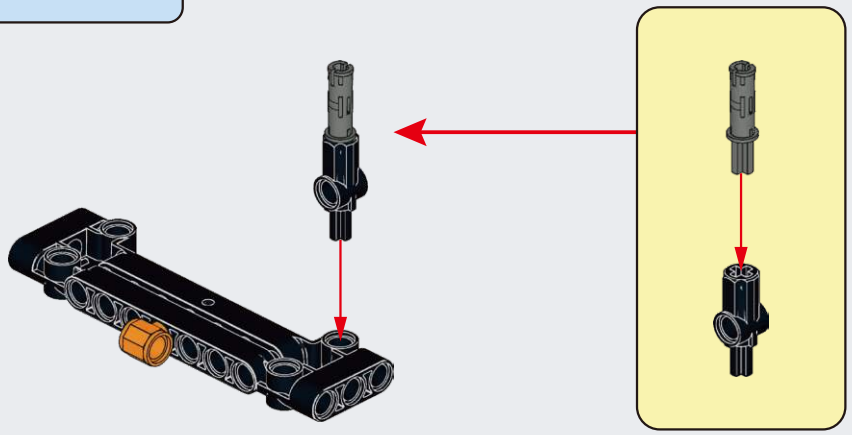

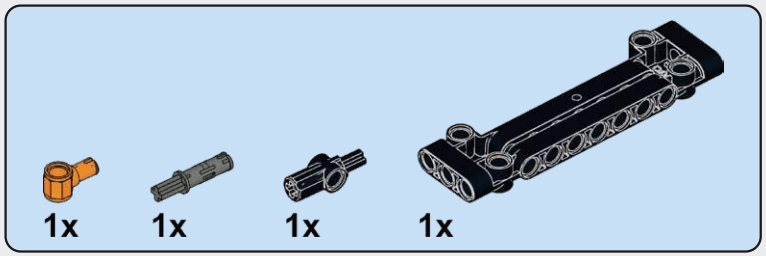

A217

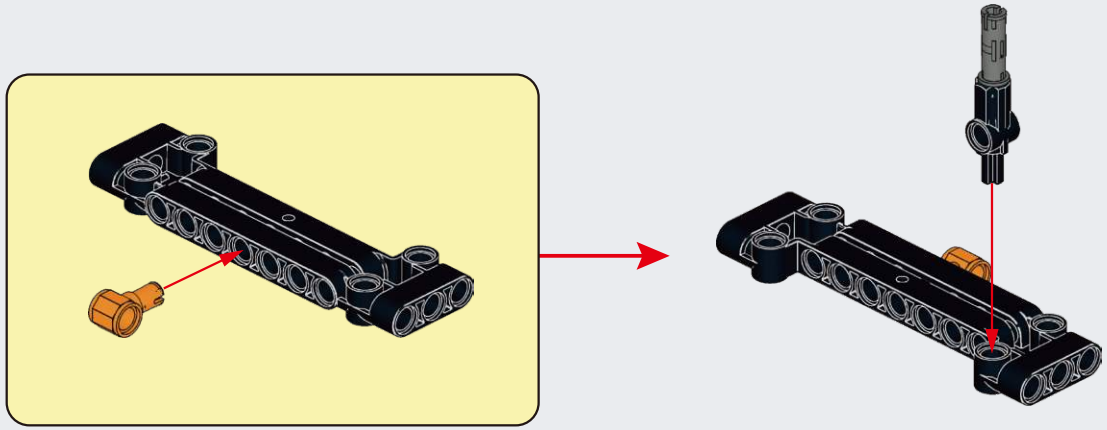

A218

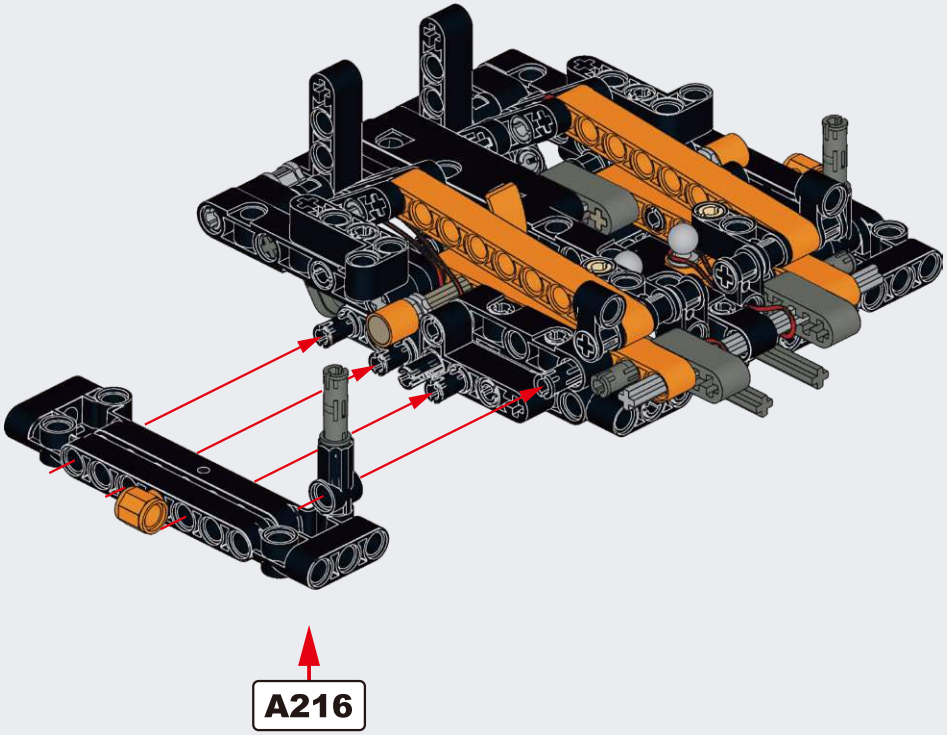

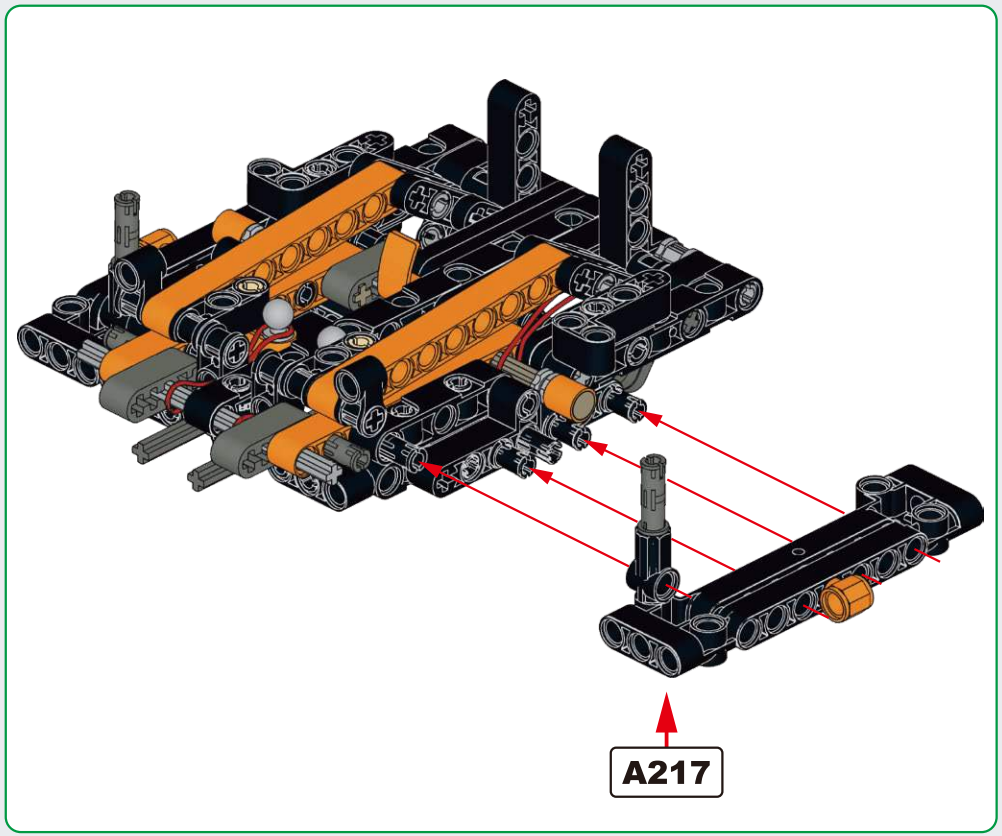

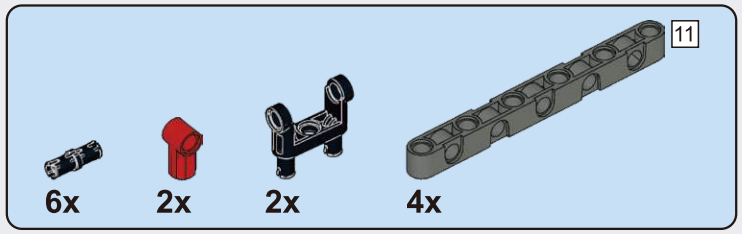

A219

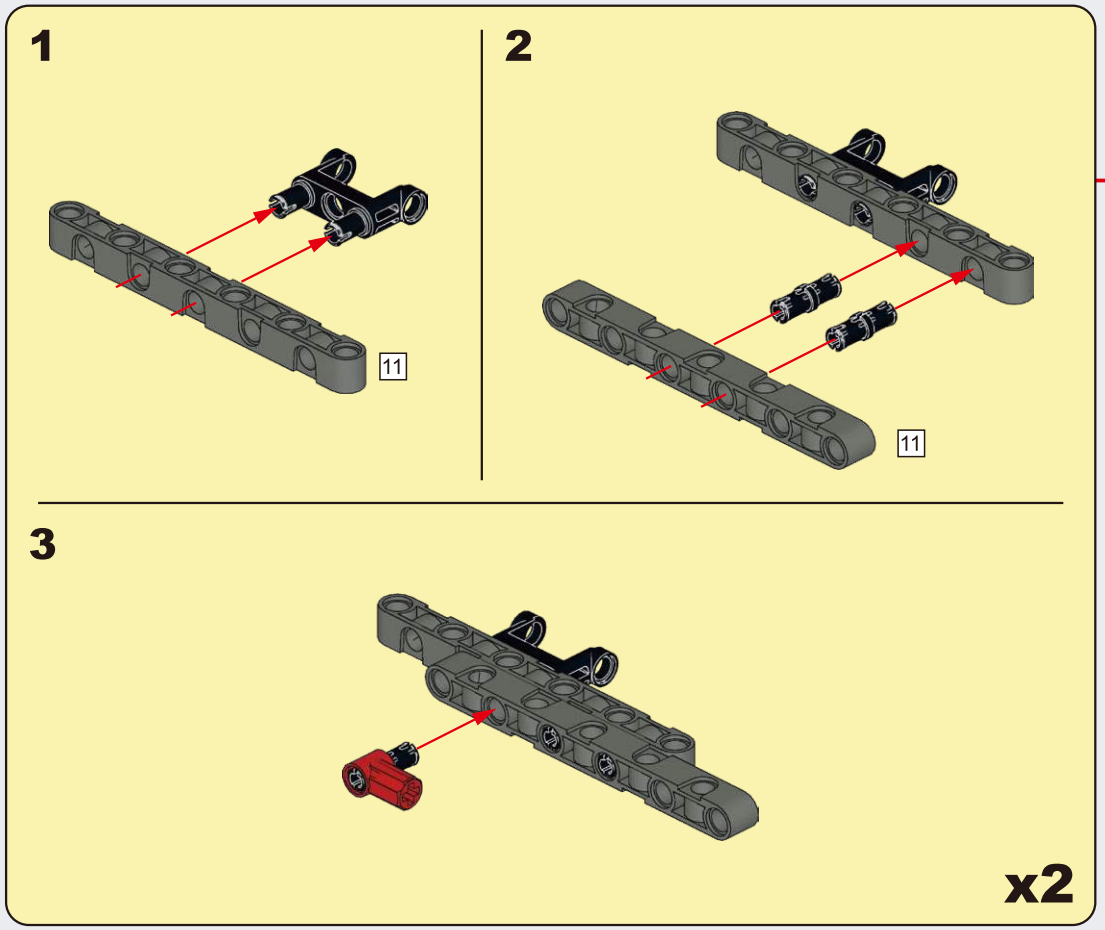

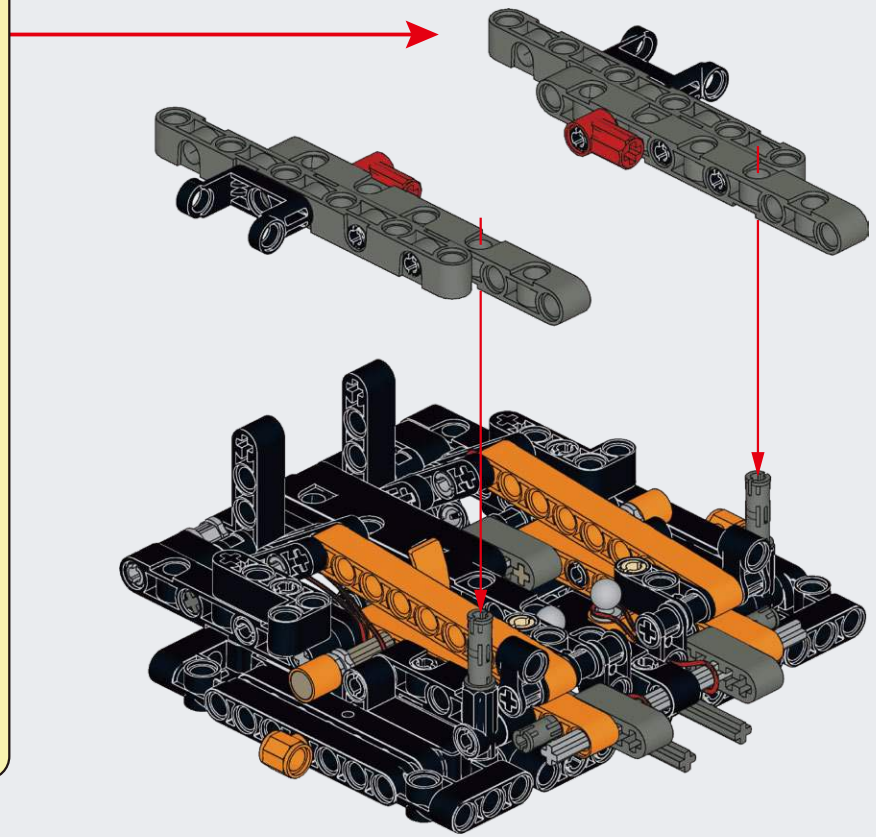

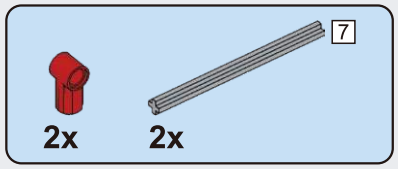

A220

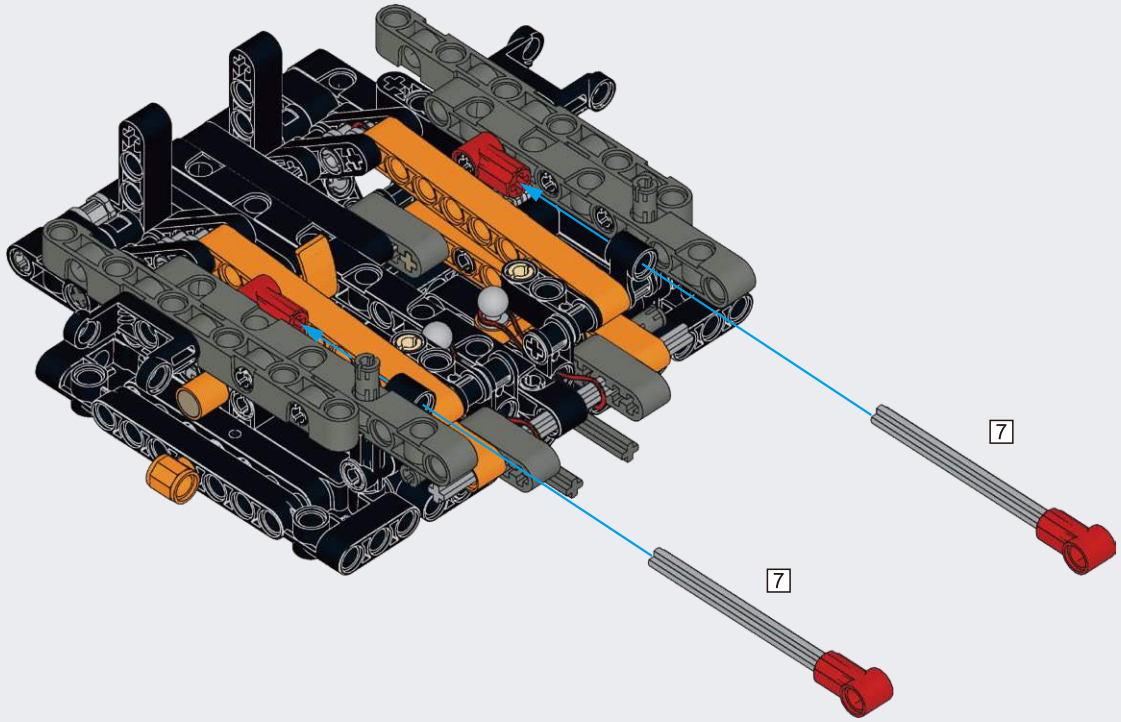

A221

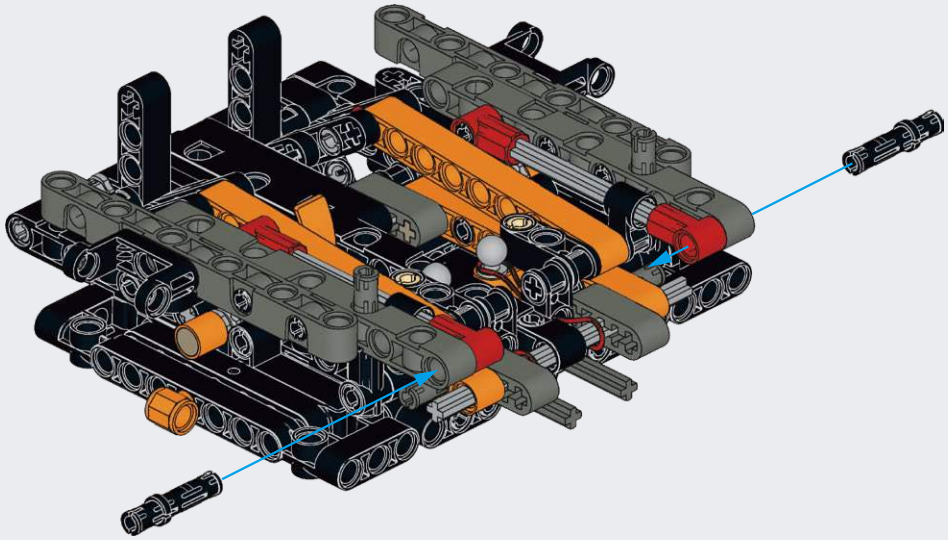

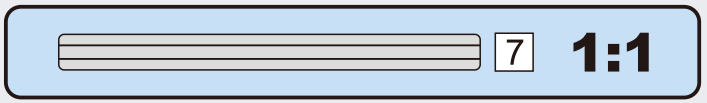

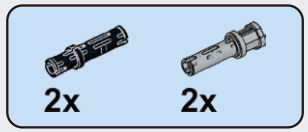

A222

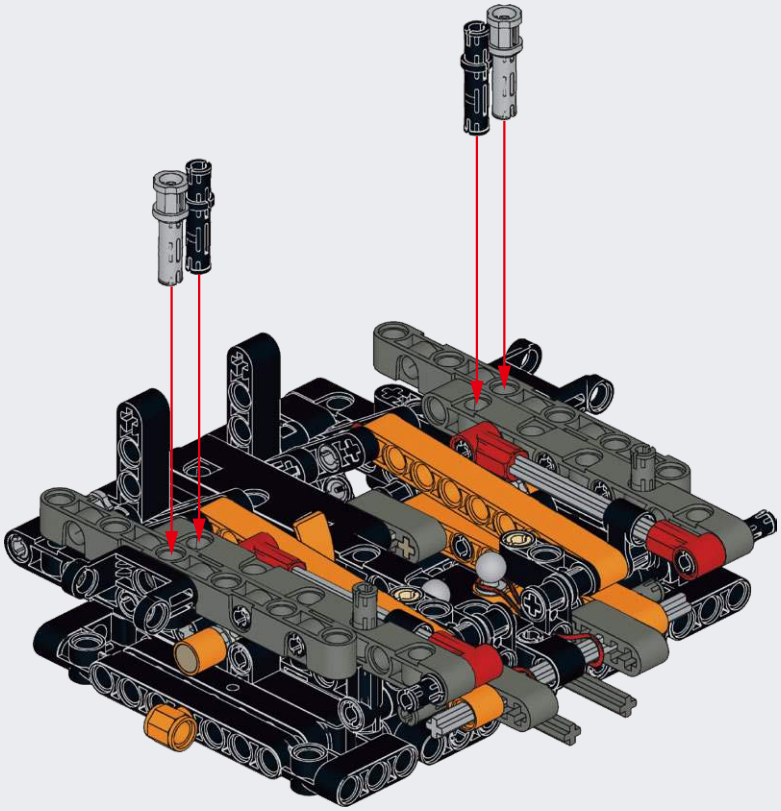

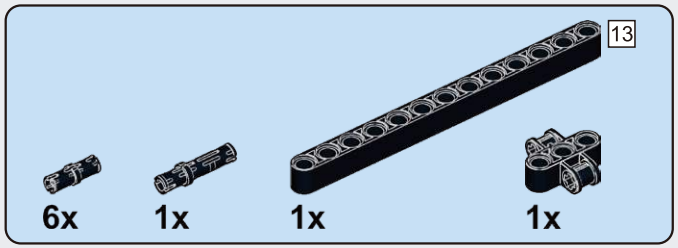

A223

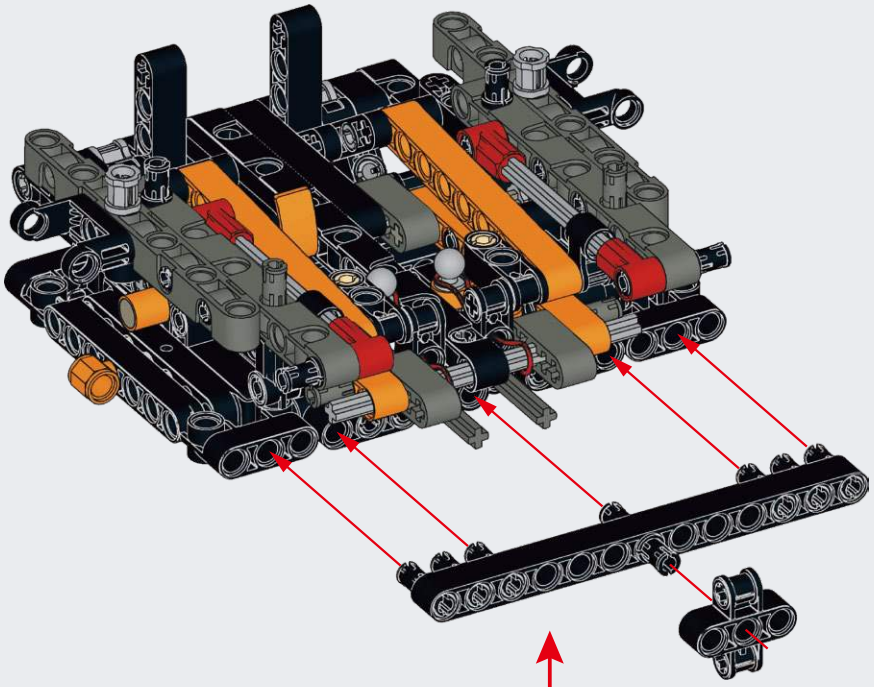

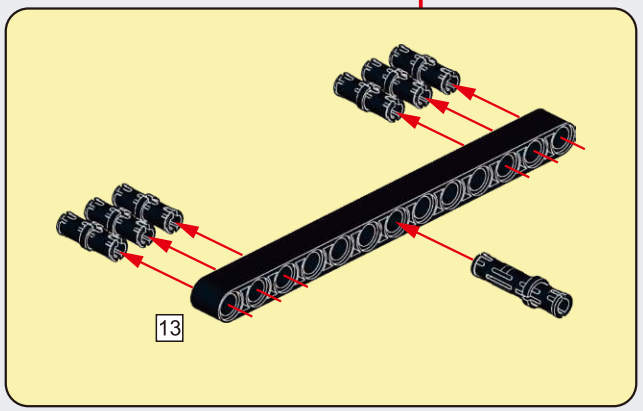

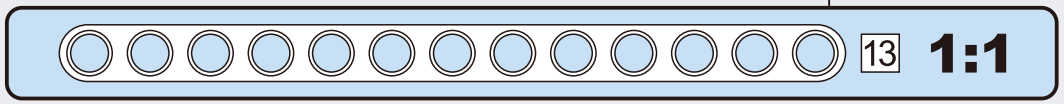

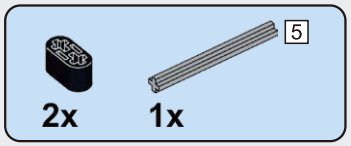

A224

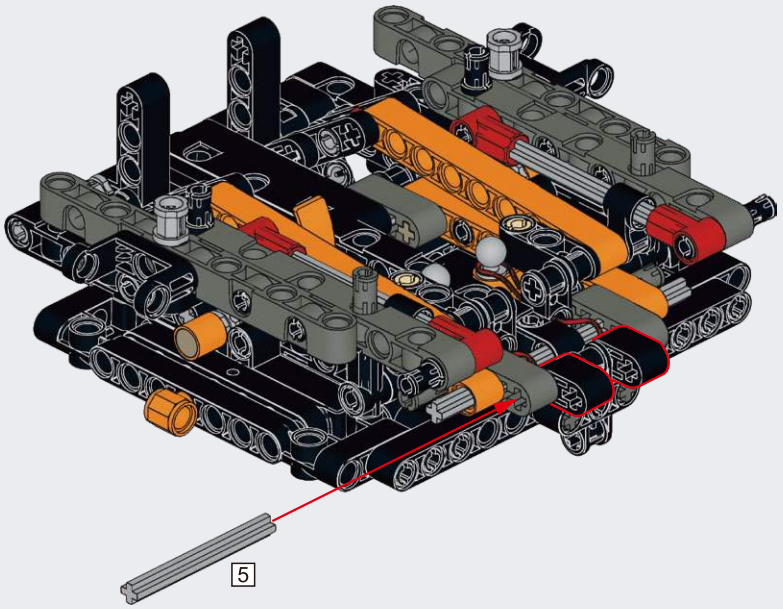

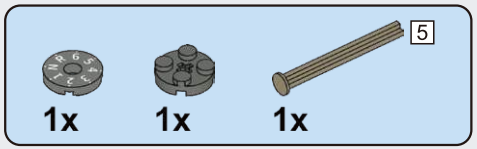

A225

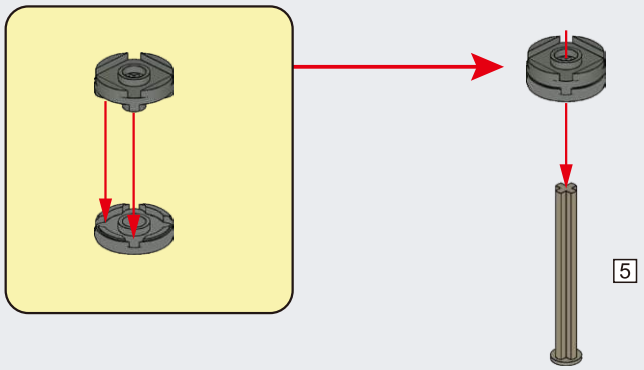

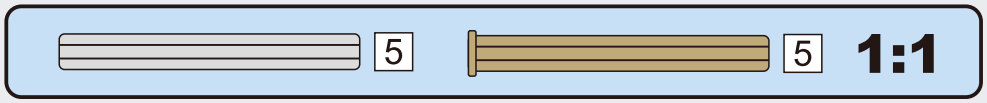

A226

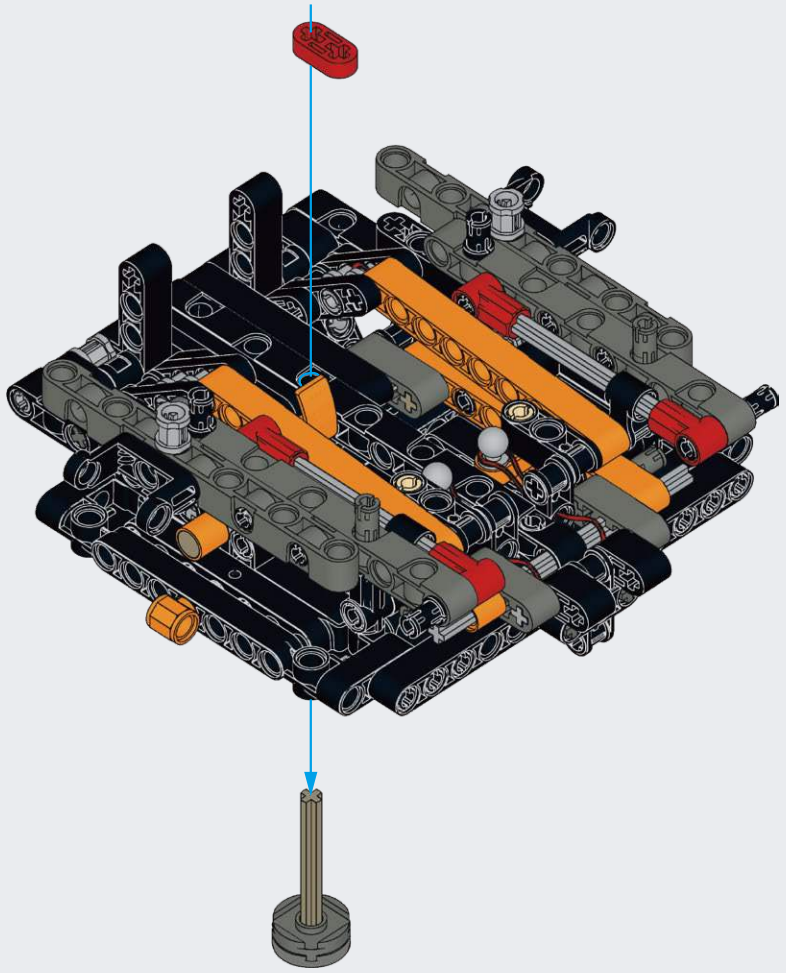

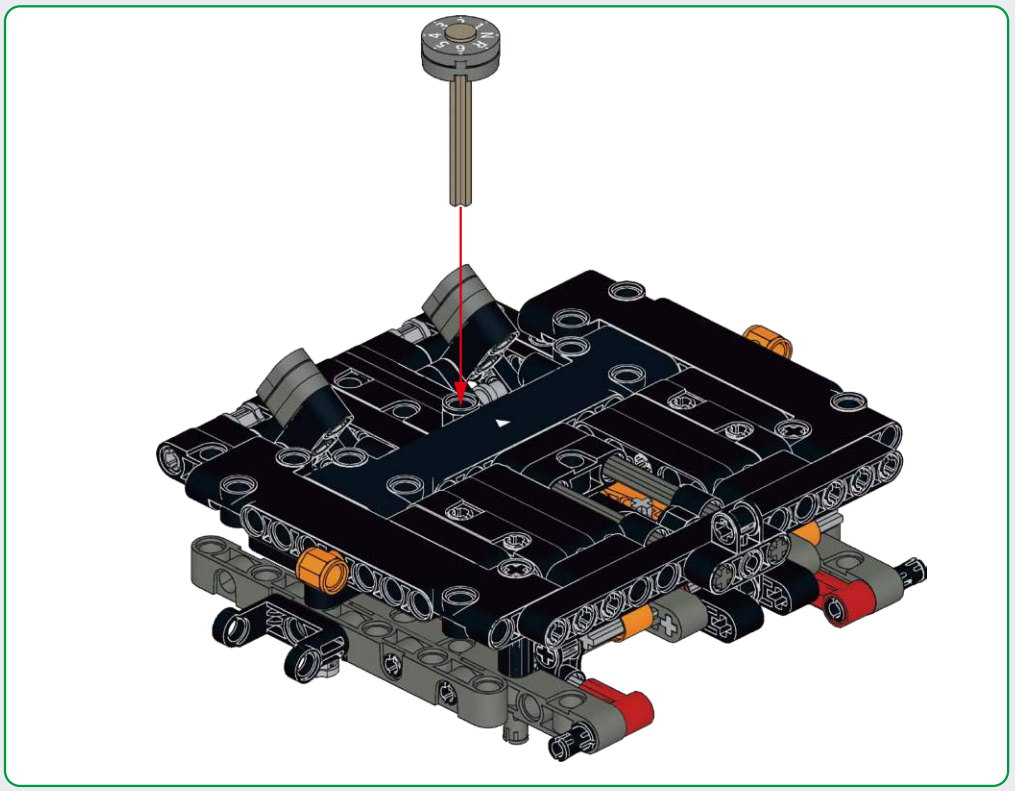

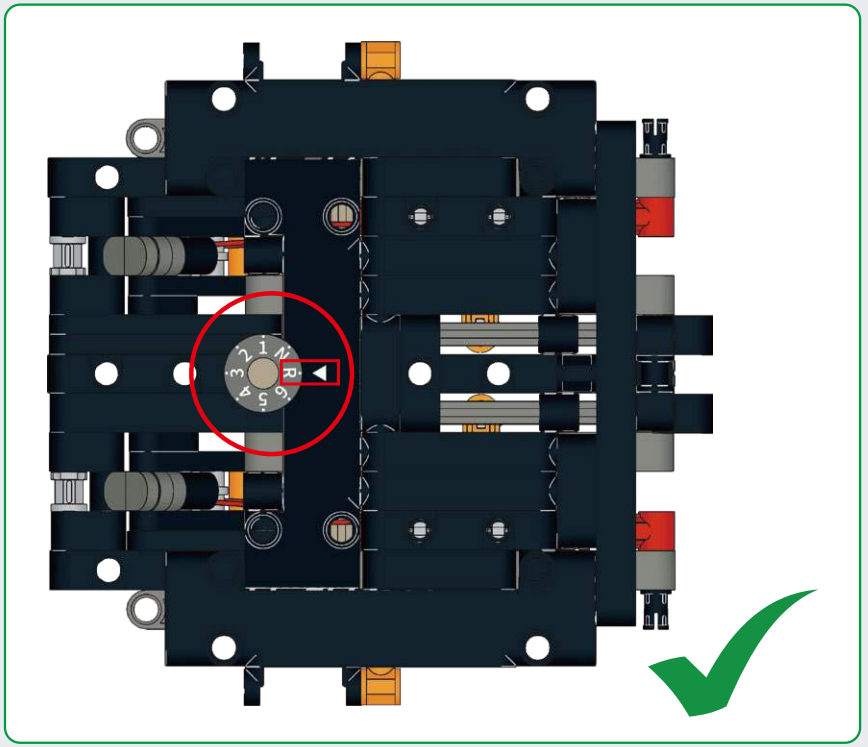

A227

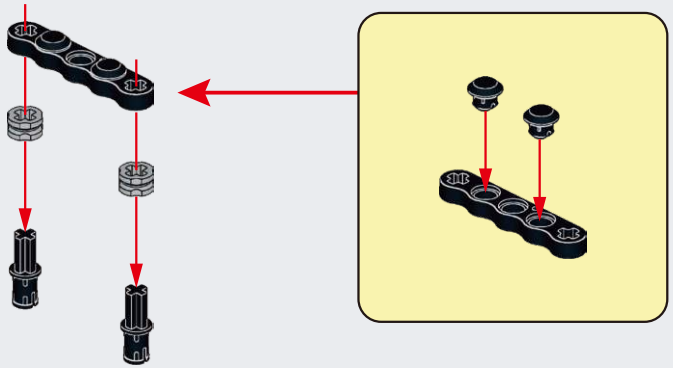

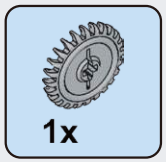

A228

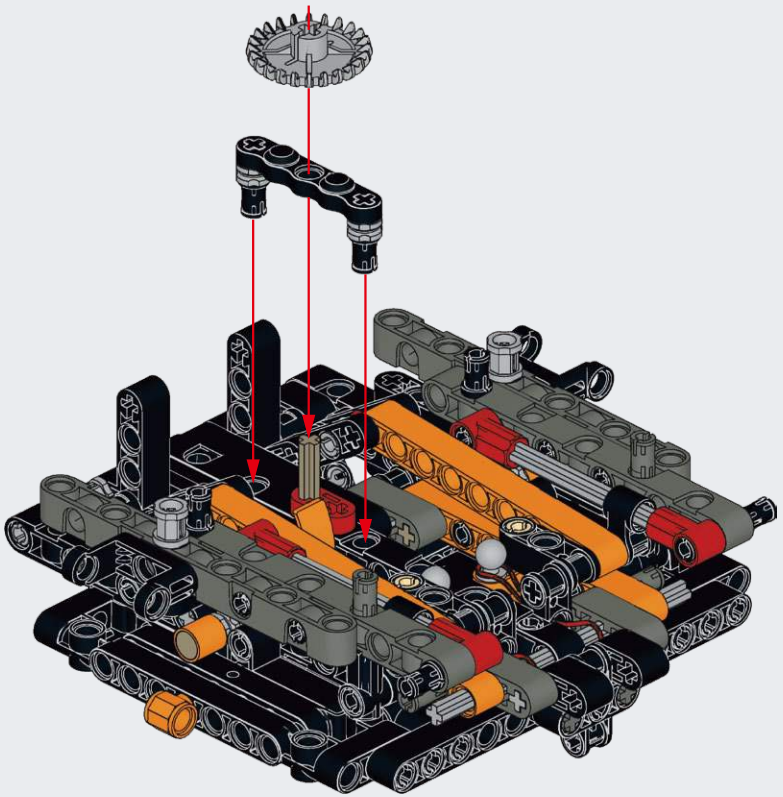

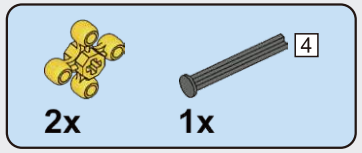

A229

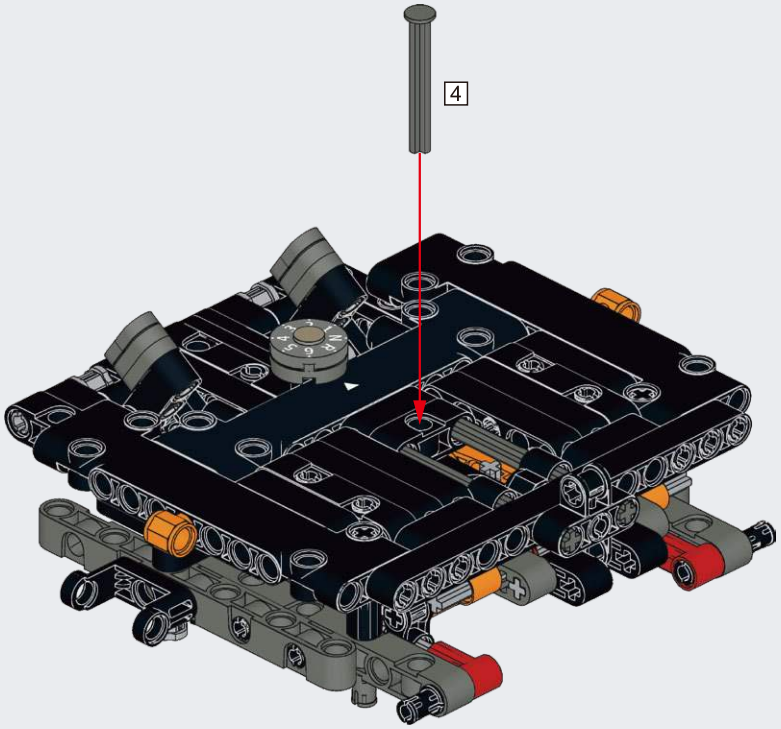

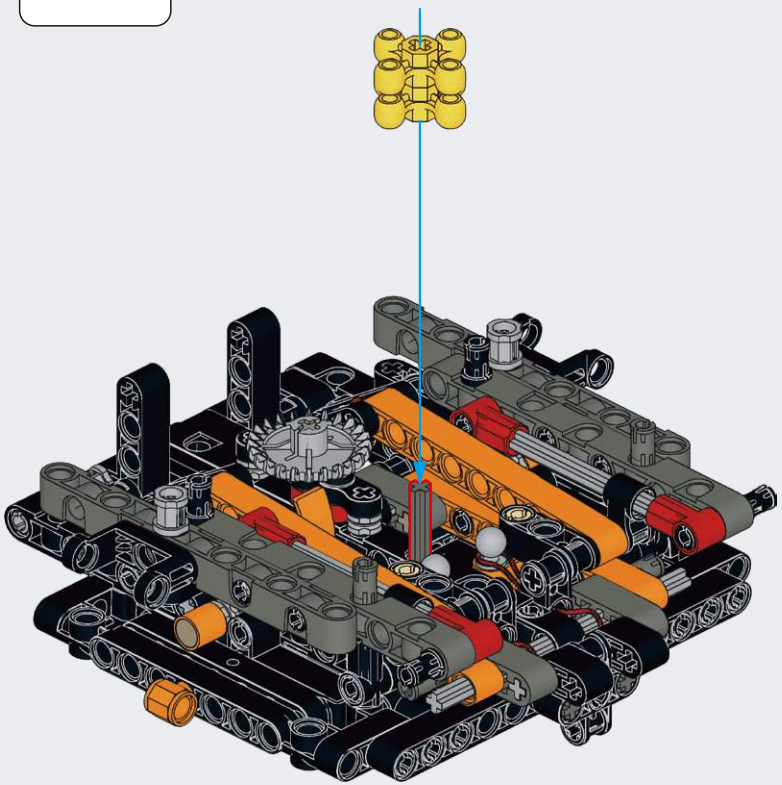

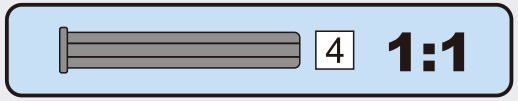

A230

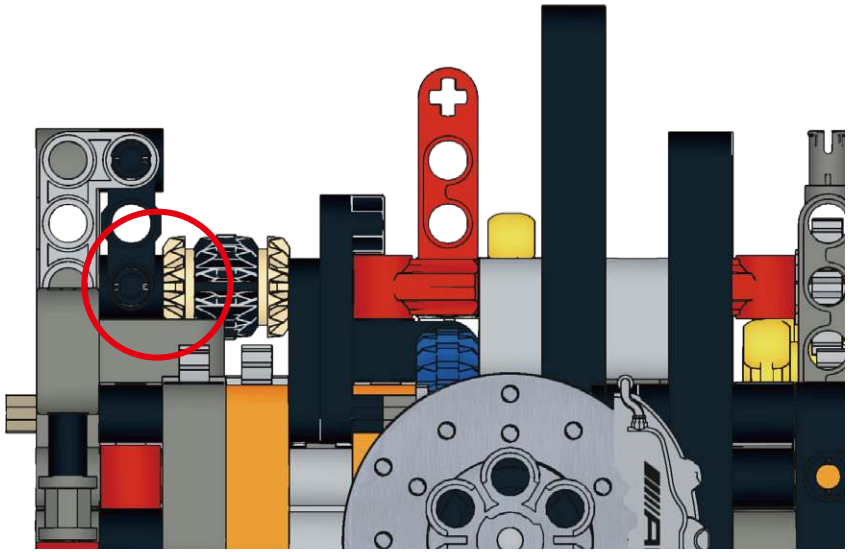

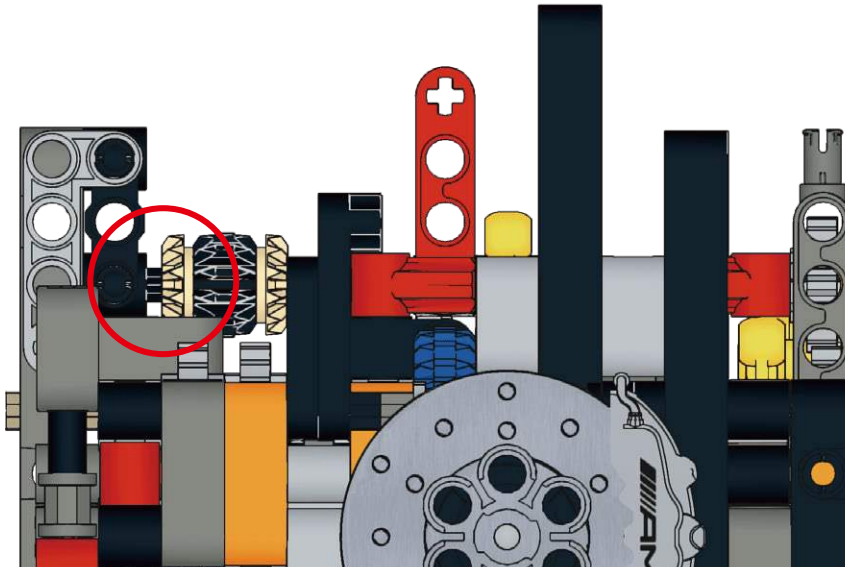

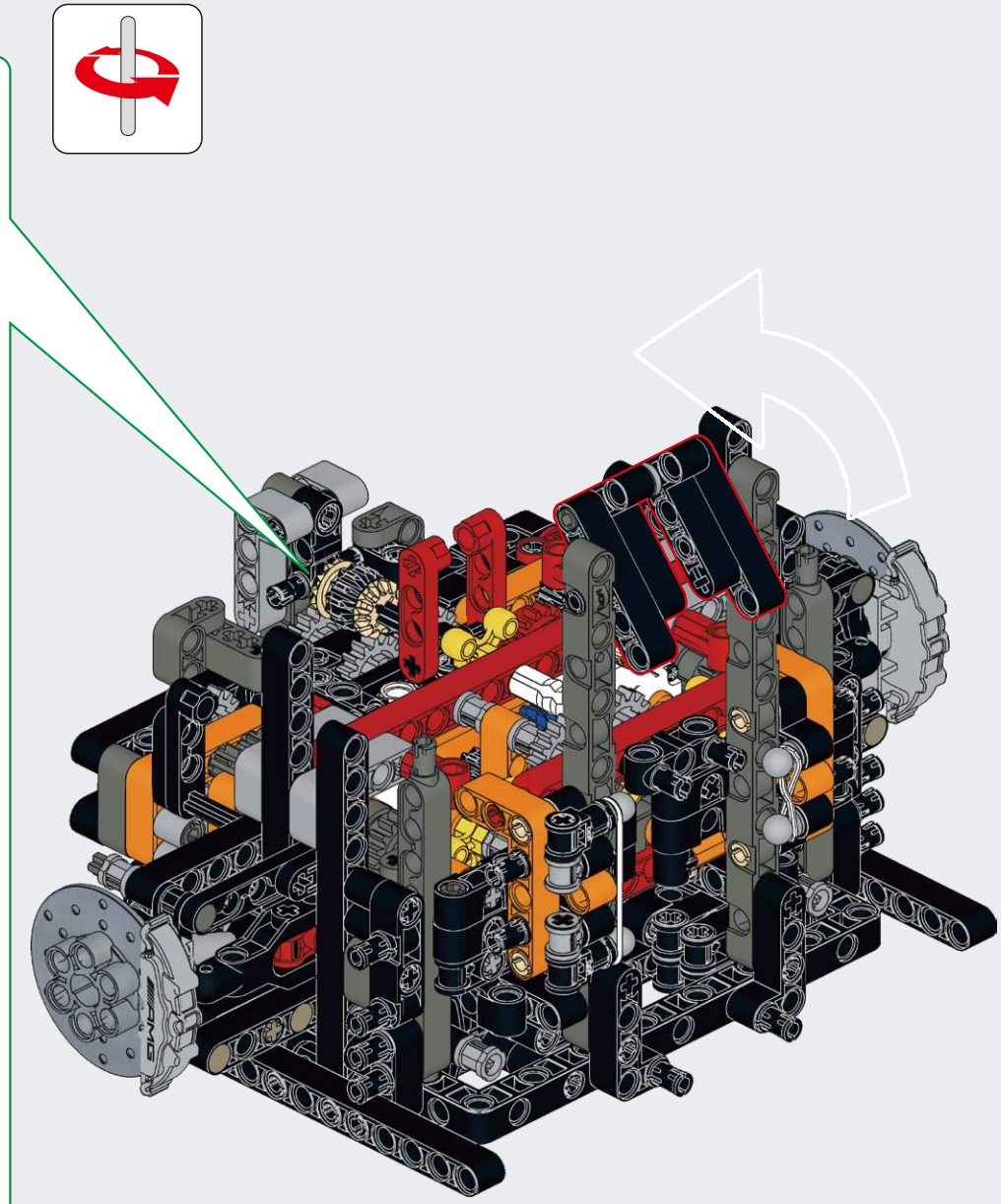

A231

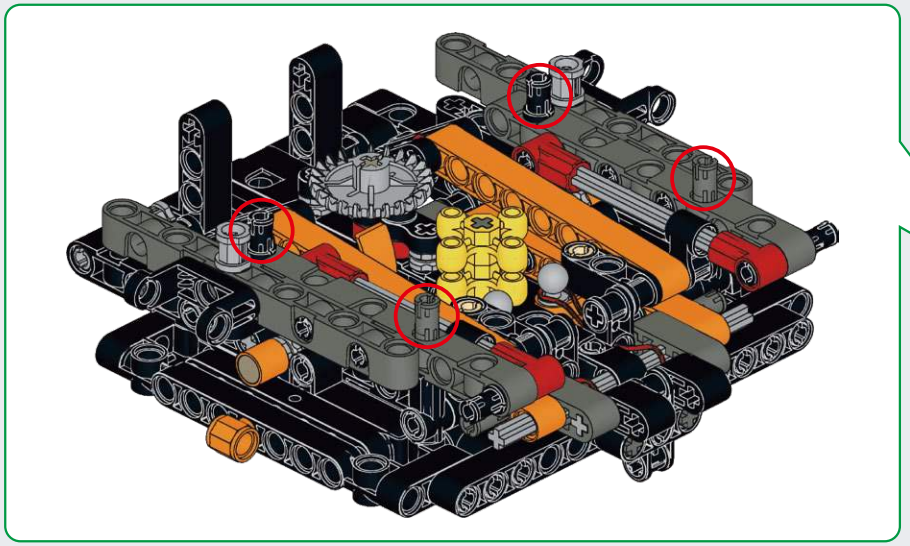

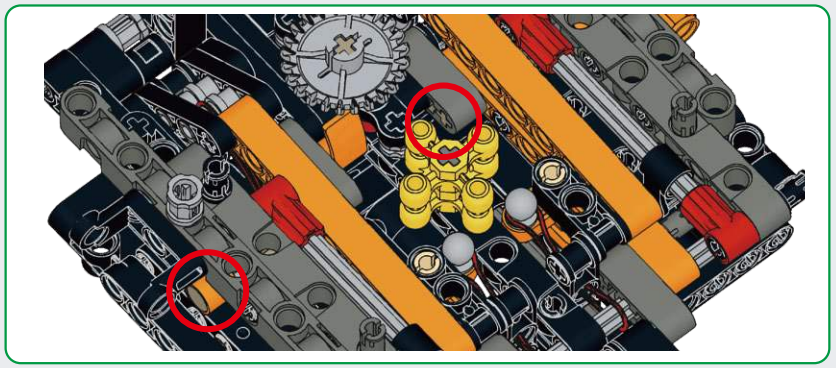

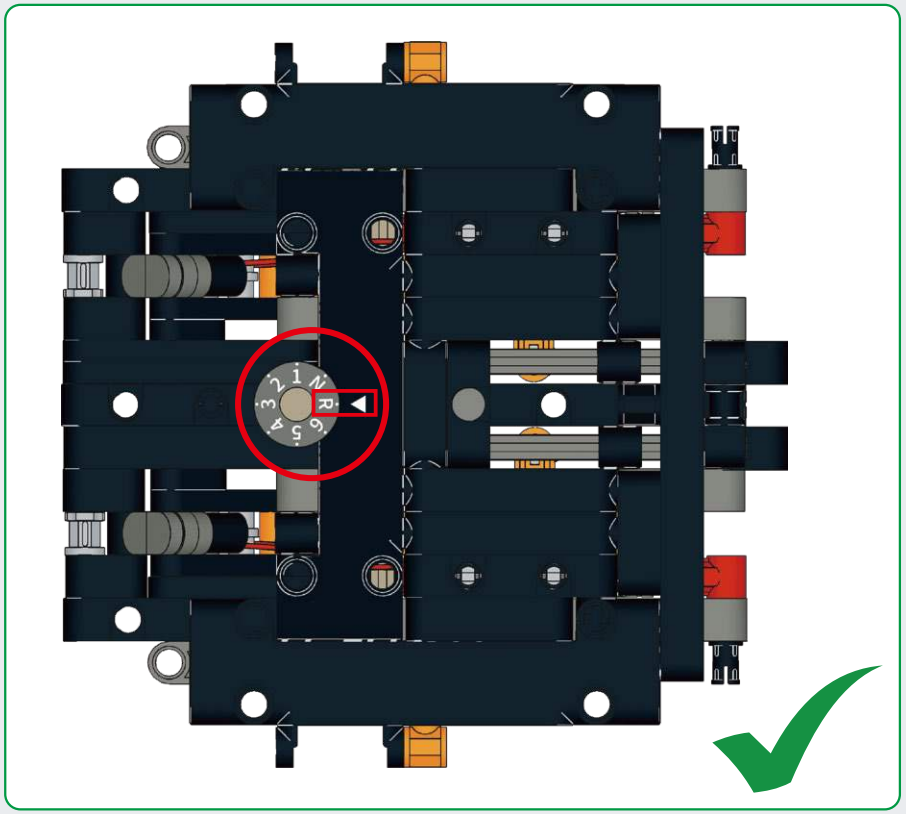

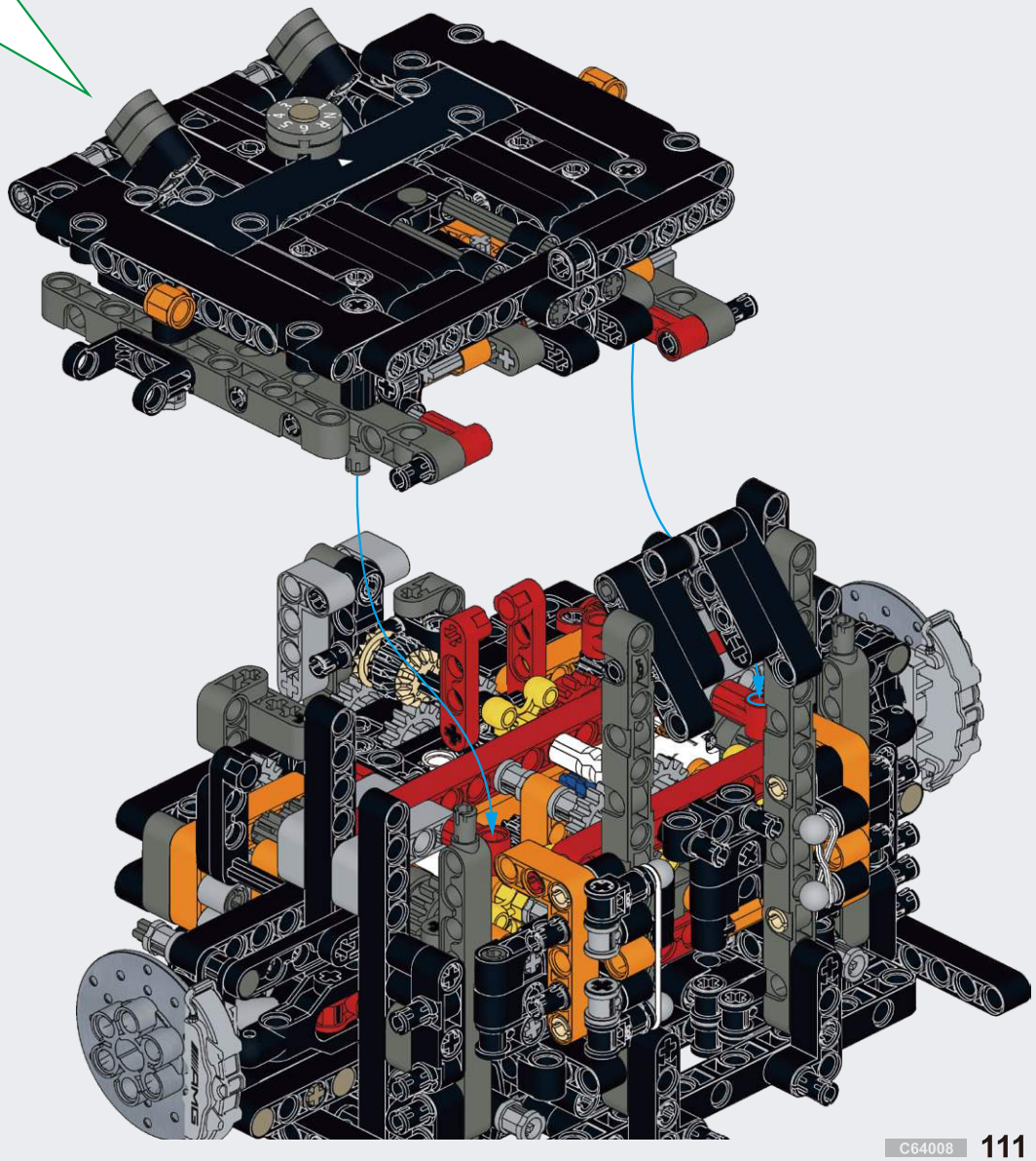

A232

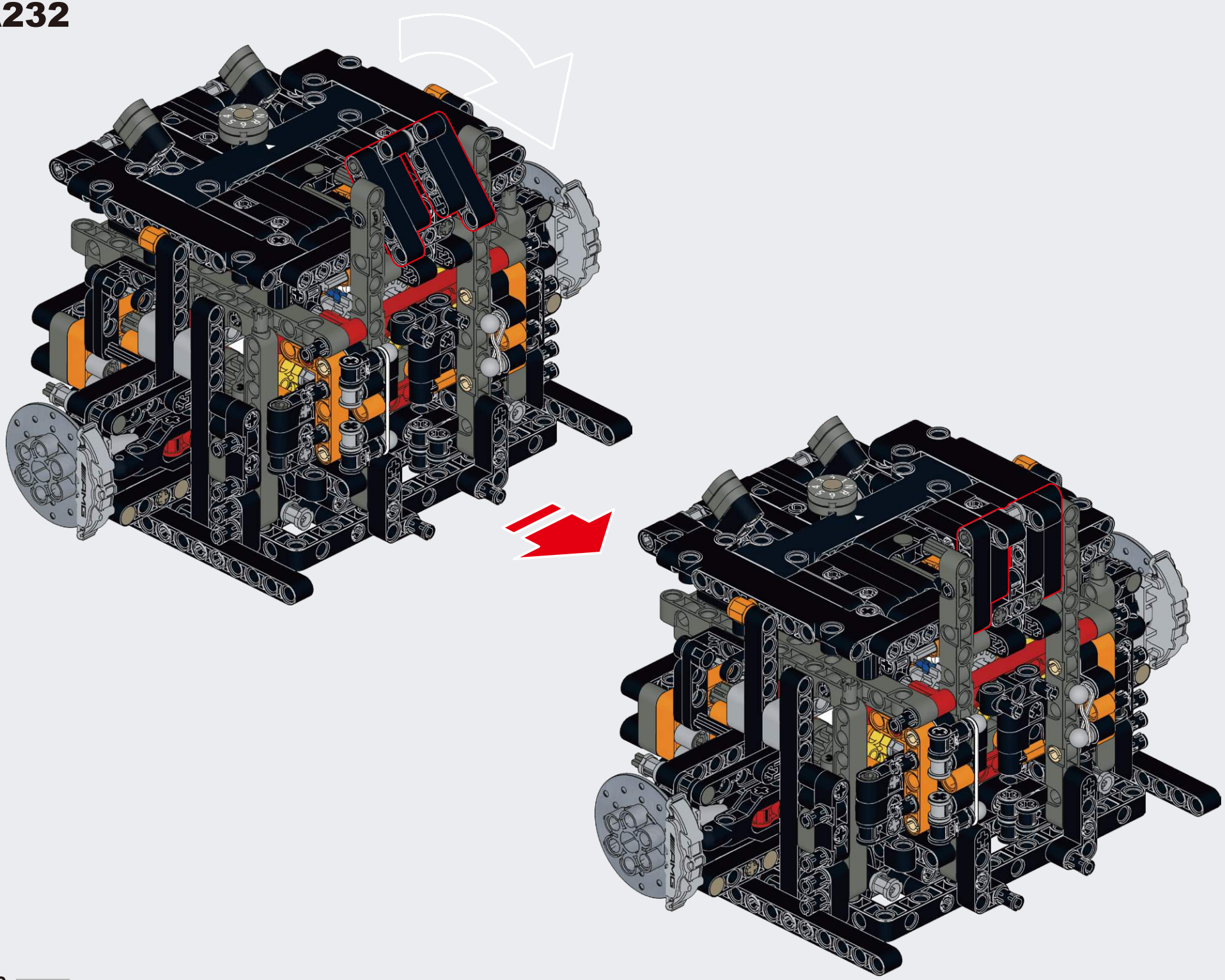

A233

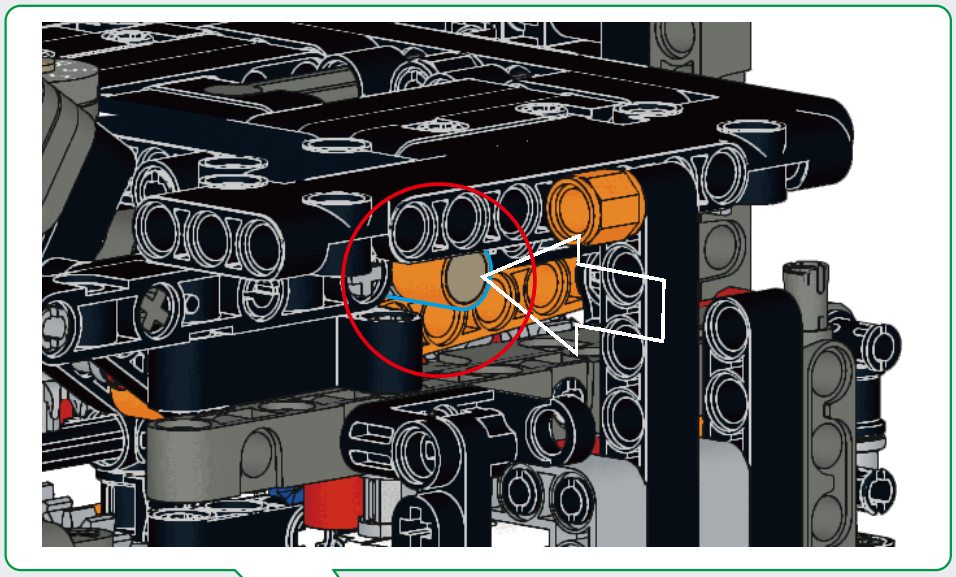

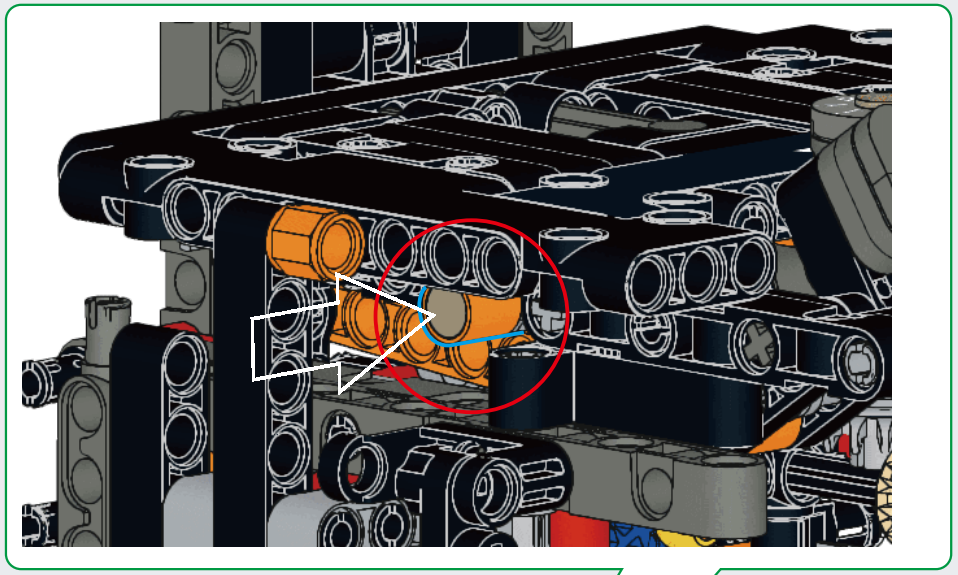

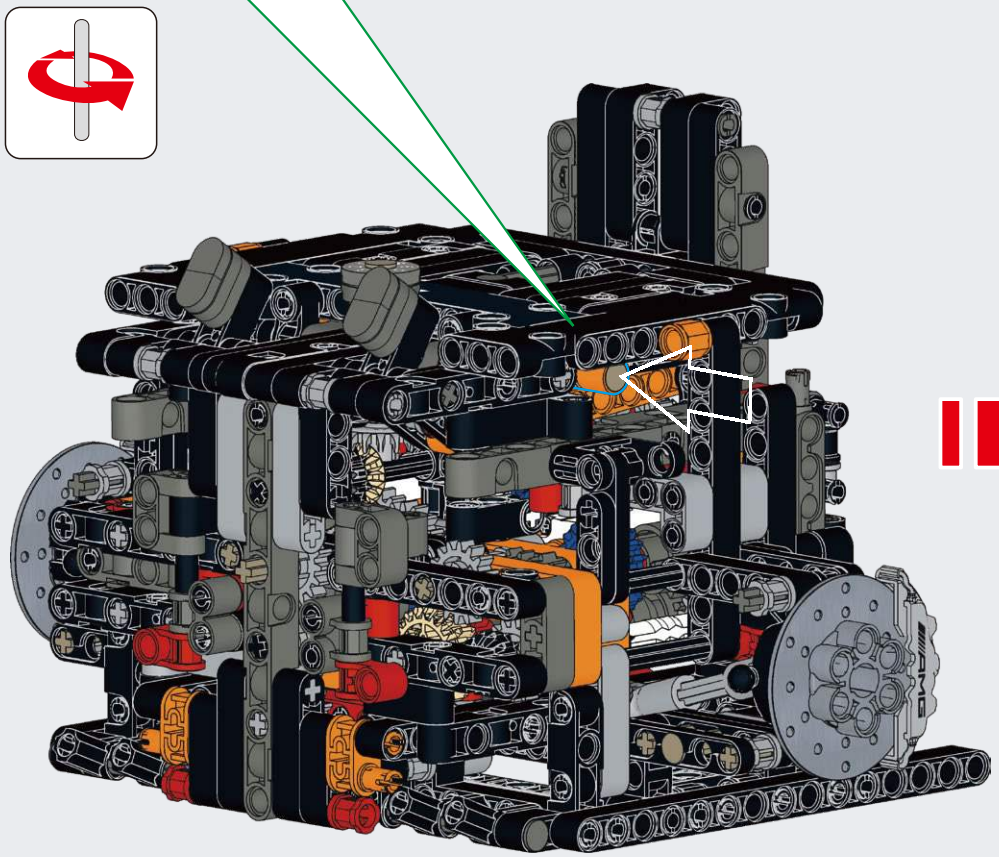

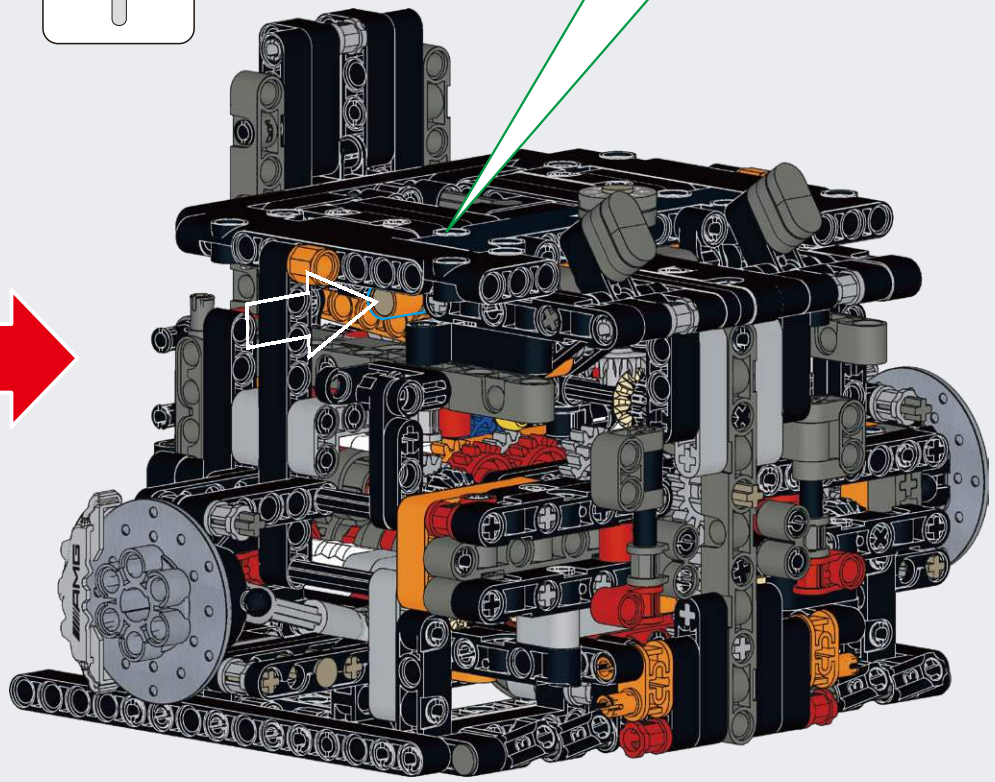

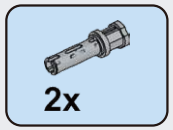

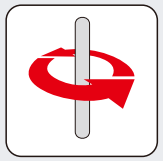

A234

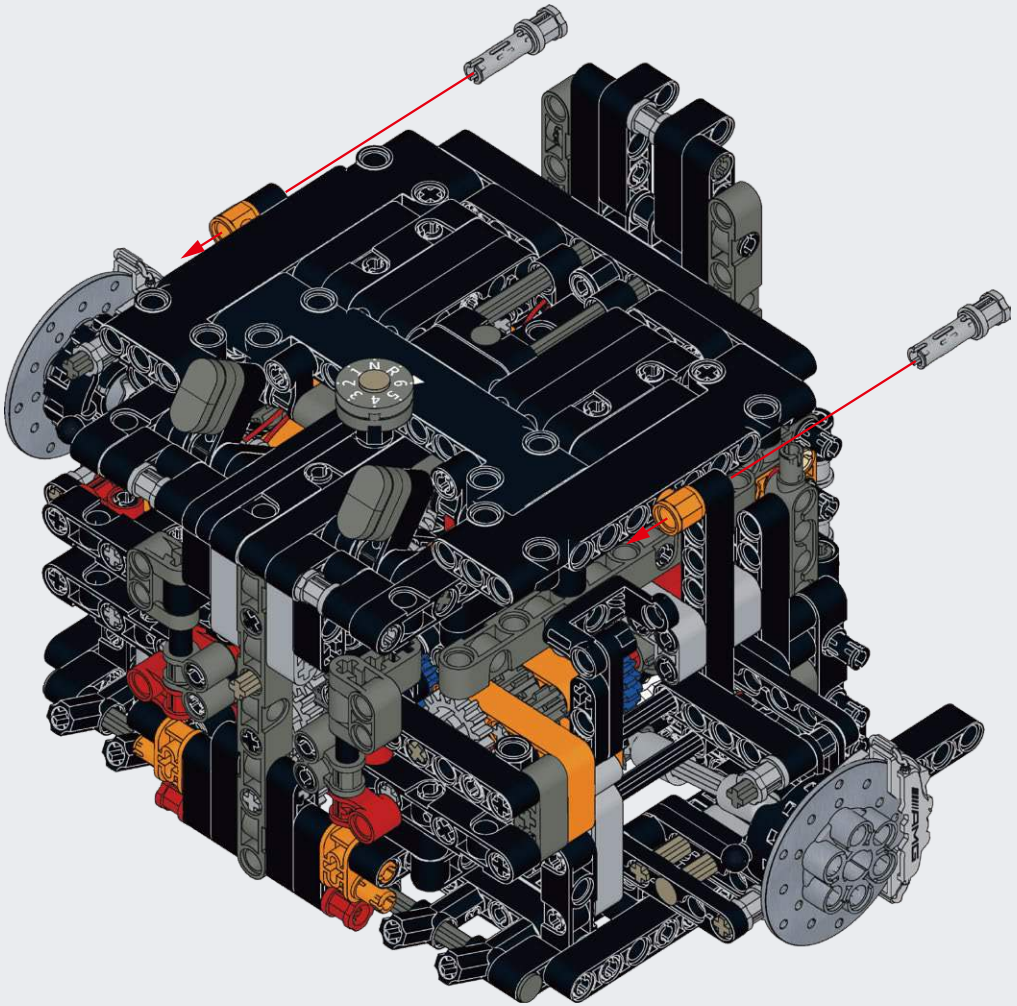

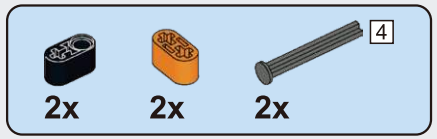

A235

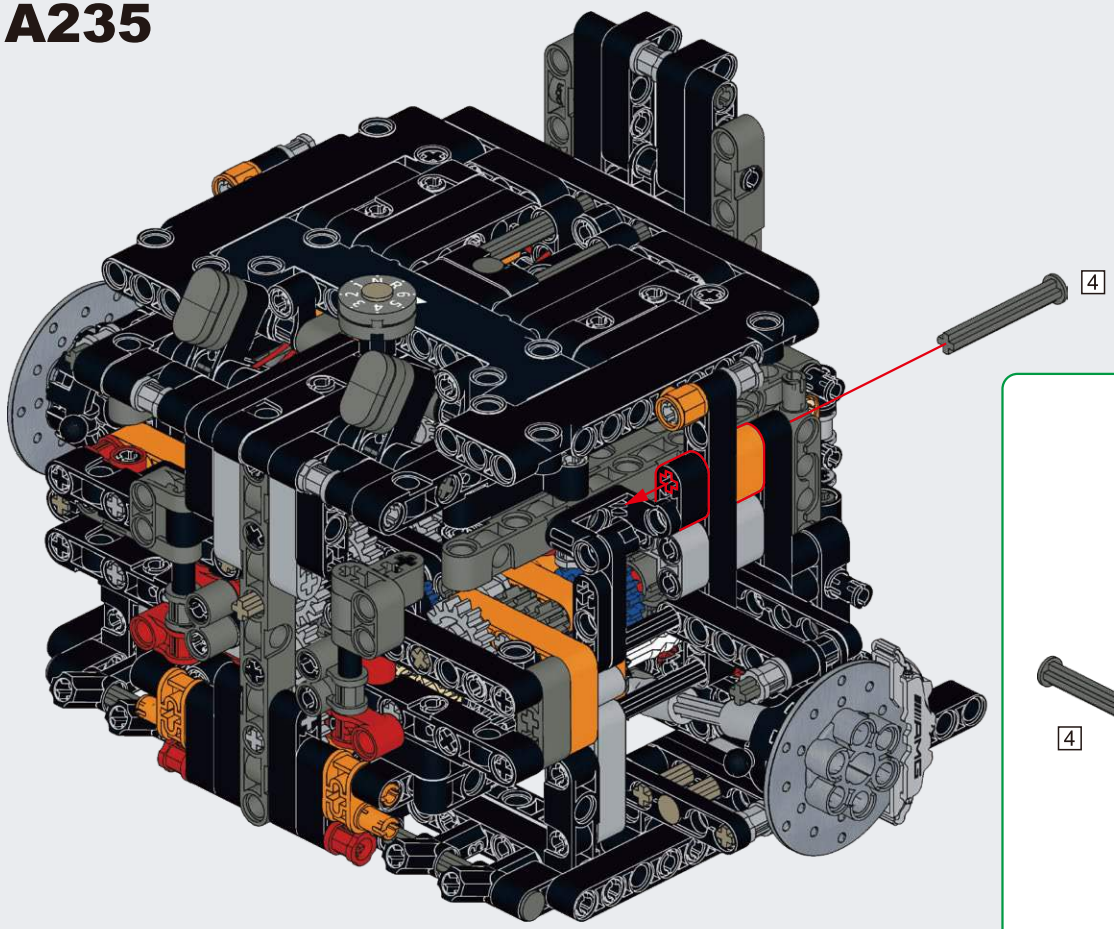

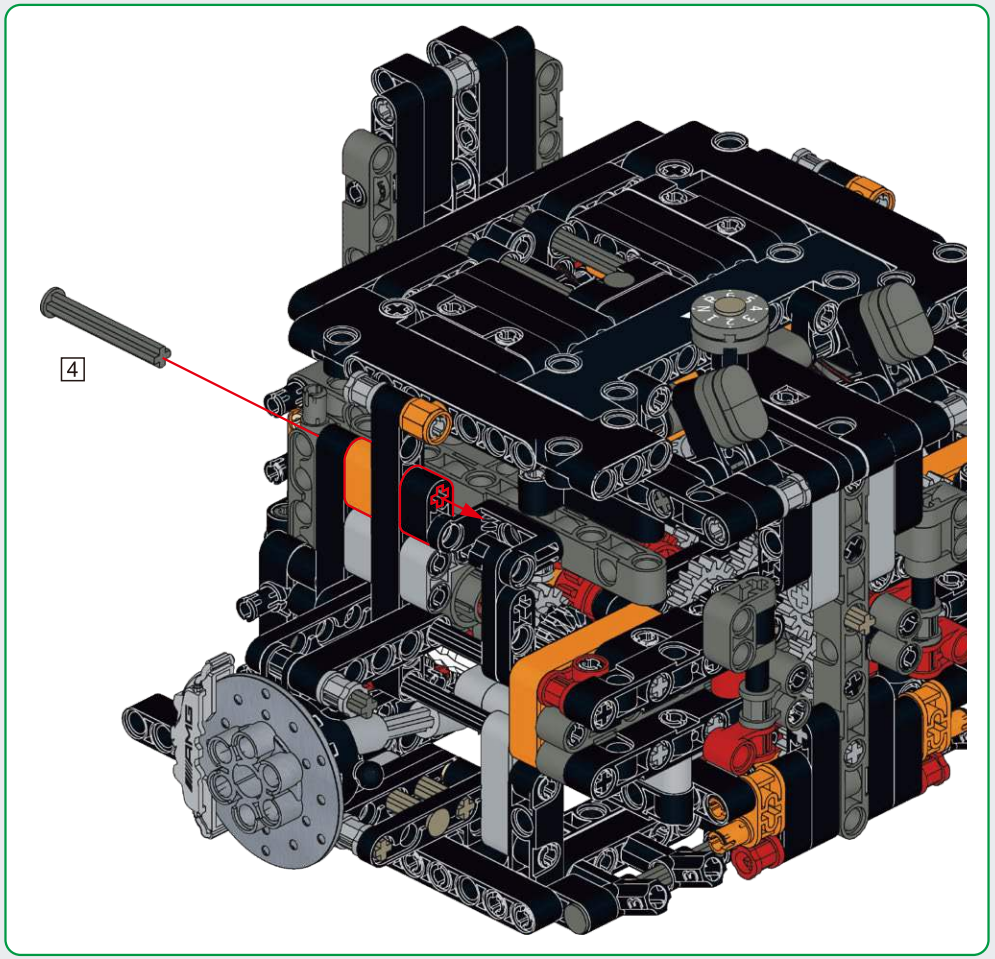

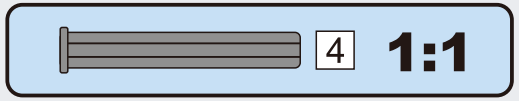

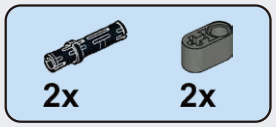

A236

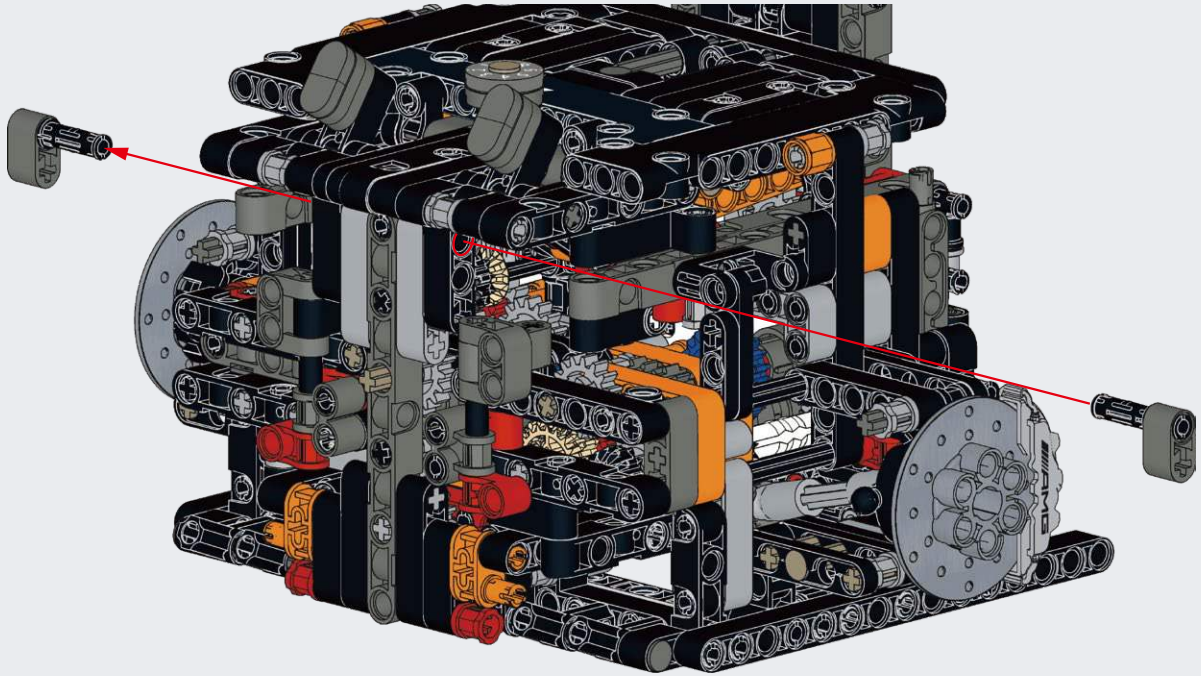

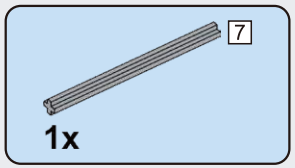

A237

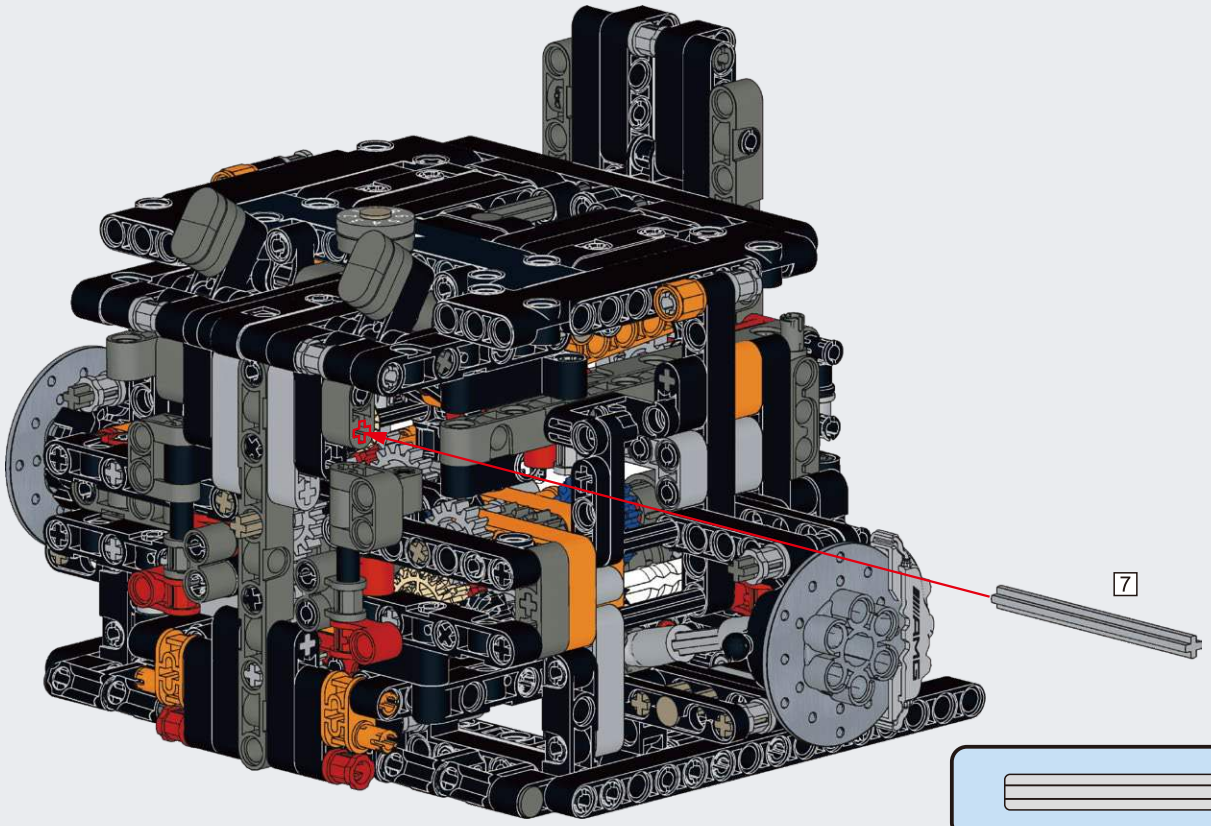

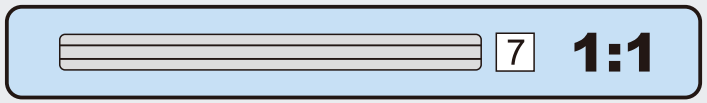

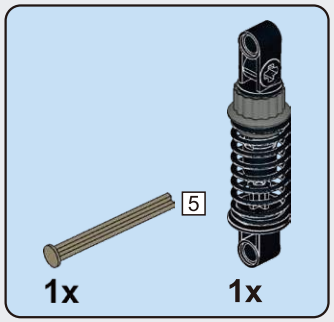

A238

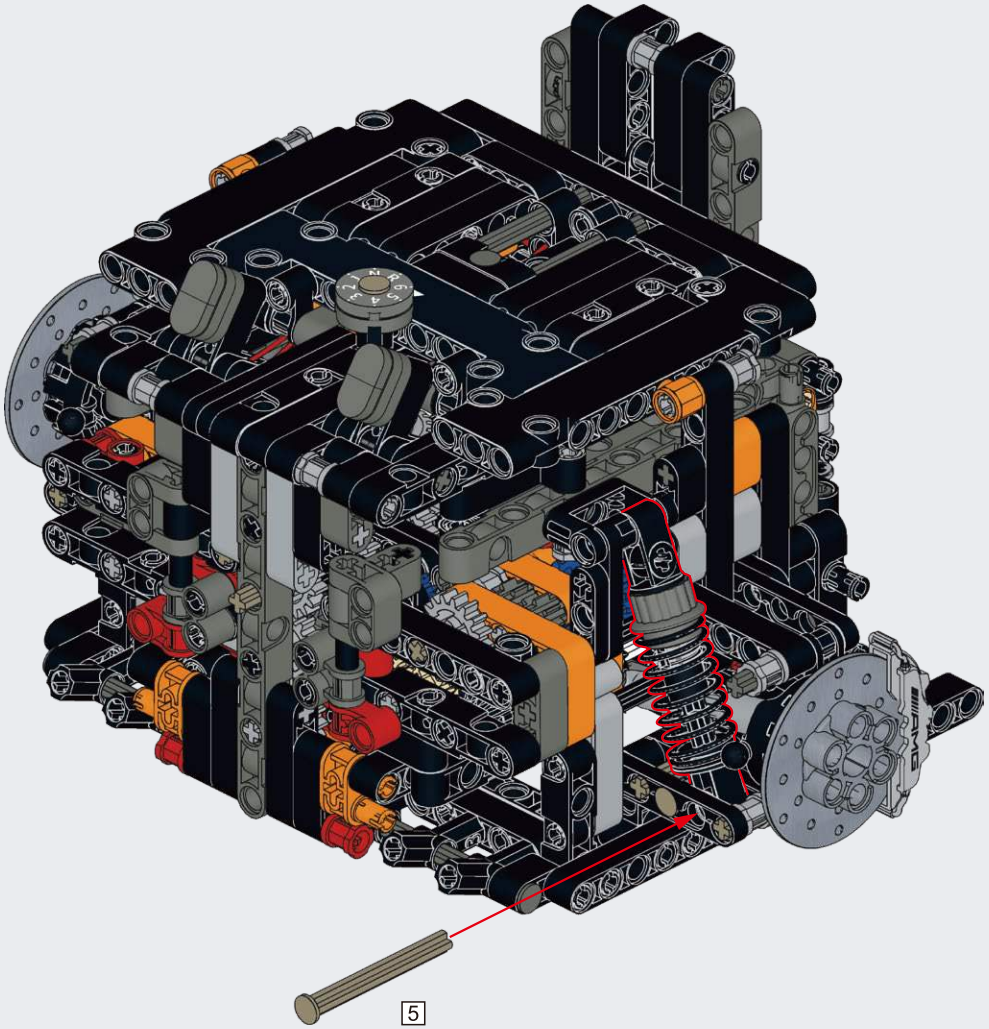

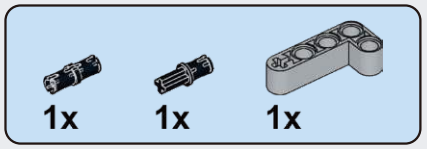

A239

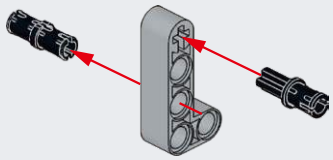

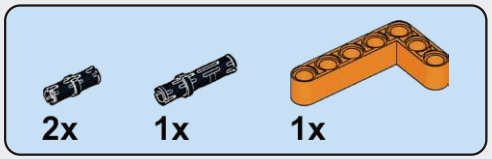

A240

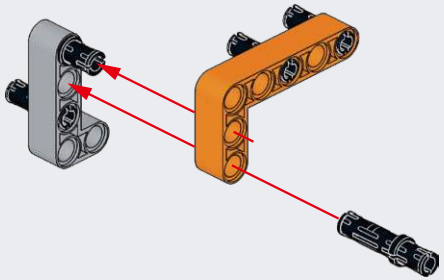

A241

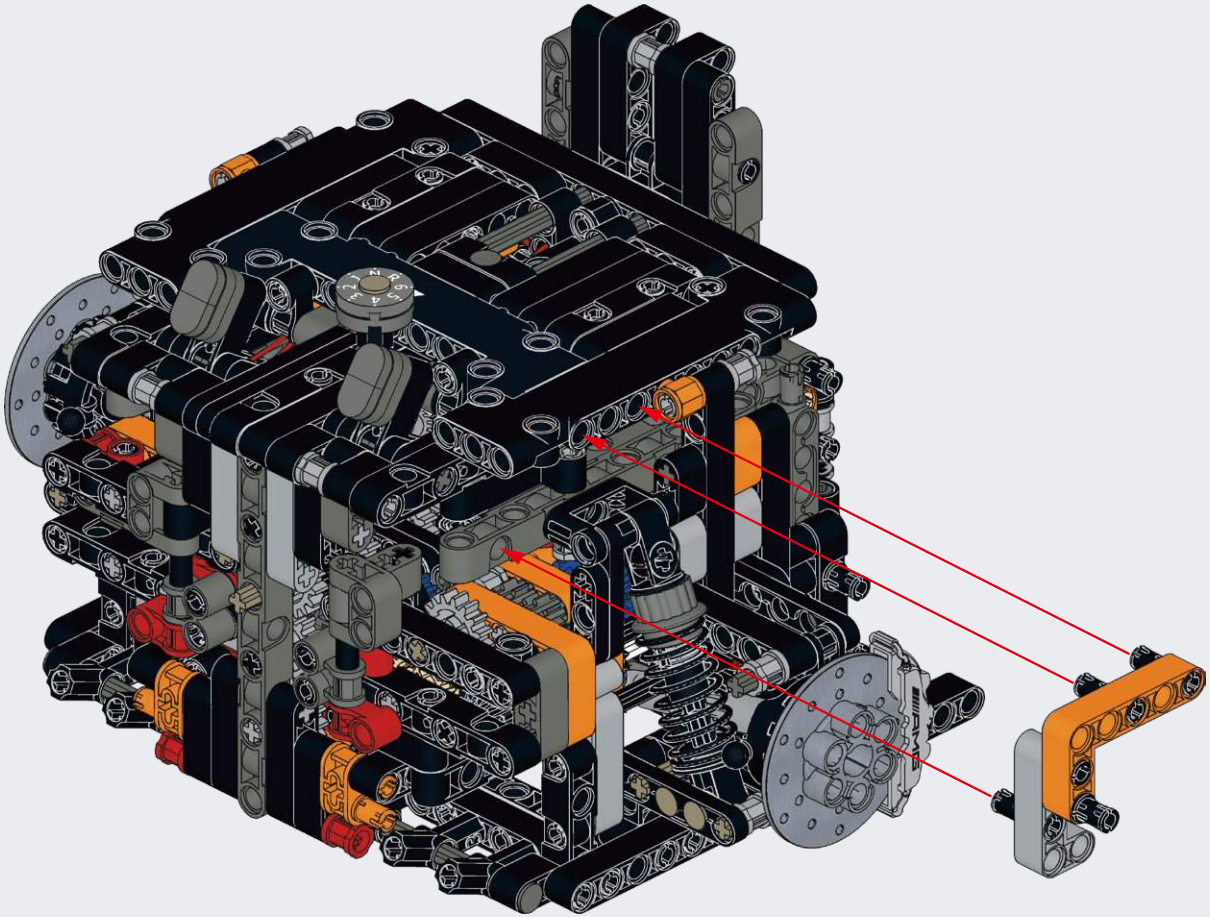

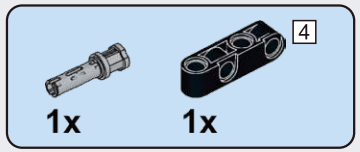

A242

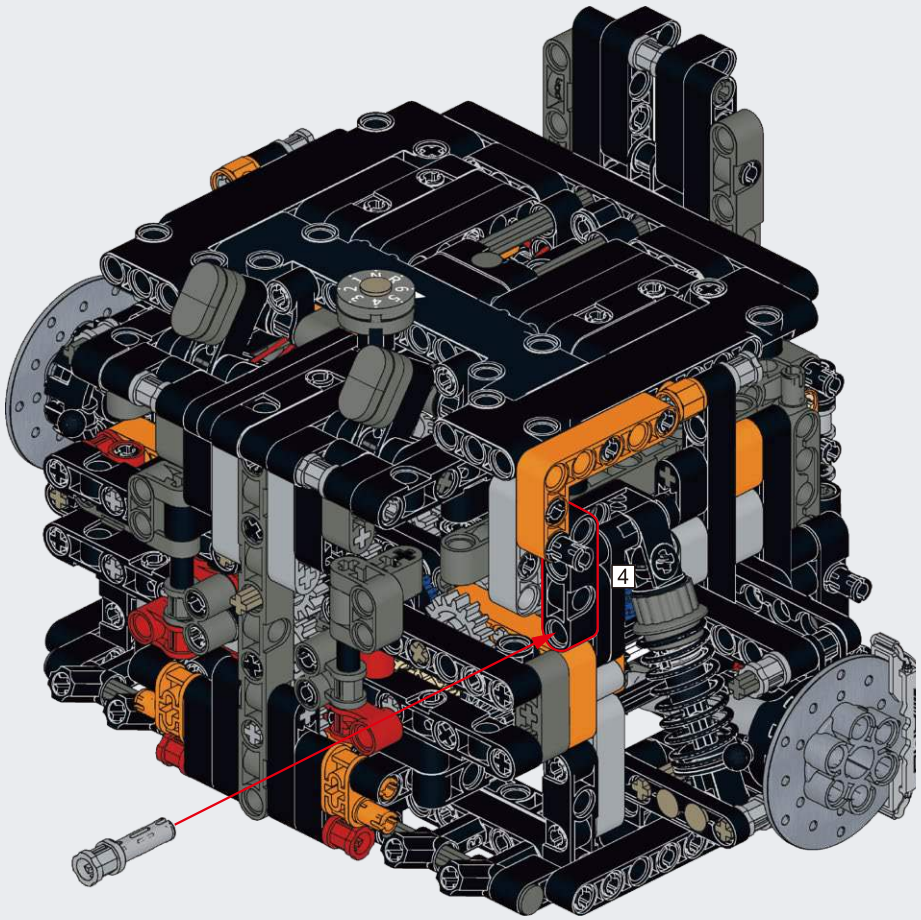

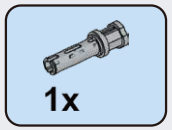

A243

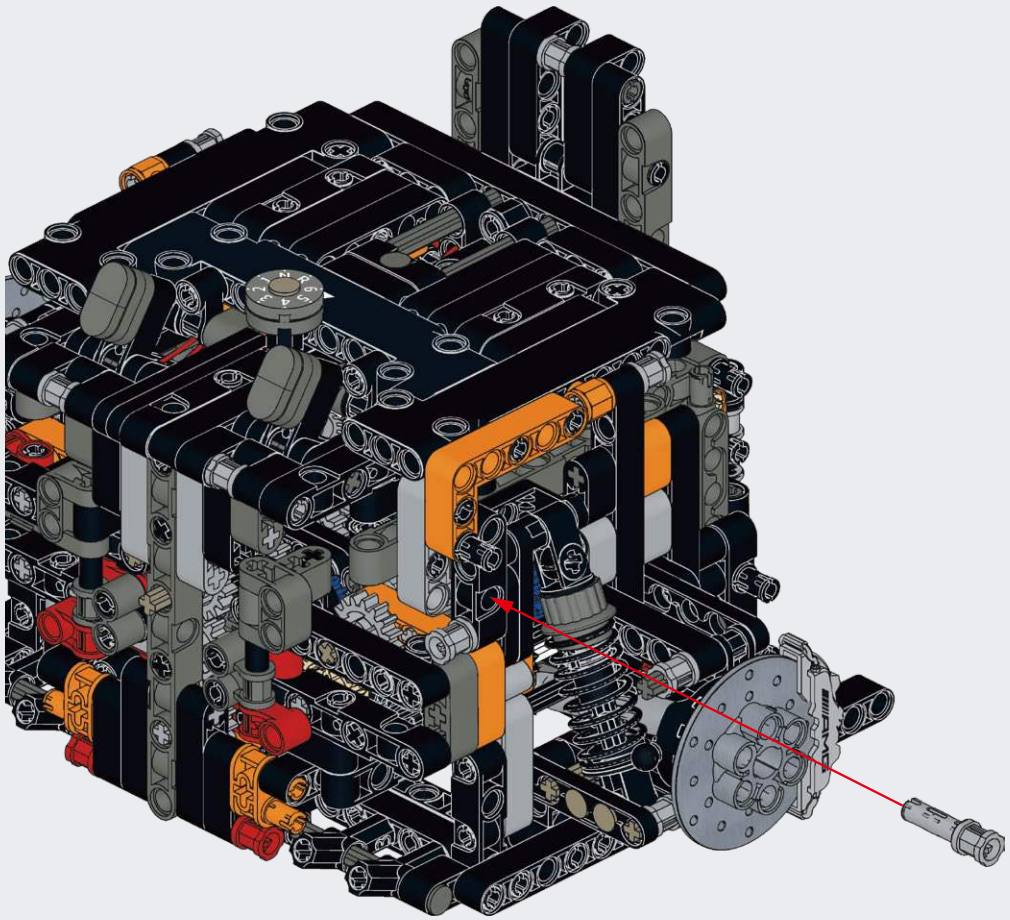

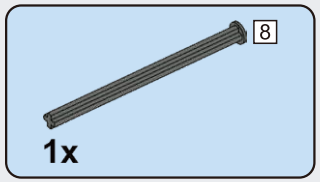

A244

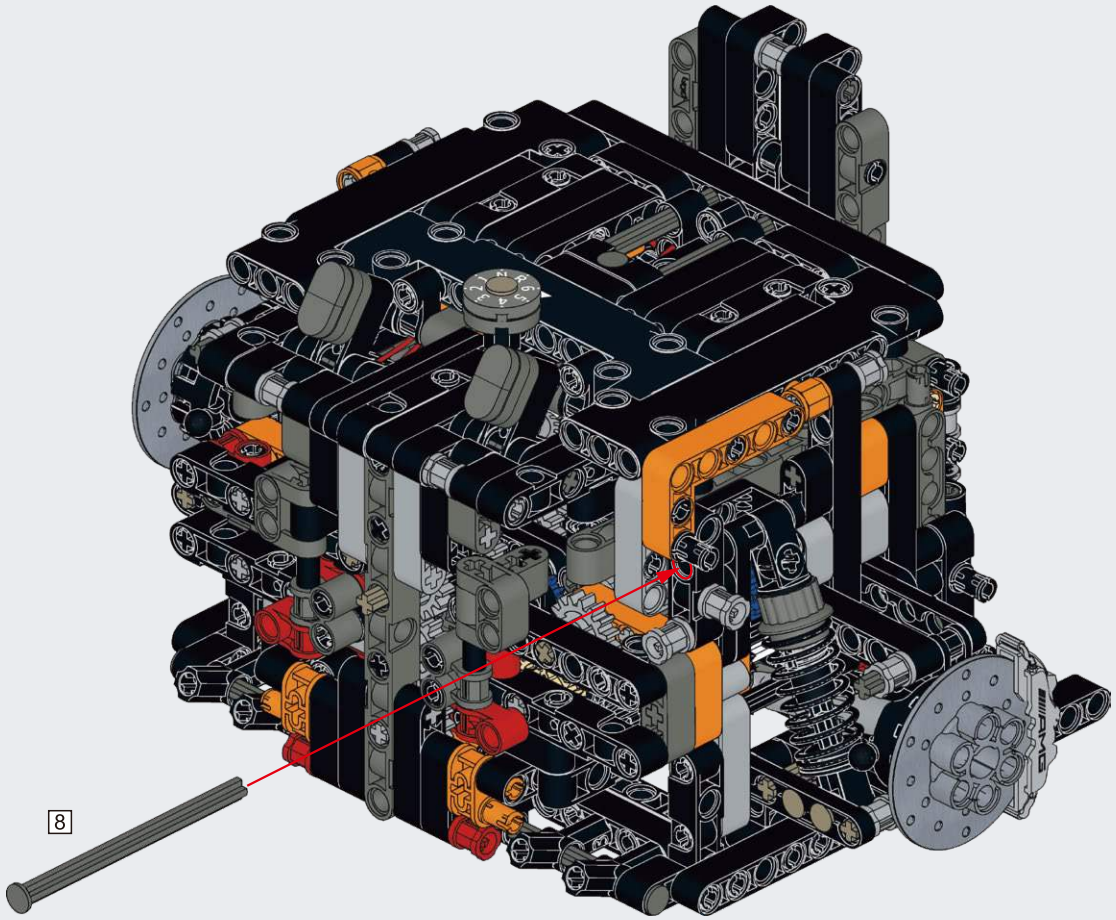

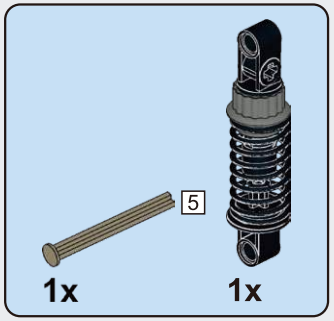

A245

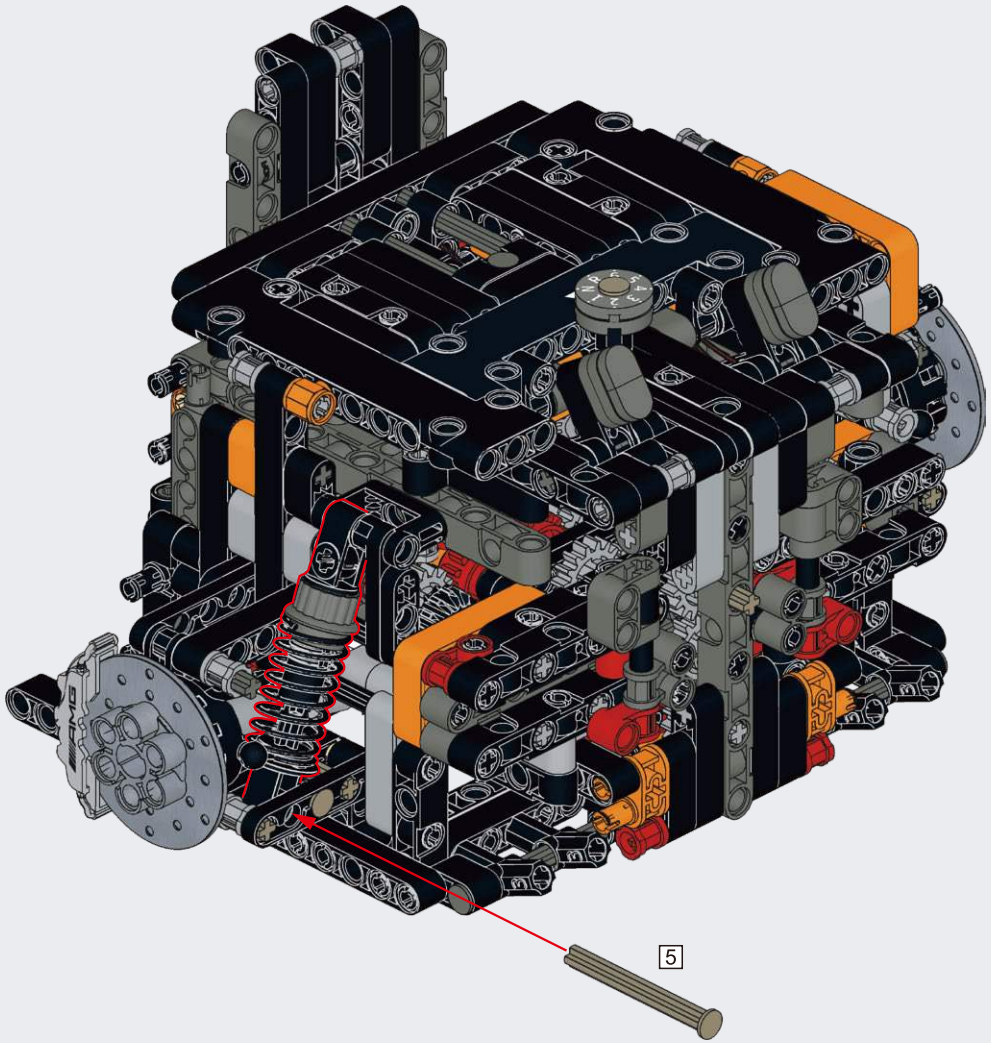

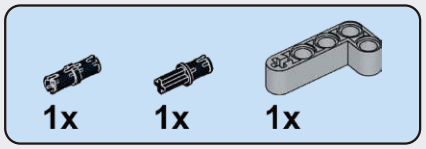

A246

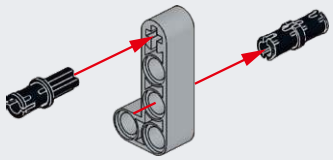

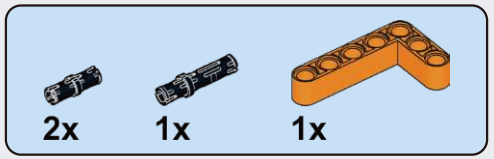

A247

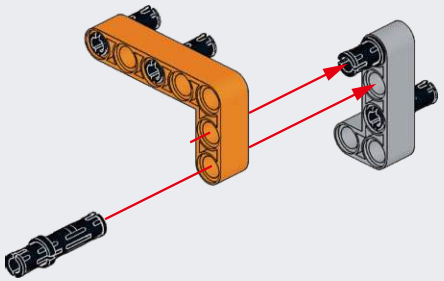

A248

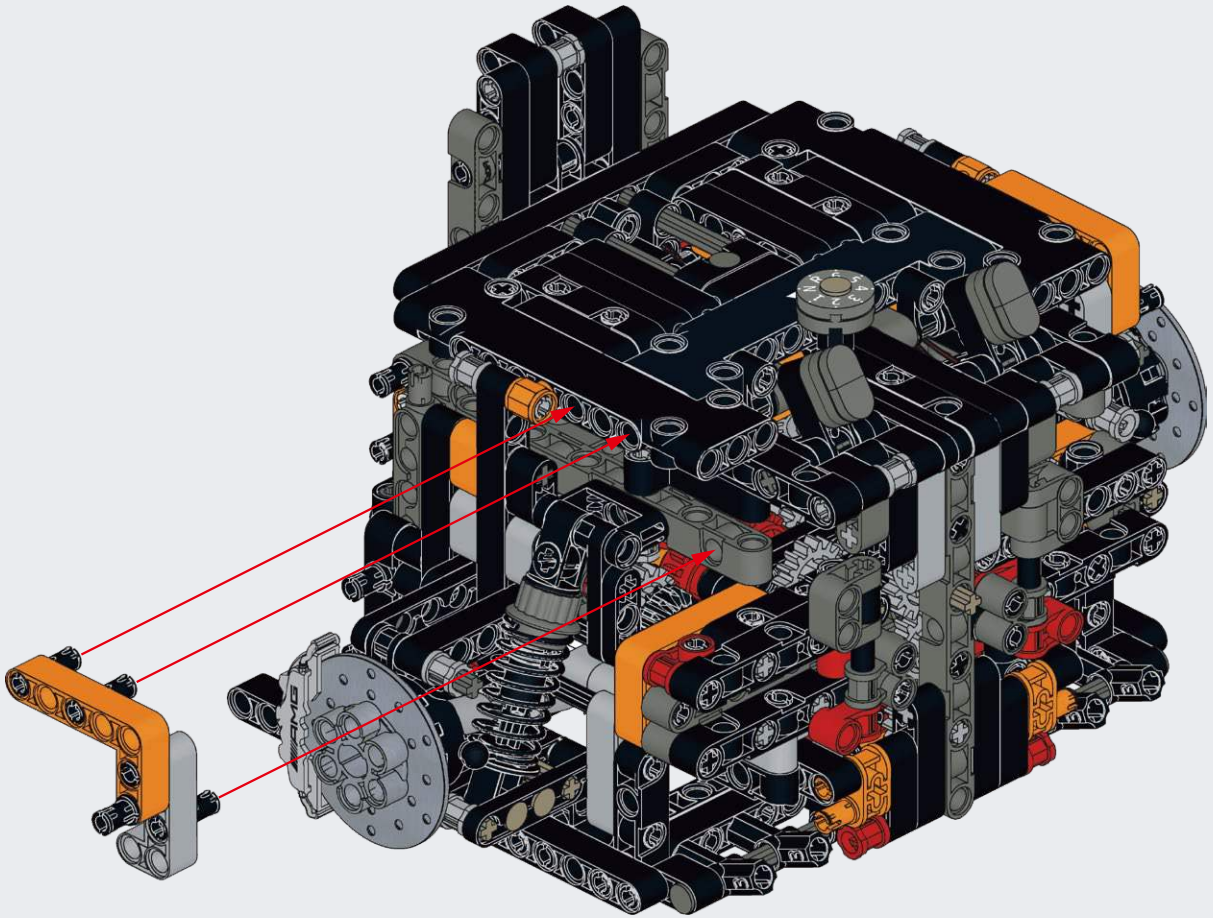

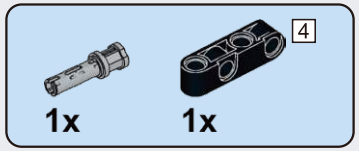

A249

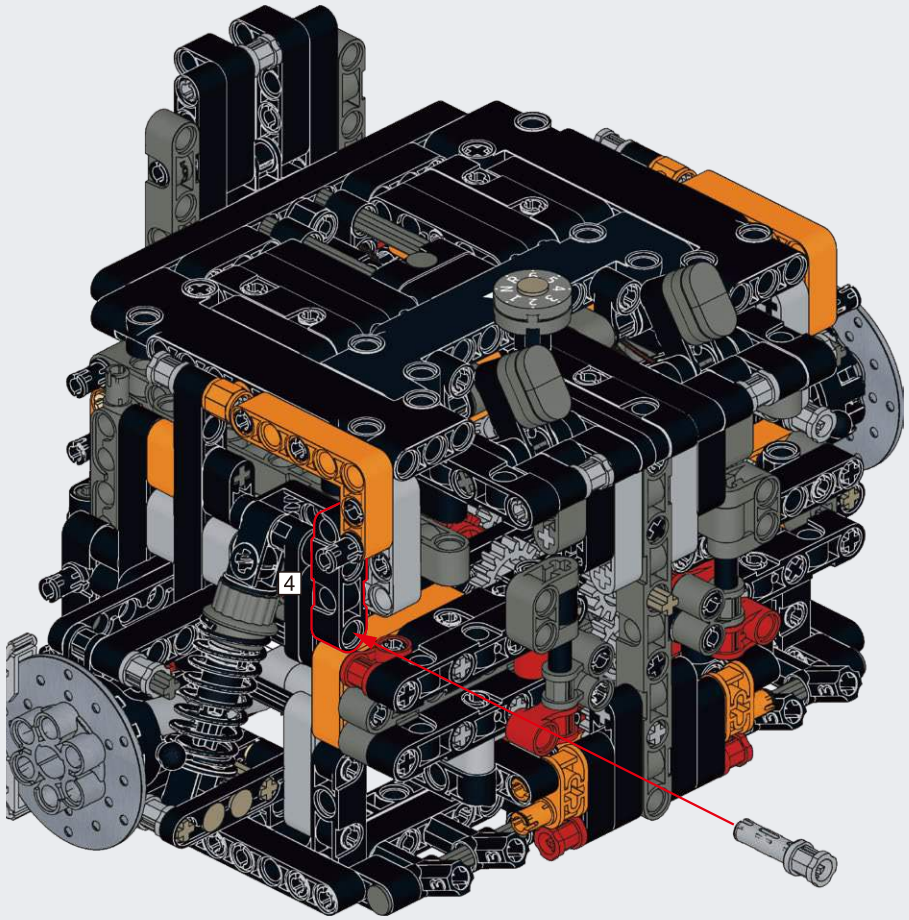

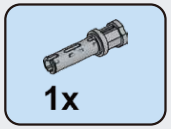

A250

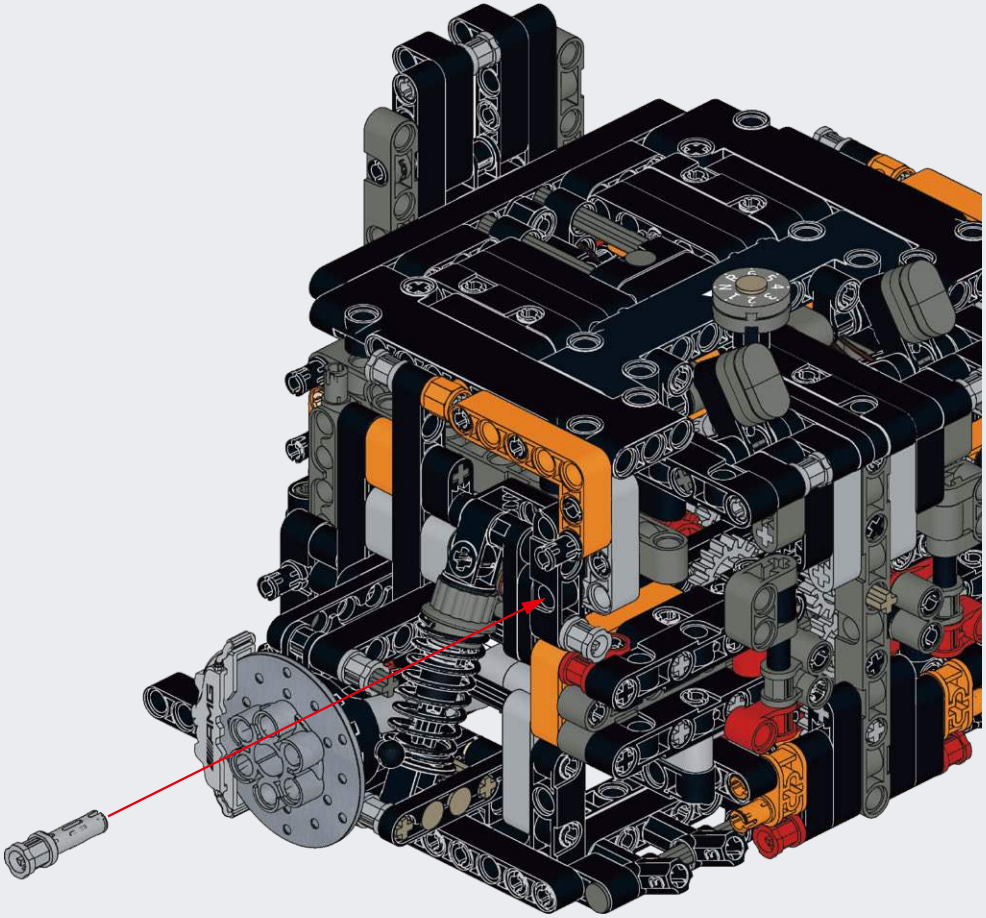

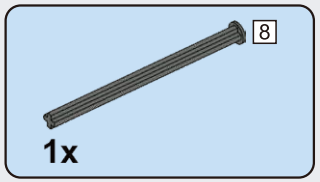

A251

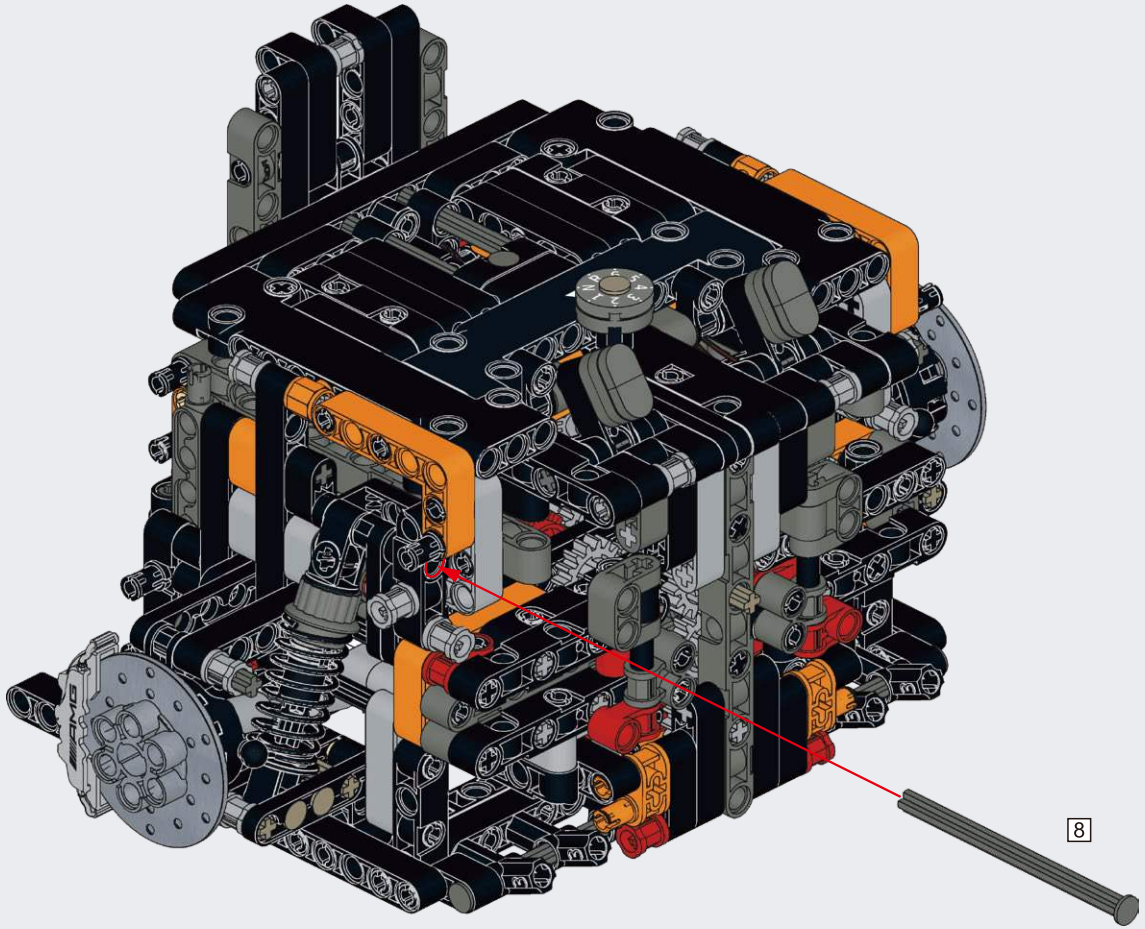

A252

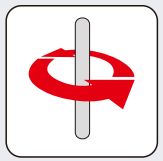

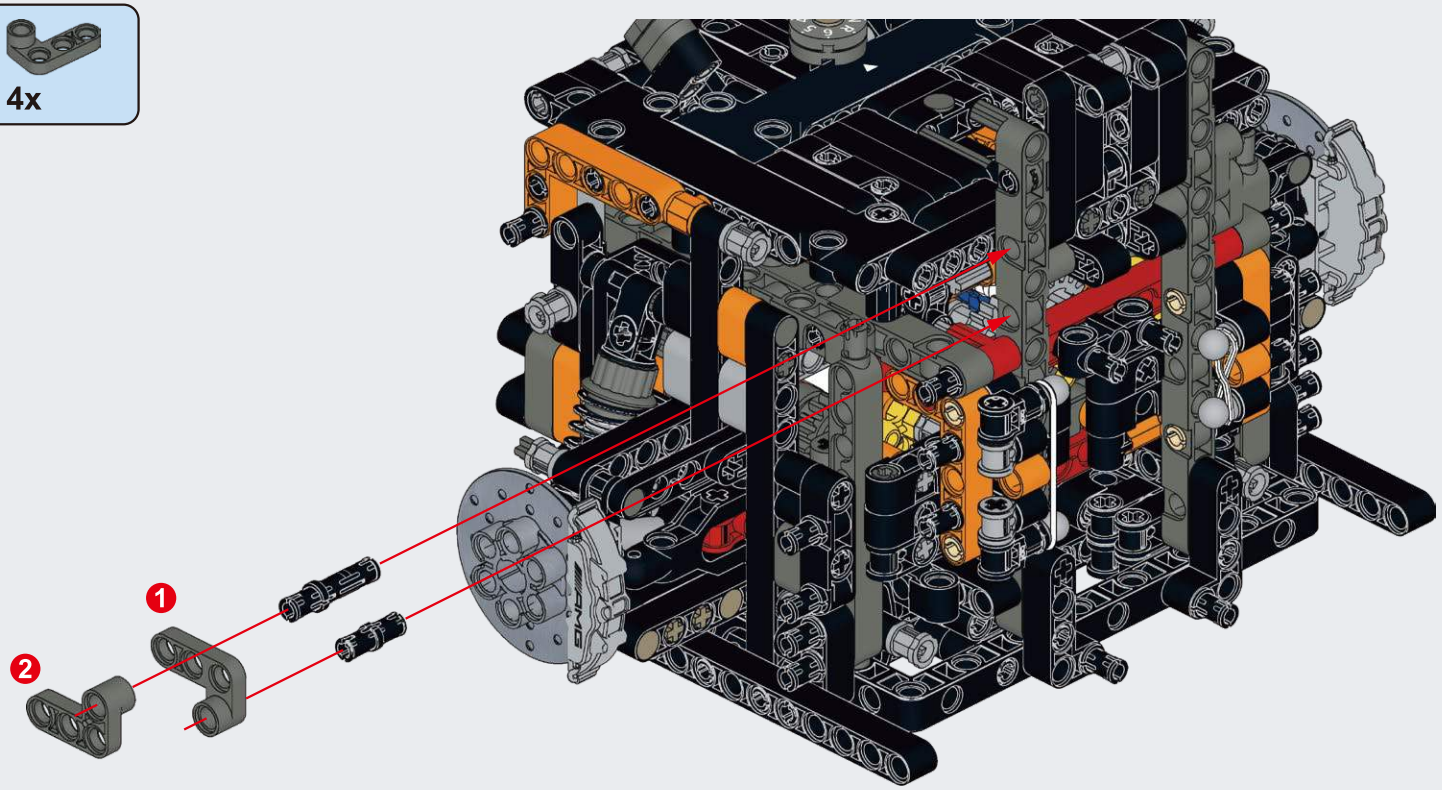

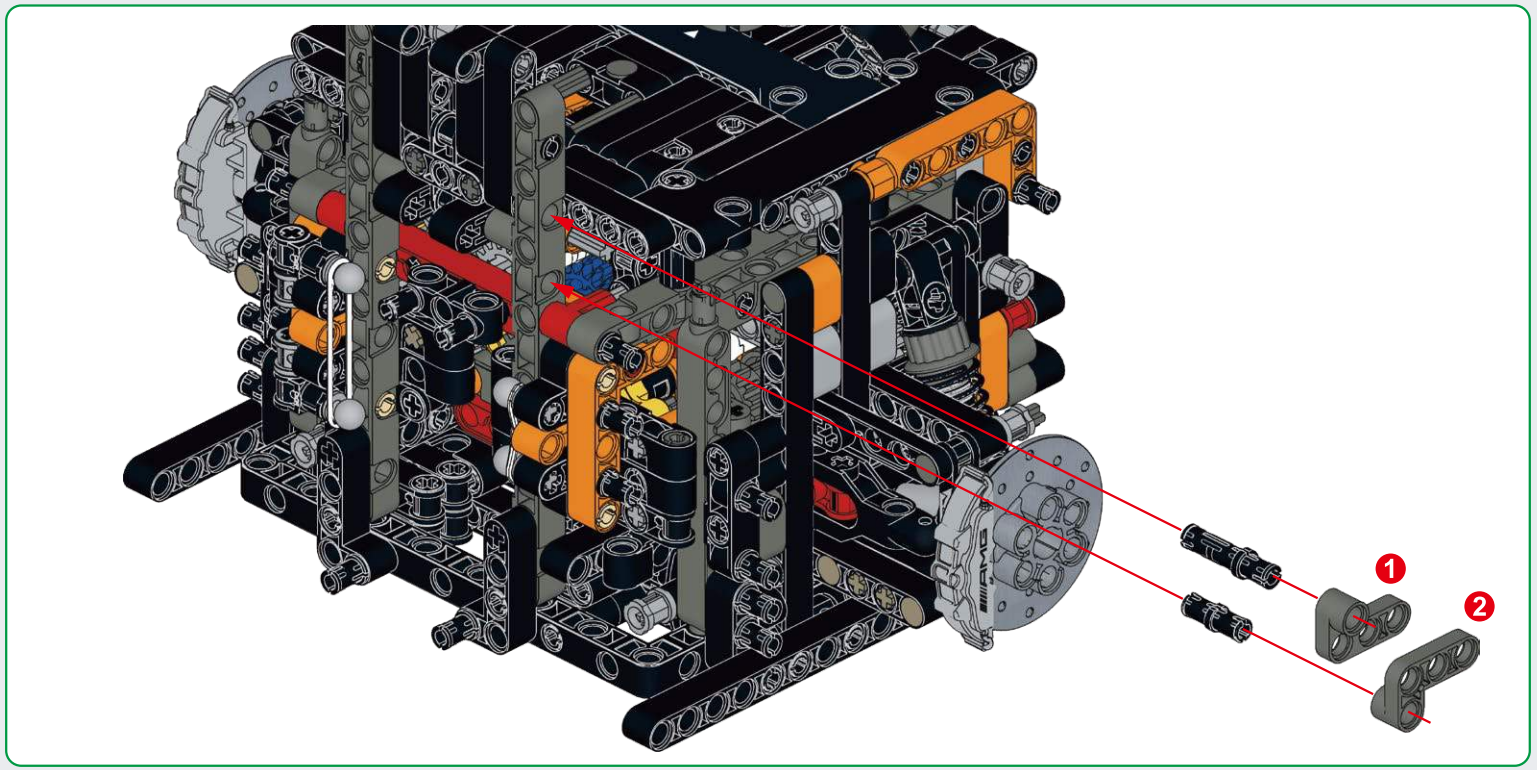

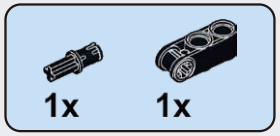

A253

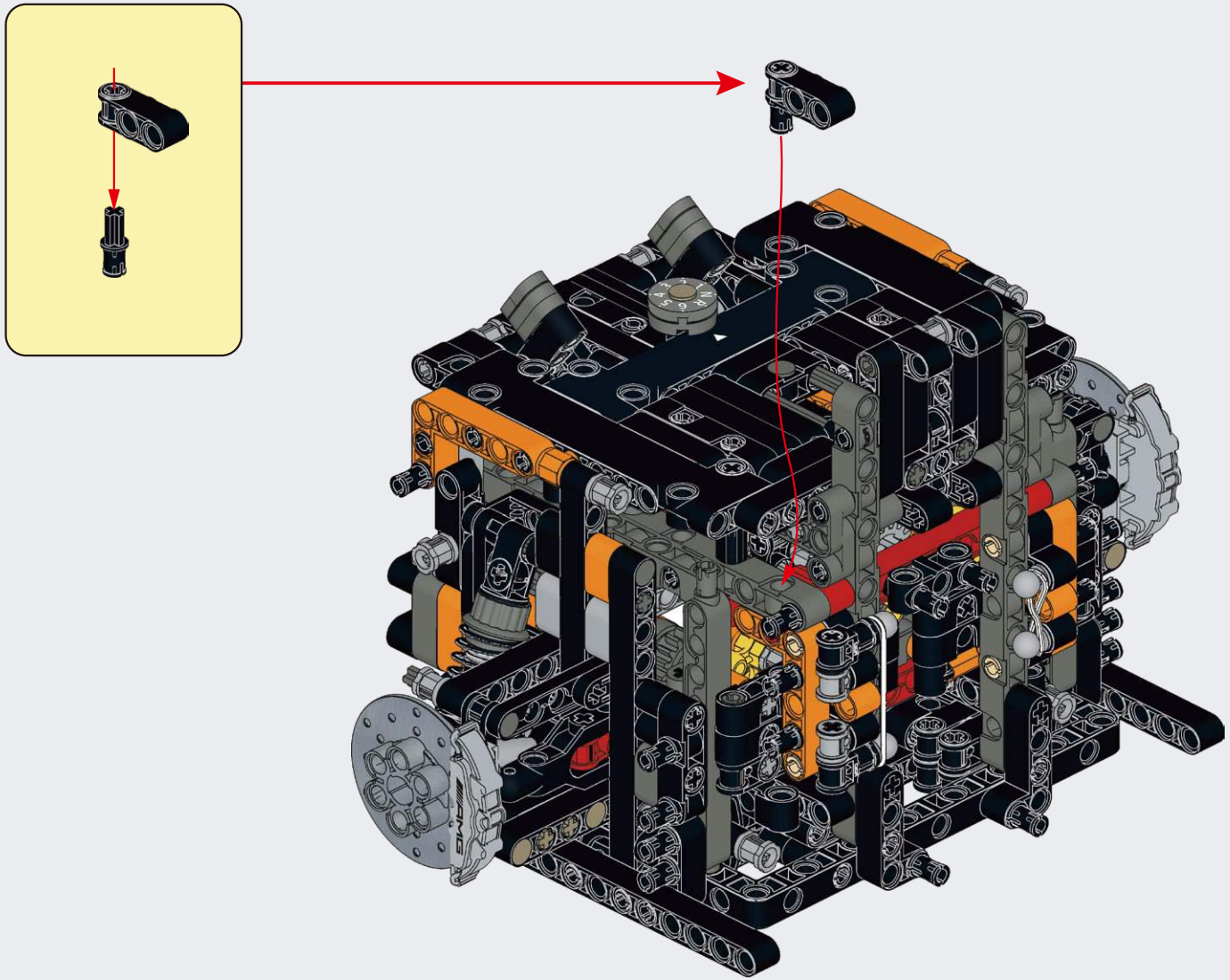

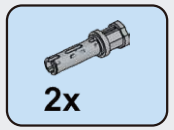

A254

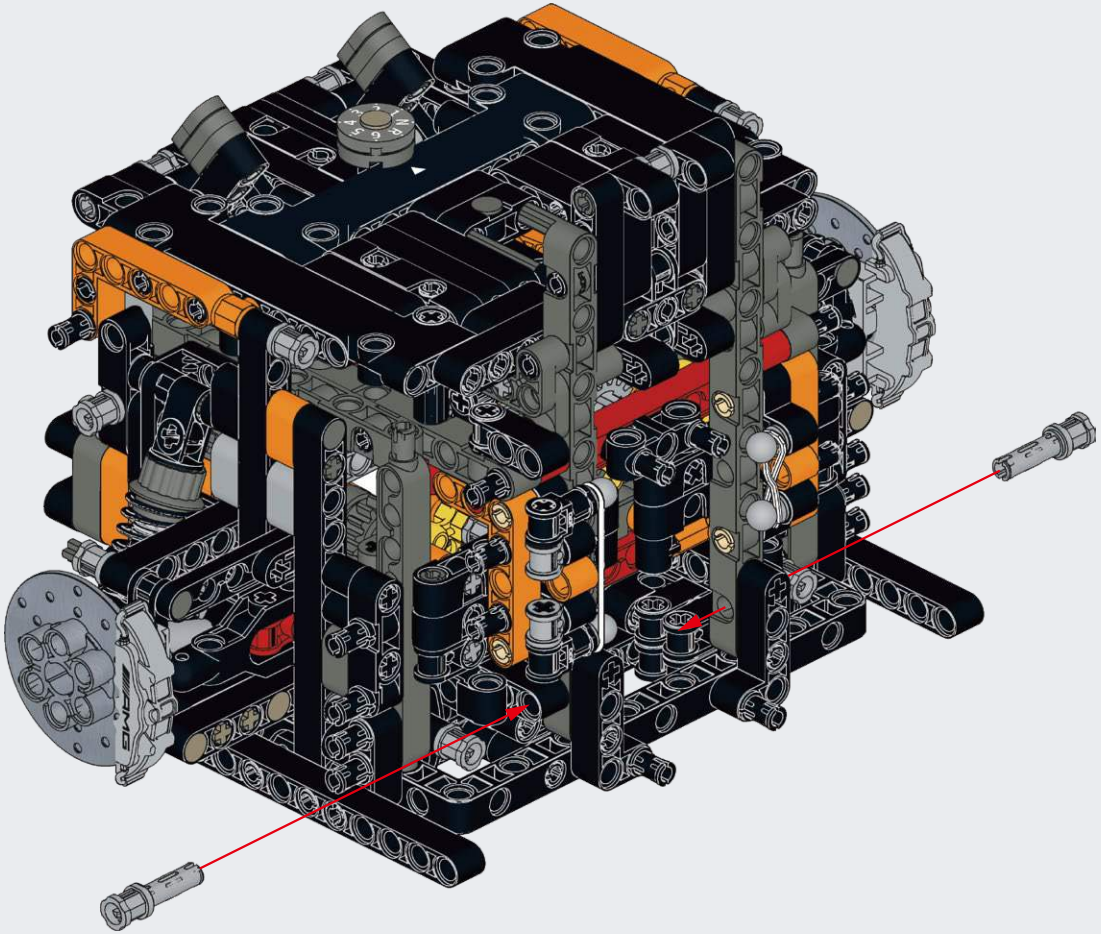

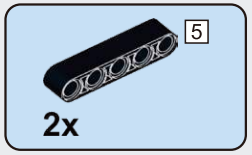

A255

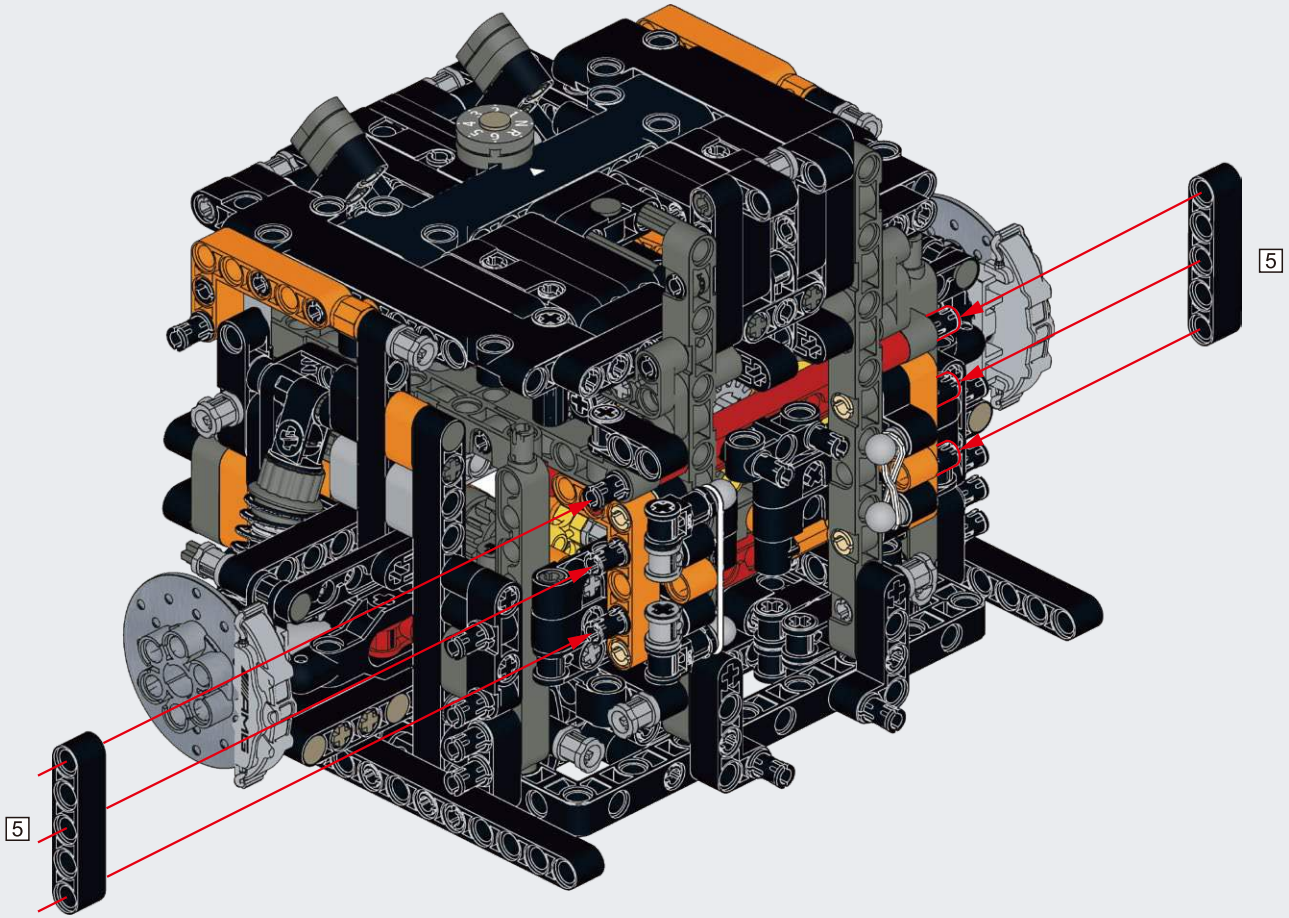

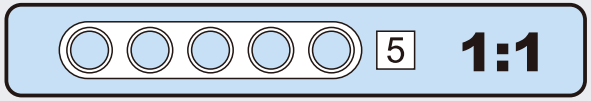

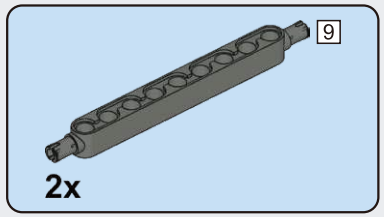

A256

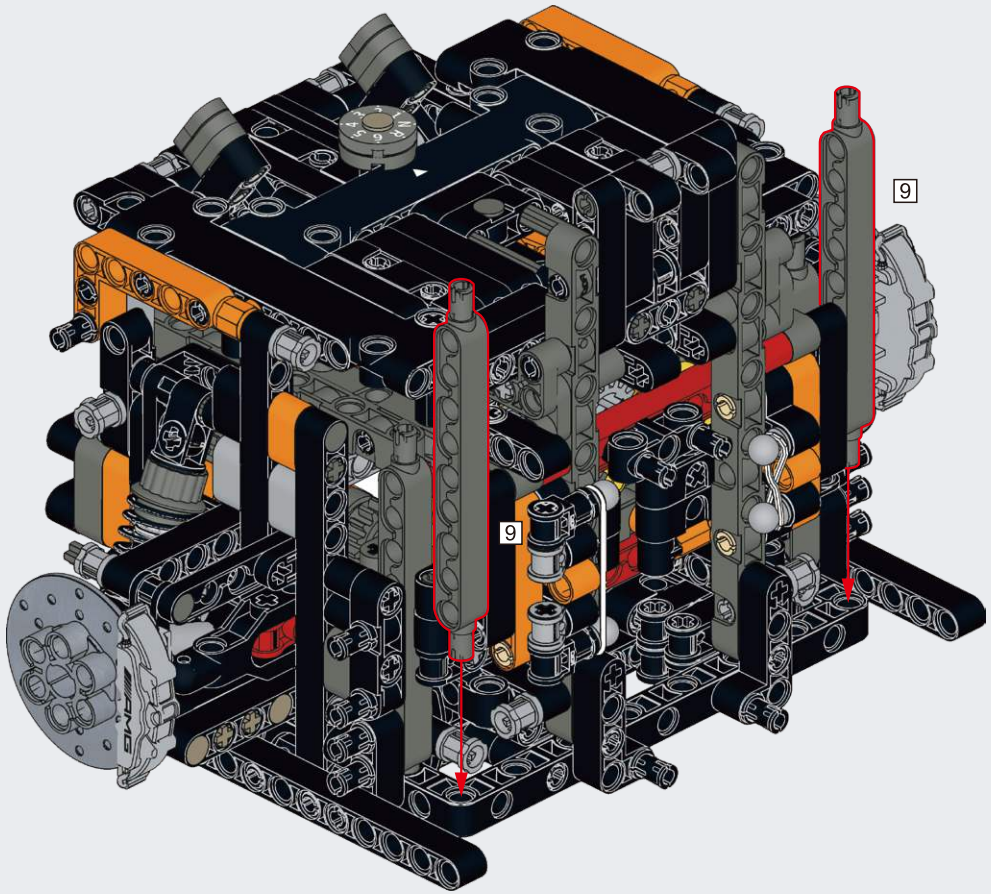

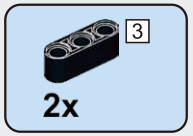

A257

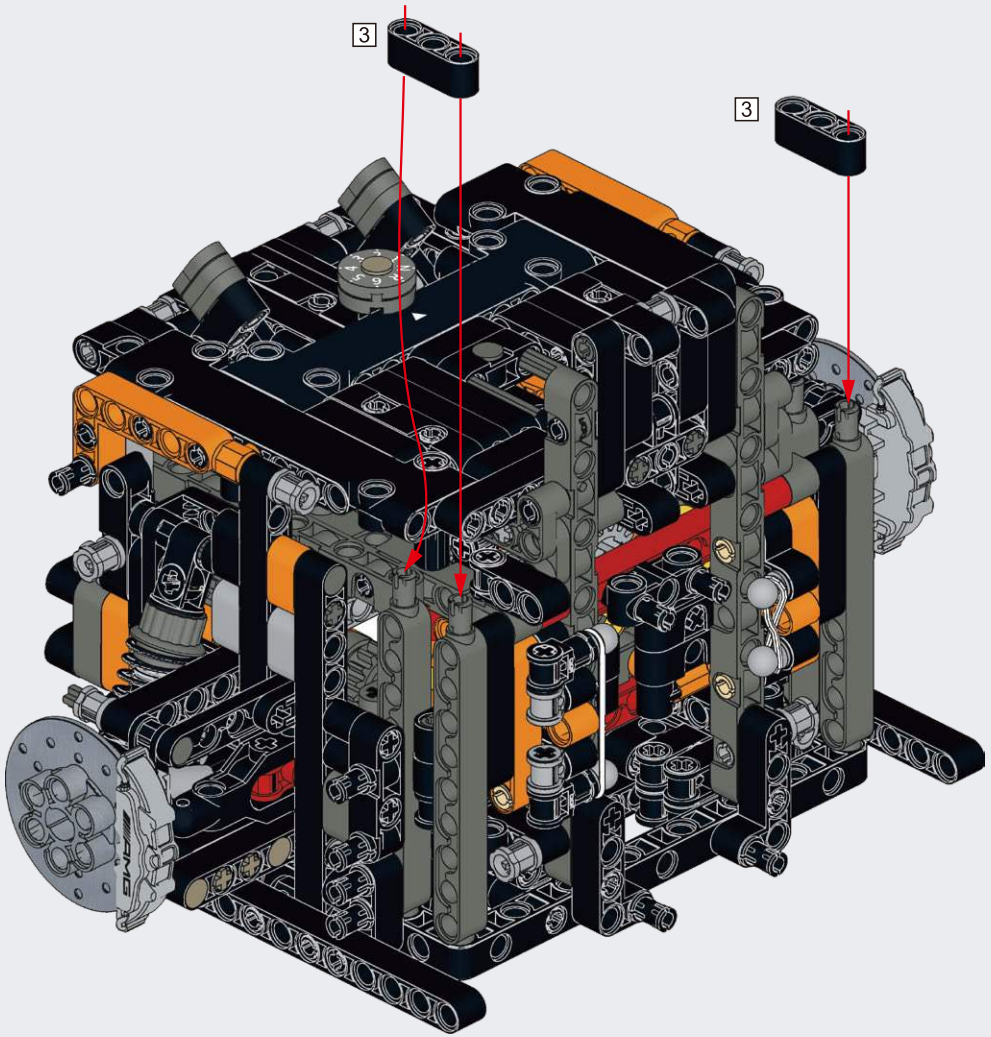

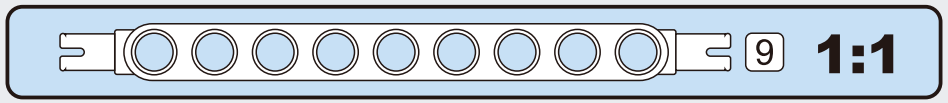

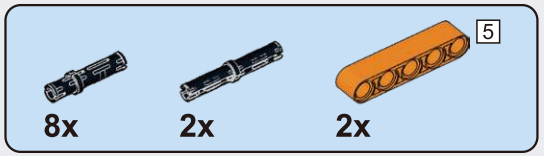

A258

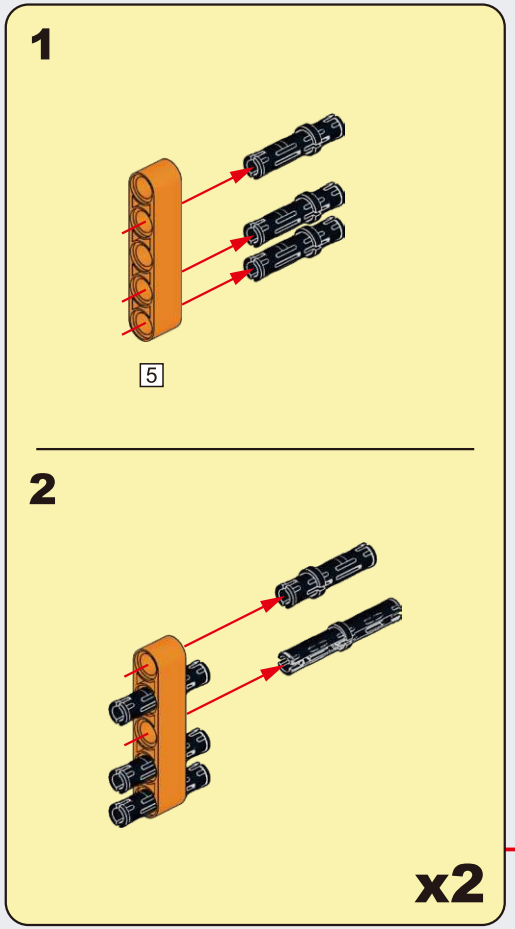

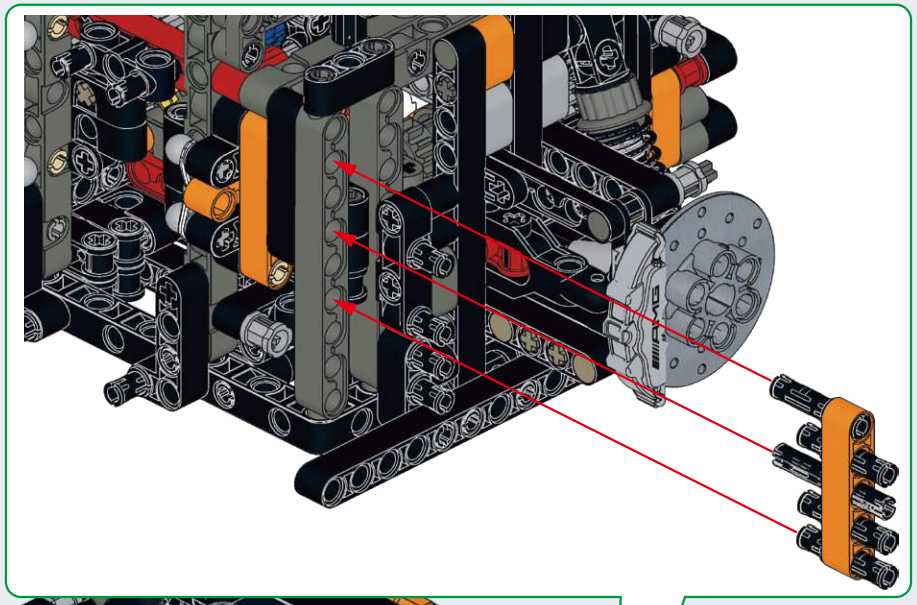

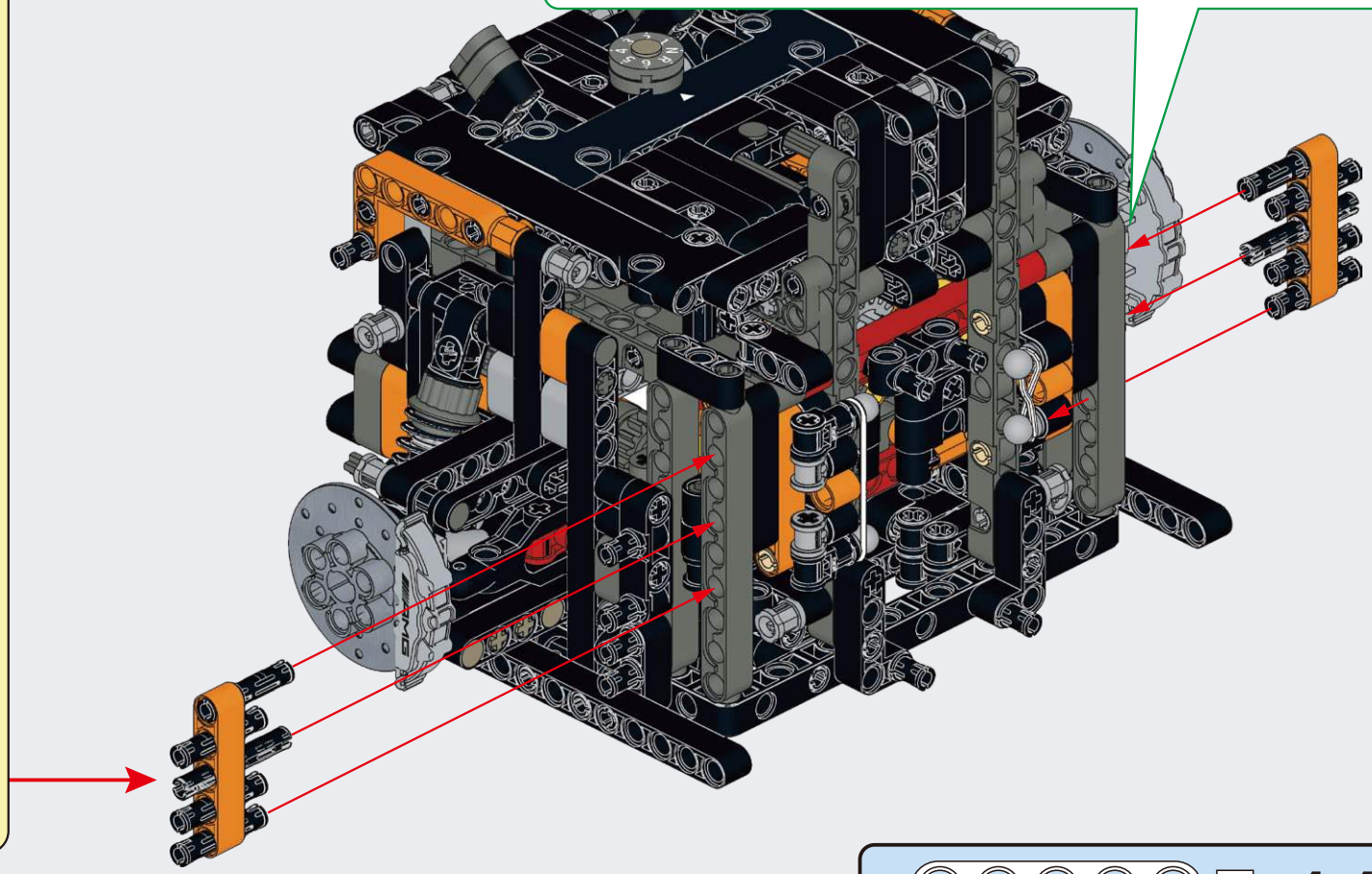

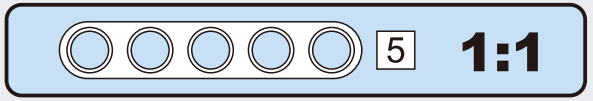

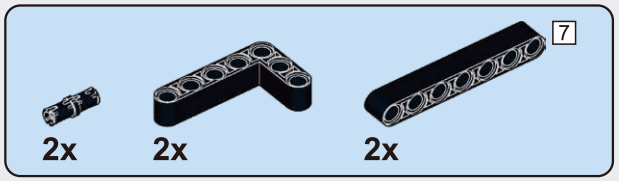

A259

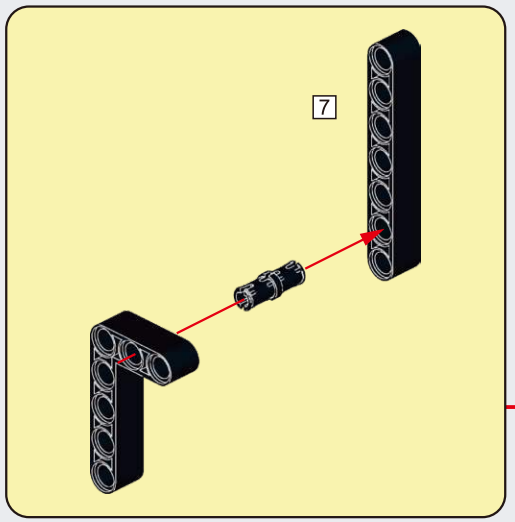

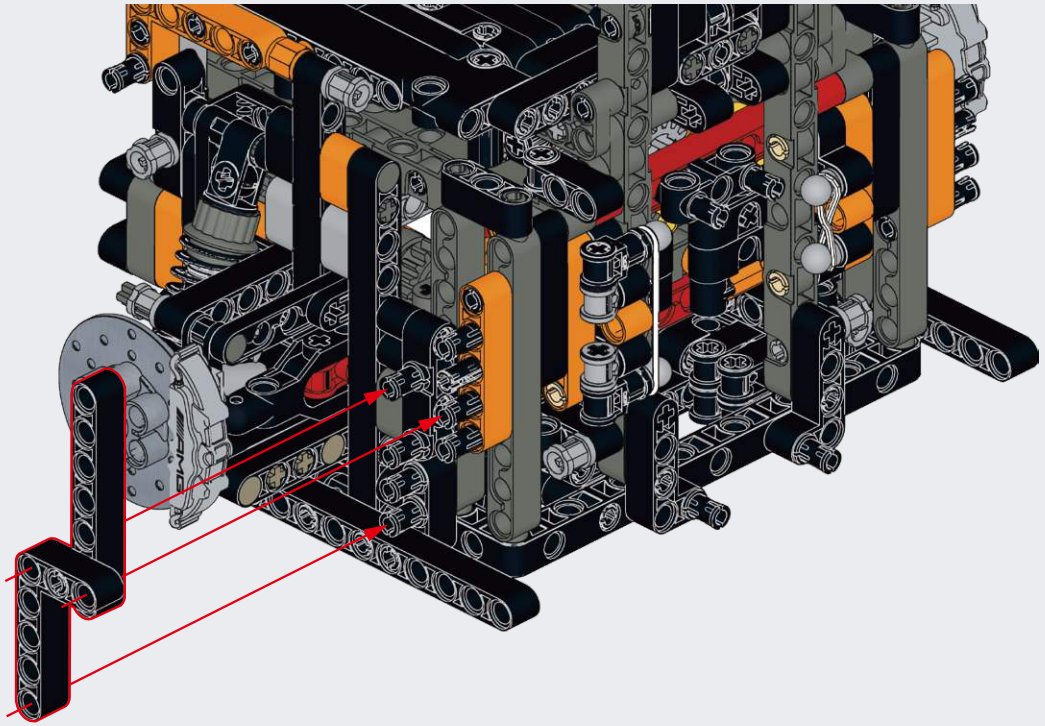

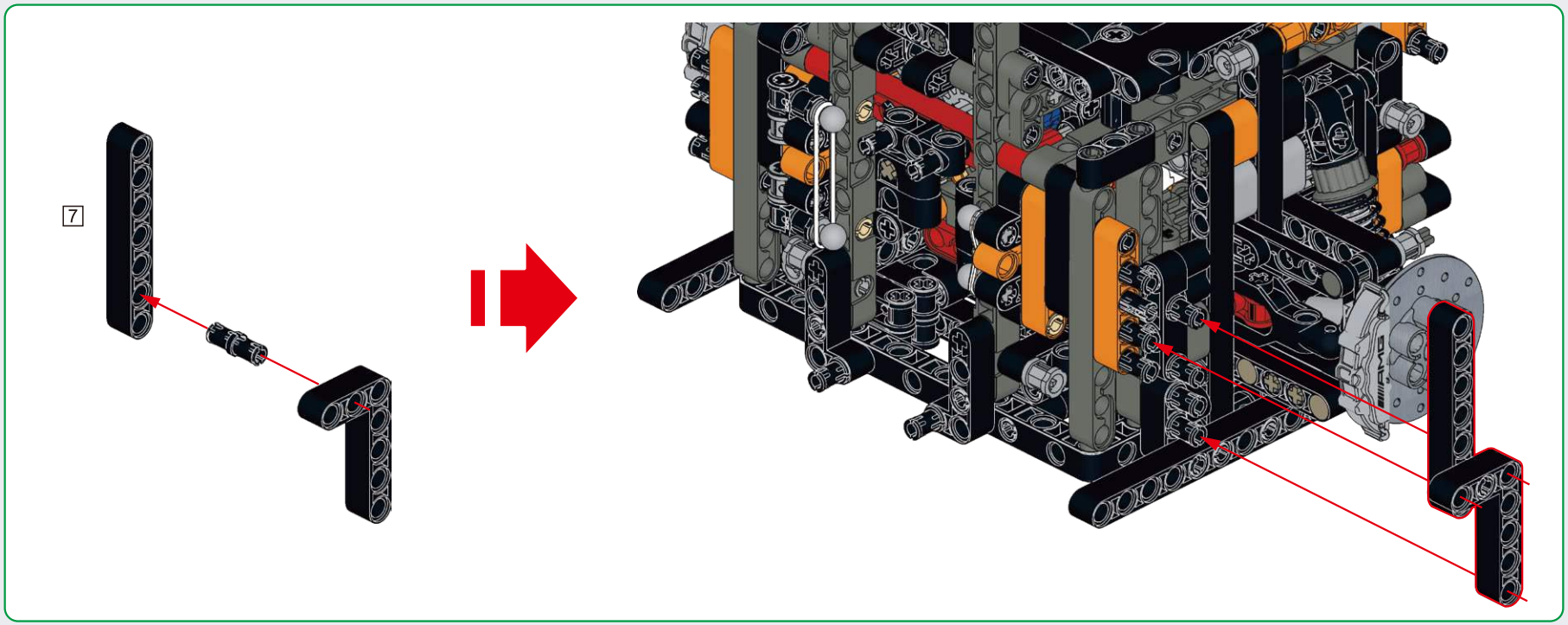

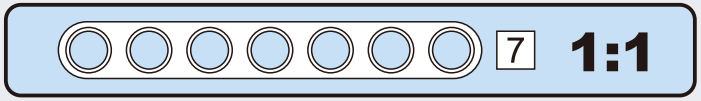

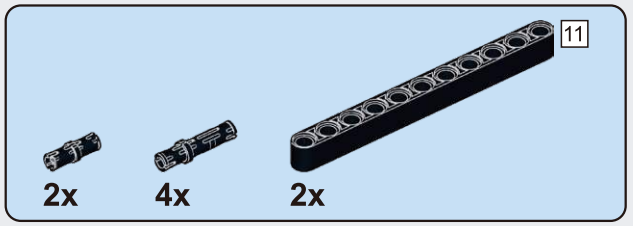

A260

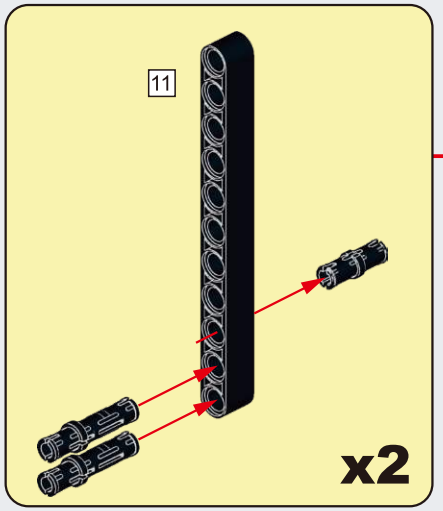

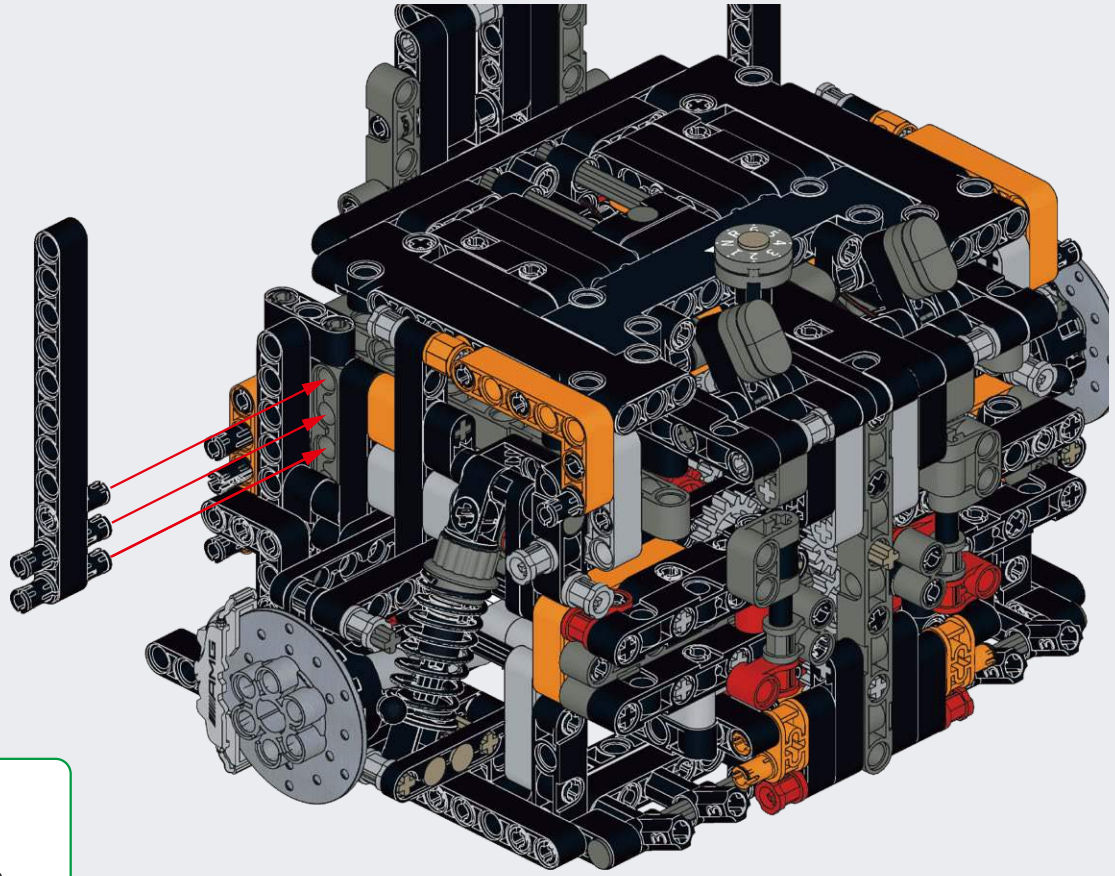

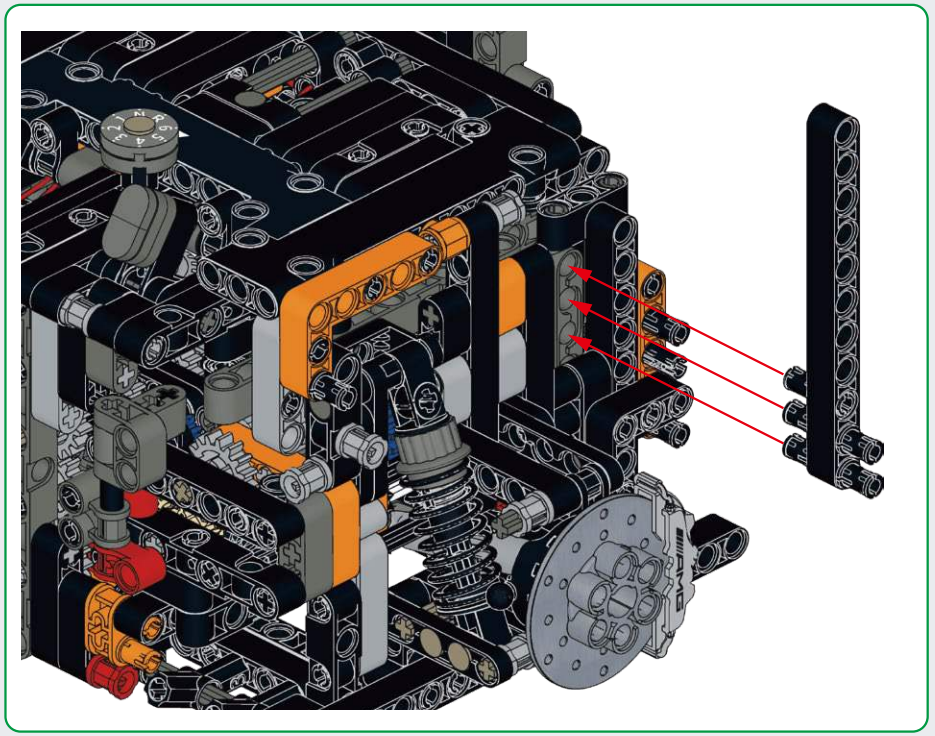

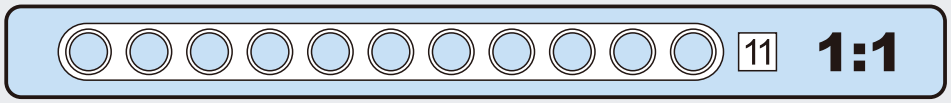

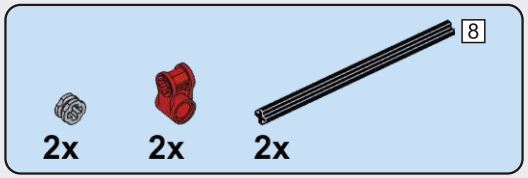

A261

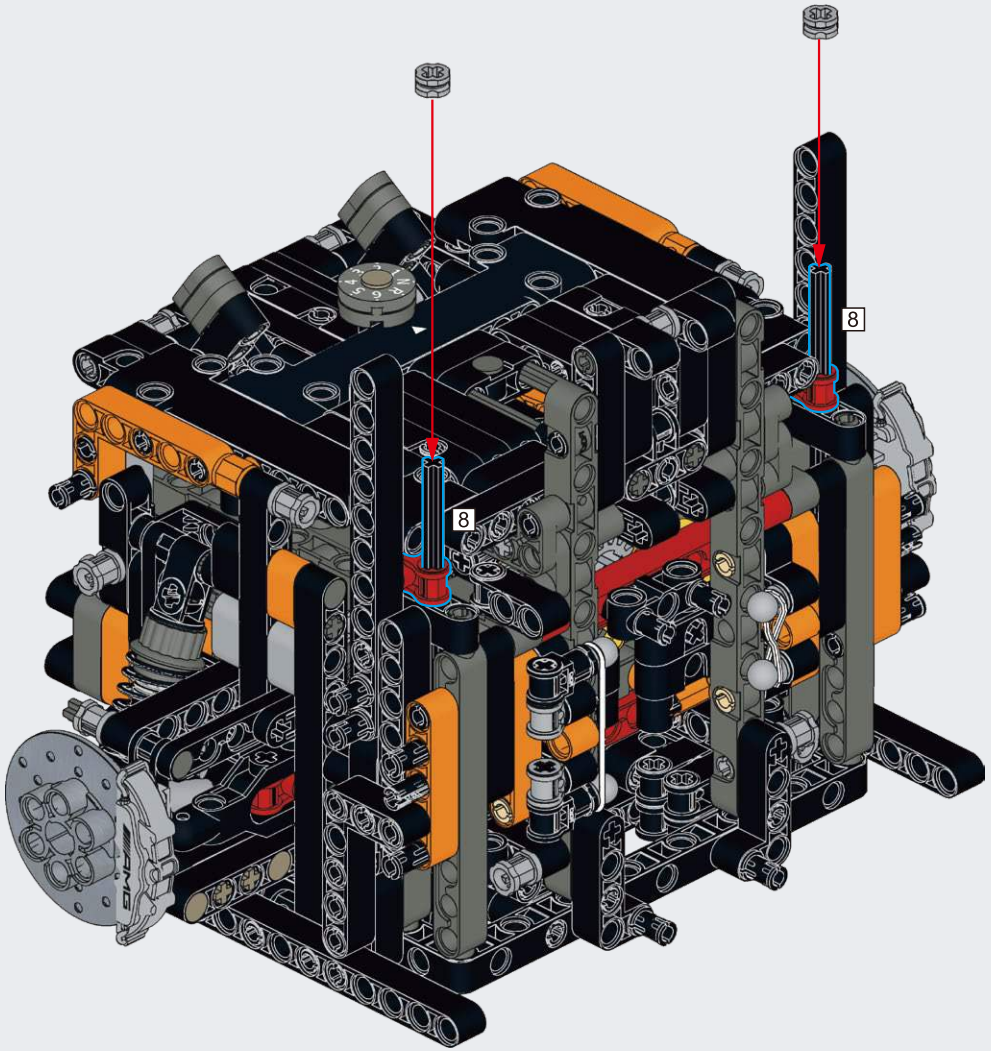

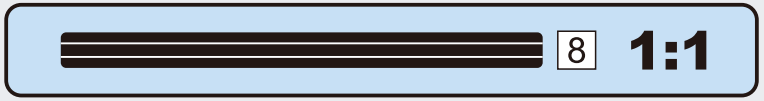

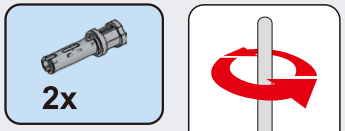

A262

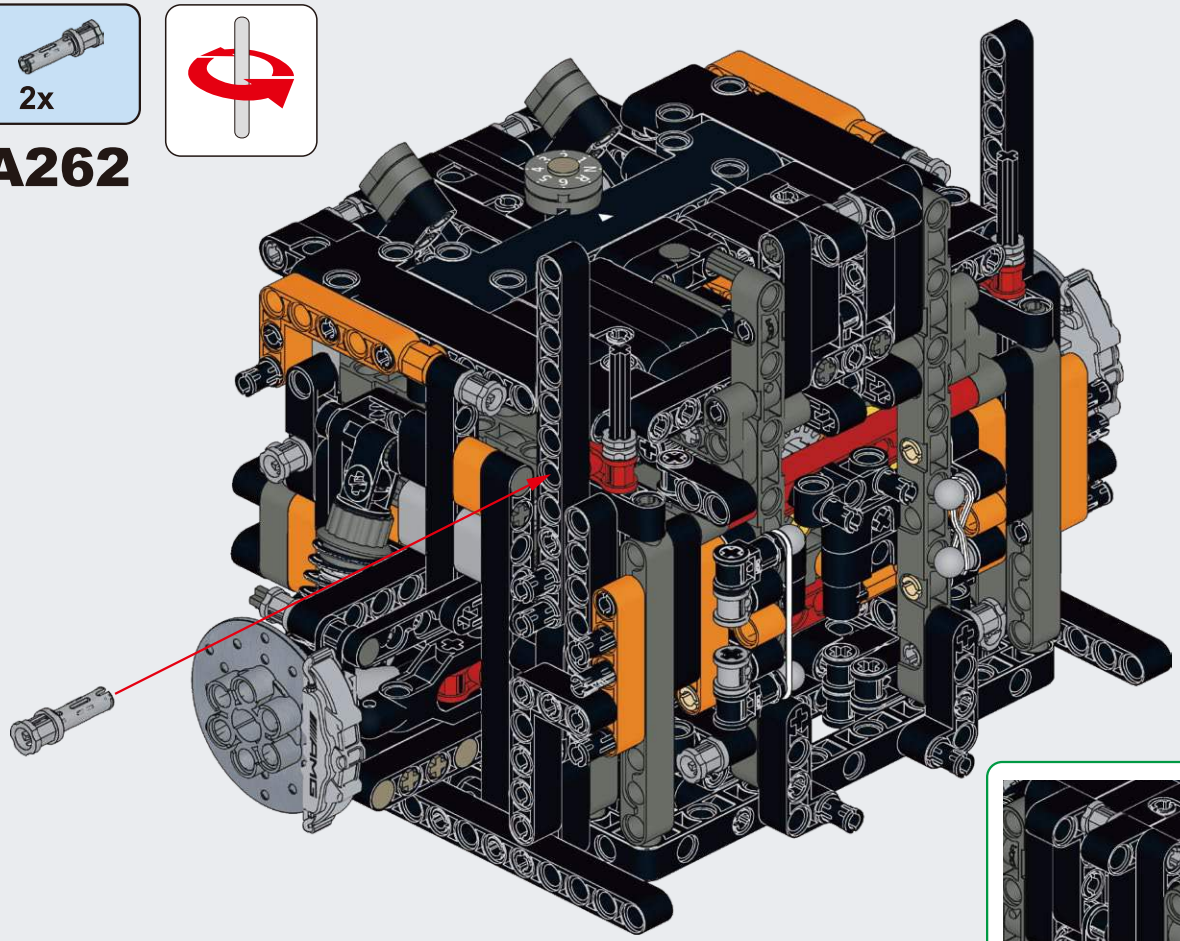

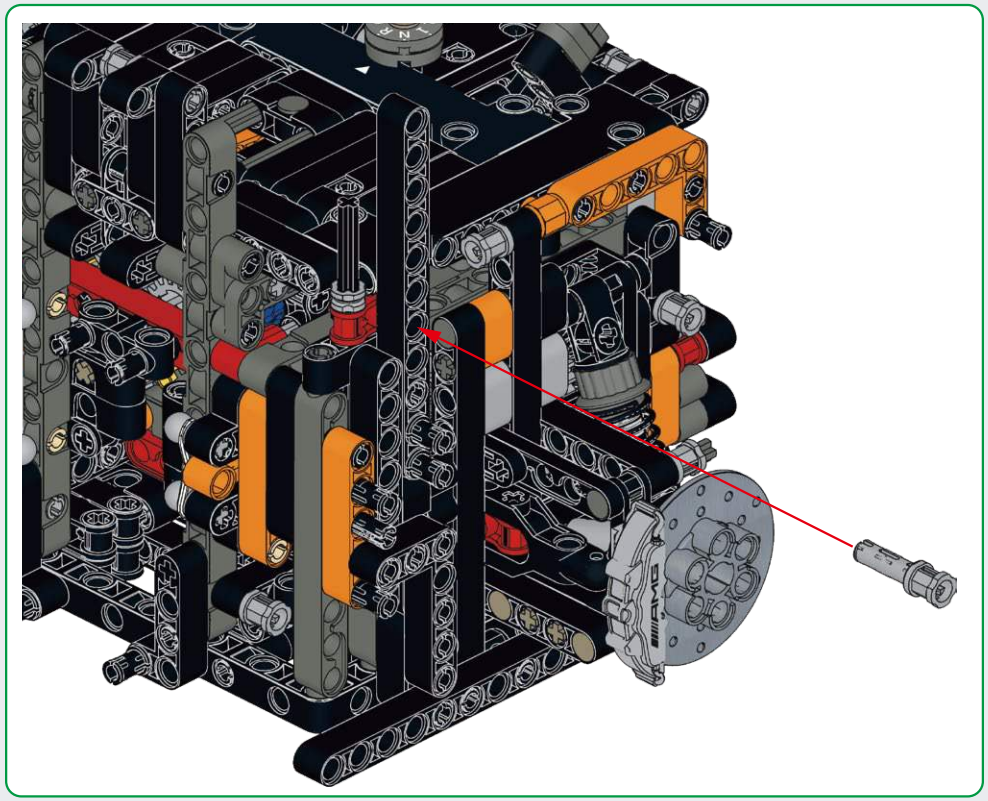

A263

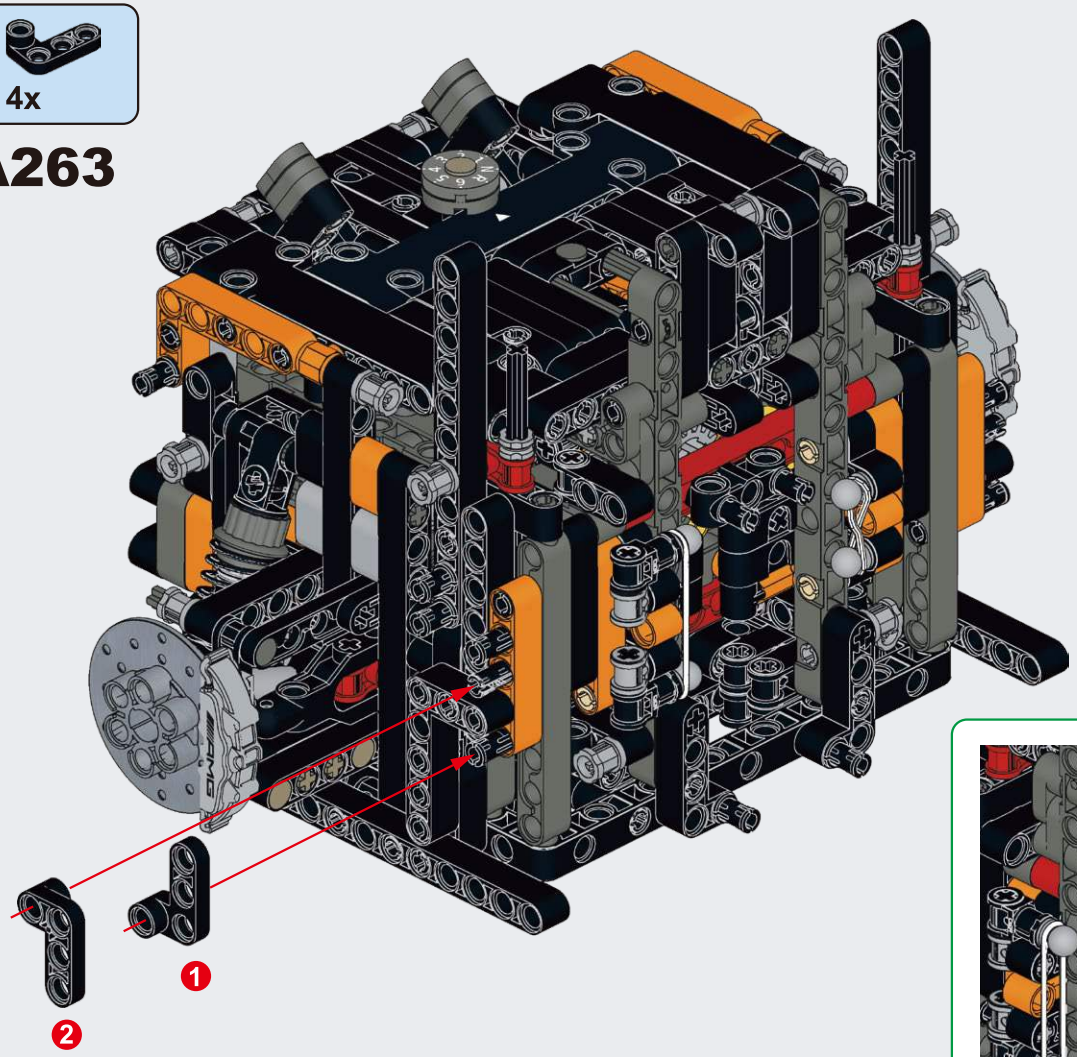

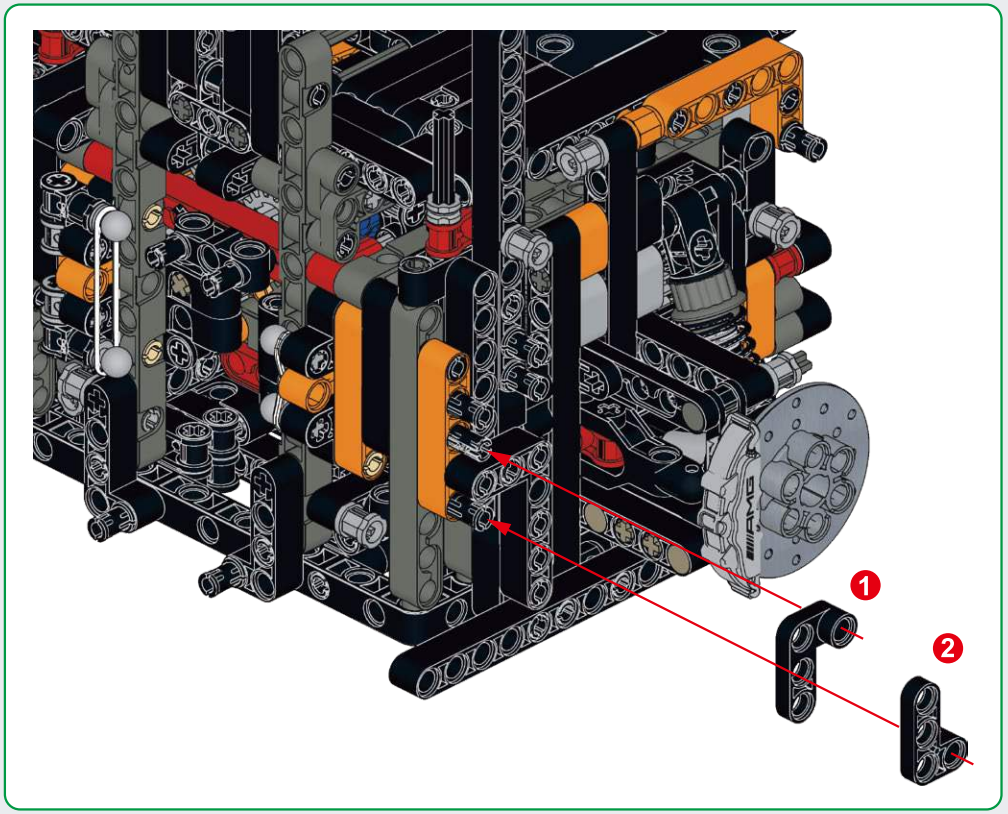

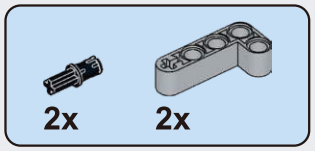

A264

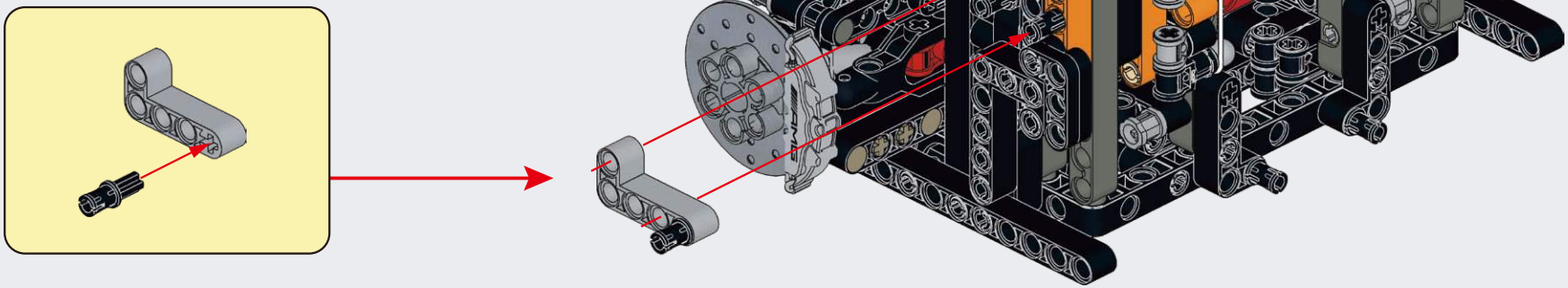

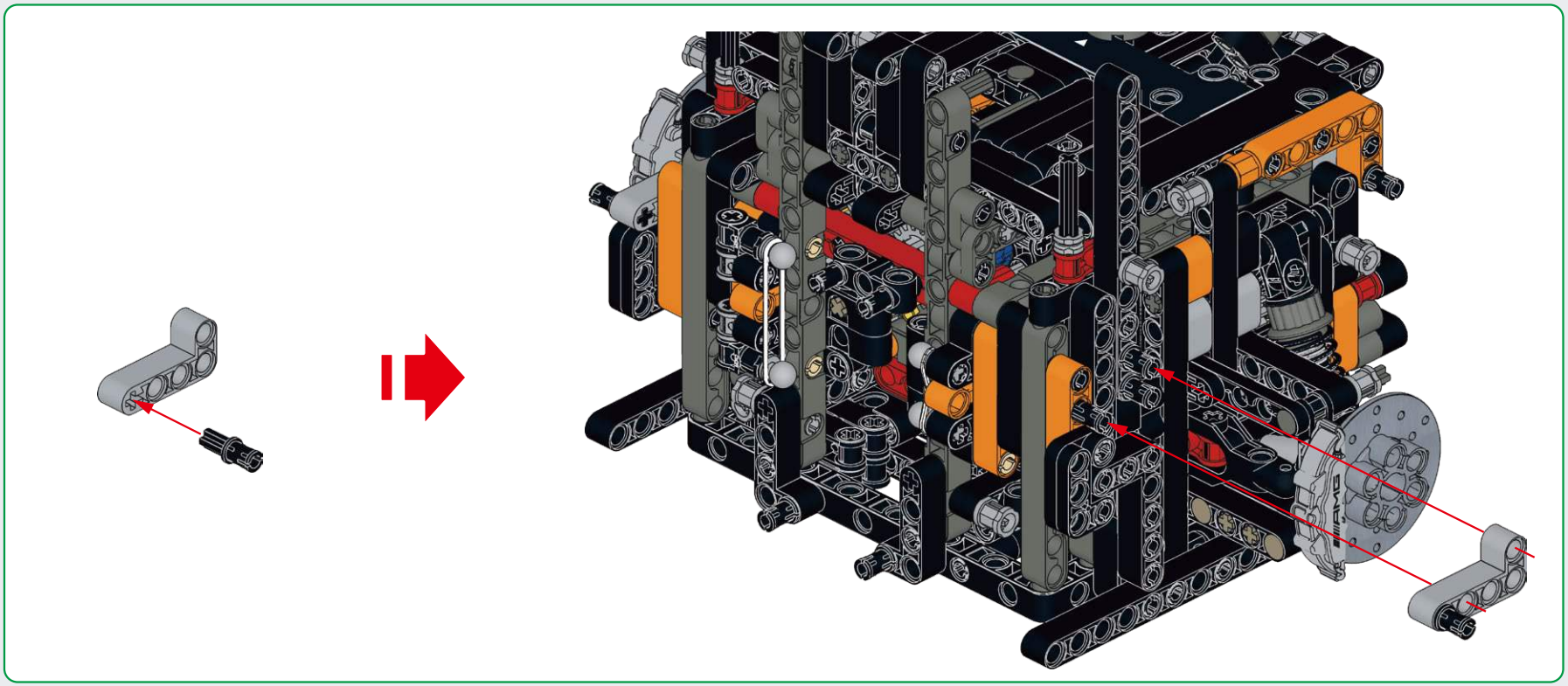

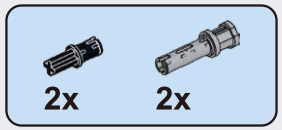

A265

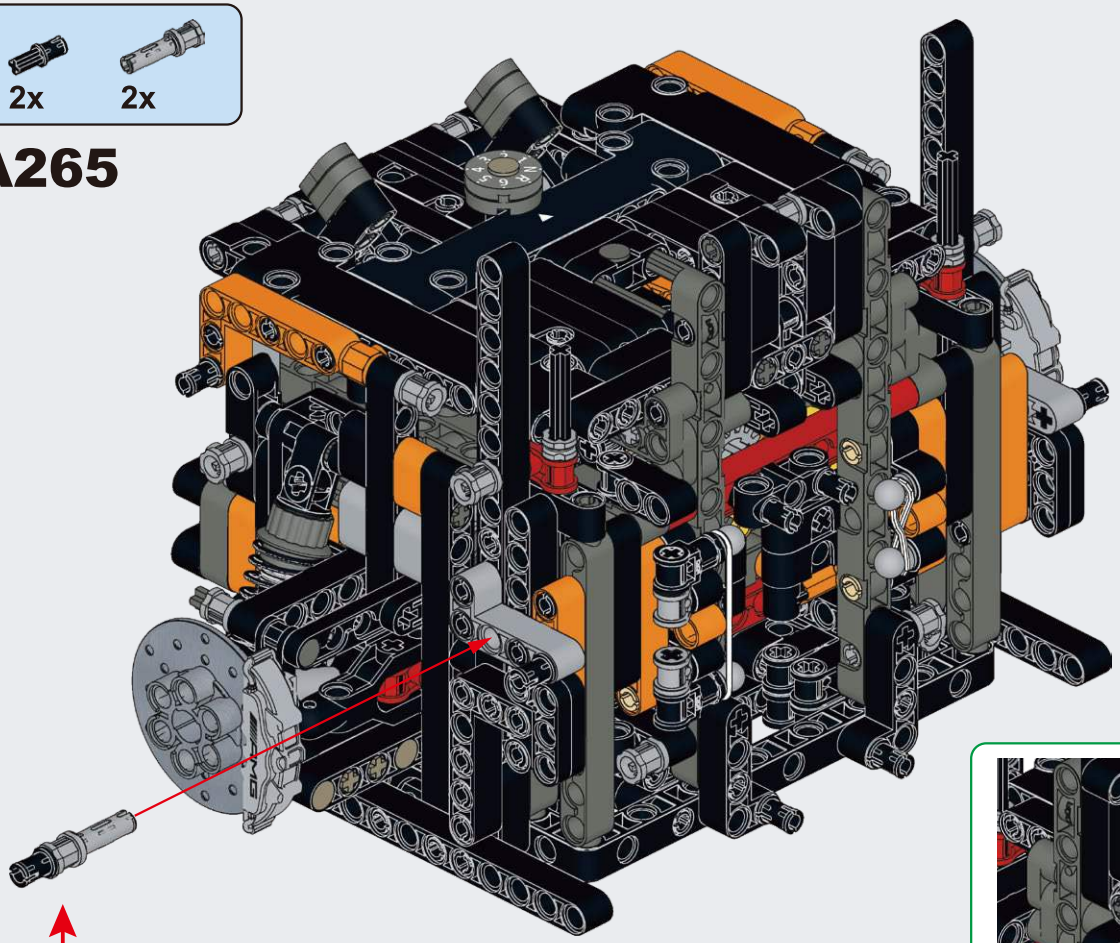

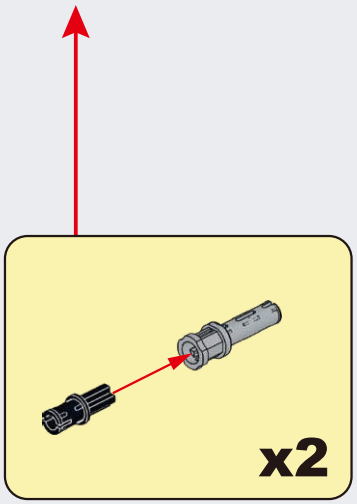

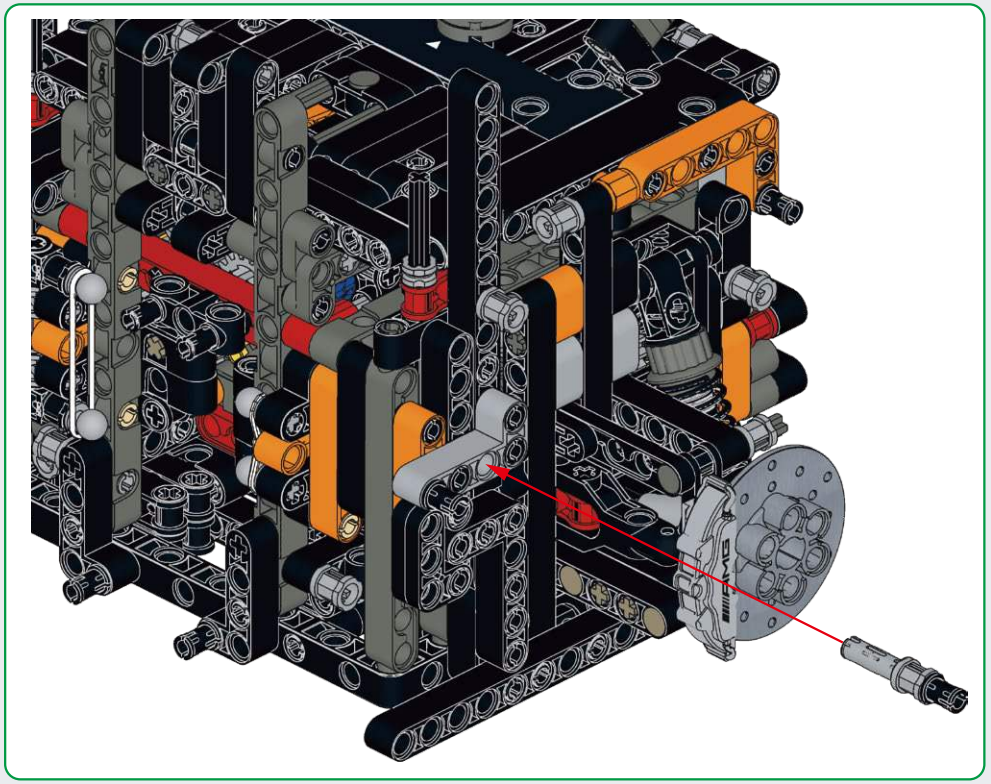

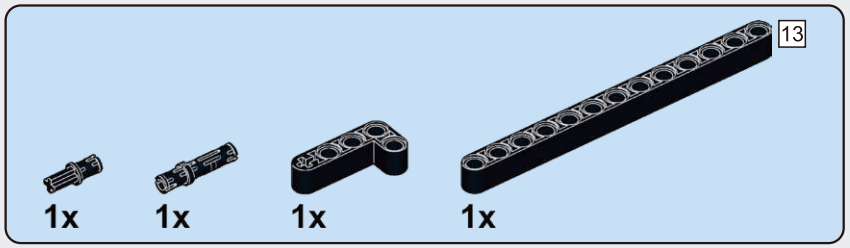

A266

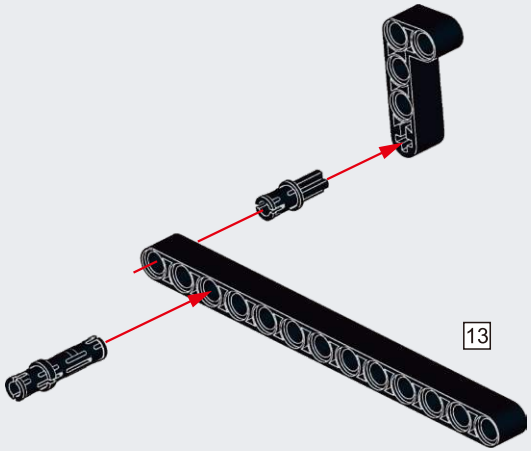

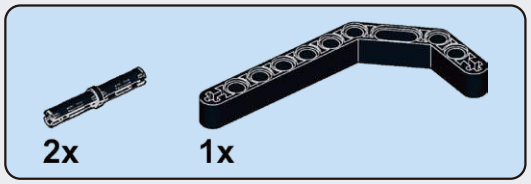

A267

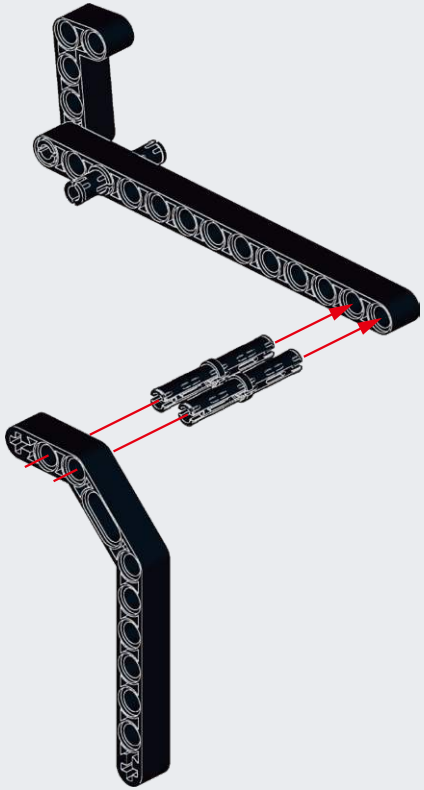

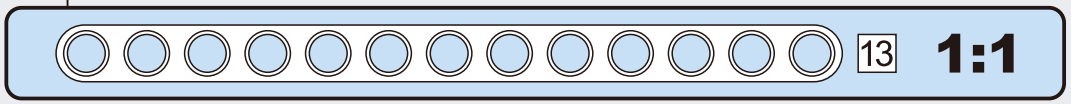

A268

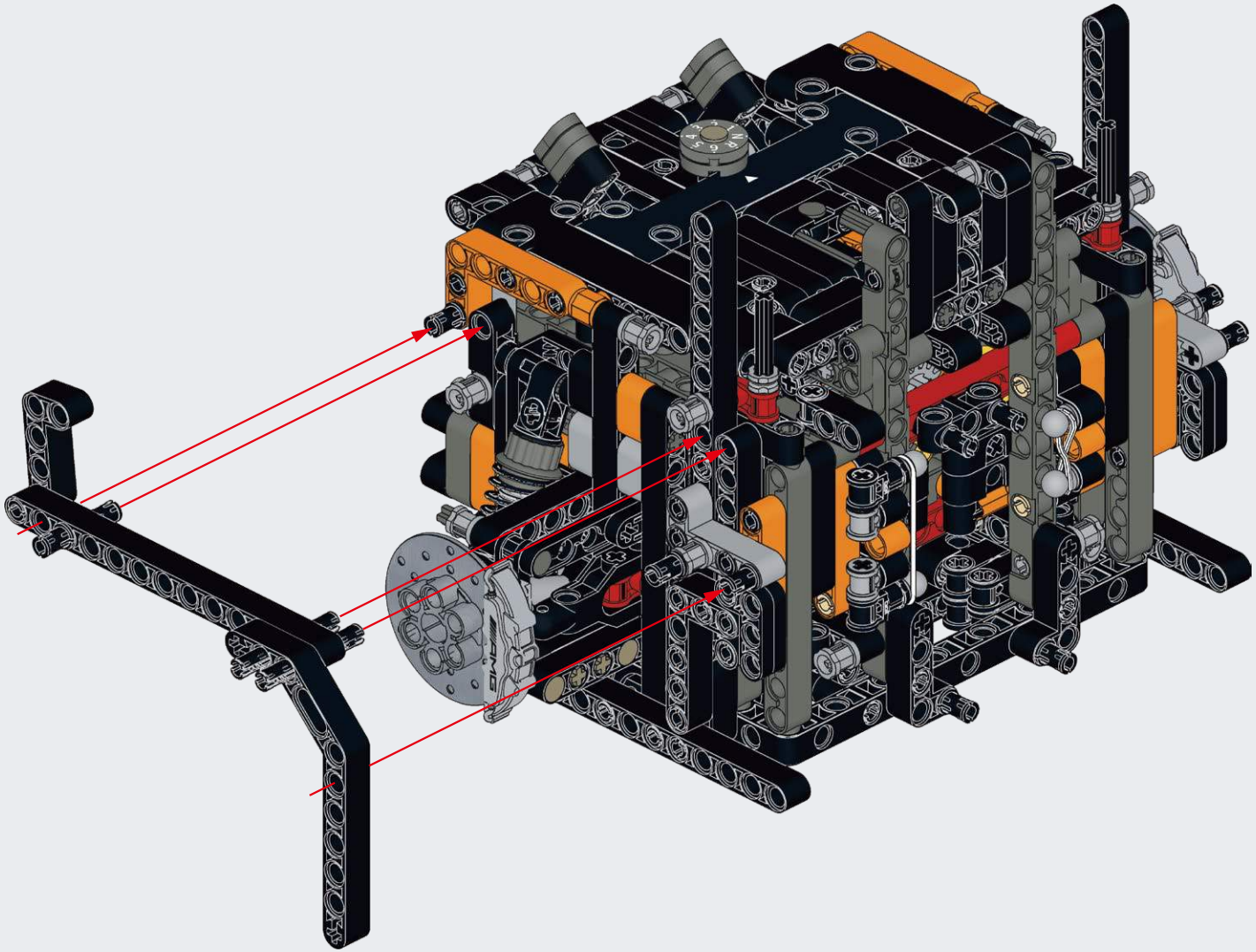

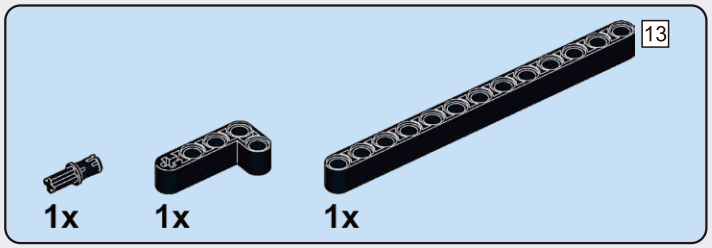

A269

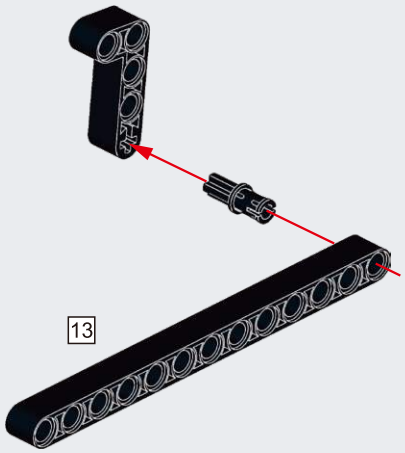

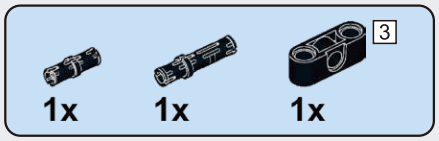

A270

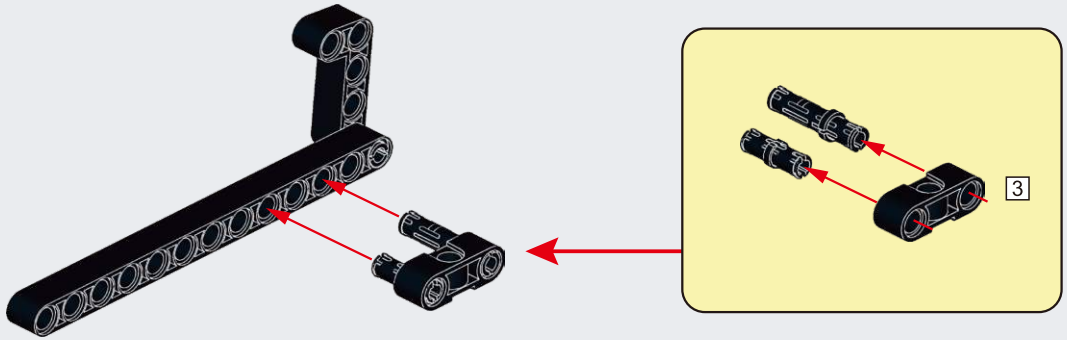

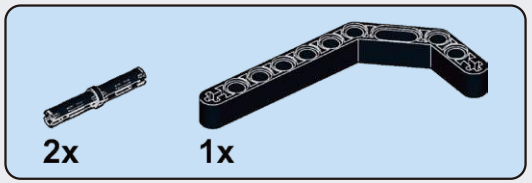

A271

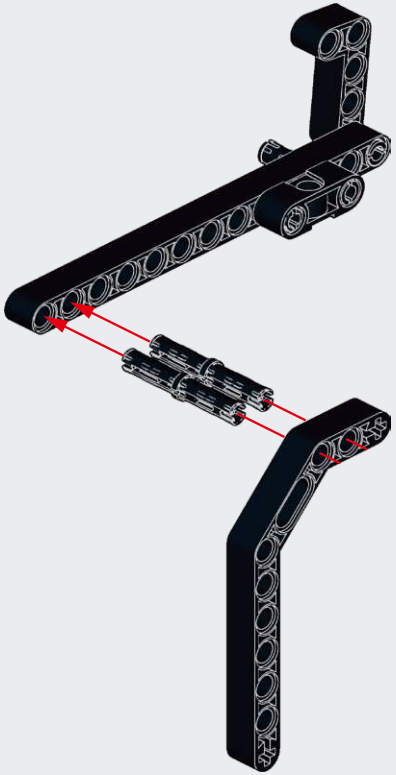

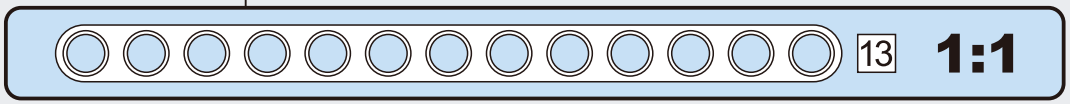

A272

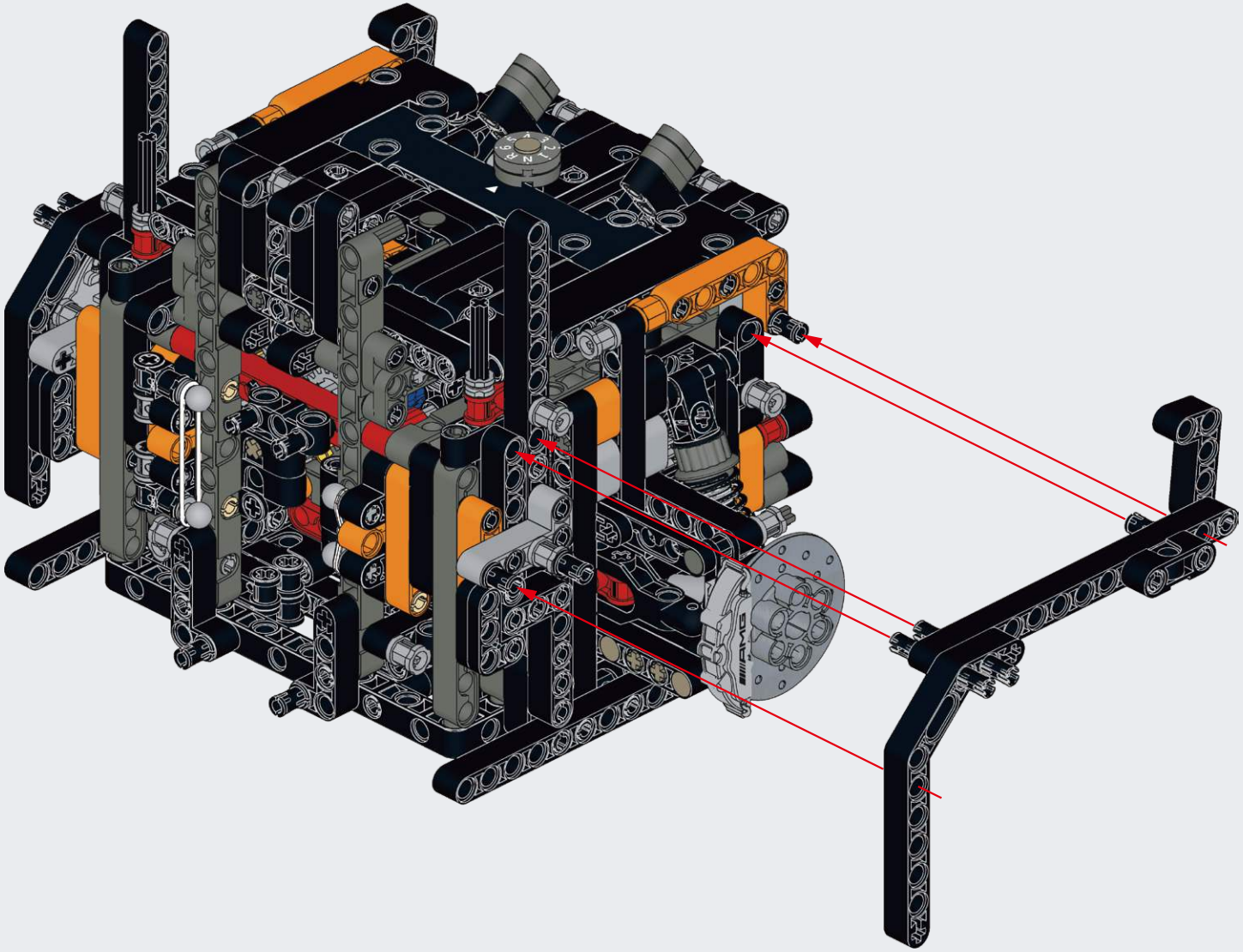

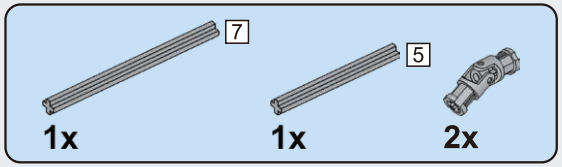

A273

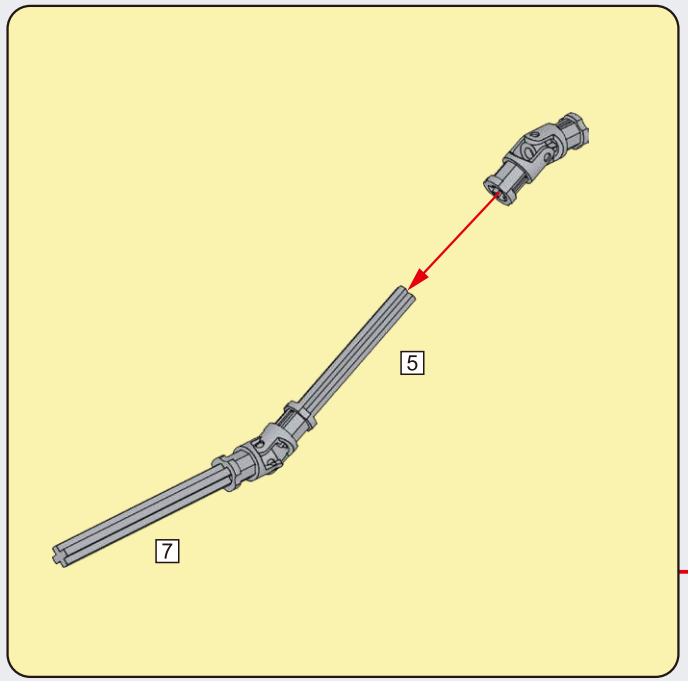

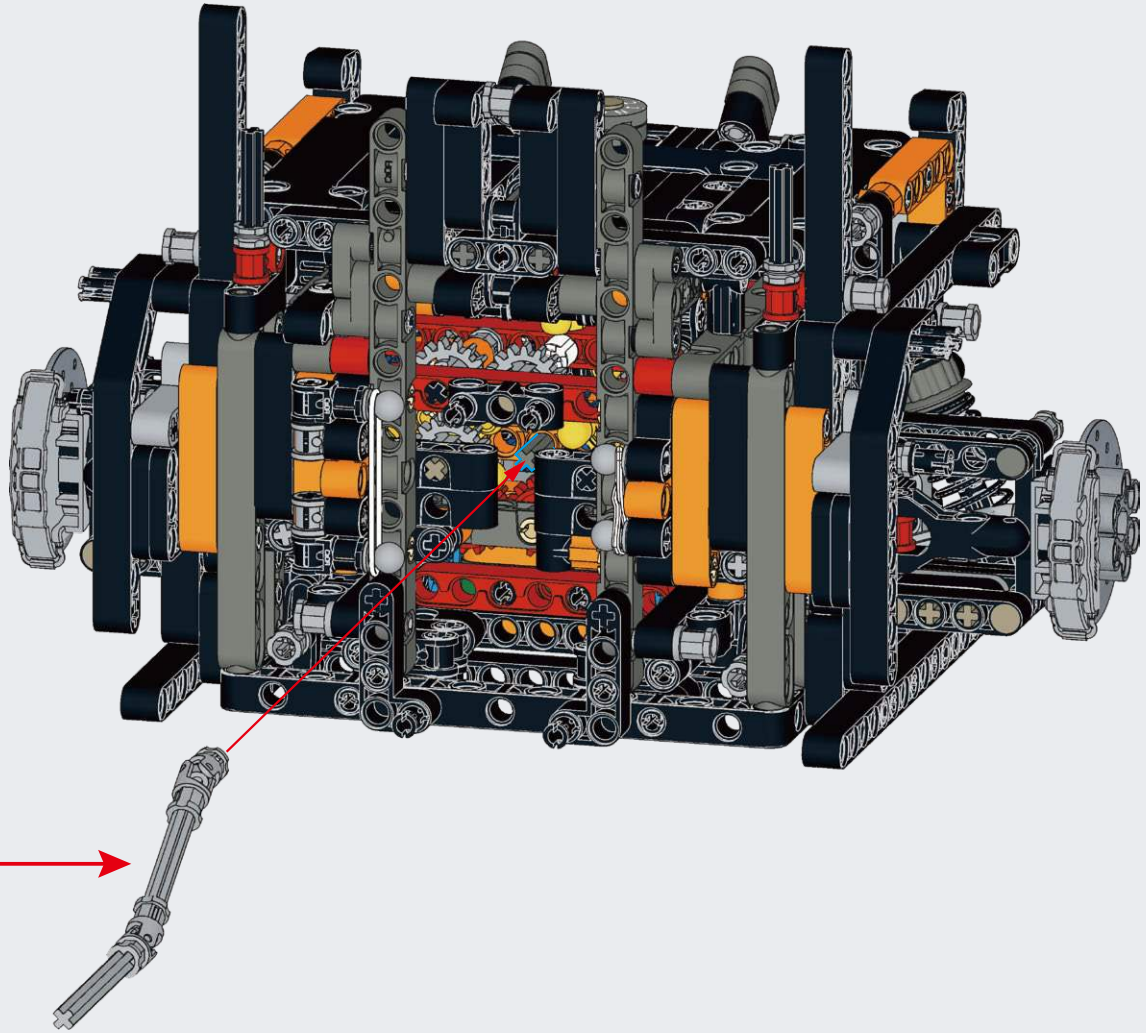

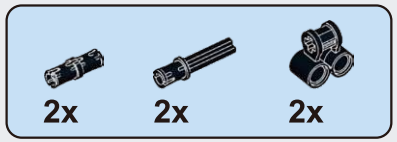

A274

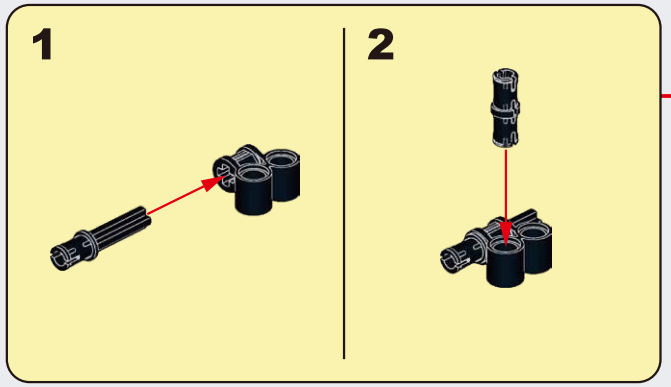

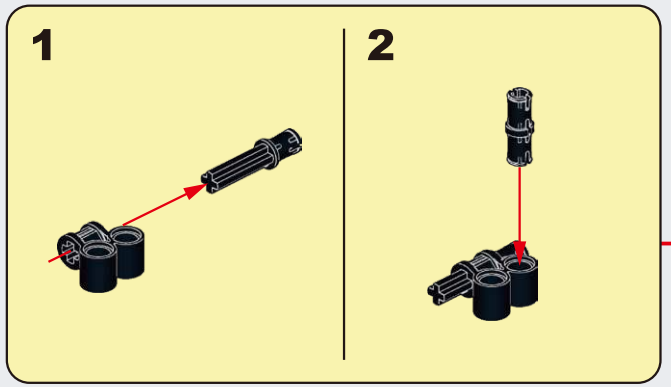

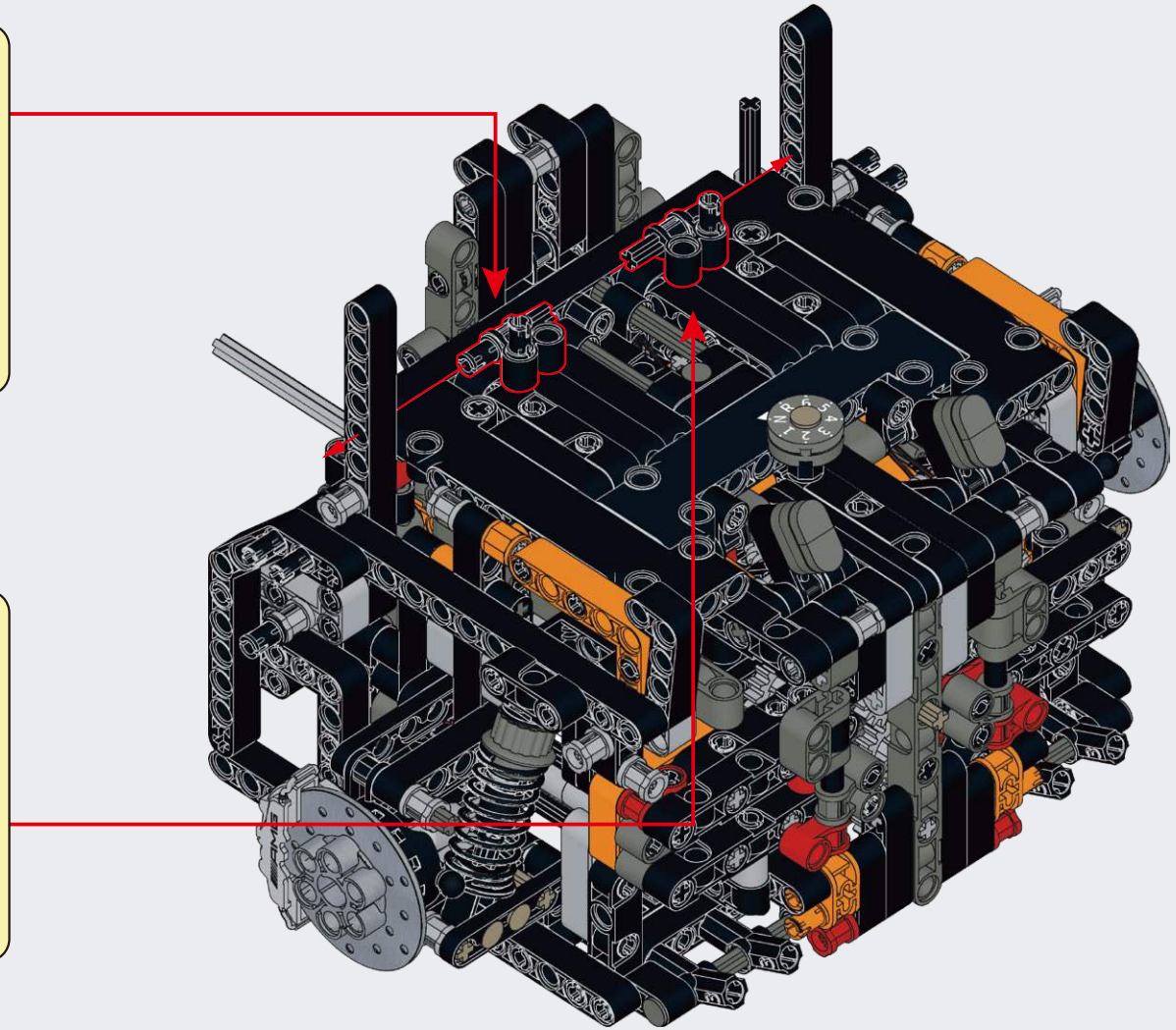

B

BOX 1 / BAG 2

1

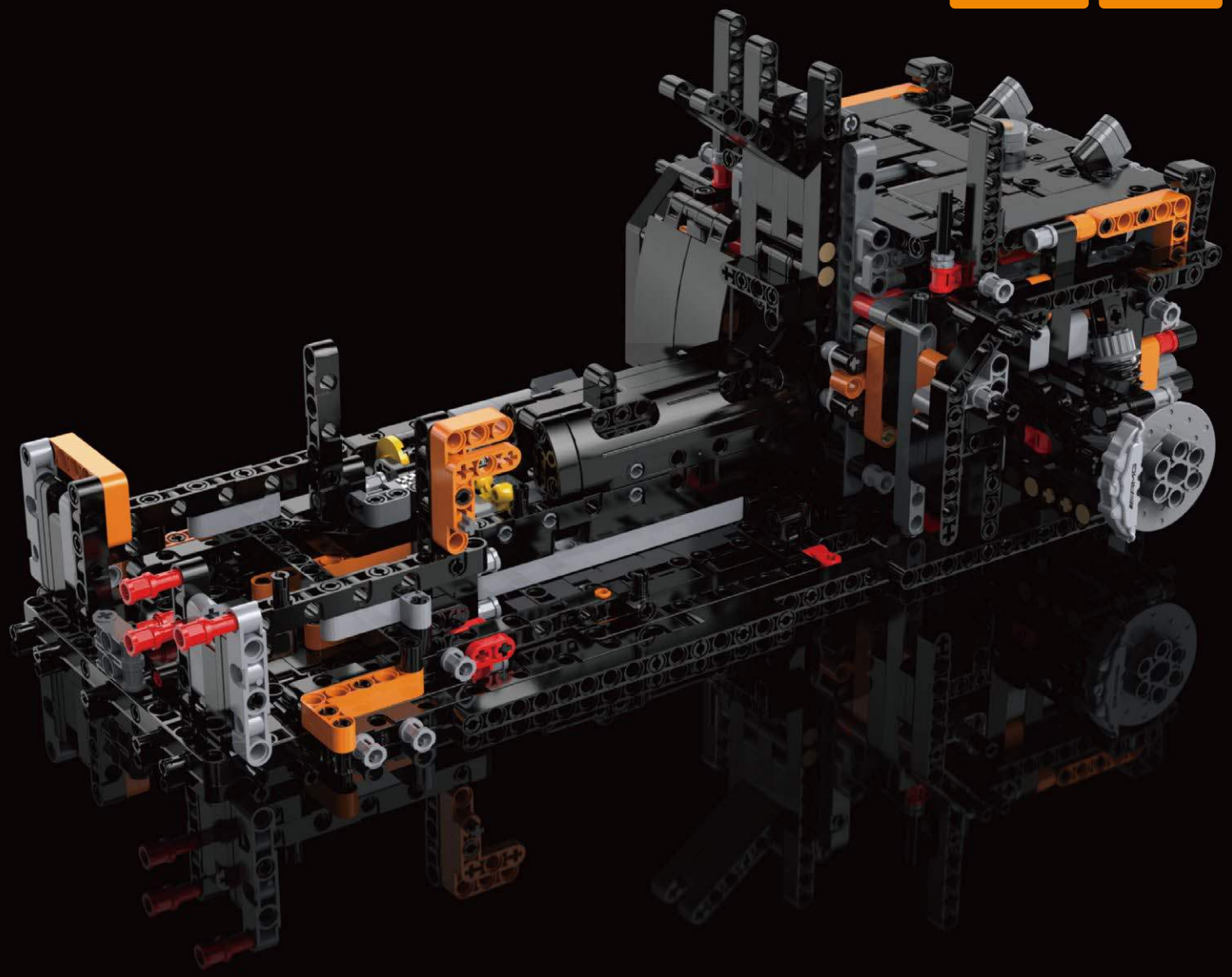

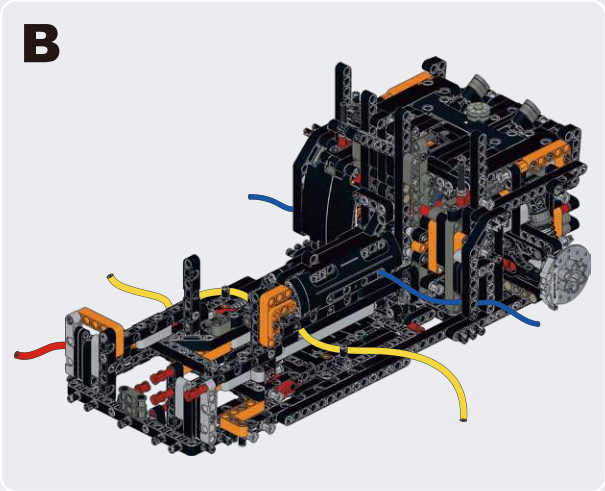

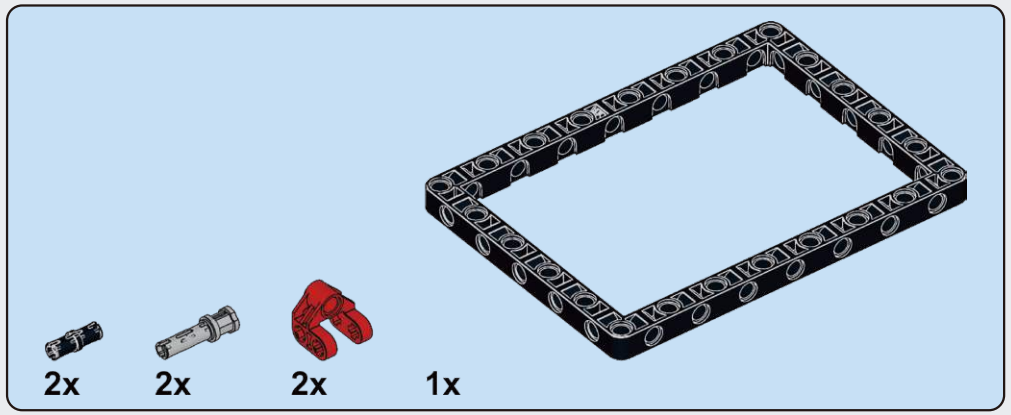

B1

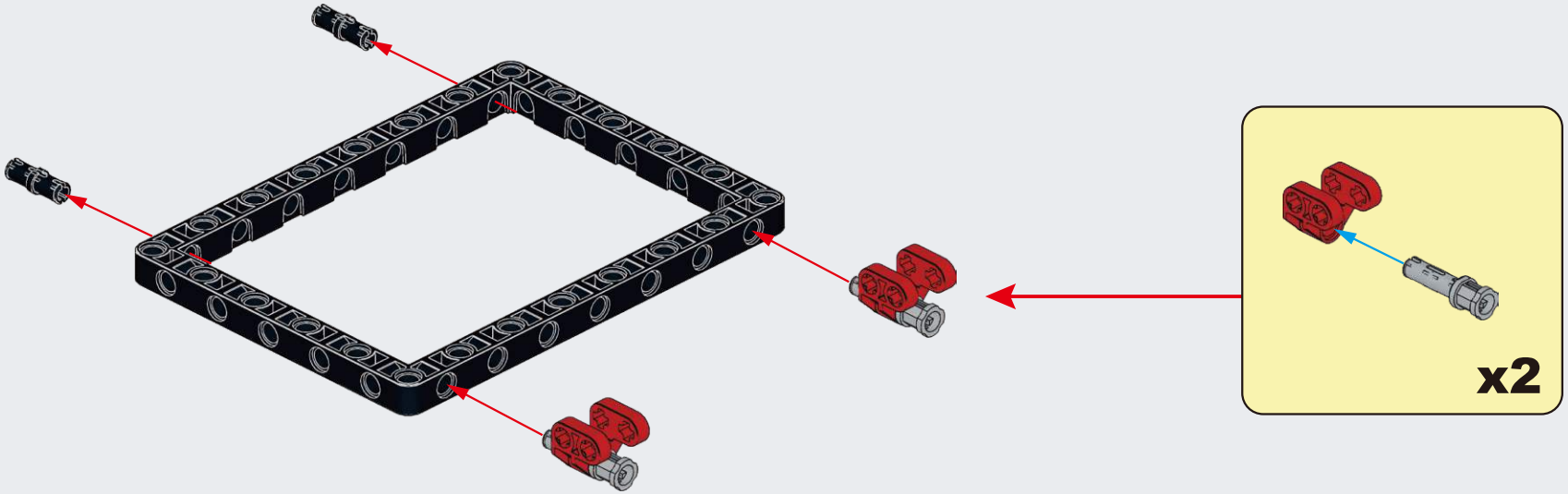

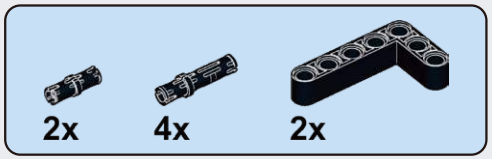

B2

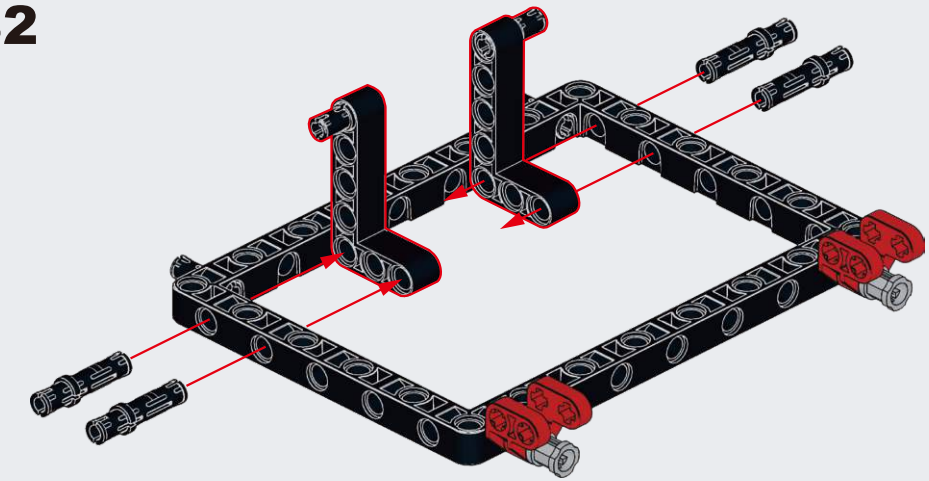

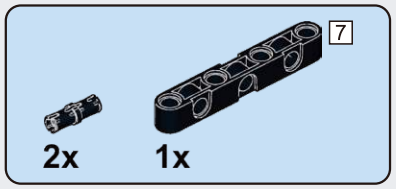

B3

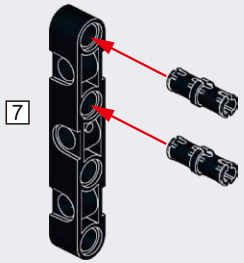

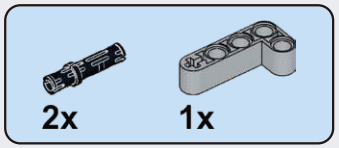

B4

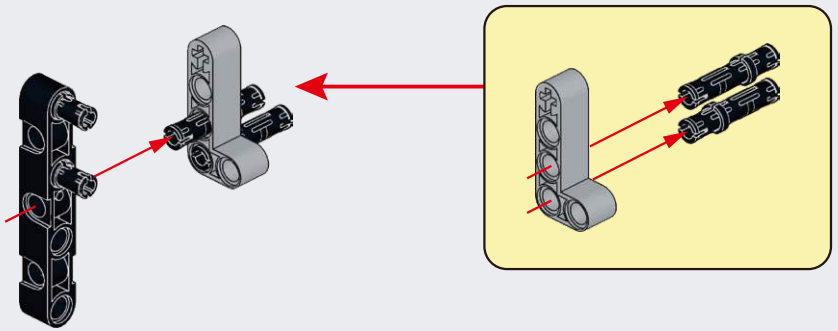

B5

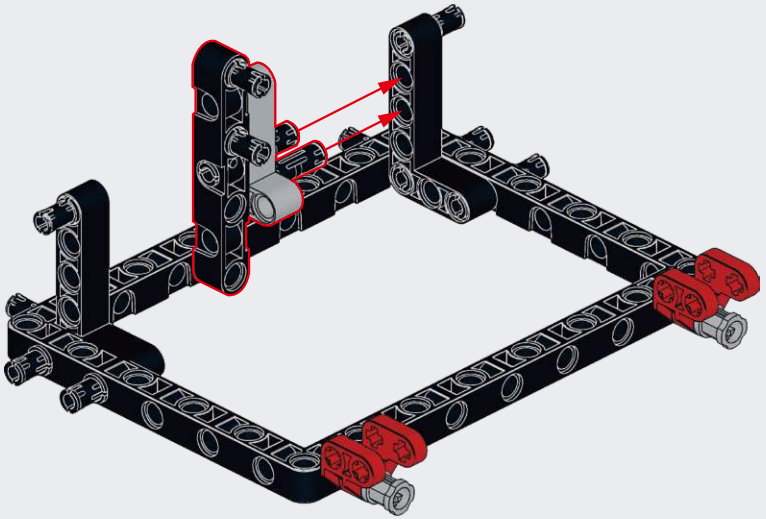

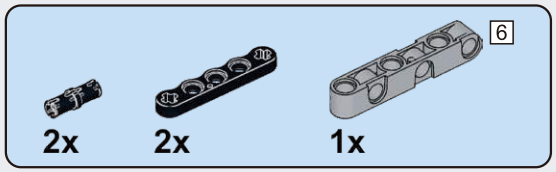

B6

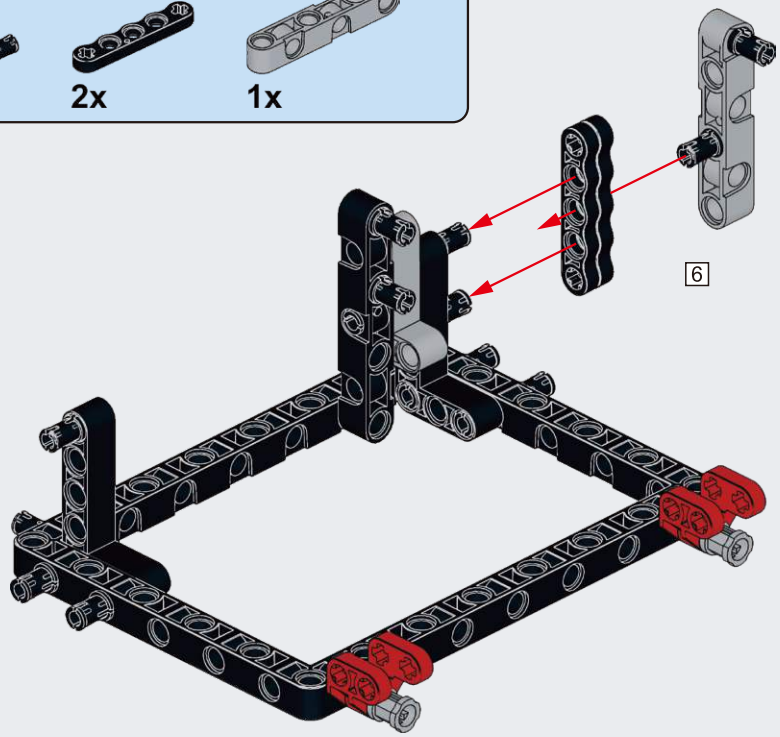

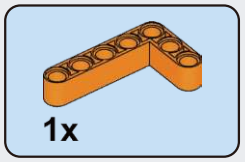

B7

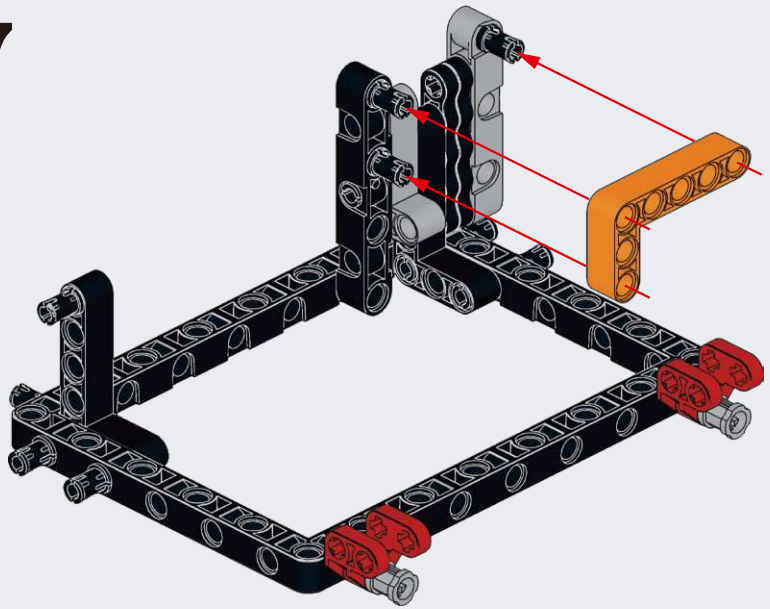

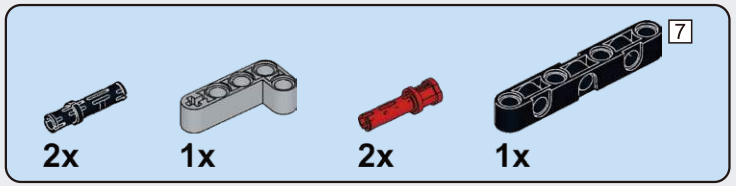

B8

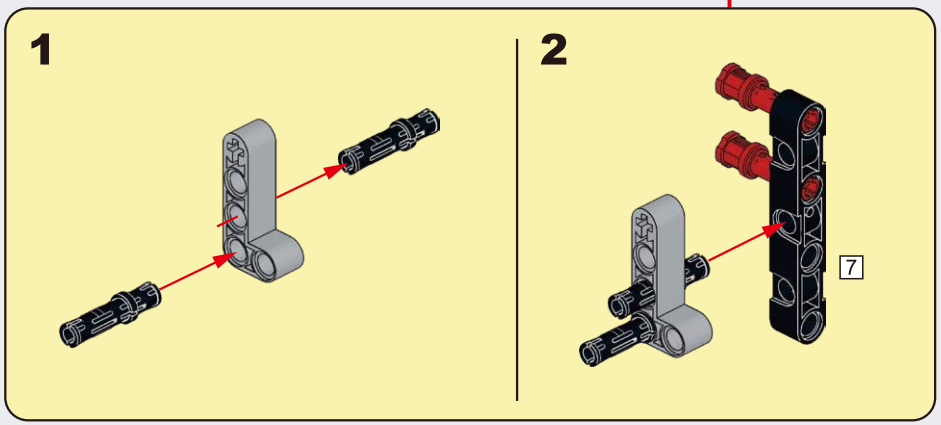

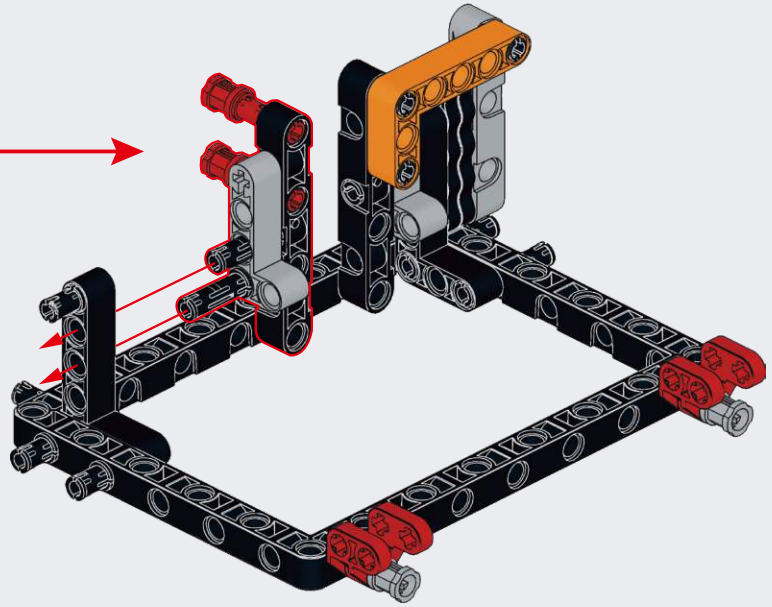

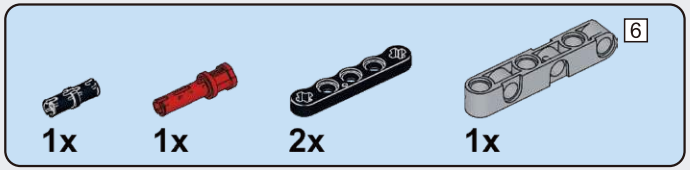

B9

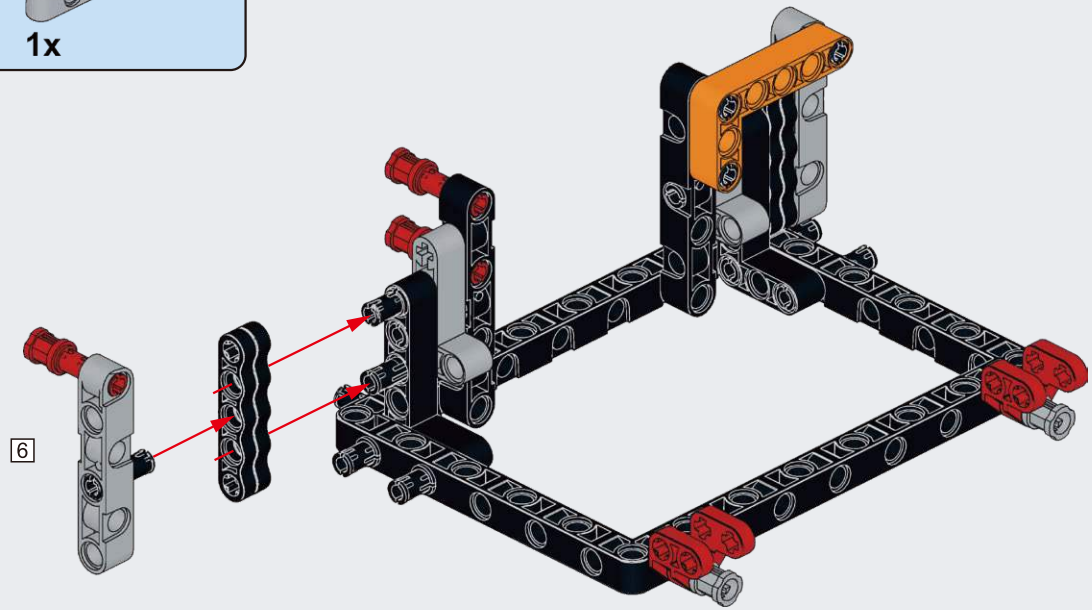

B10

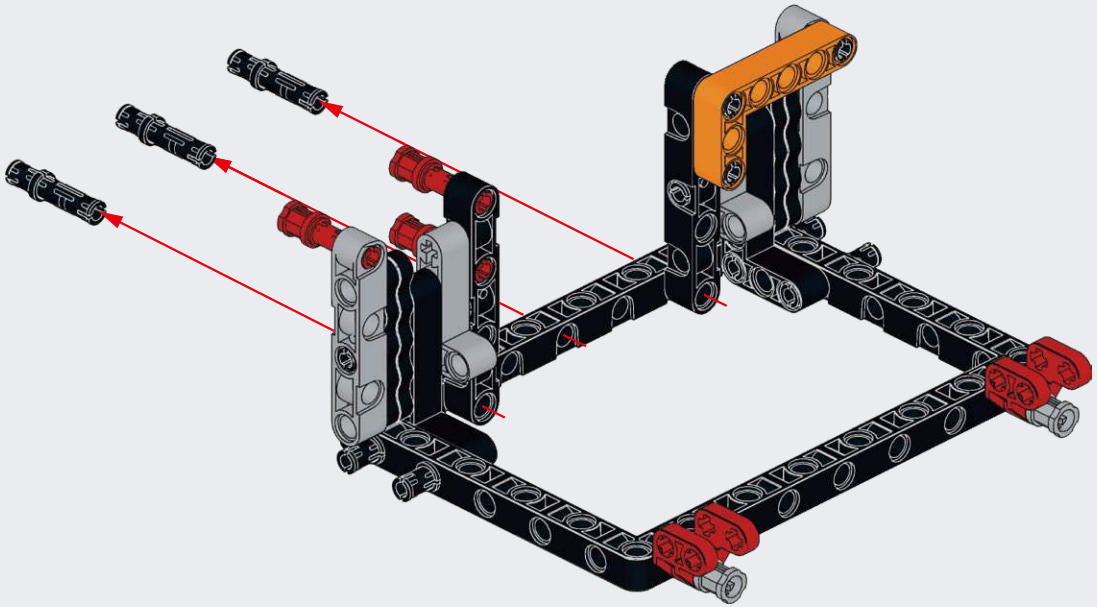

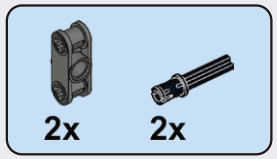

B11

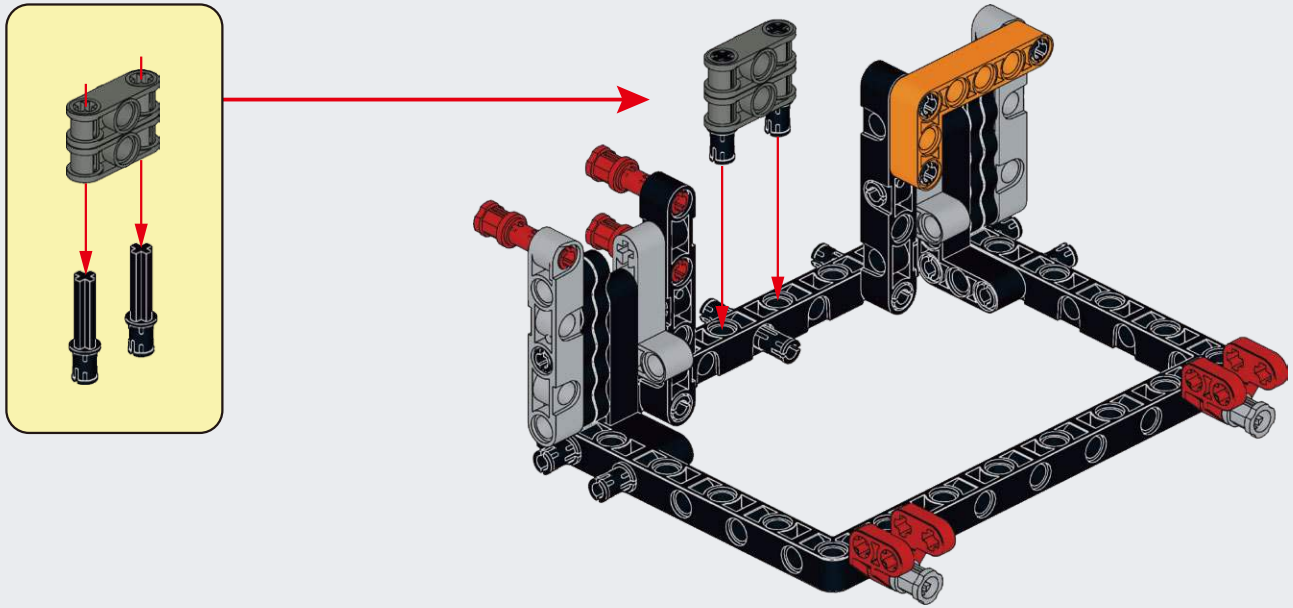

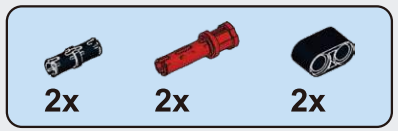

B12

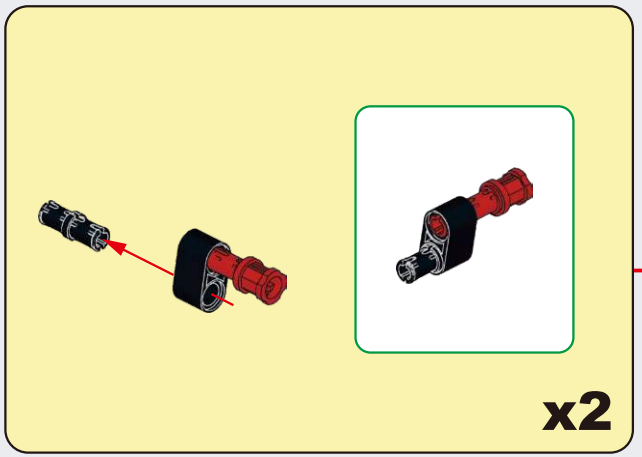

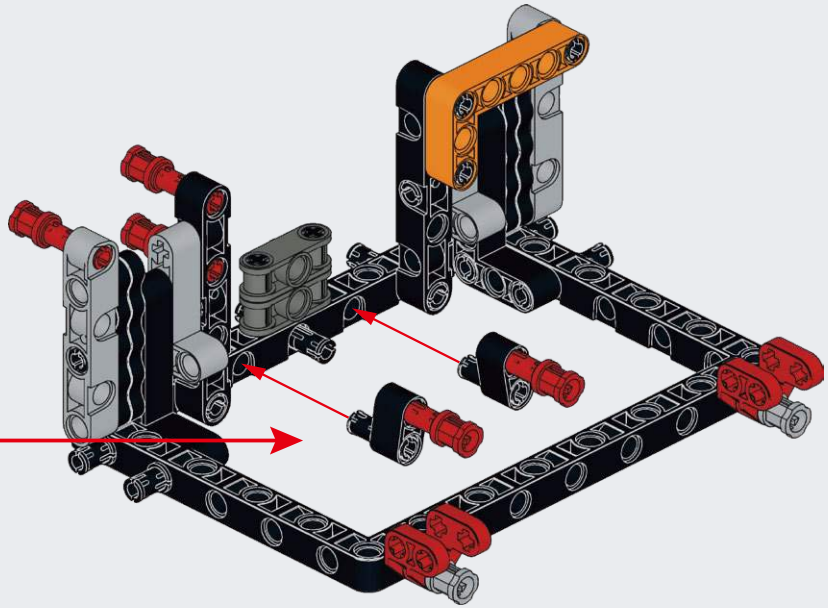

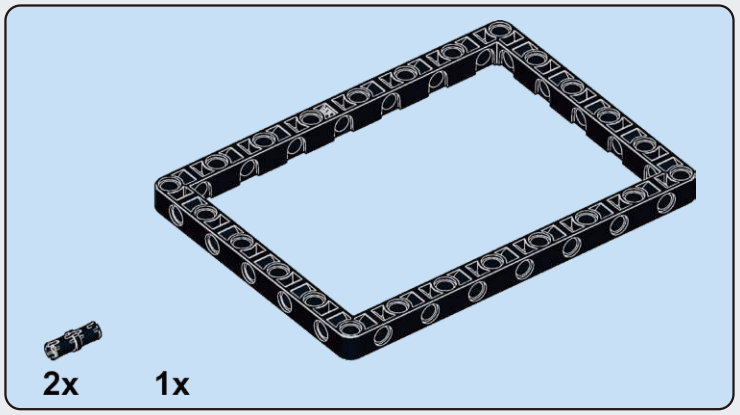

B13

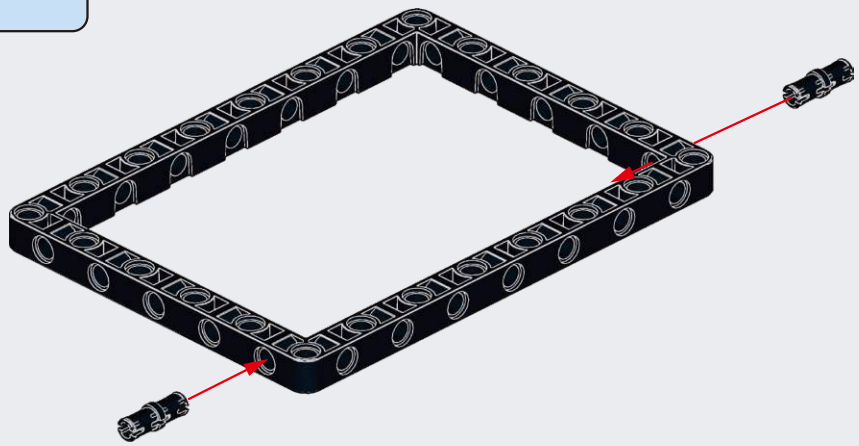

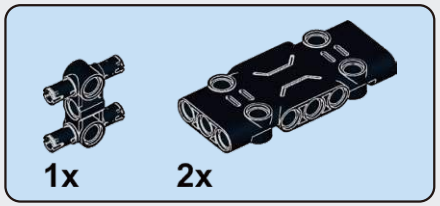

B14

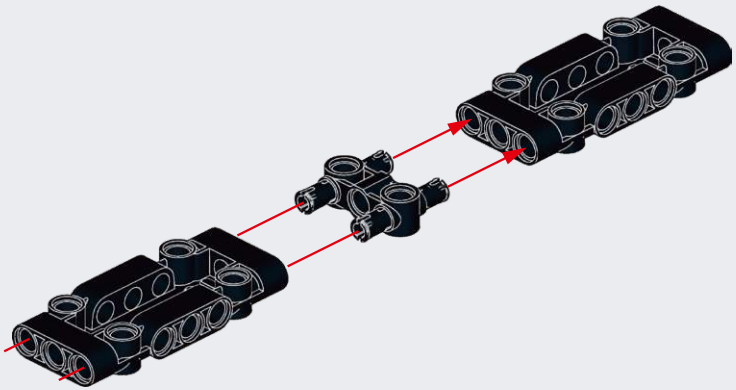

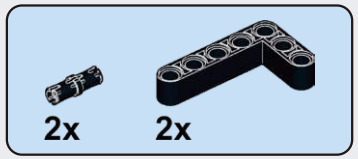

B15

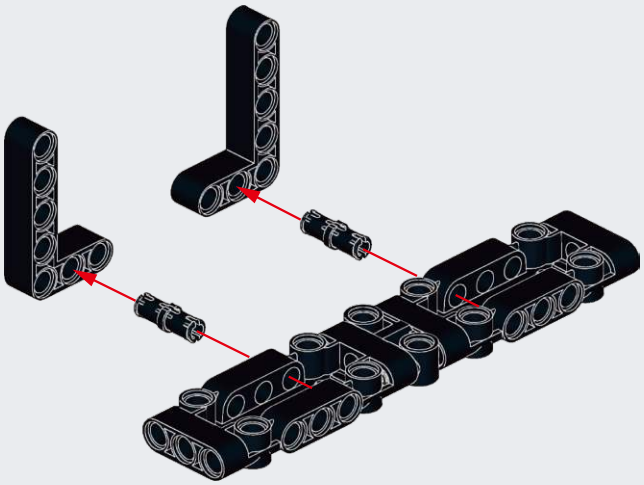

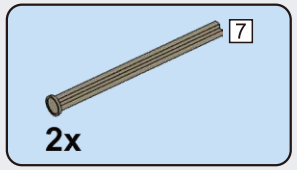

B16

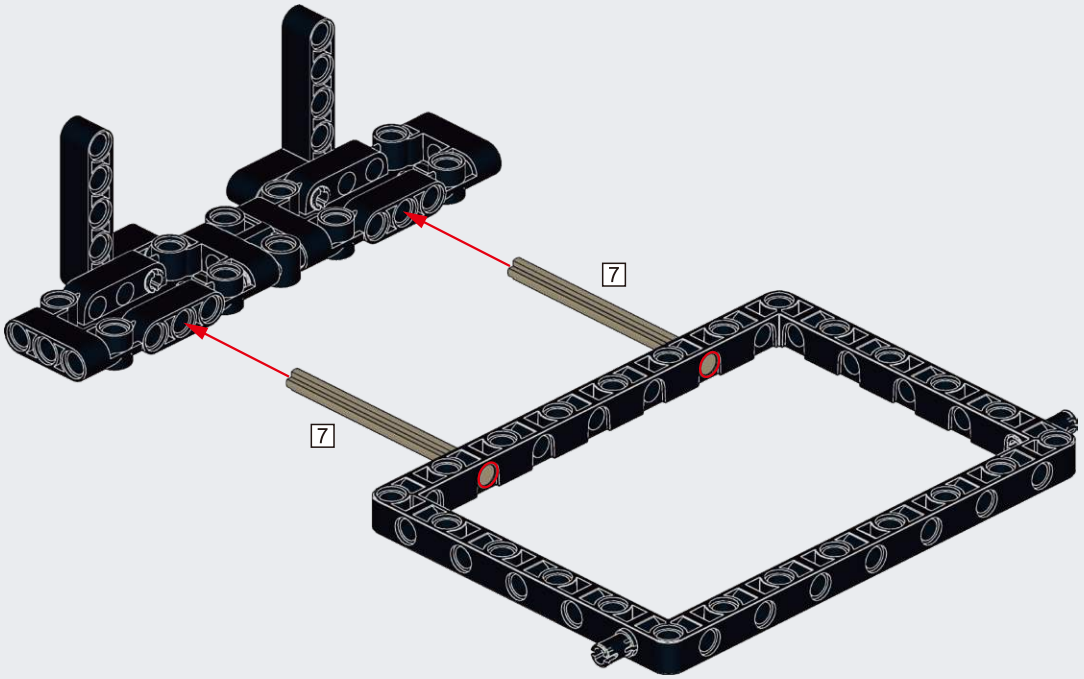

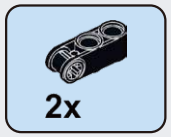

B17

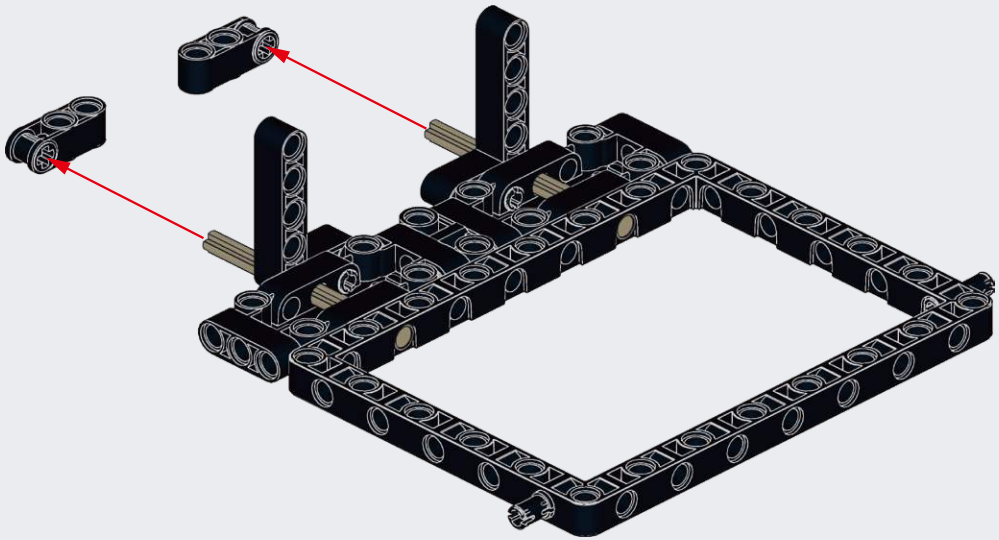

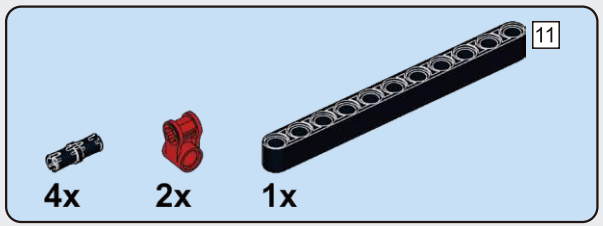

B18

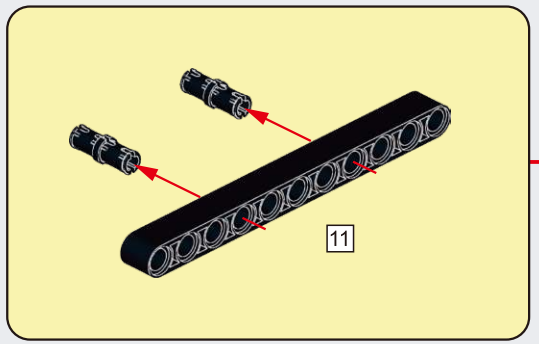

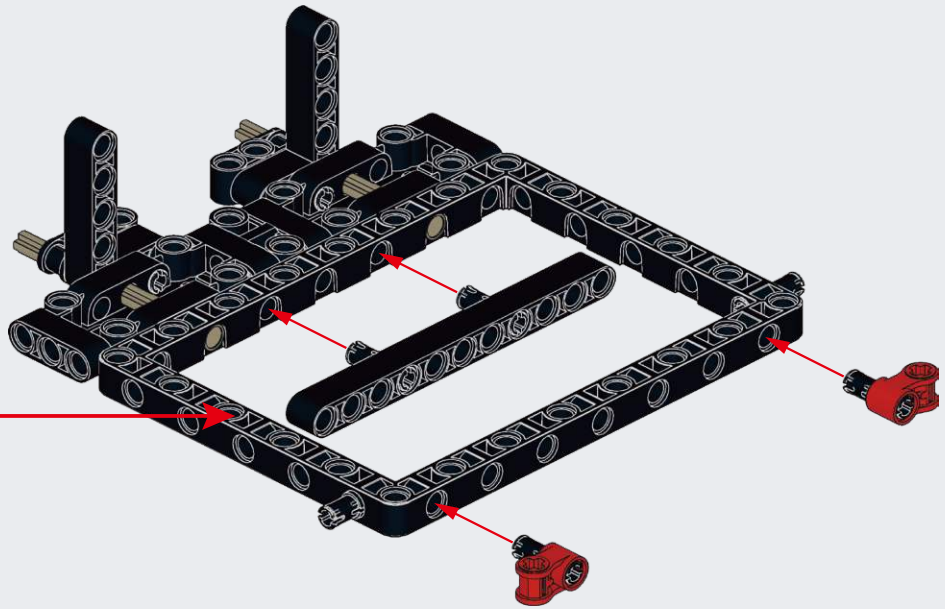

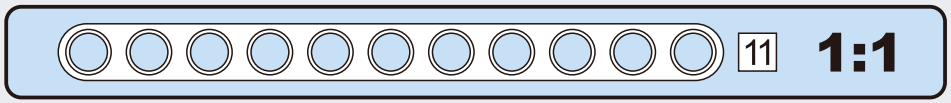

B19

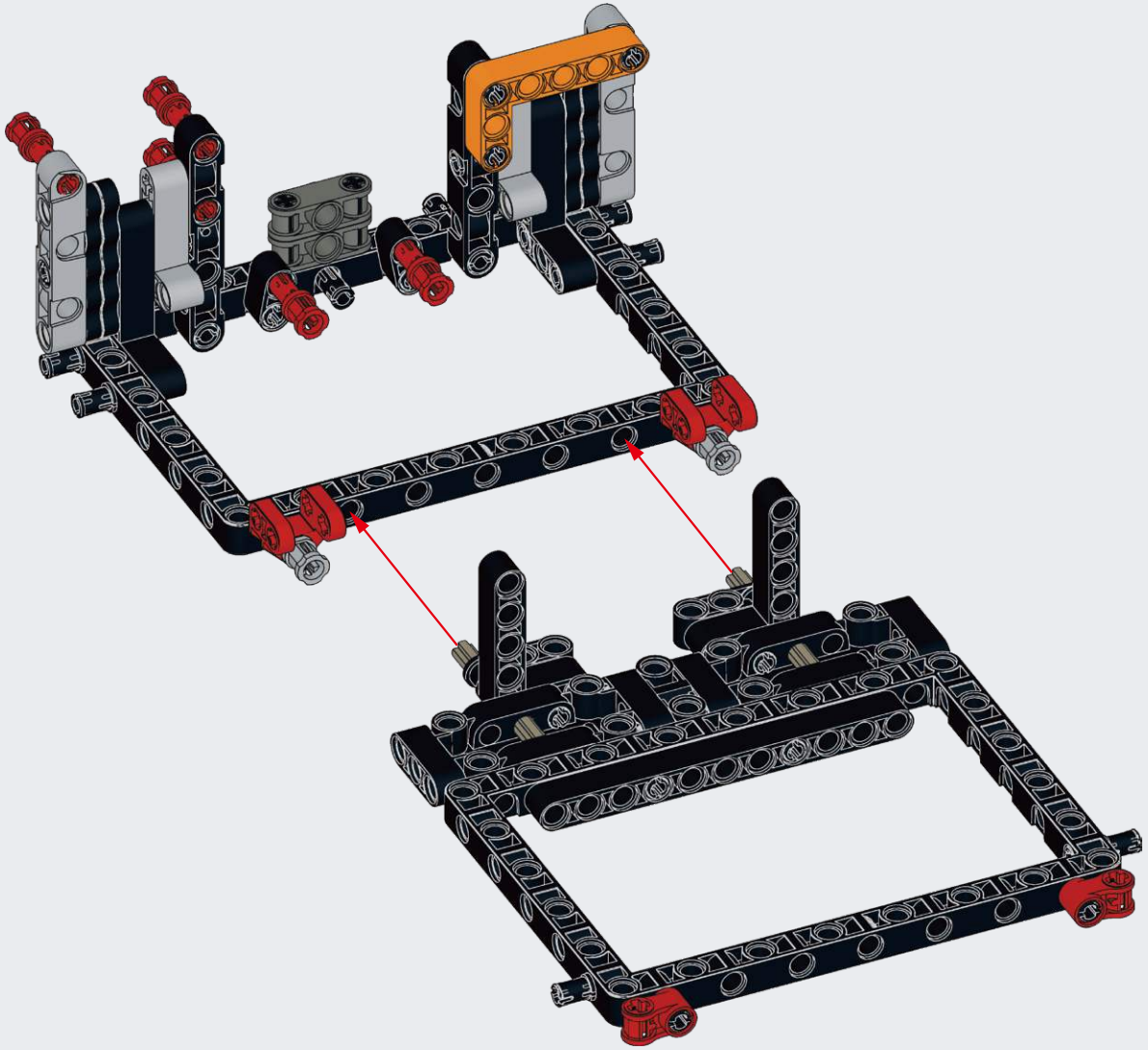

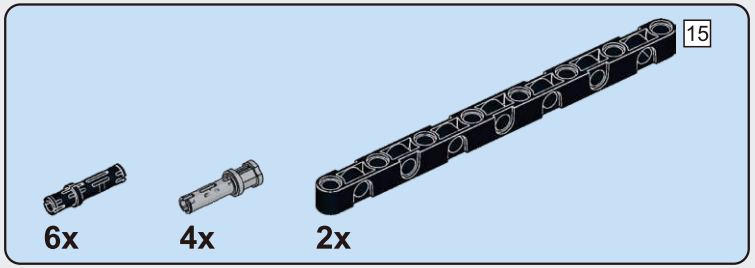

B20

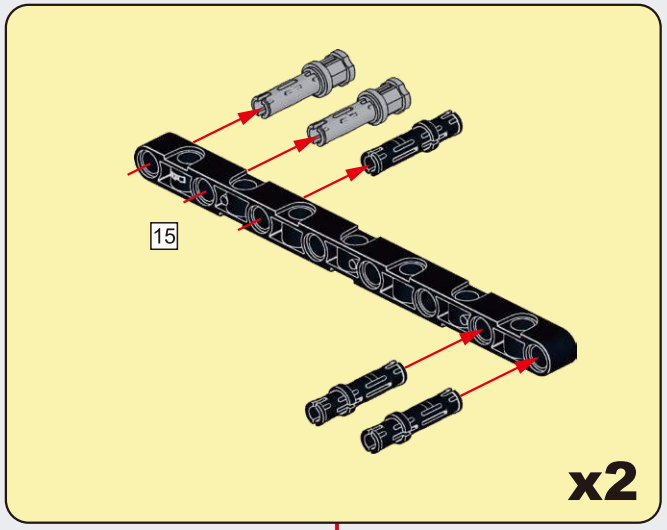

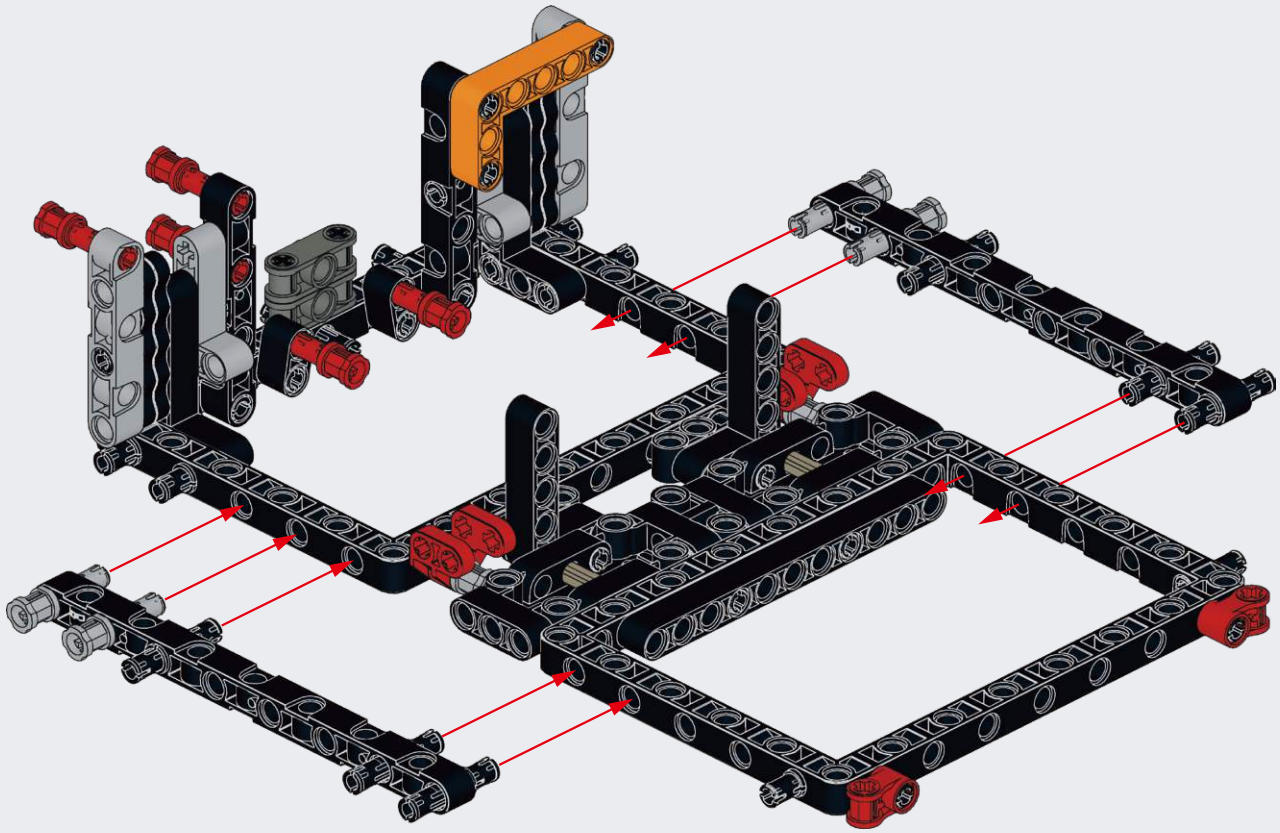

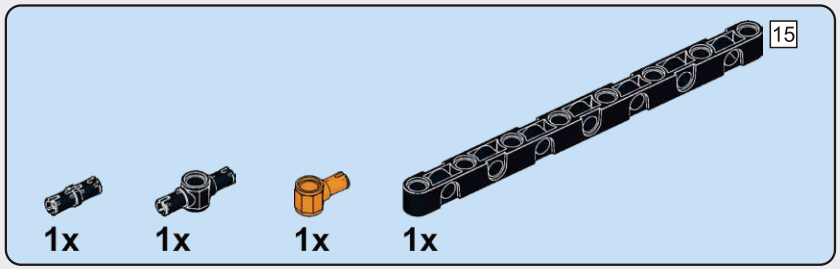

B21

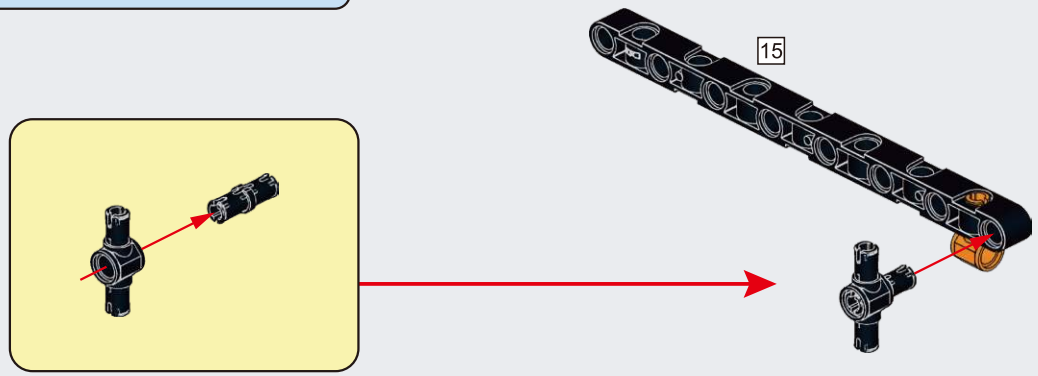

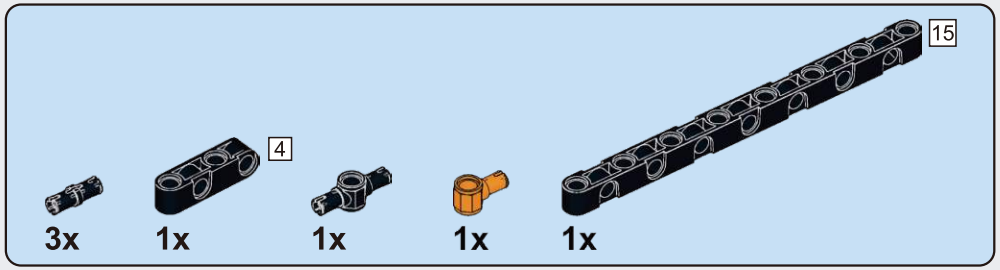

B22

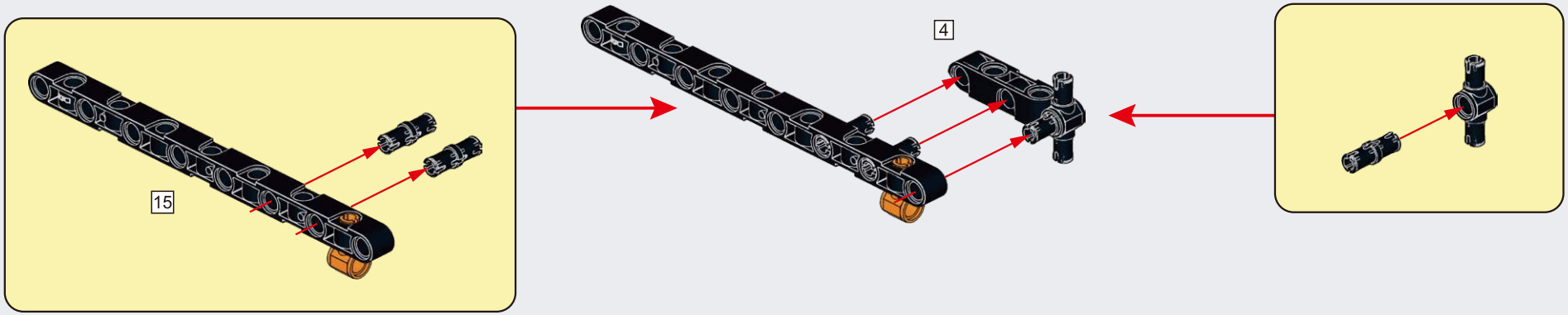

B23

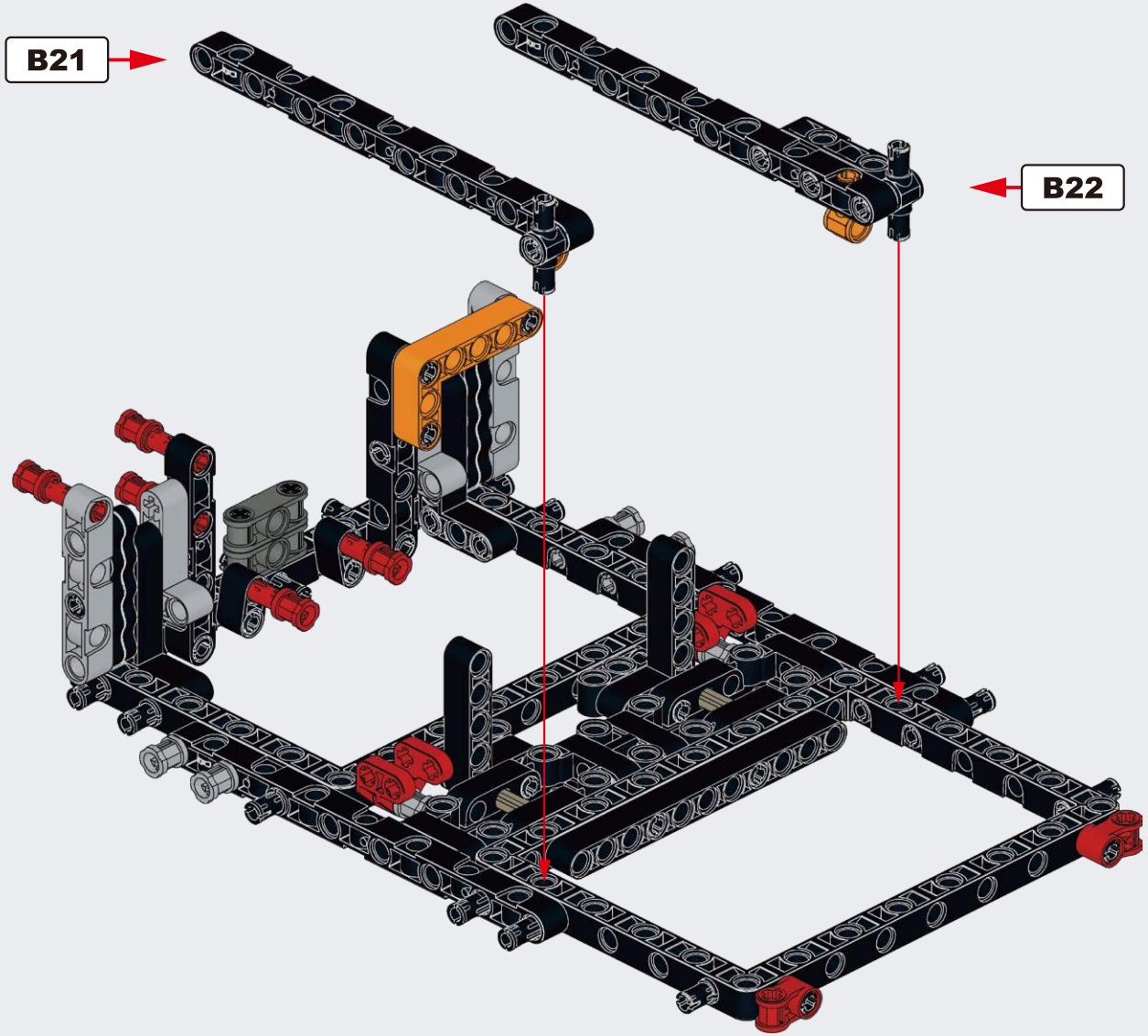

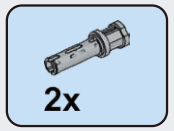

B24

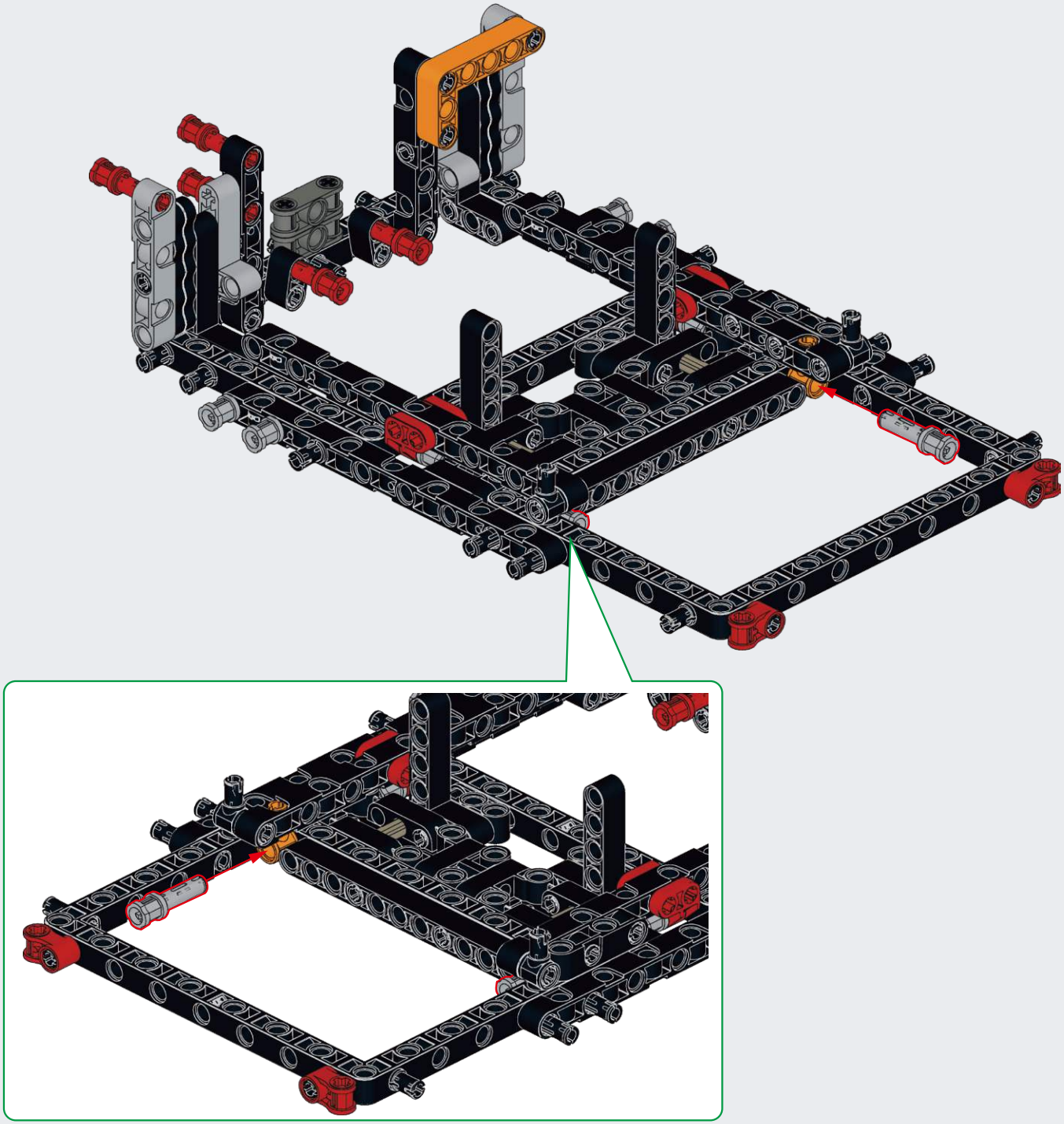

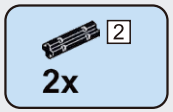

B25

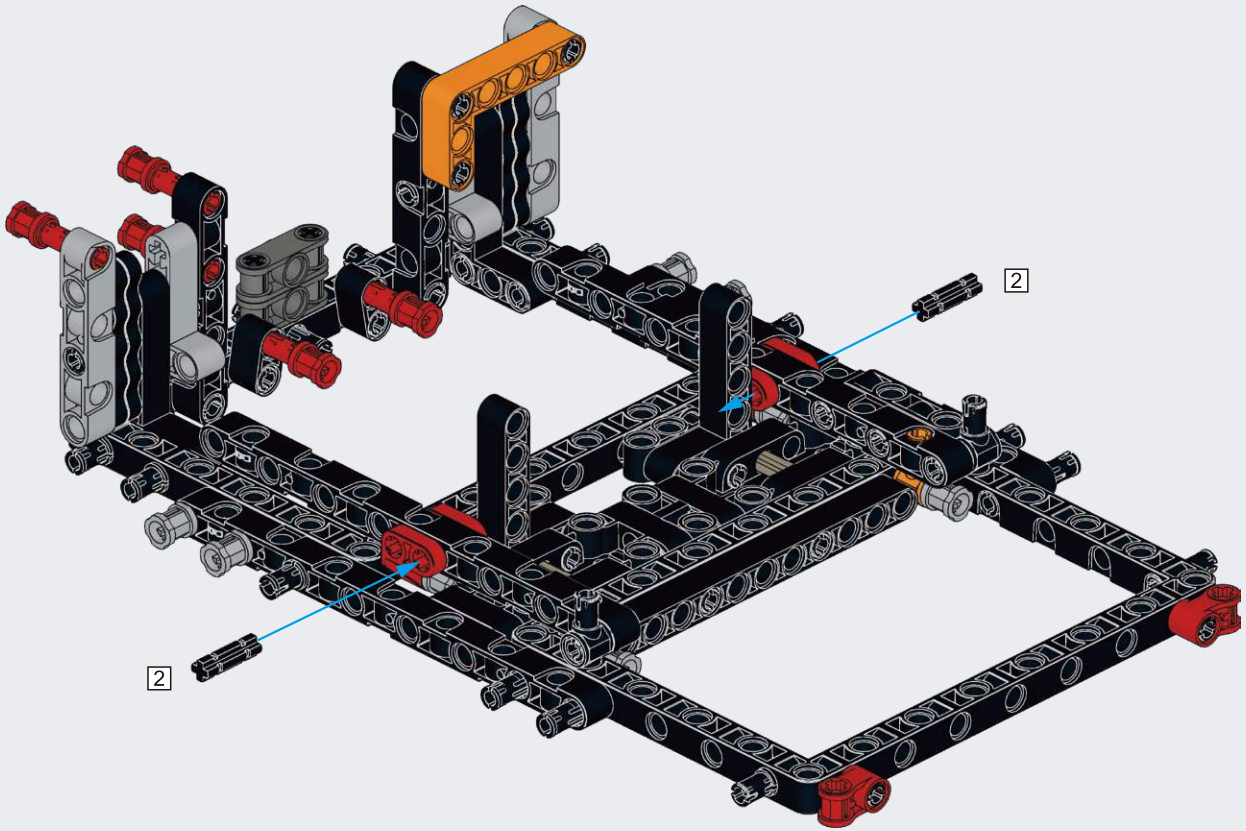

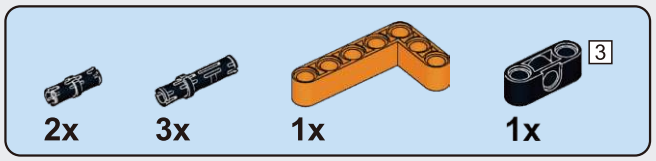

B26

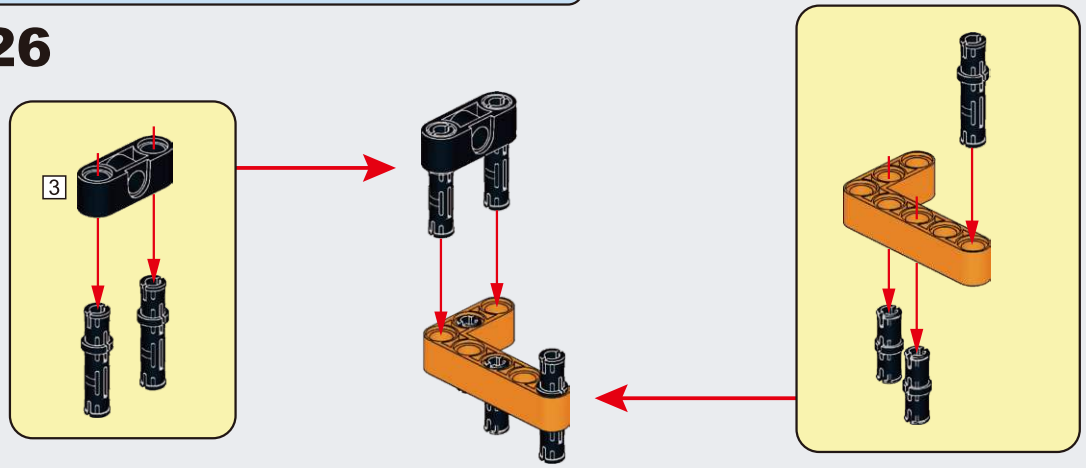

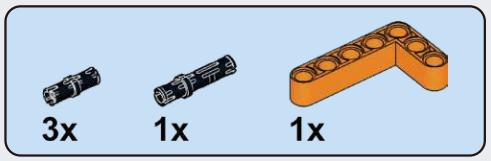

B27

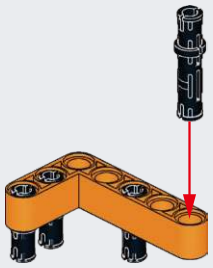

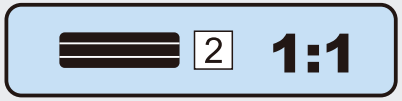

B28

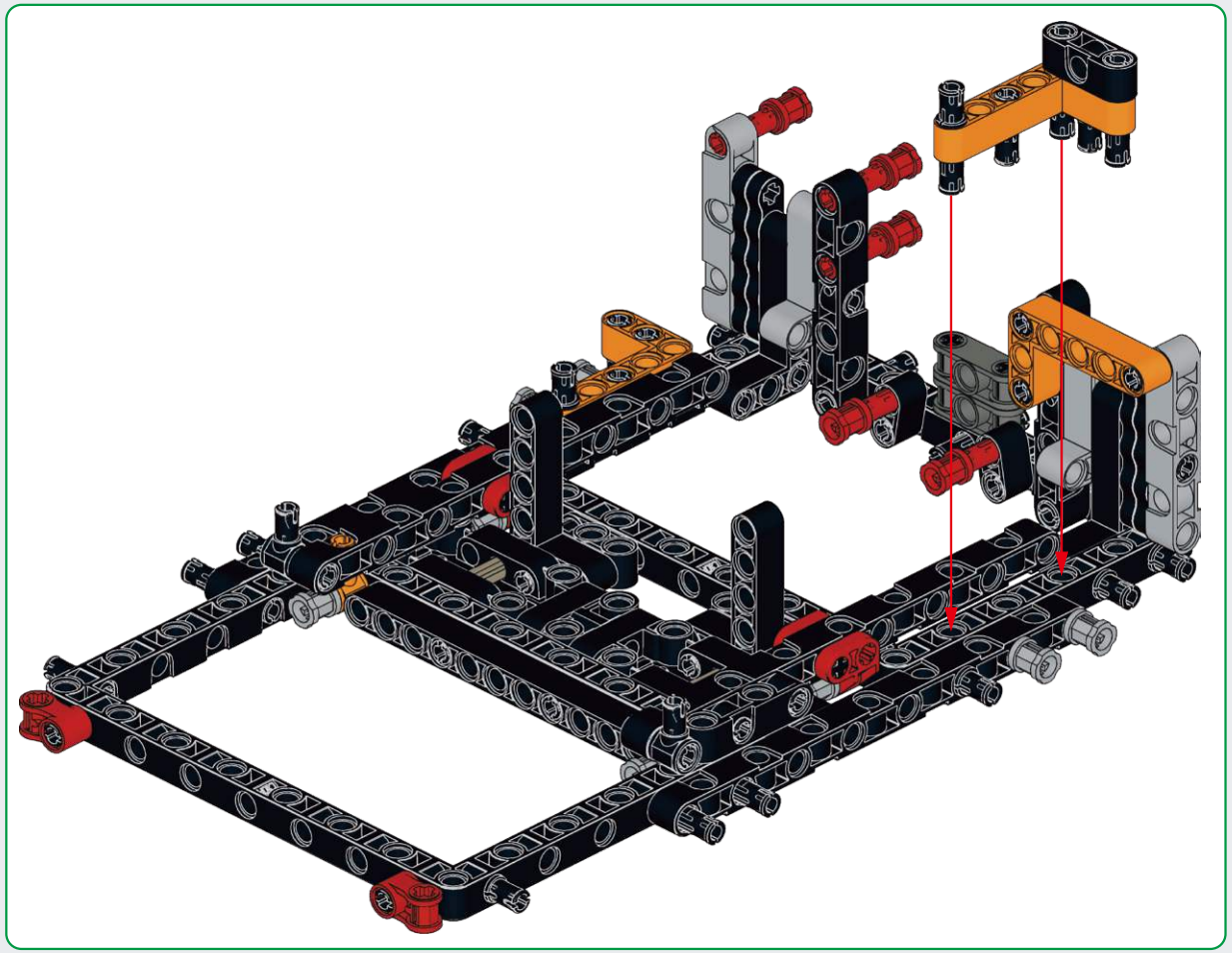

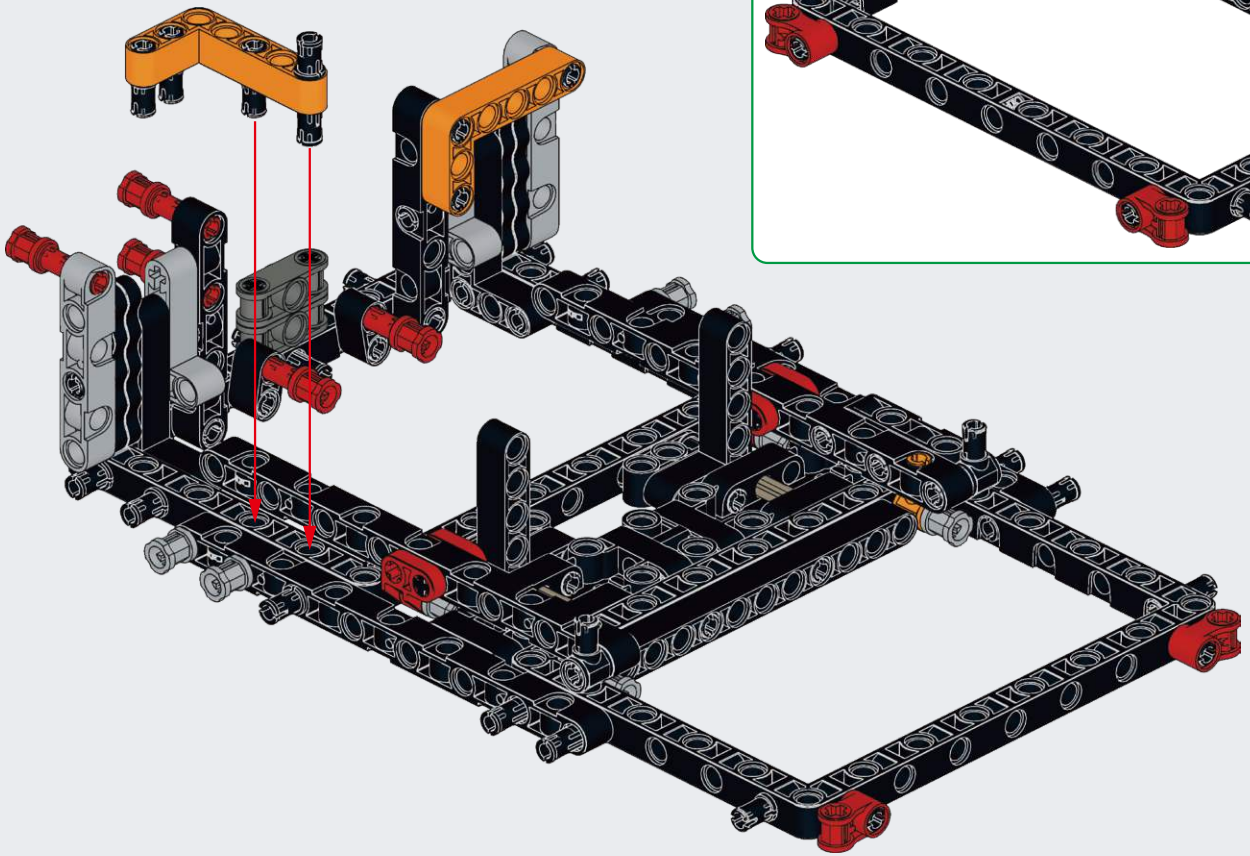

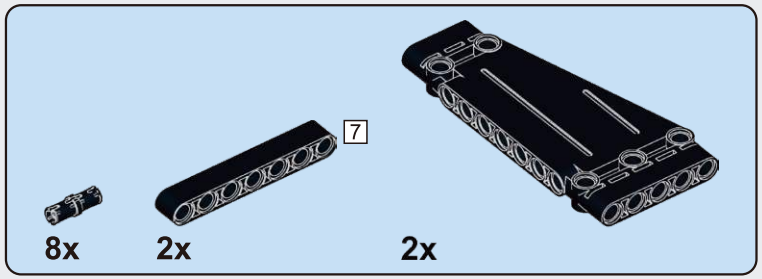

B29

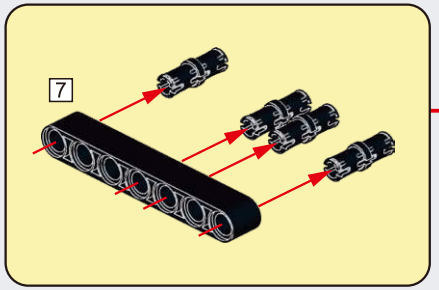

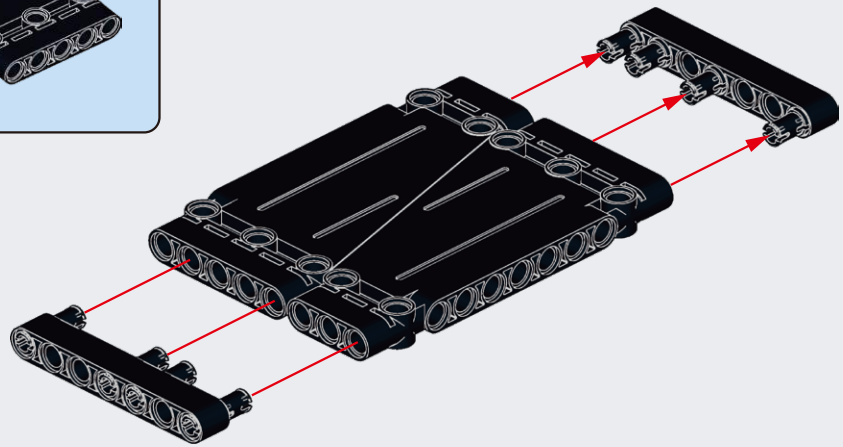

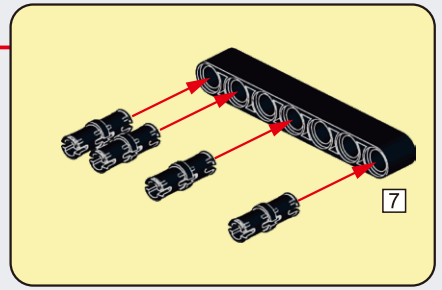

B30

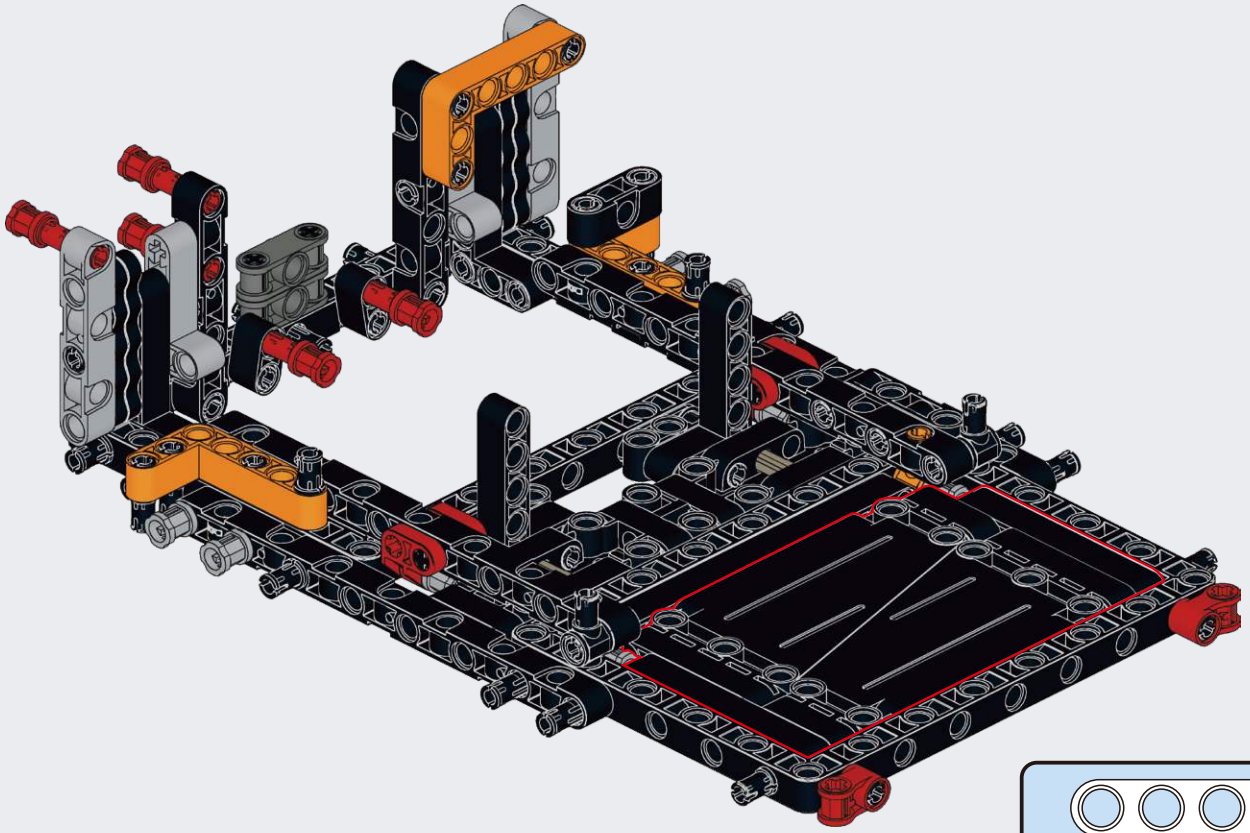

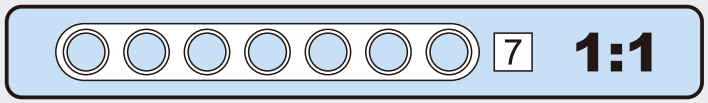

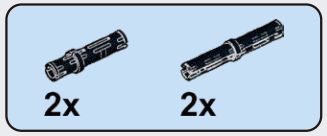

B31

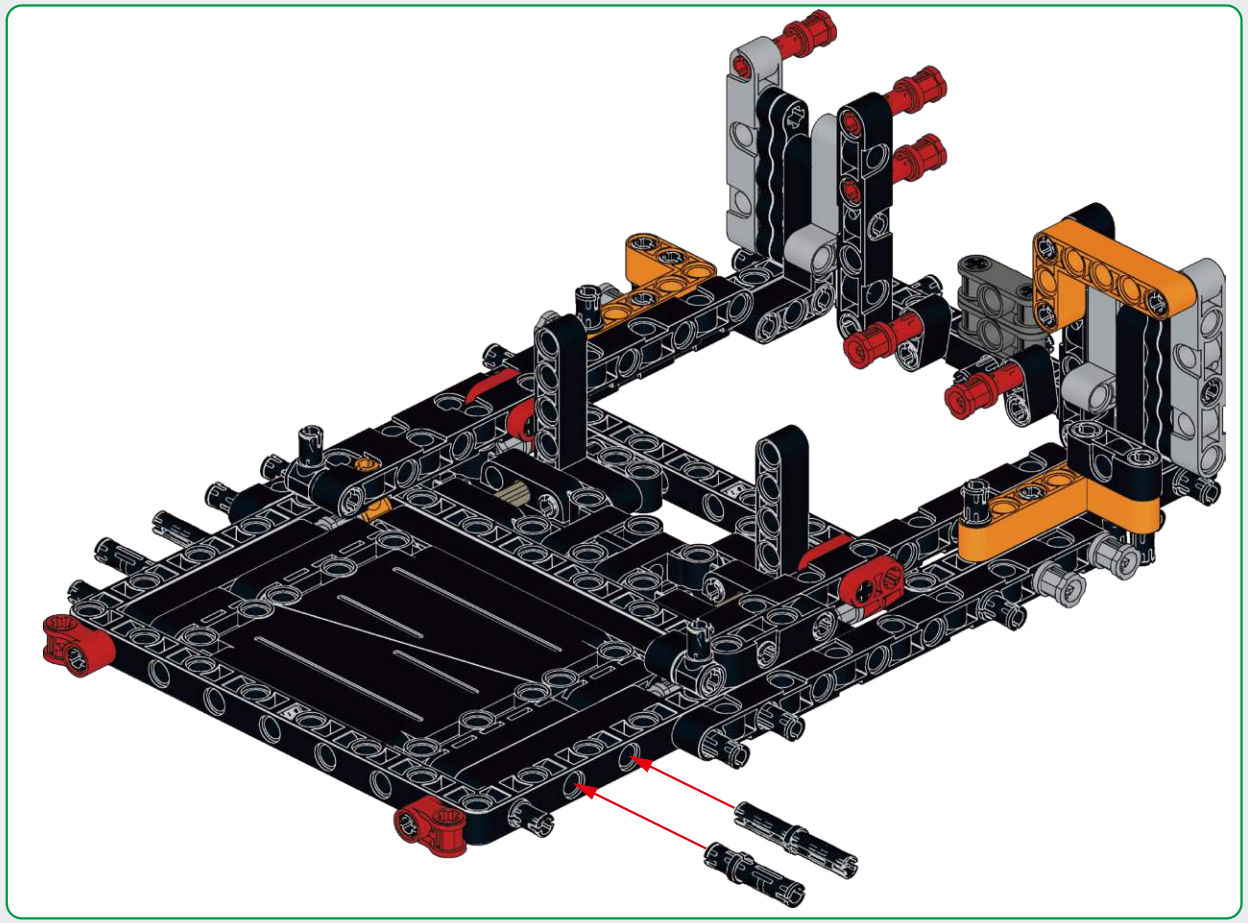

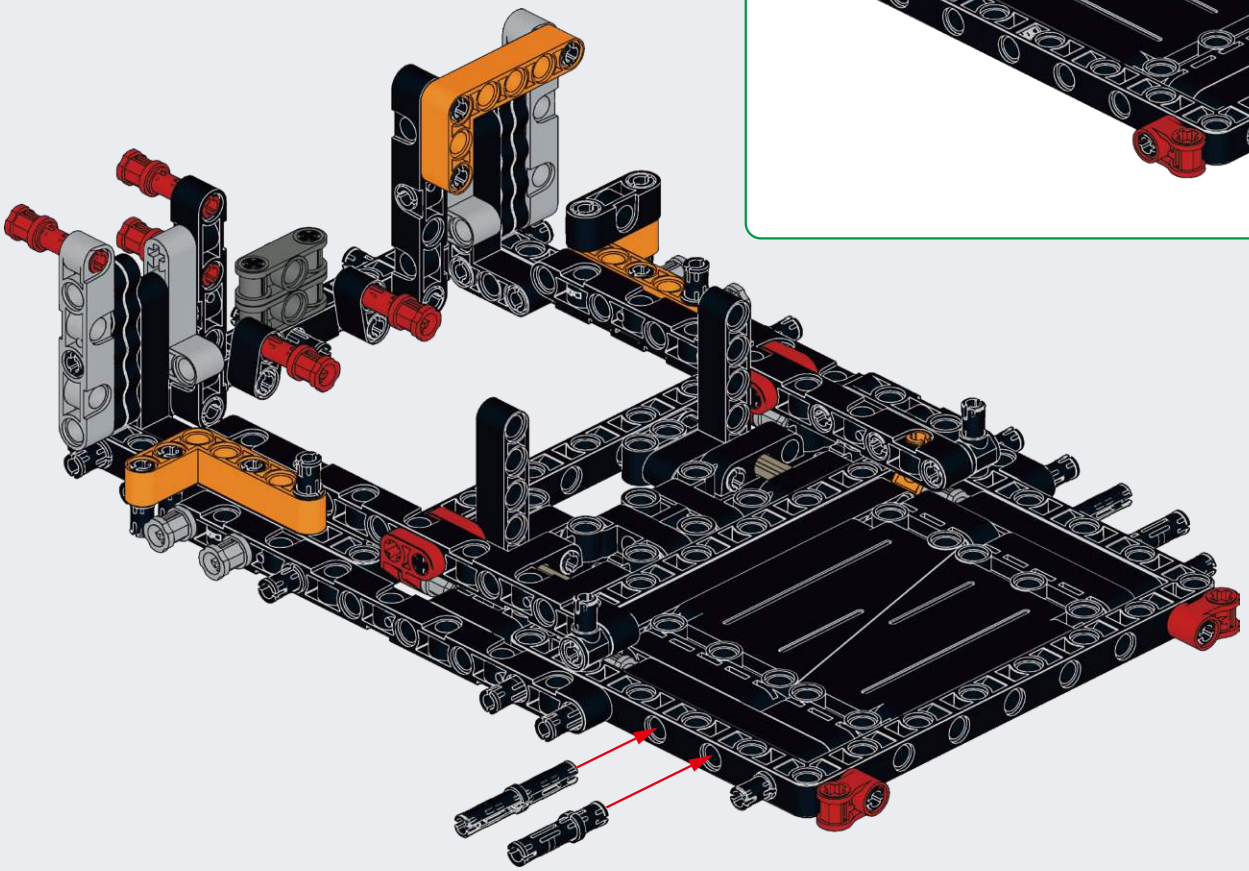

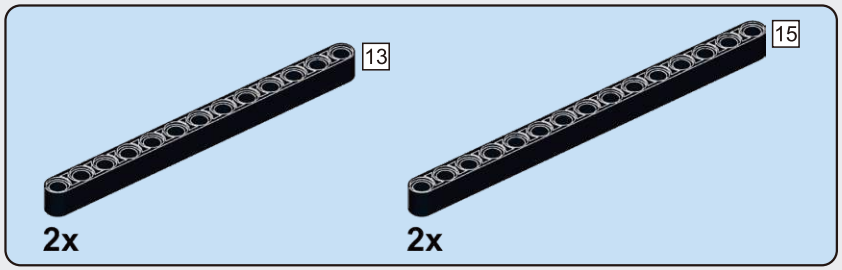

B32

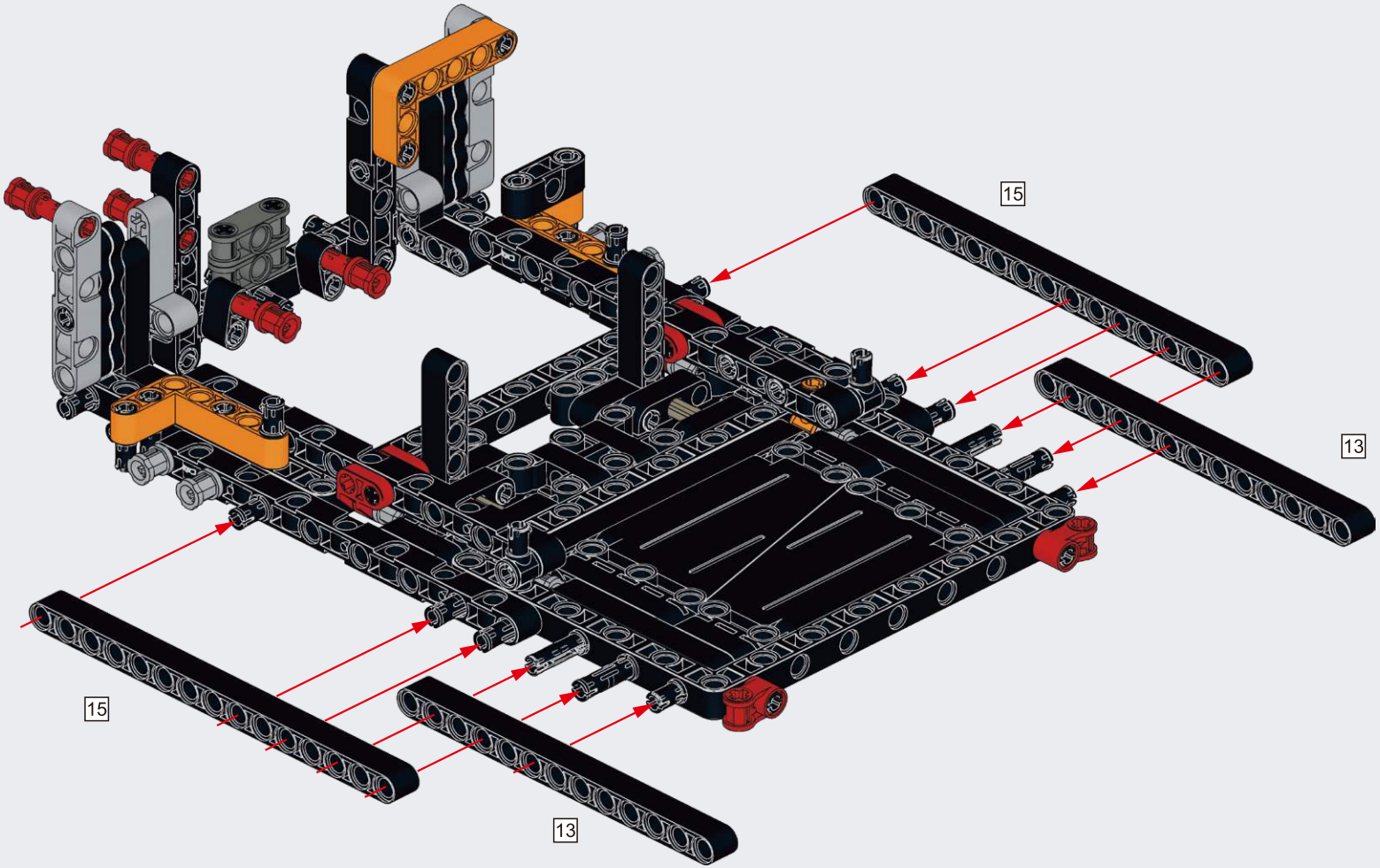

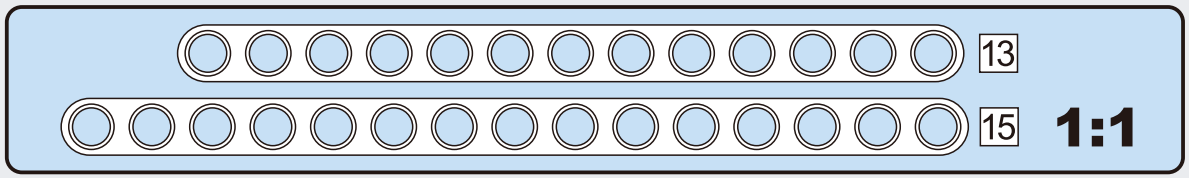

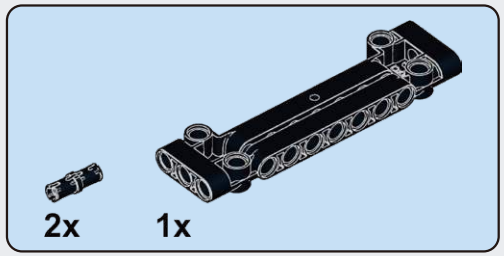

B33

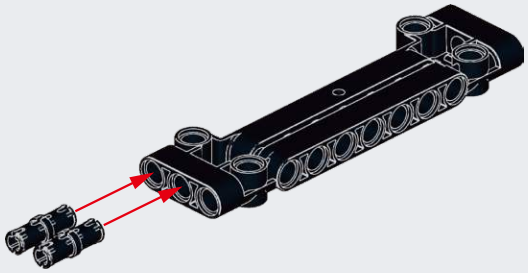

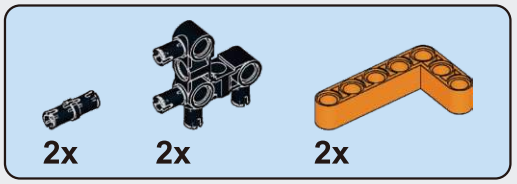

B34

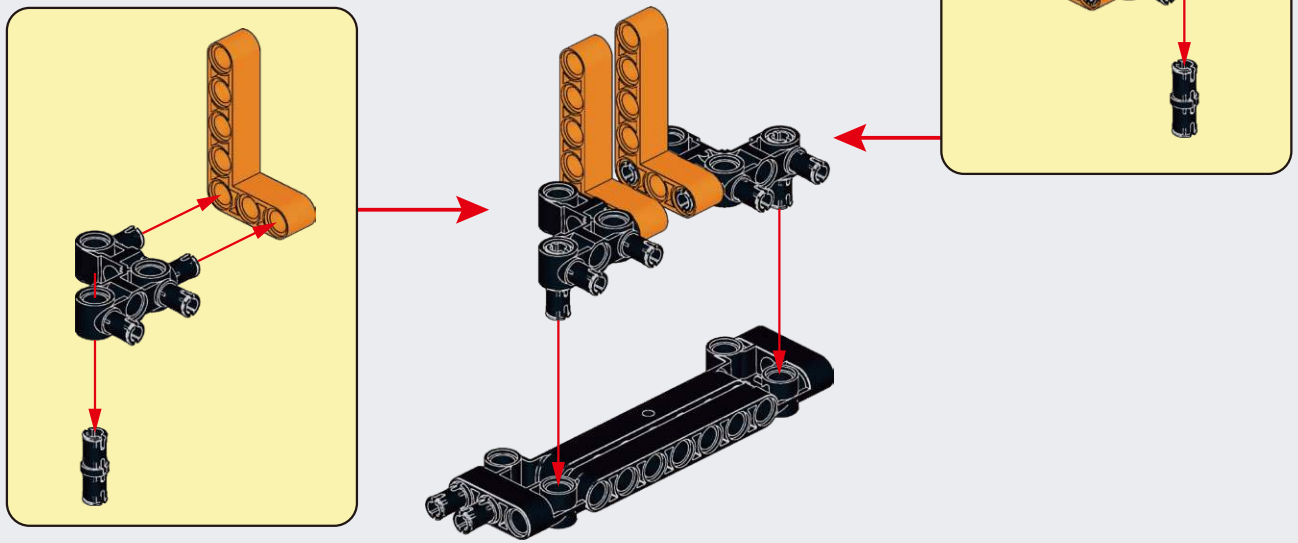

B35

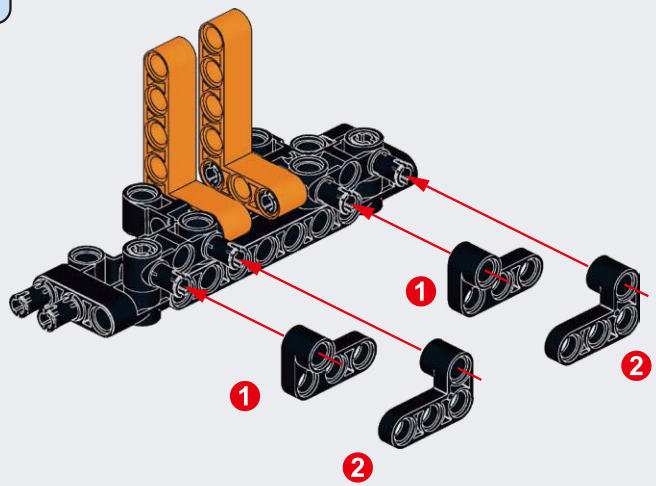

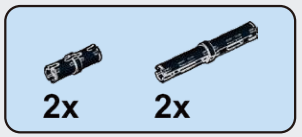

B36

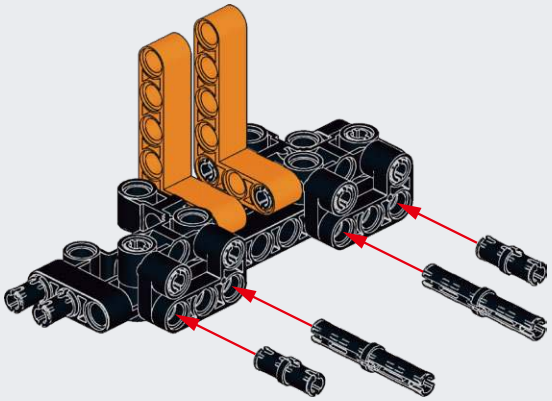

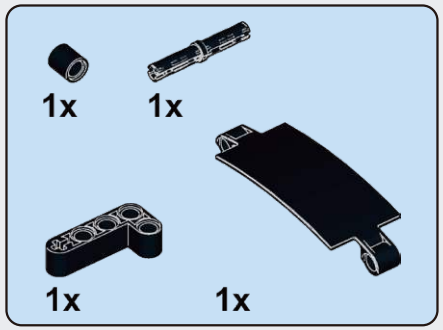

B37

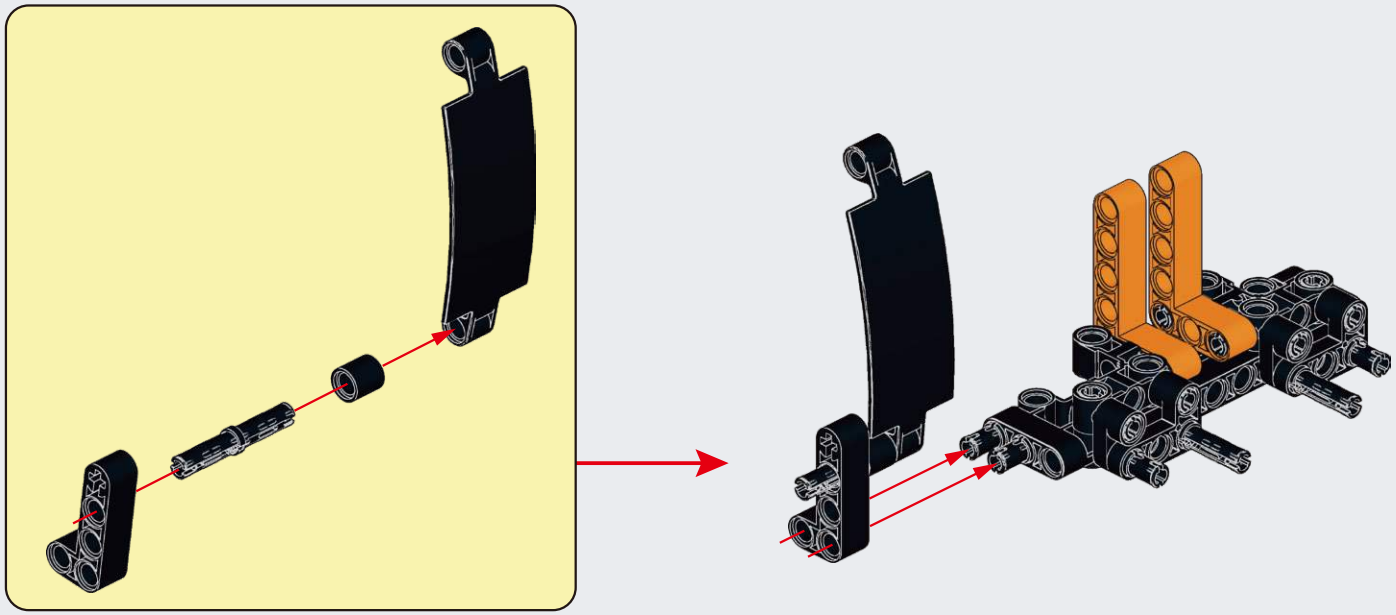

B38

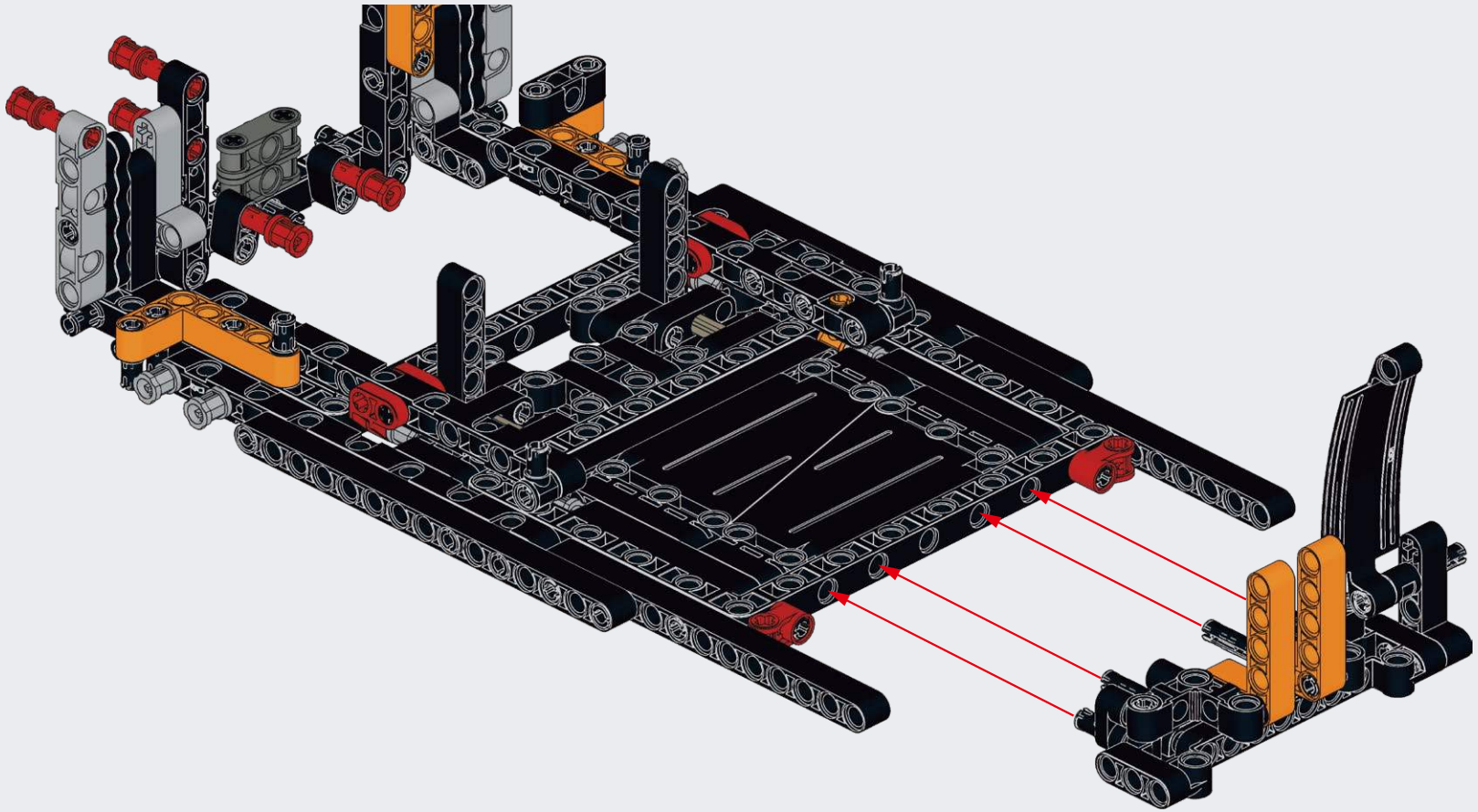

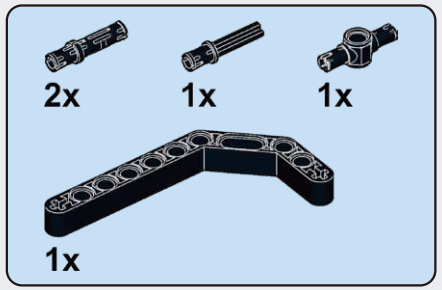

B39

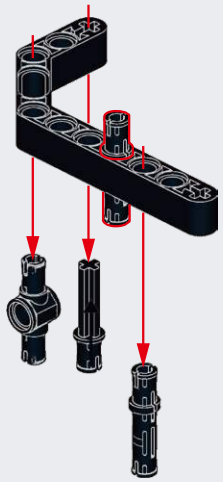

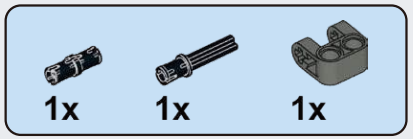

B40

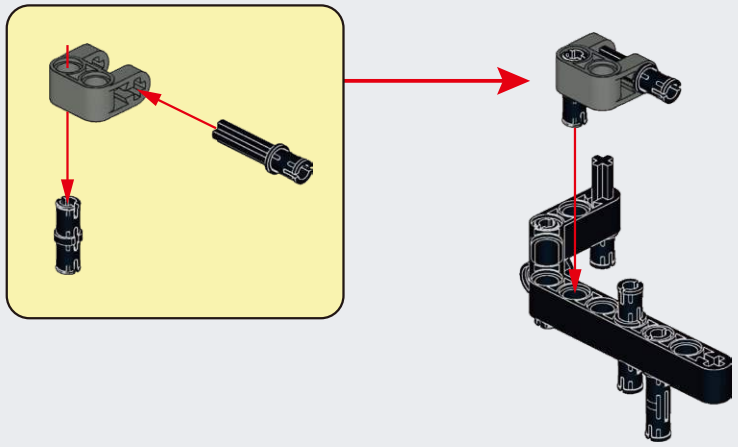

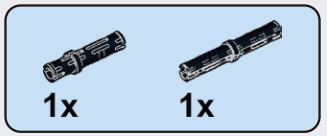

B41

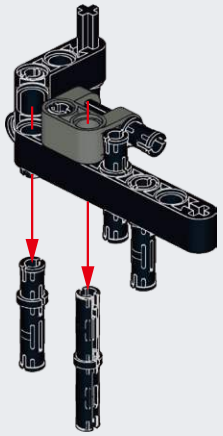

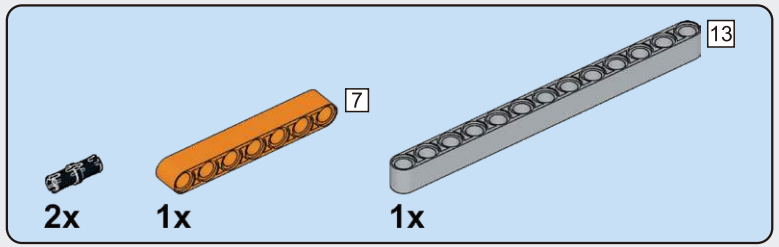

B42

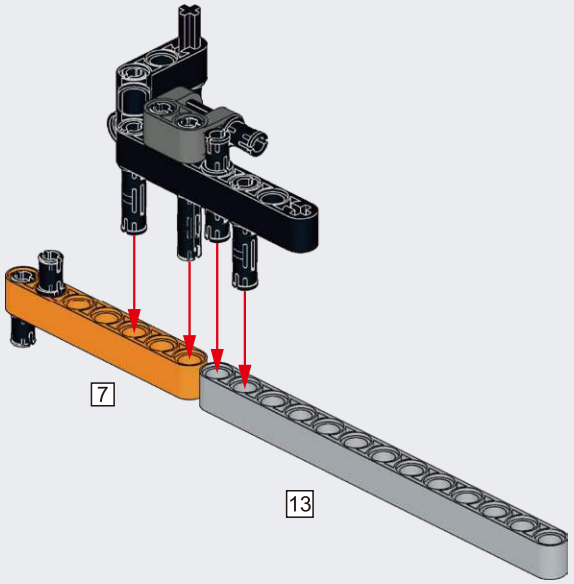

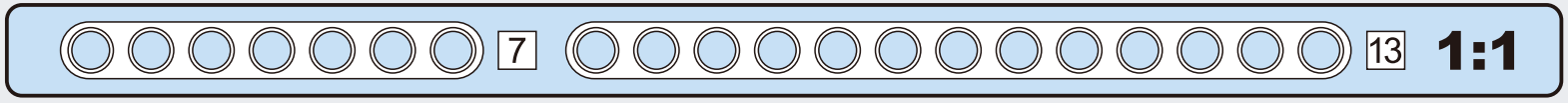

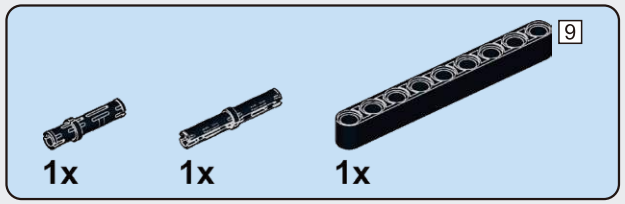

B43

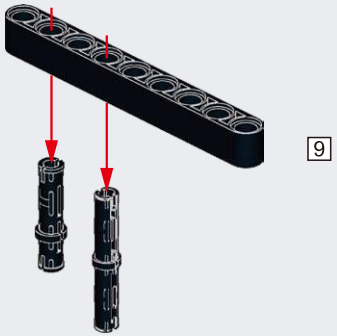

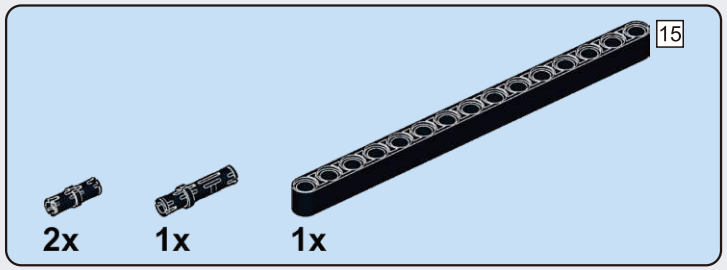

B44

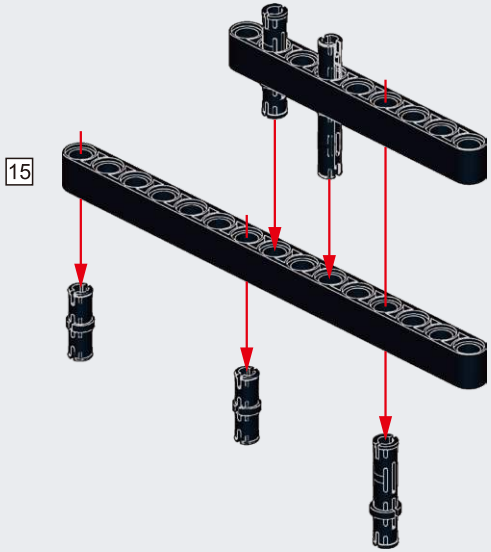

B45

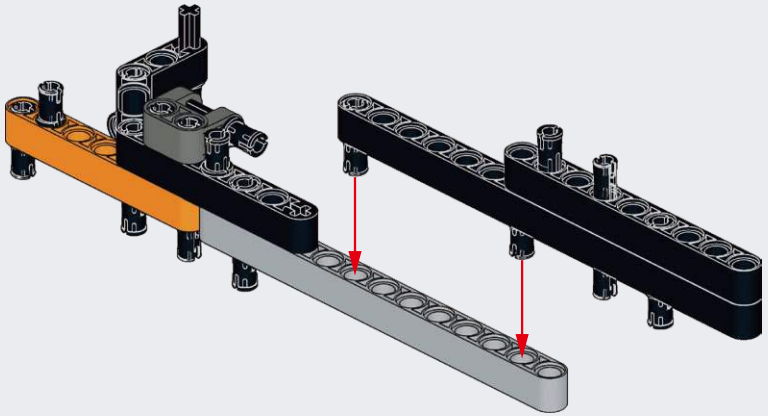

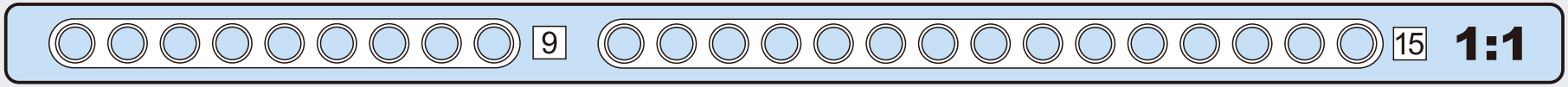

B46

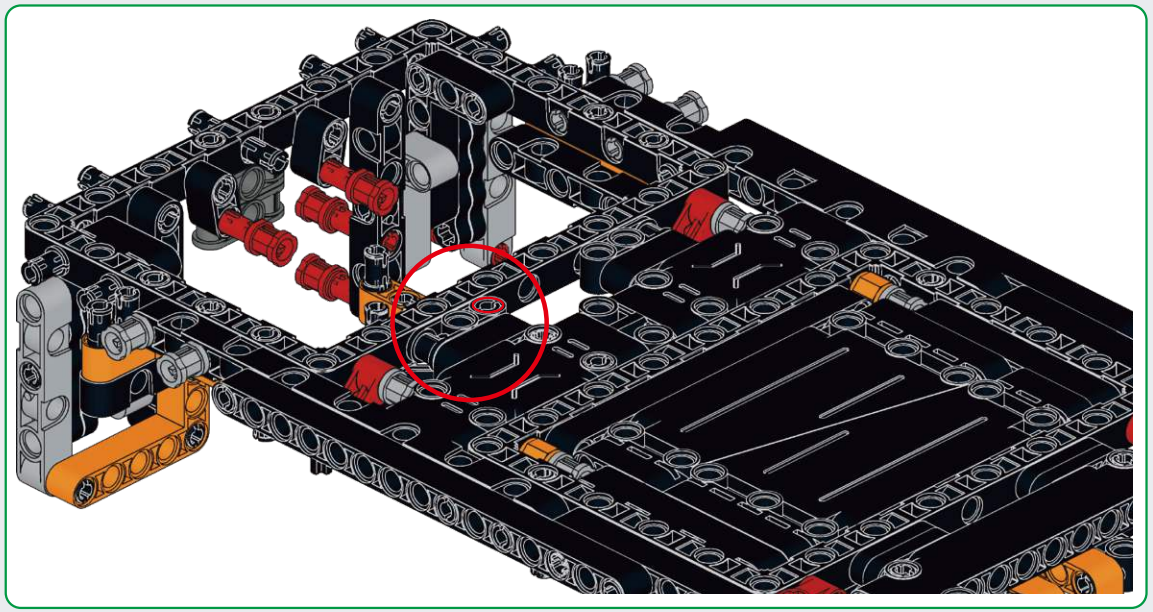

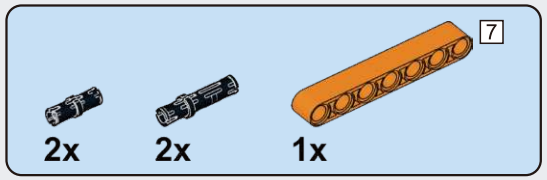

B47

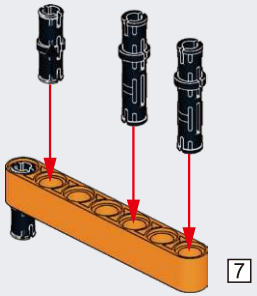

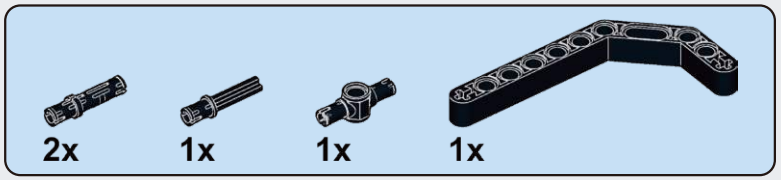

B48

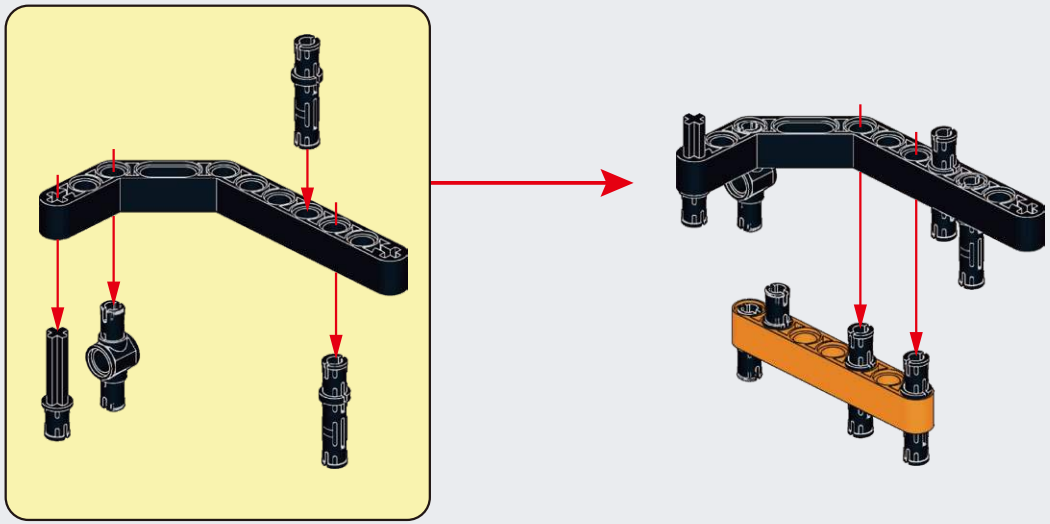

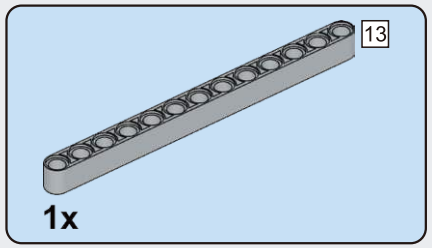

B49

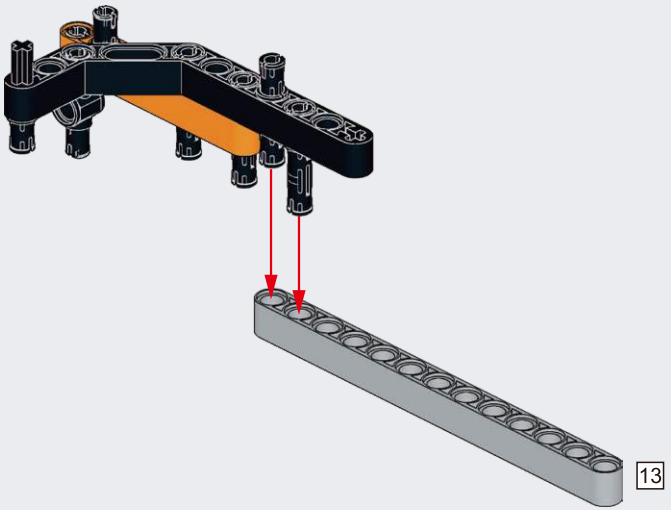

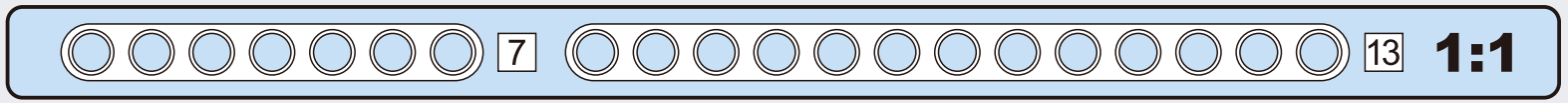

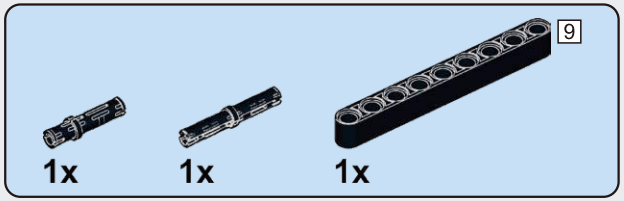

B50

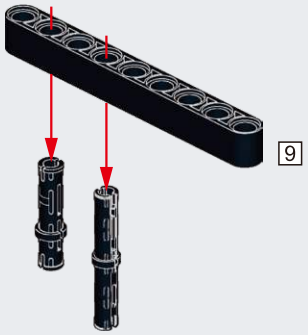

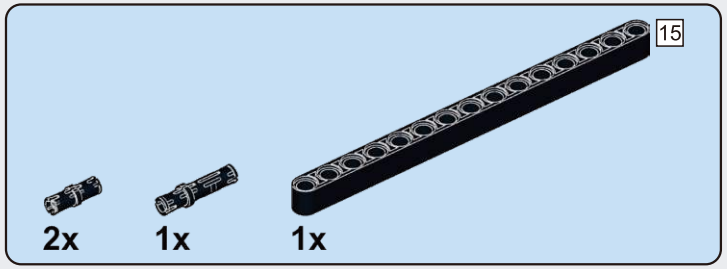

B51

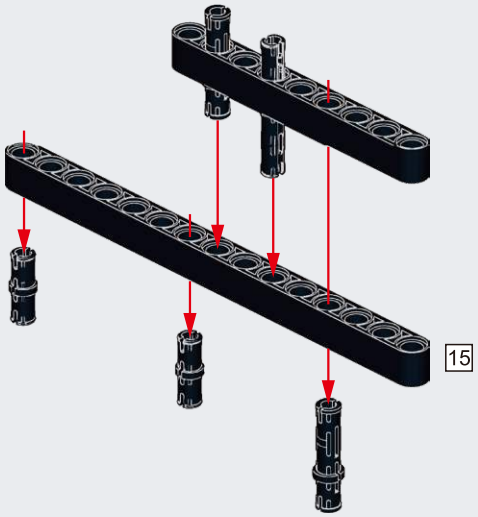

B52

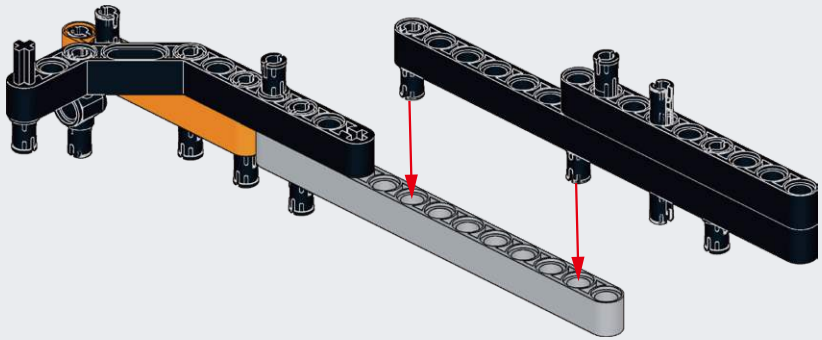

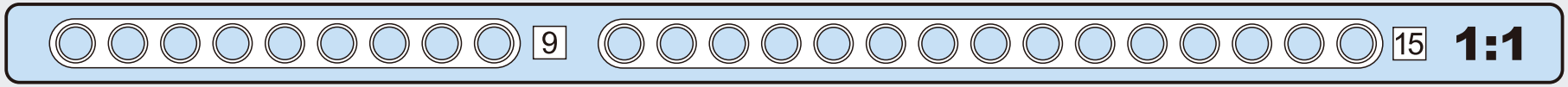

B53

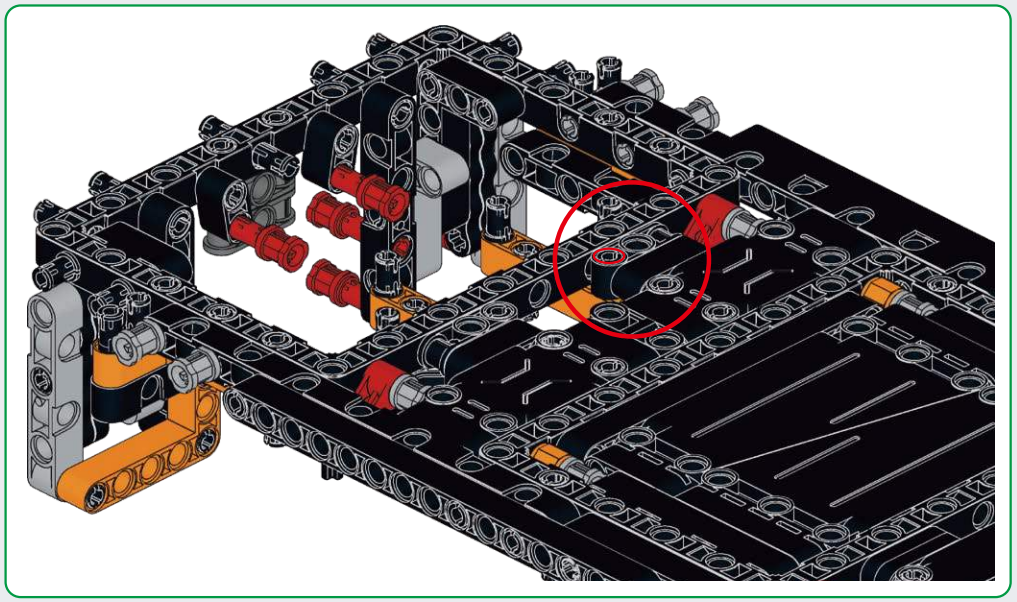

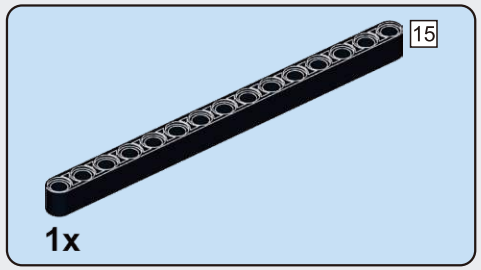

B54

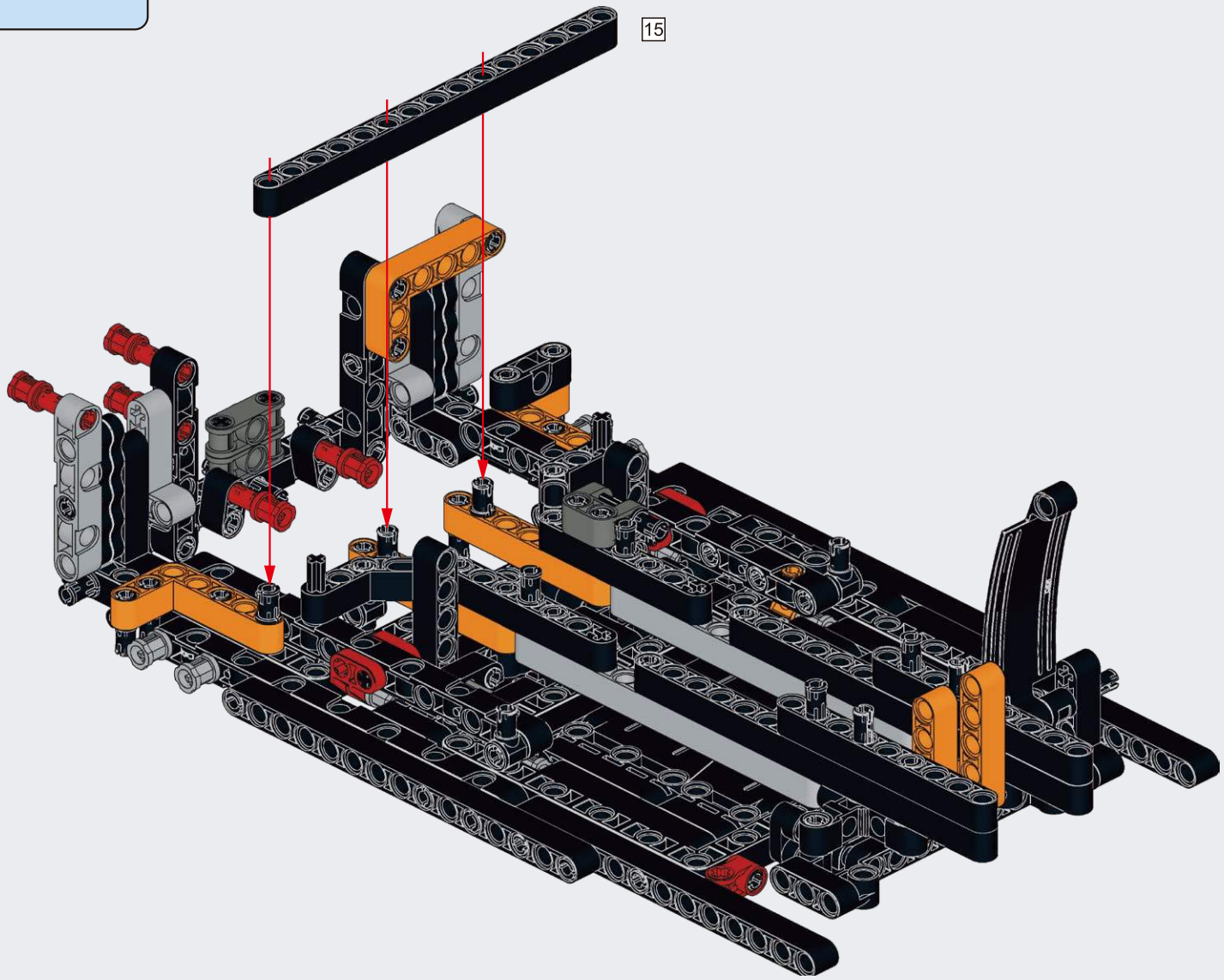

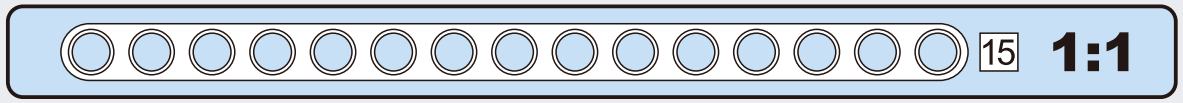

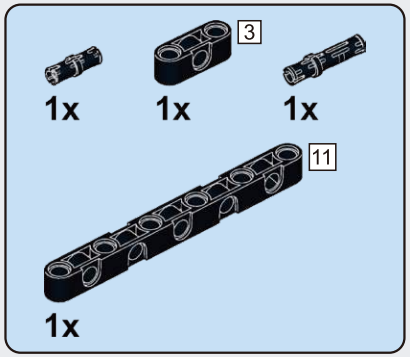

B55

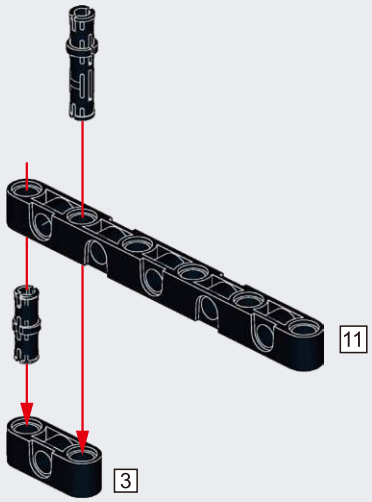

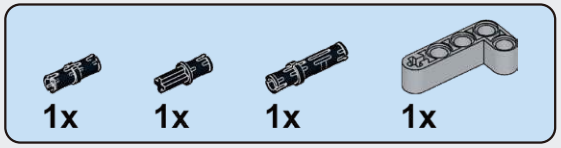

B56

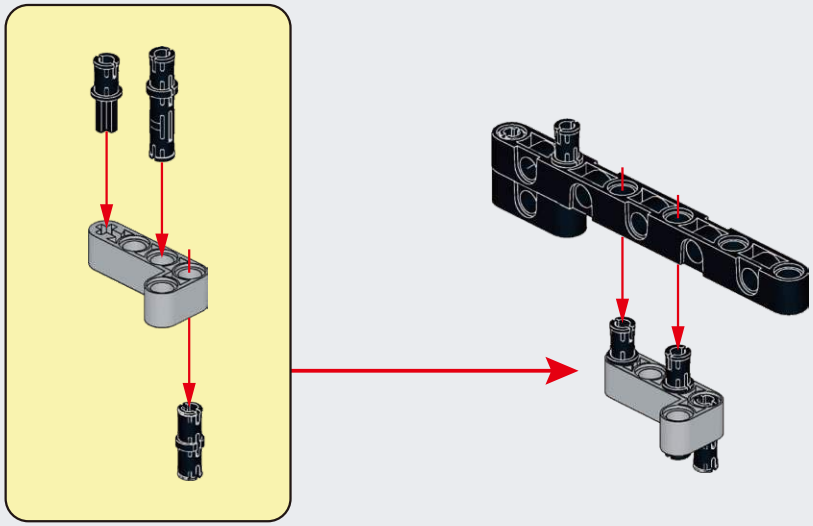

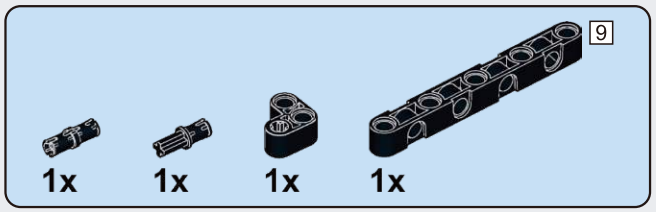

B57

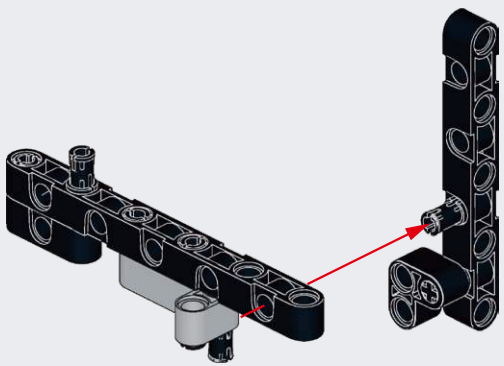

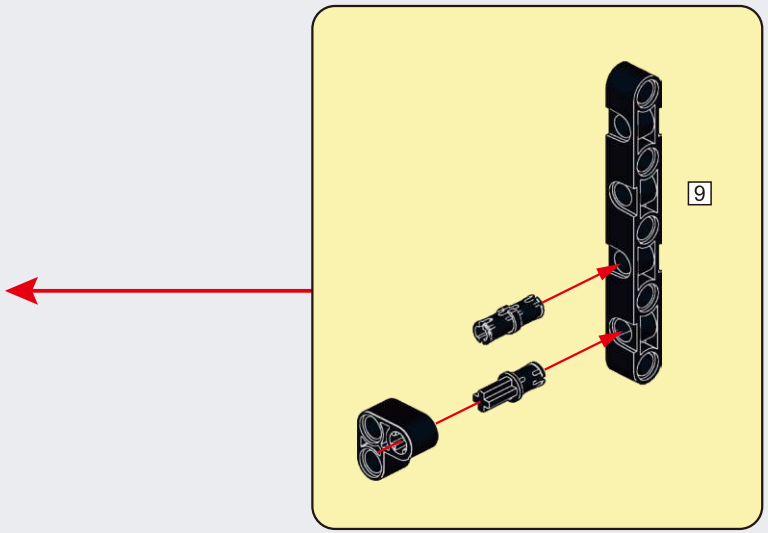

B58

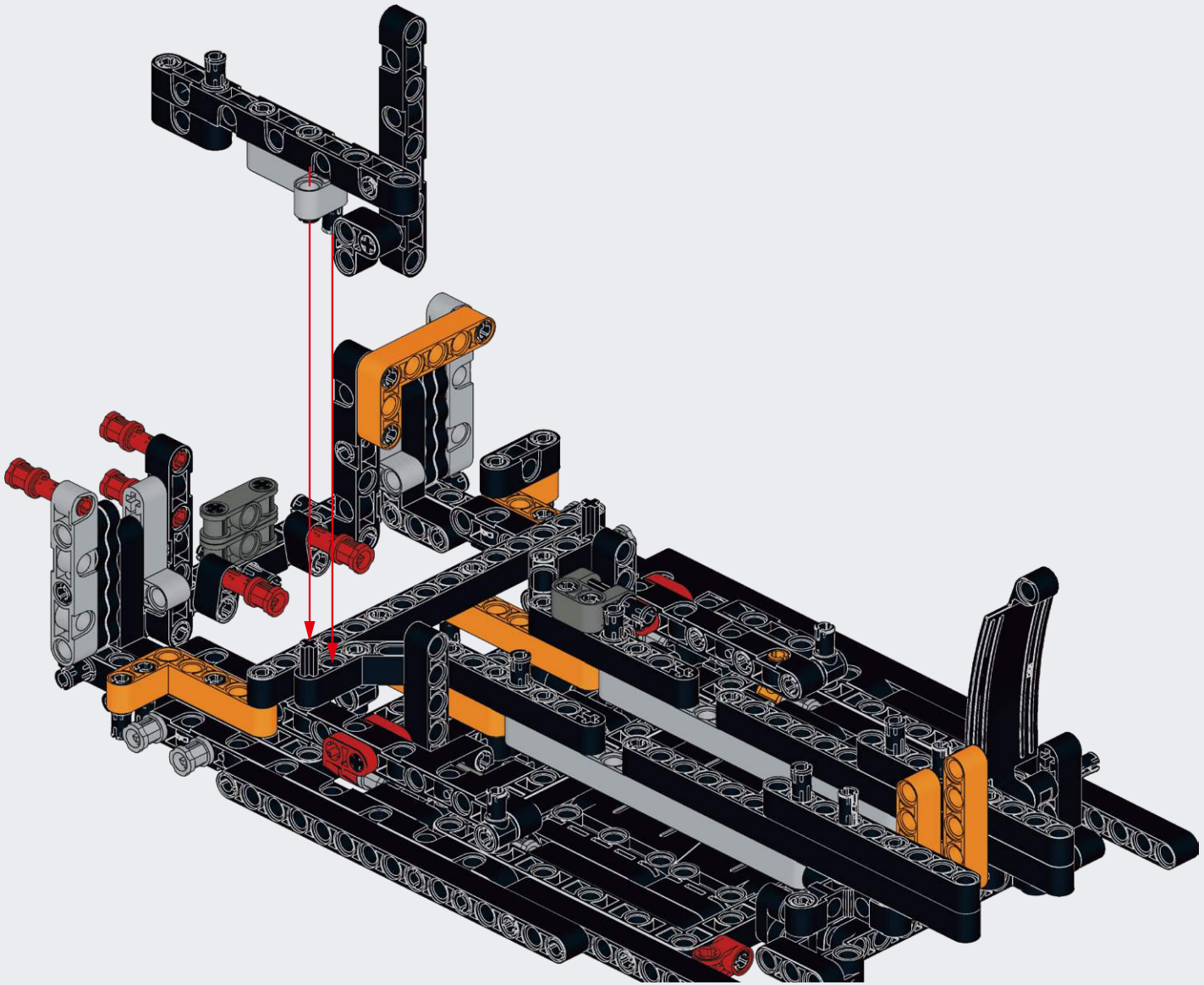

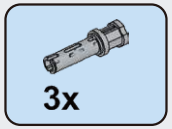

B59

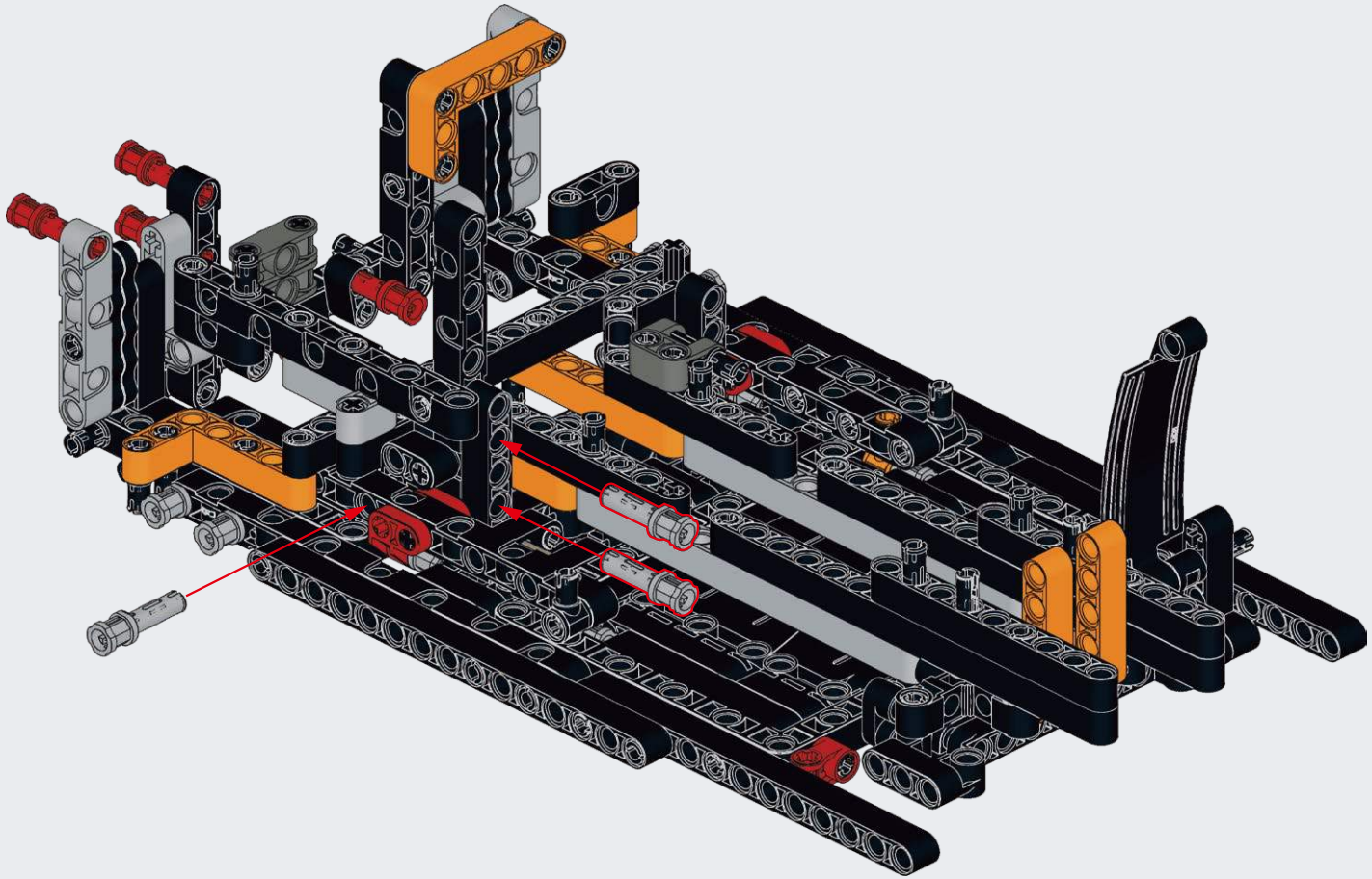

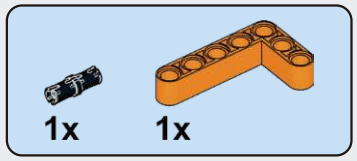

B60

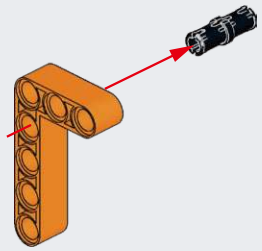

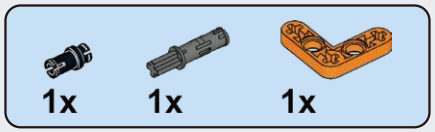

B61

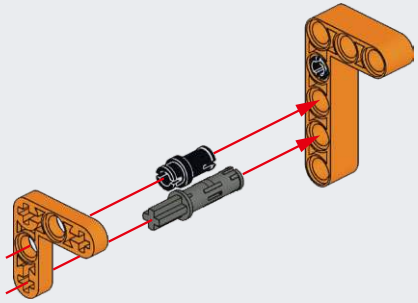

B62

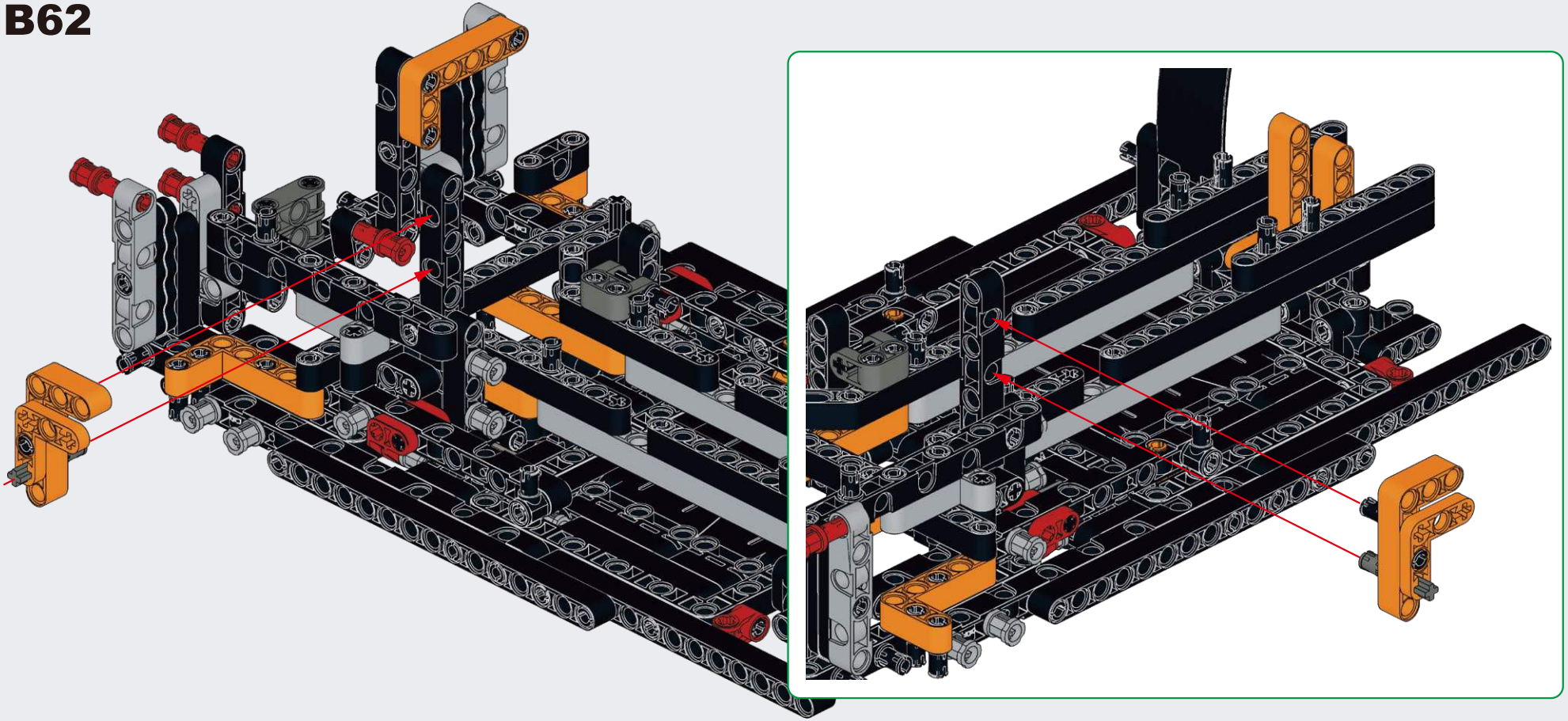

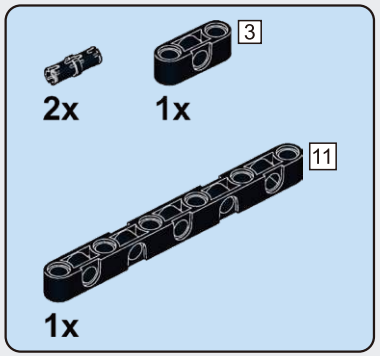

B63

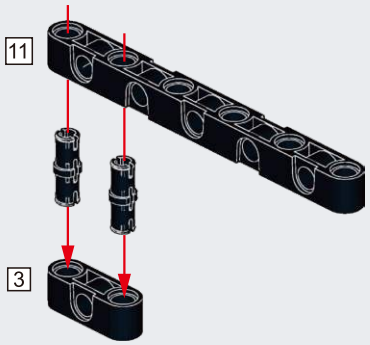

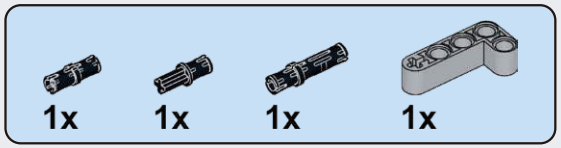

B64

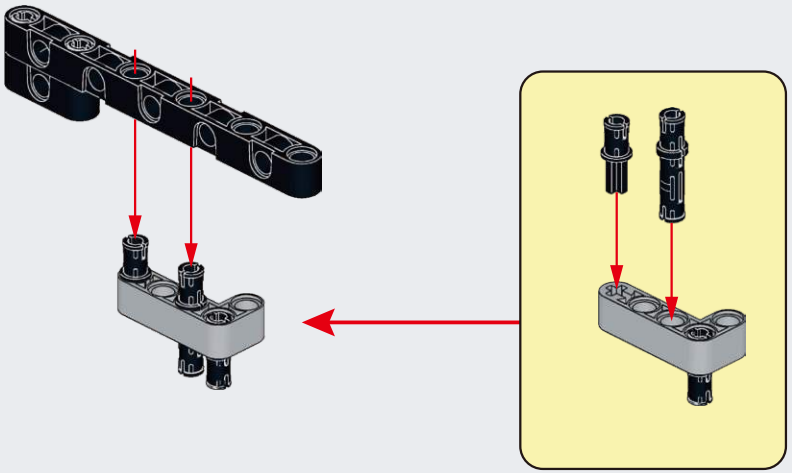

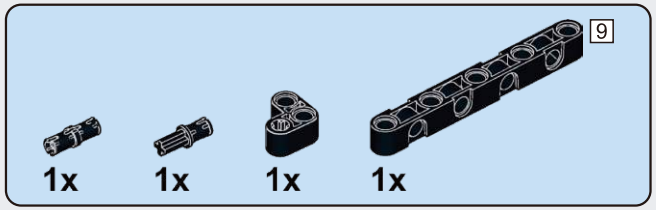

B65

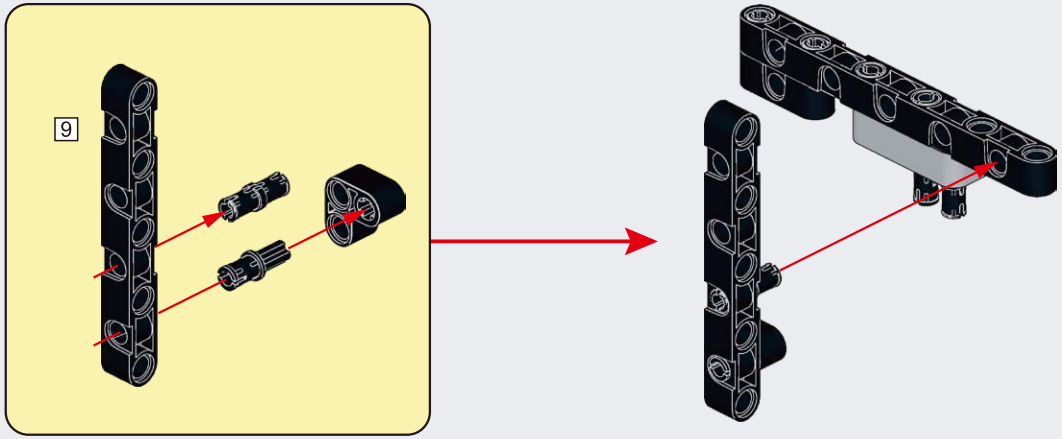

B66

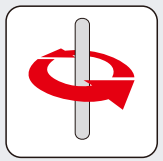

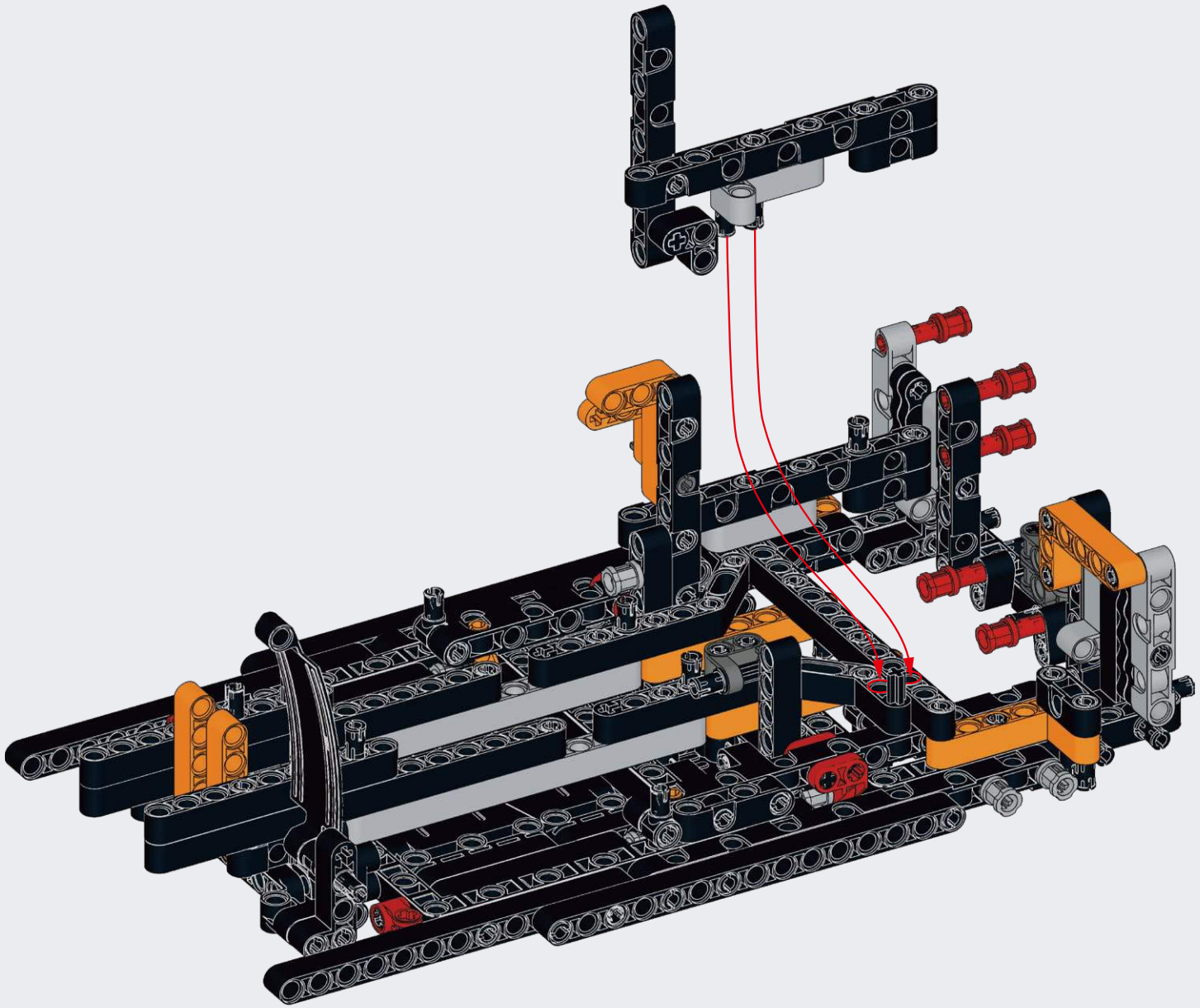

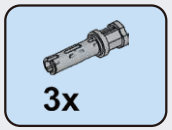

B67

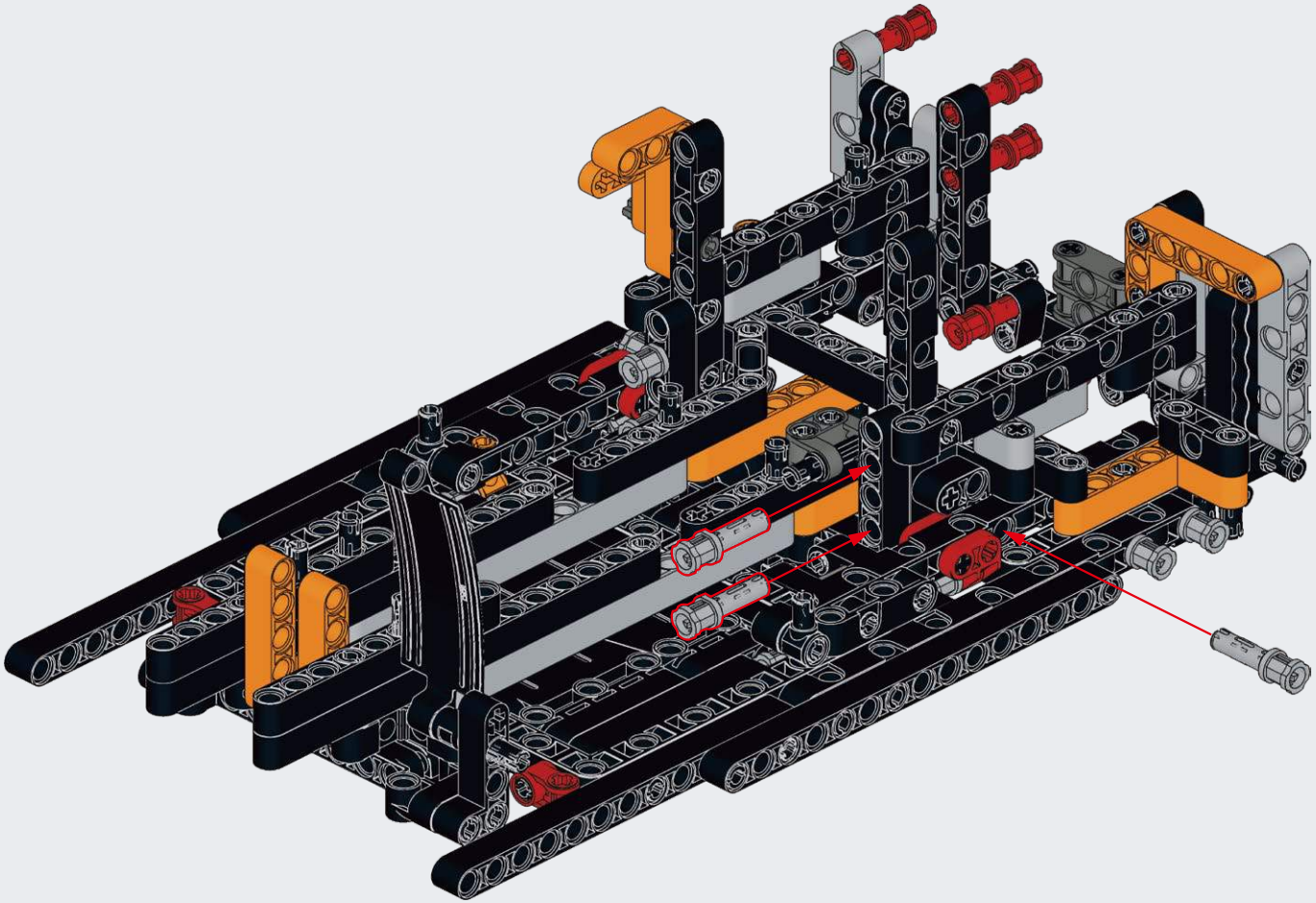

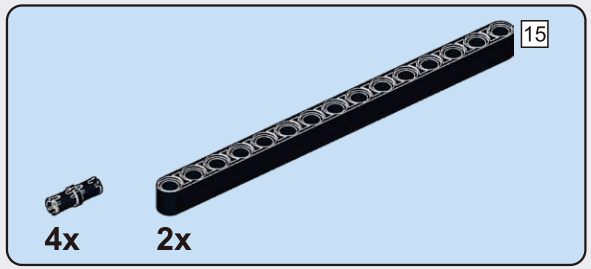

B68

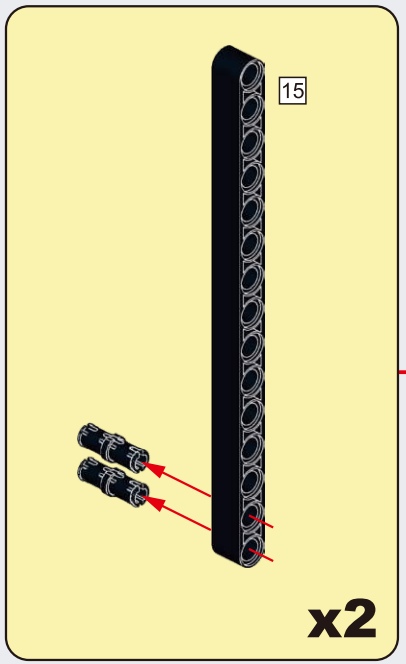

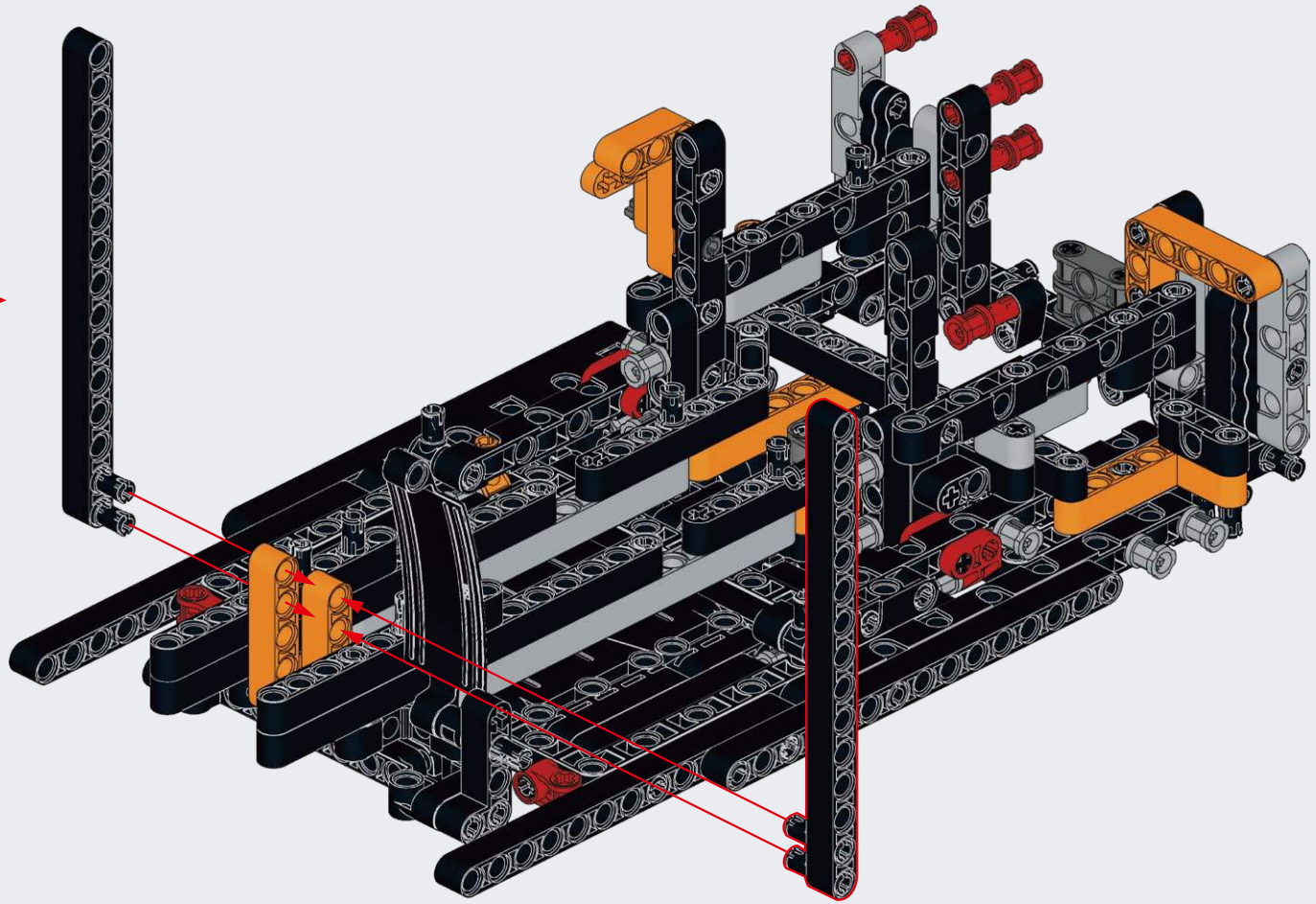

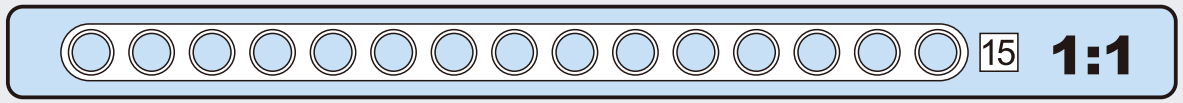

B69

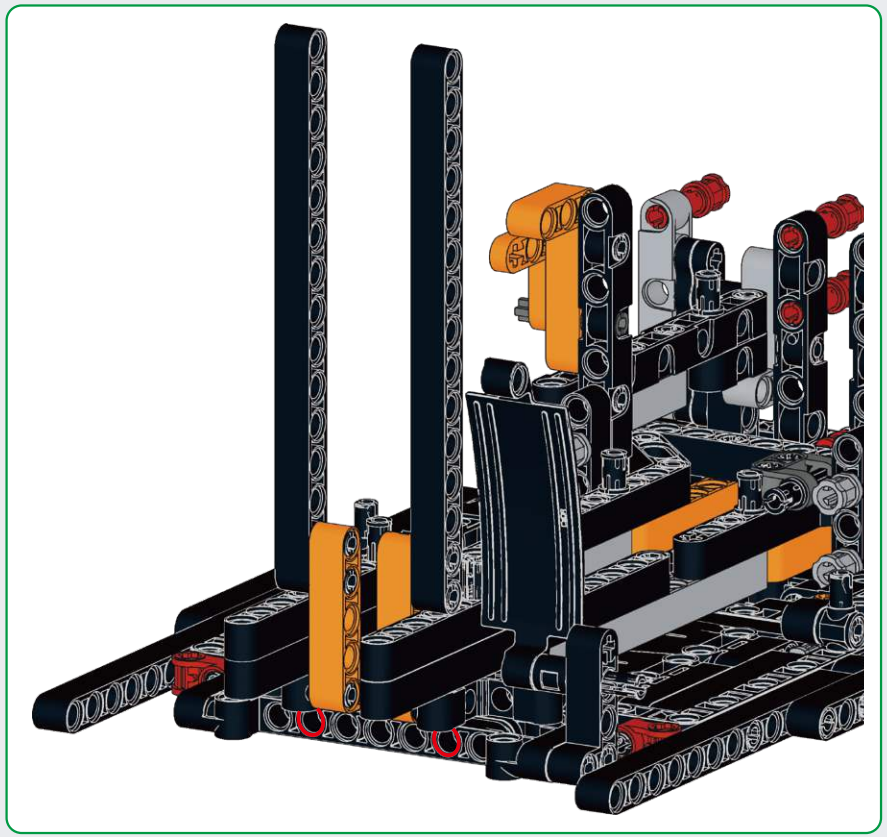

B70

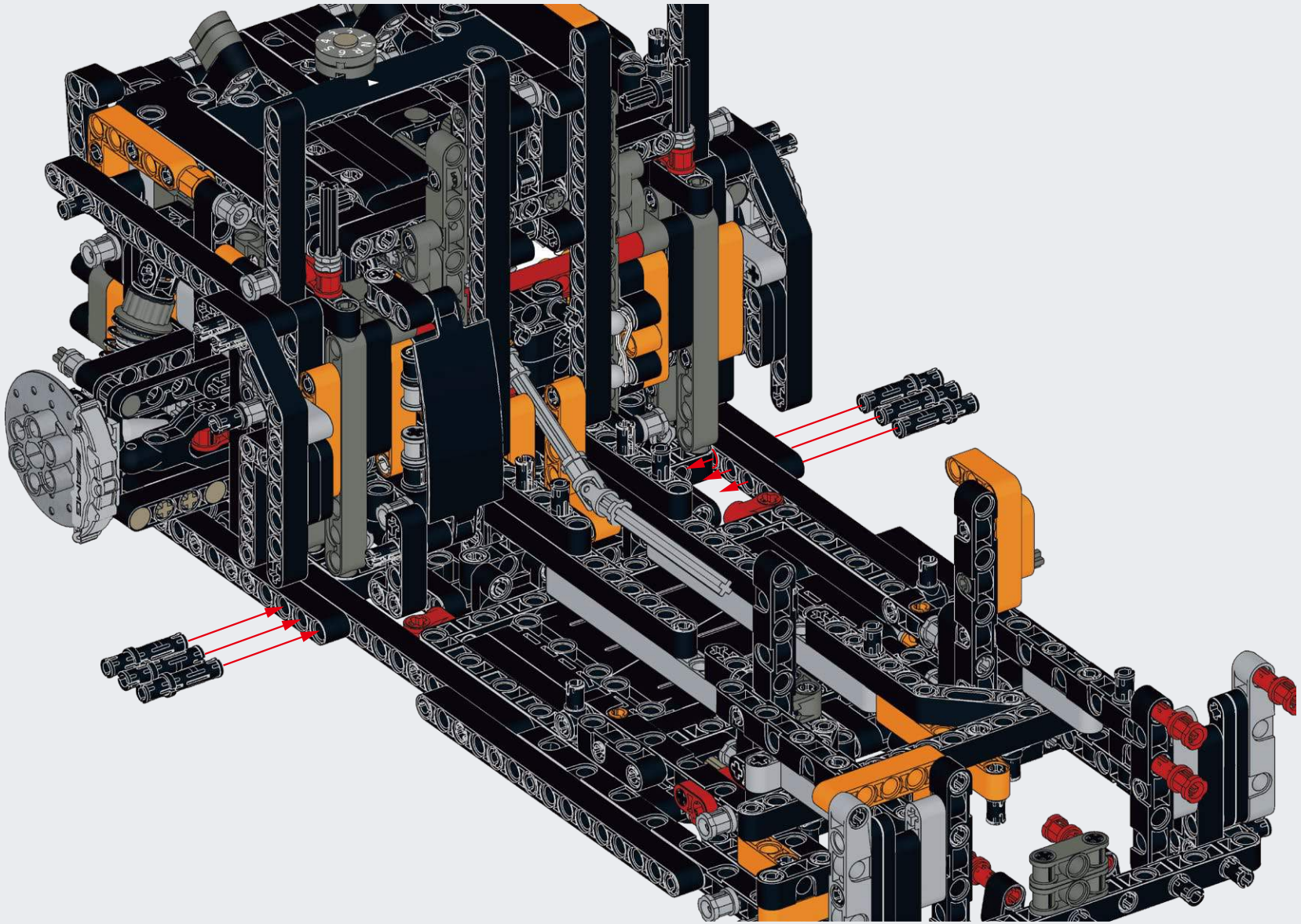

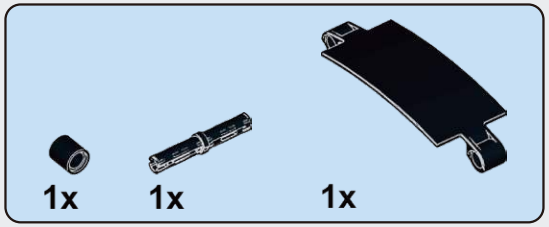

B71

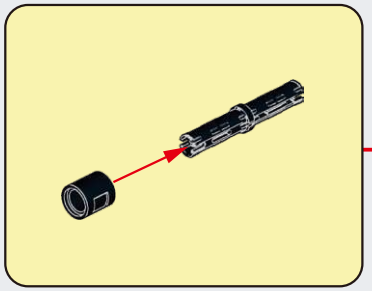

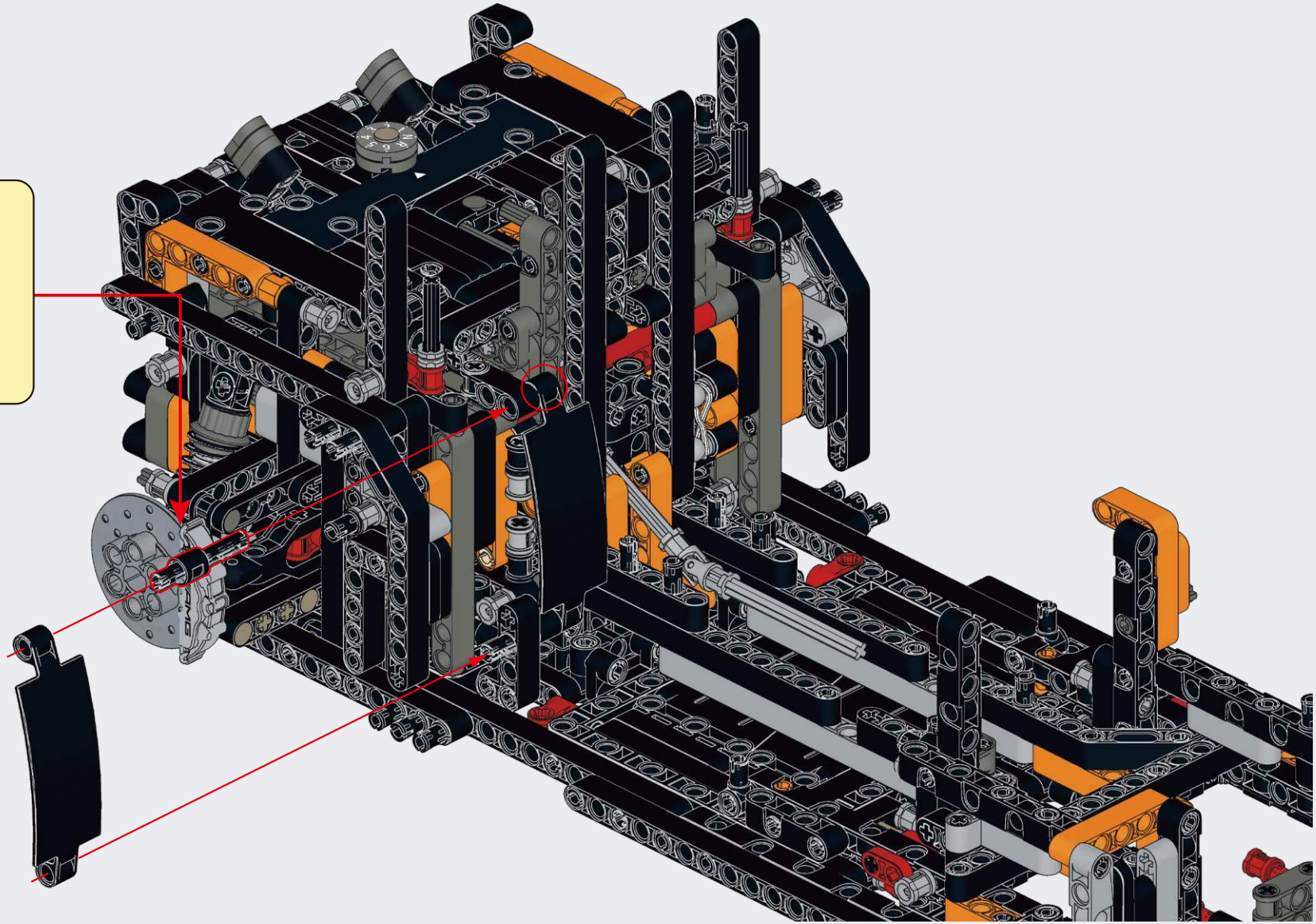

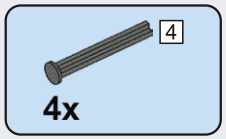

B72

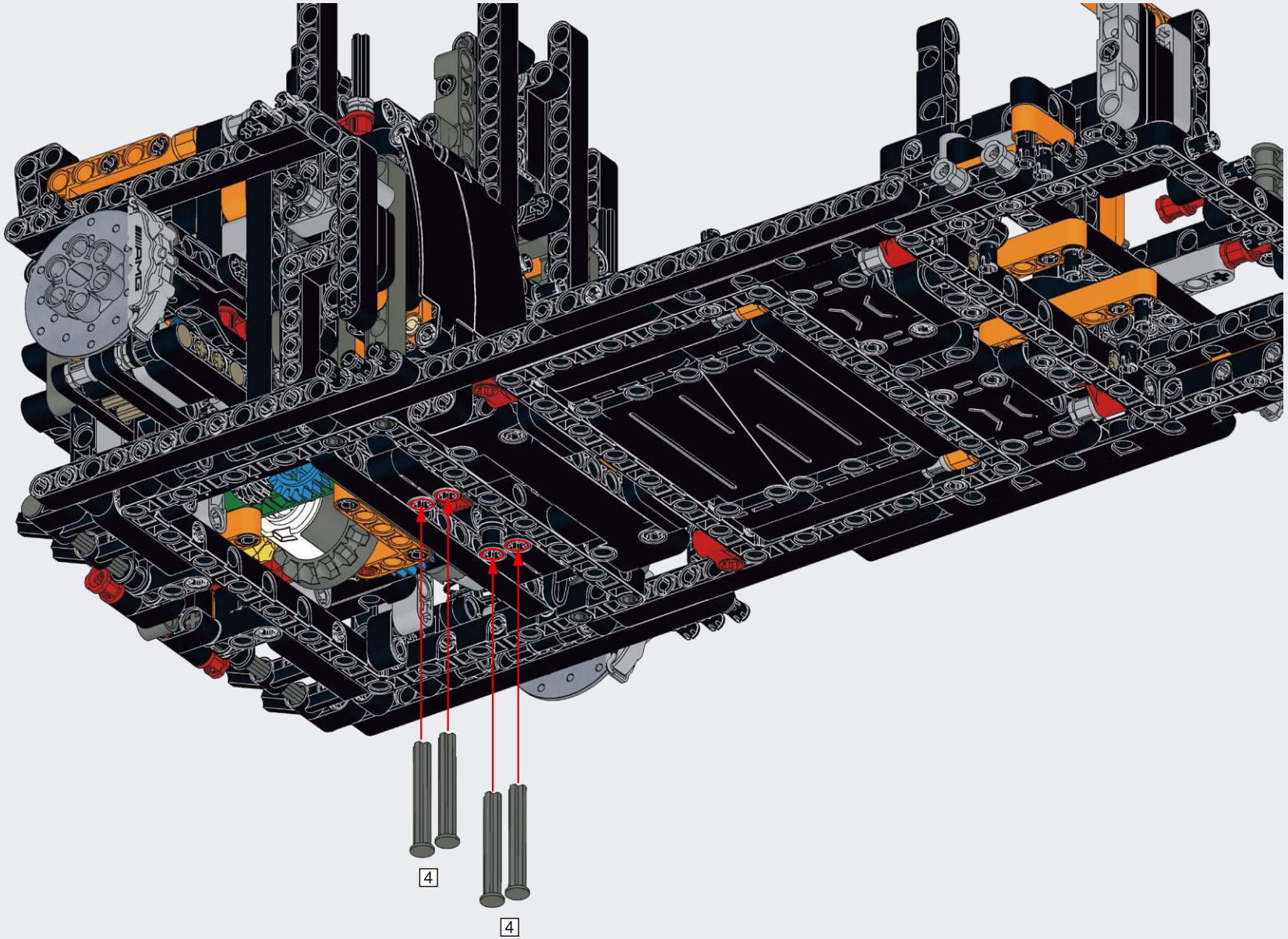

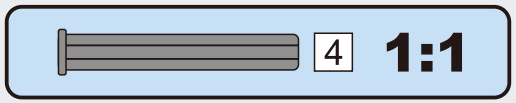

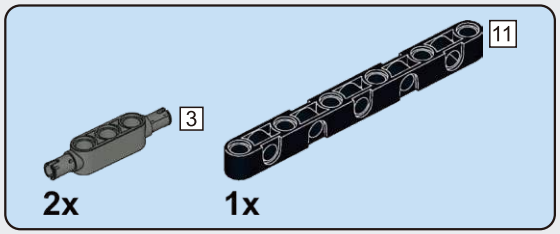

B73

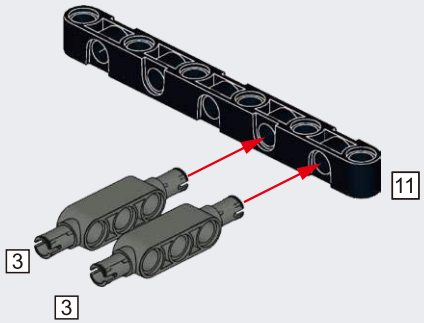

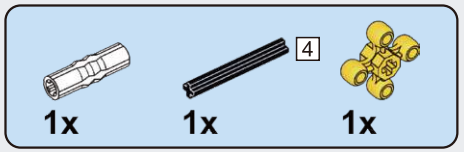

B74

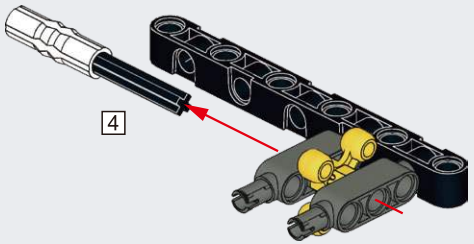

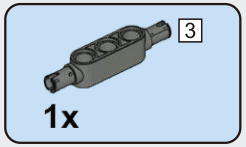

B75

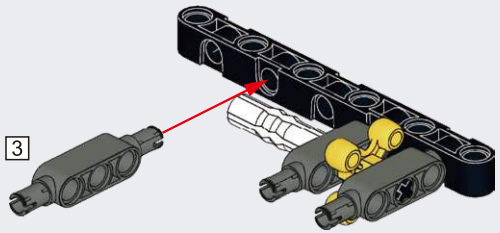

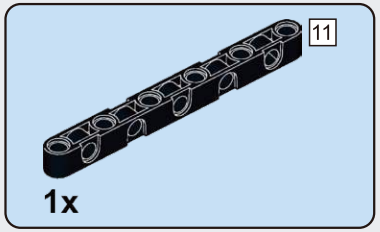

B76

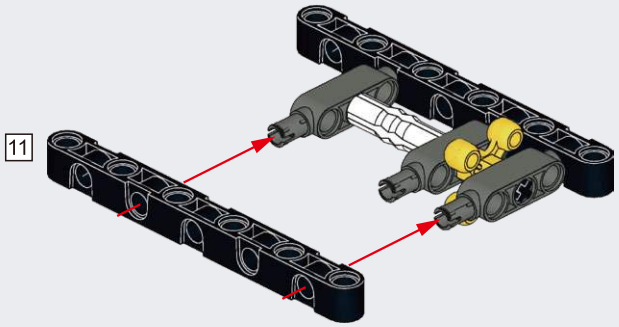

B77

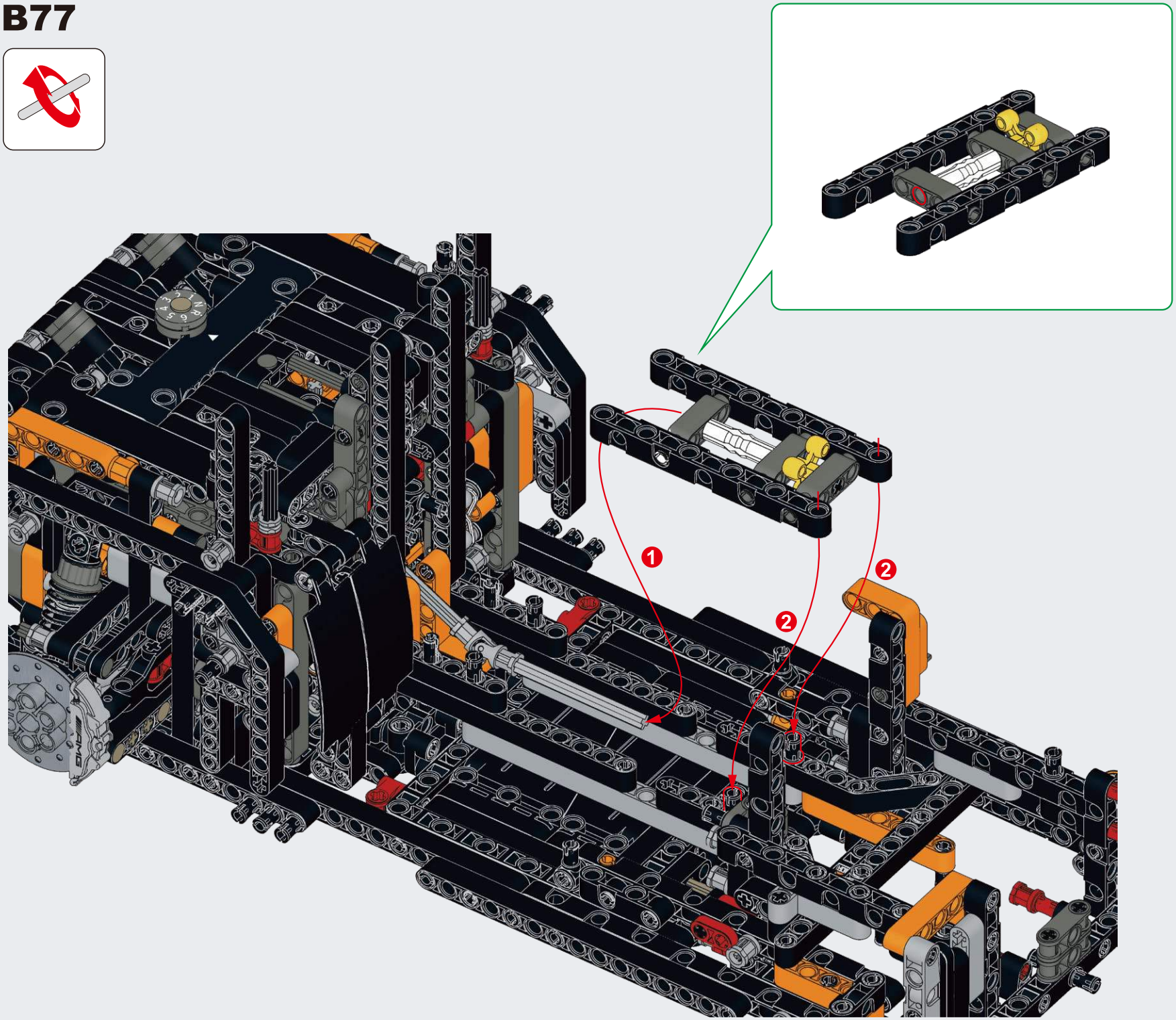

B78

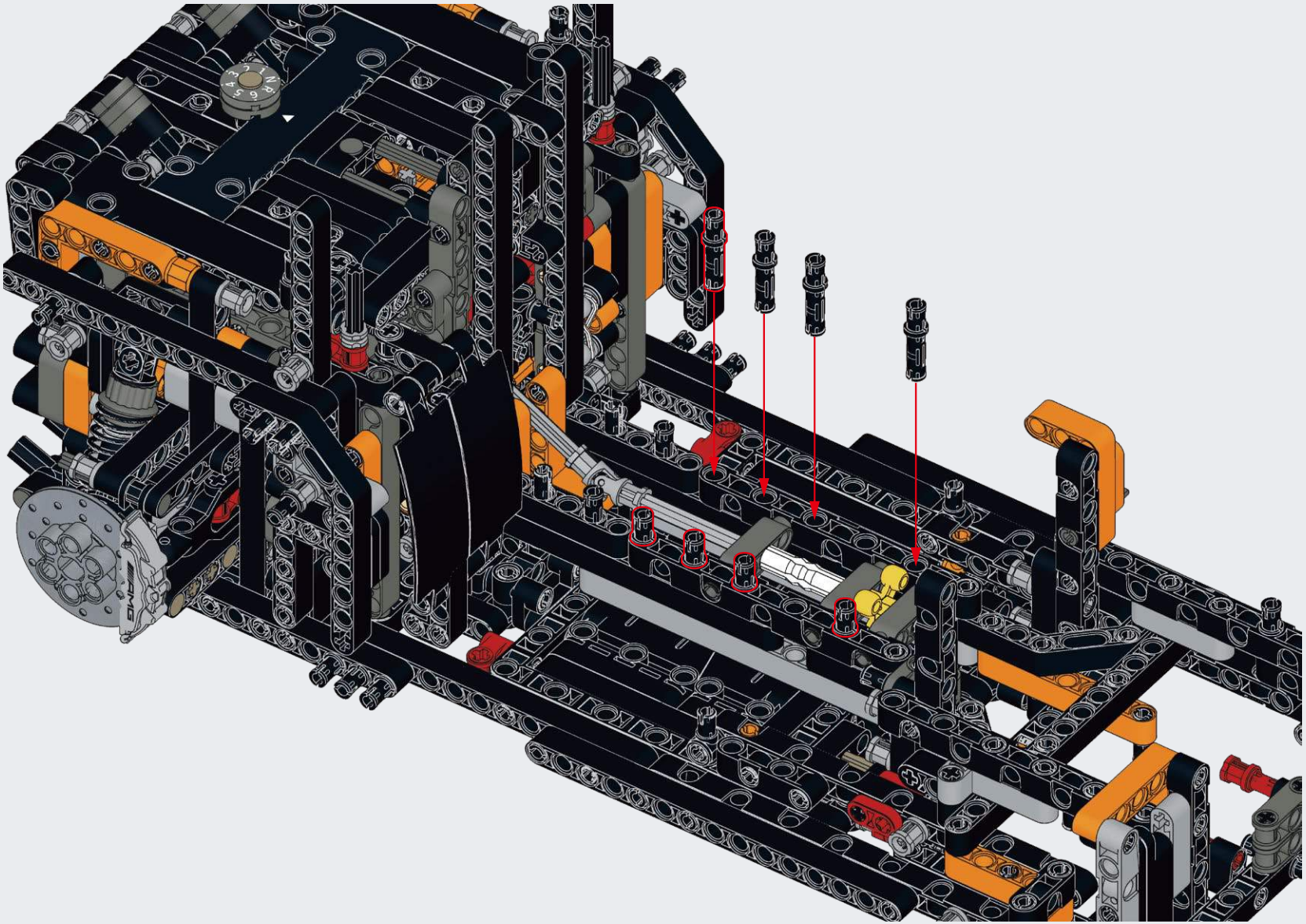

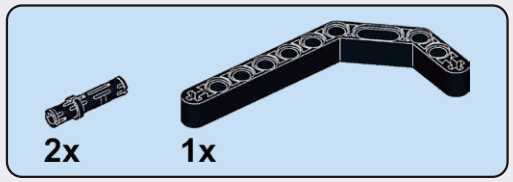

B79

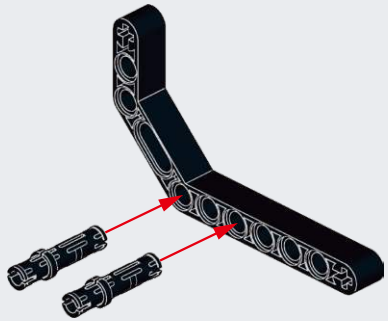

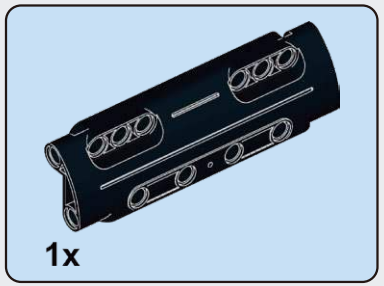

B80

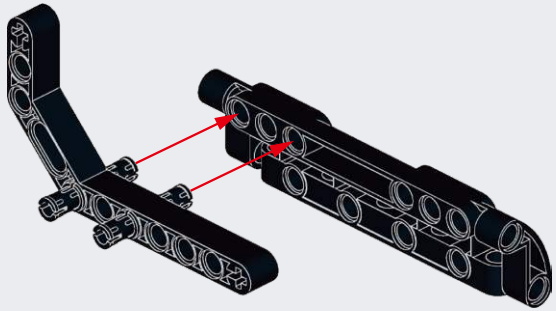

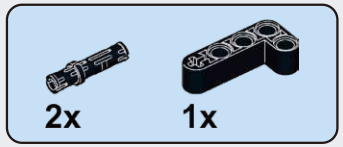

B81

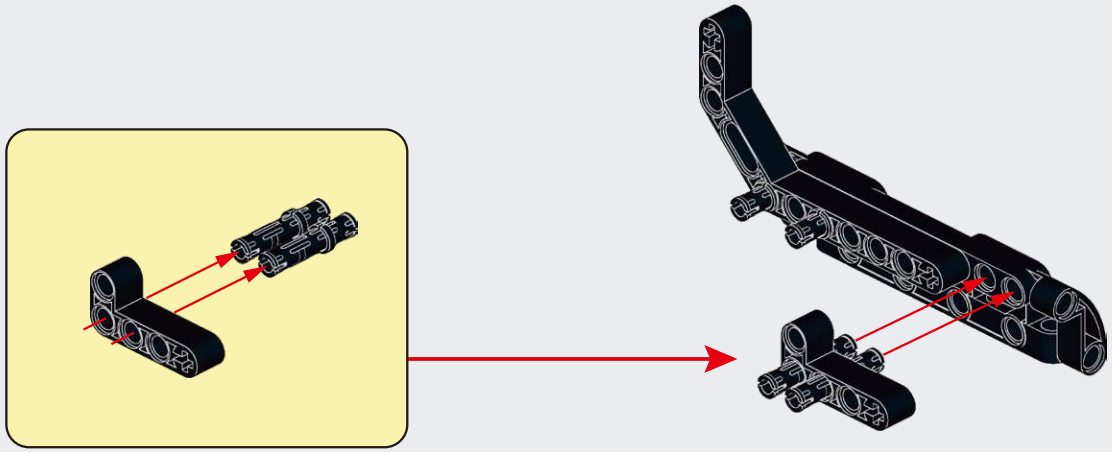

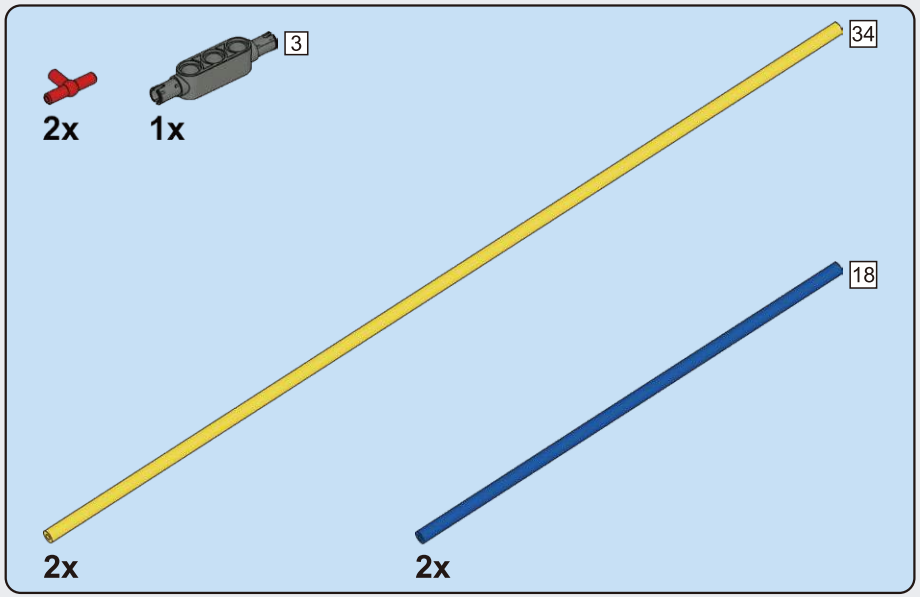

B82

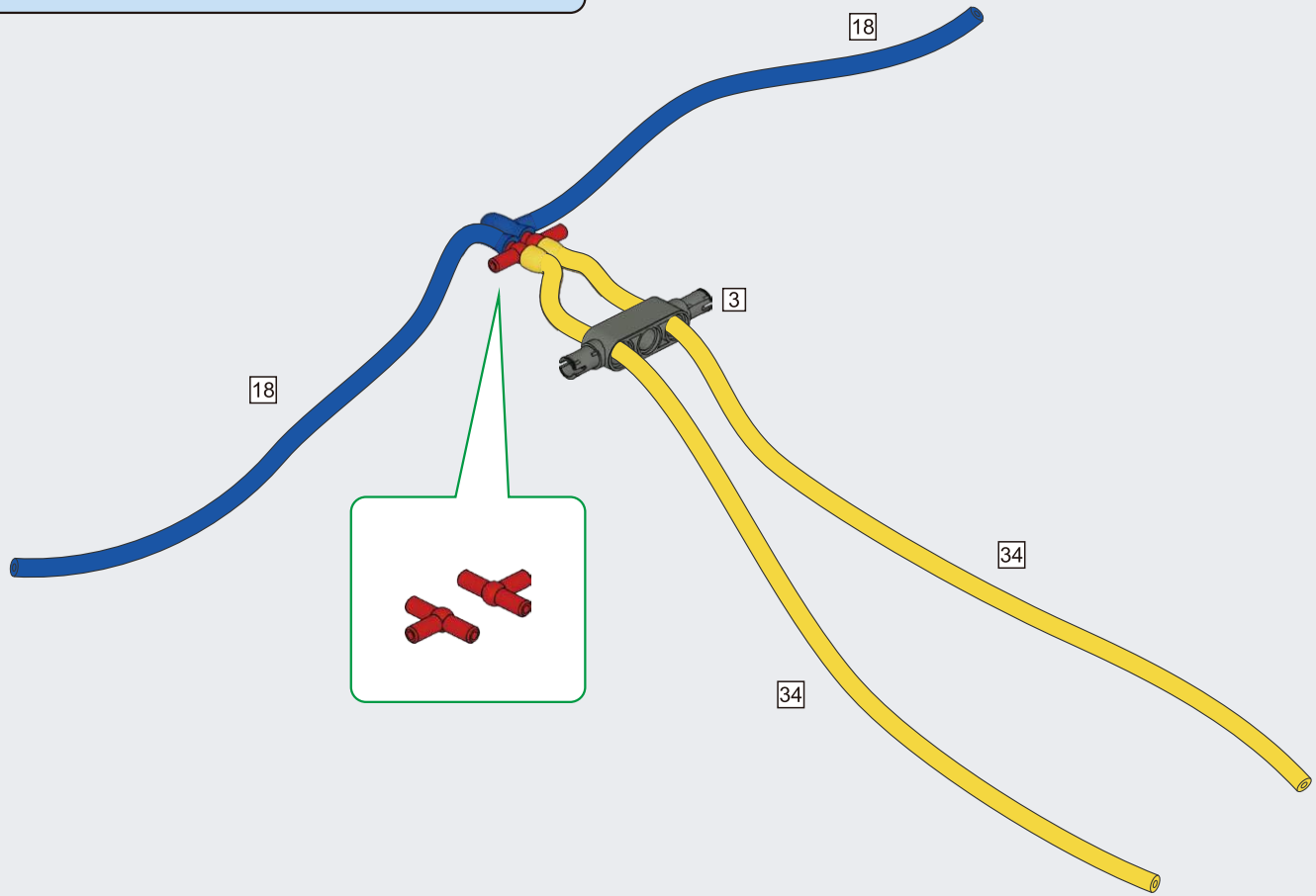

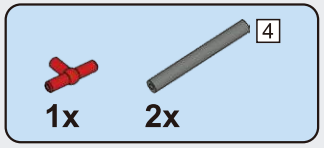

B83

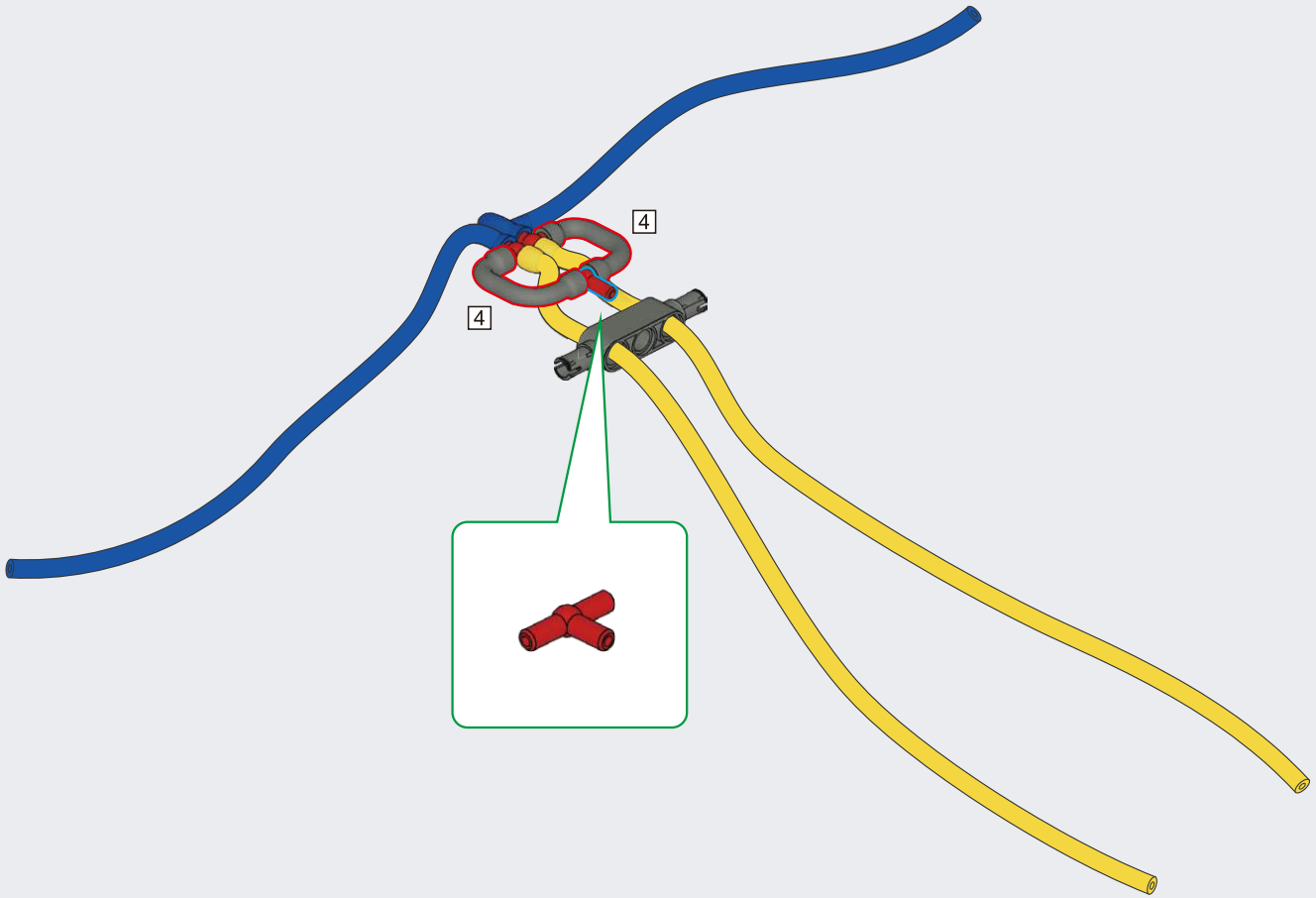

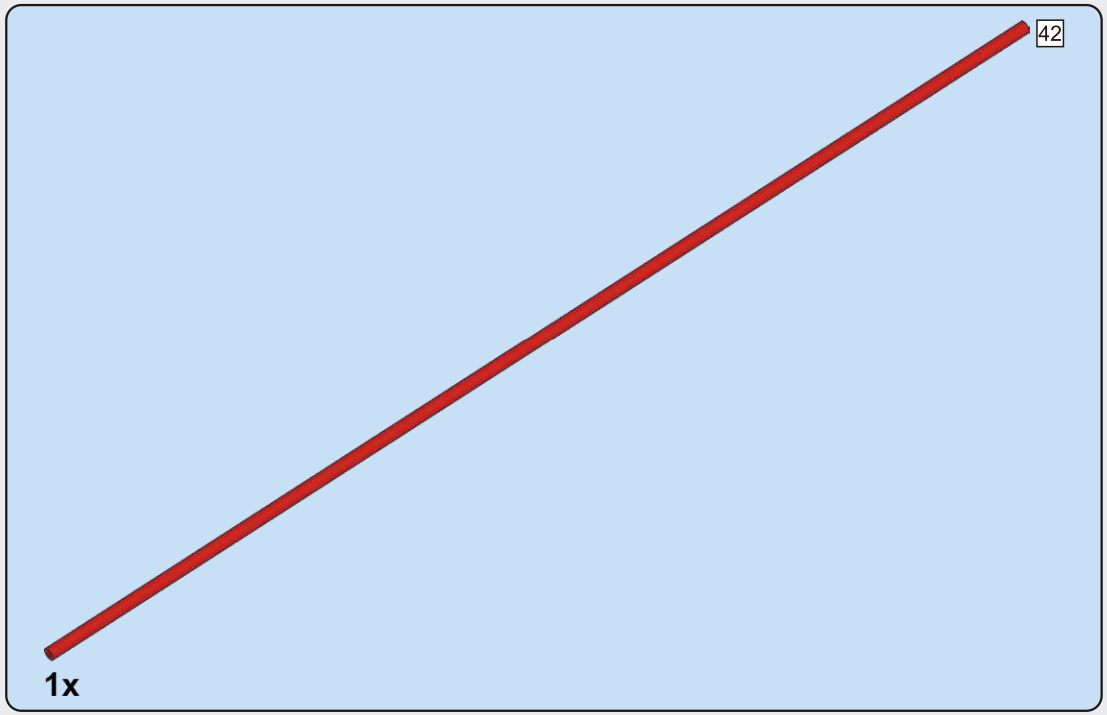

B84

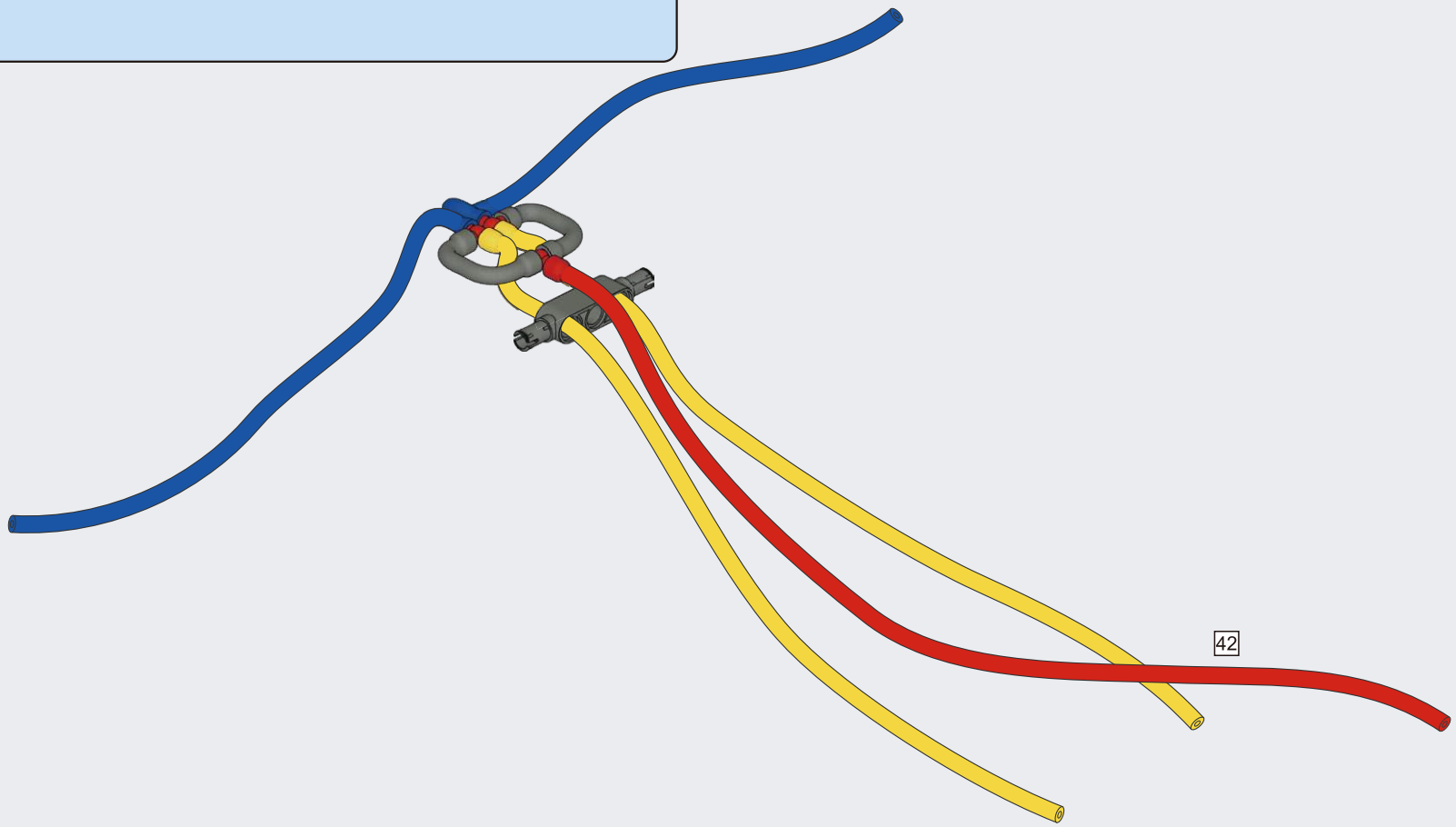

B85

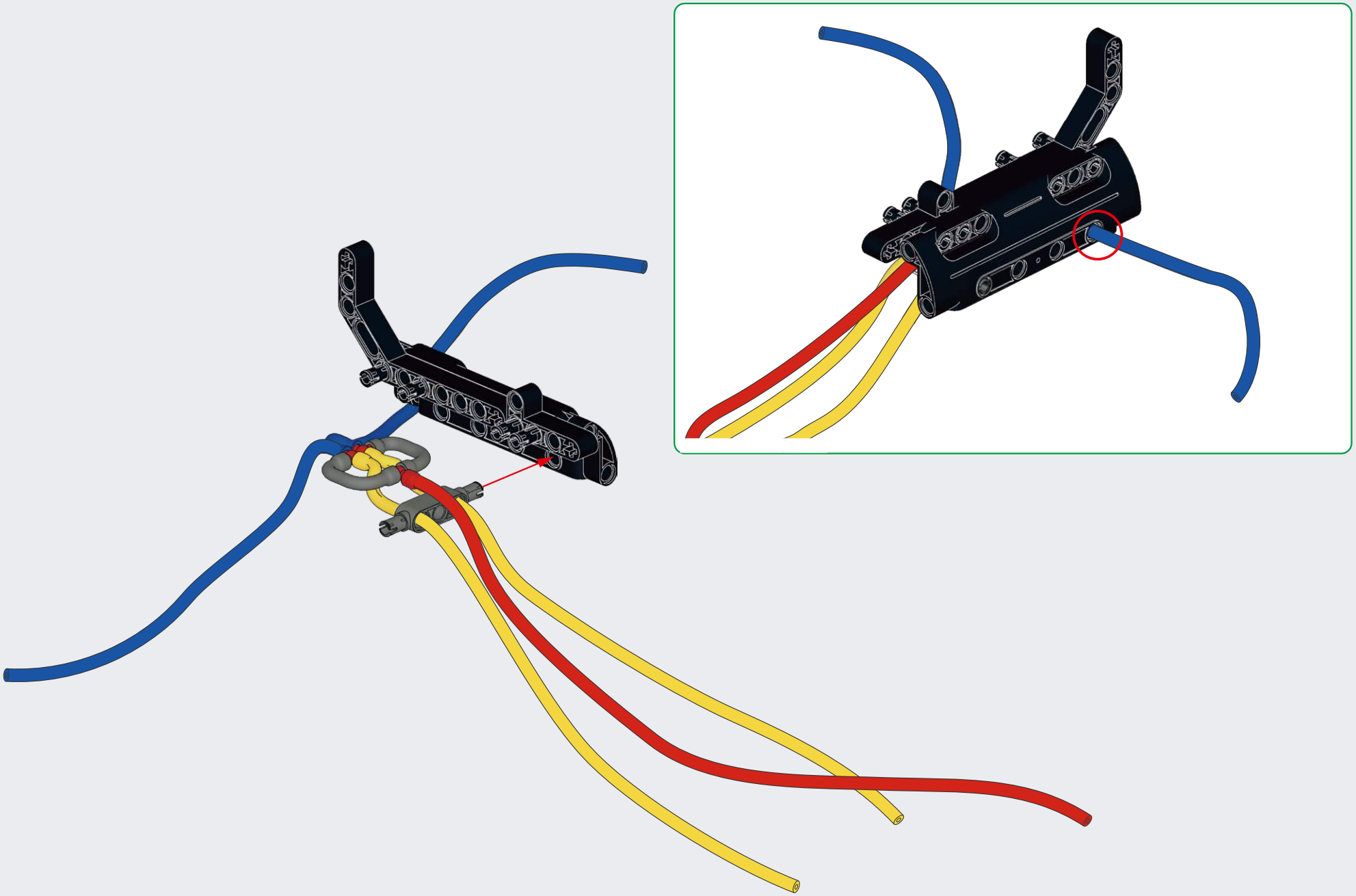

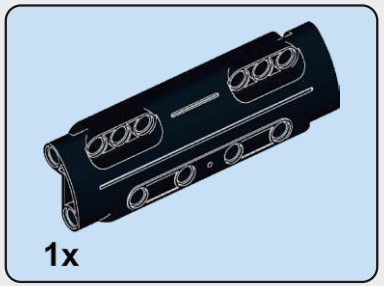

B86

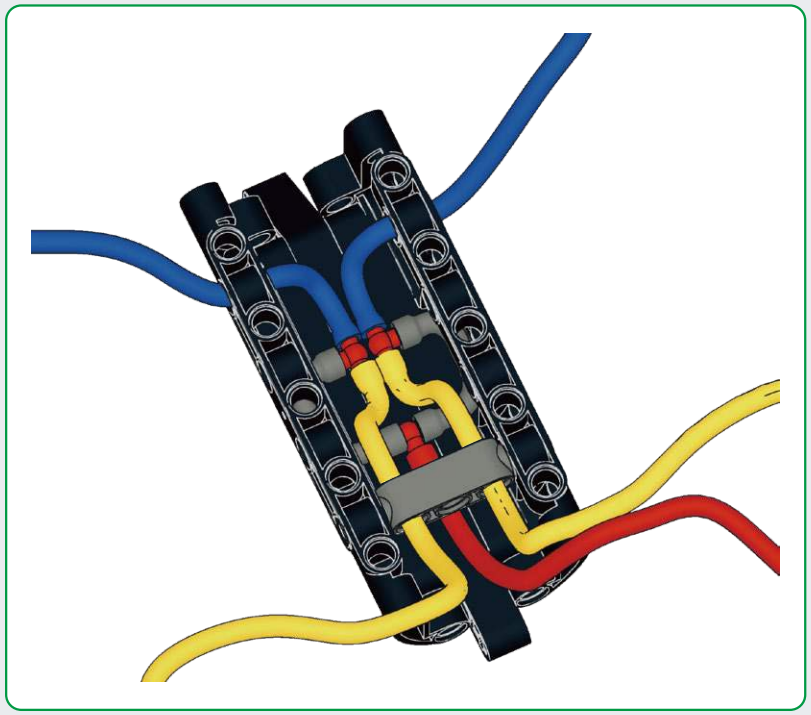

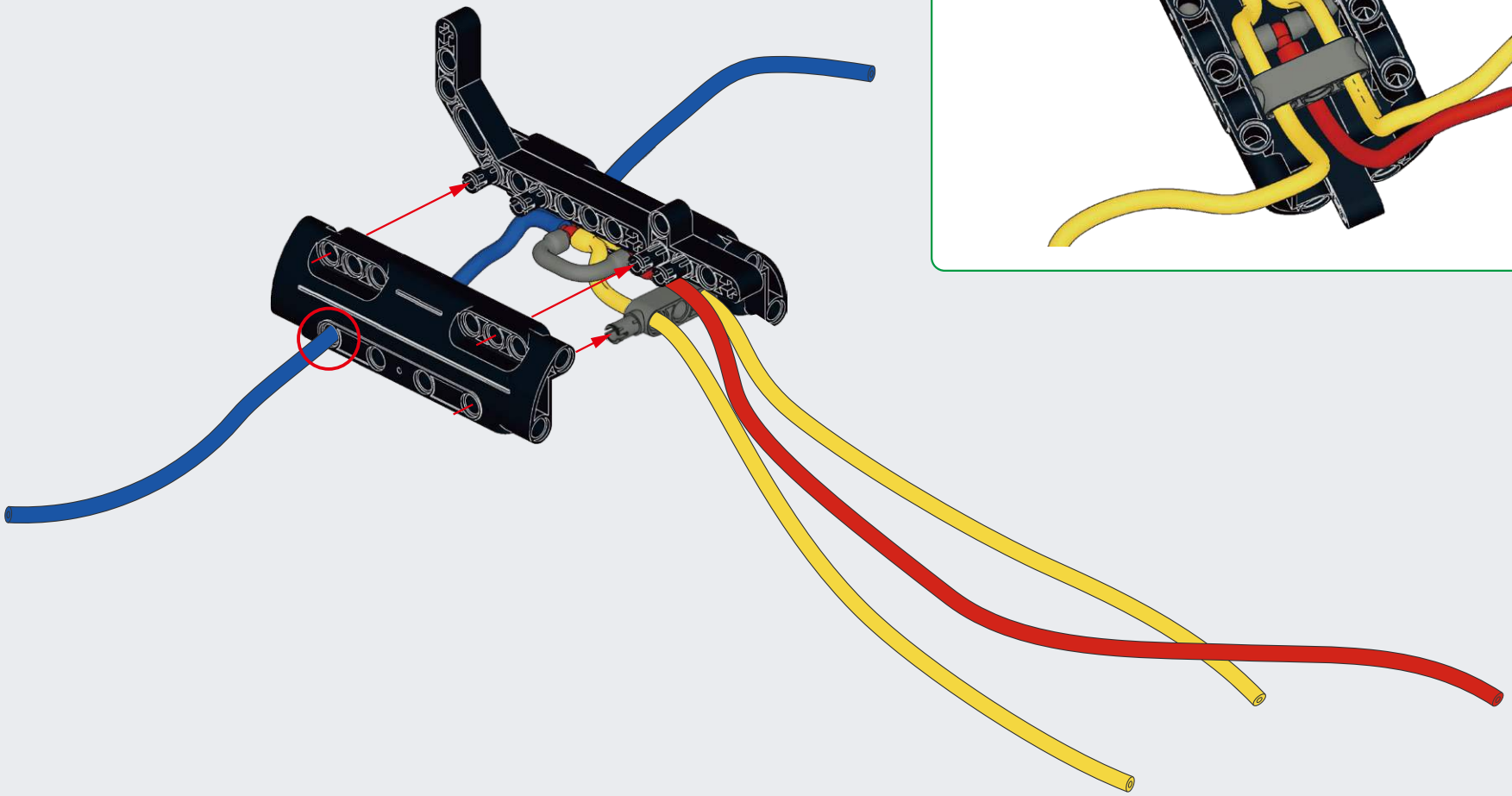

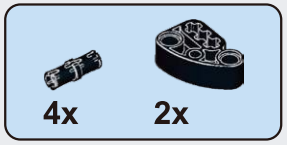

B87

B88

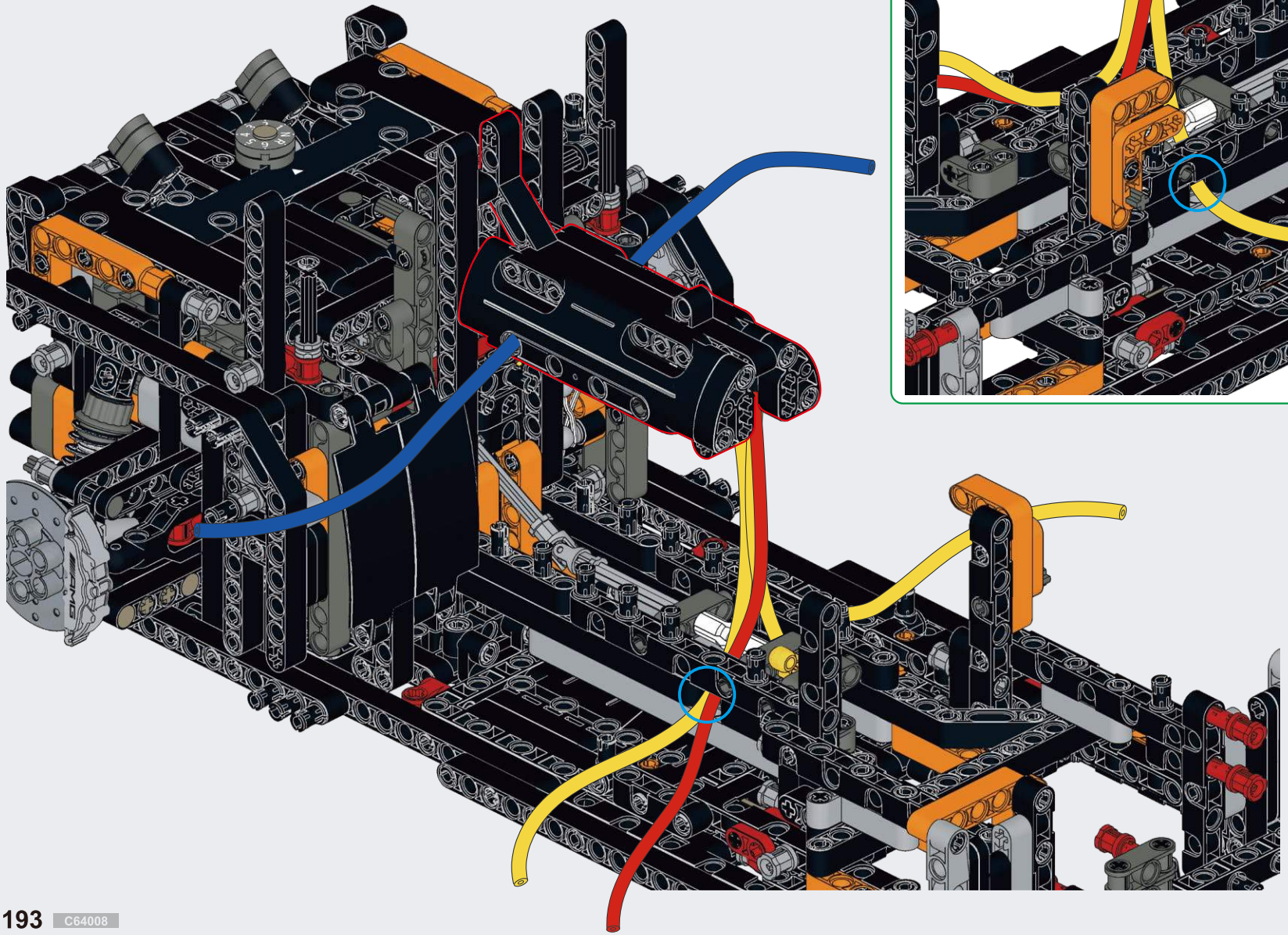

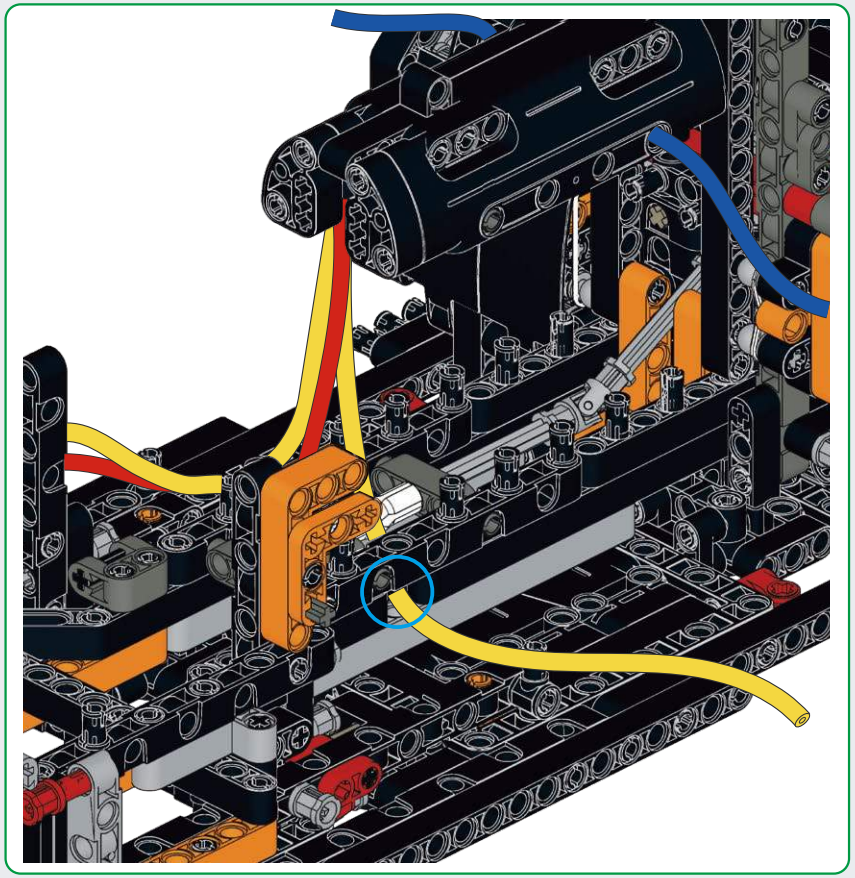

B89

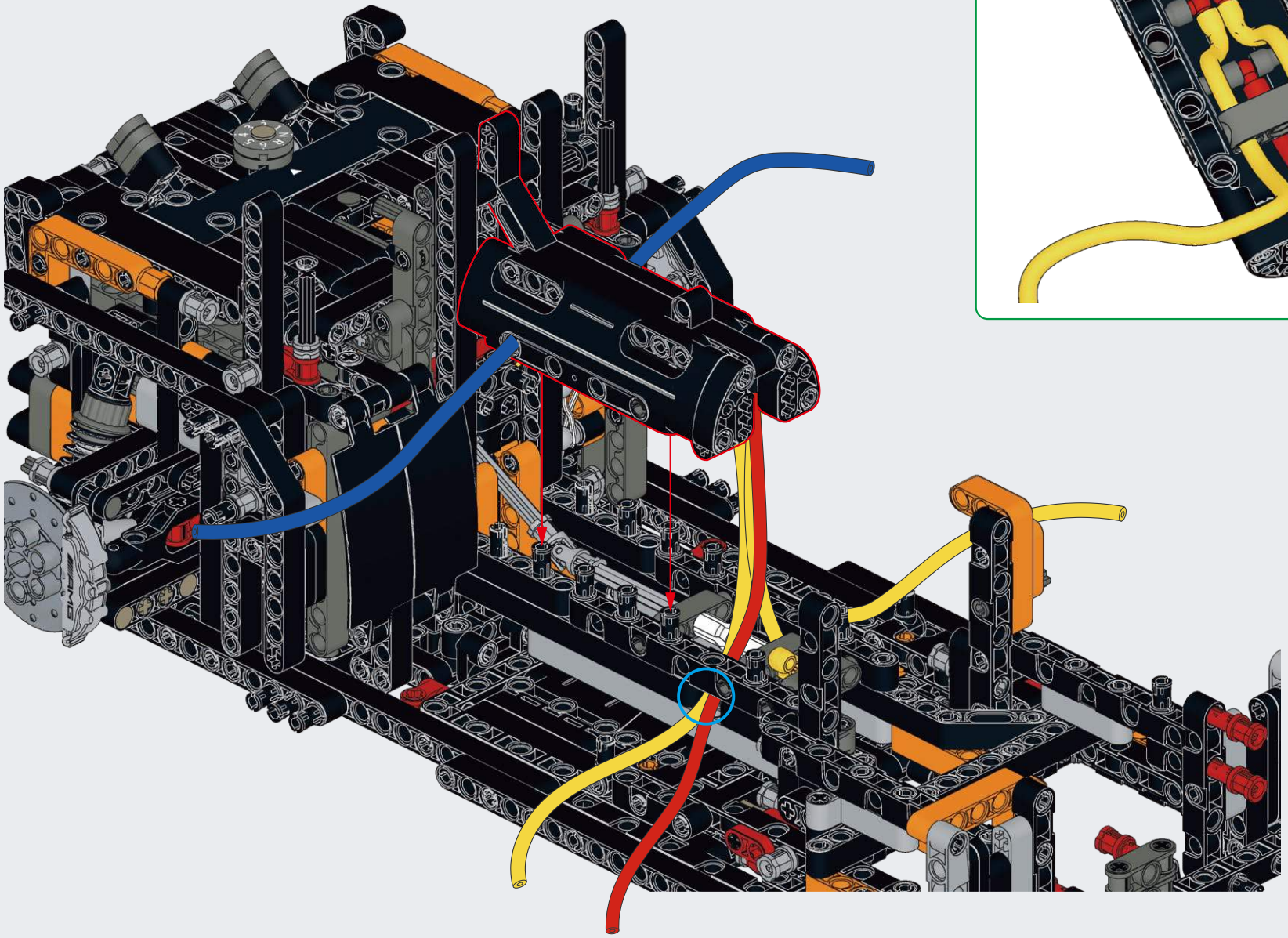

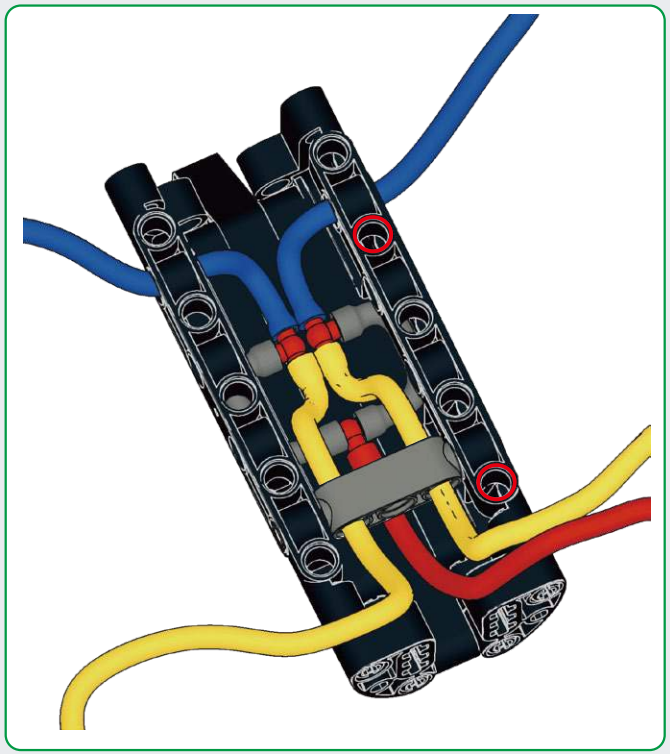

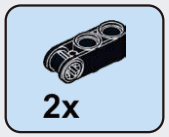

B90

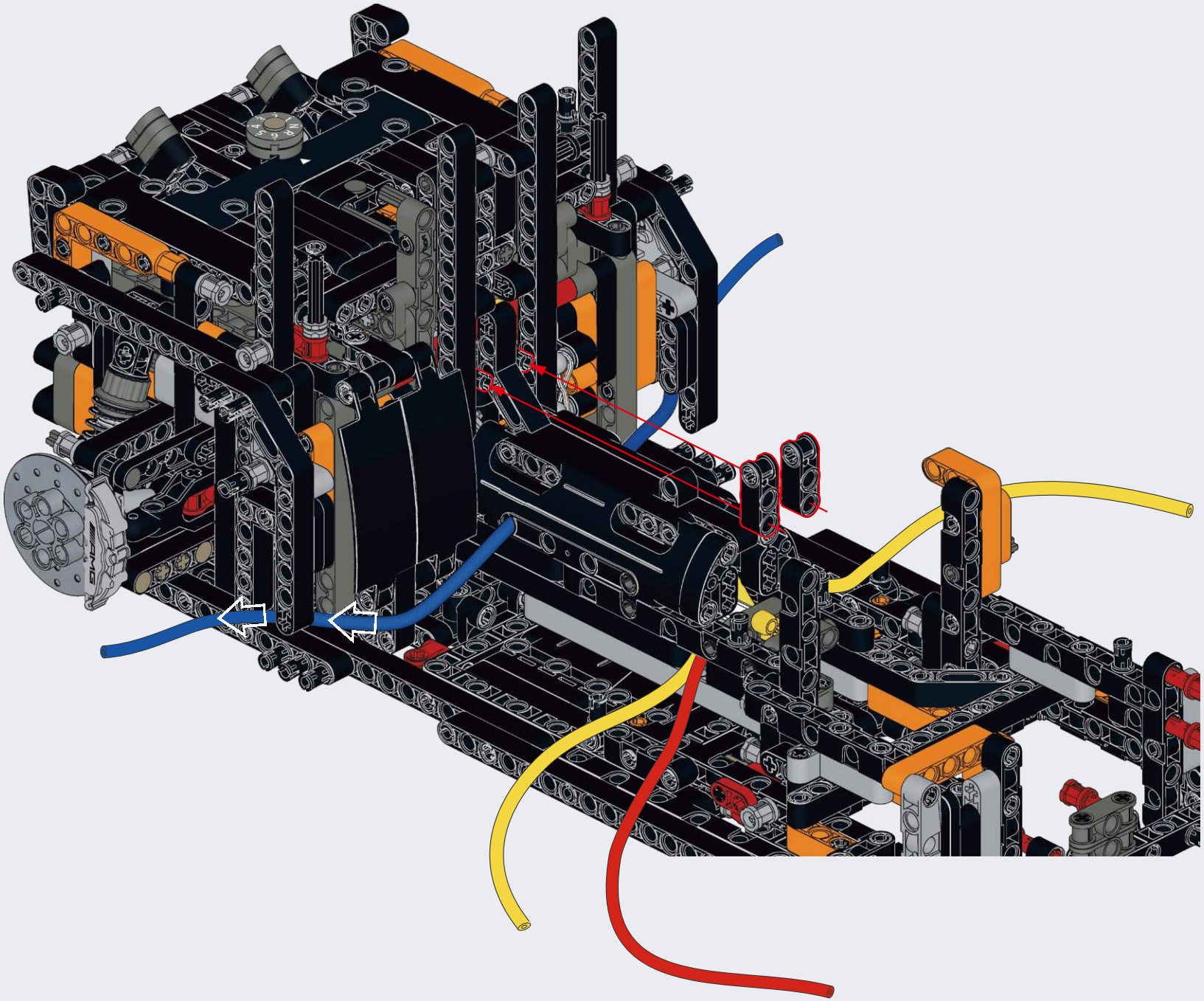

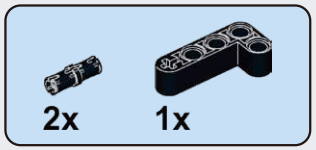

B91

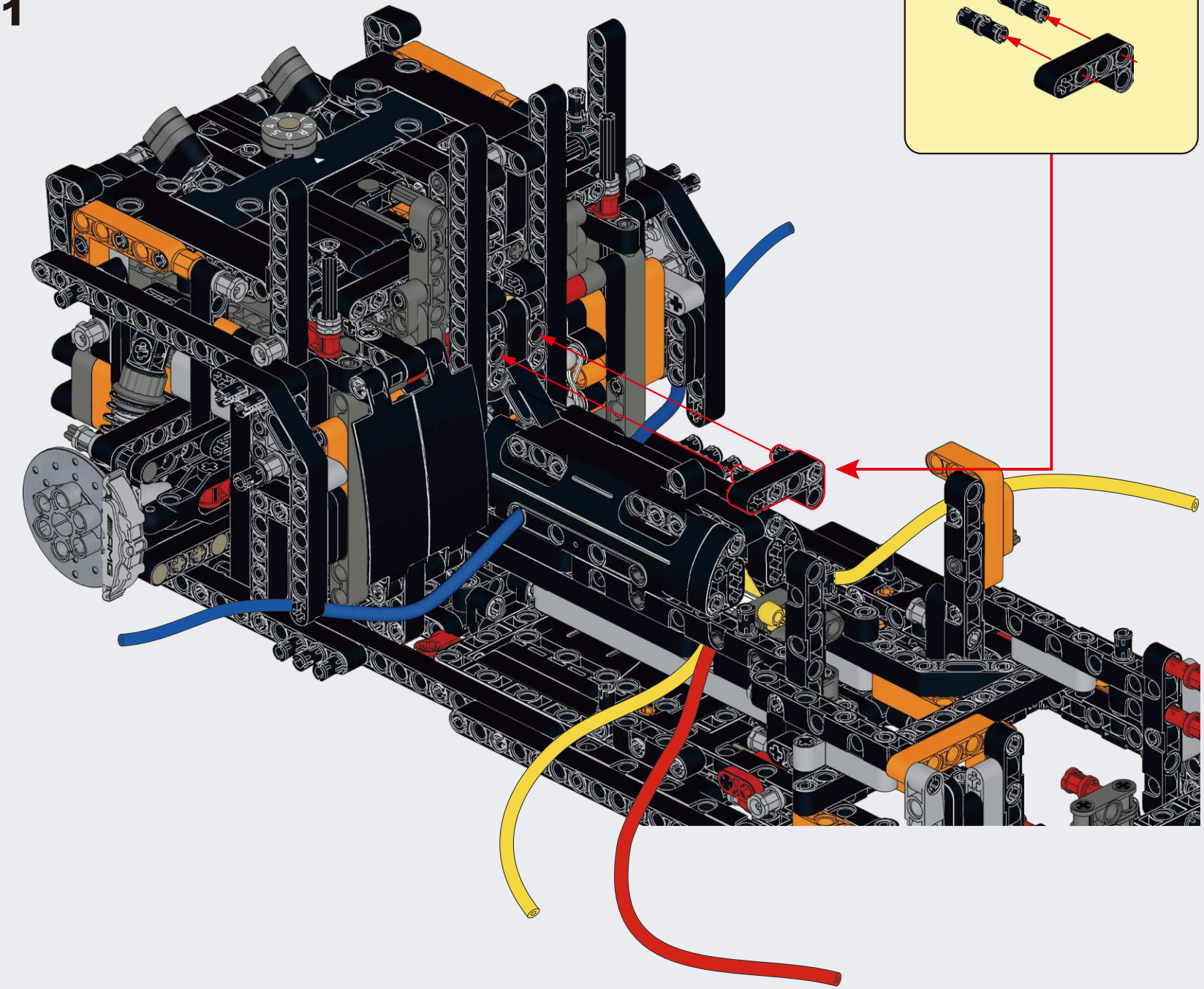

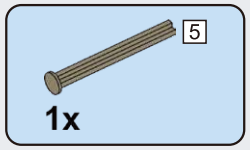

B92

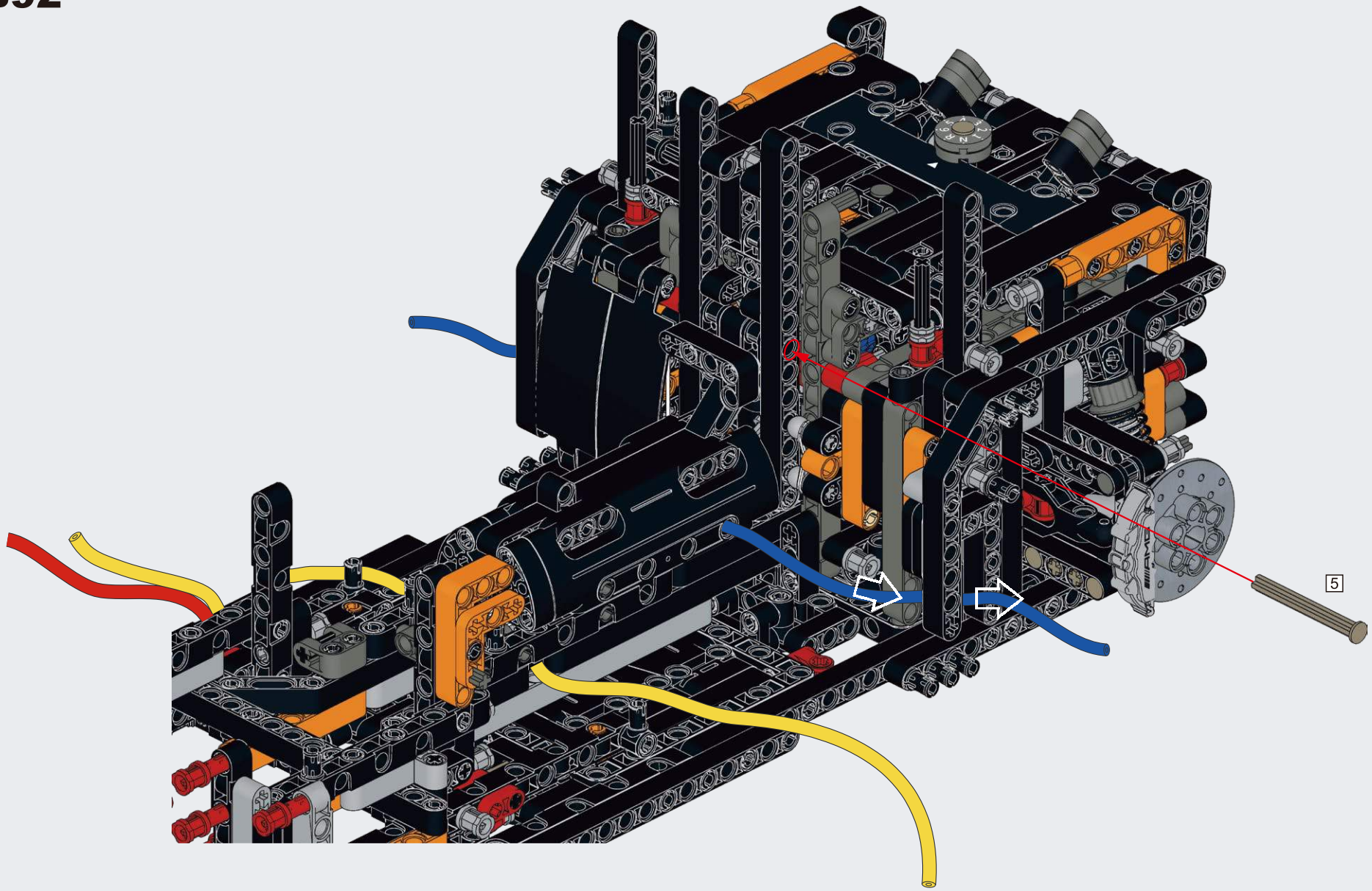

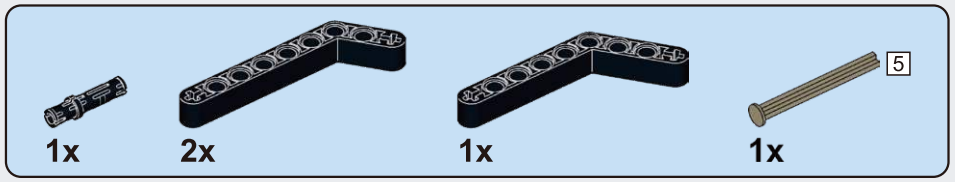

B93

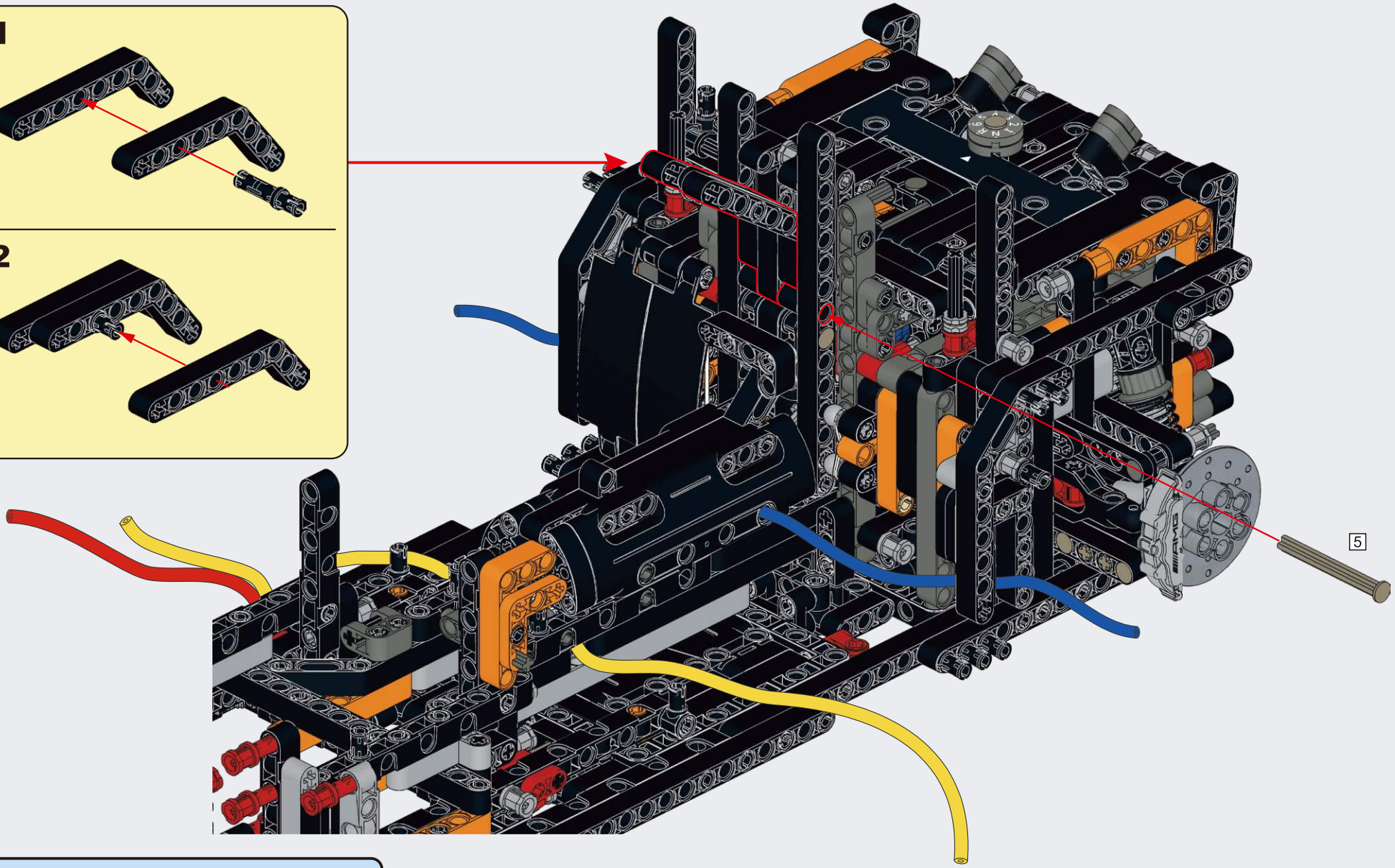

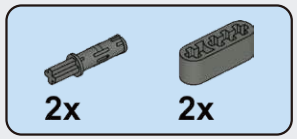

B94

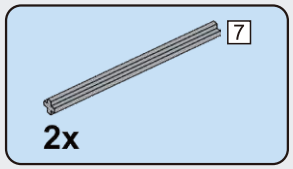

B95

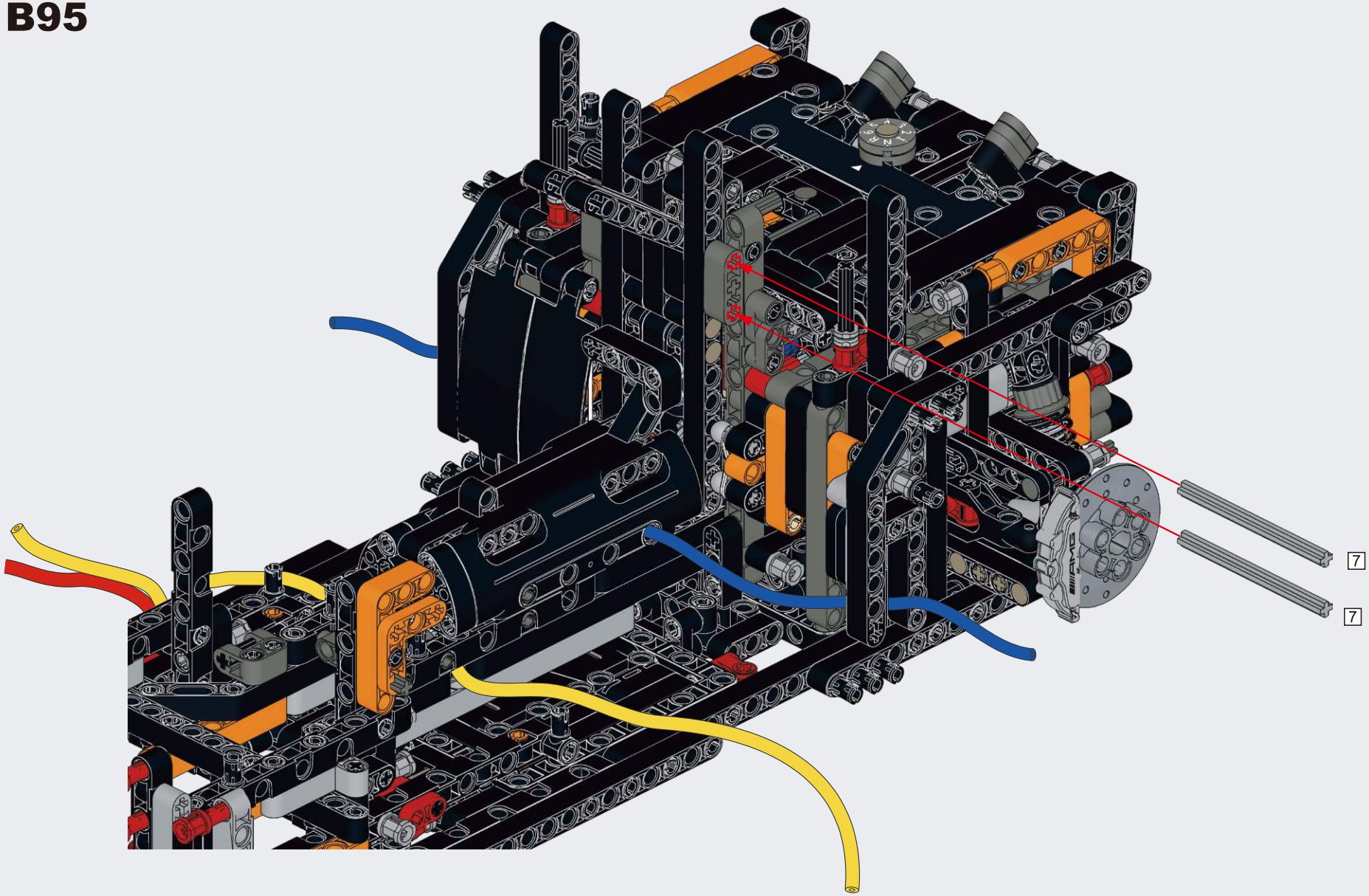

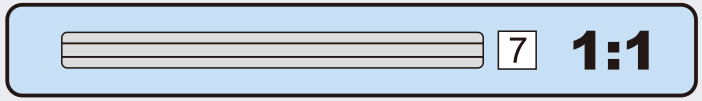

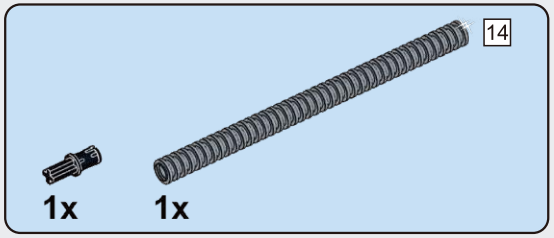

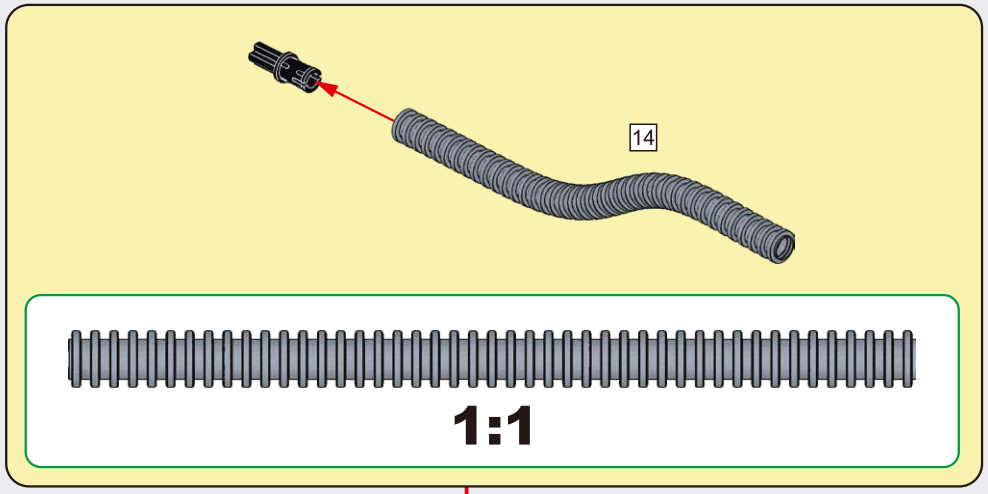

B96

B97

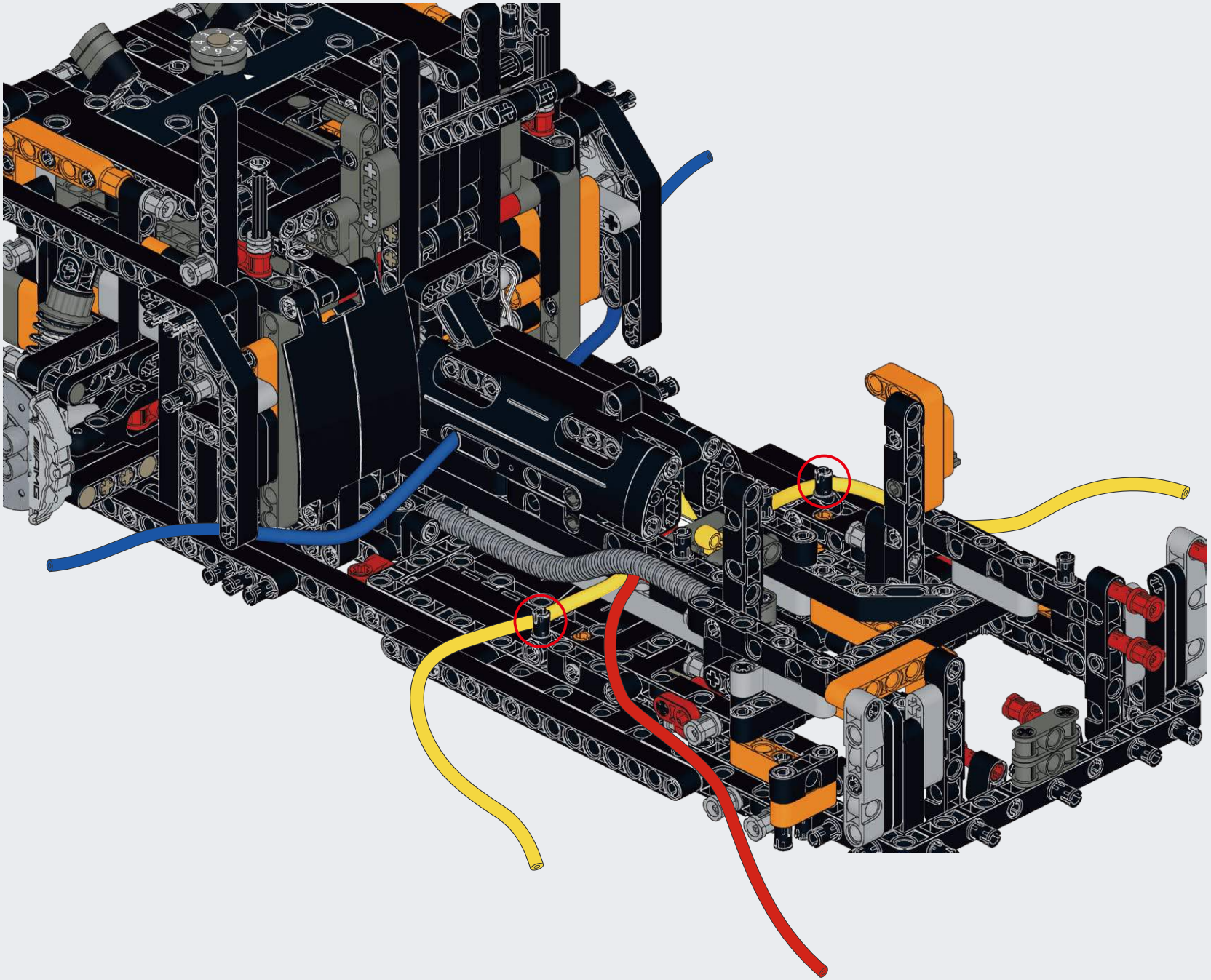

C

BOX 2 / BAG 3

2

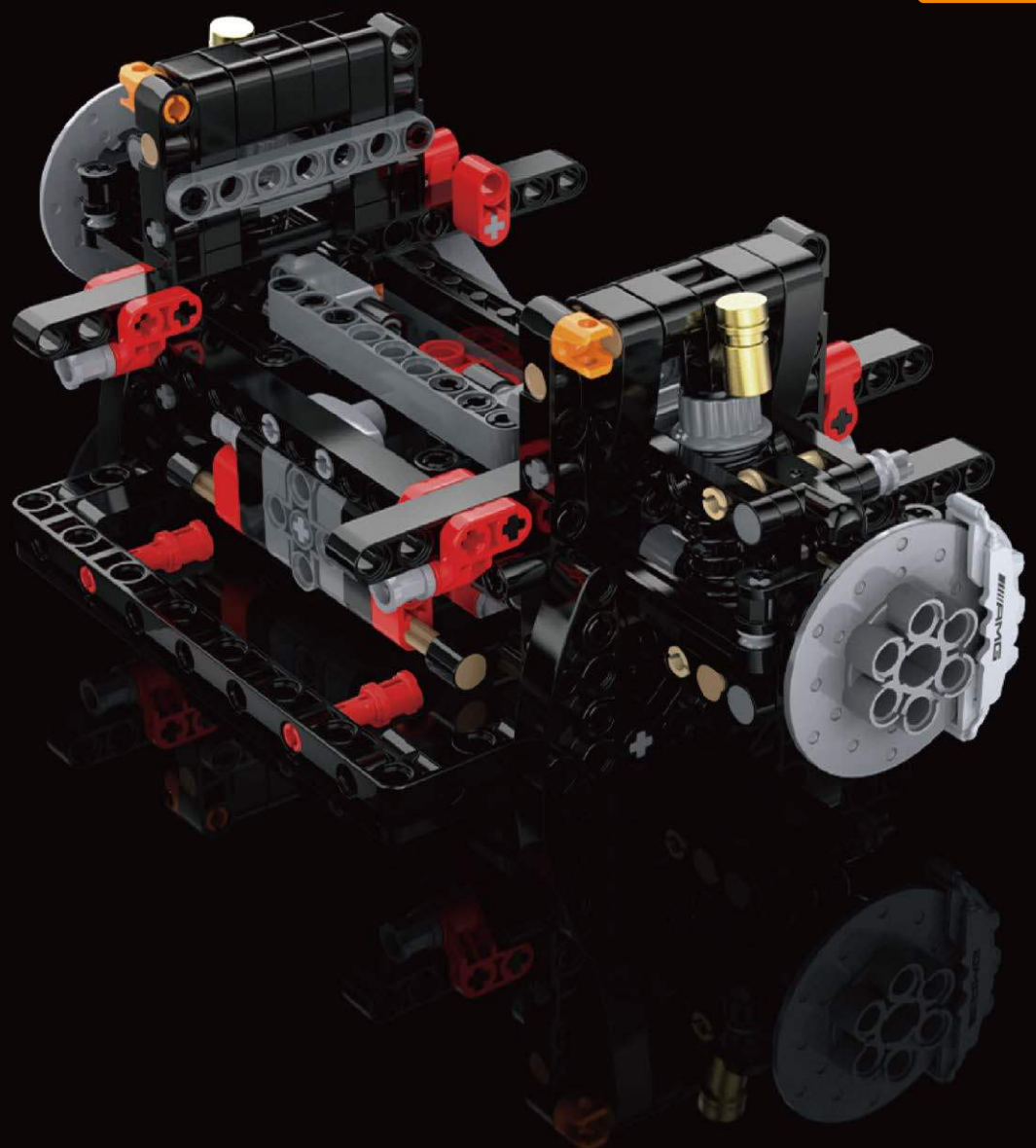

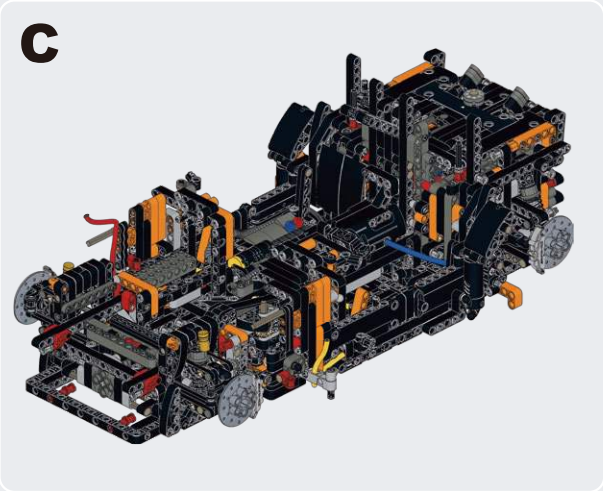

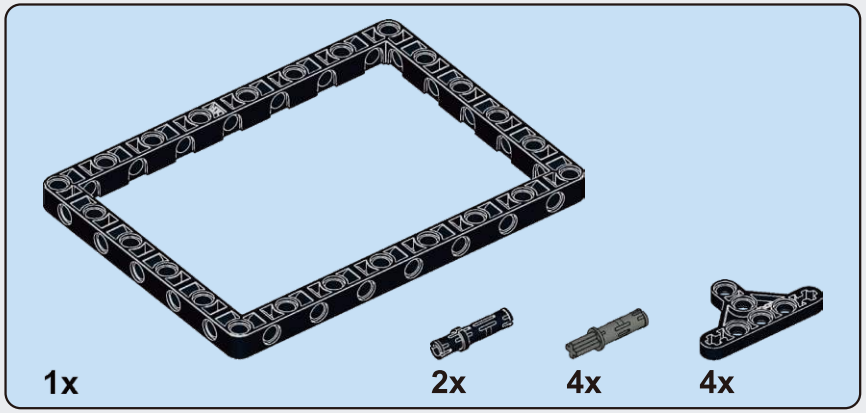

C1

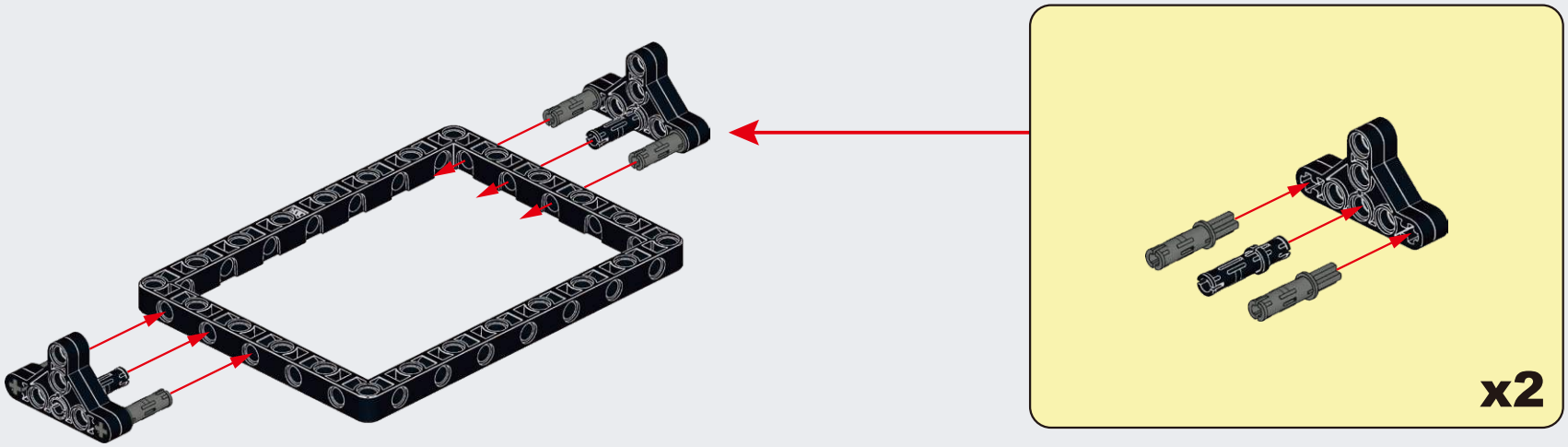

C2

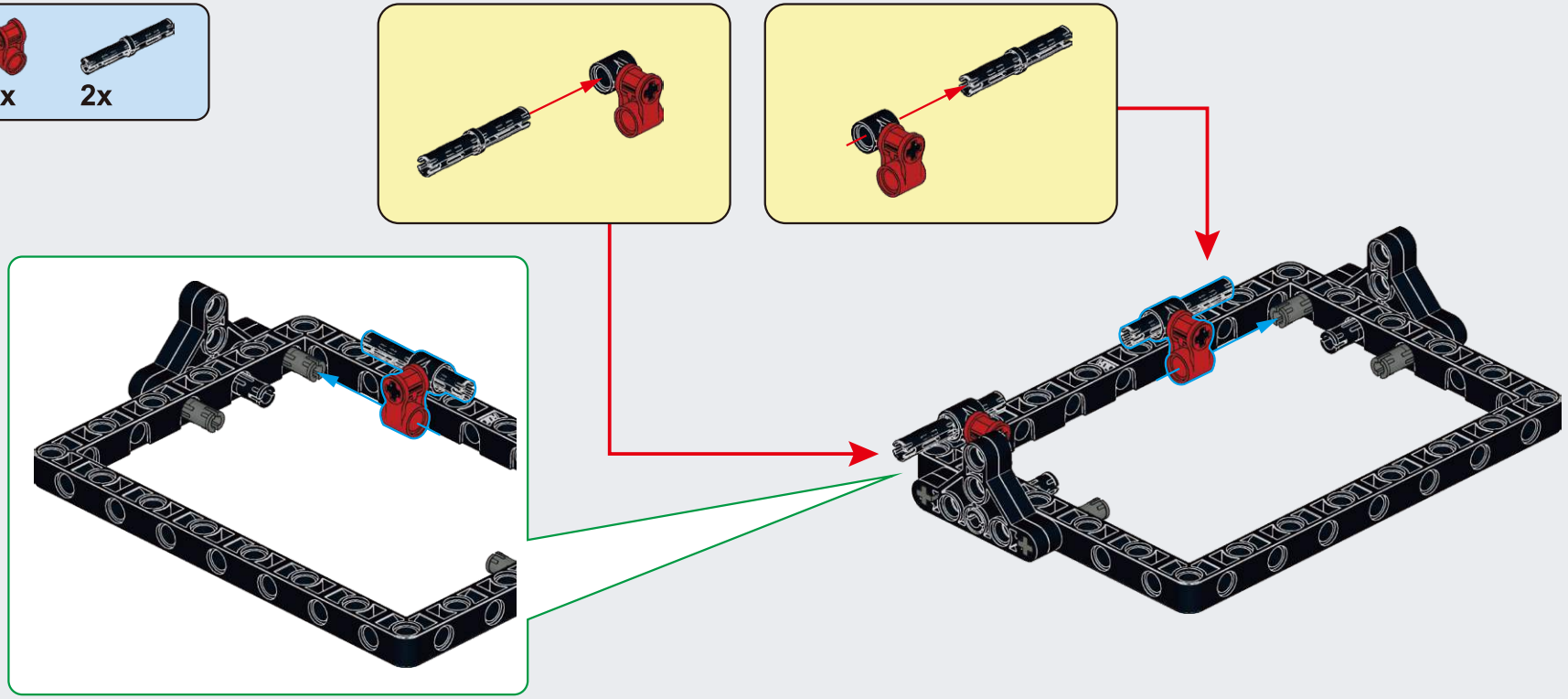

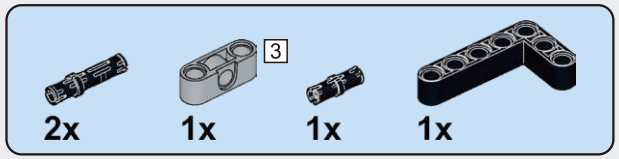

C3

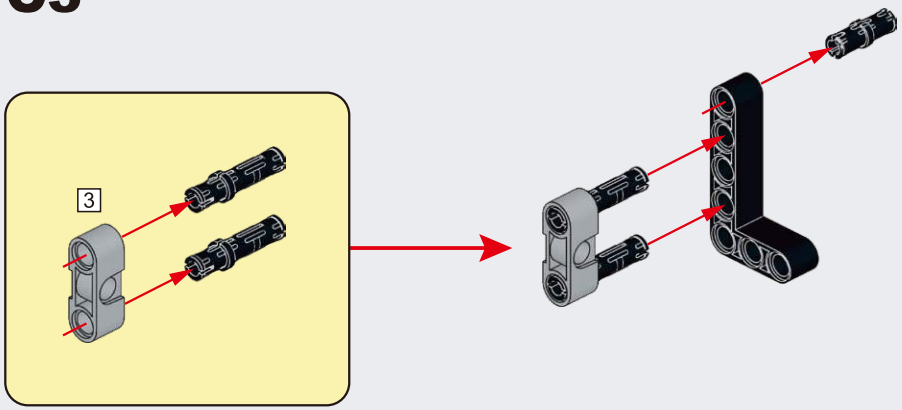

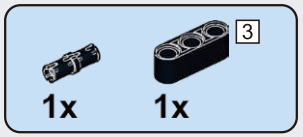

C4

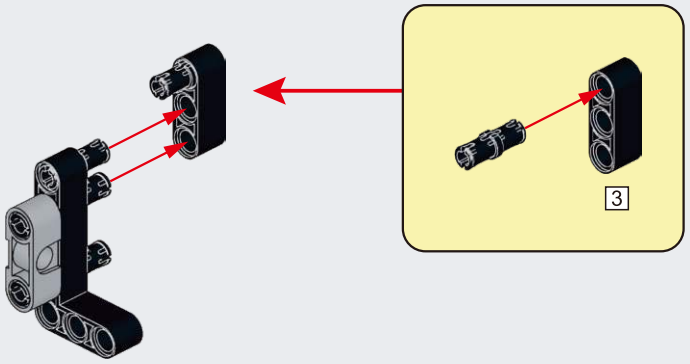

C5

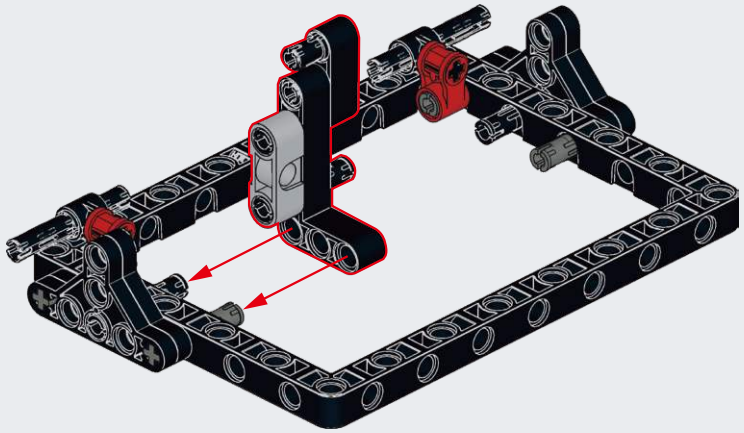

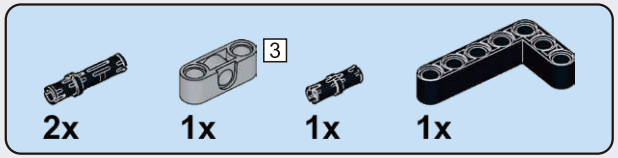

C6

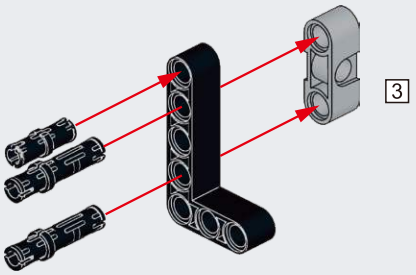

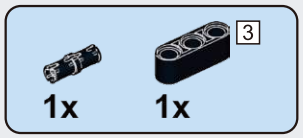

C7

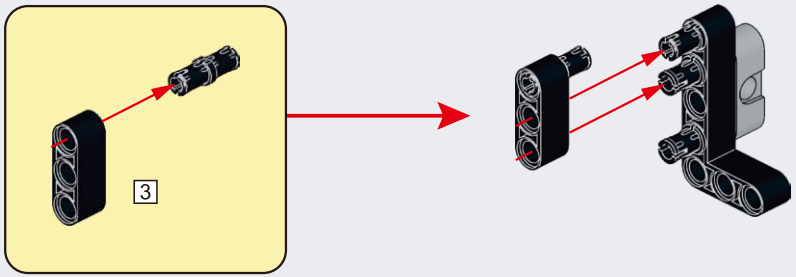

C8

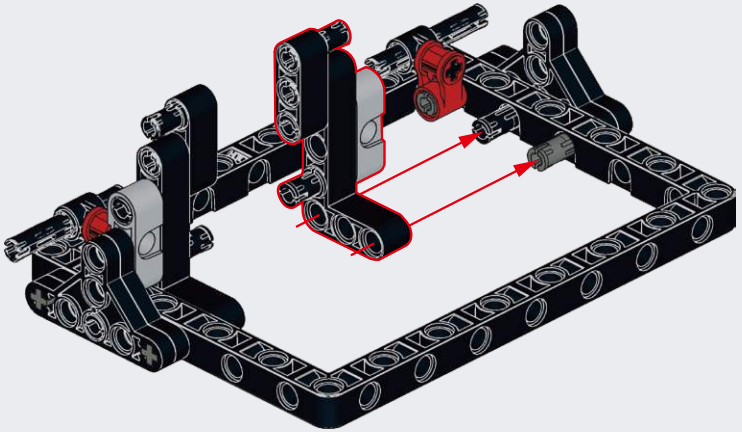

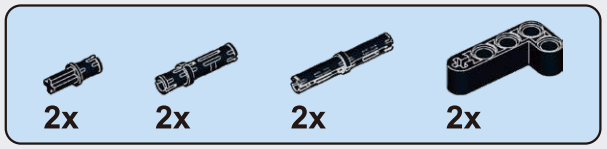

C9

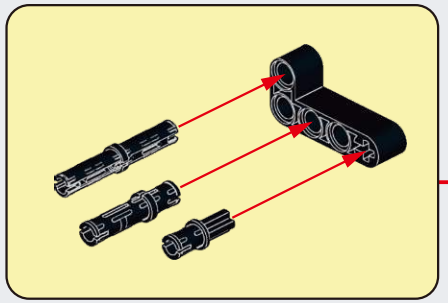

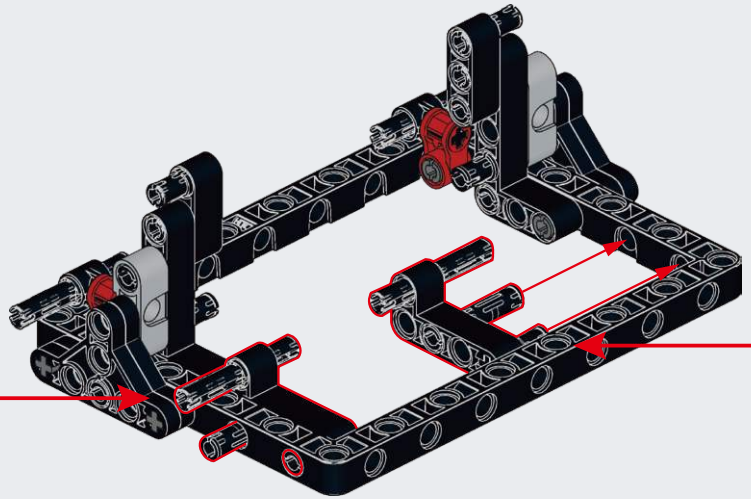

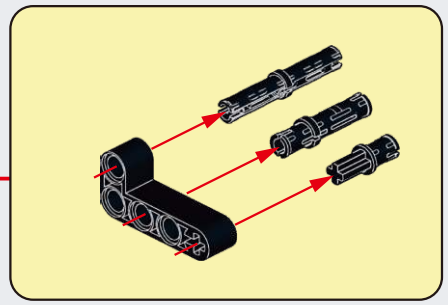

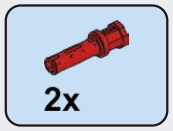

C10

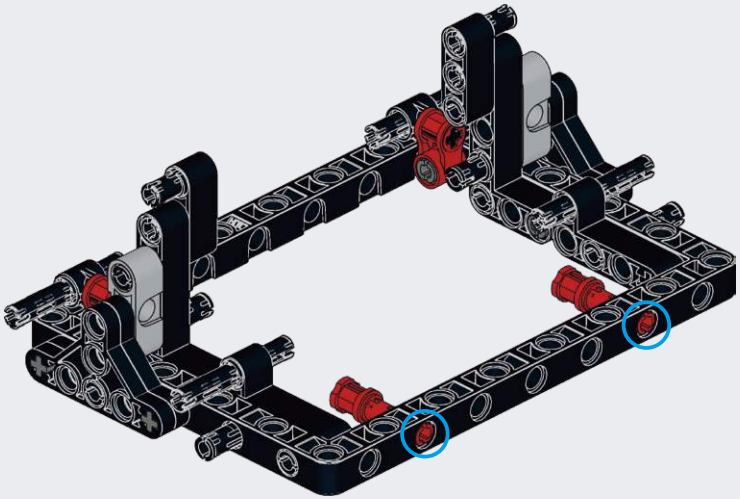

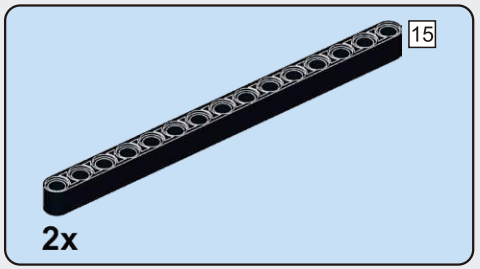

C11

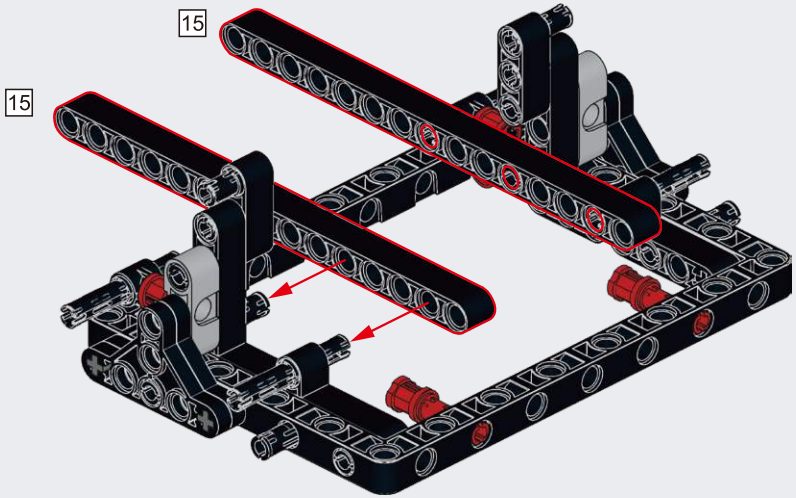

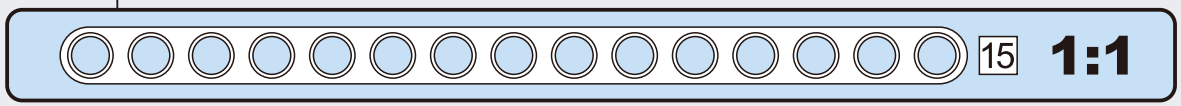

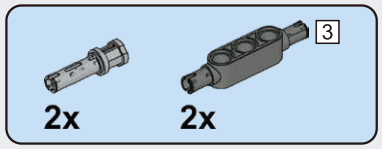

C12

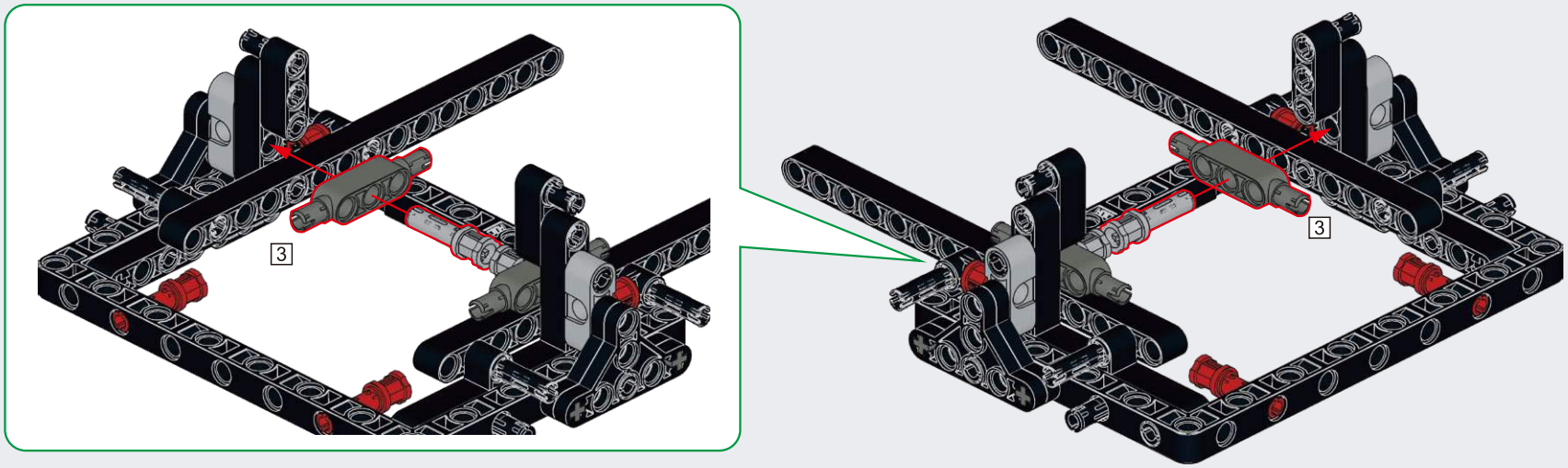

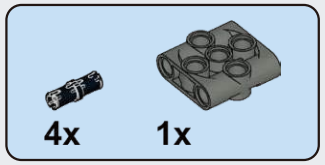

C13

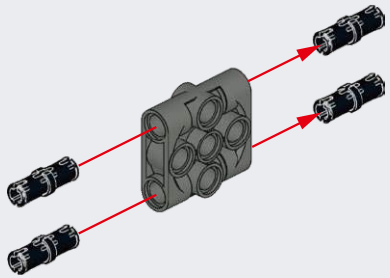

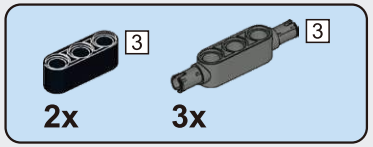

C14

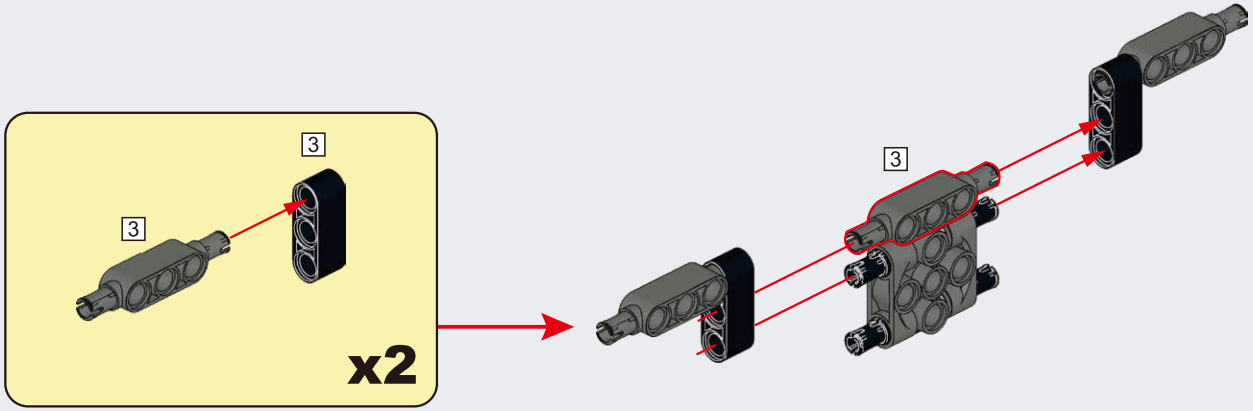

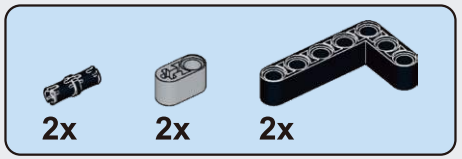

C15

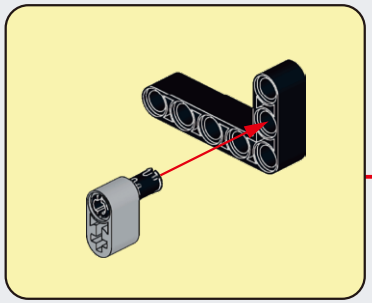

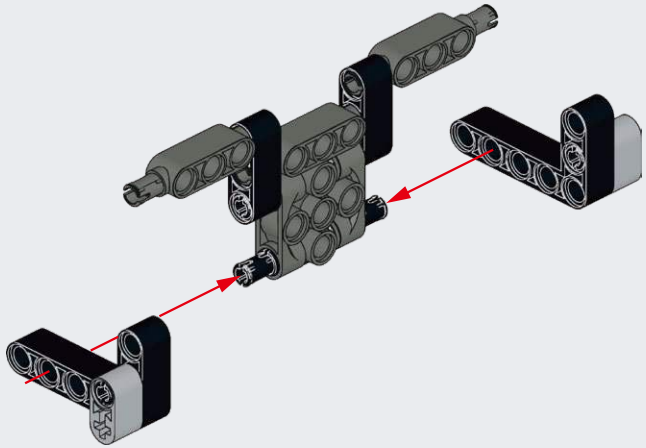

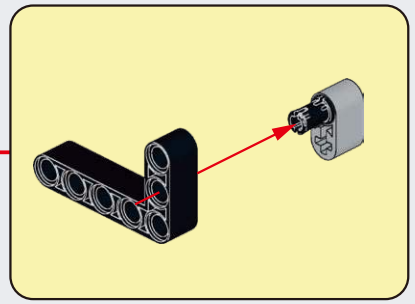

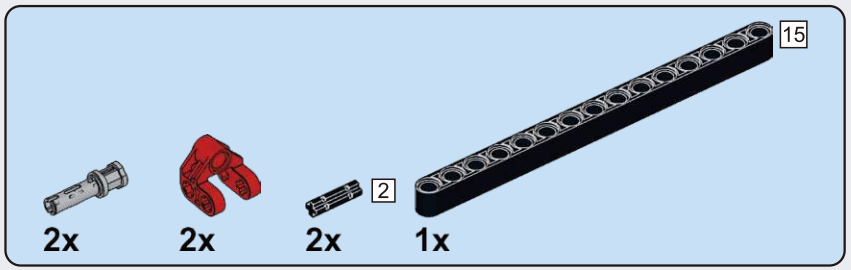

C16

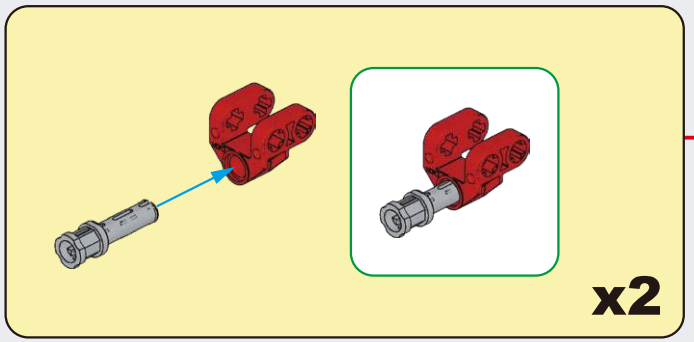

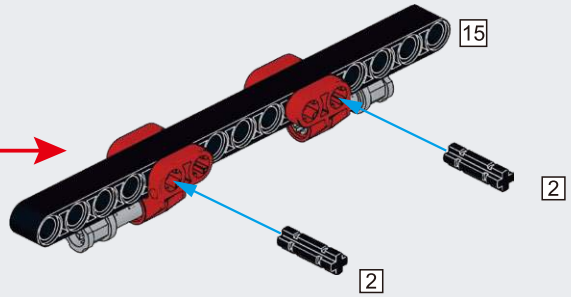

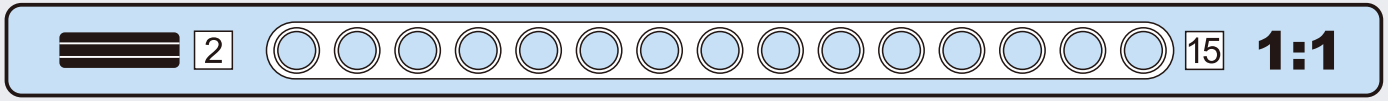

C17

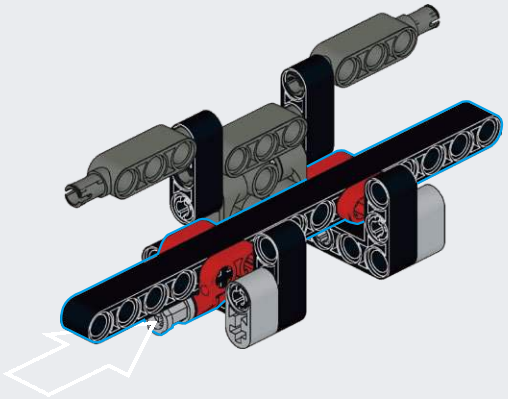

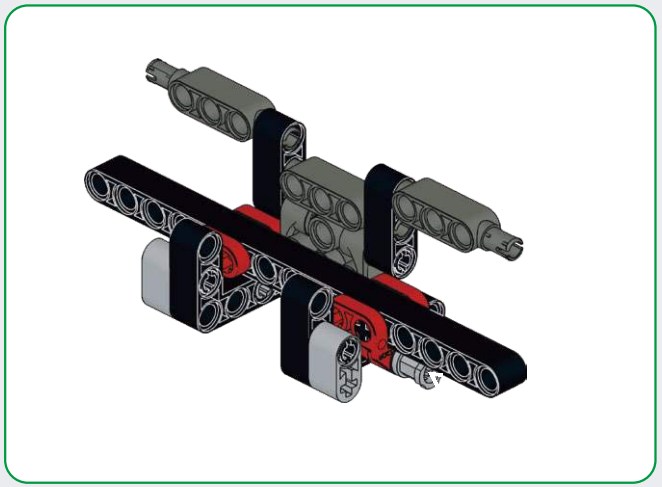

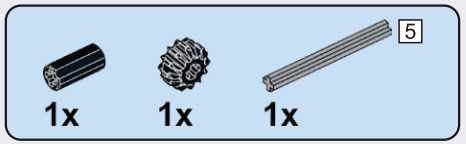

C18

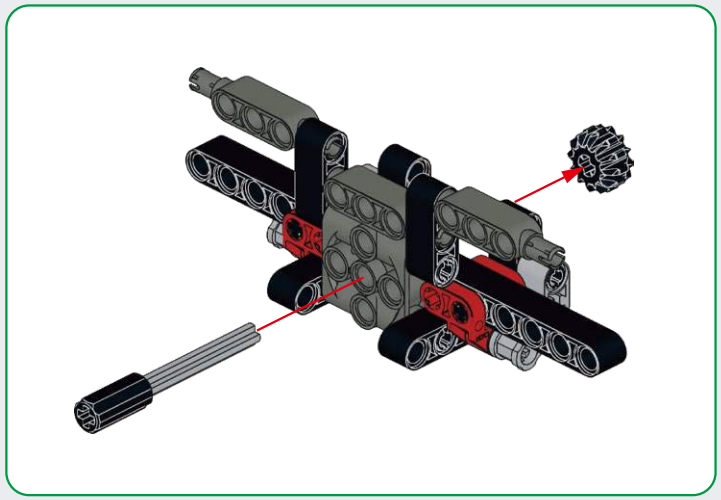

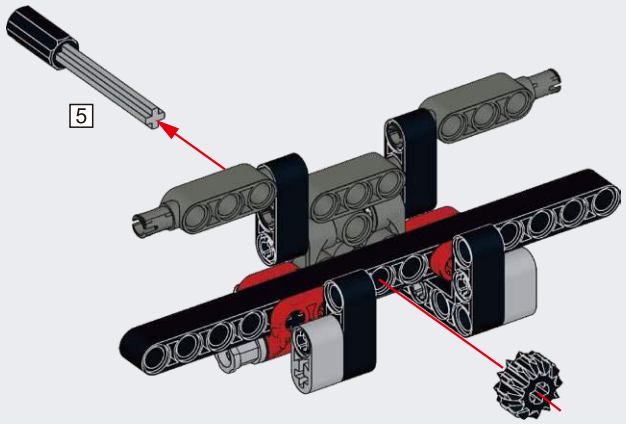

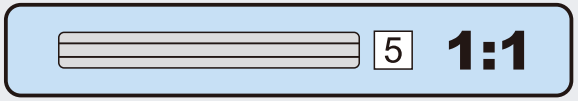

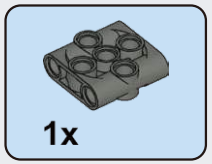

C19

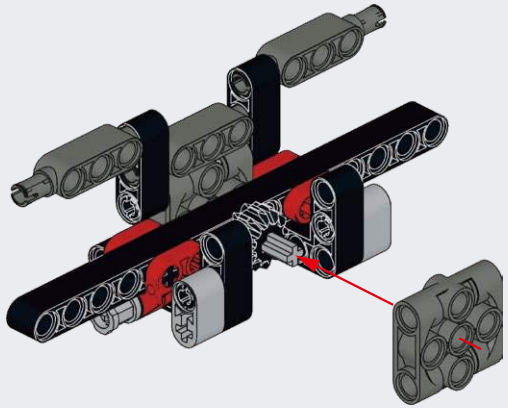

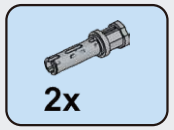

C20

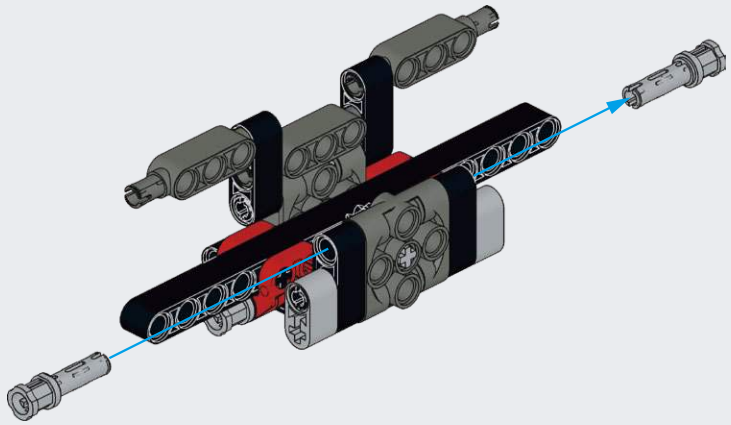

C21

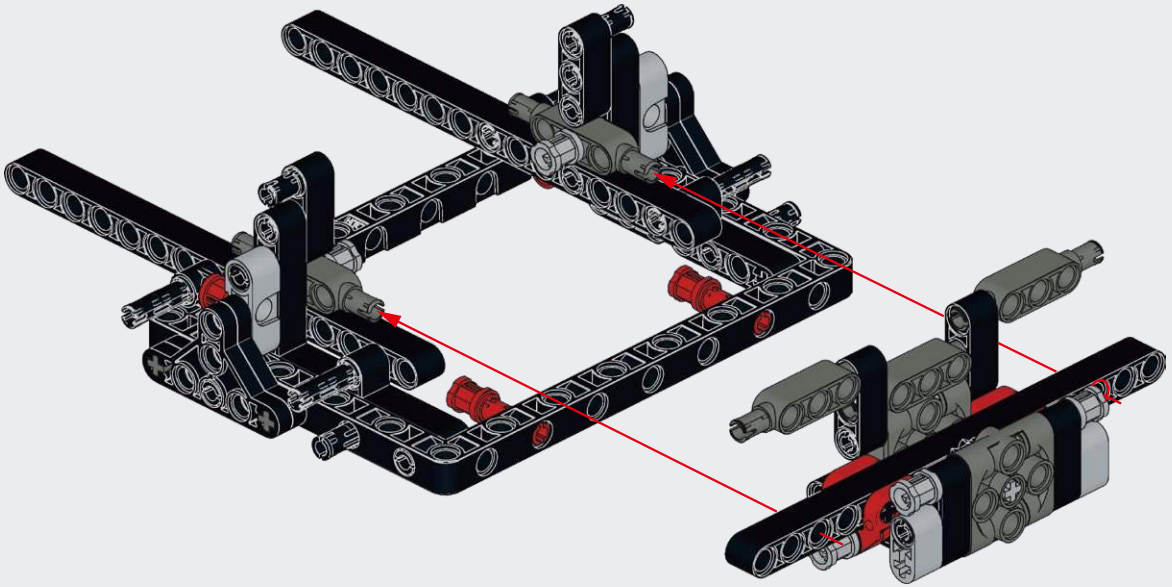

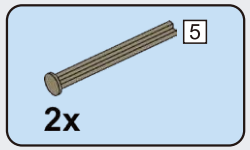

C22

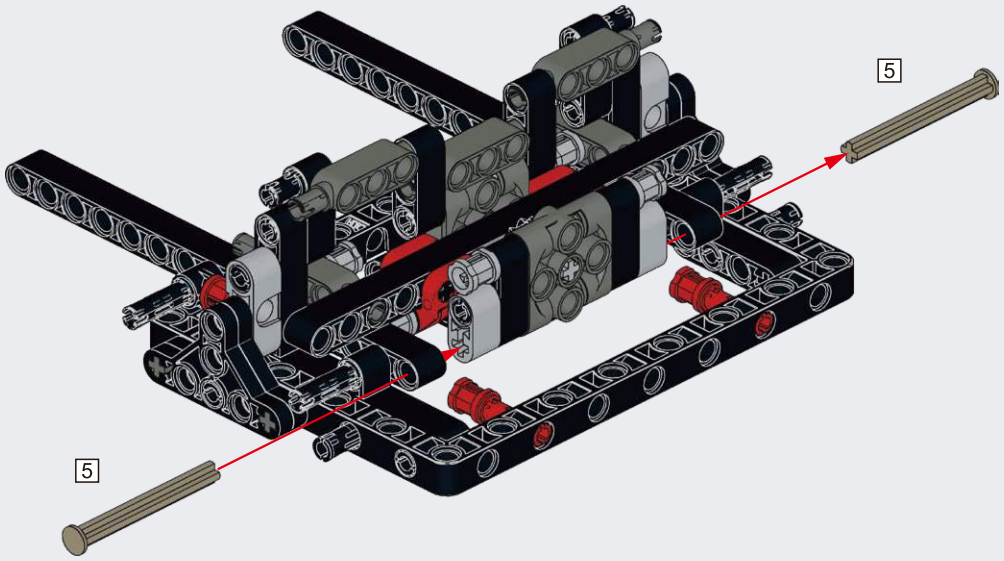

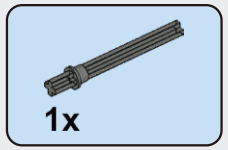

C23

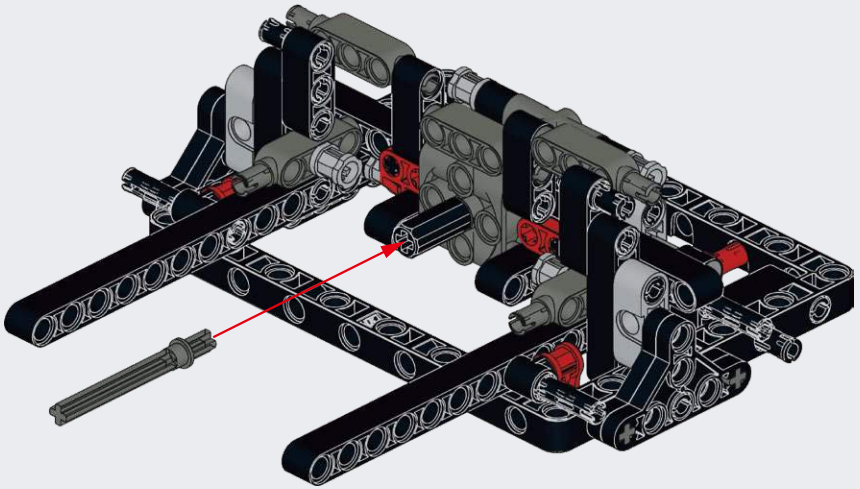

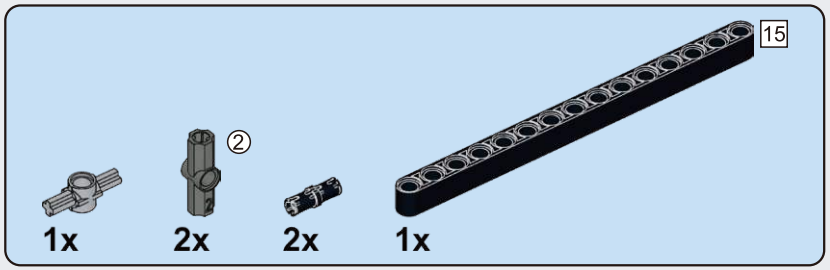

C24

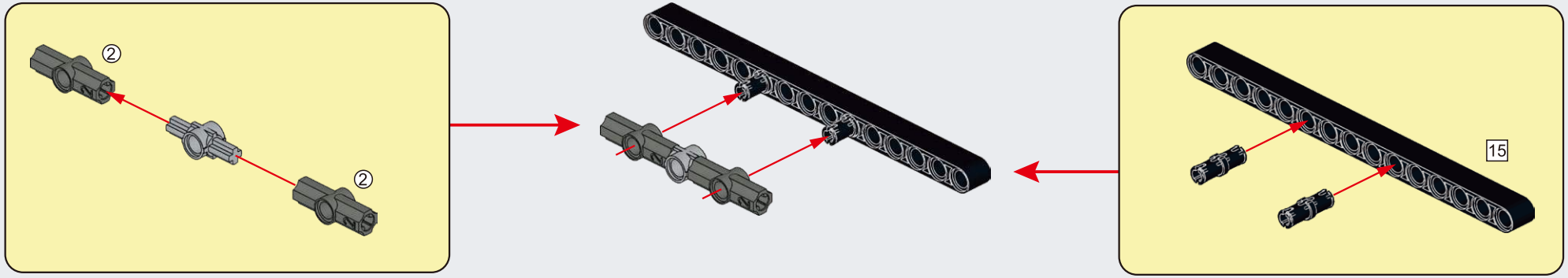

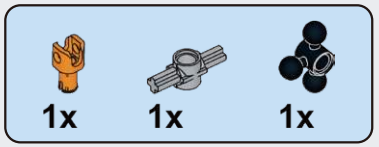

C25

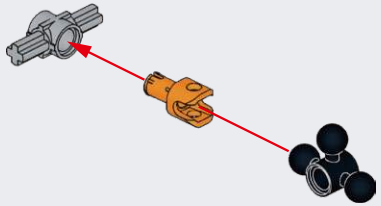

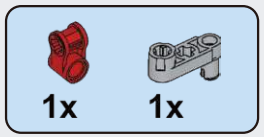

C26

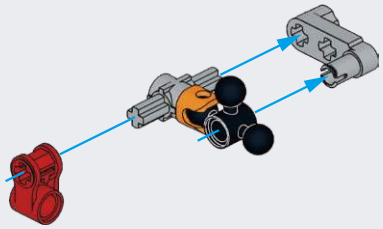

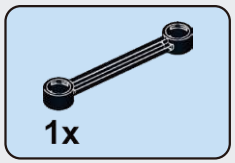

C27

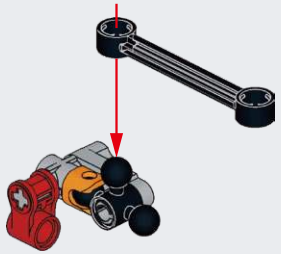

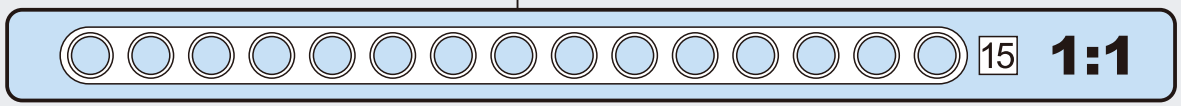

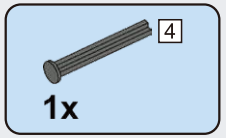

C28

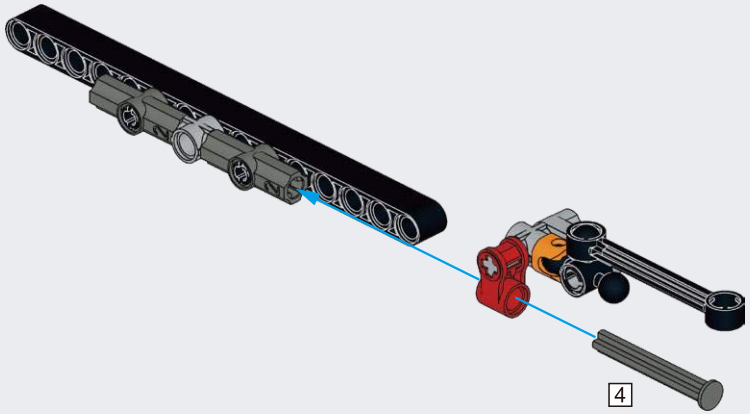

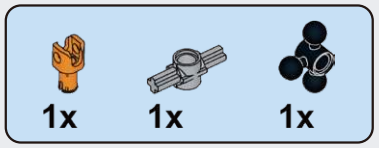

C29

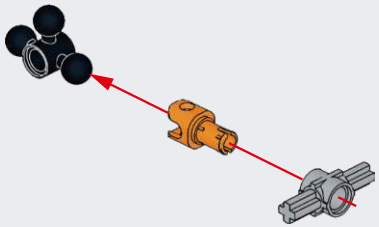

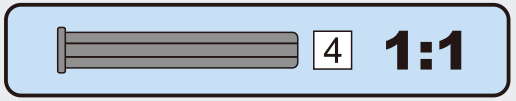

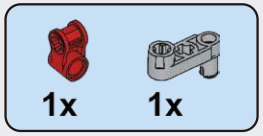

C30

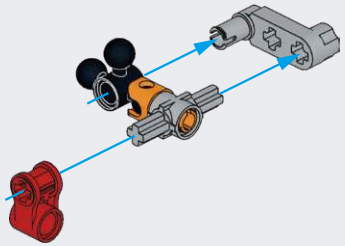

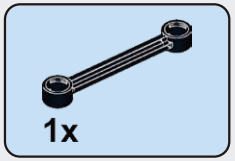

C31

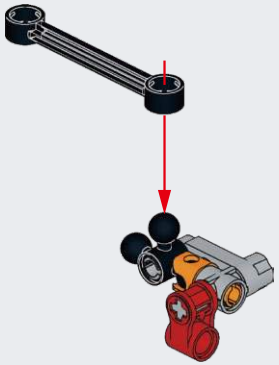

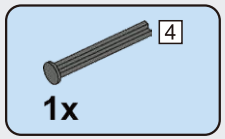

C32

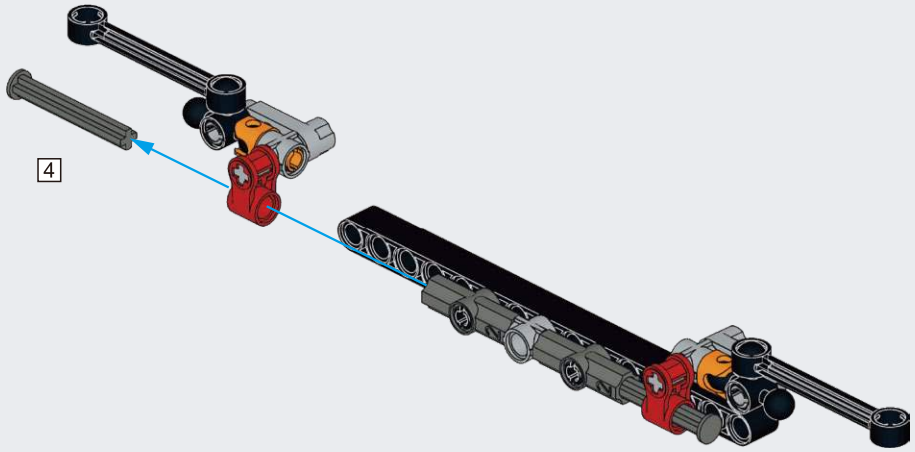

C33

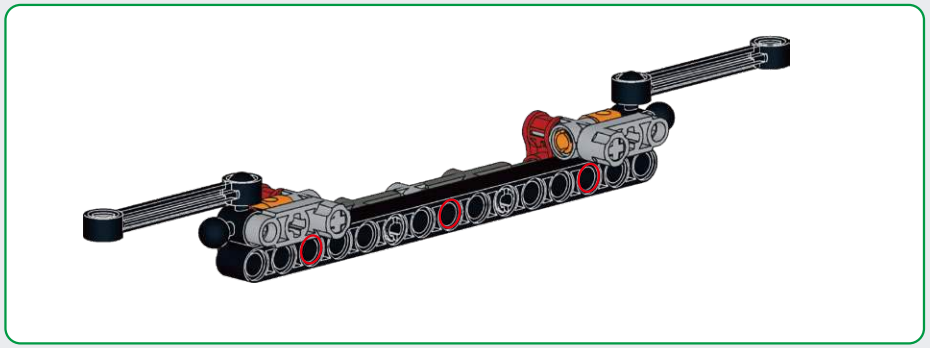

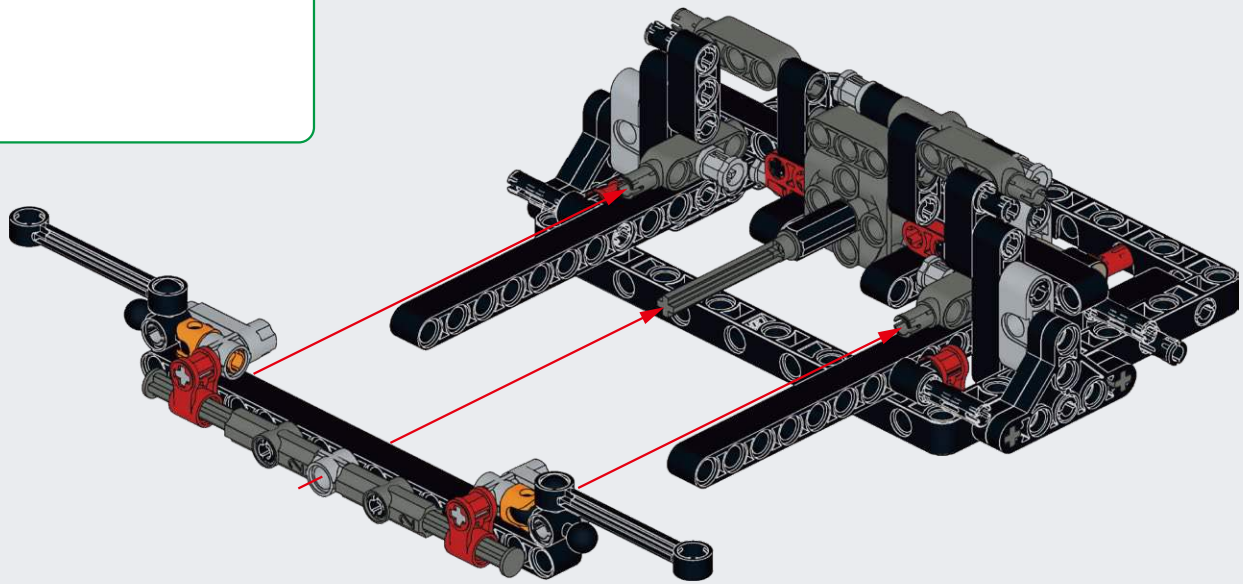

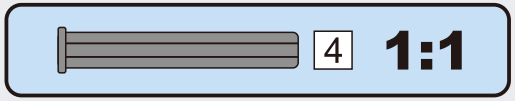

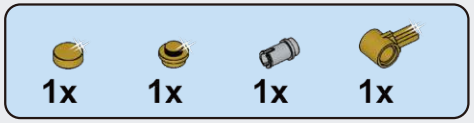

C34

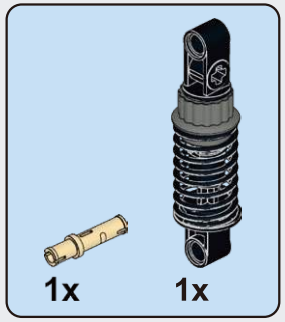

C35

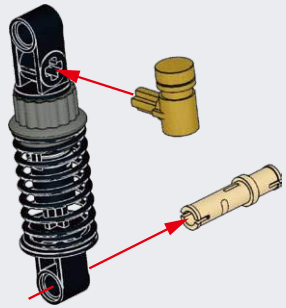

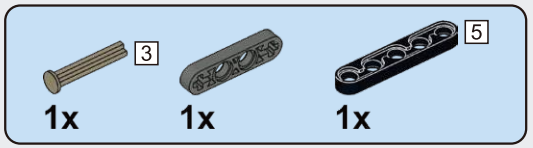

C36

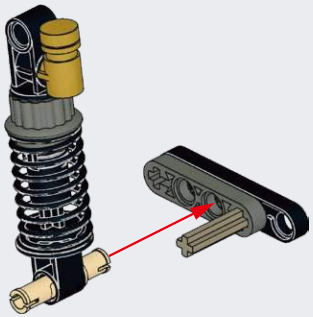

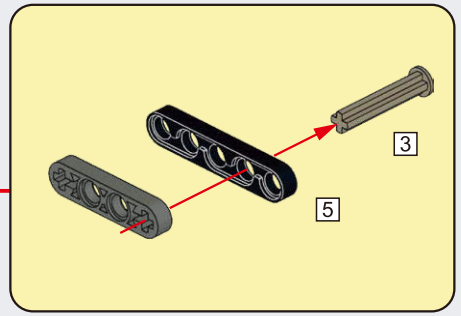

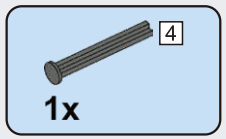

C37

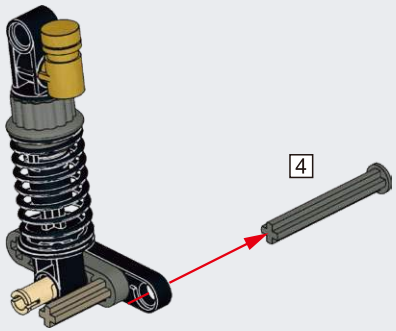

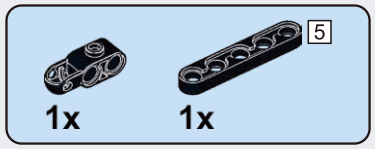

C38

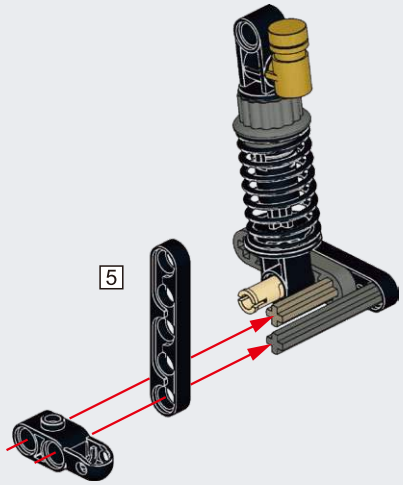

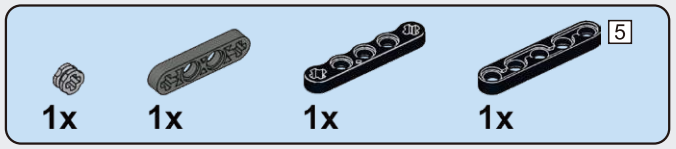

C39

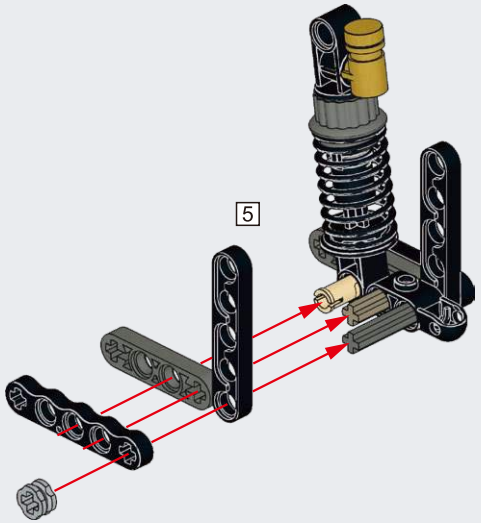

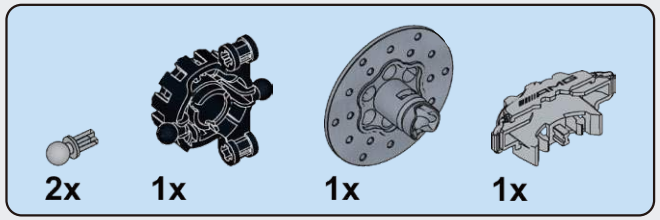

C40

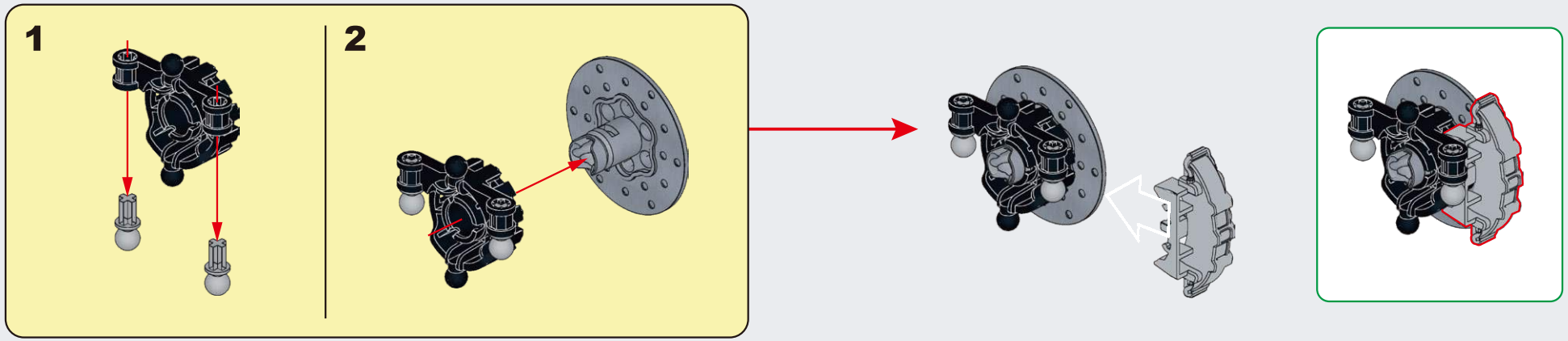

C41

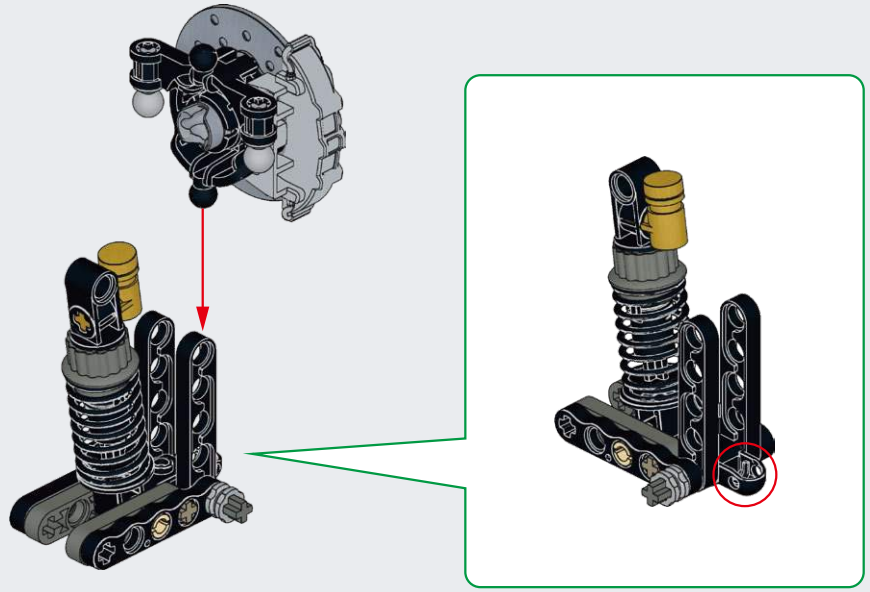

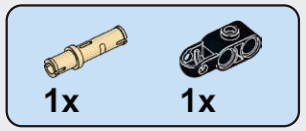

C42

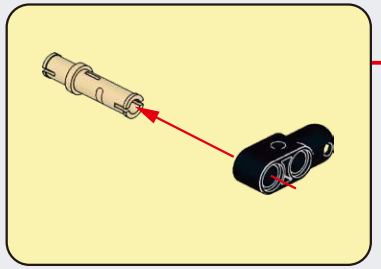

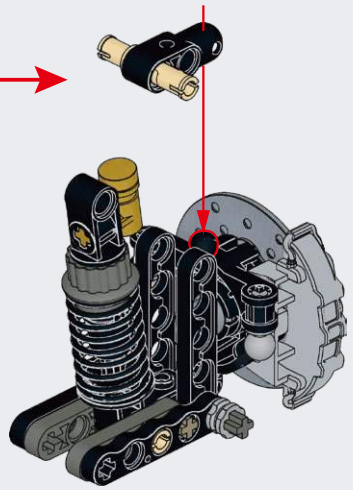

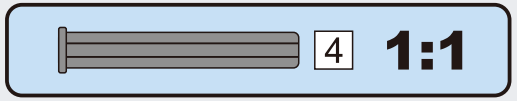

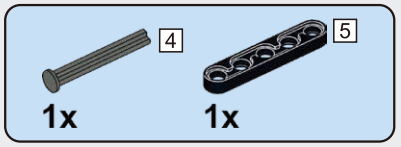

C43

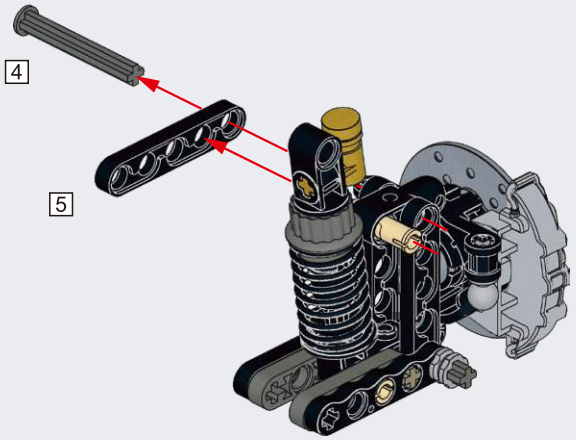

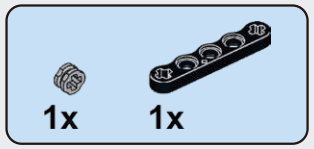

C44

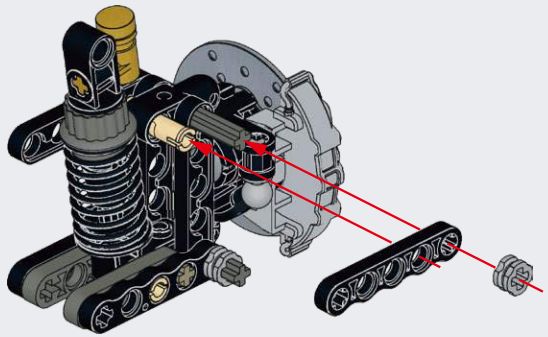

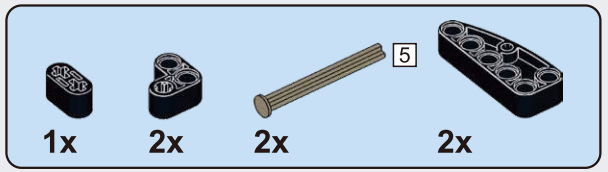

C45

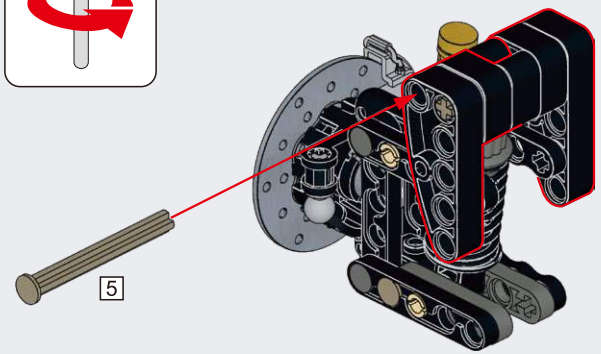

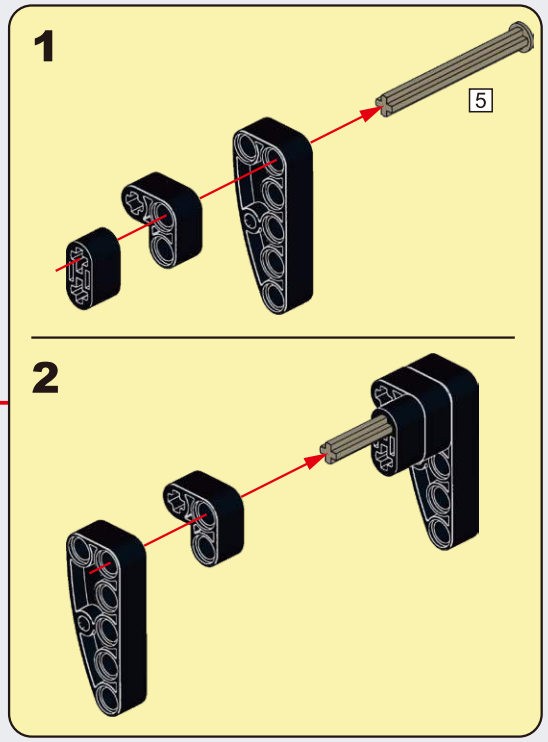

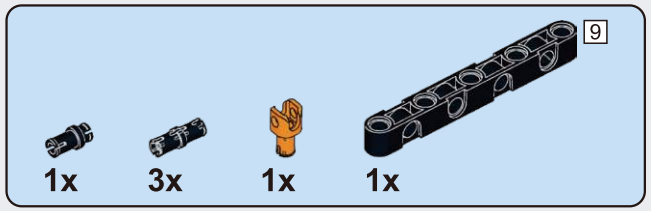

C46

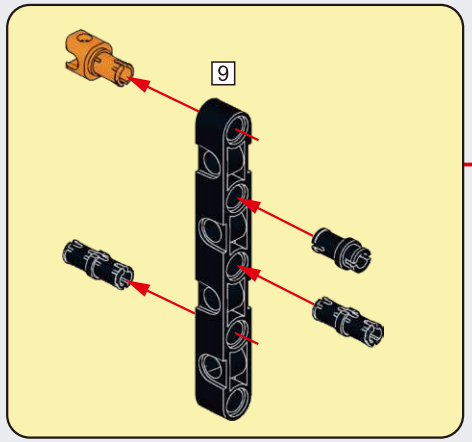

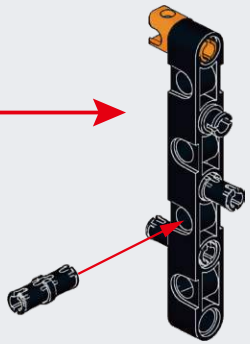

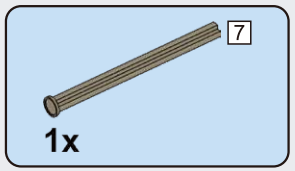

C47

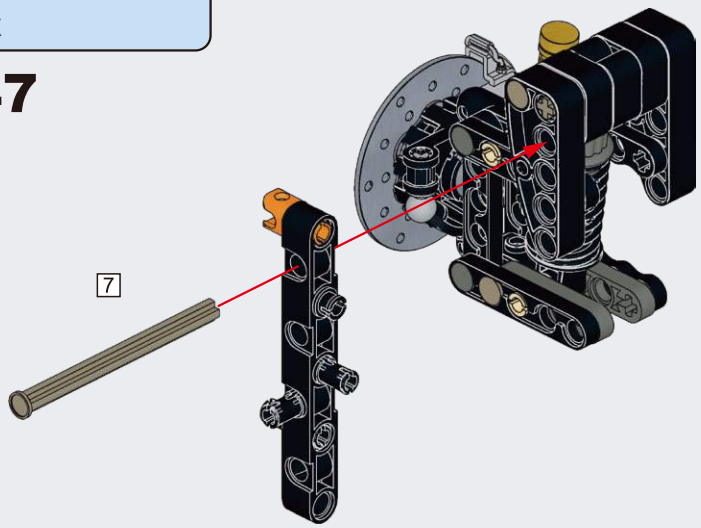

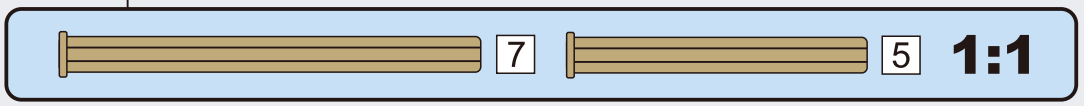

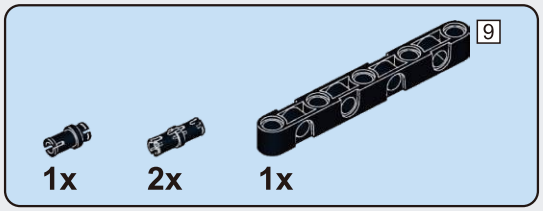

C48

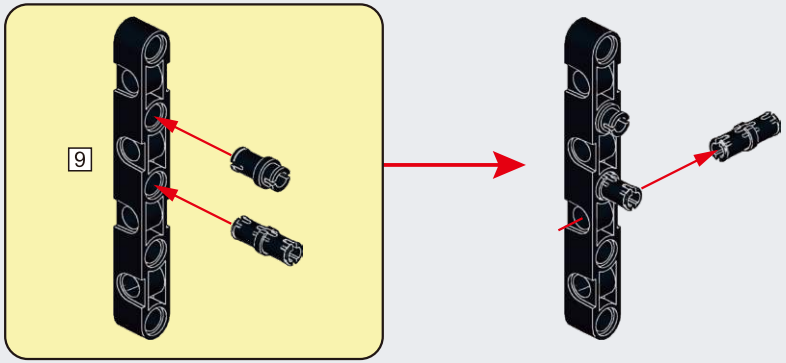

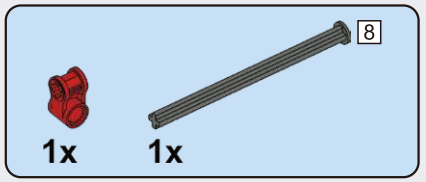

C49

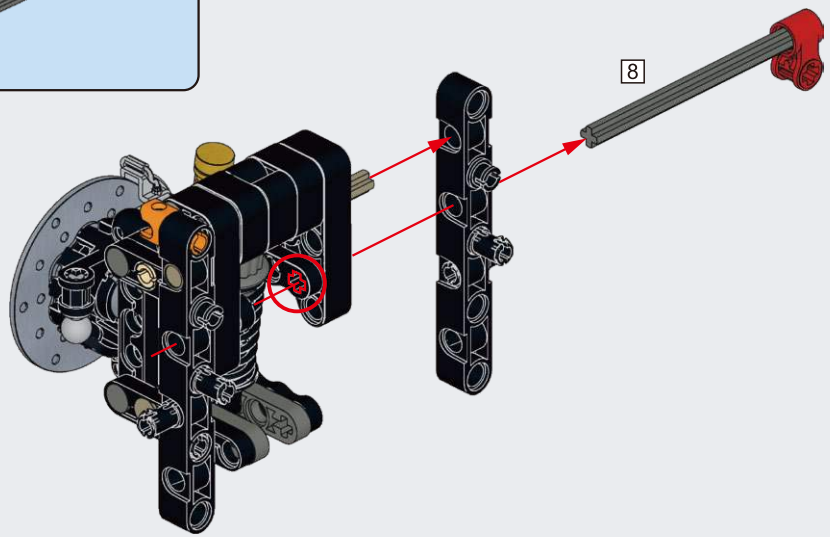

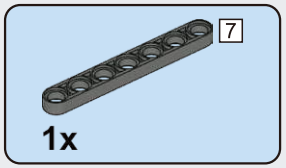

C50

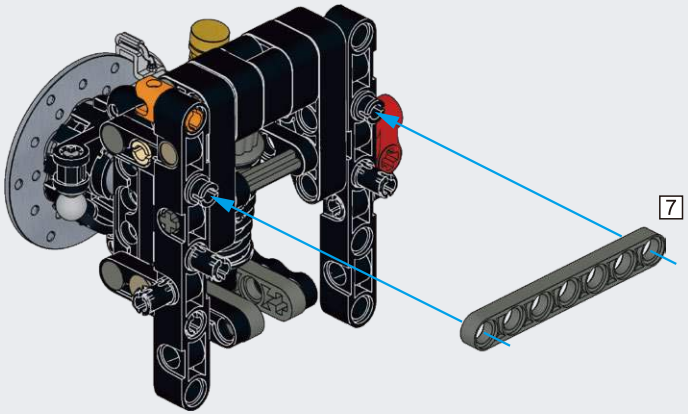

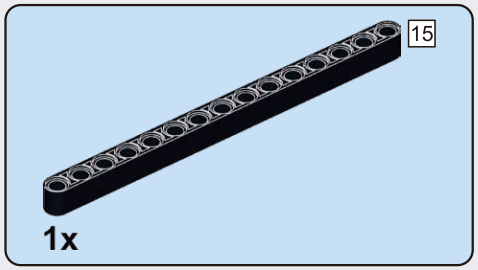

C51

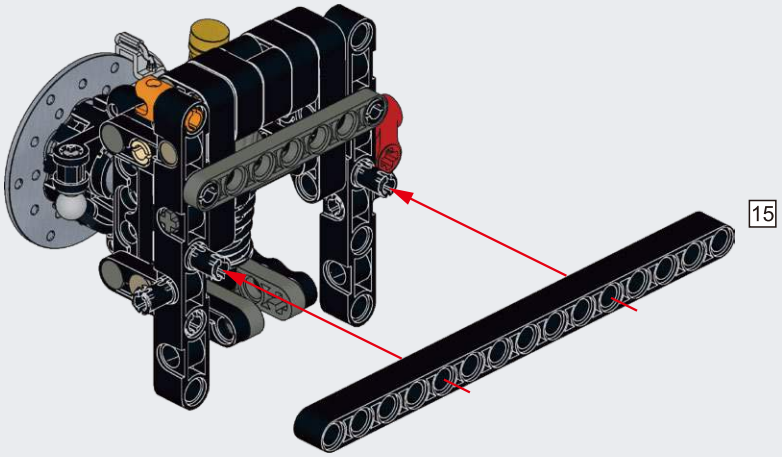

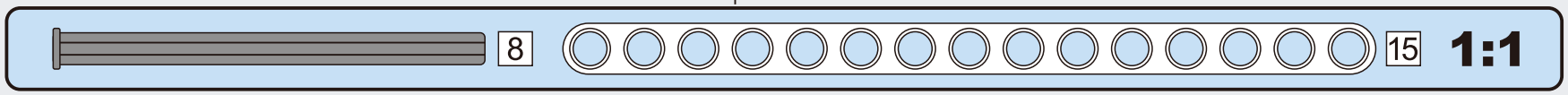

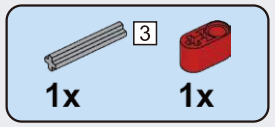

C52

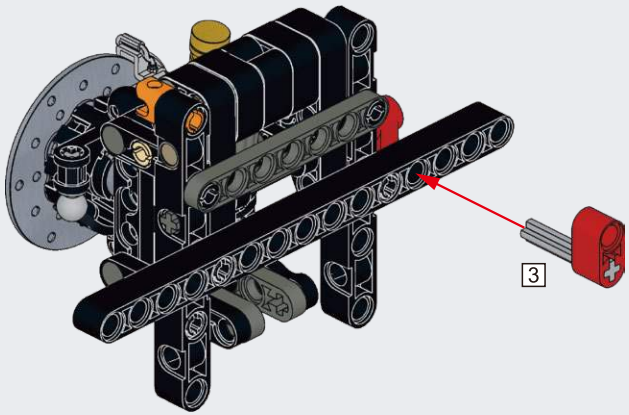

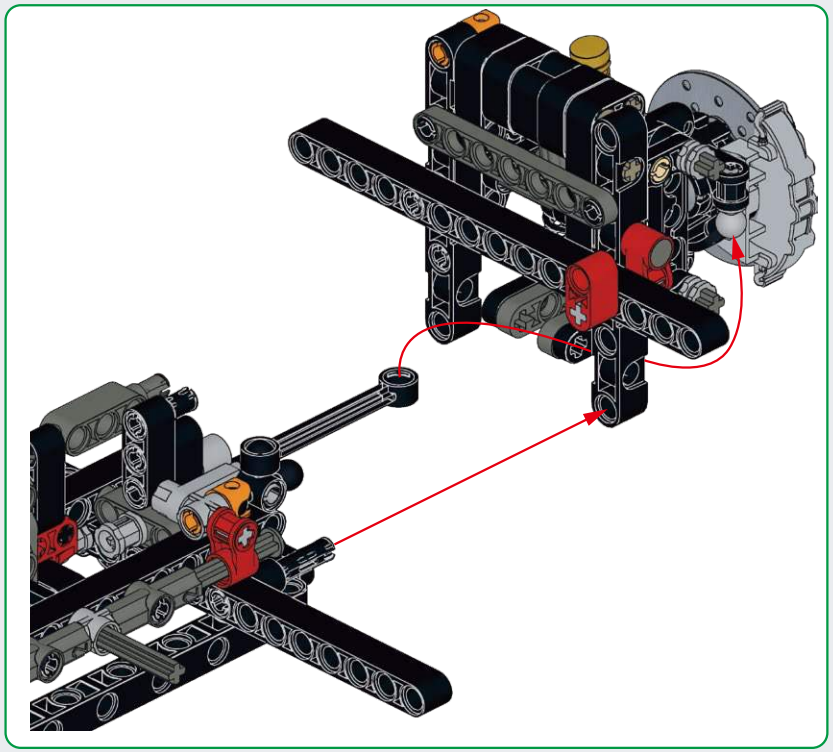

C53

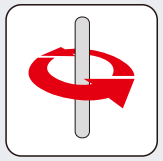

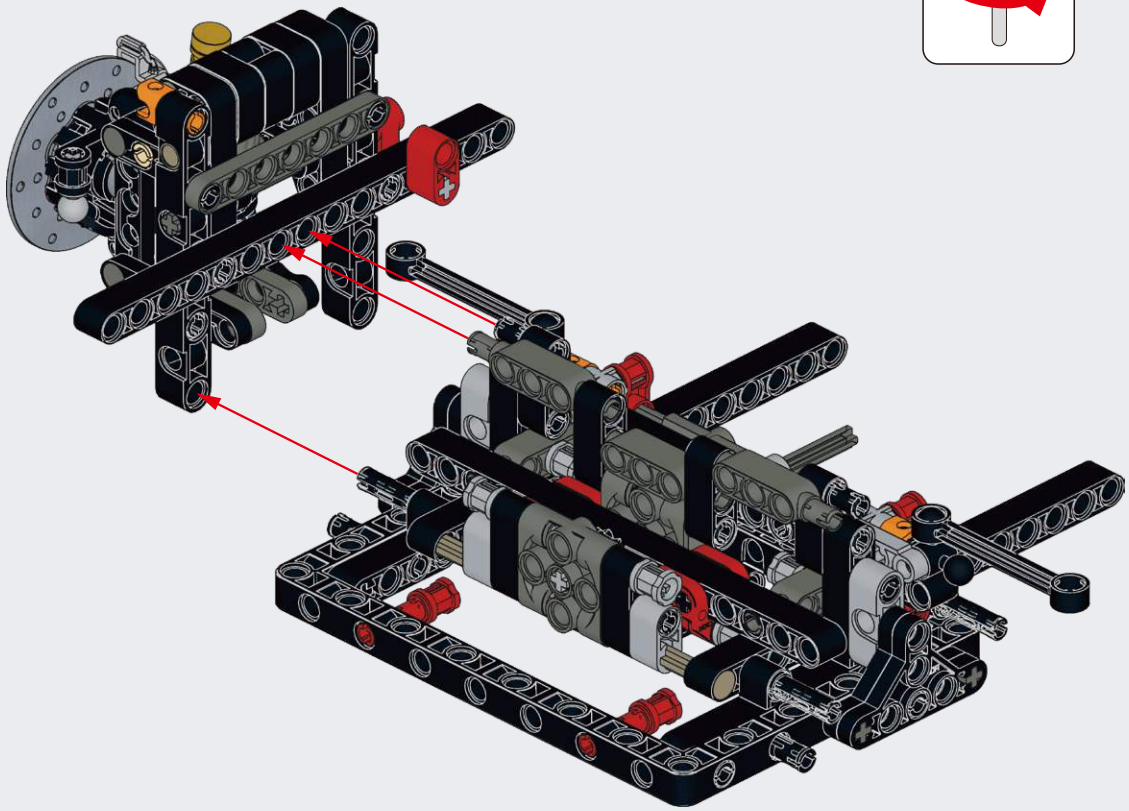

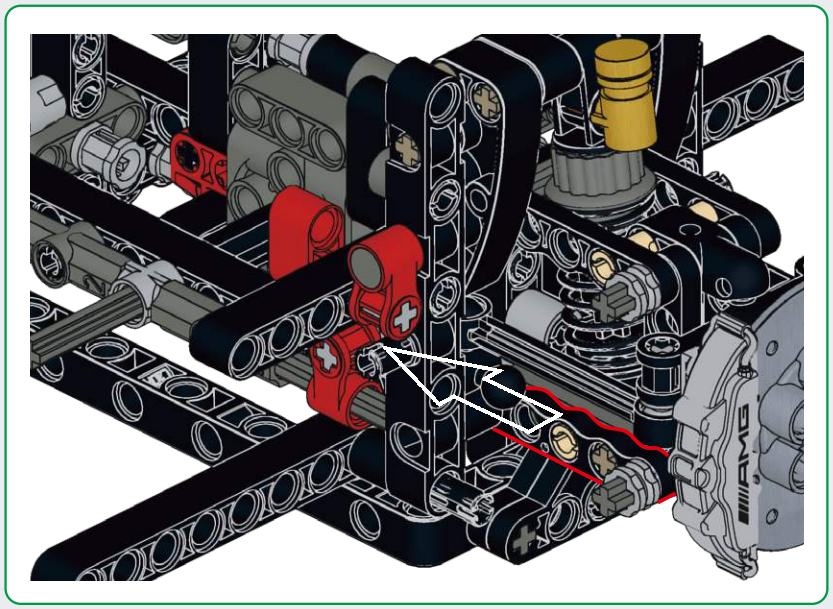

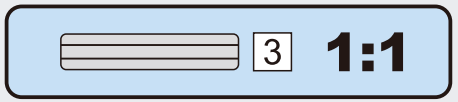

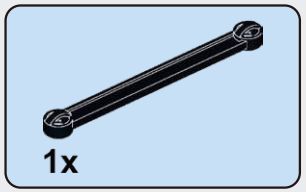

C54

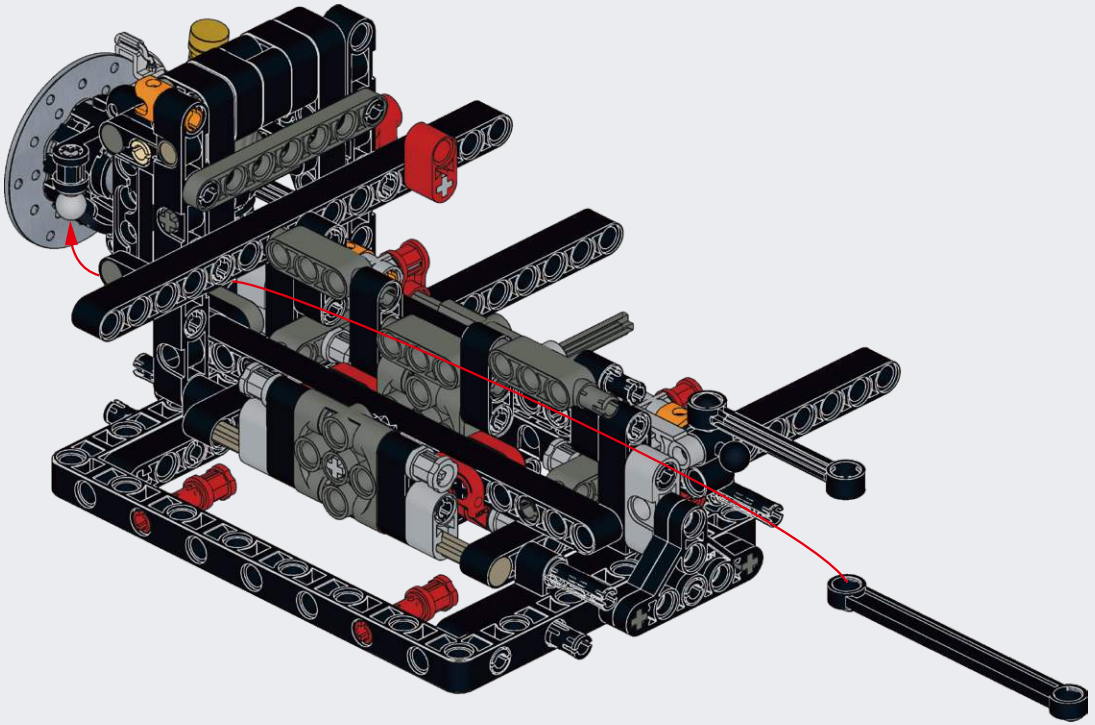

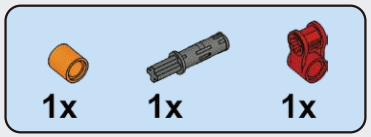

C55

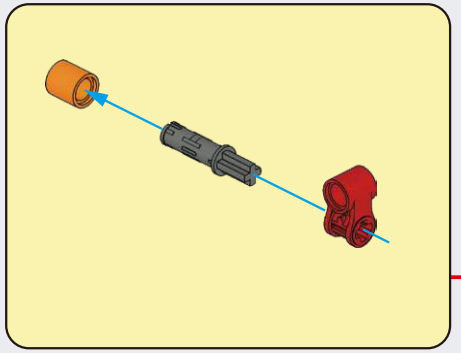

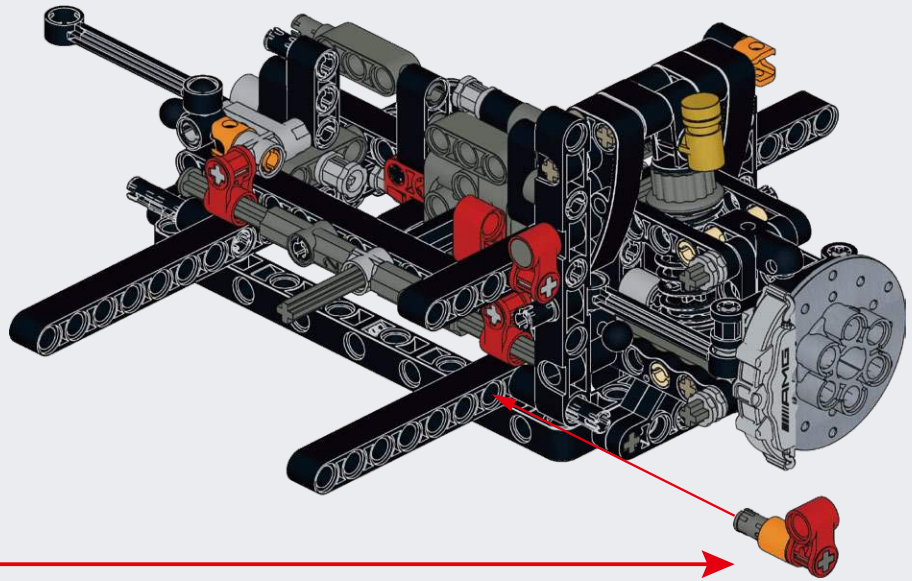

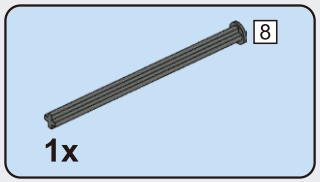

C56

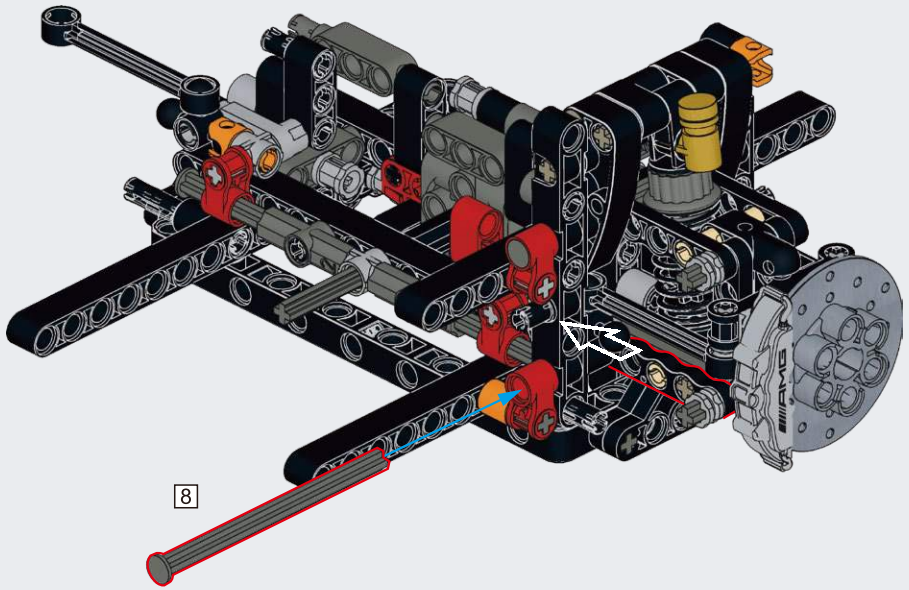

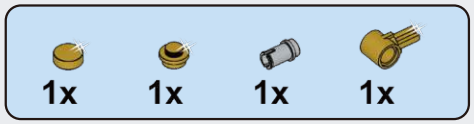

C57

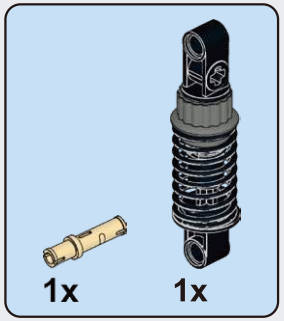

C58

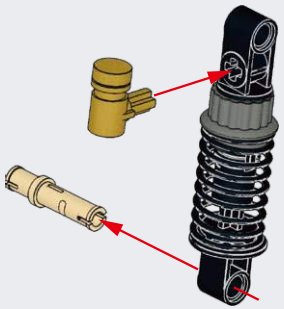

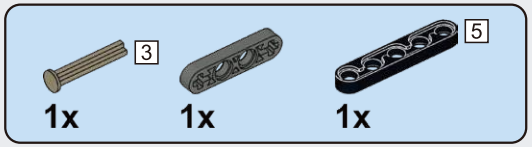

C59

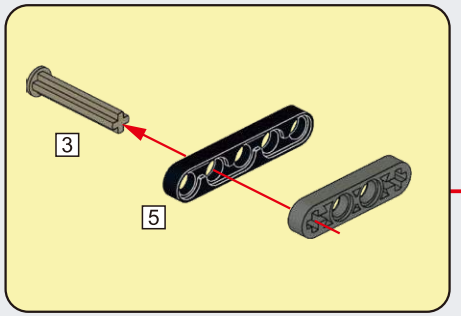

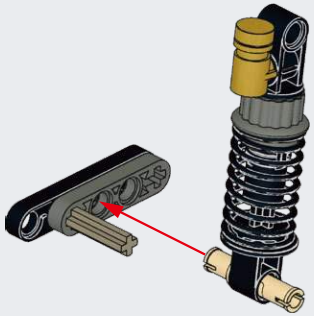

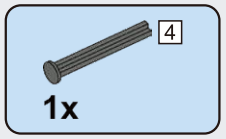

C60

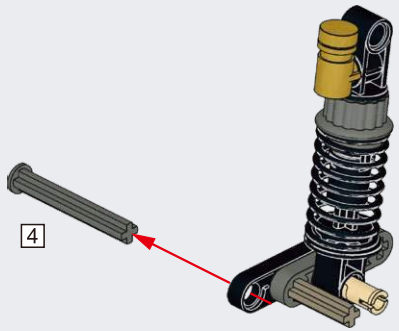

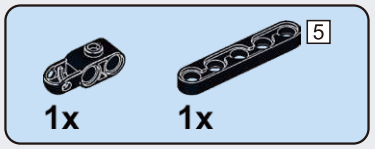

C61

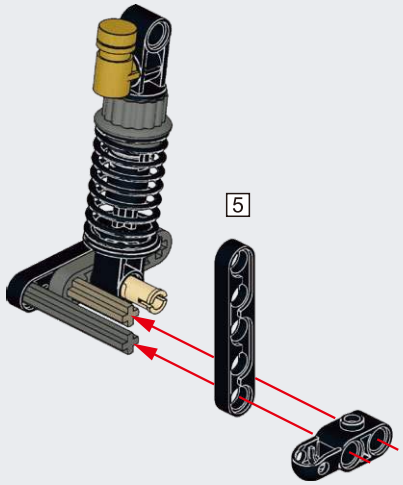

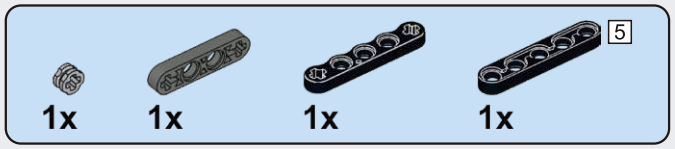

C62

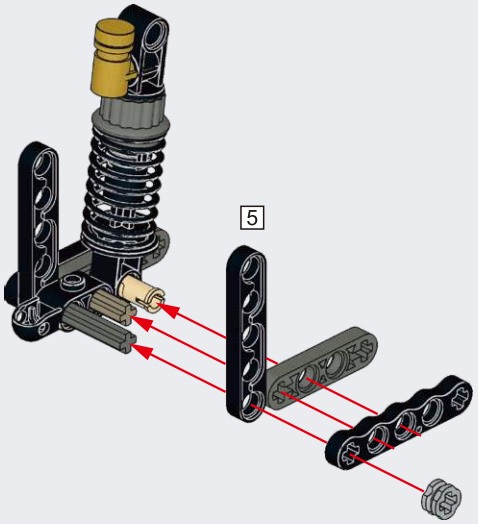

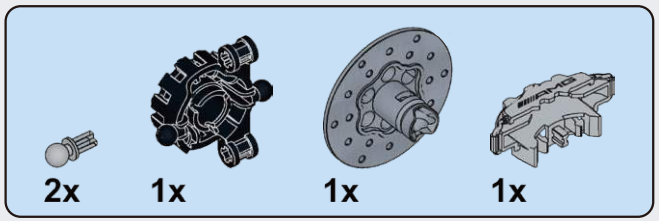

C63

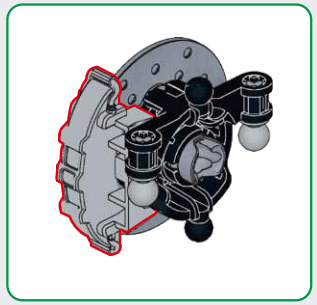

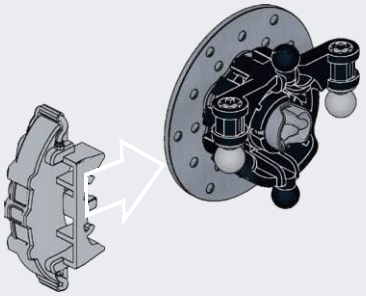

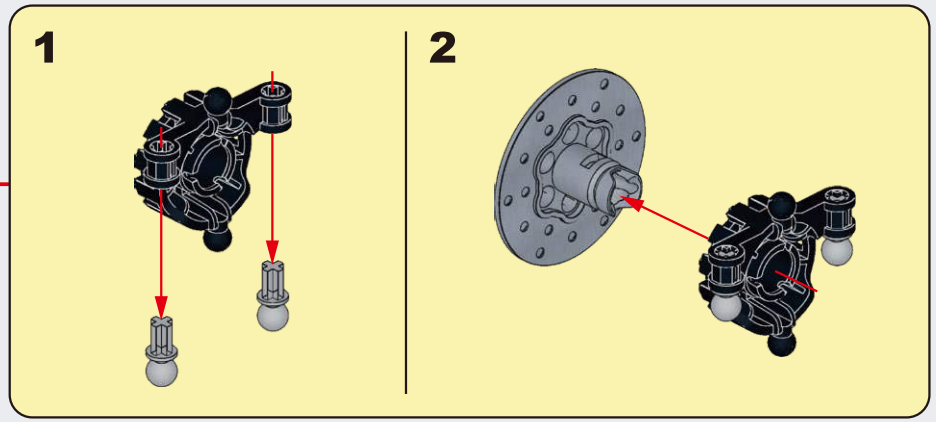

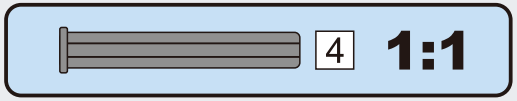

C64

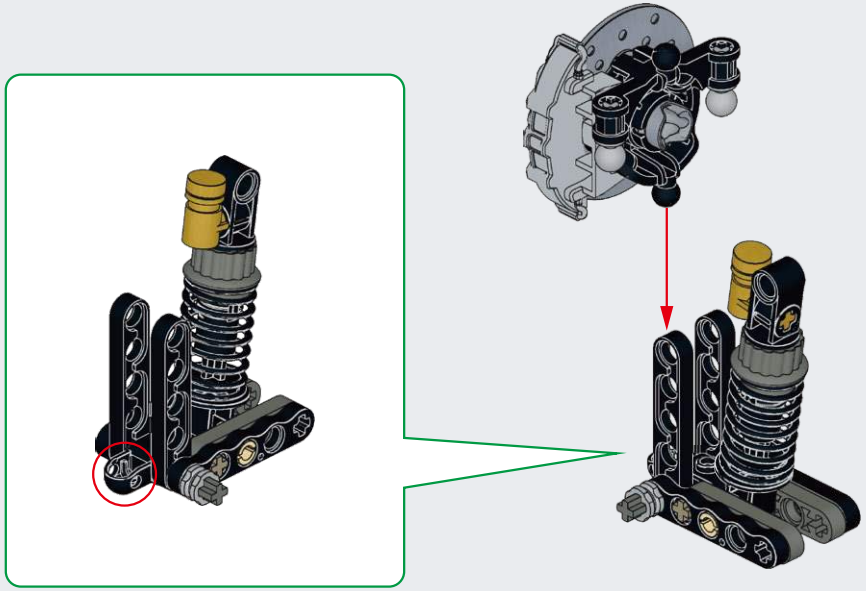

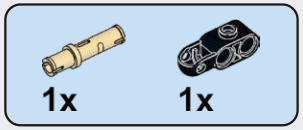

C65

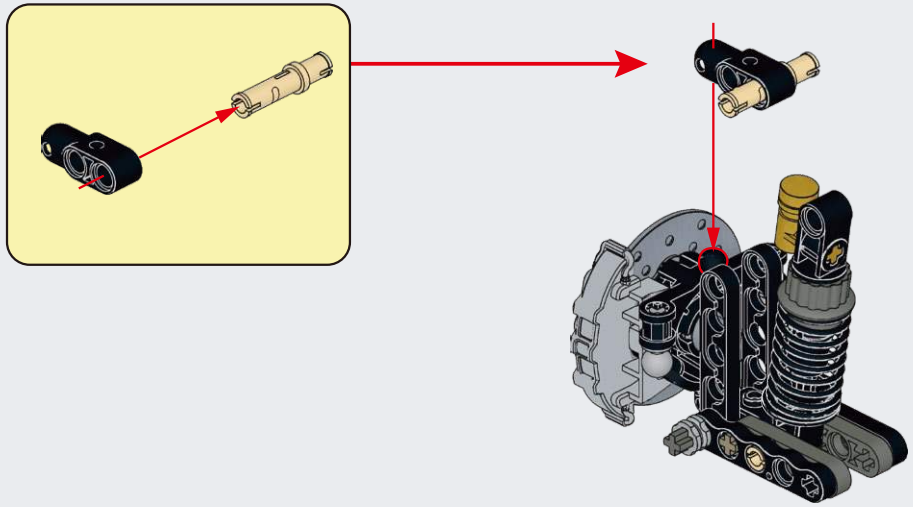

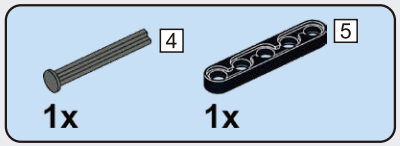

C66

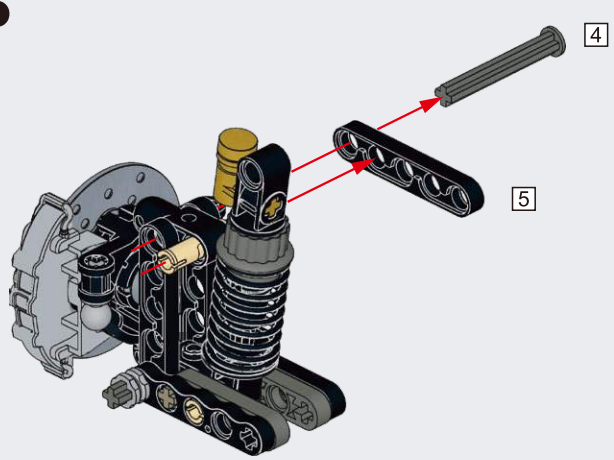

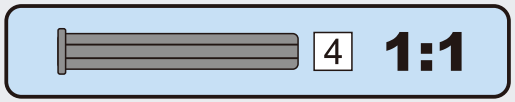

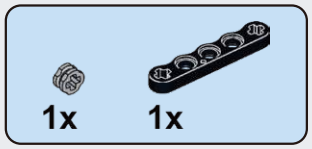

C67

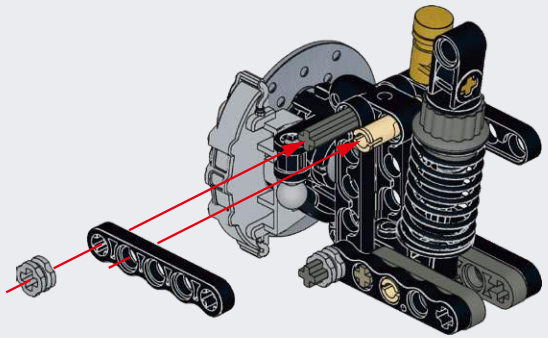

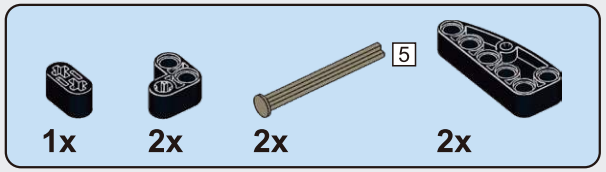

C68

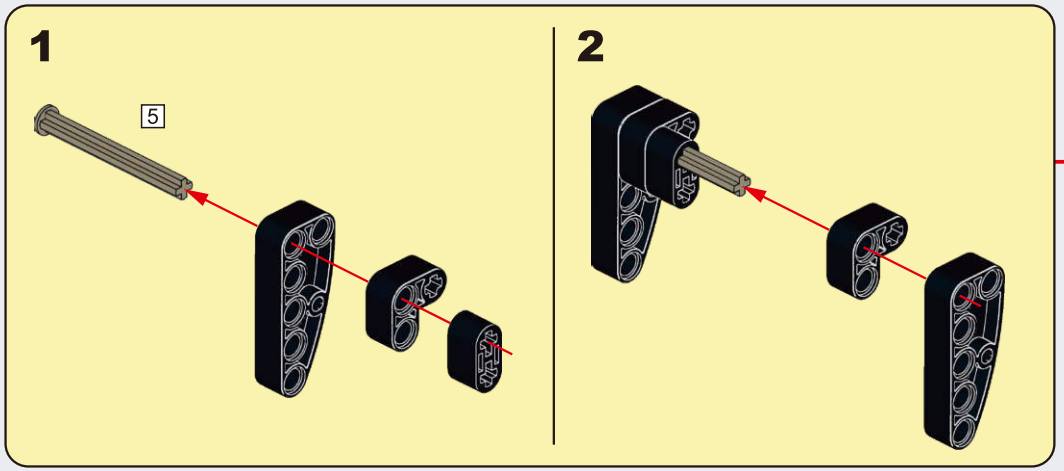

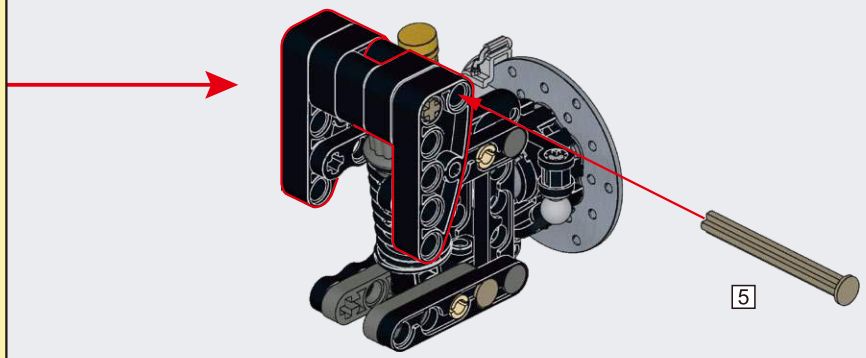

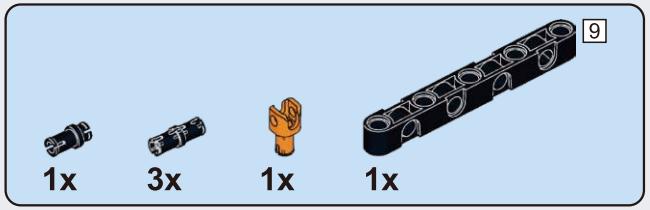

C69

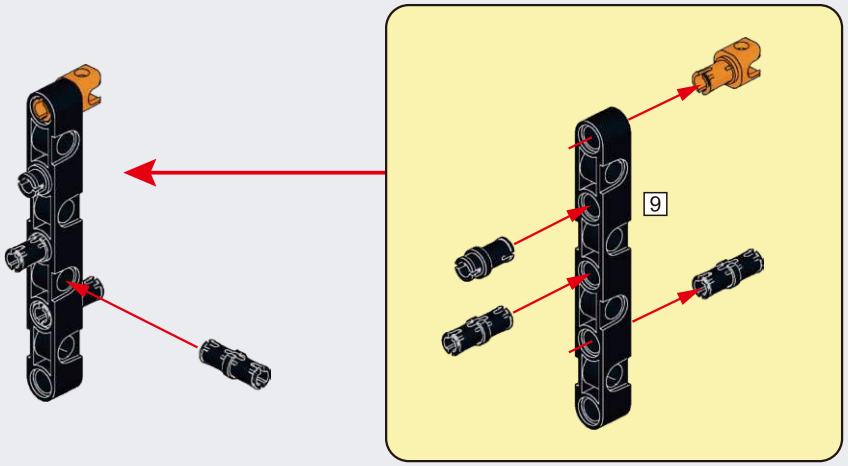

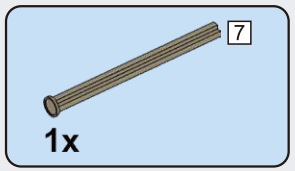

C70

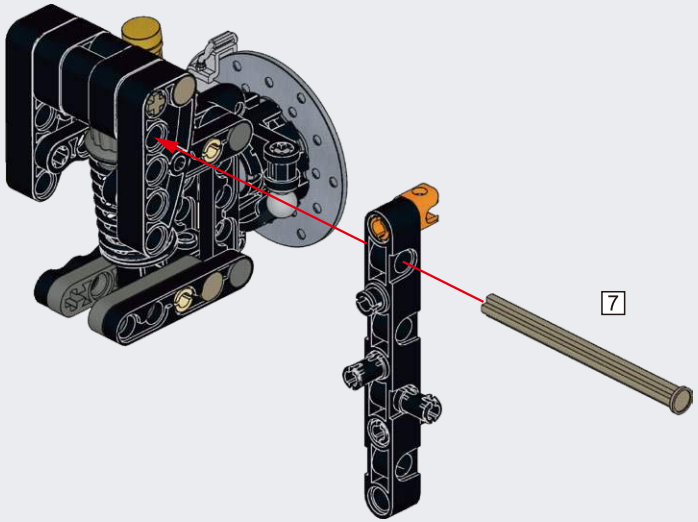

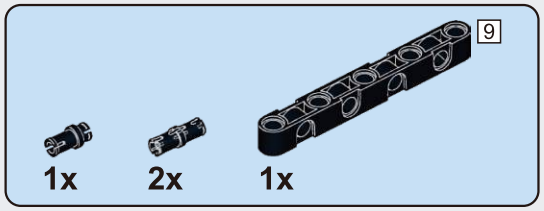

C71

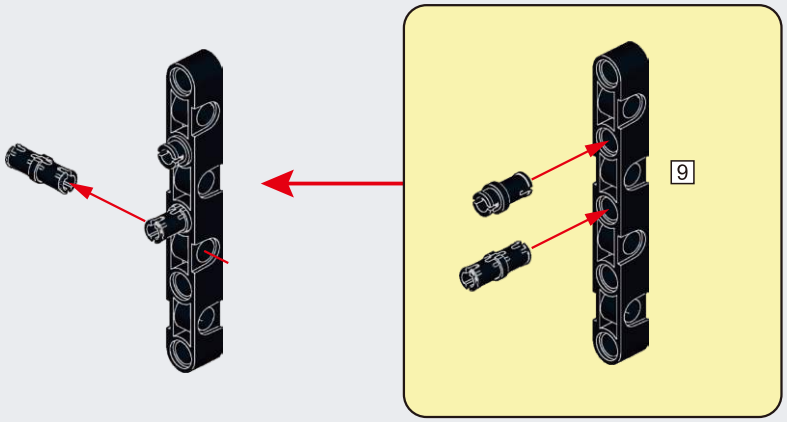

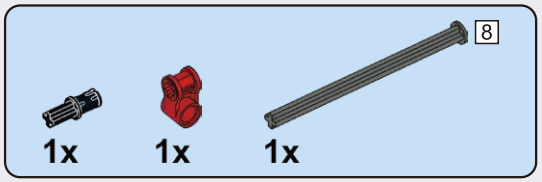

C72

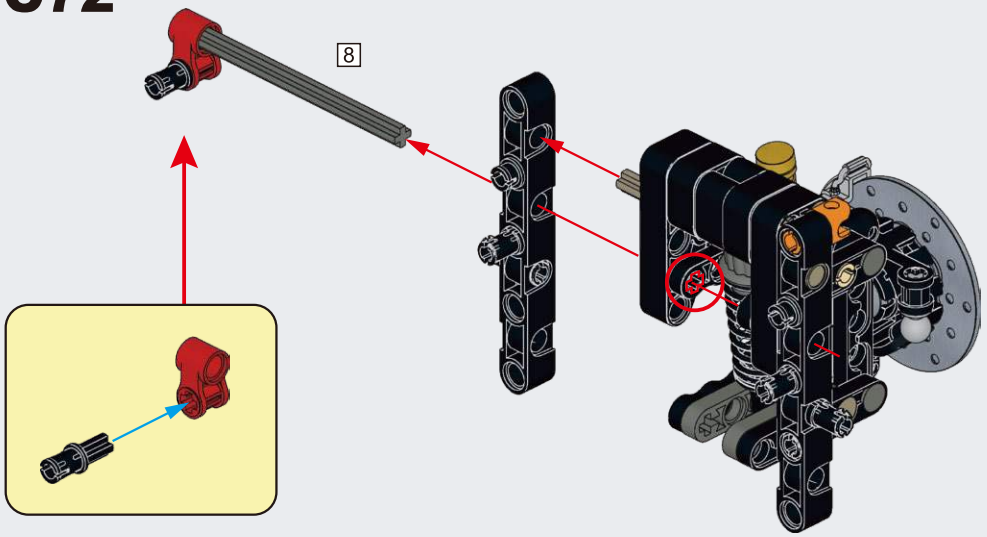

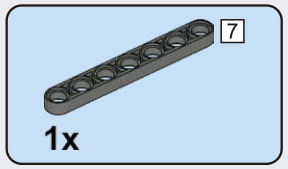

C73

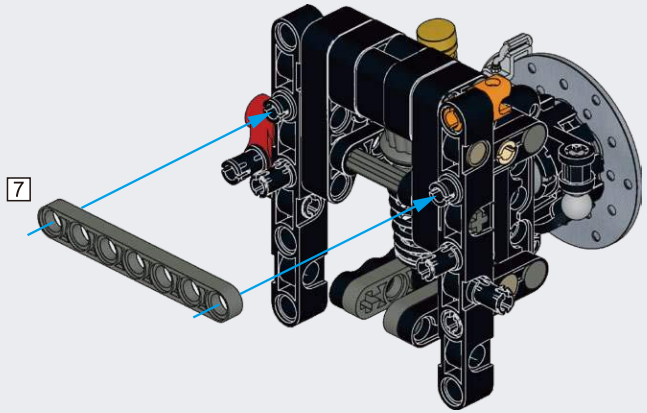

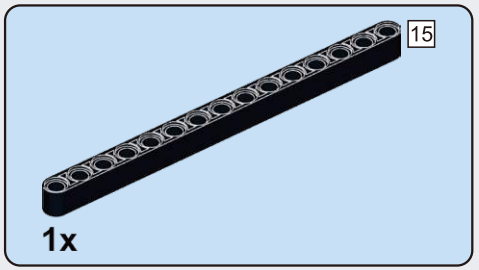

C74

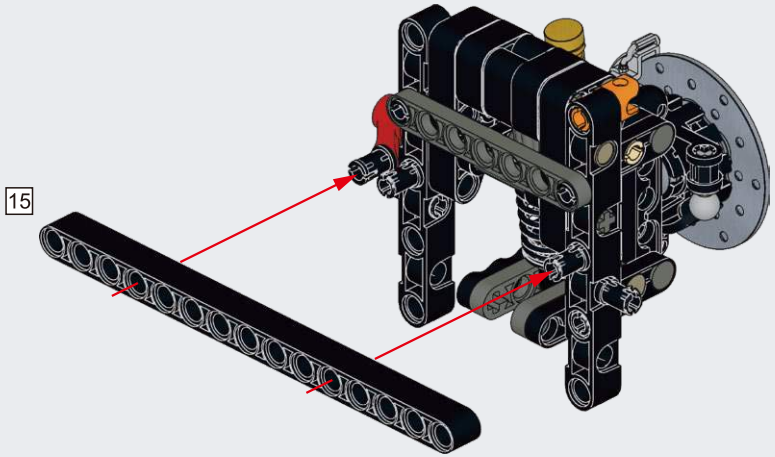

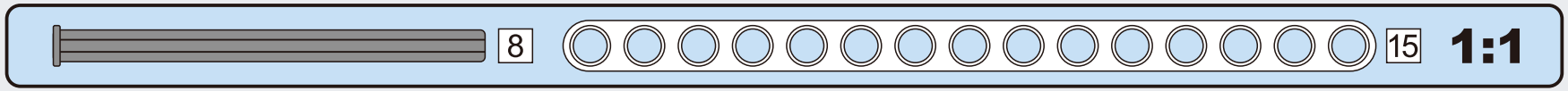

C75

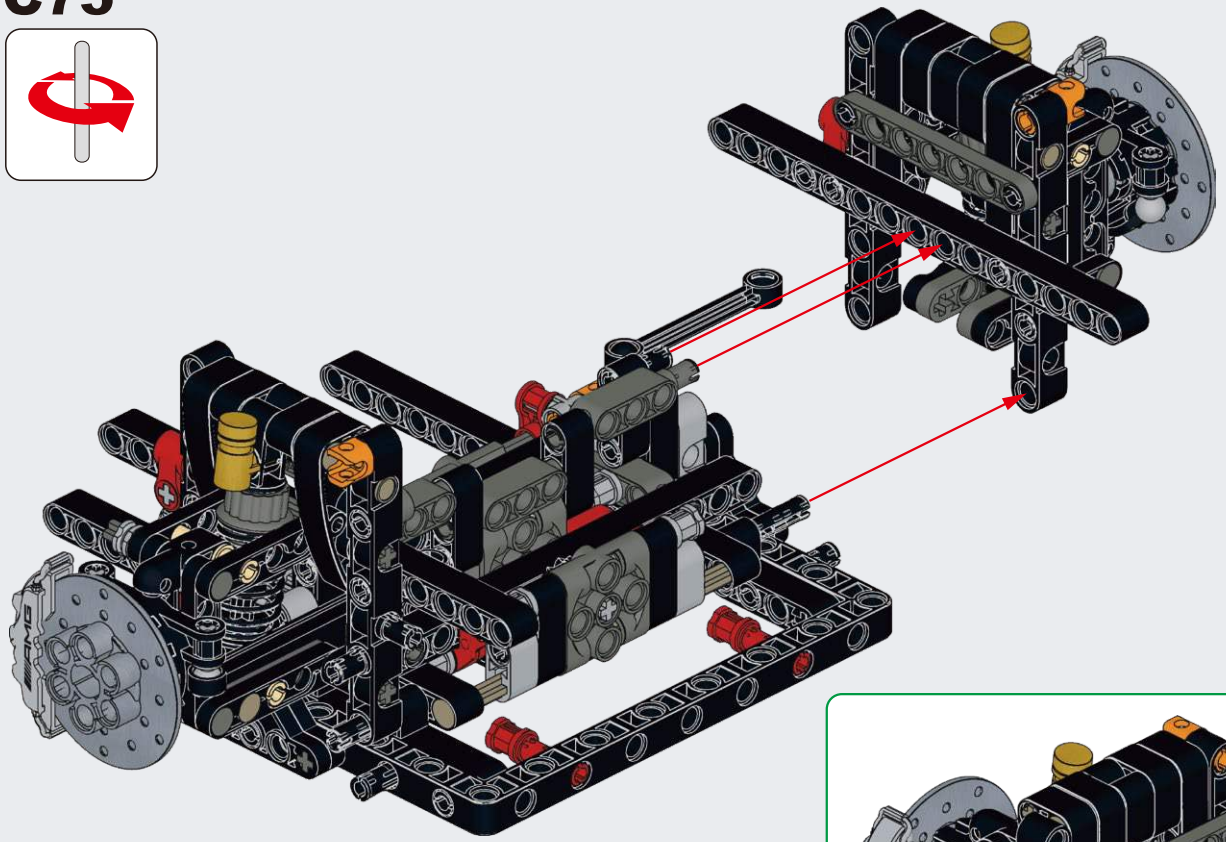

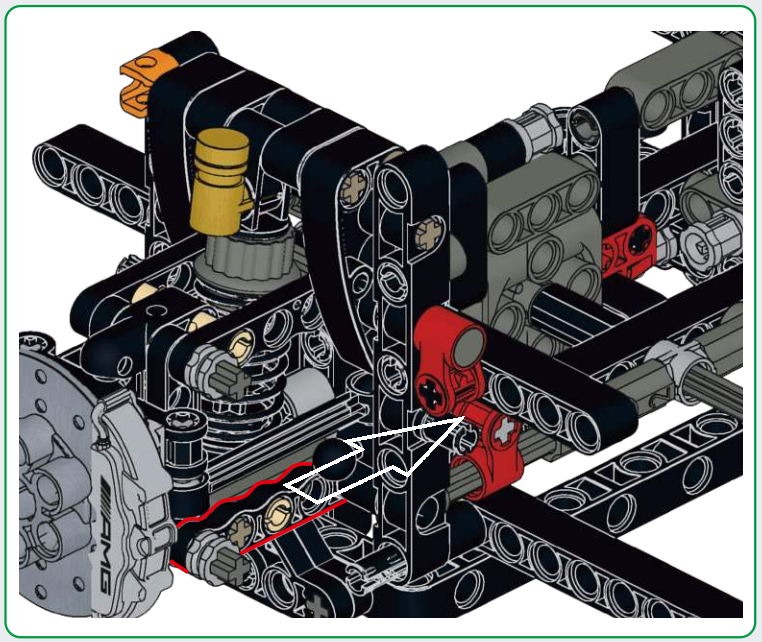

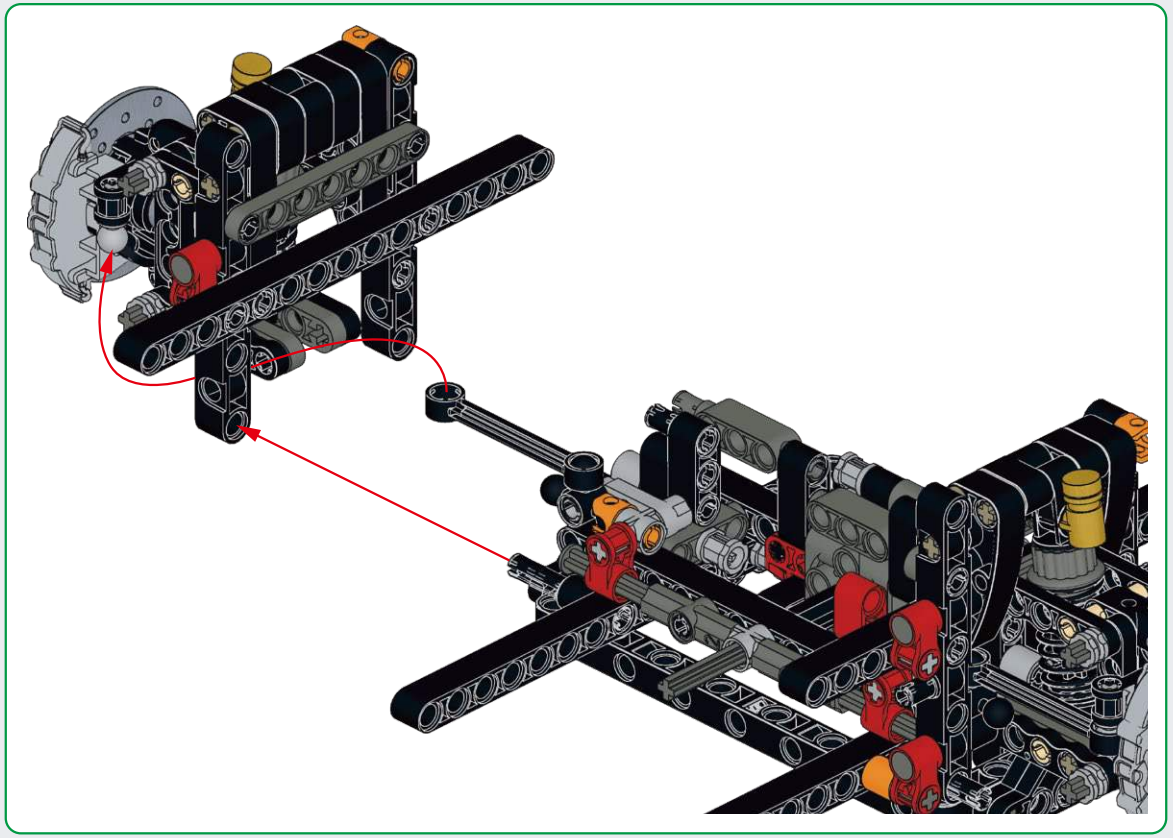

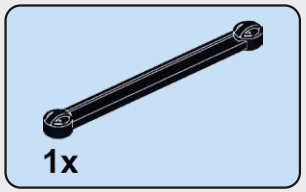

C76

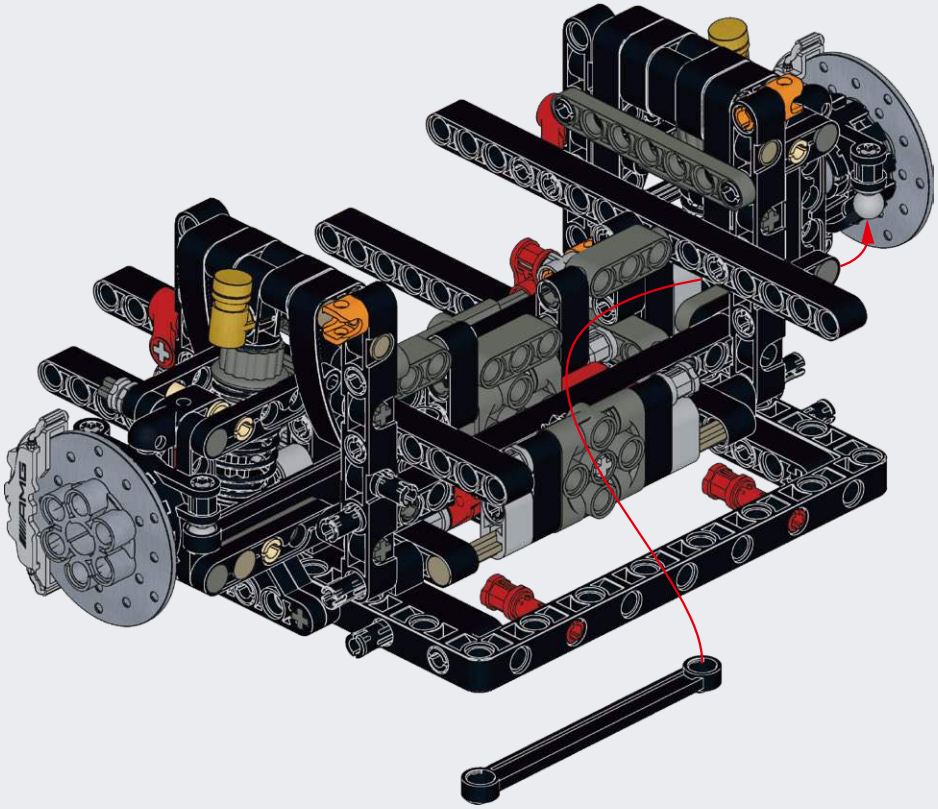

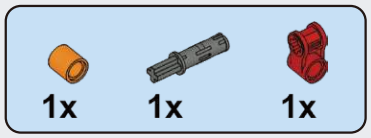

C77

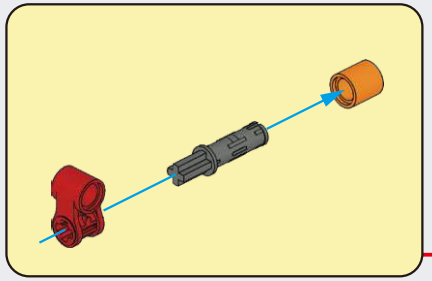

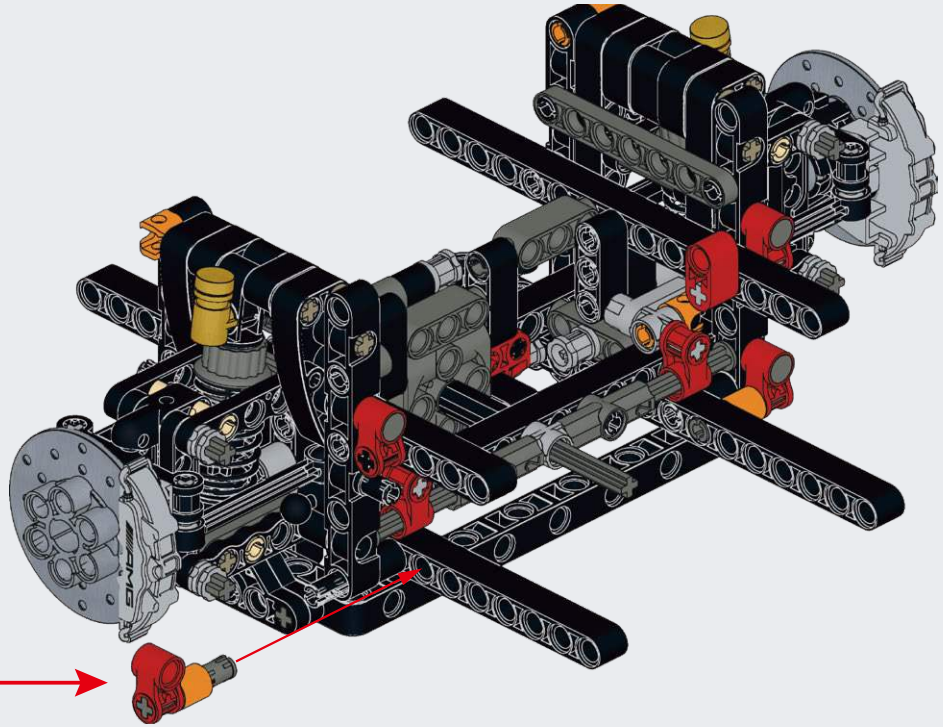

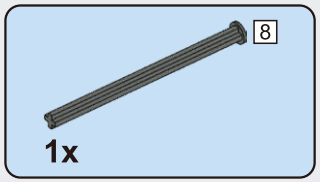

C78

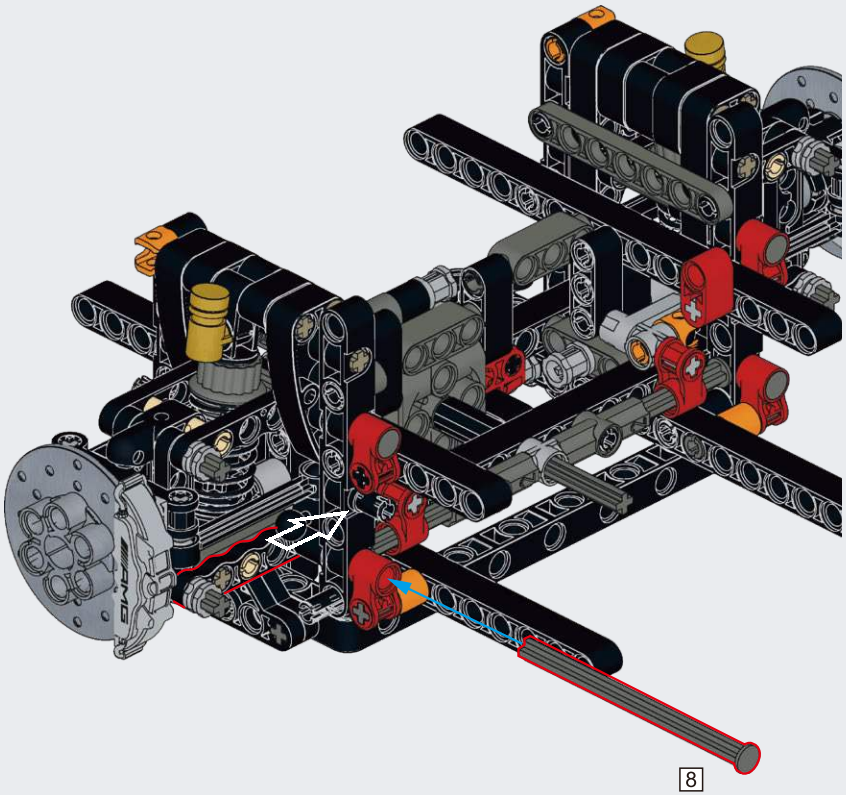

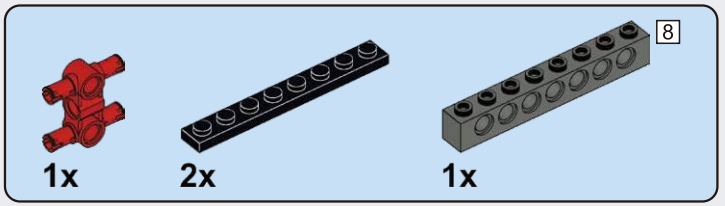

C79

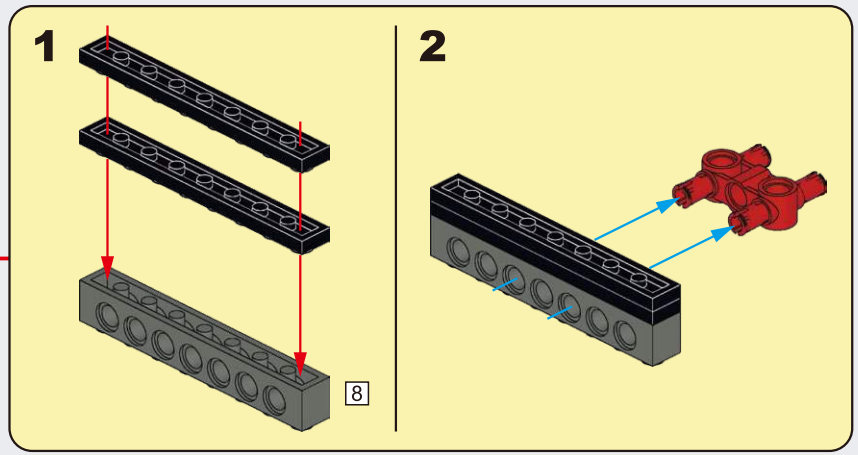

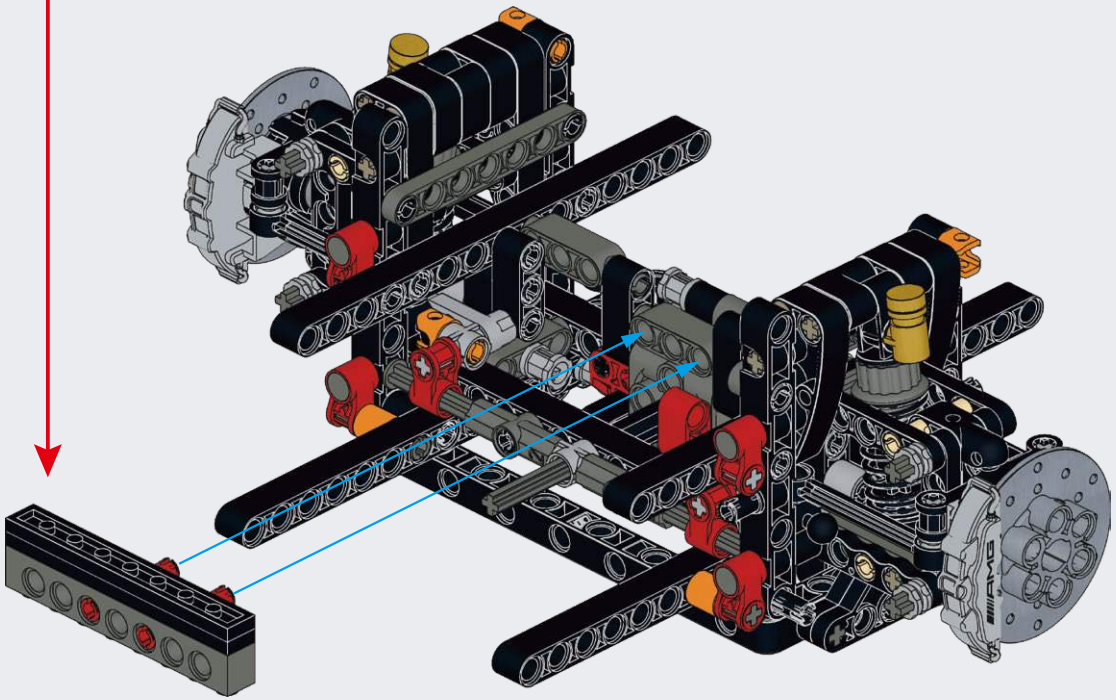

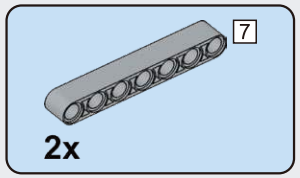

C80

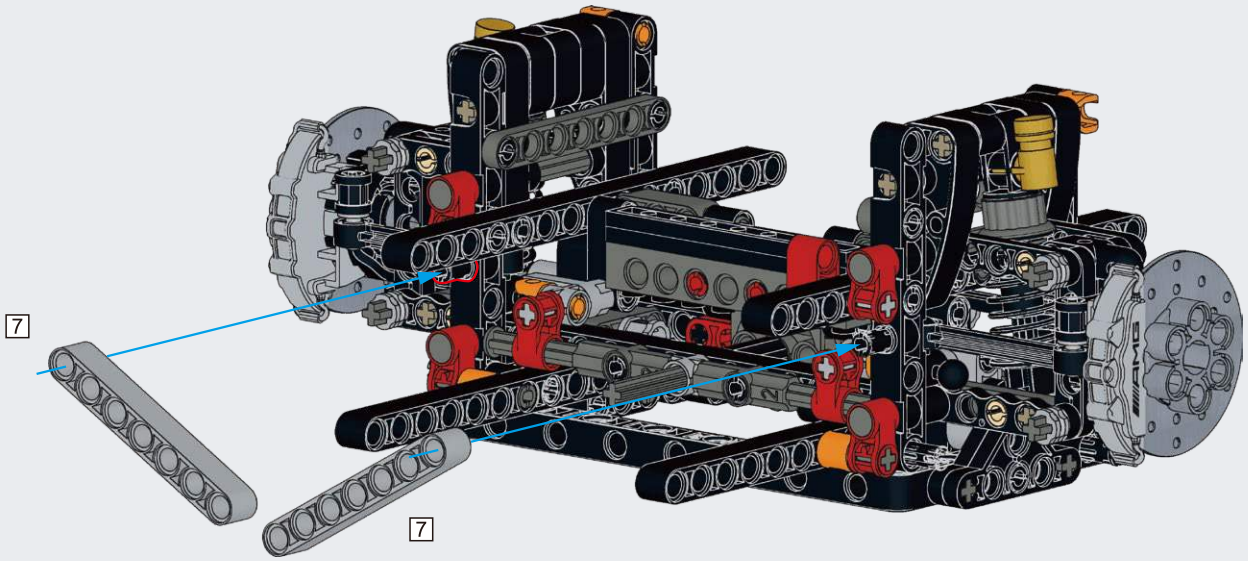

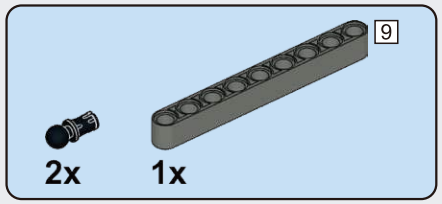

C81

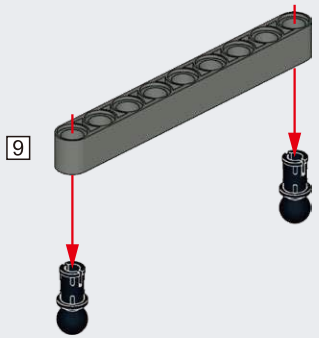

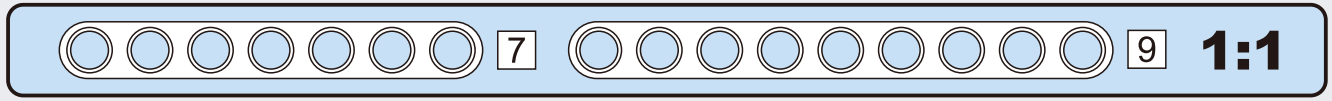

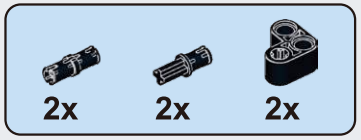

C82

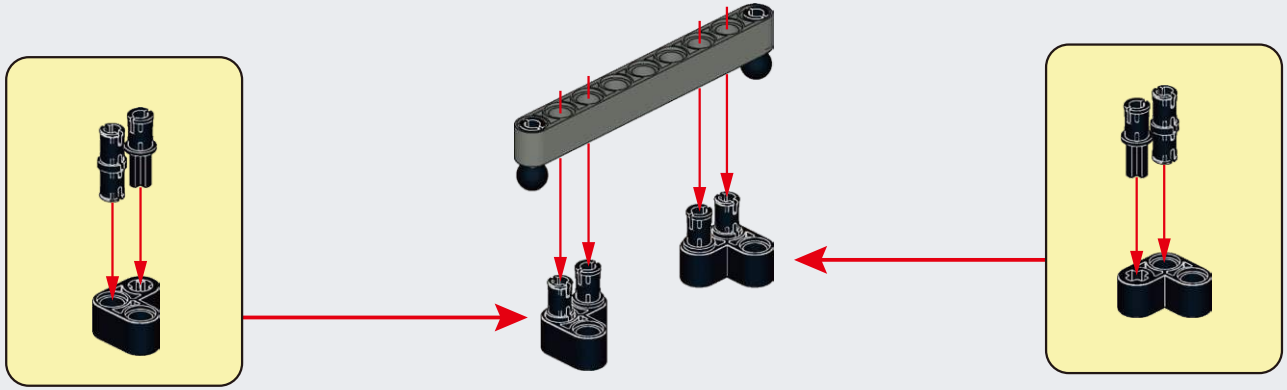

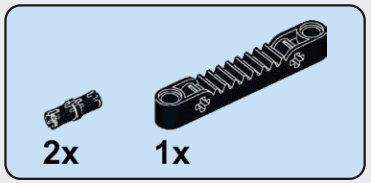

C83

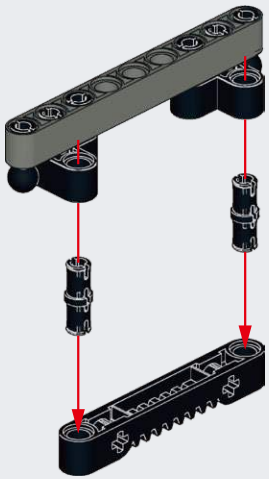

C84

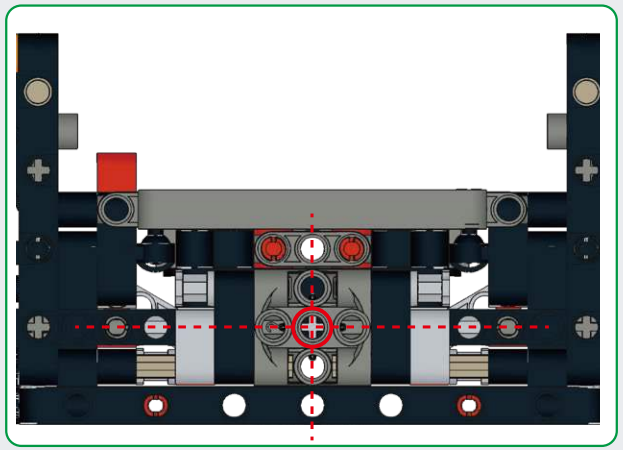

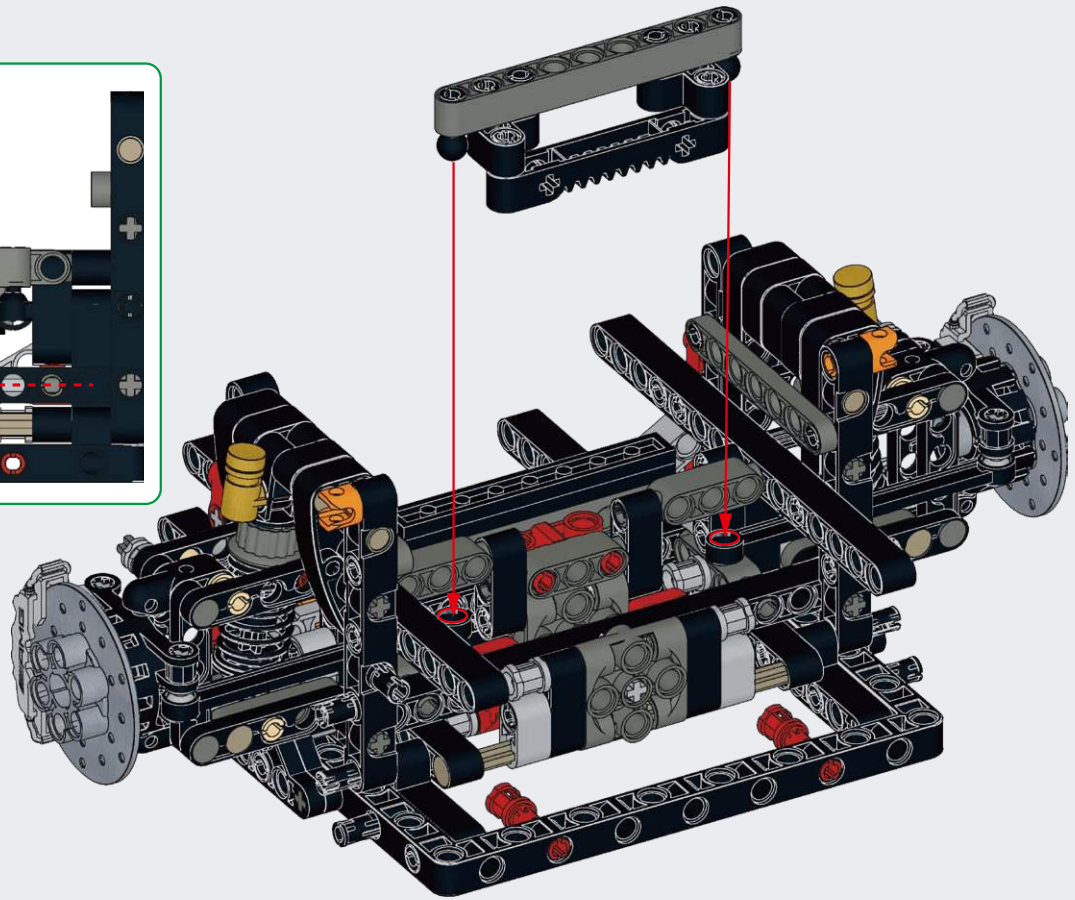

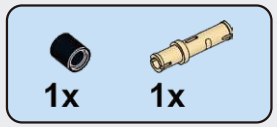

C85

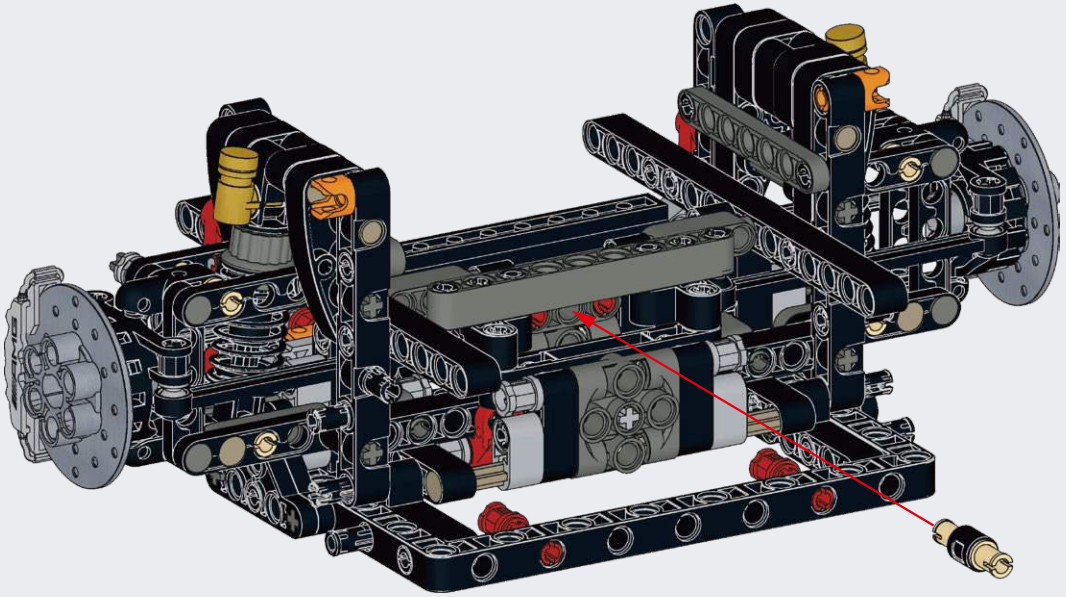

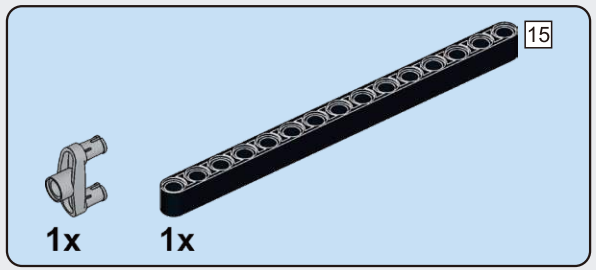

C86

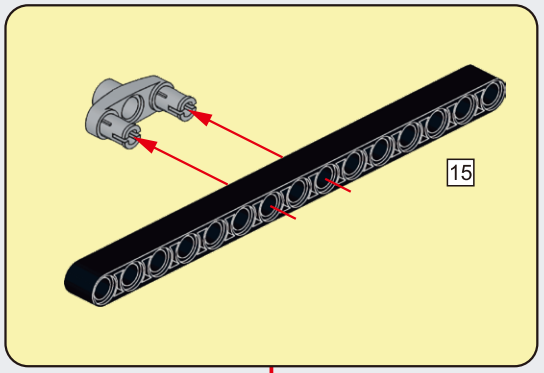

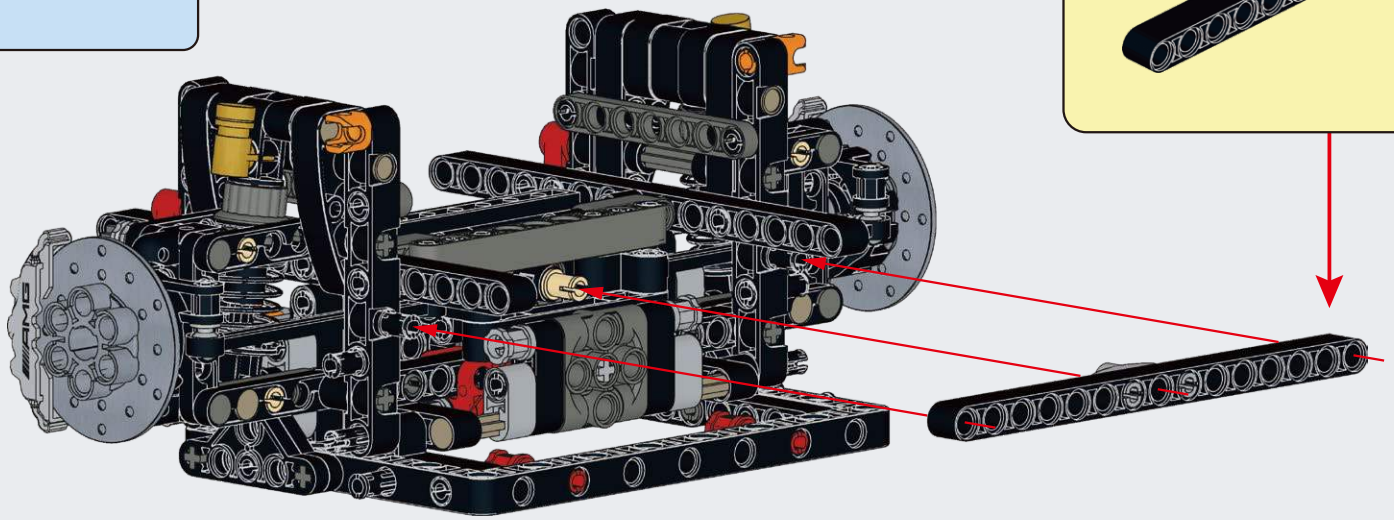

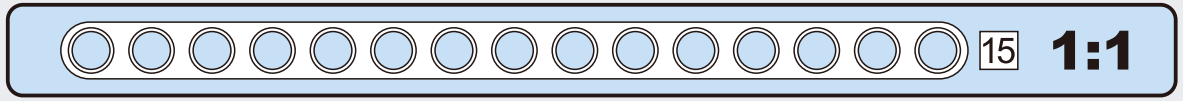

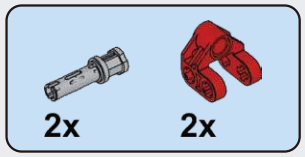

C87

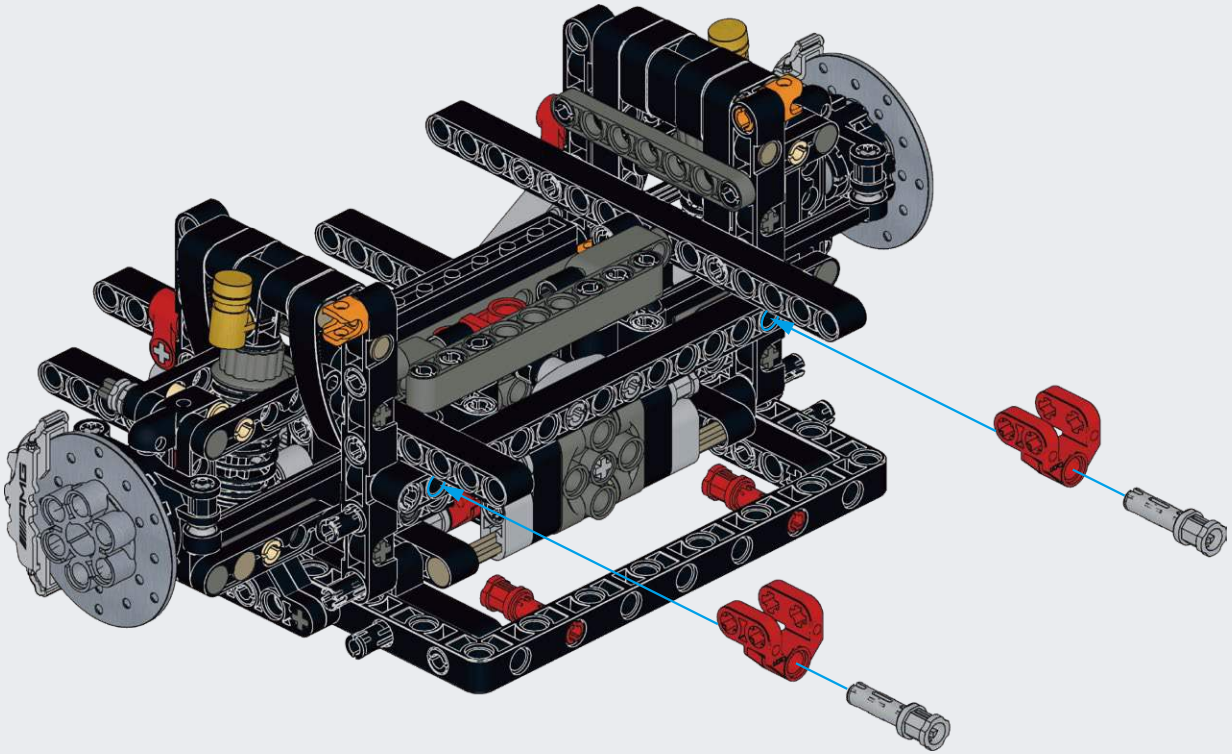

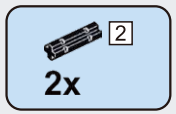

C88

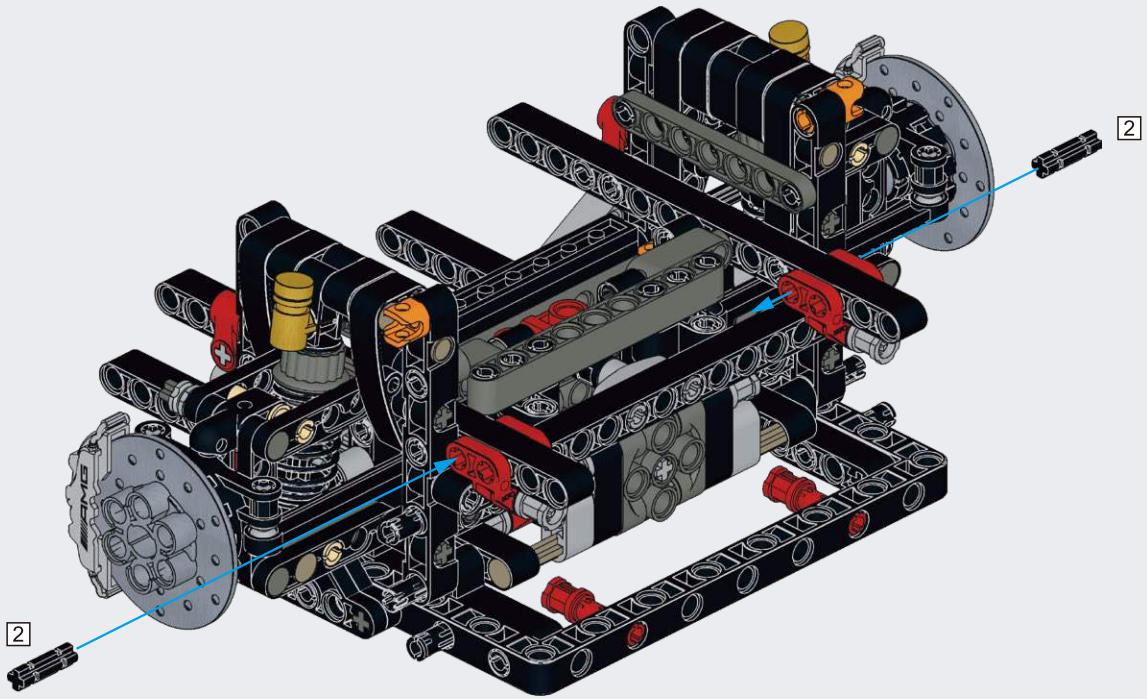

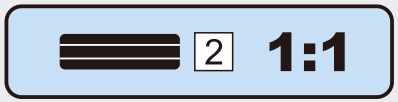

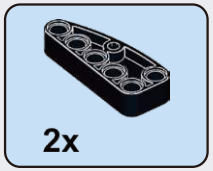

C89

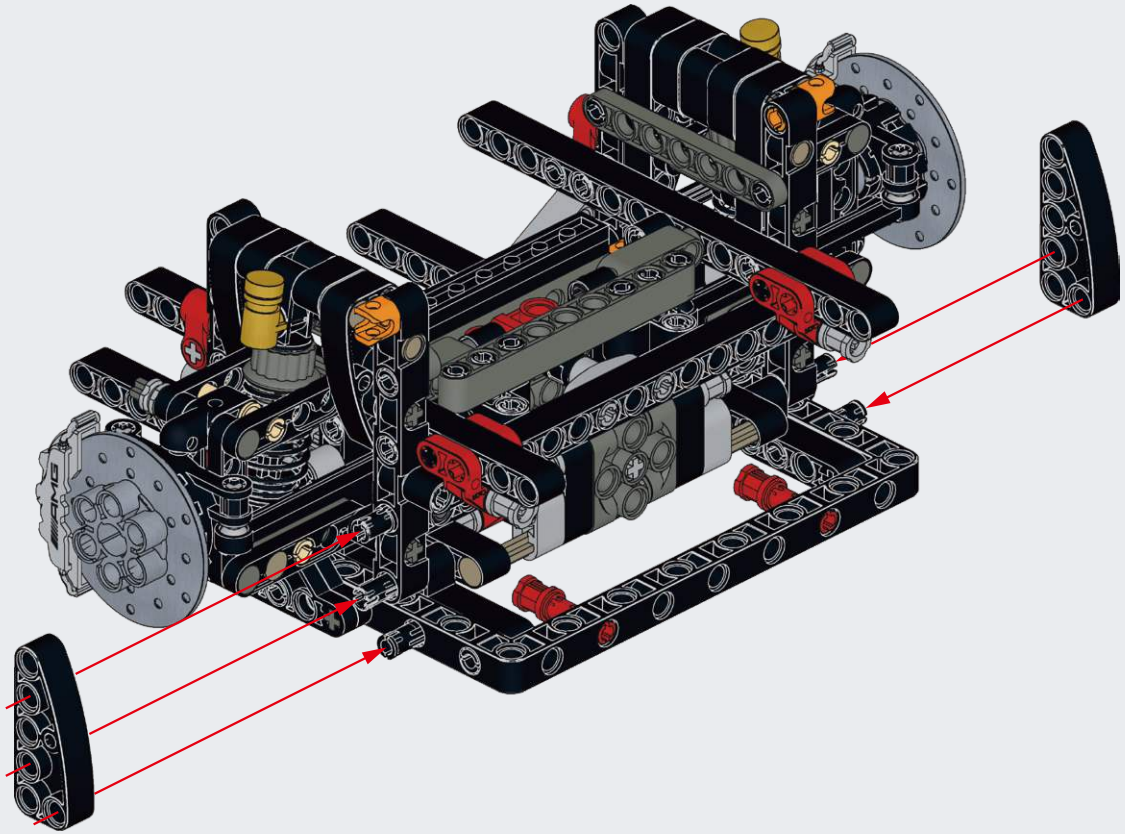

C90

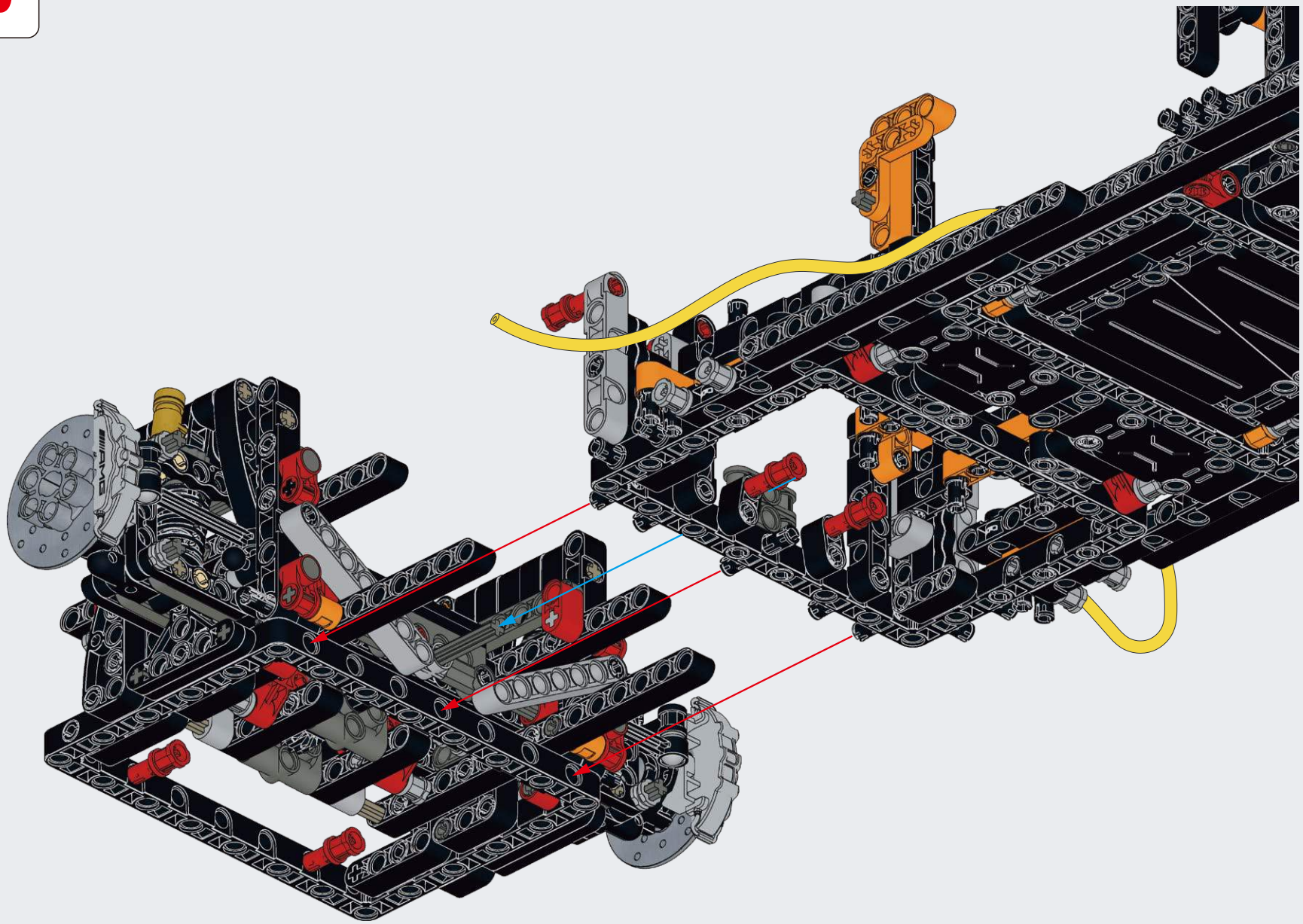

C91

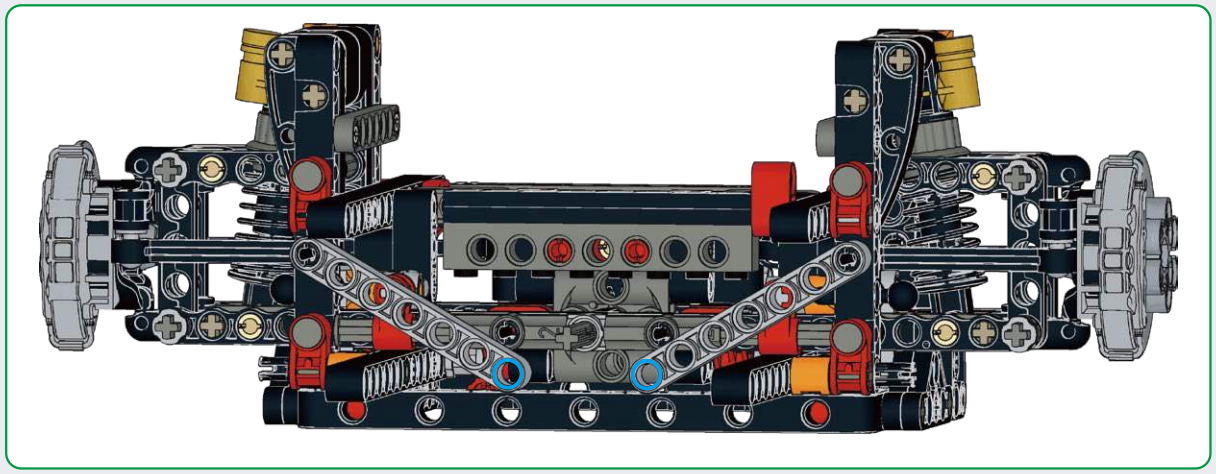

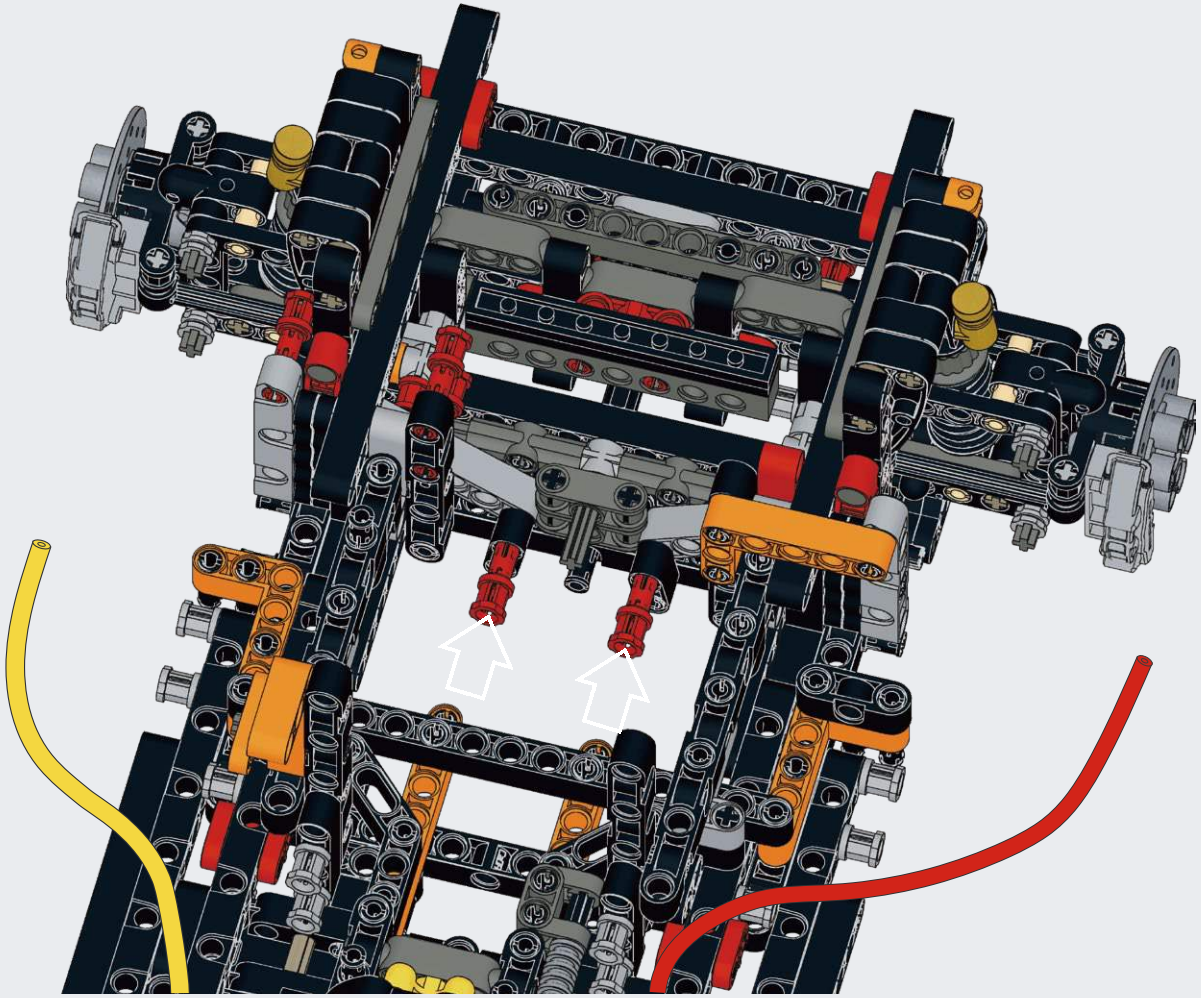

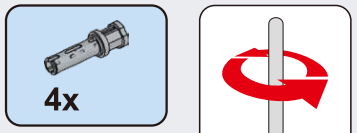

C92

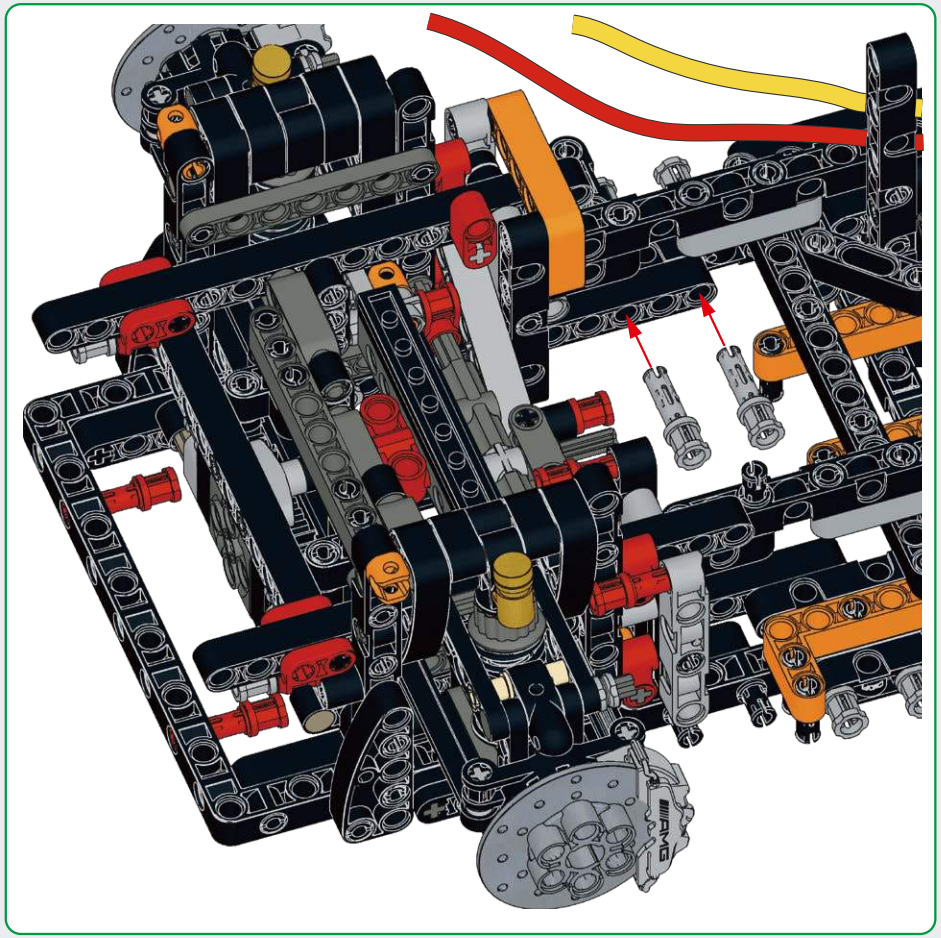

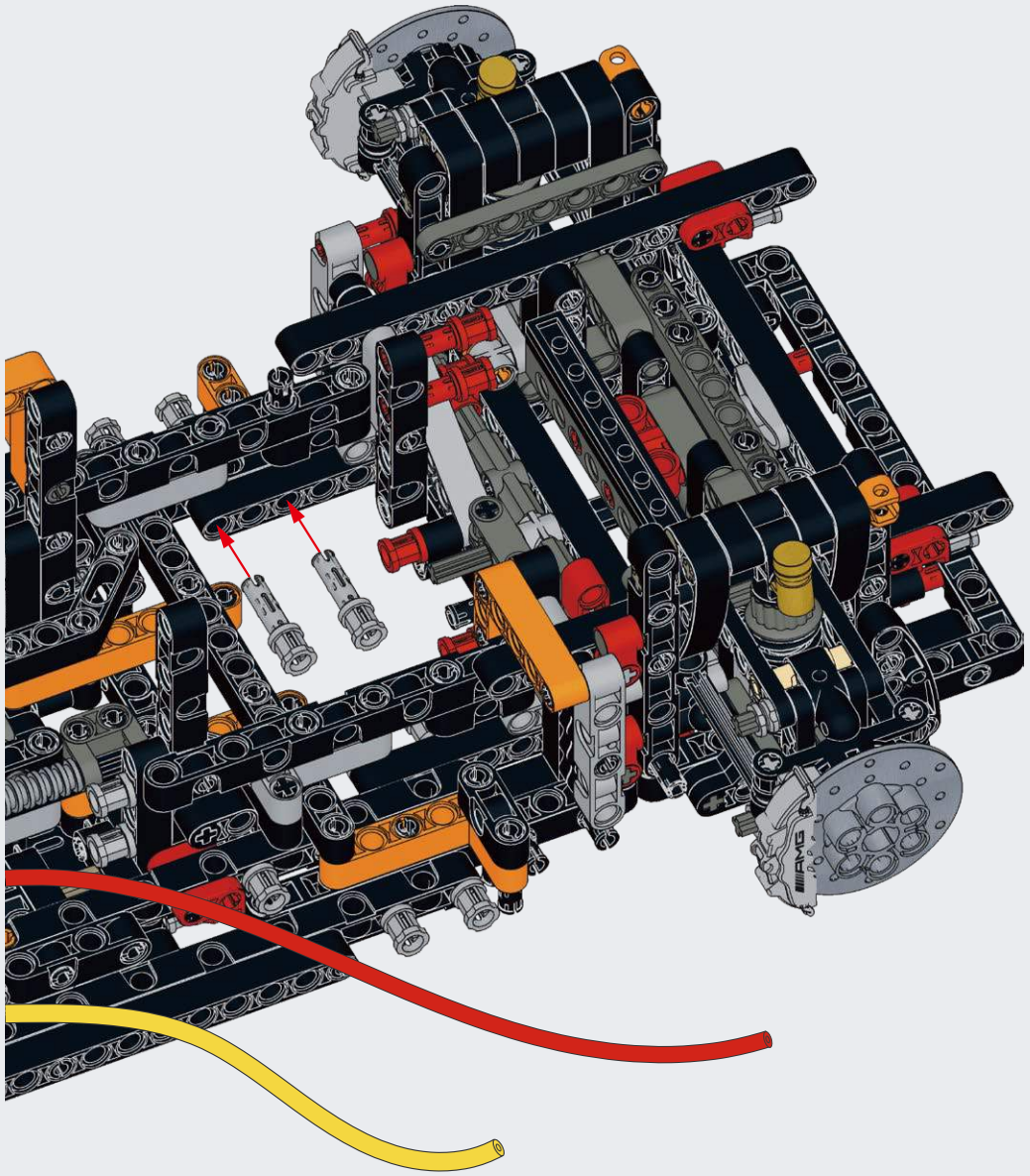

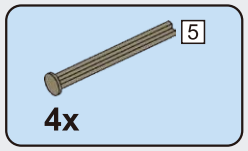

C93

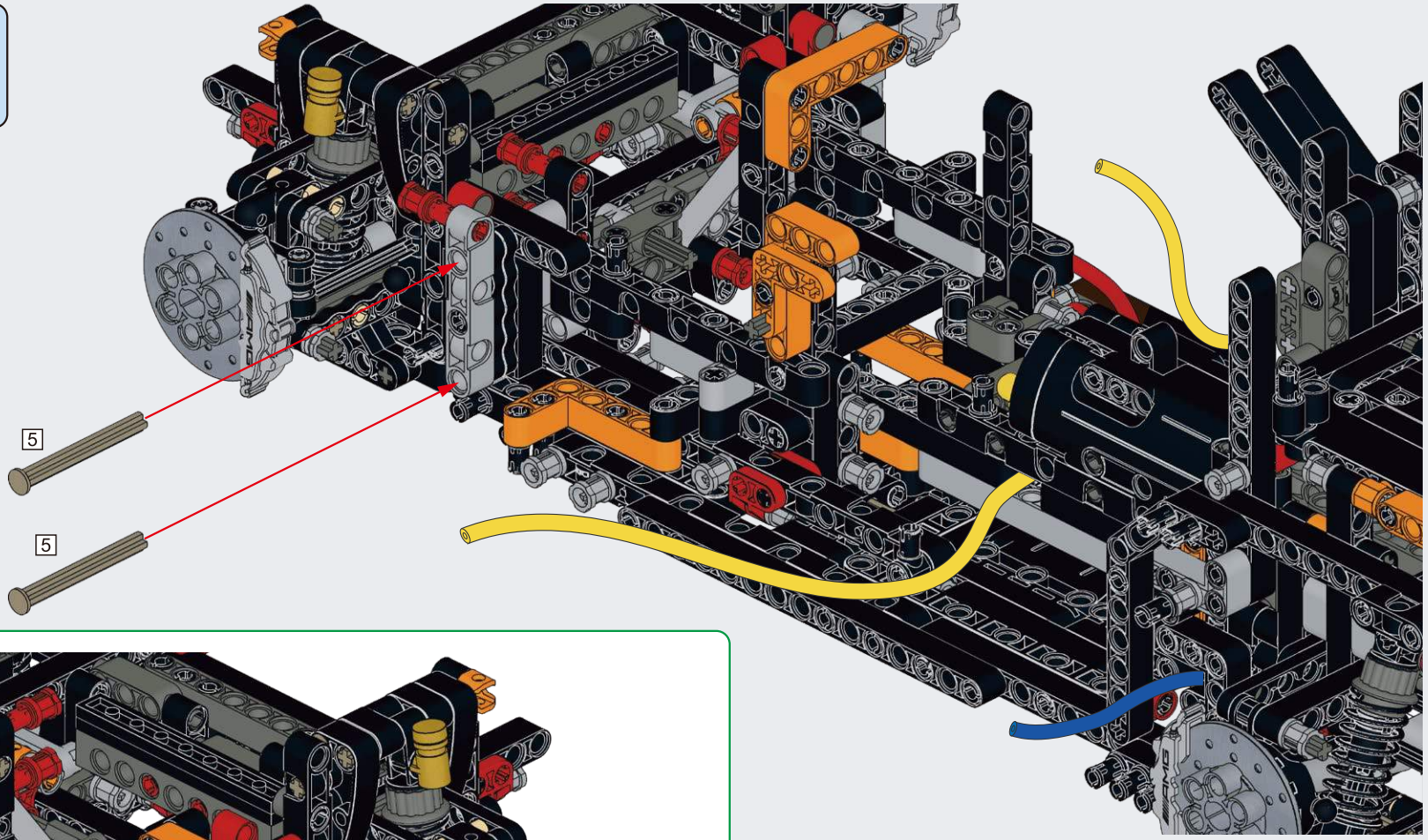

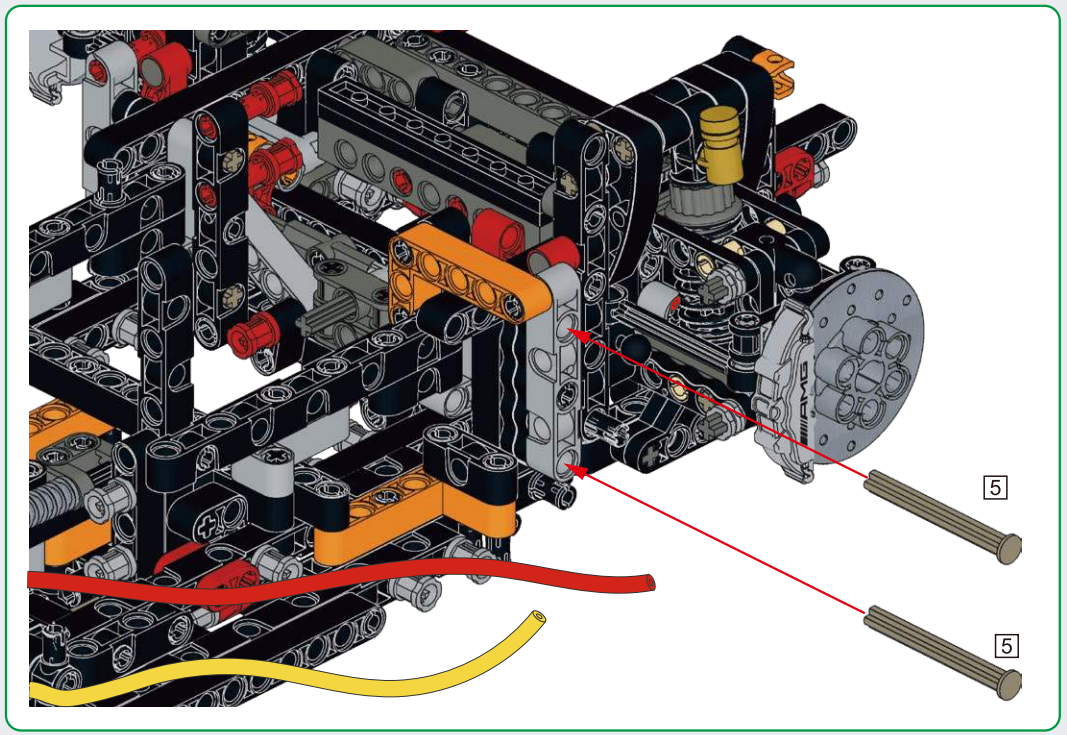

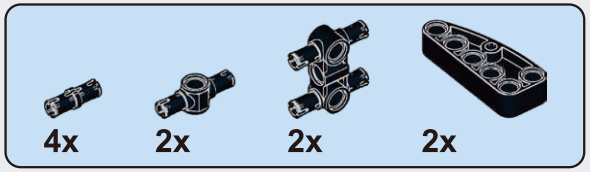

C94

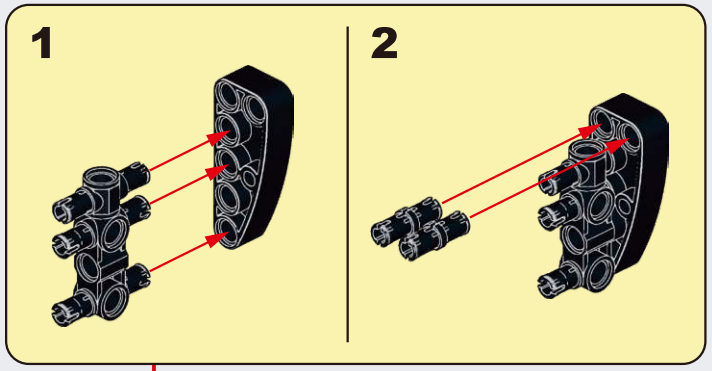

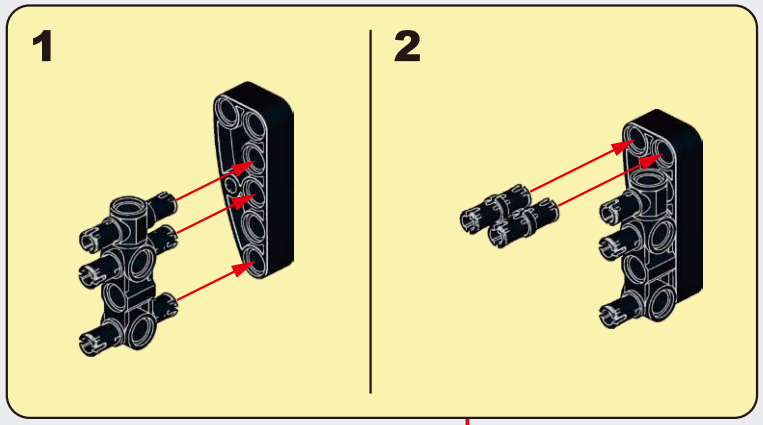

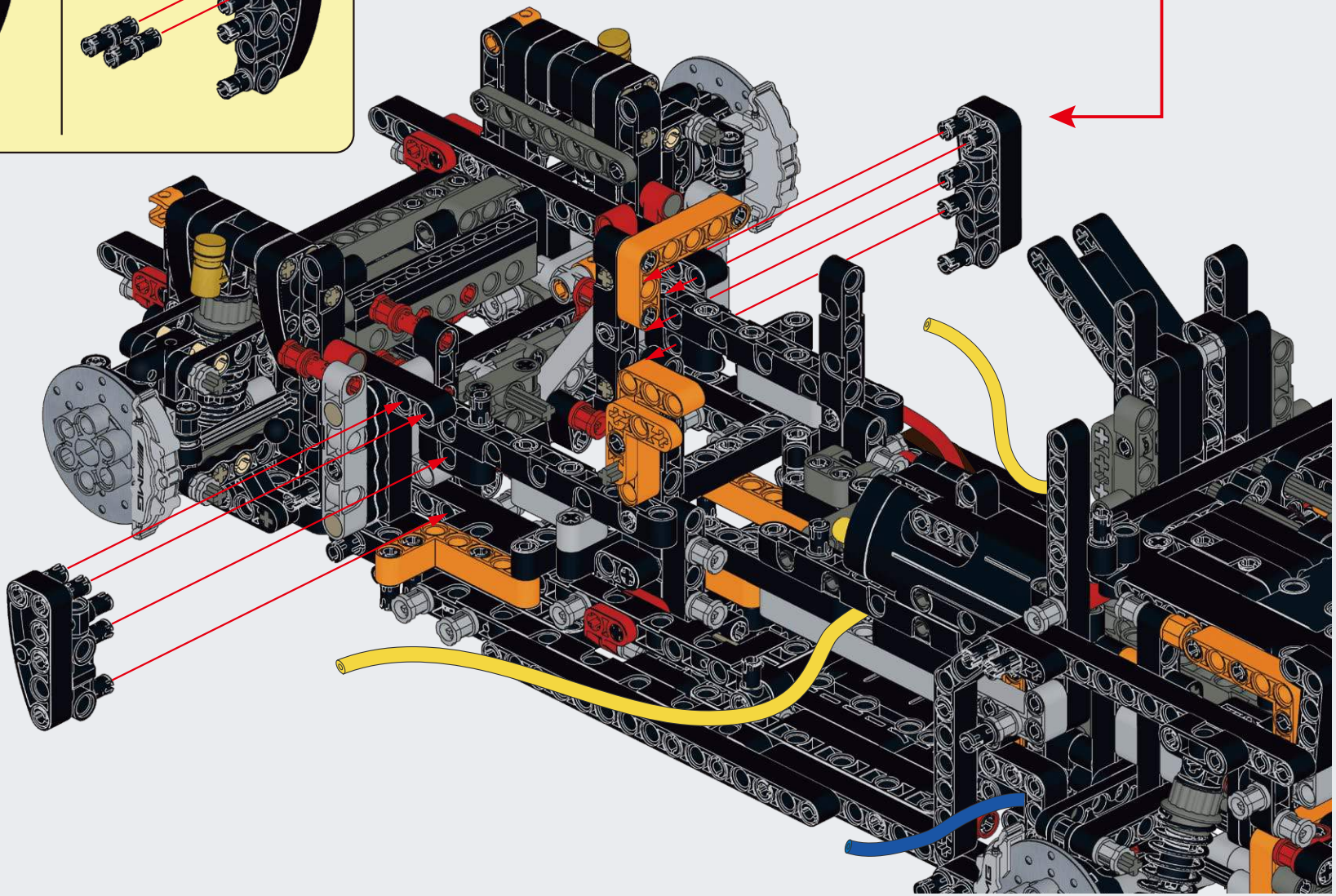

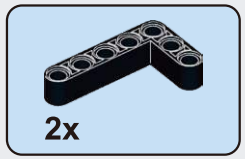

C95

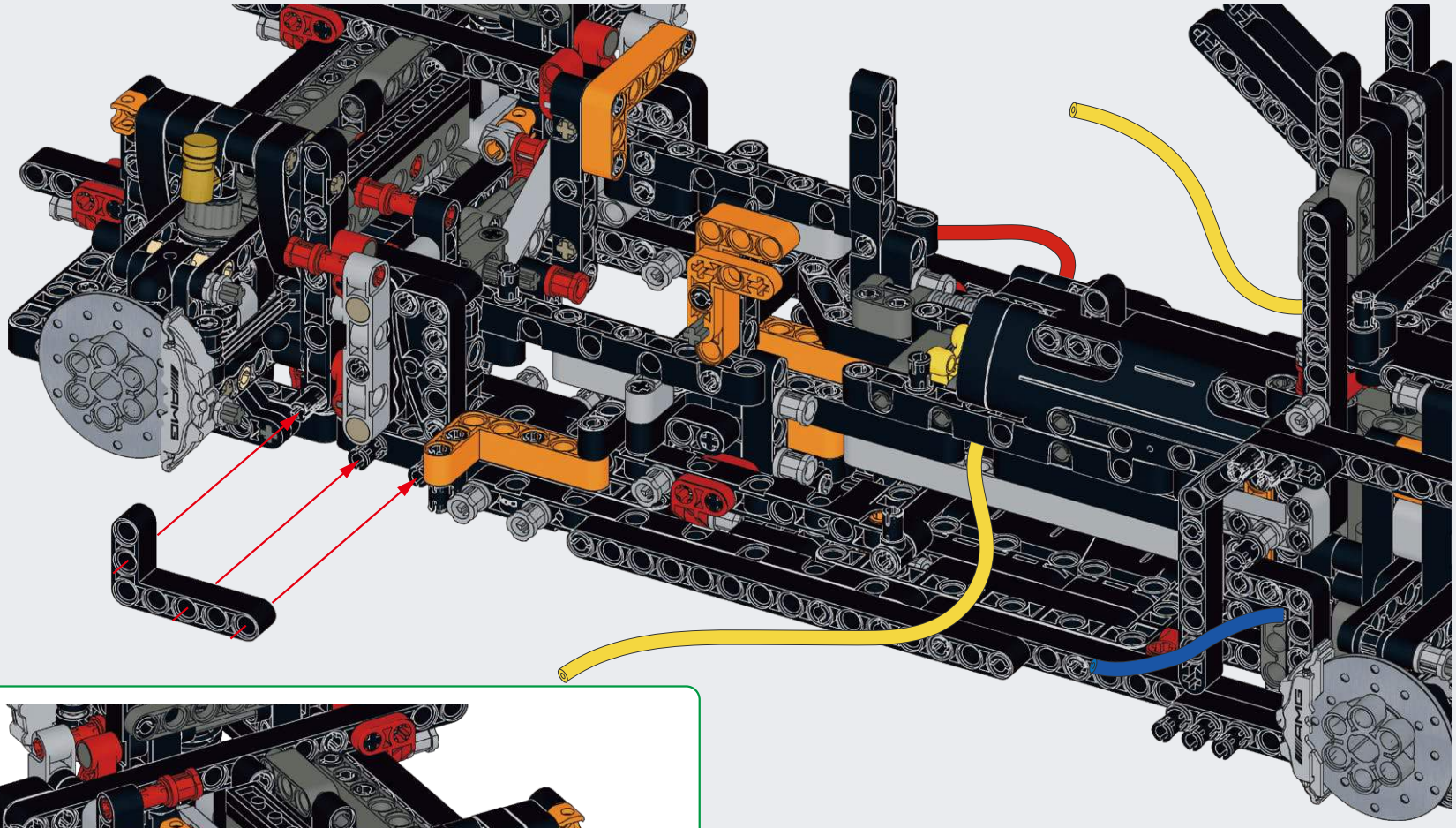

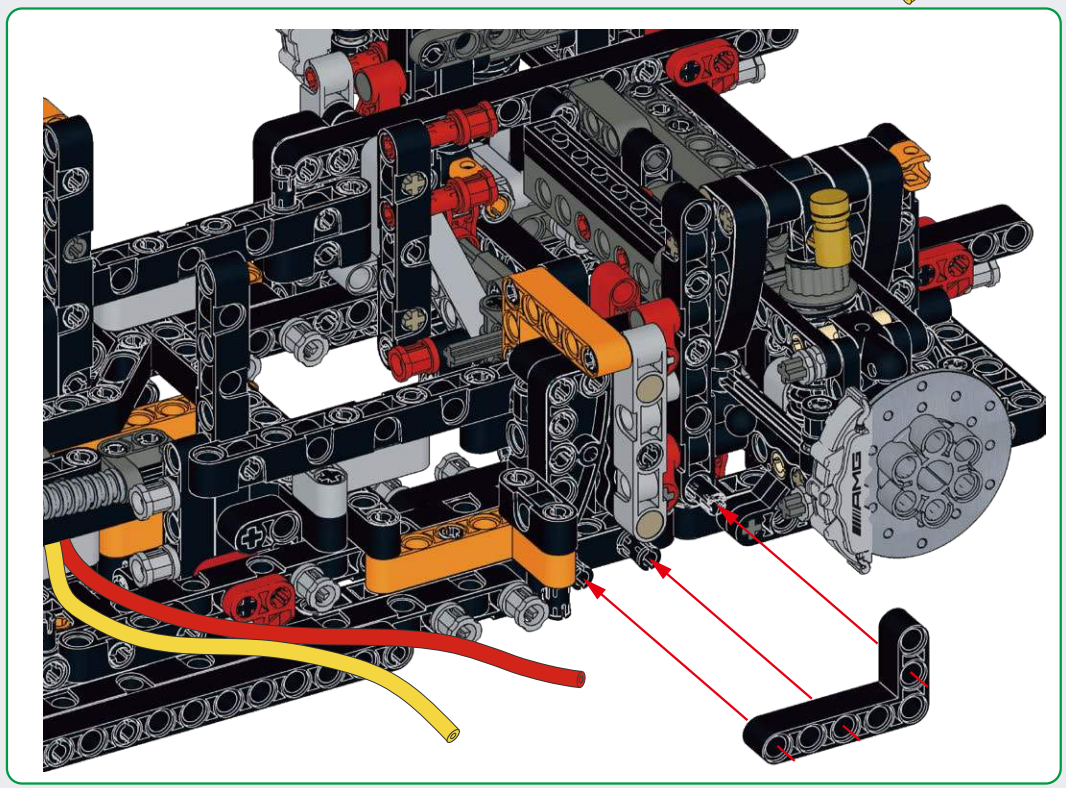

C96

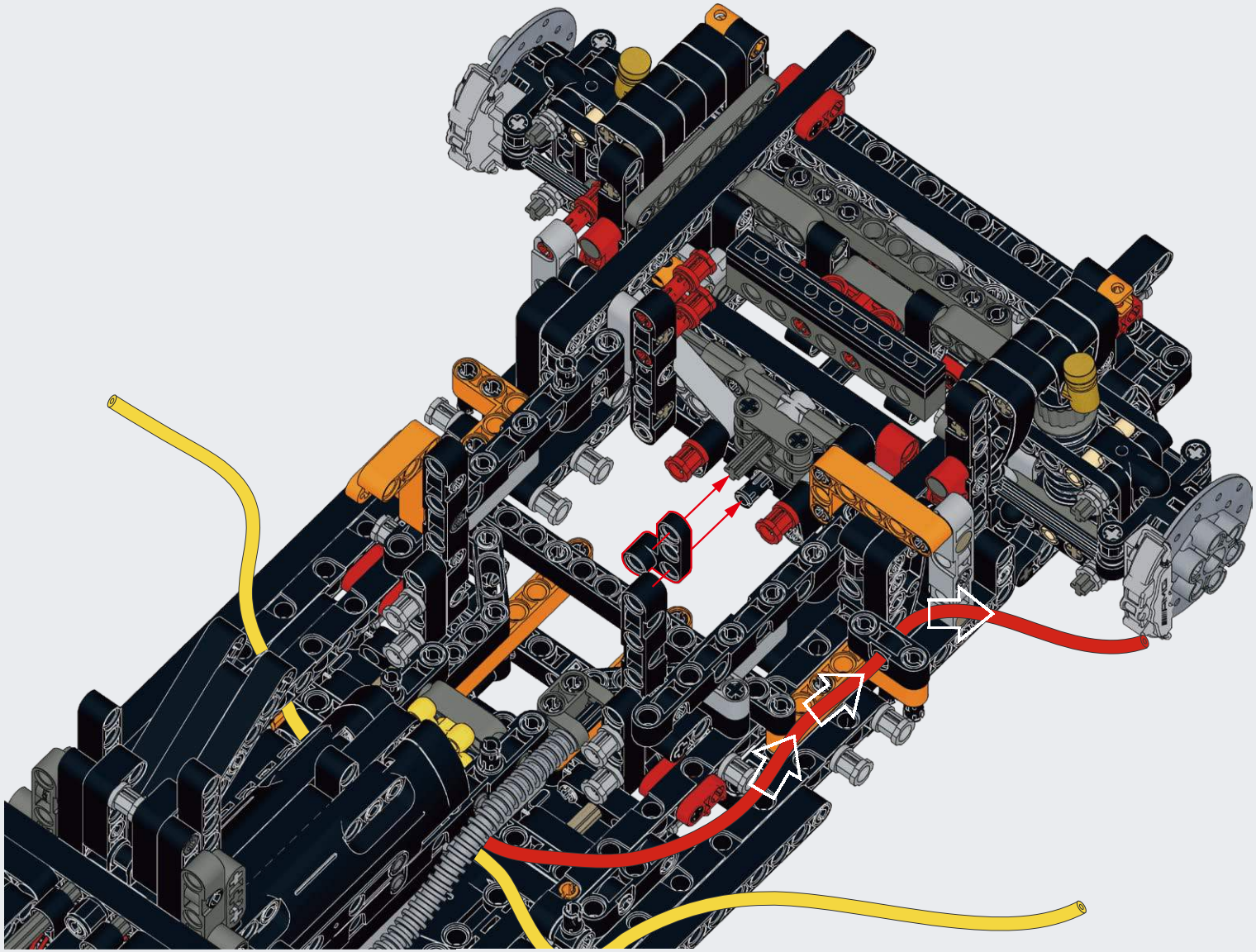

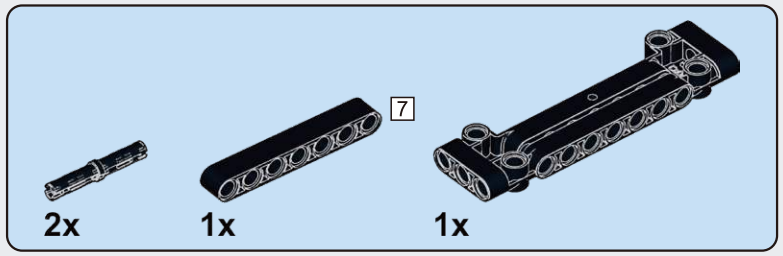

C97

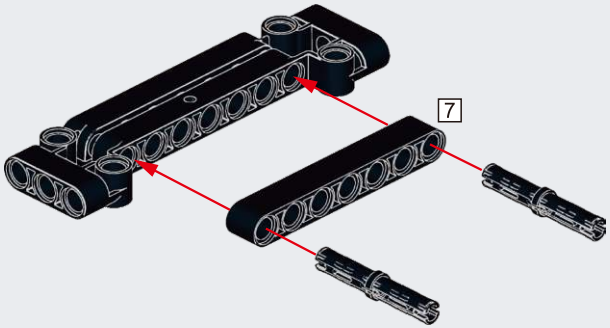

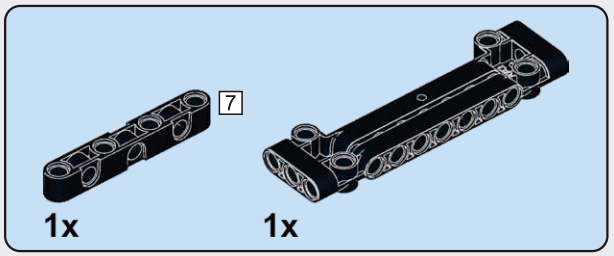

C98

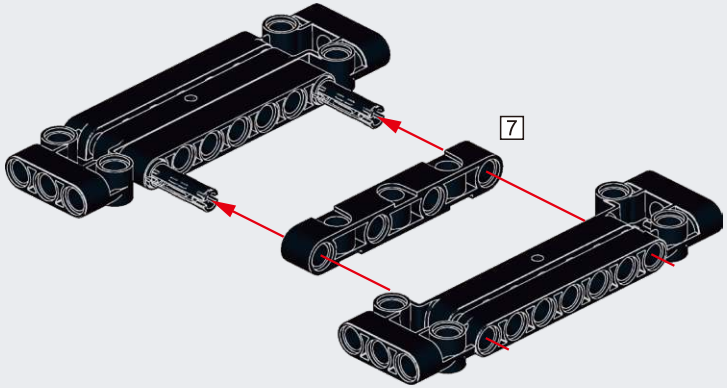

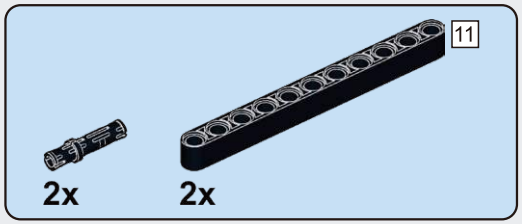

C99

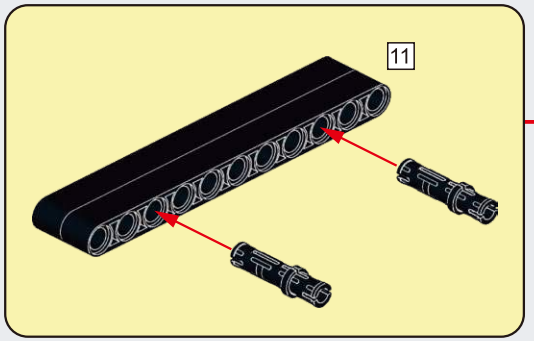

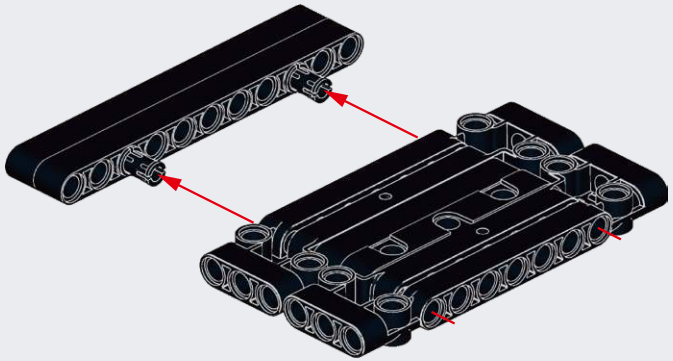

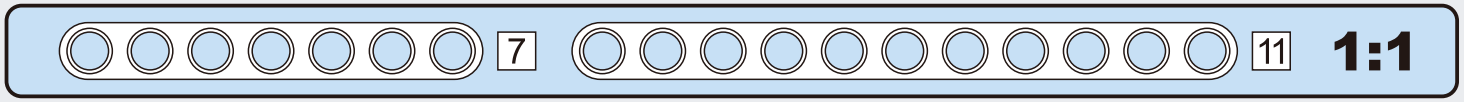

C100

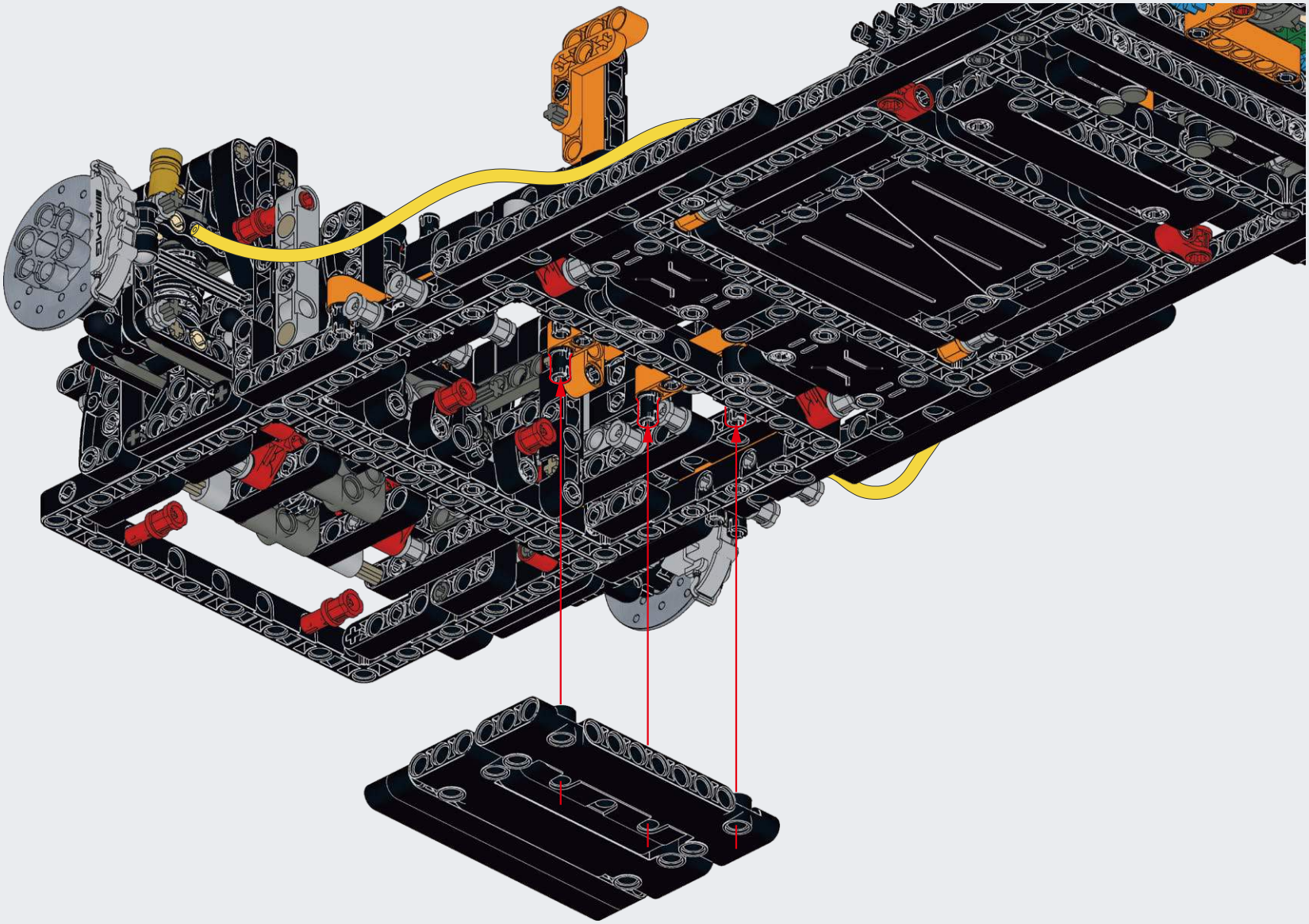

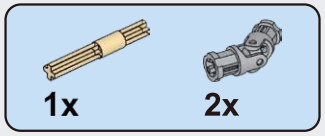

C101

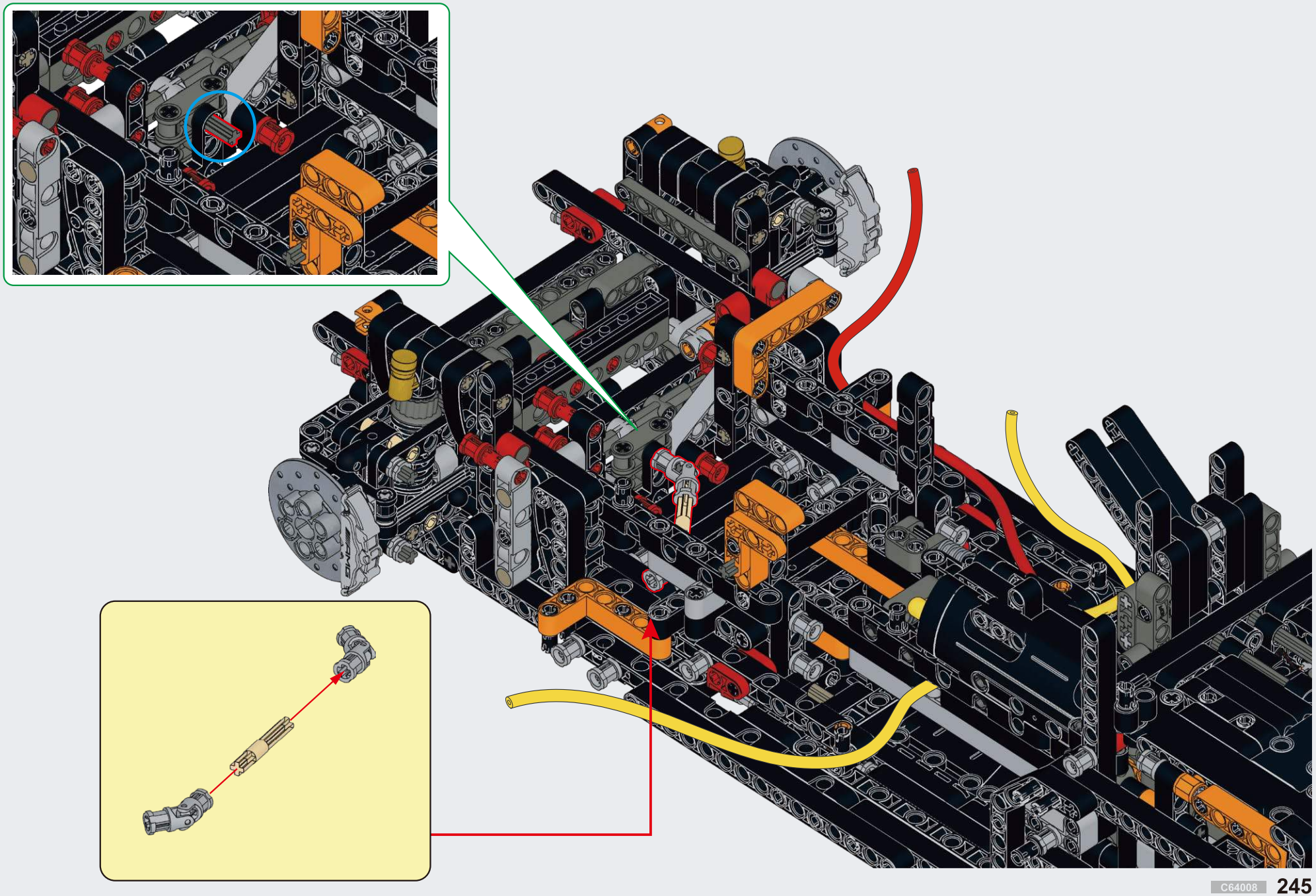

C102

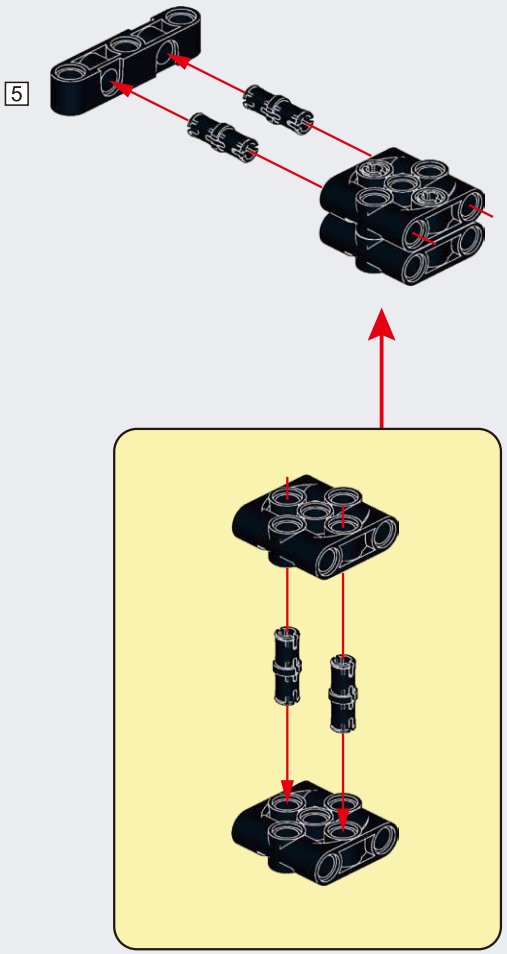

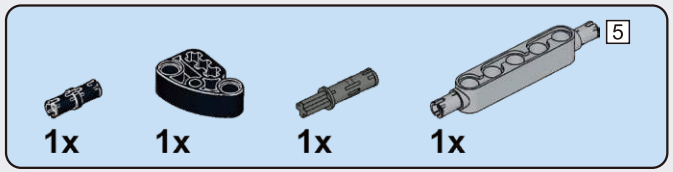

C103

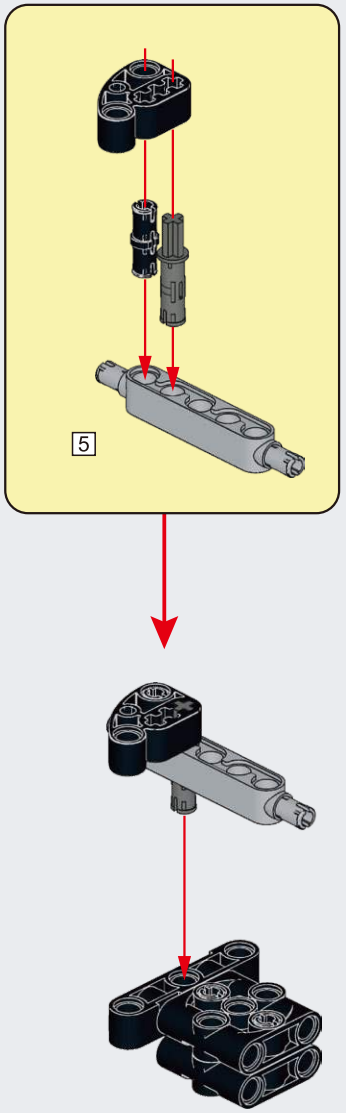

C104

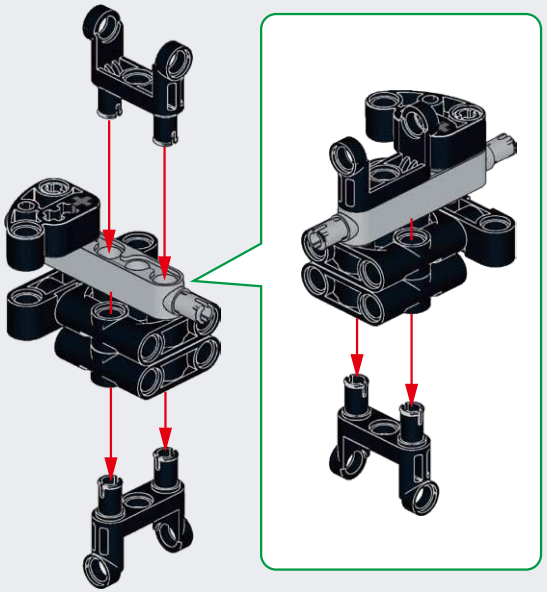

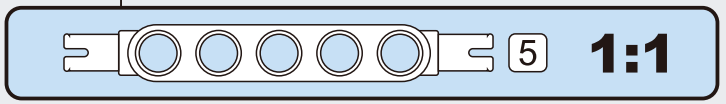

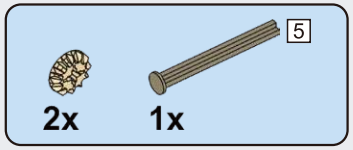

C105

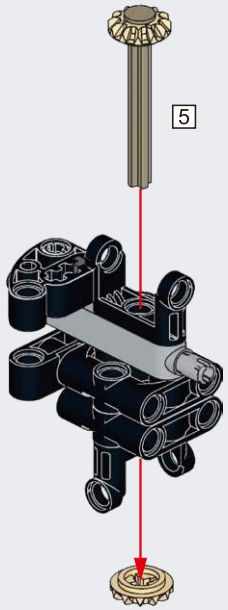

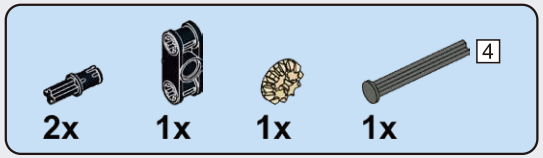

C106

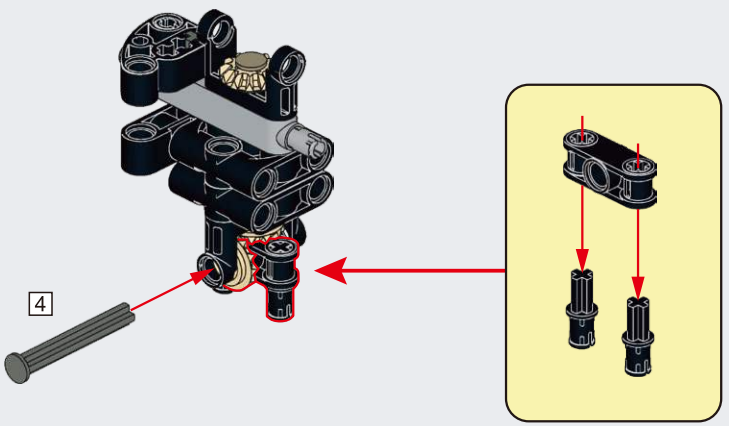

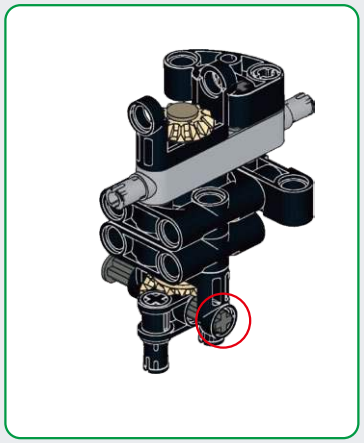

C107

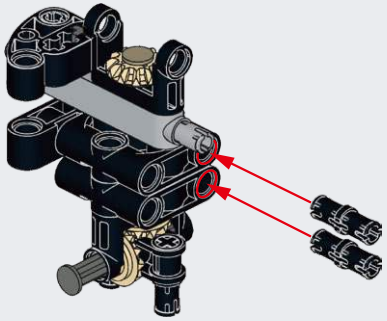

C108

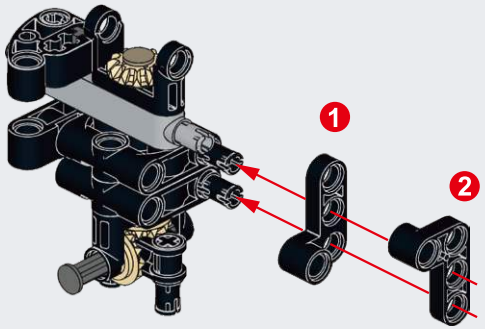

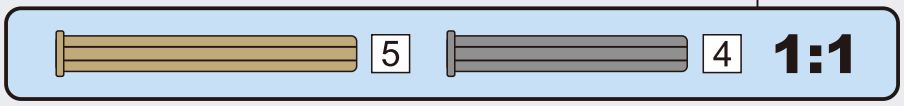

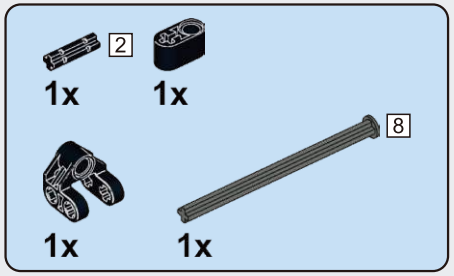

C109

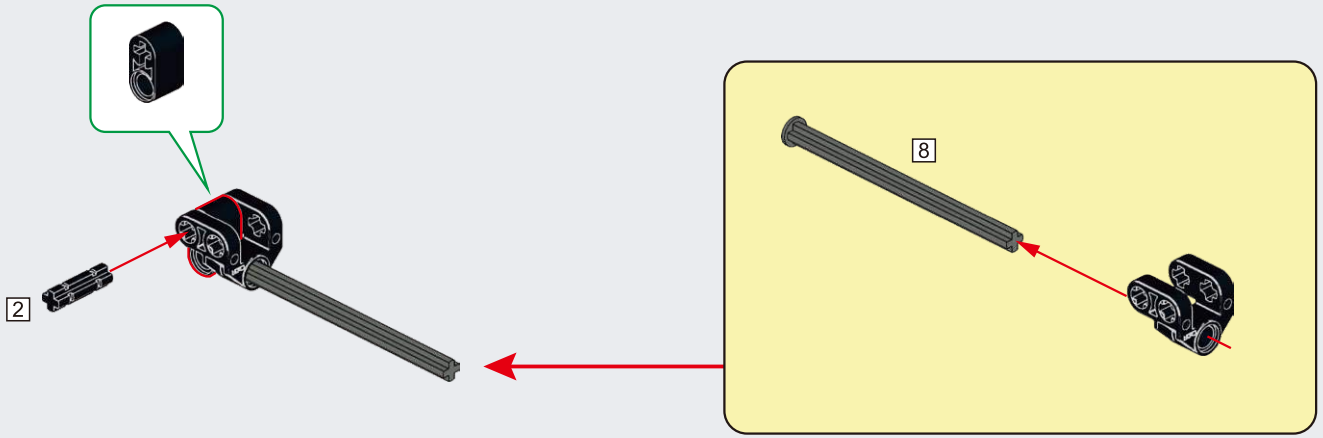

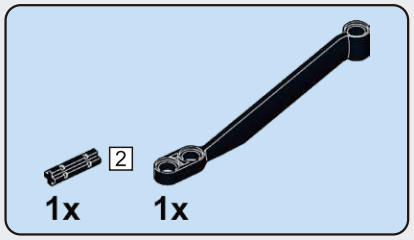

C110

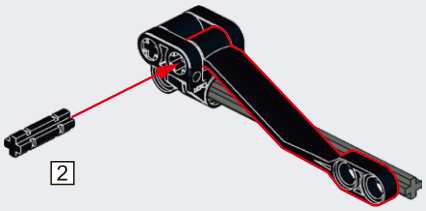

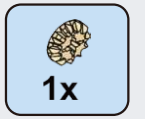

C111

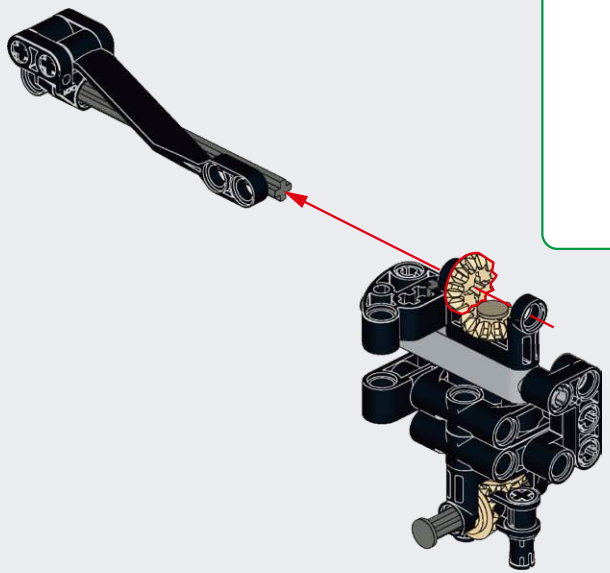

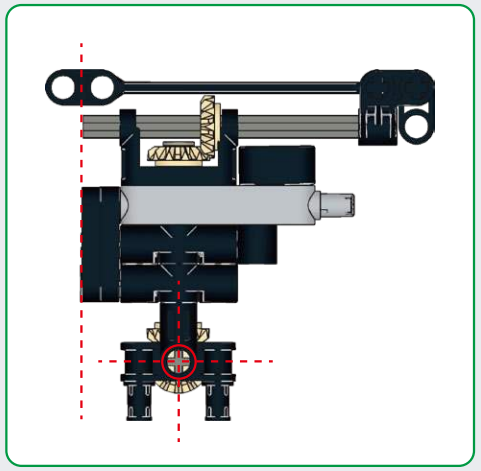

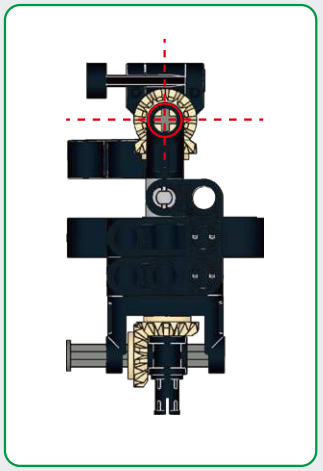

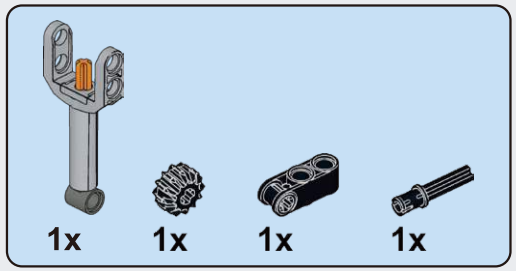

C112

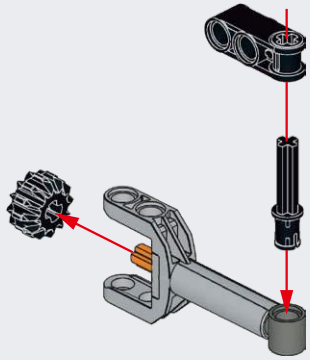

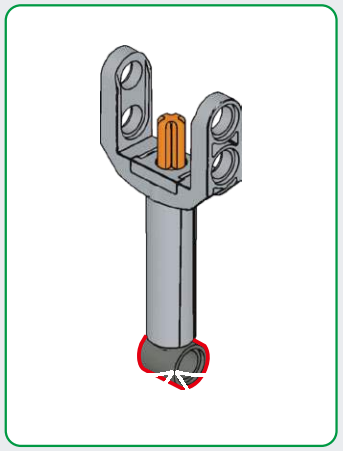

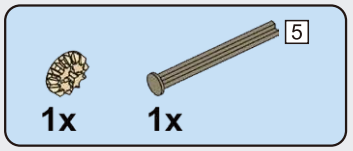

C113

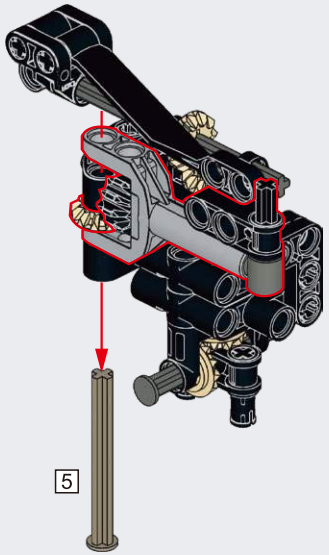

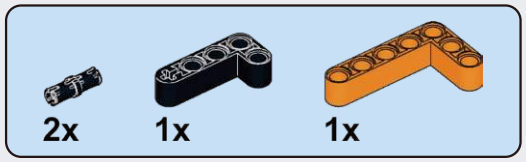

C114

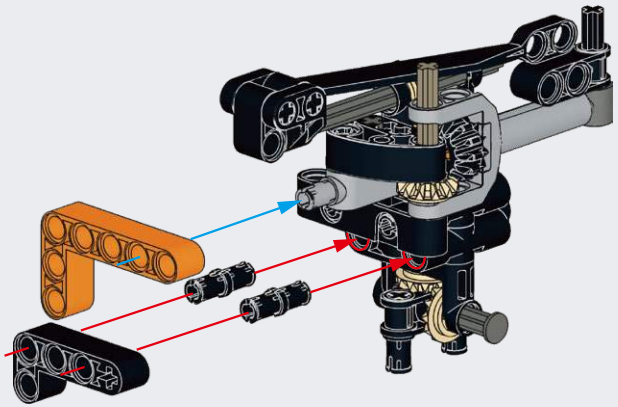

C115

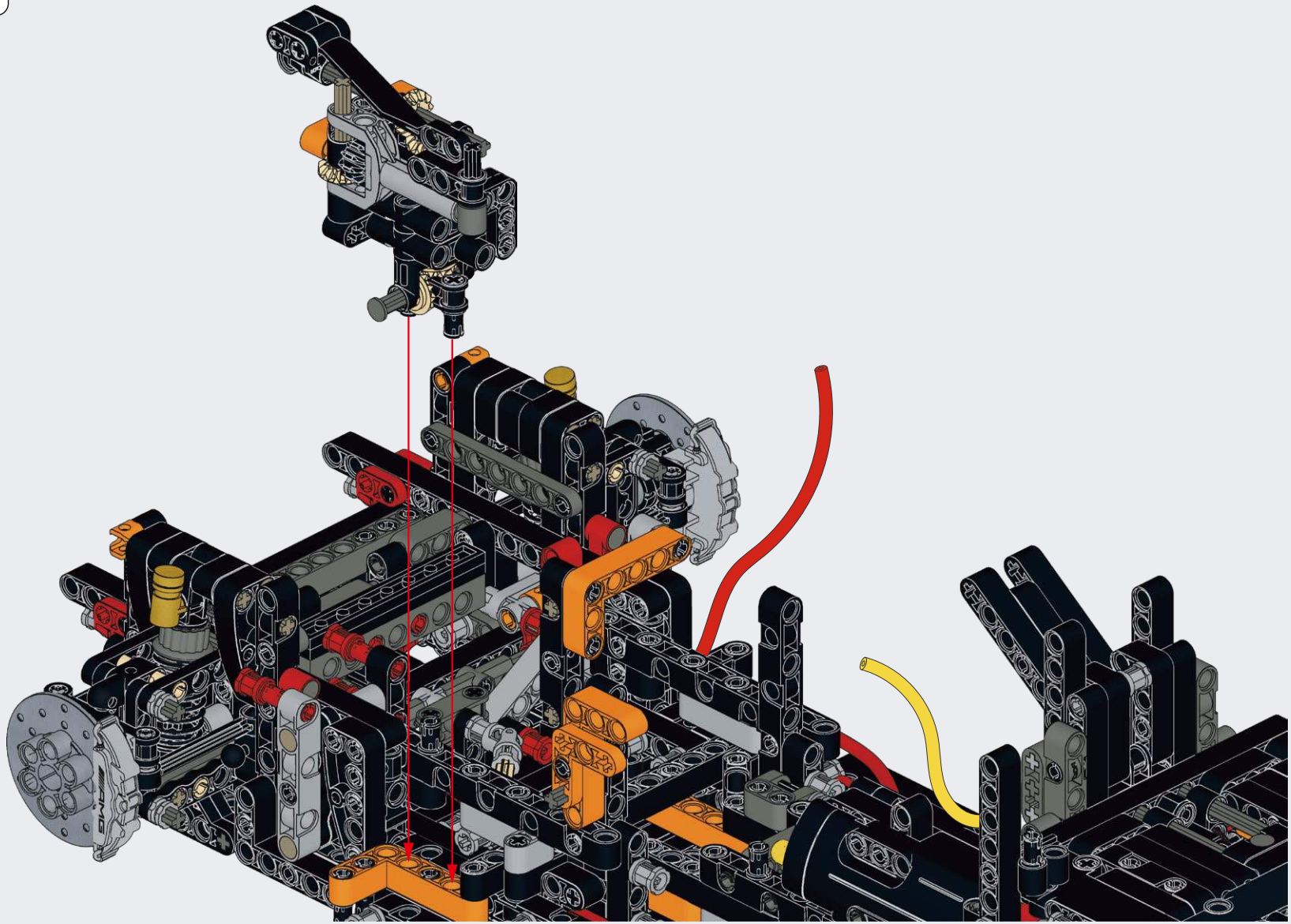

C116

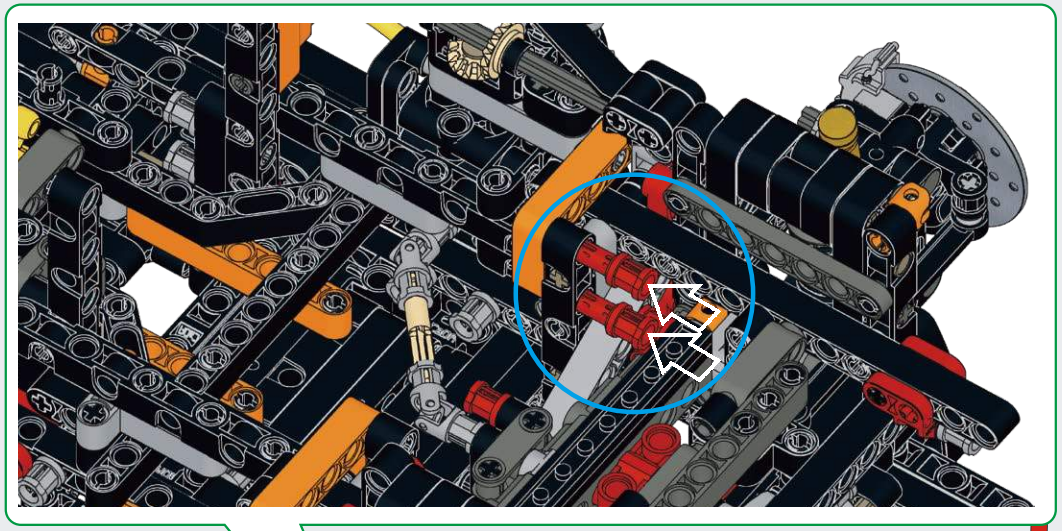

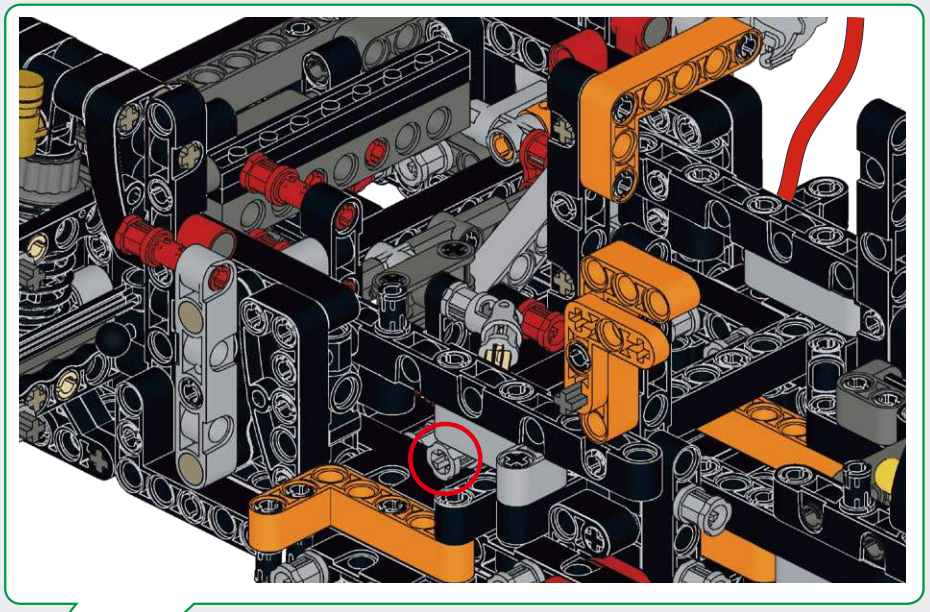

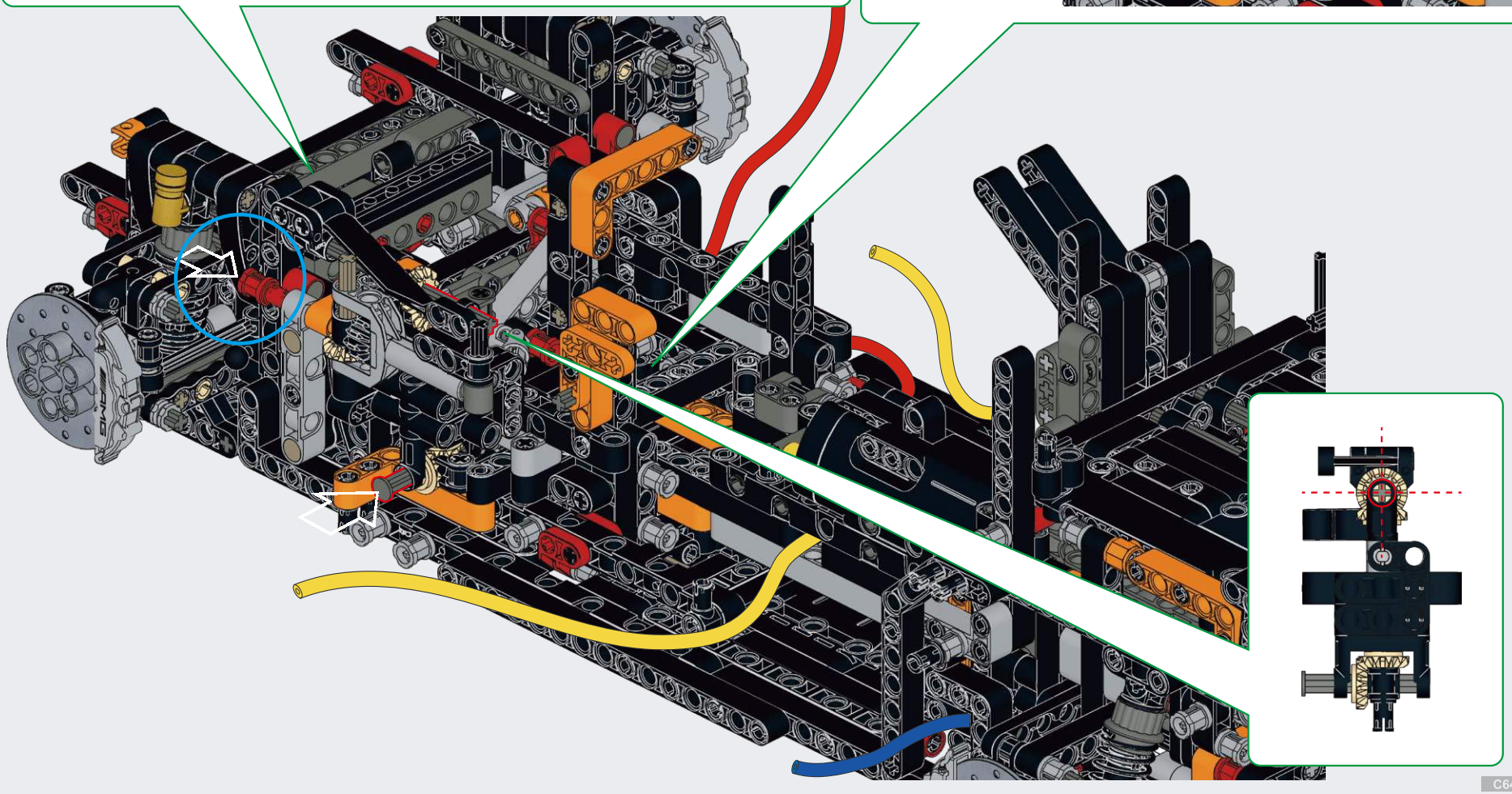

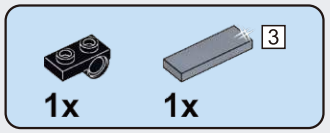

C117

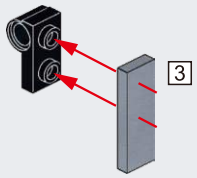

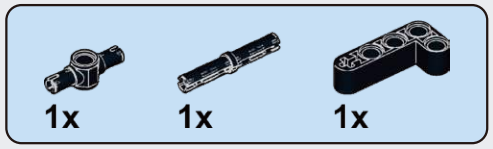

C118

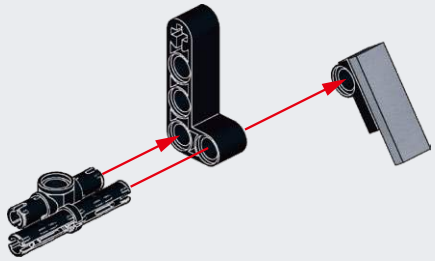

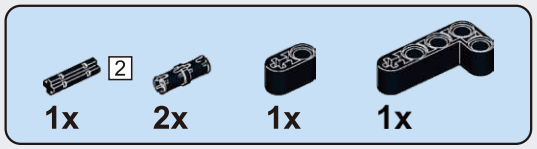

C119

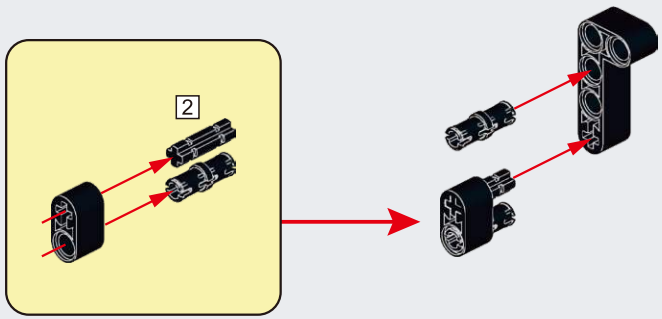

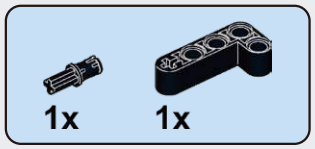

C120

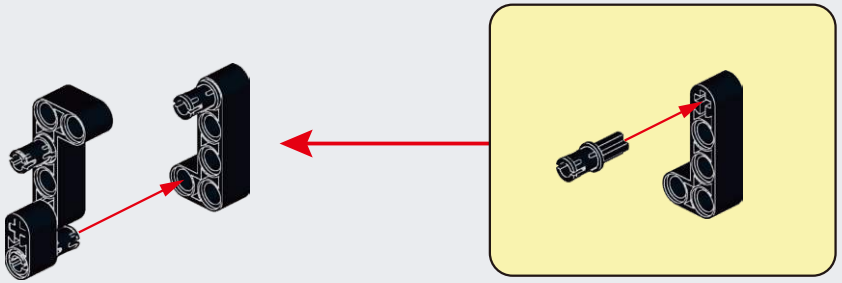

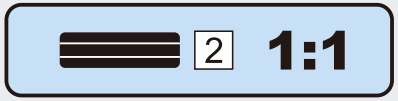

C121

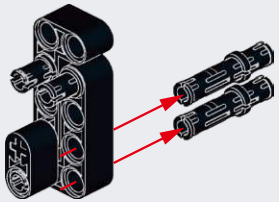

C122

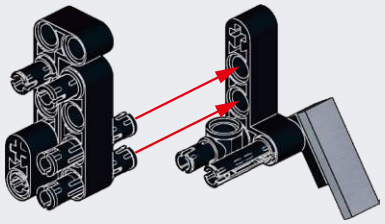

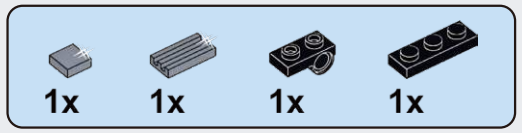

C123

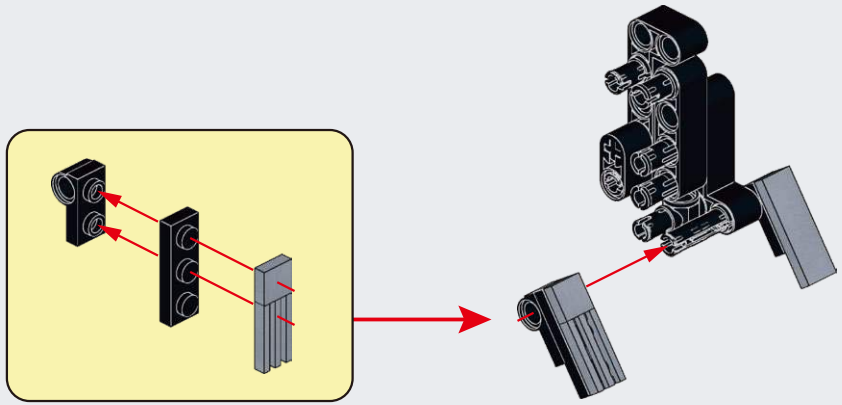

C124

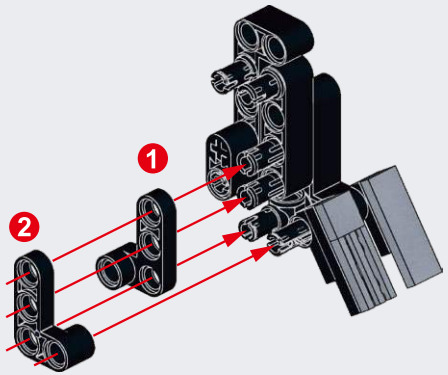

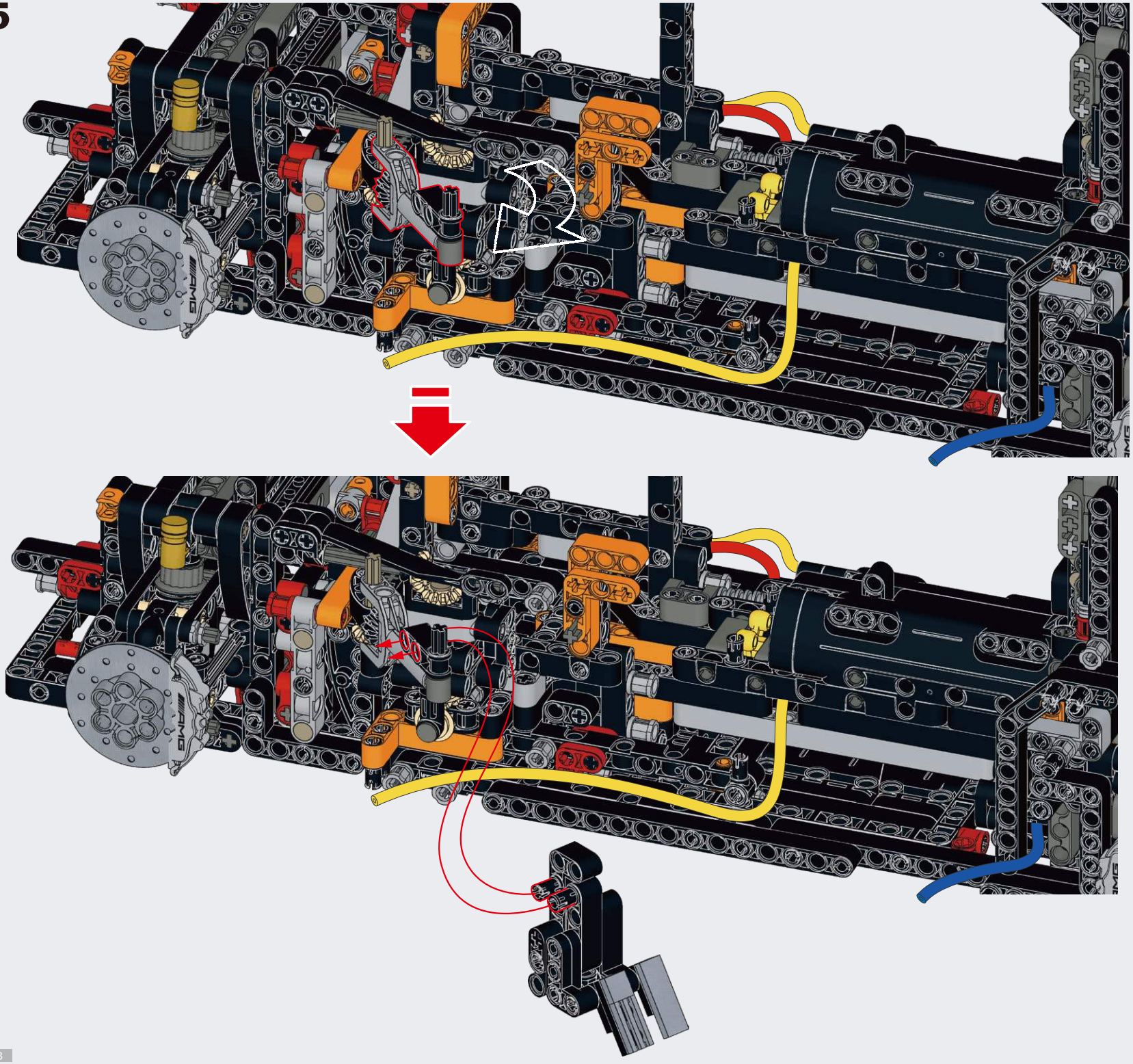

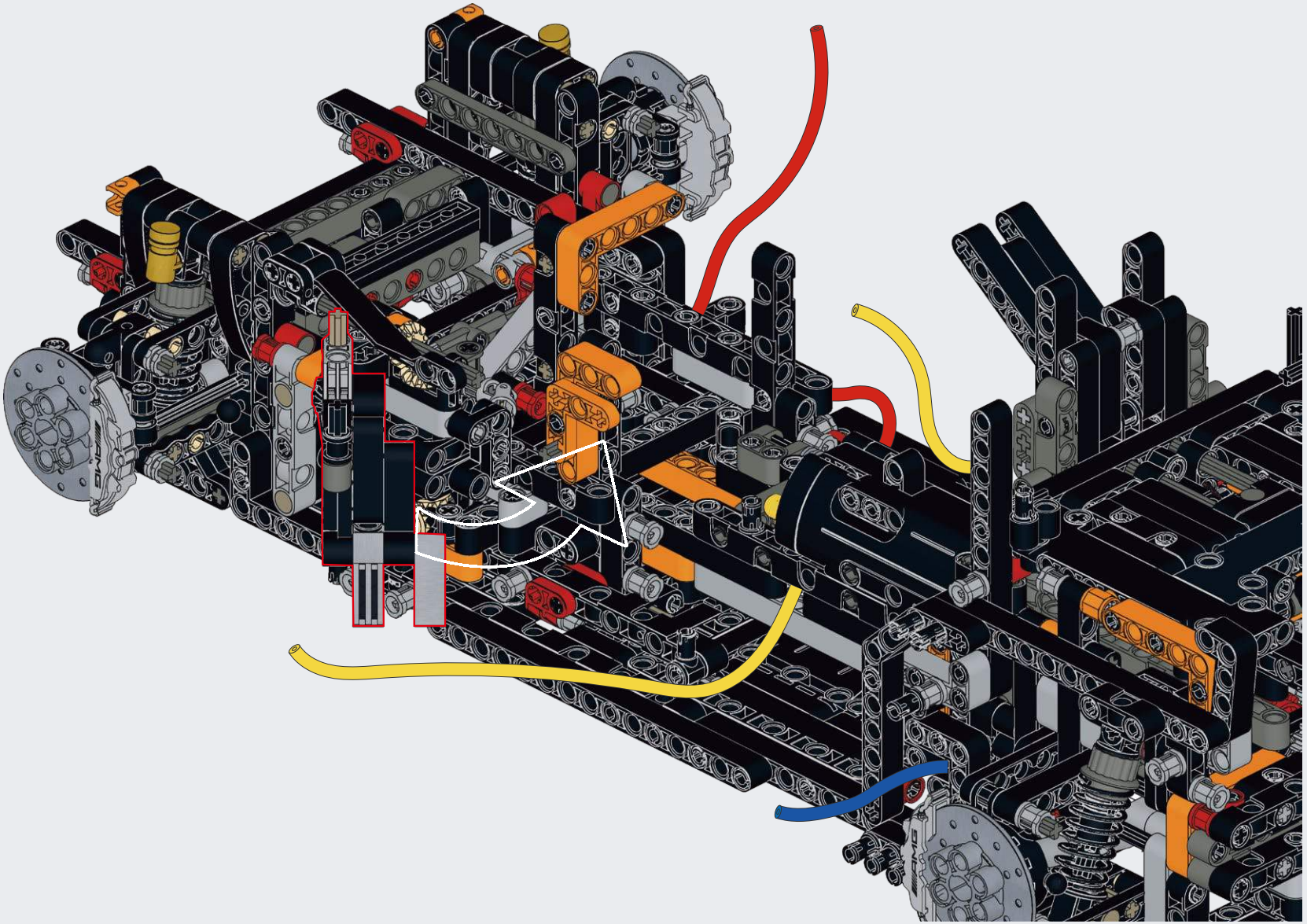

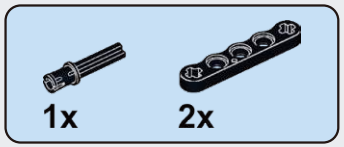

C127

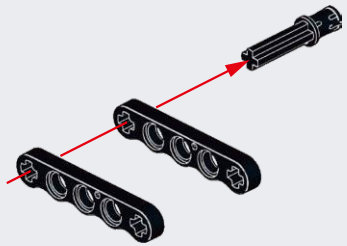

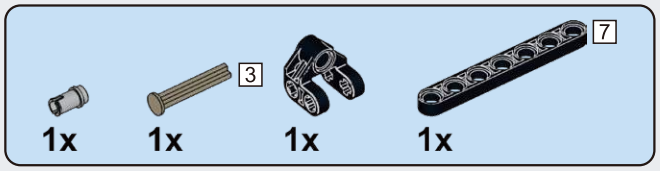

C128

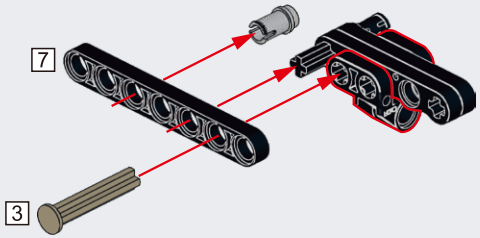

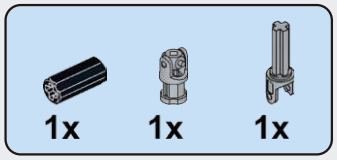

C129

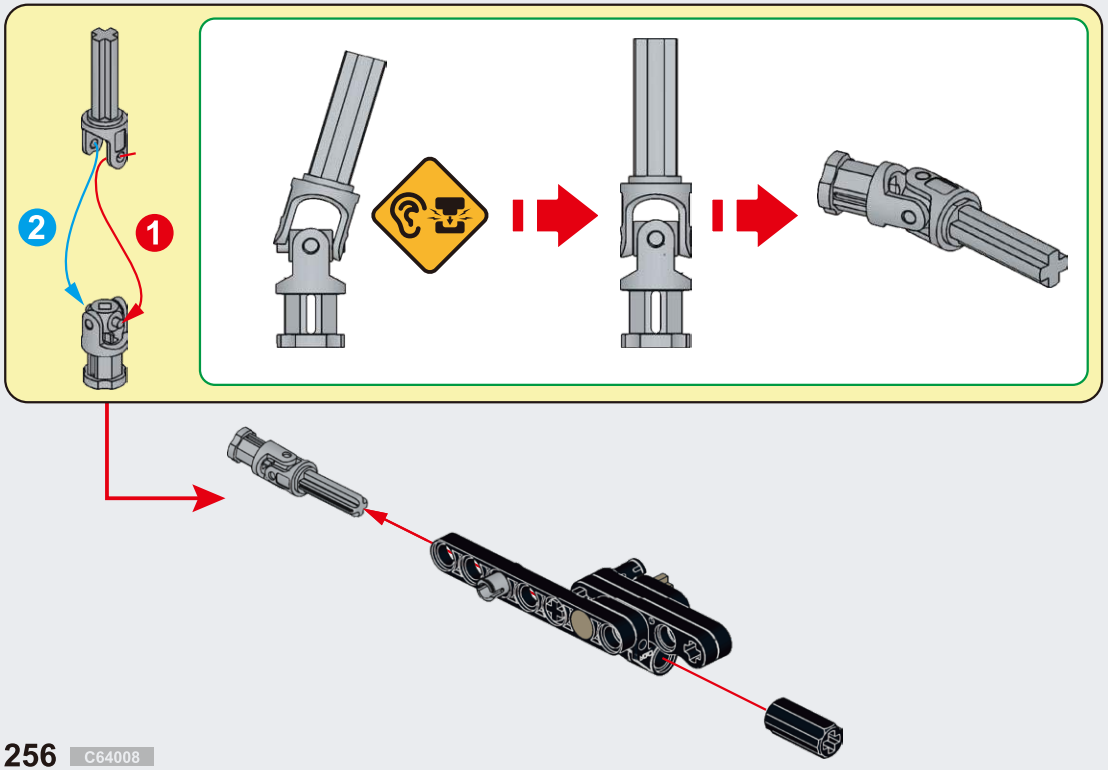

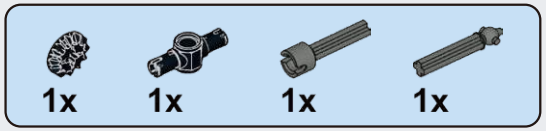

C130

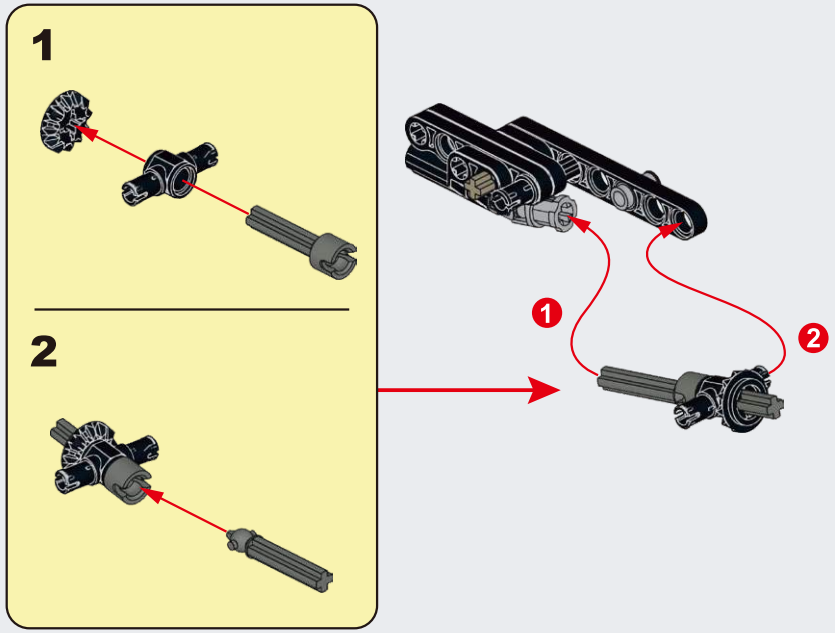

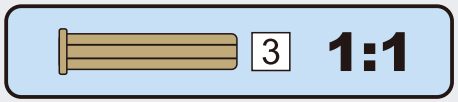

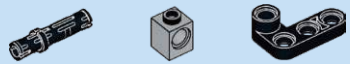

C131

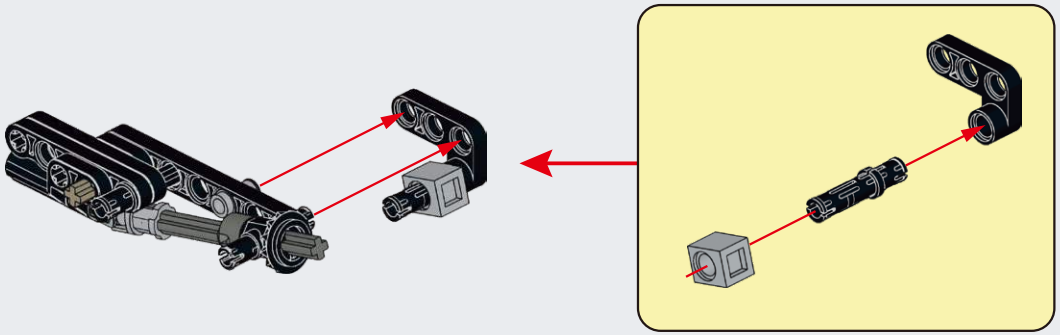

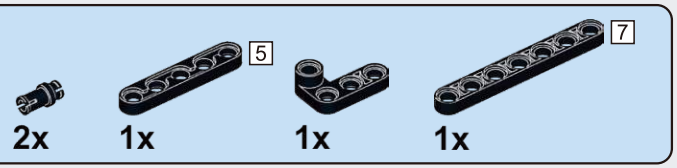

C132

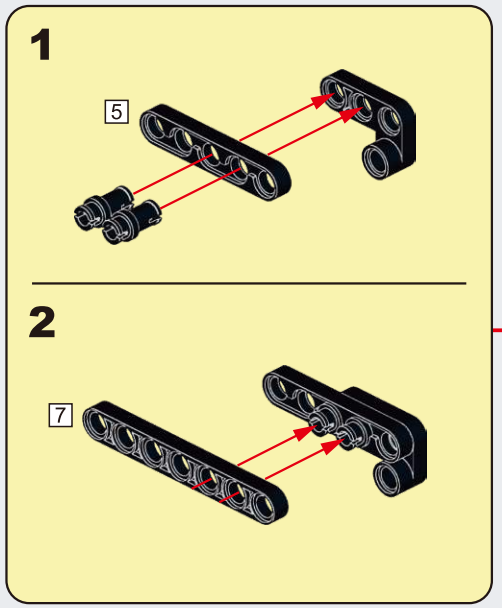

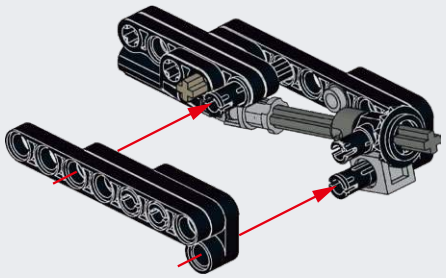

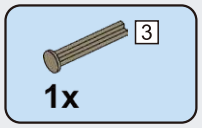

C133

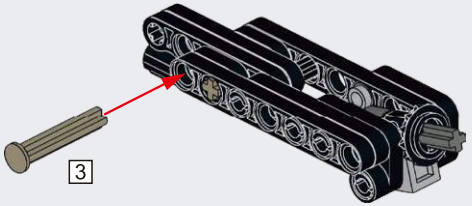

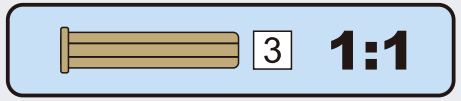

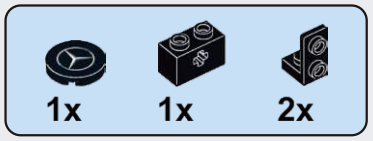

C134

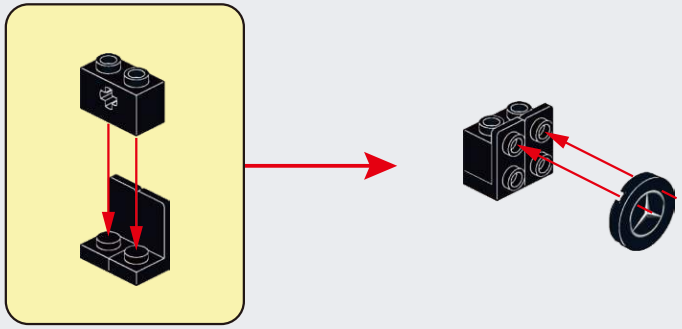

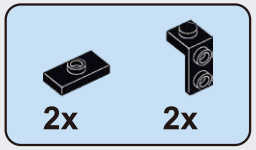

C135

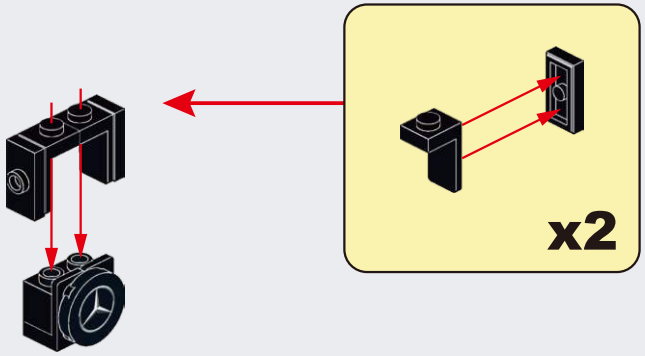

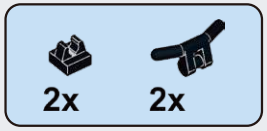

C136

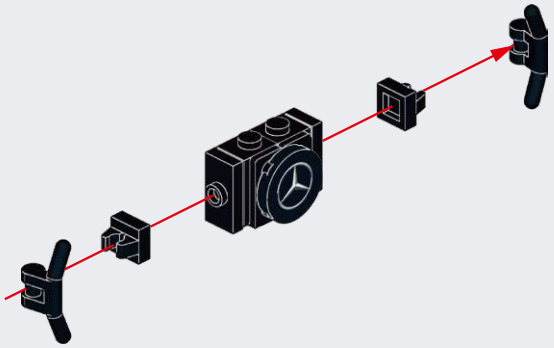

C137

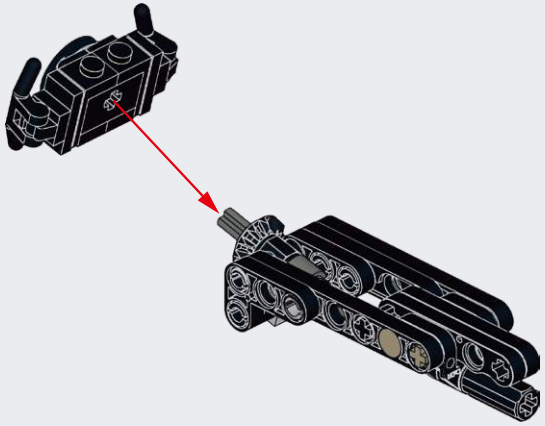

C138

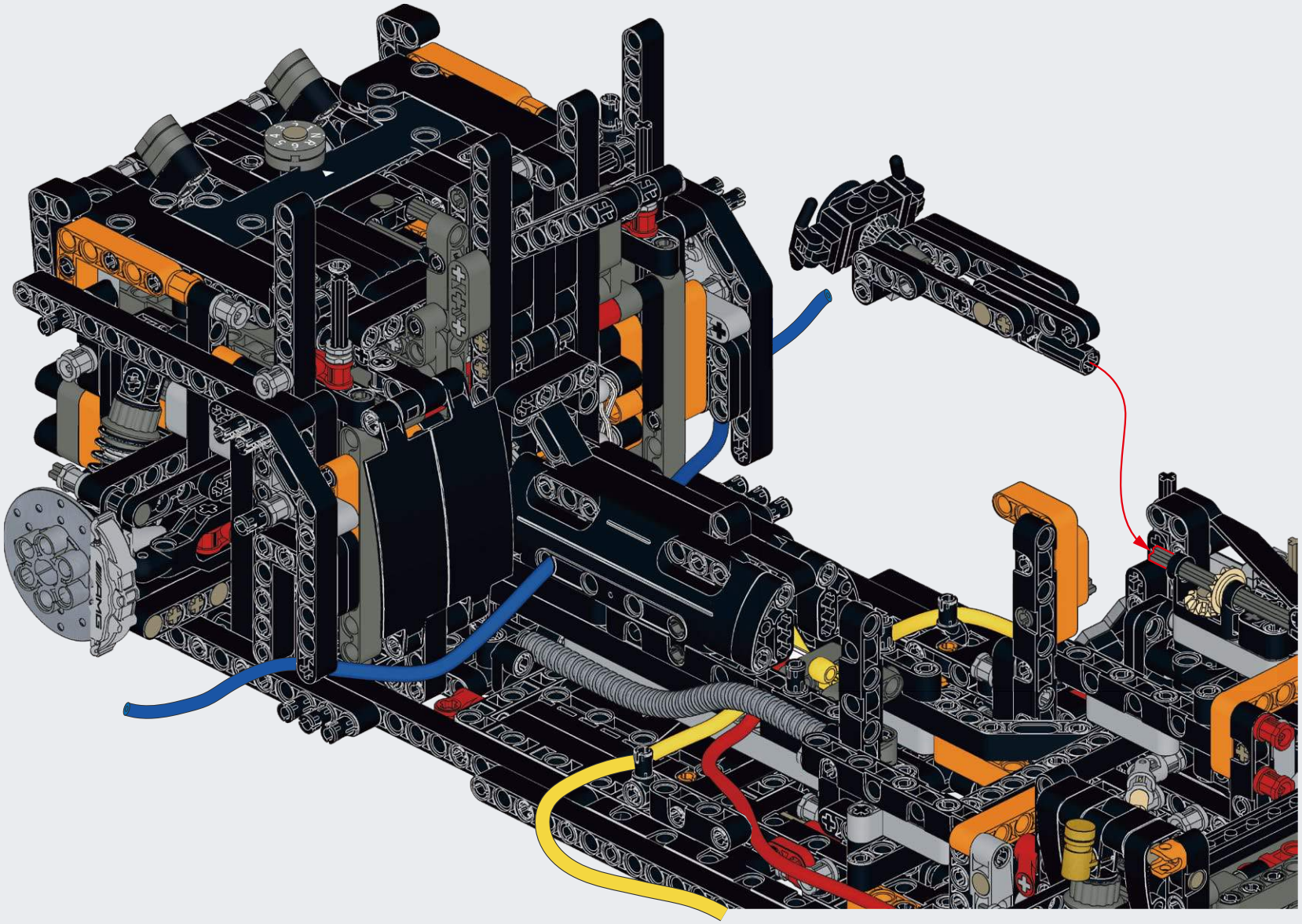

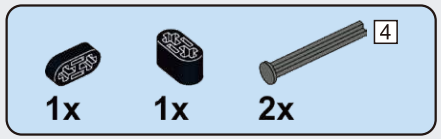

C139

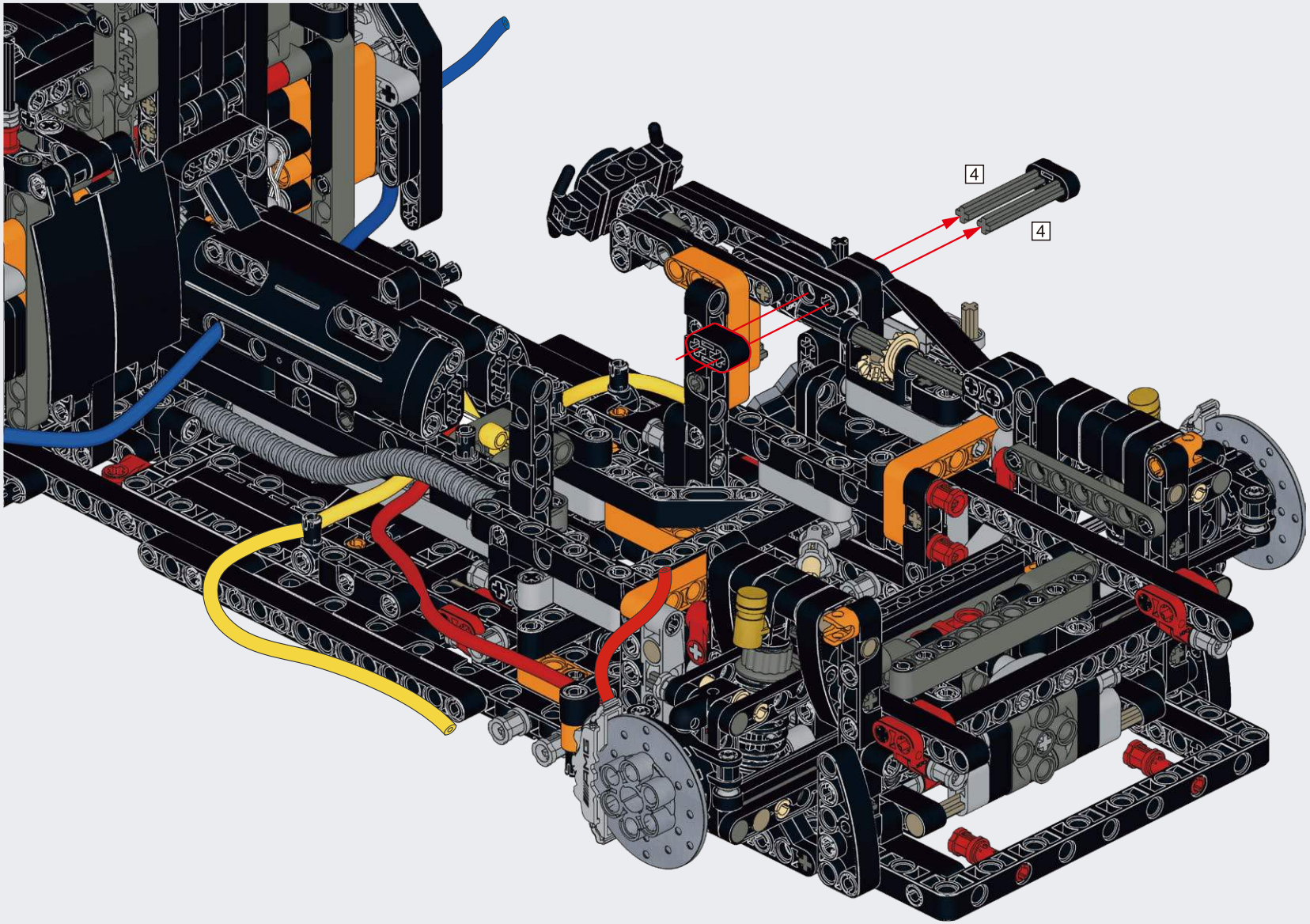

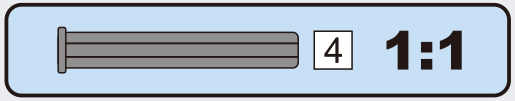

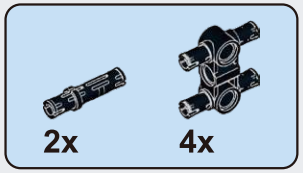

C140

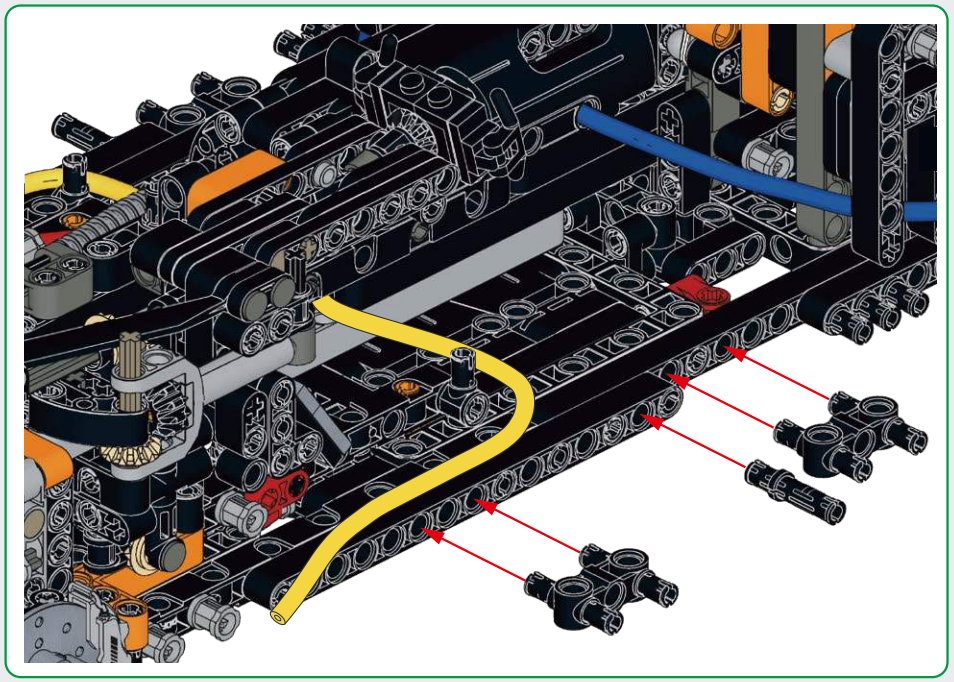

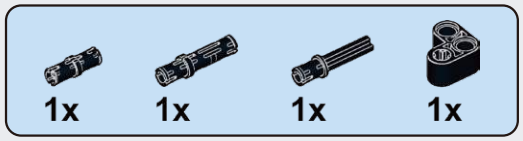

C141

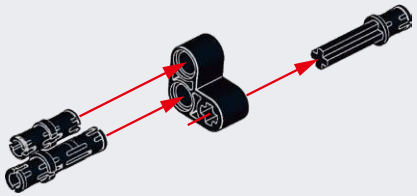

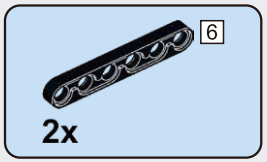

C142

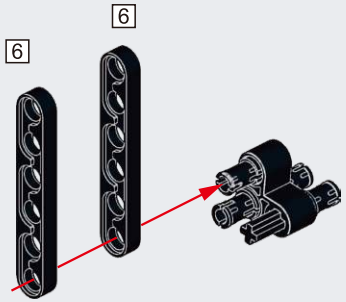

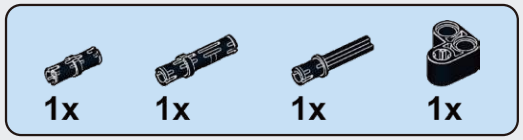

C143

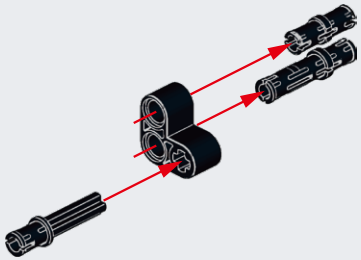

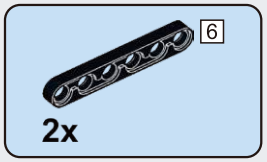

C144

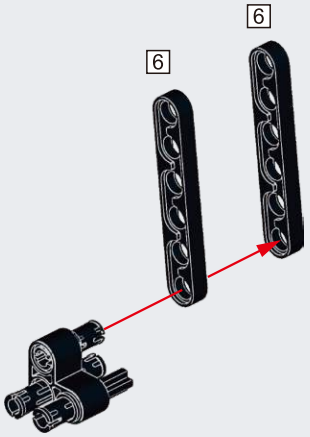

C145

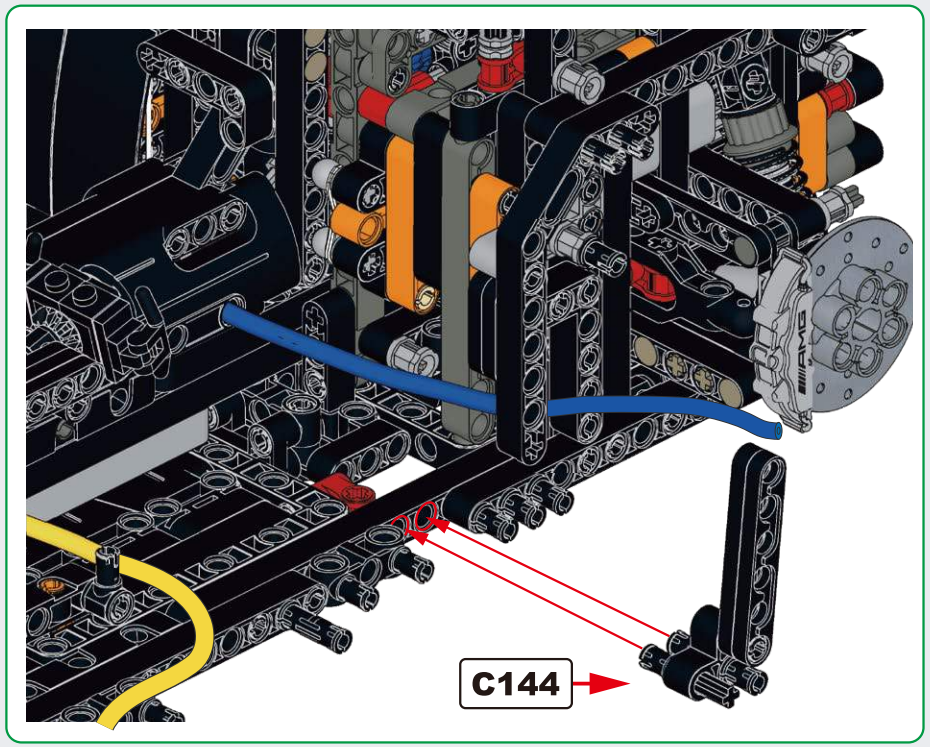

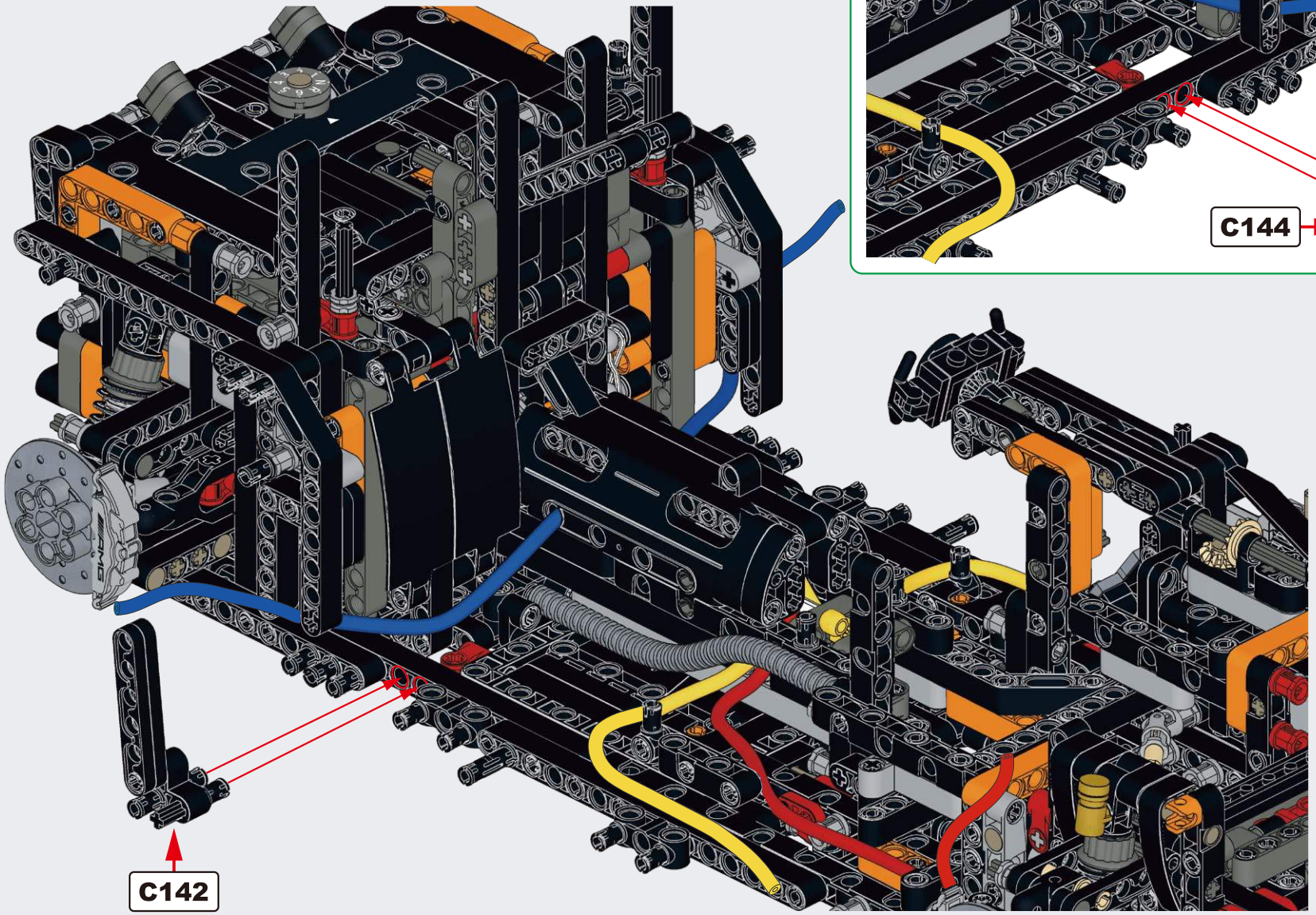

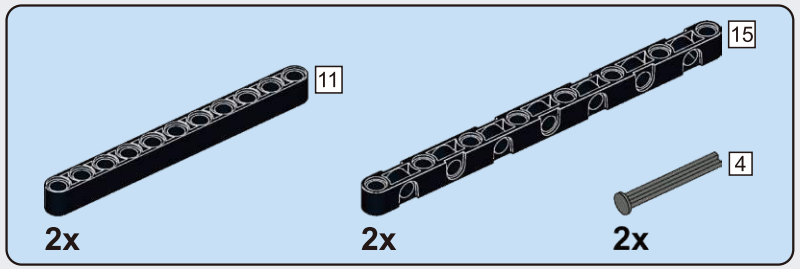

C146

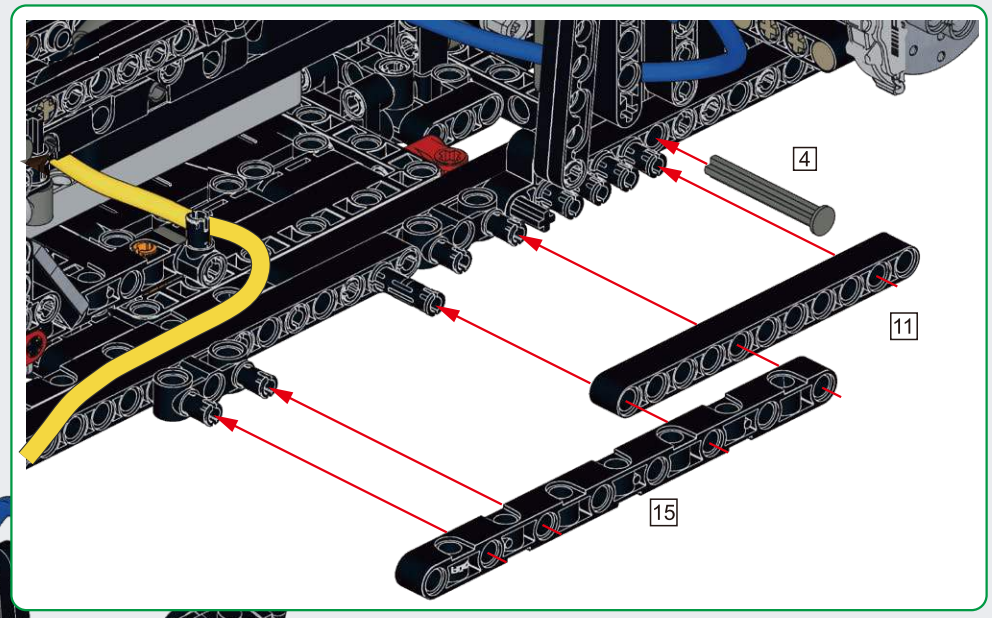

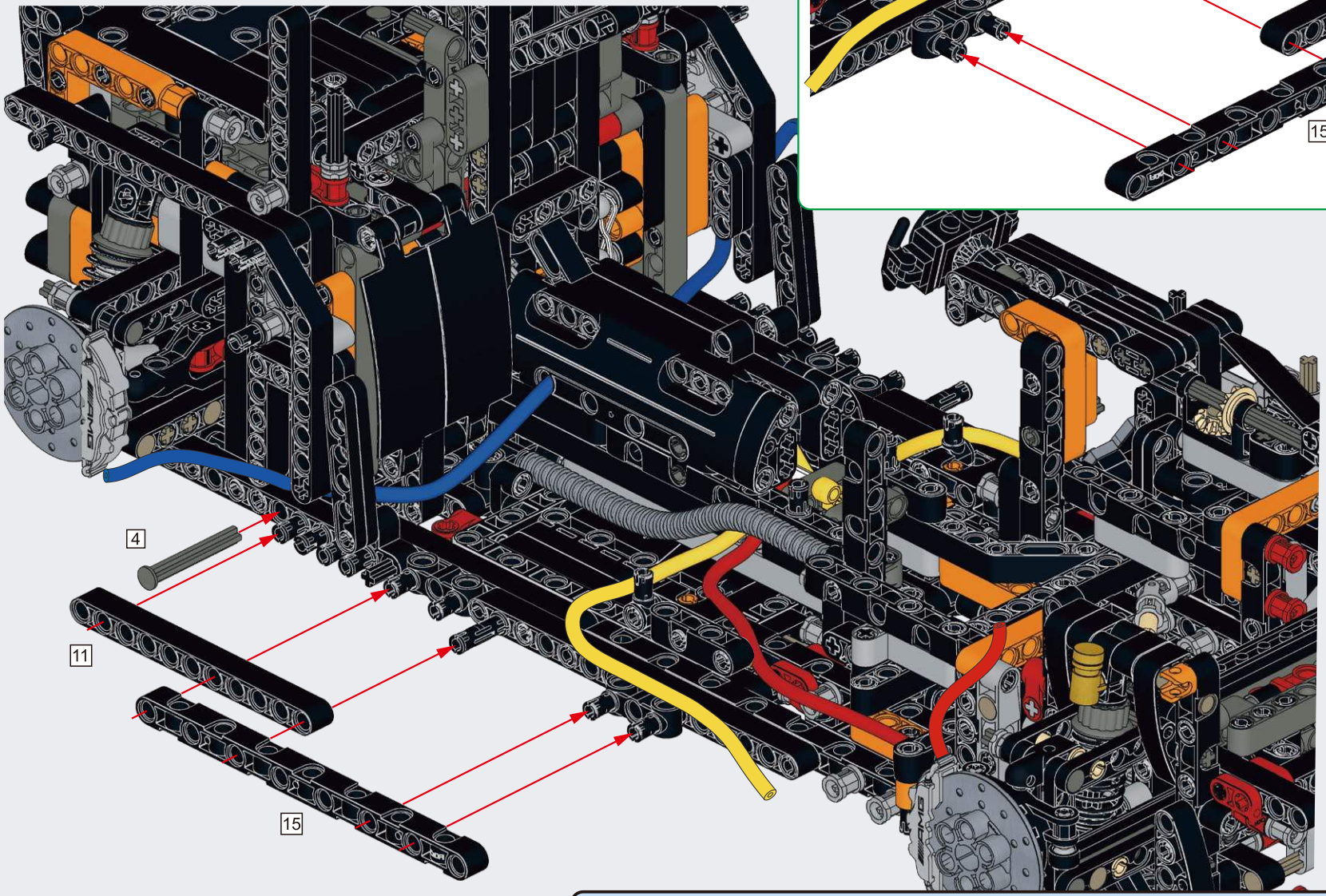

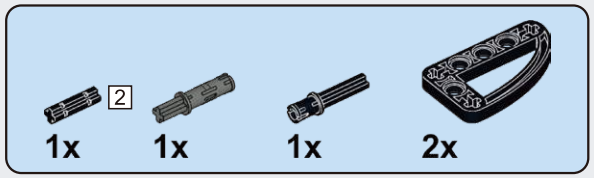

C147

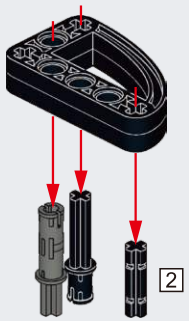

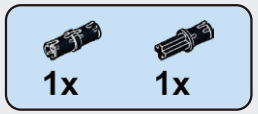

C148

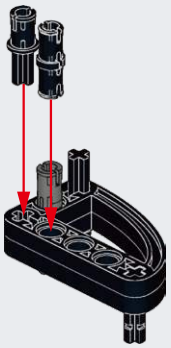

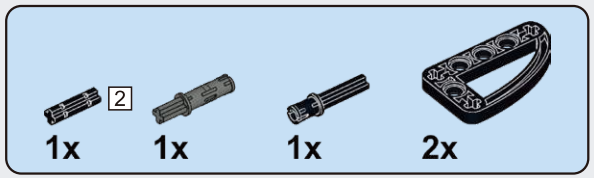

C149

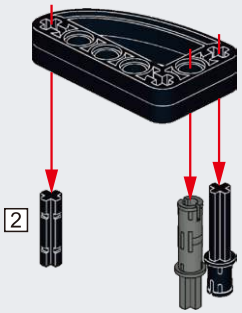

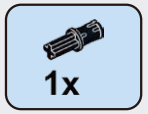

C150

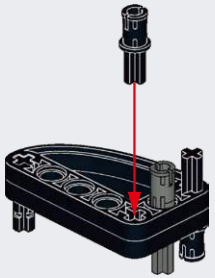

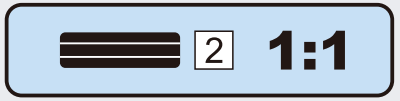

C151

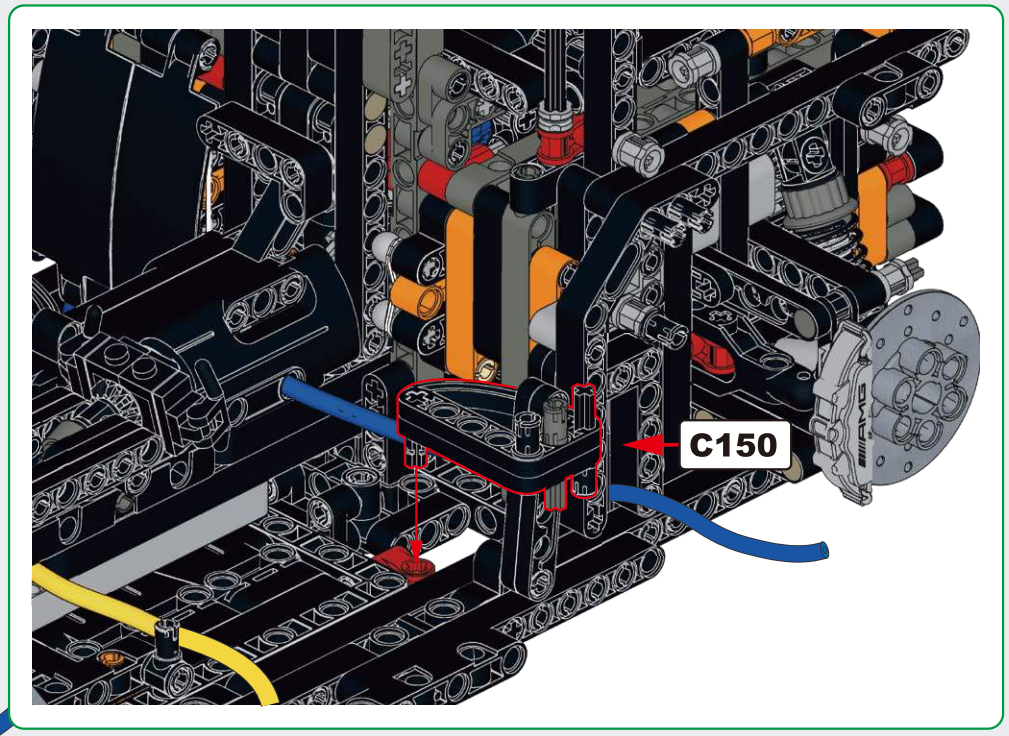

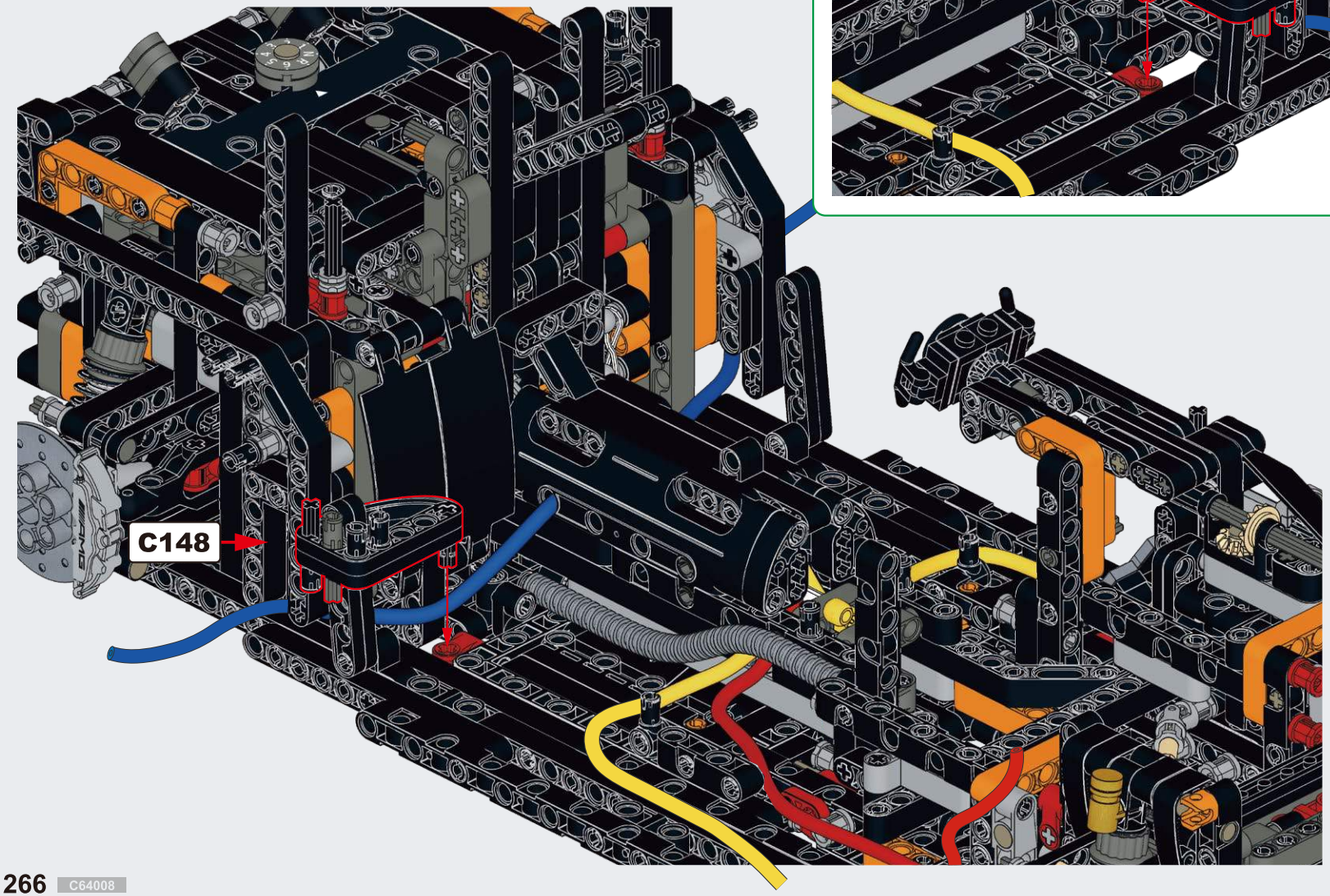

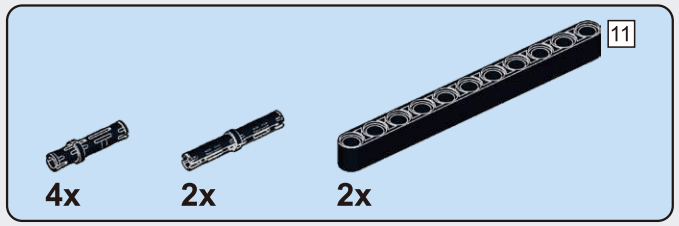

C152

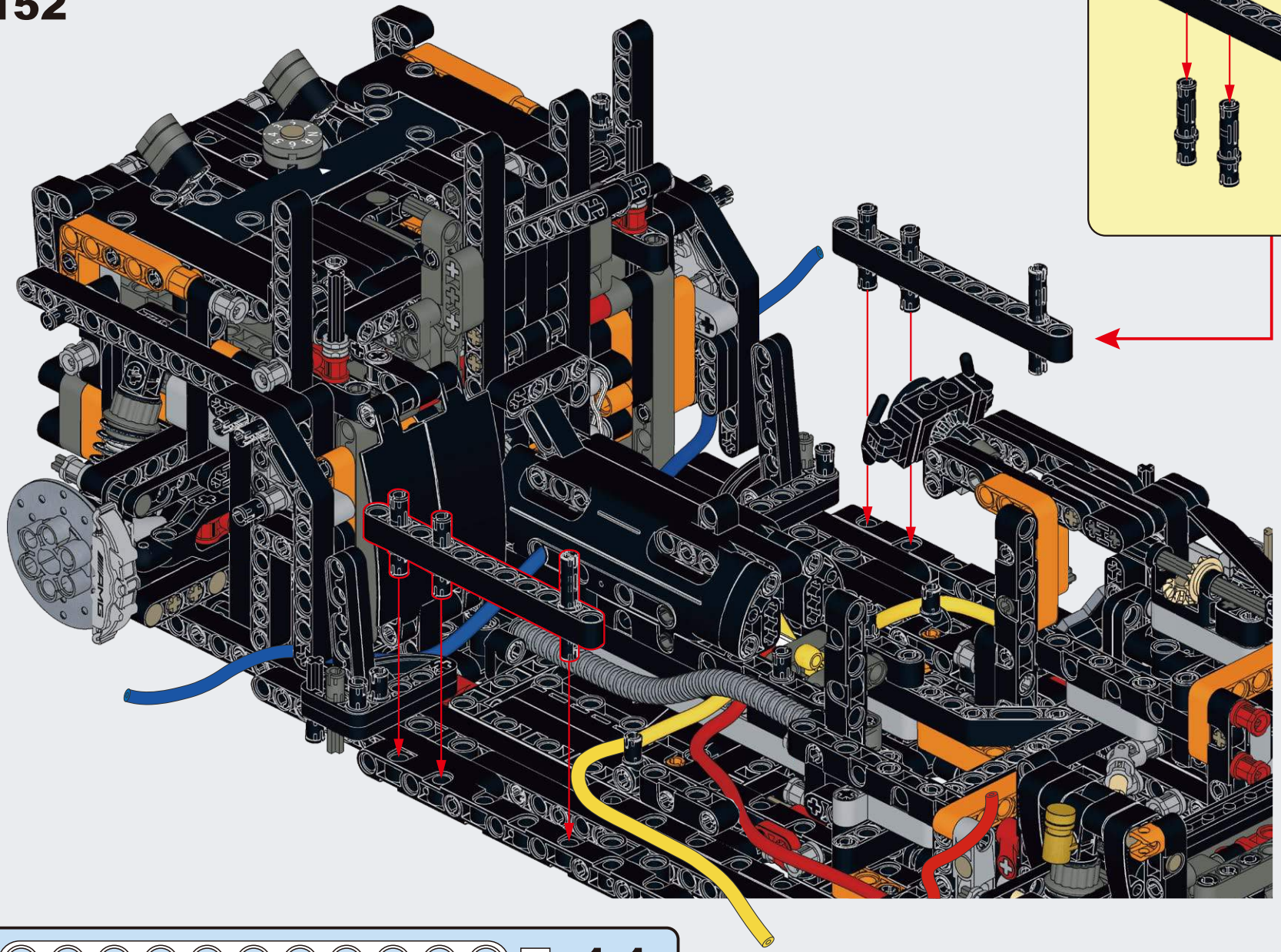

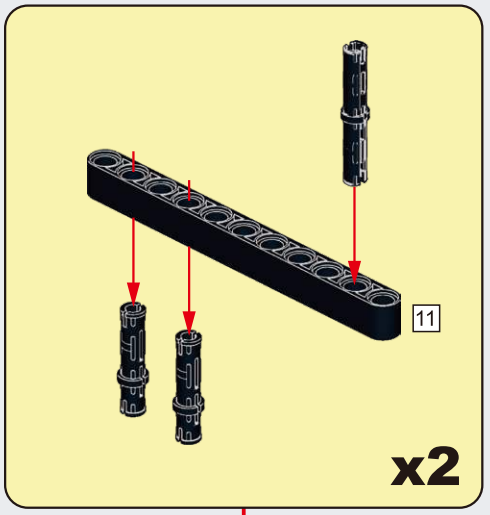

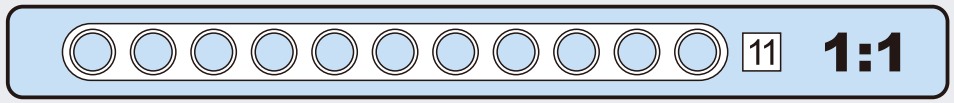

C153

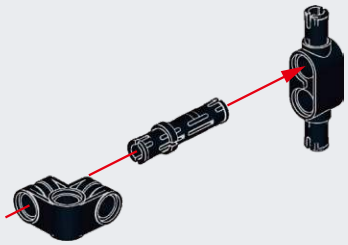

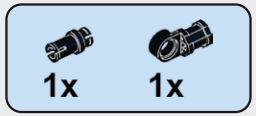

C154

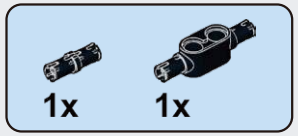

C155

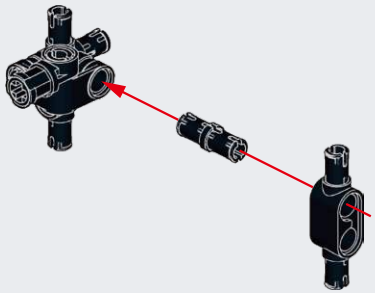

C156

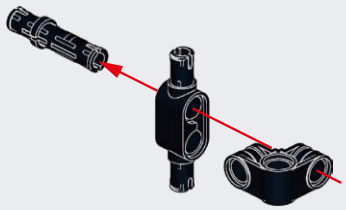

C157

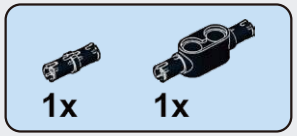

C158

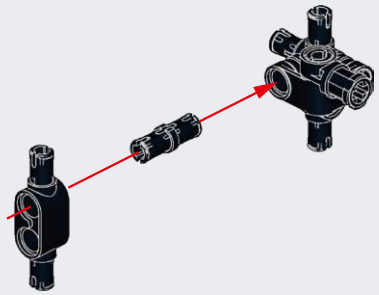

C159

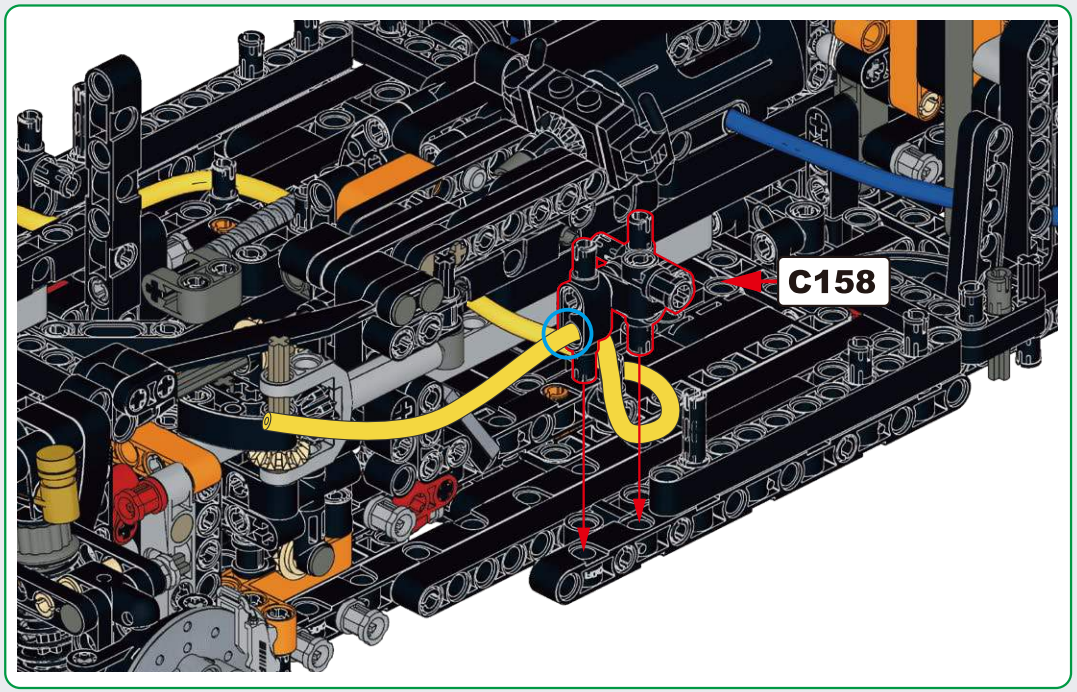

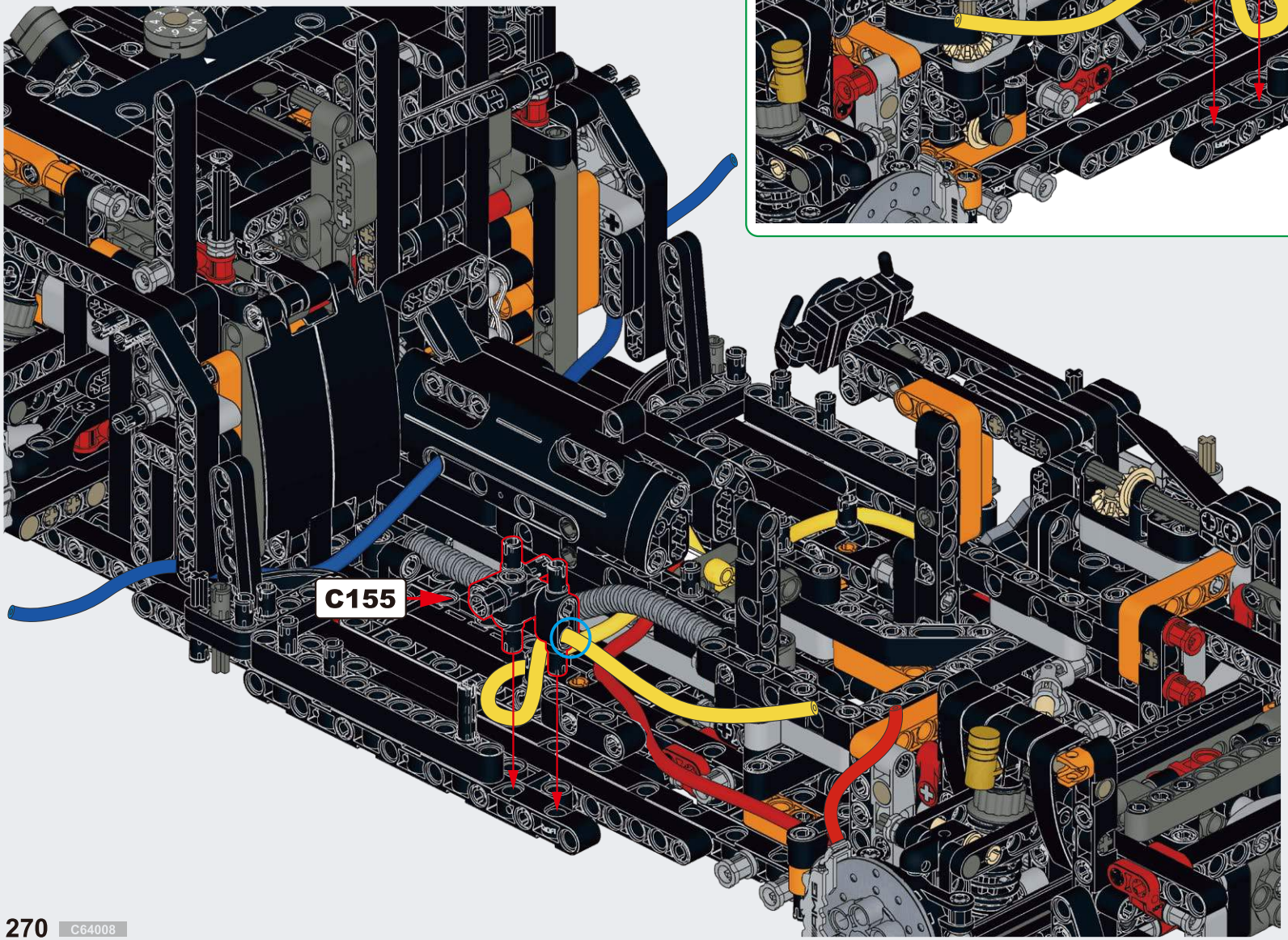

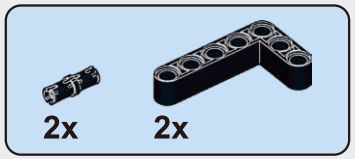

C160

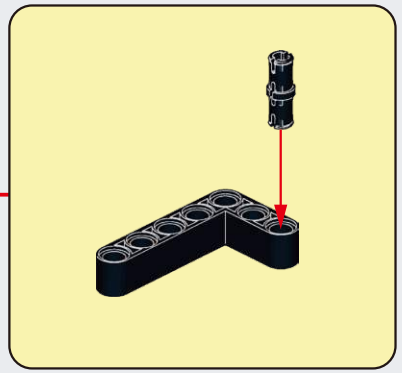

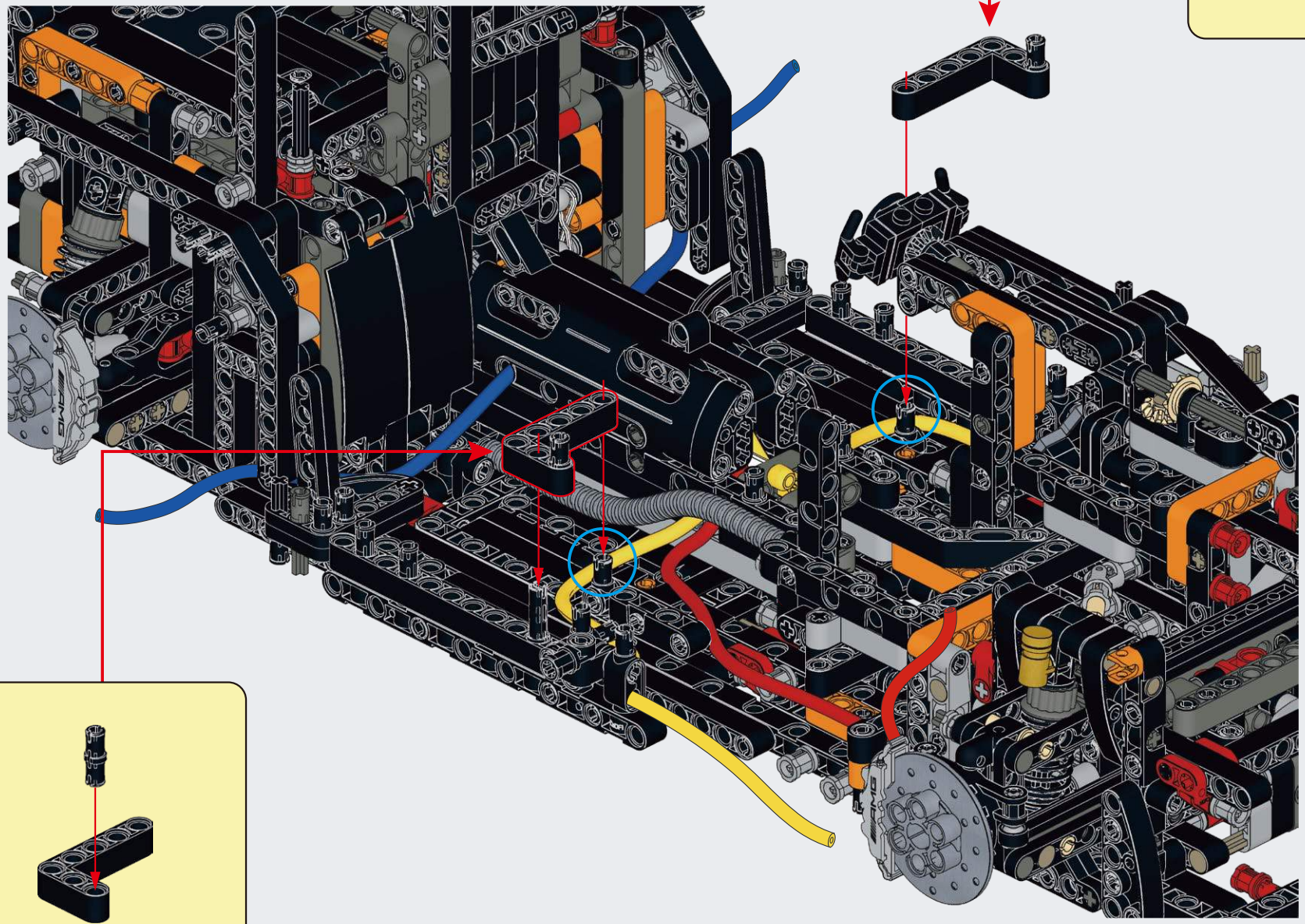

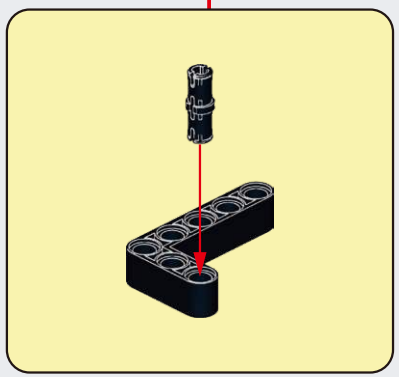

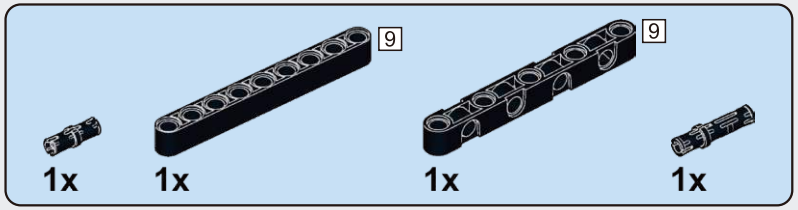

C161

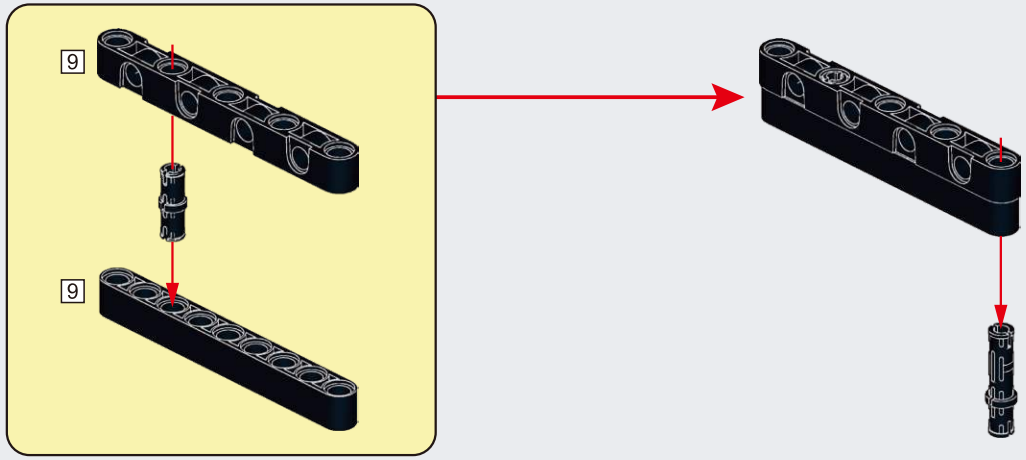

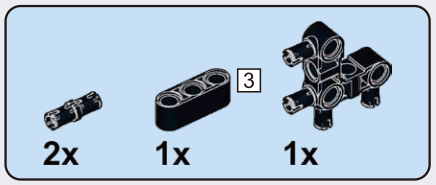

C162

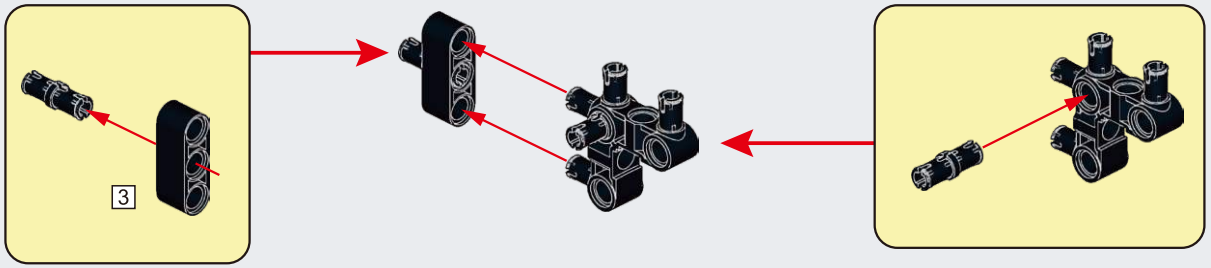

C163

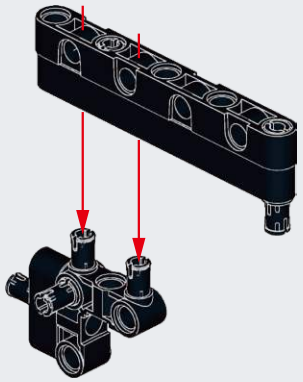

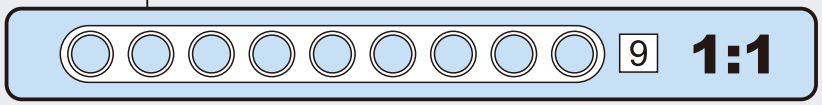

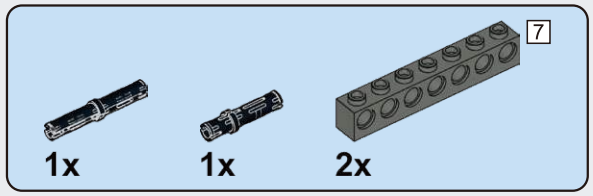

C164

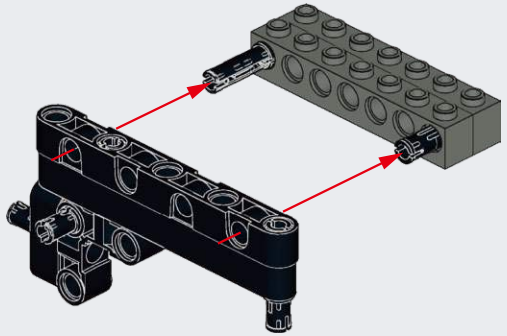

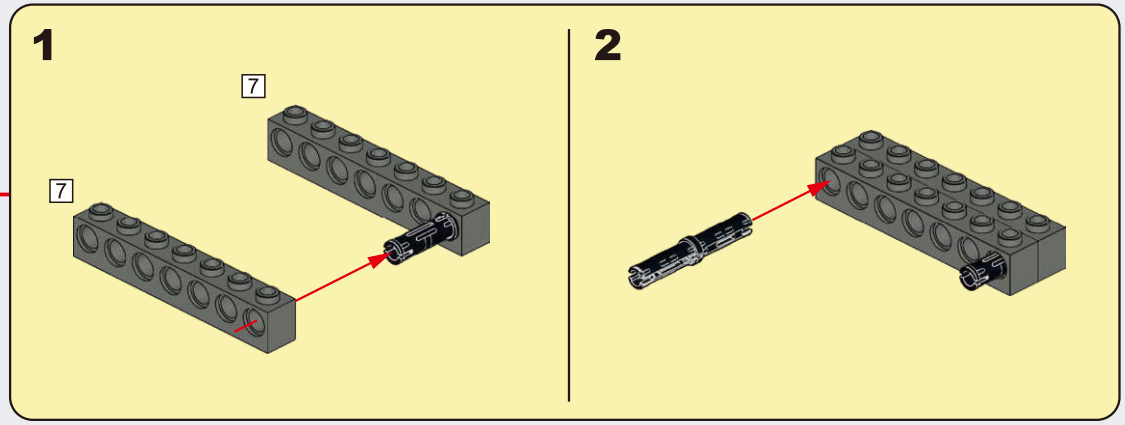

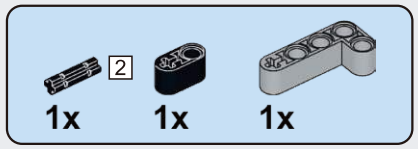

C165

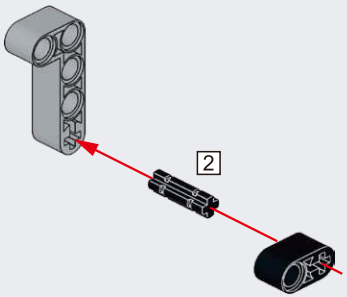

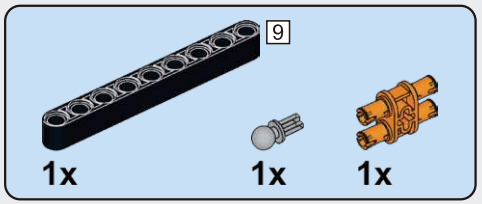

C166

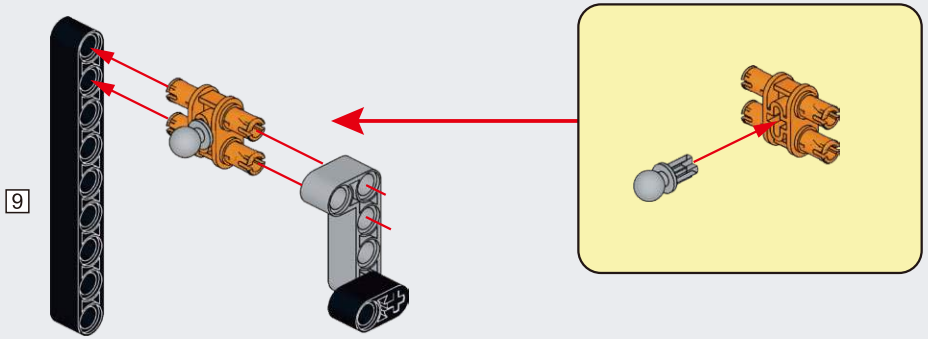

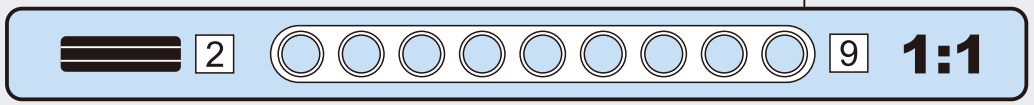

C167

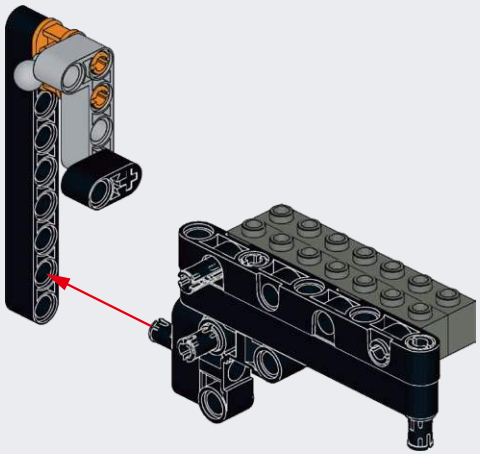

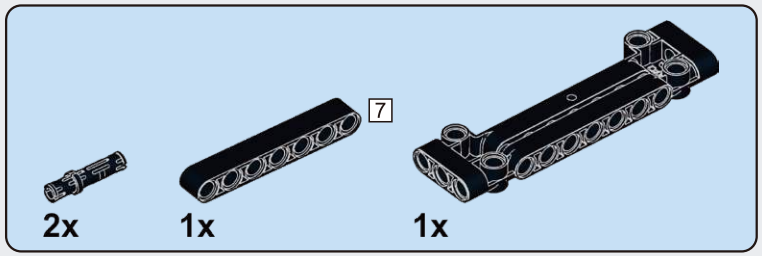

C168

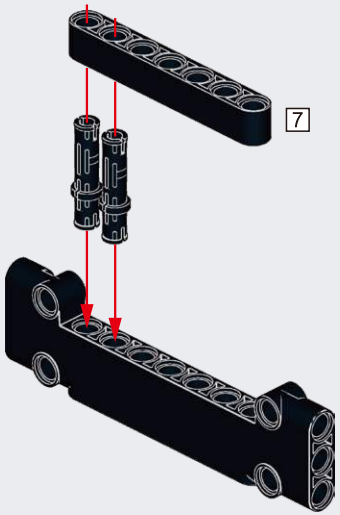

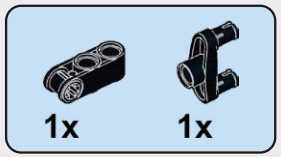

C169

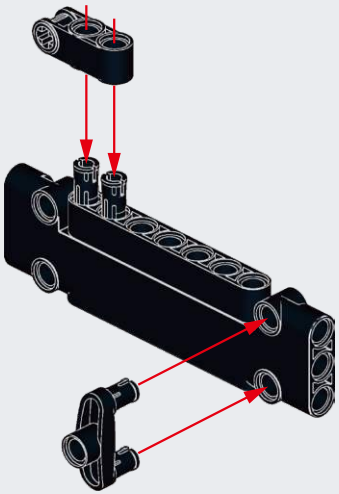

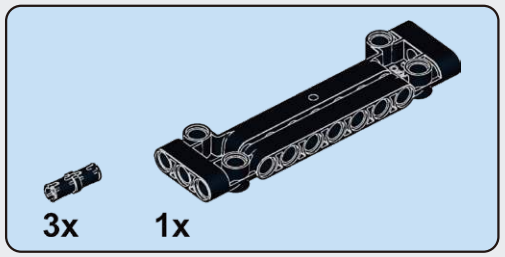

C170

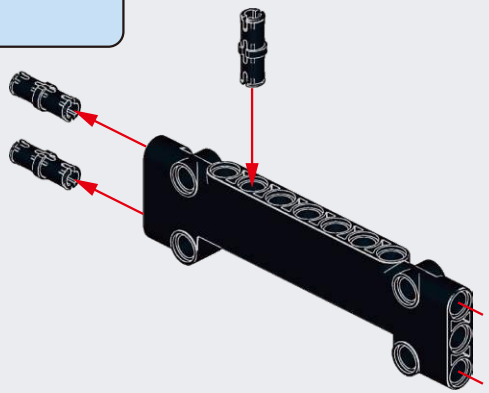

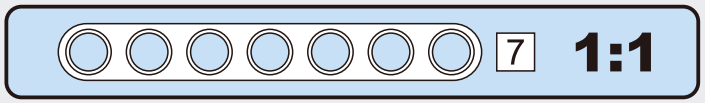

C171

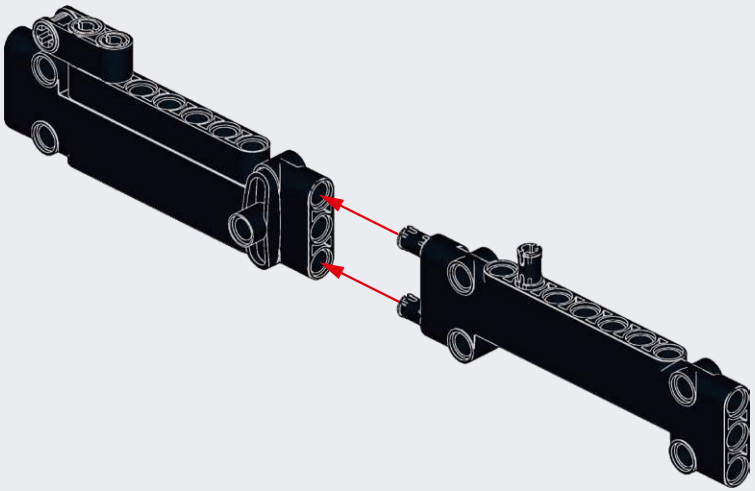

C172

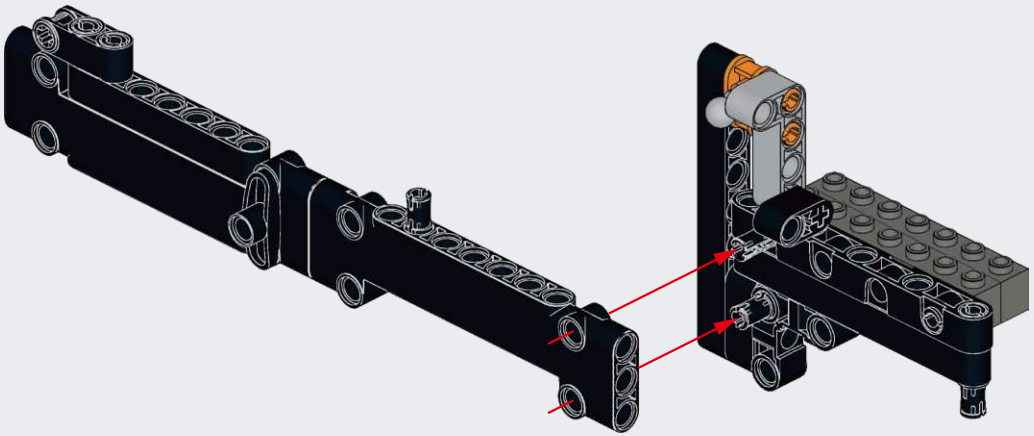

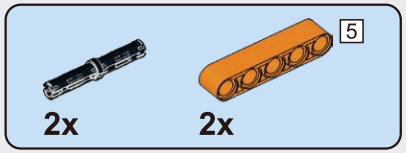

C173

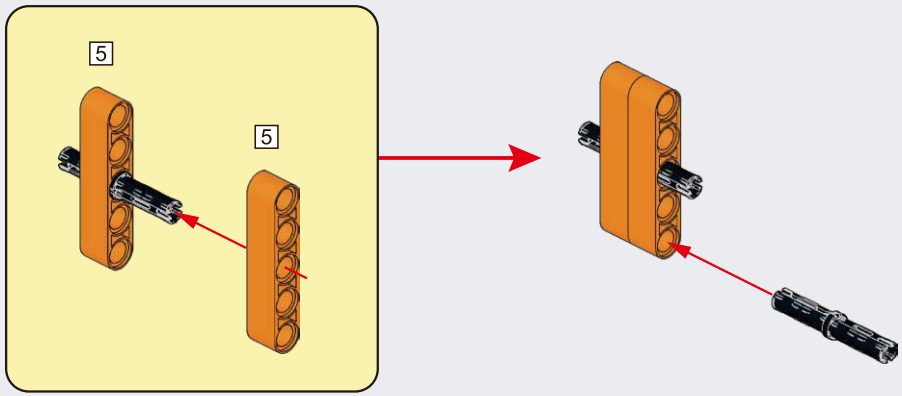

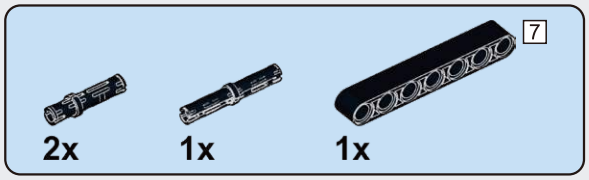

C174

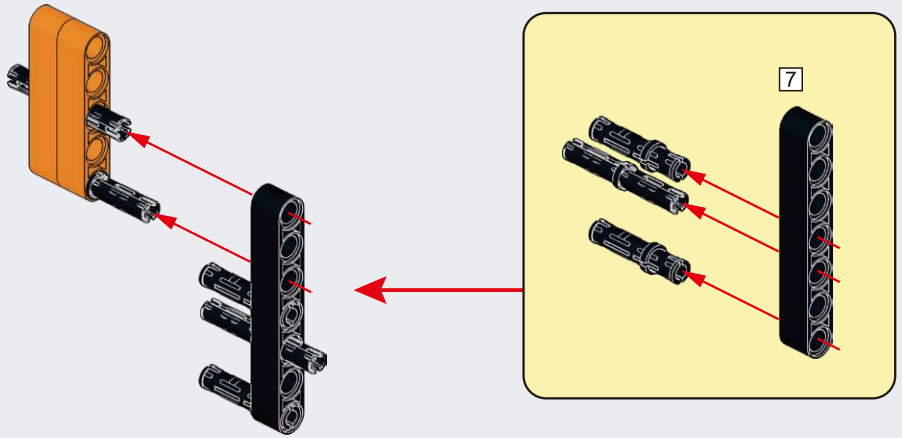

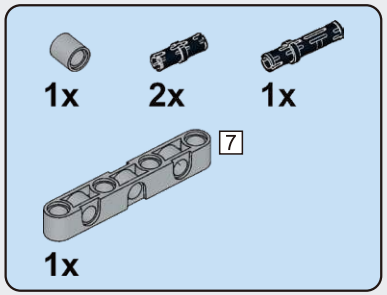

C175

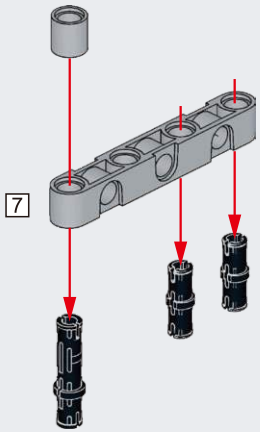

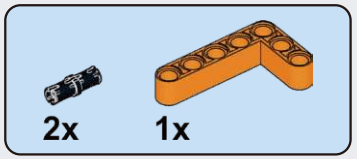

C176

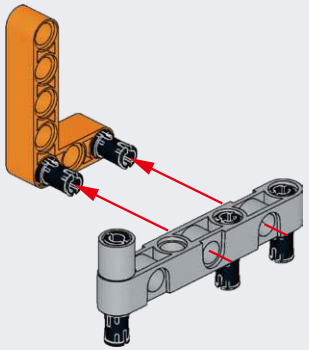

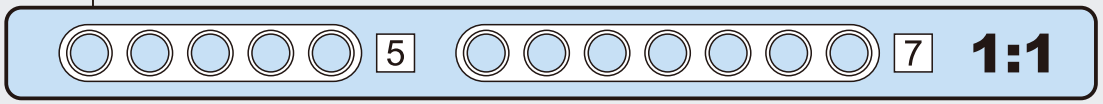

C177

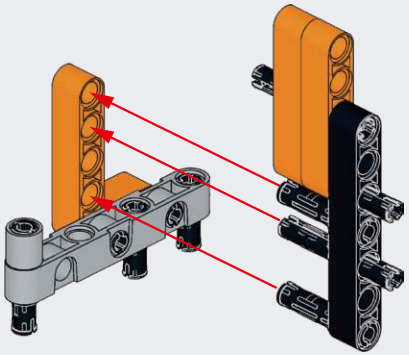

C178

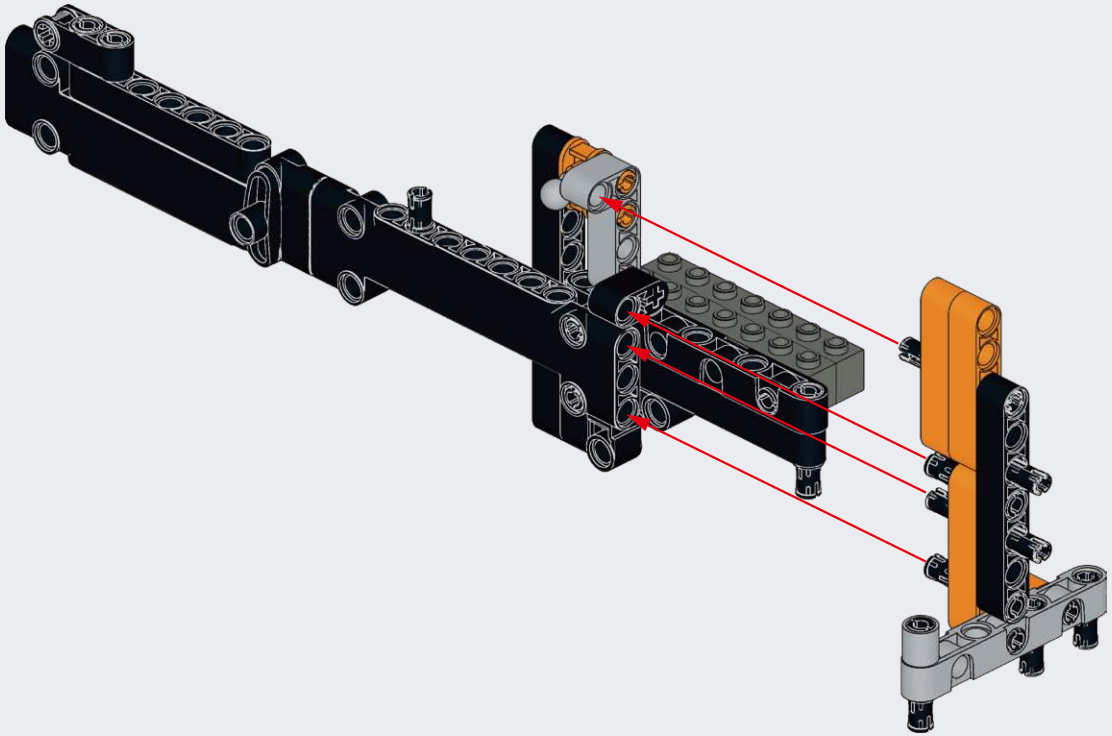

C179

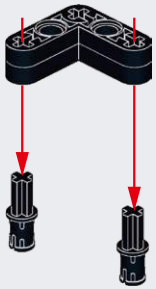

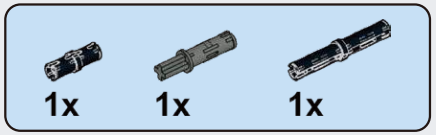

C180

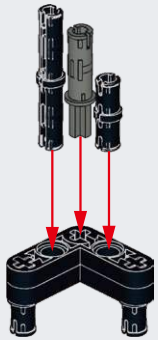

C181

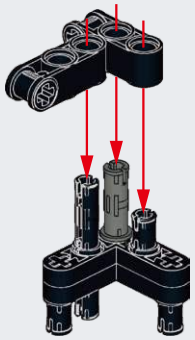

C182

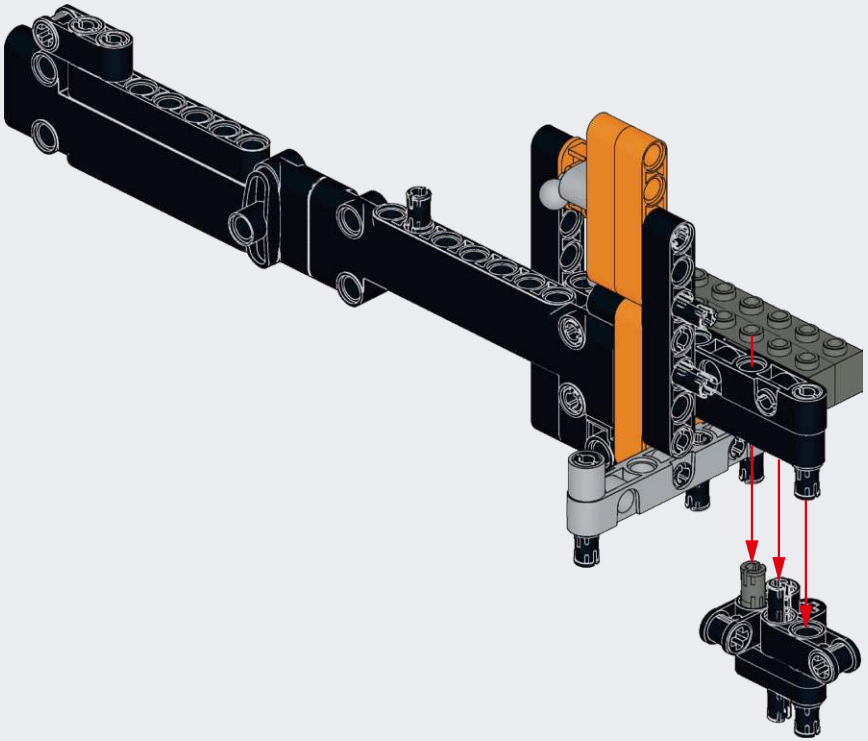

C183

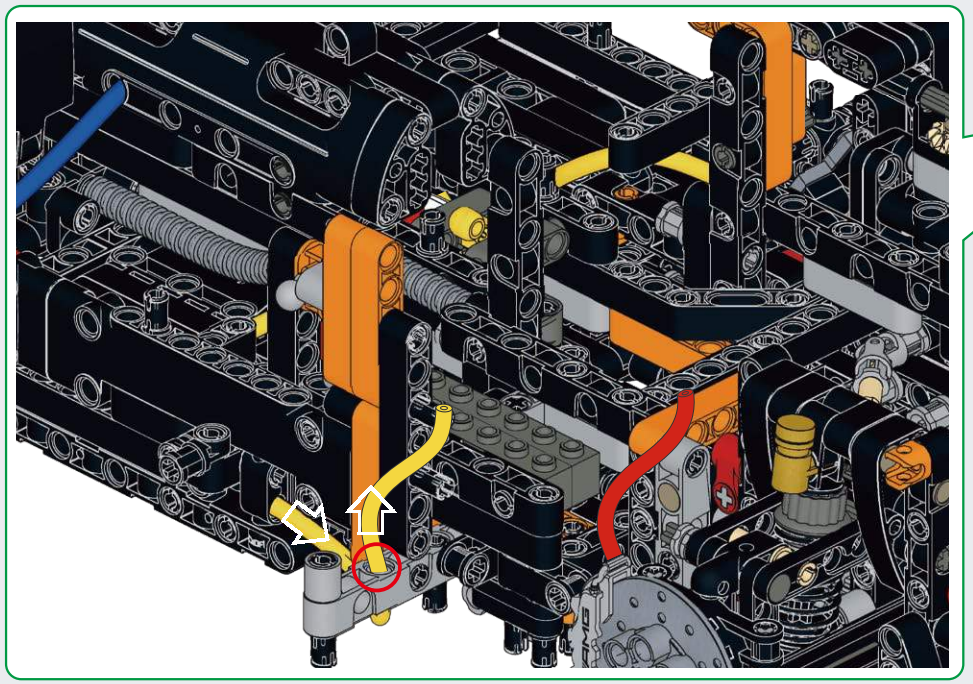

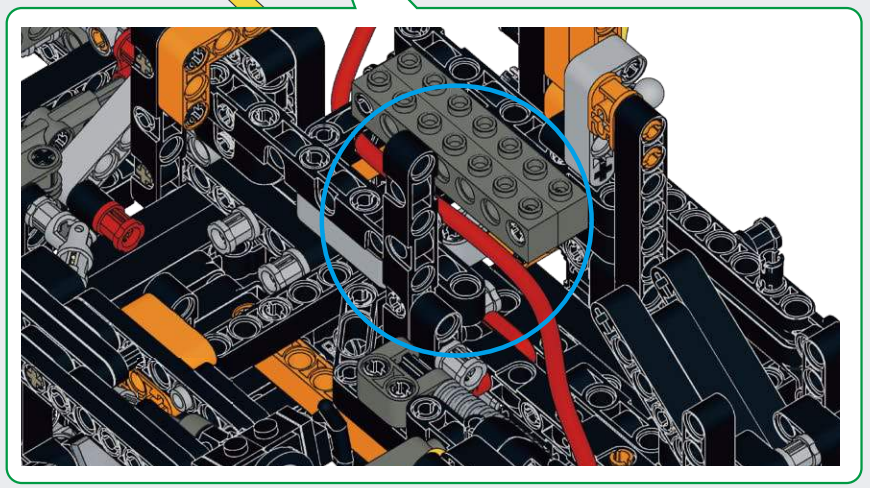

C184

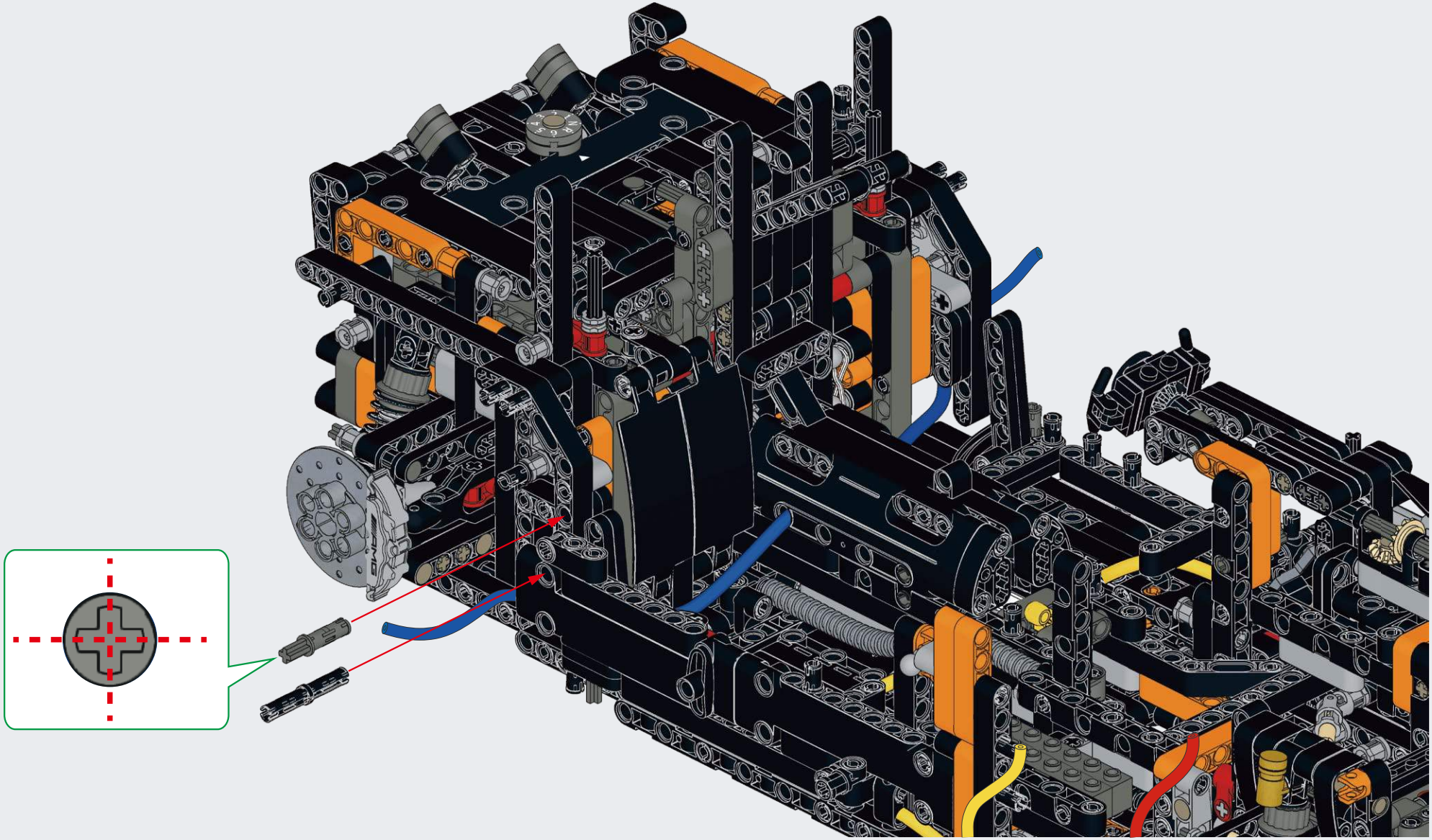

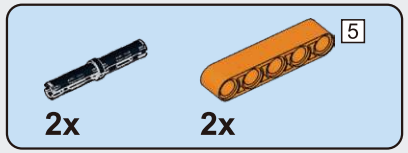

C185

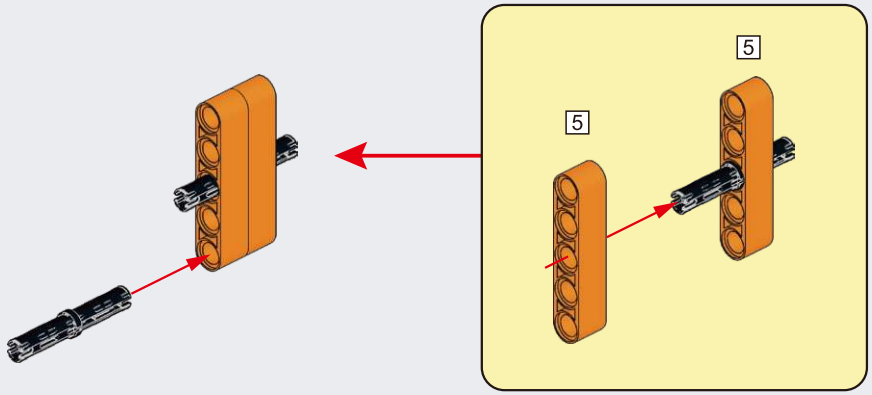

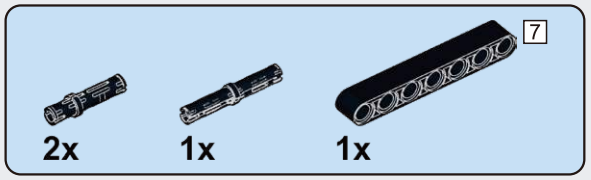

C186

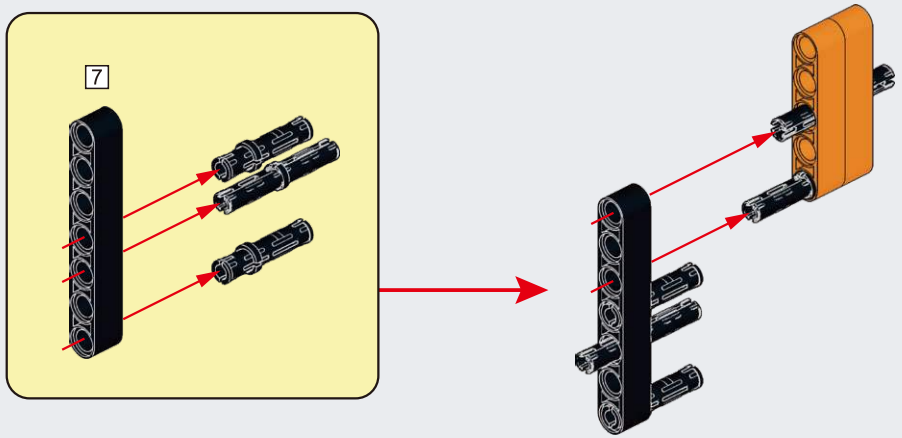

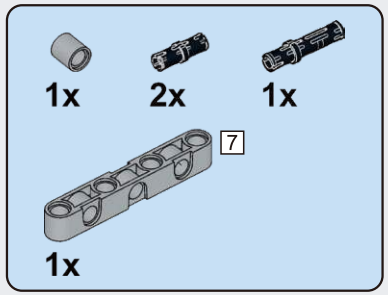

C187

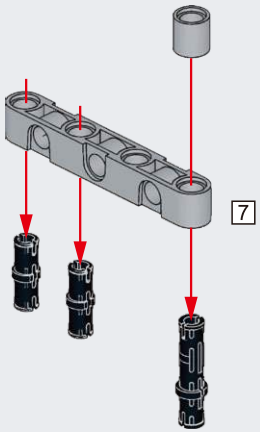

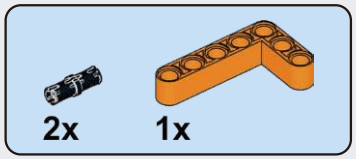

C188

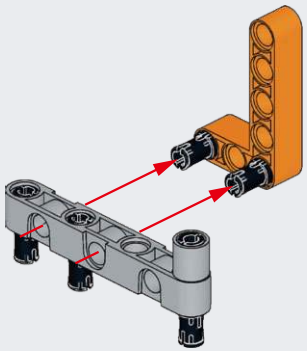

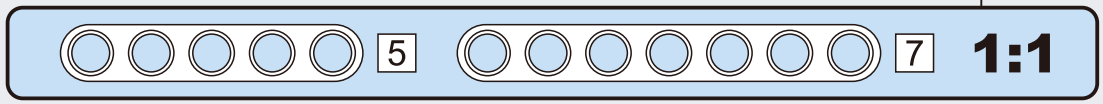

C189

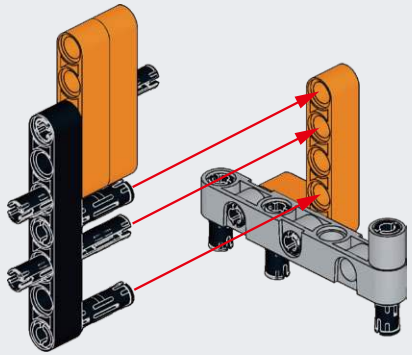

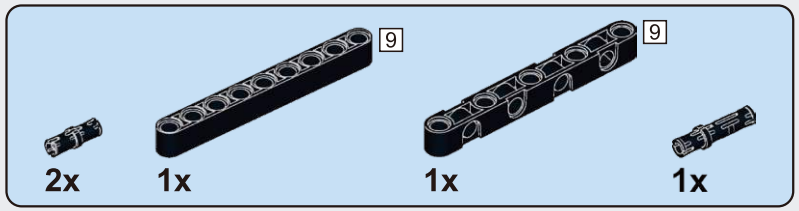

C190

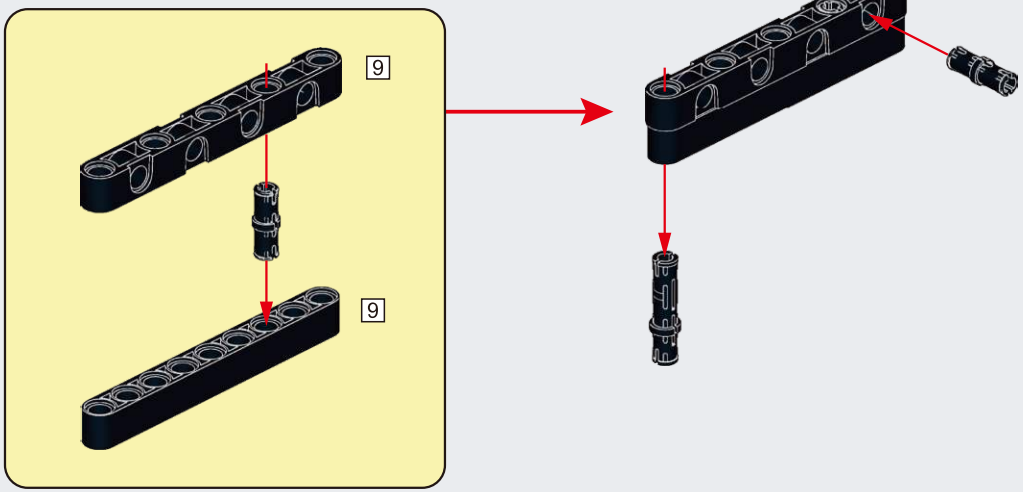

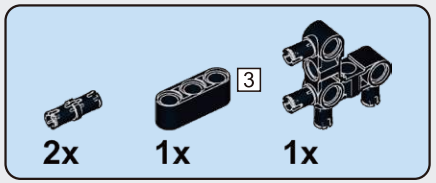

C191

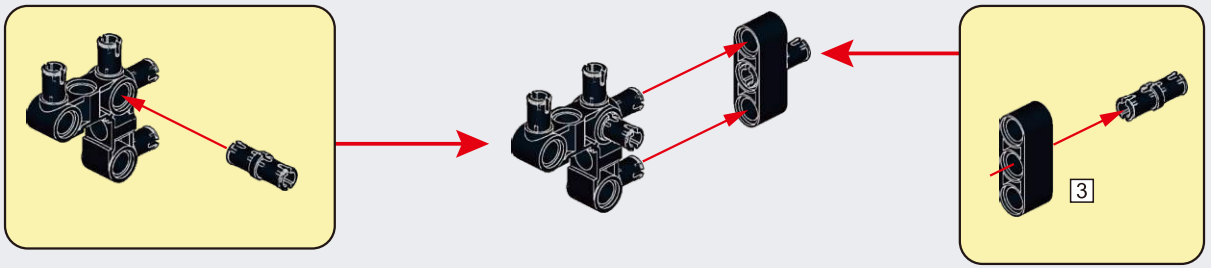

C192

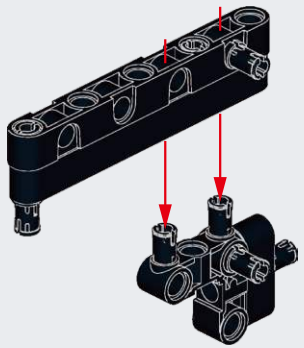

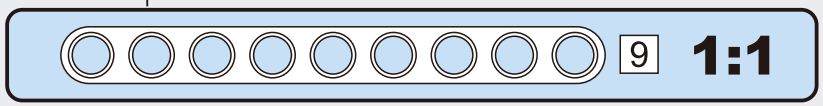

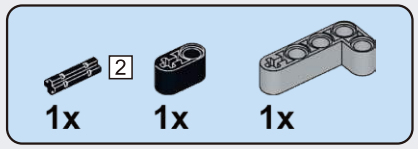

C193

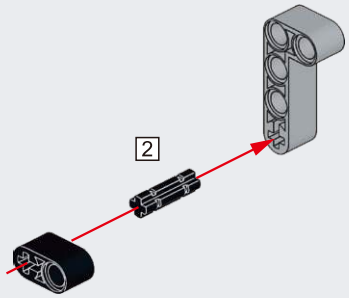

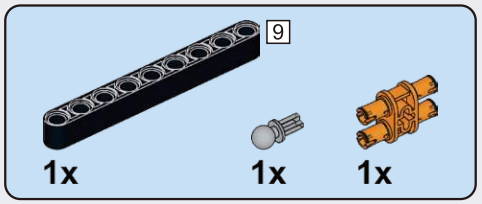

C194

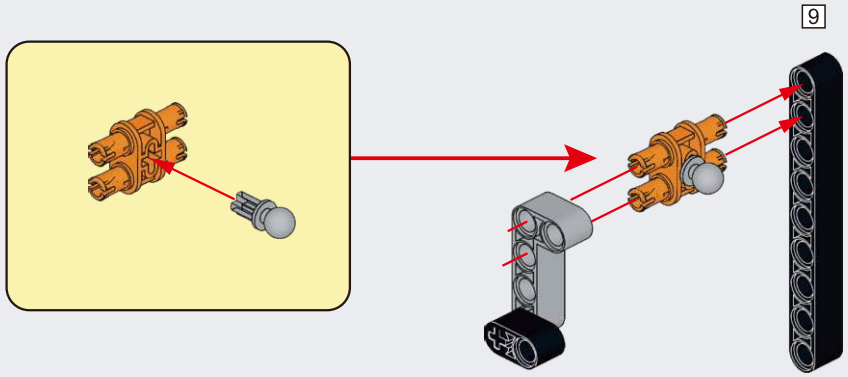

C195

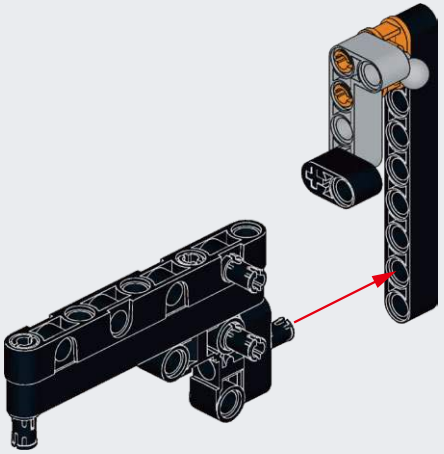

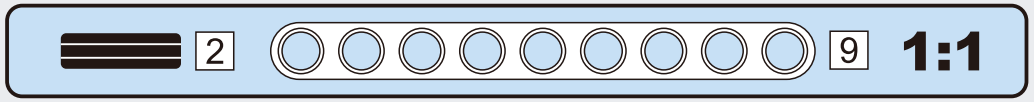

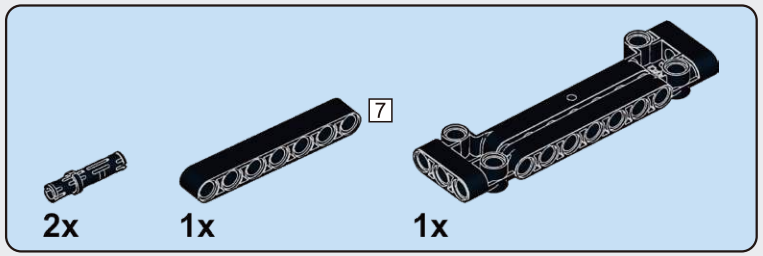

C196

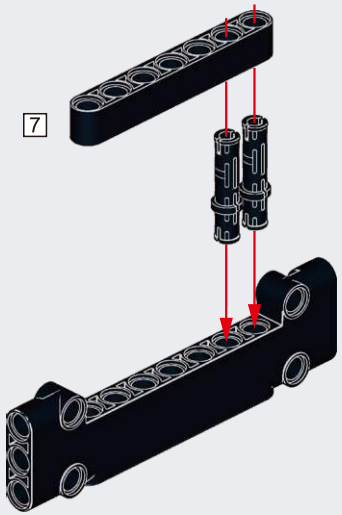

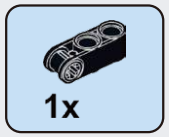

C197

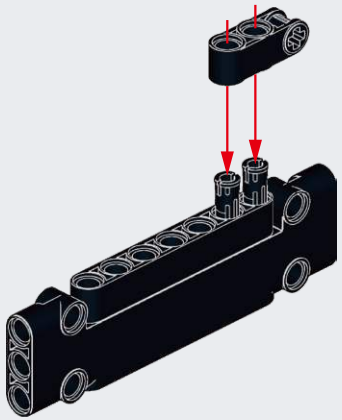

C198

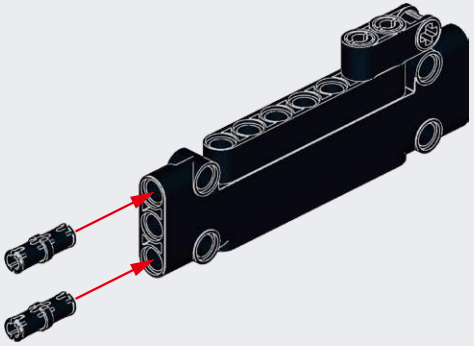

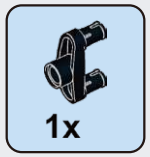

C199

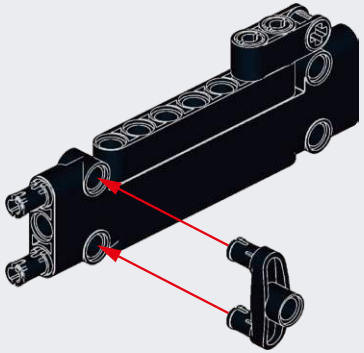

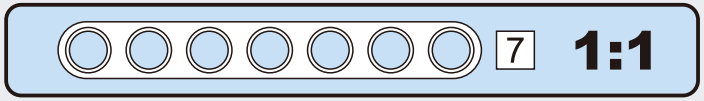

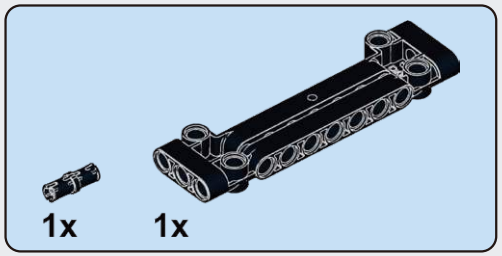

C200

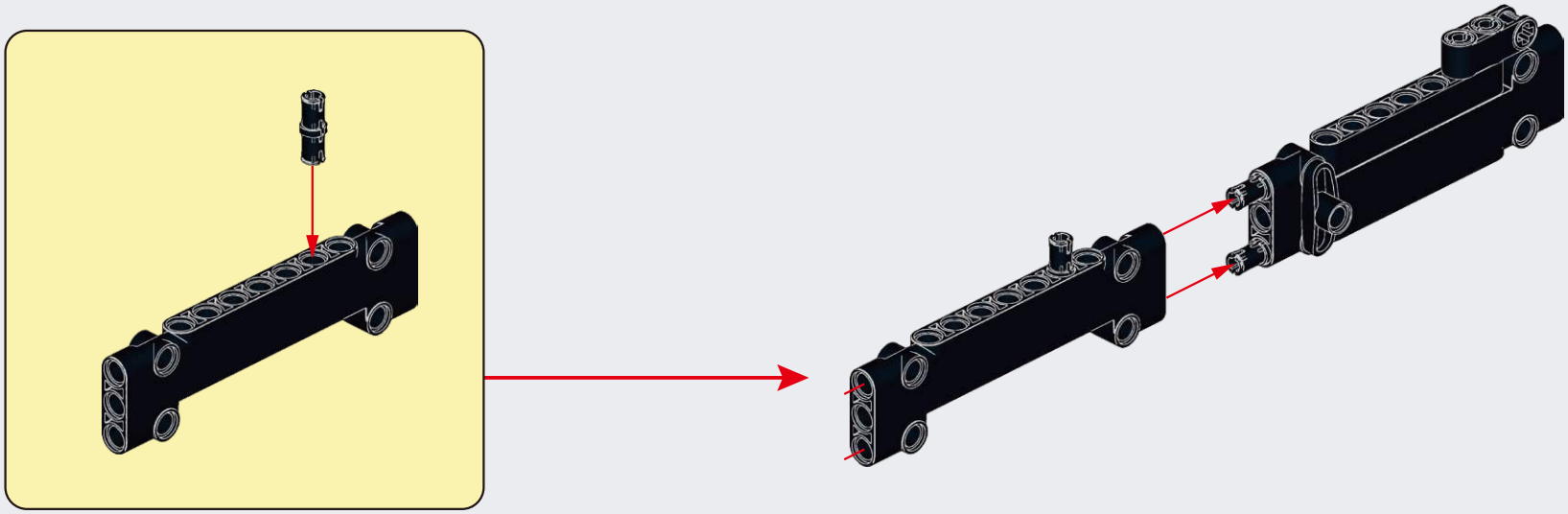

C201

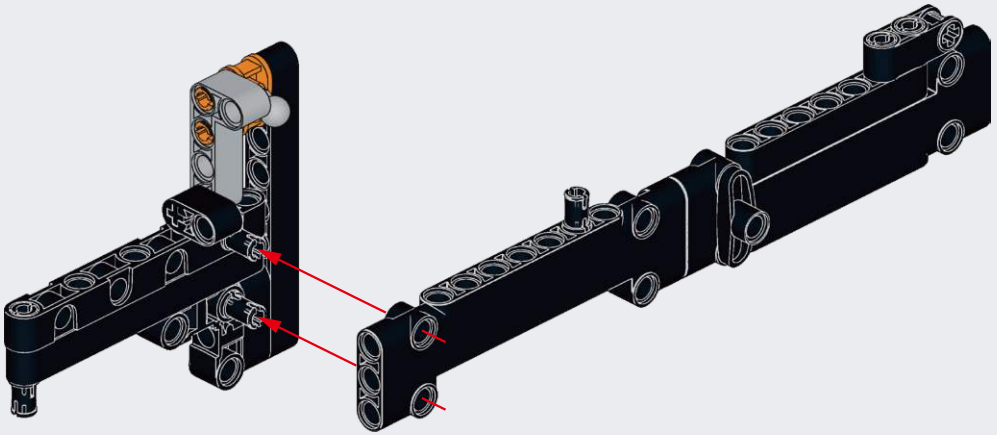

C202

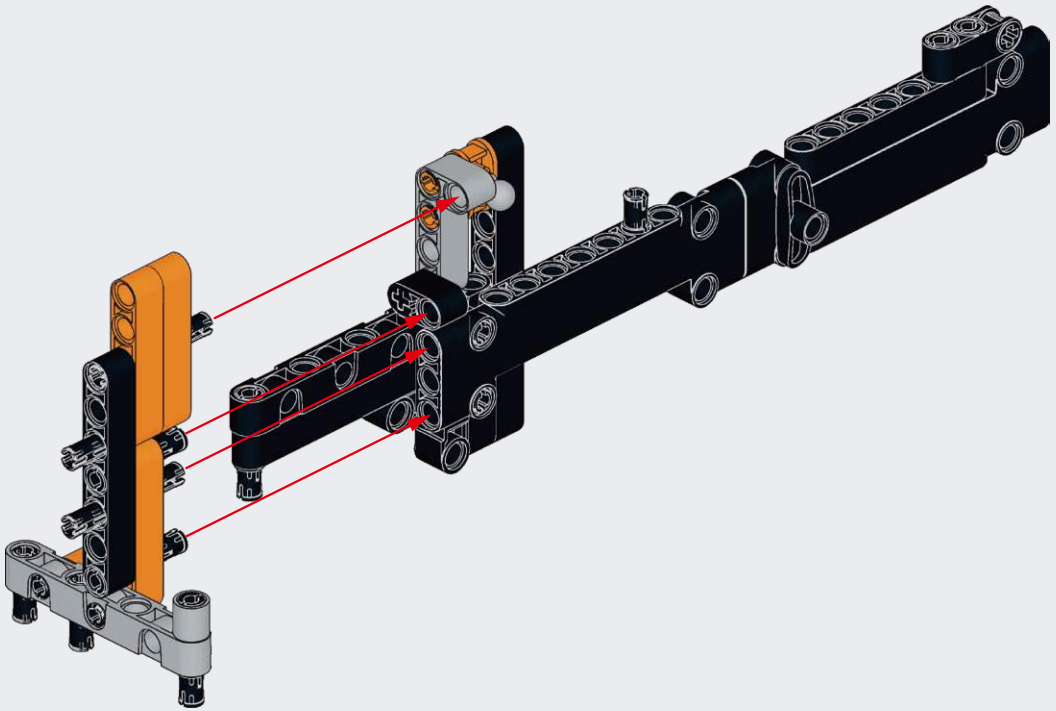

C203

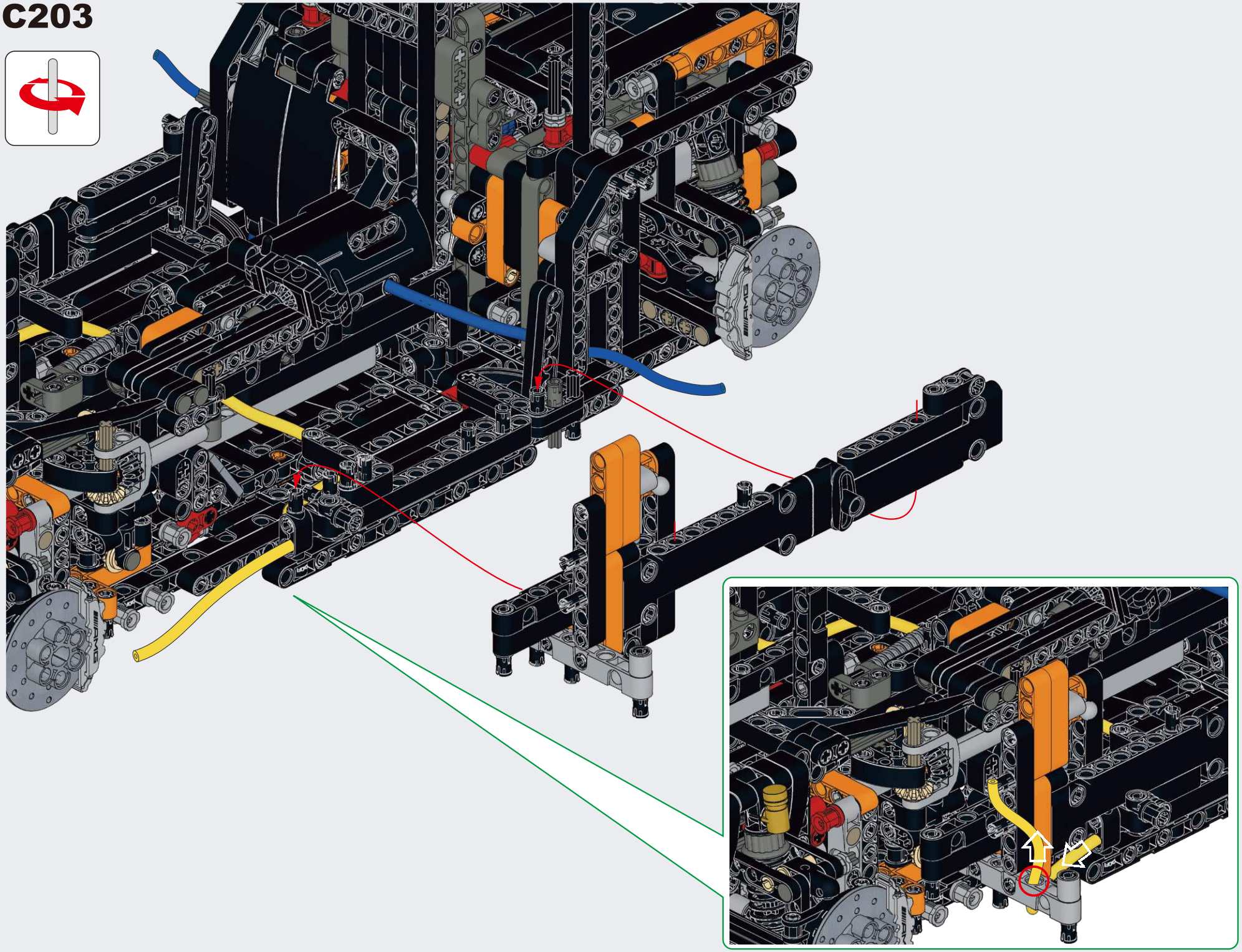

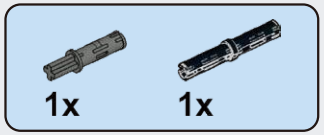

C204

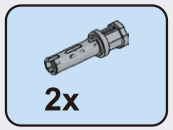

C205

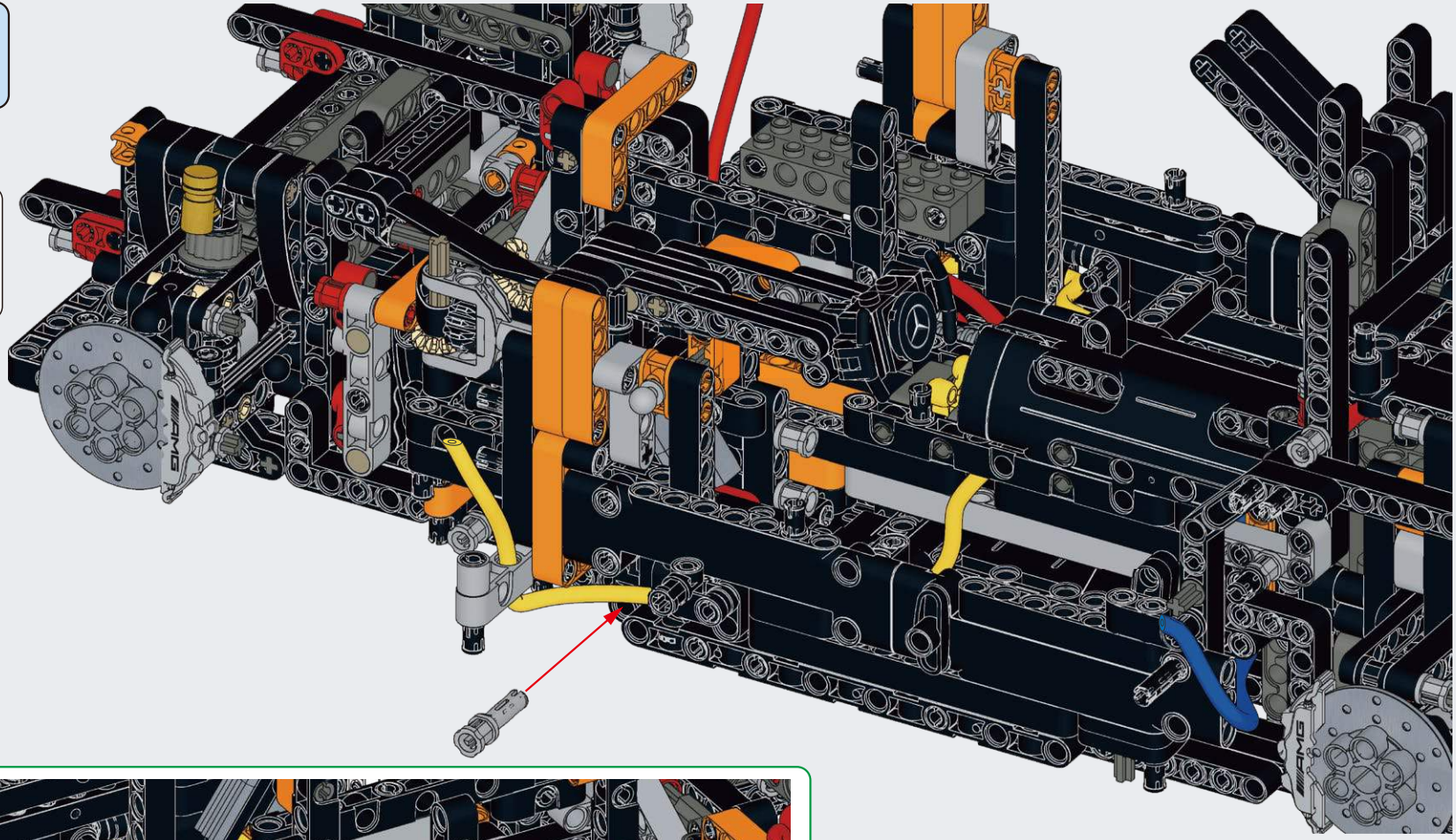

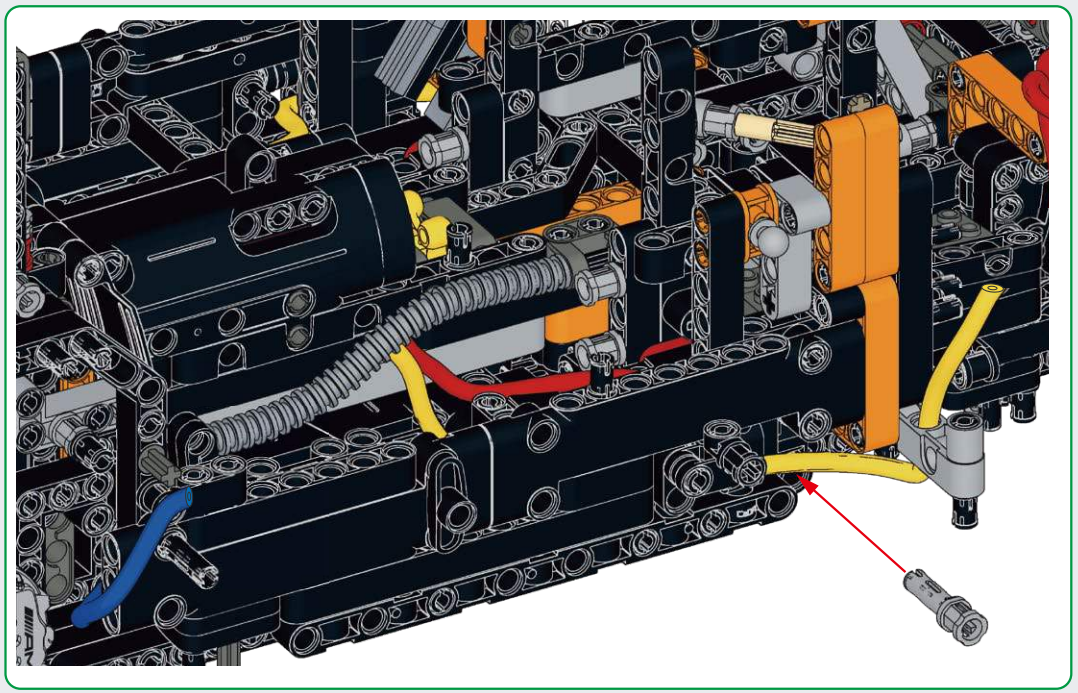

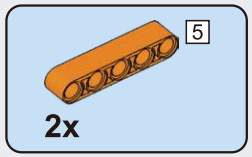

C206

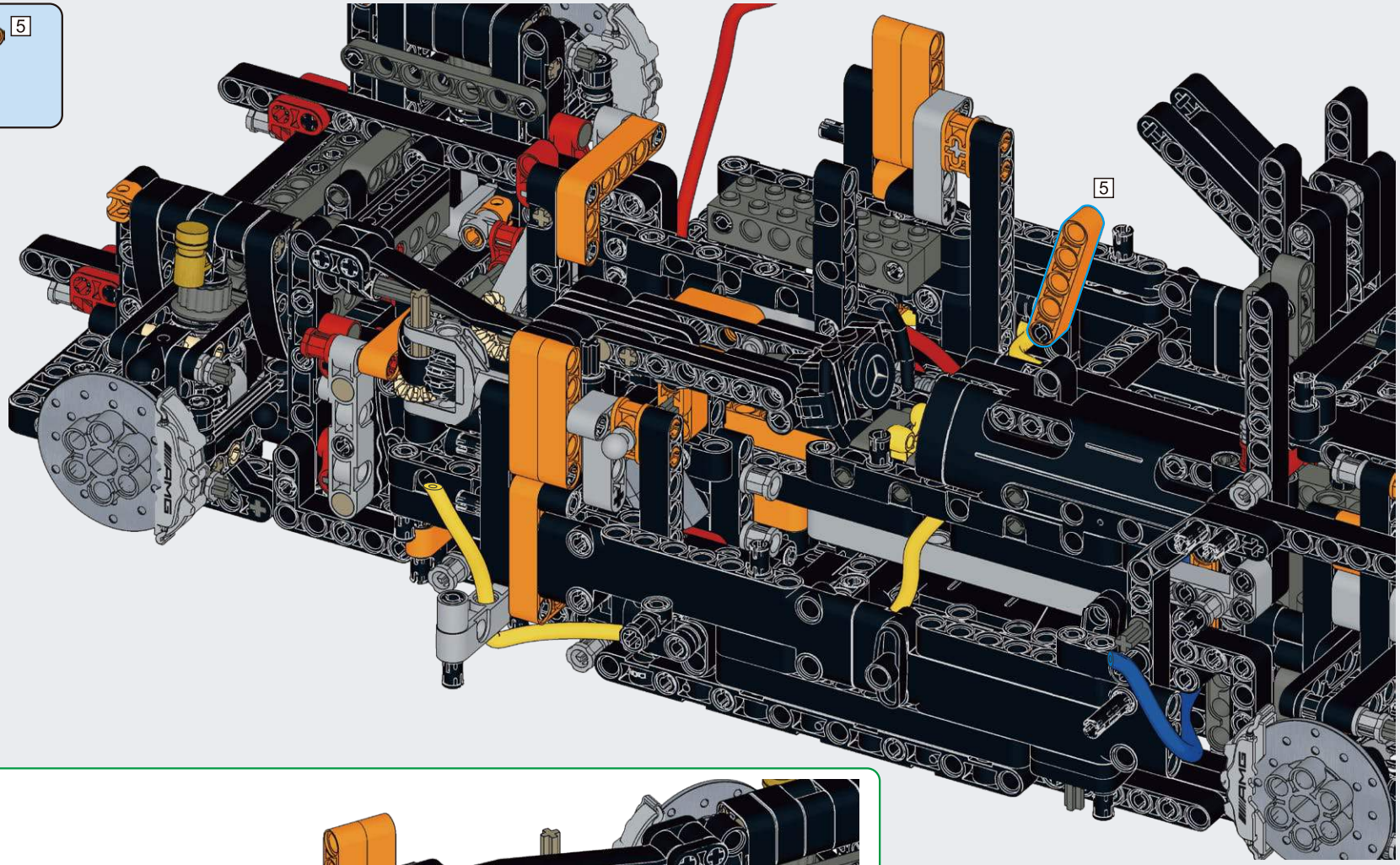

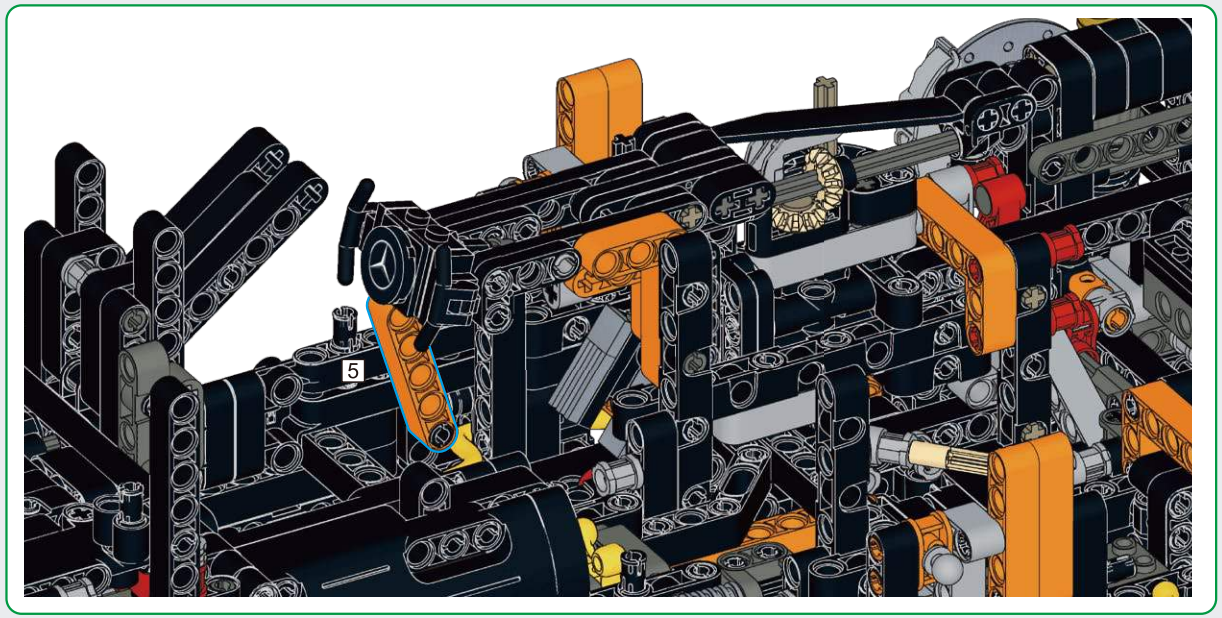

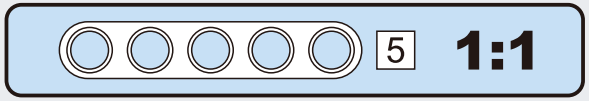

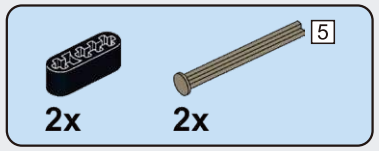

C207

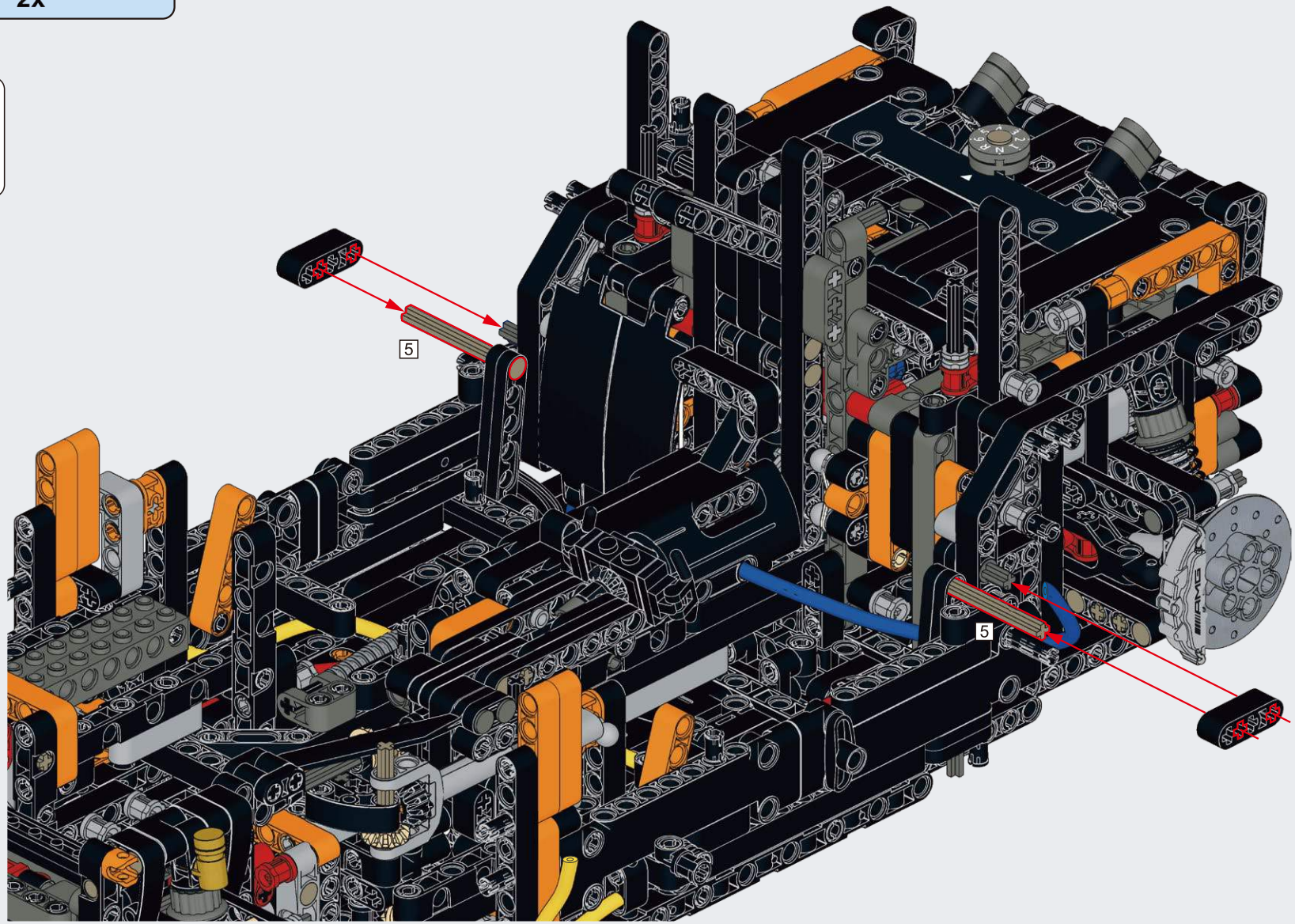

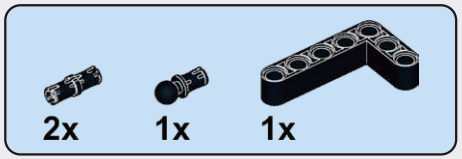

C208

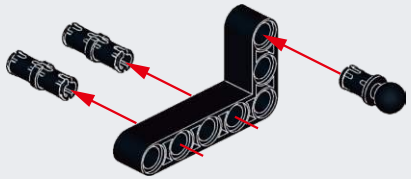

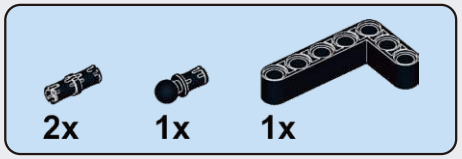

C209

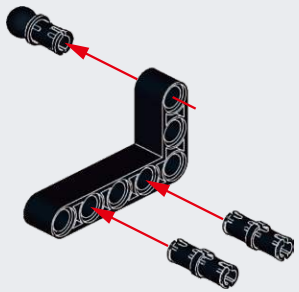

C210

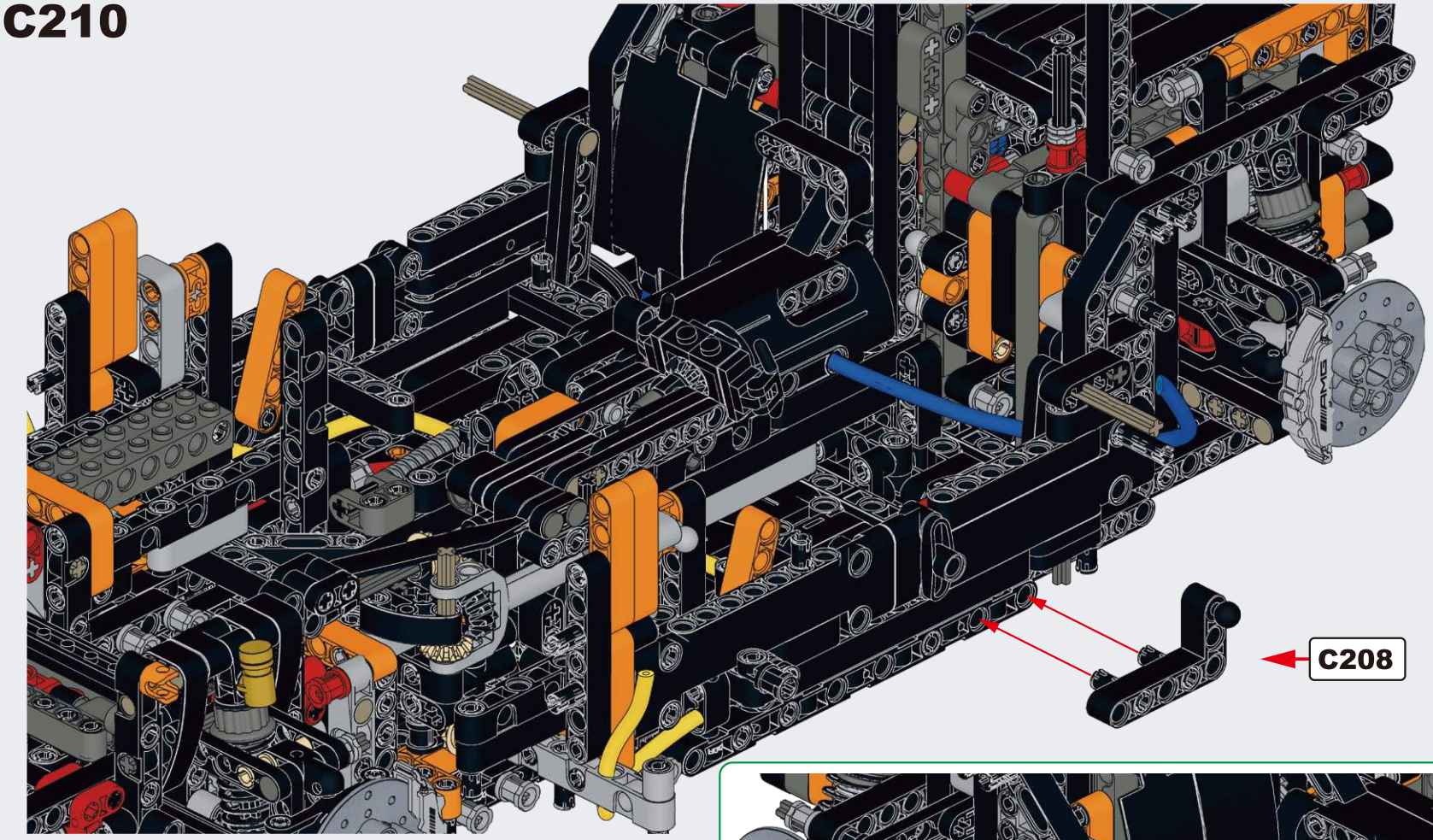

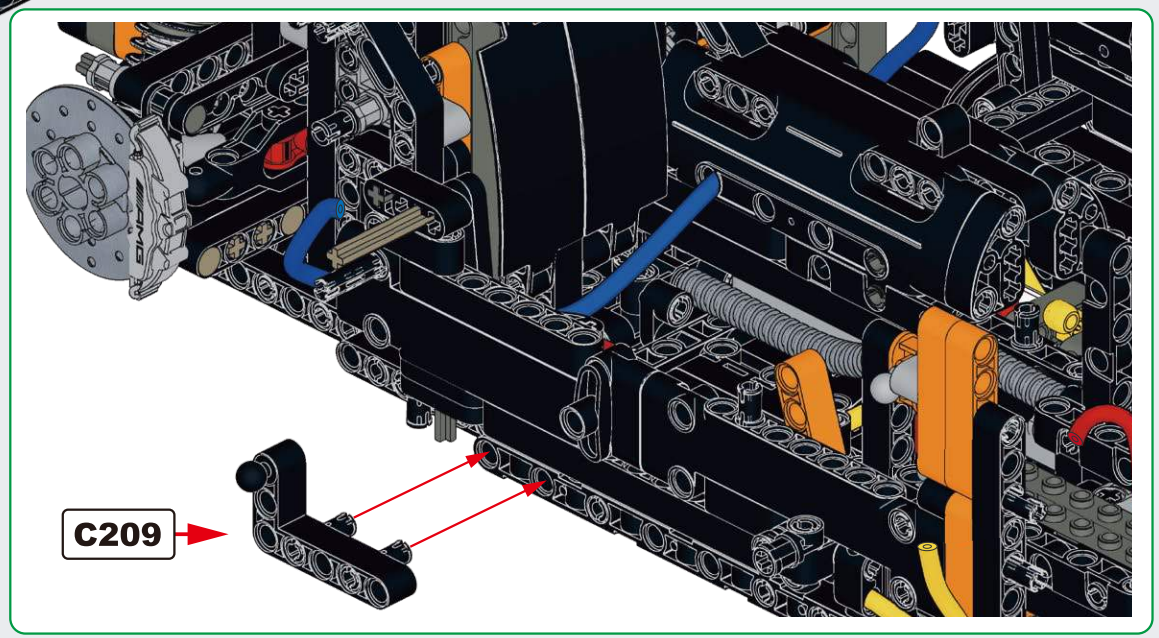

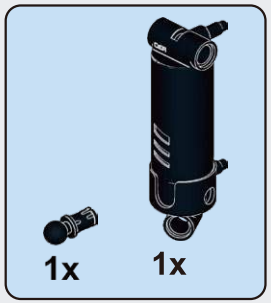

C211

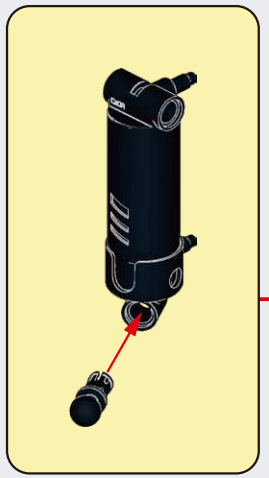

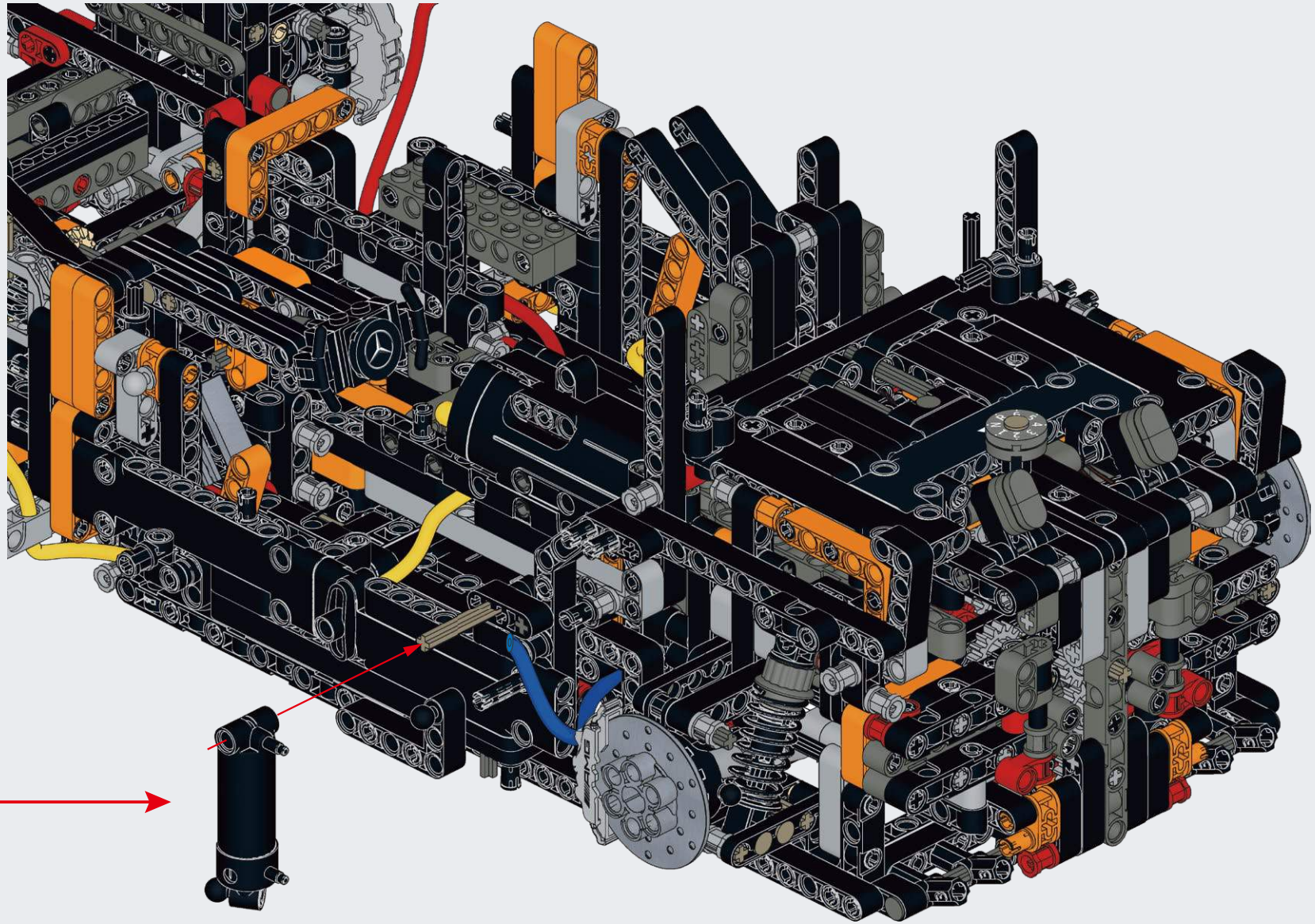

C212

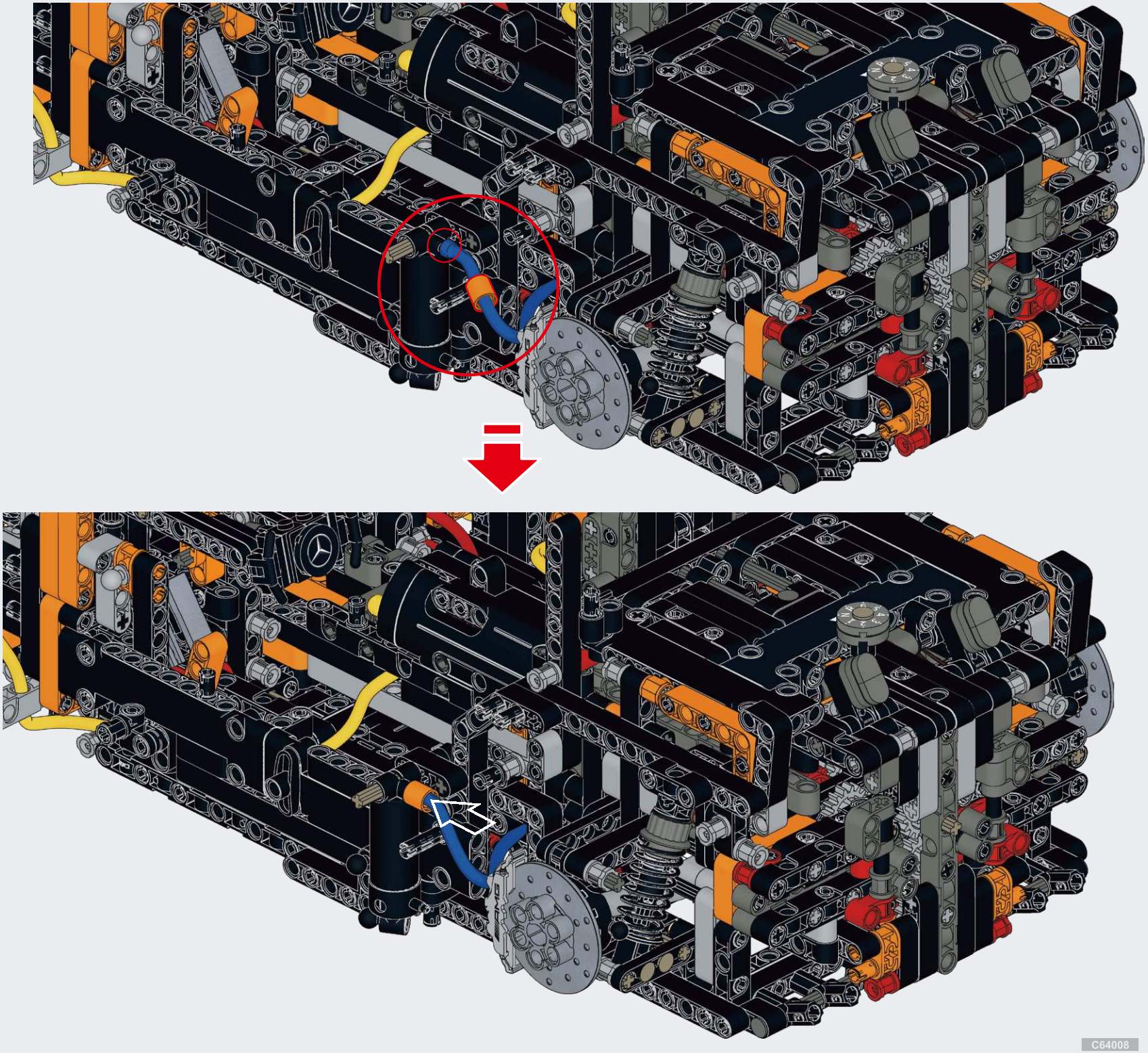

C213

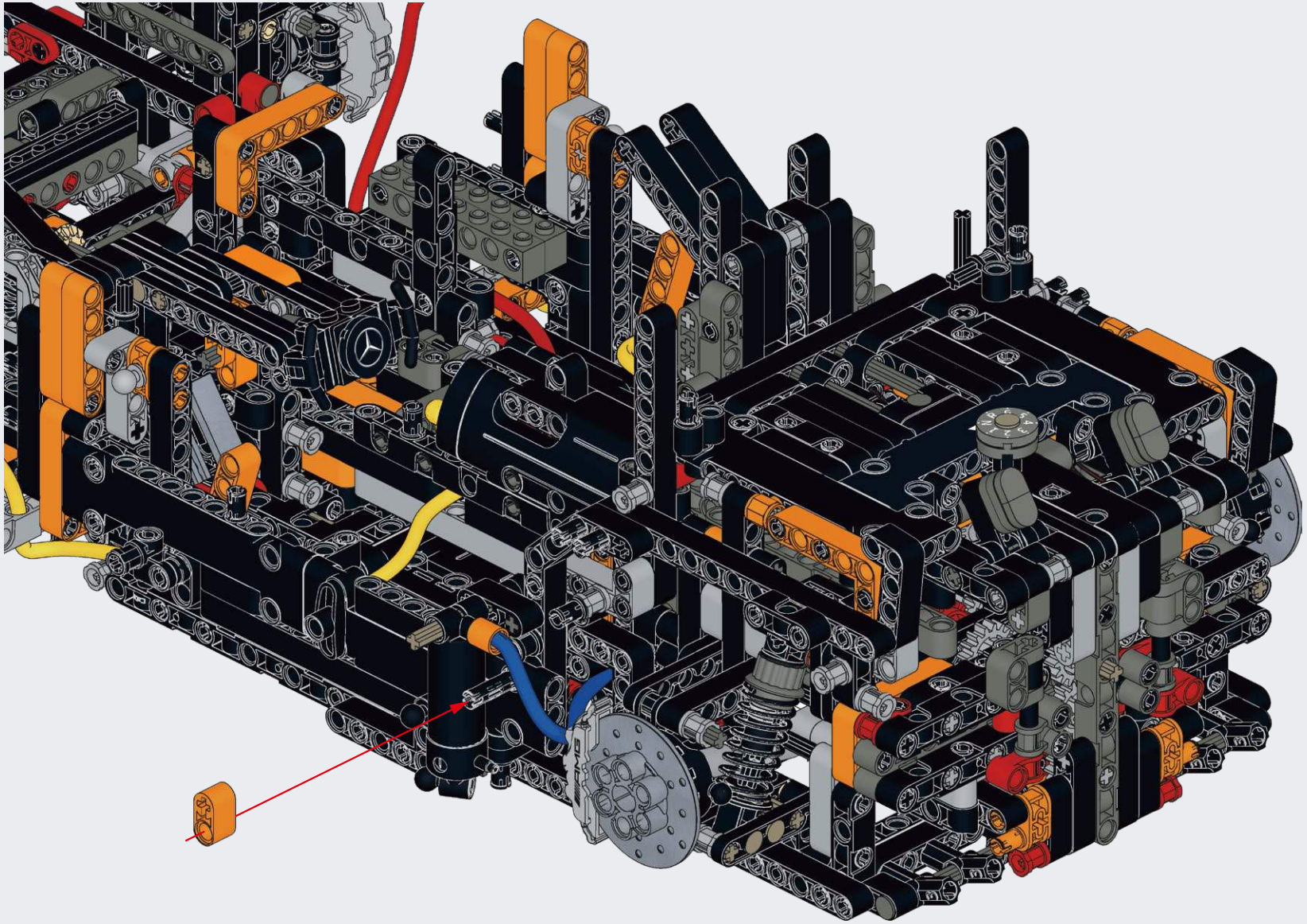

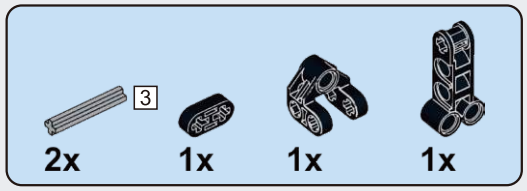

C214

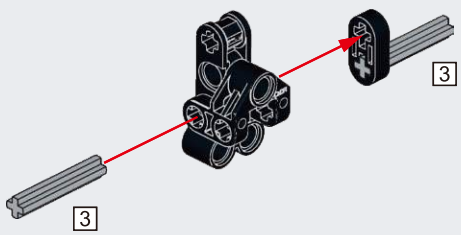

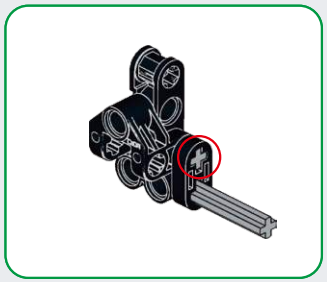

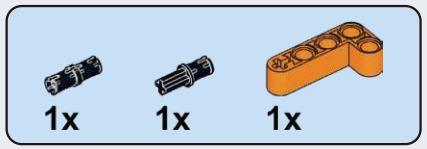

C215

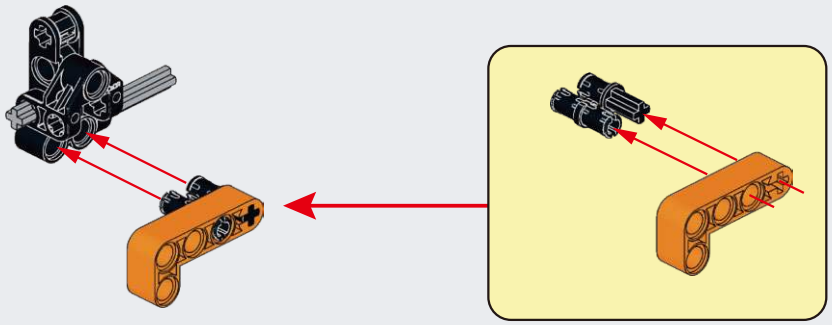

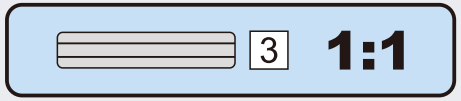

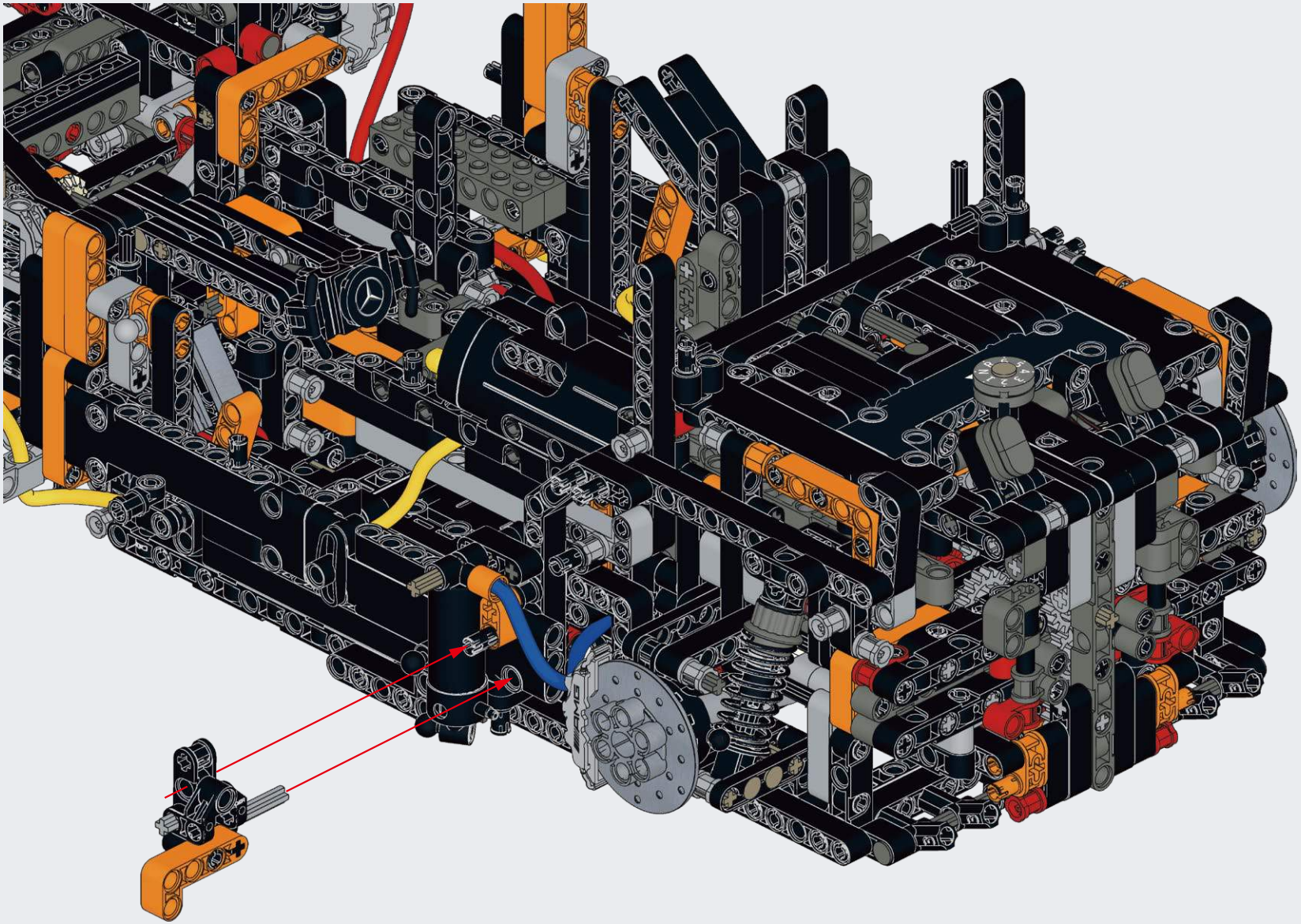

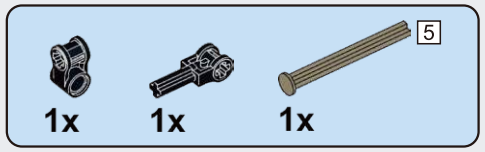

C217

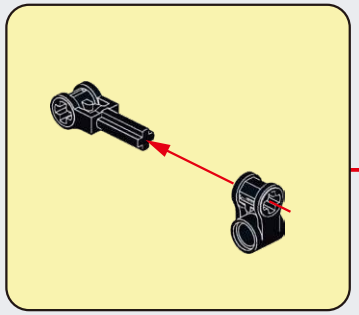

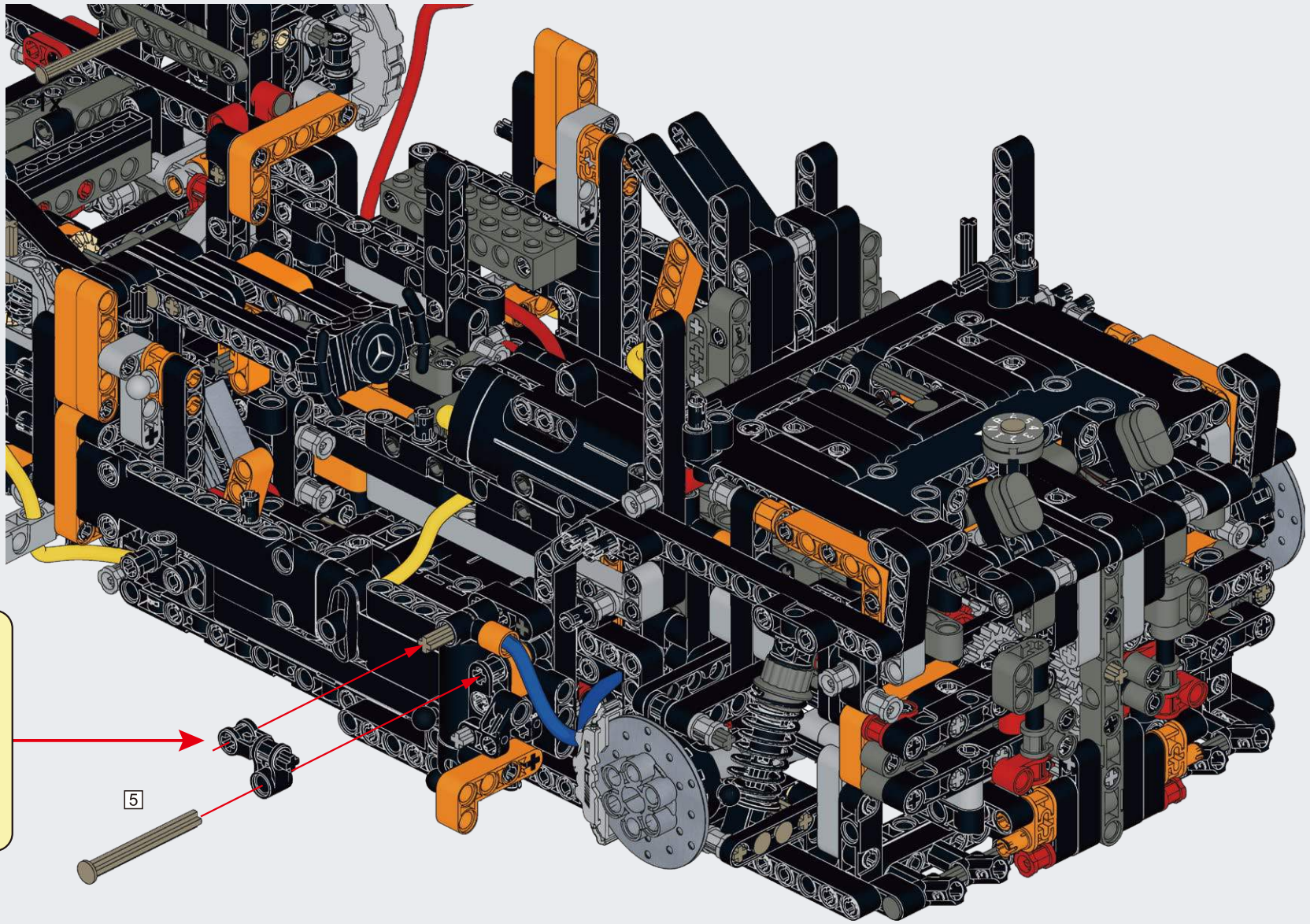

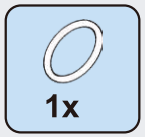

C218

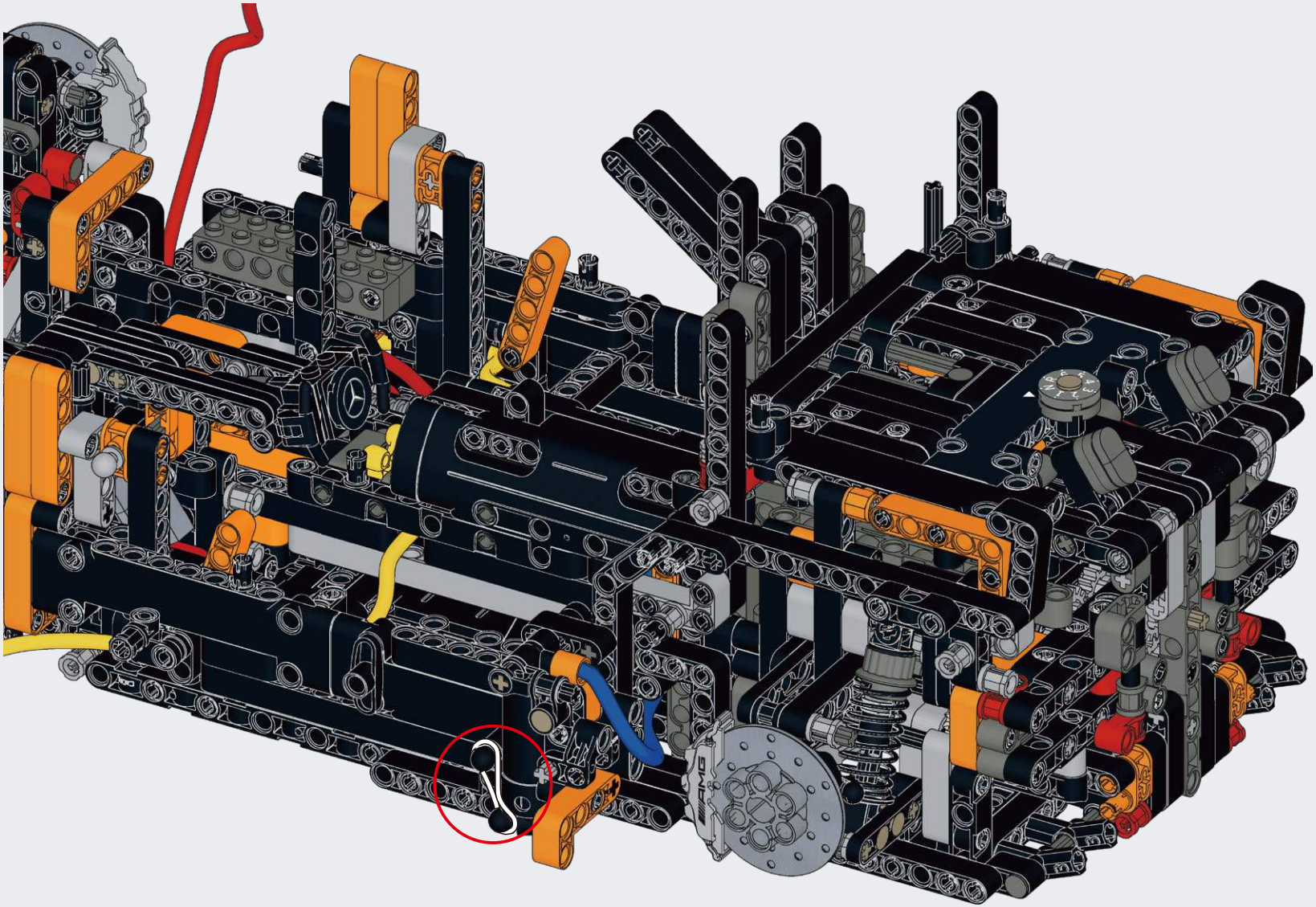

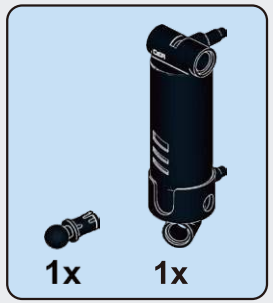

C219

C220

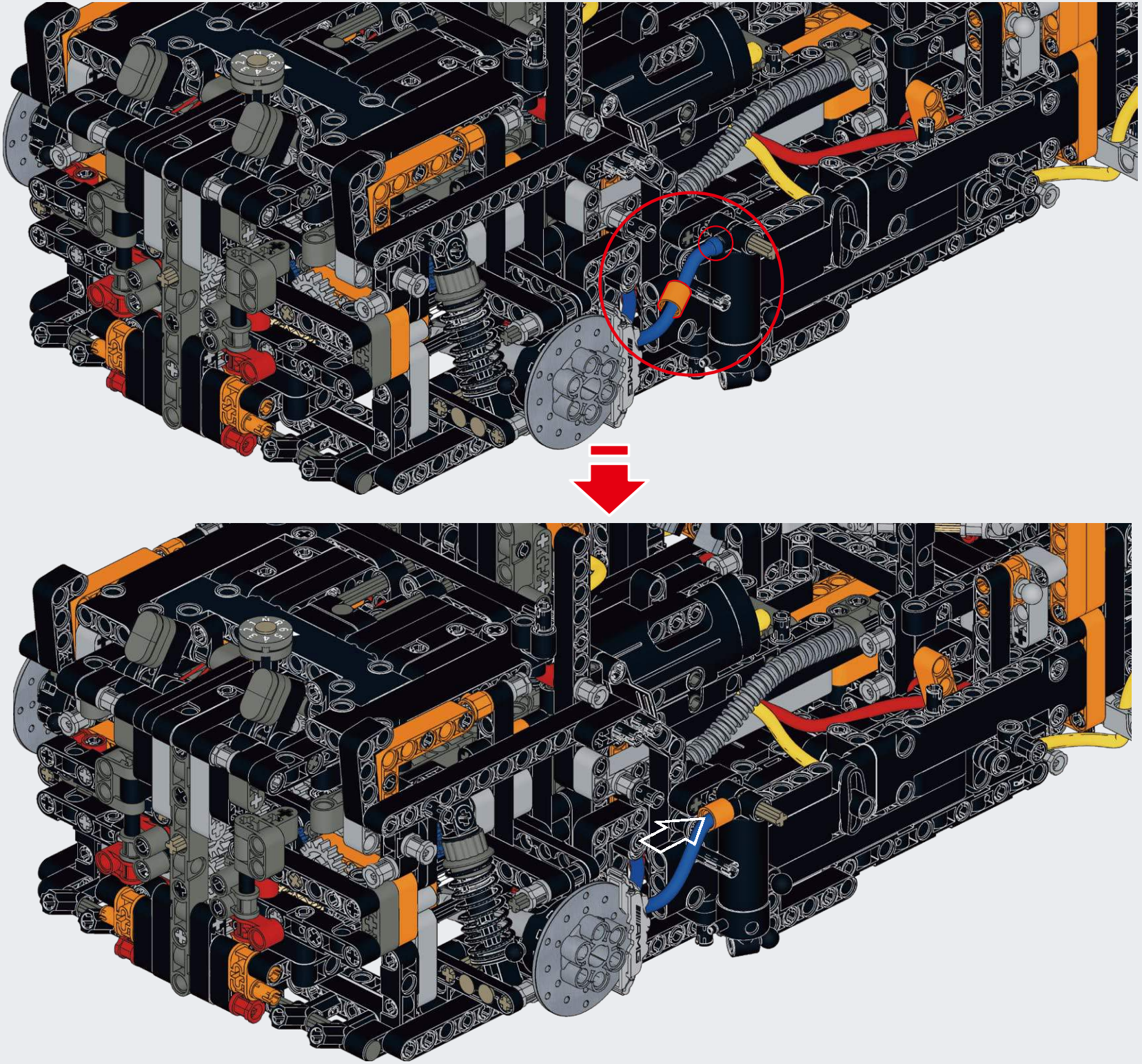

C221

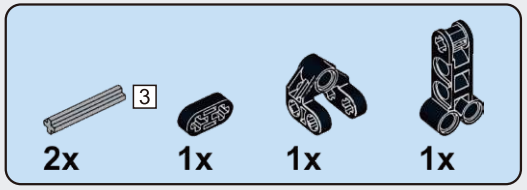

C222

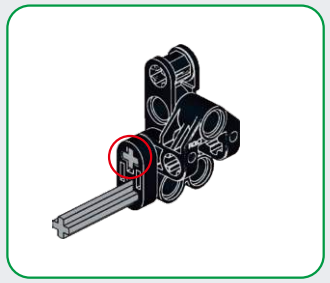

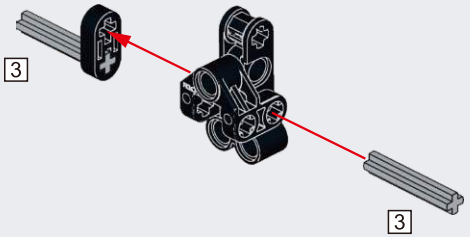

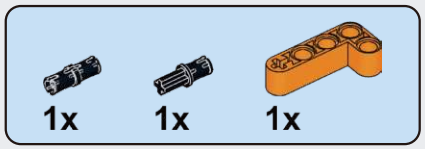

C223

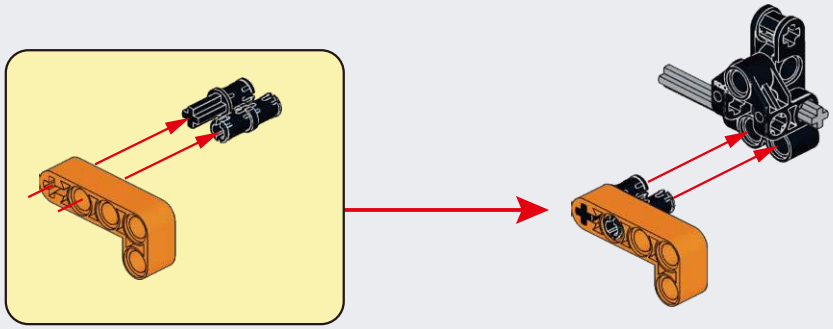

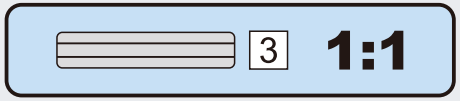

C224

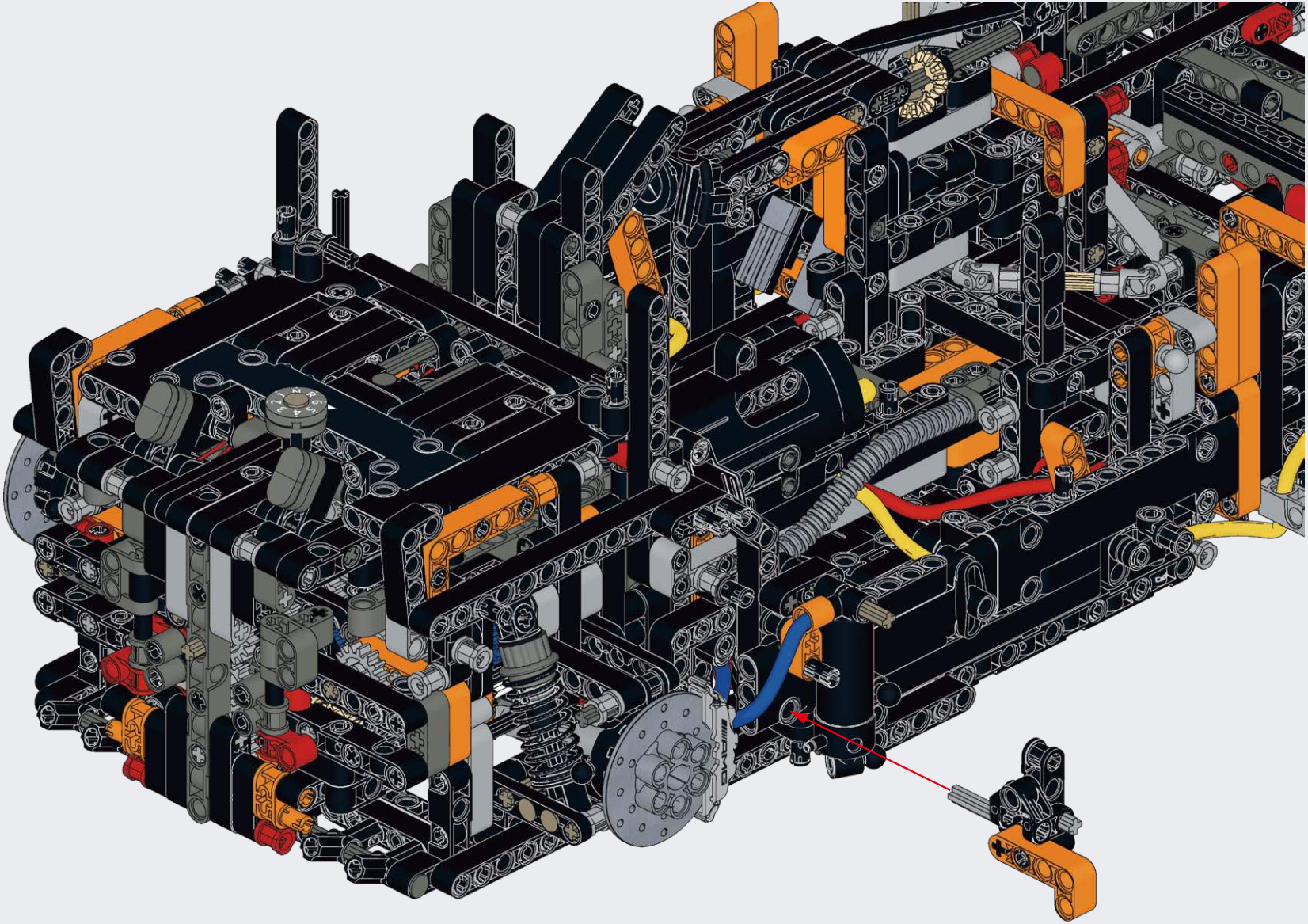

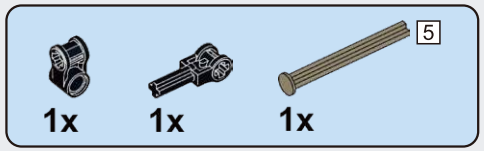

C225

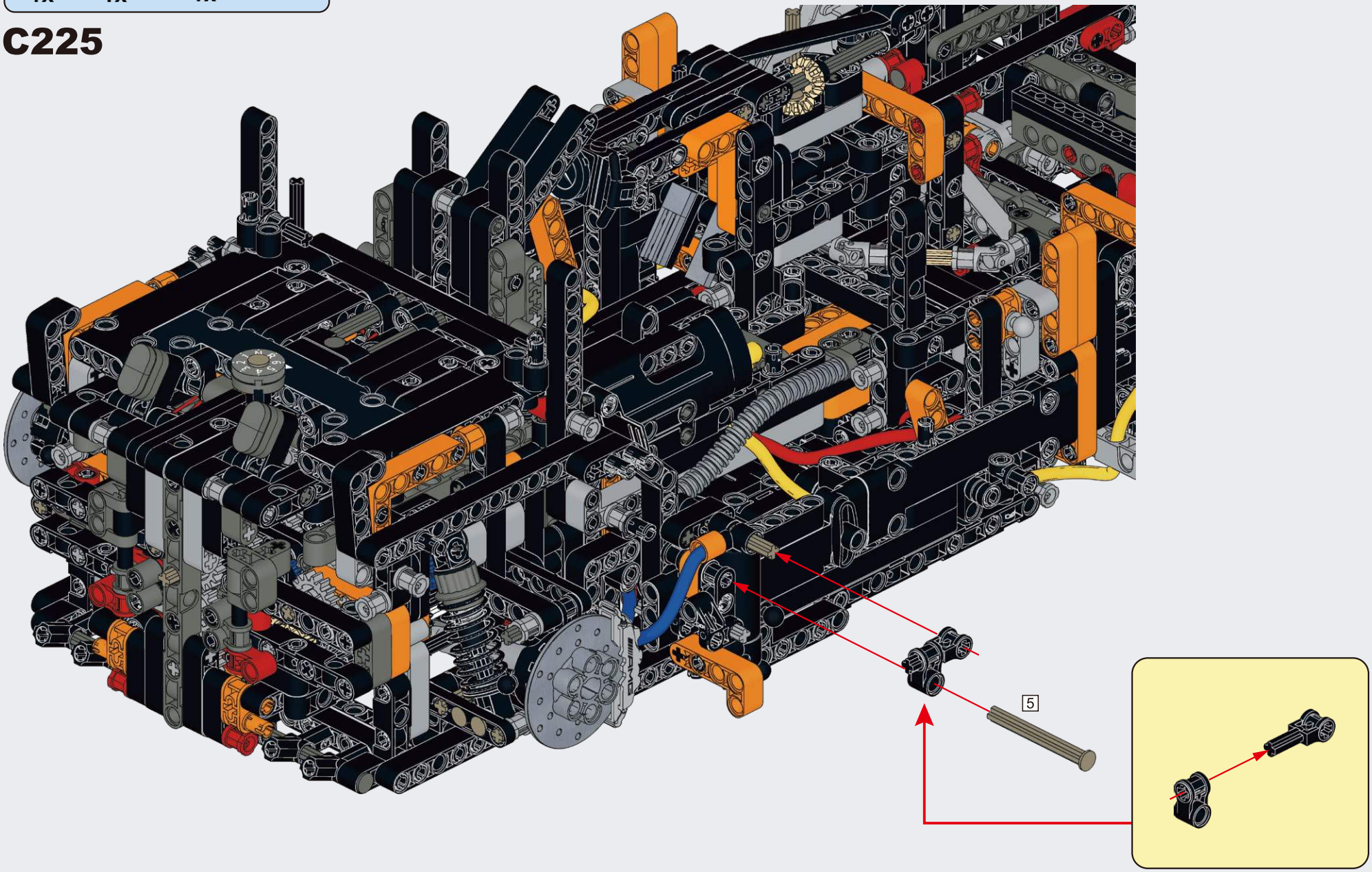

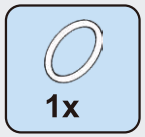

C226

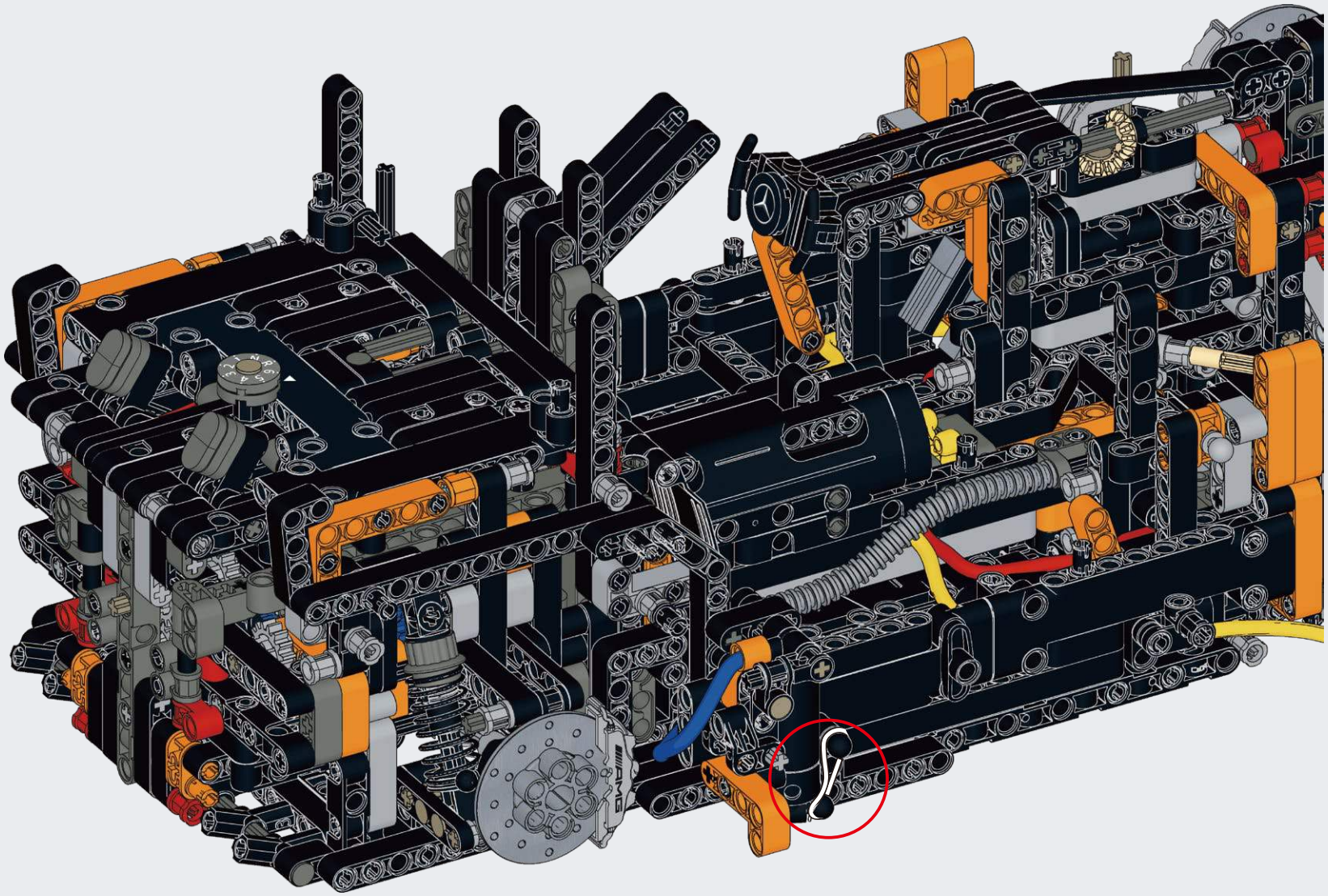

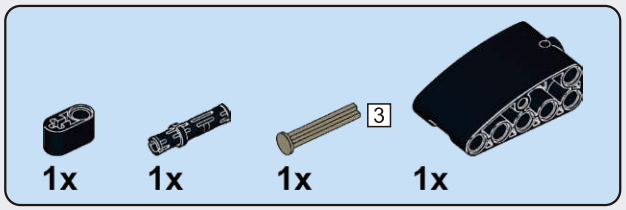

C227

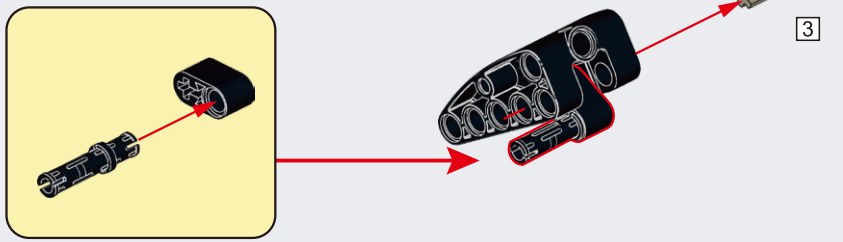

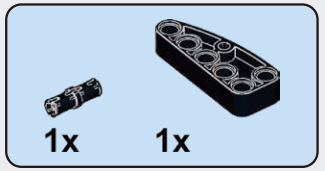

C228

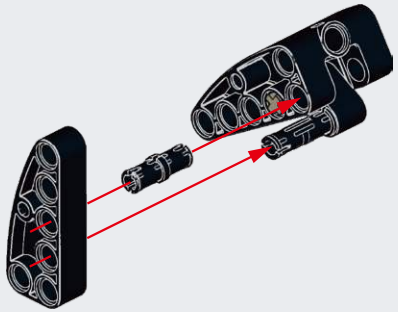

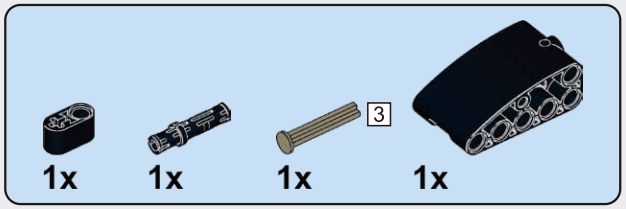

C229

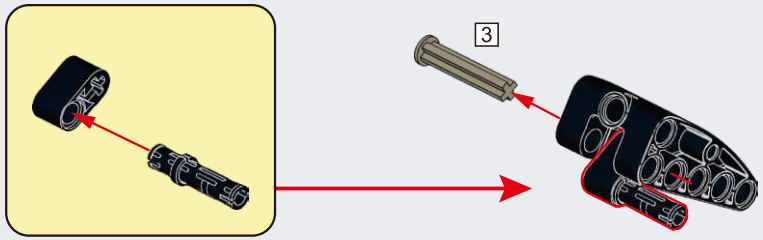

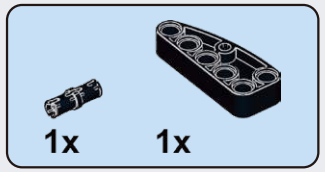

C230

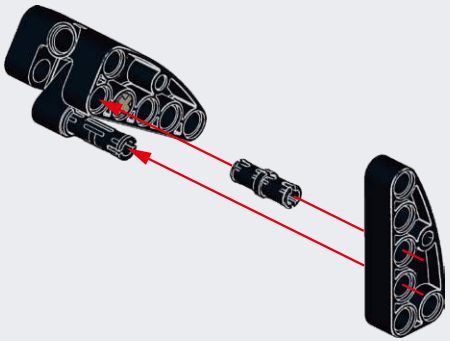

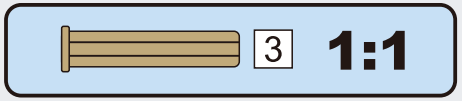

C231

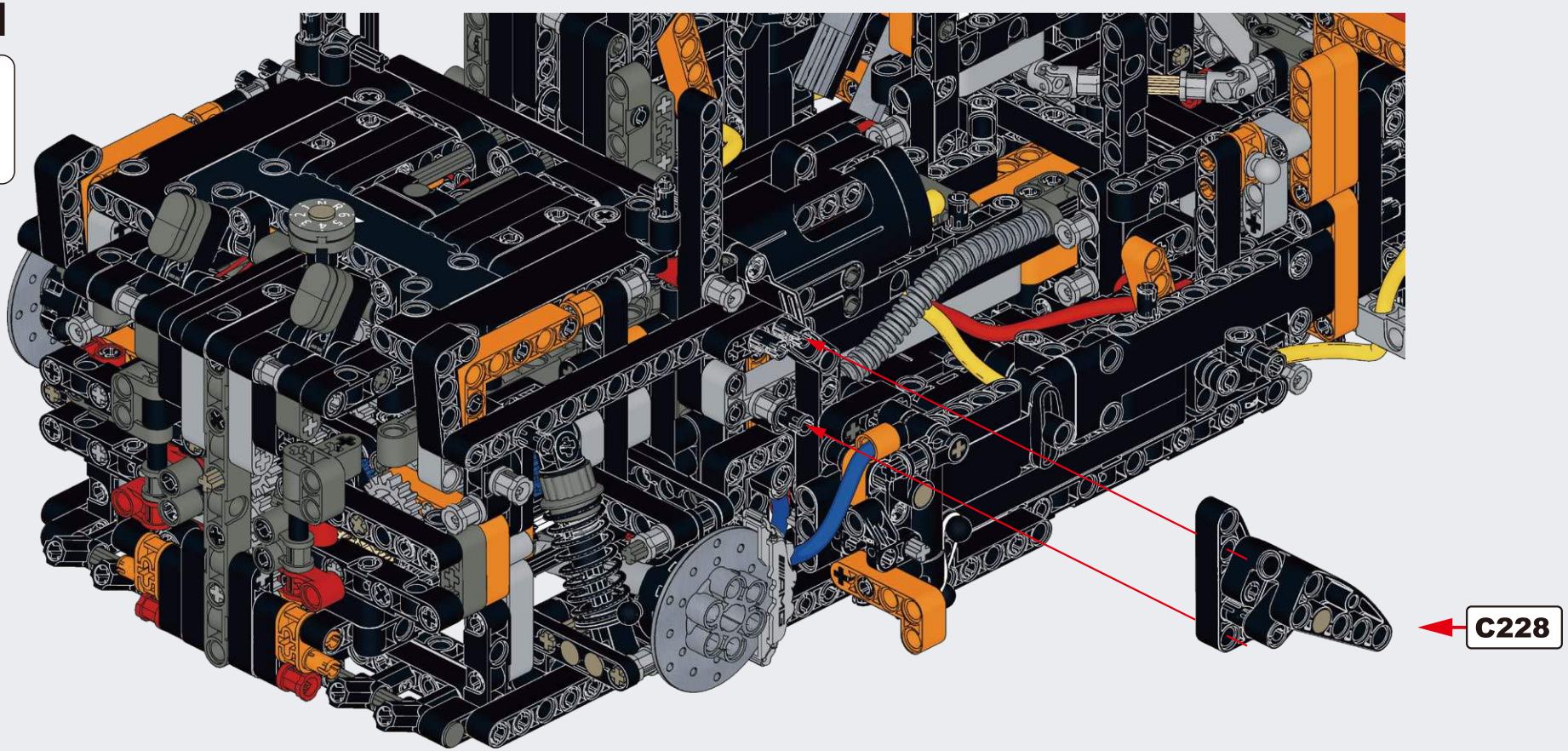

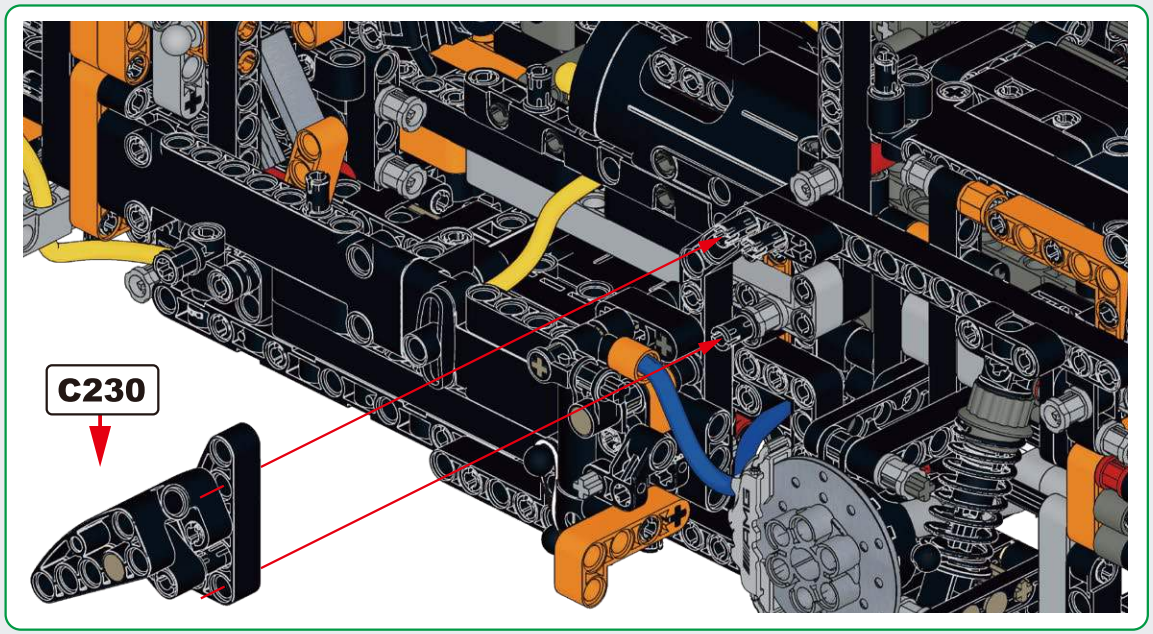

C232

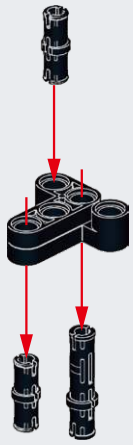

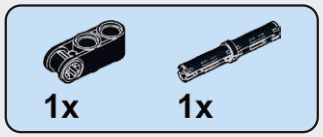

C233

C234

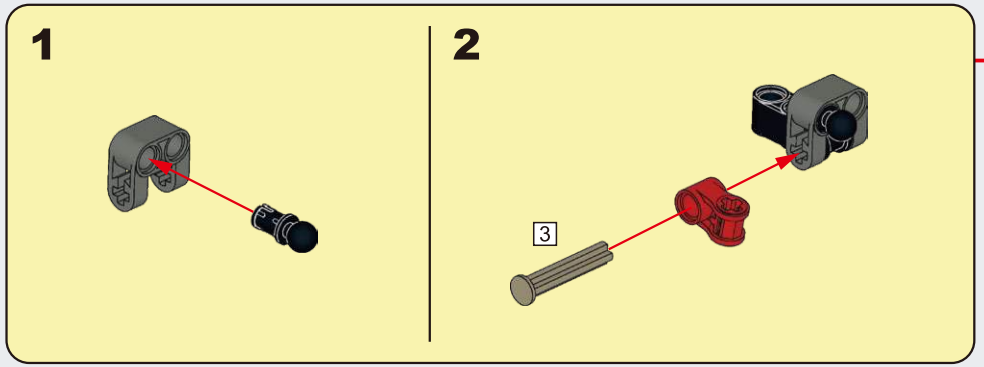

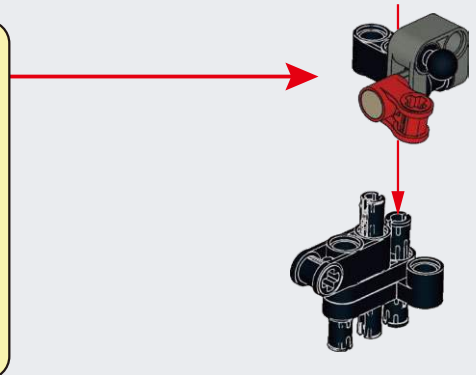

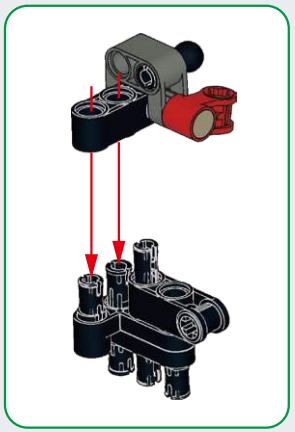

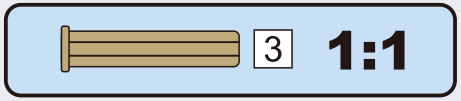

C235

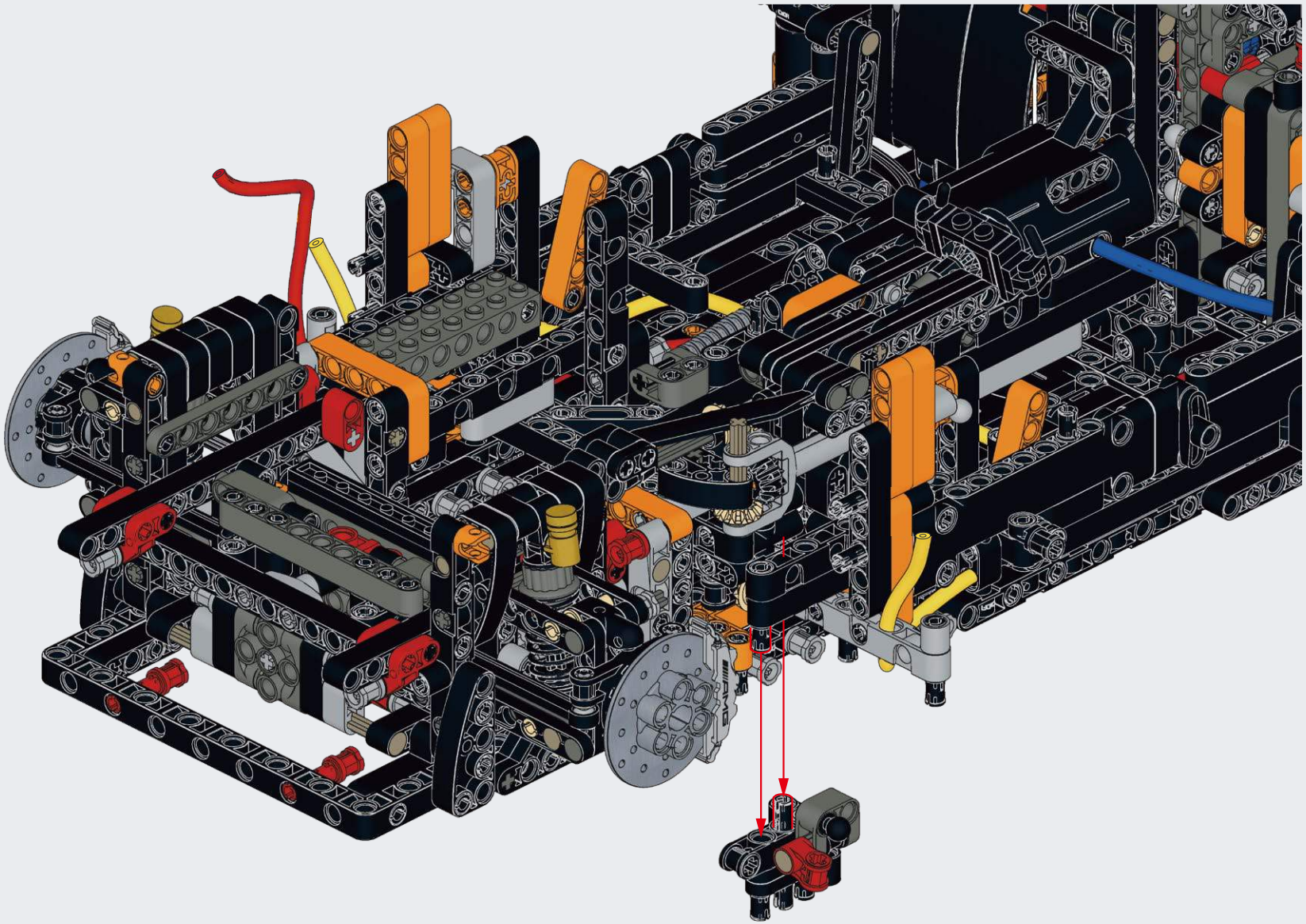

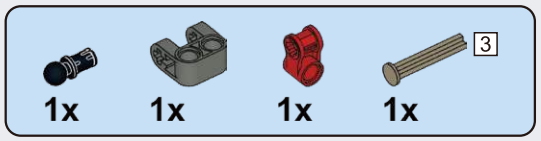

C236

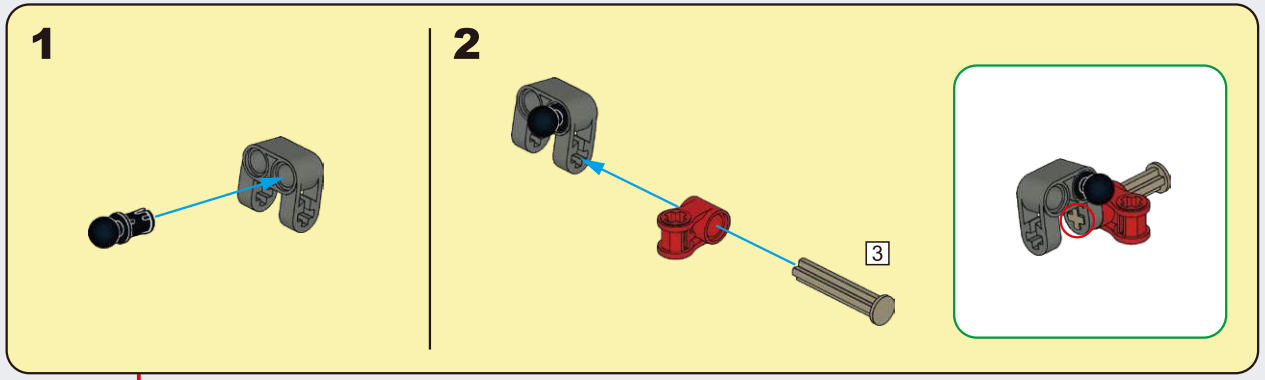

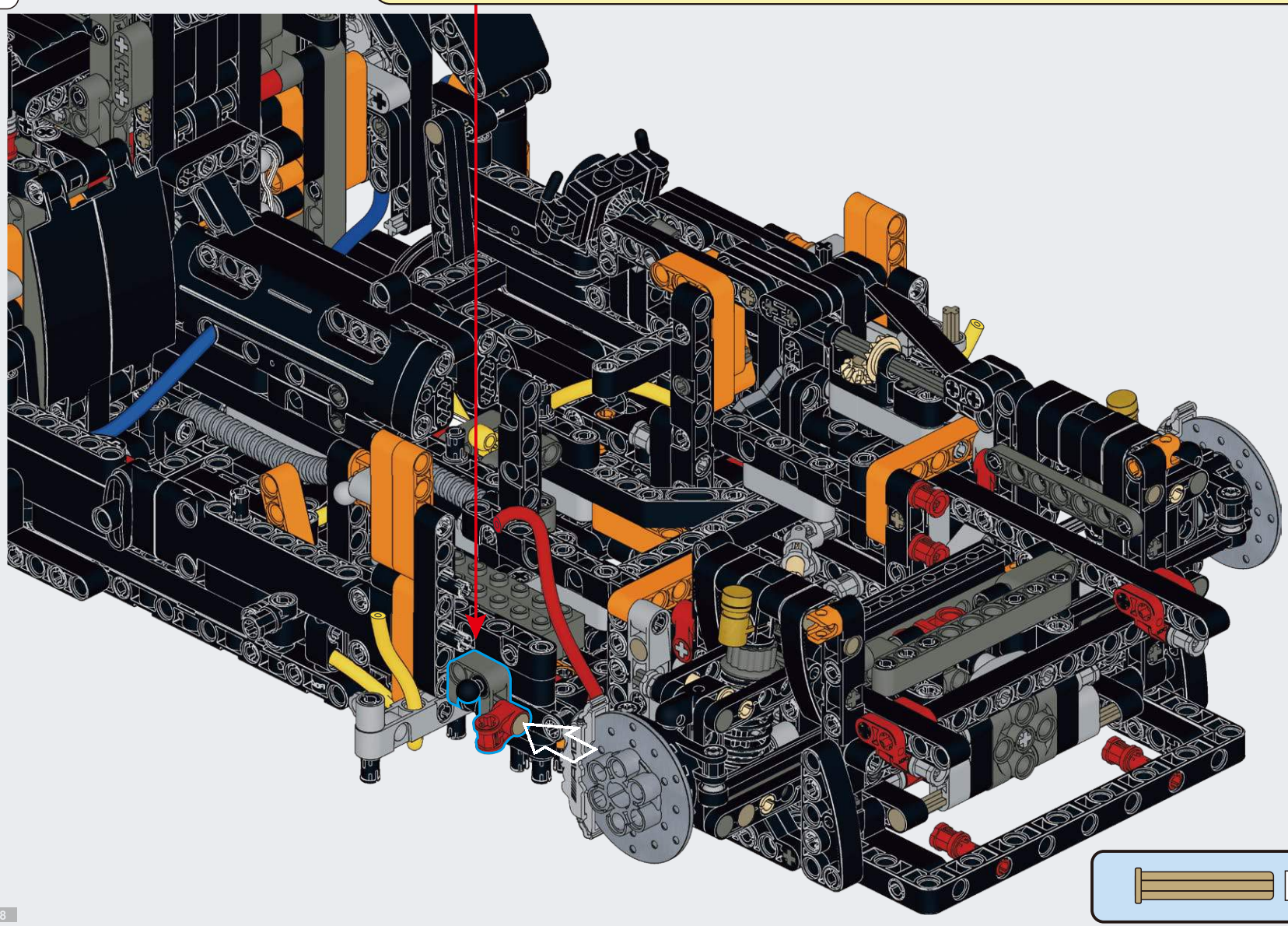

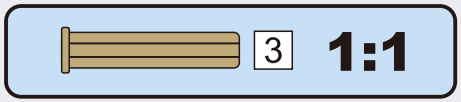

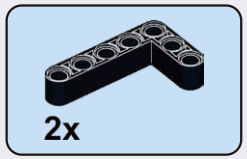

C237

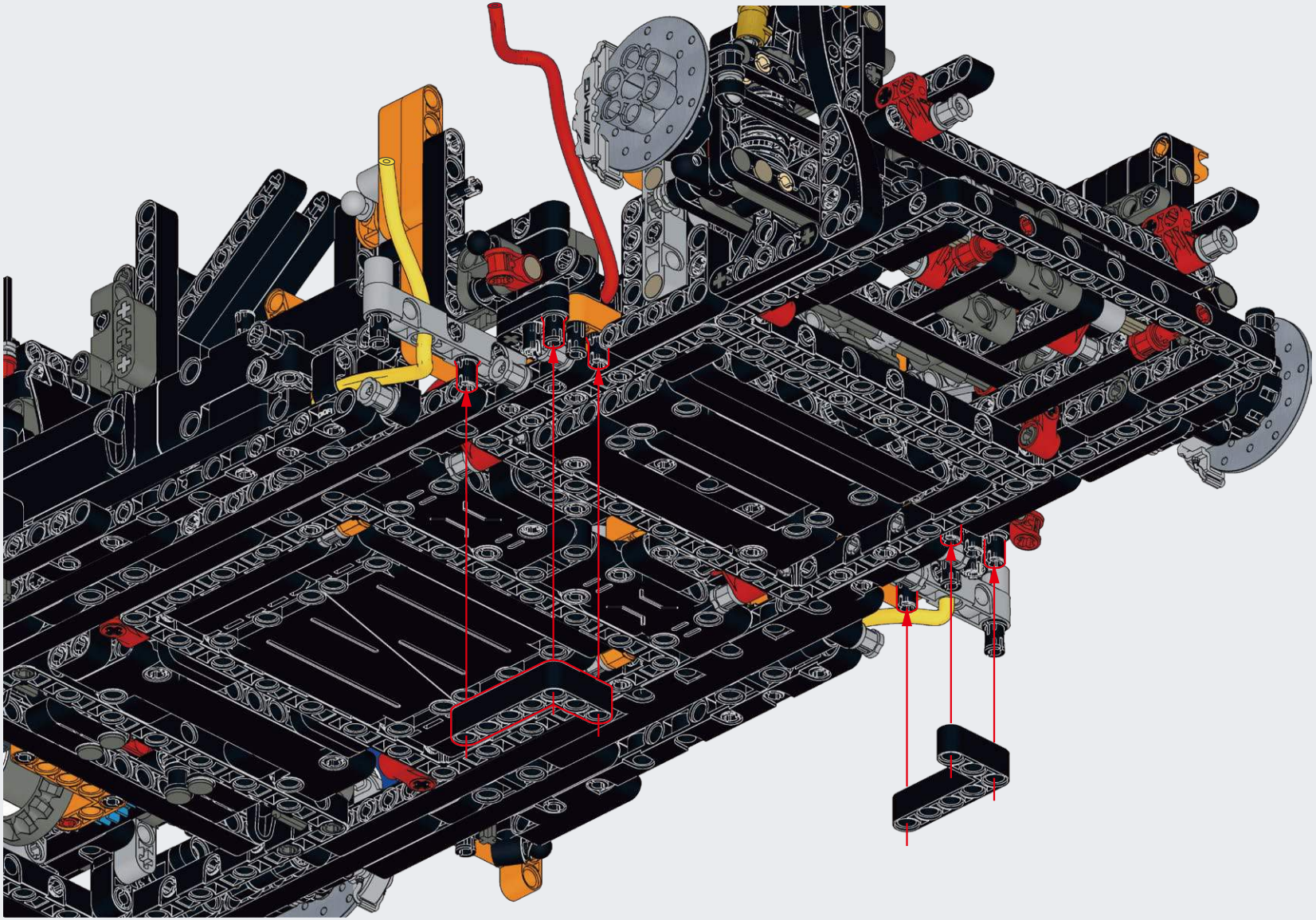

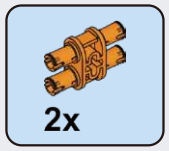

C238

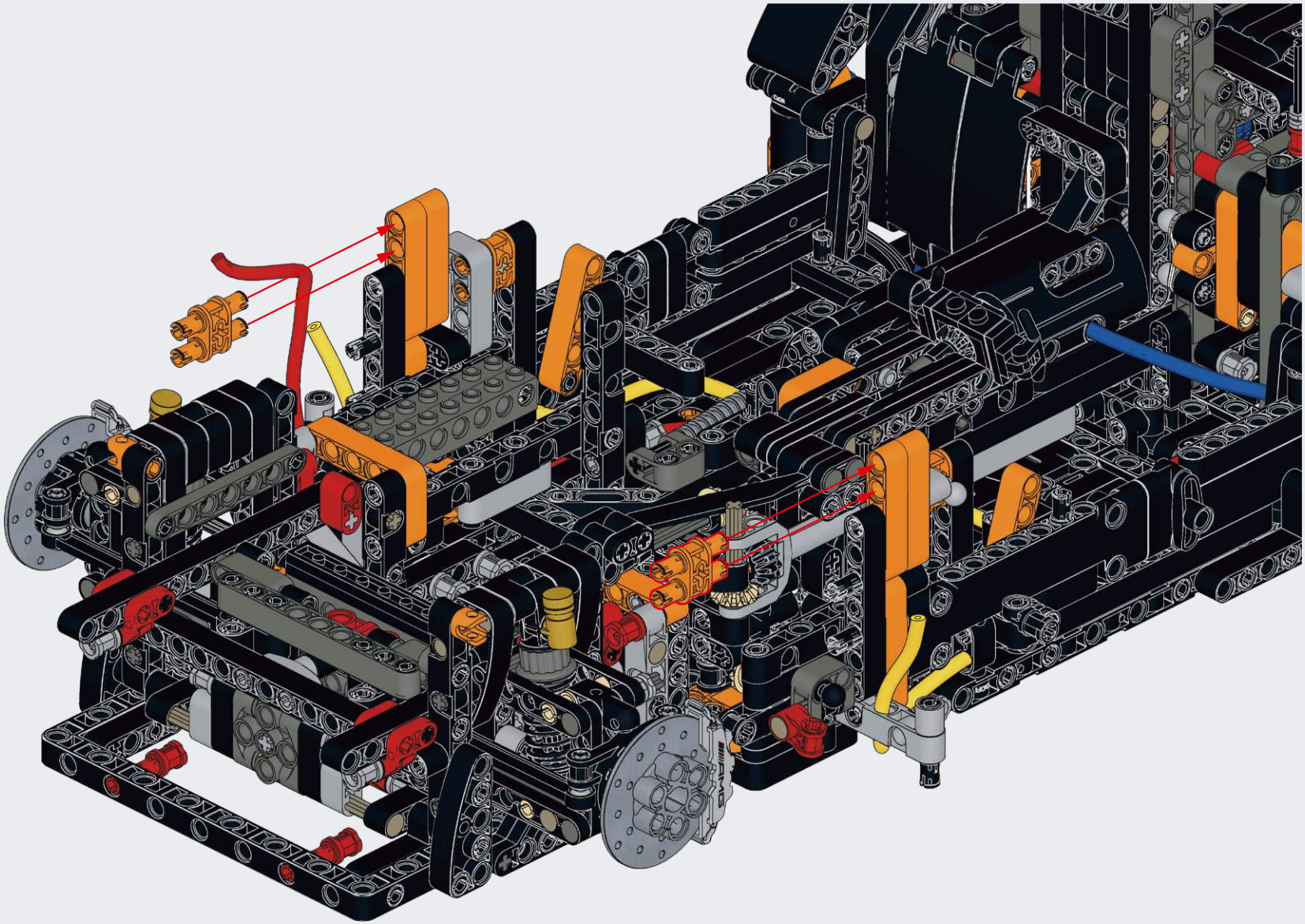

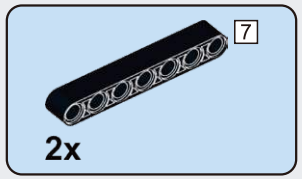

C239

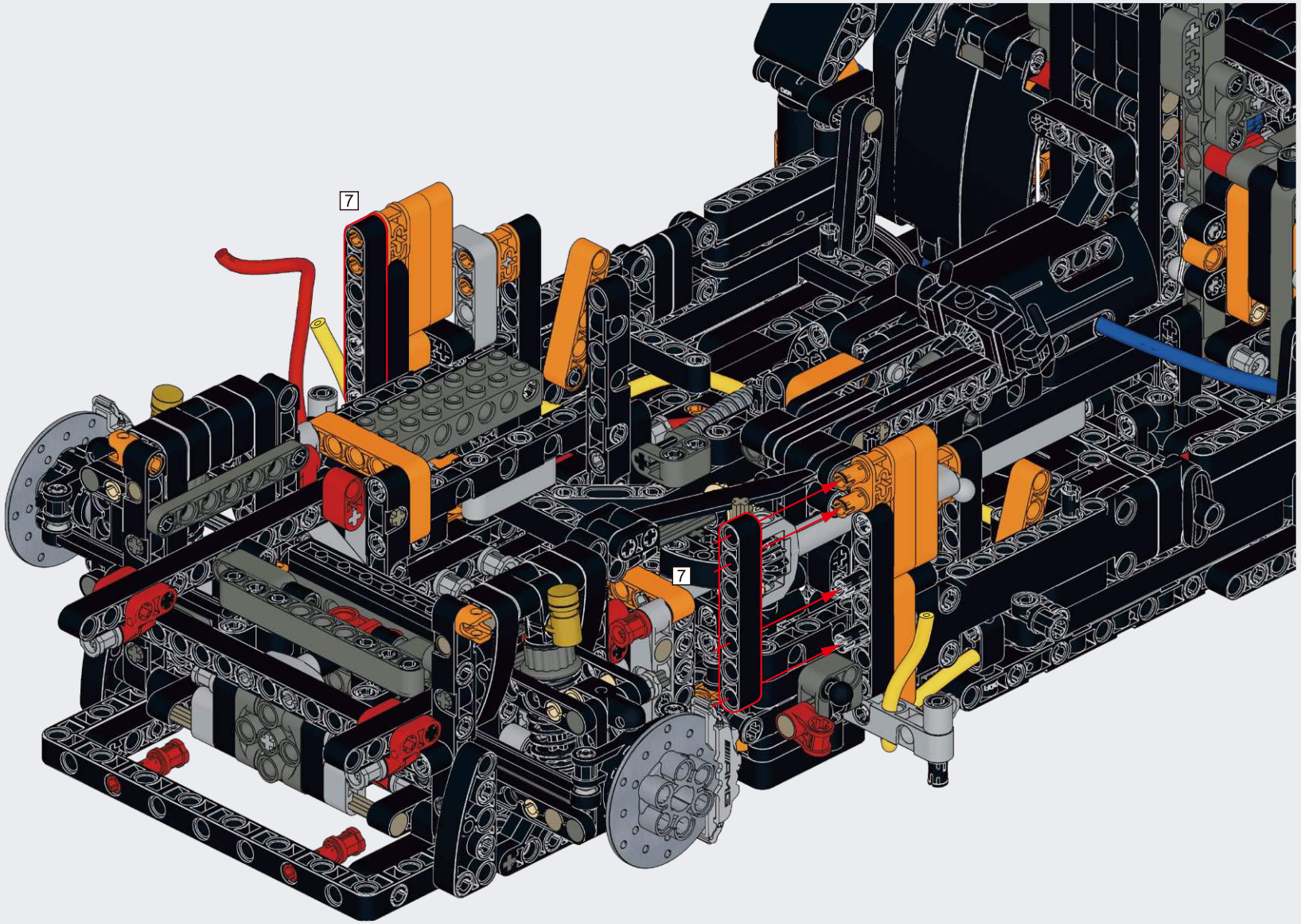

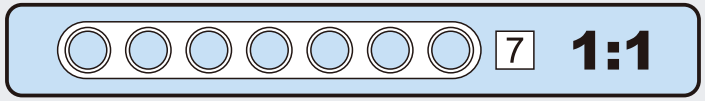

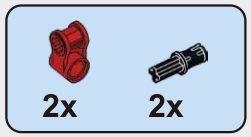

C240

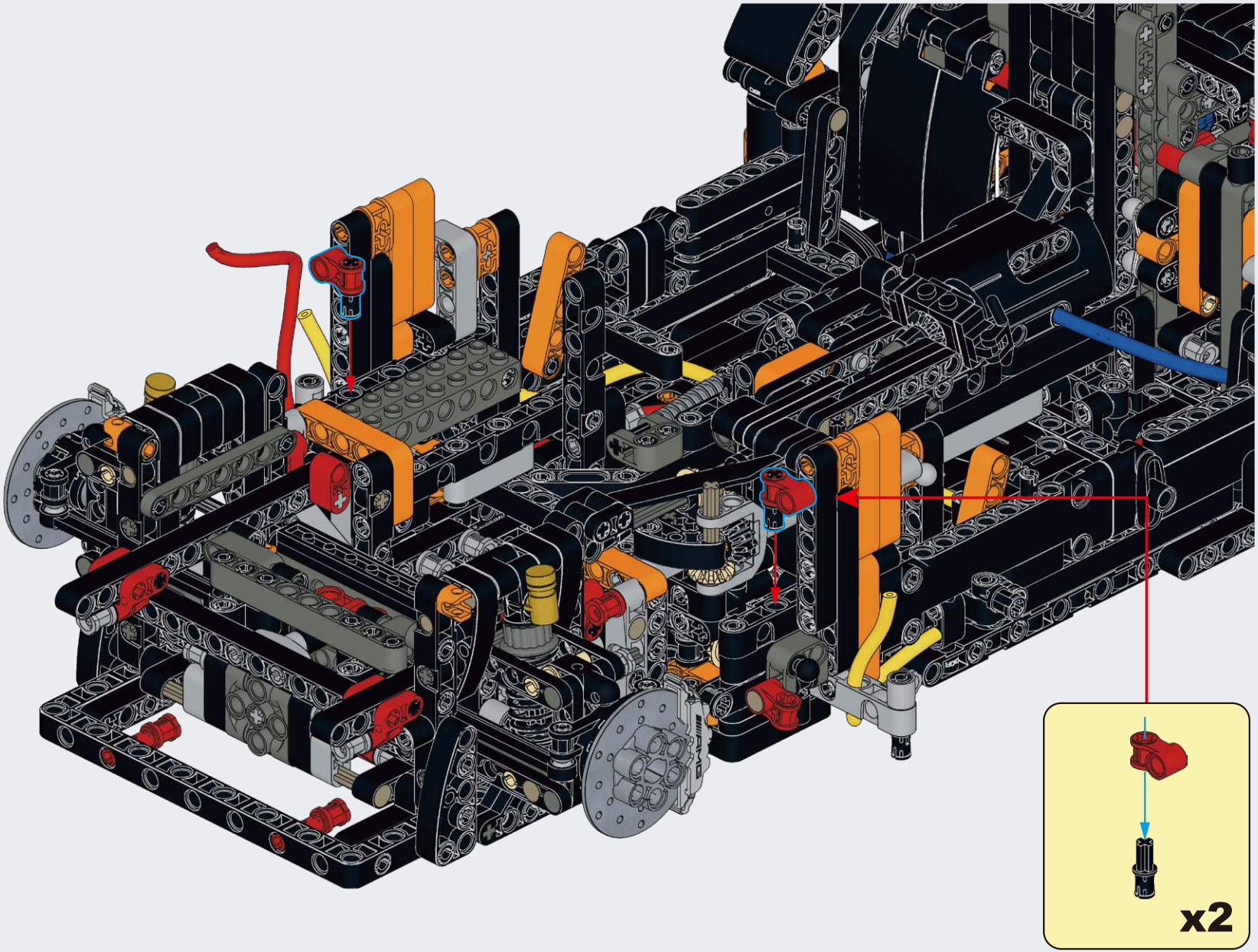

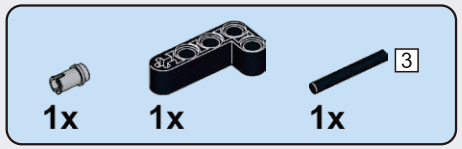

C241

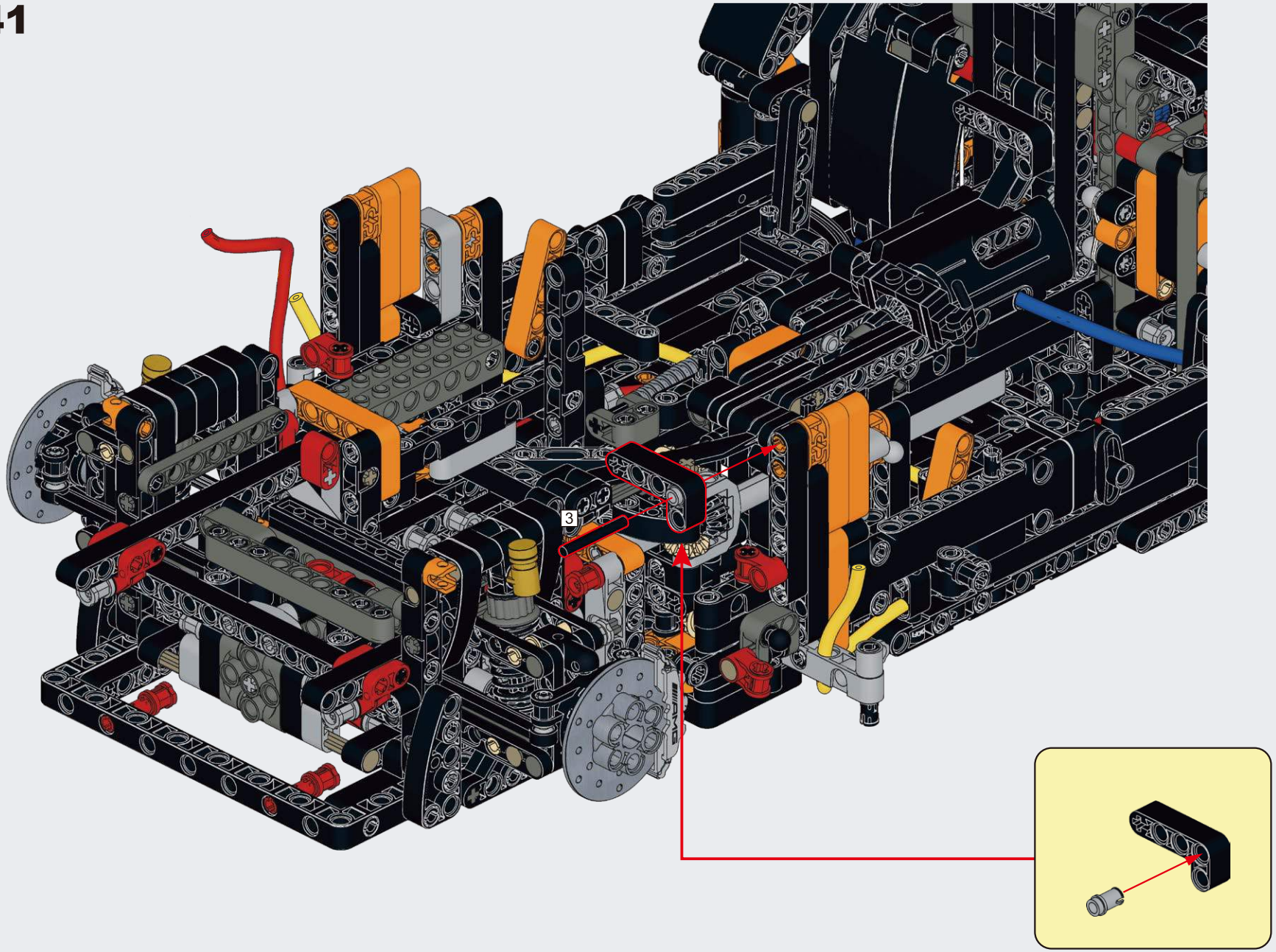

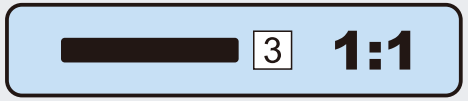

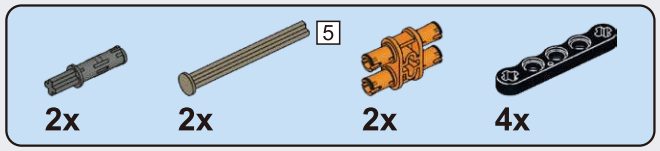

C242

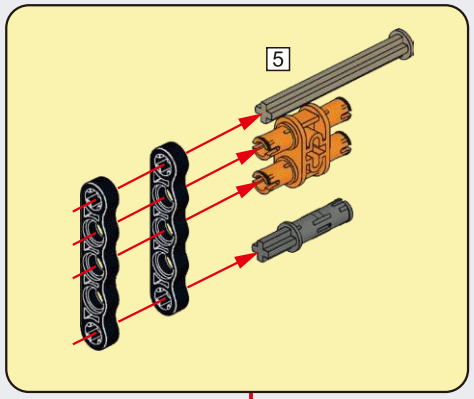

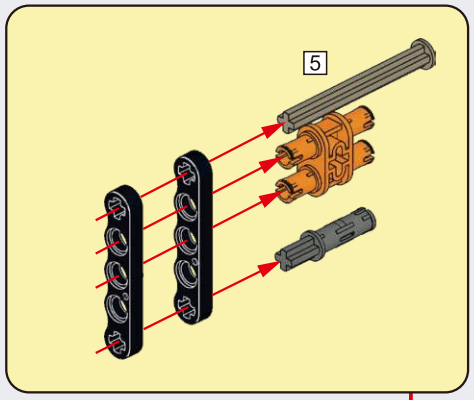

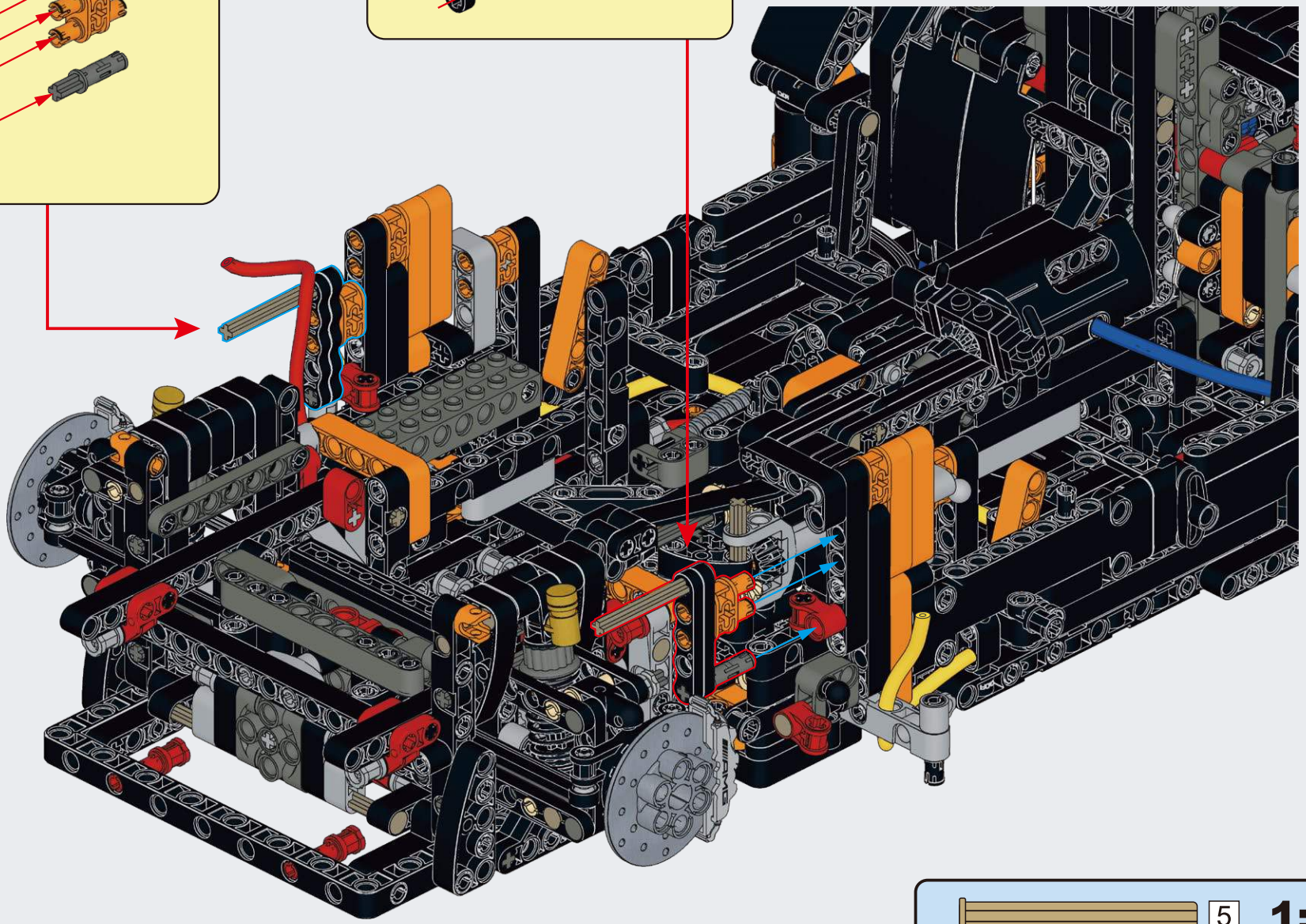

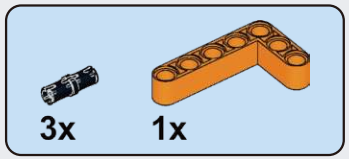

C243

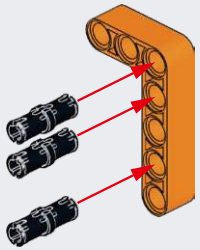

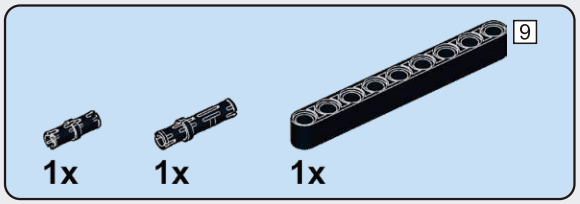

C244

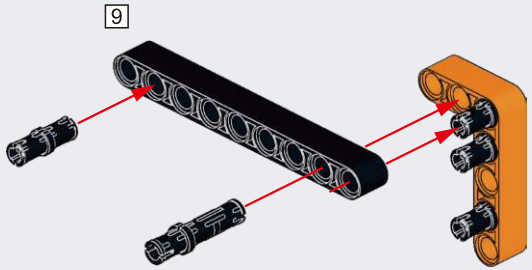

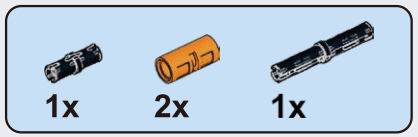

C245

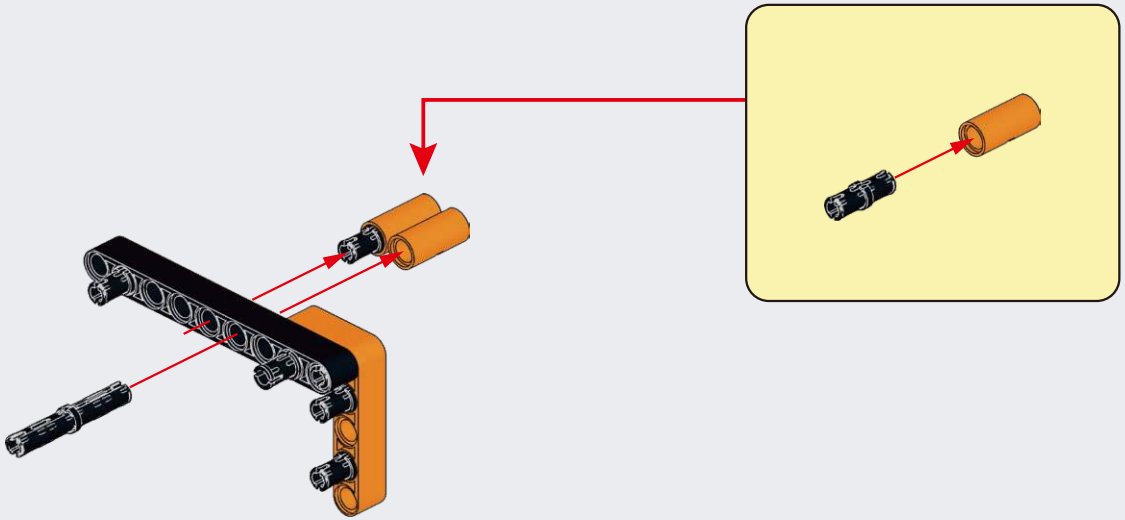

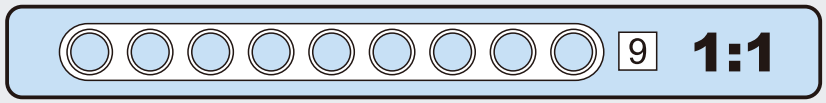

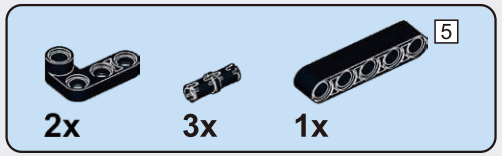

C246

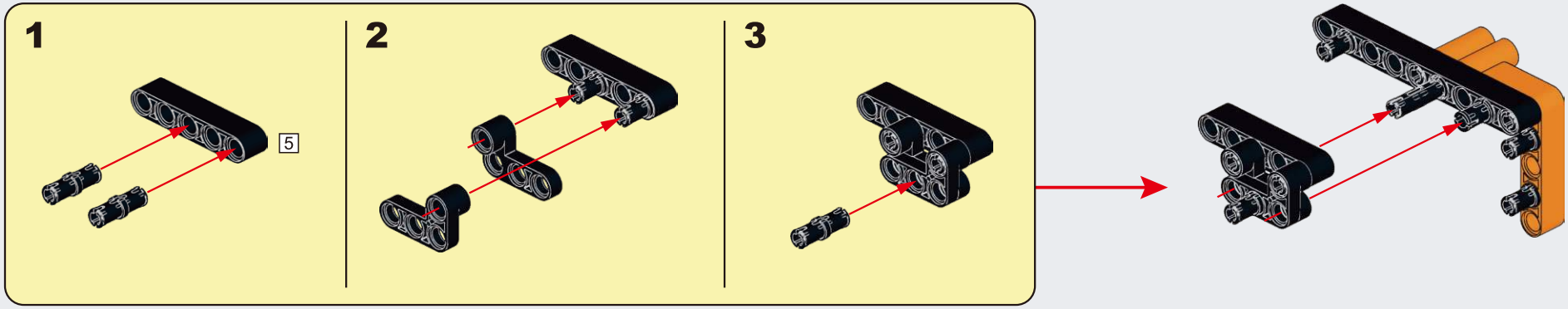

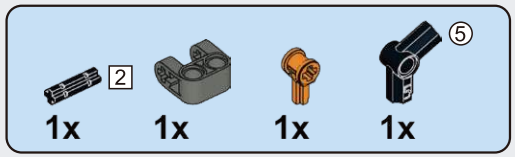

C247

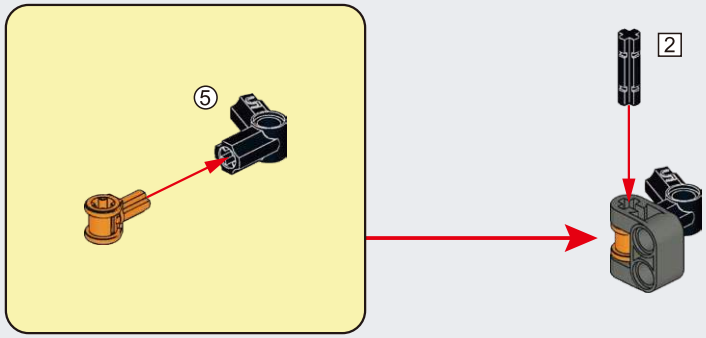

C248

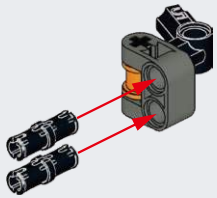

C249

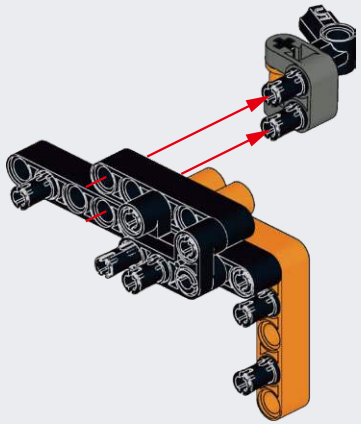

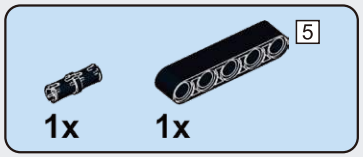

C250

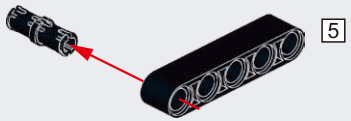

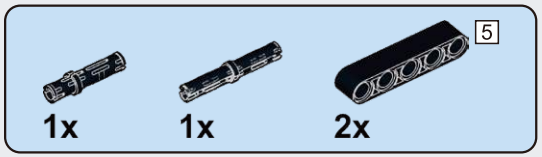

C251

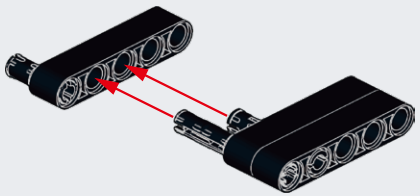

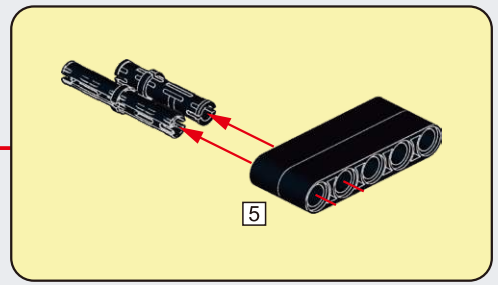

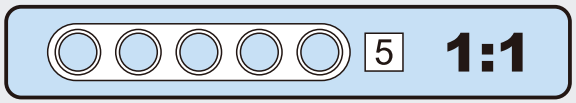

C252

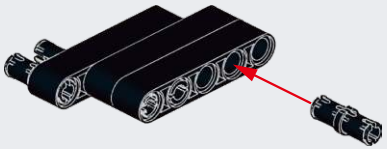

C253

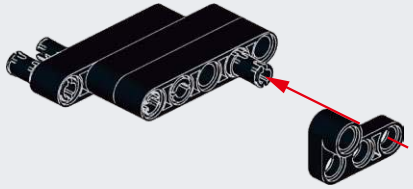

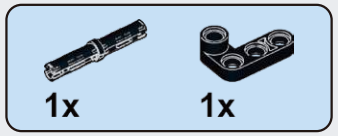

C254

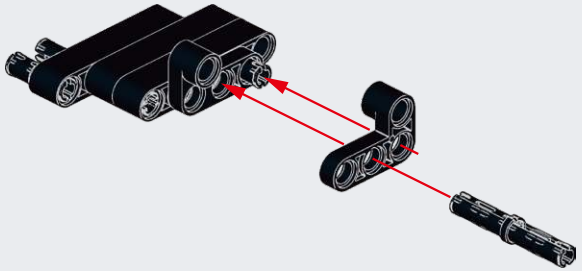

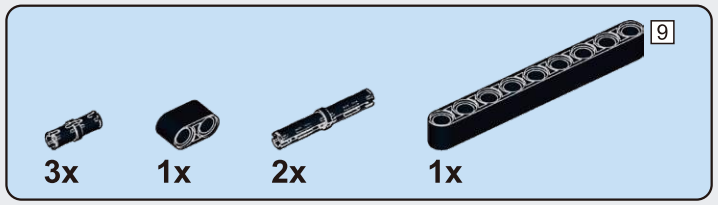

C255

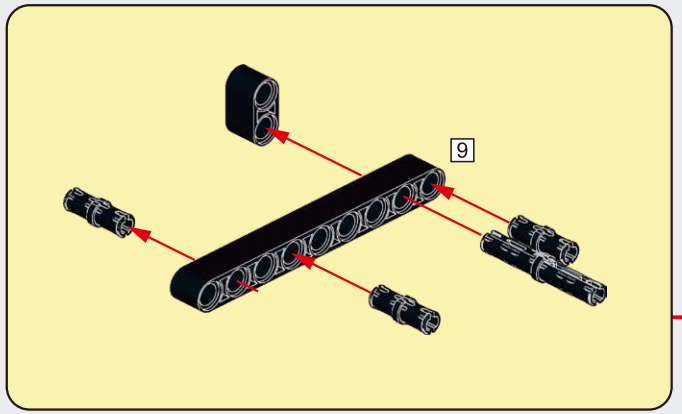

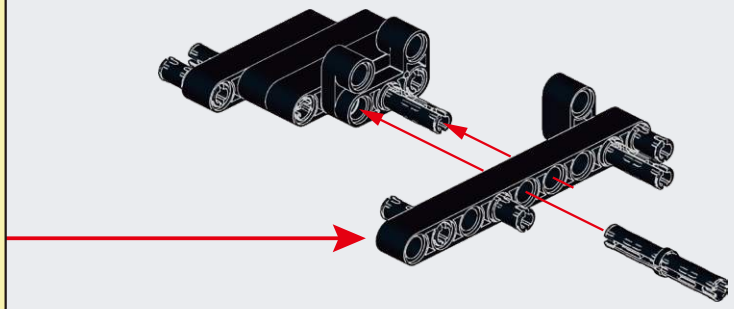

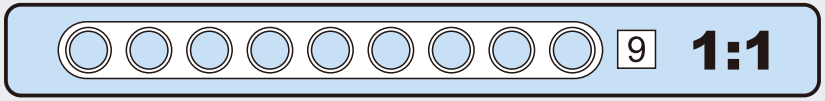

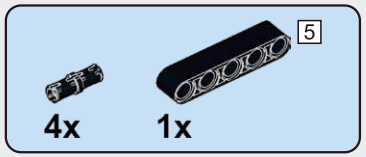

C256

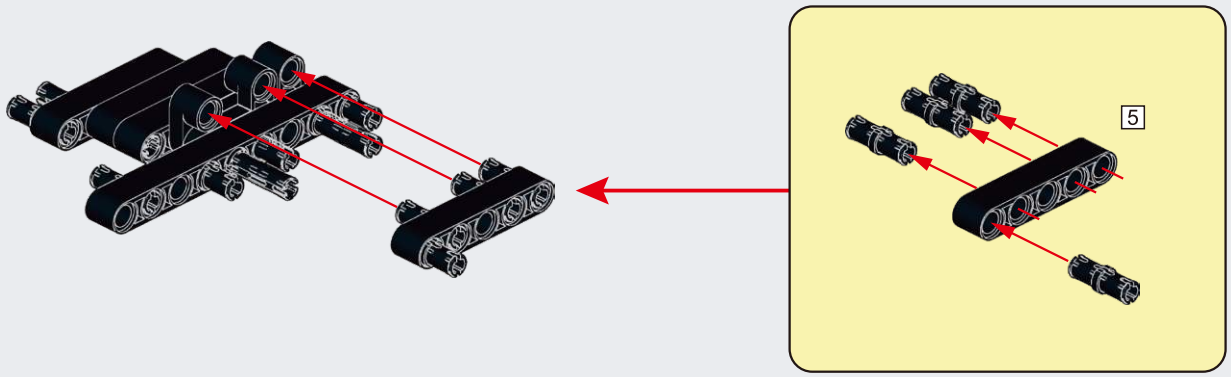

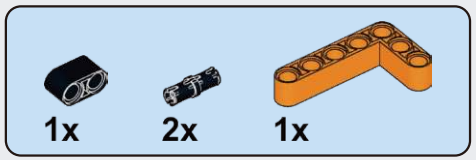

C257

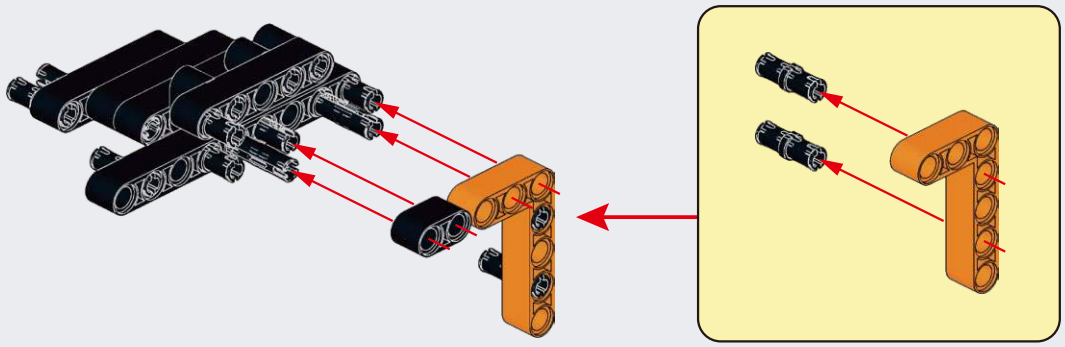

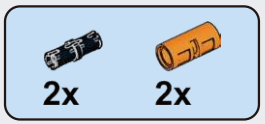

C258

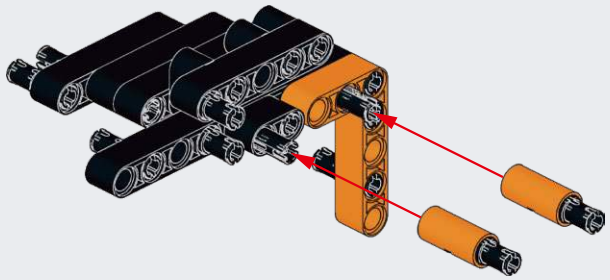

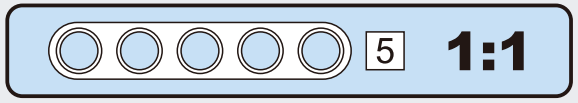

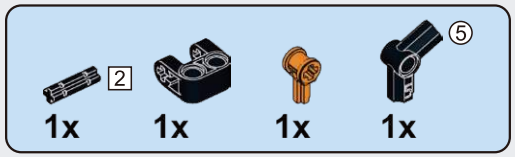

C259

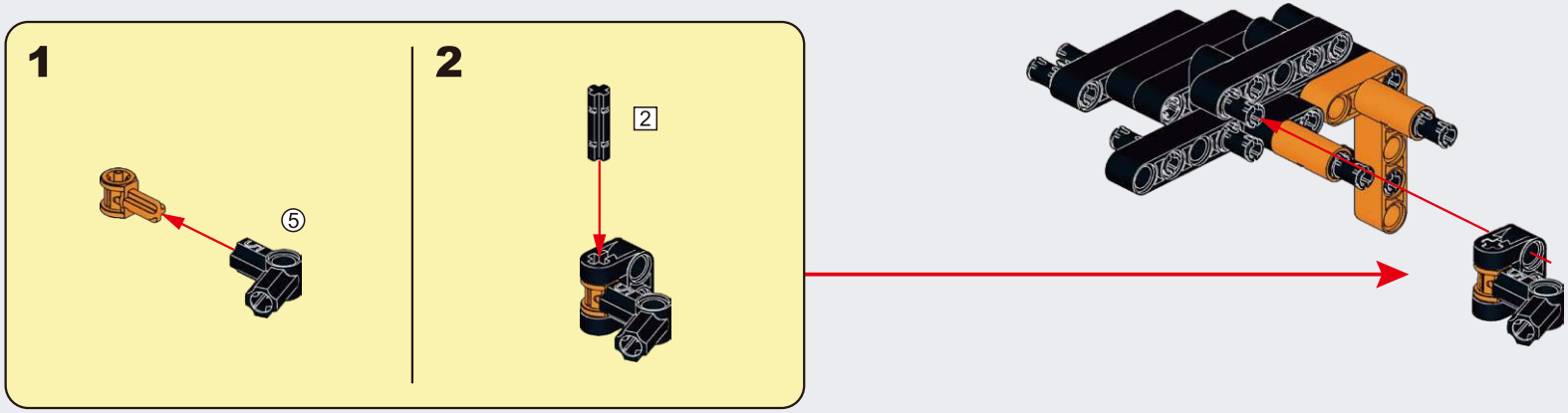

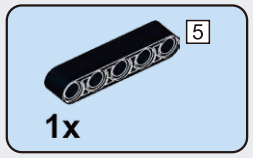

C260

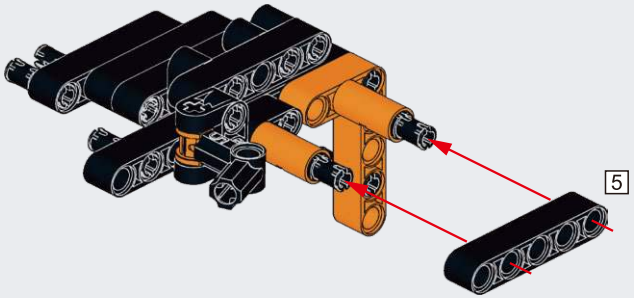

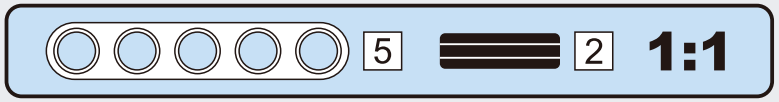

C261

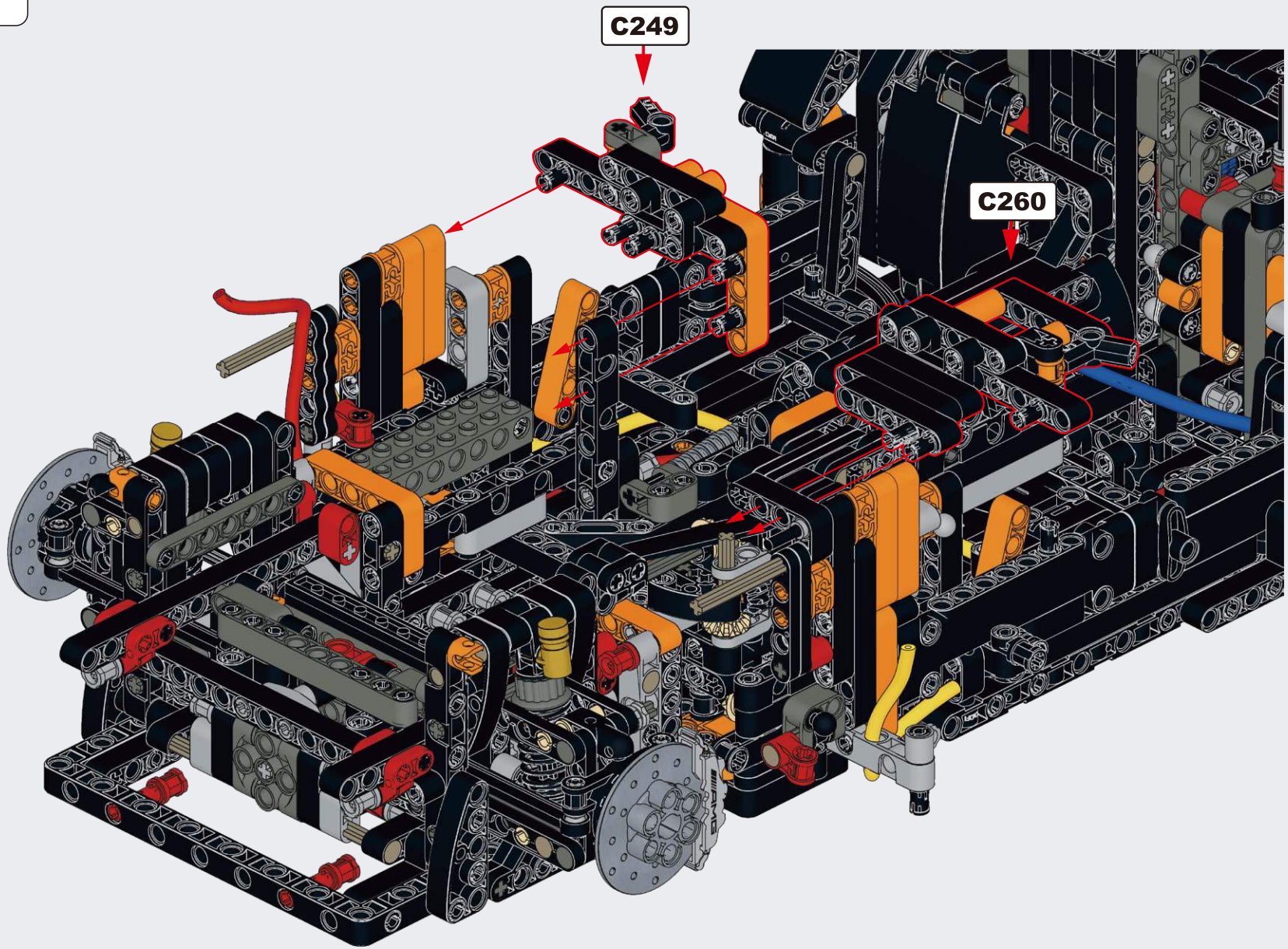

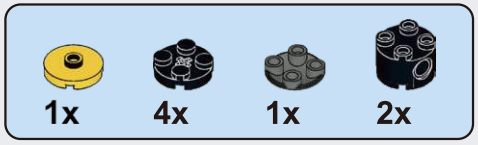

C262

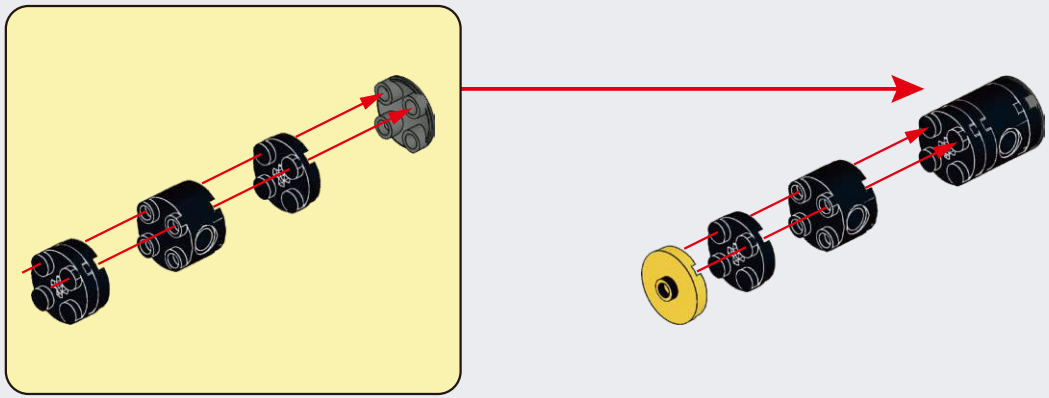

C263

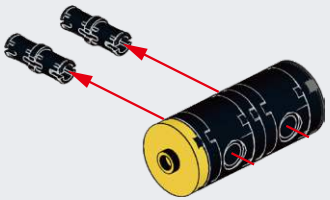

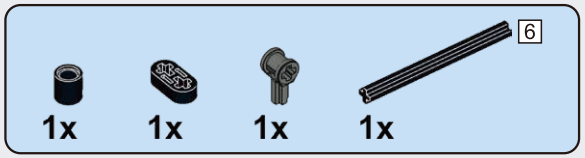

C264

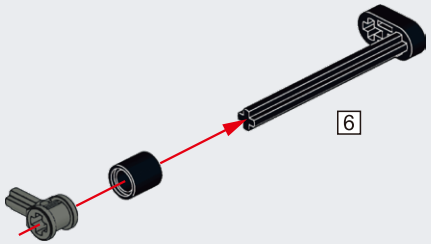

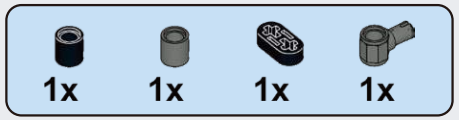

C265

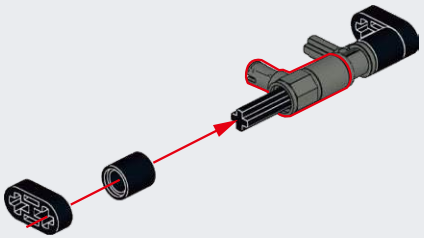

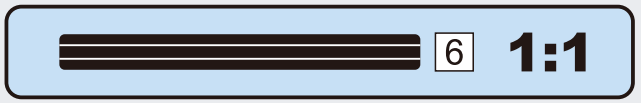

C266

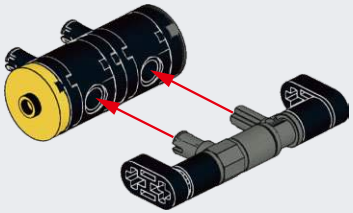

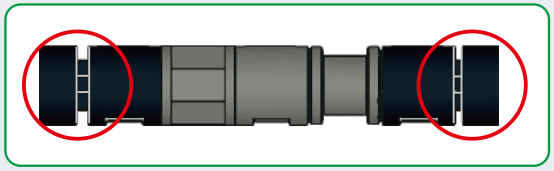

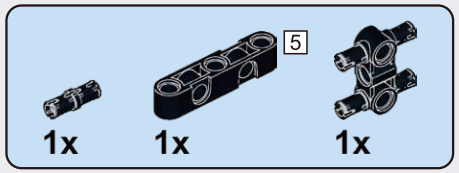

C267

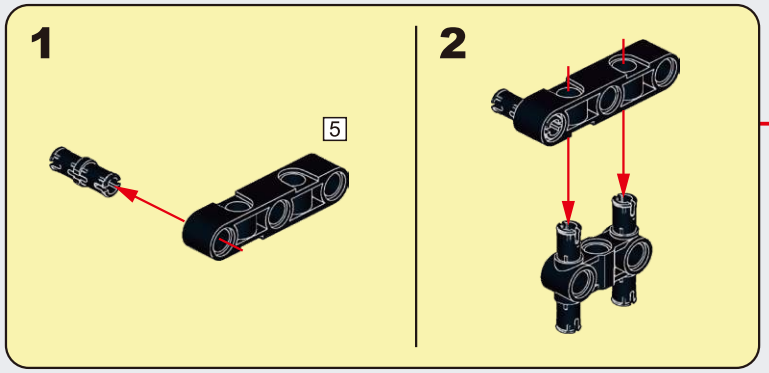

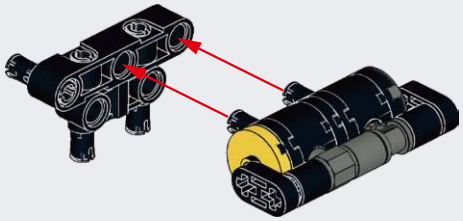

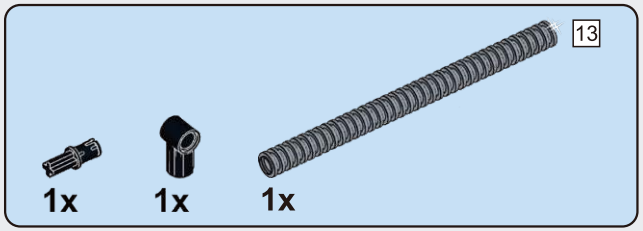

C268

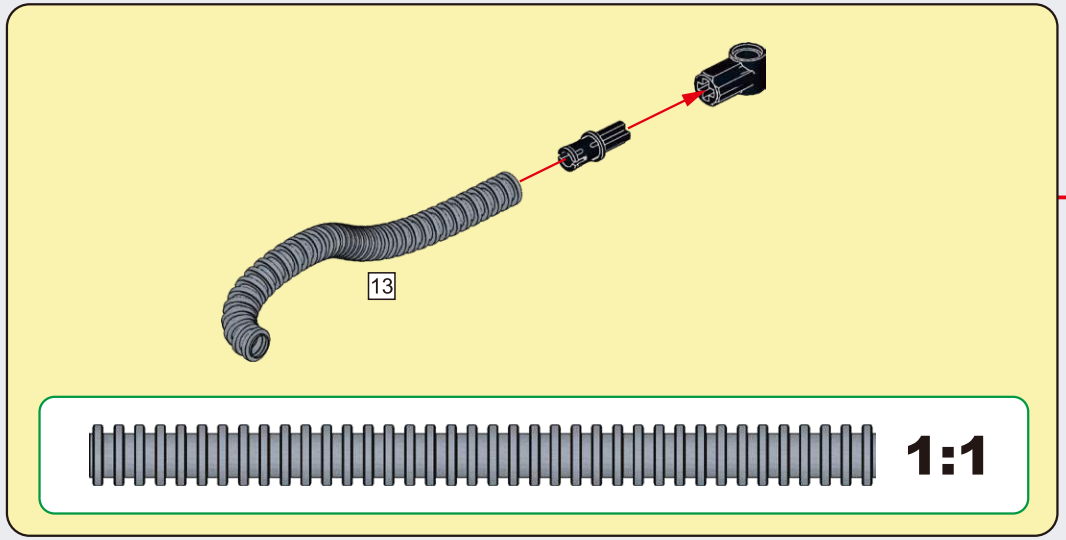

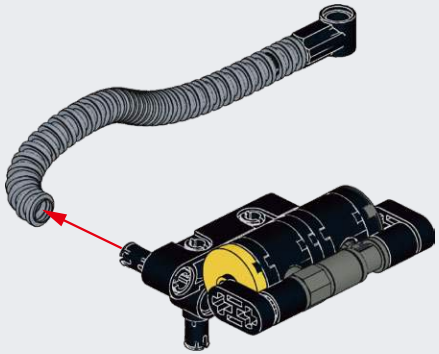

C269

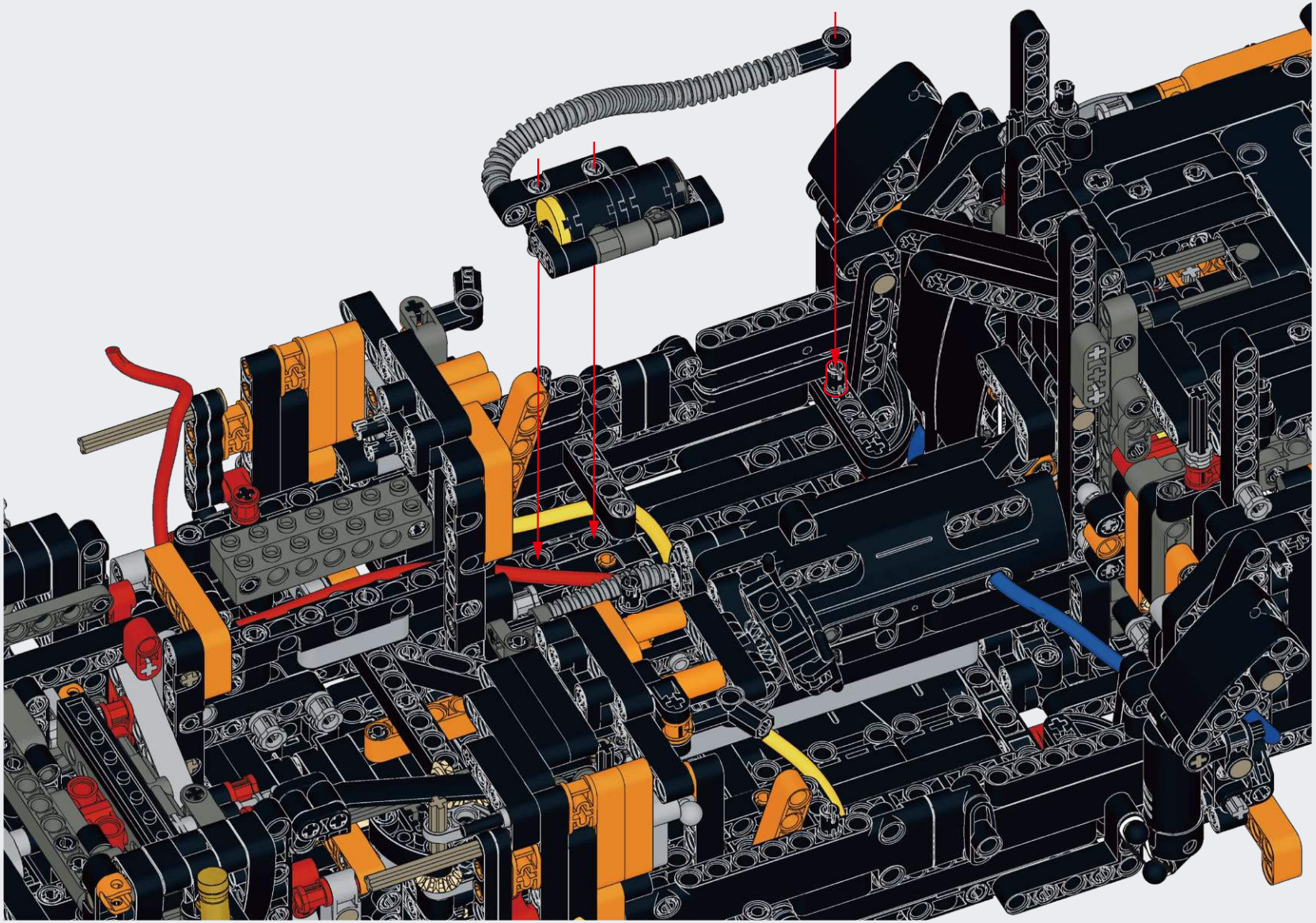

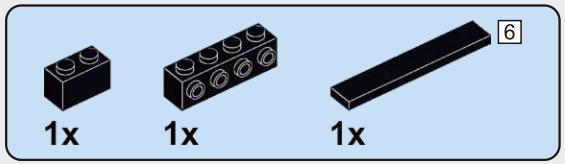

C270

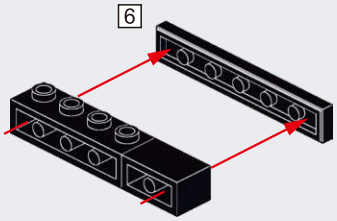

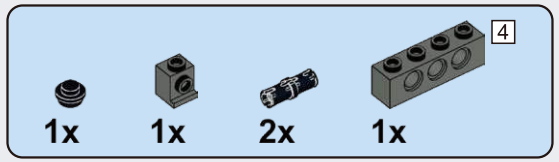

C271

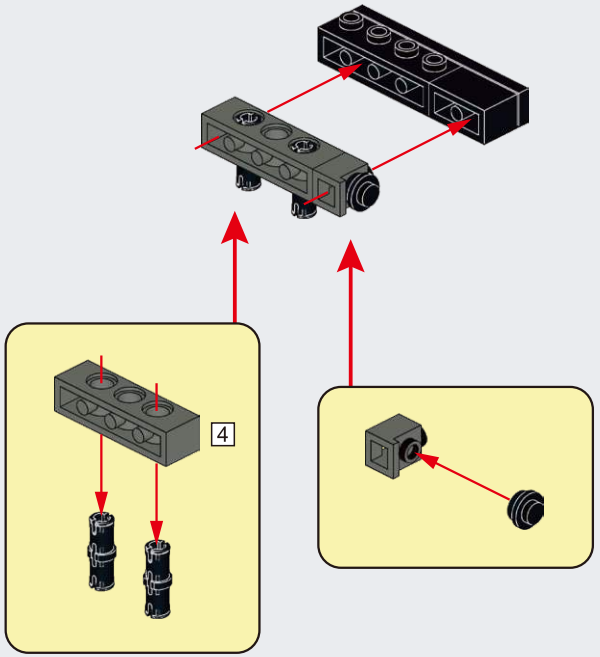

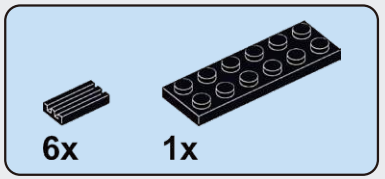

C272

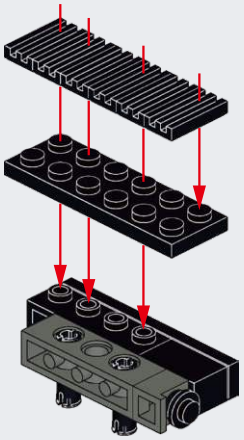

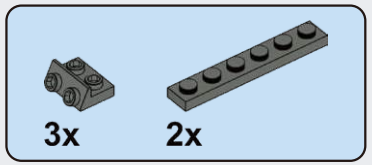

C273

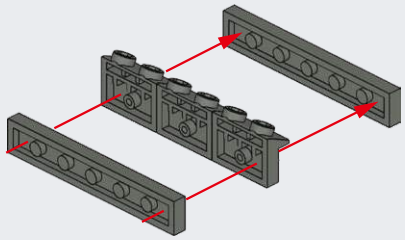

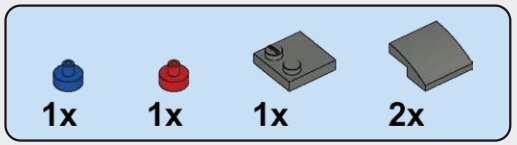

C274

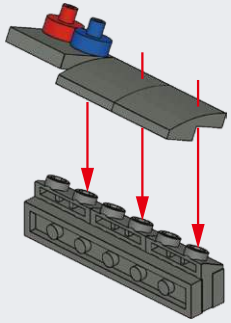

C275

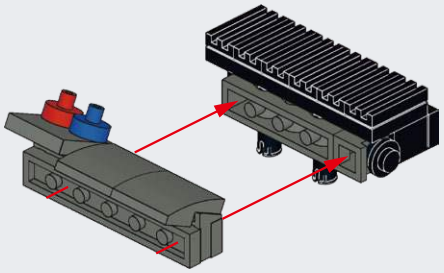

C276

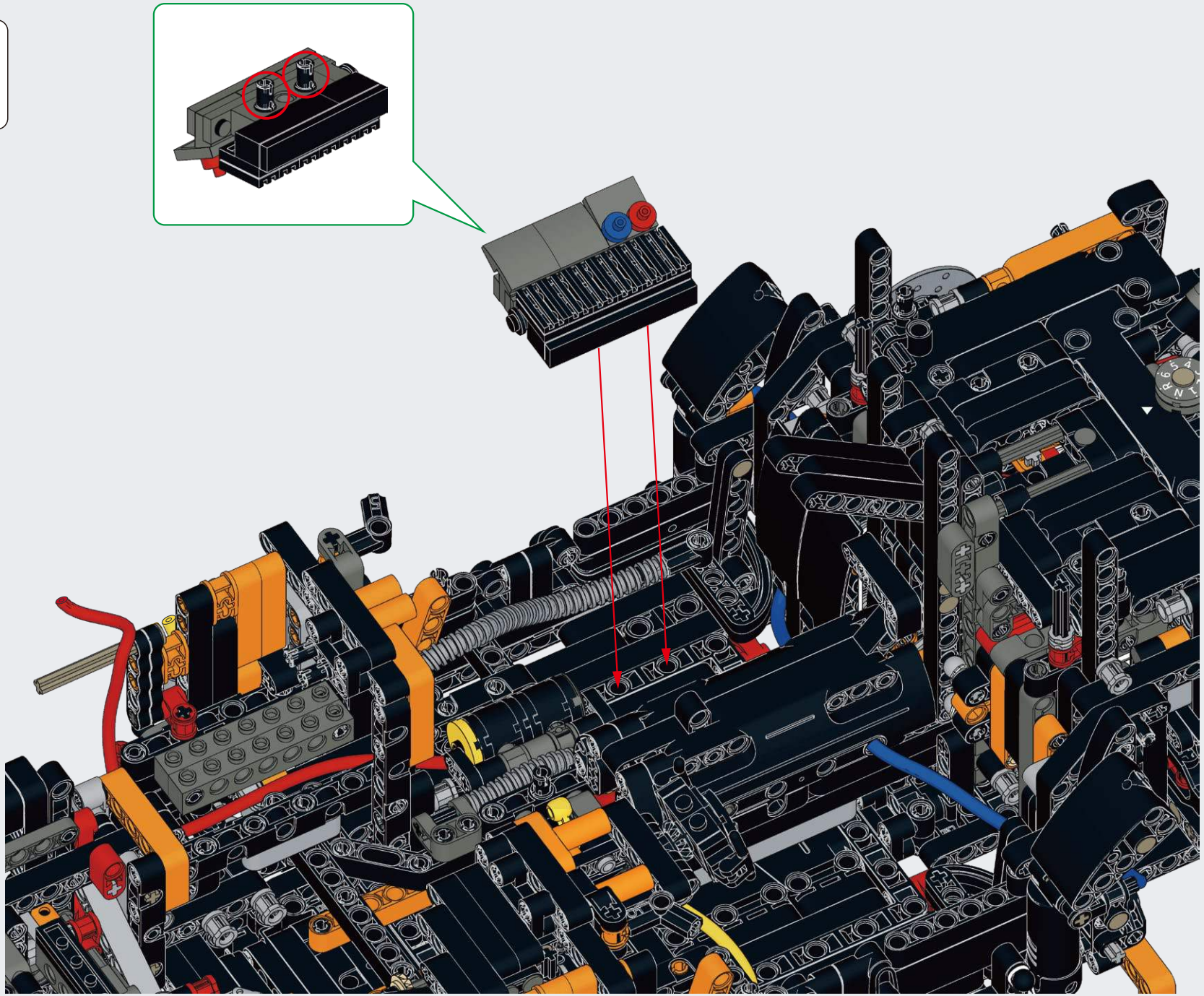

D

BOX 2 / BAG 4

2

D

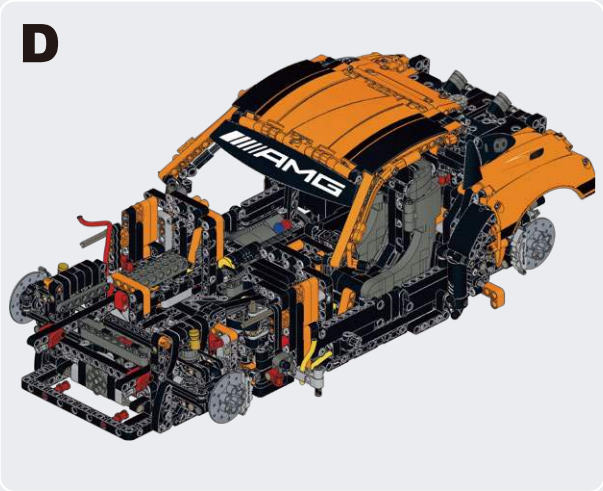

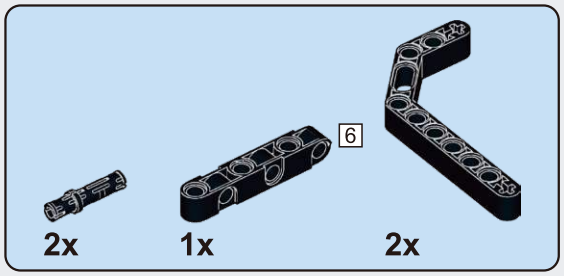

D1

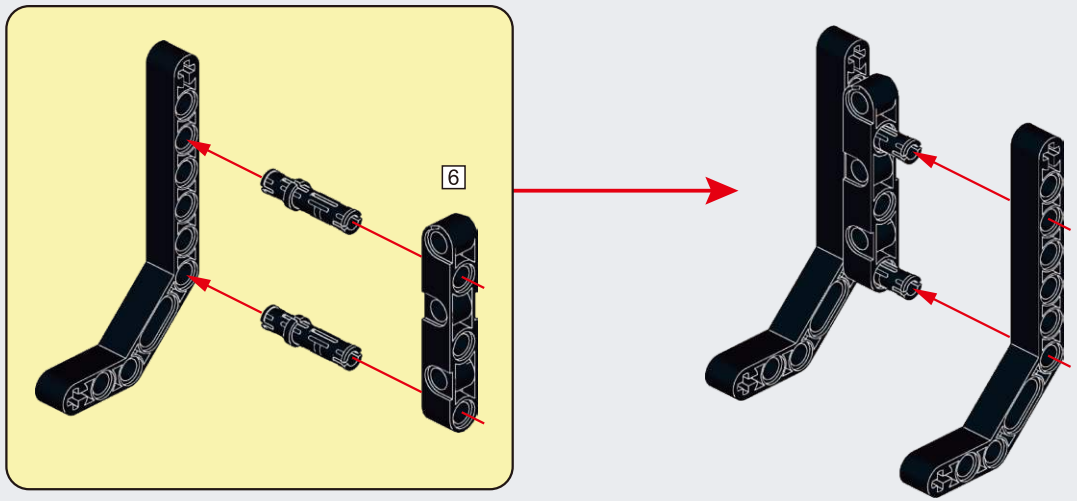

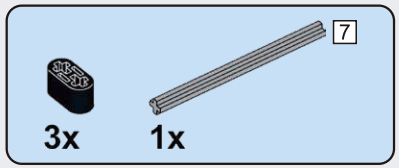

D2

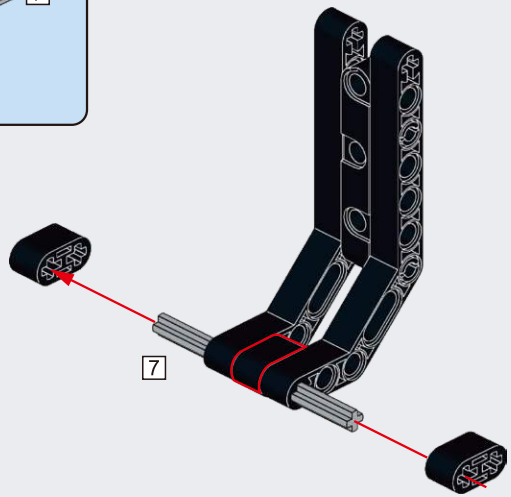

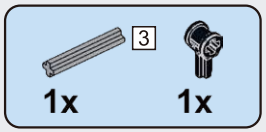

D3

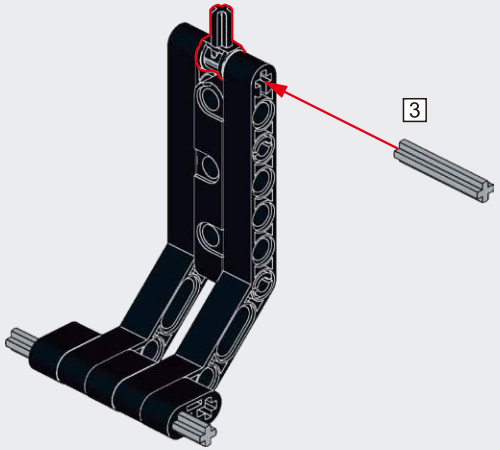

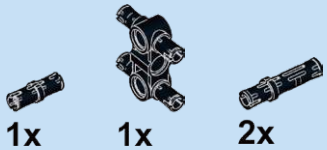

D4

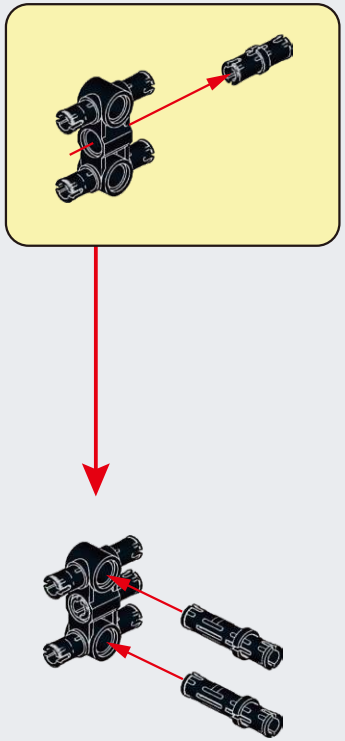

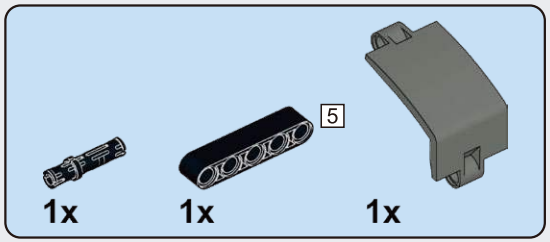

D5

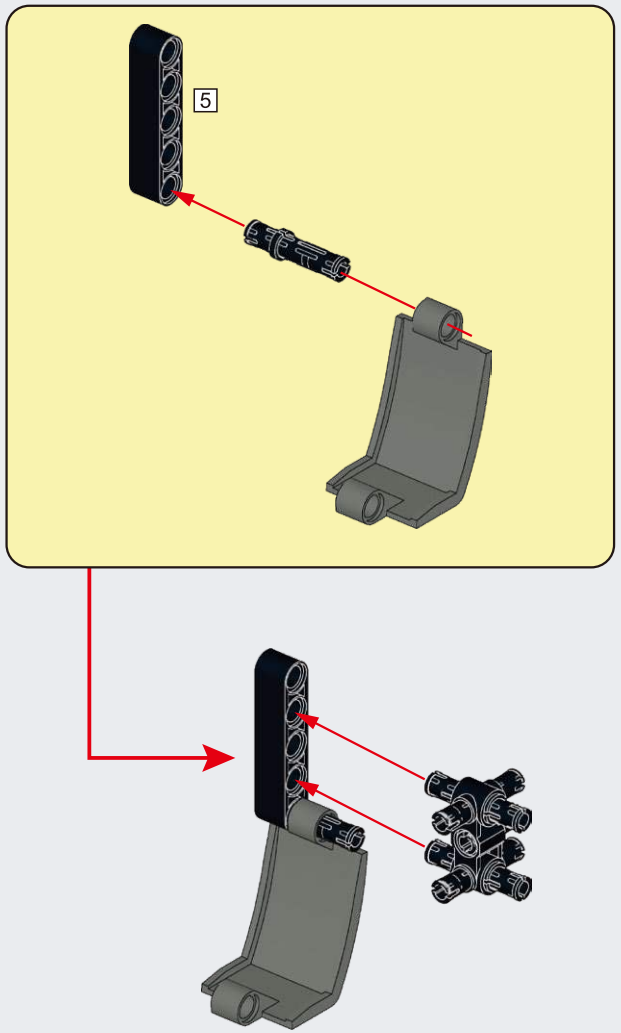

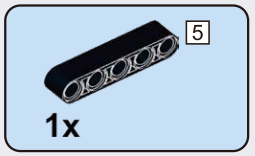

D6

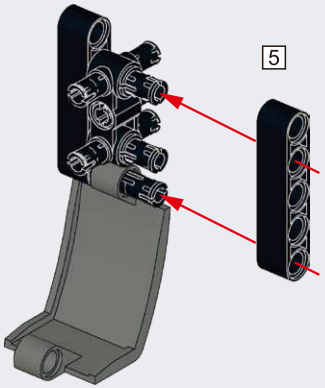

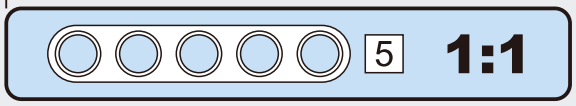

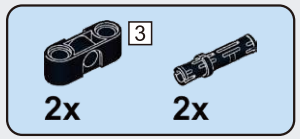

D7

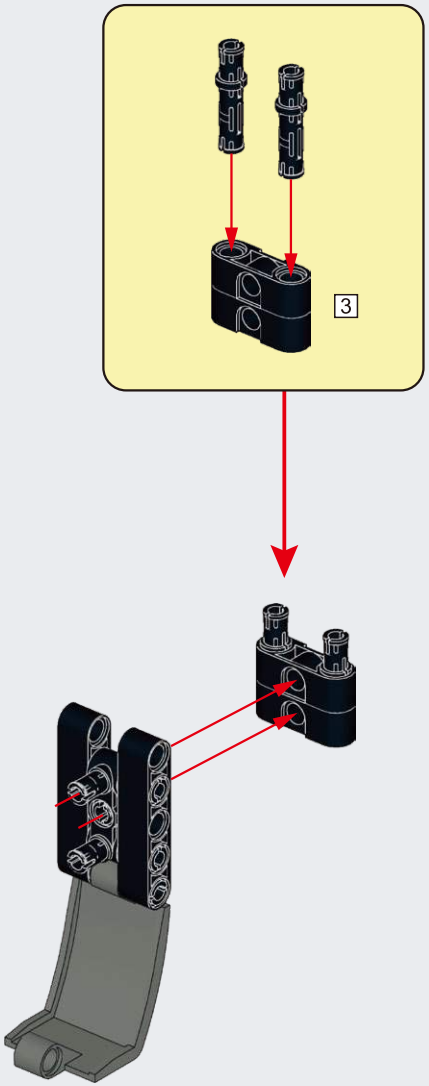

D8

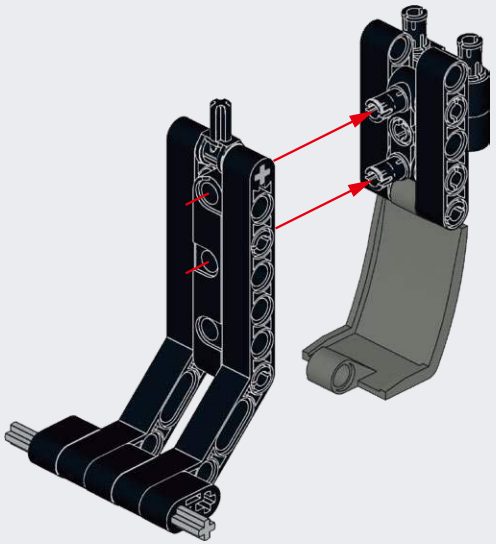

D9

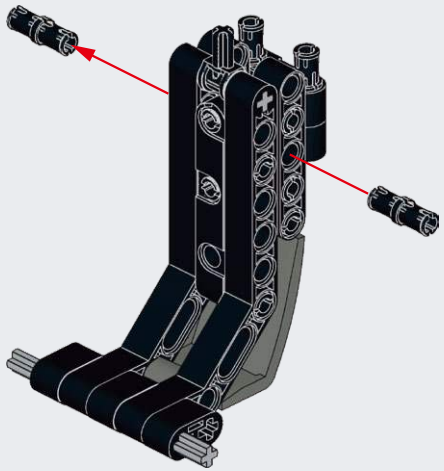

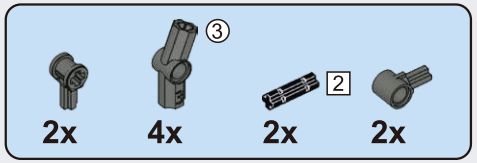

D10

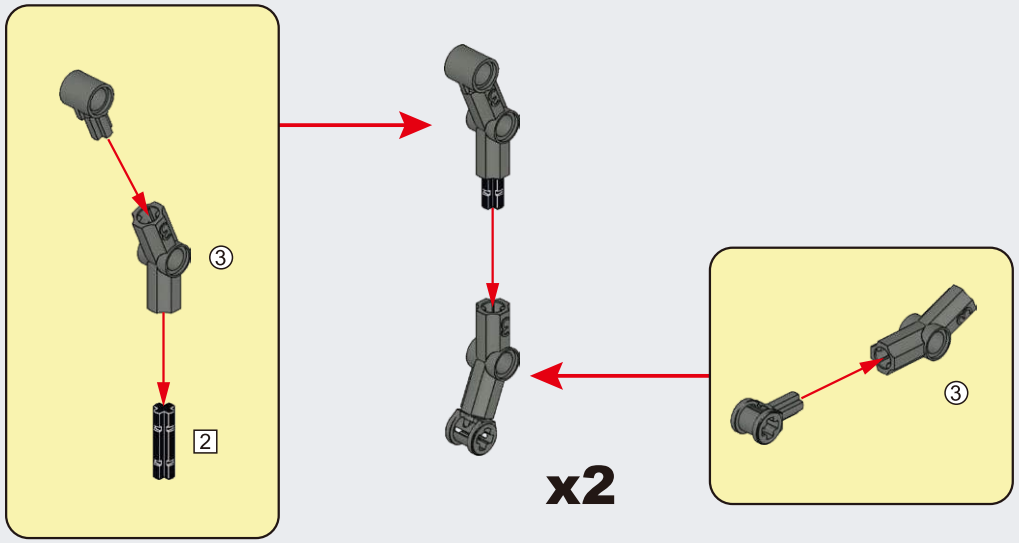

D11

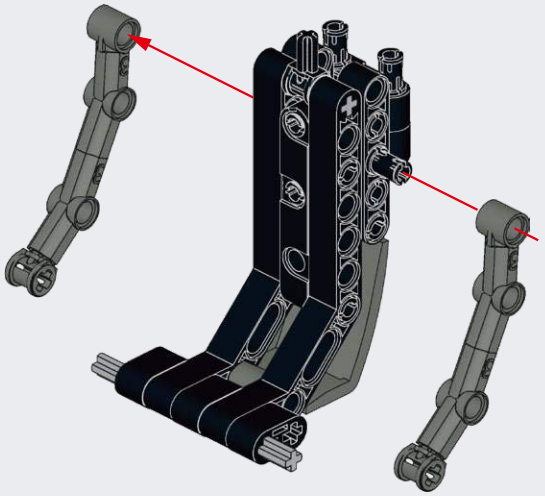

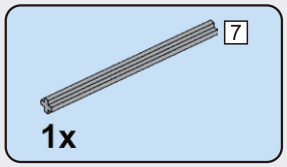

D12

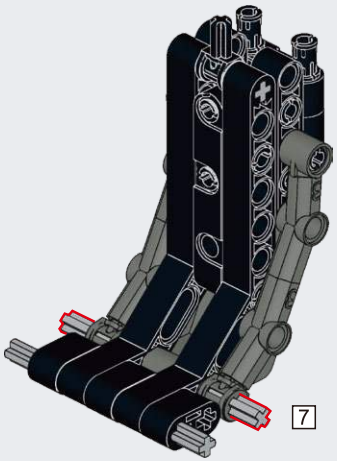

D13

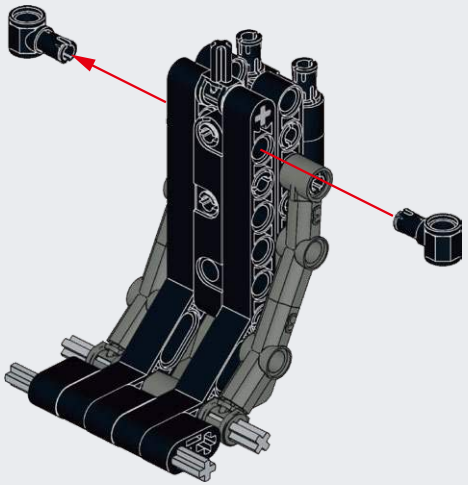

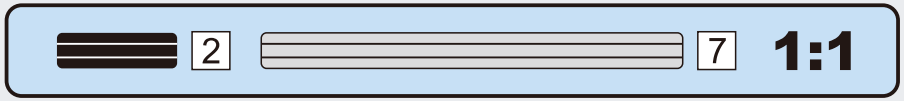

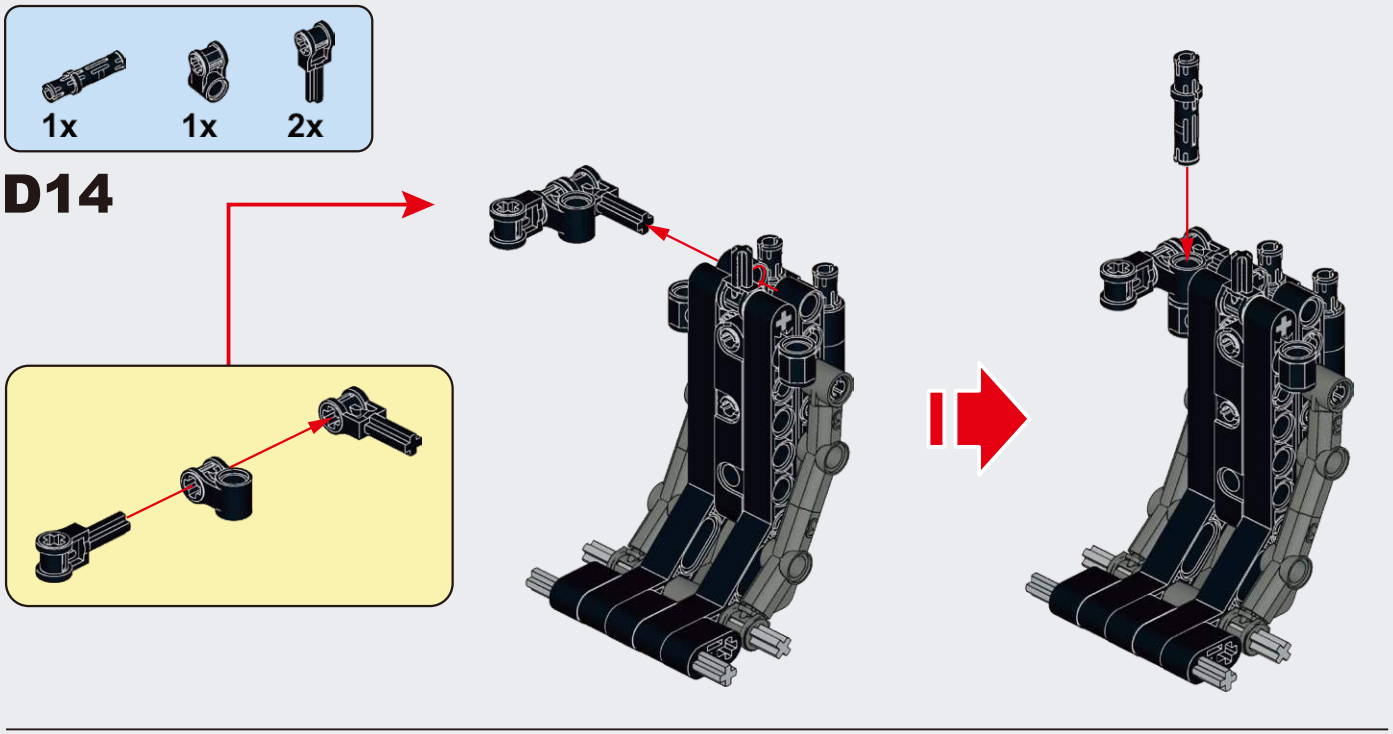

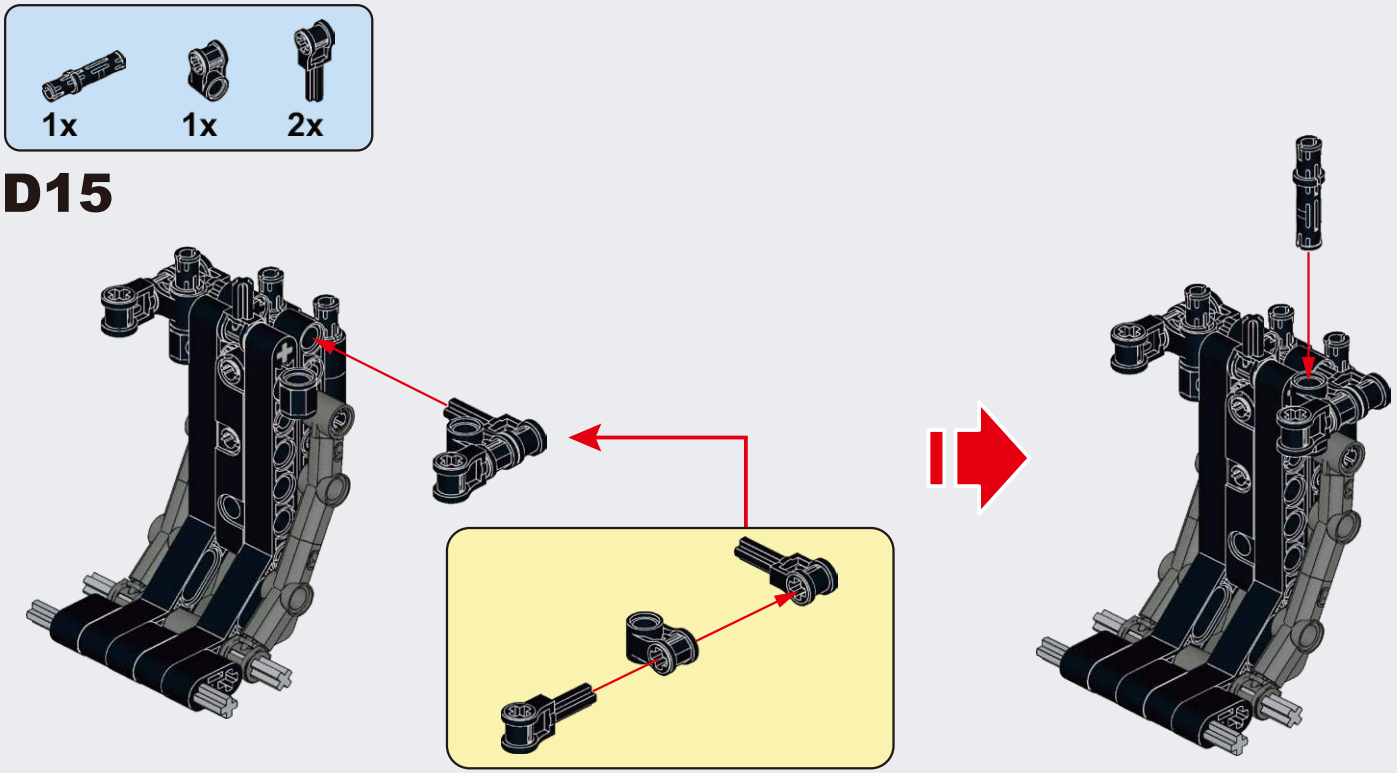

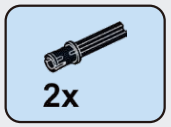

D16

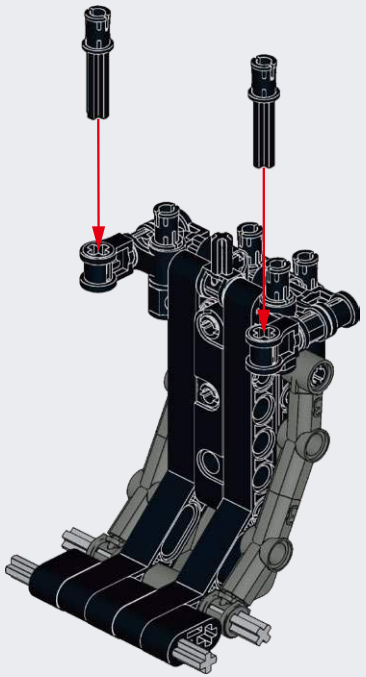

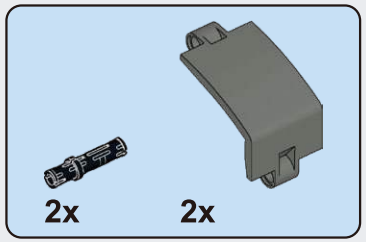

D17

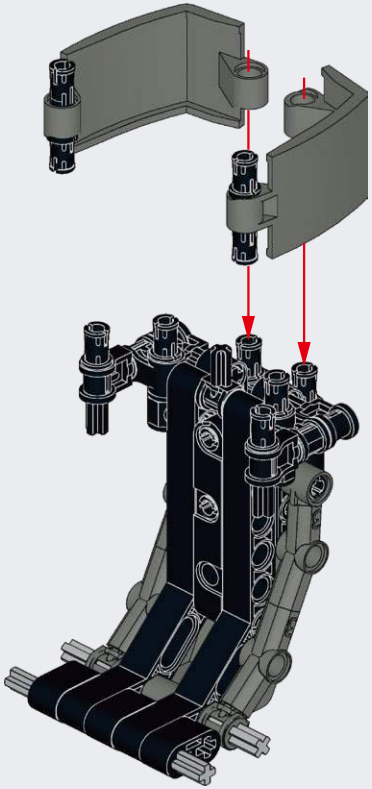

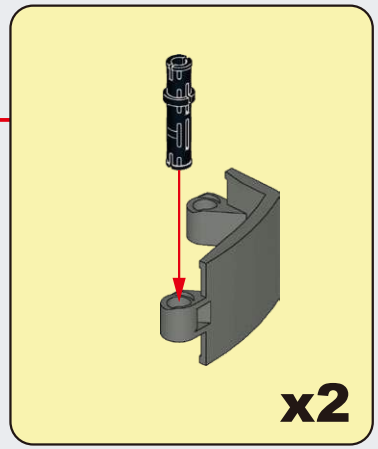

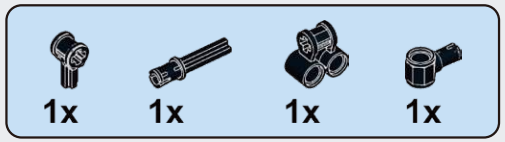

D18

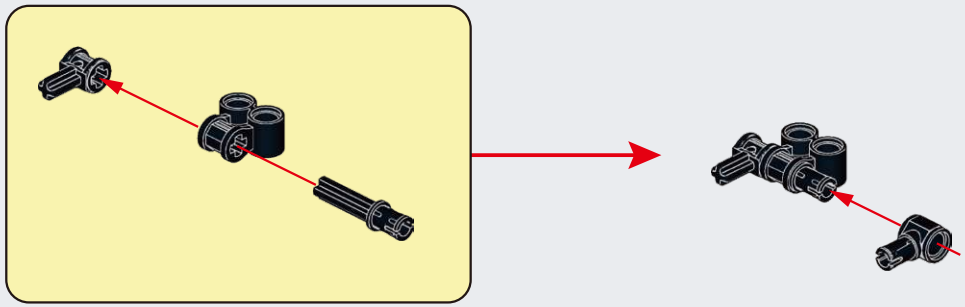

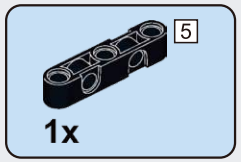

D19

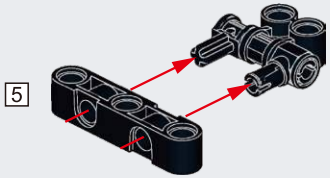

D20

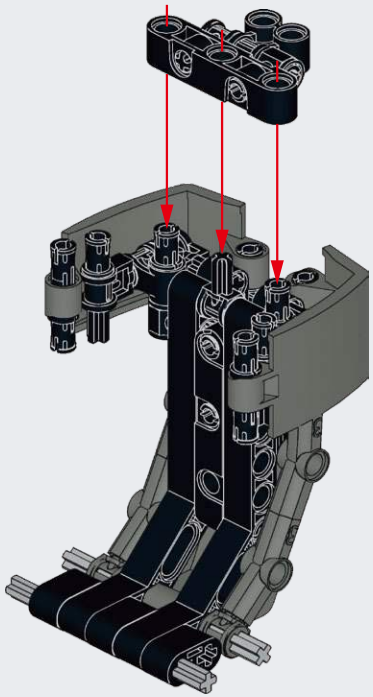

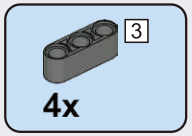

D21

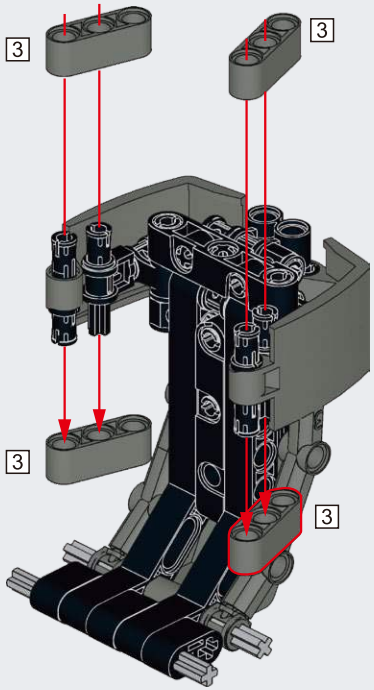

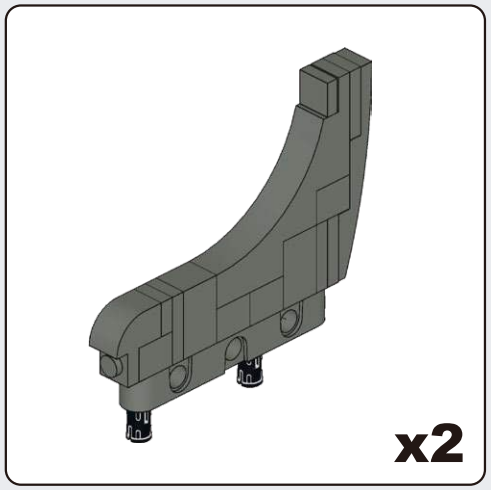

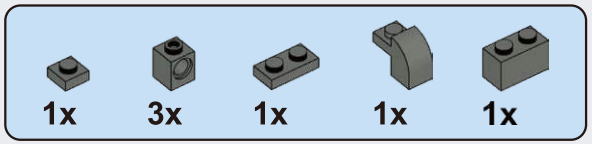

D22

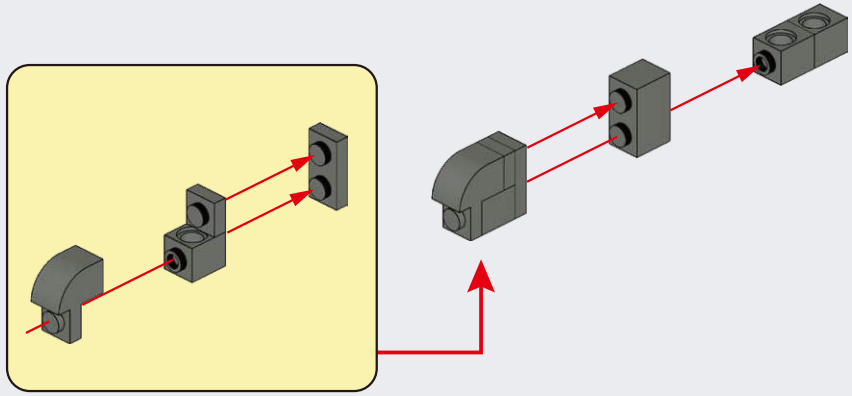

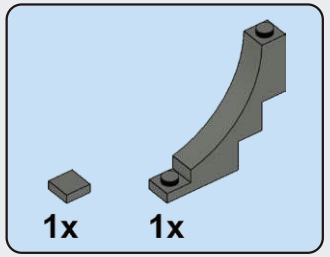

D23

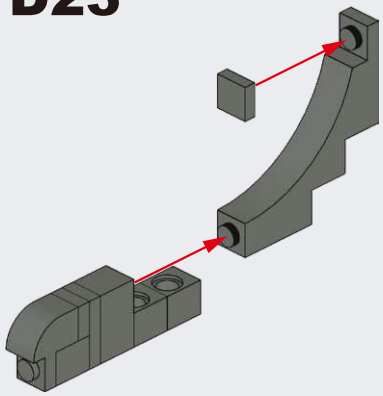

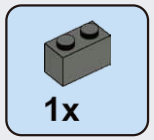

D24

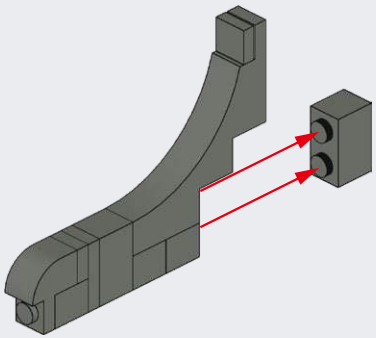

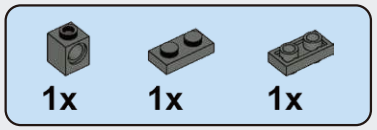

D25

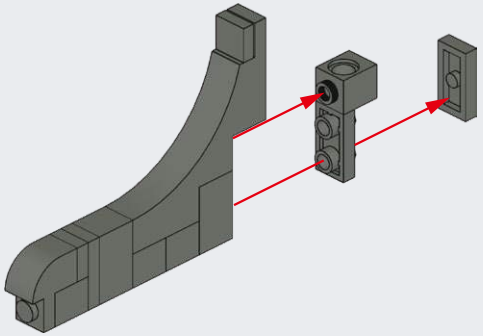

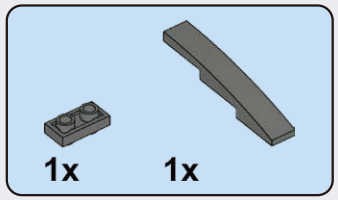

D26

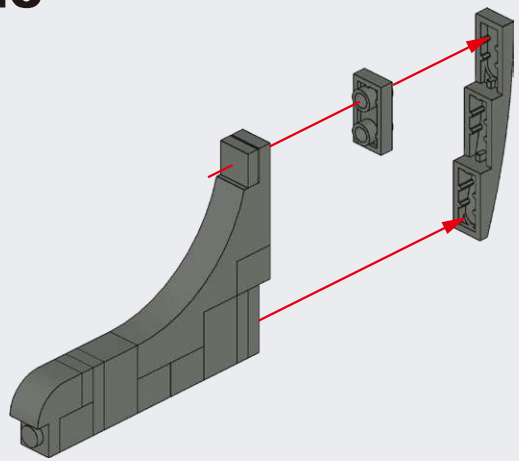

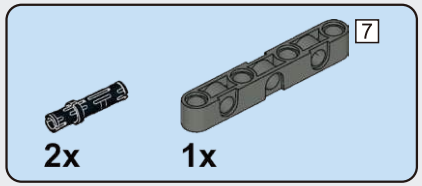

D27

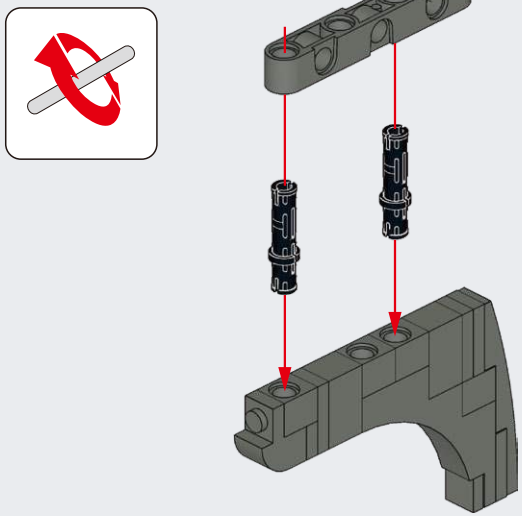

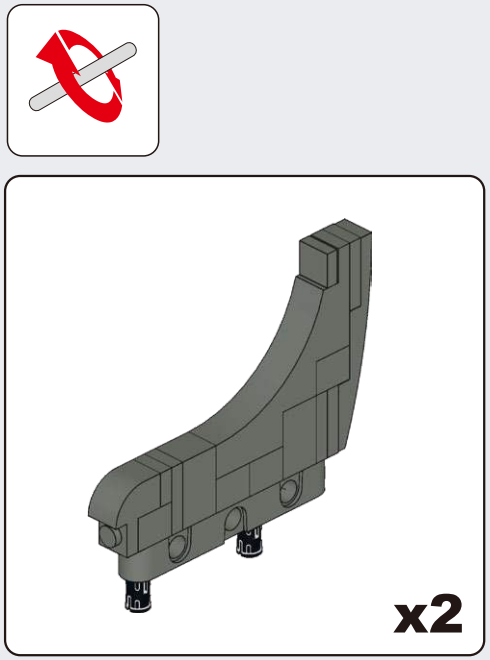

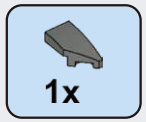

D28

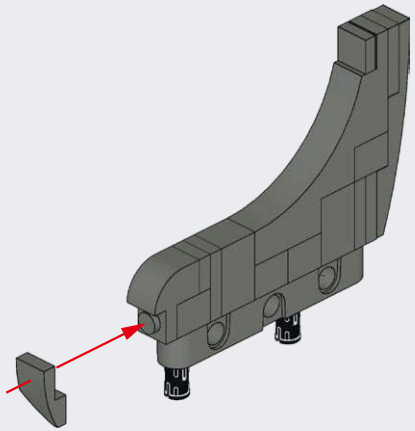

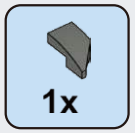

D29

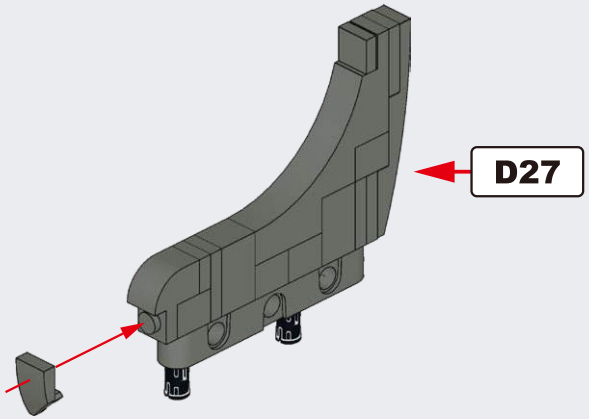

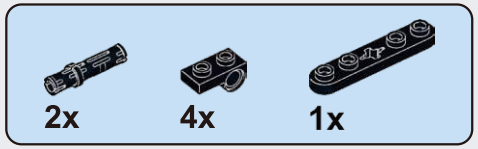

D30

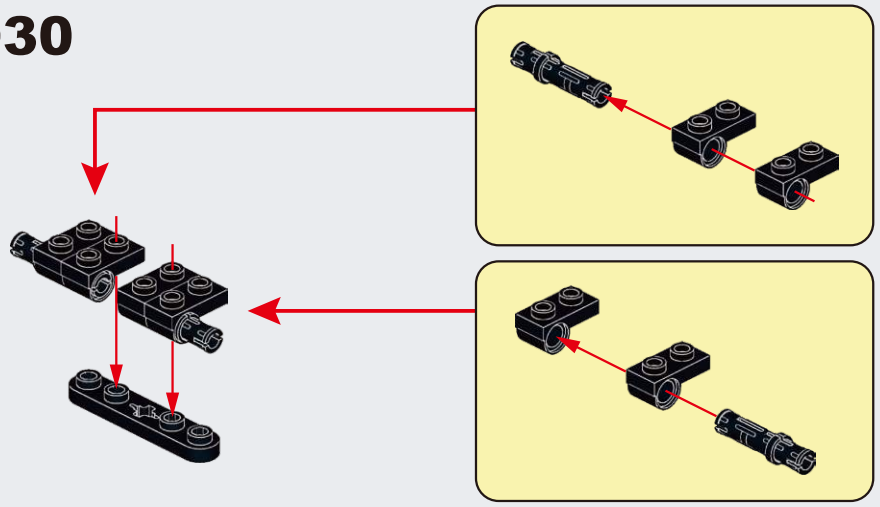

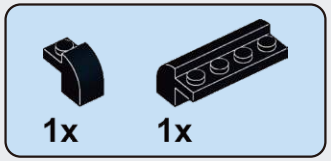

D31

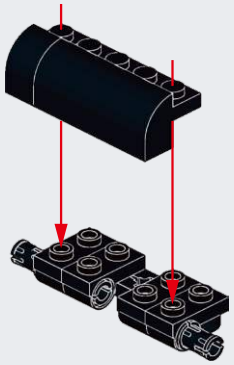

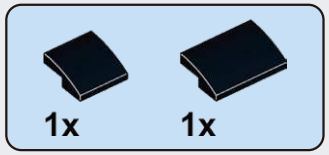

D32

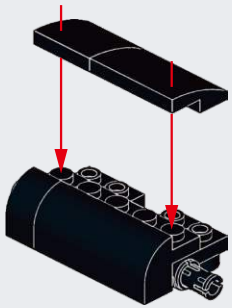

D33

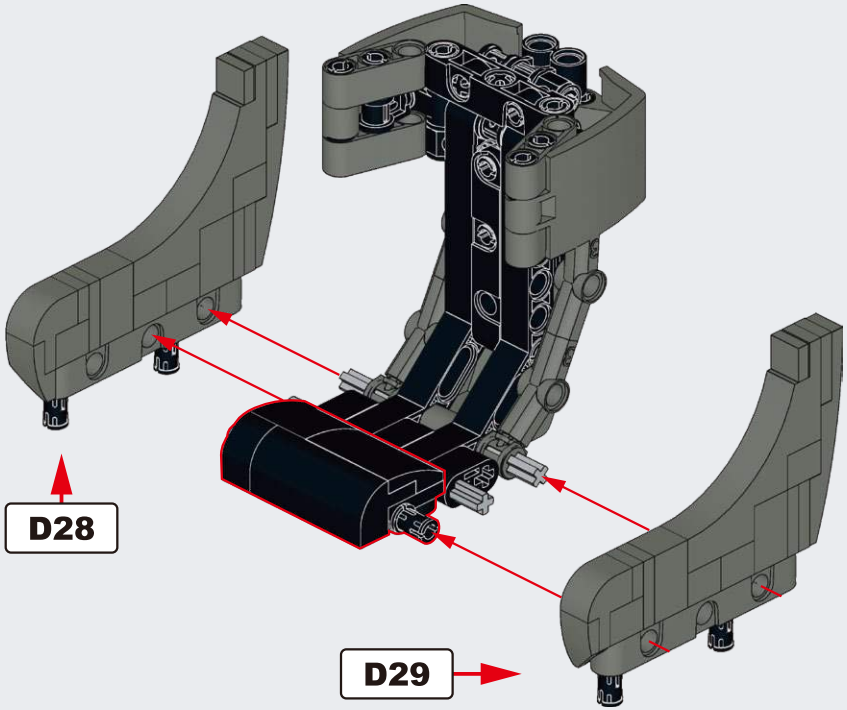

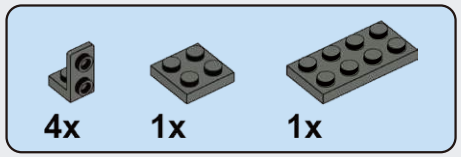

D34

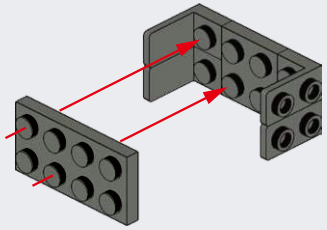

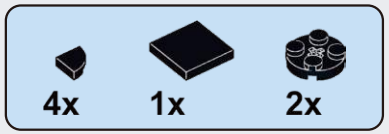

D35

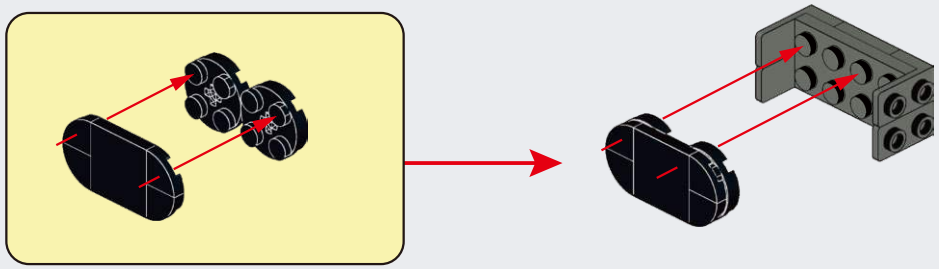

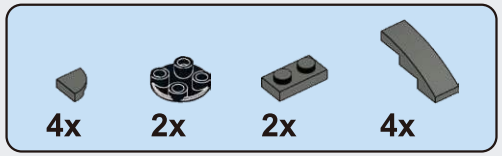

D36

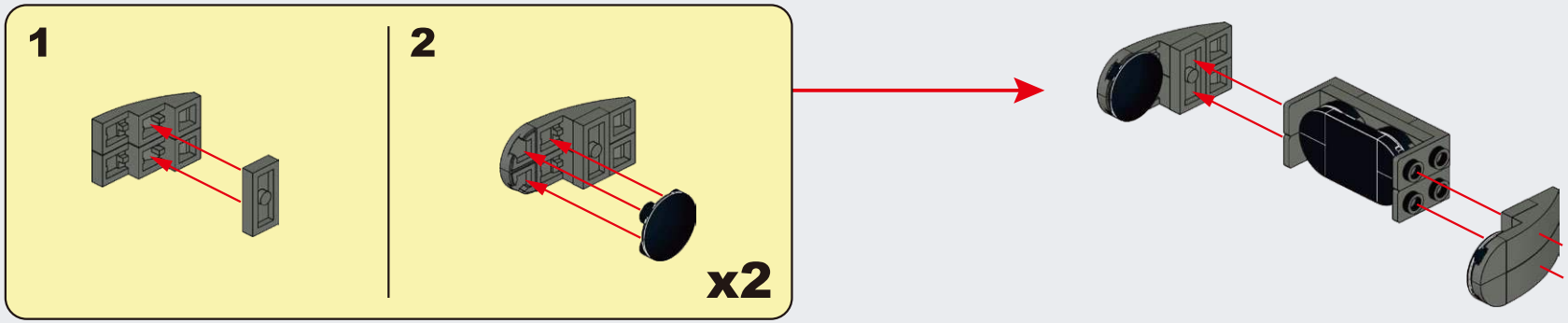

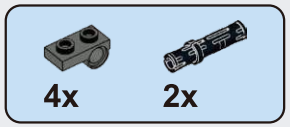

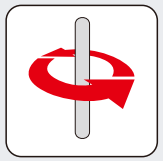

D37

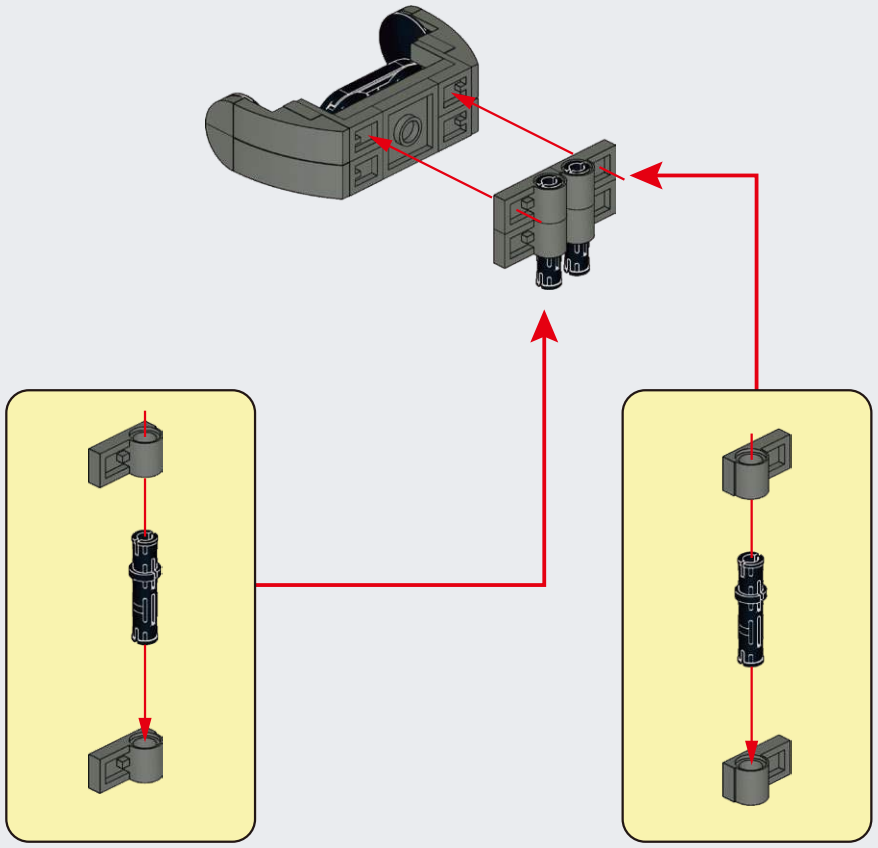

D38

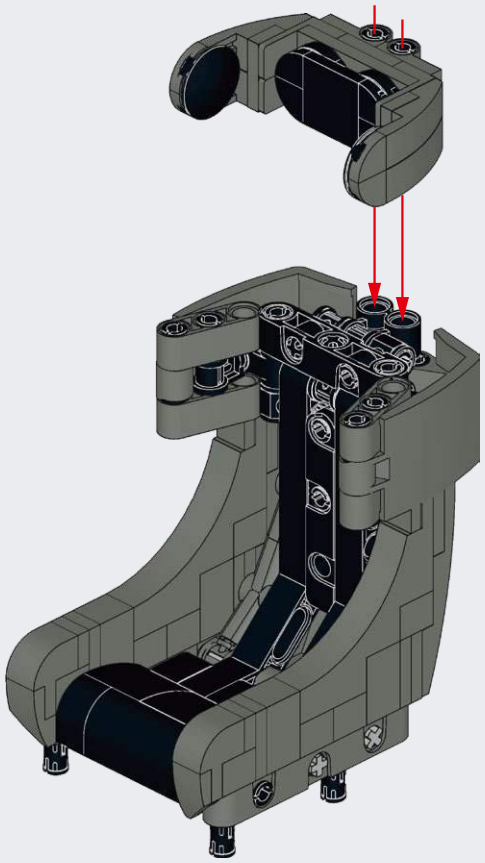

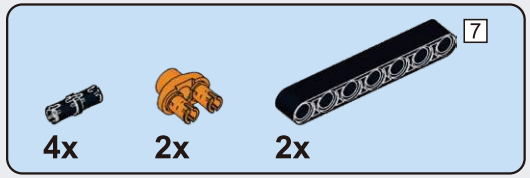

D39

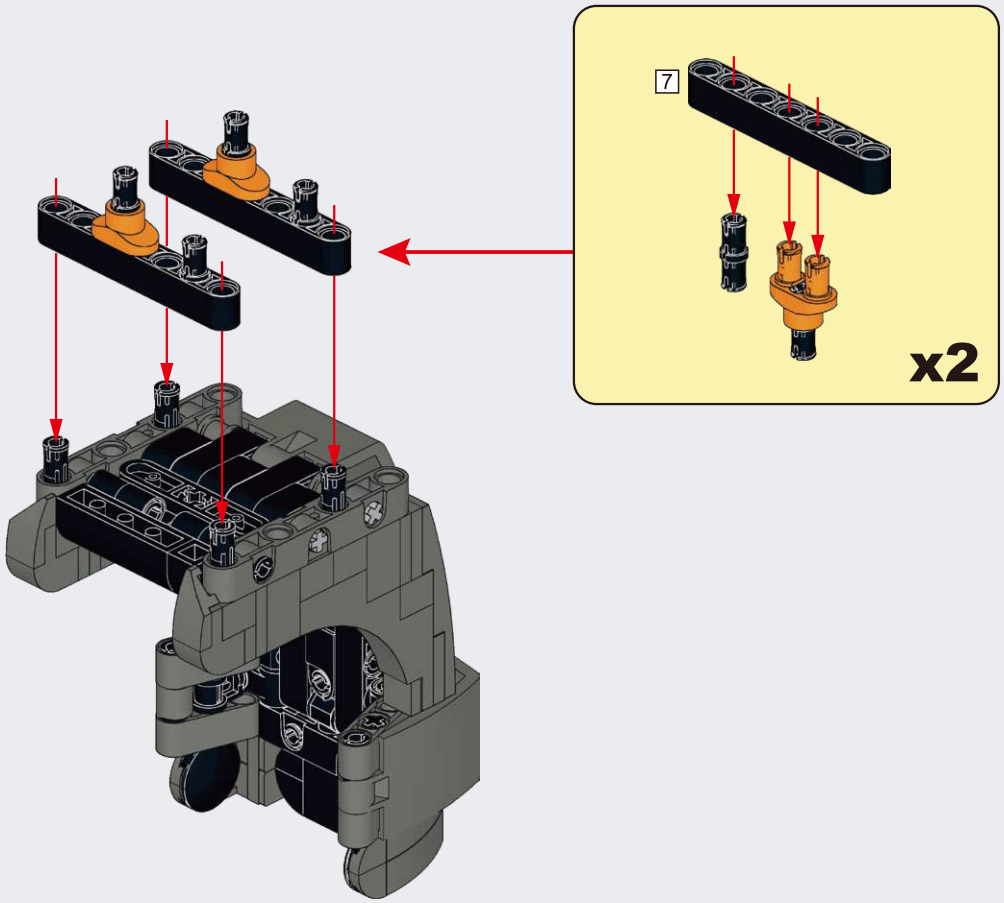

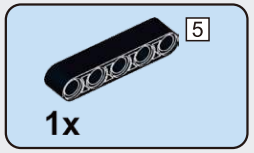

D40

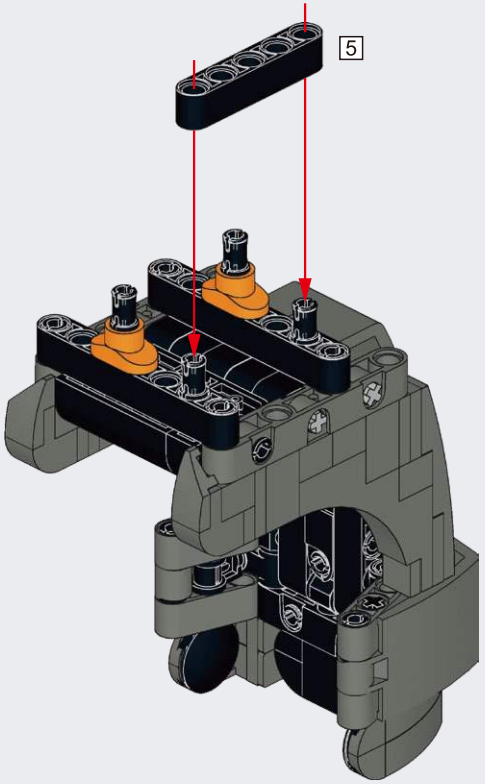

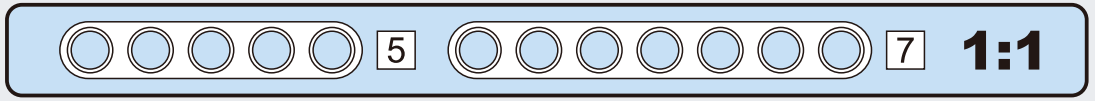

D41

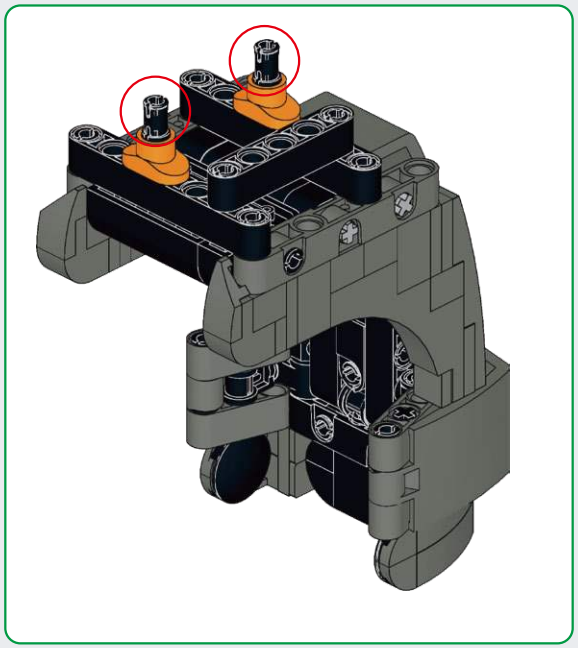

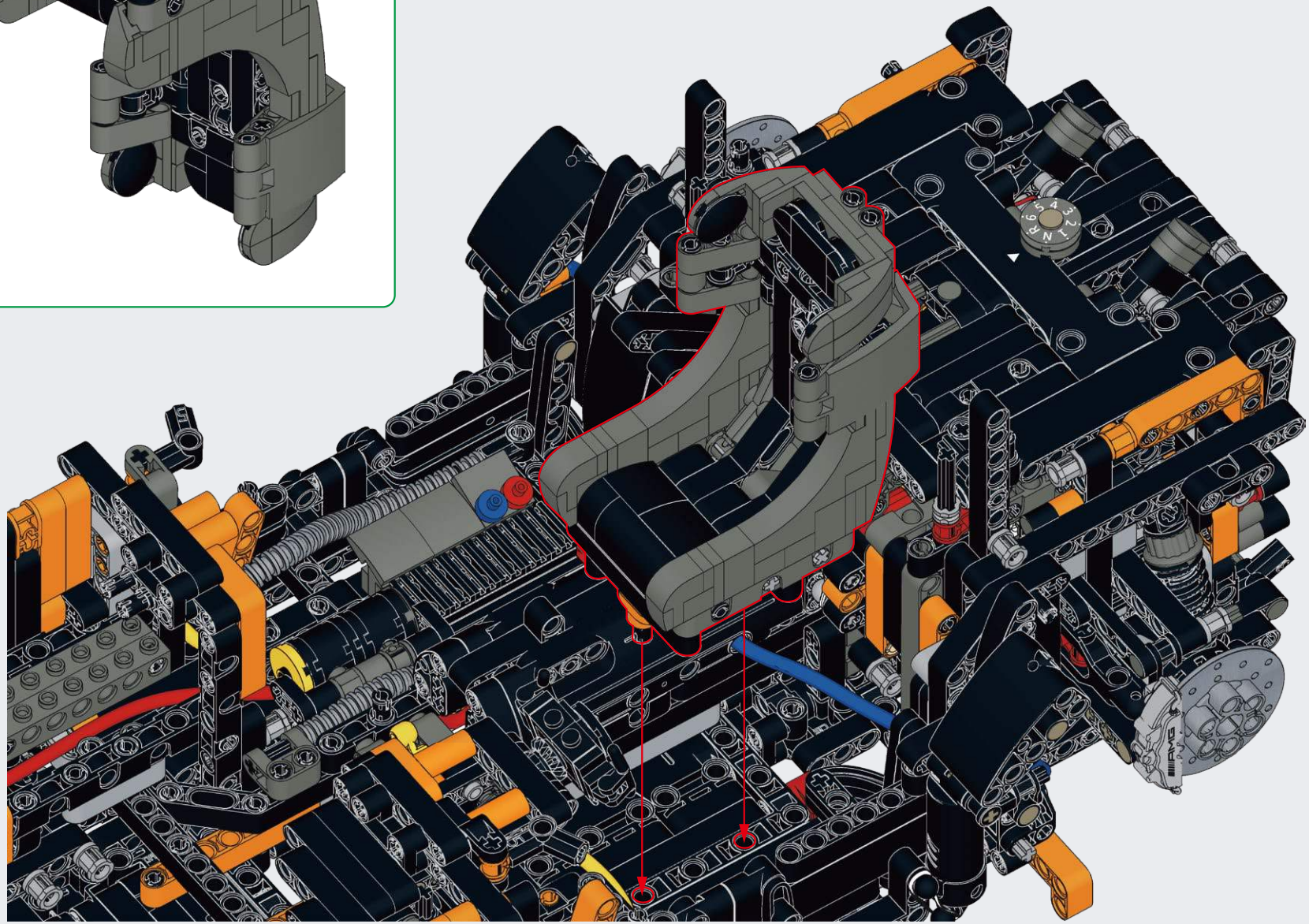

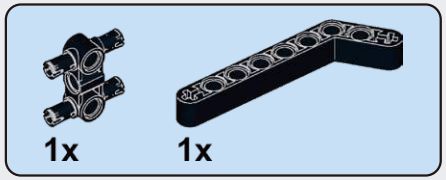

D42

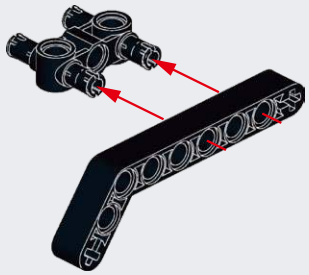

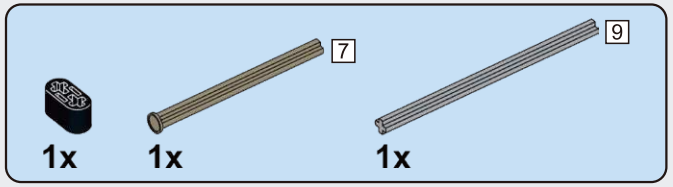

D43

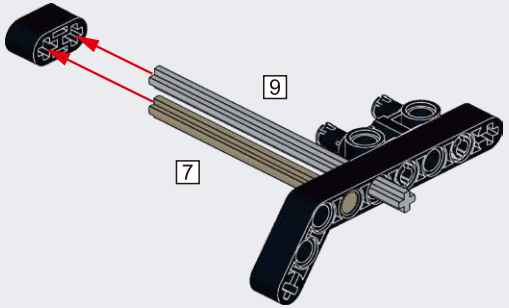

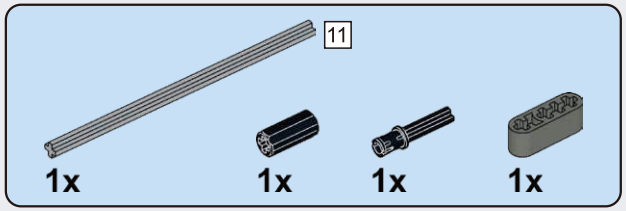

D44

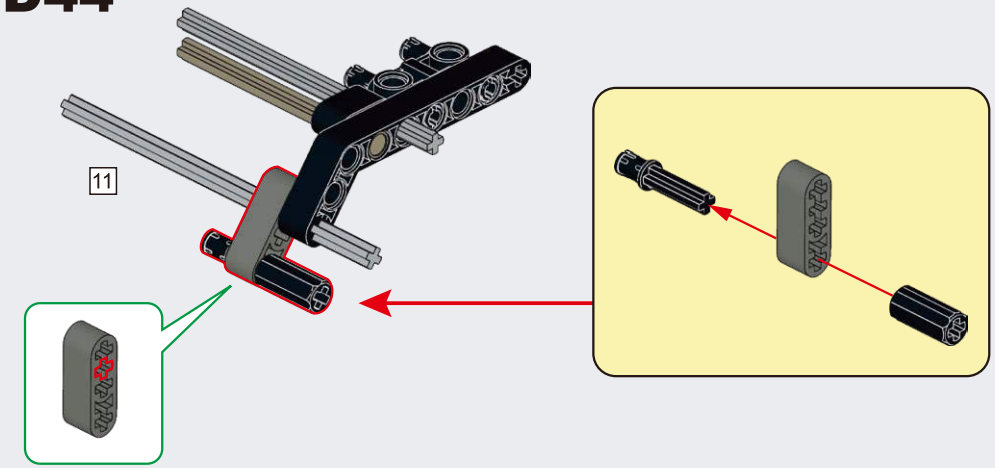

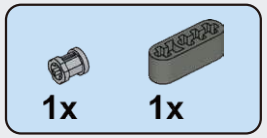

D45

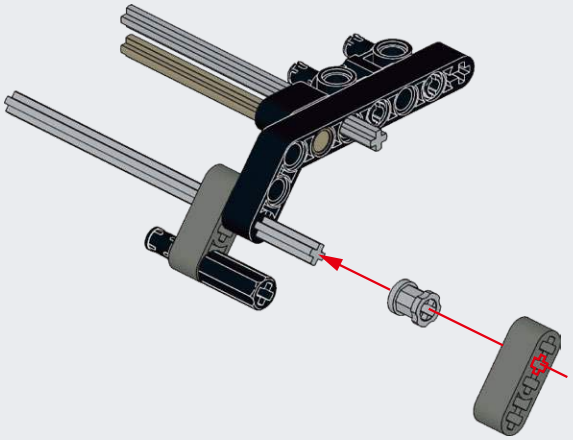

D46

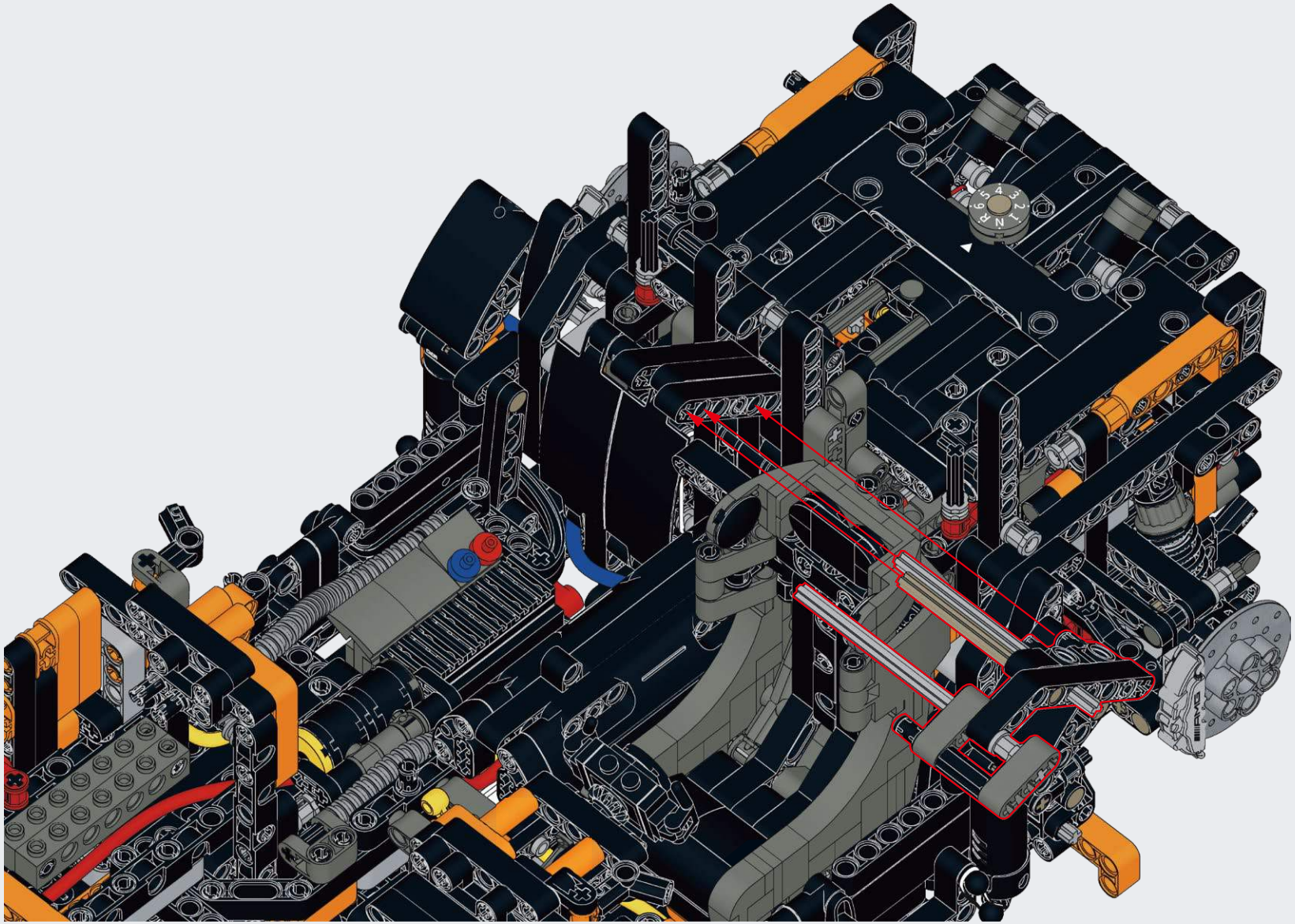

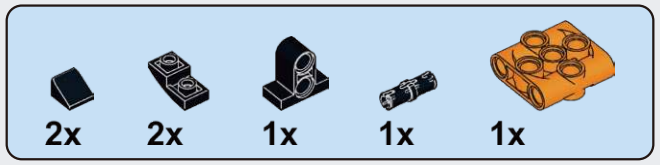

D47

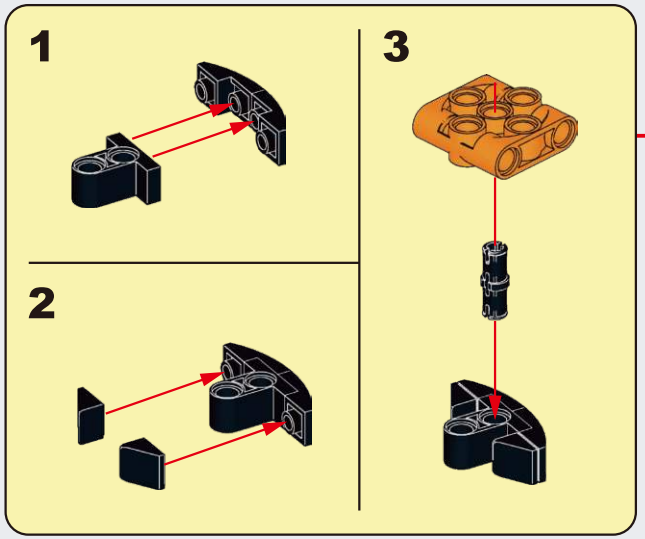

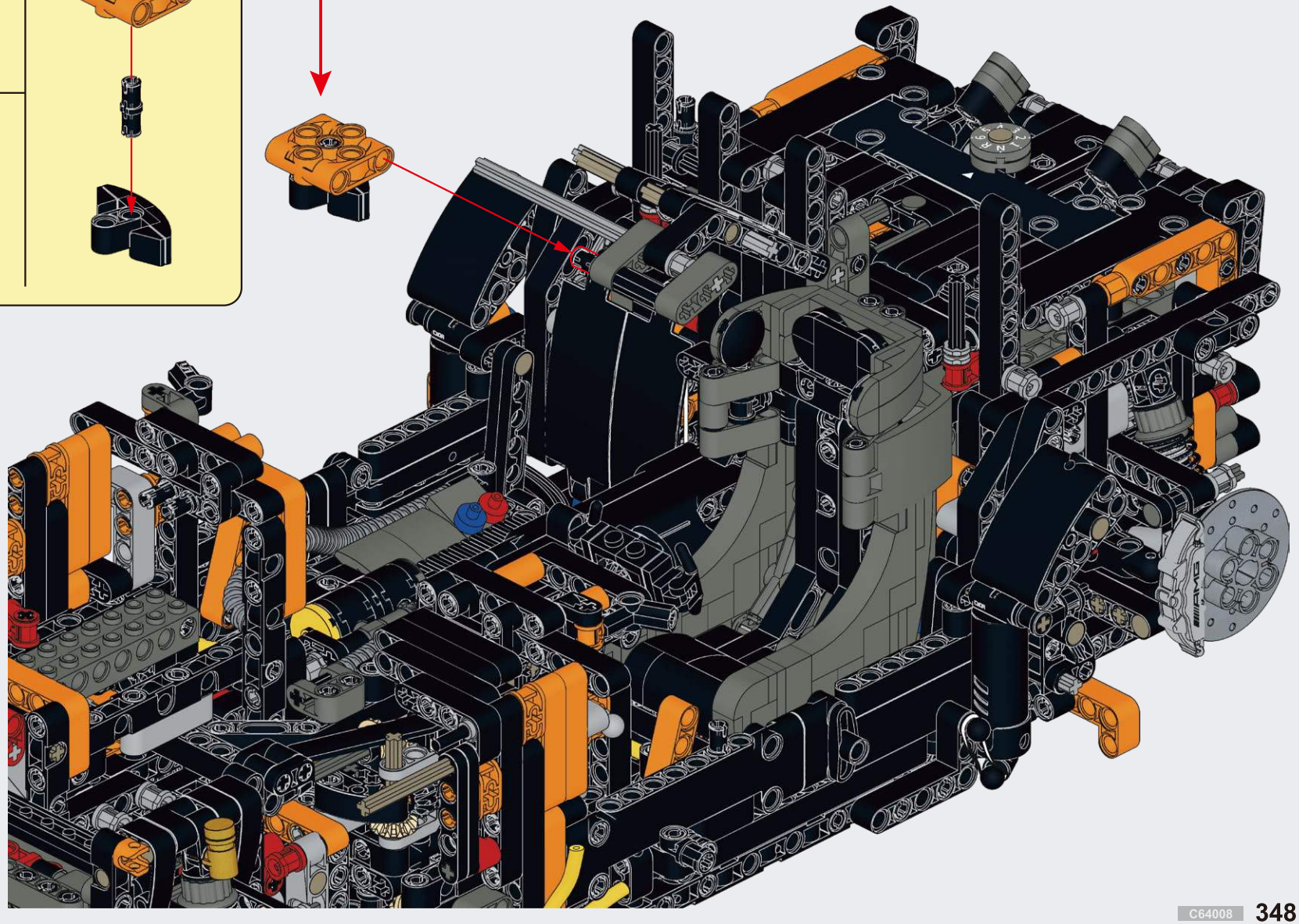

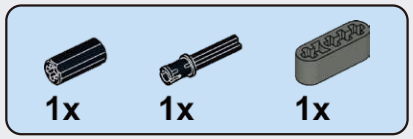

D48

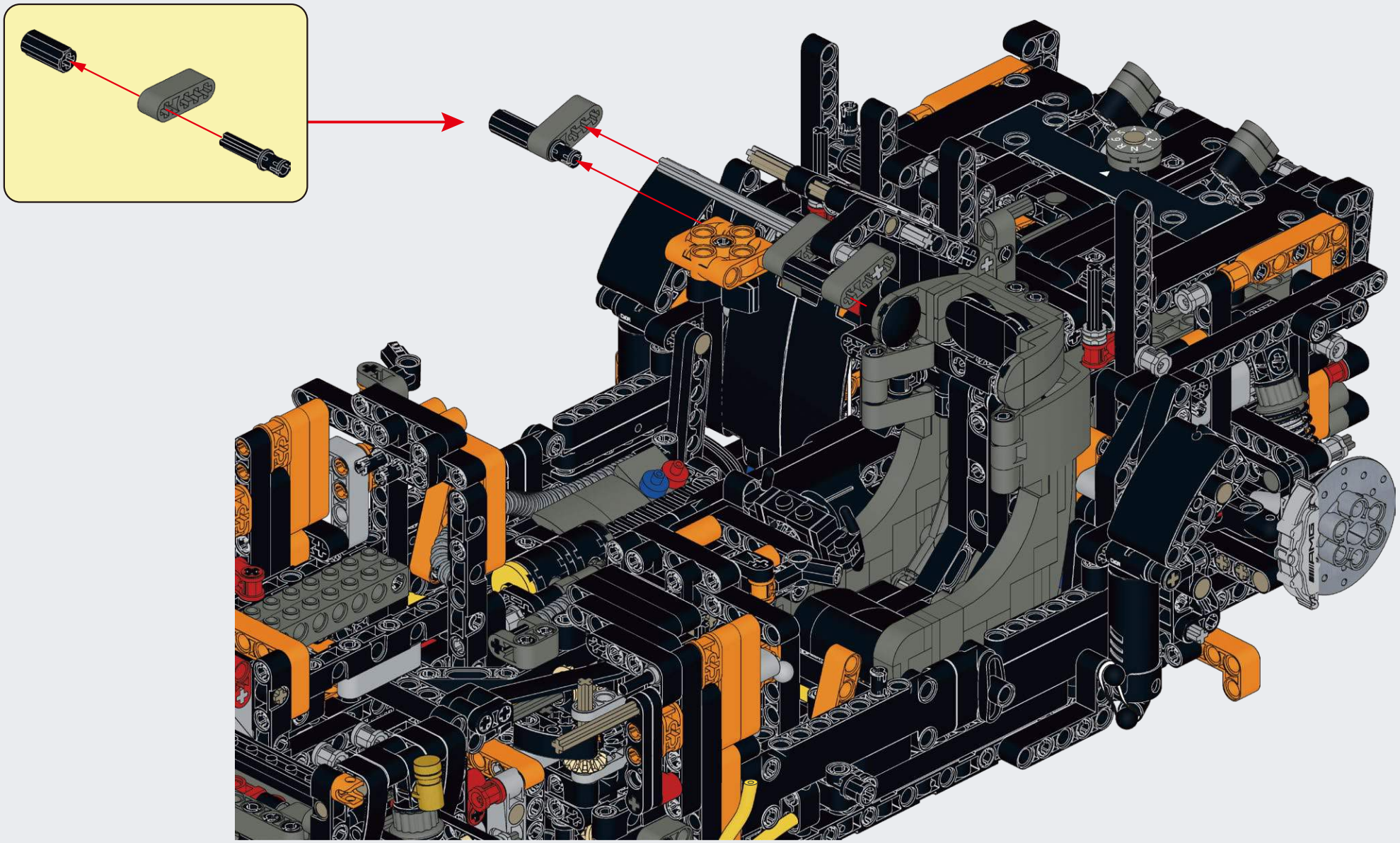

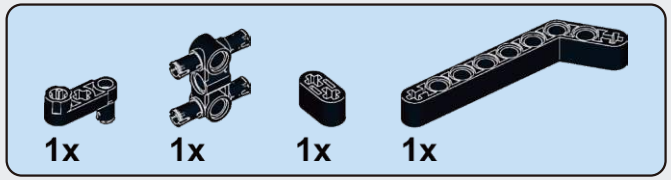

D49

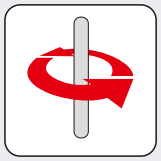

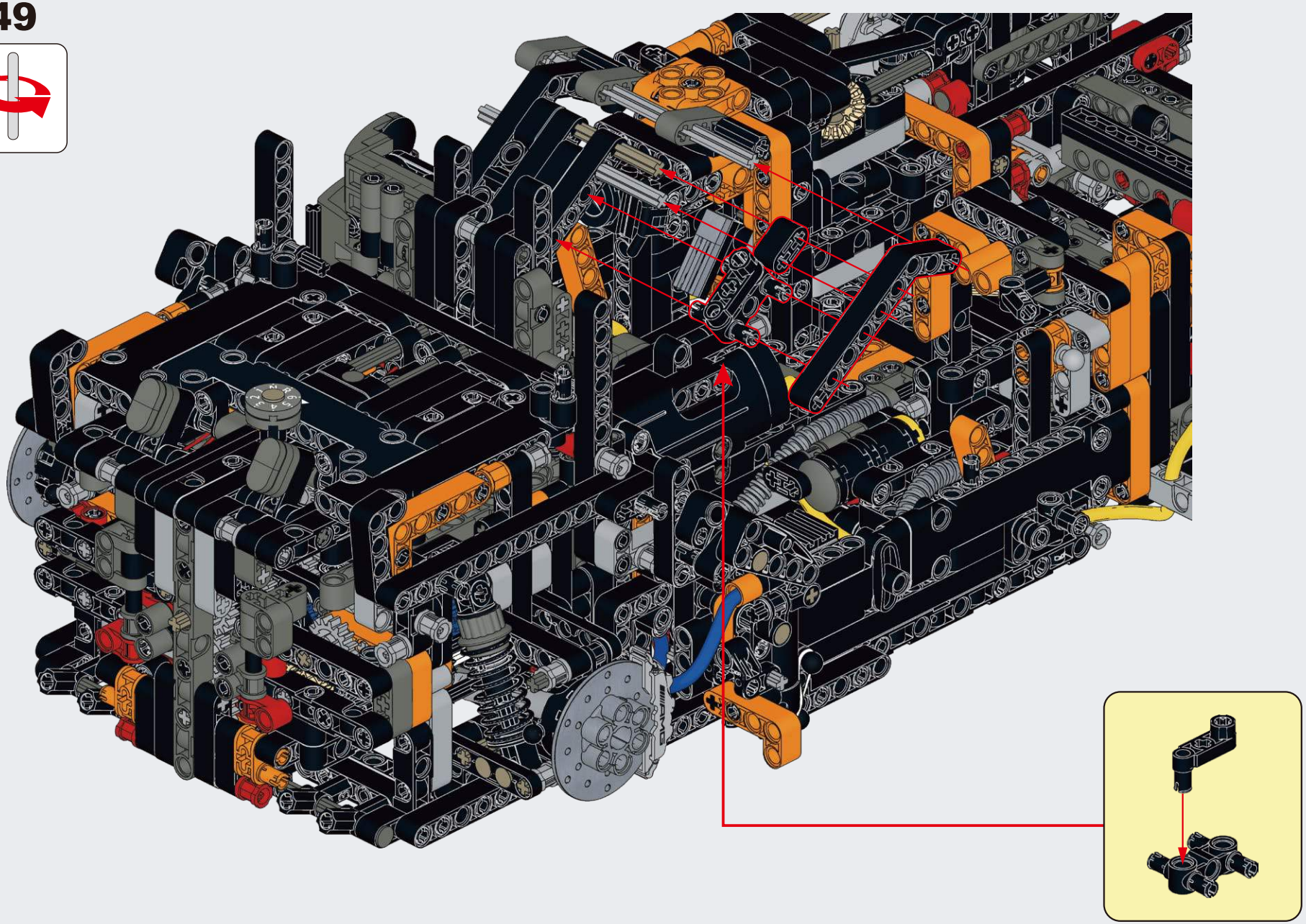

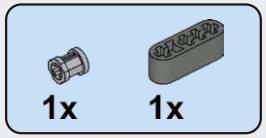

D50

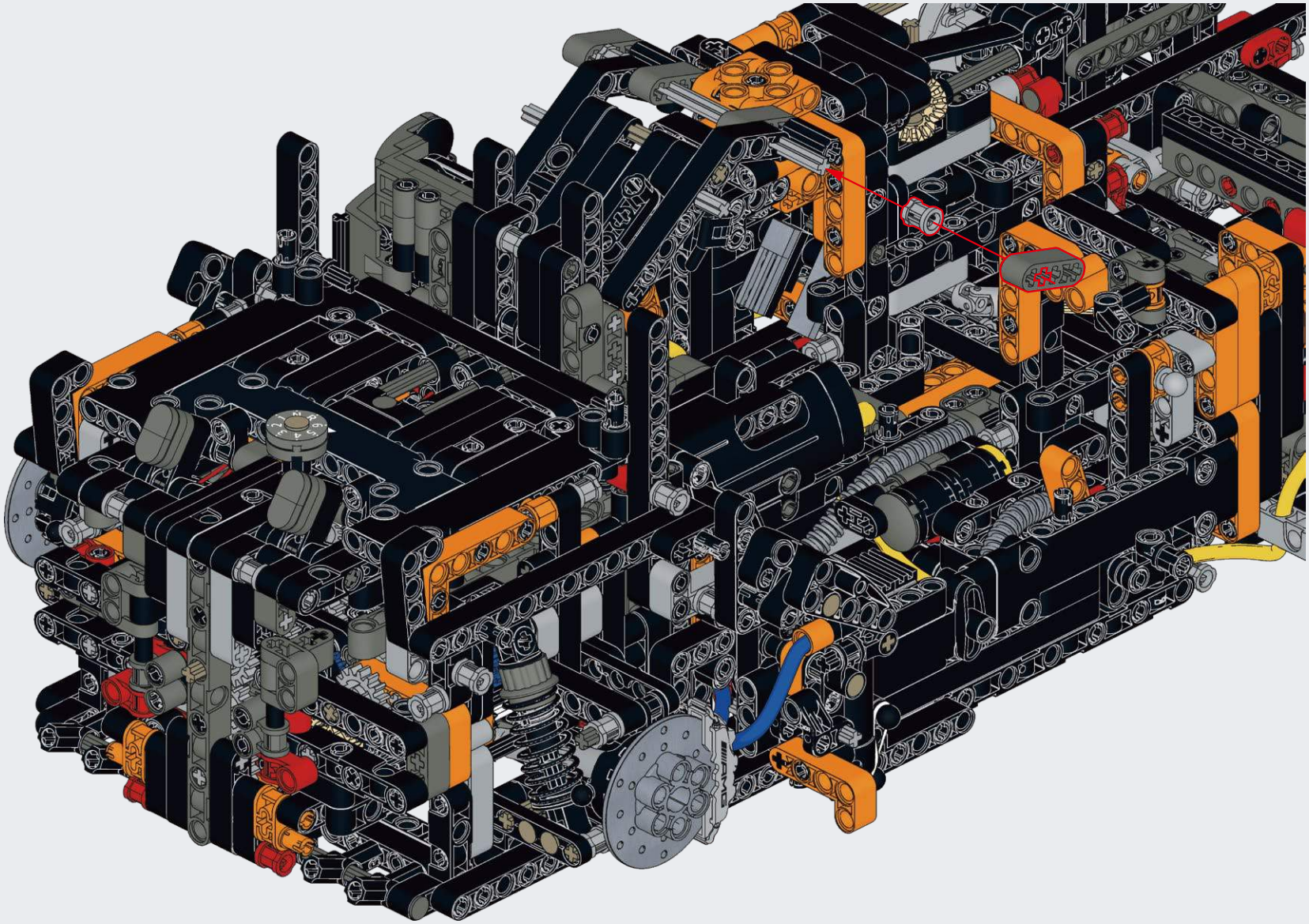

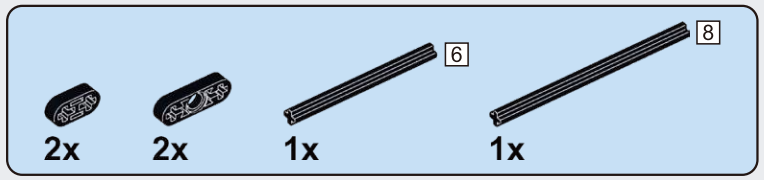

D51

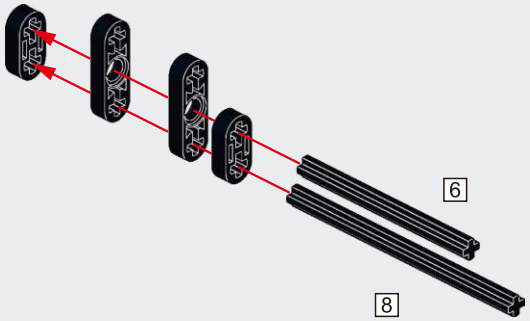

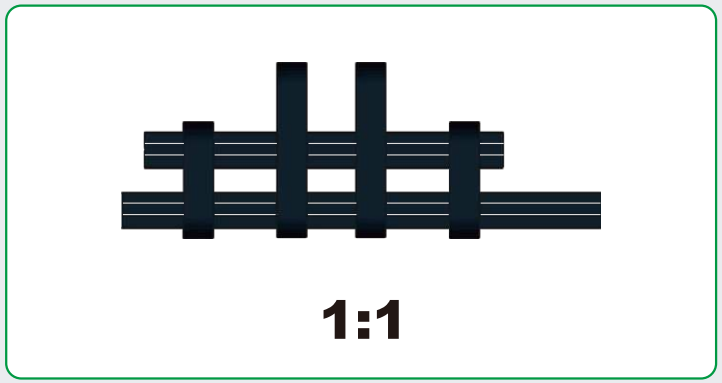

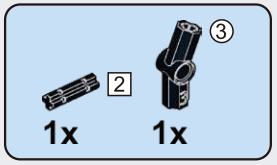

D52

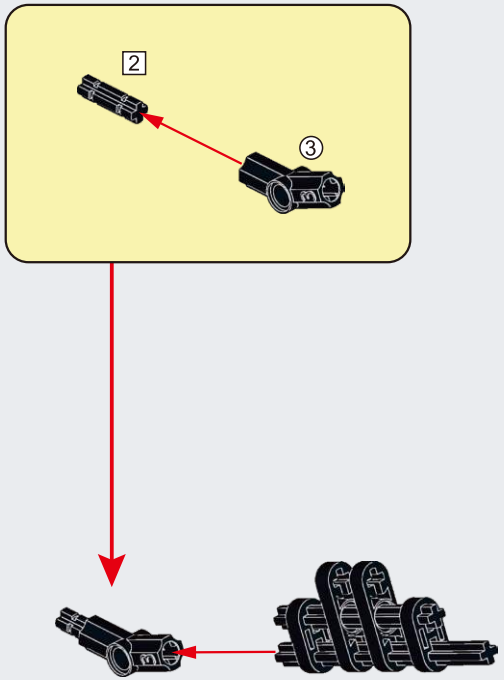

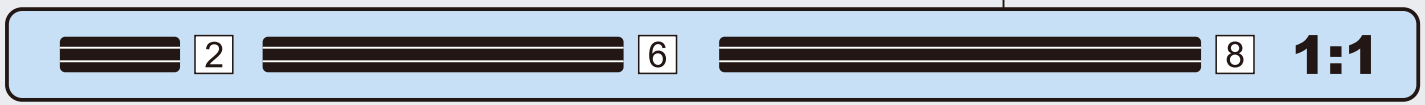

D53

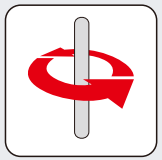

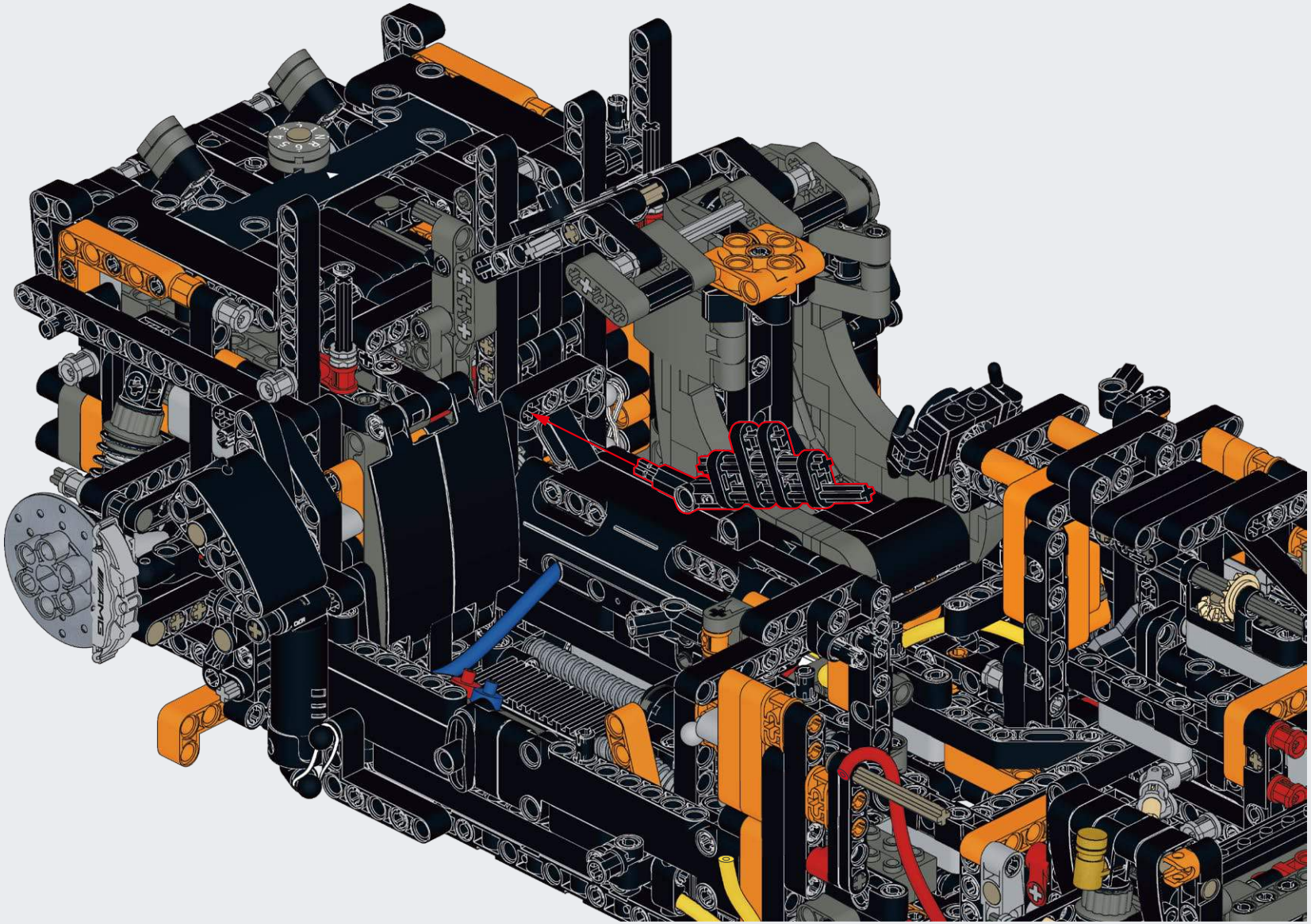

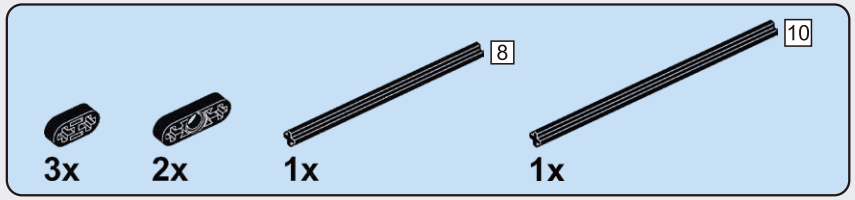

D54

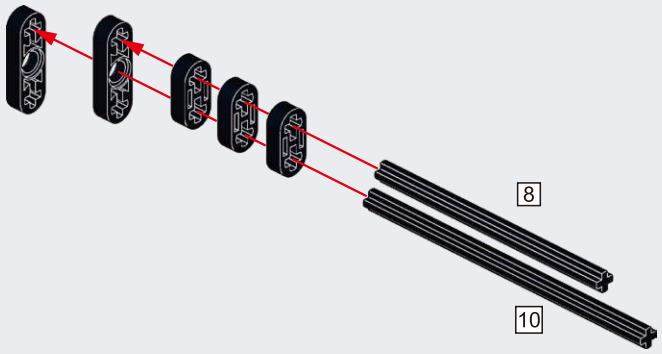

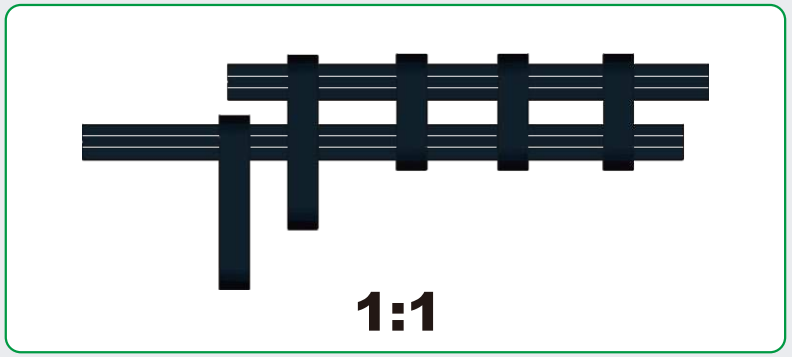

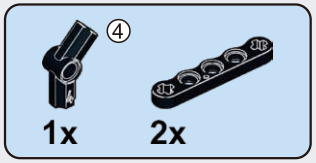

D55

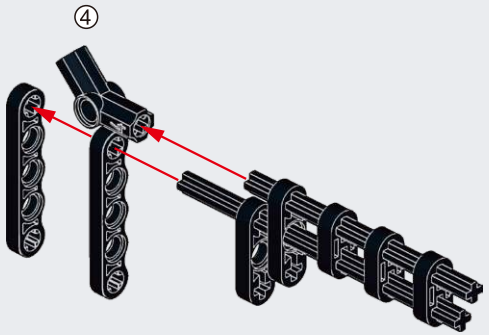

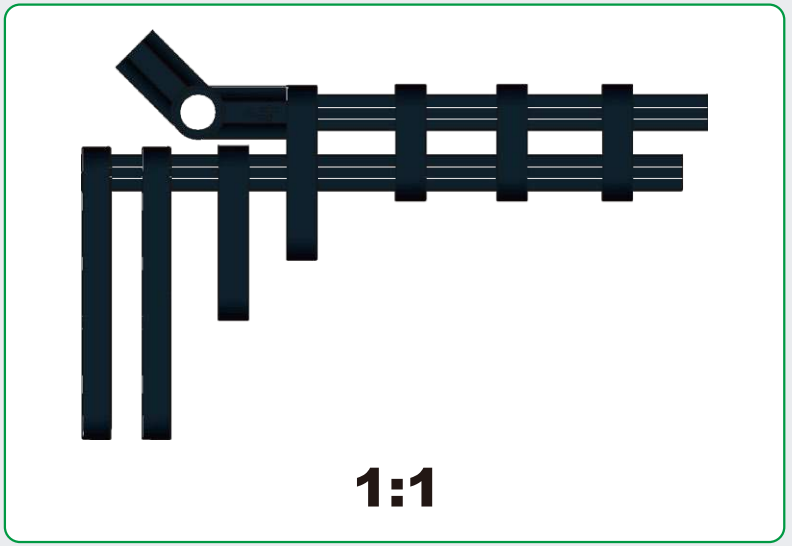

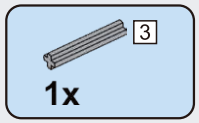

D56

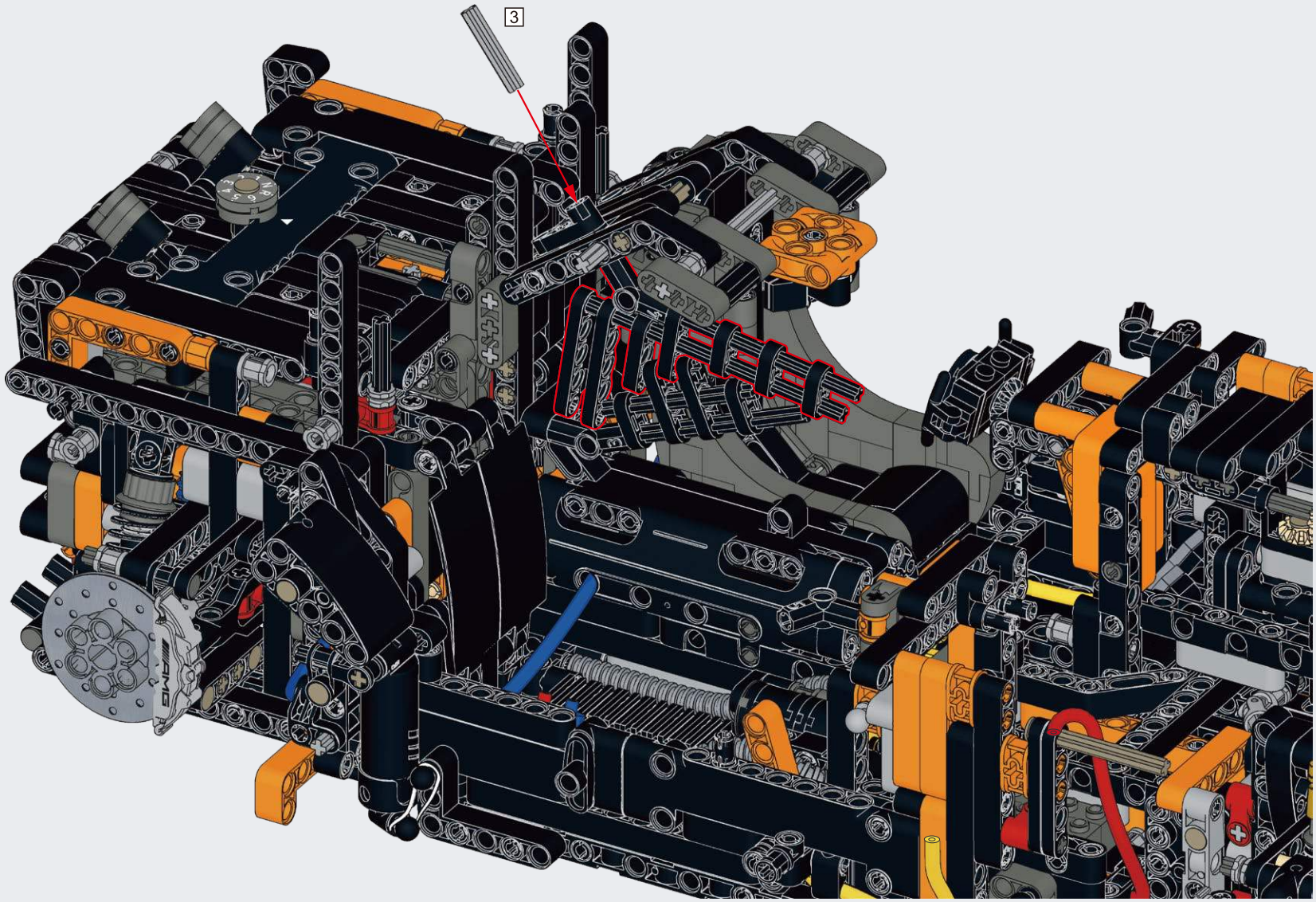

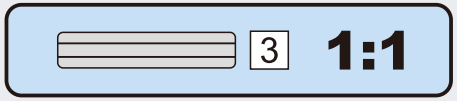

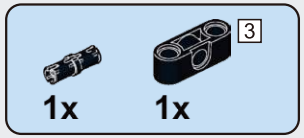

D57

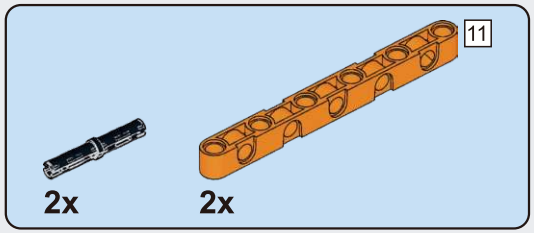

D58

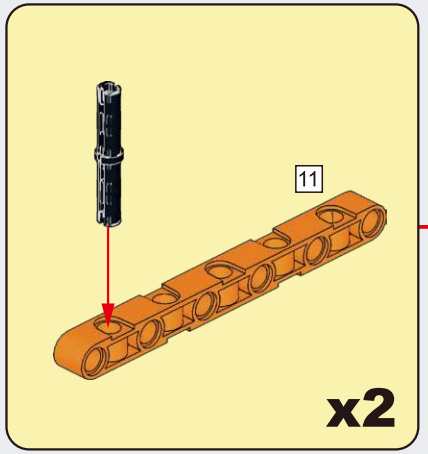

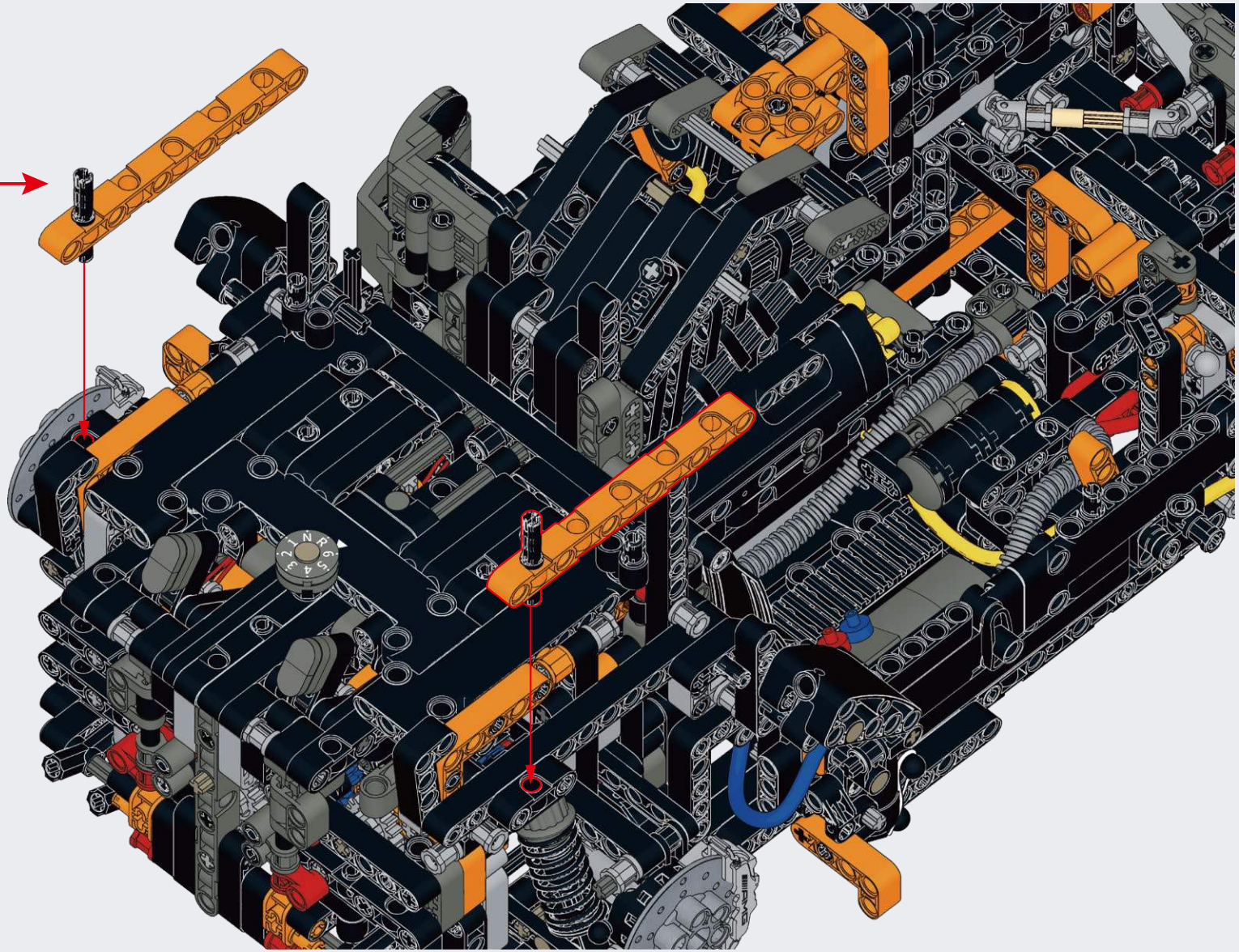

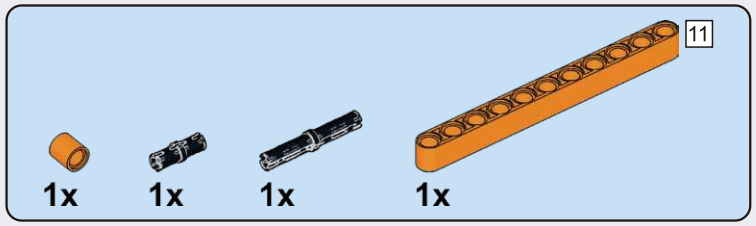

D59

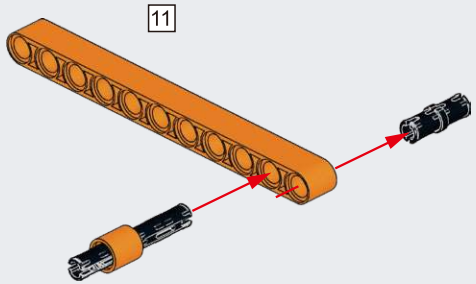

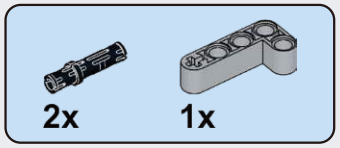

D60

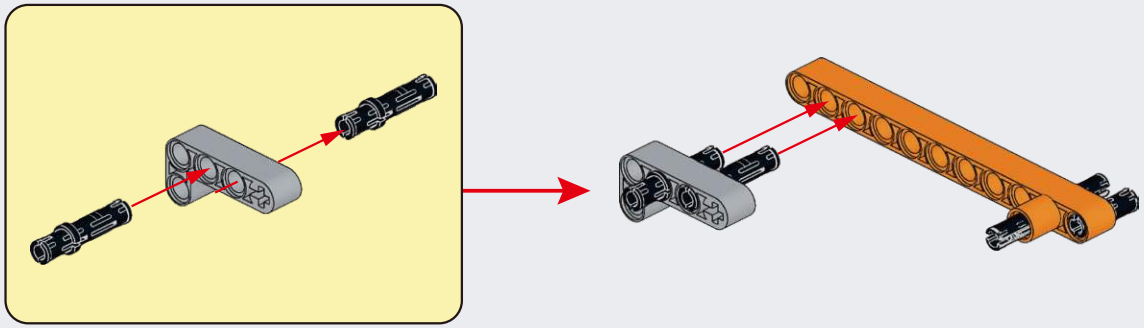

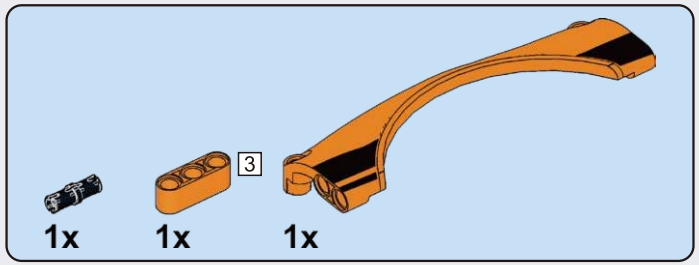

D61

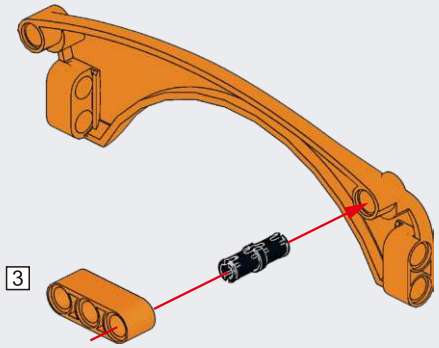

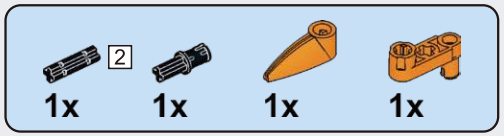

D62

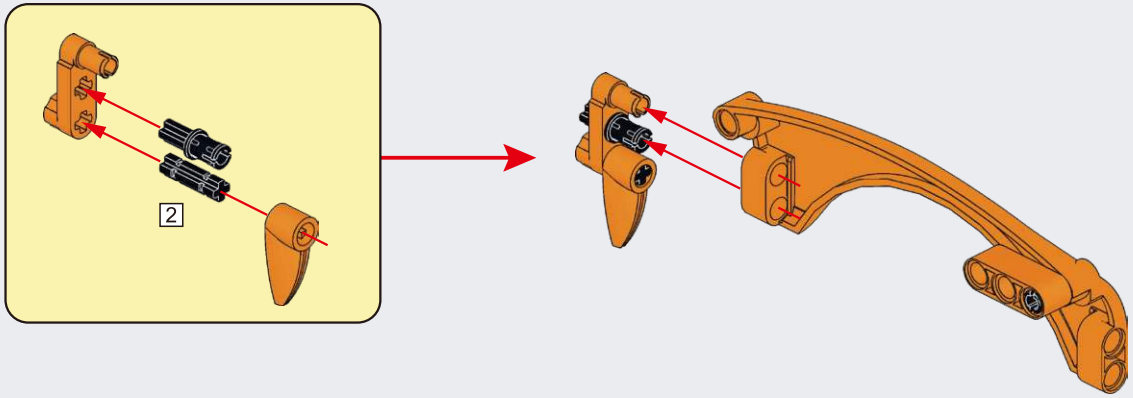

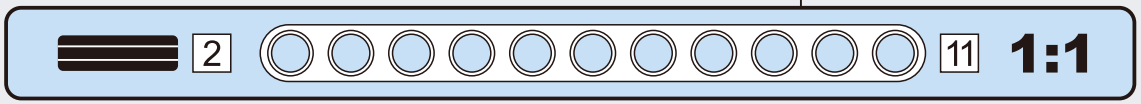

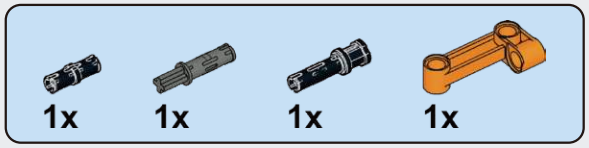

D63

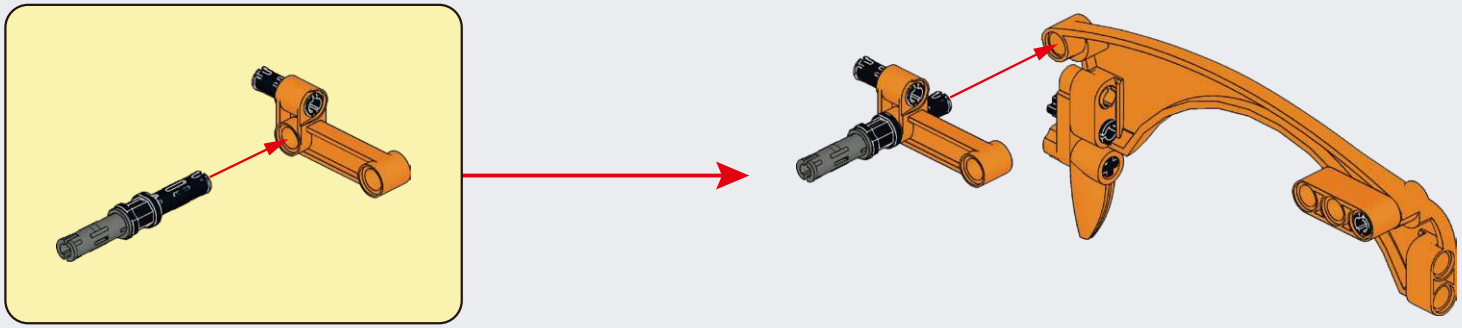

D64

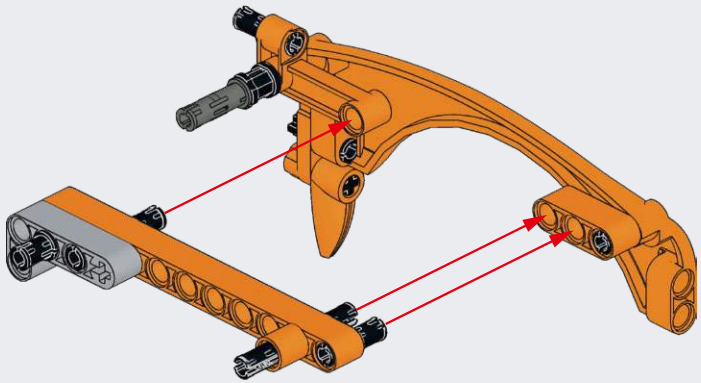

D65

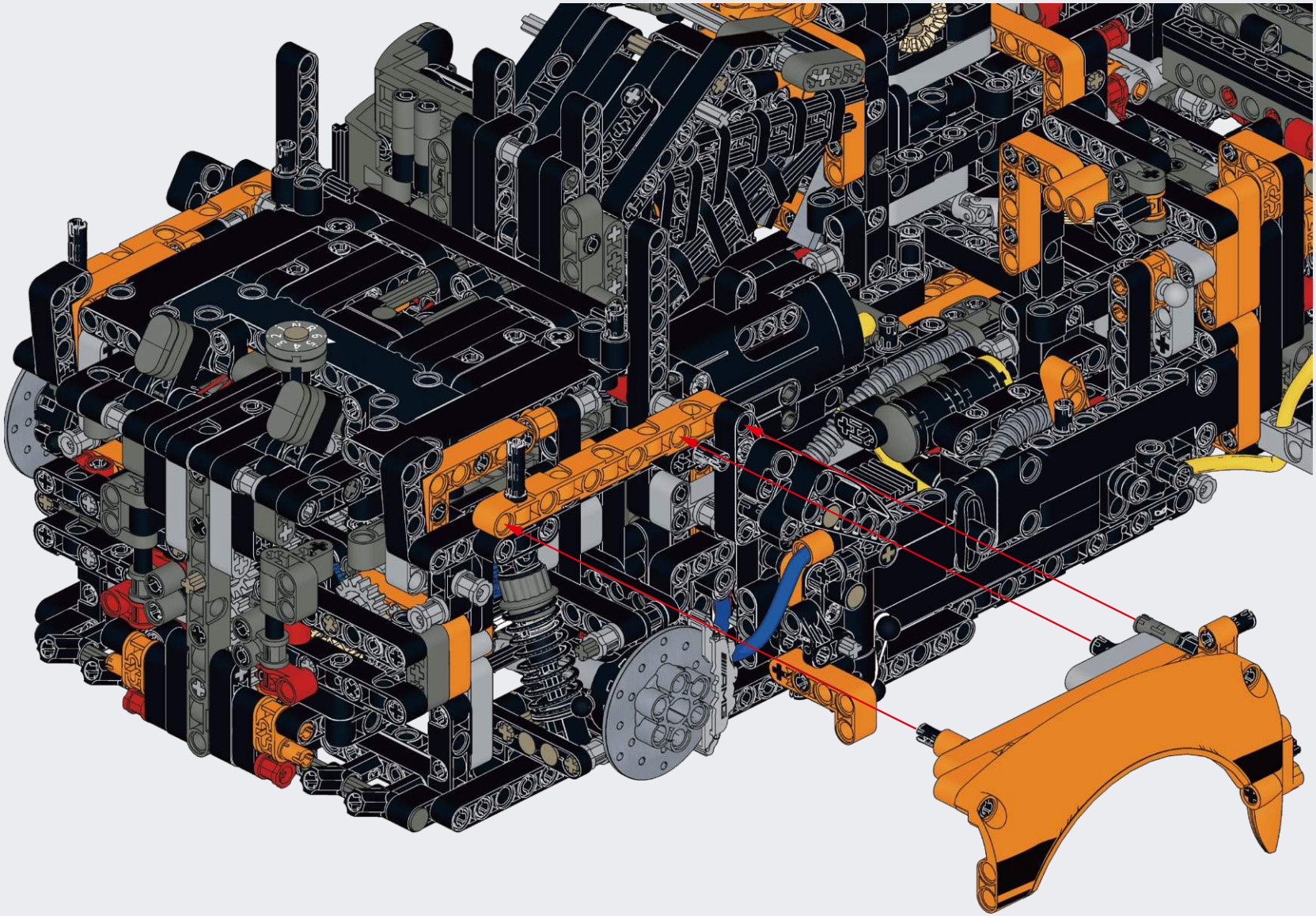

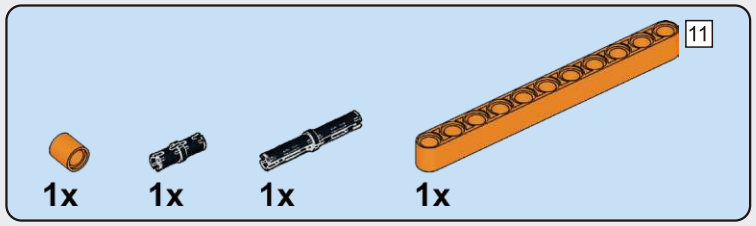

D66

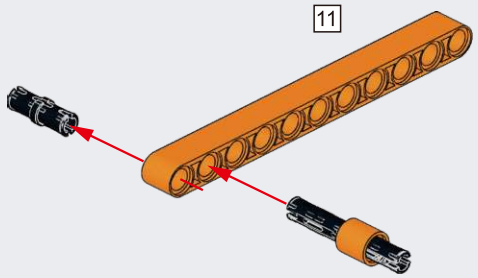

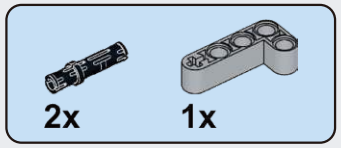

D67

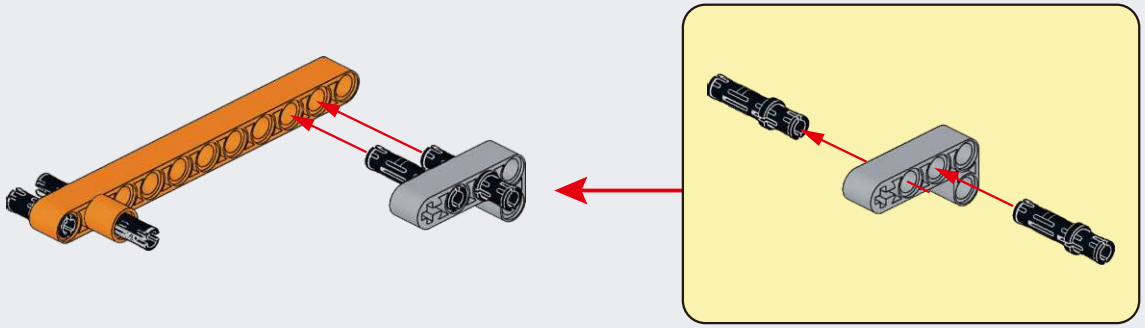

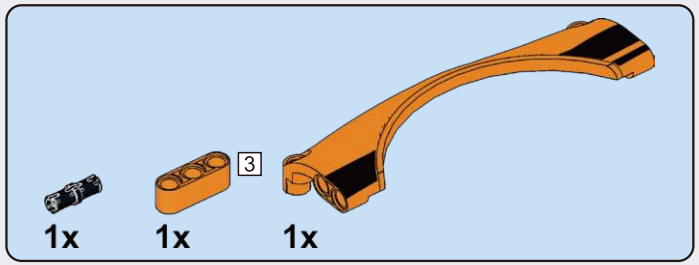

D68

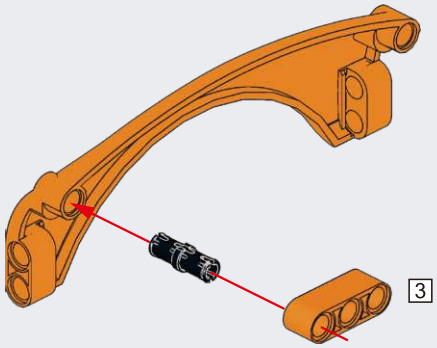

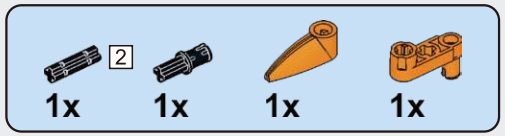

D69

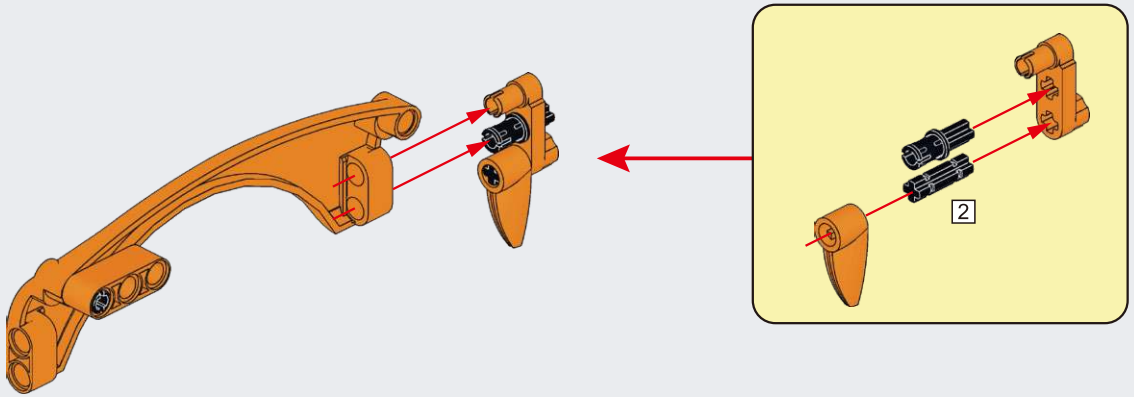

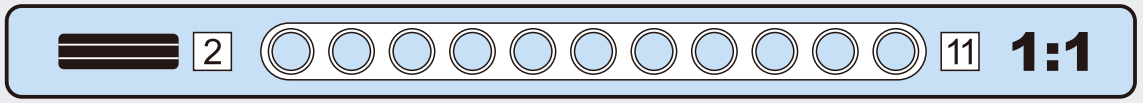

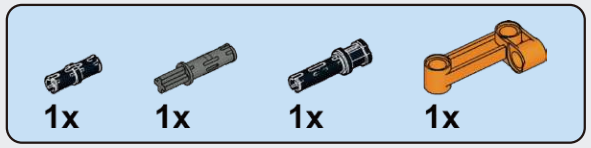

D70

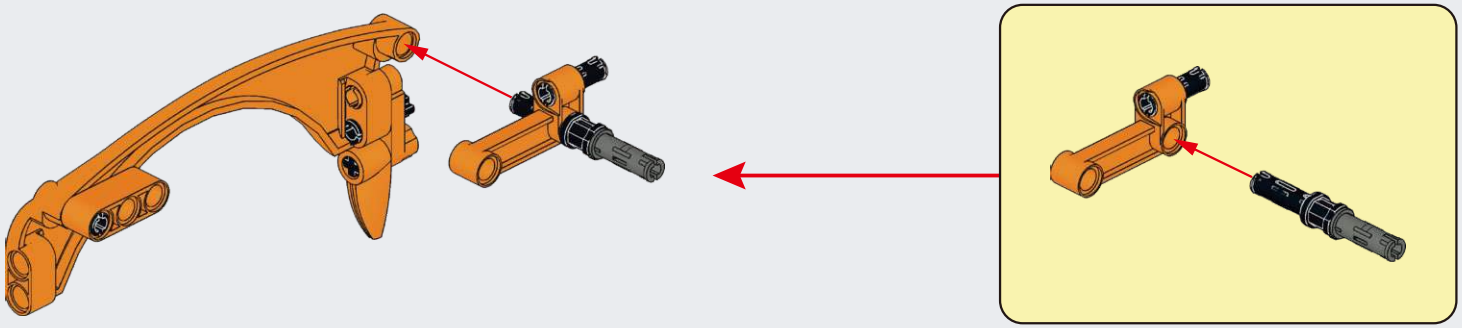

D71

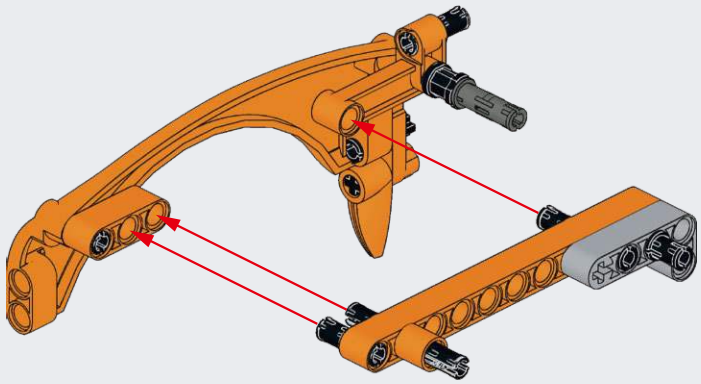

D72

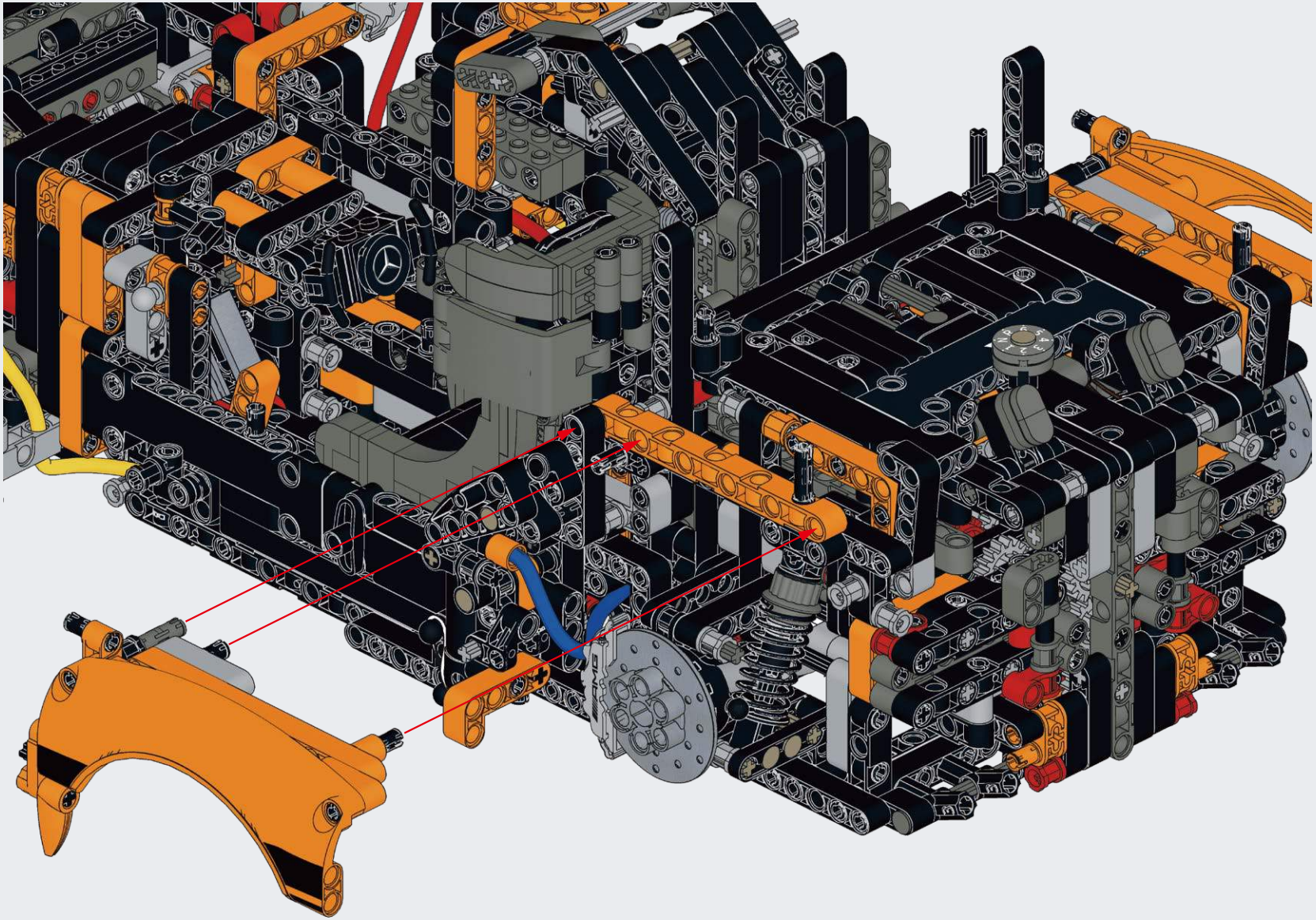

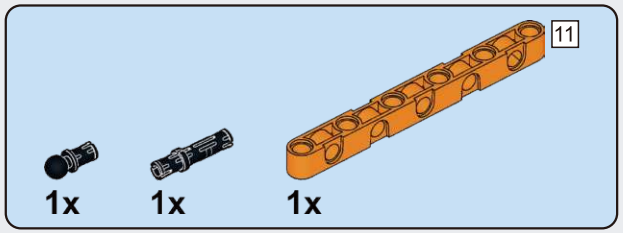

D73

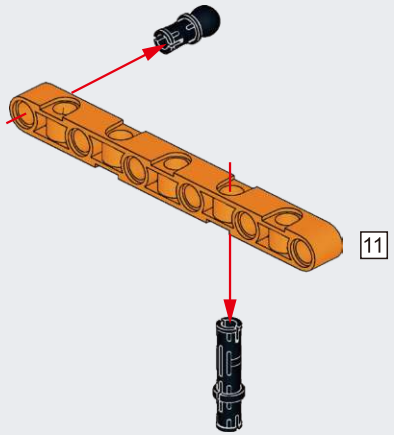

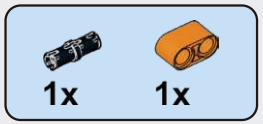

D74

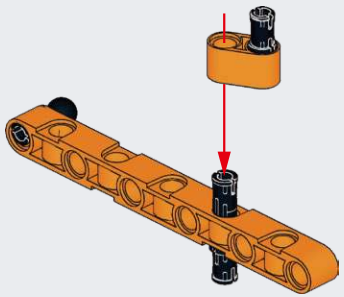

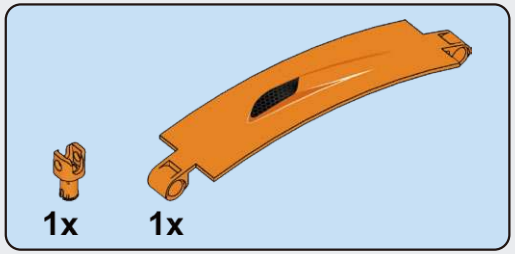

D75

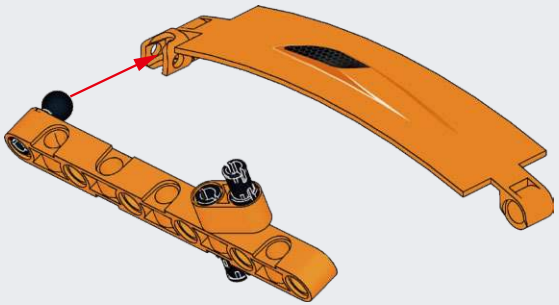

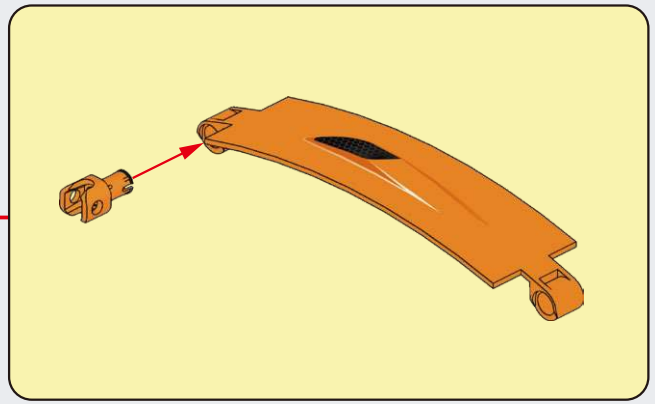

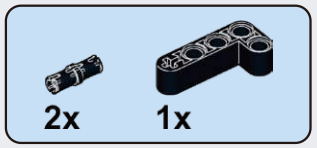

D76

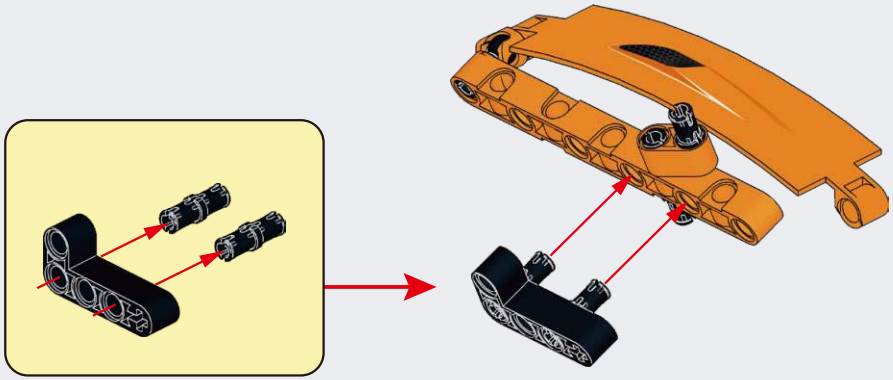

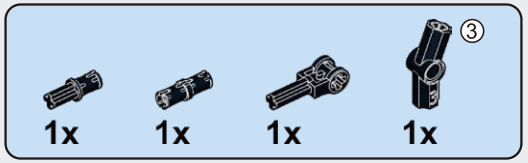

D77

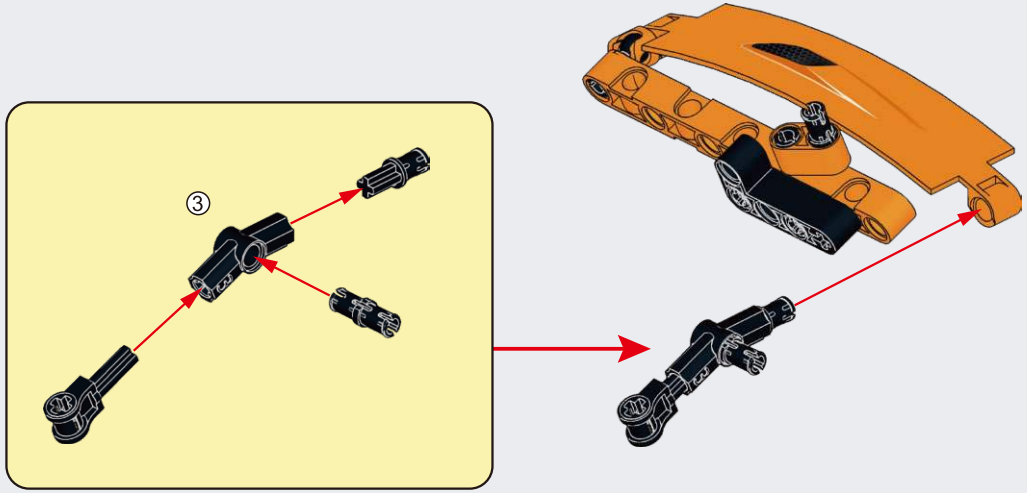

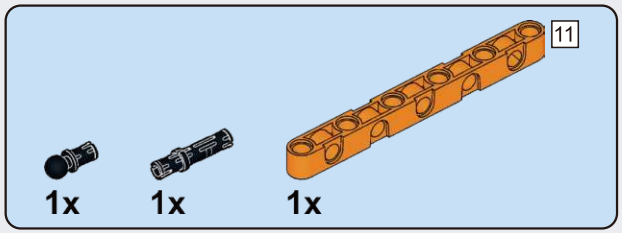

D78

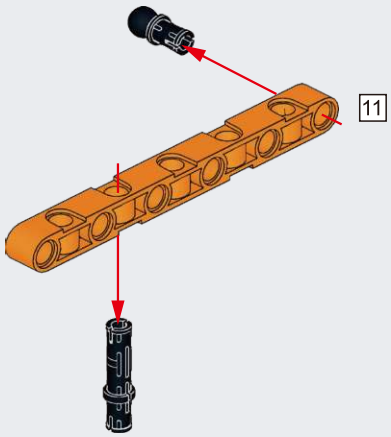

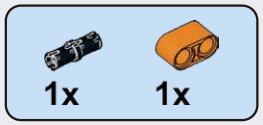

D79

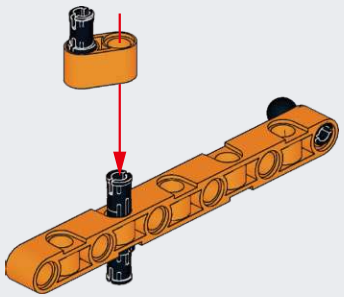

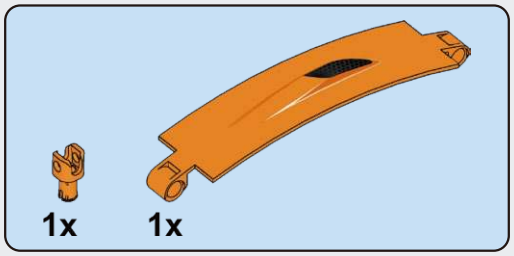

D80

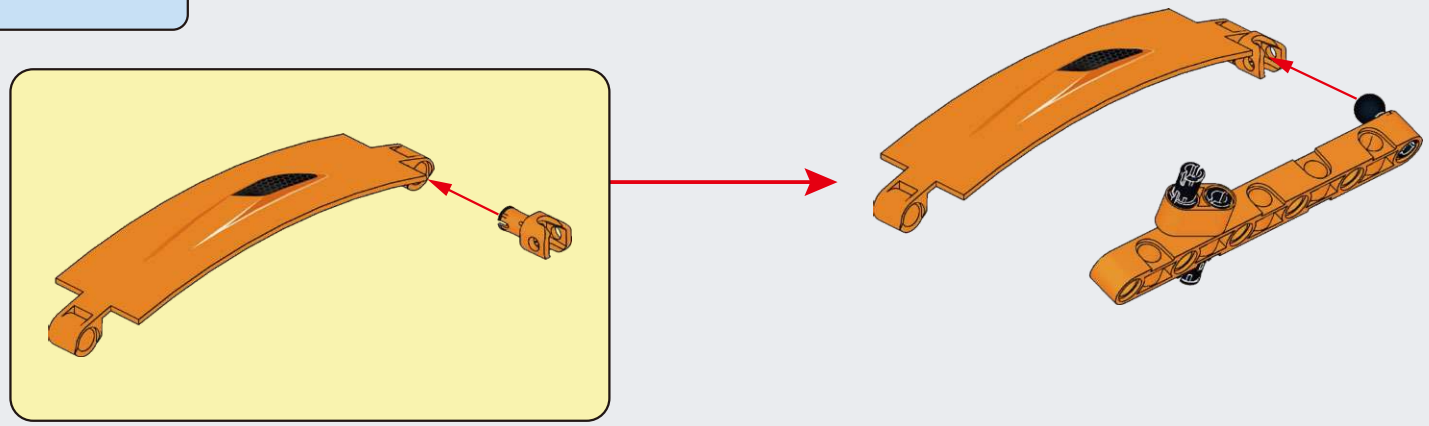

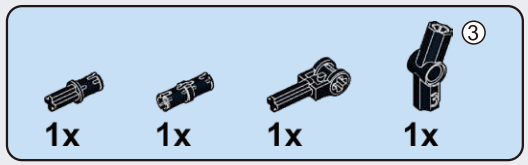

D81

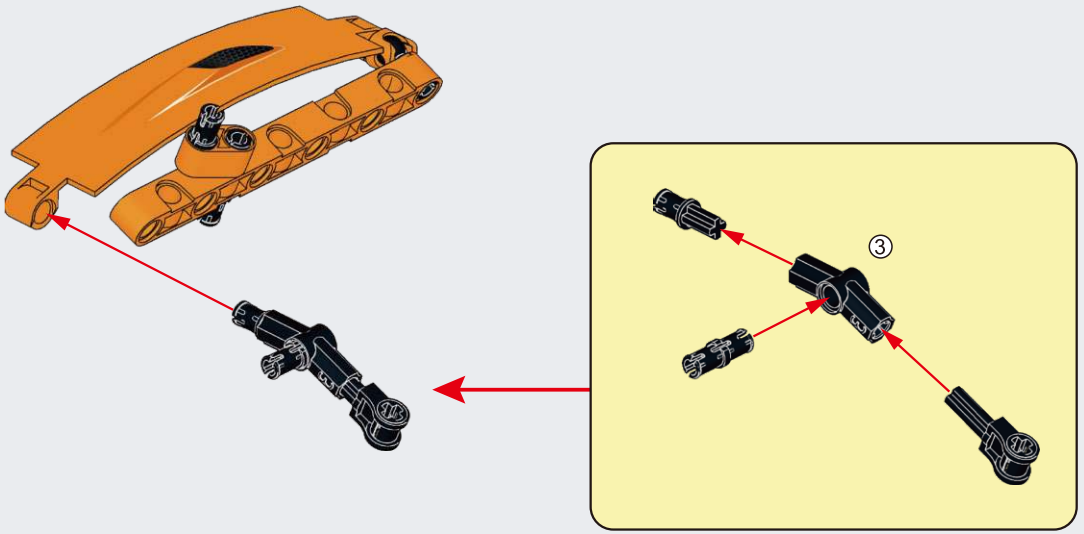

D82

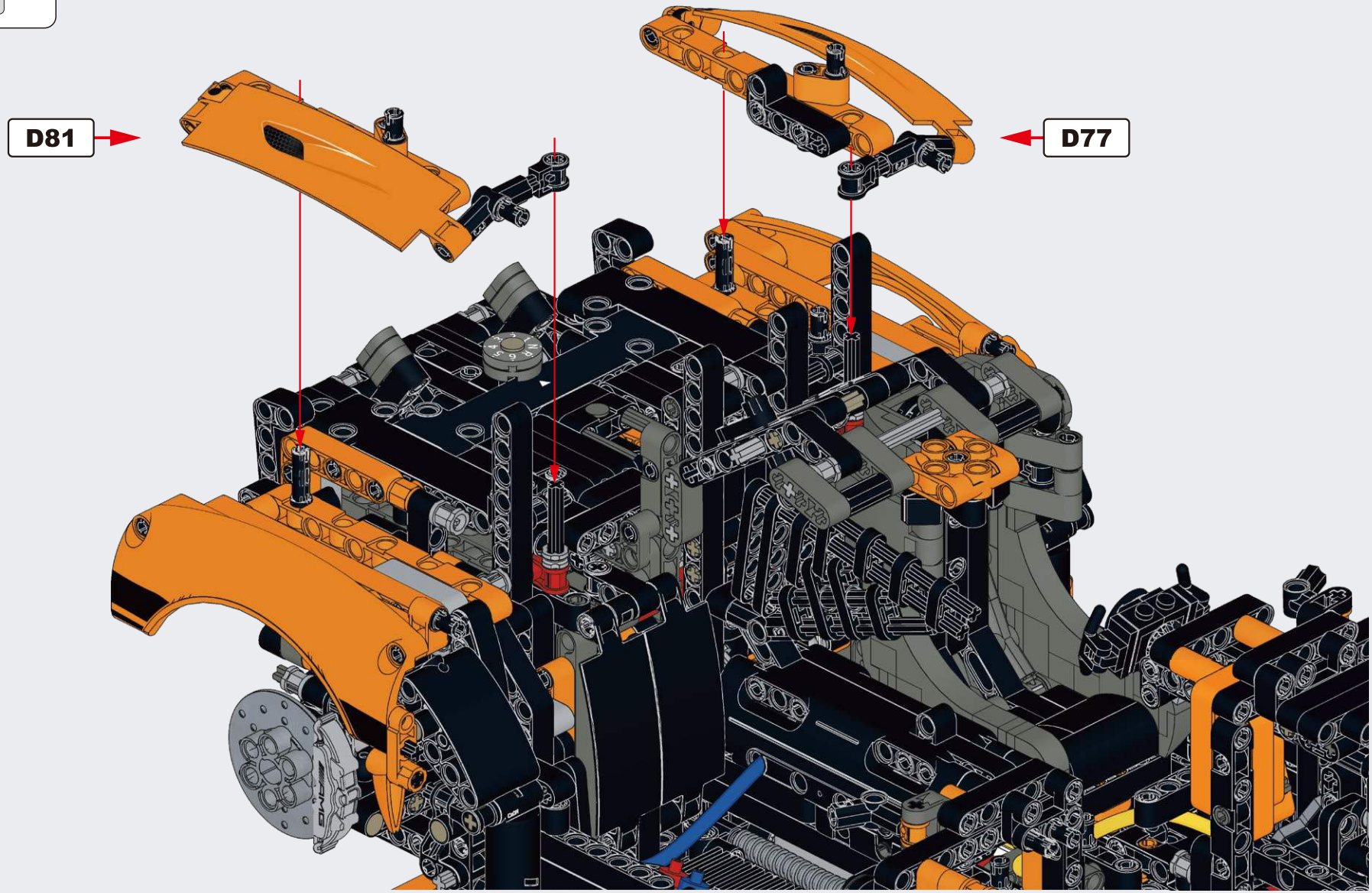

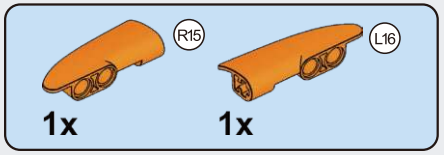

D83

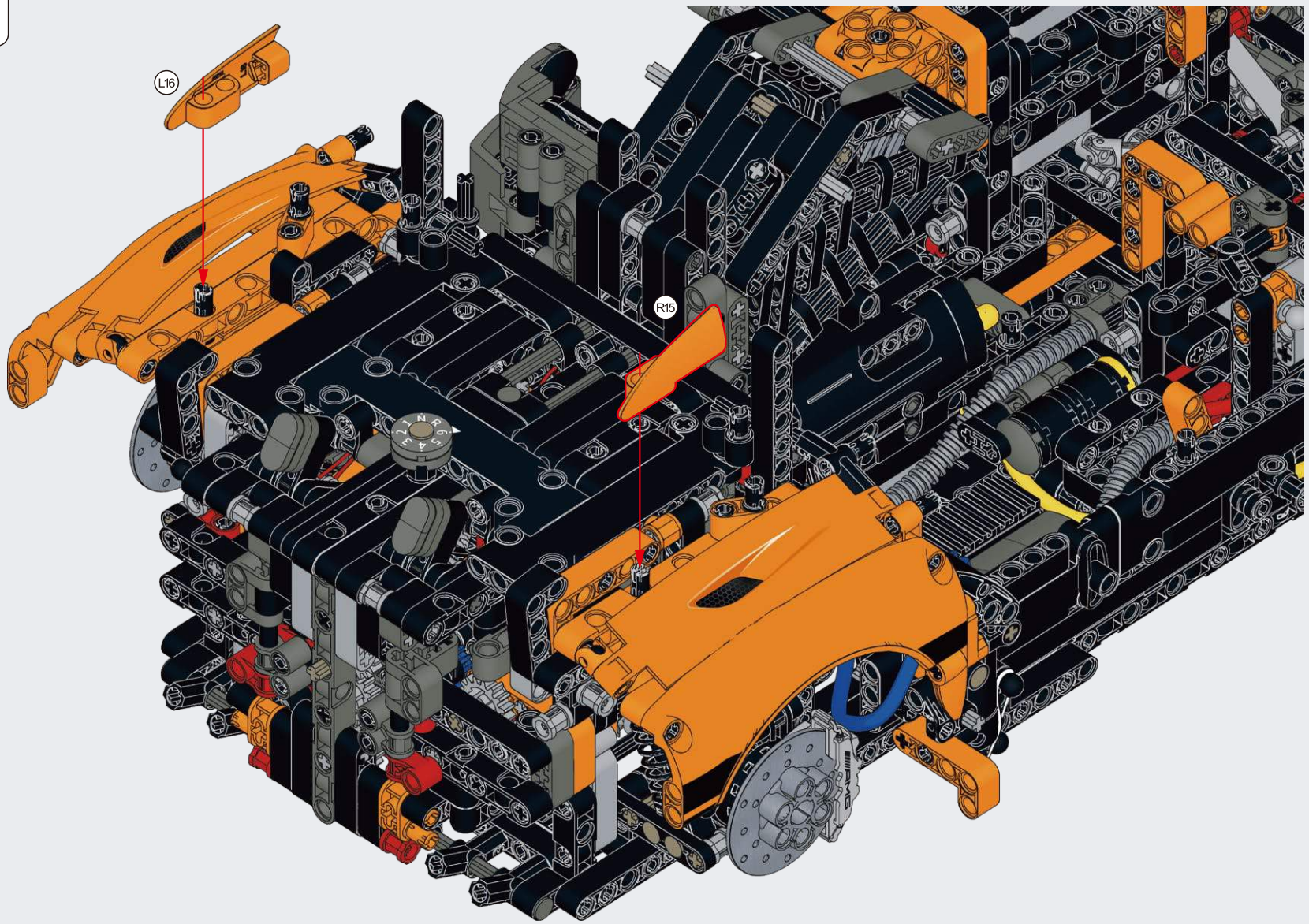

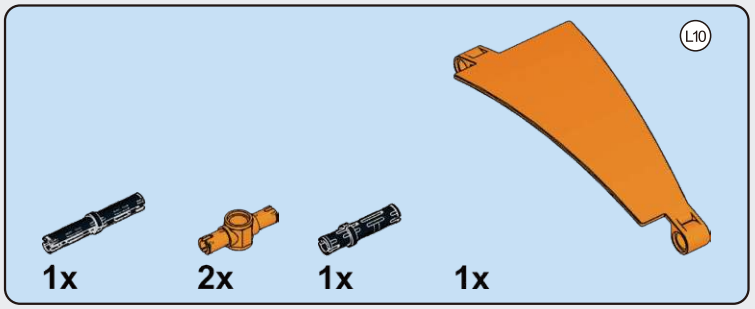

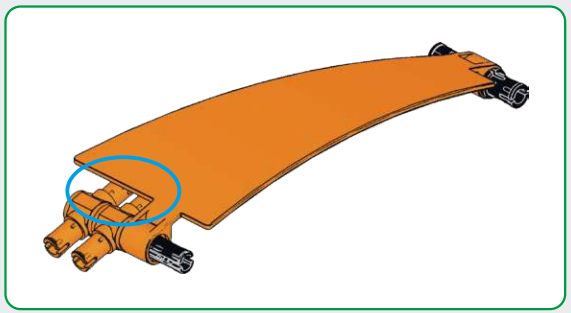

D84

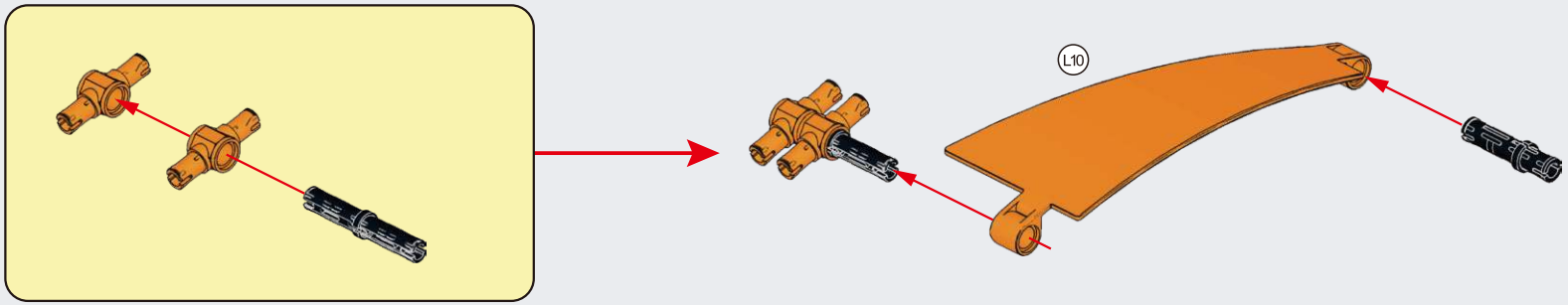

D85

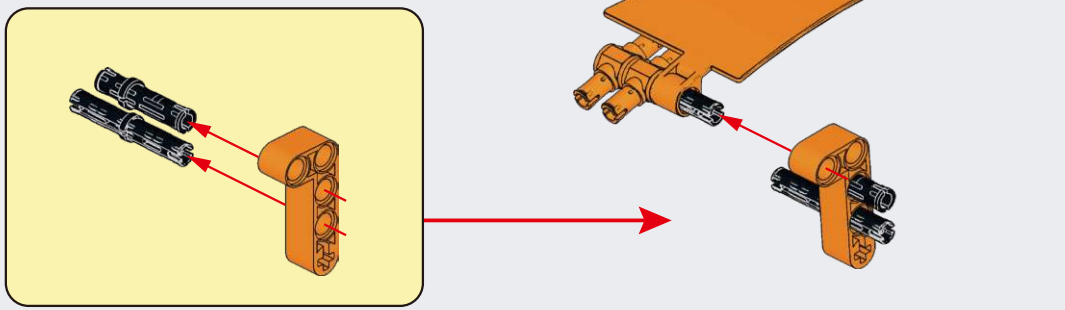

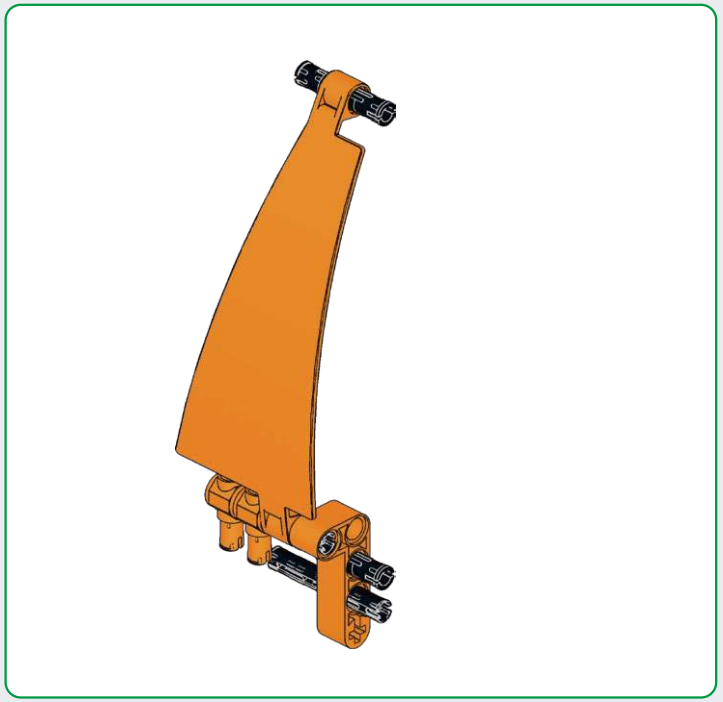

D86

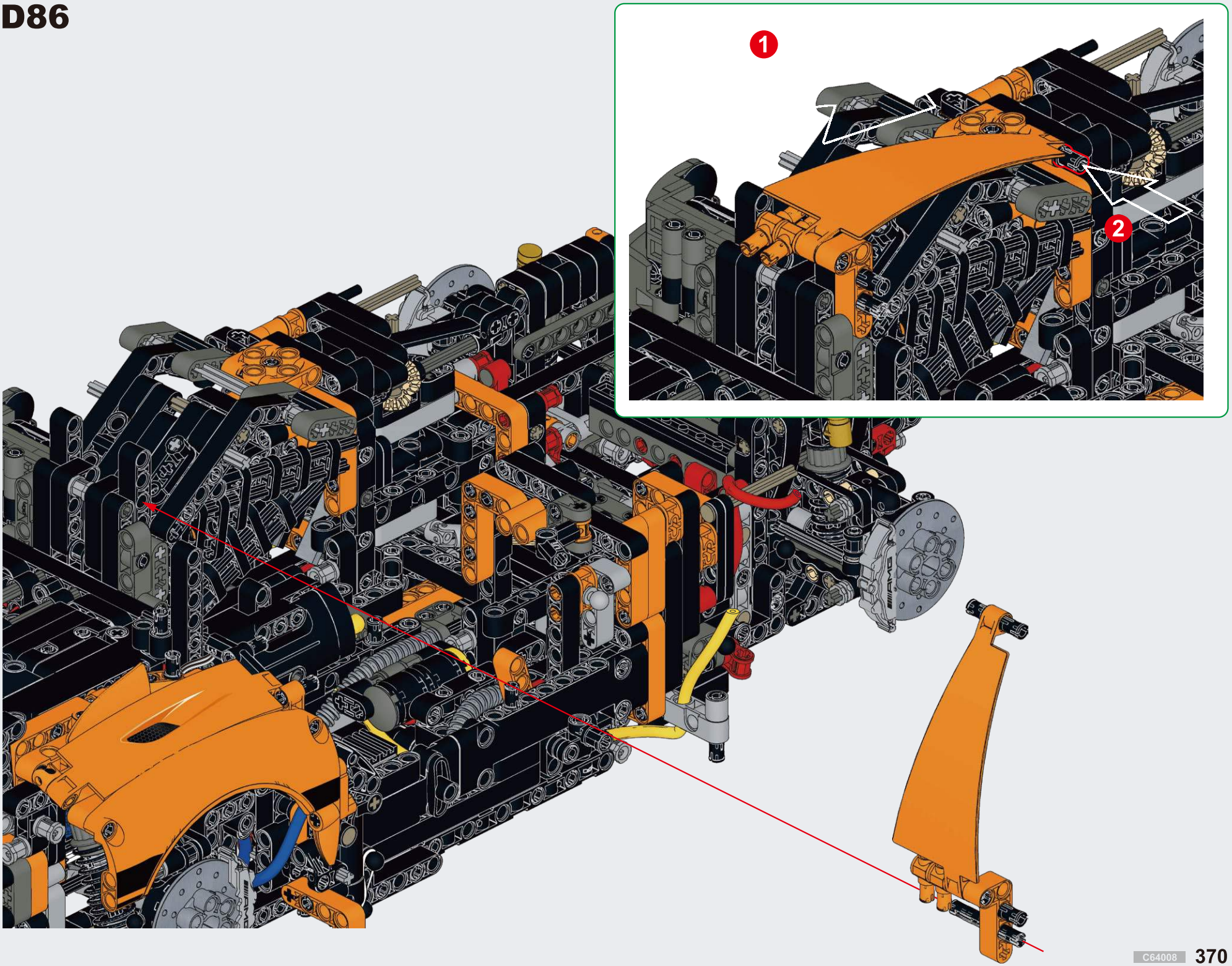

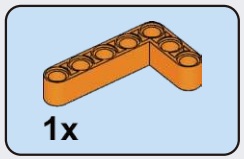

D87

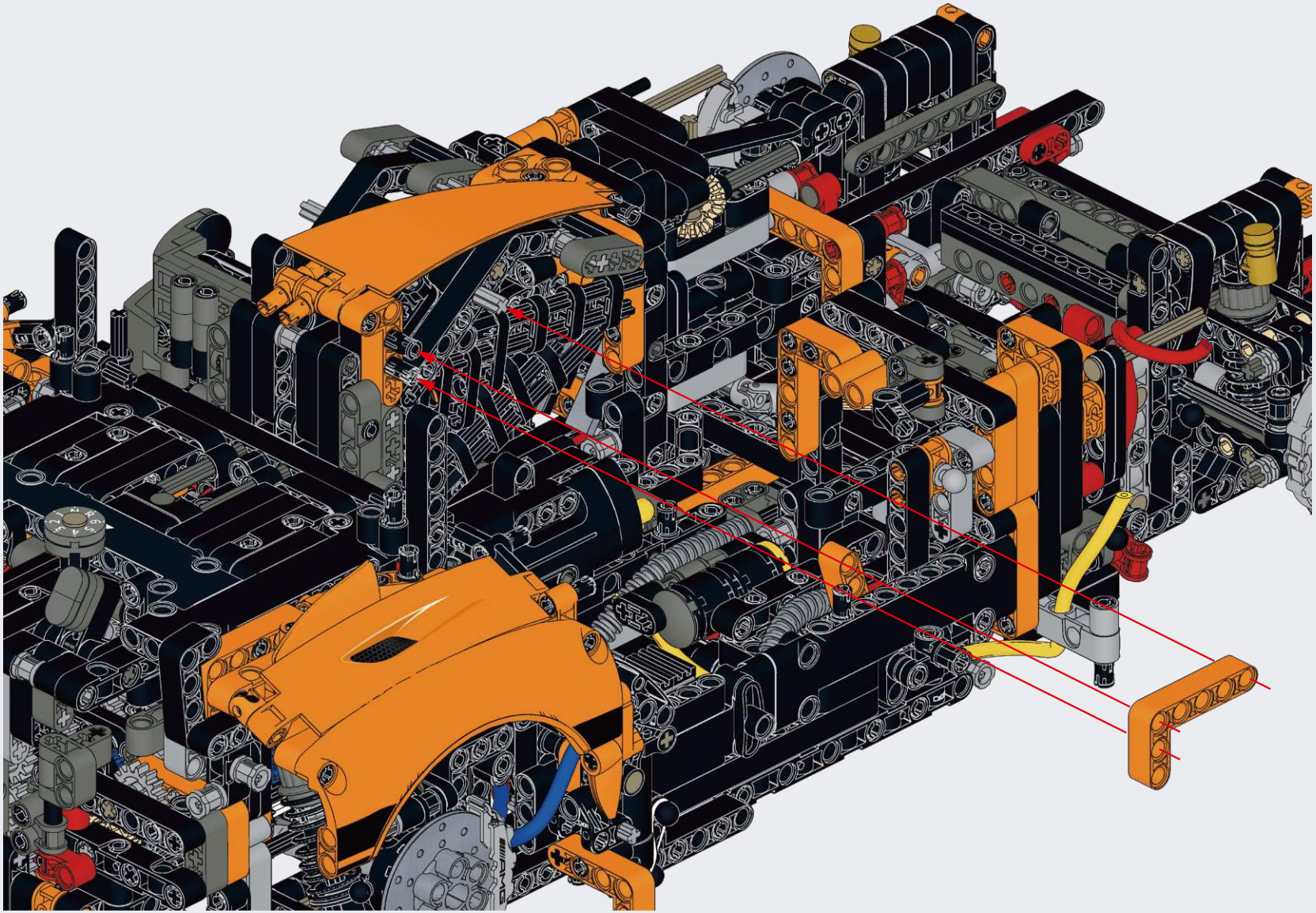

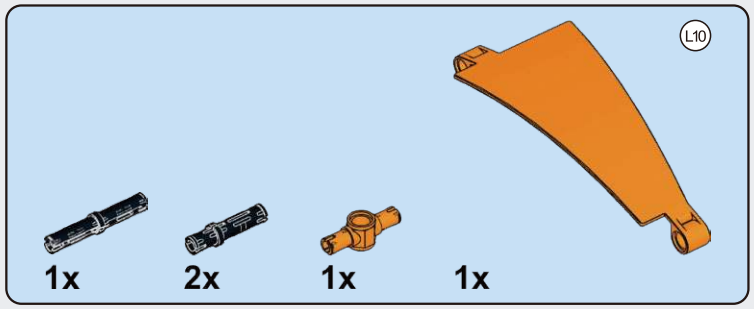

D88

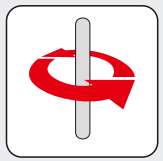

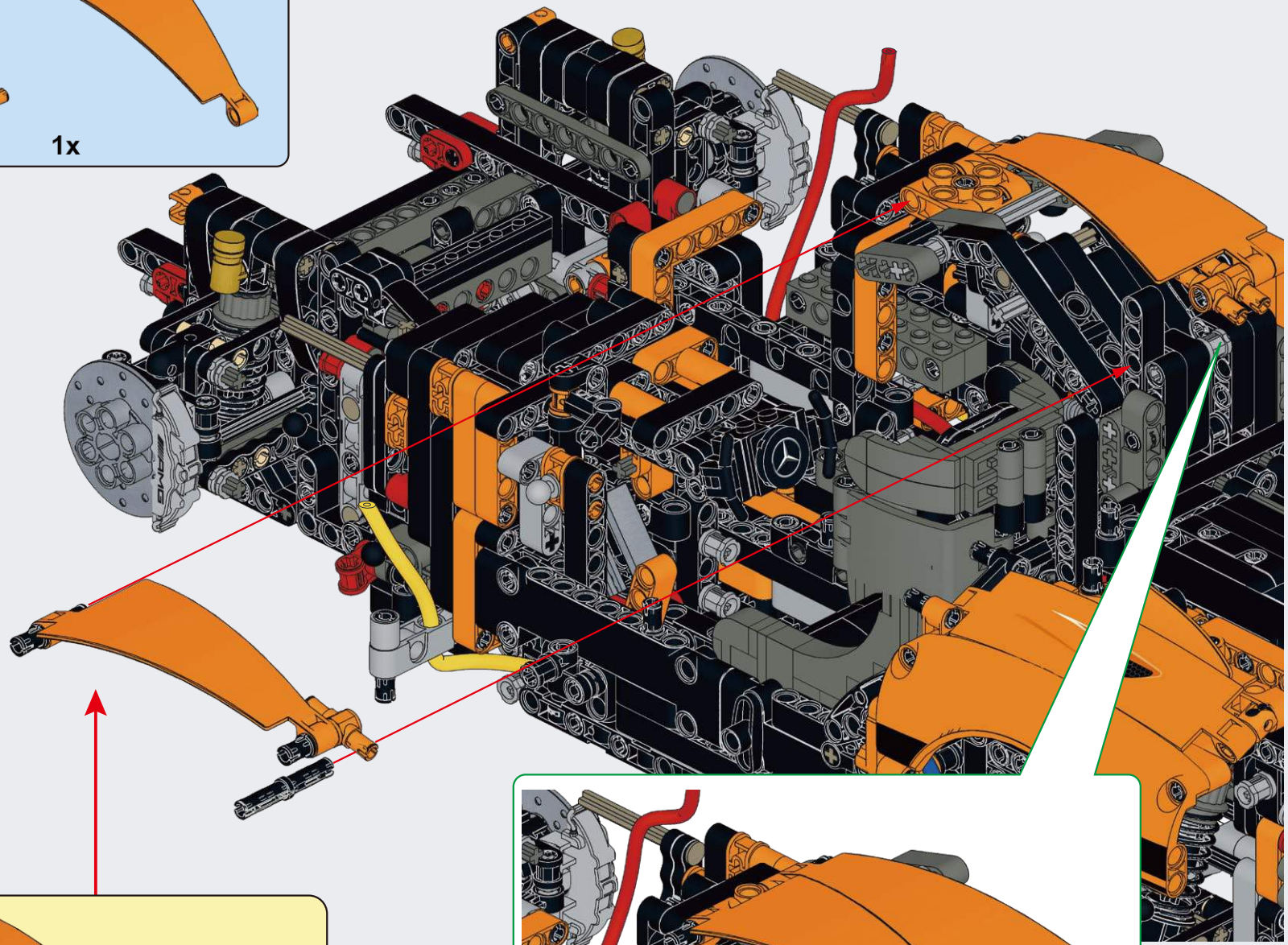

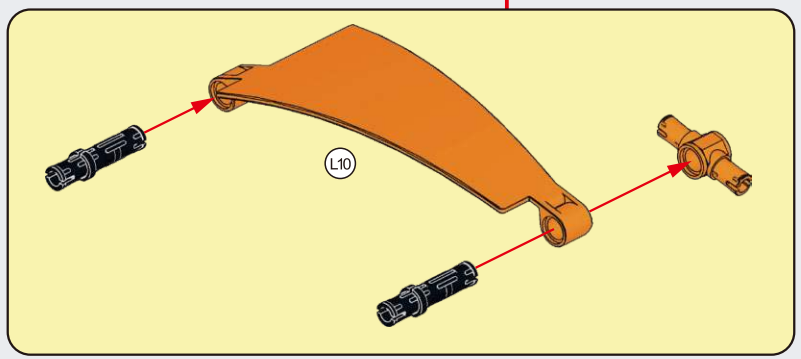

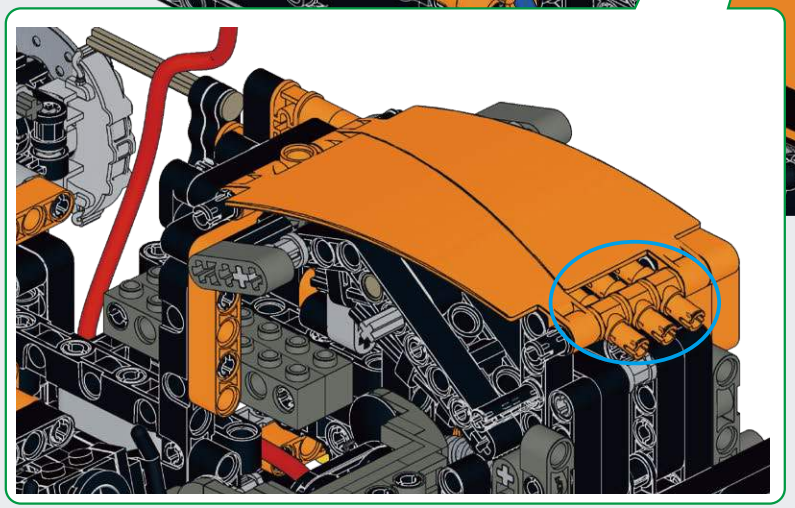

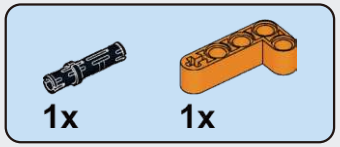

D89

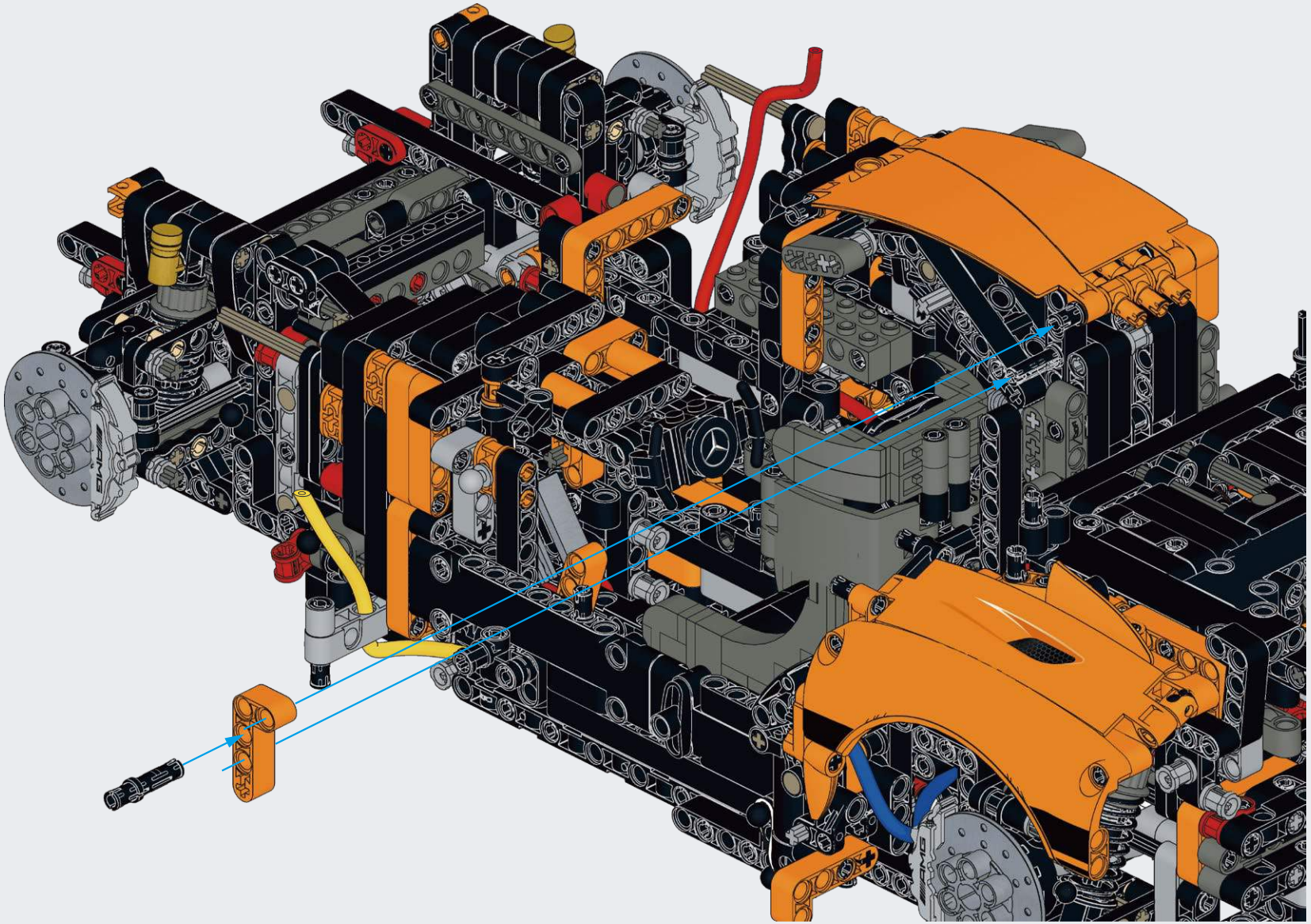

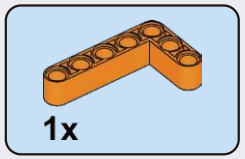

D90

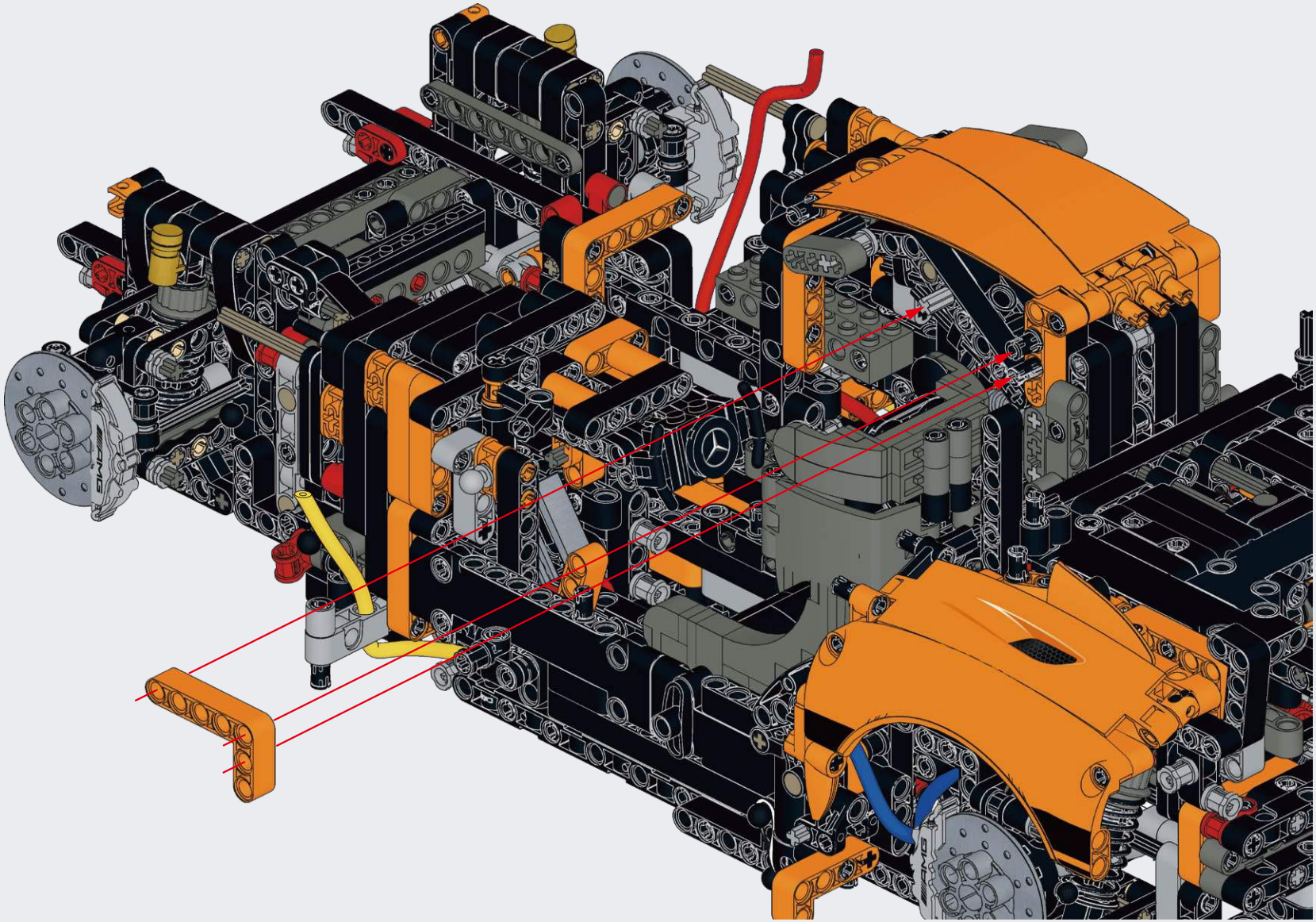

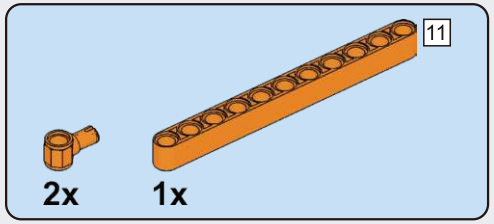

D91

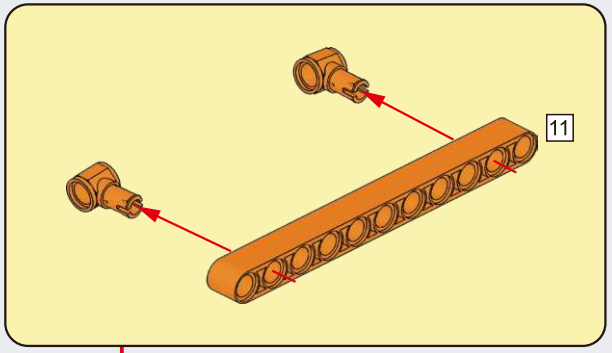

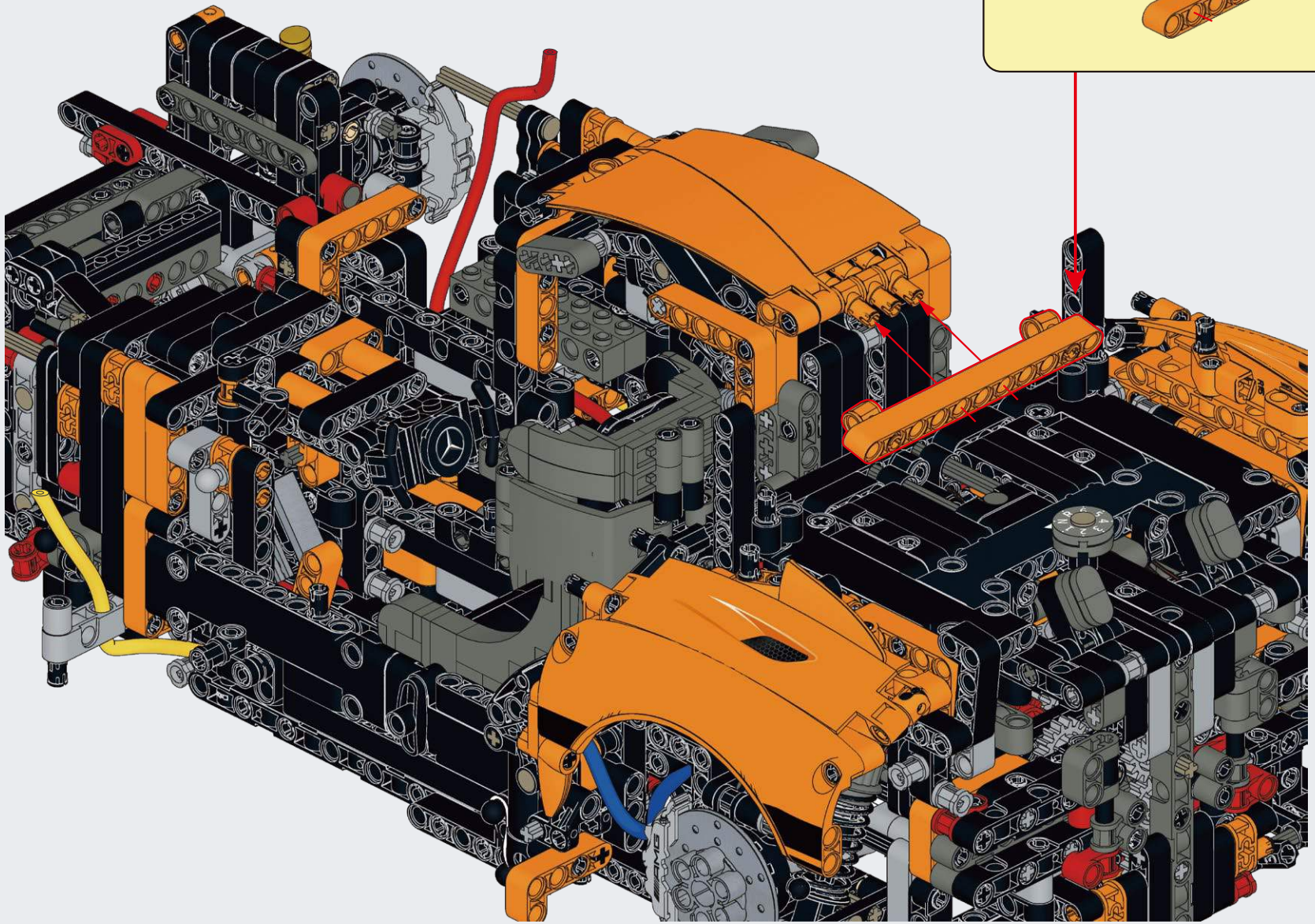

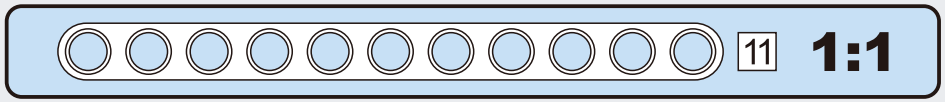

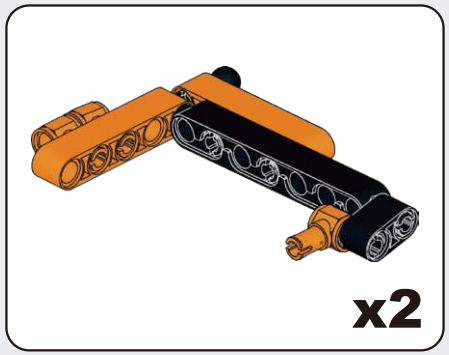

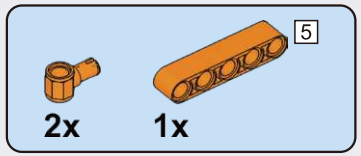

D92

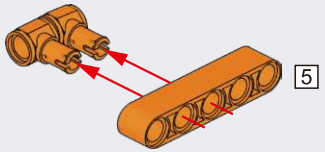

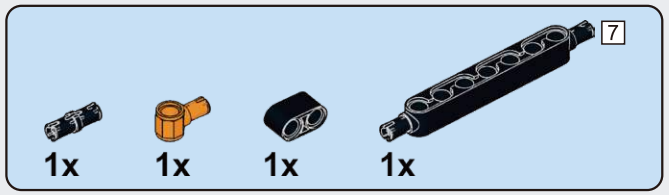

D93

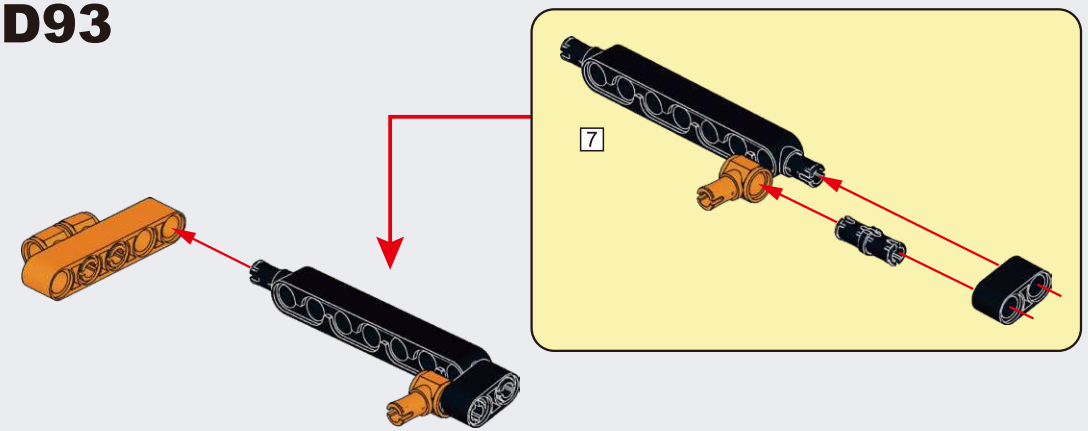

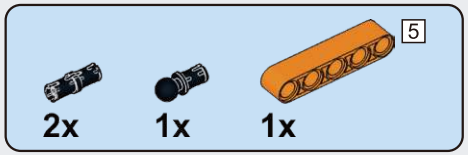

D94

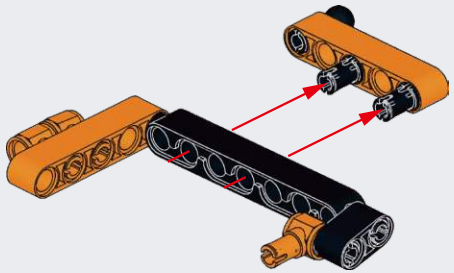

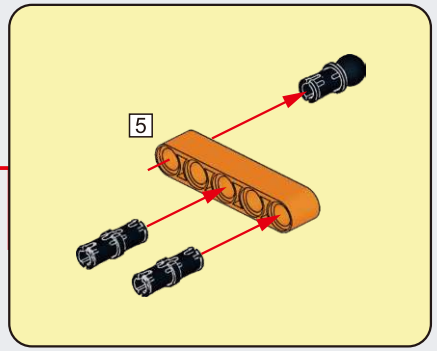

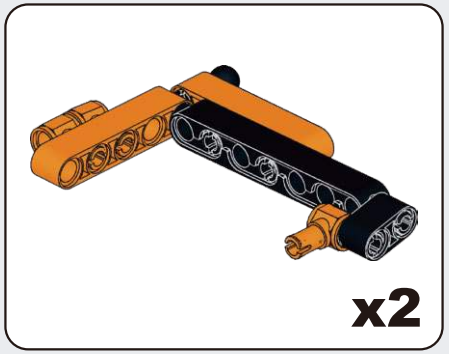

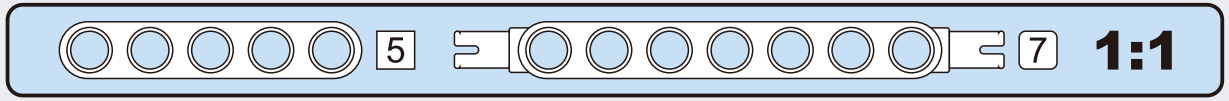

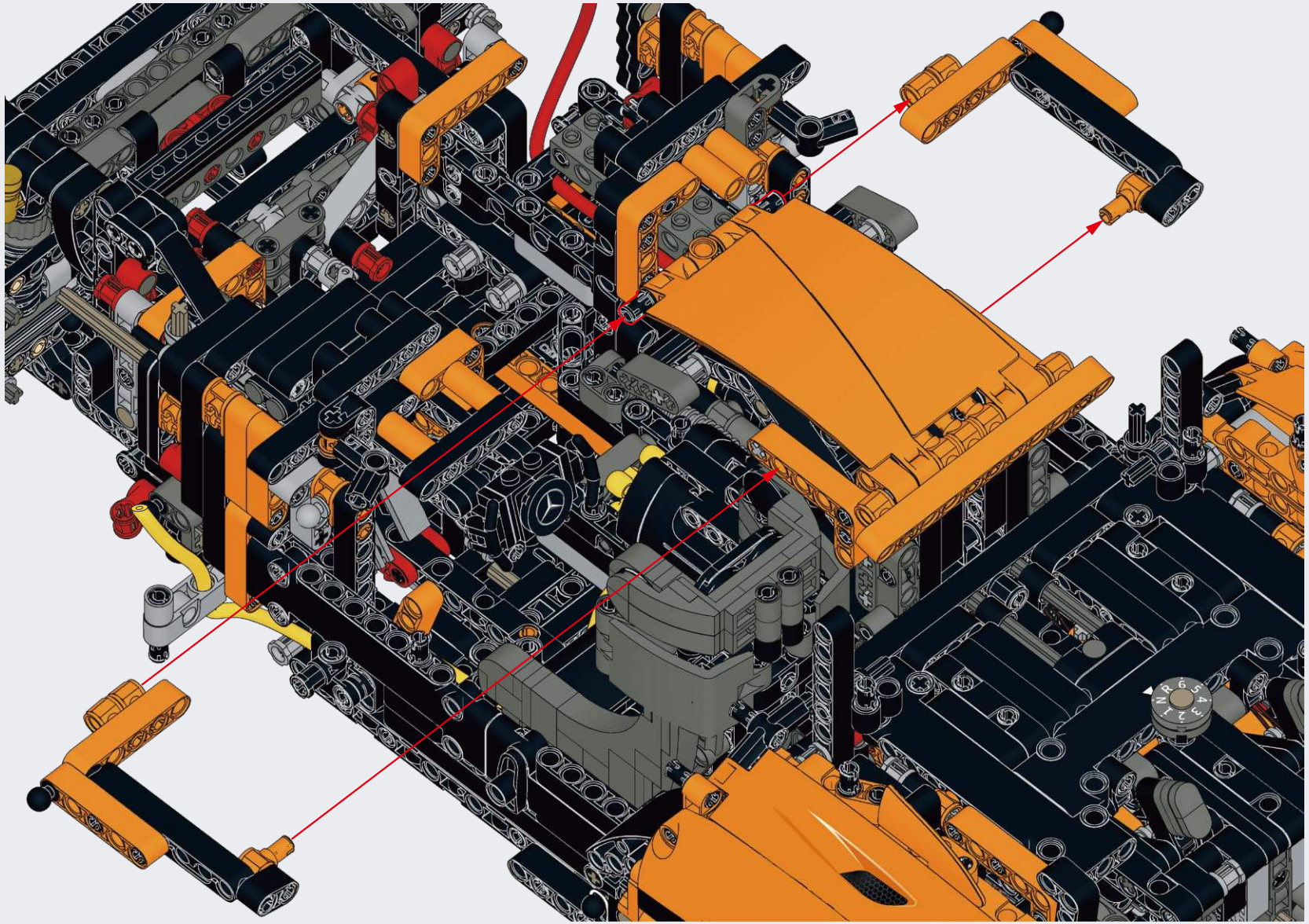

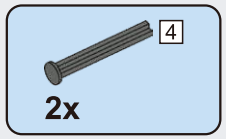

D96

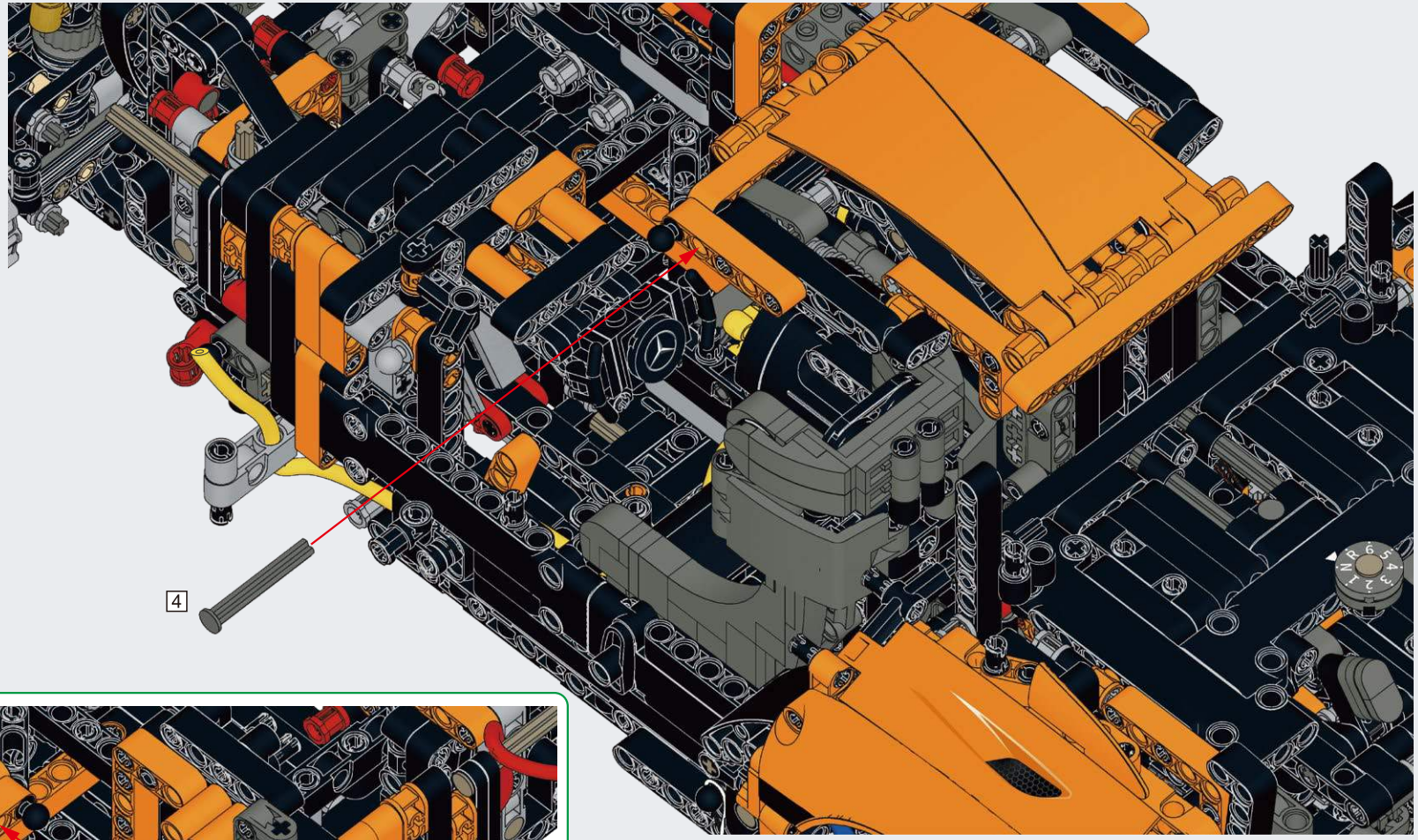

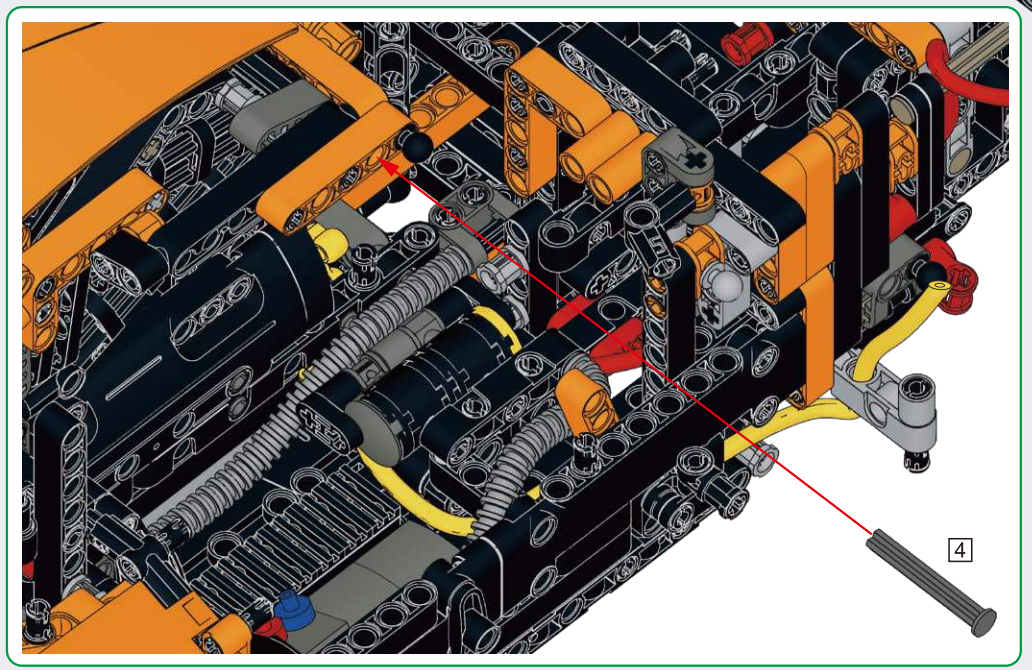

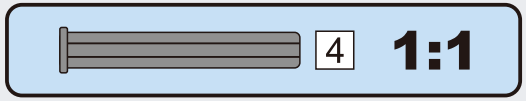

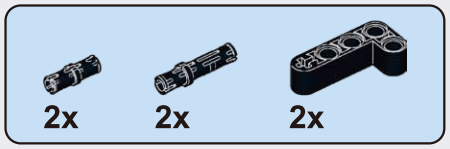

D97

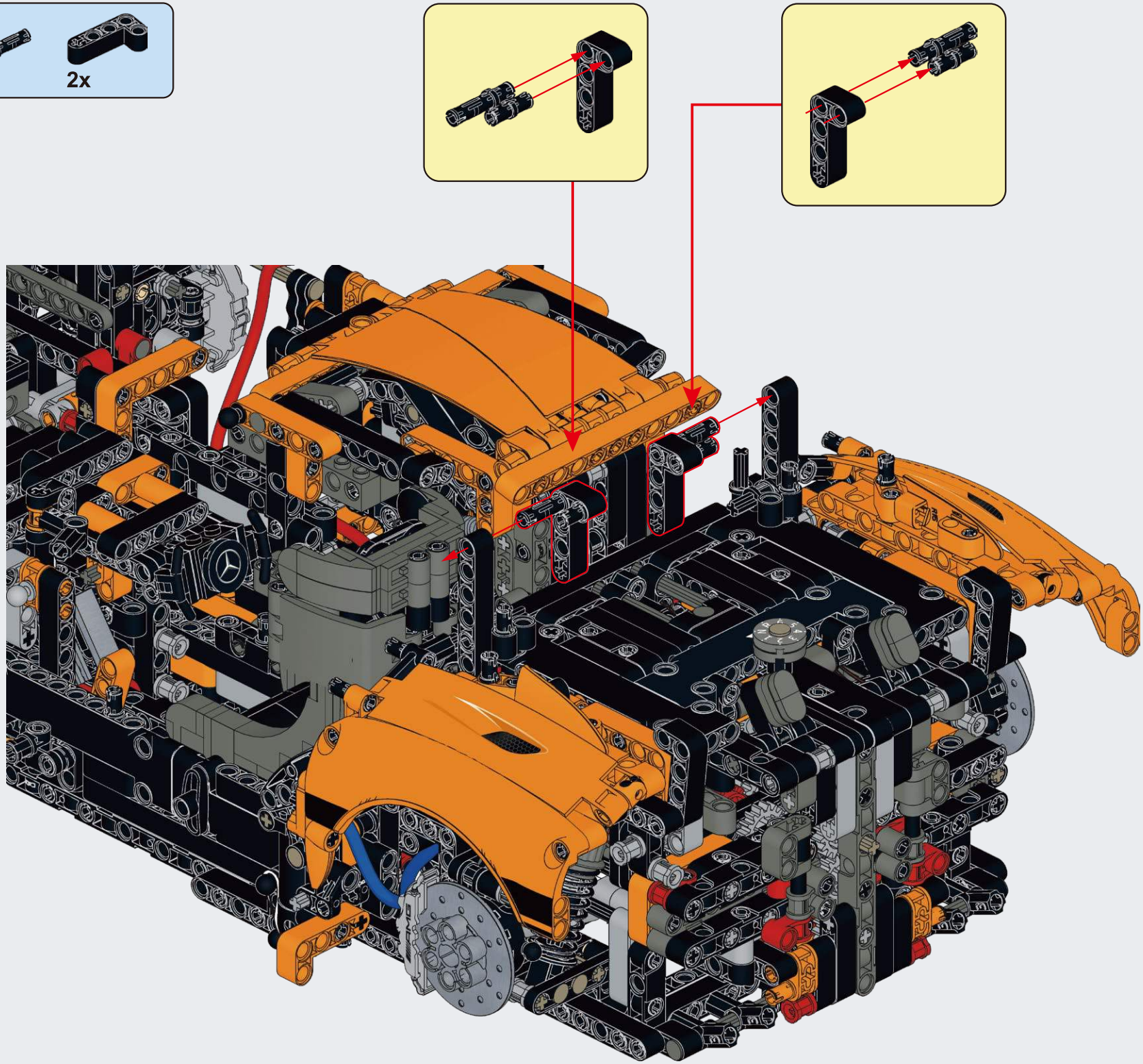

2x

D98

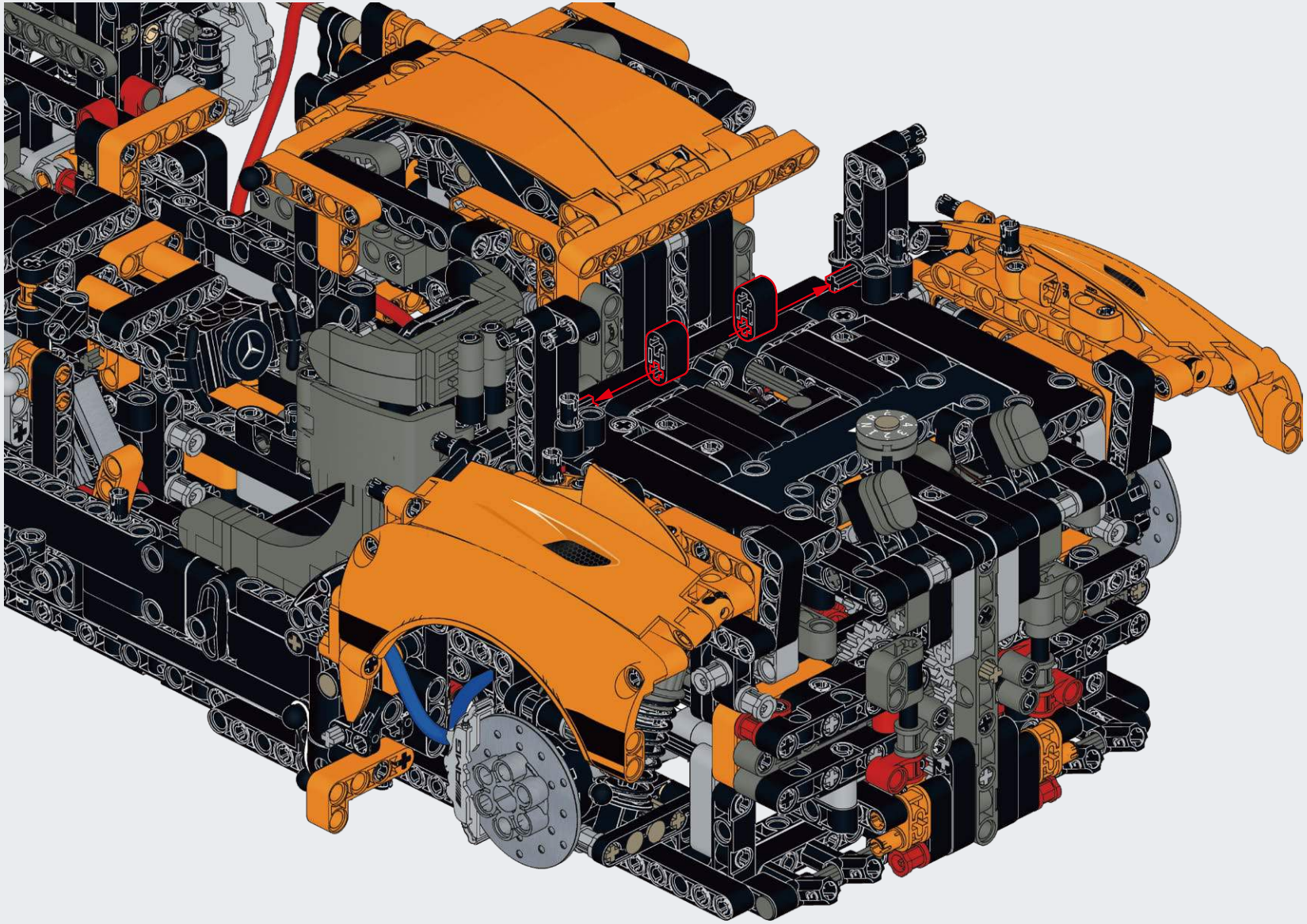

D99

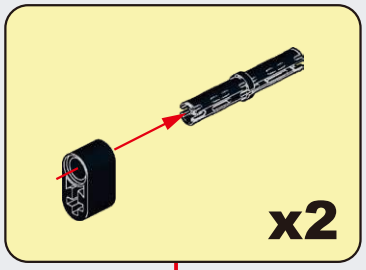

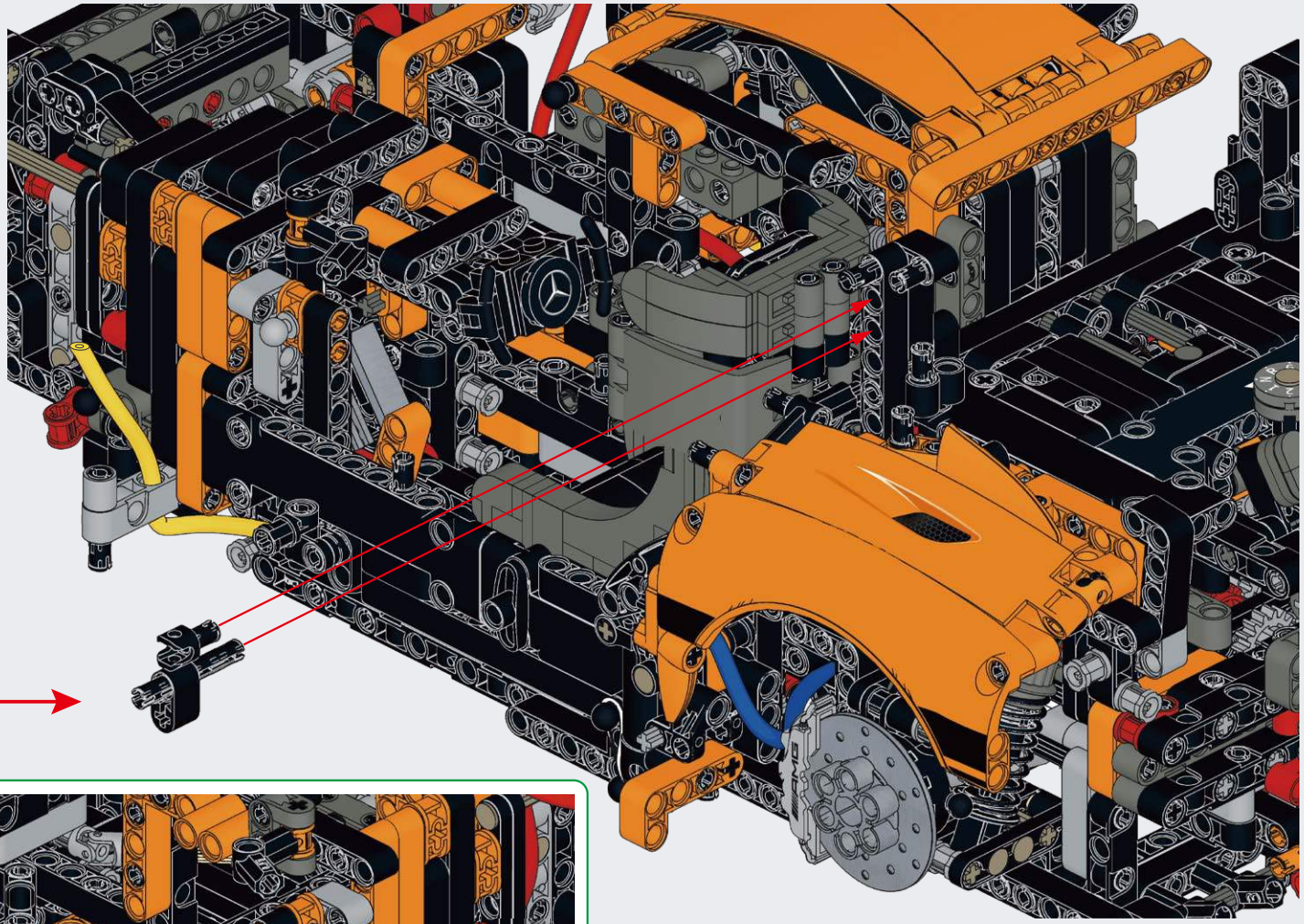

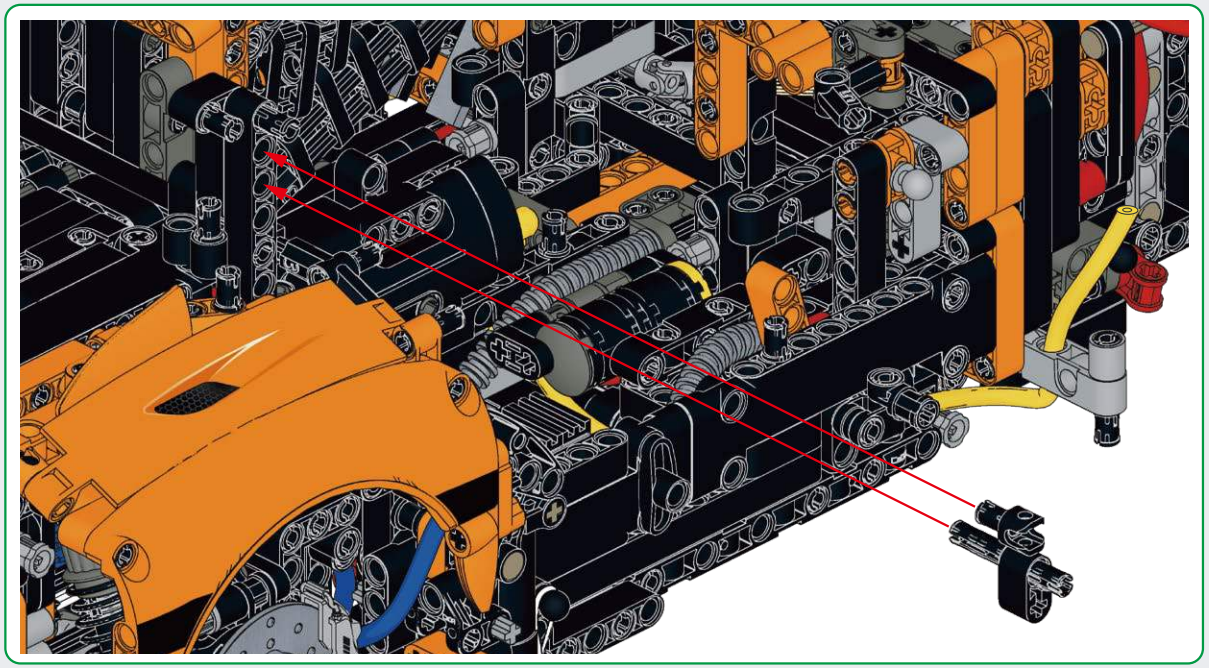

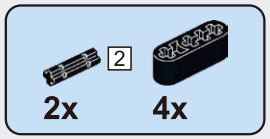

D100

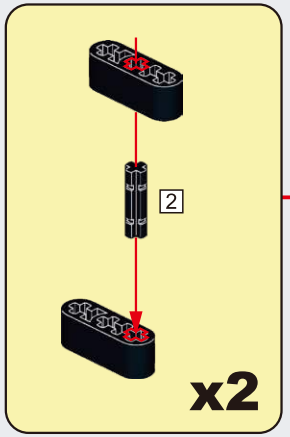

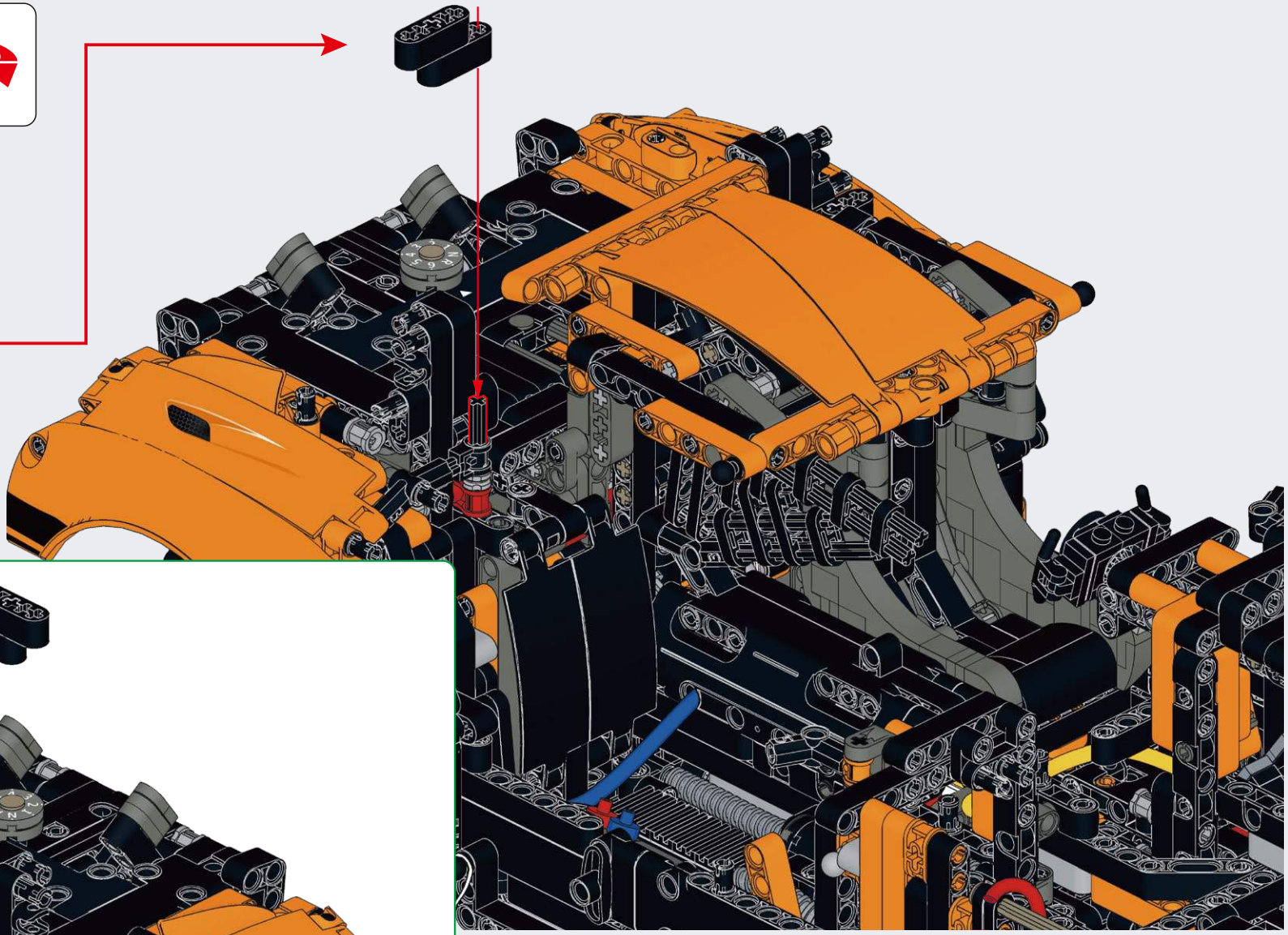

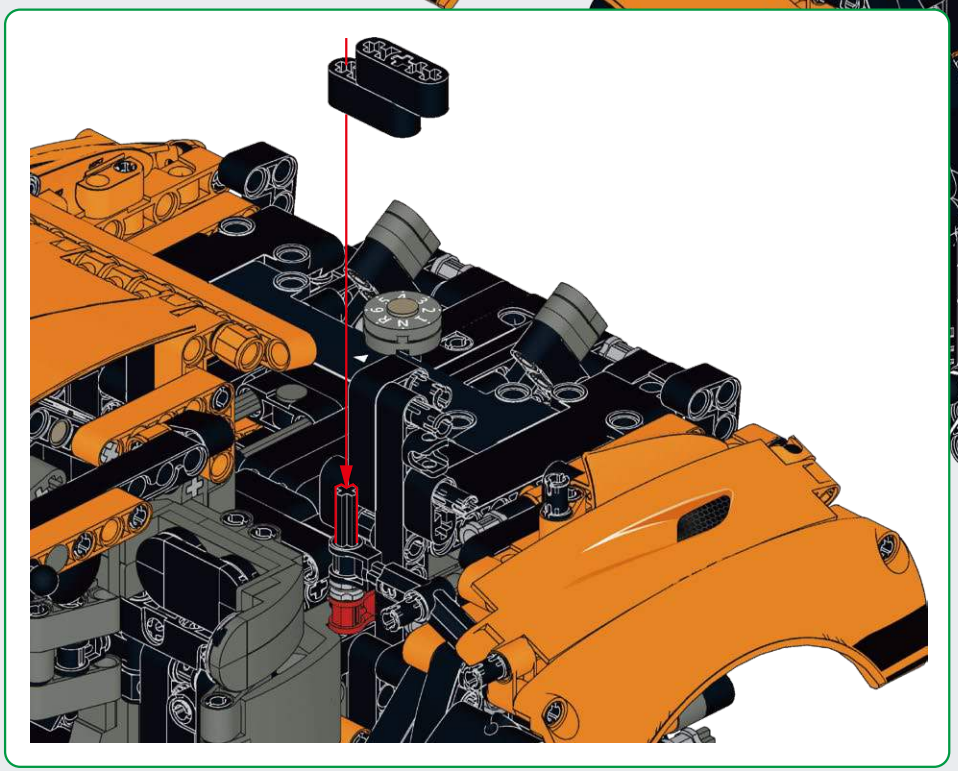

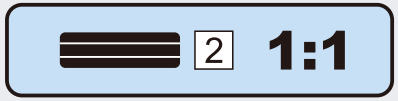

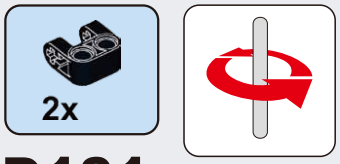

D101

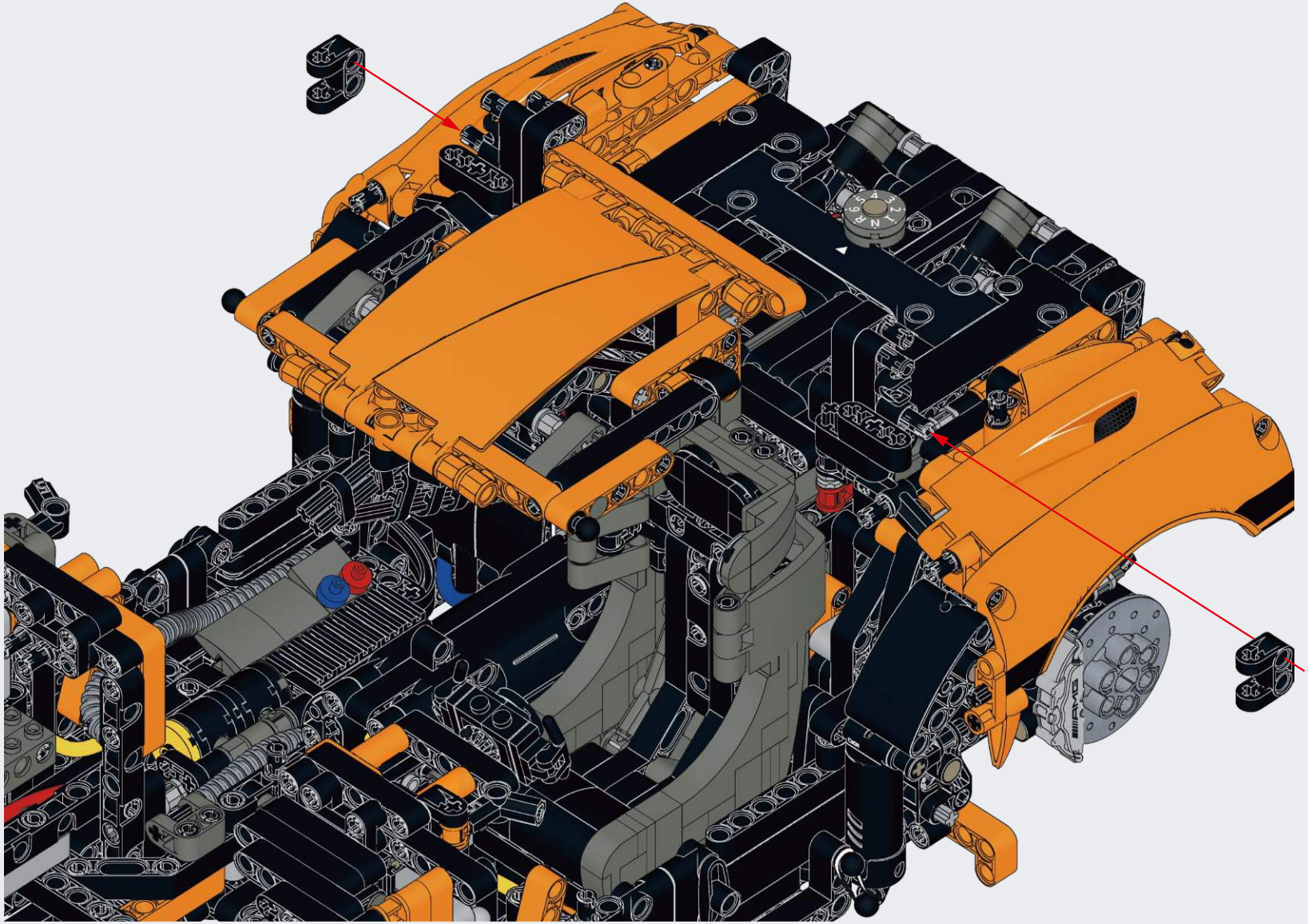

2
2x

D102

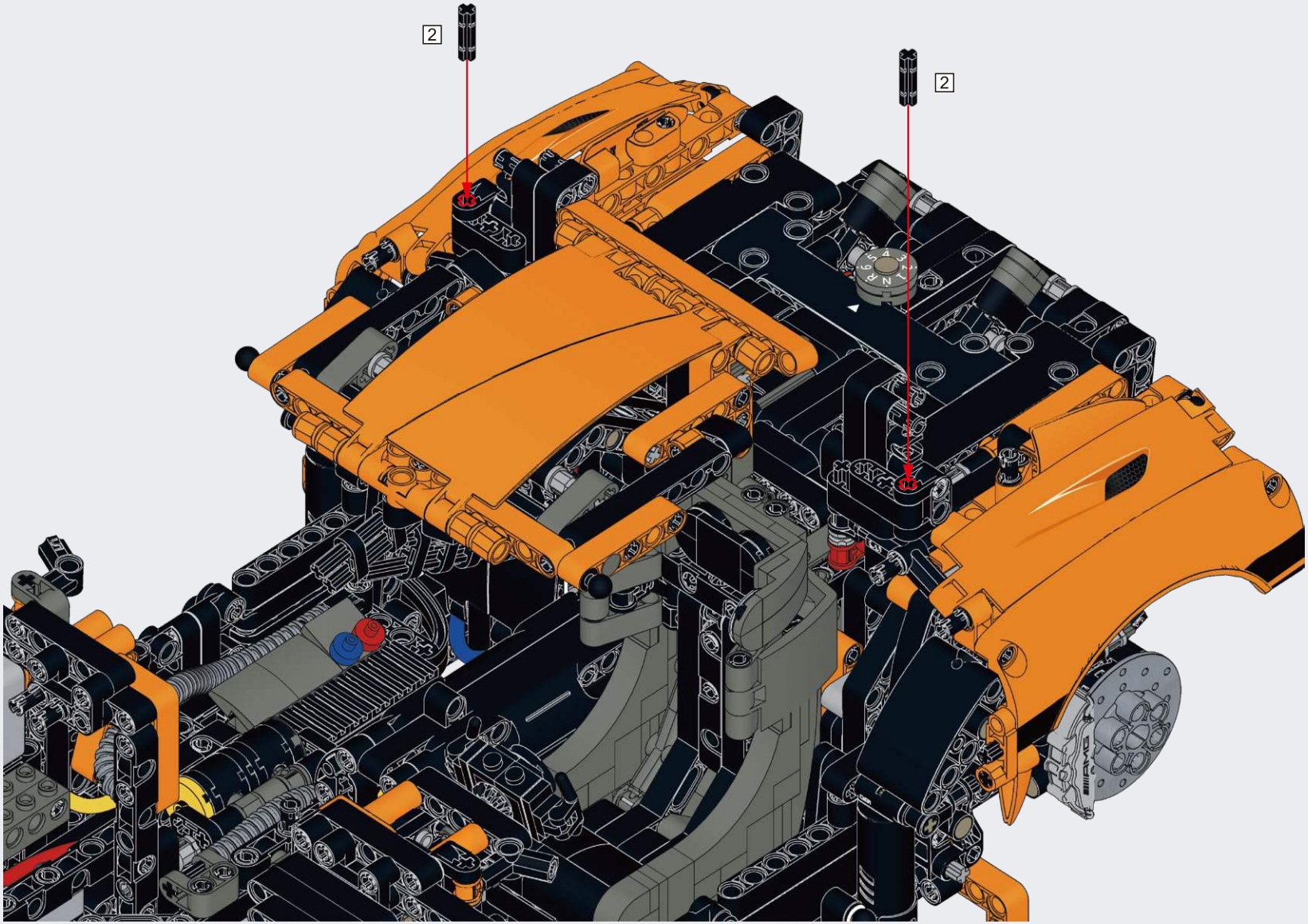

2 1:1

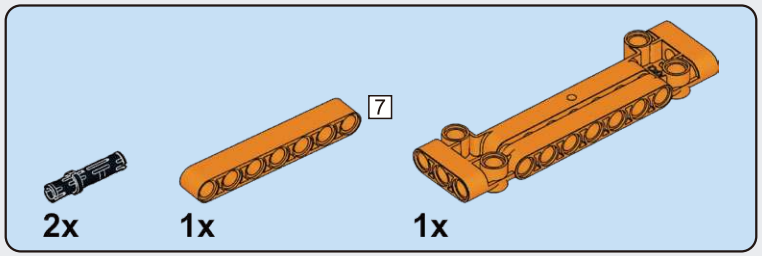

D103

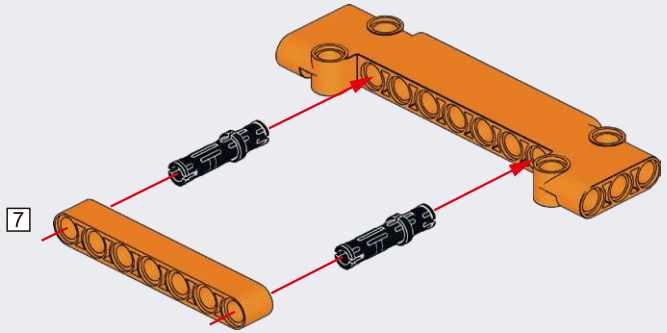

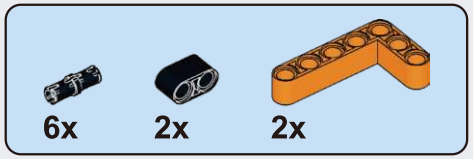

D104

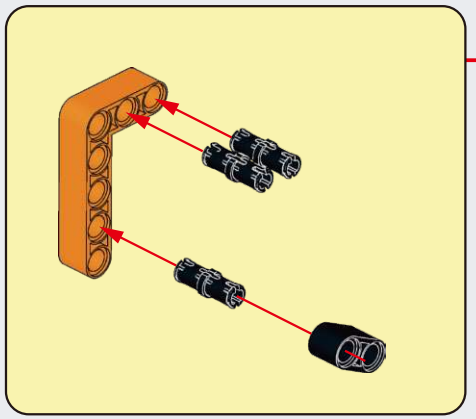

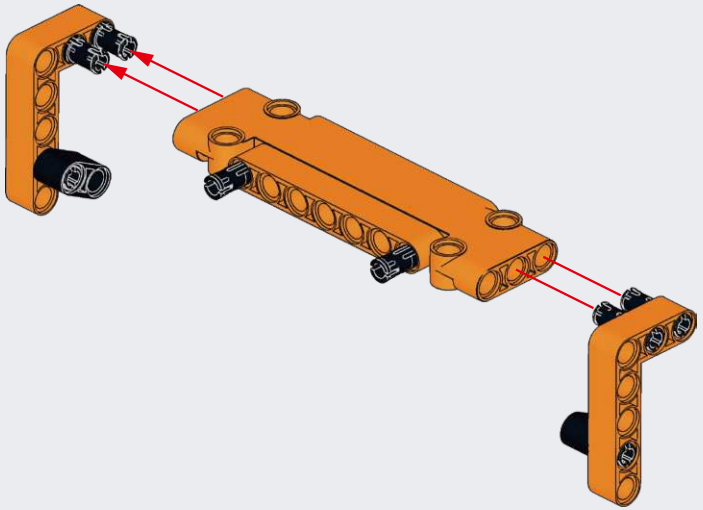

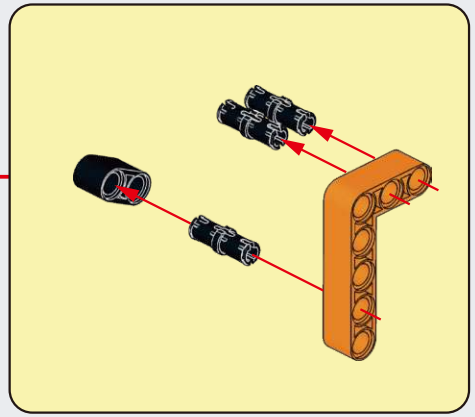

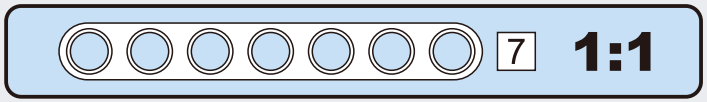

D105

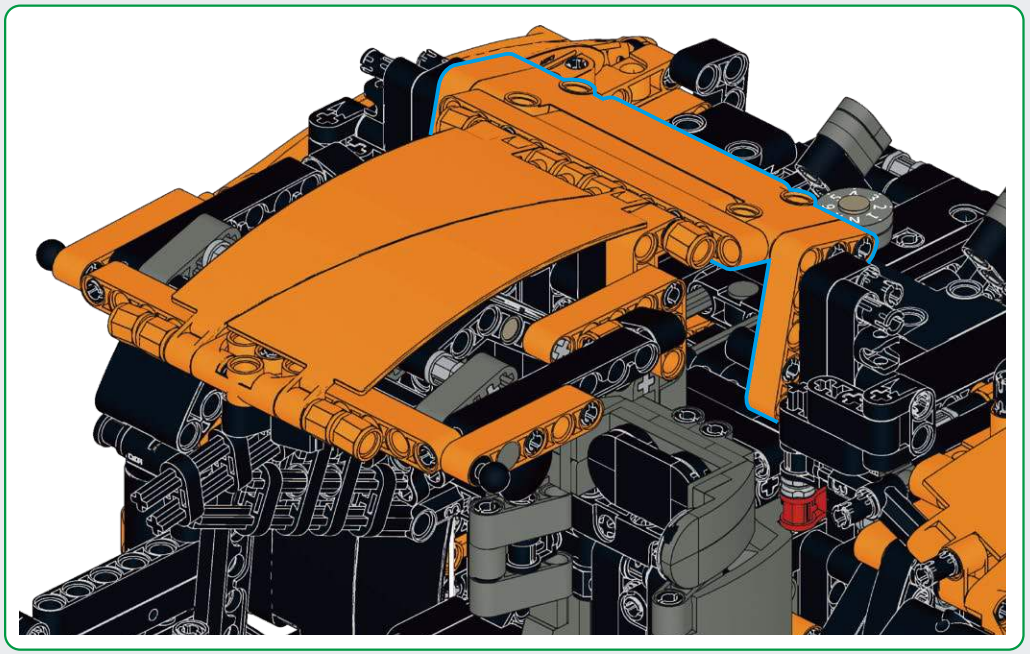

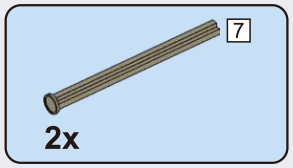

D106

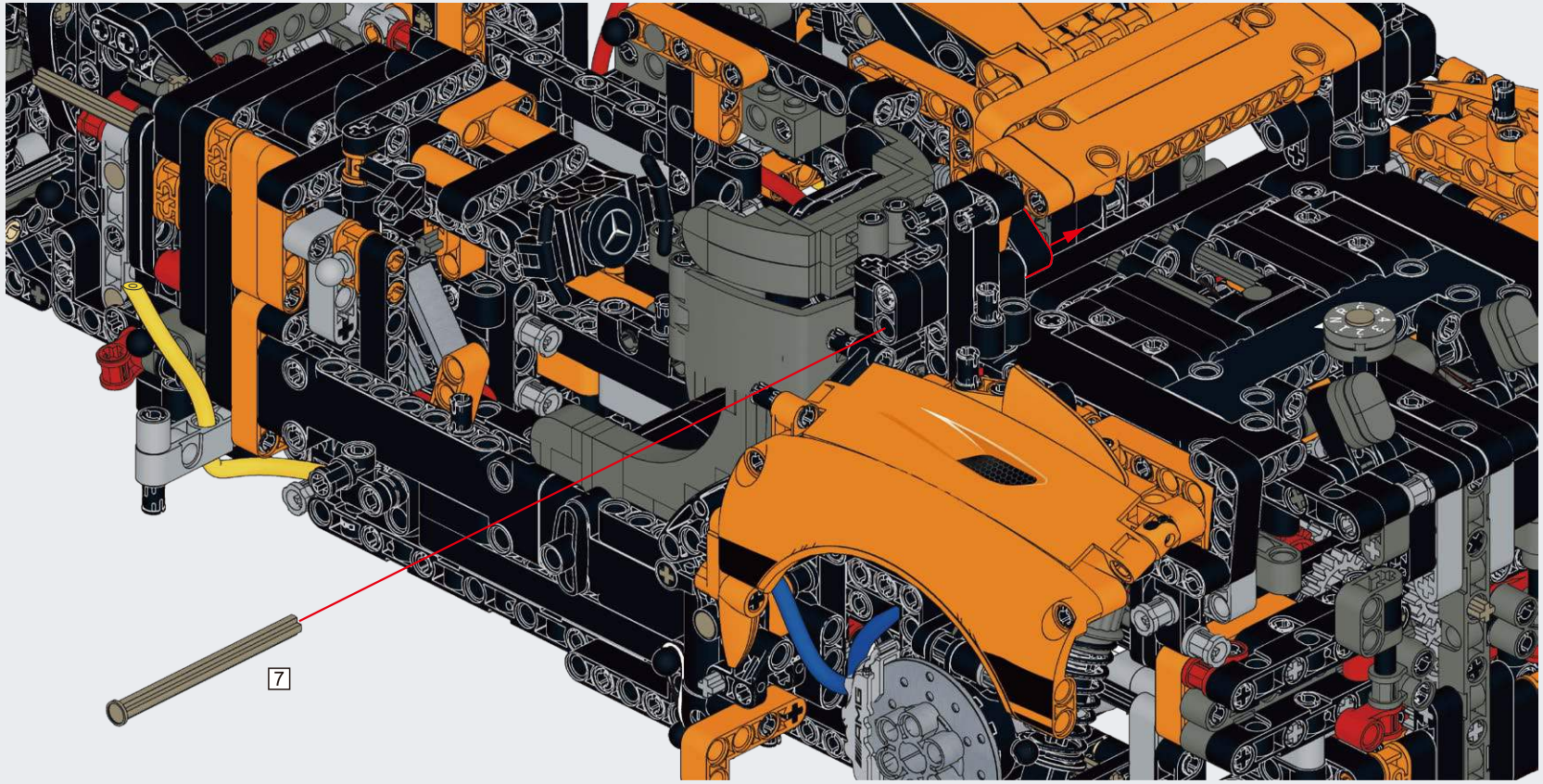

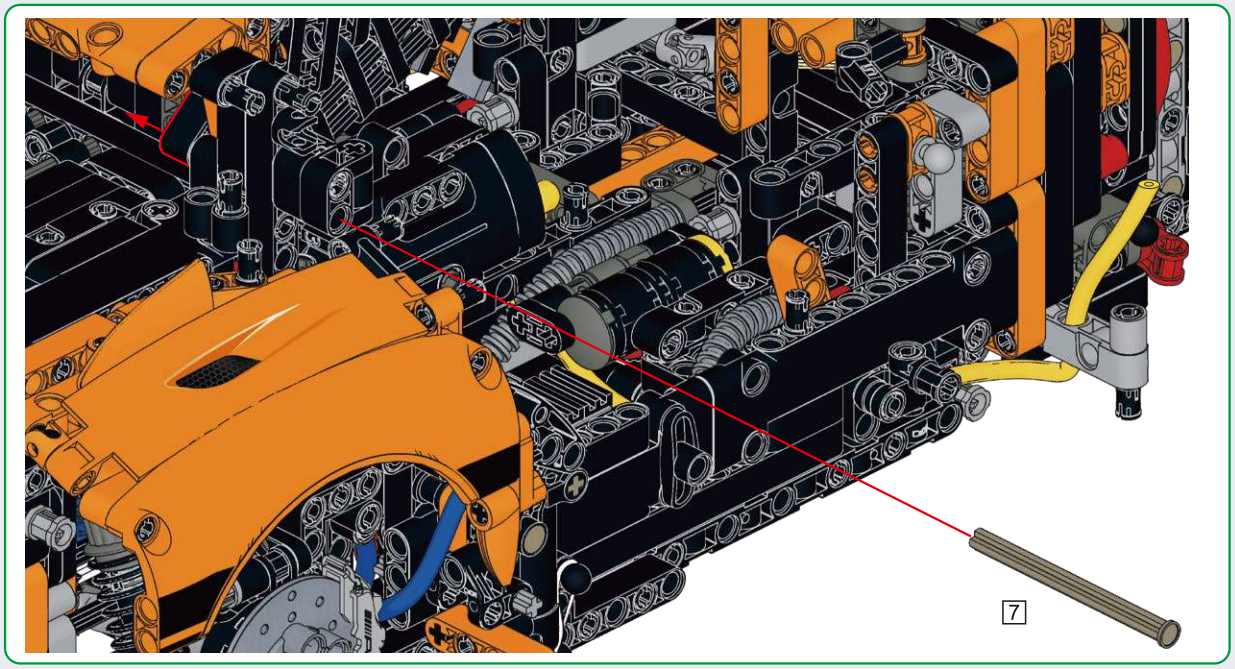

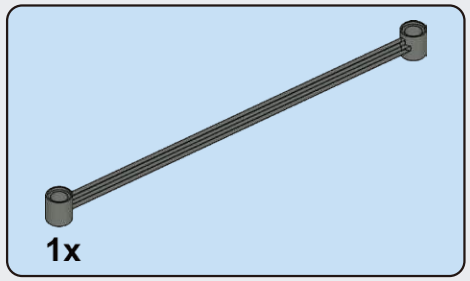

D107

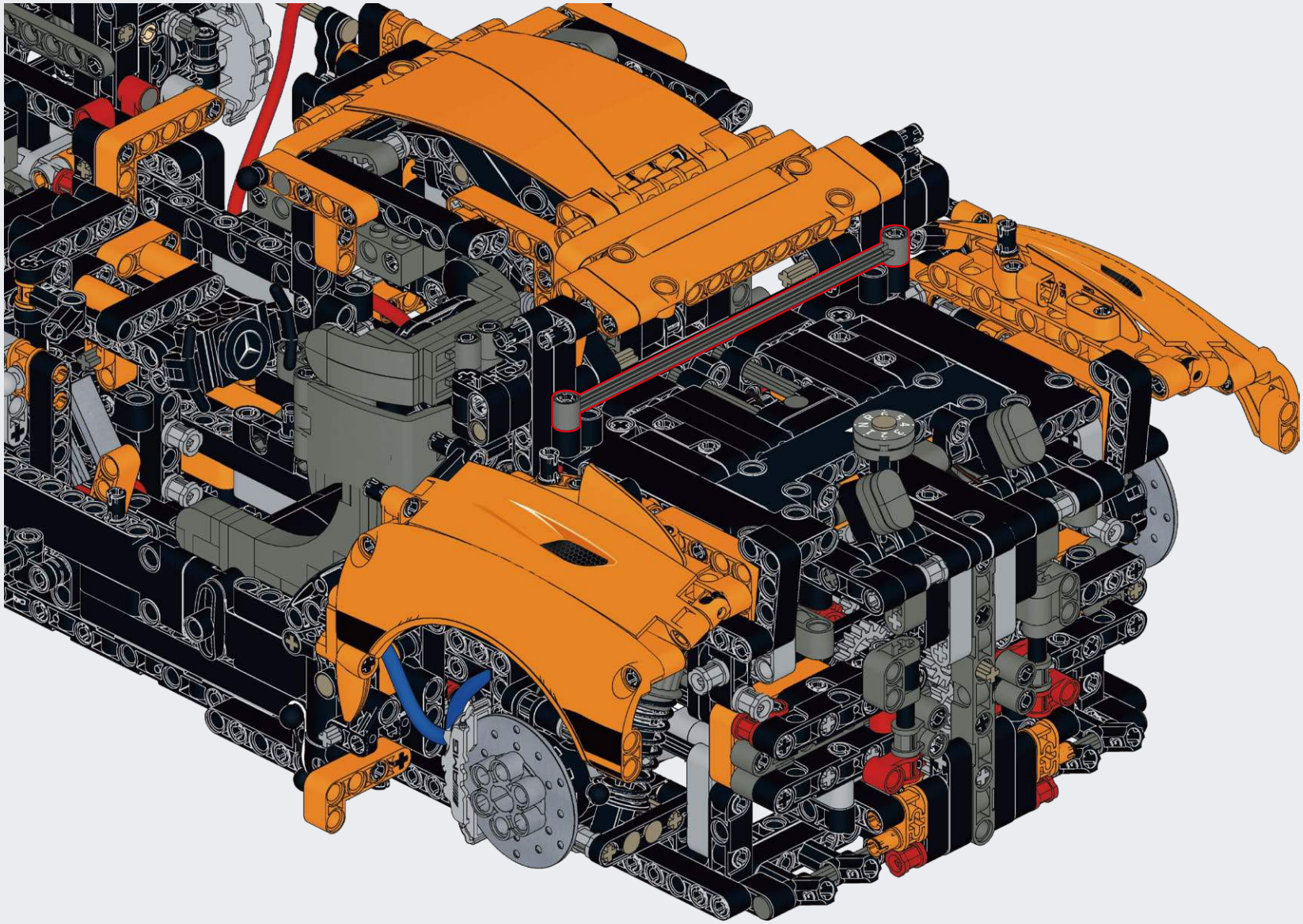

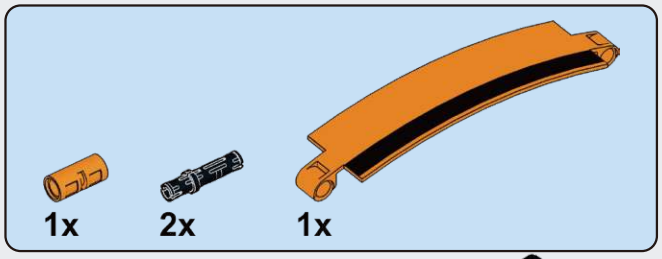

D108

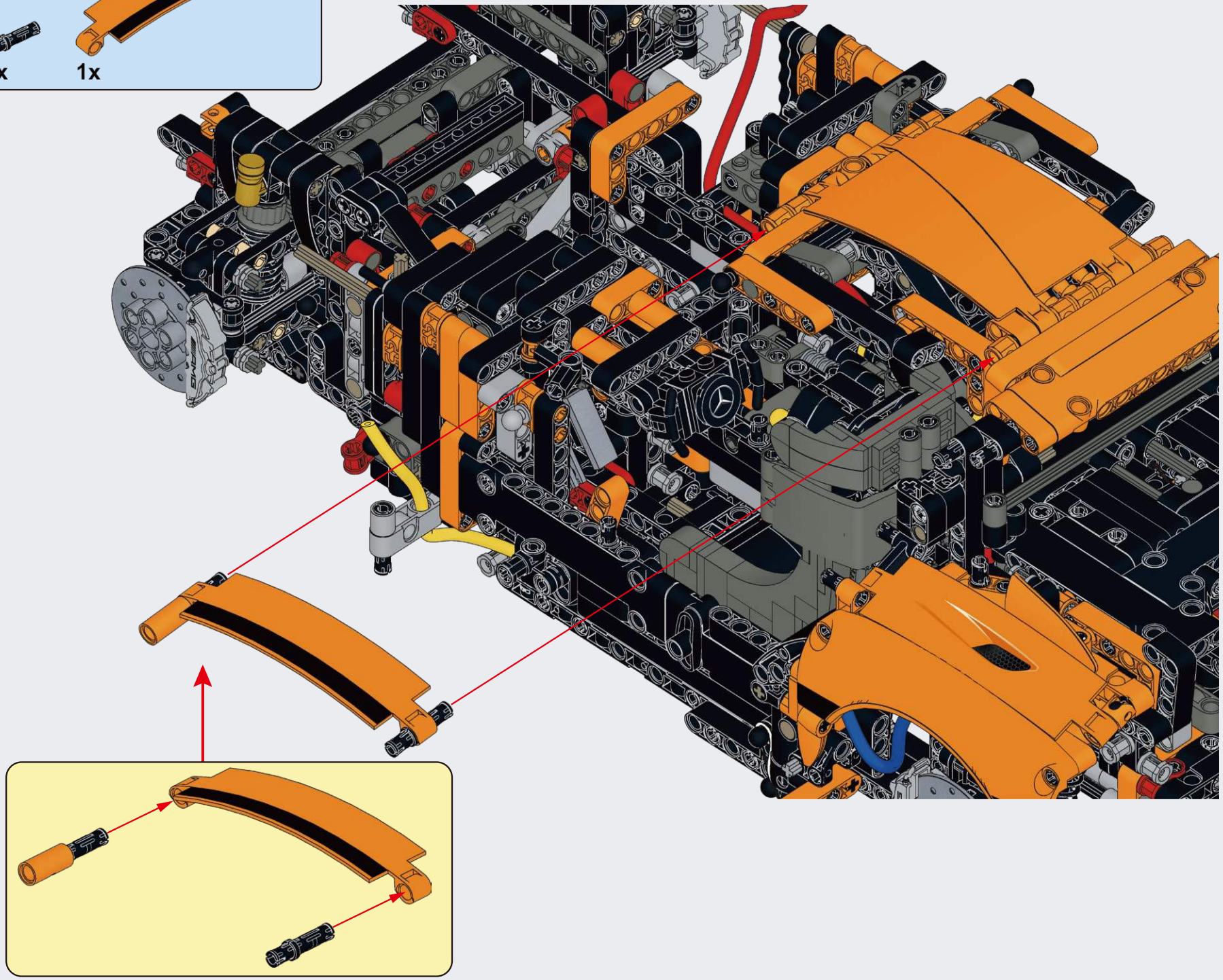

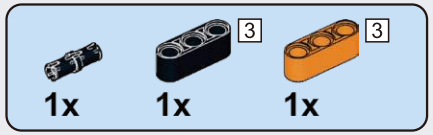

D109

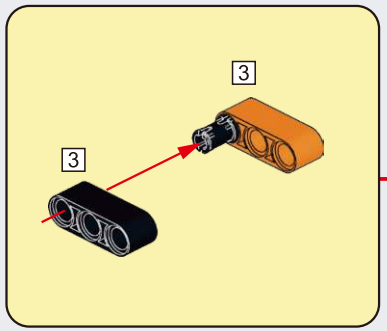

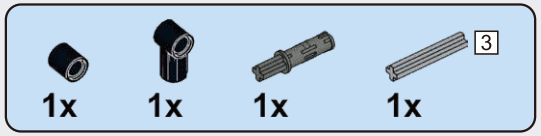

D110

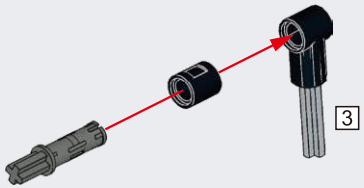

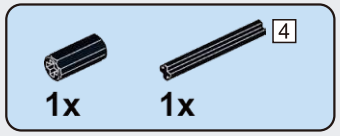

D111

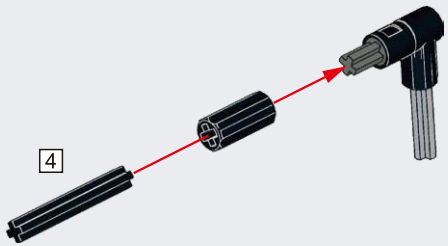

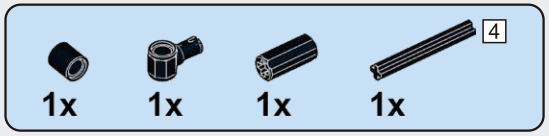

D112

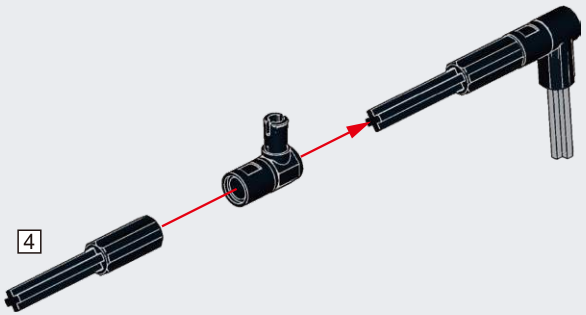

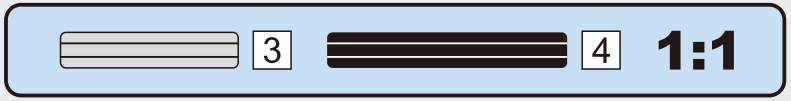

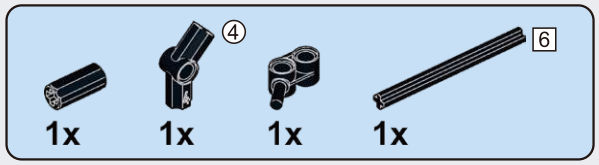

D113

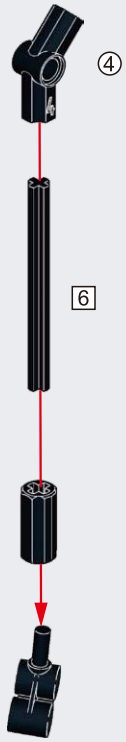

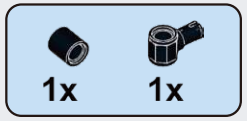

D114

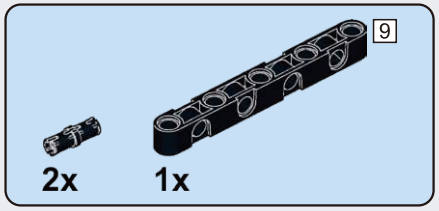

D115

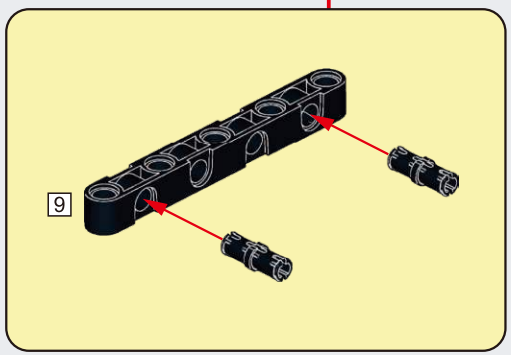

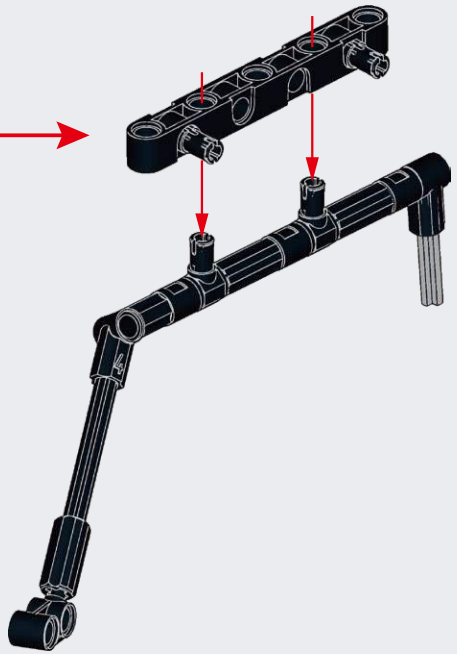

D116

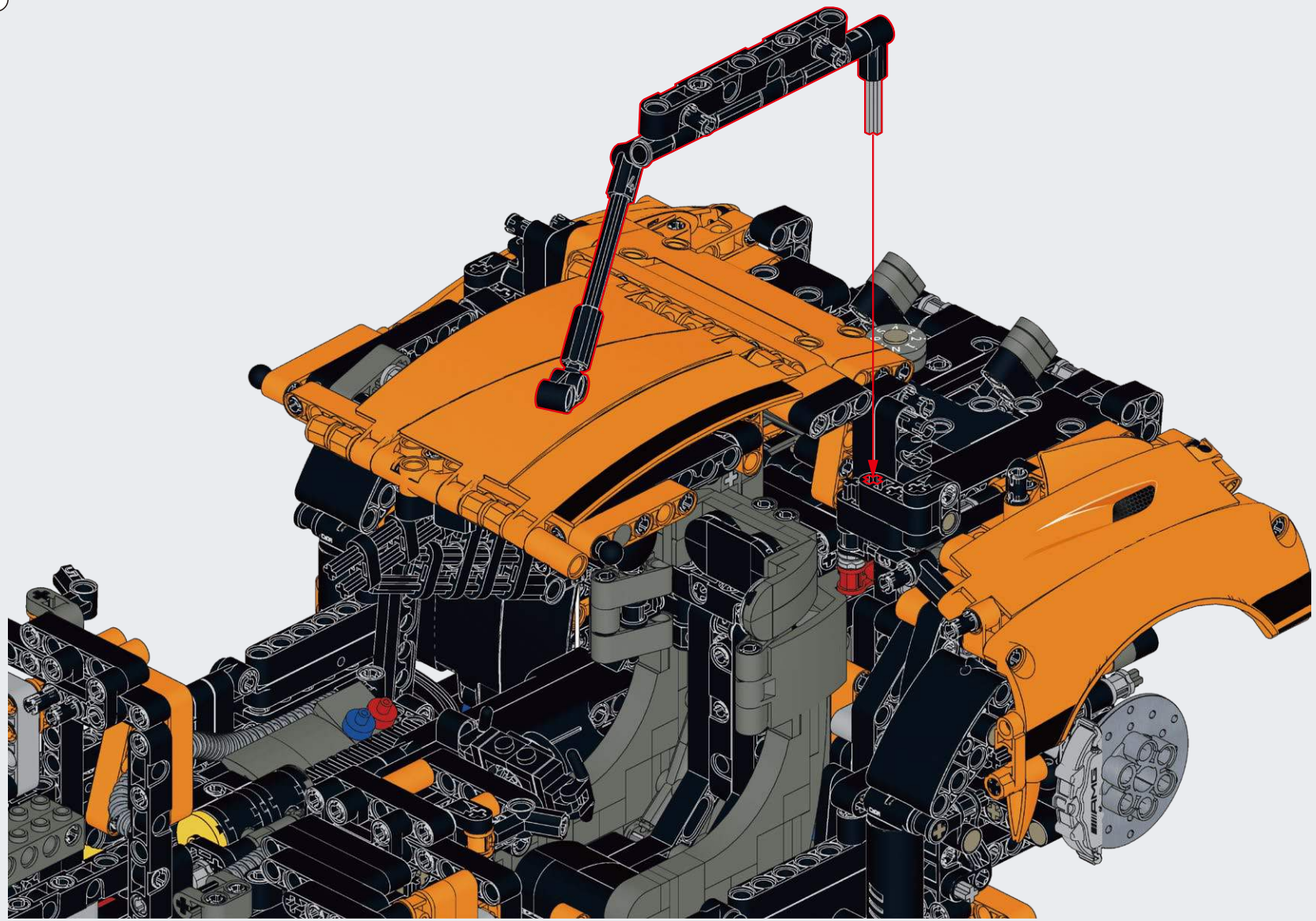

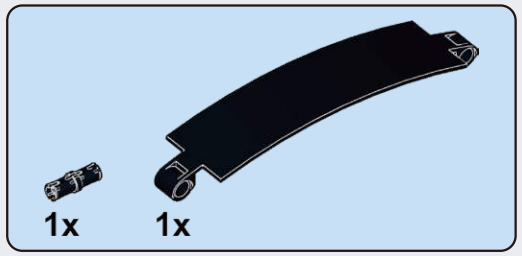

D117

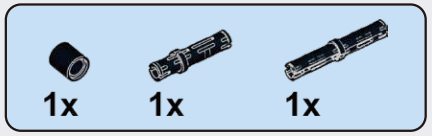

D118

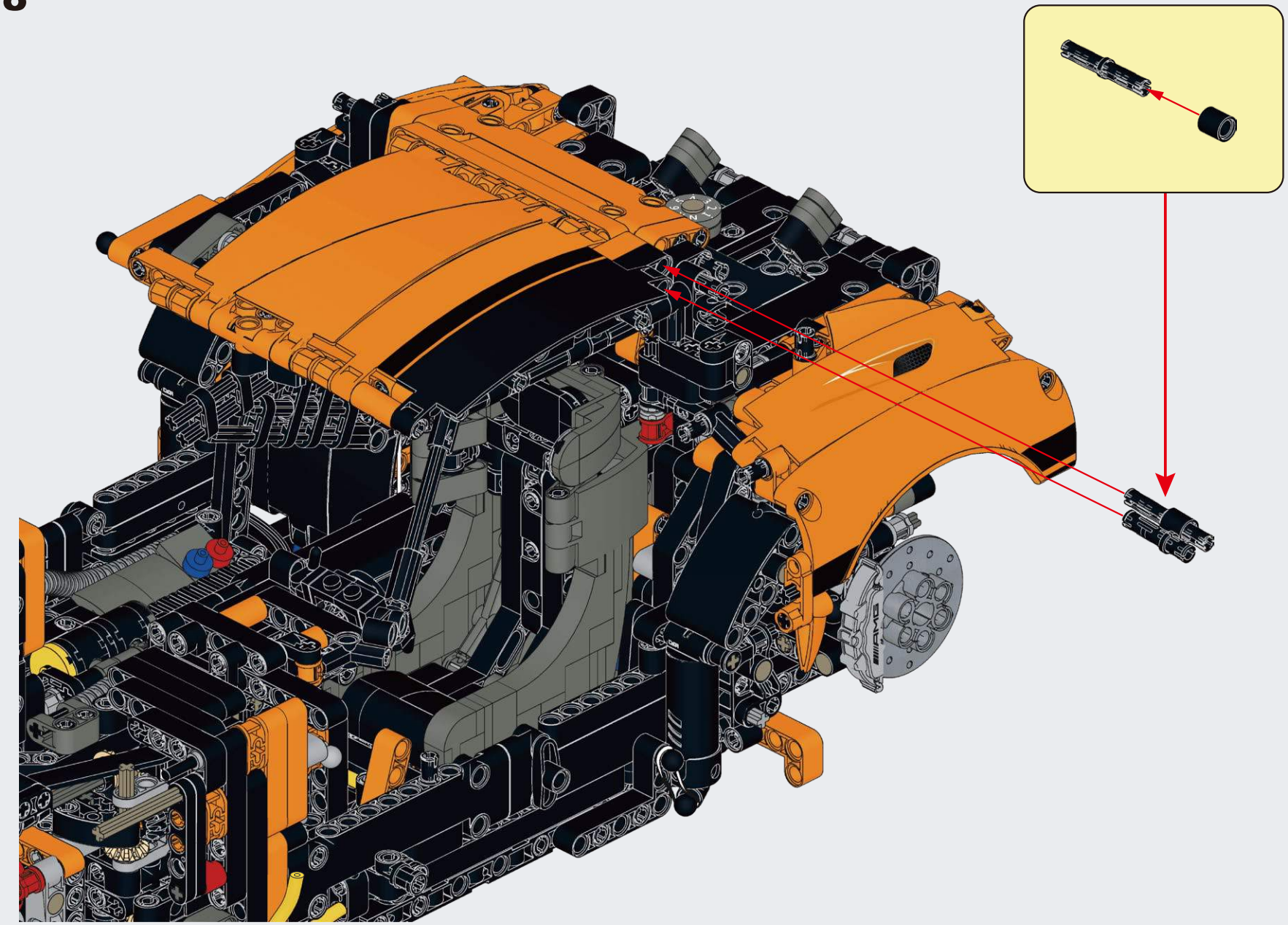

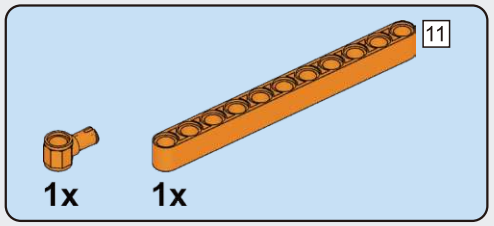

D119

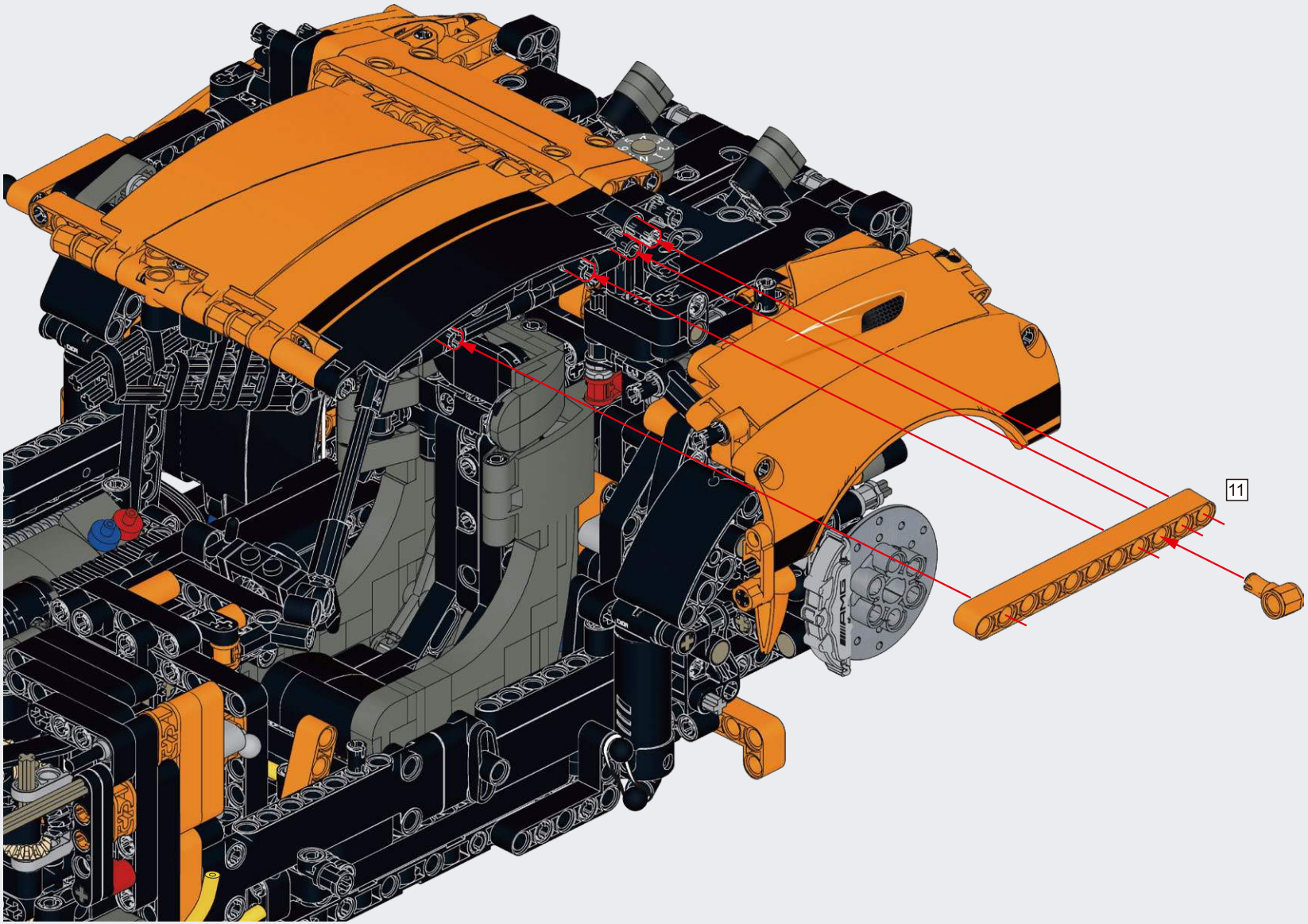

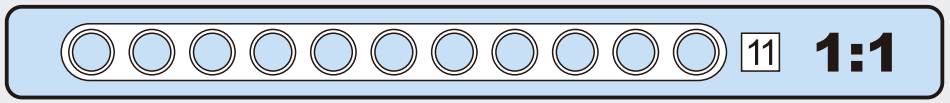

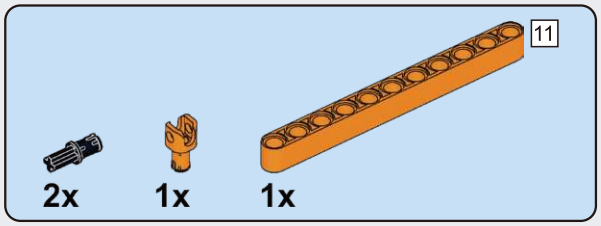

D120

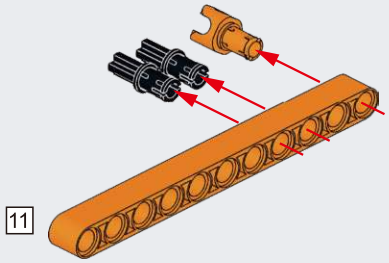

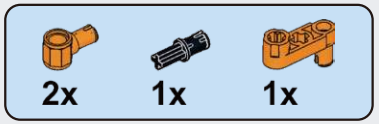

D121

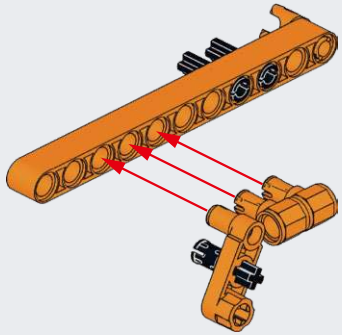

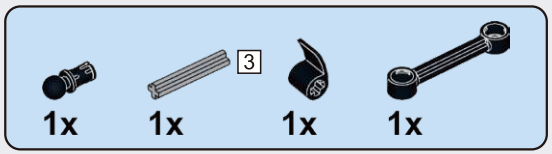

D122

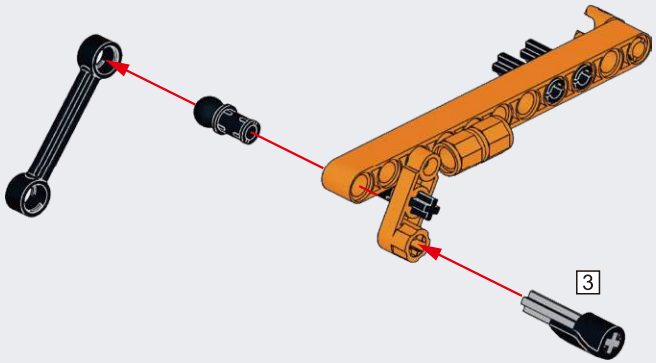

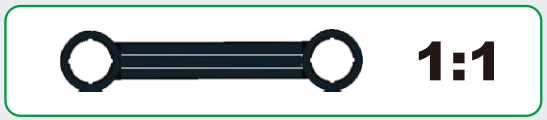

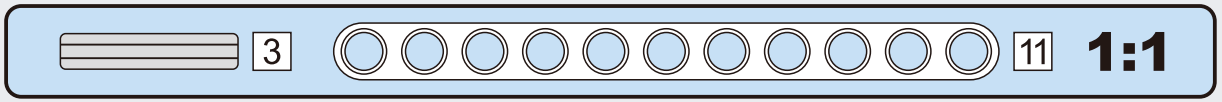

D123

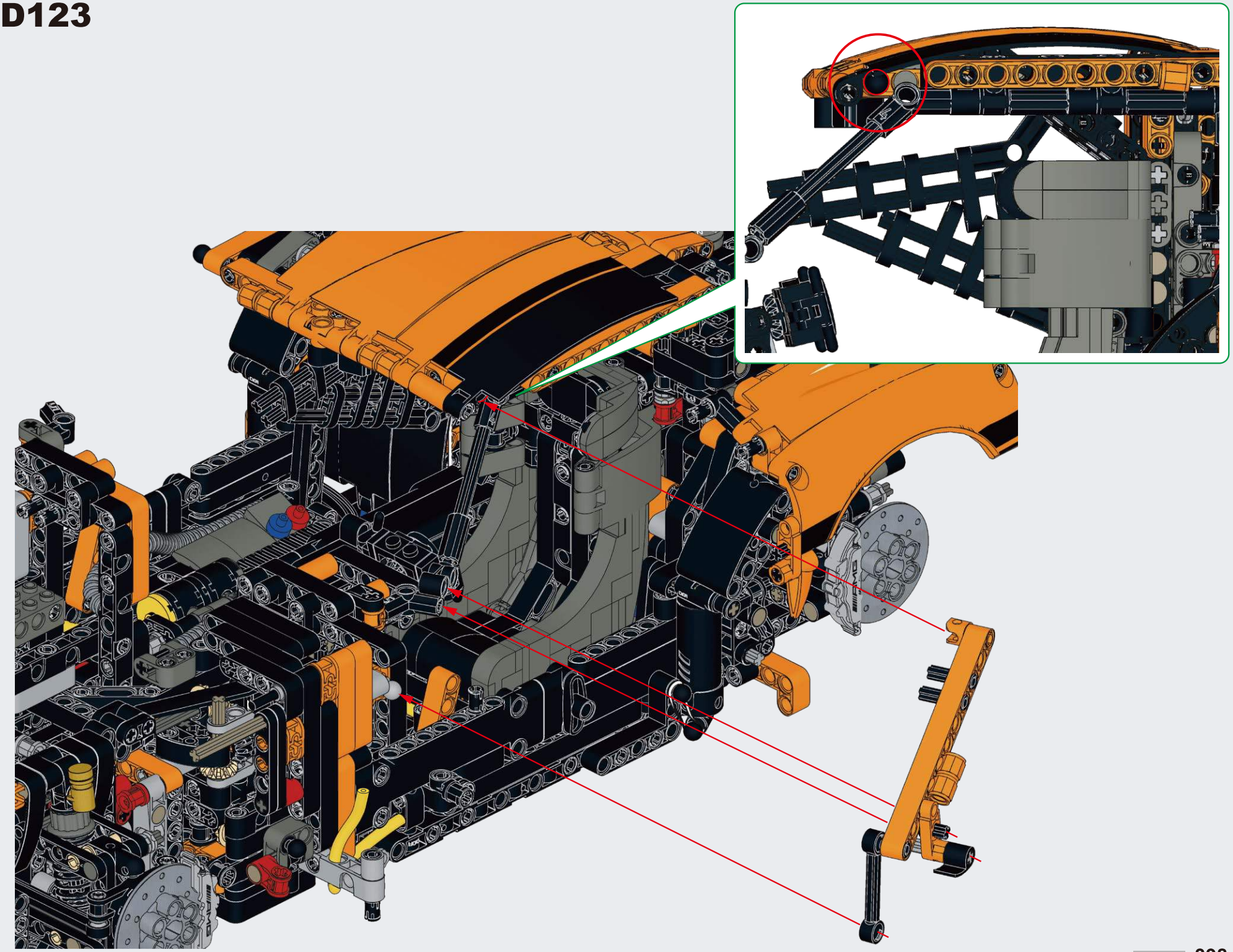

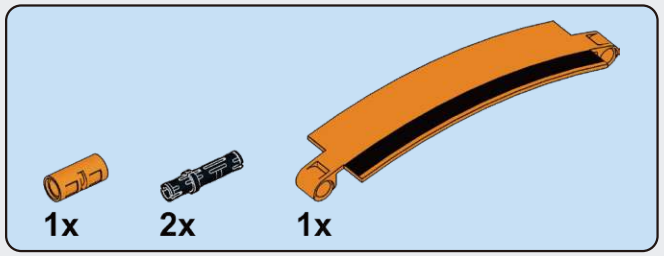

D124

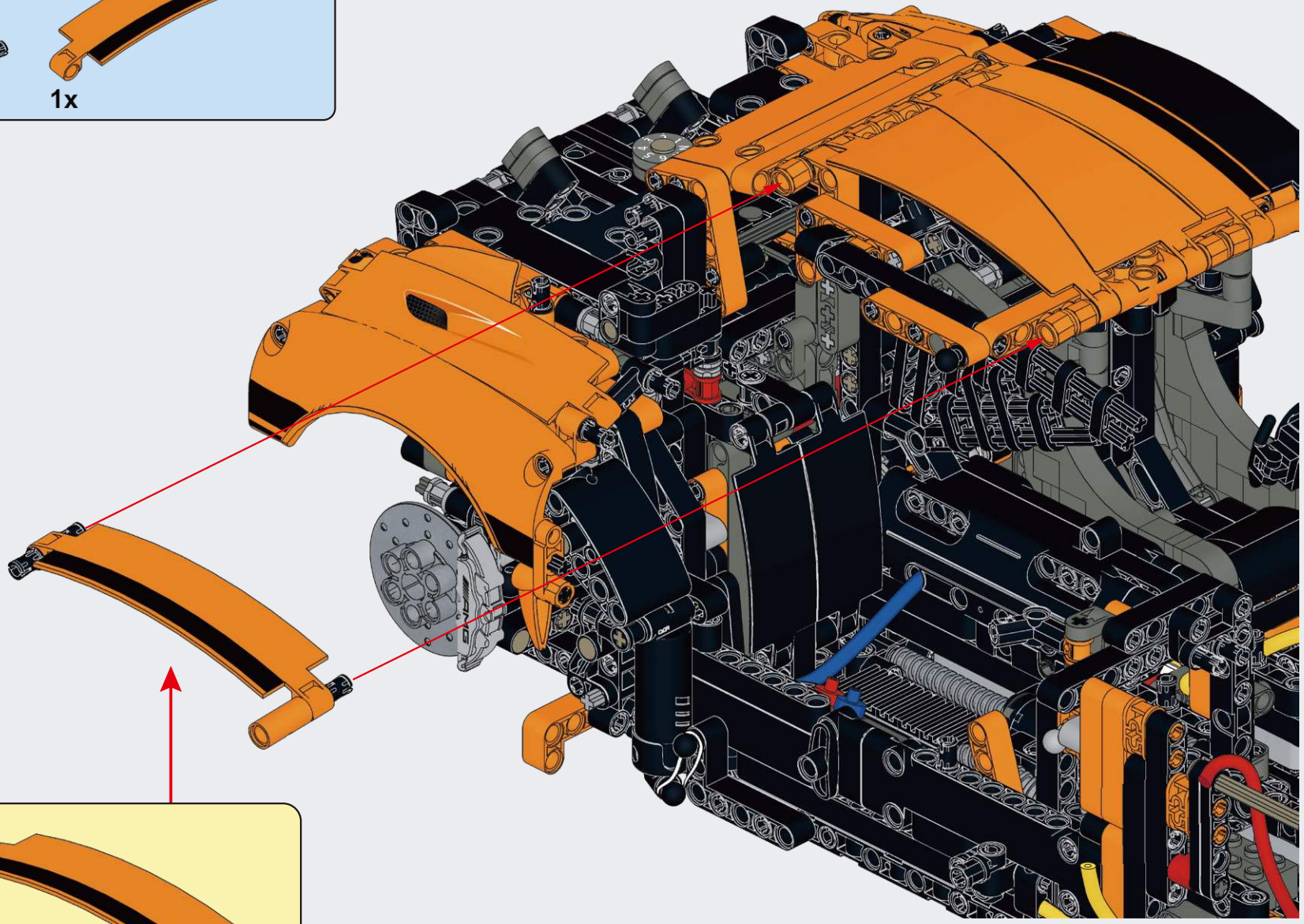

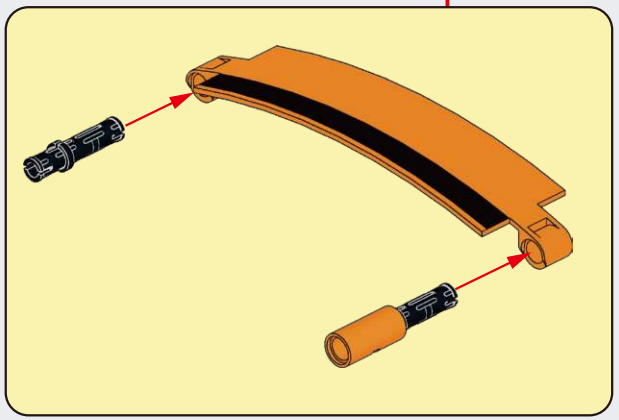

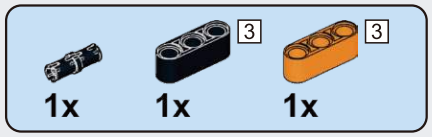

D125

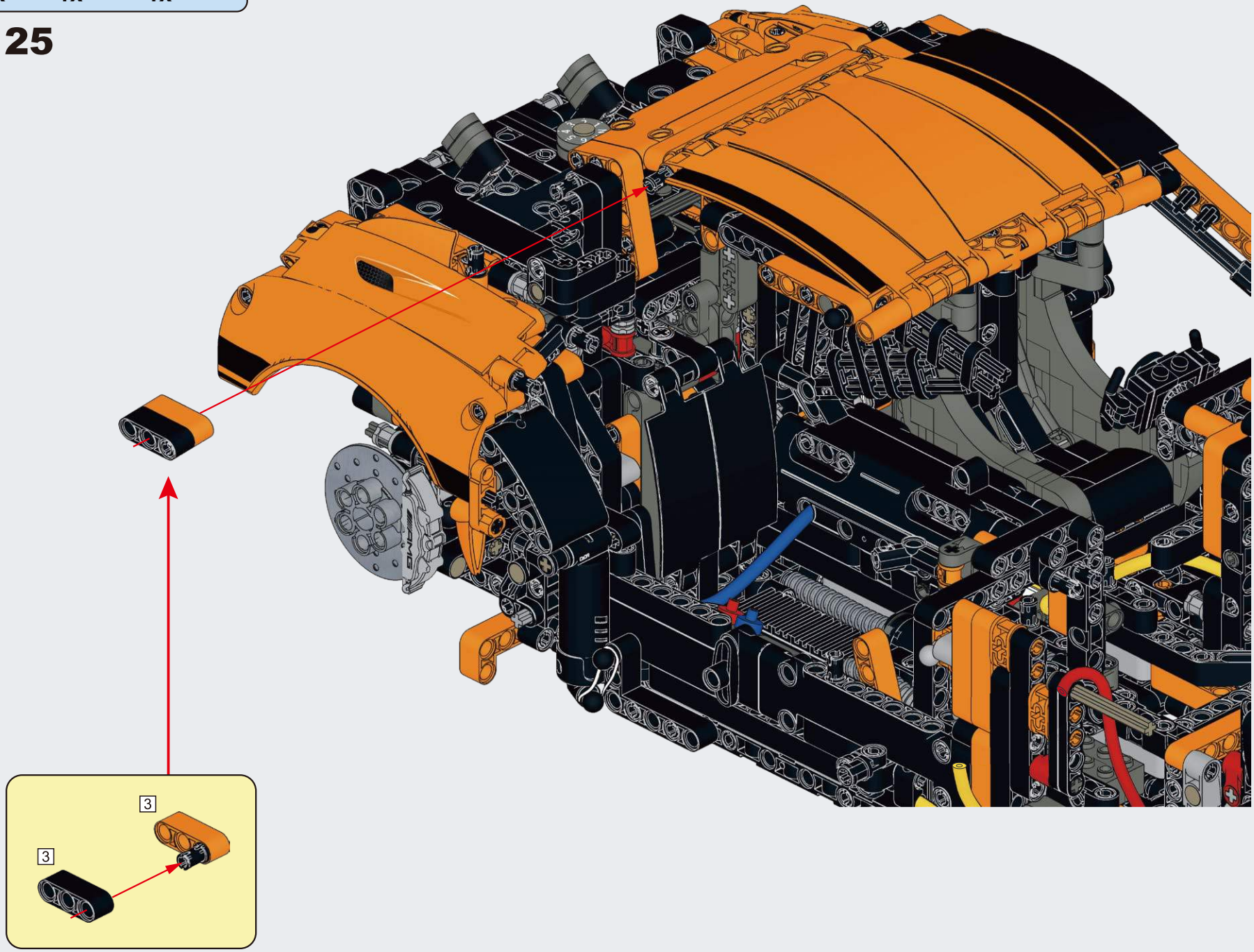

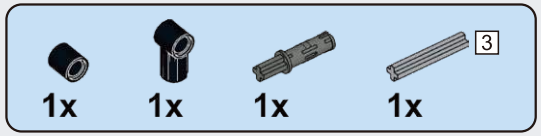

D126

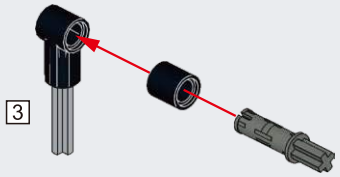

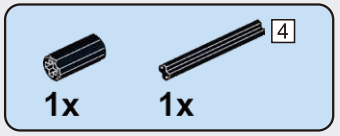

D127

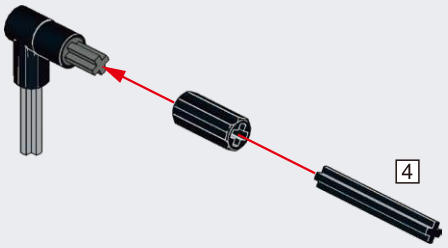

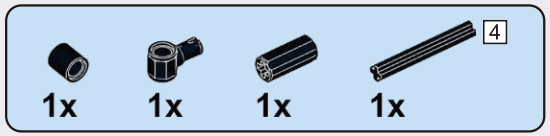

D128

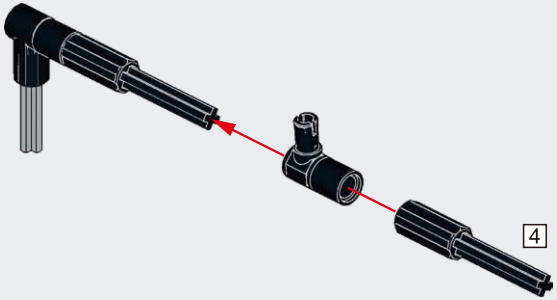

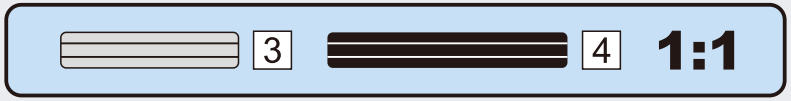

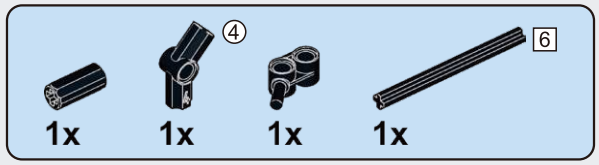

D129

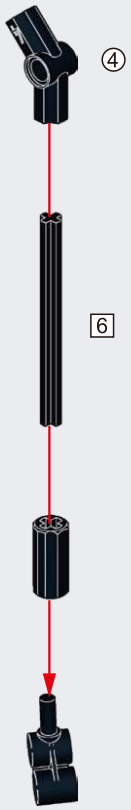

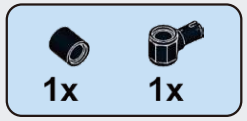

D130

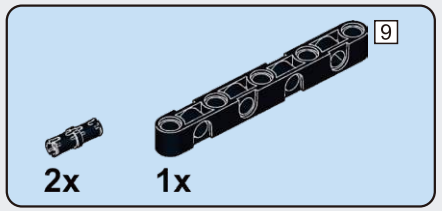

D131

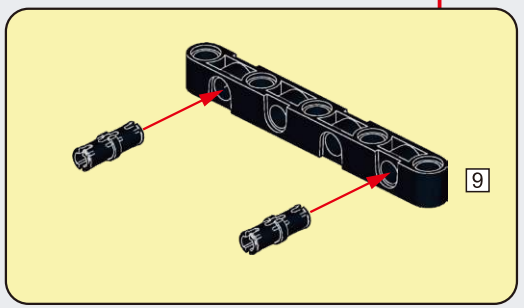

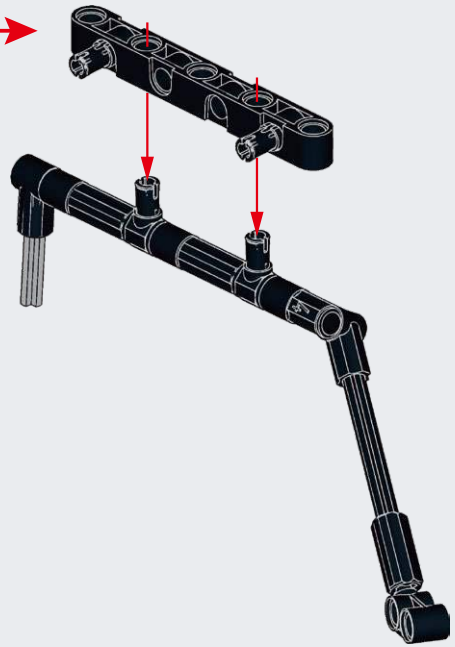

CaDA® MASTER

AMG

Mercedes-AMG GT3

www.doubleeagle-group.com

ONE

403ARC640080005