CaDA® MASTER

AMG

BOOK TWO

02

AMG
AMG

CaDA® MASTER

AMG

D132

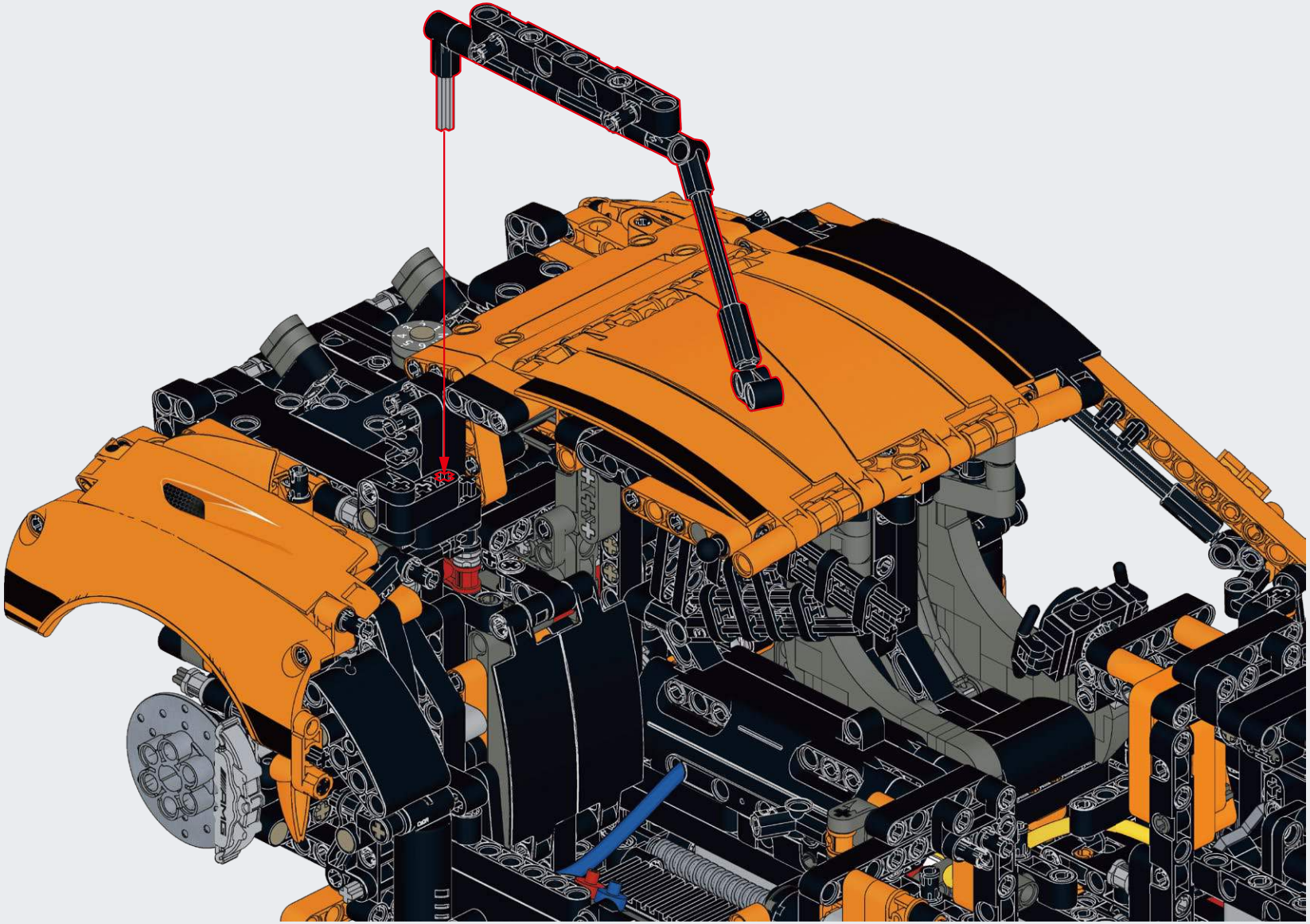

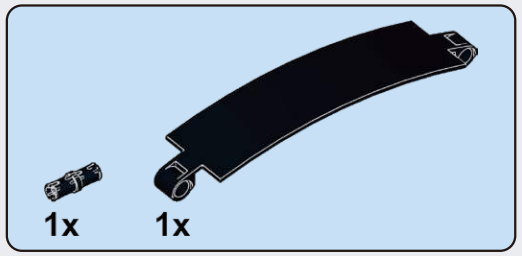

D133

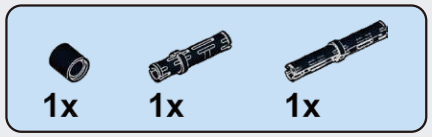

D134

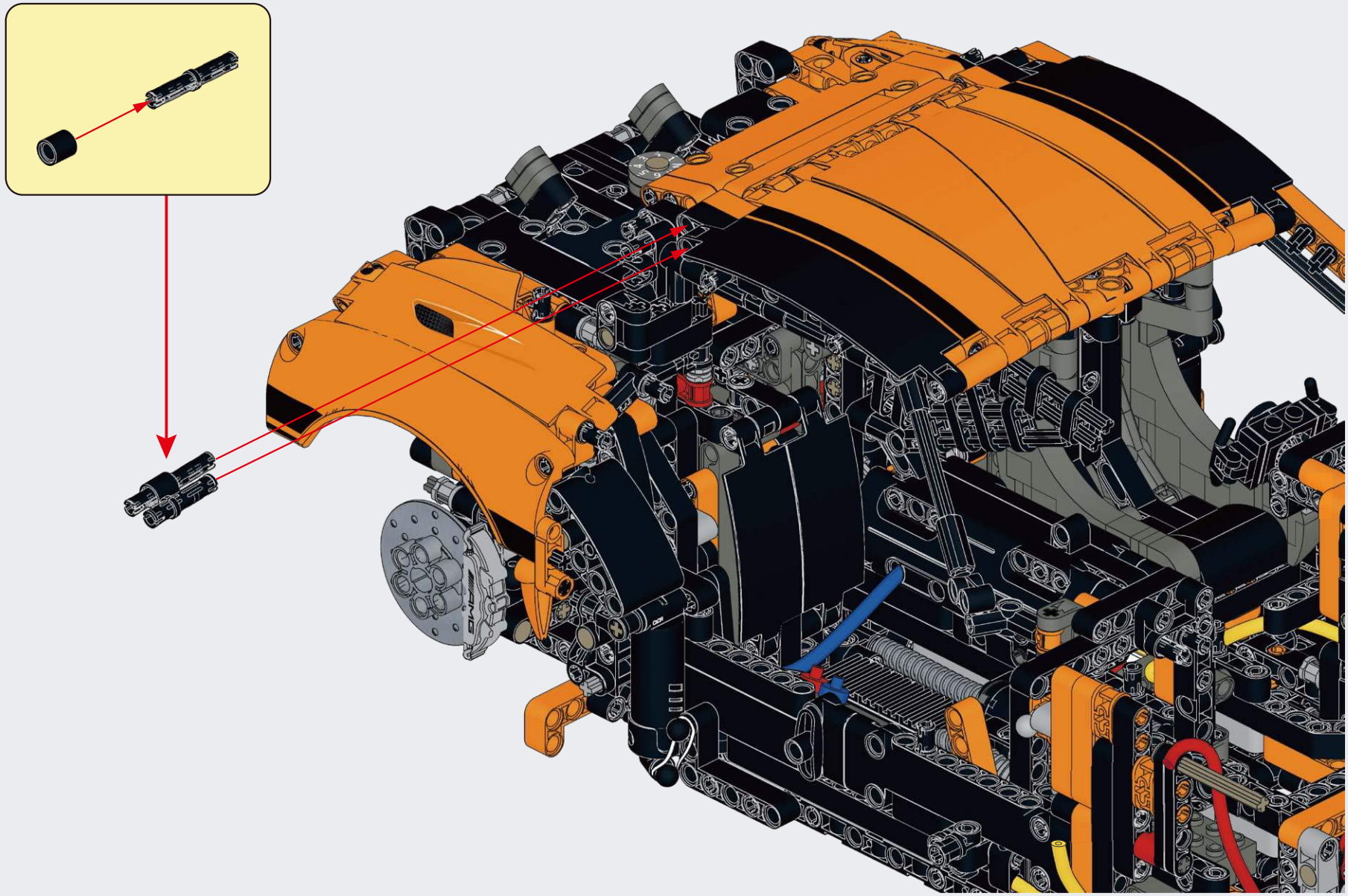

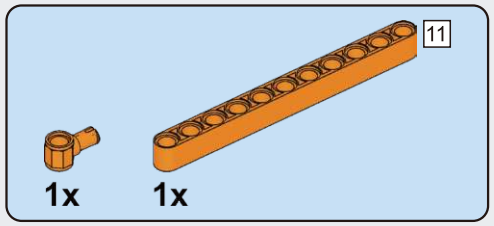

D135

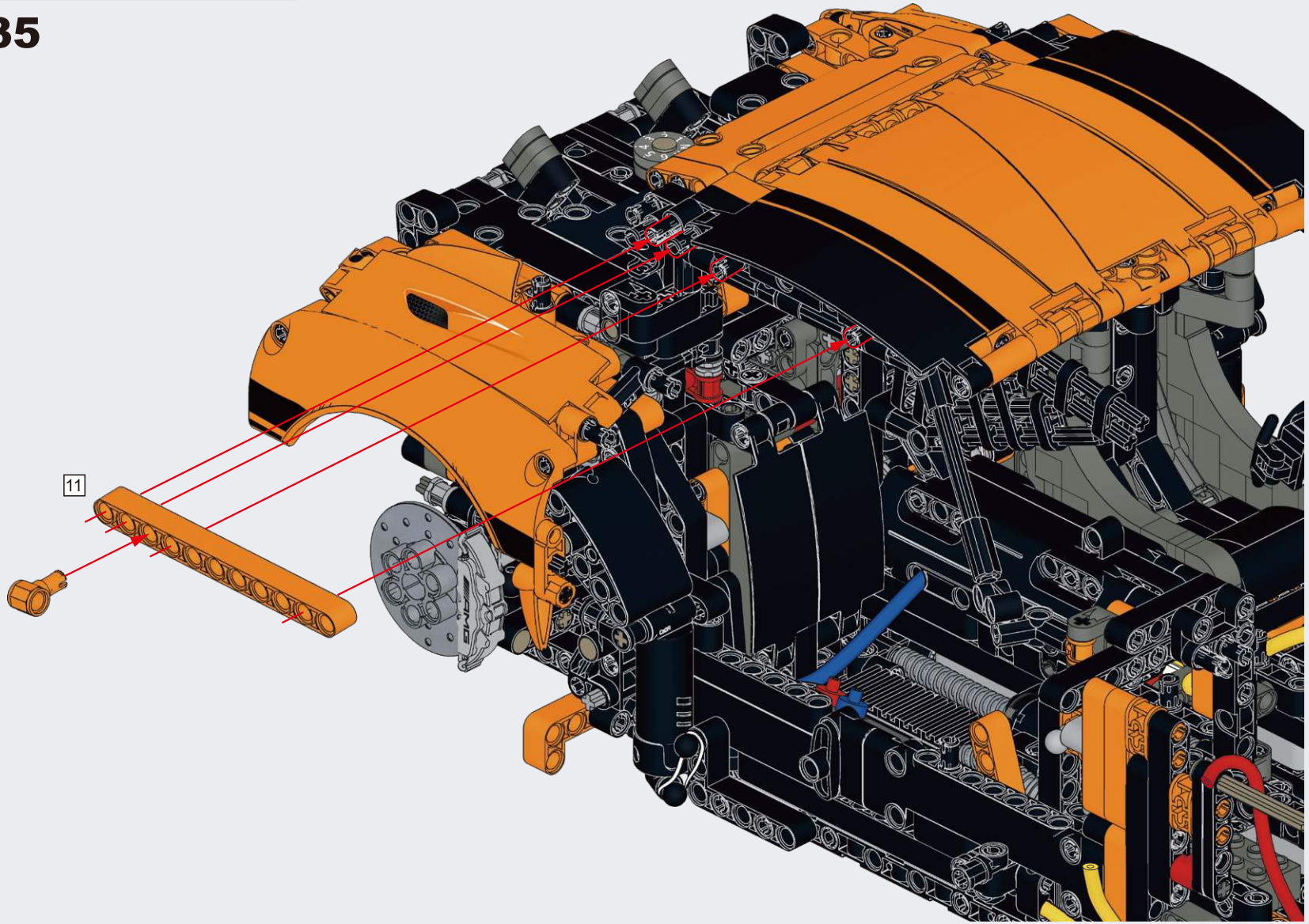

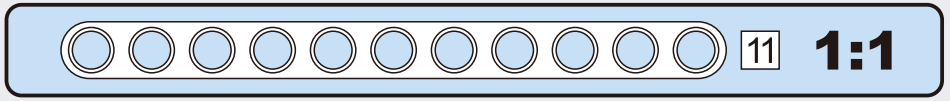

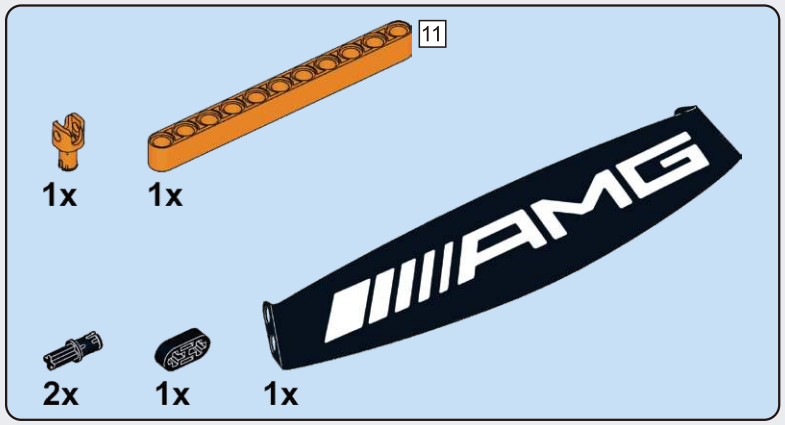

D136

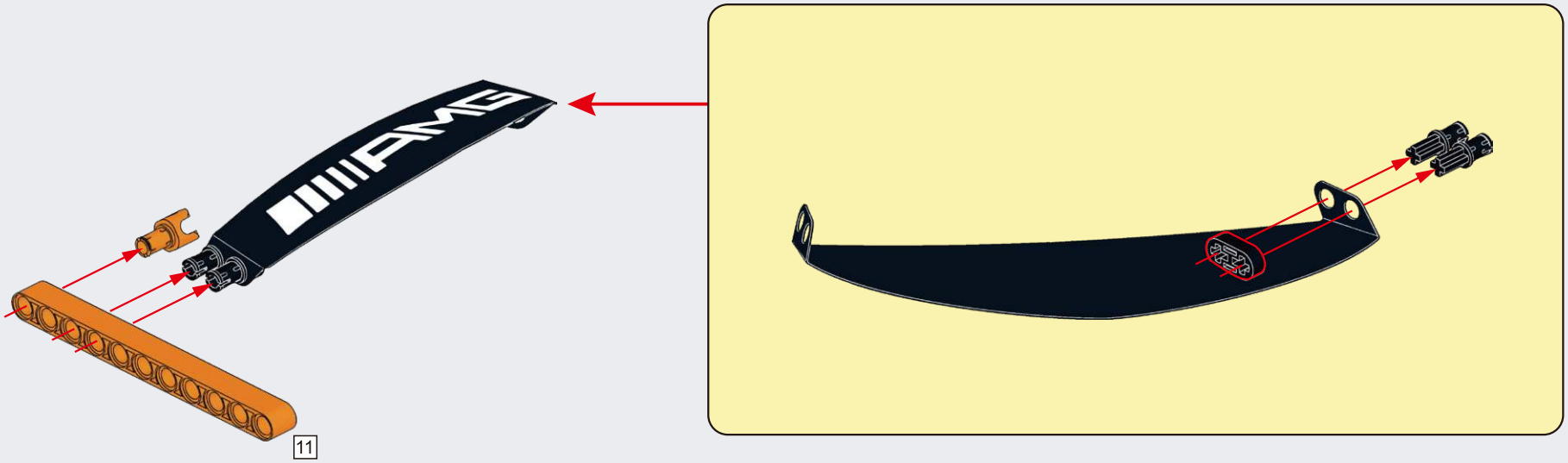

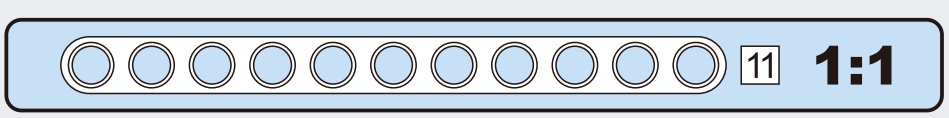

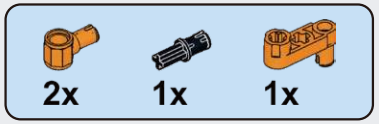

D137

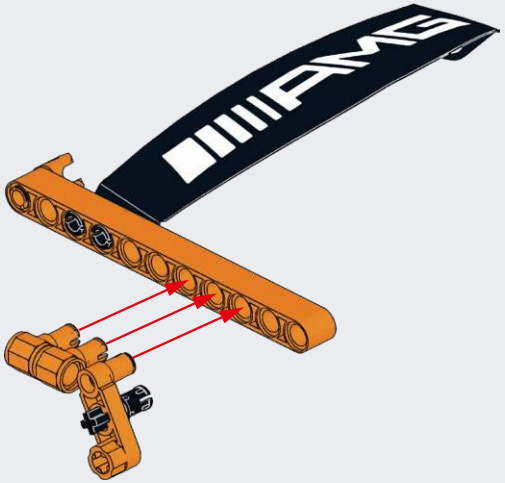

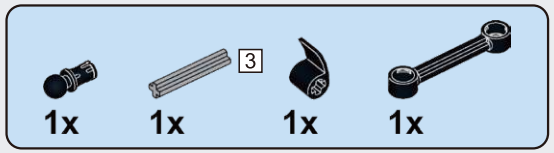

D138

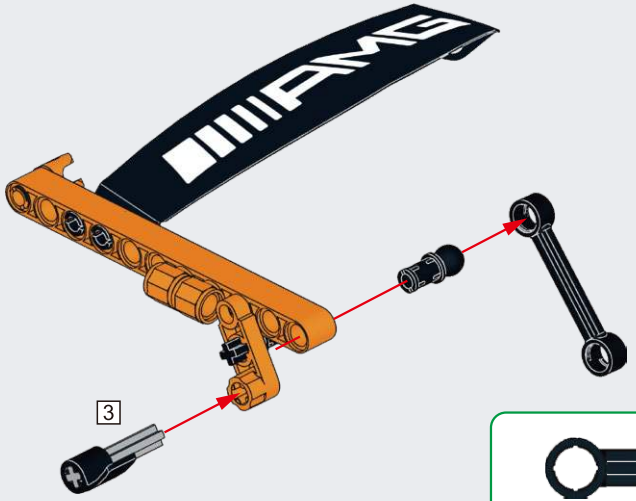

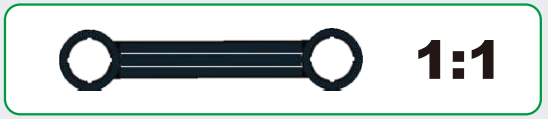

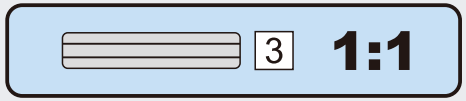

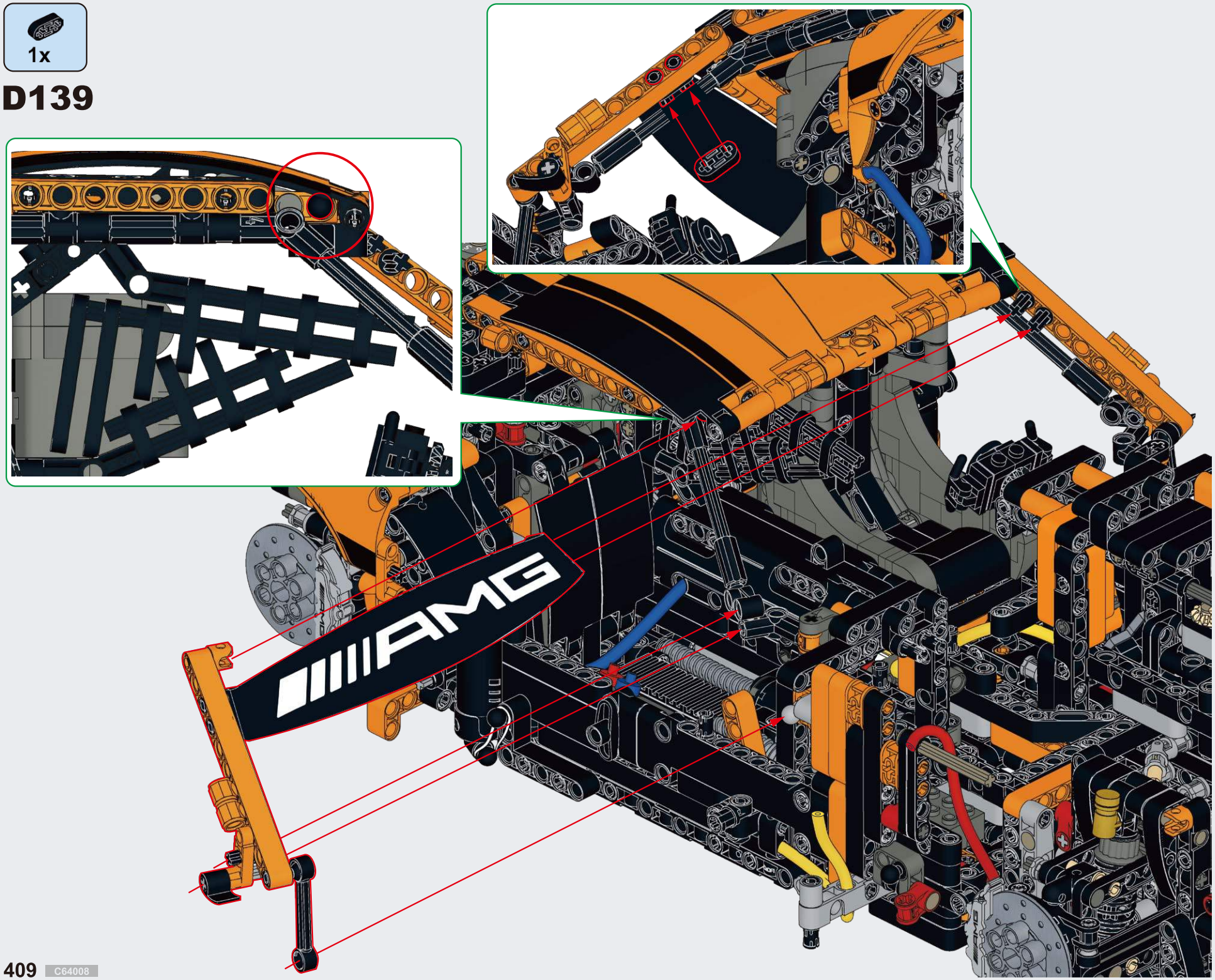
1x
D139
AMG

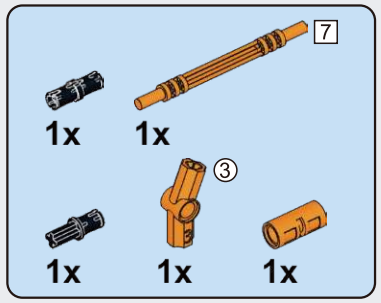

D140

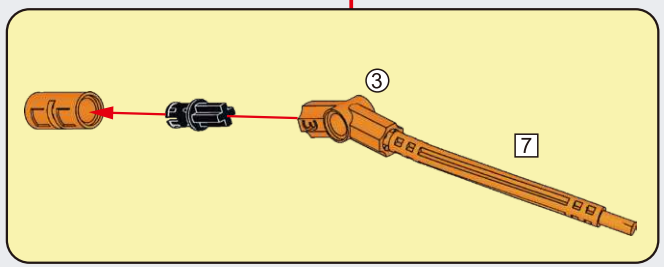

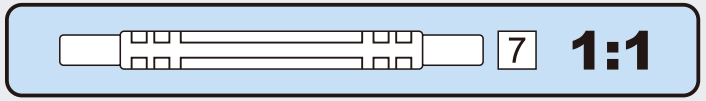

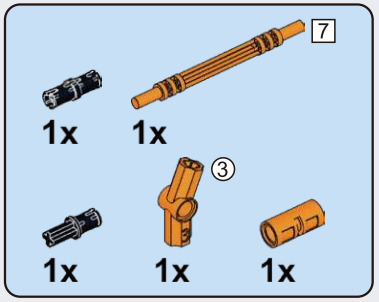

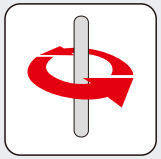

D141

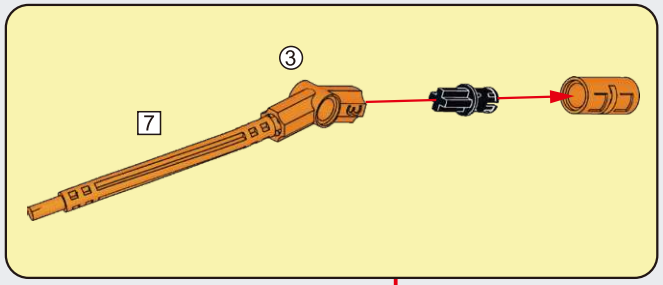

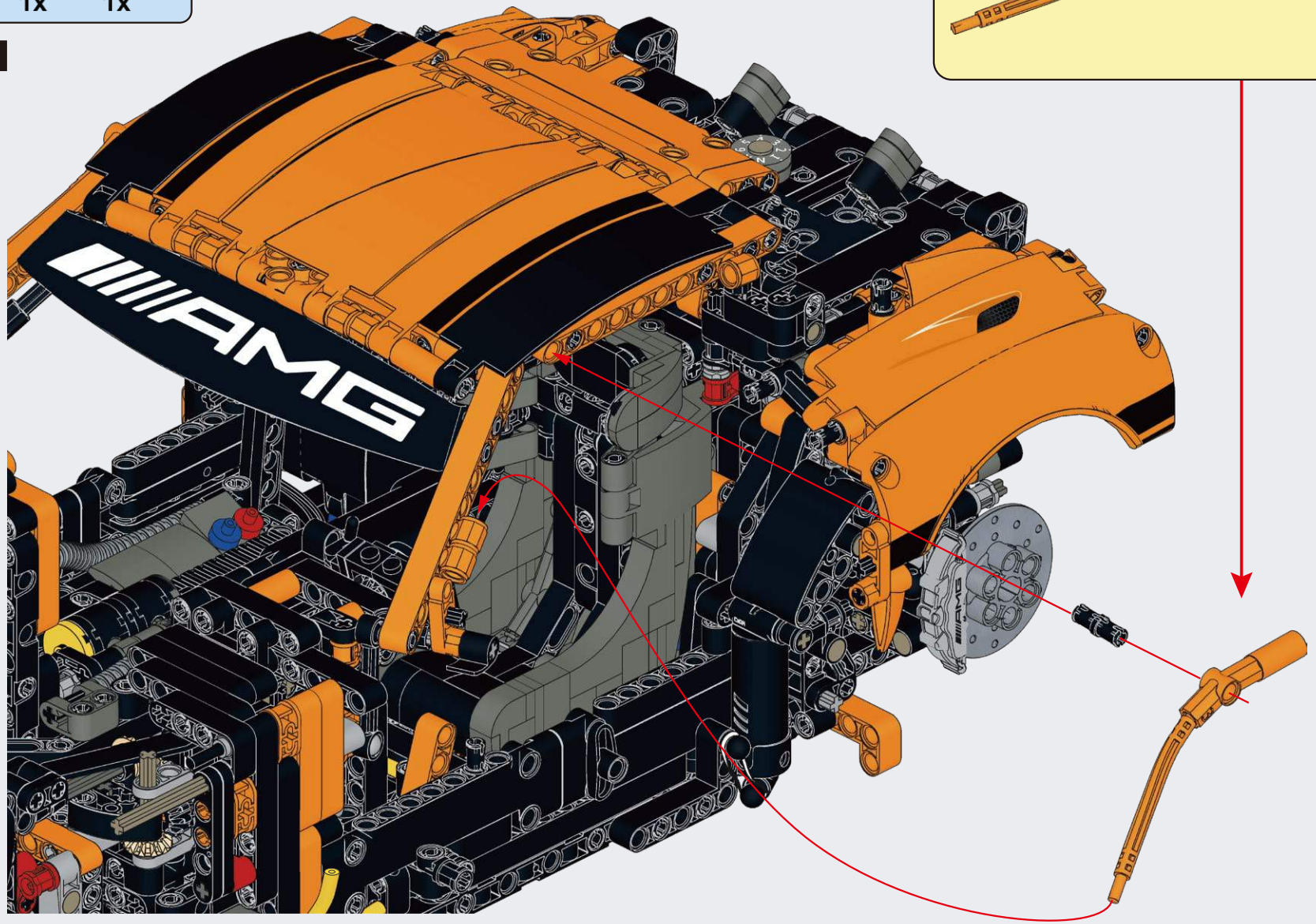

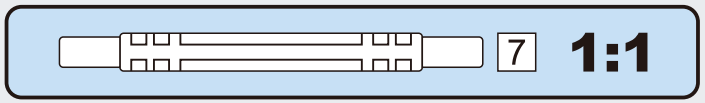

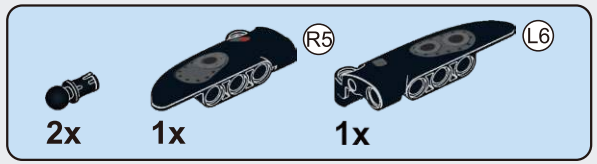

D142

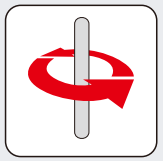

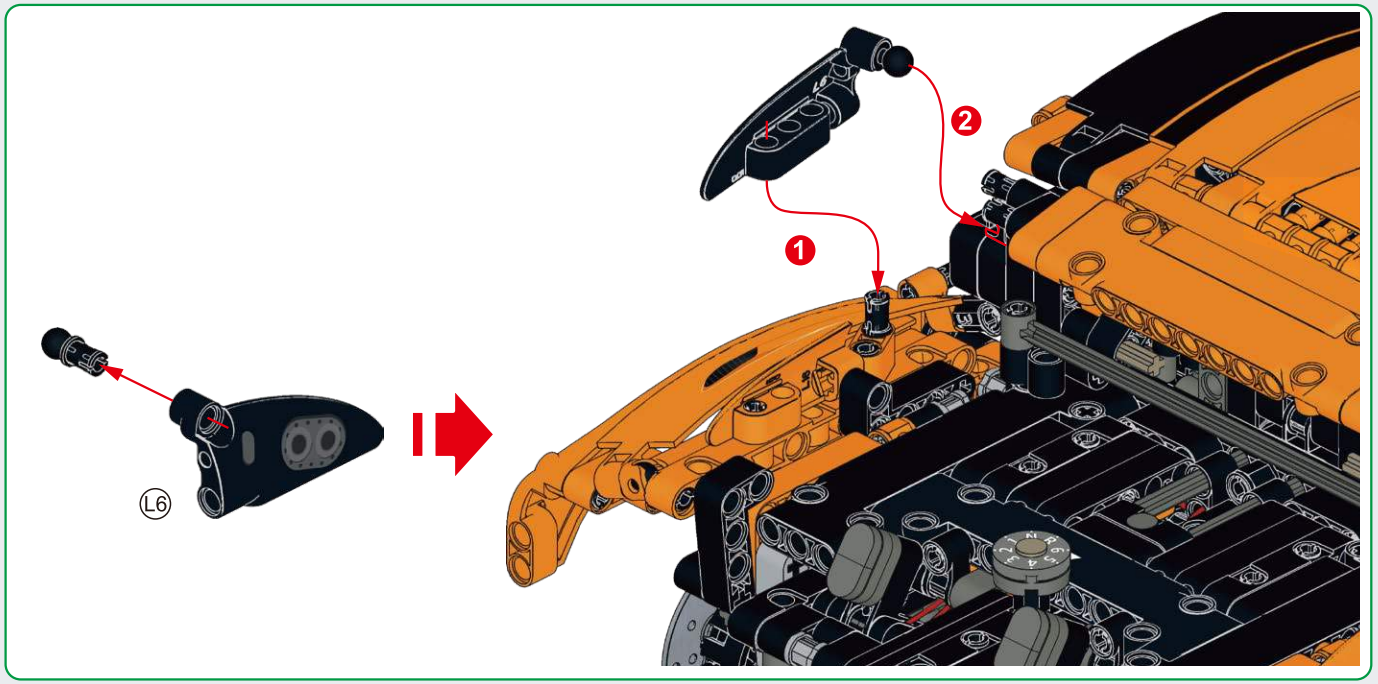

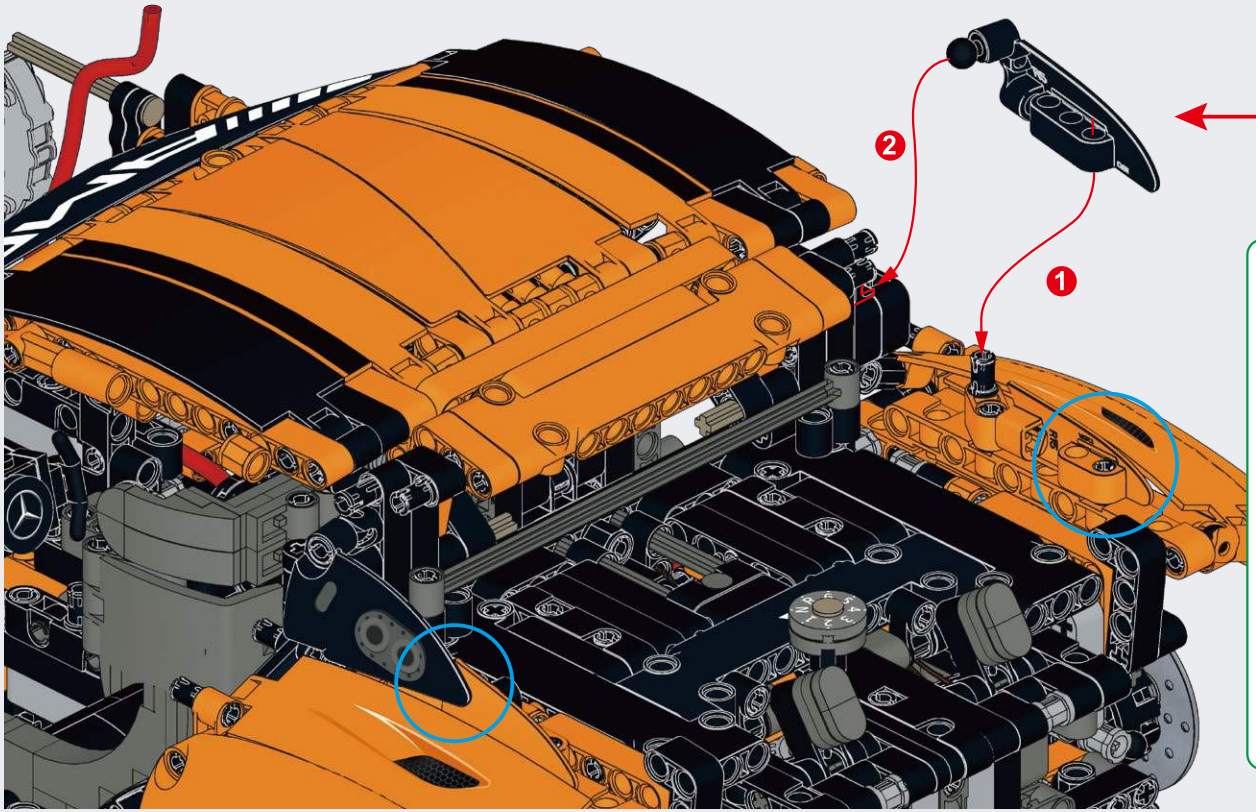

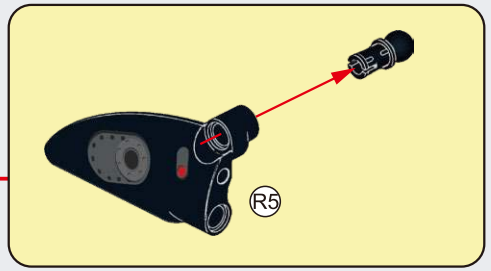

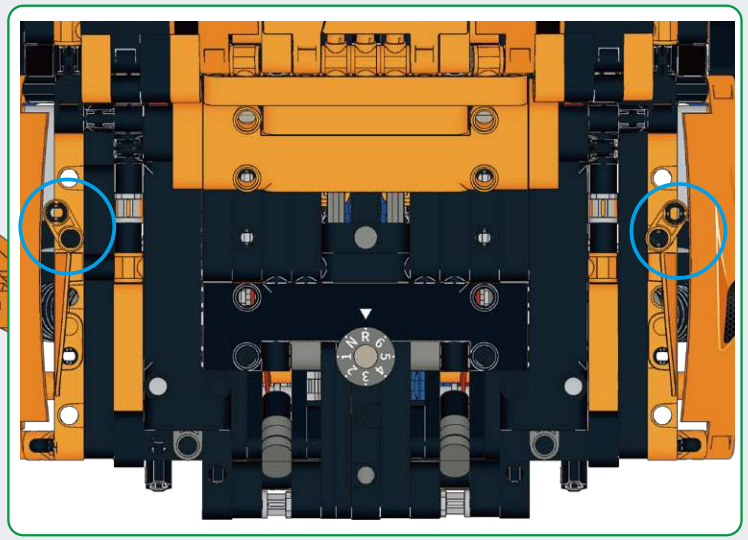

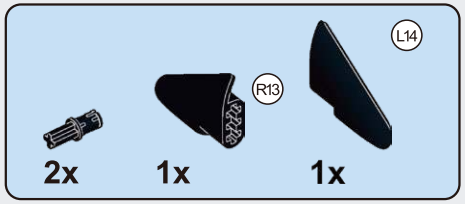

D143

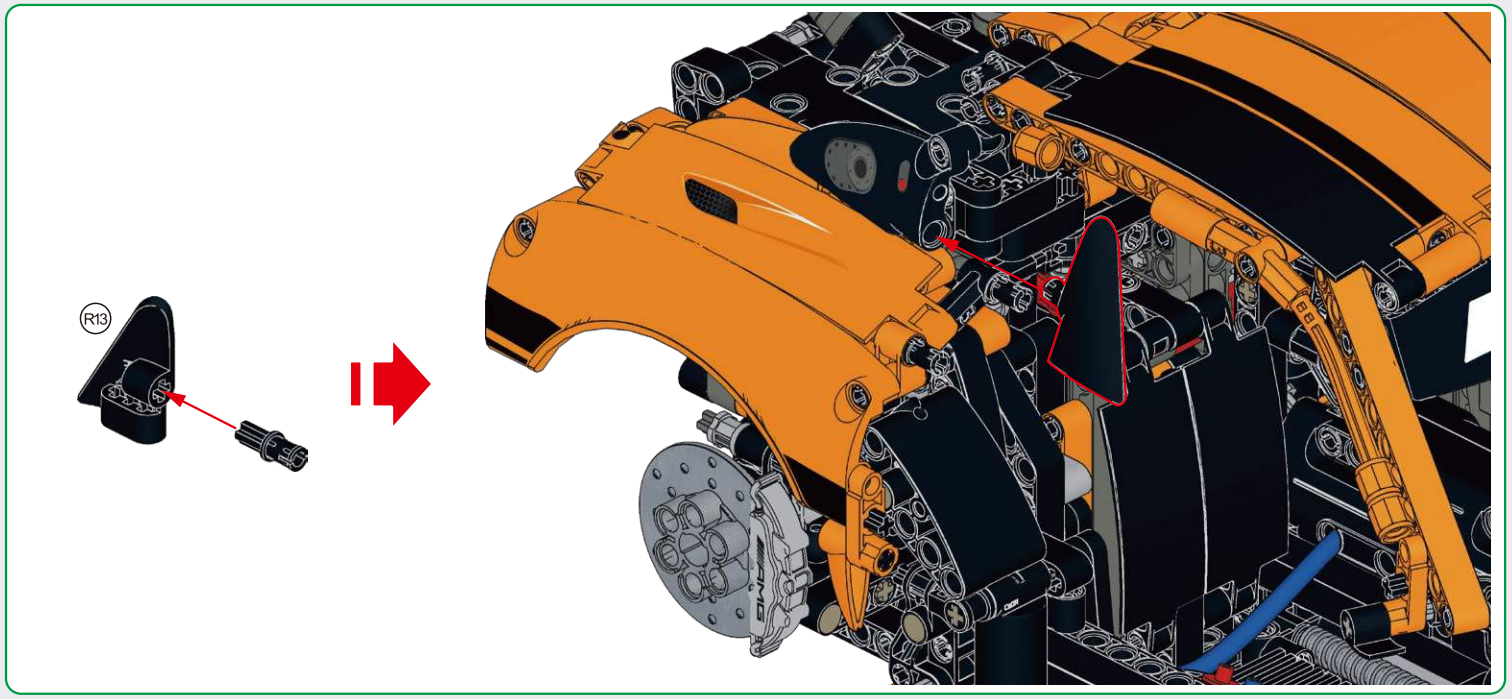

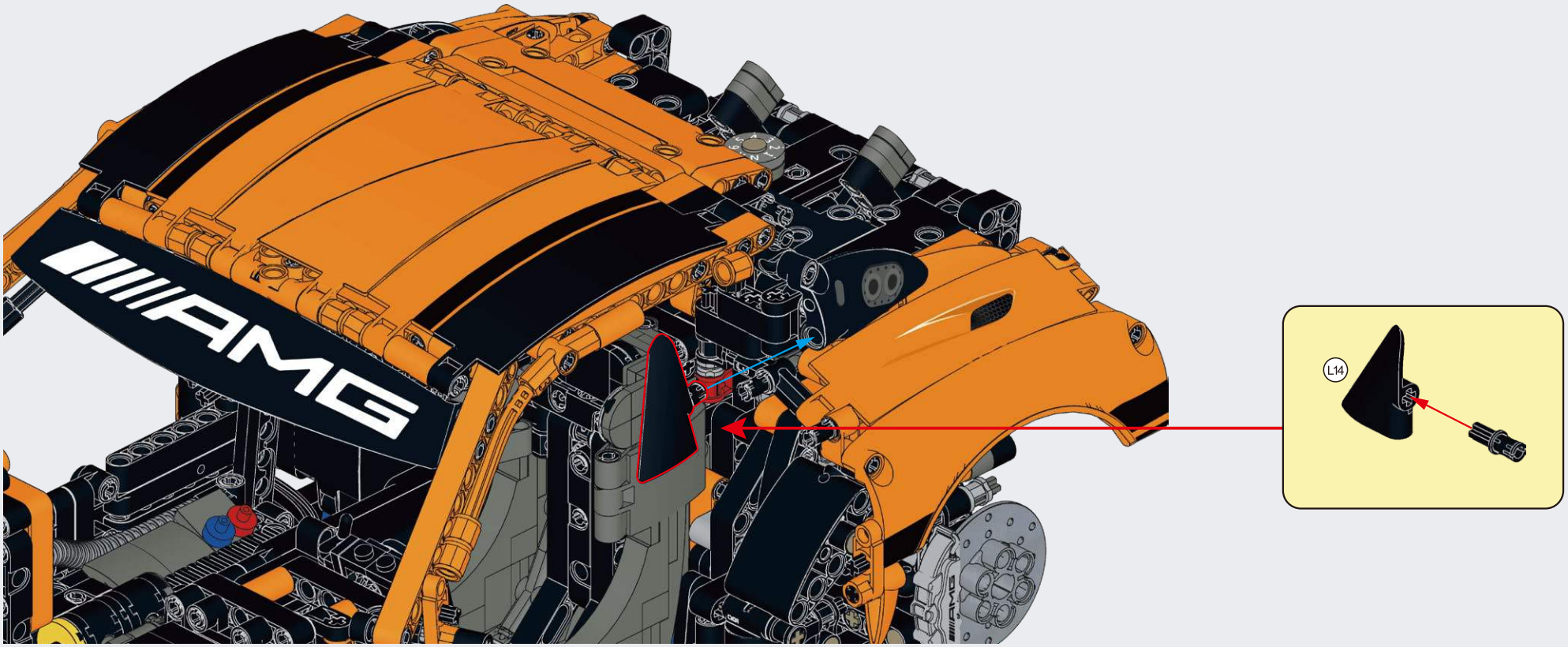

E

BOX 2 / BAG 5

2

E

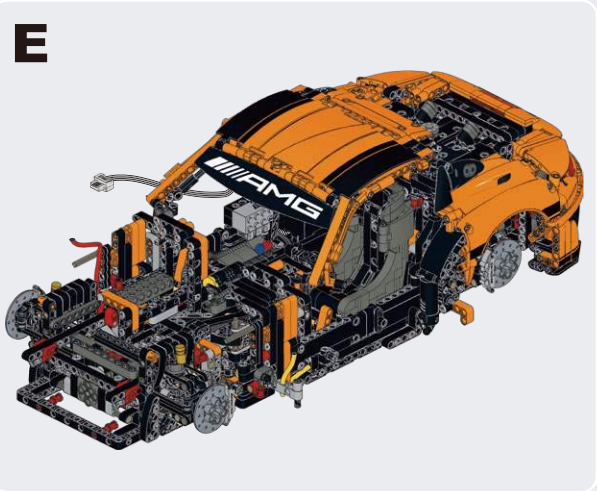

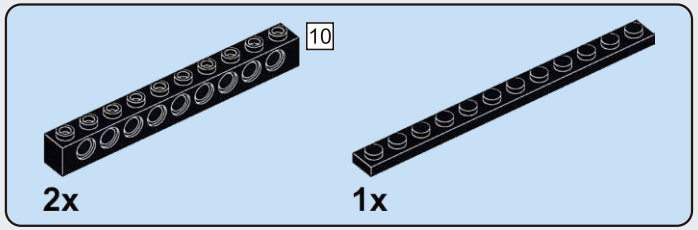

E1

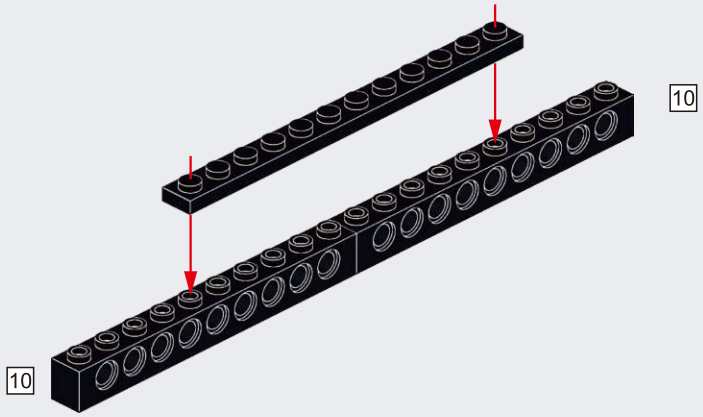

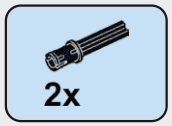

E2

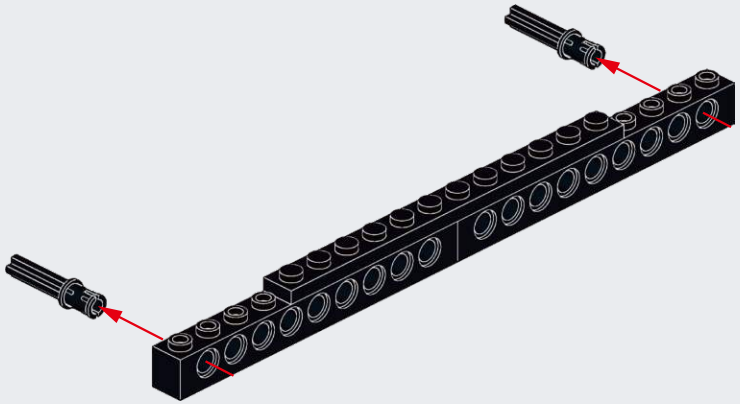

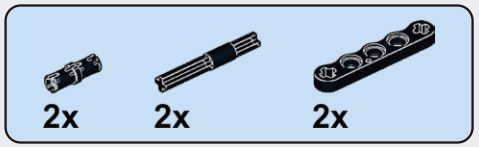

E3

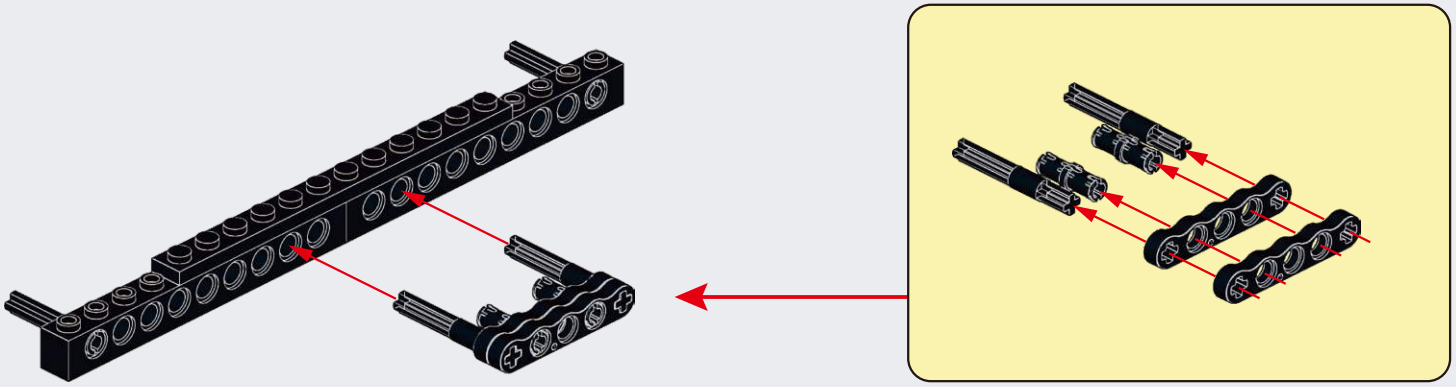

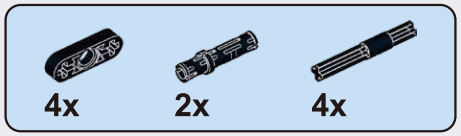

E4

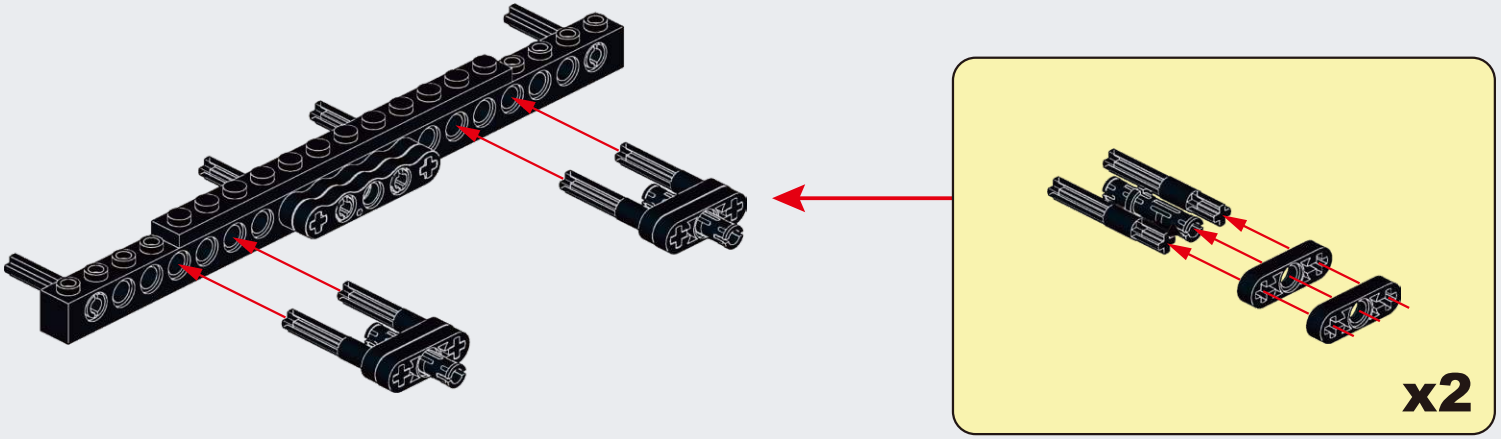

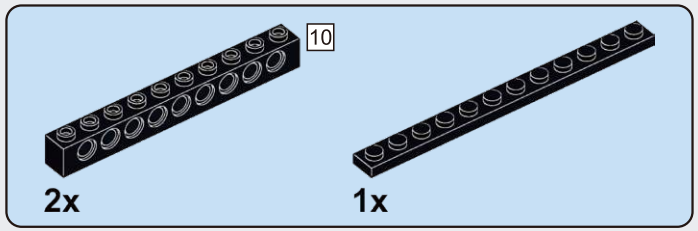

E5

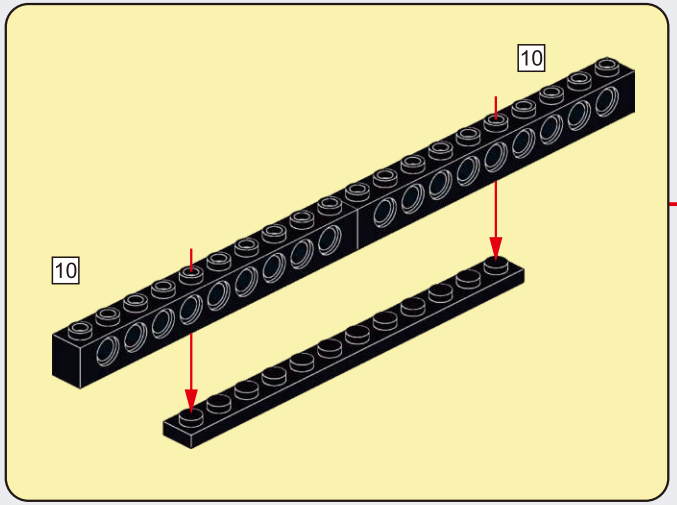

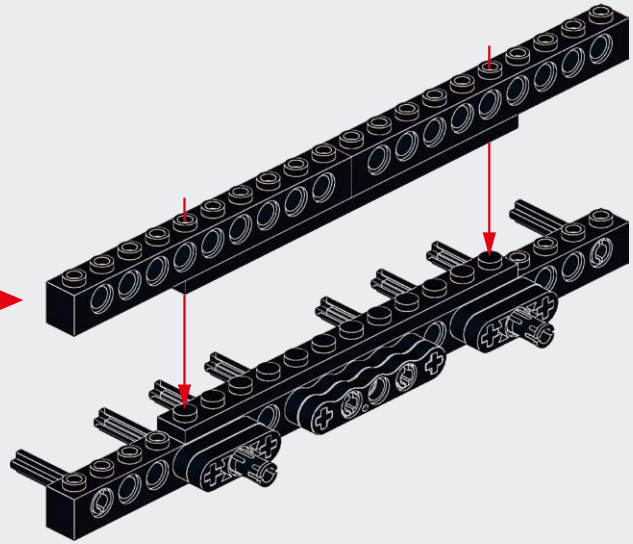

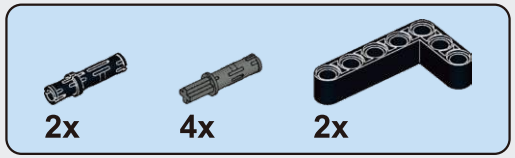

E6

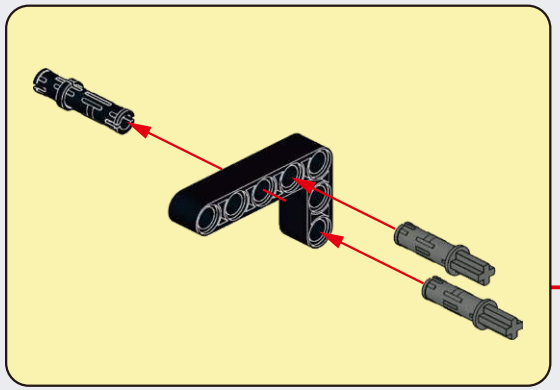

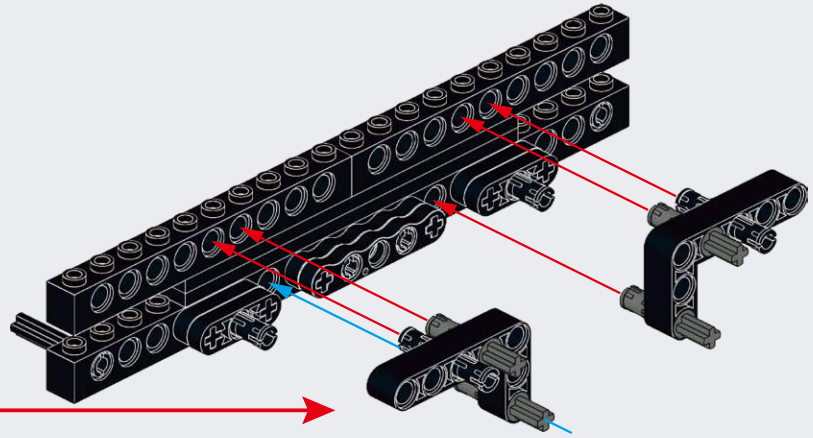

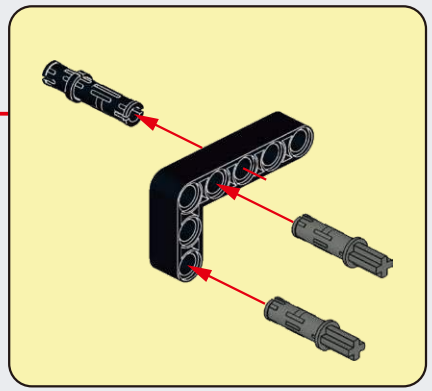

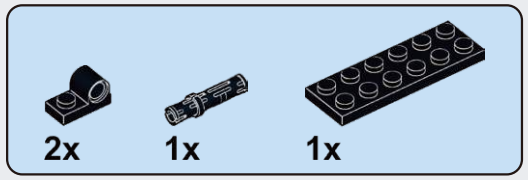

E7

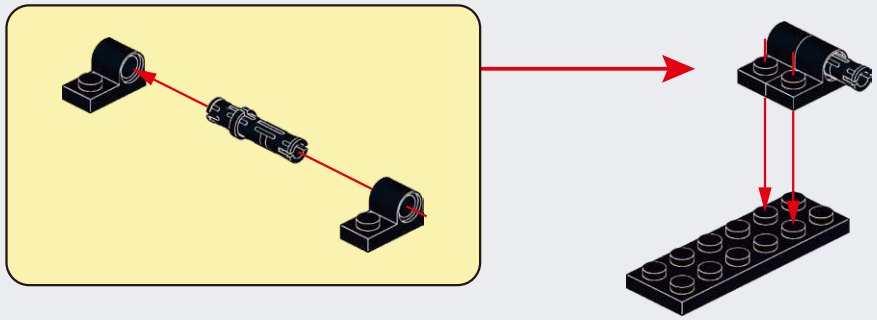

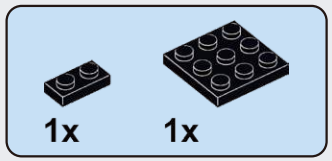

E8

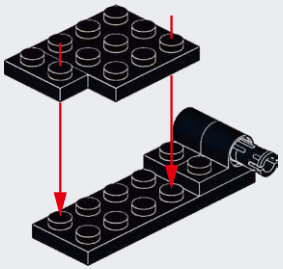

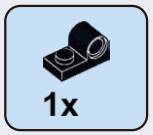

E9

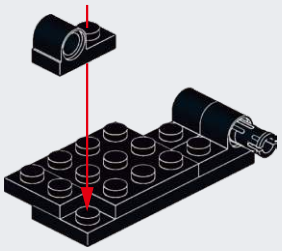

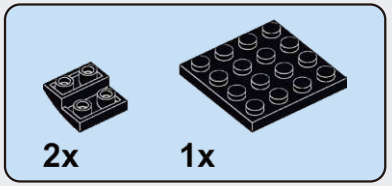

E10

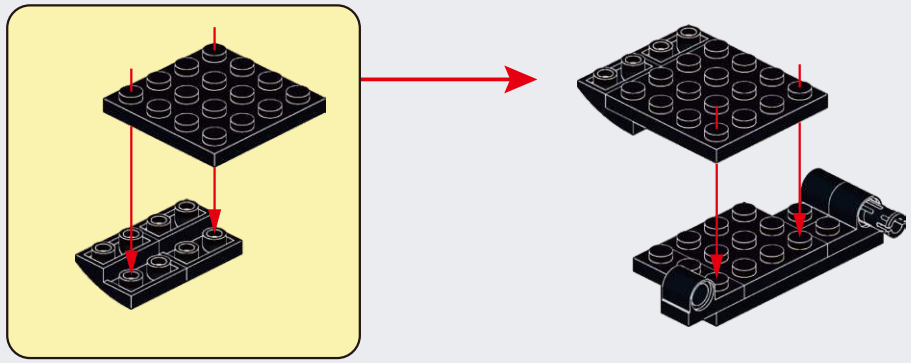

E11

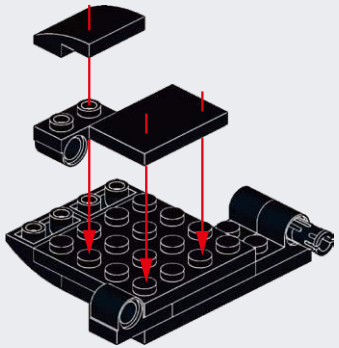

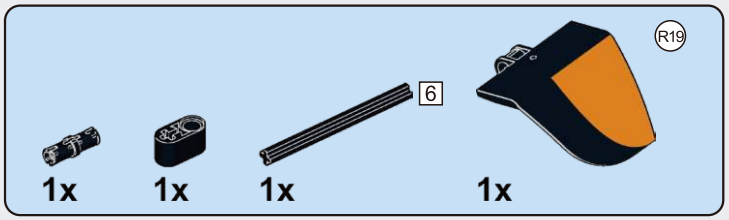

E12

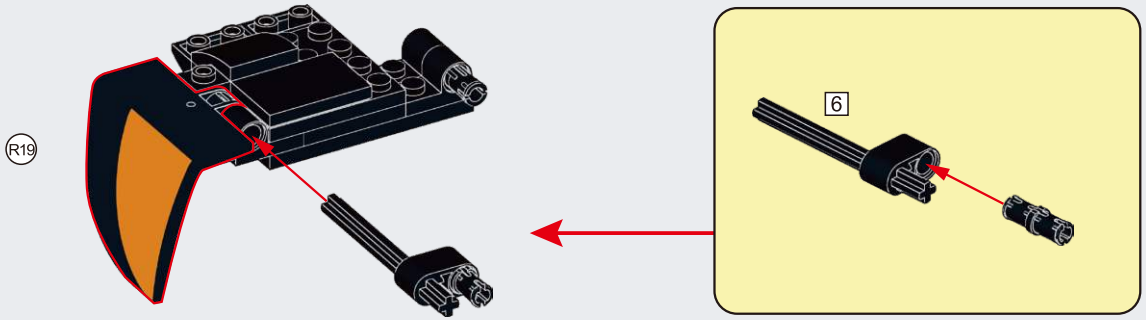

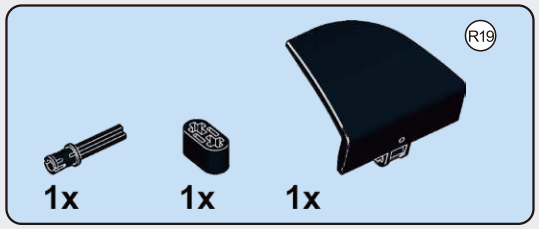

E13

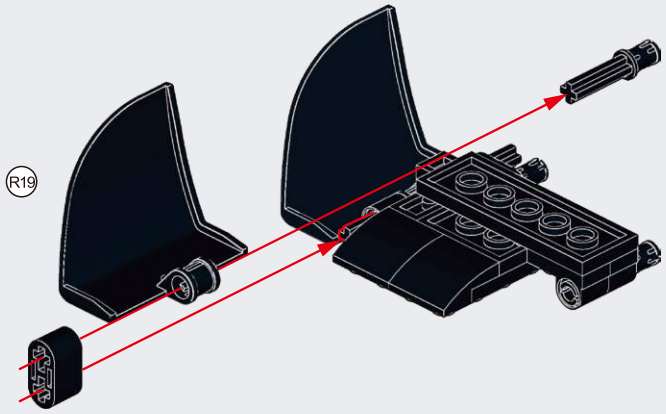

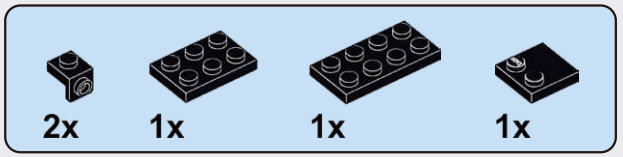

E14

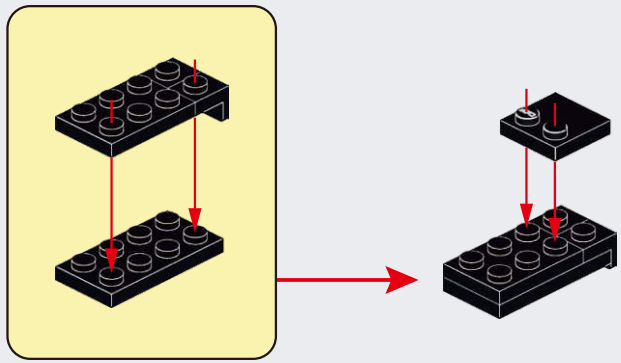

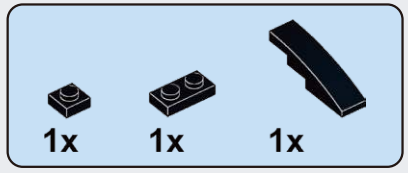

E15

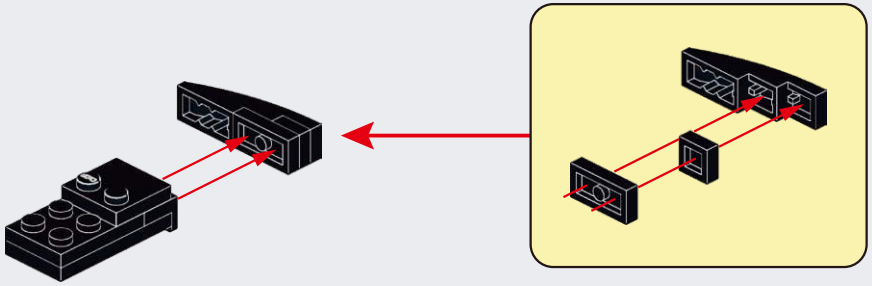

E16

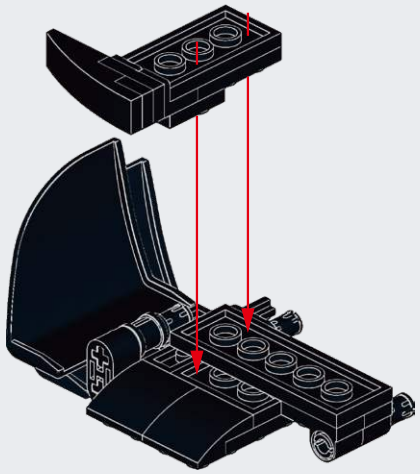

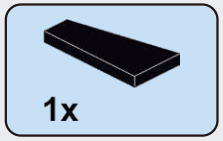

E17

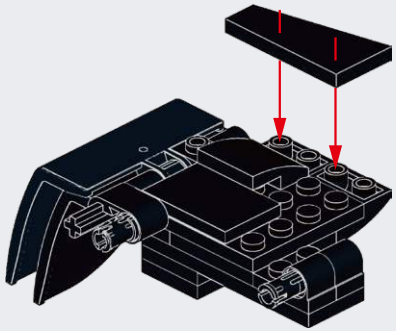

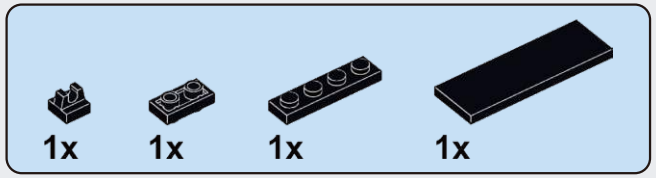

E18

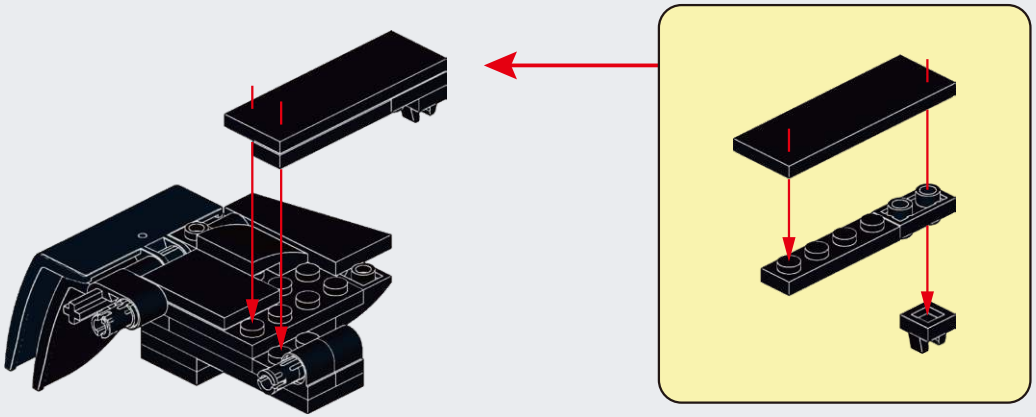

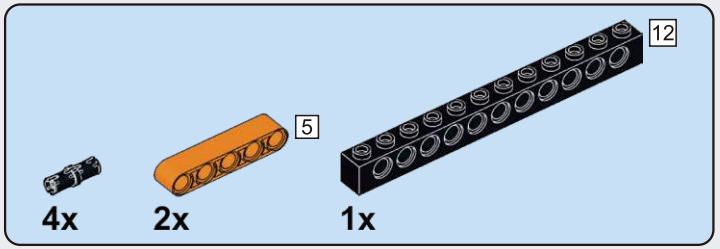

E19

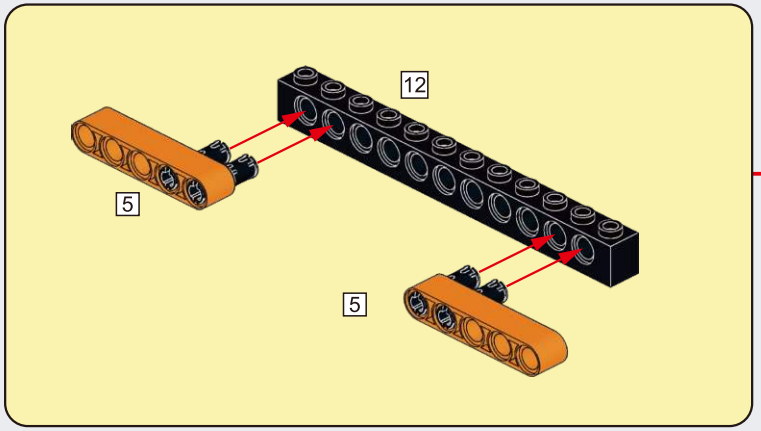

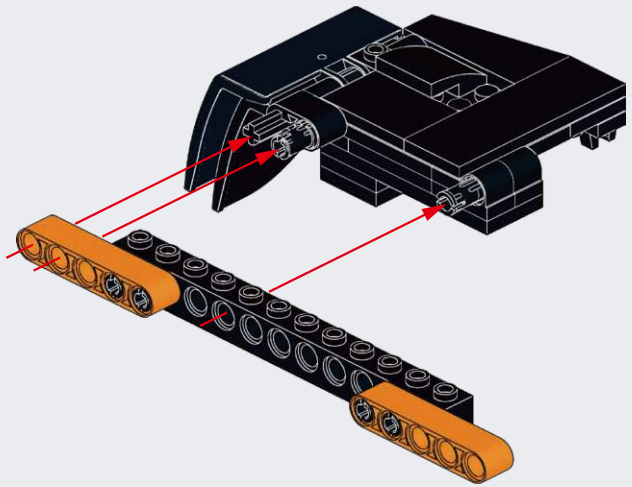

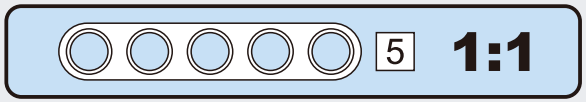

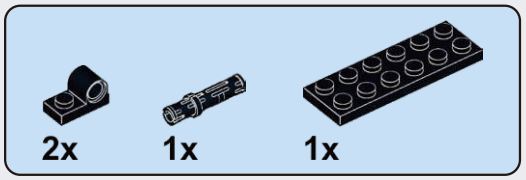

E20

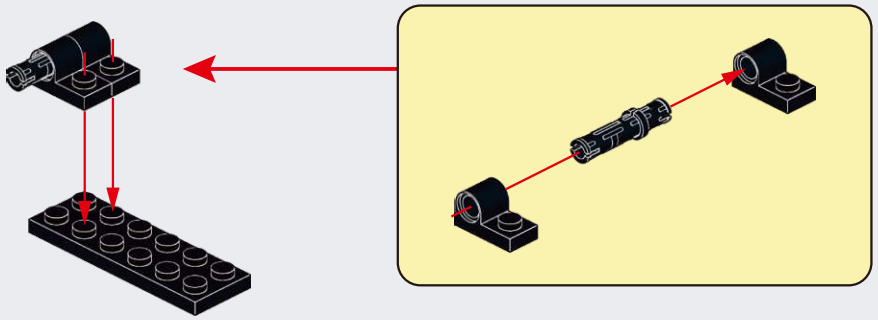

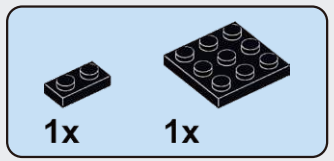

E21

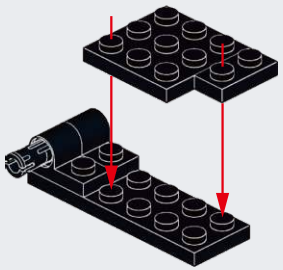

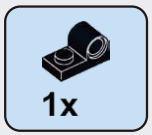

E22

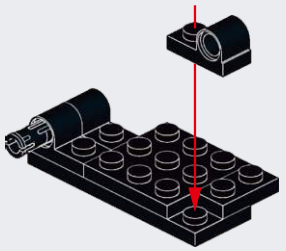

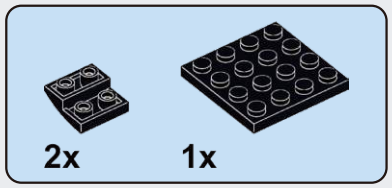

E23

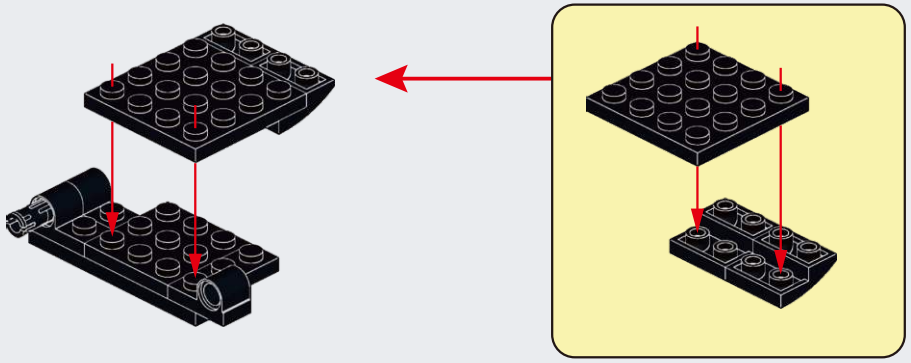

E24

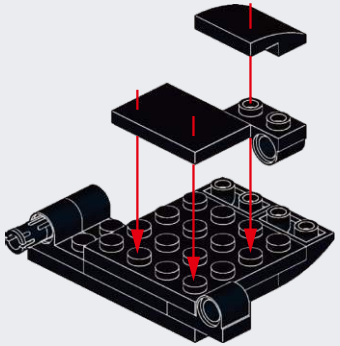

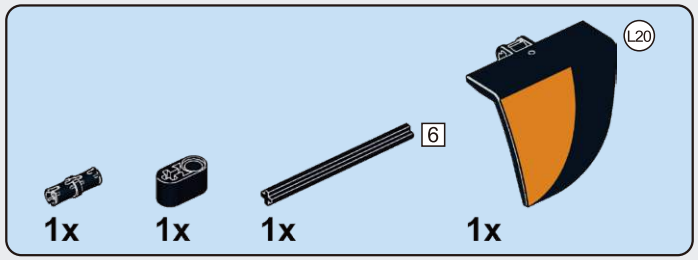

E25

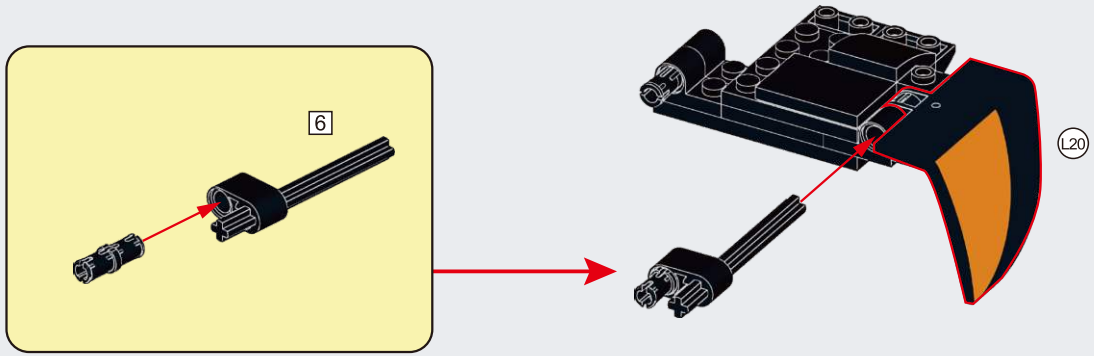

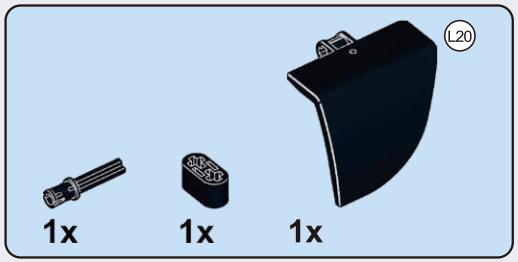

E26

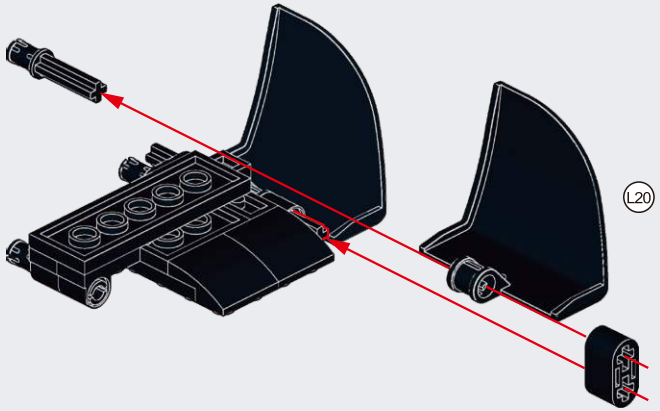

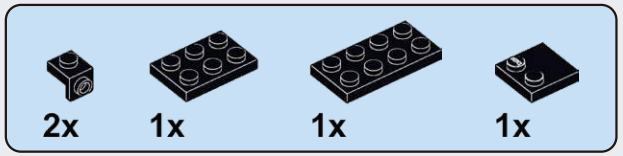

E27

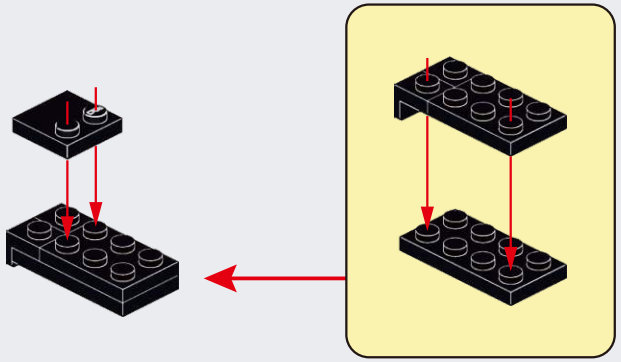

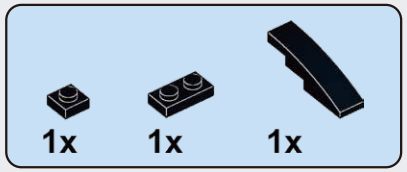

E28

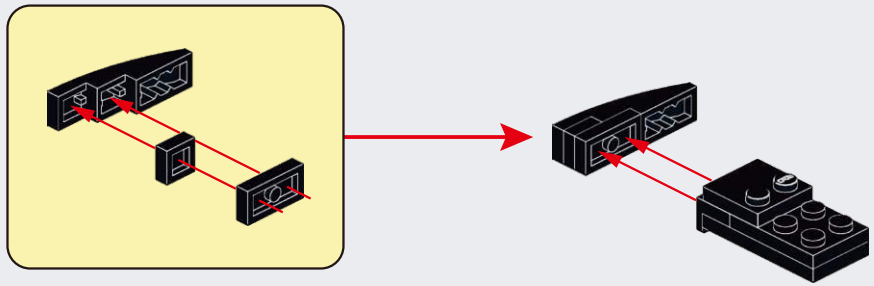

E29

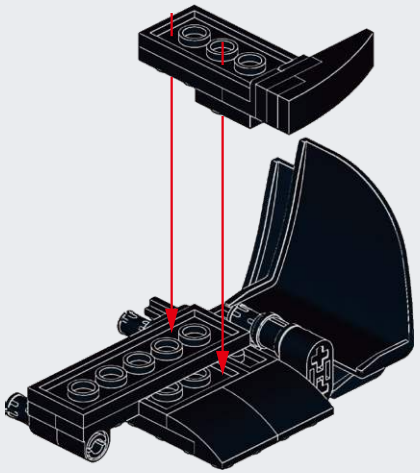

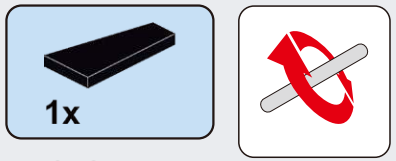

E30

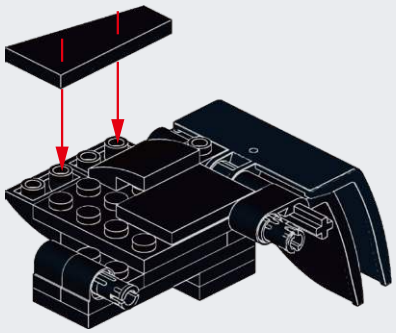

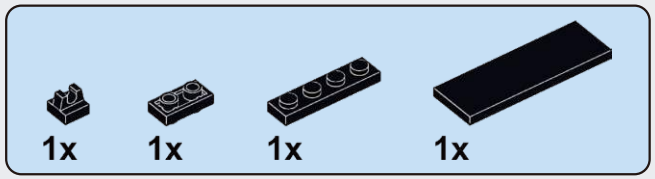

E31

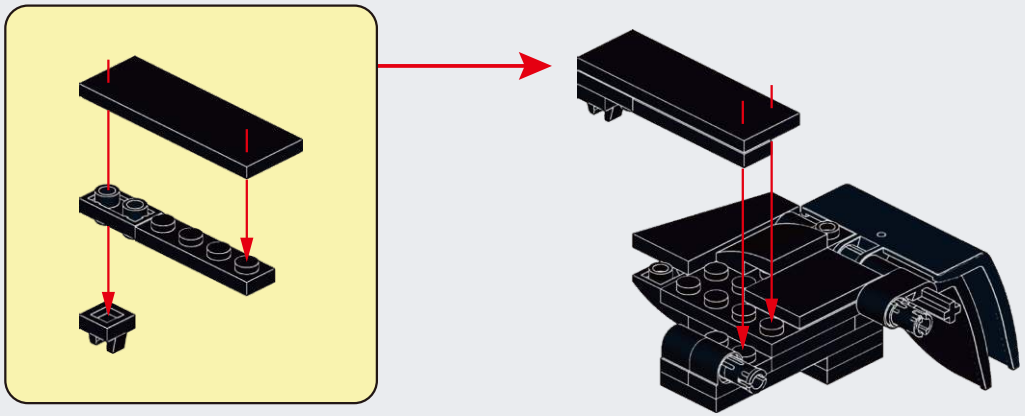

E32

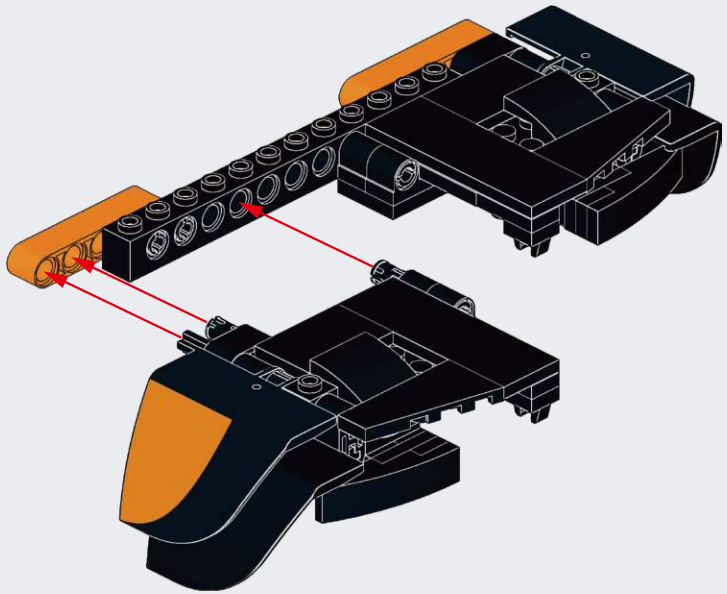

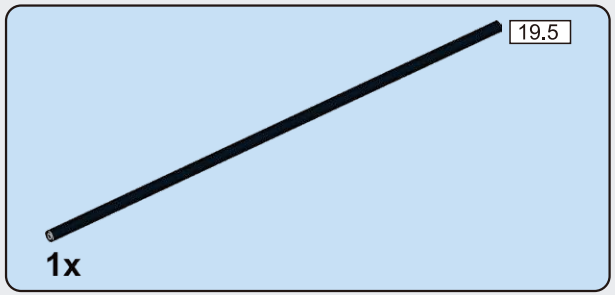

E33

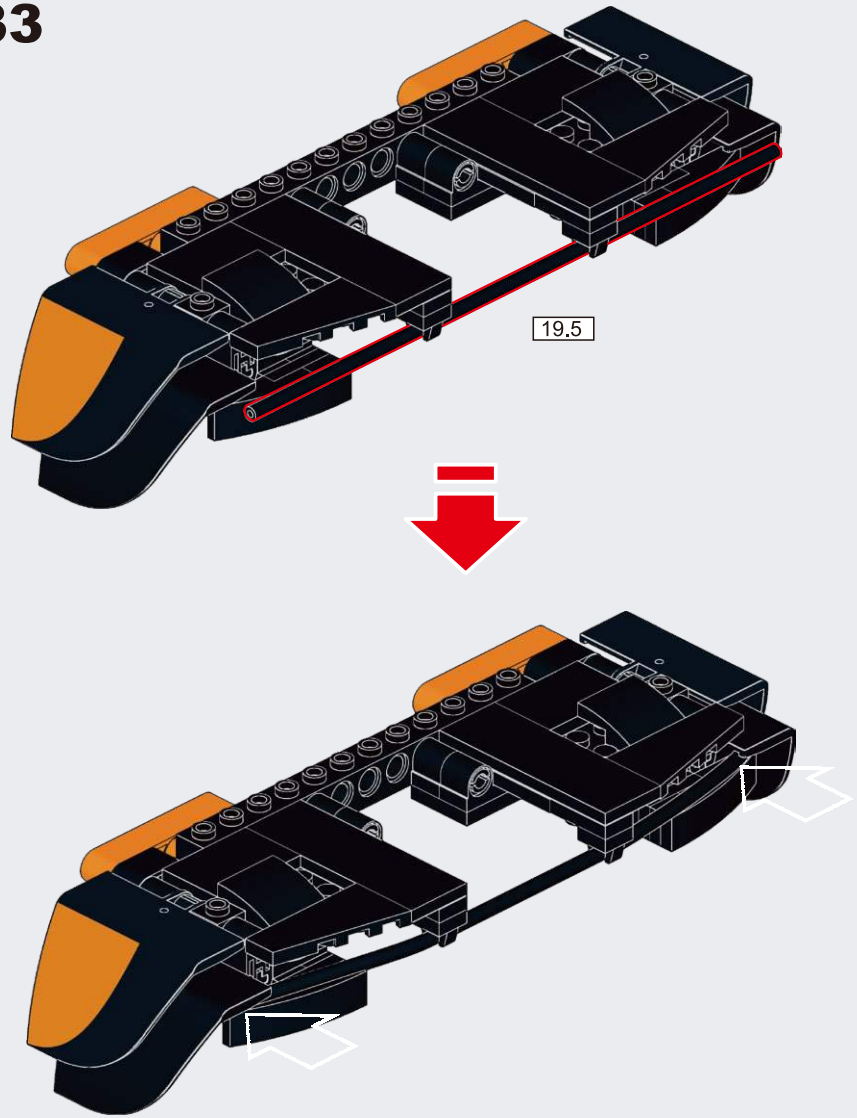

E34

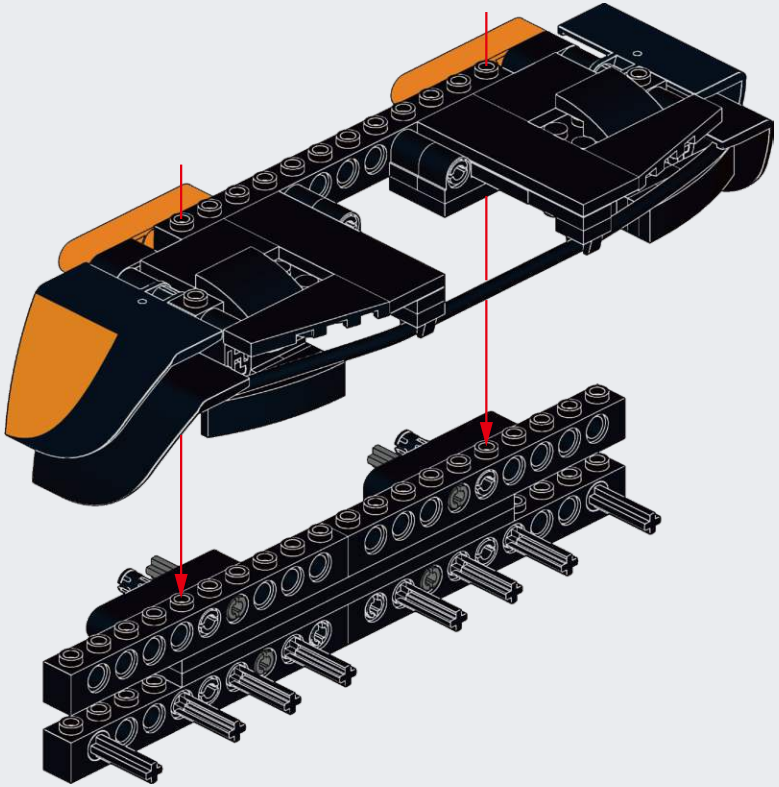

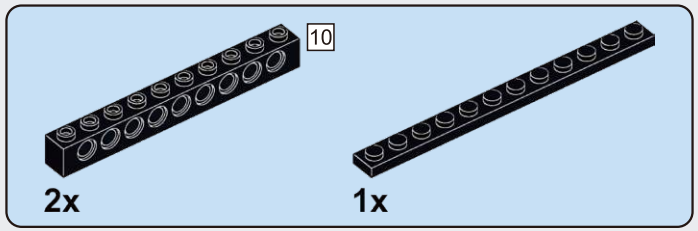

E35

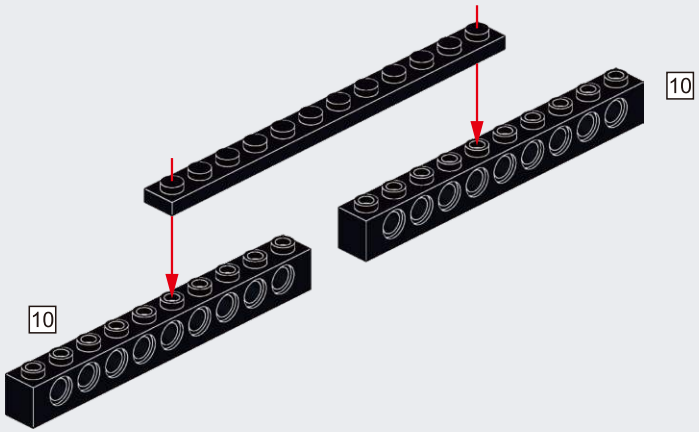

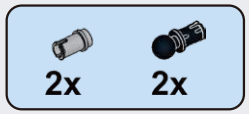

E36

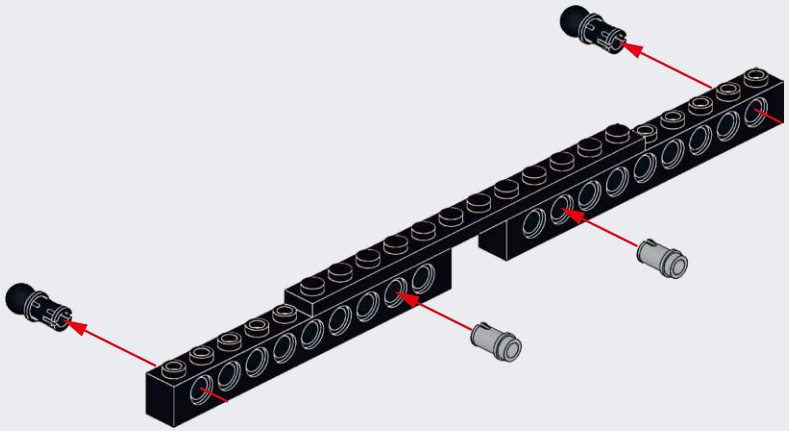

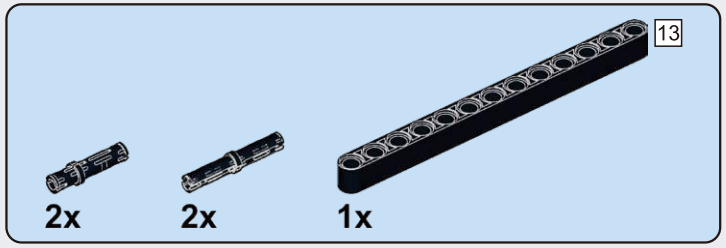

E37

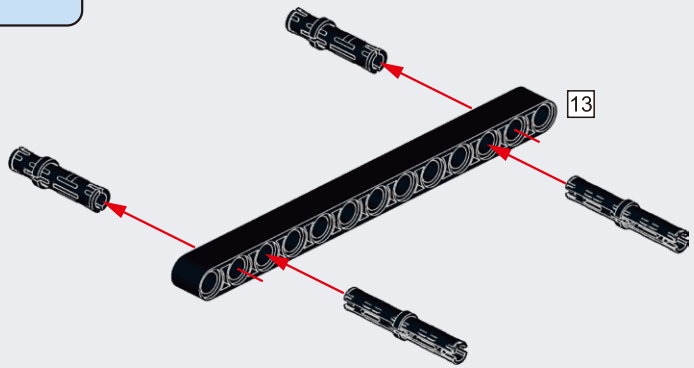

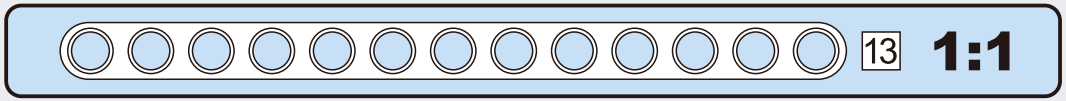

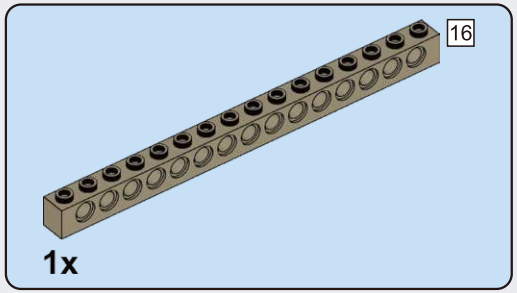

E38

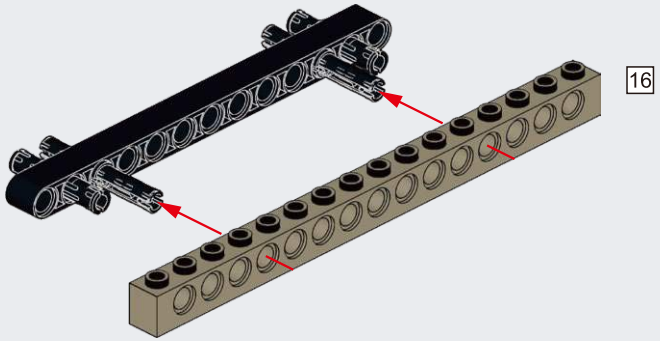

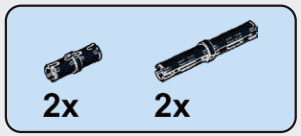

E39

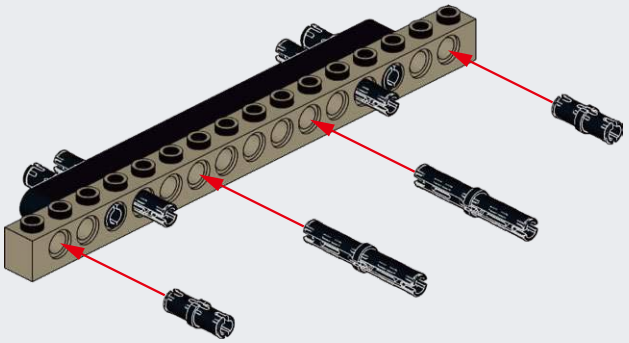

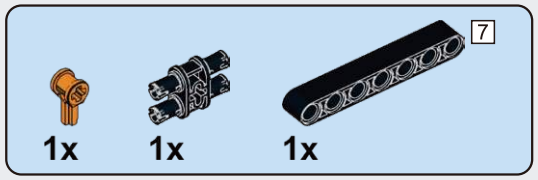

E40

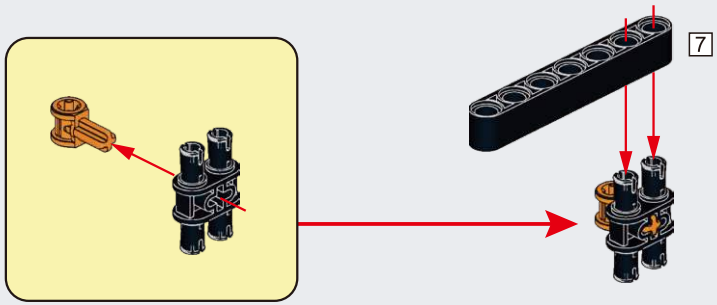

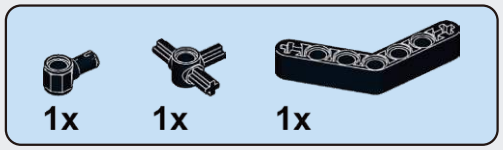

E41

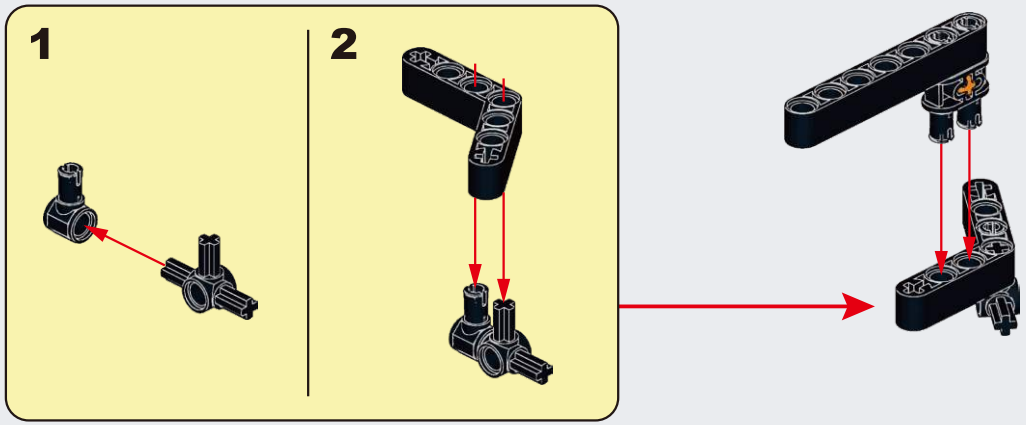

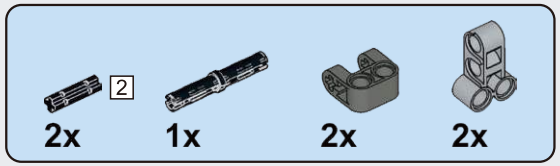

E42

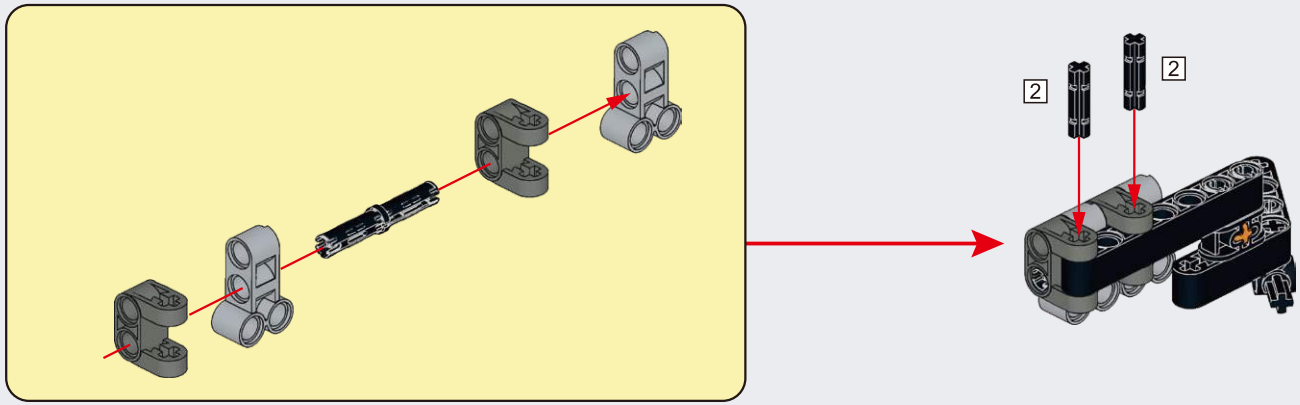

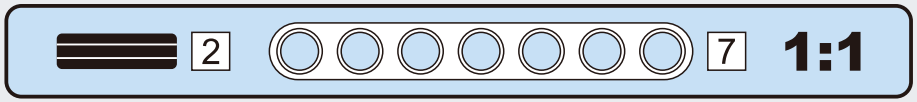

E43

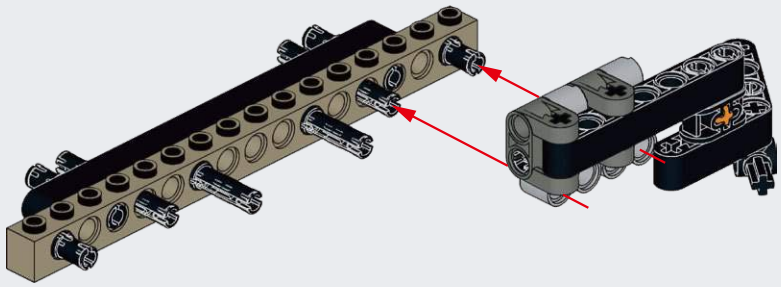

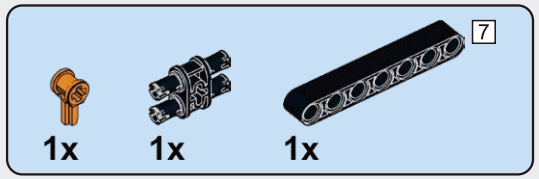

E44

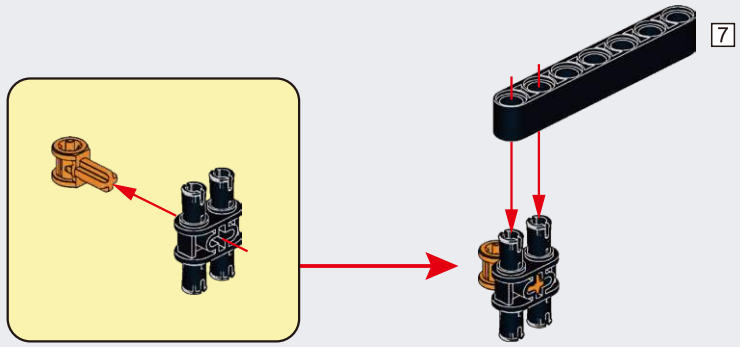

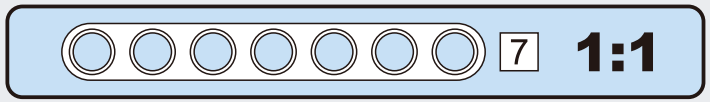

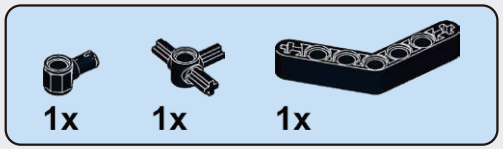

E45

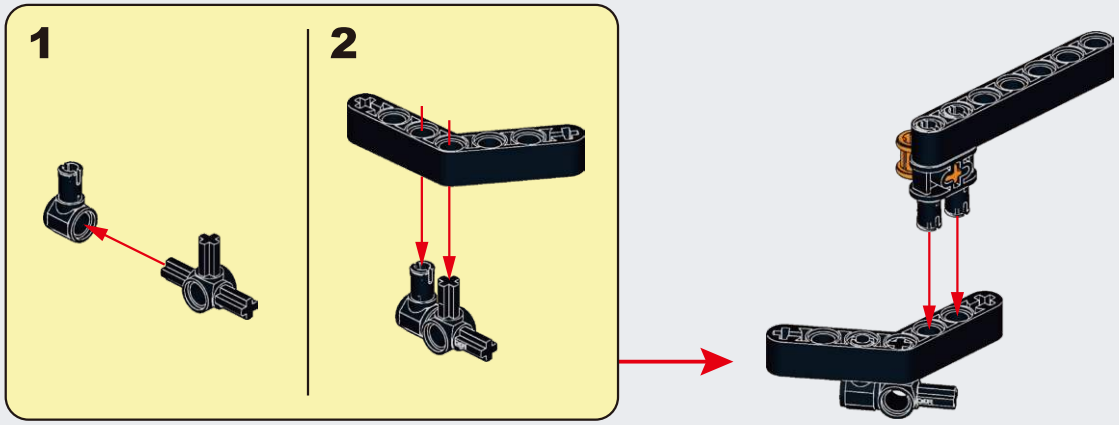

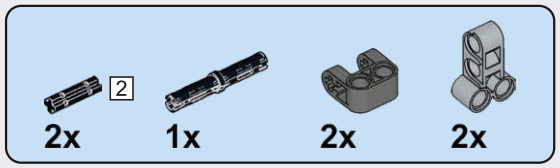

E46

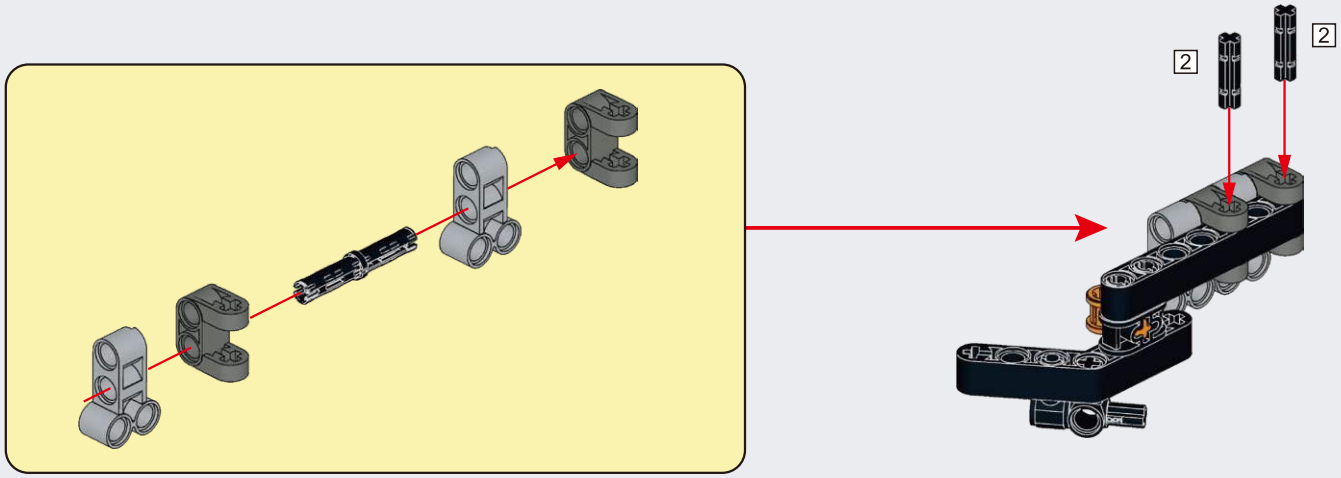

E47

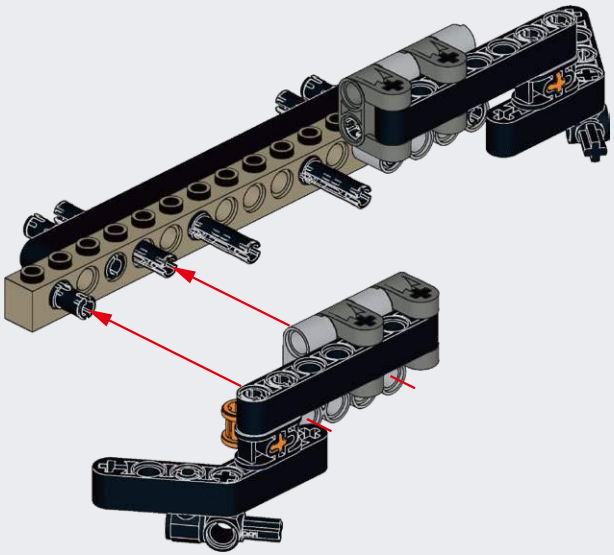

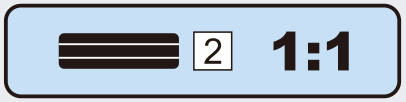

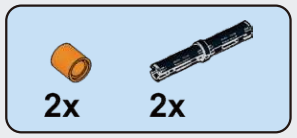

E48

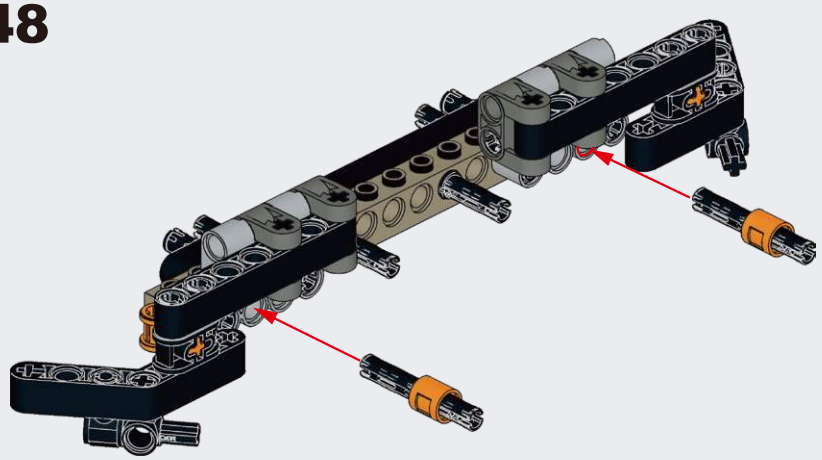

E49

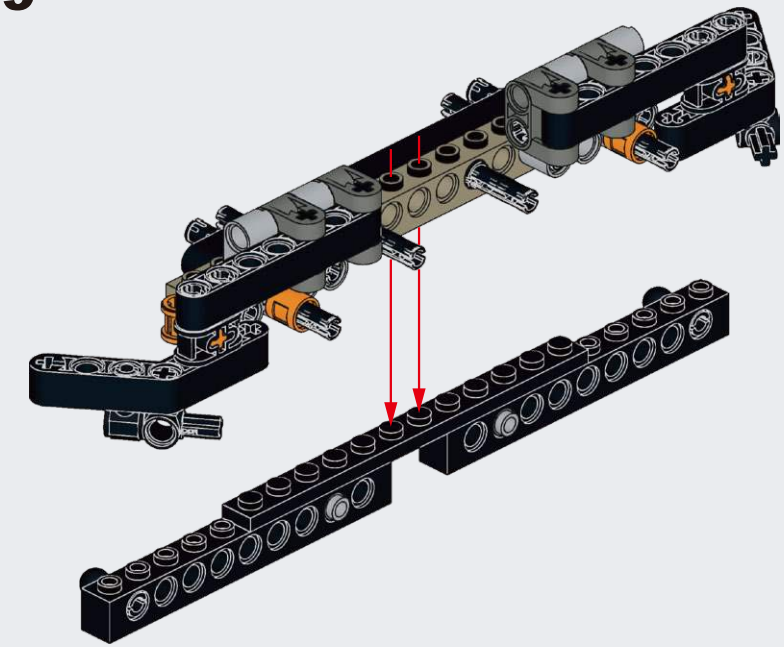

E50

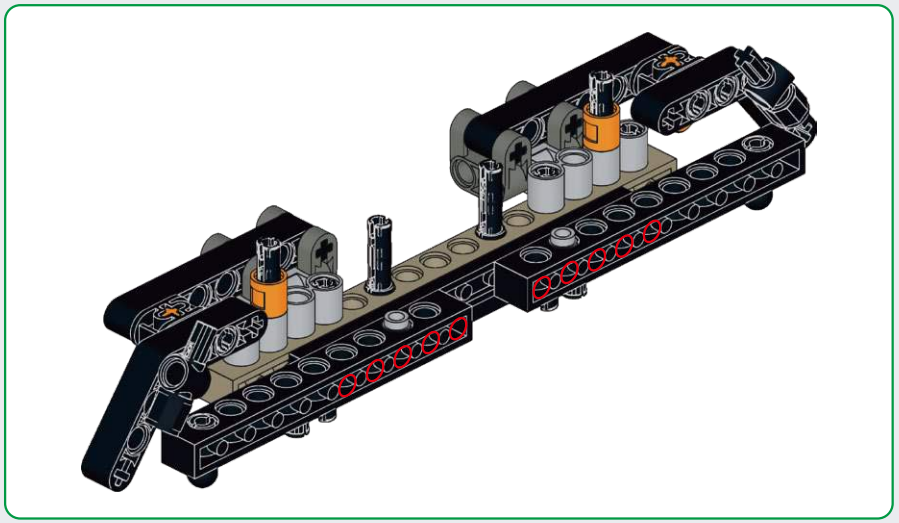

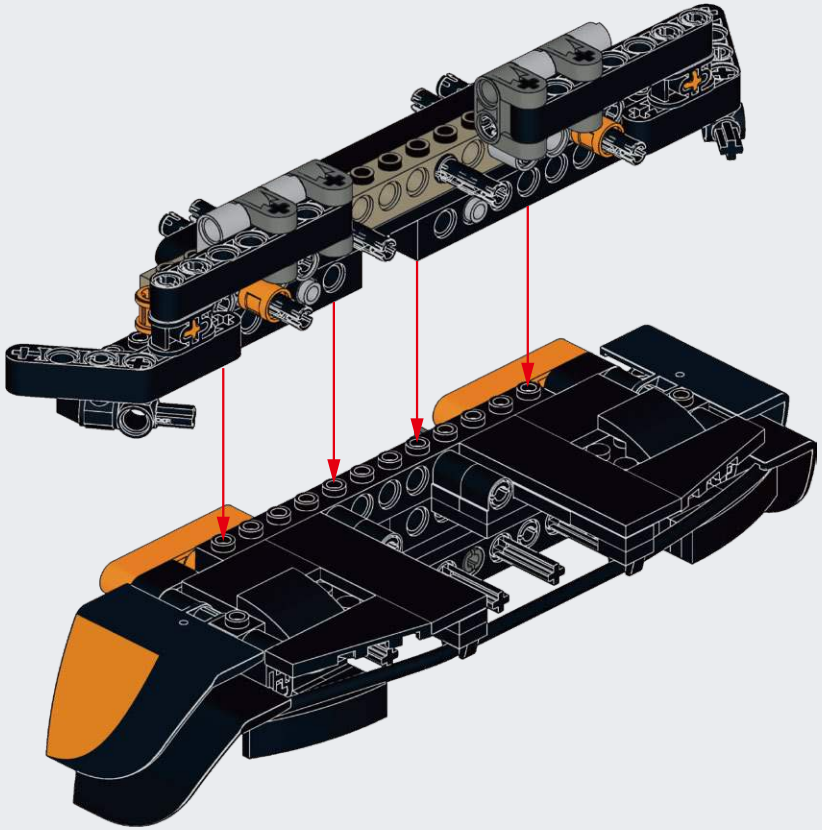

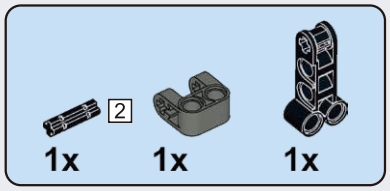

E51

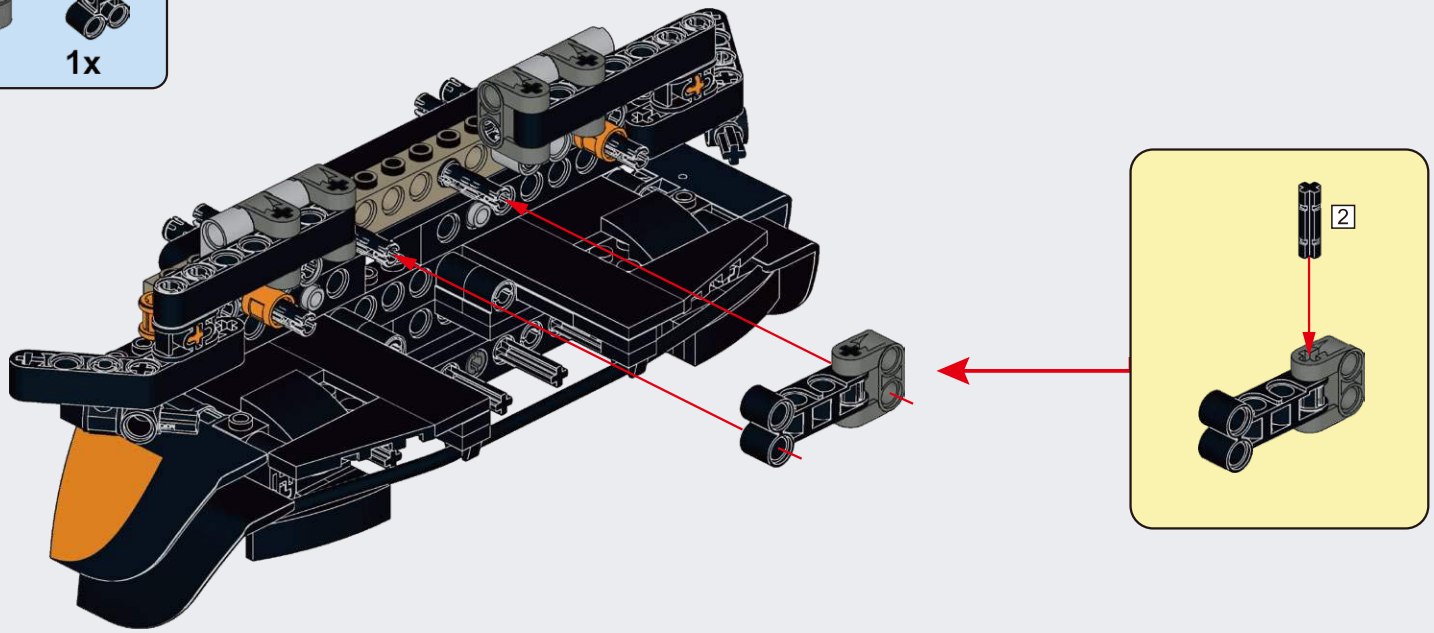

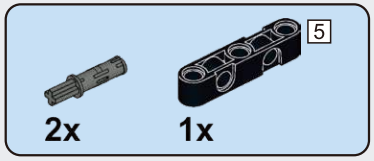

E52

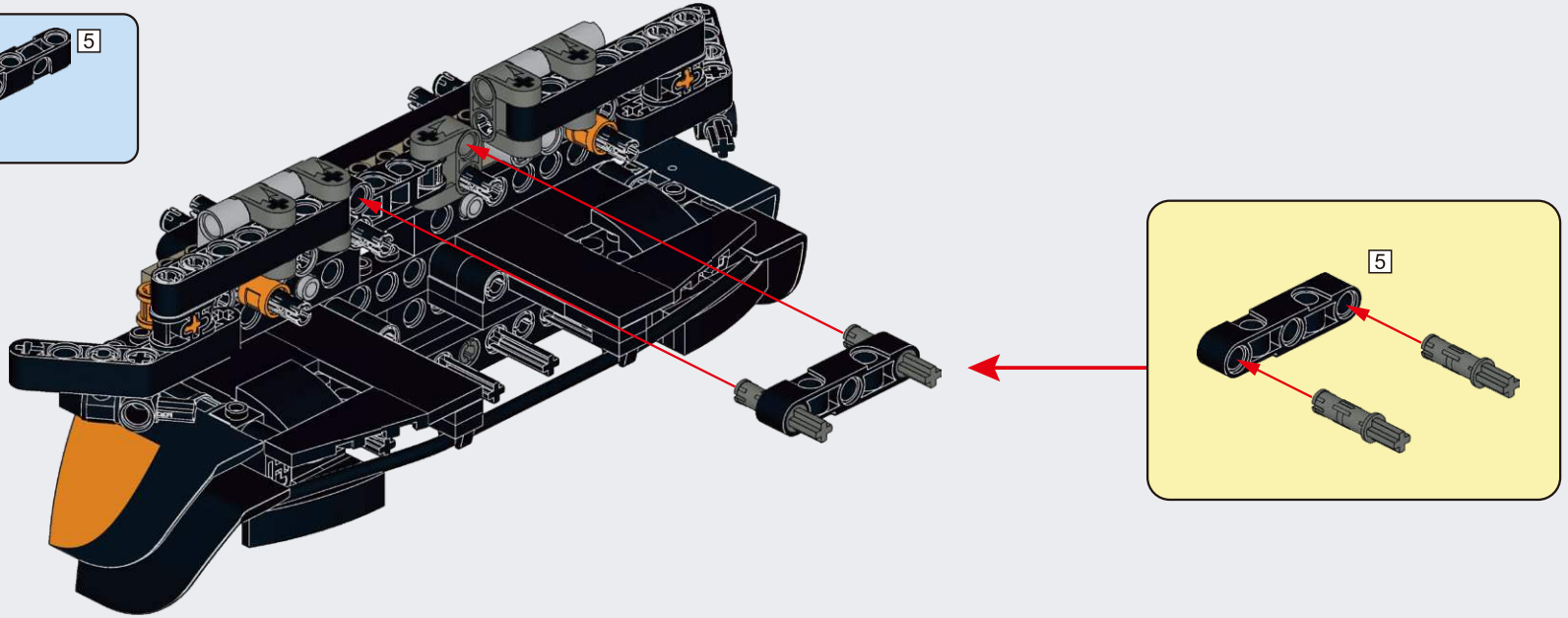

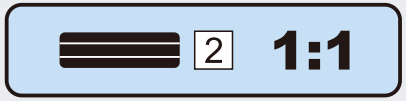

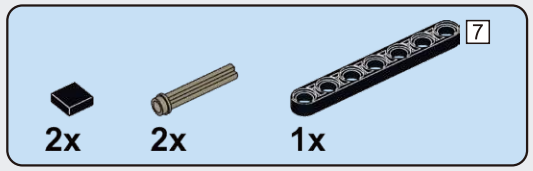

E53

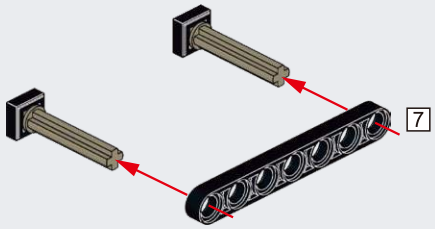

E54

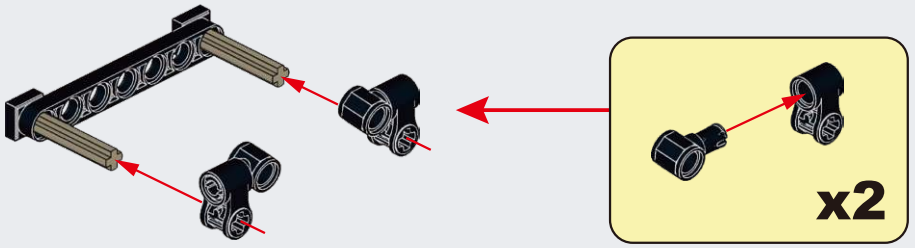

E55

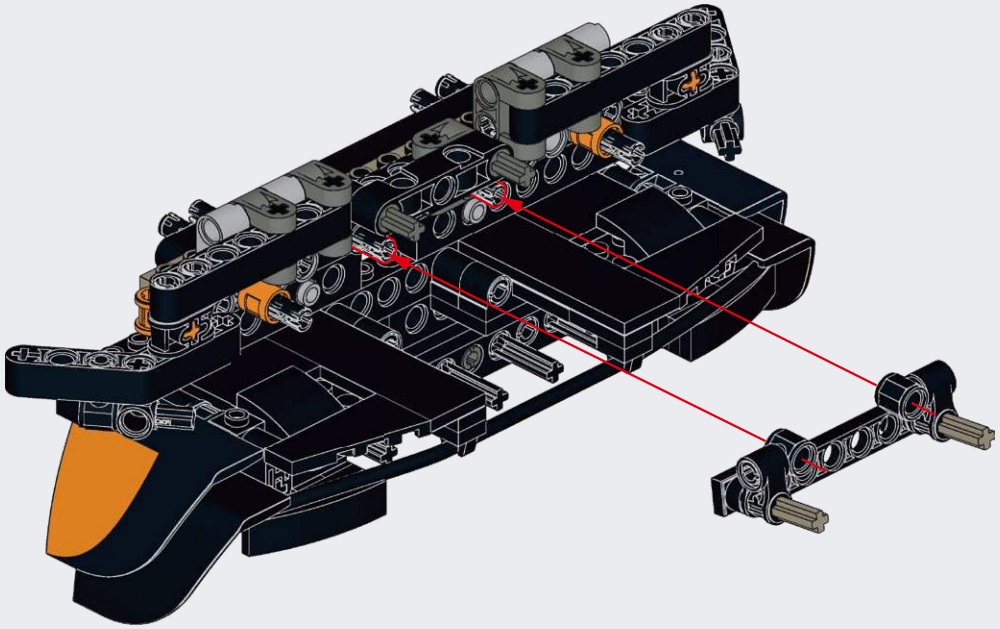

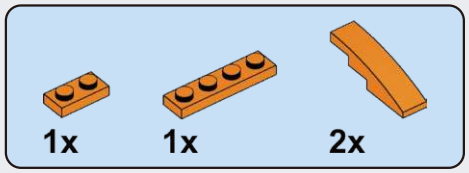

E56

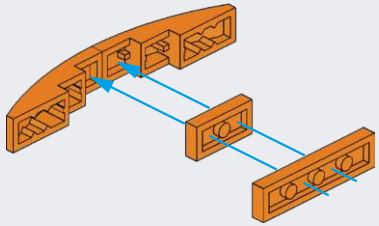

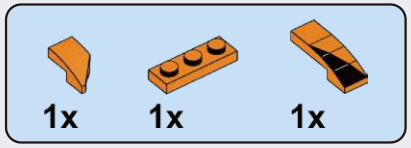

E57

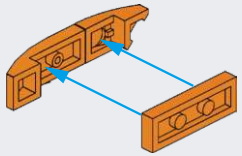

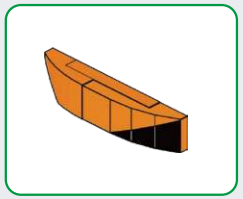

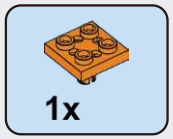

E58

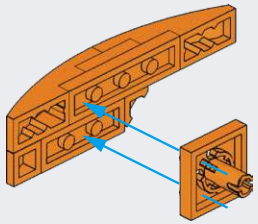

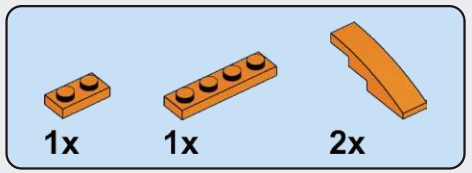

E59

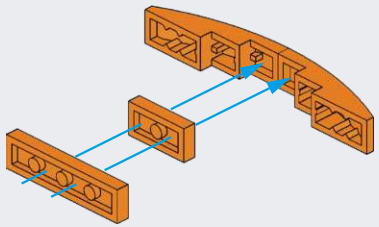

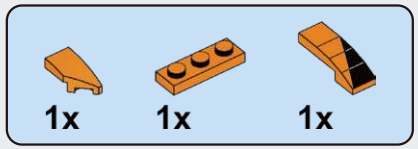

E60

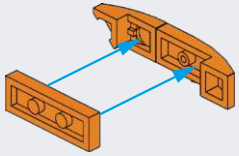

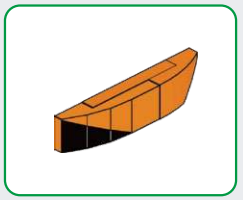

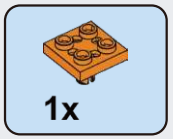

E61

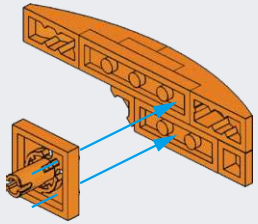

E62

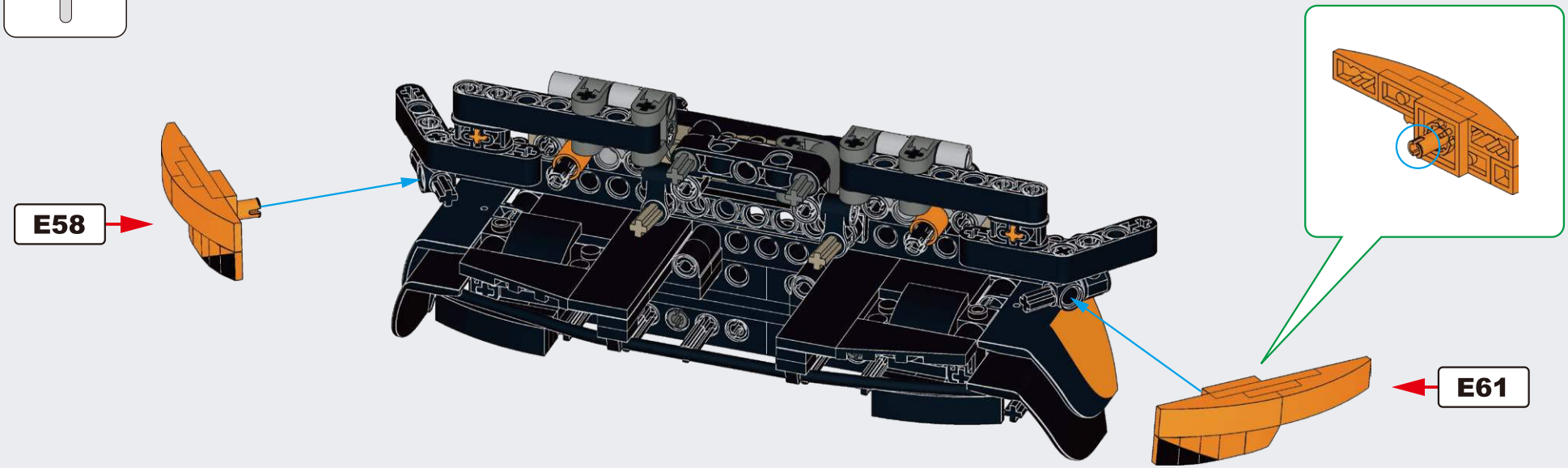

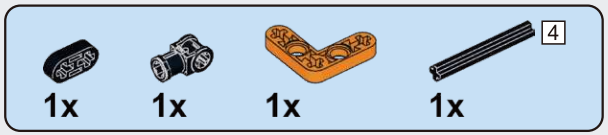

E63

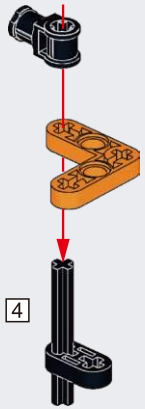

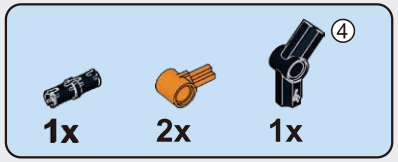

E64

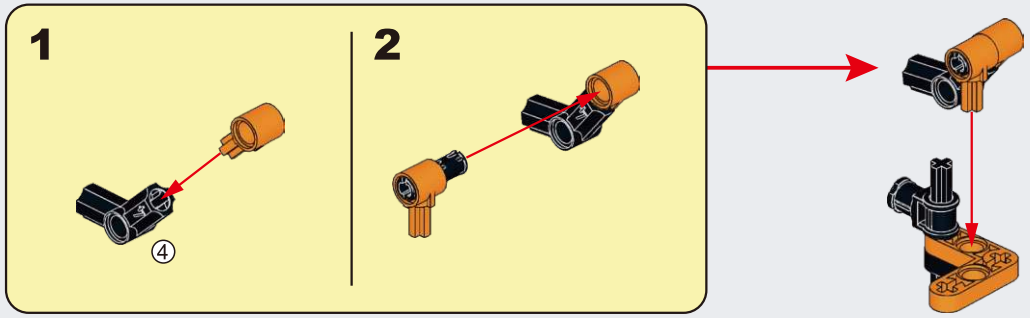

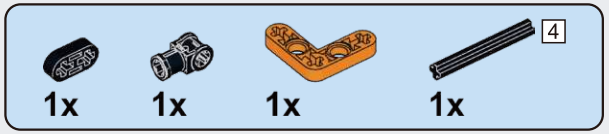

E65

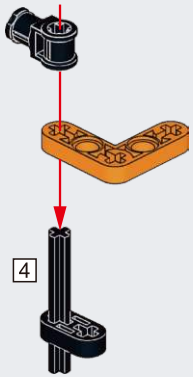

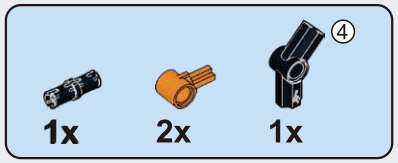

E66

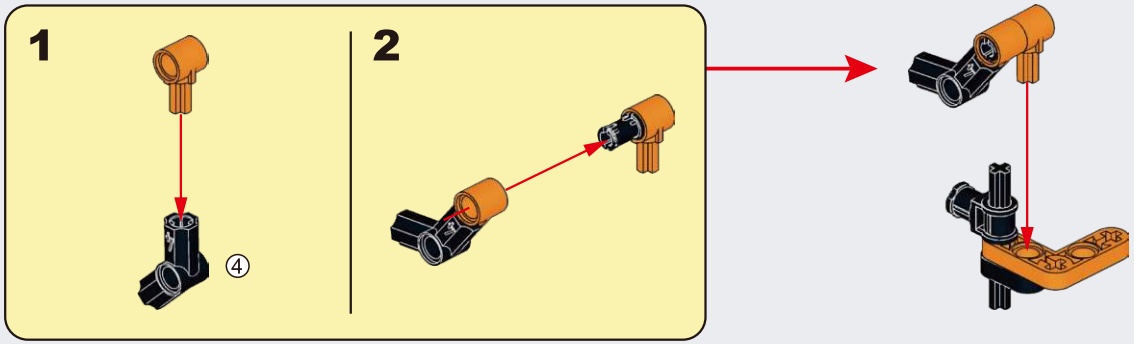

E67

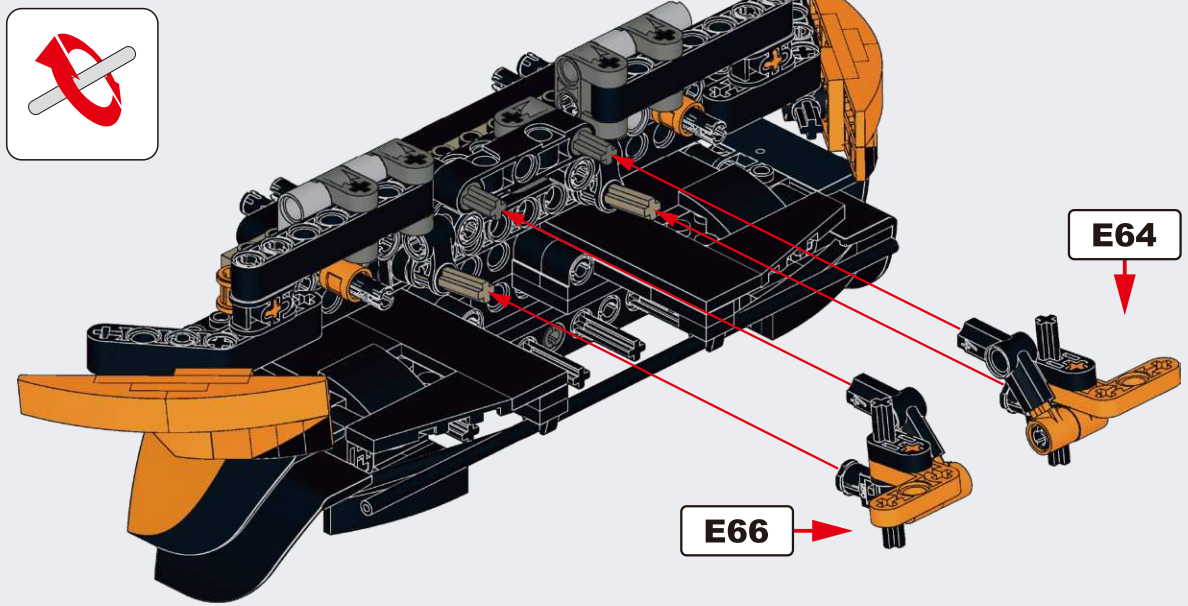

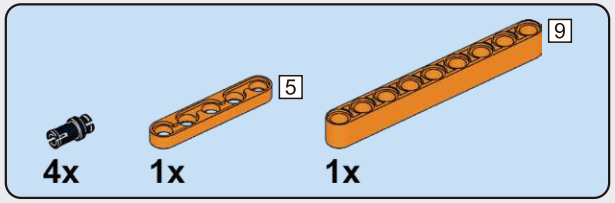

E68

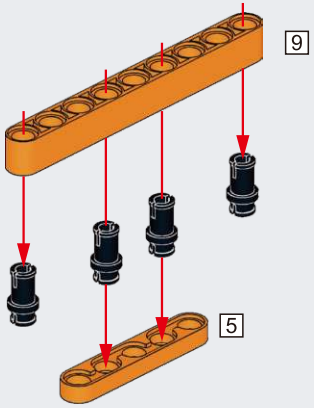

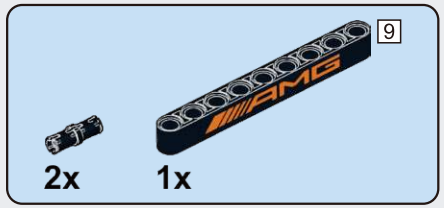

E69

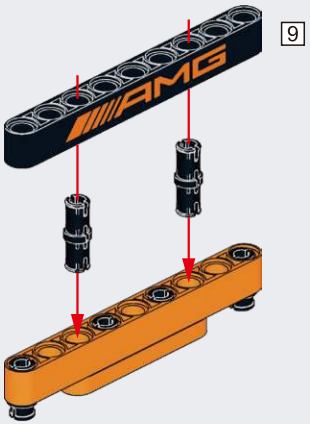

E70

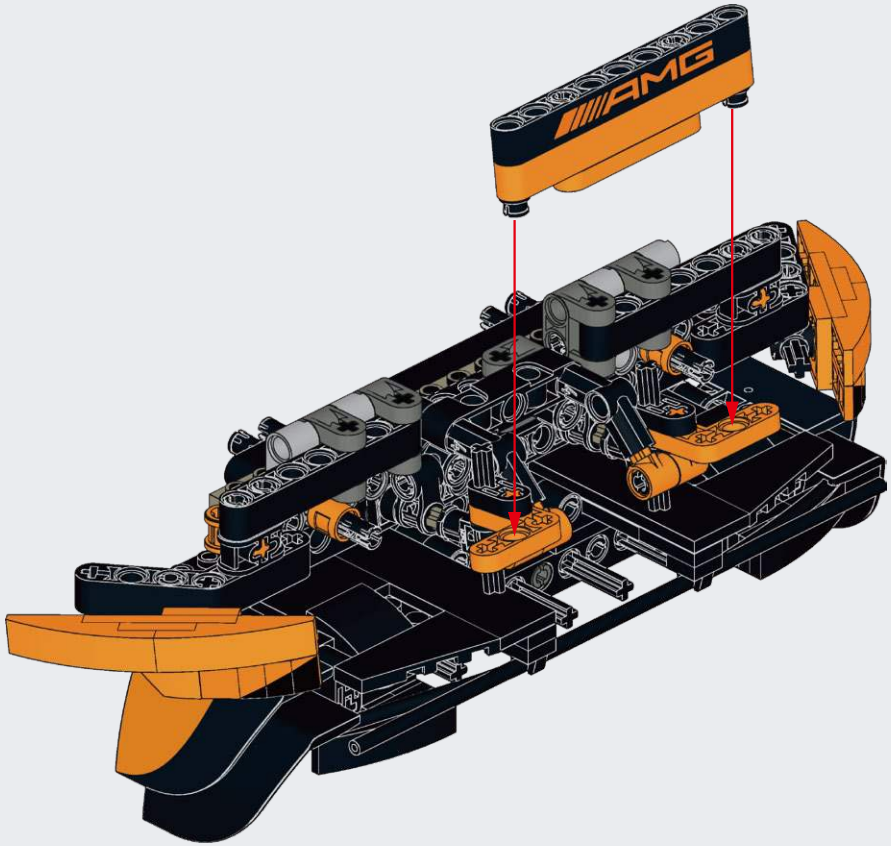

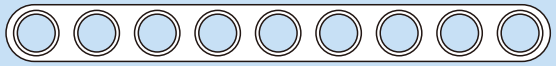

1:1

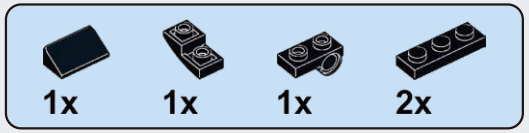

E71

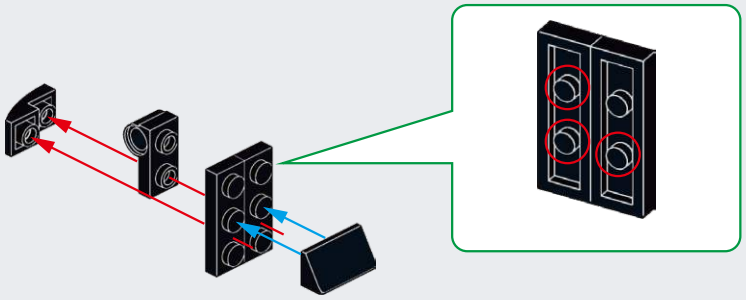

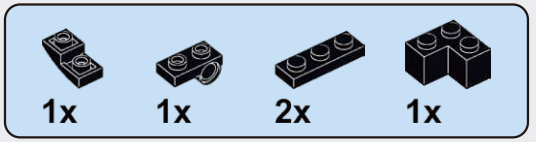

E72

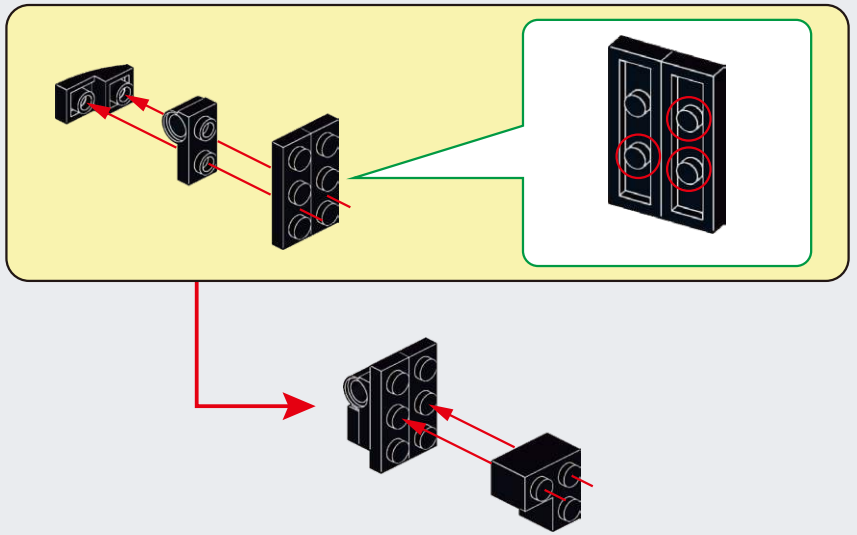

E73

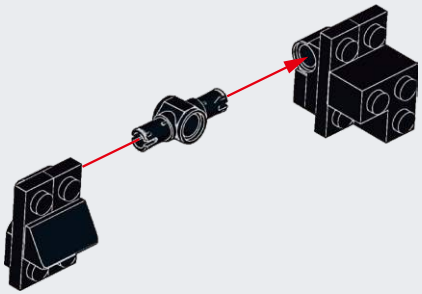

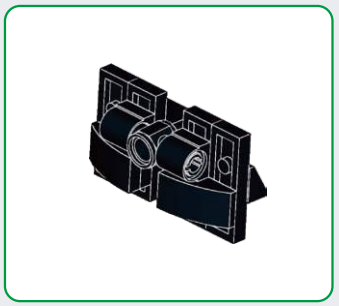

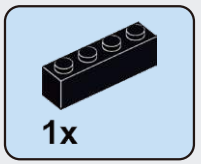

E74

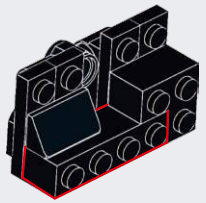

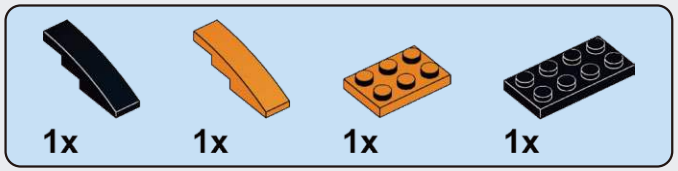

E75

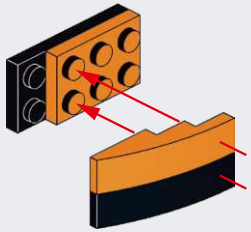

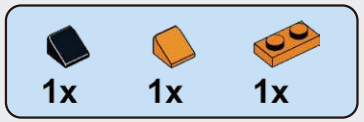

E76

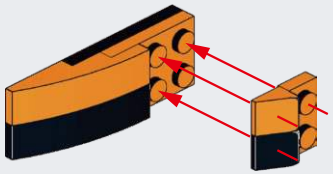

E77

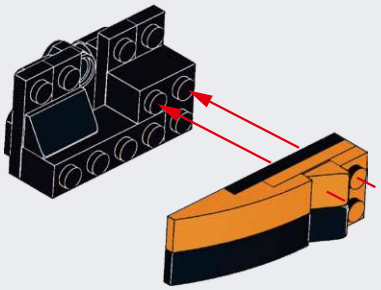

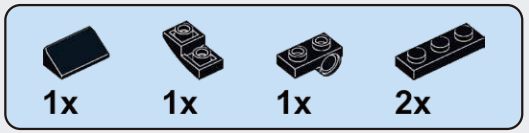

E78

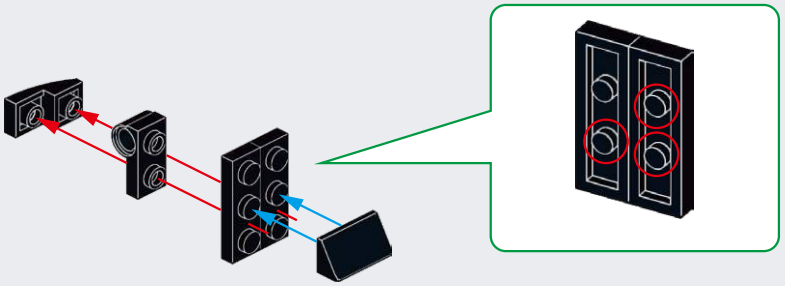

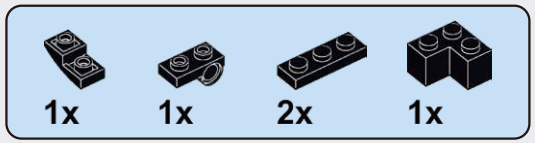

E79

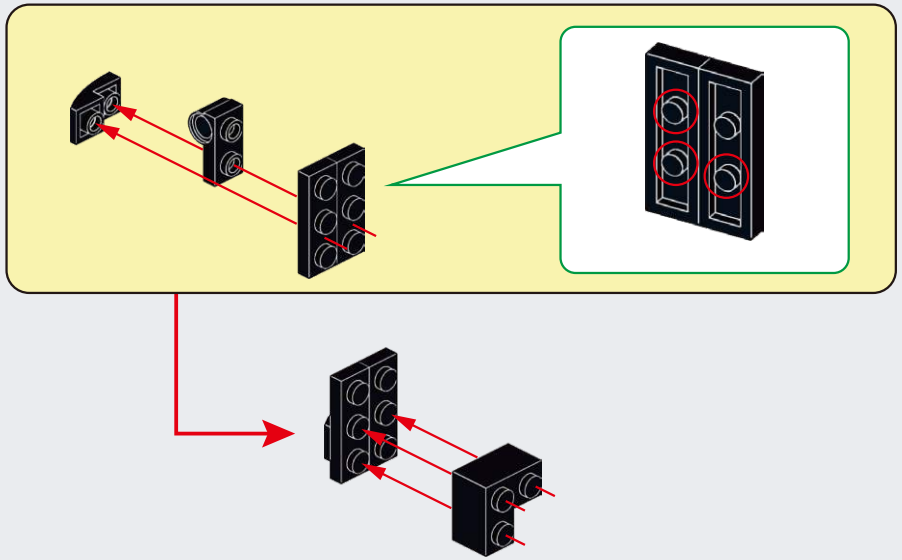

E80

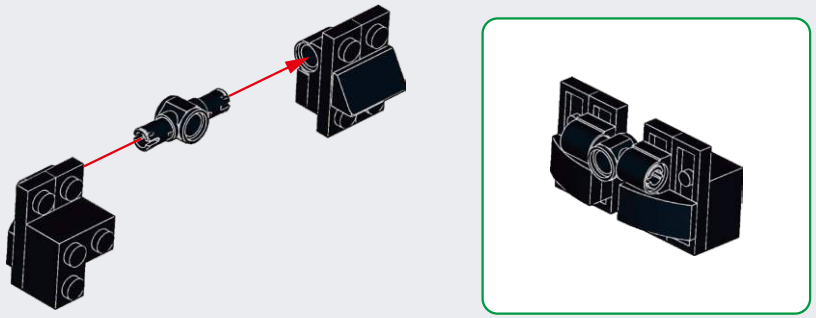

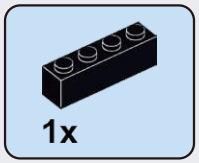

E81

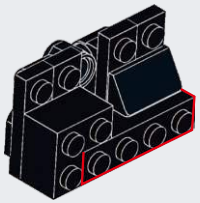

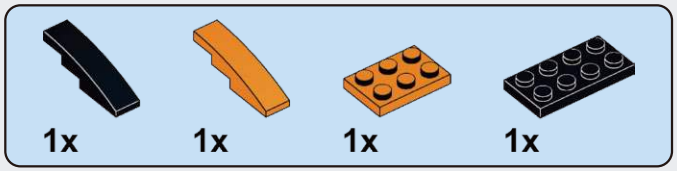

E82

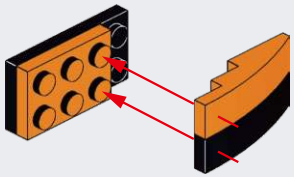

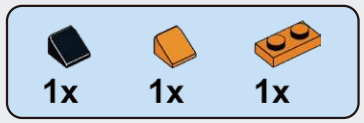

E83

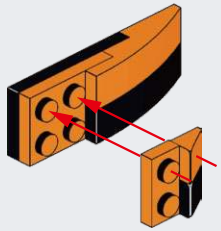

E84

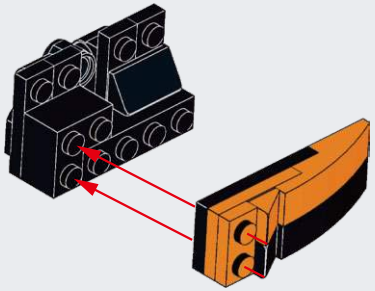

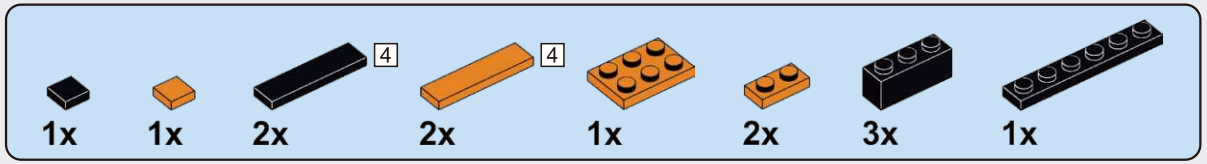

E85

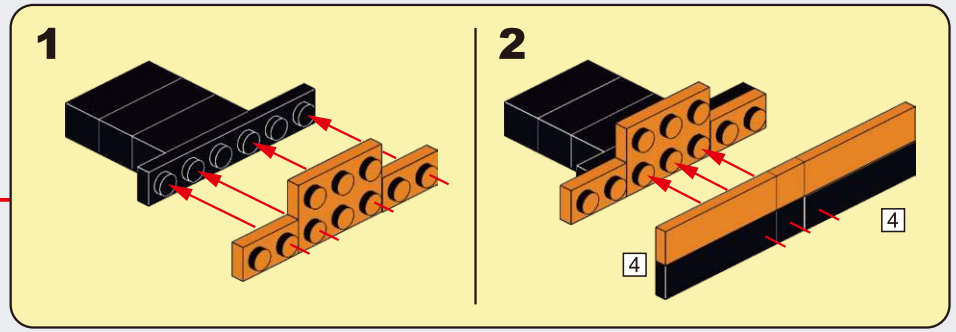

E86

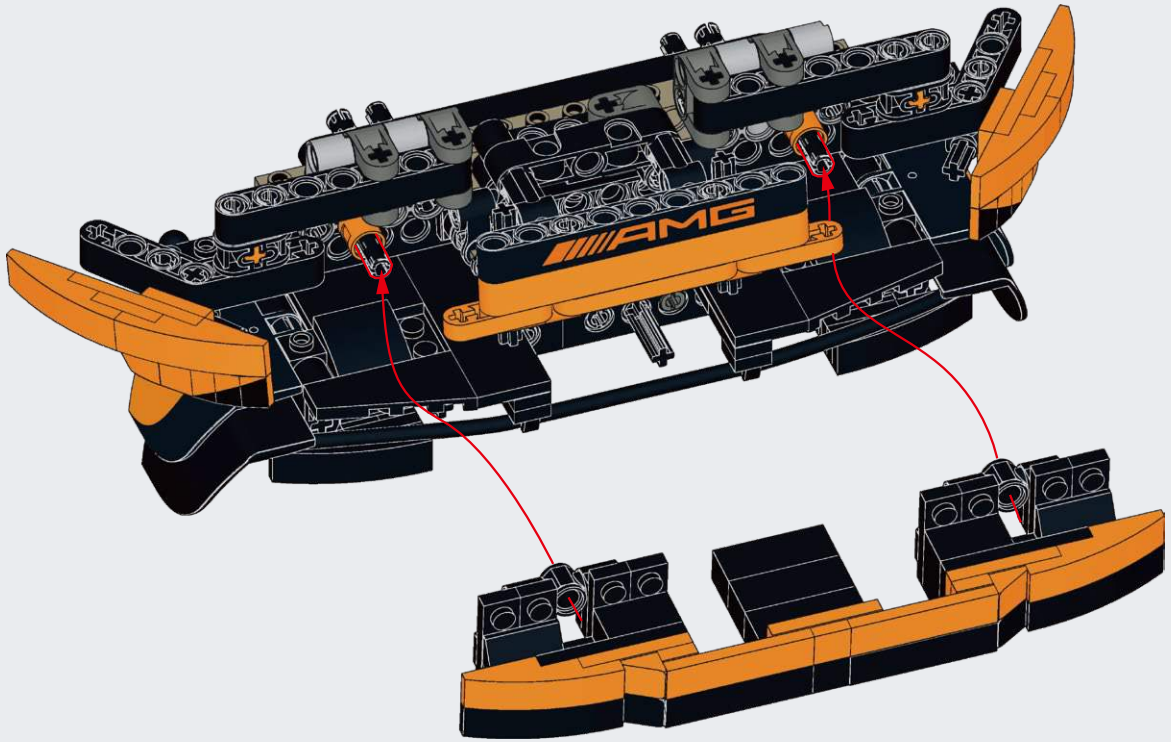

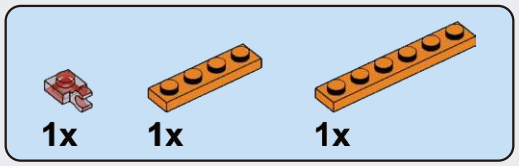

E87

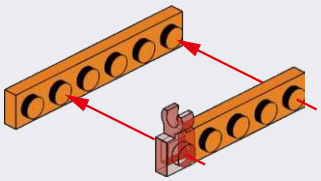

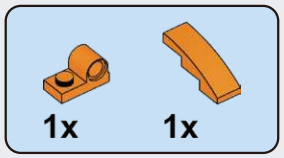

E88

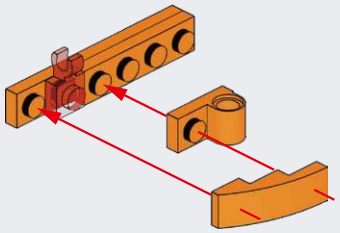

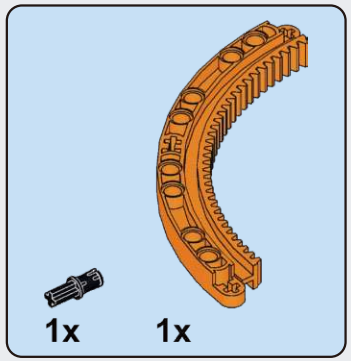

E89

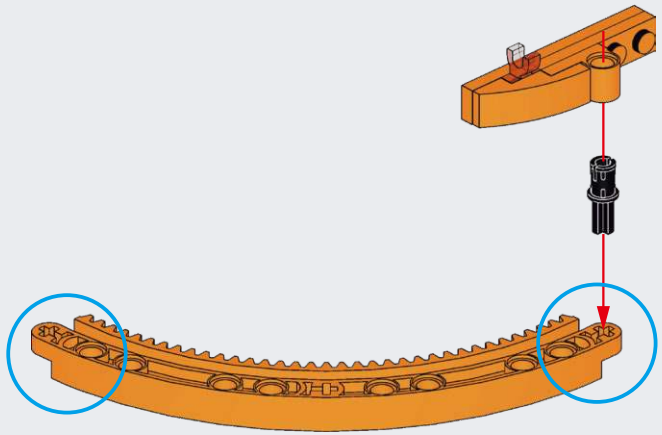

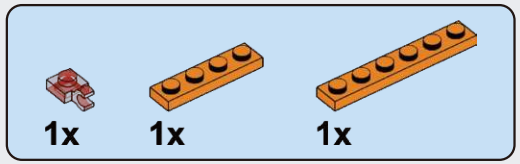

E90

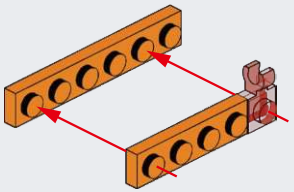

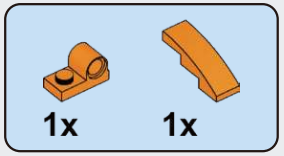

E91

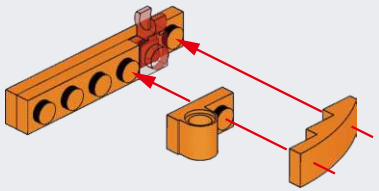

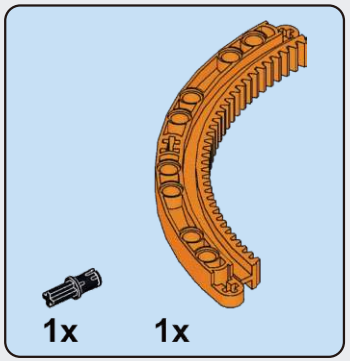

E92

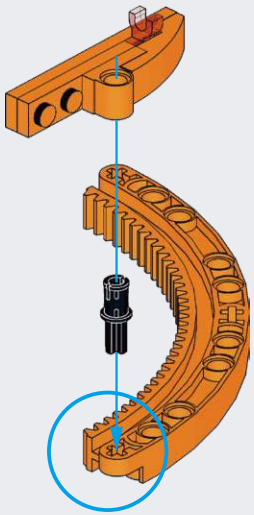

E93

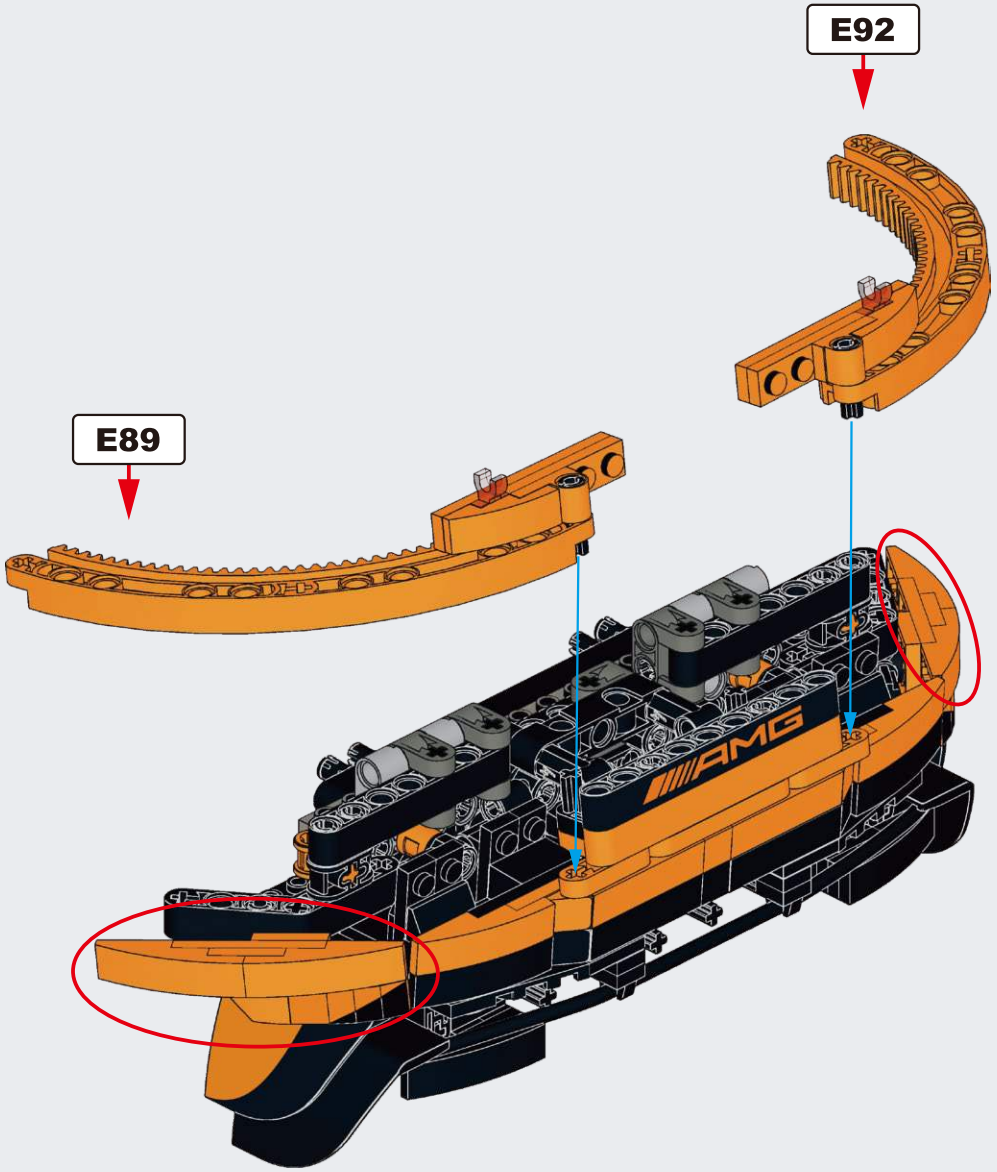

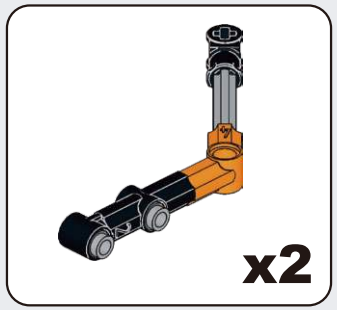

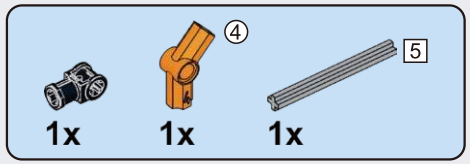

E94

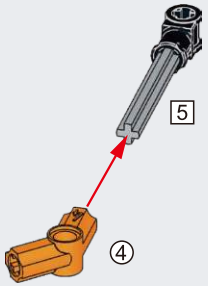

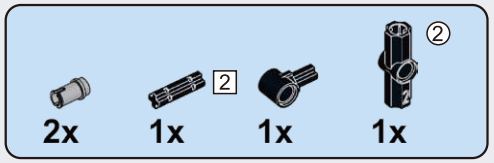

E95

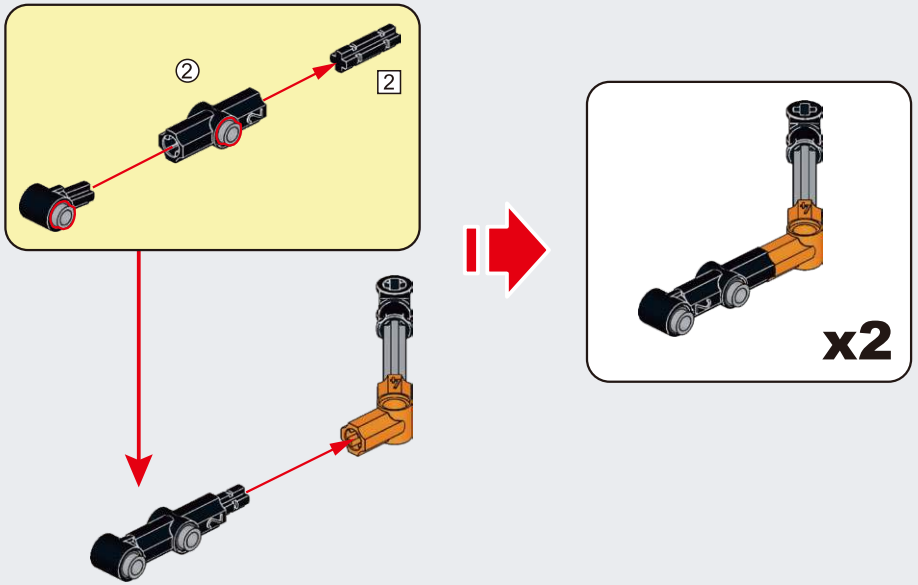

E96

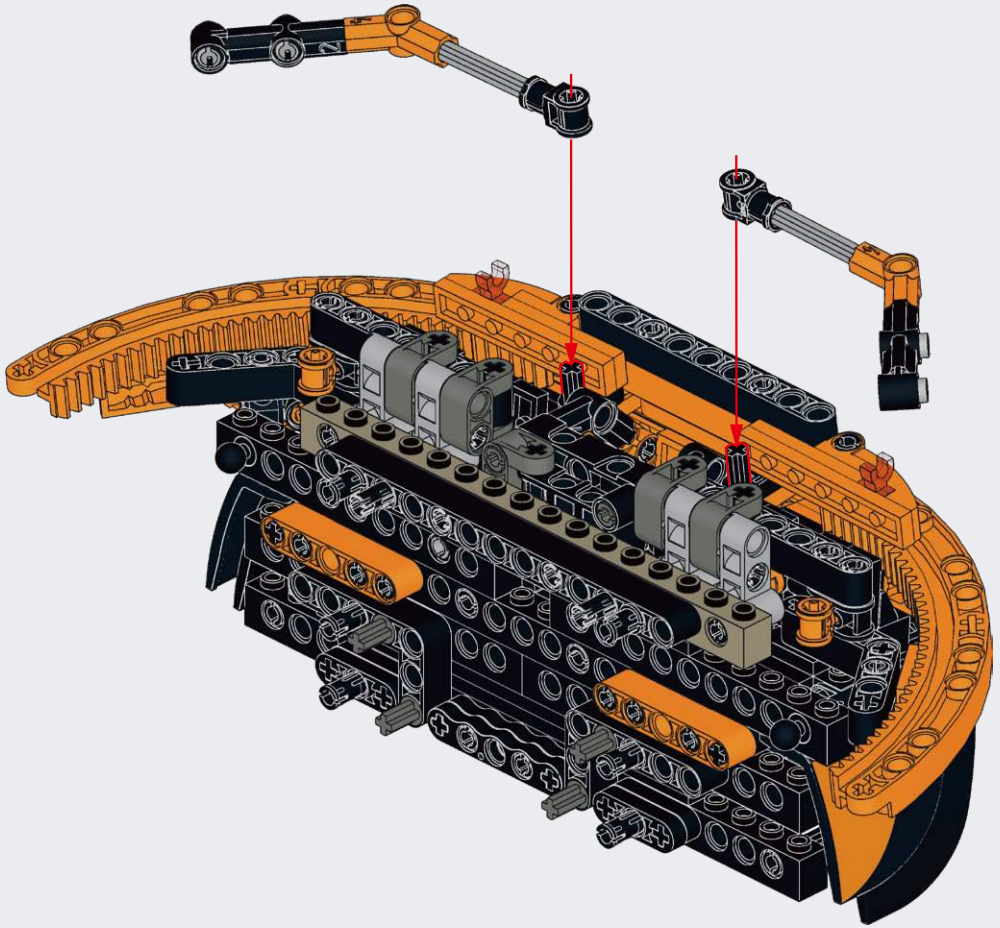

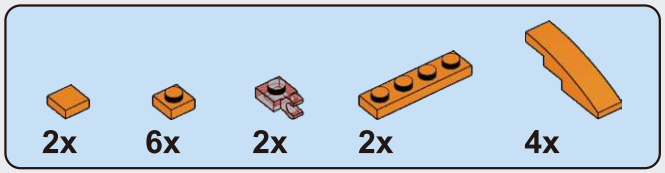

E97

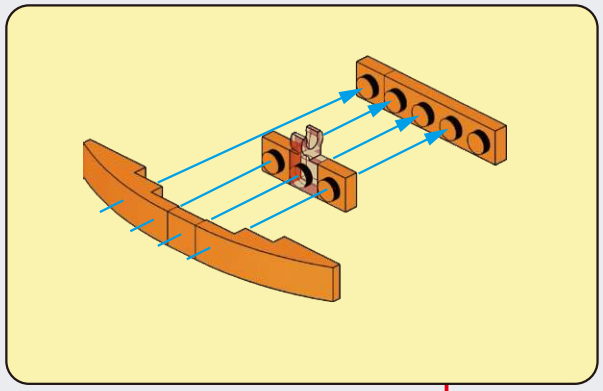

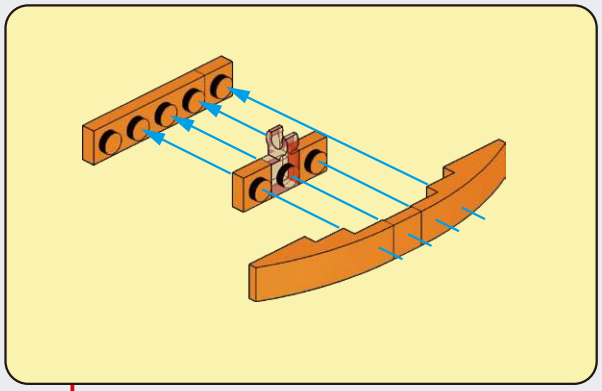

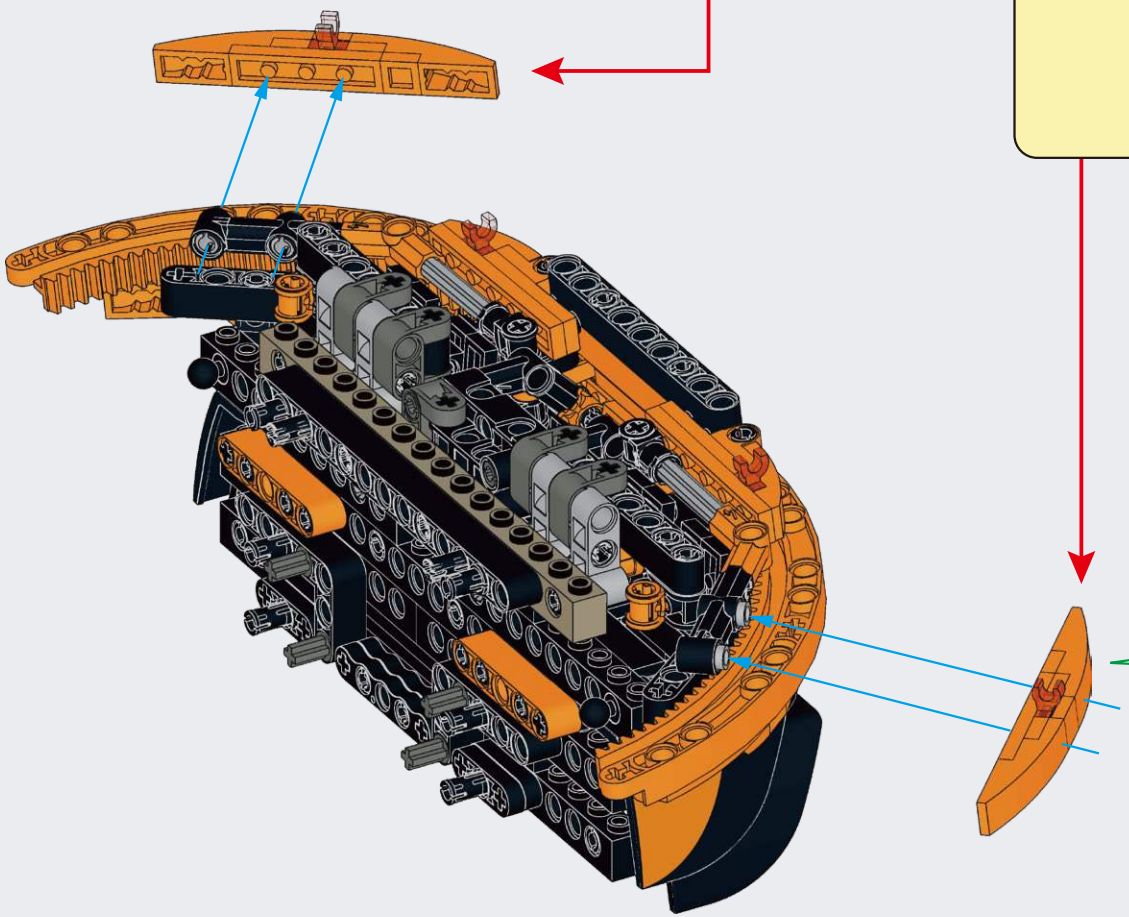

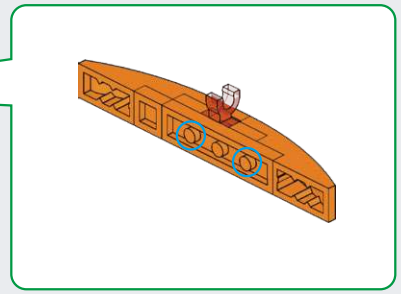

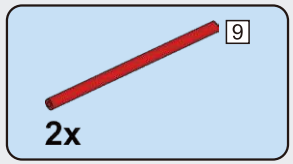

E98

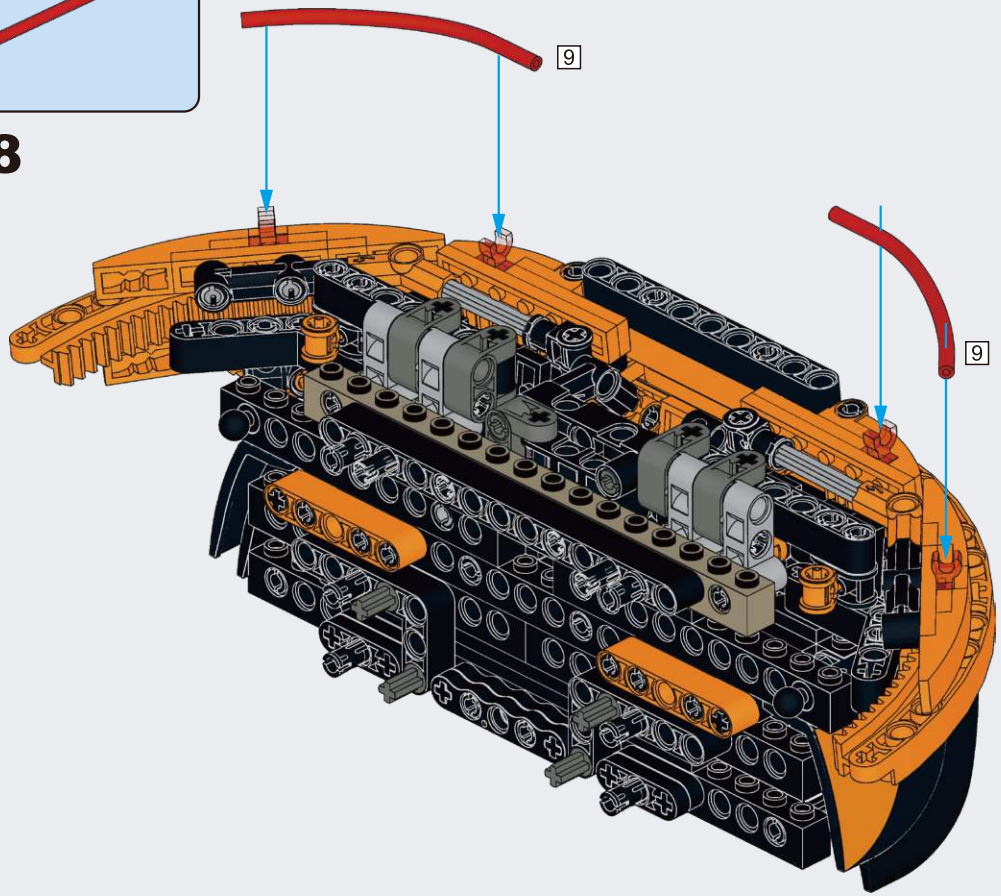

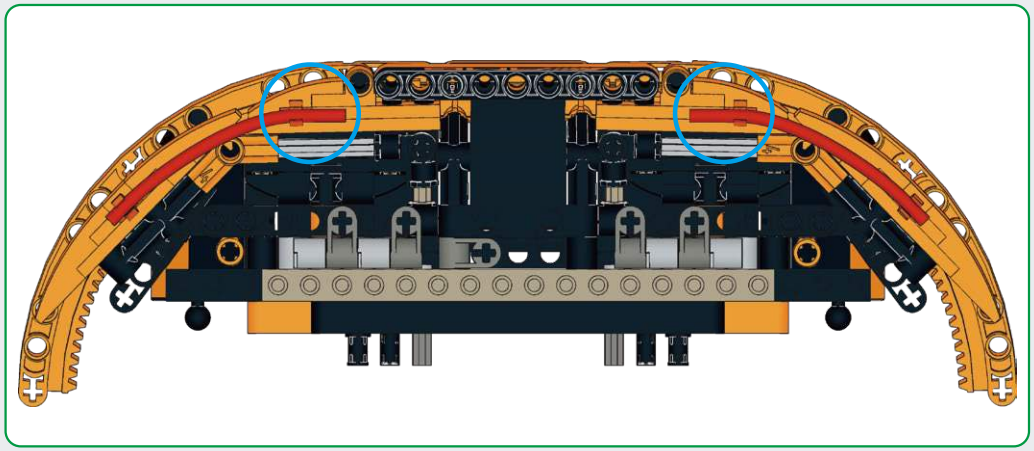

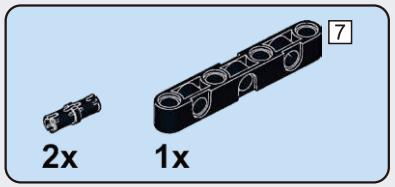

E99

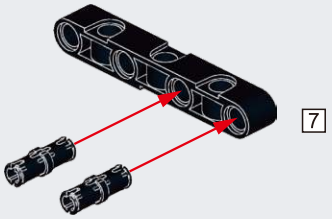

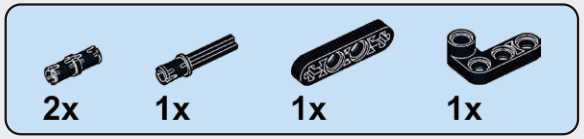

E100

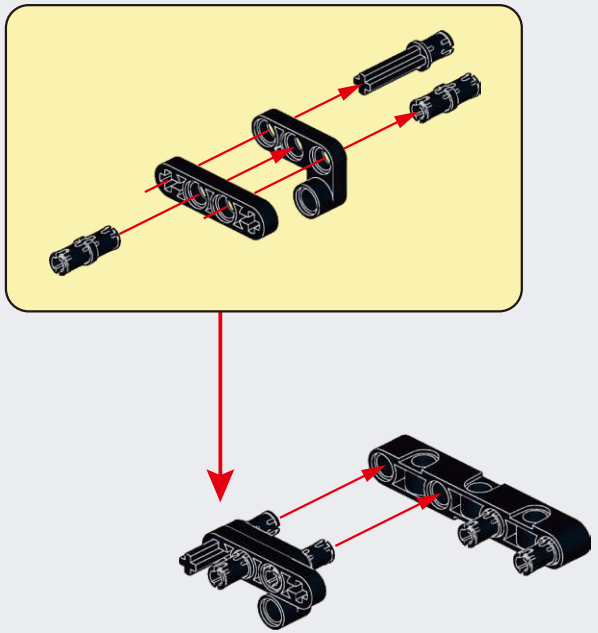

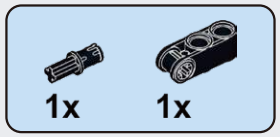

E101

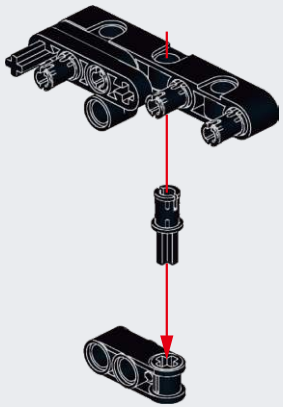

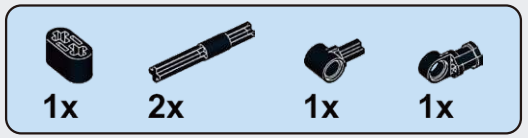

E102

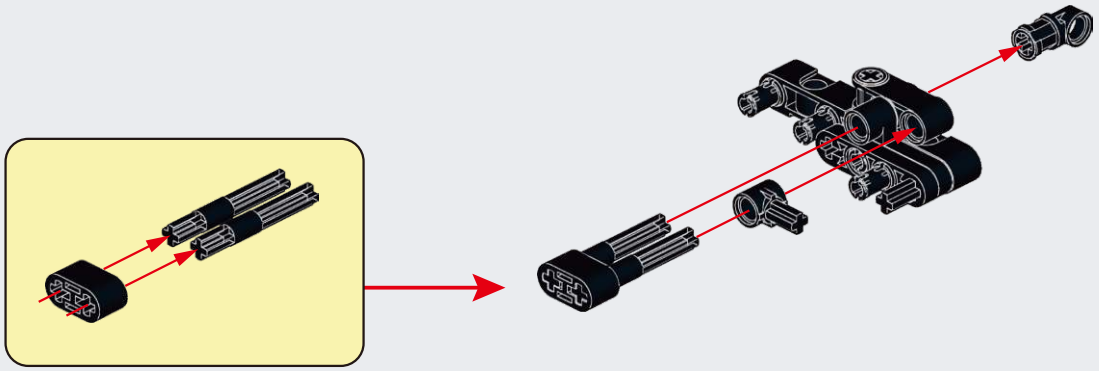

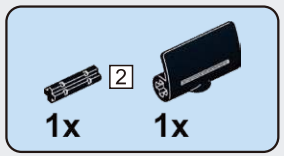

E103

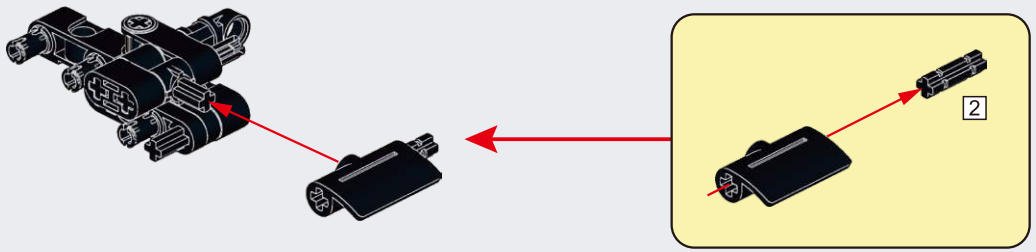

E104

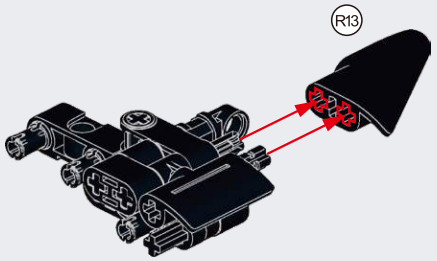

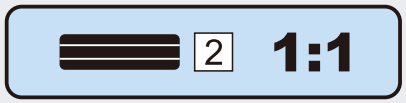

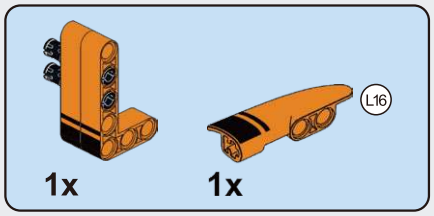

E105

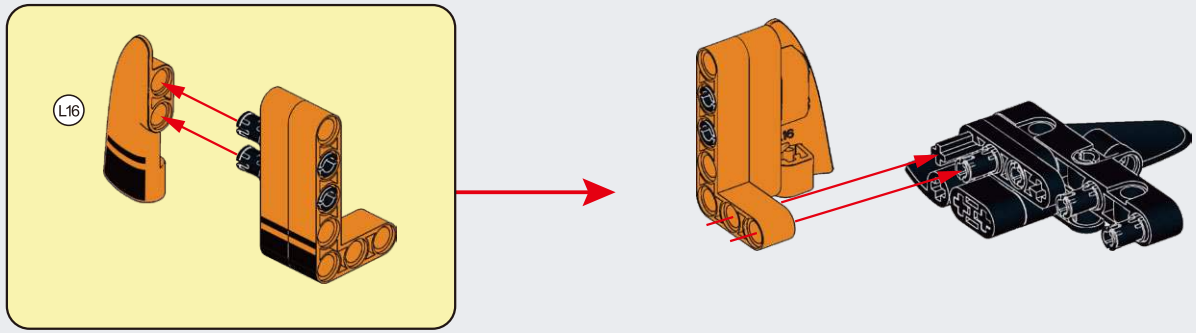

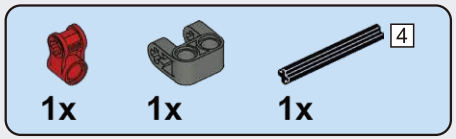

E106

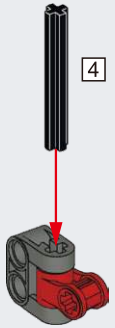

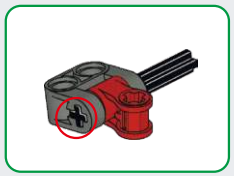

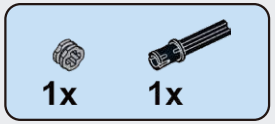

E107

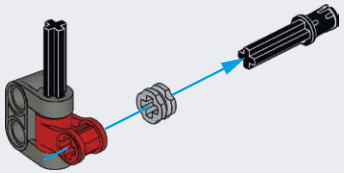

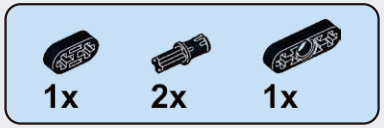

E108

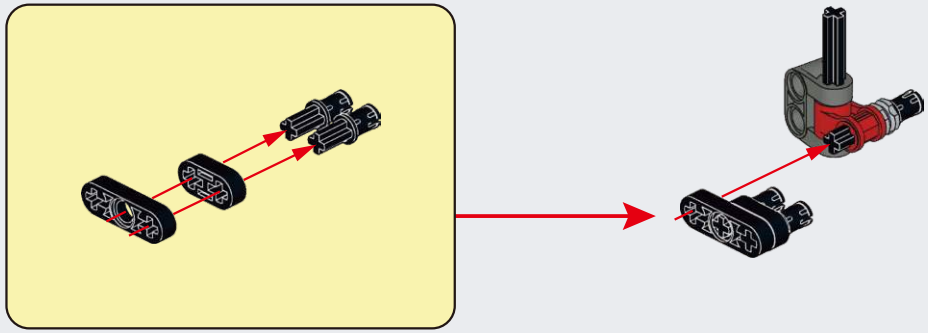

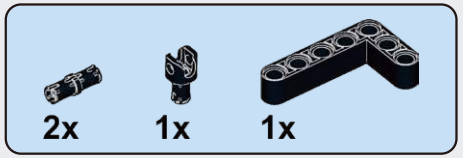

E109

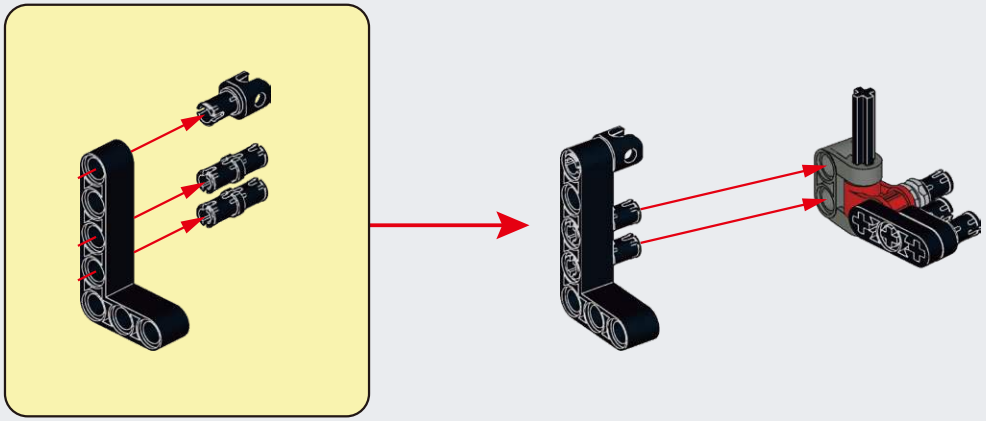

E110

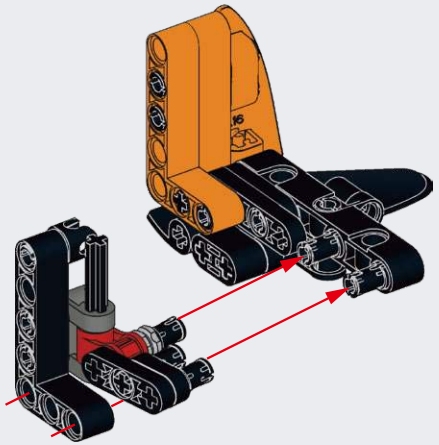

E111

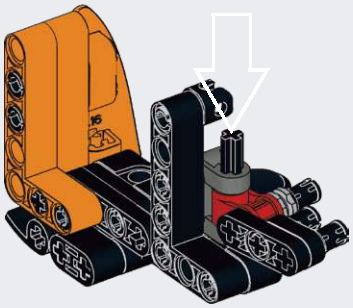

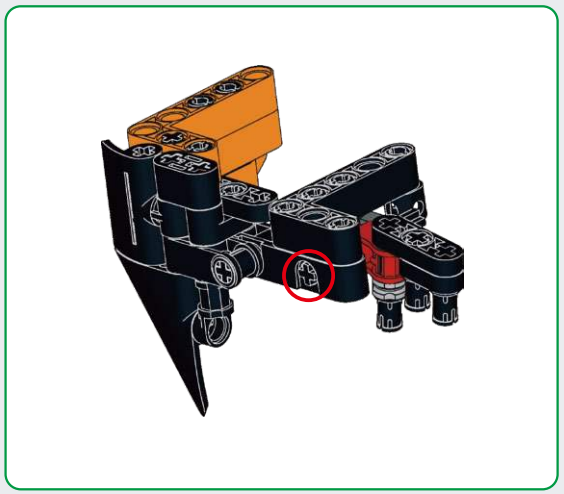

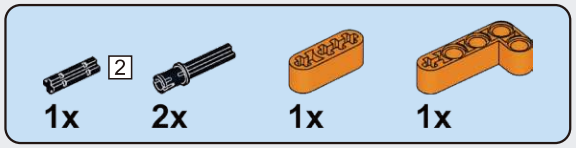

E112

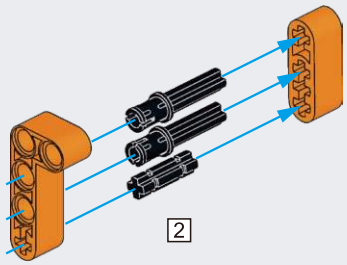

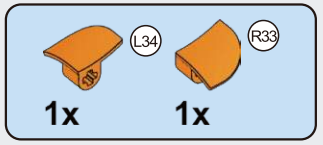

E113

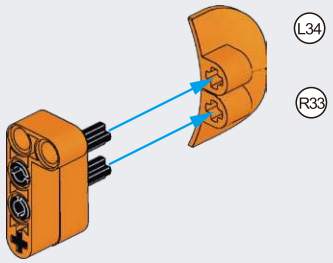

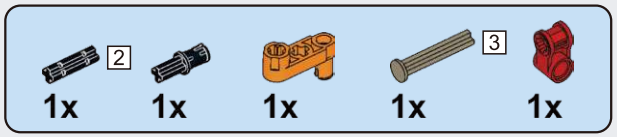

E114

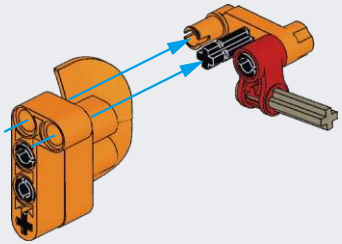

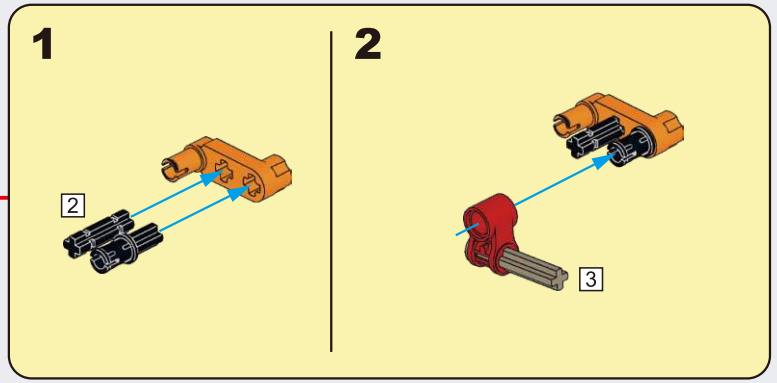

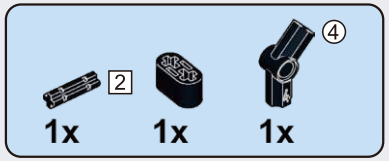

E115

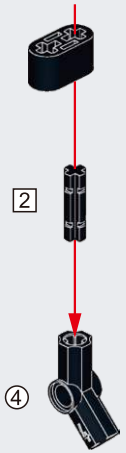

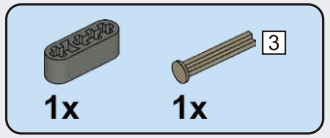

E116

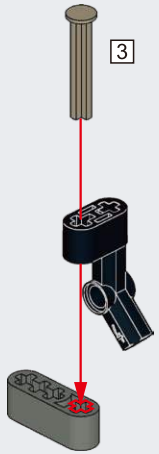

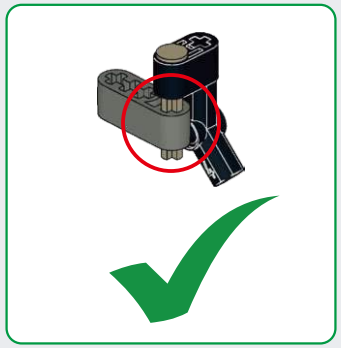

E117

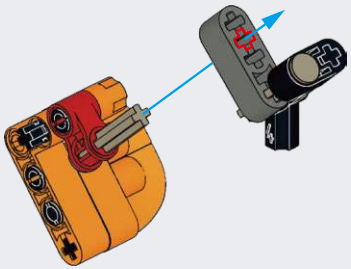

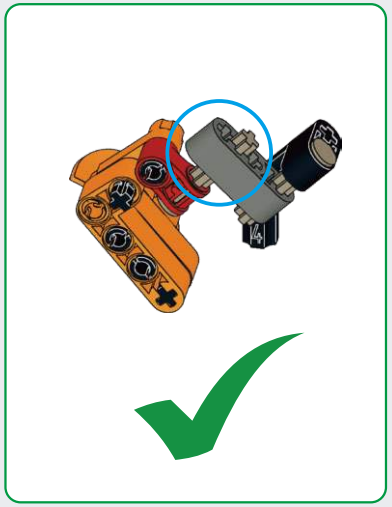

E118

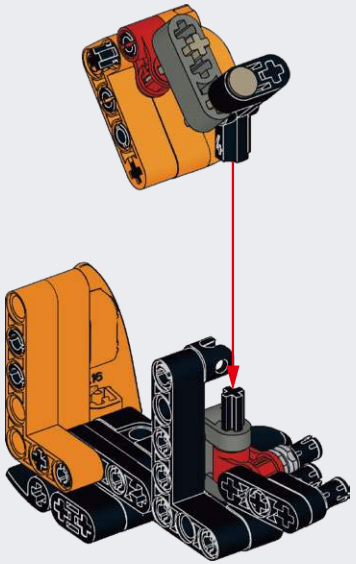

E119

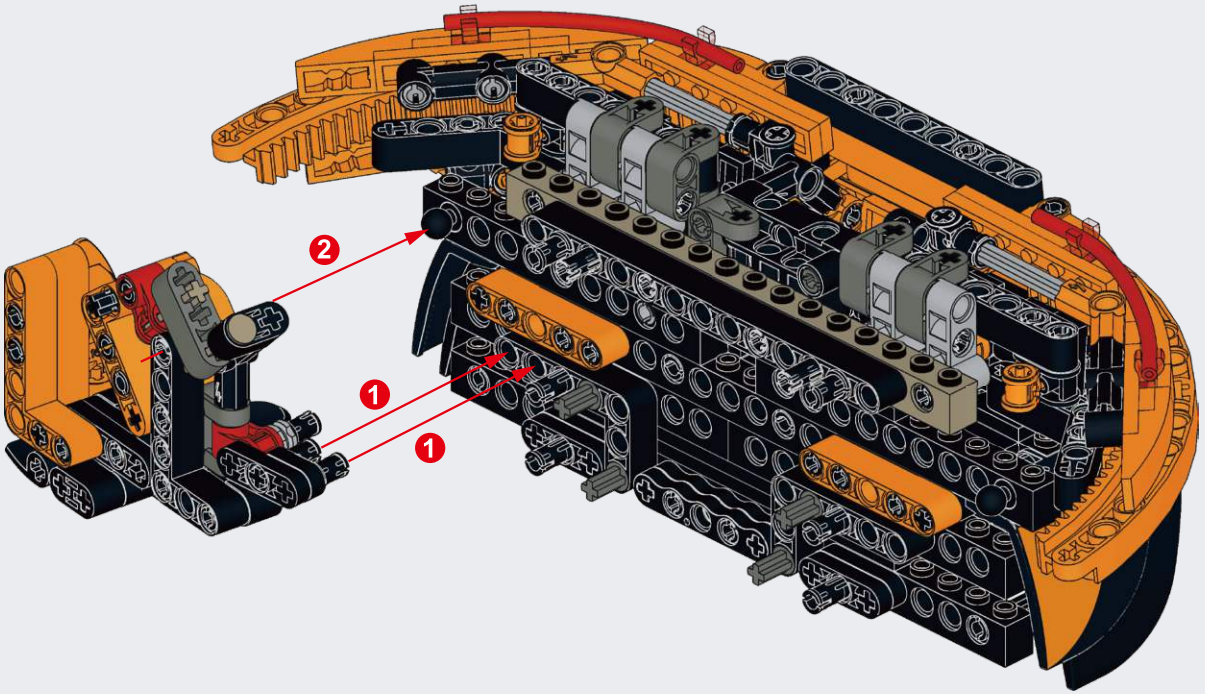

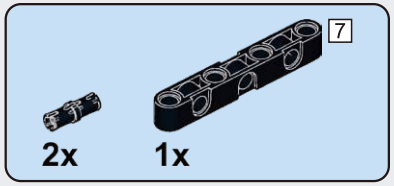

E120

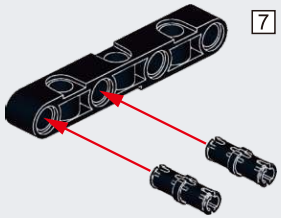

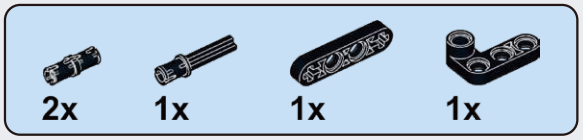

E121

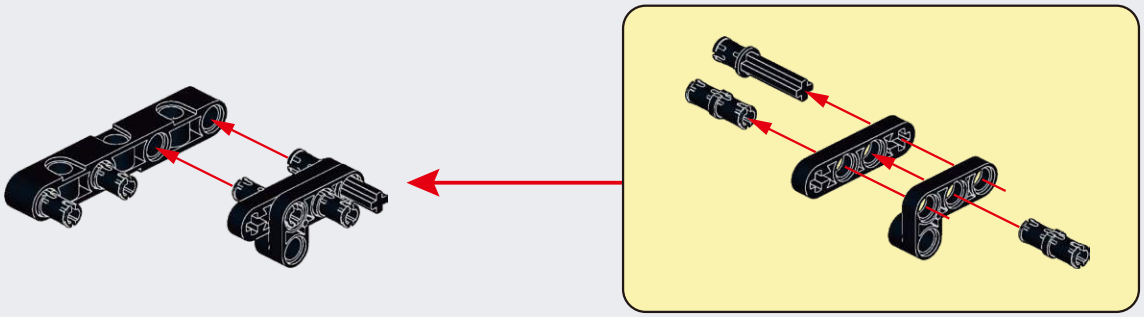

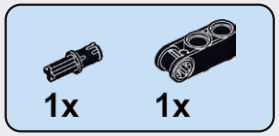

E122

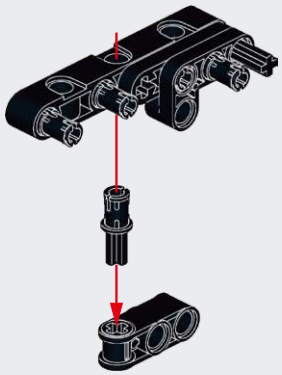

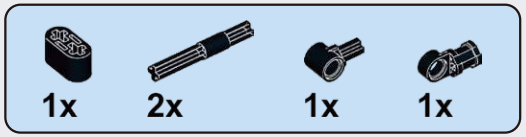

E123

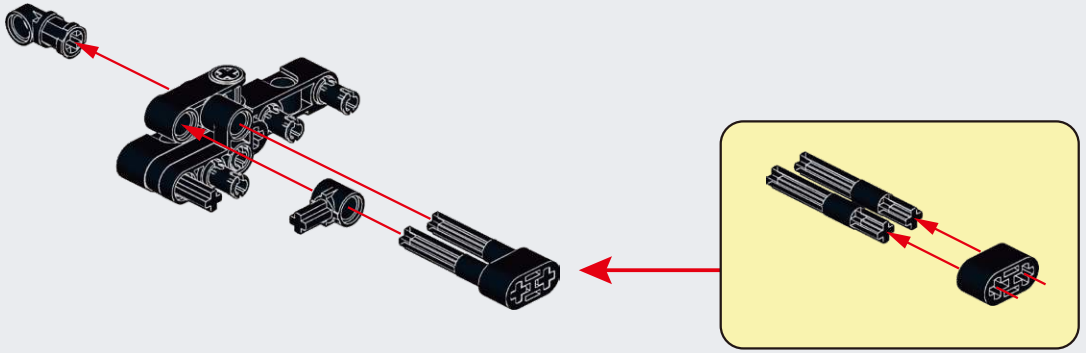

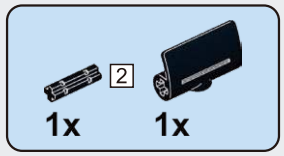

E124

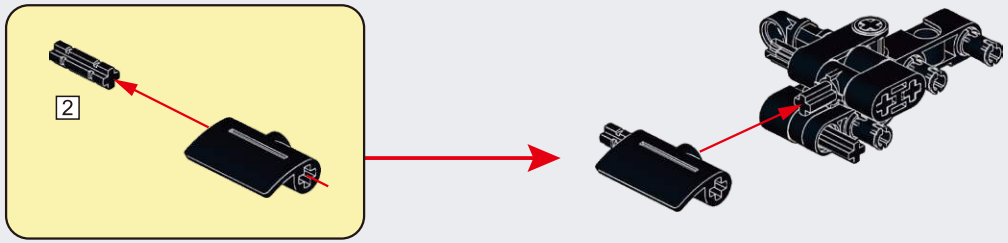

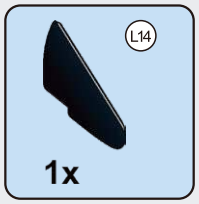

E125

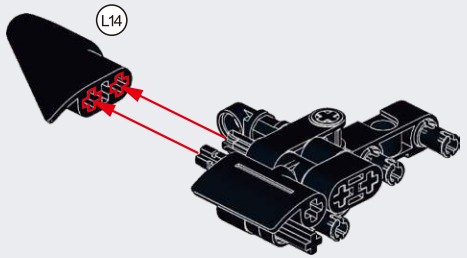

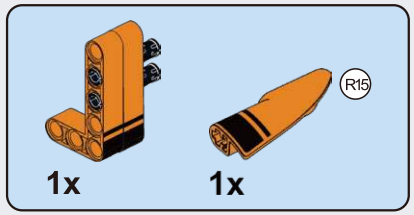

E126

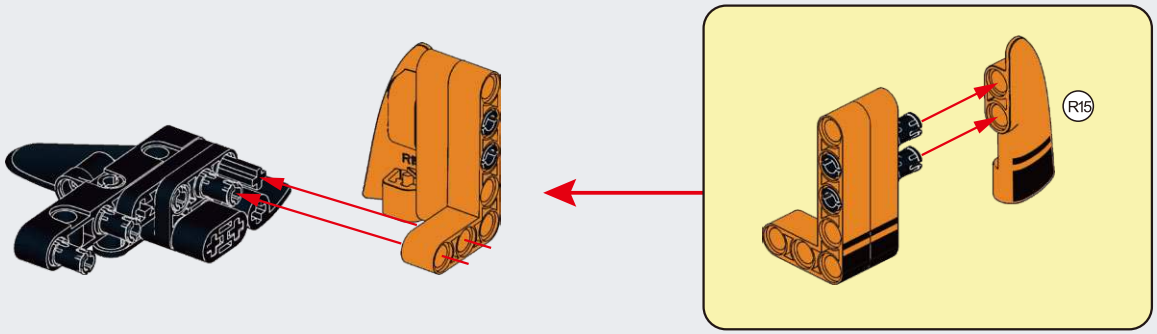

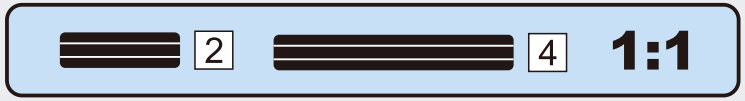

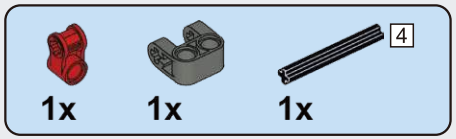

E127

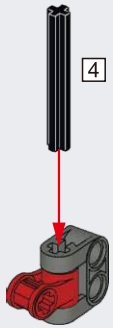

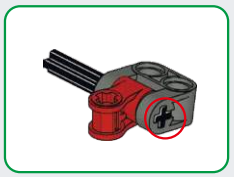

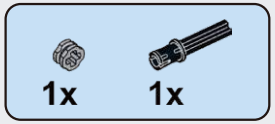

E128

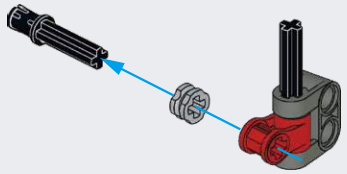

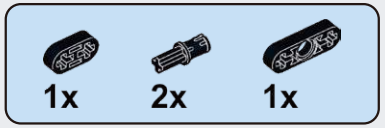

E129

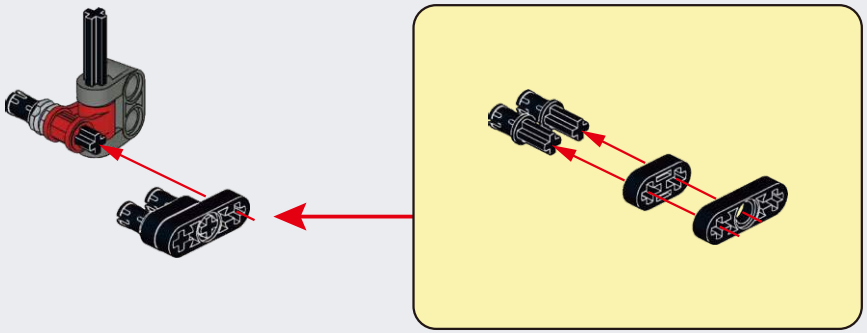

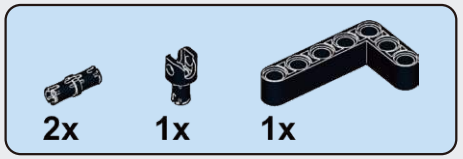

E130

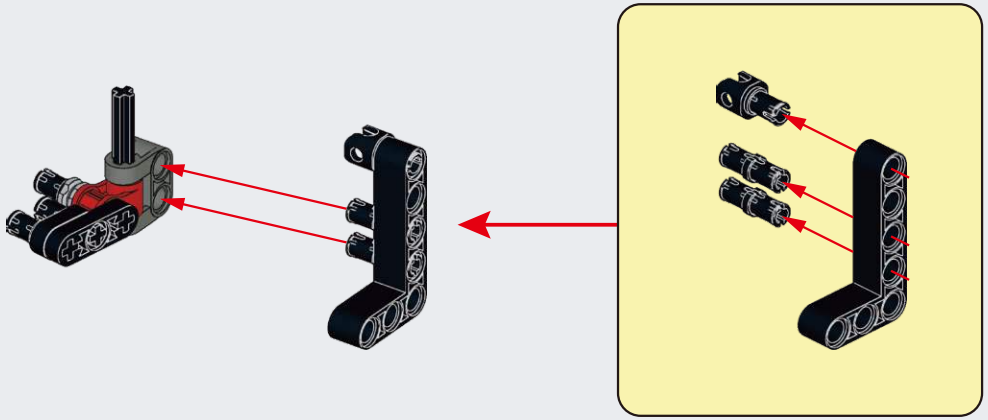

E131

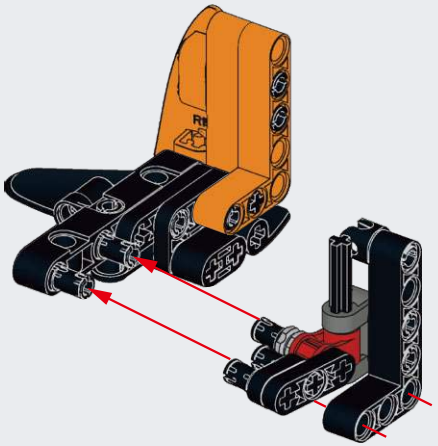

E132

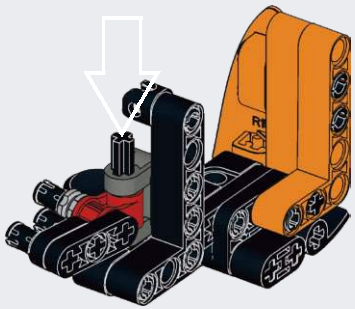

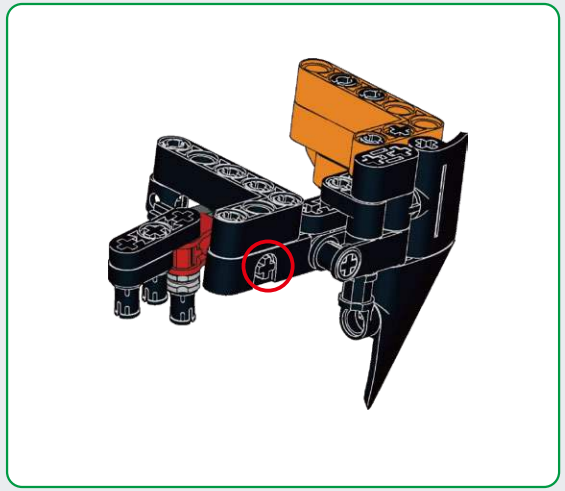

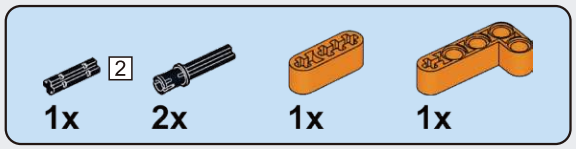

E133

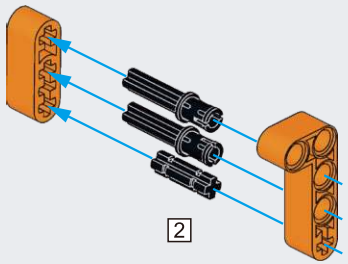

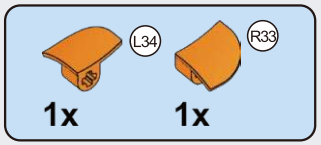

E134

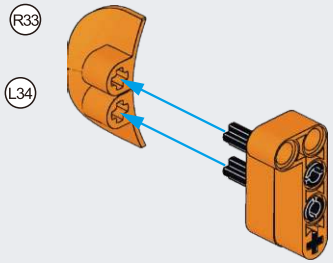

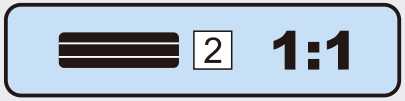

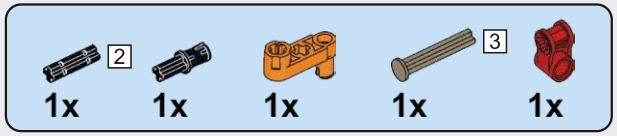

E135

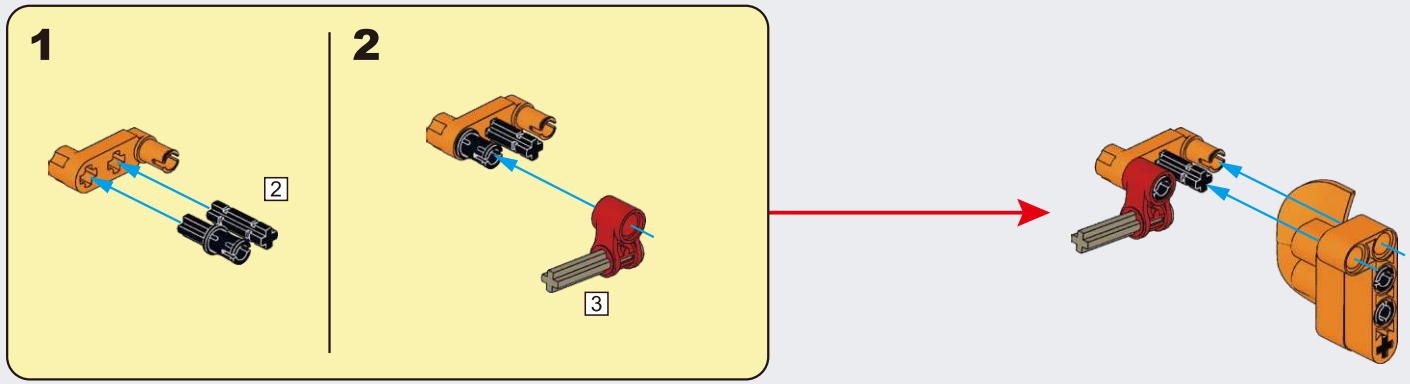

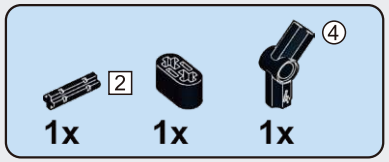

E136

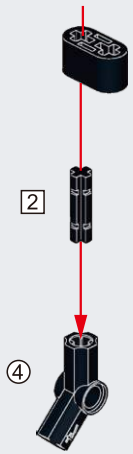

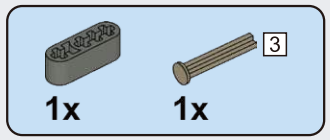

E137

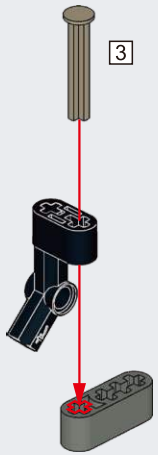

E138

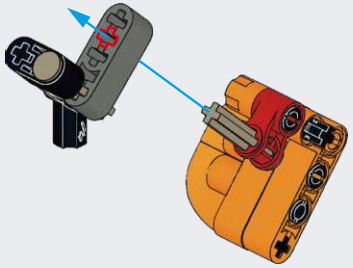

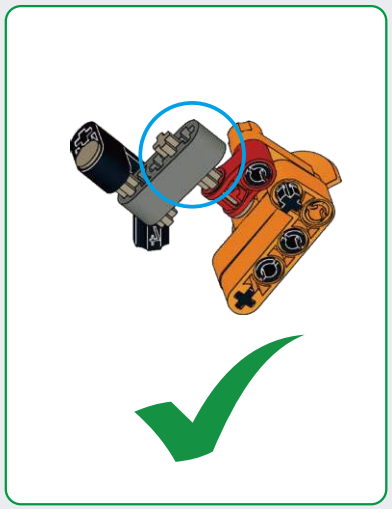

E139

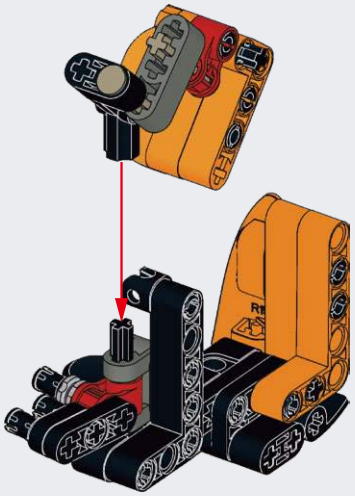

E140

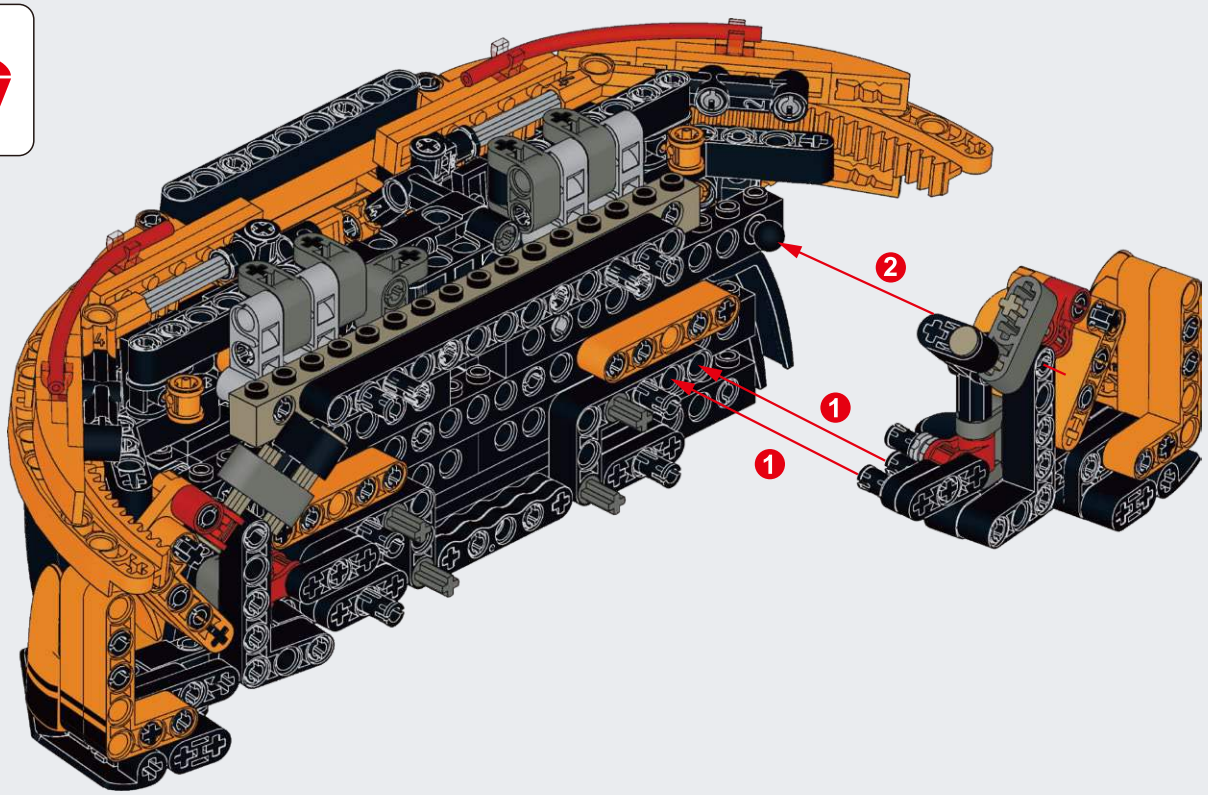

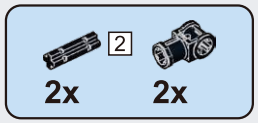

E141

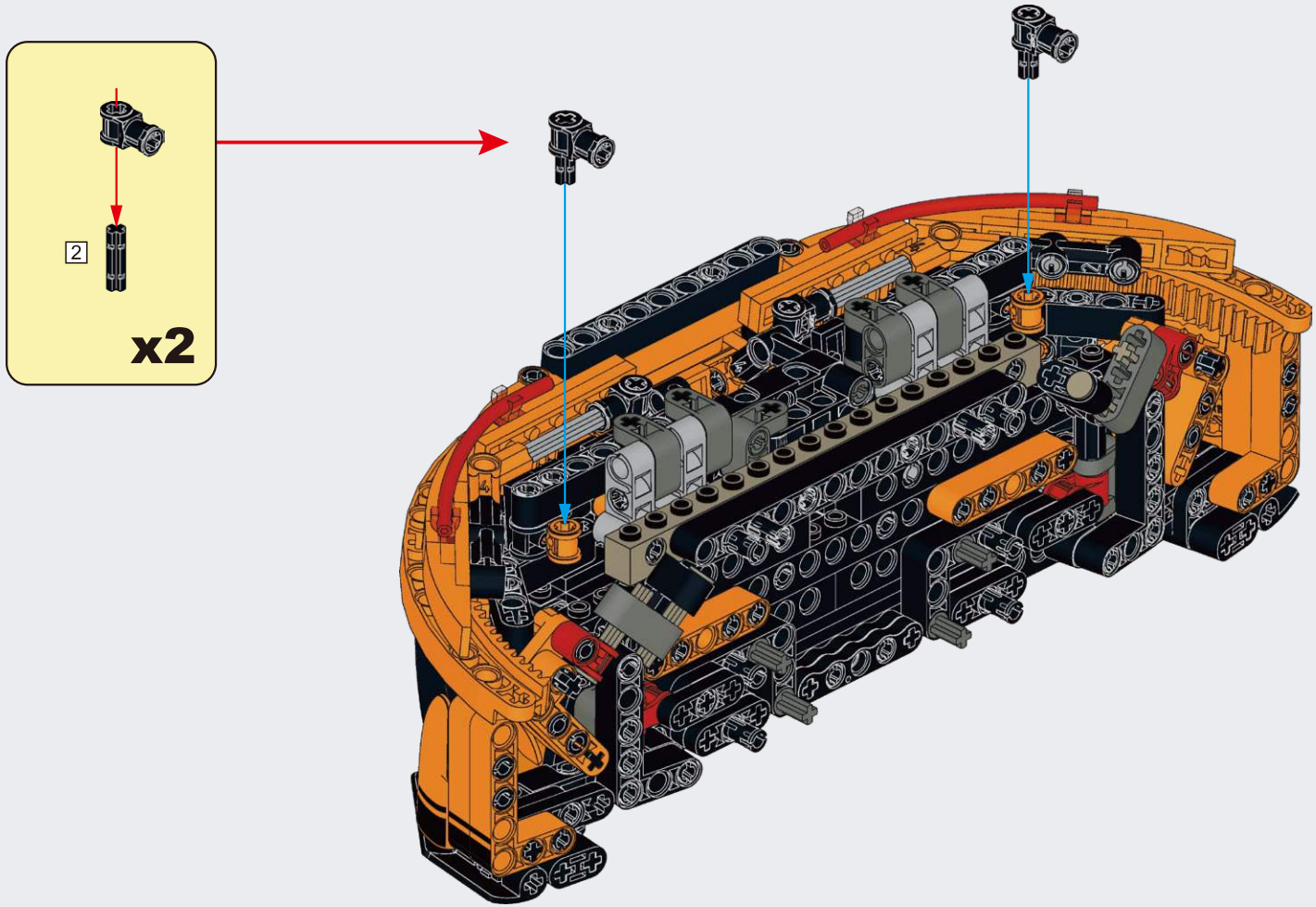

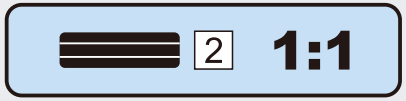

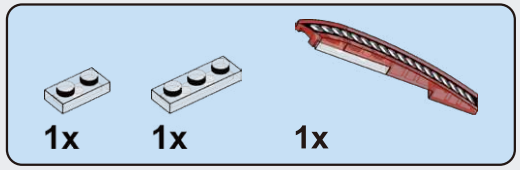

E142

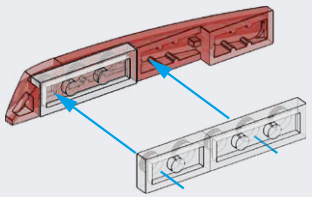

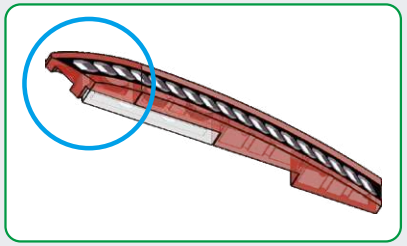

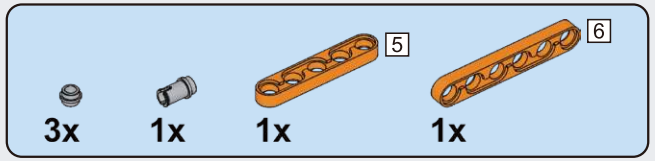

E143

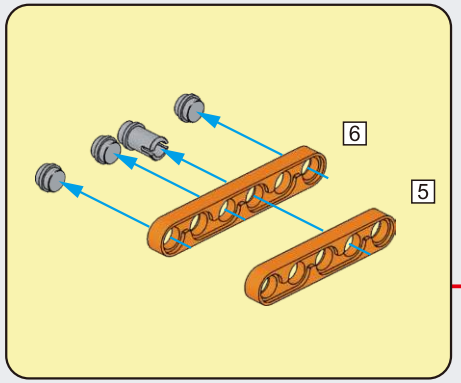

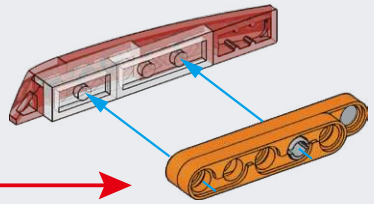

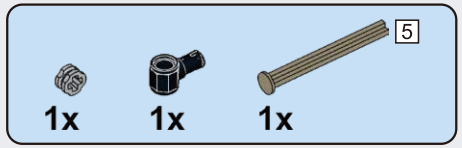

E144

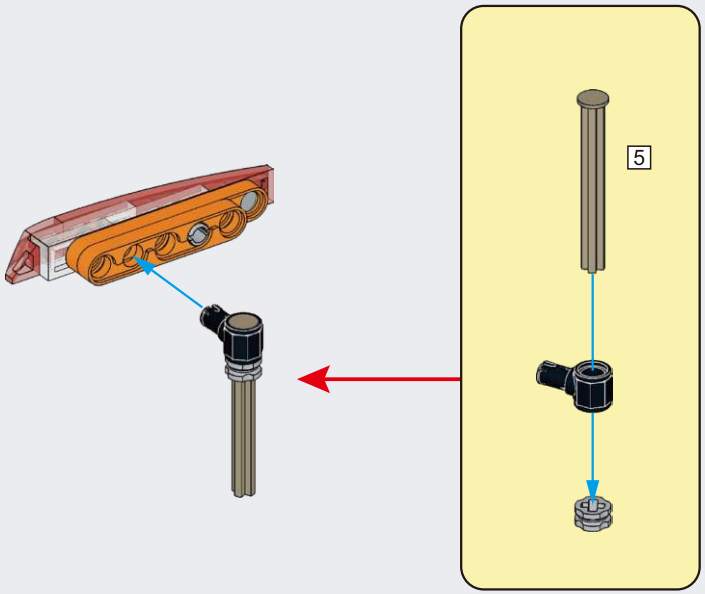

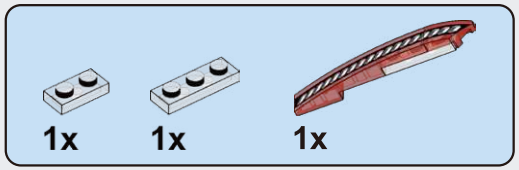

E145

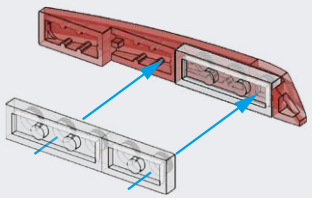

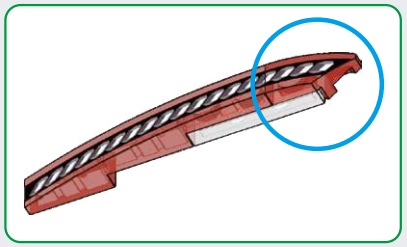

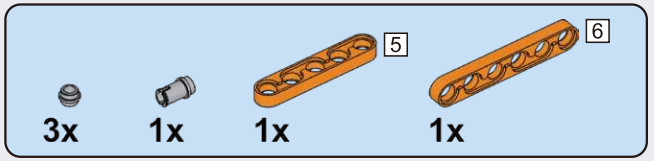

E146

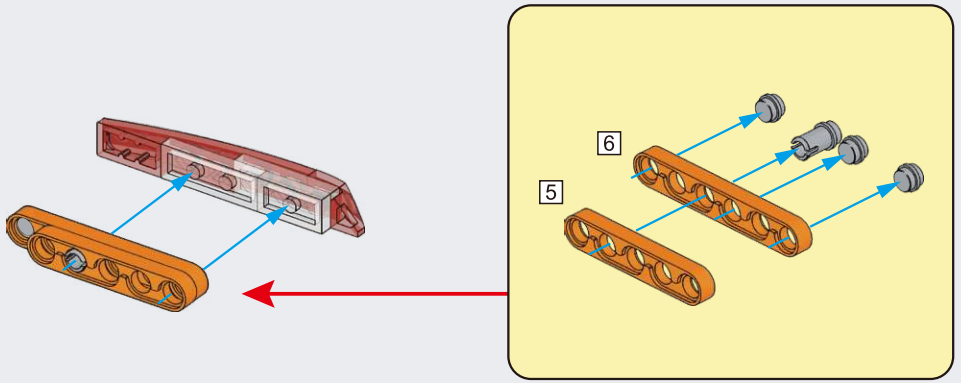

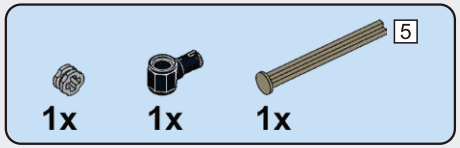

E147

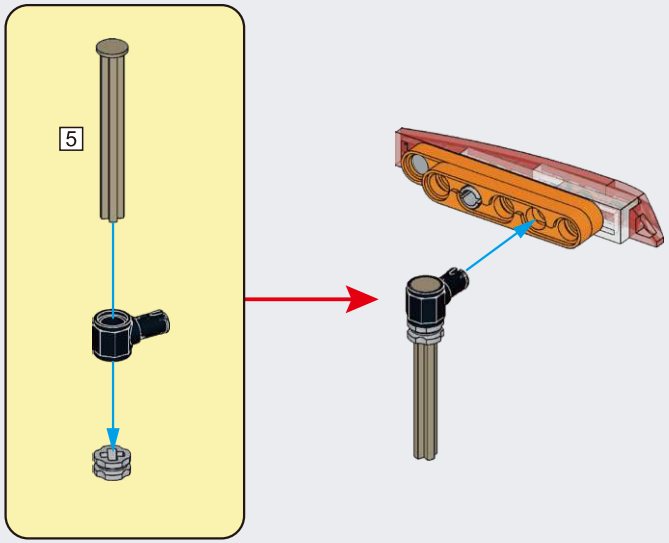

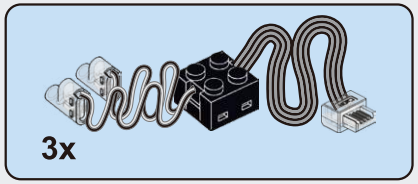

E148

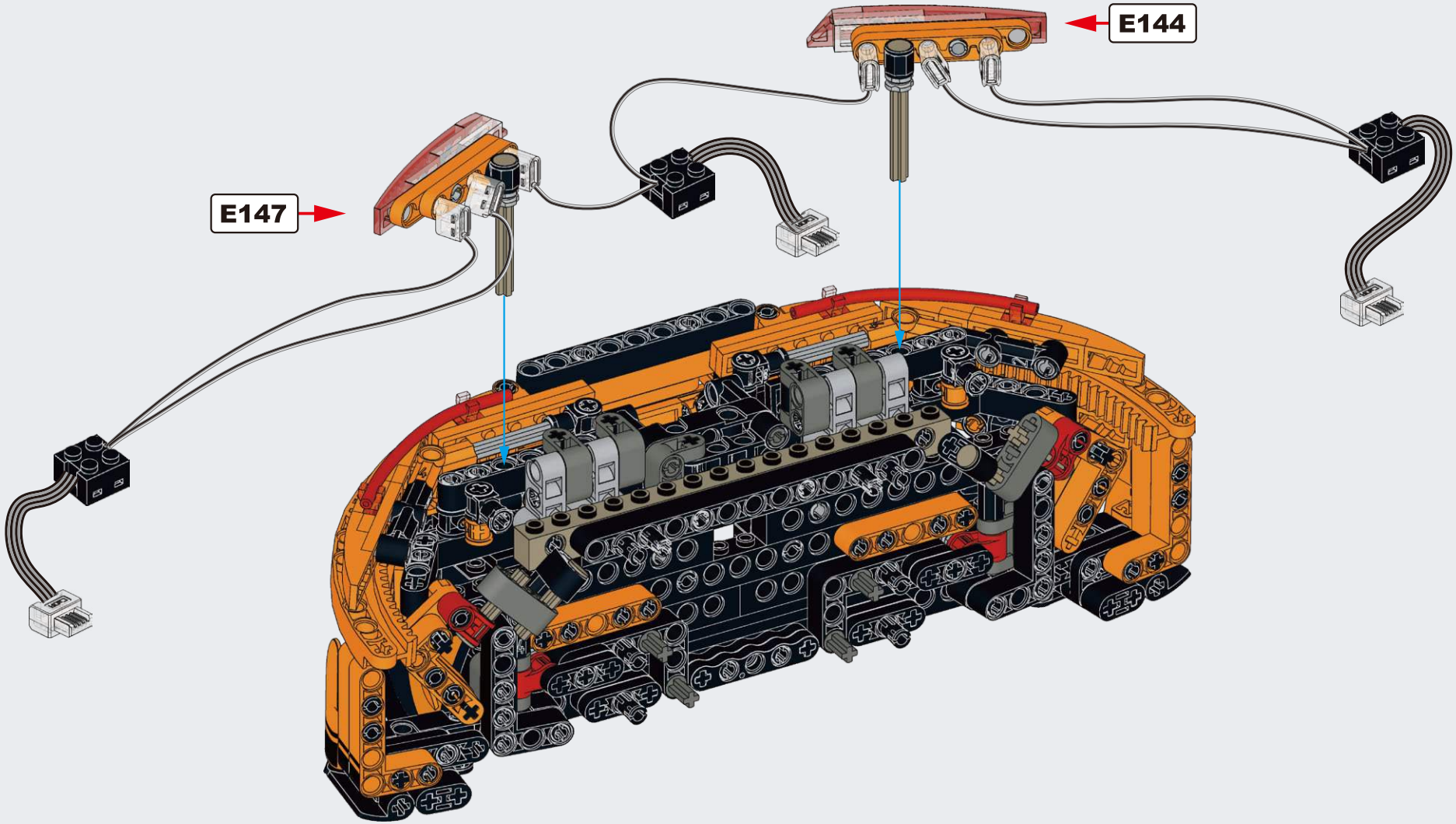

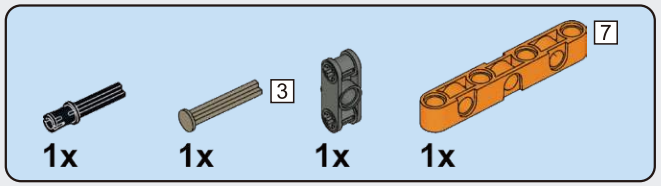

E149

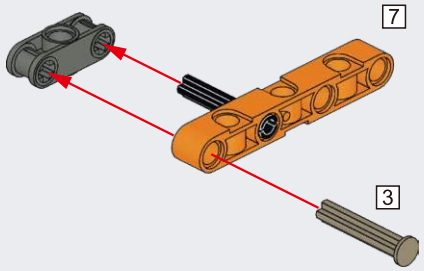

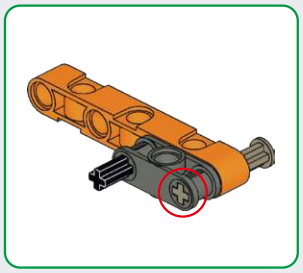

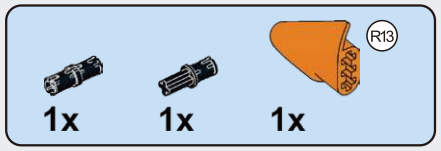

E150

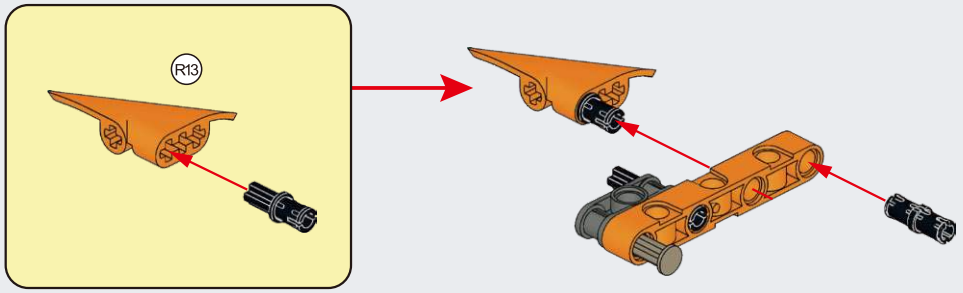

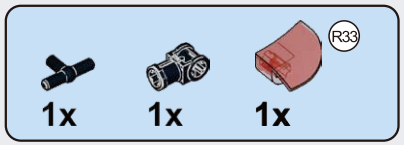

E151

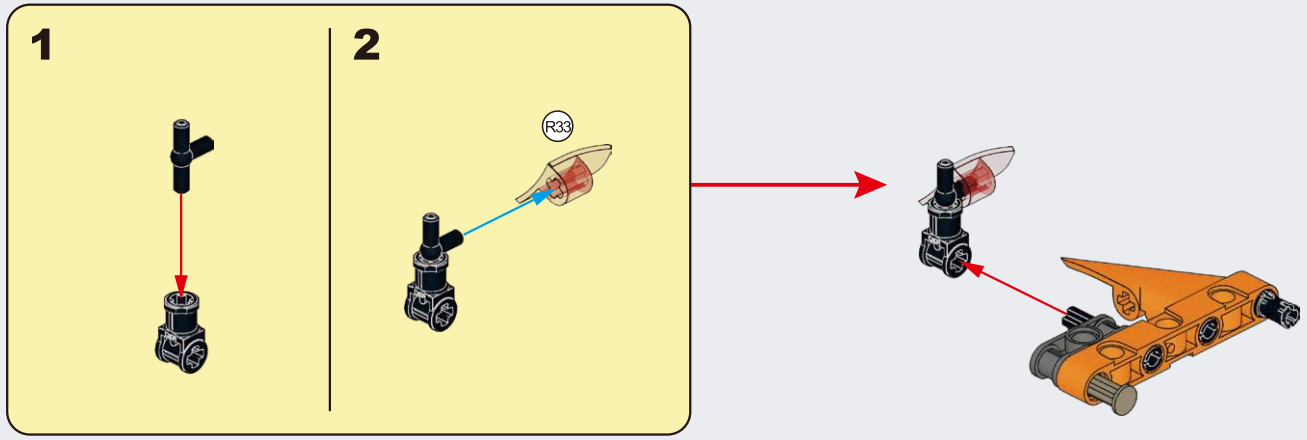

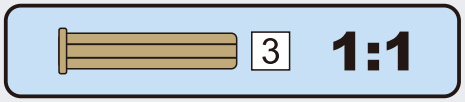

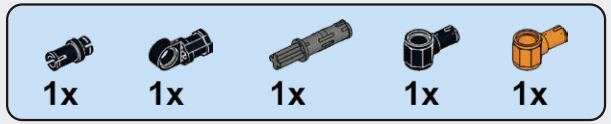

E152

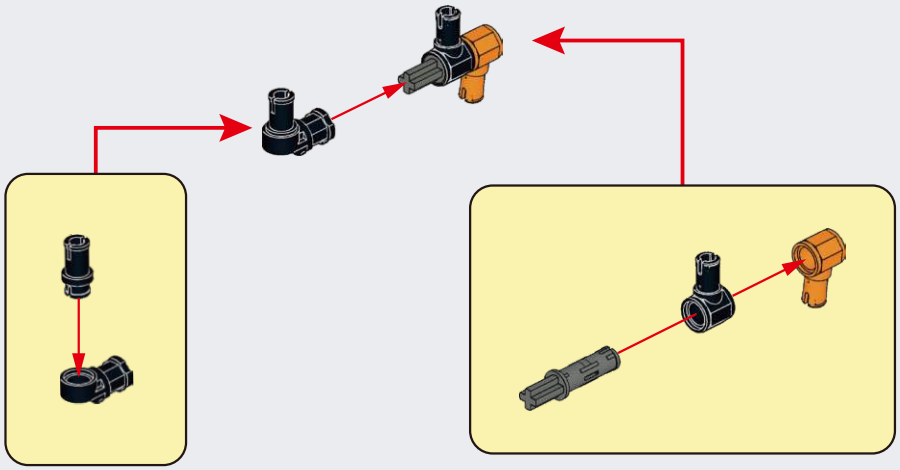

E153

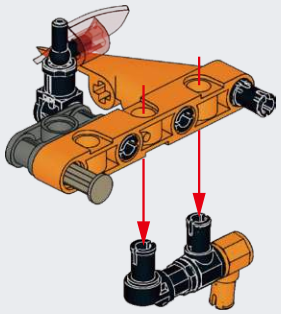

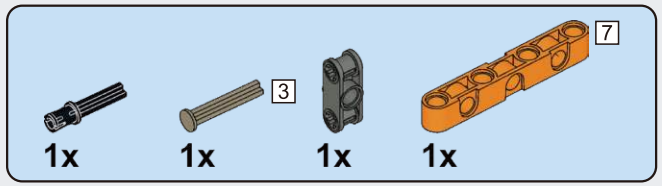

E154

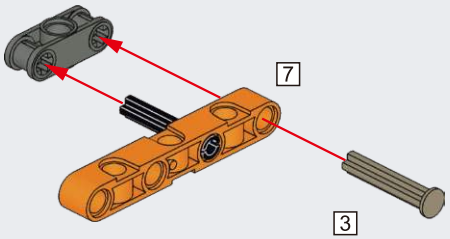

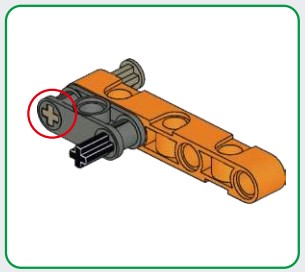

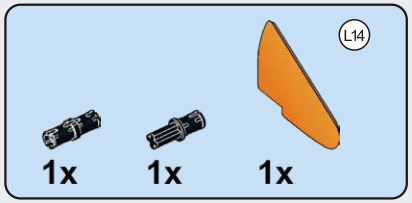

E155

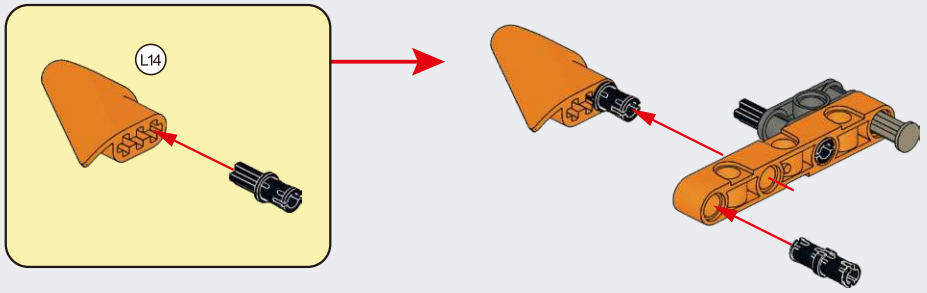

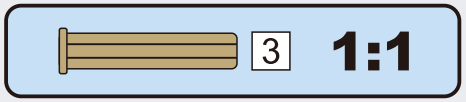

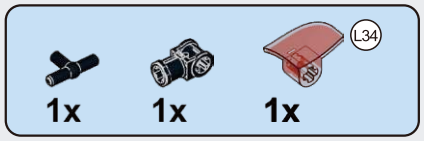

E156

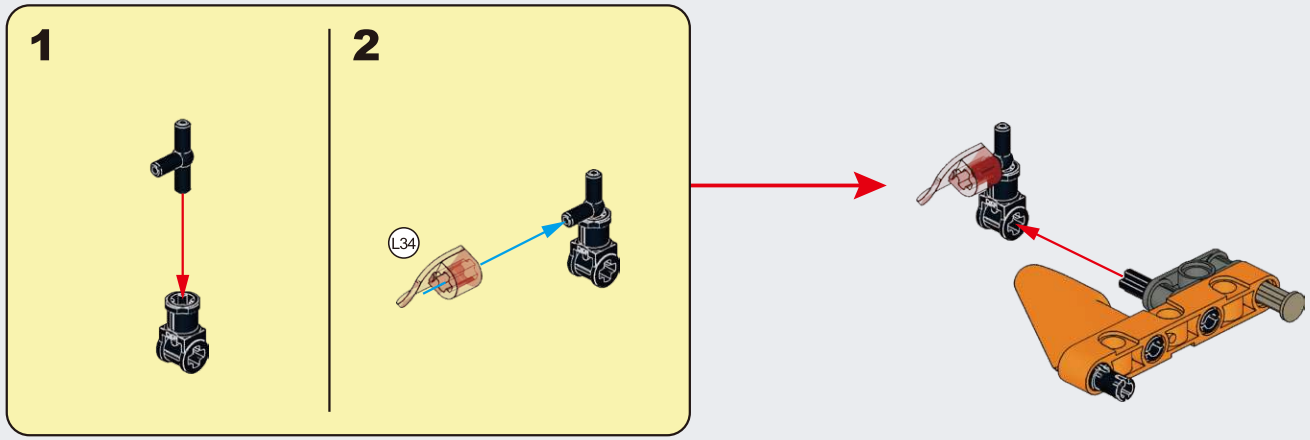

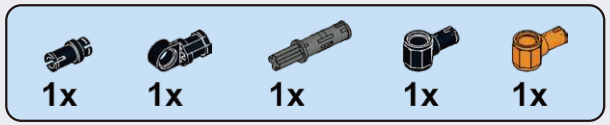

E157

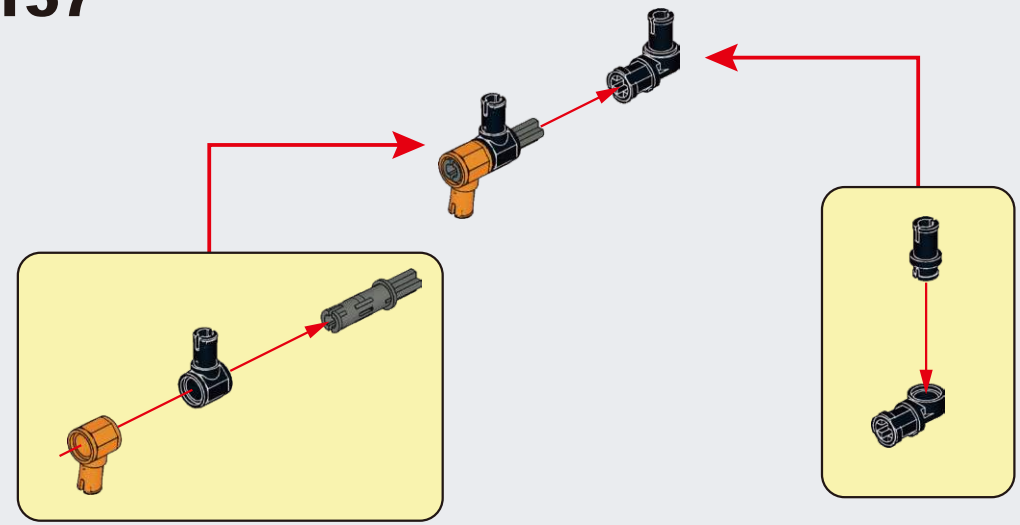

E158

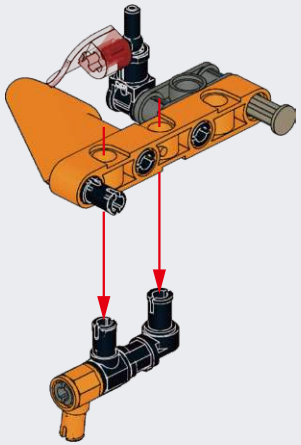

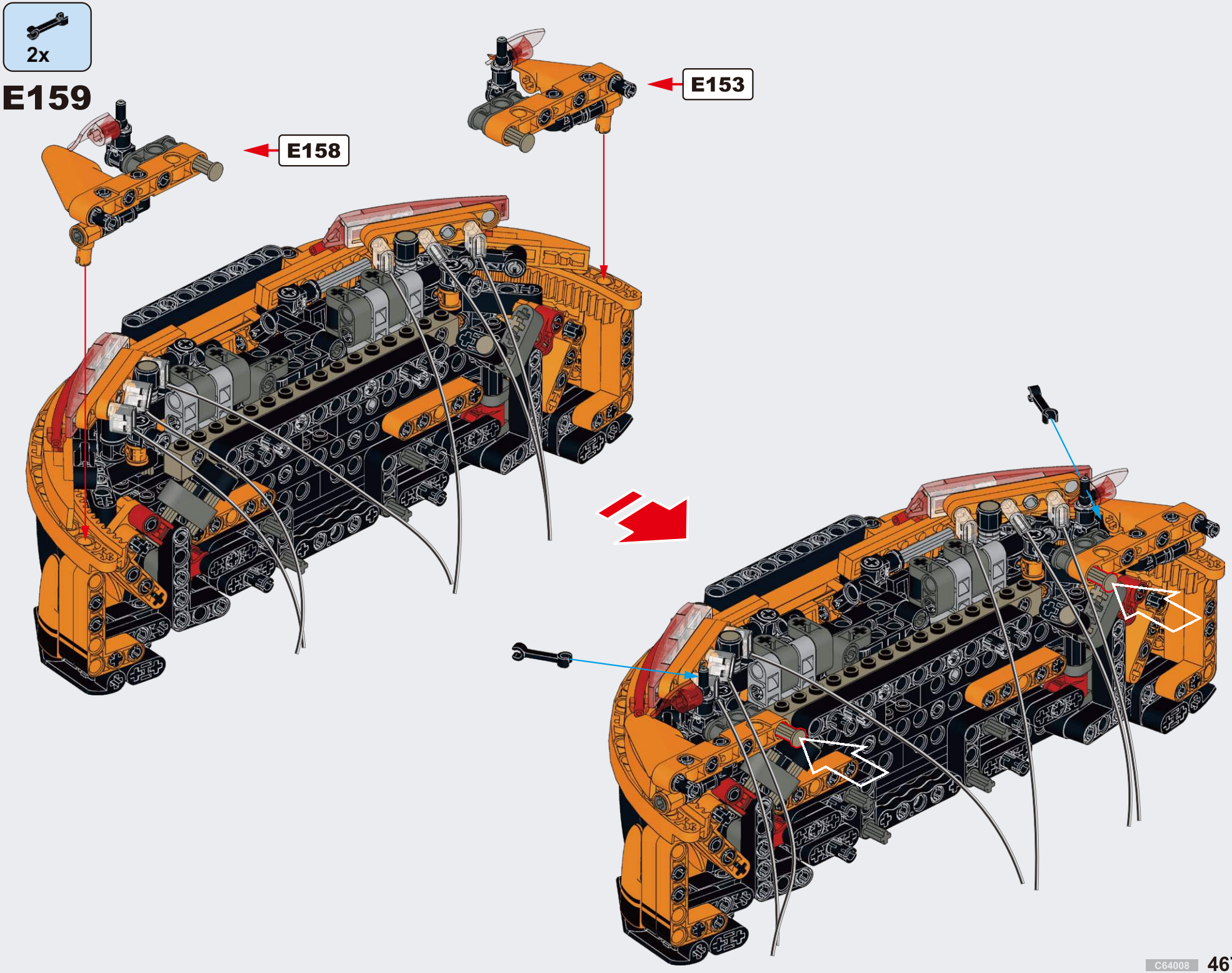
2x
E159
E158
E153

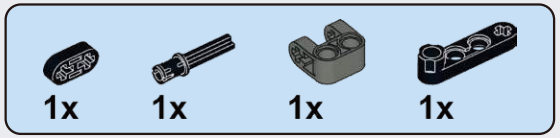

E160

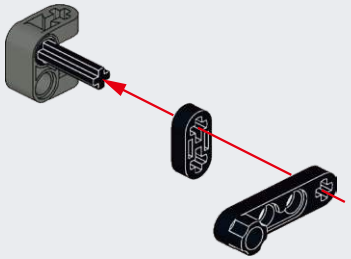

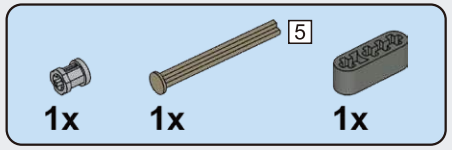

E161

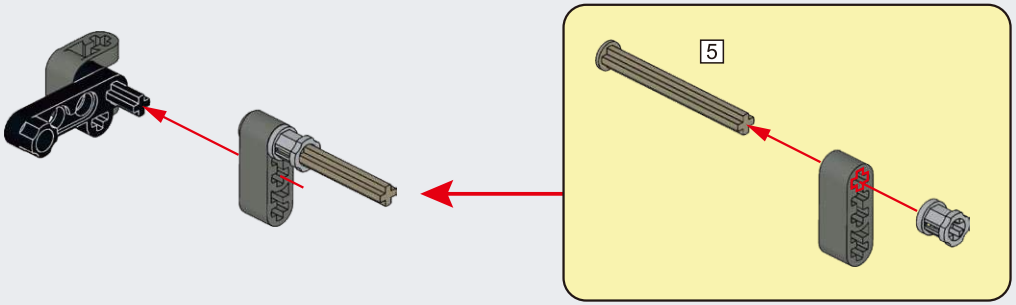

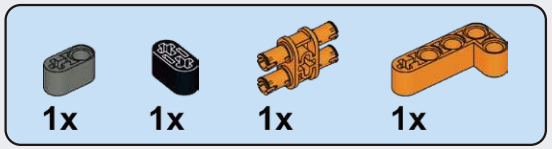

E162

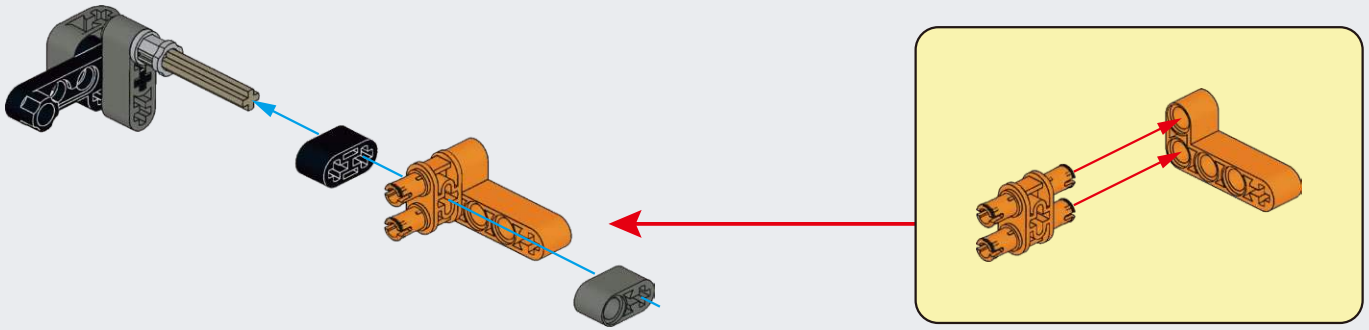

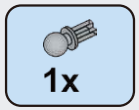

E163

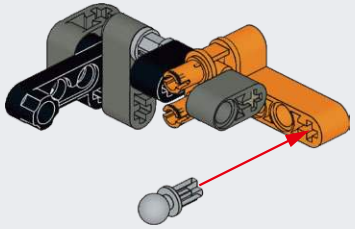

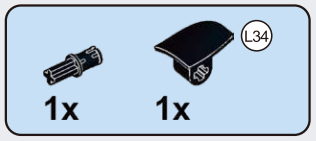

E164

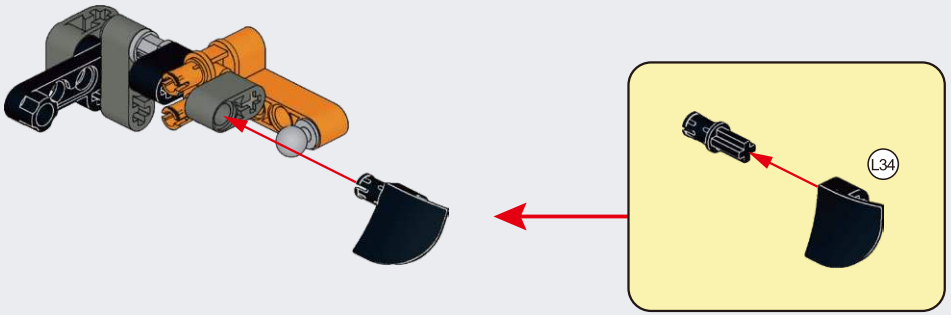

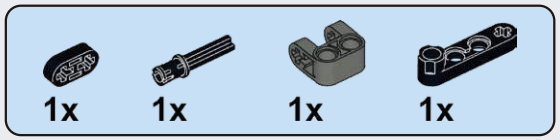

E165

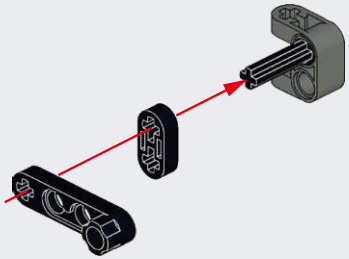

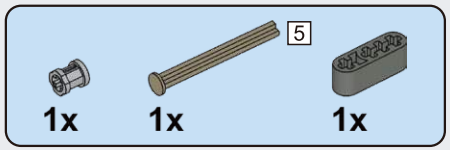

E166

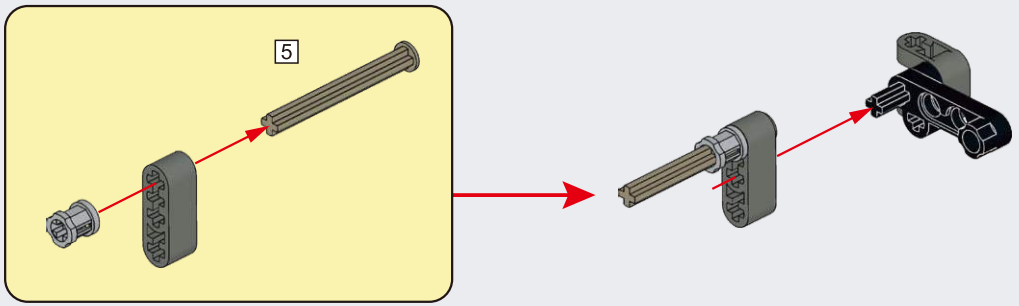

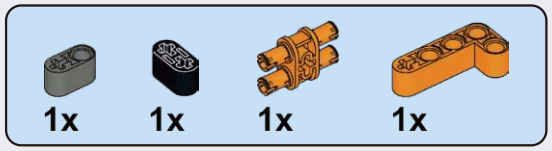

E167

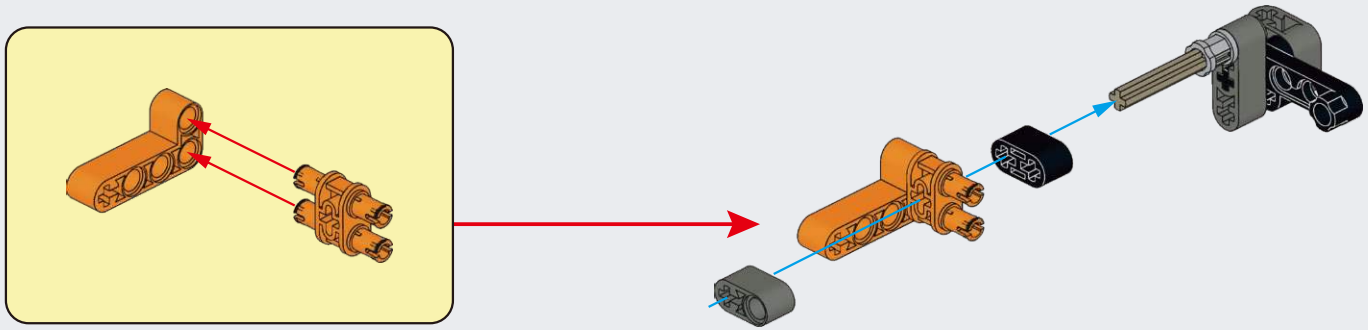

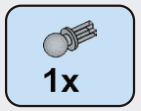

E168

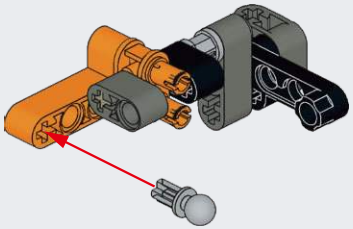

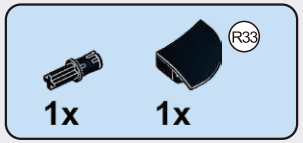

E169

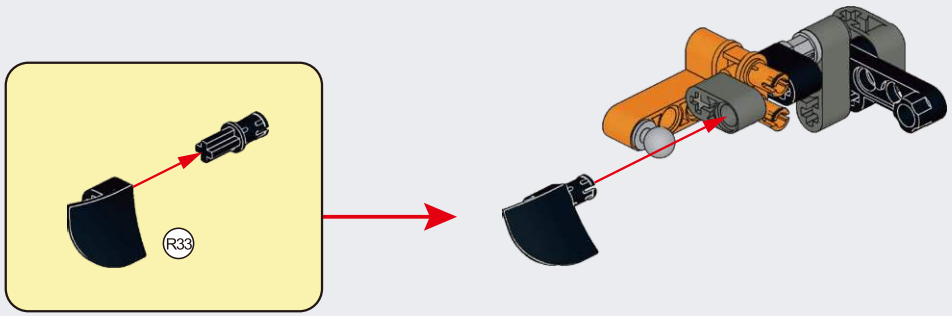

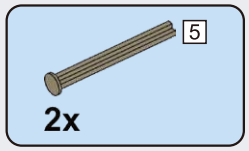

E170

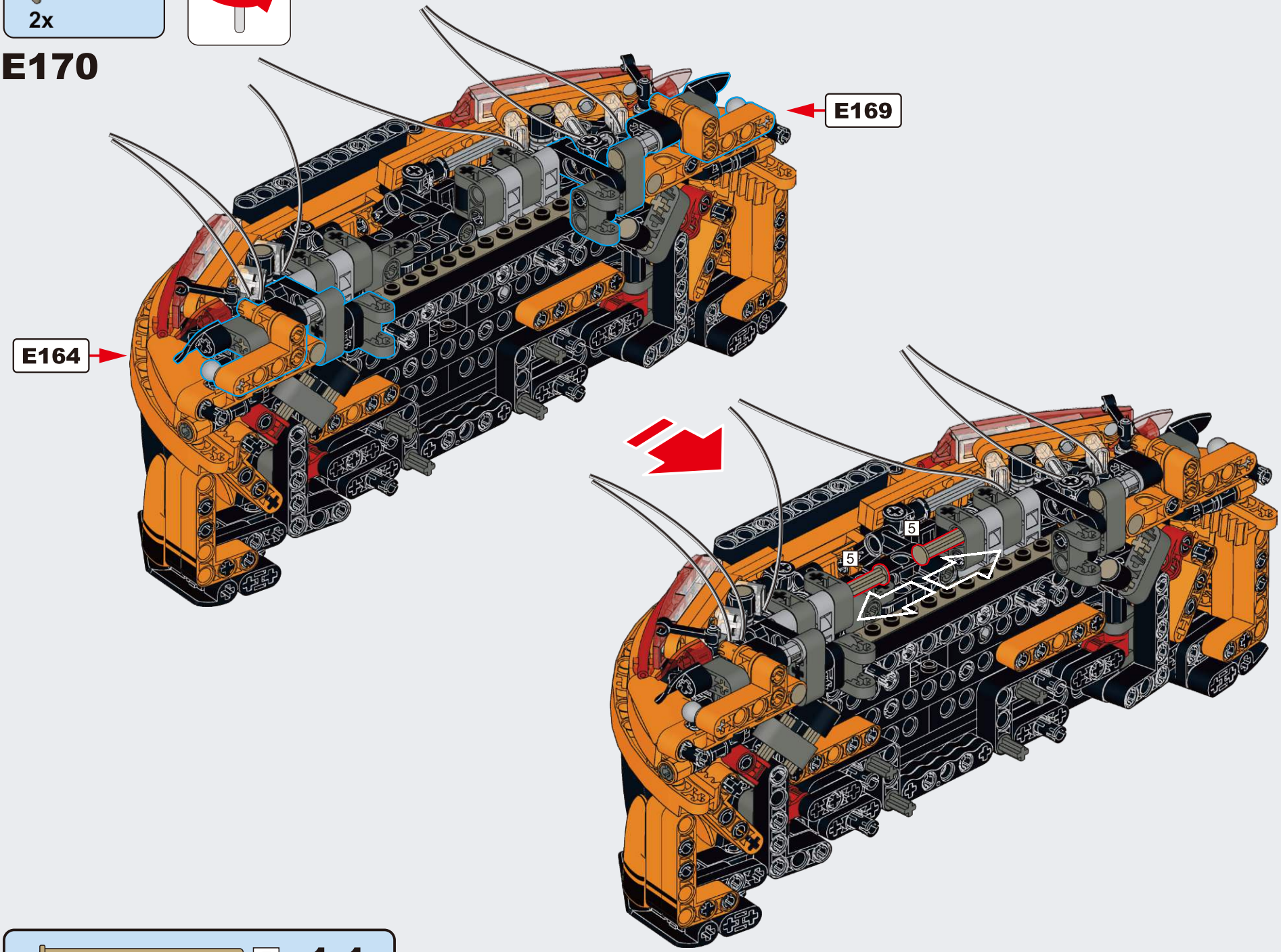

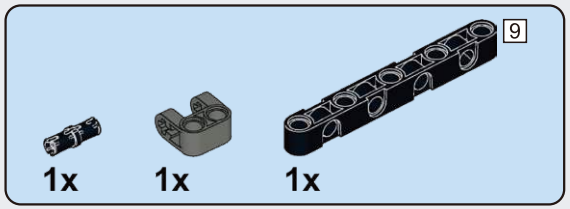

E171

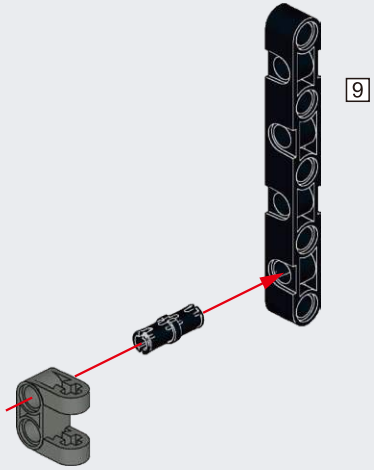

E172

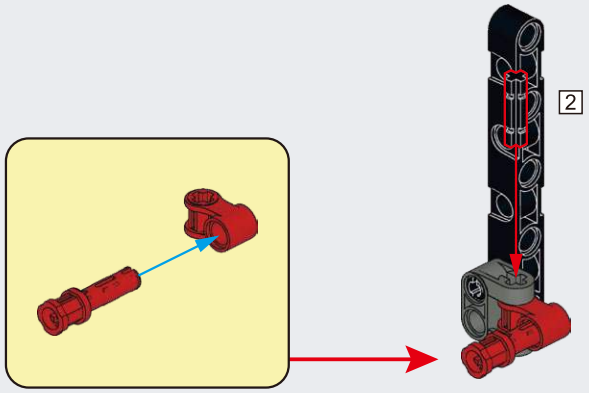

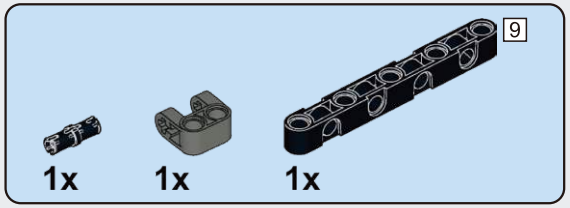

E173

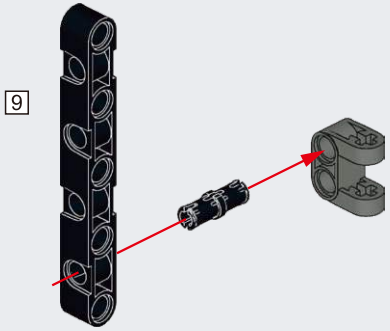

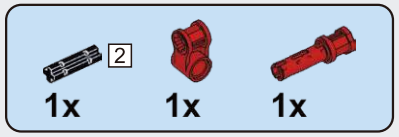

E174

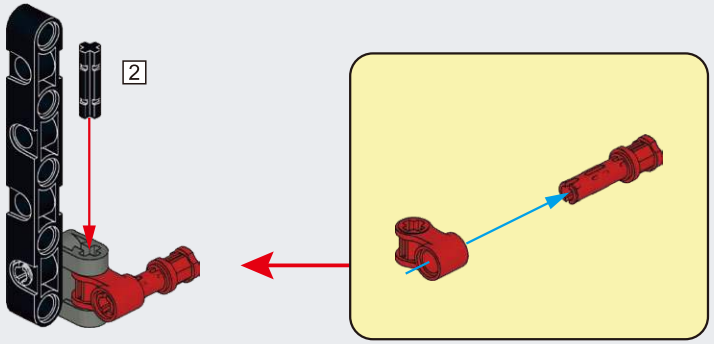

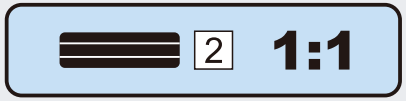

E175

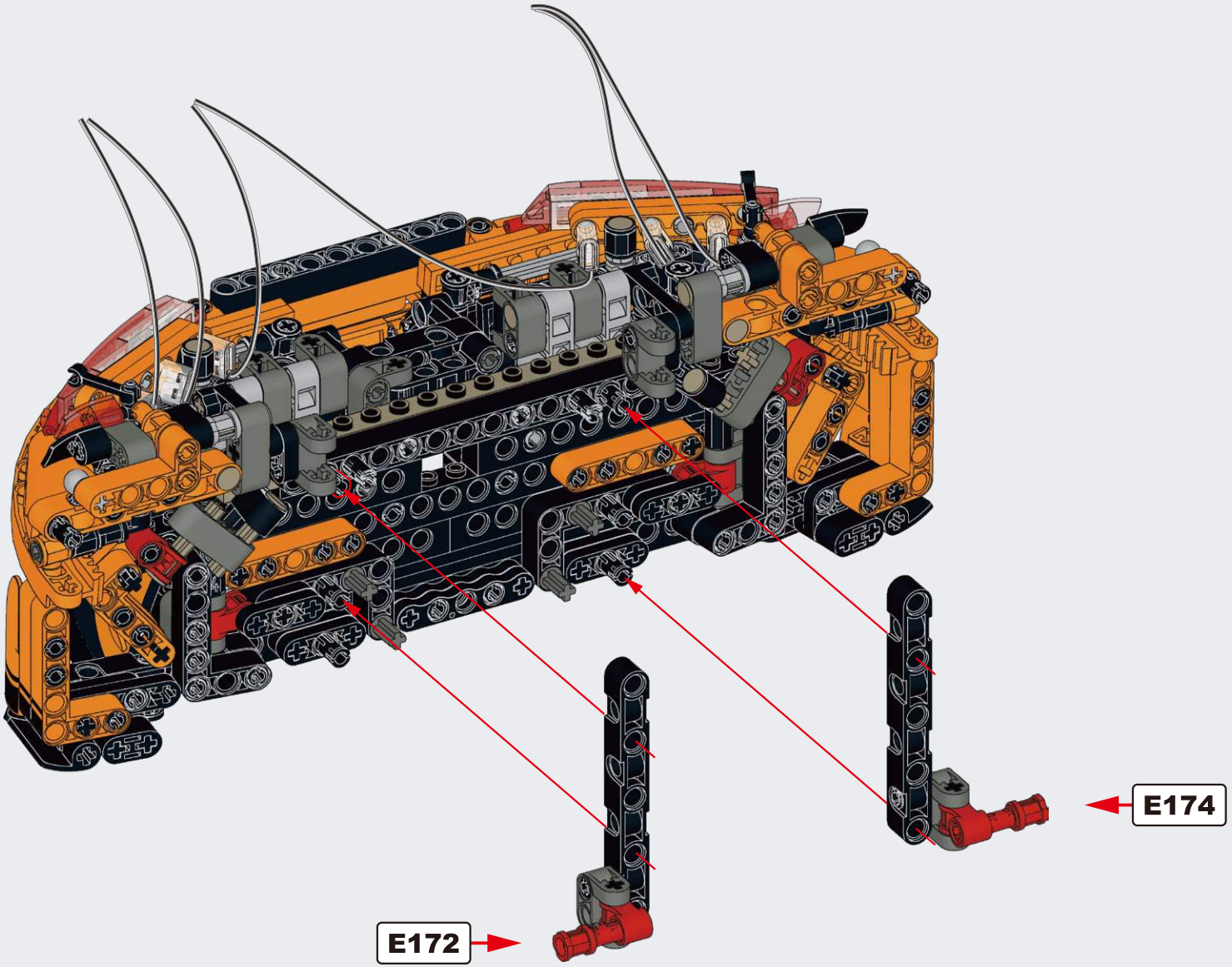

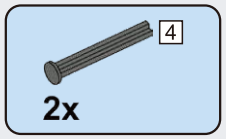

E176

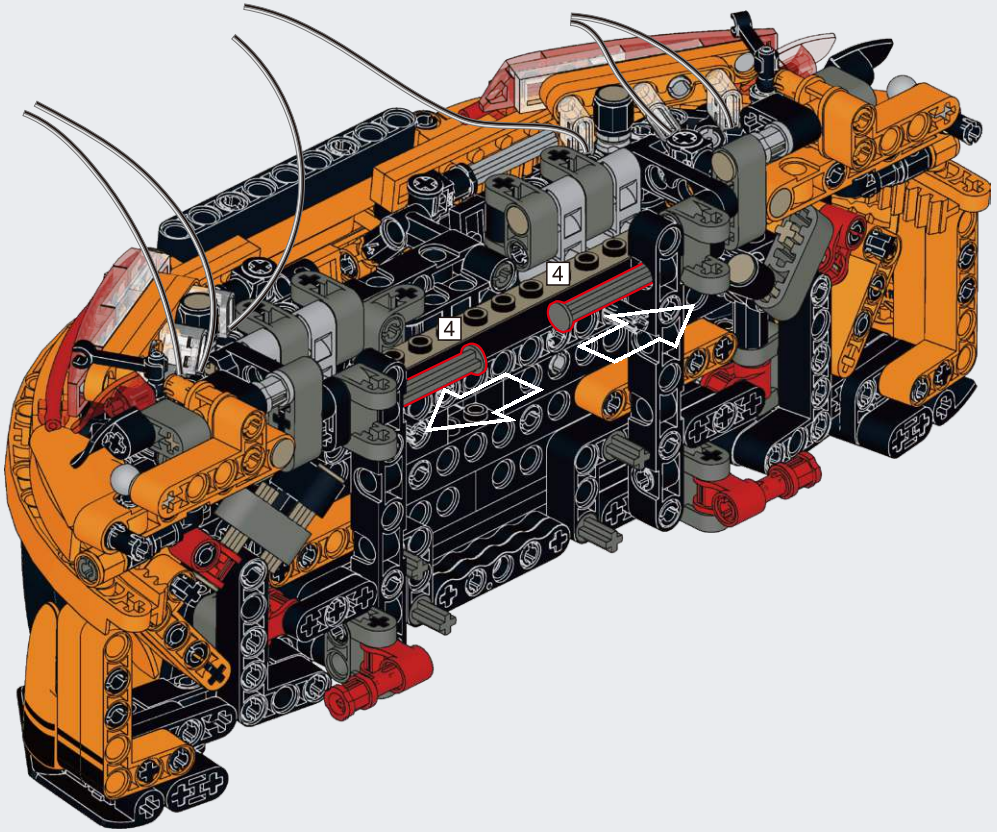

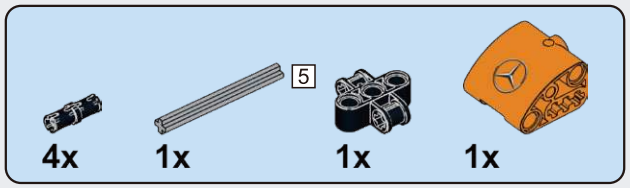

E177

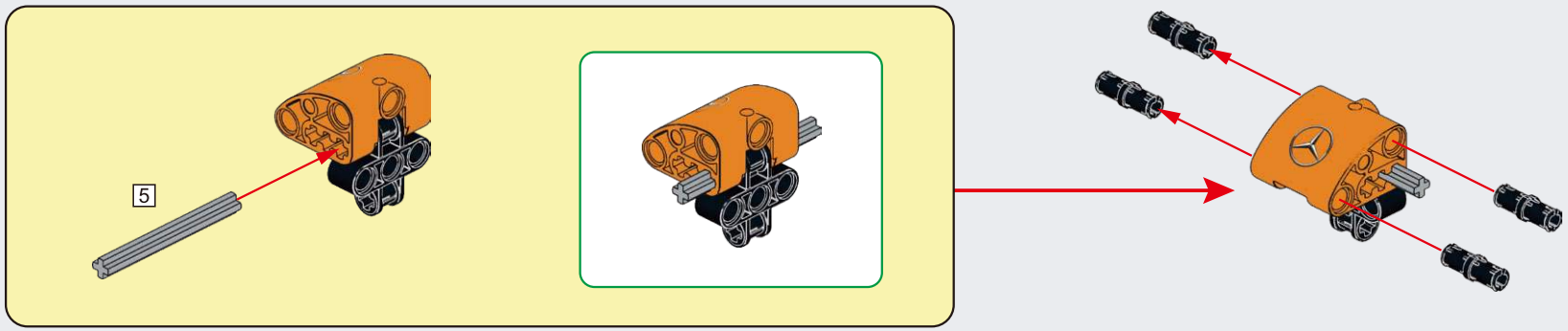

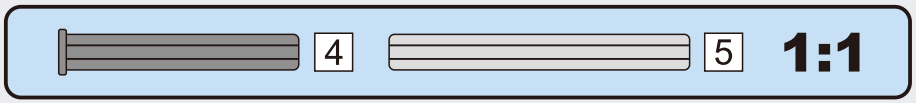

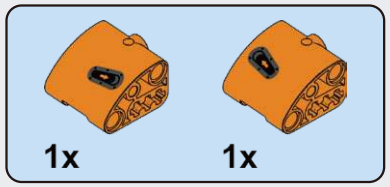

E178

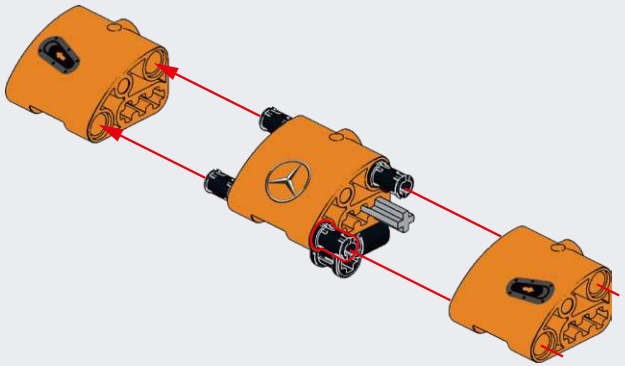

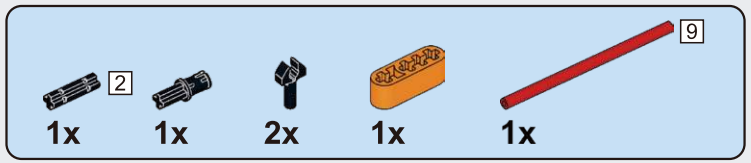

E179

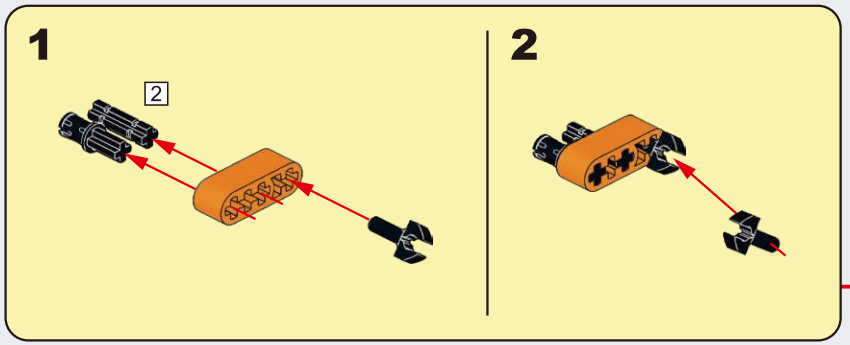

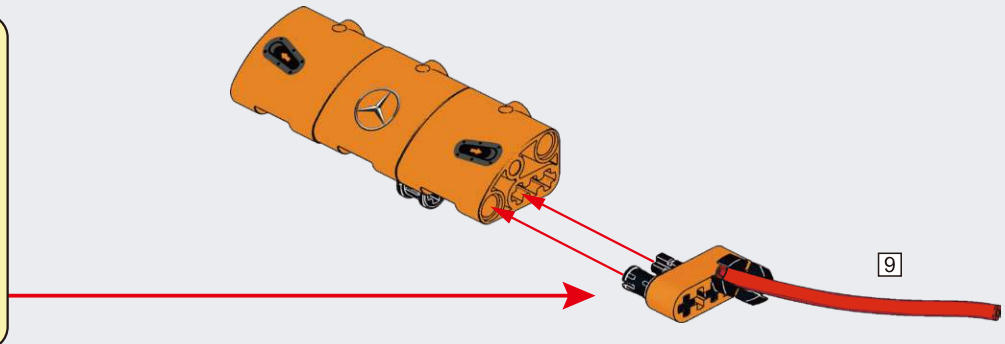

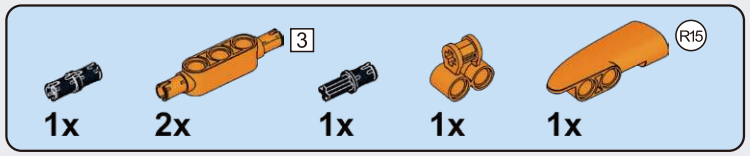

E180

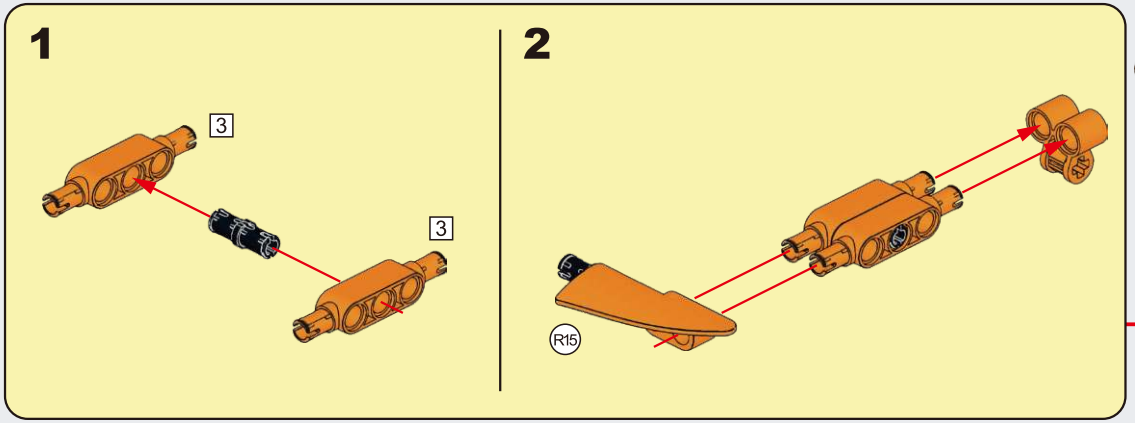

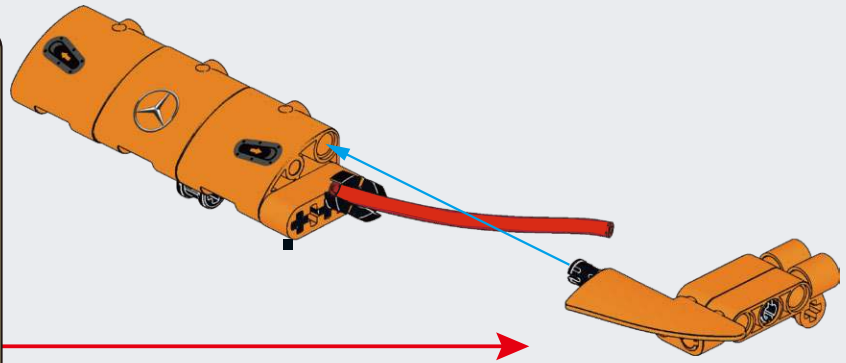

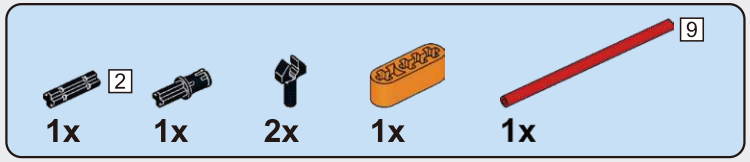

E181

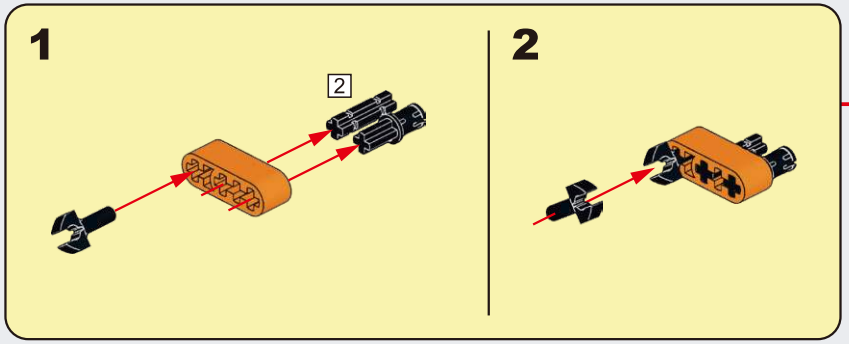

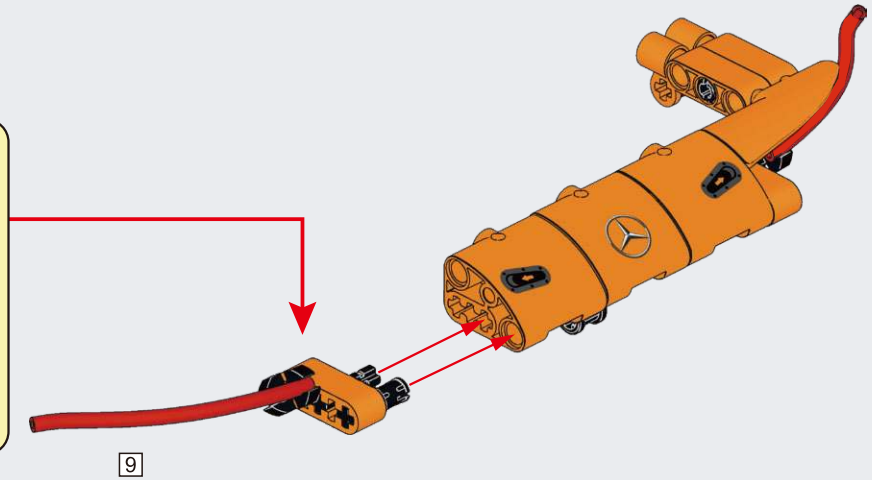

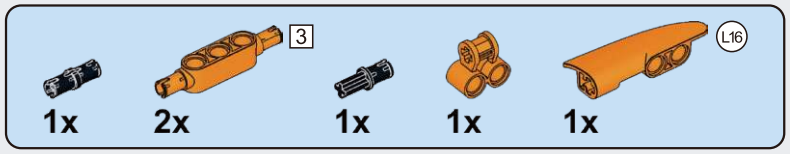

E182

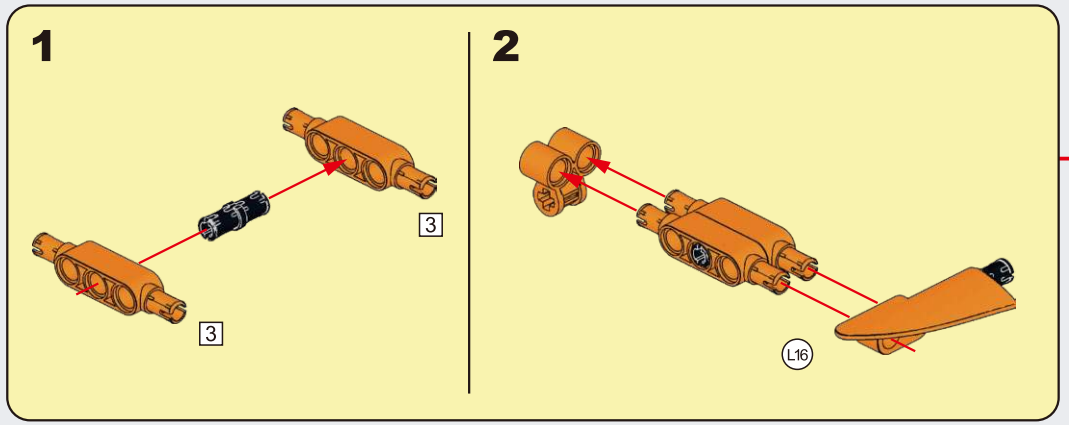

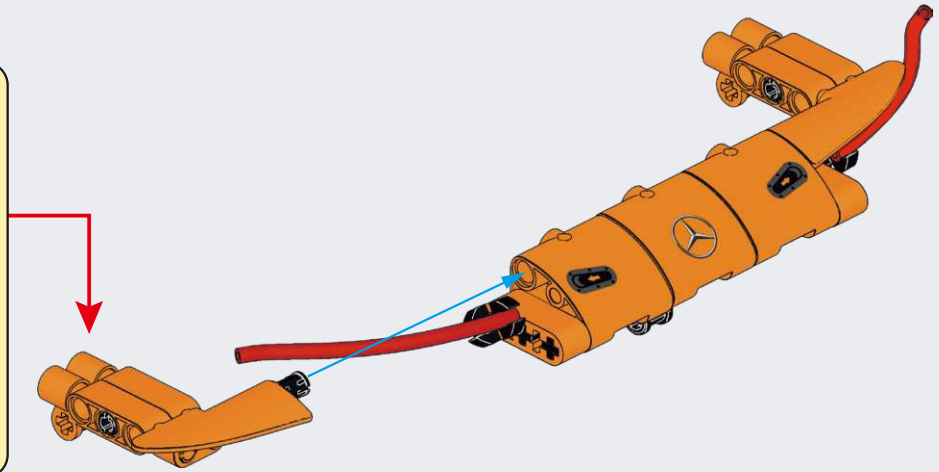

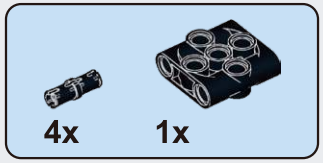

E183

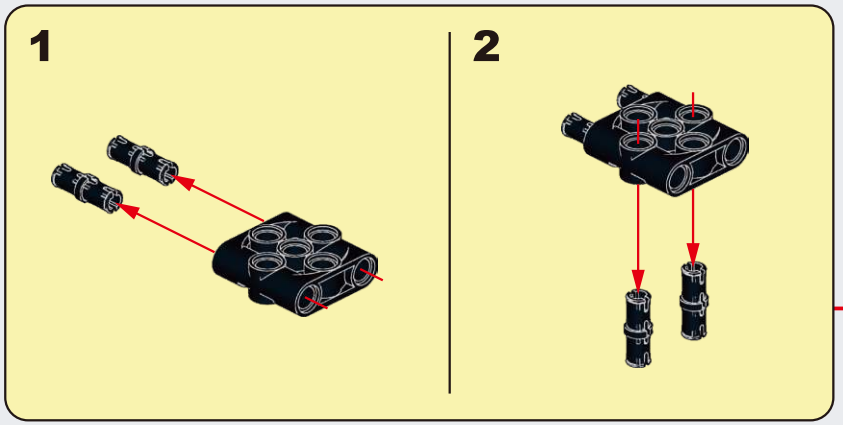

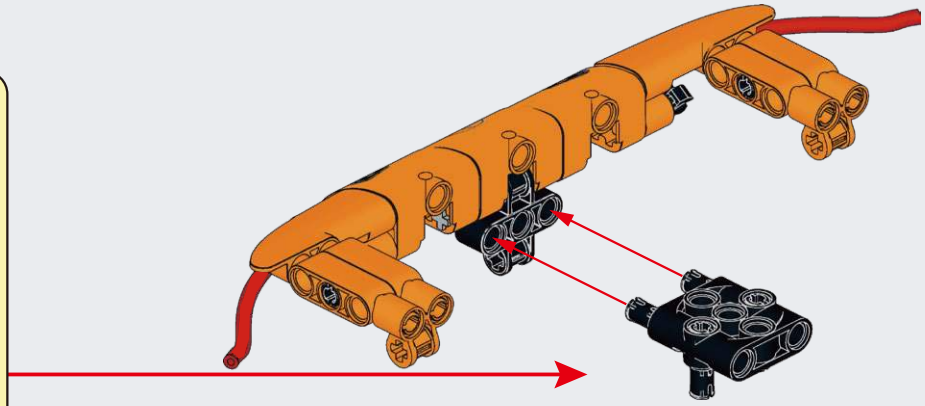

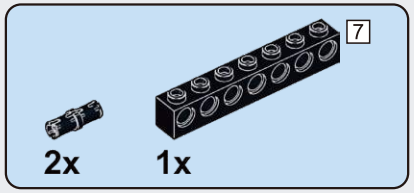

E184

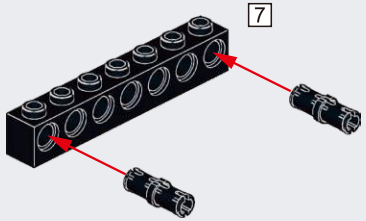

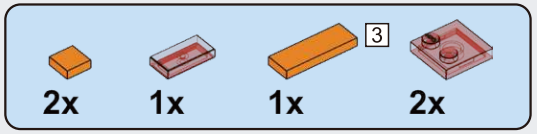

E185

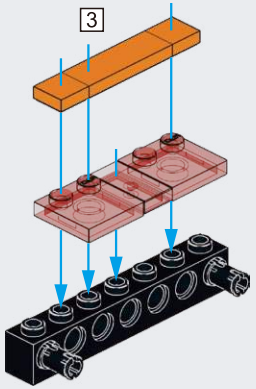

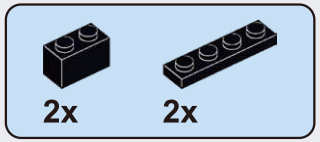

E186

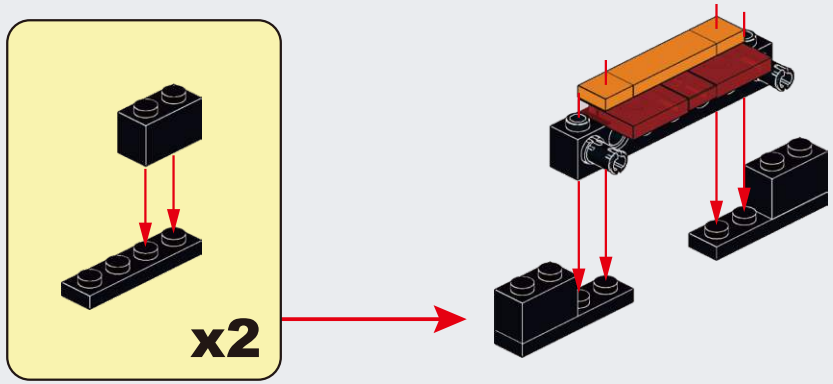

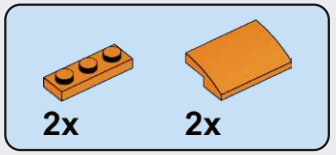

E187

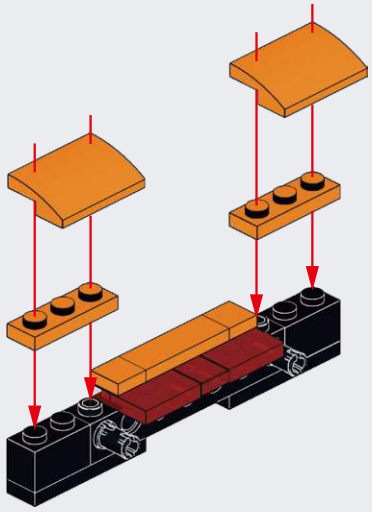

E188

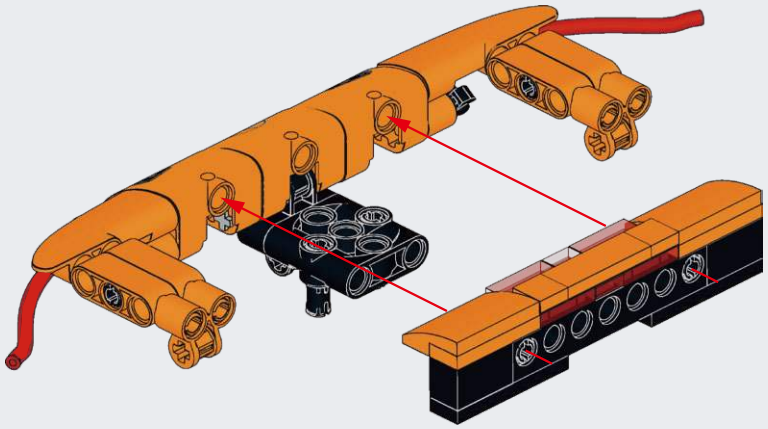

E189

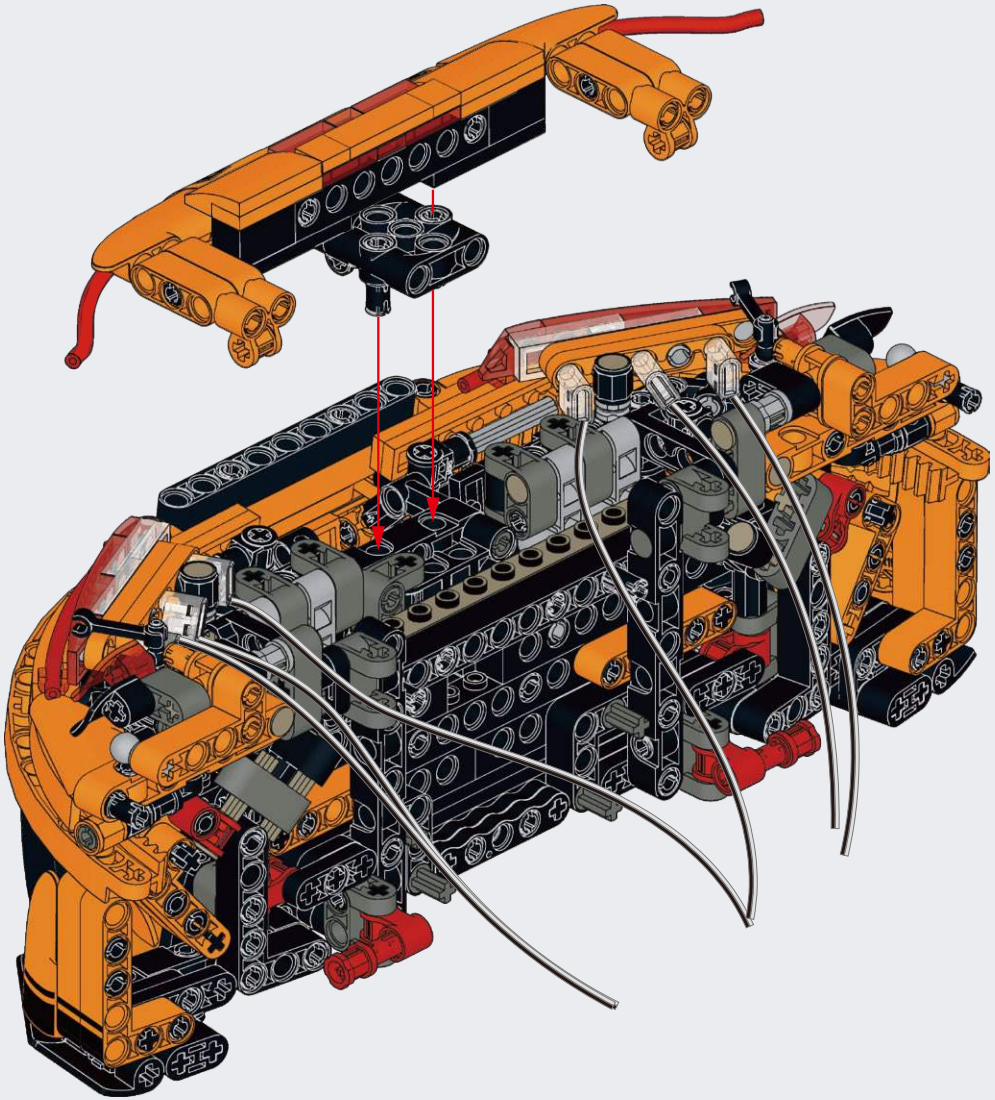

E190

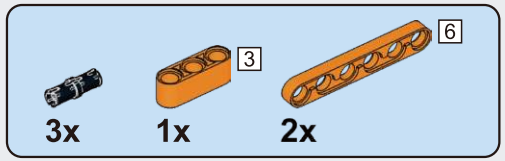

E191

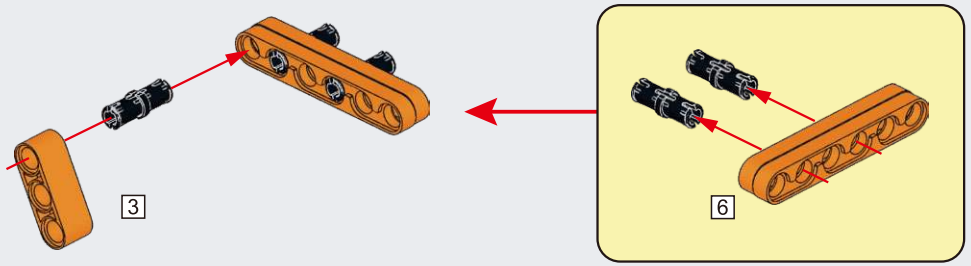

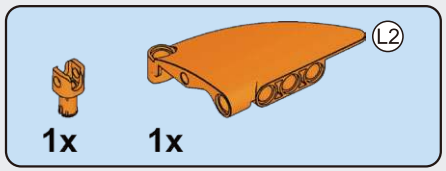

E192

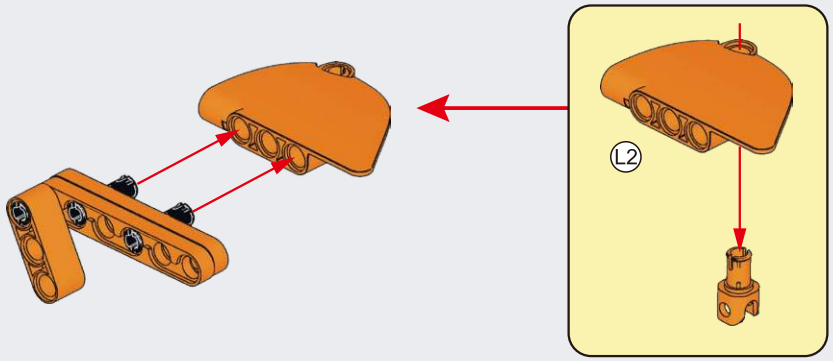

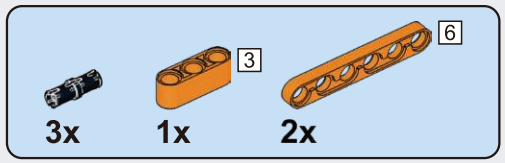

E193

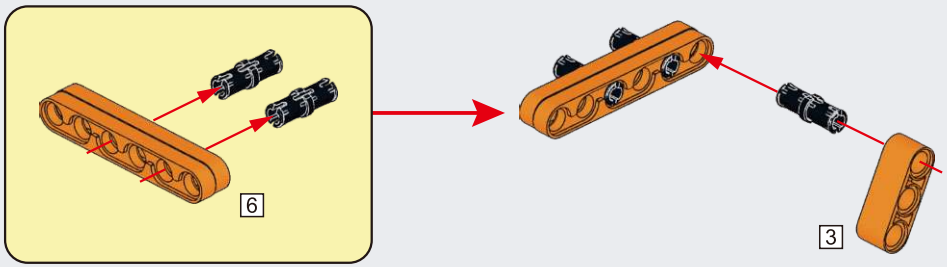

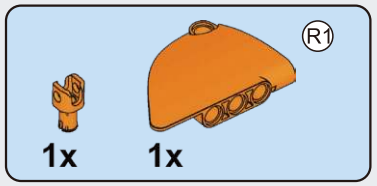

E194

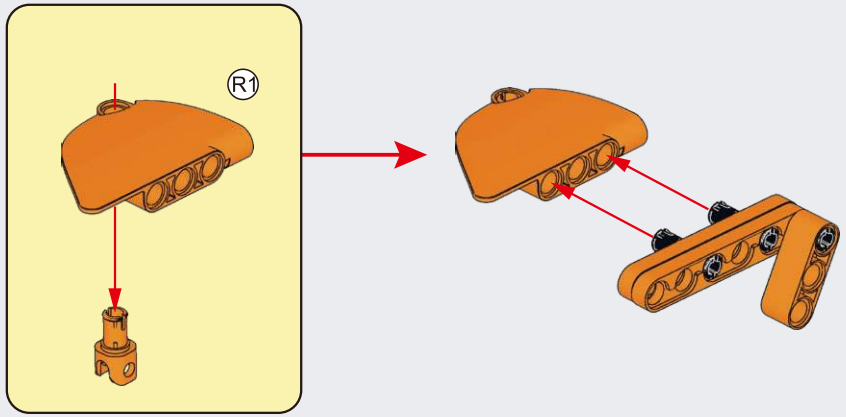

E195

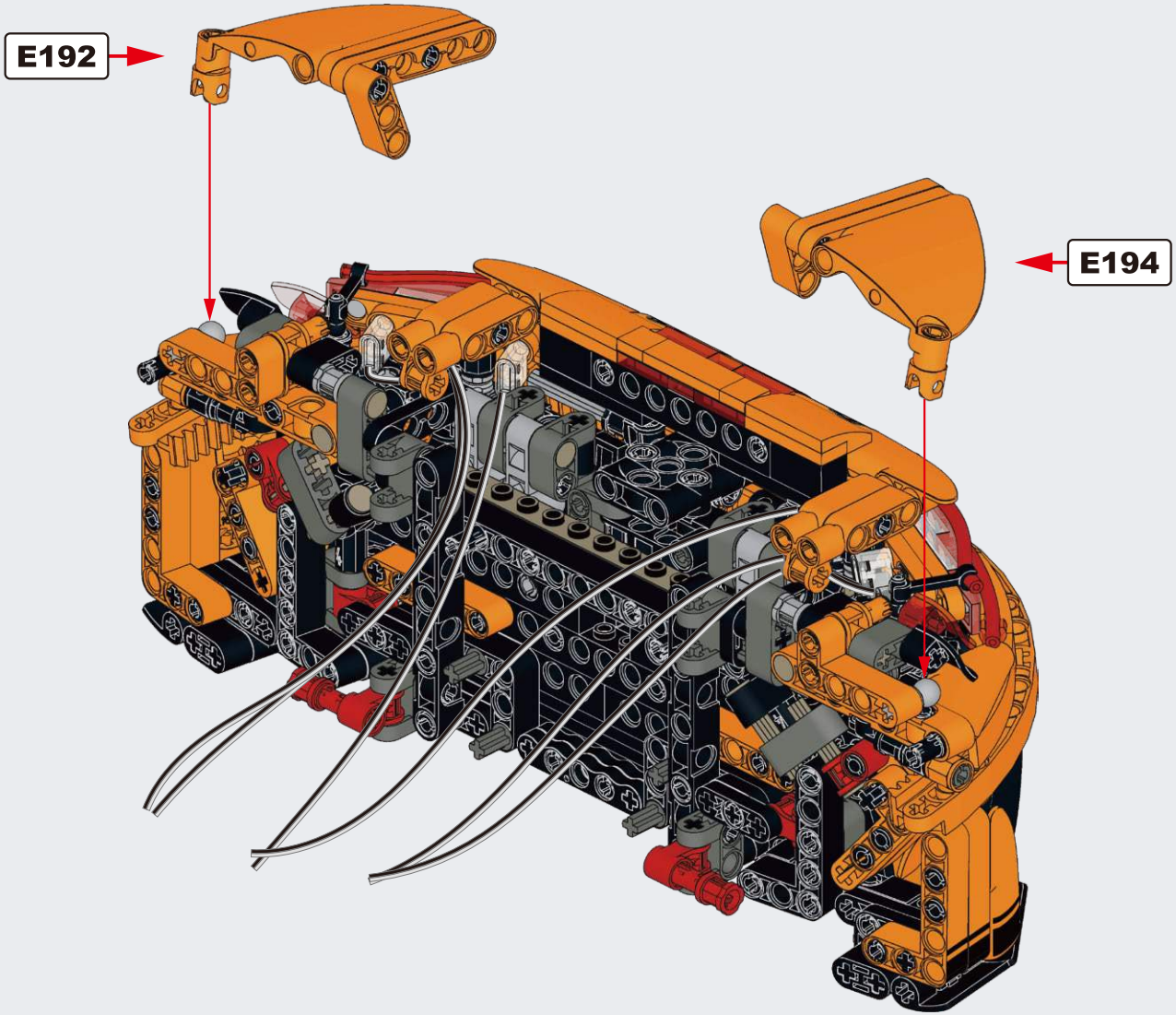

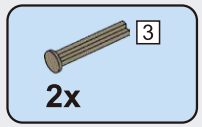

E196

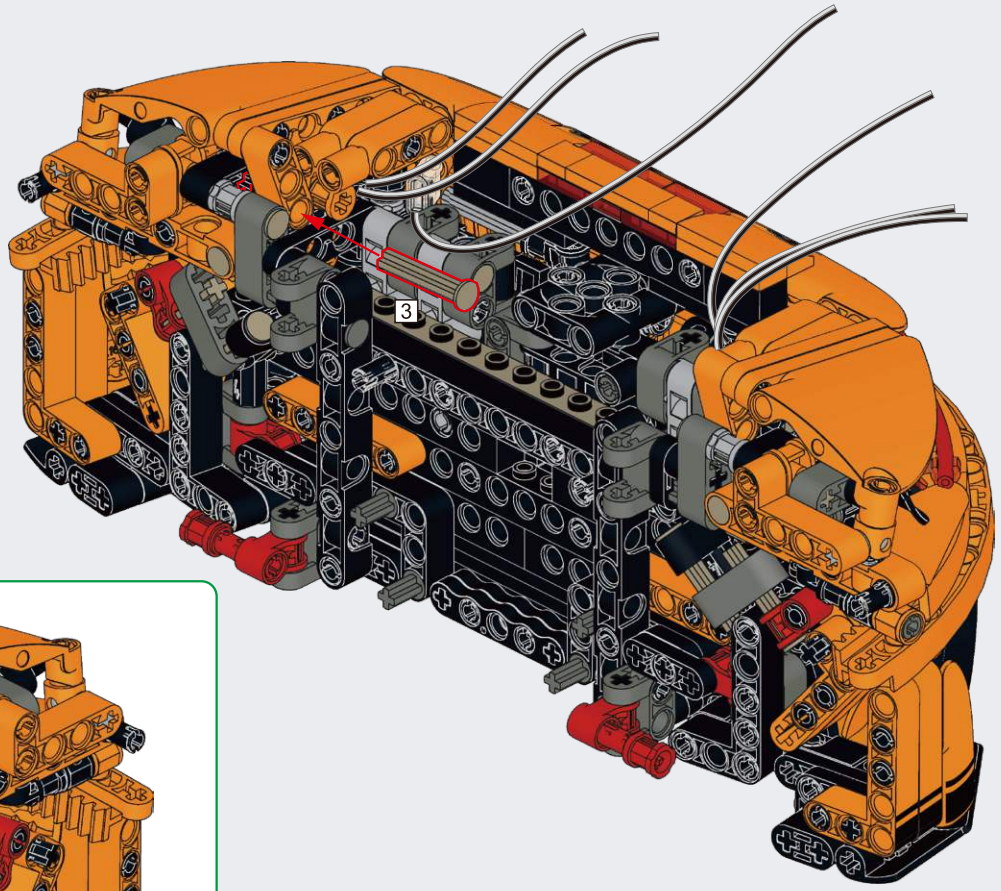

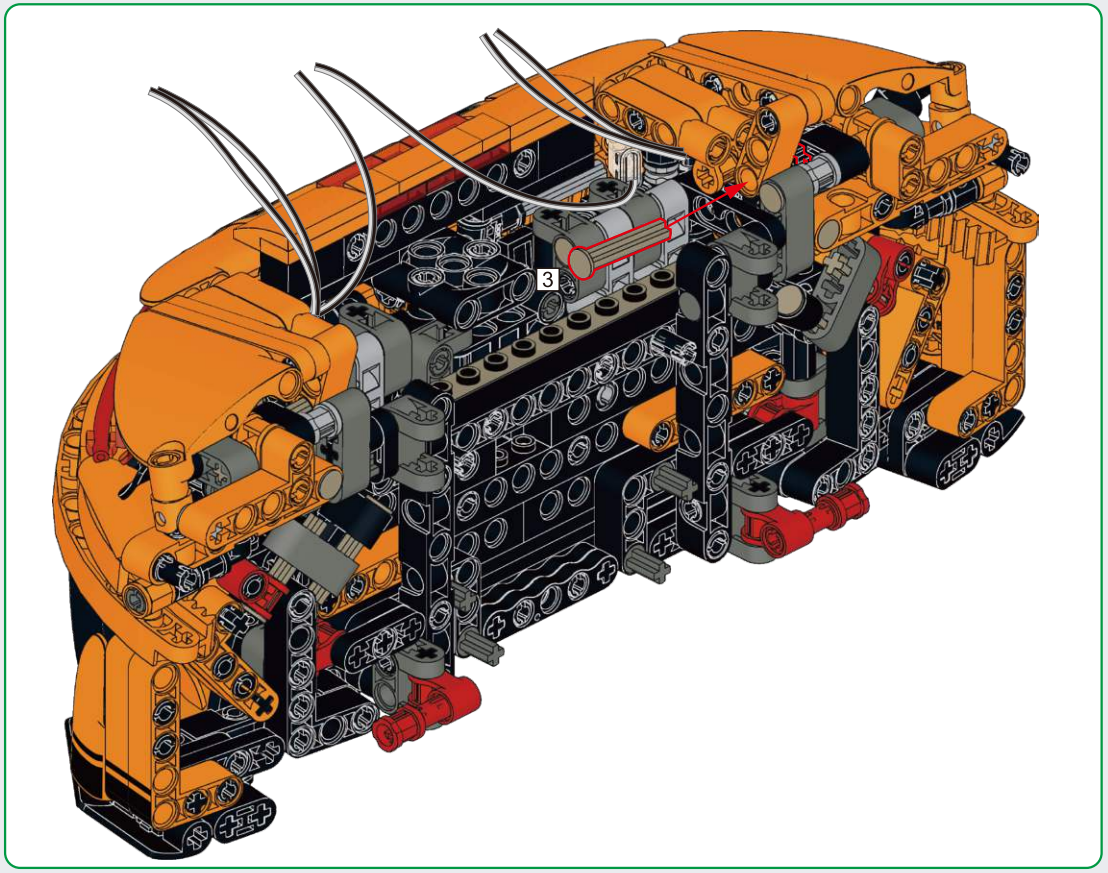

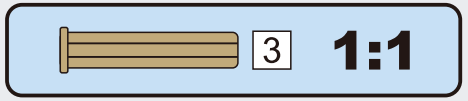

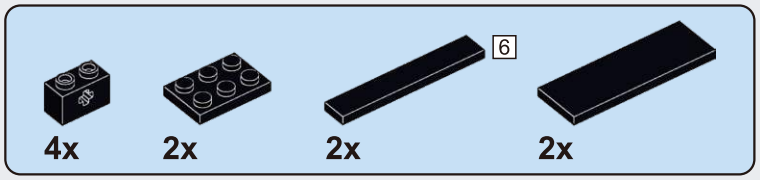

E197

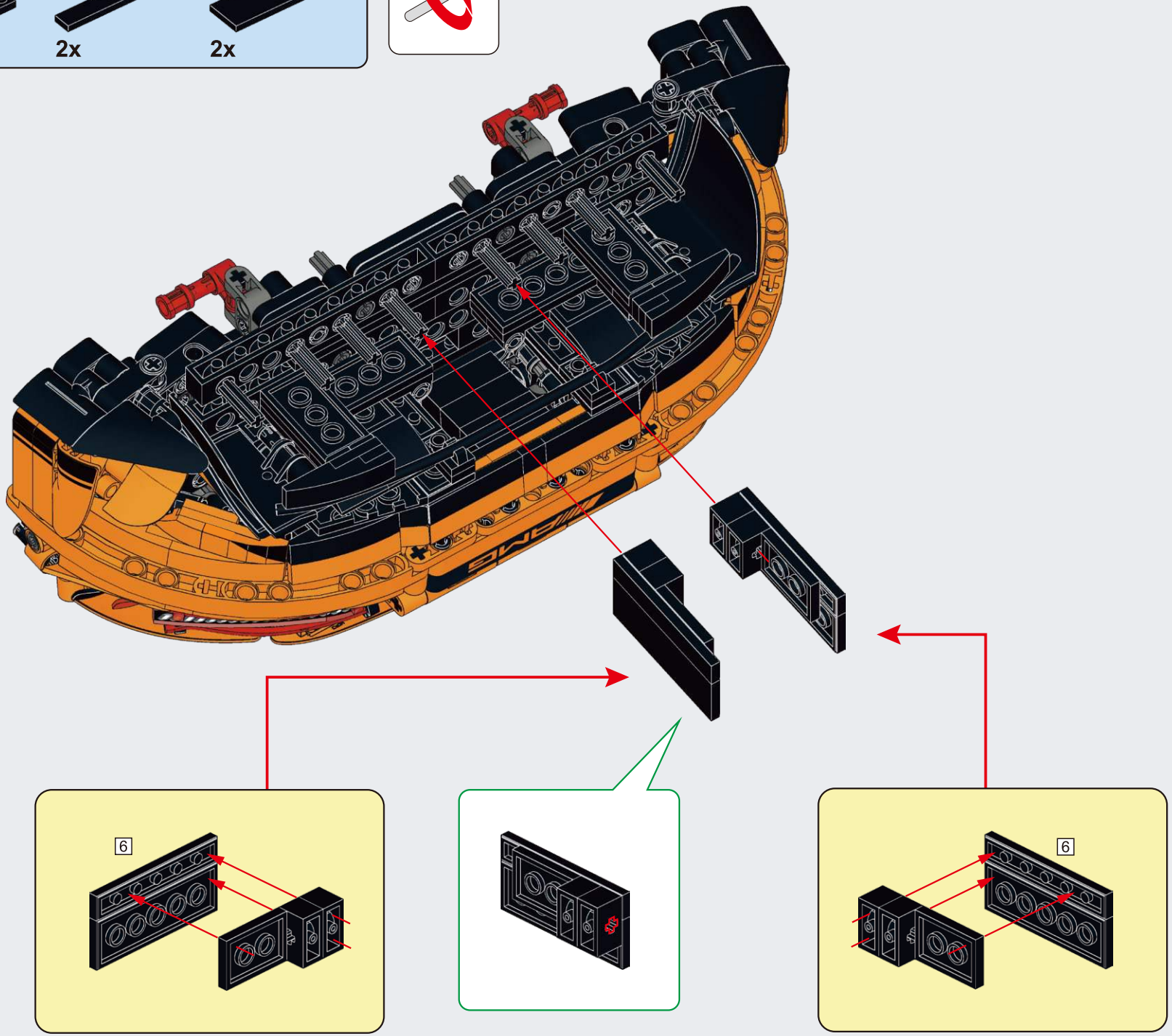

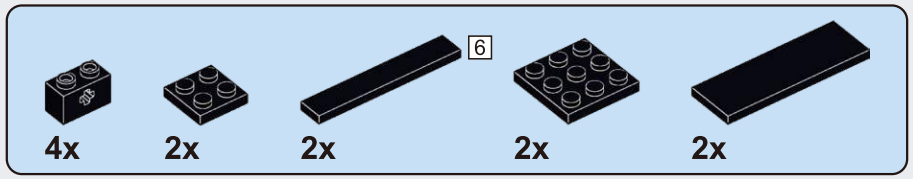

E198

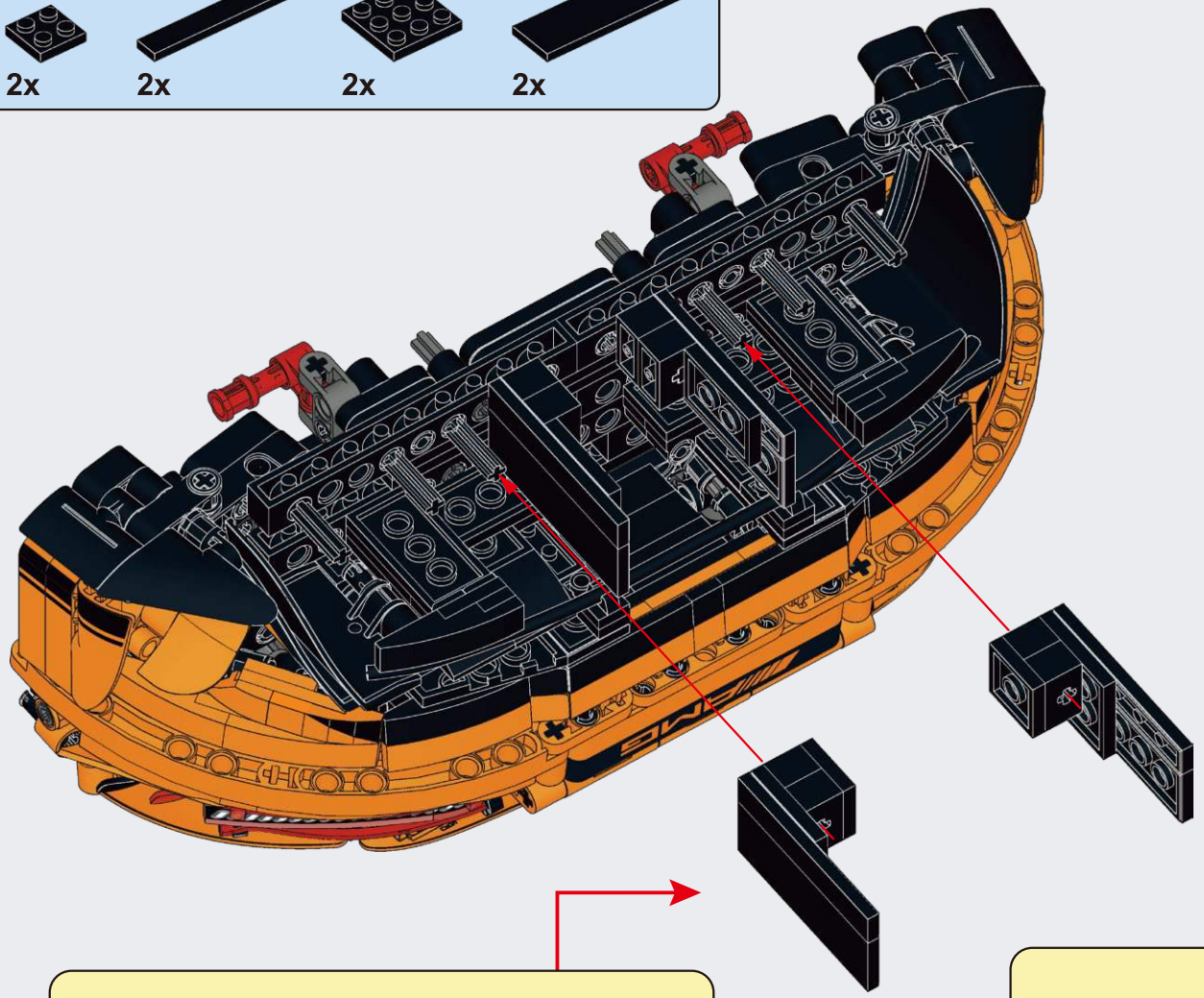

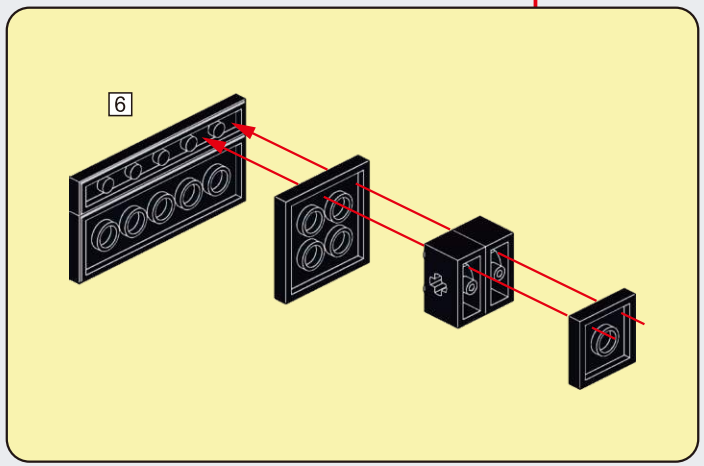

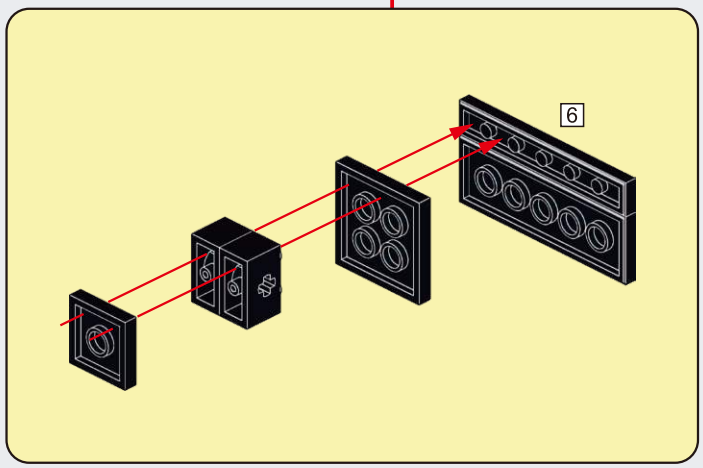

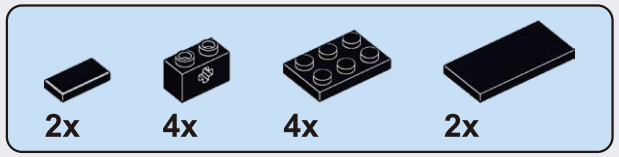

E199

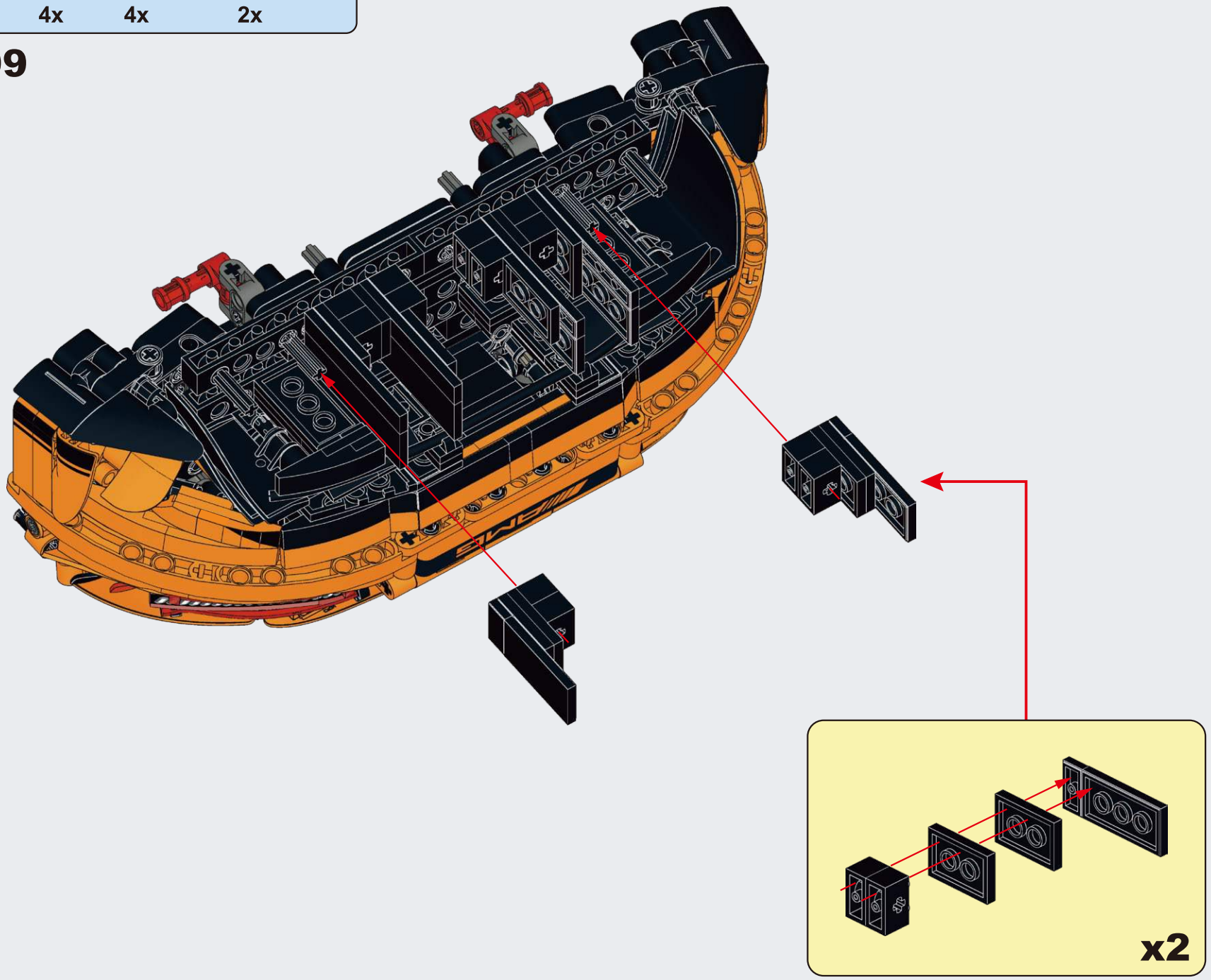

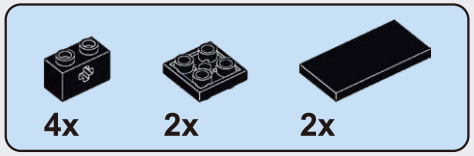

E200

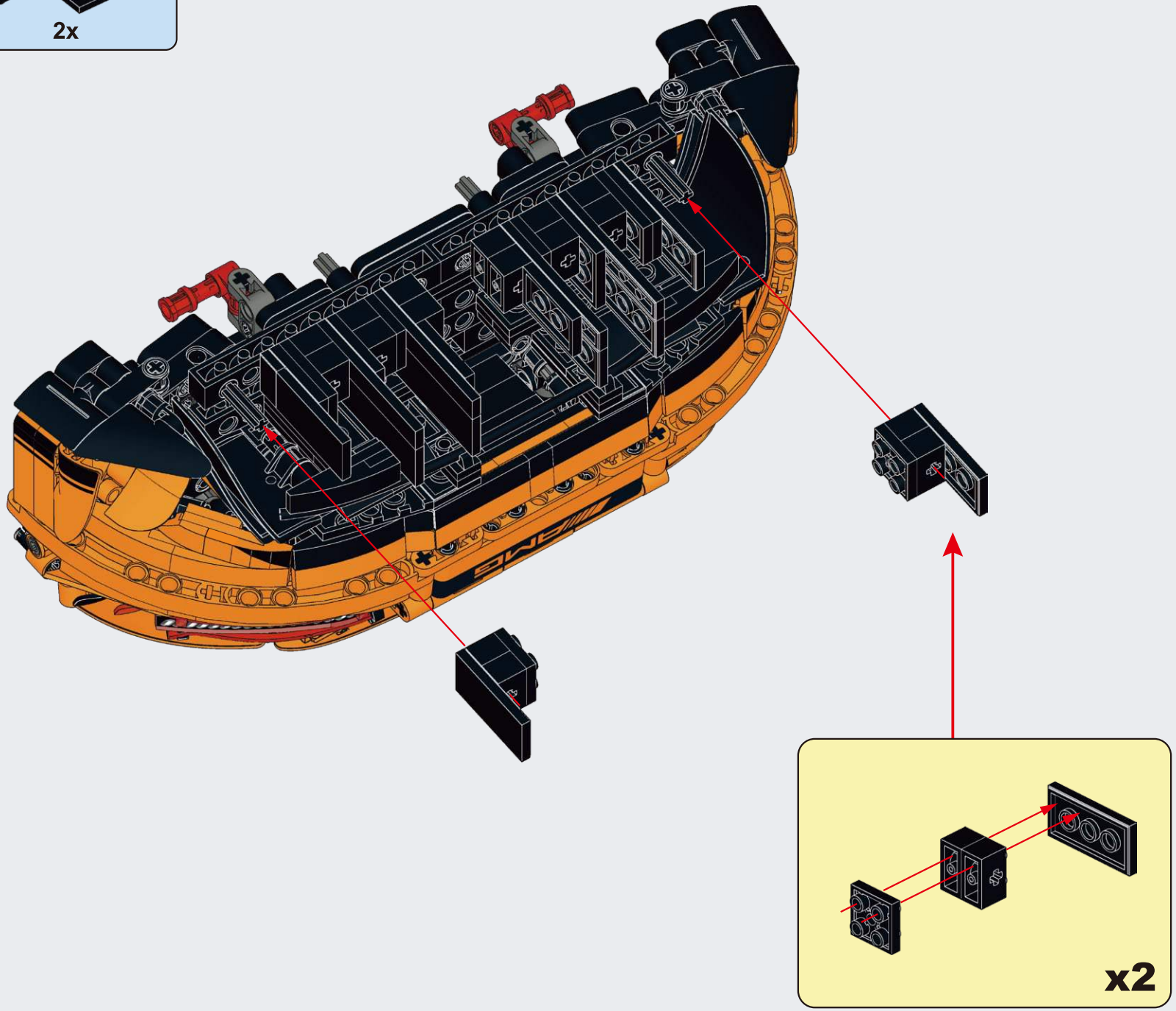

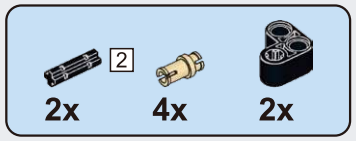

E201

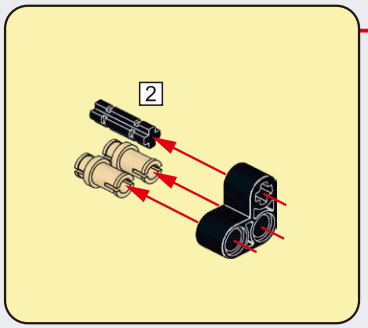

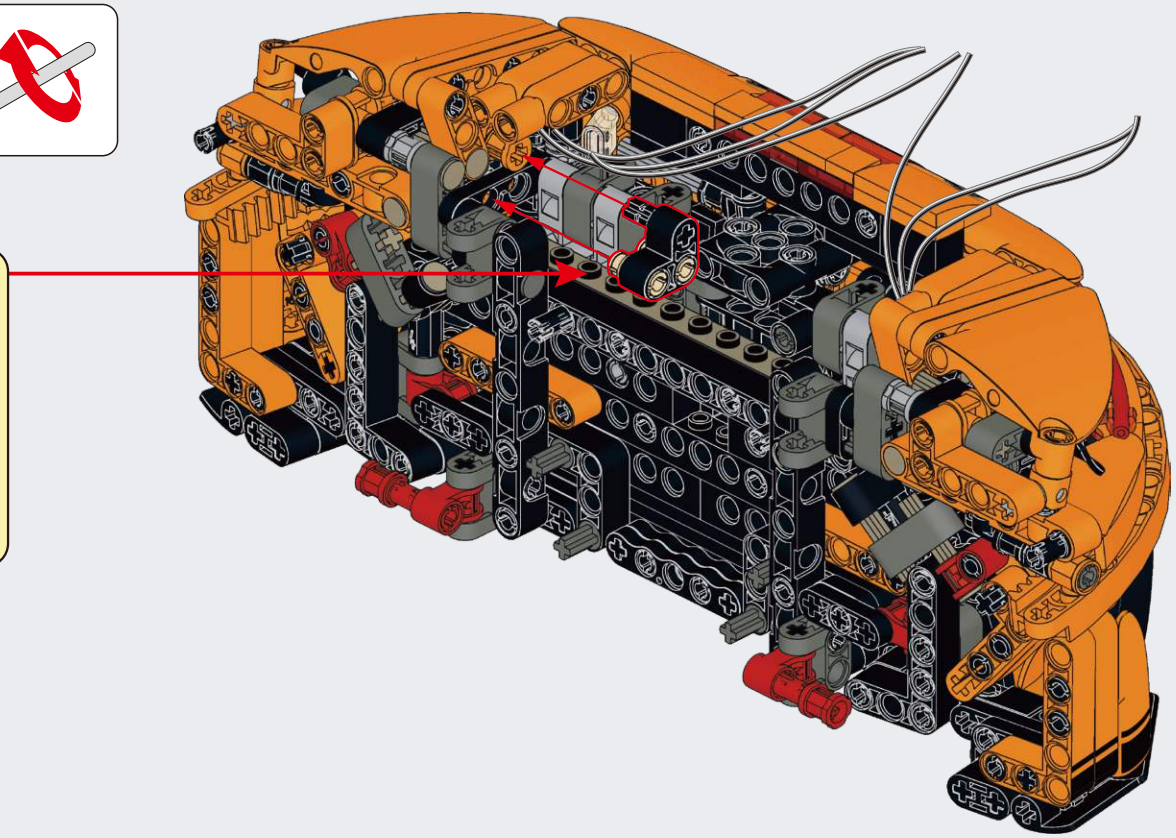

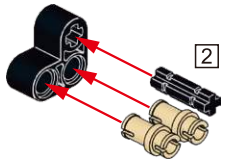

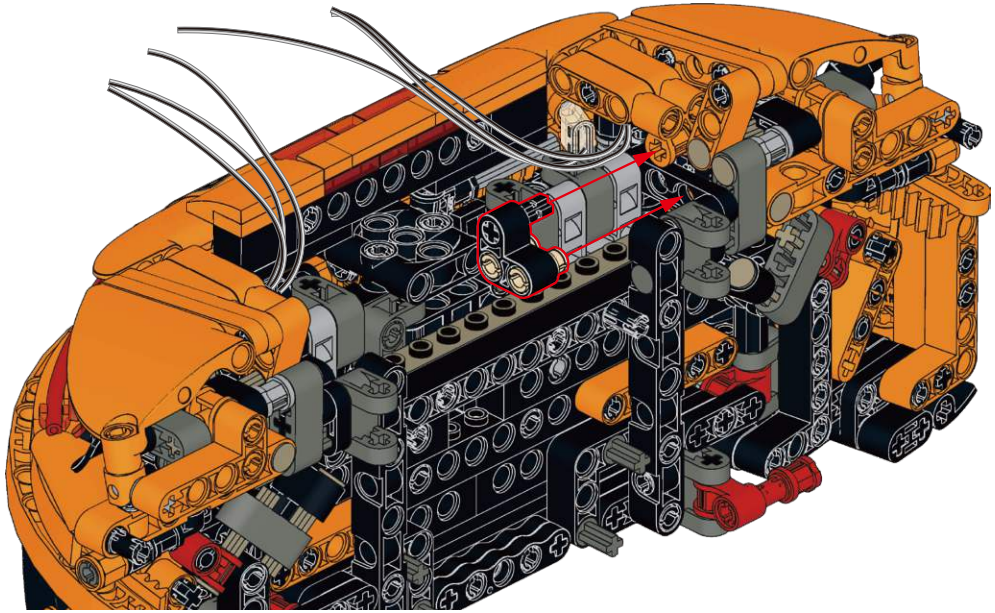

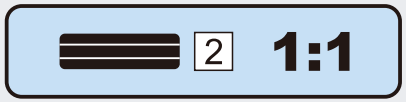

E202

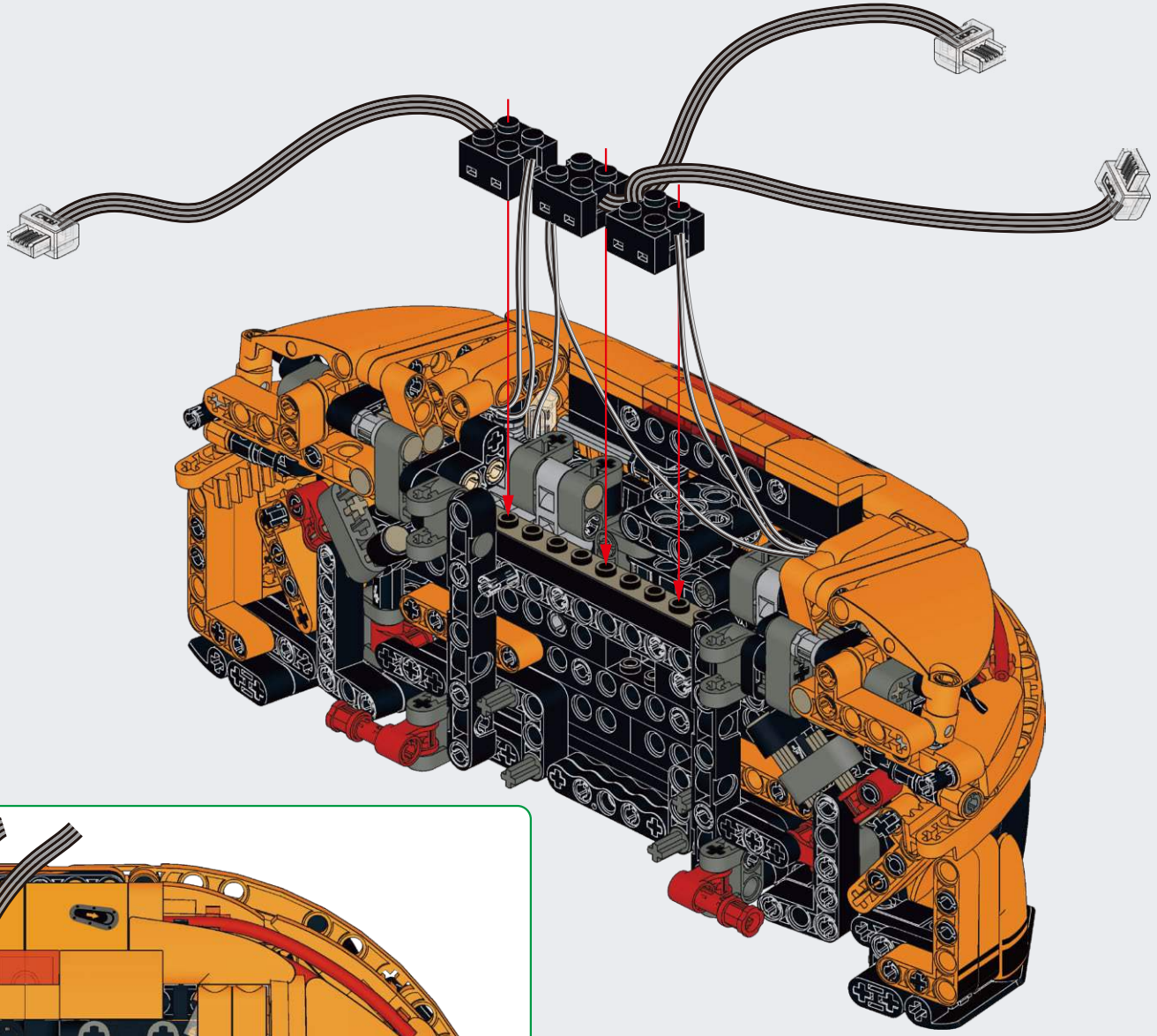

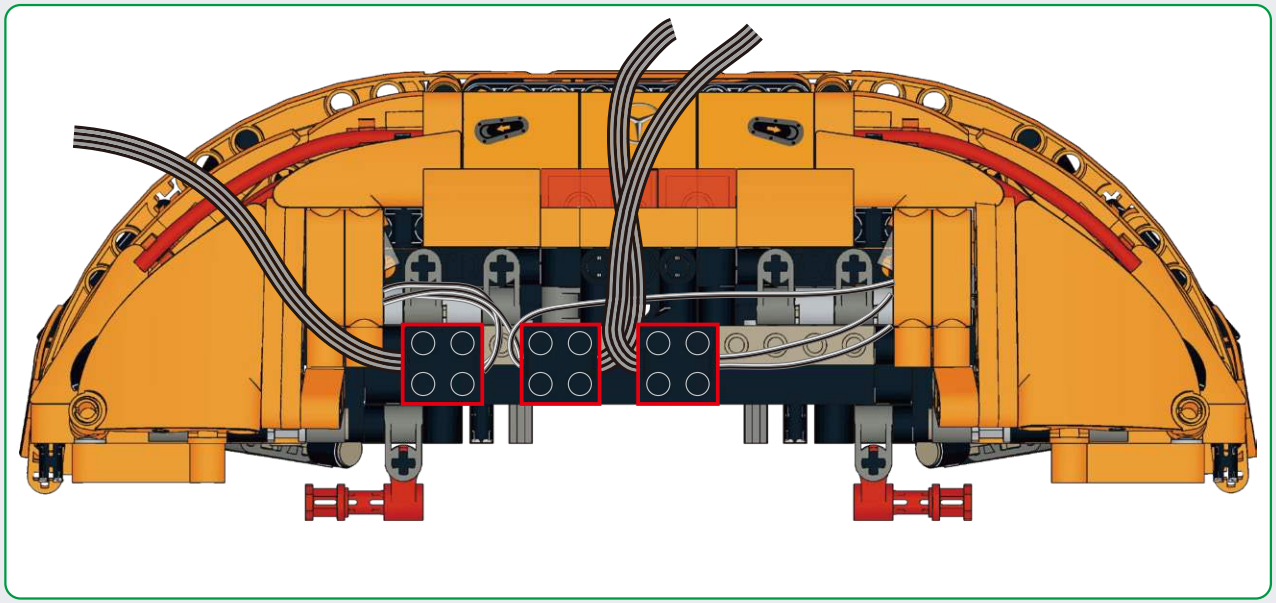

E203

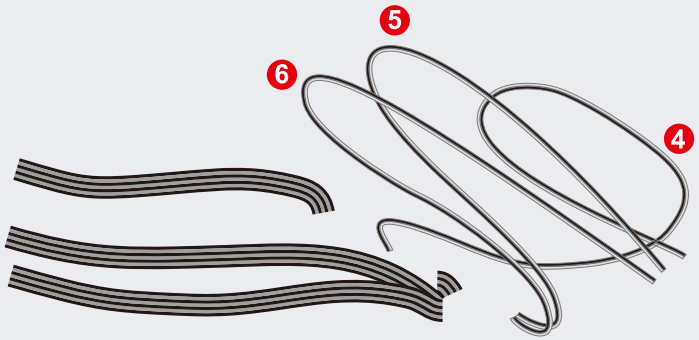

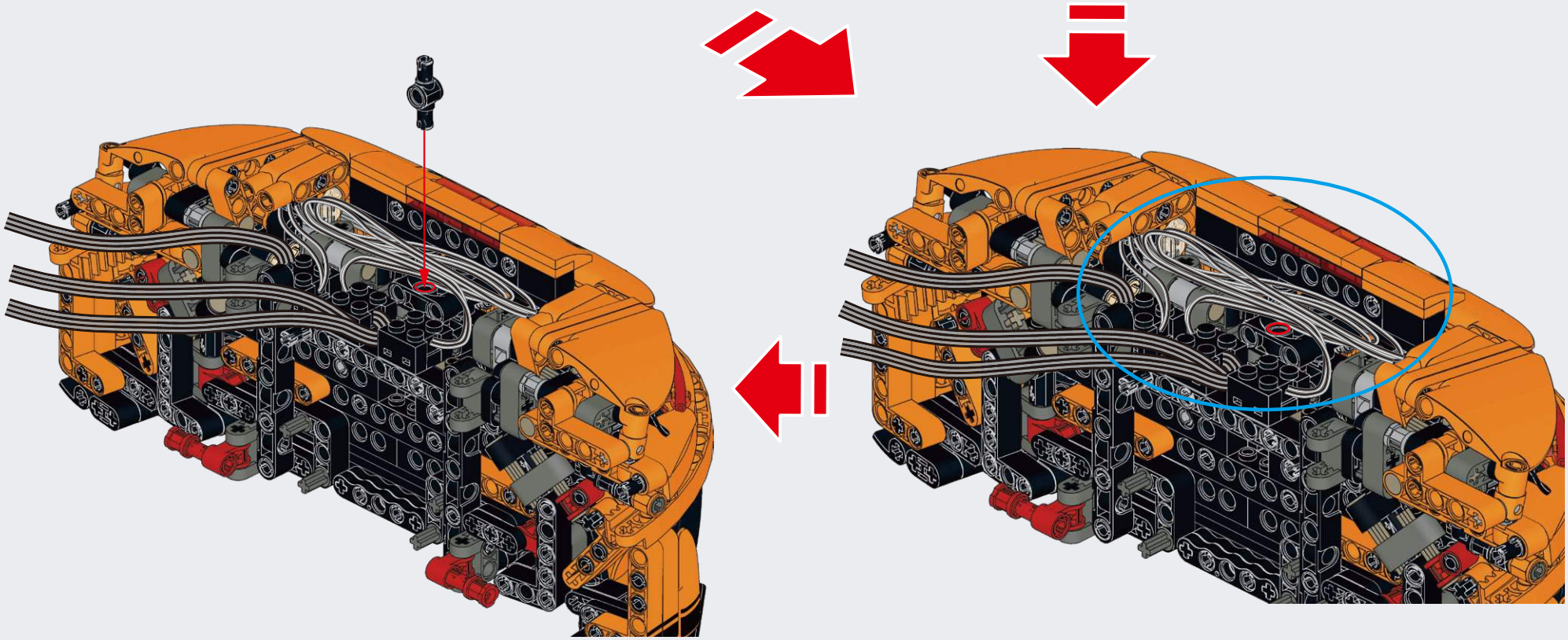

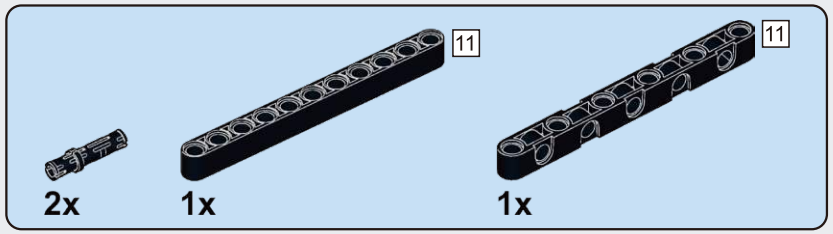

E204

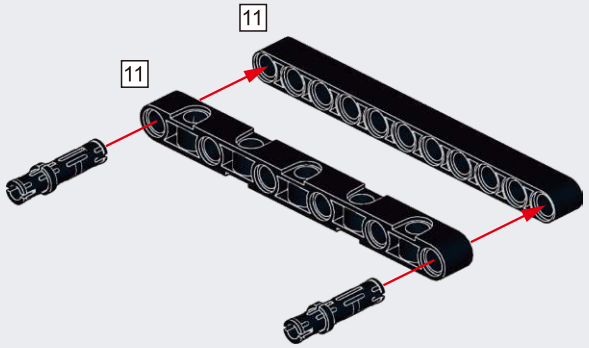

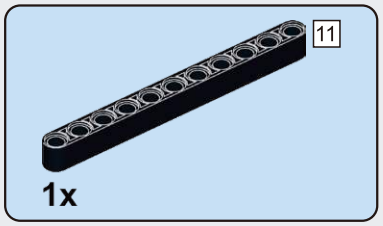

E205

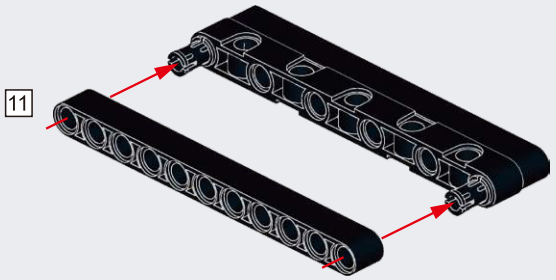

E206

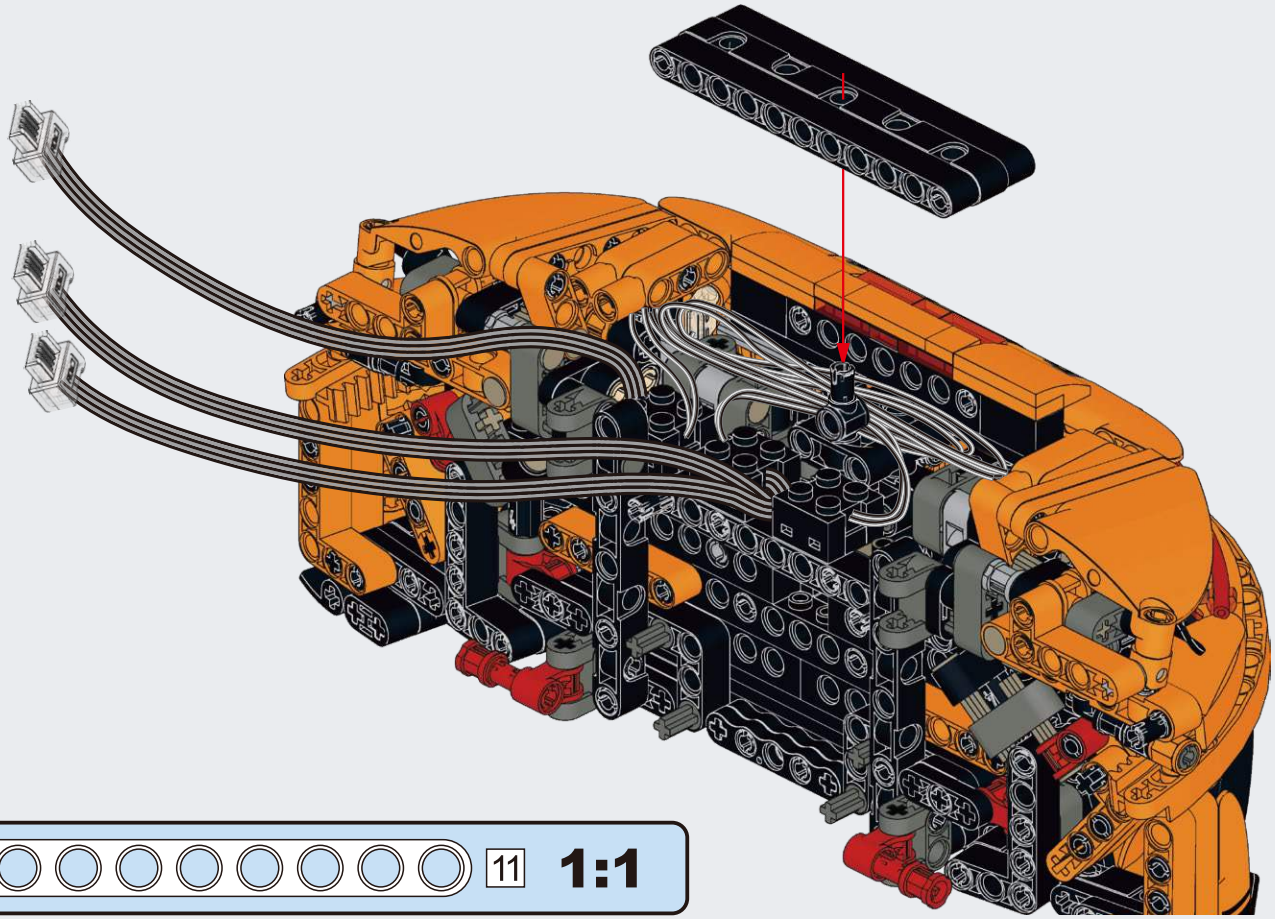

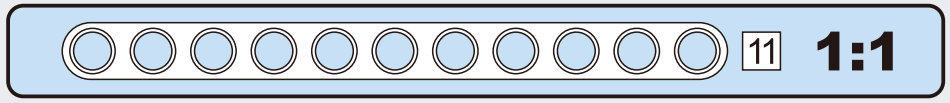

E207

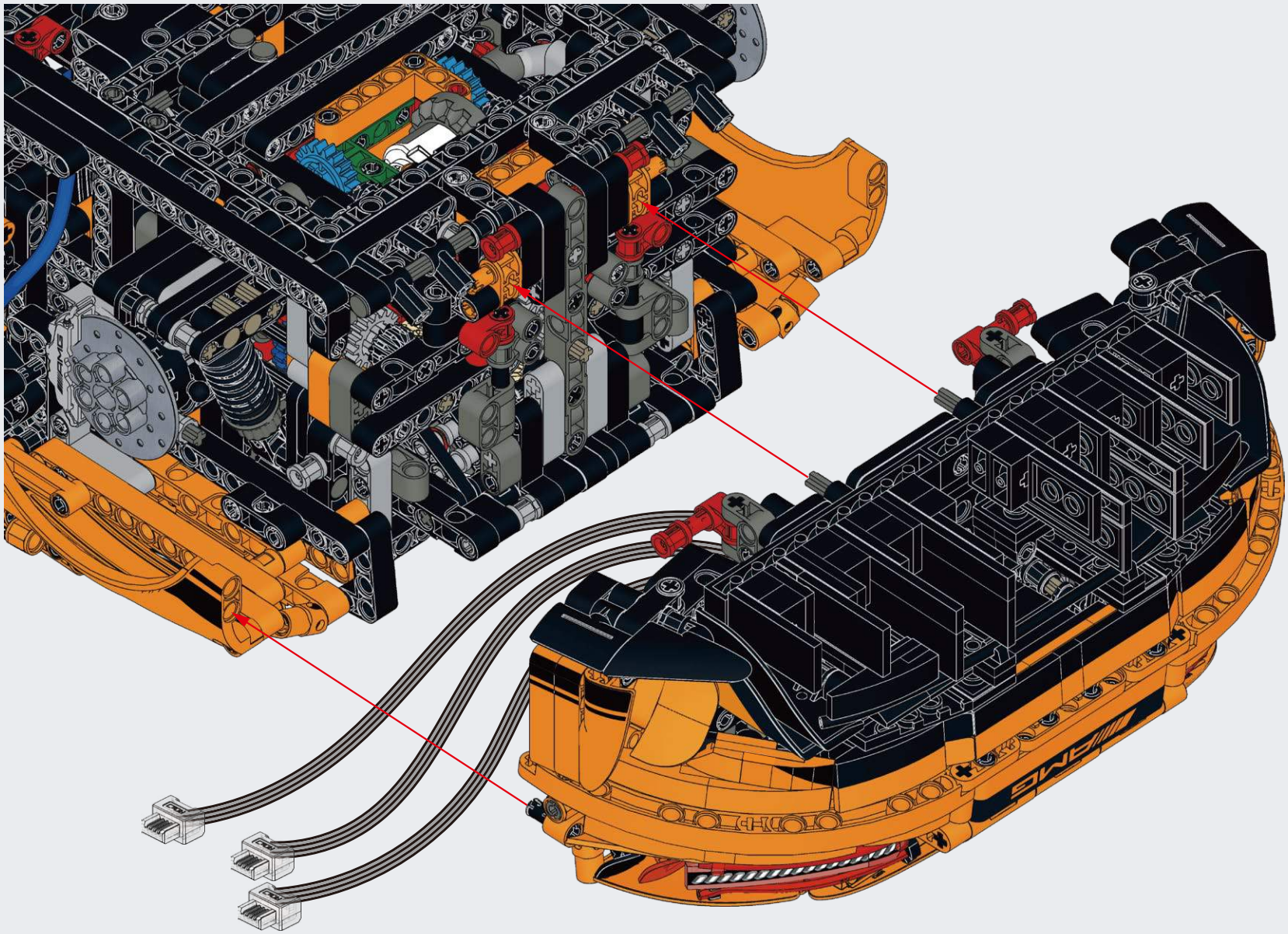

E208

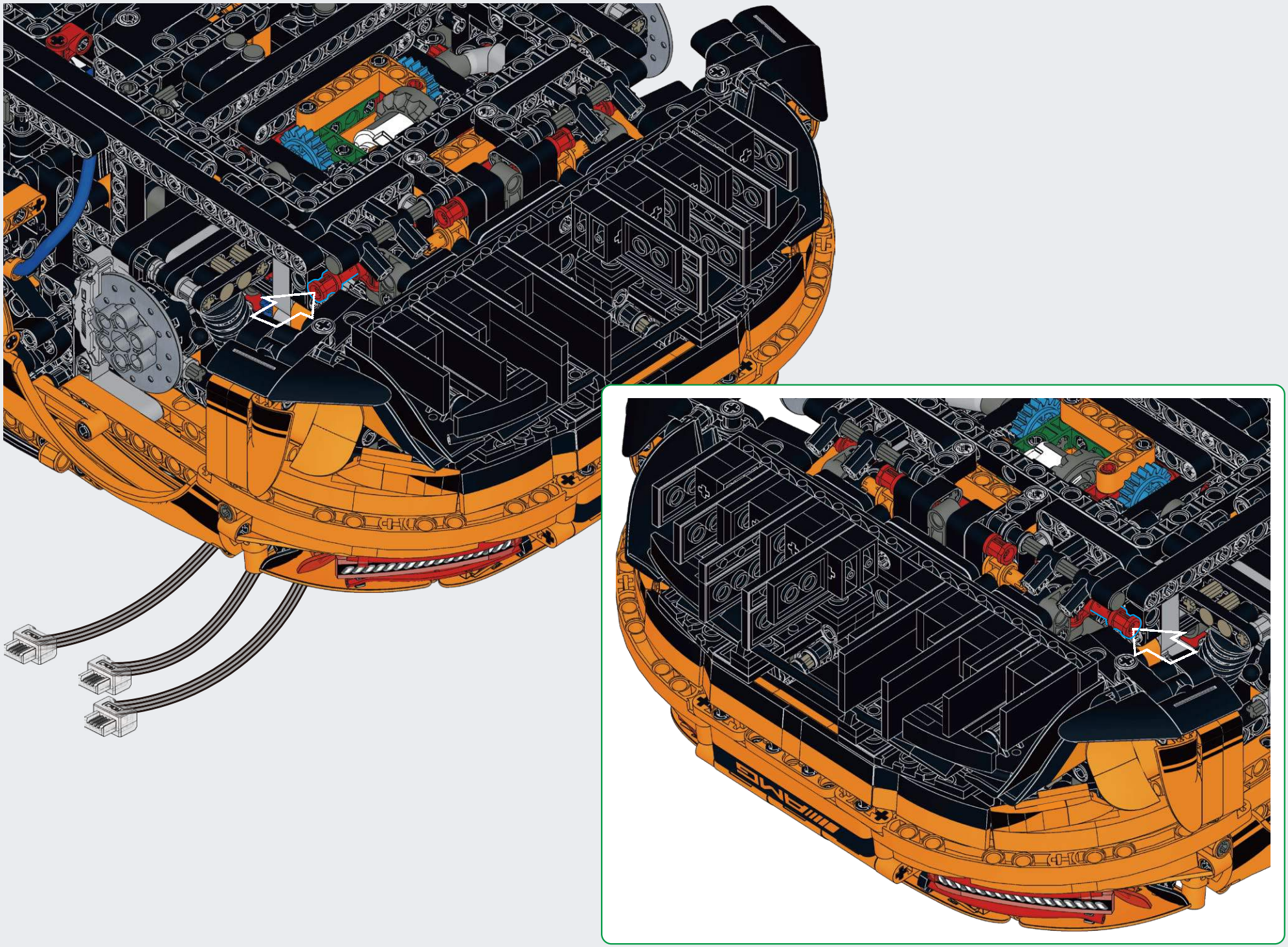

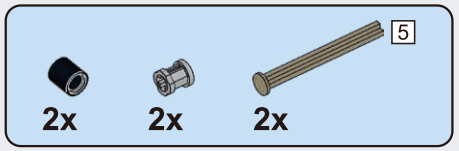

E209

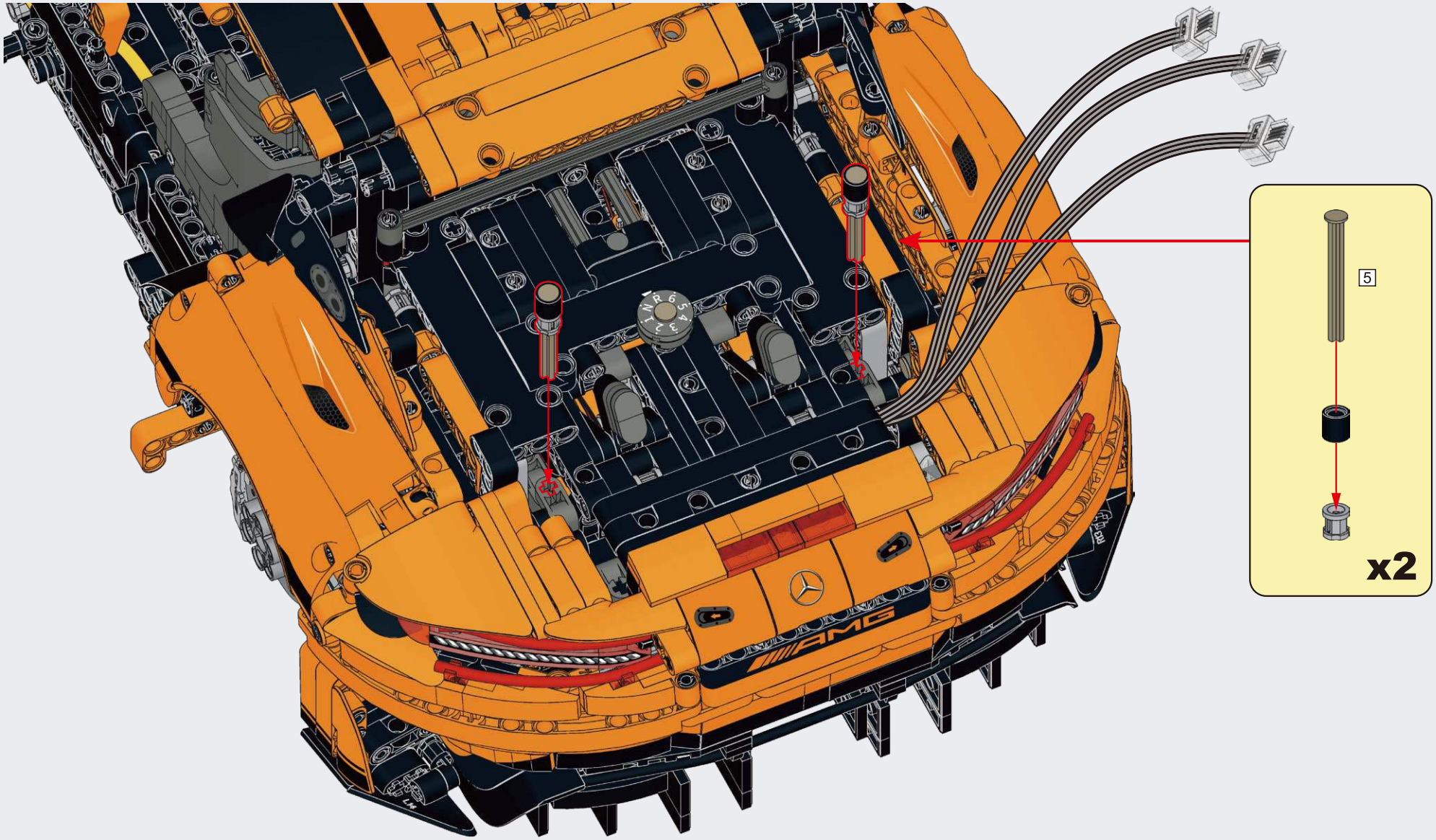

E210

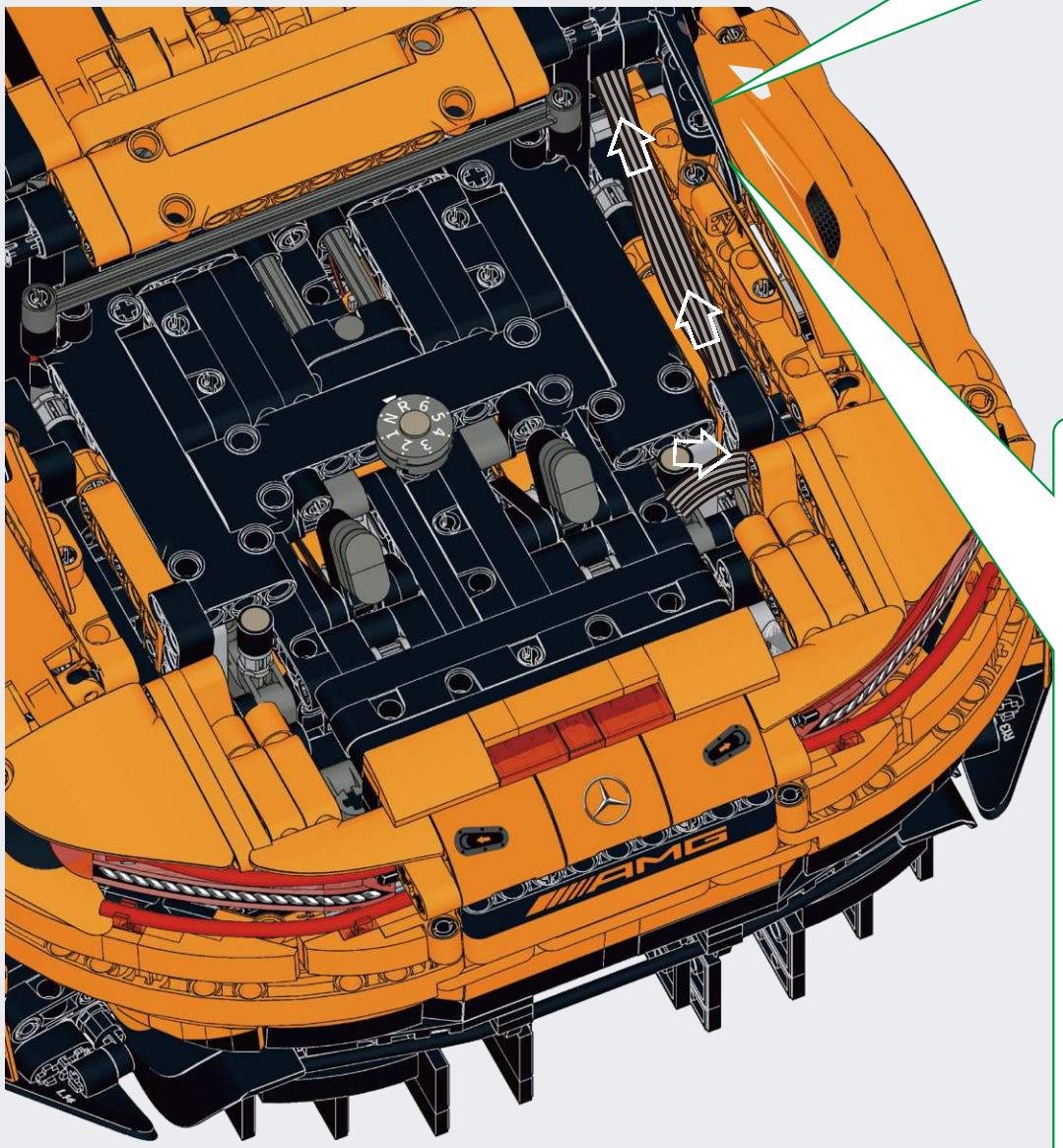

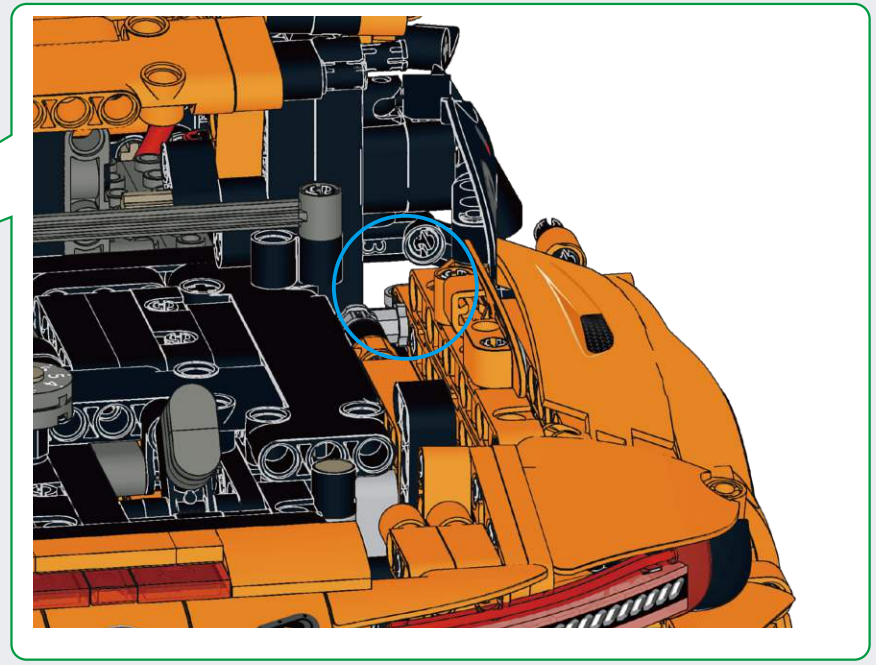

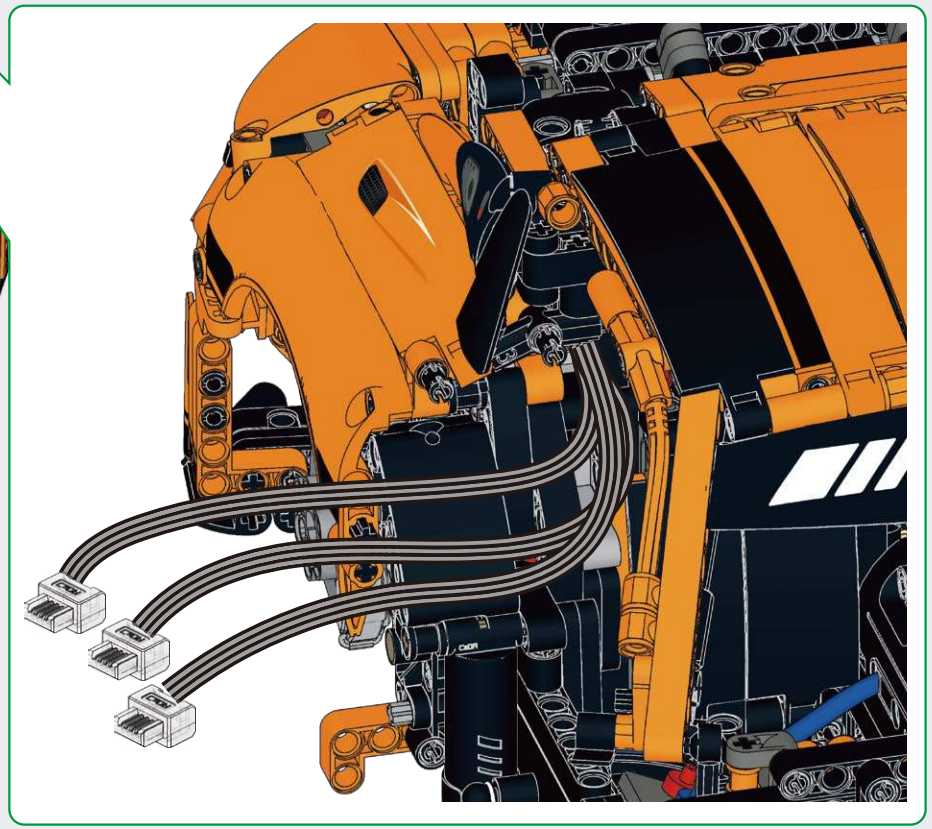

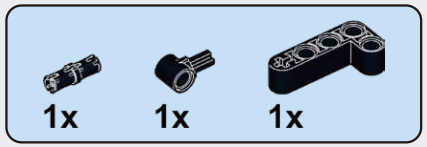

E211

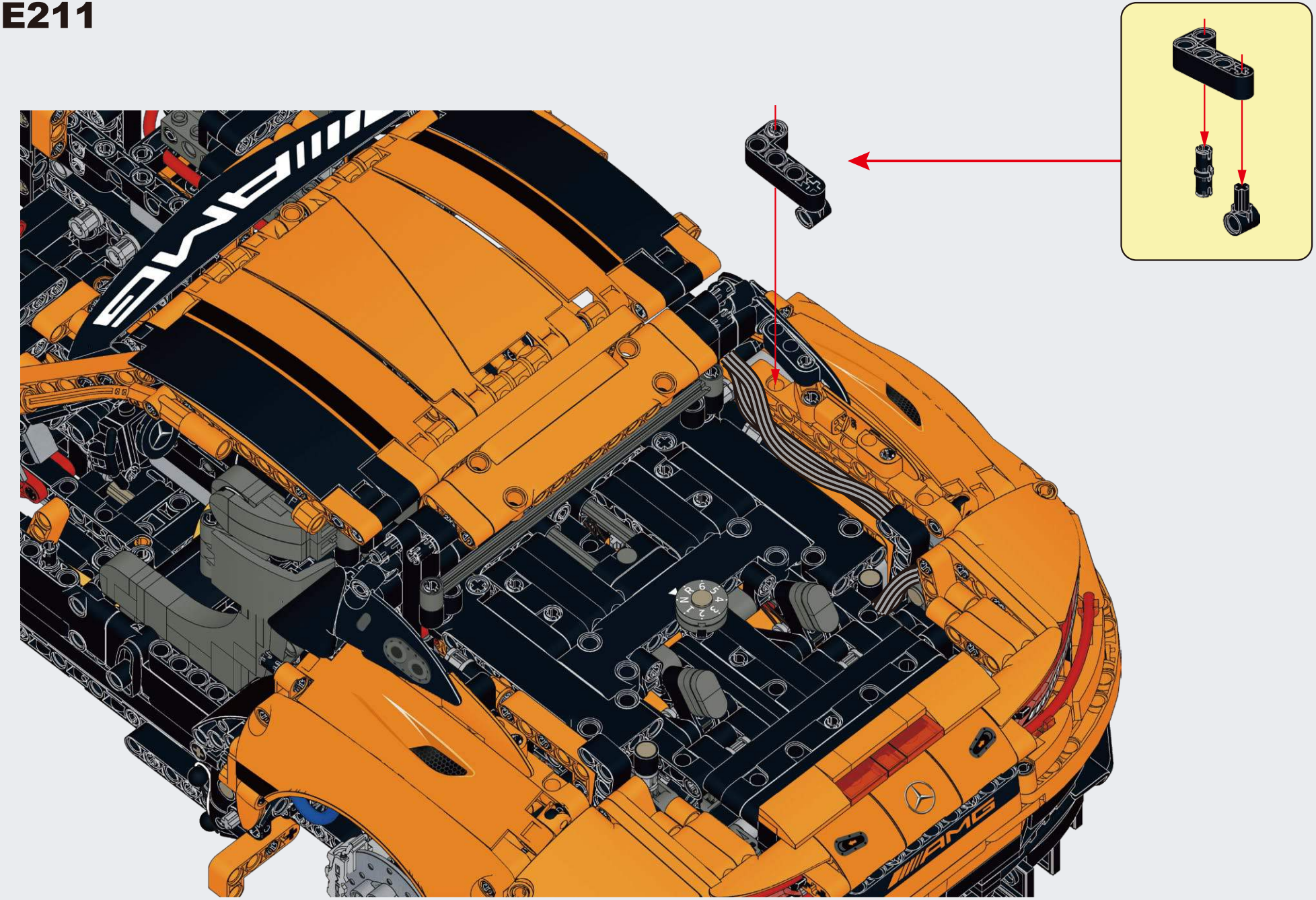

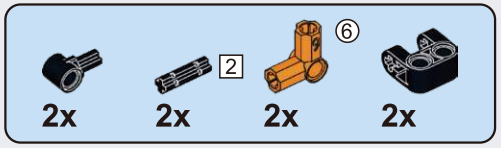

E212

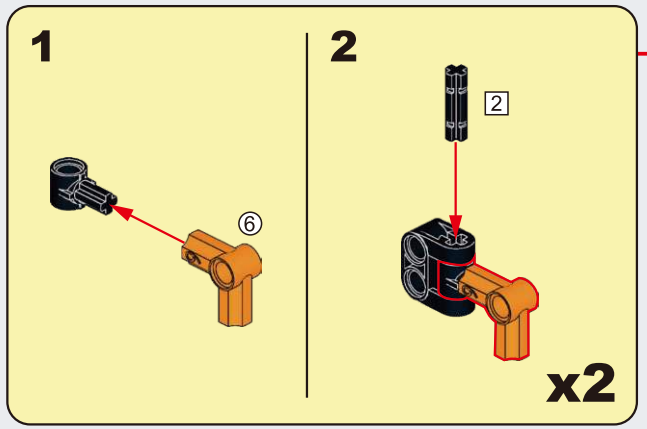

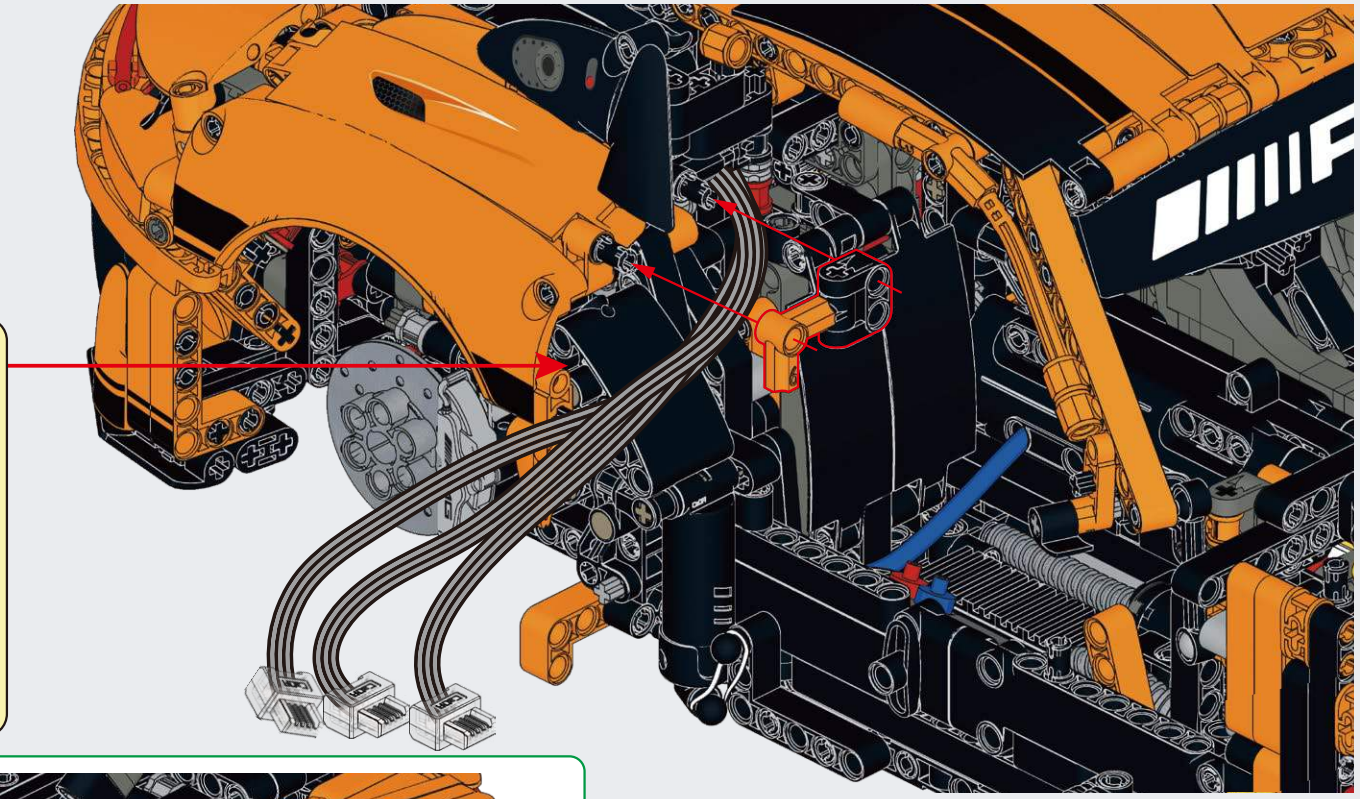

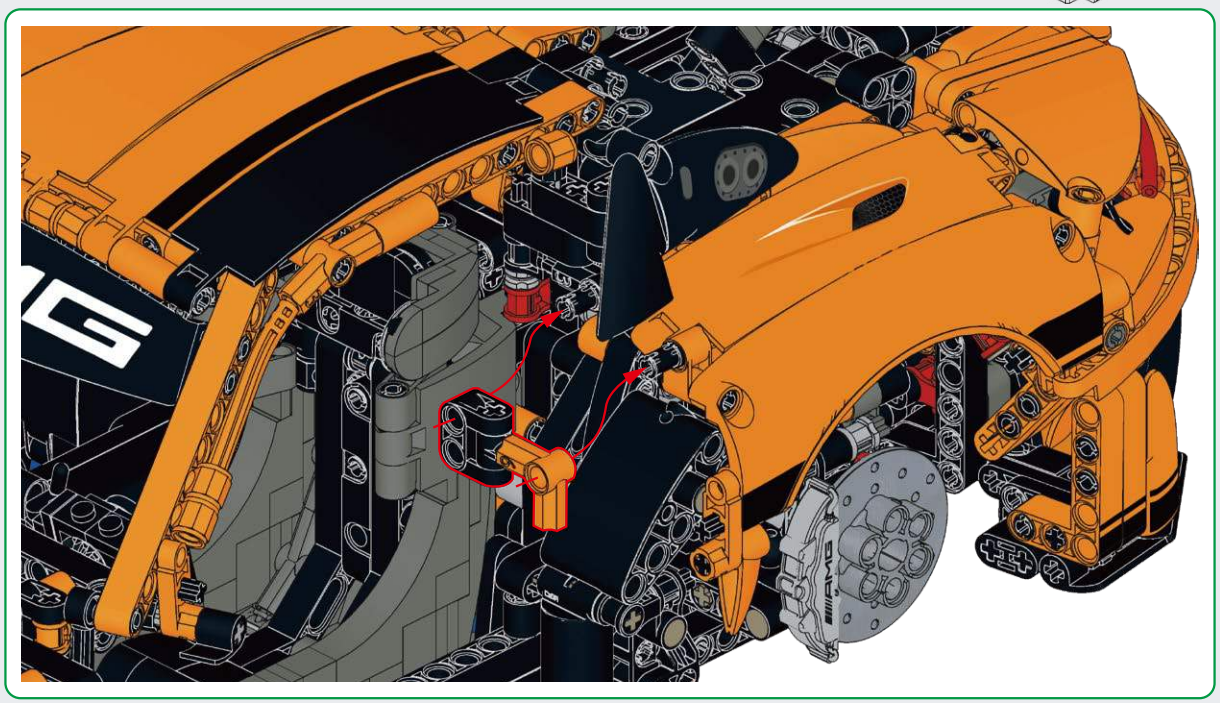

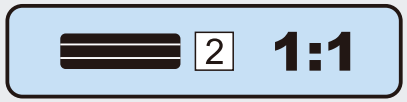

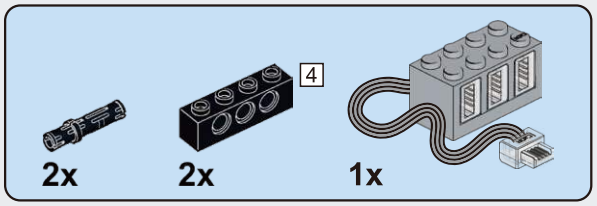

E213

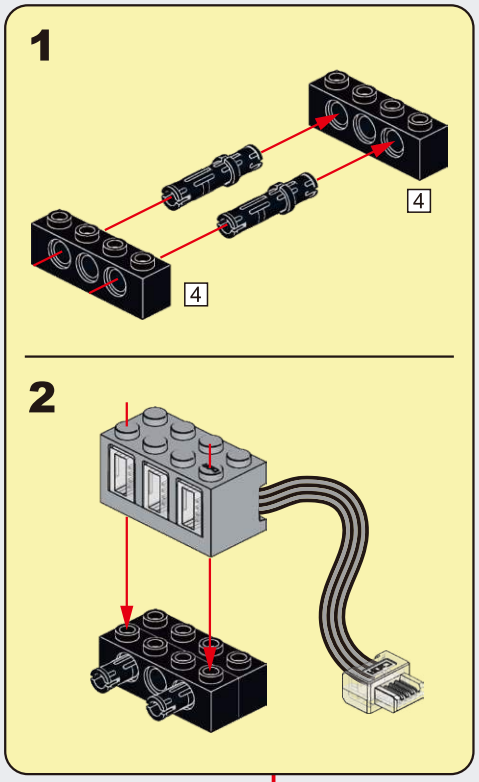

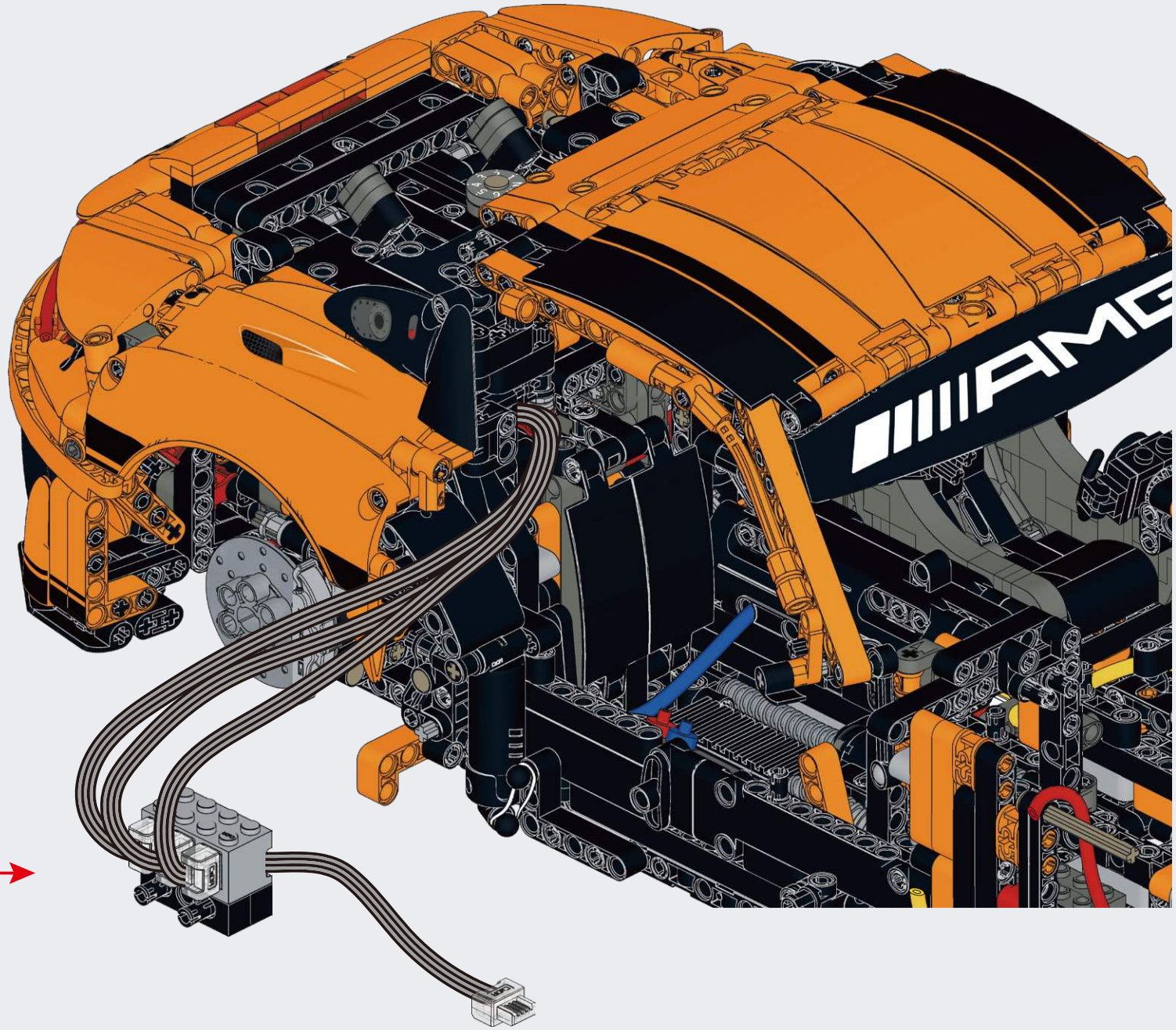

E214

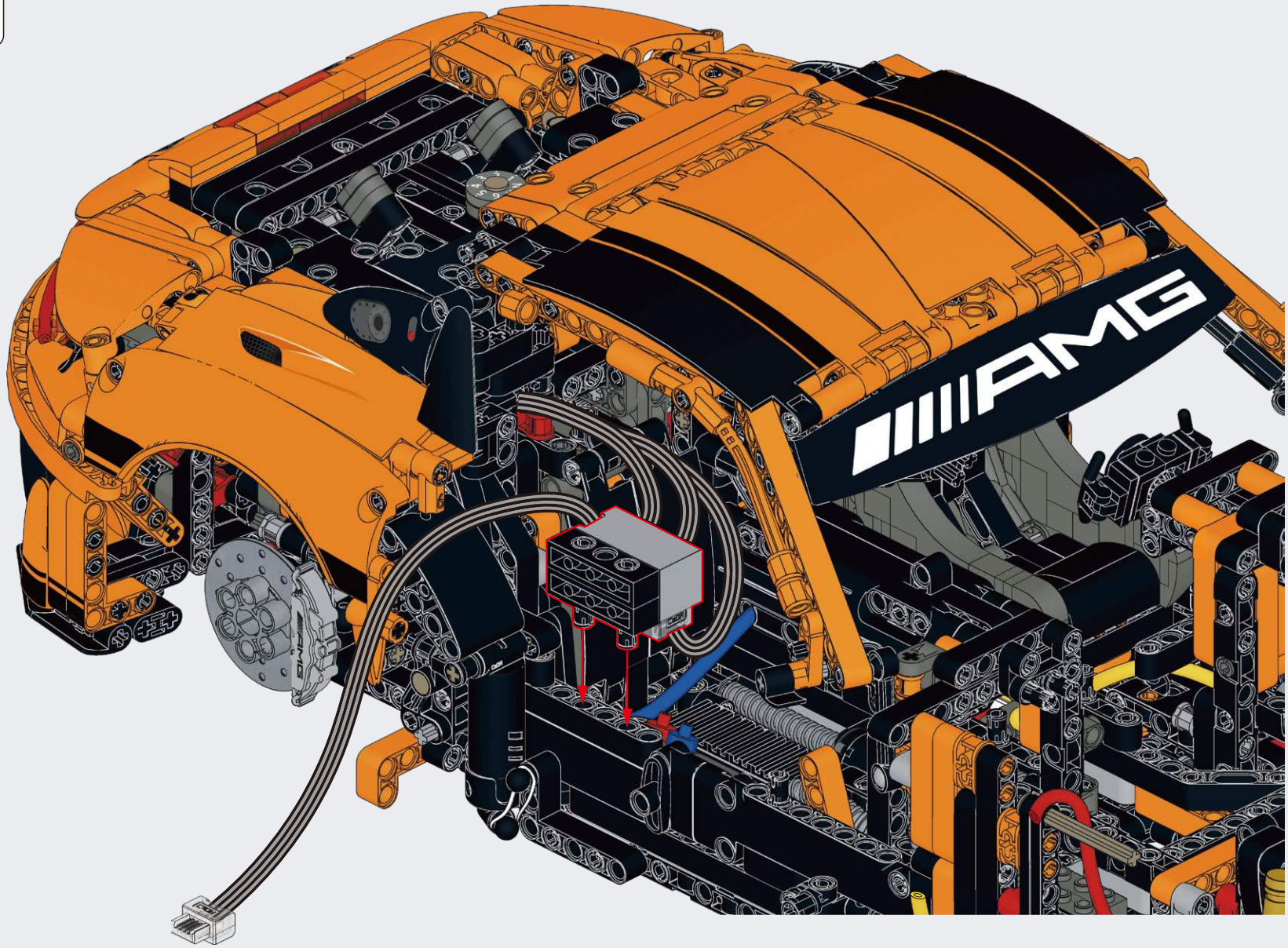

F

BOX 2 / BAG 6

2

F

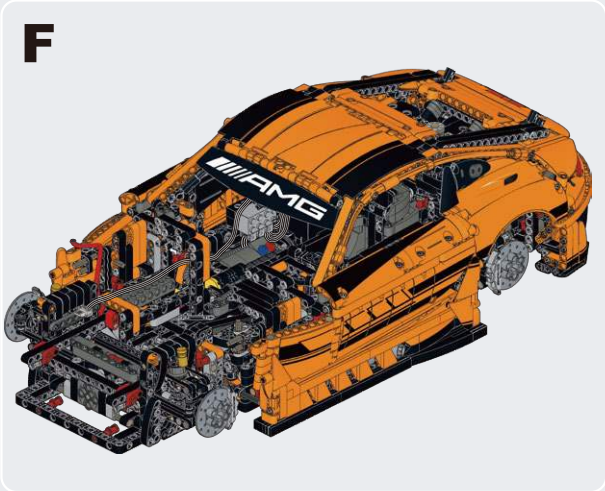

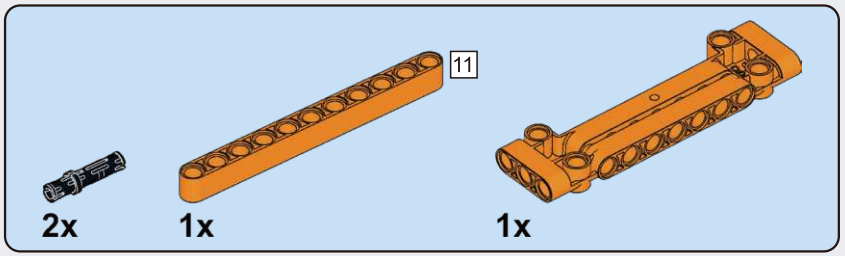

F1

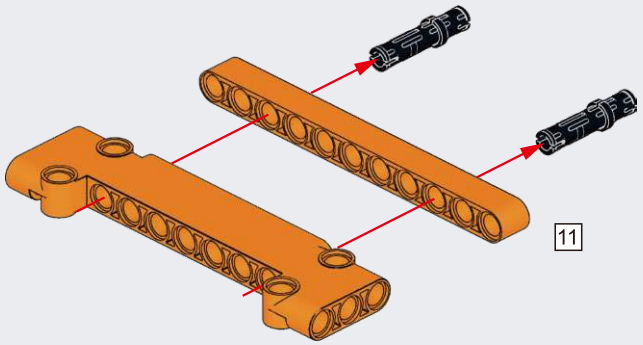

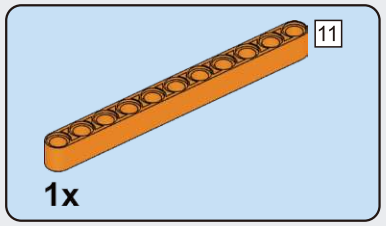

F2

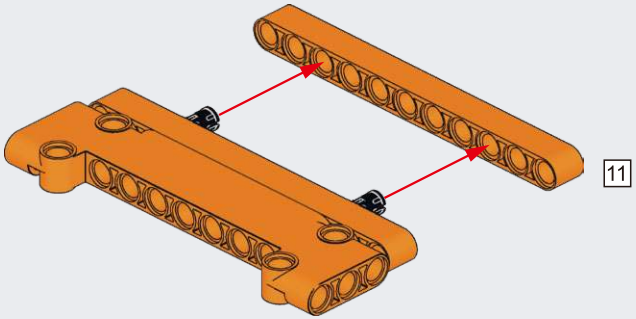

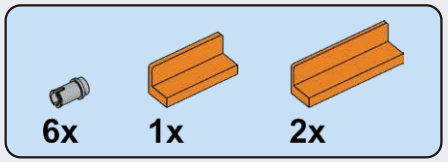

F3

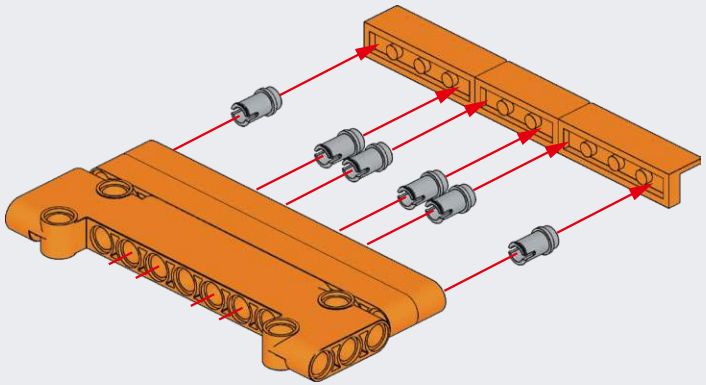

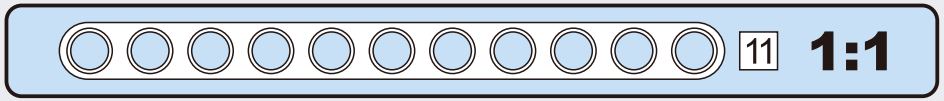

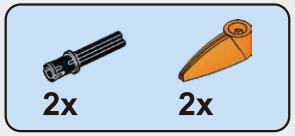

F4

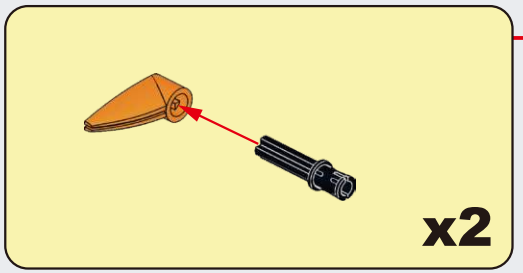

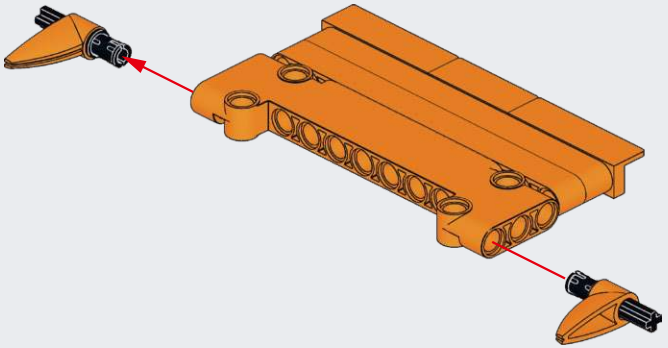

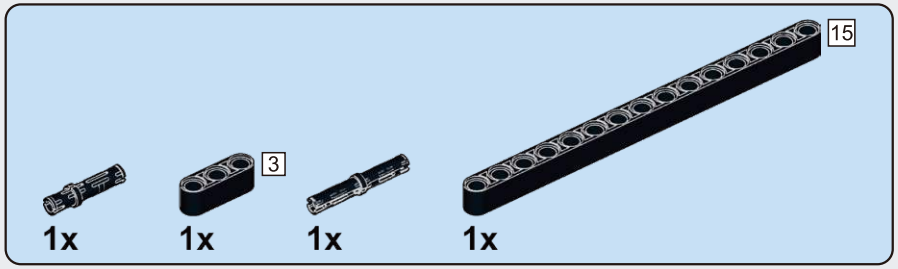

F5

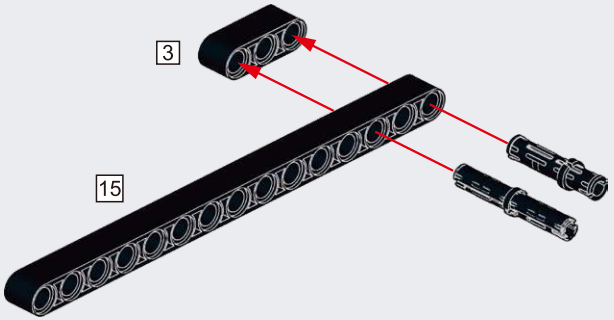

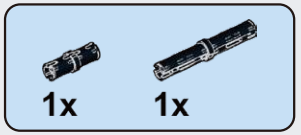

F6

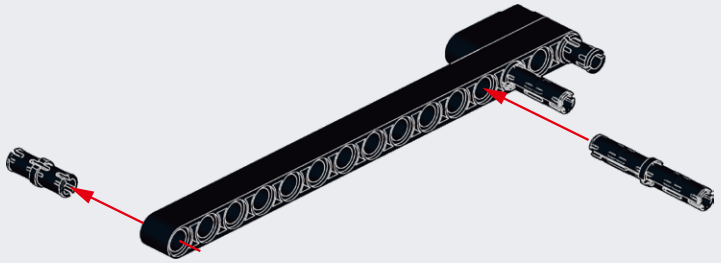

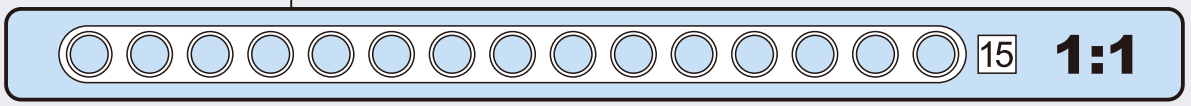

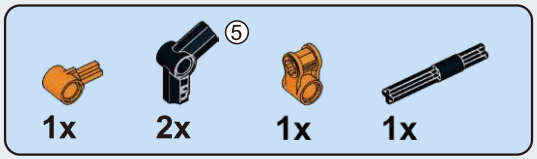

F7

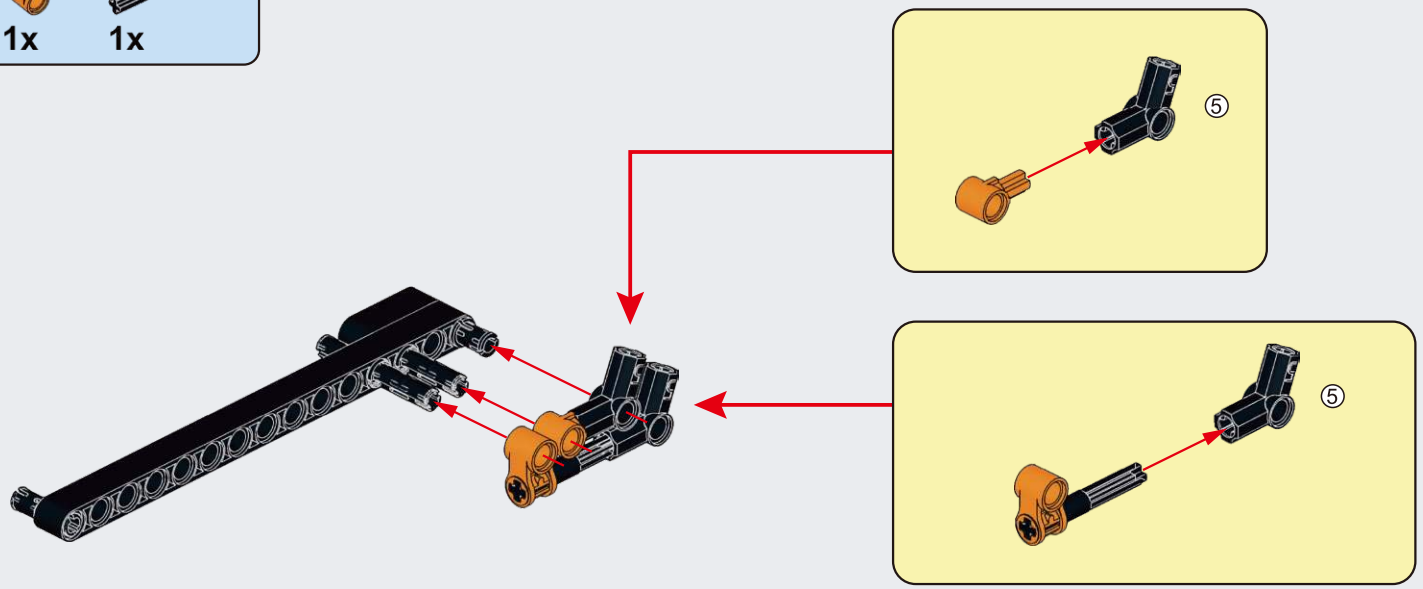

F8

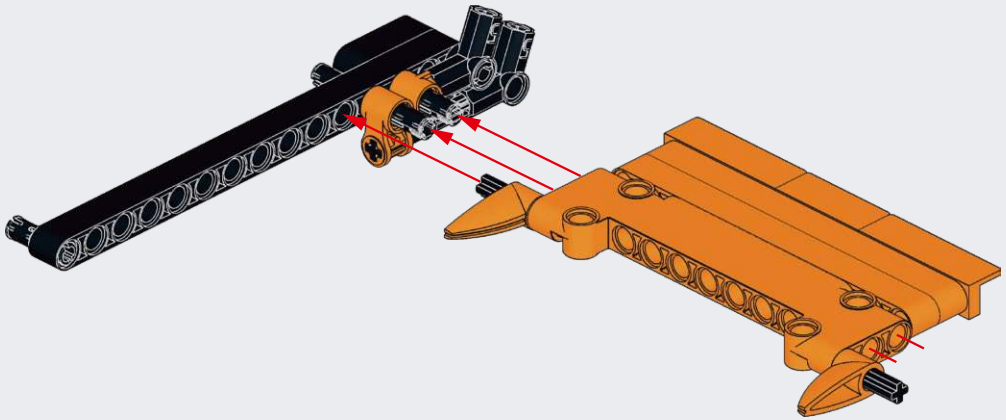

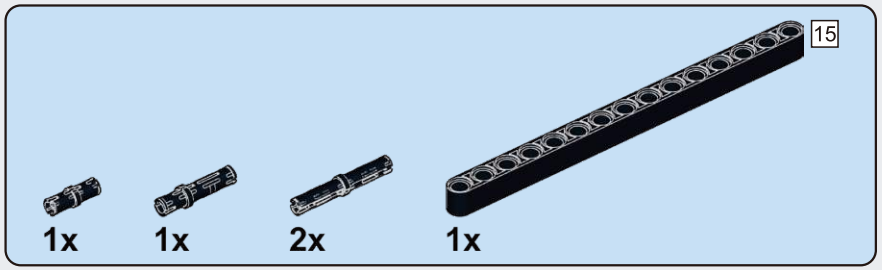

F9

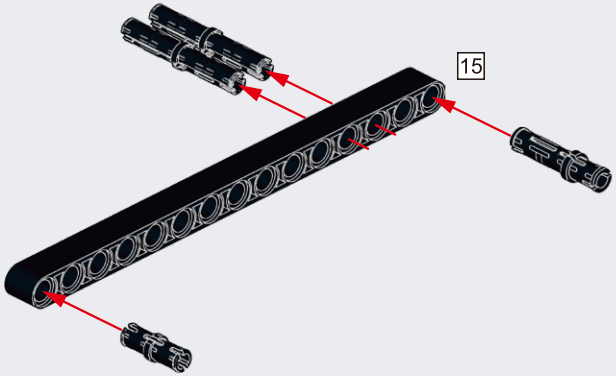

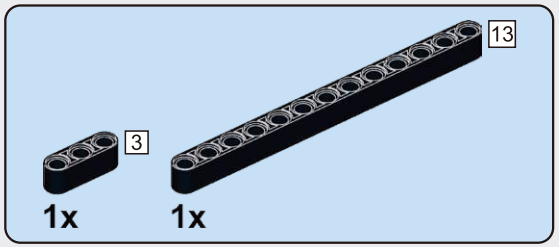

F10

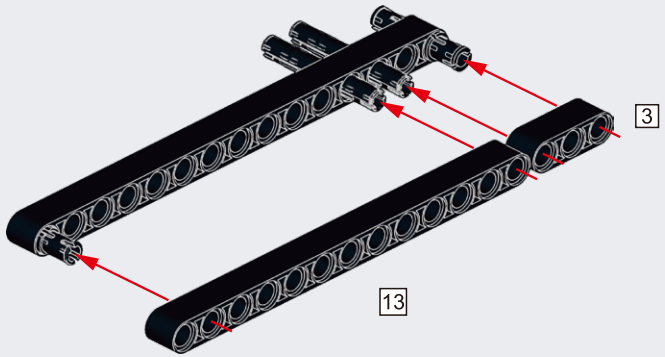

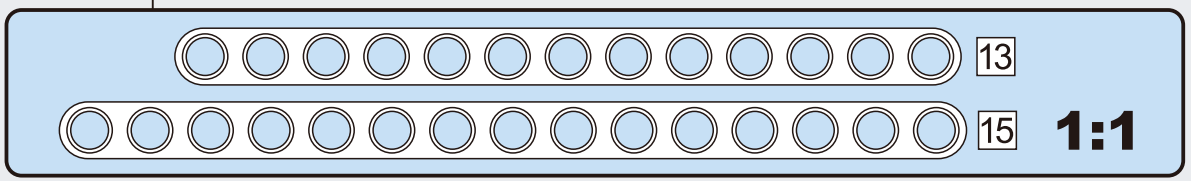

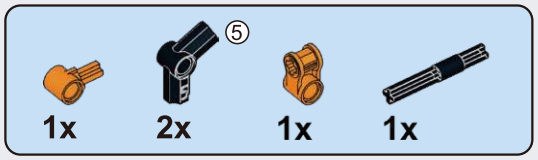

F11

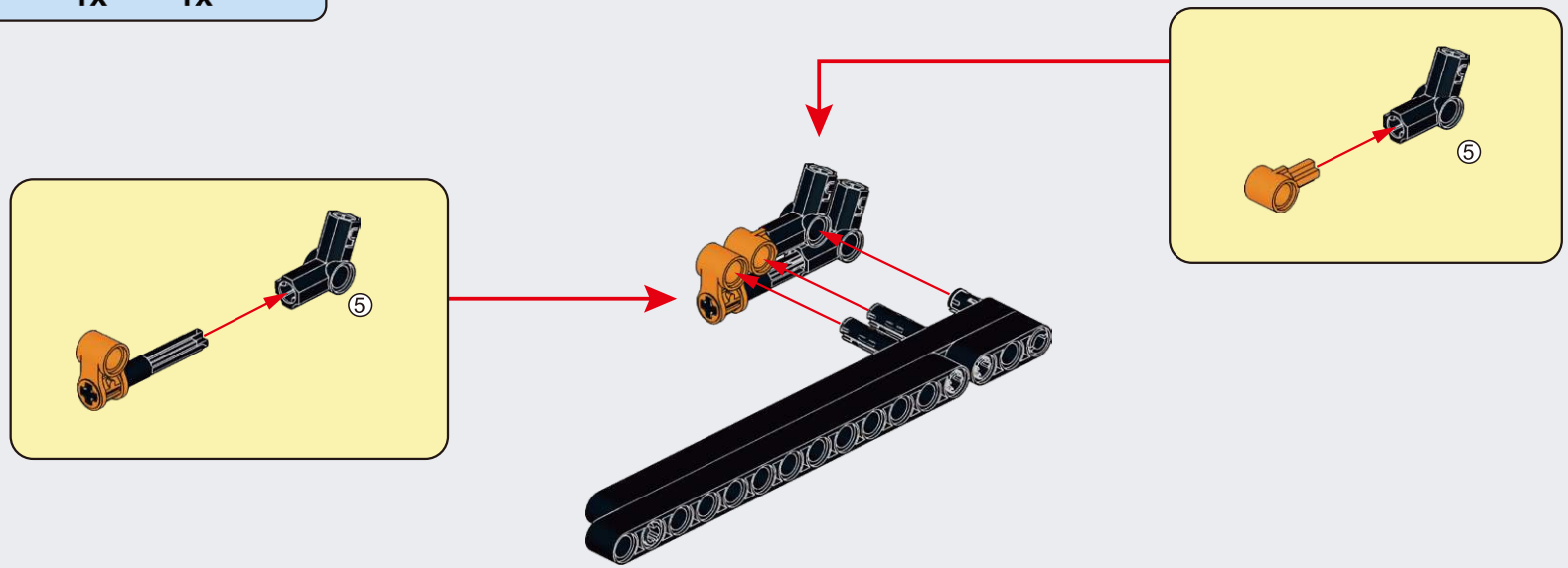

F12

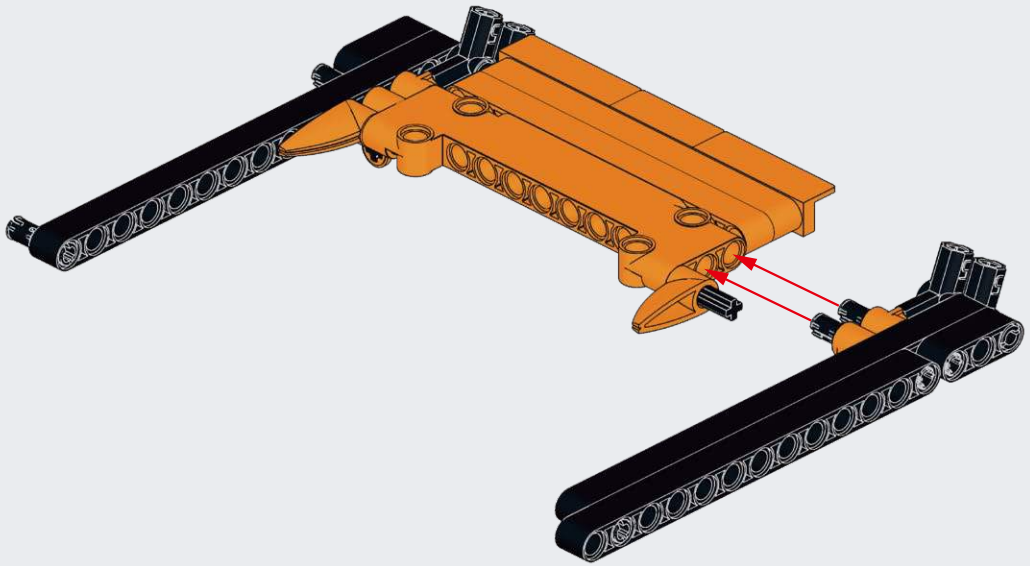

F13

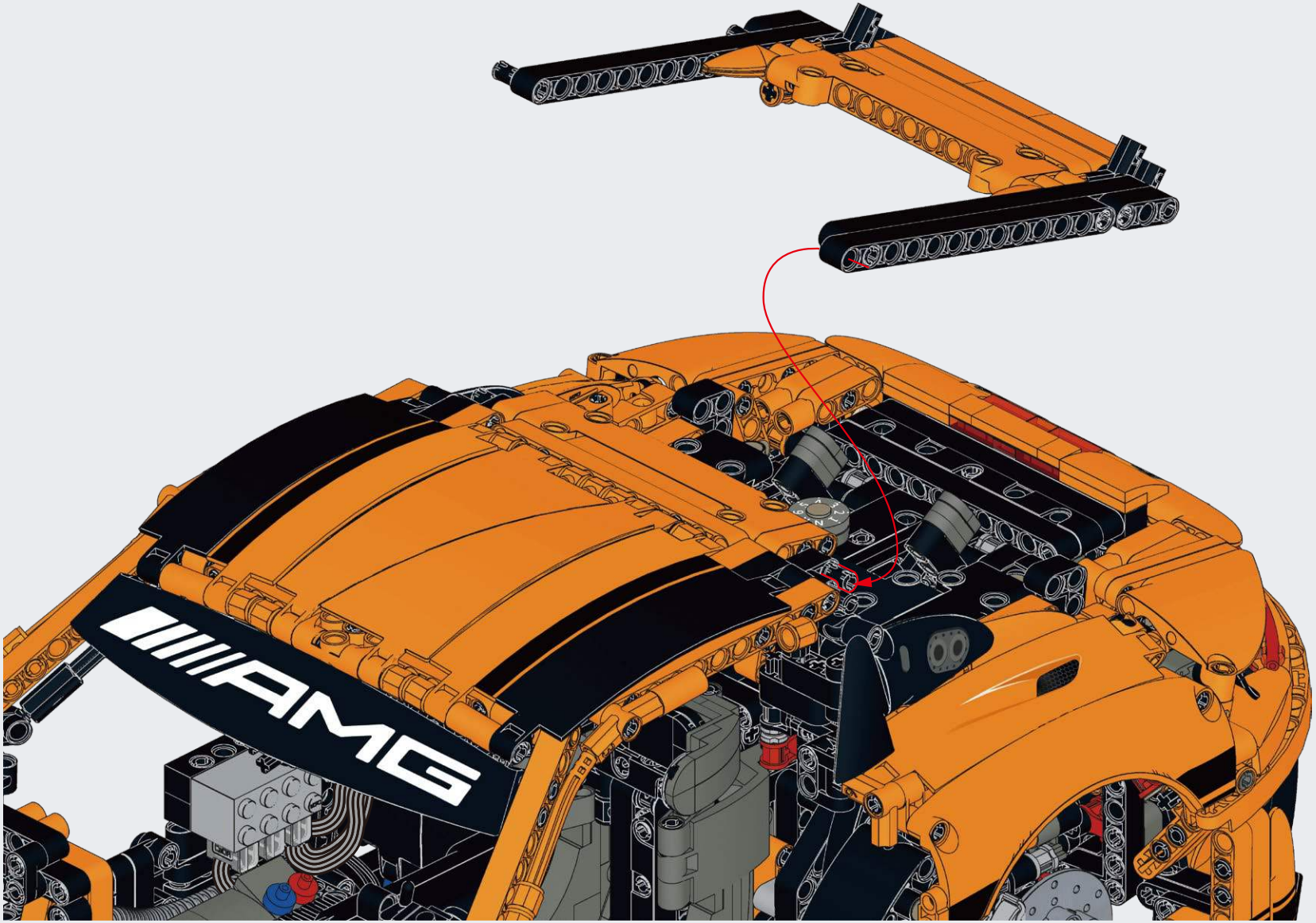

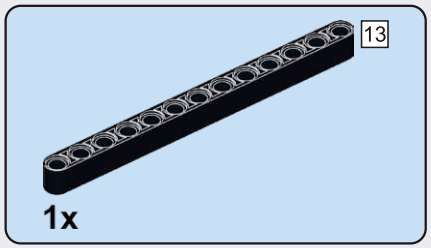

F14

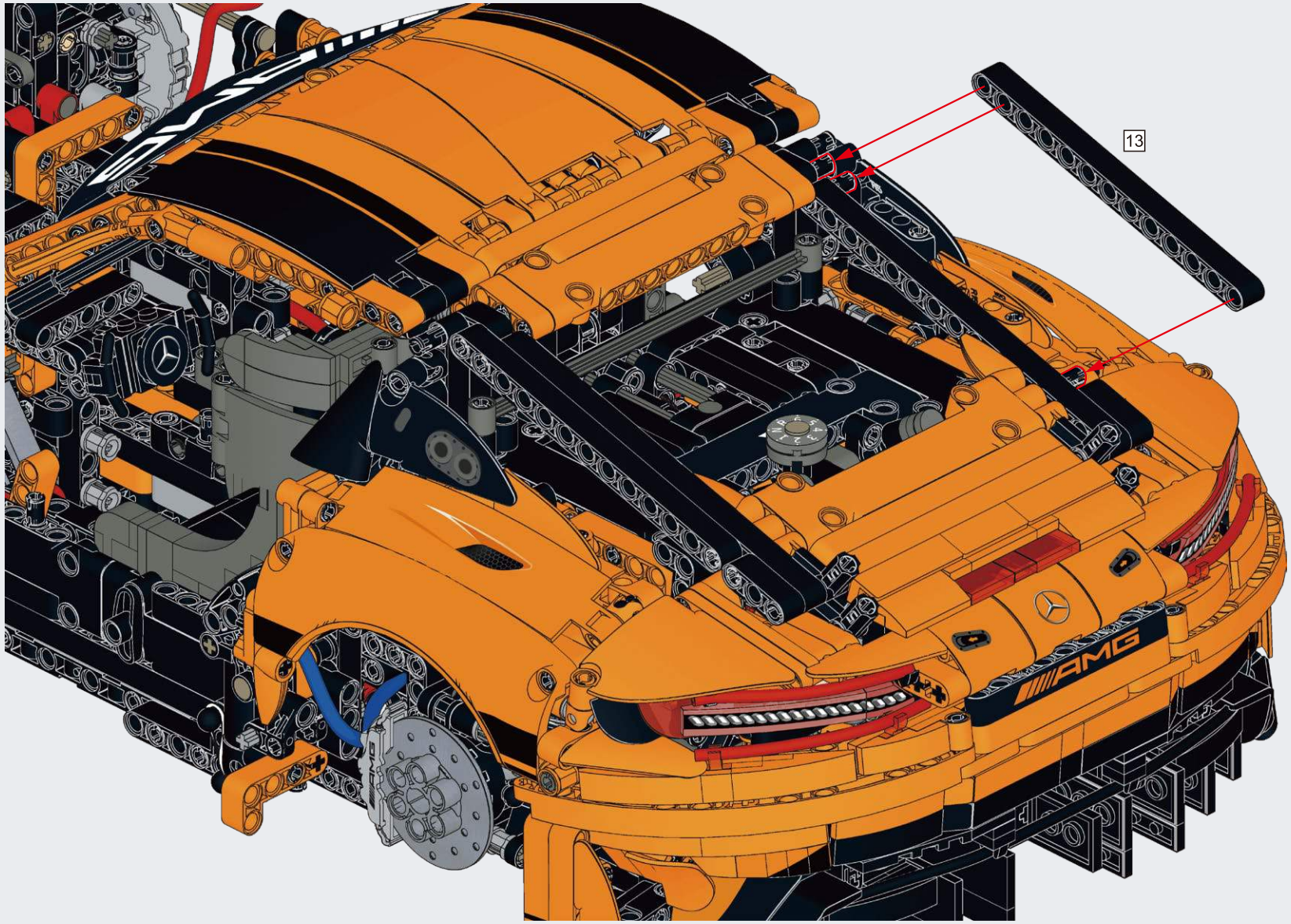

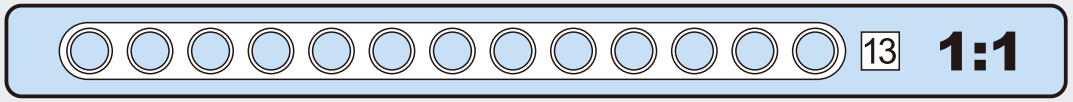

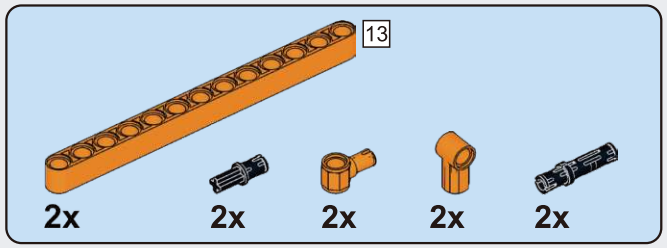

F15

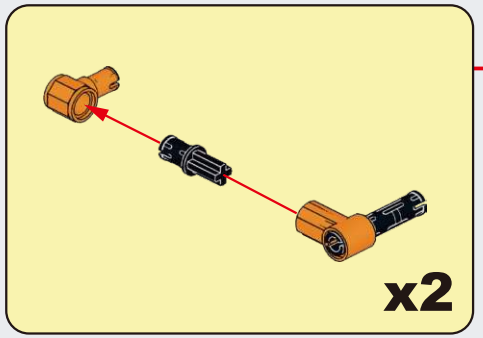

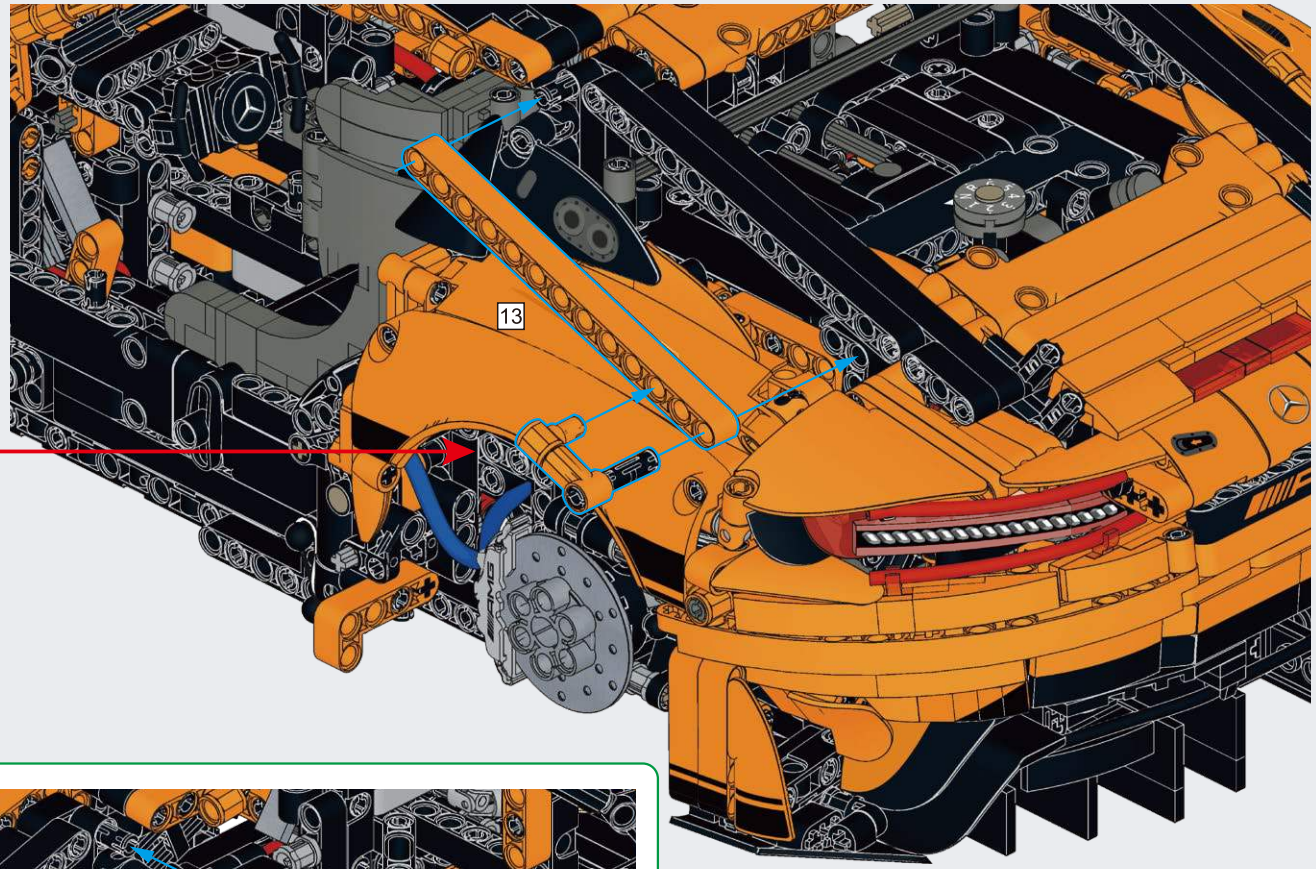

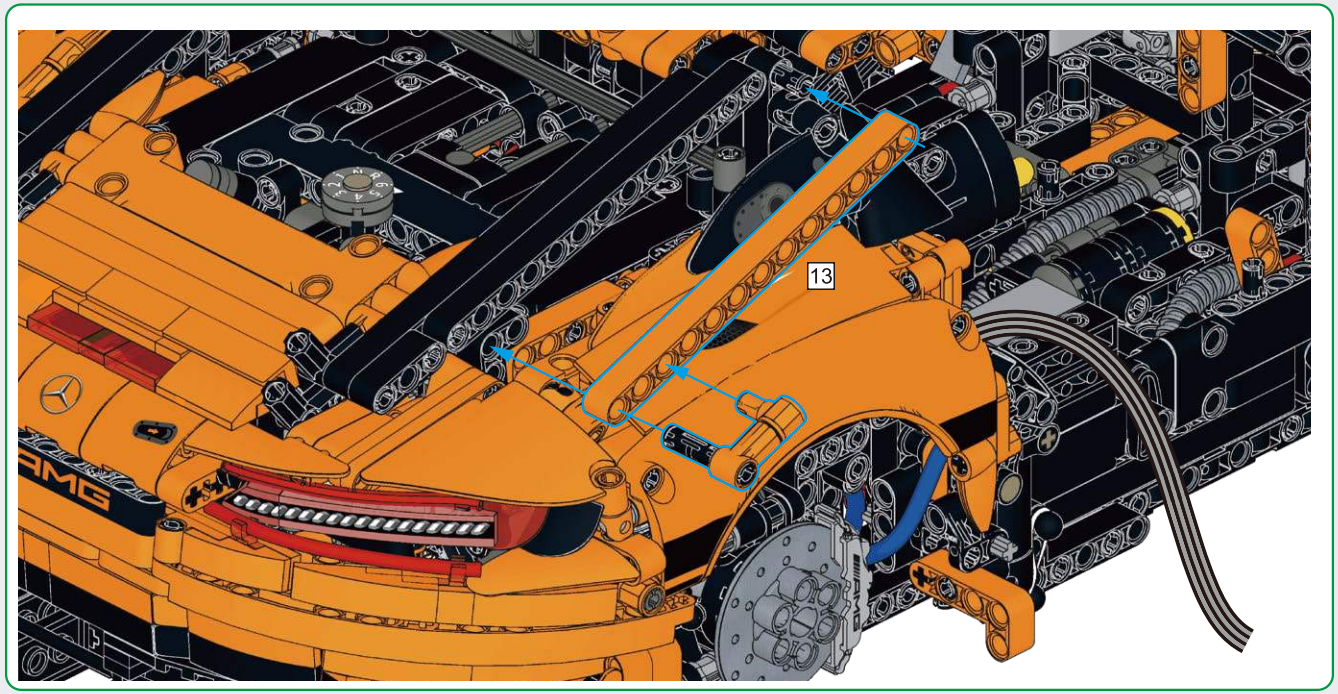

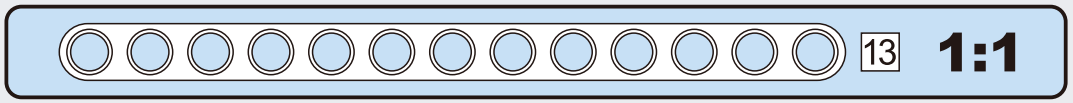

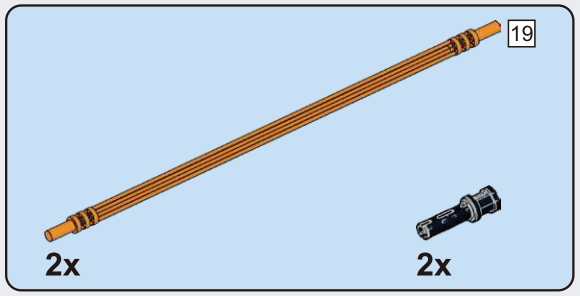

F16

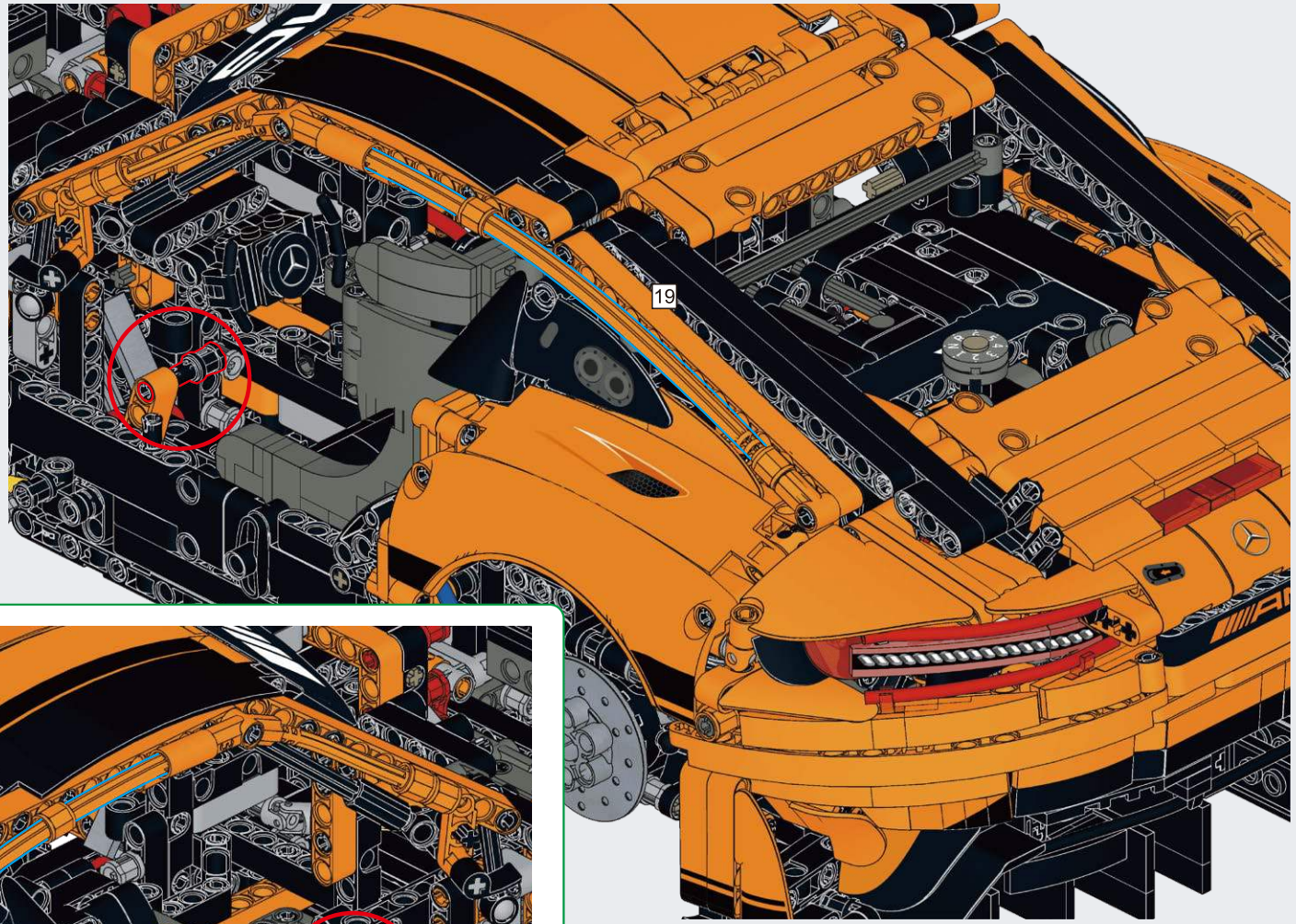

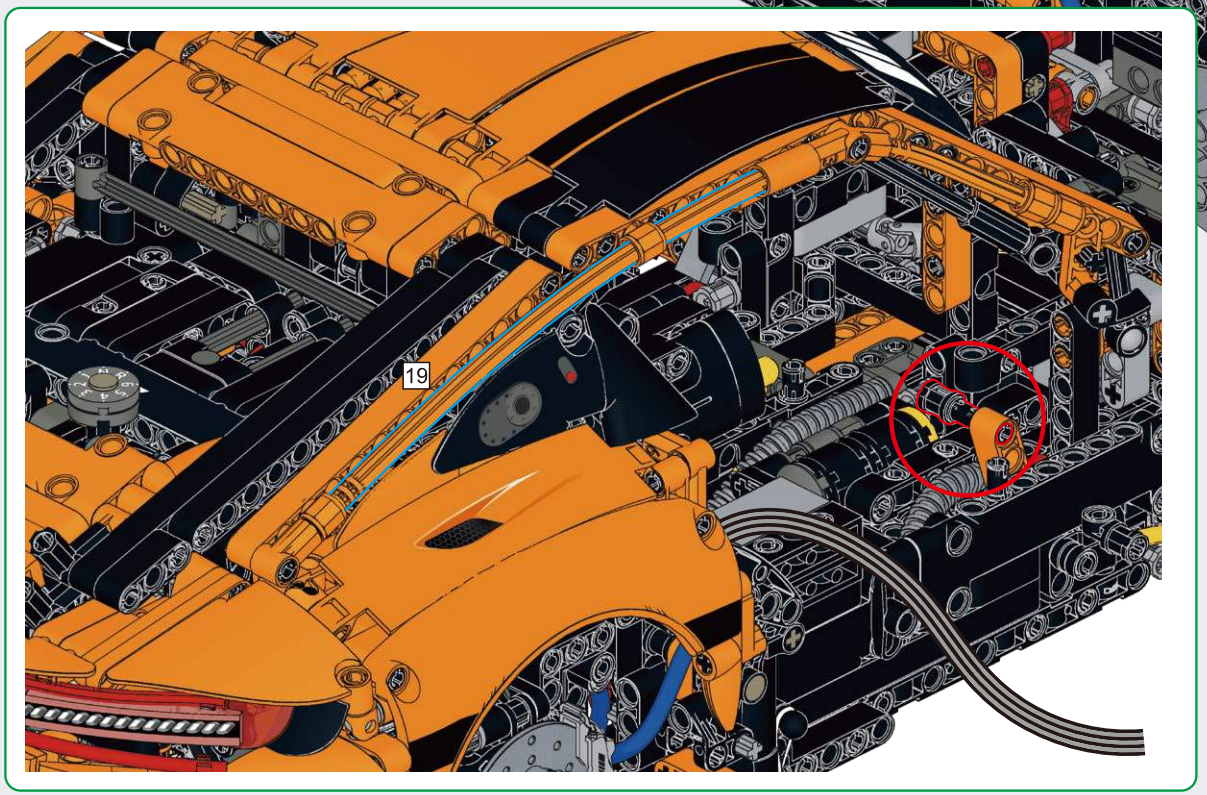

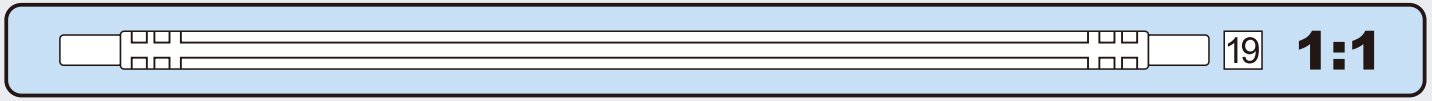

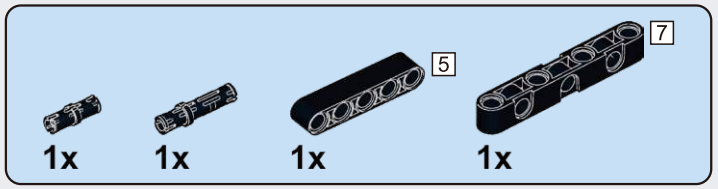

F17

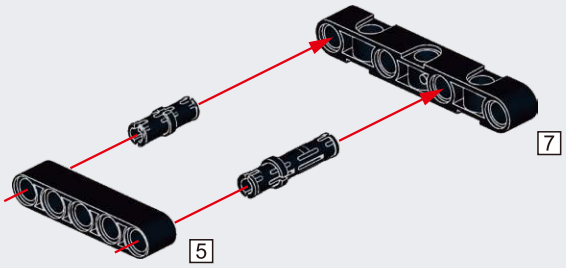

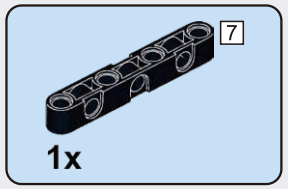

F18

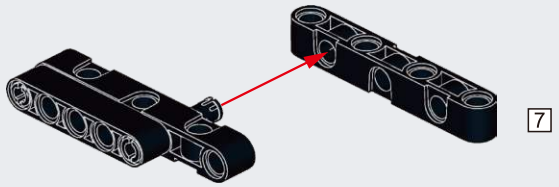

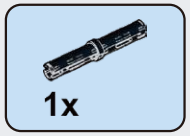

F19

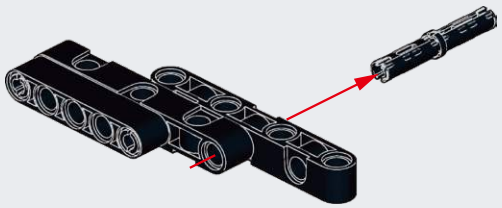

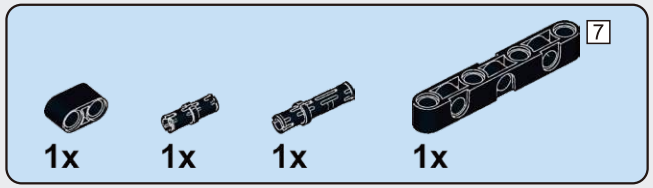

F20

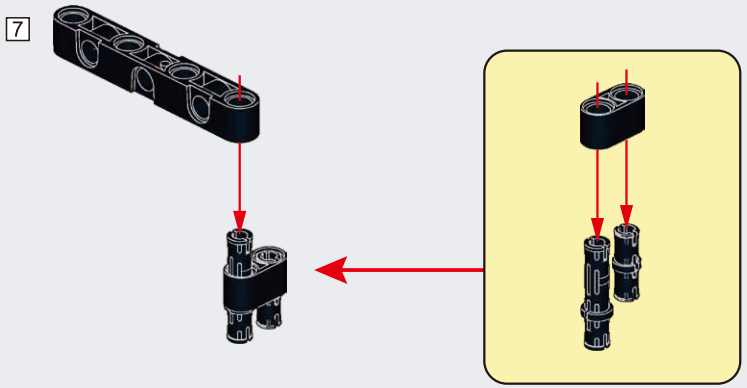

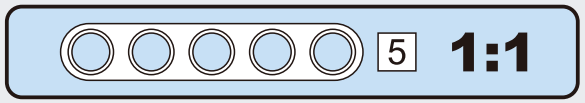

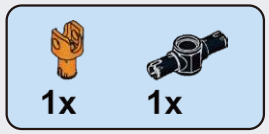

F21

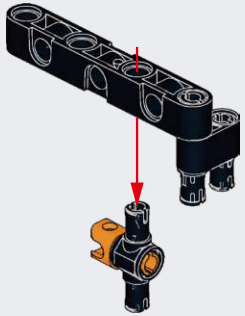

F22

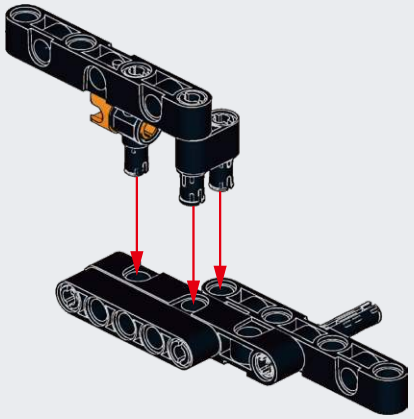

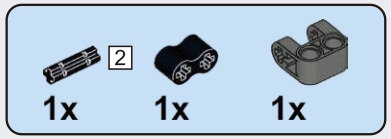

F23

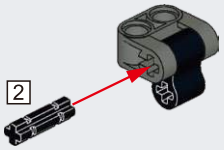

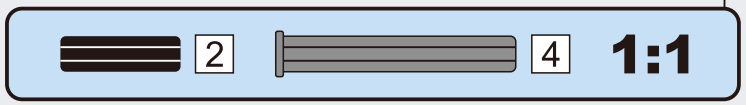

F24

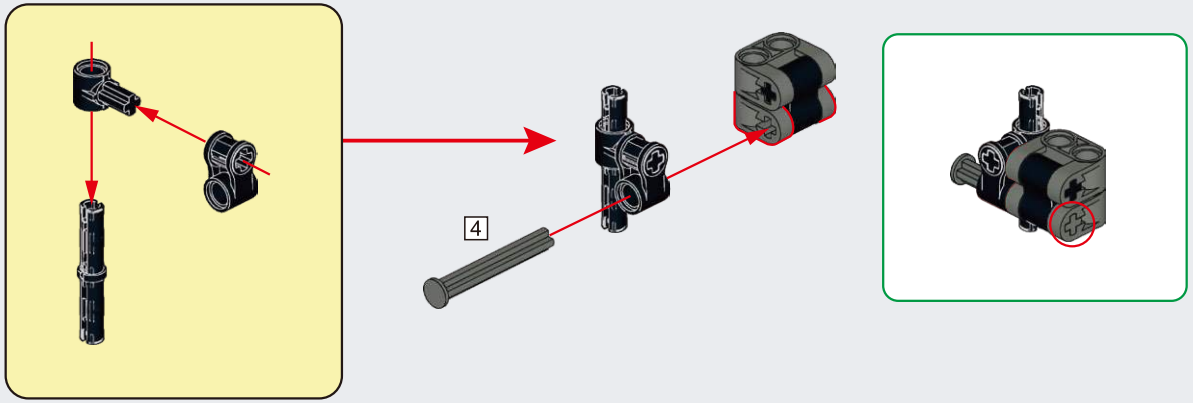

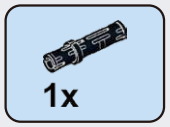

F25

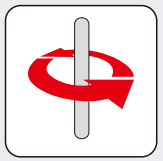

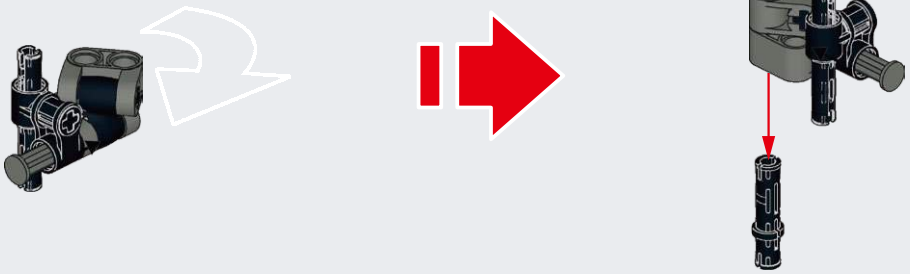

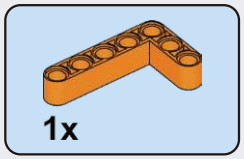

F26

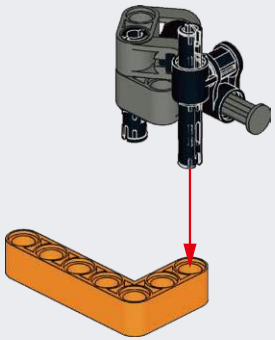

F27

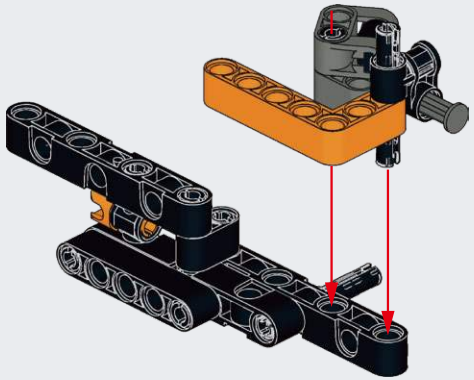

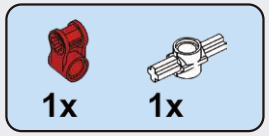

F28

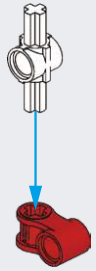

F29

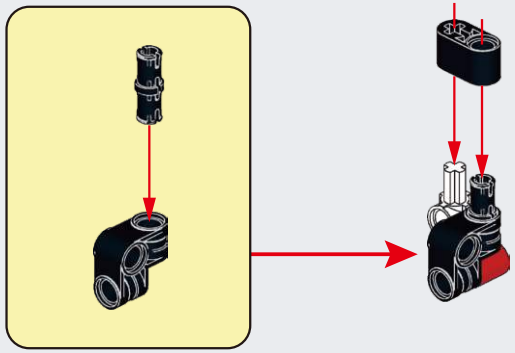

F30

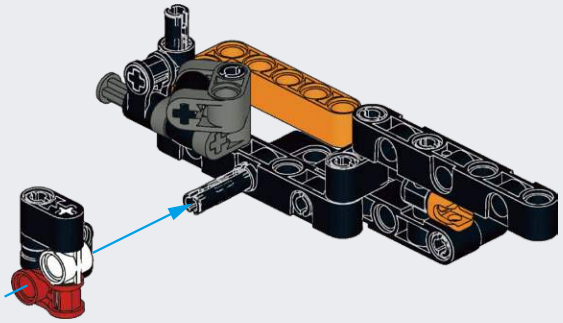

F31

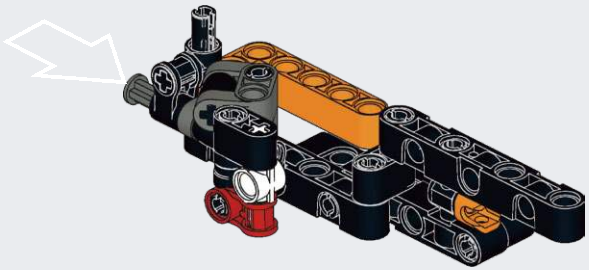

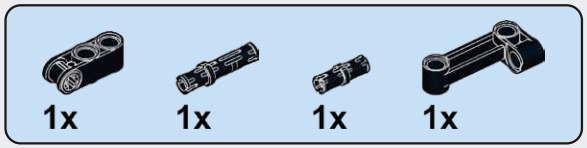

F32

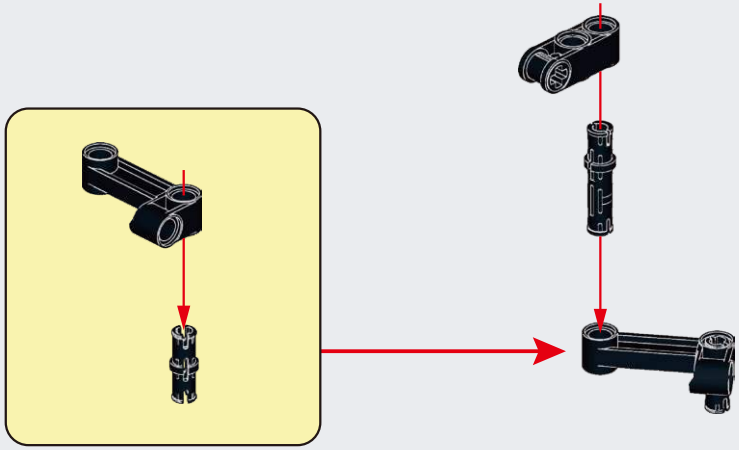

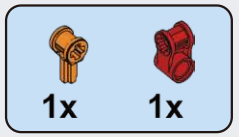

F33

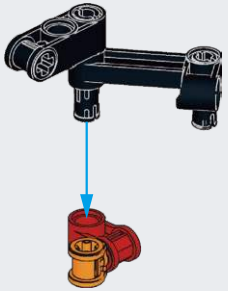

F34

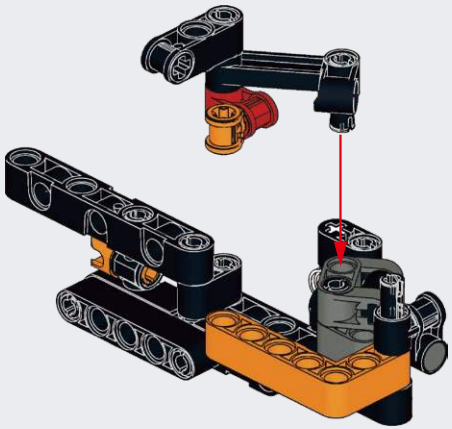

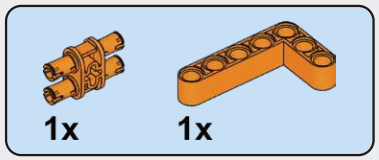

F35

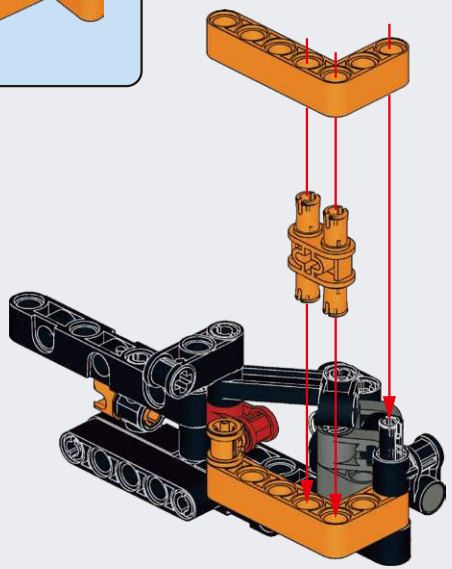

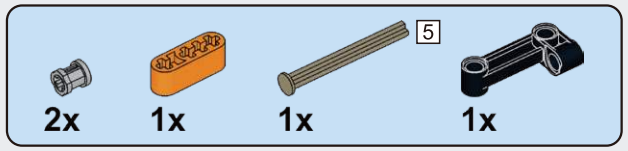

F36

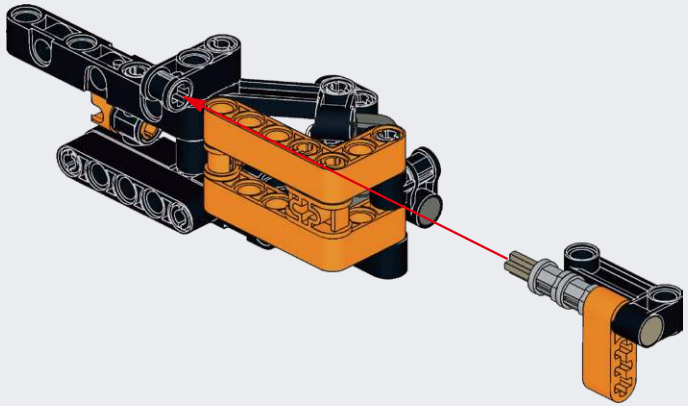

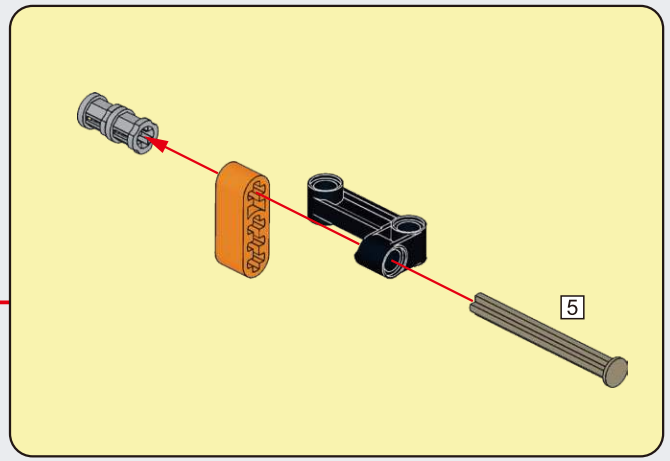

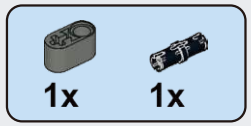

F37

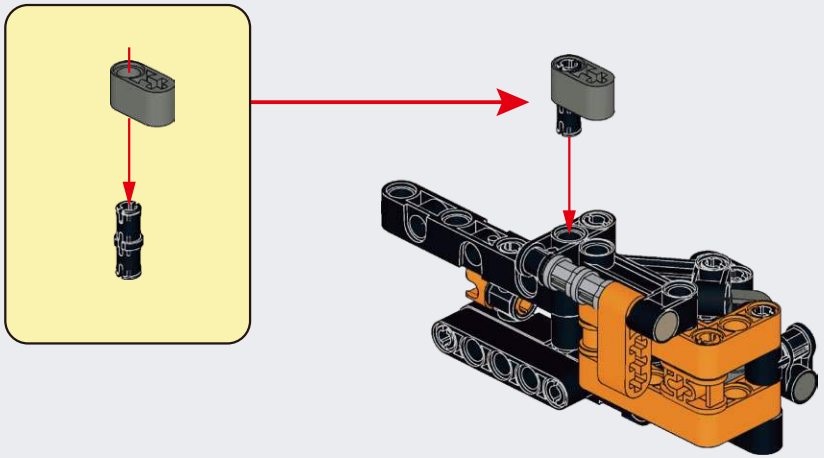

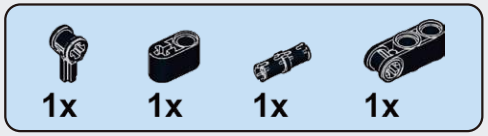

F38

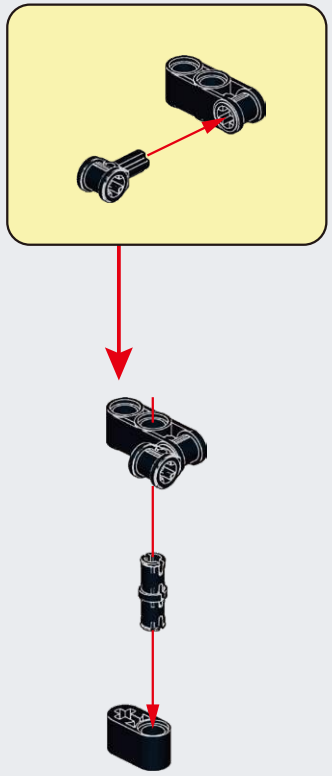

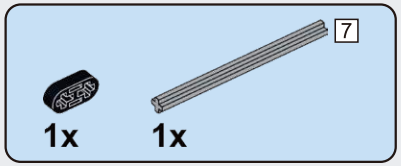

F39

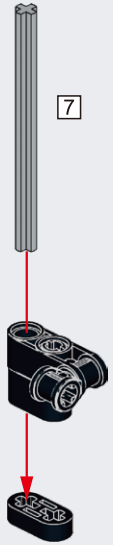

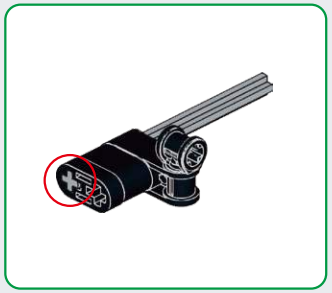

F40

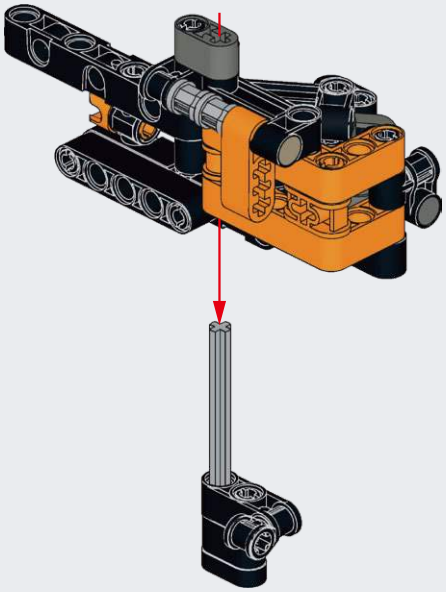

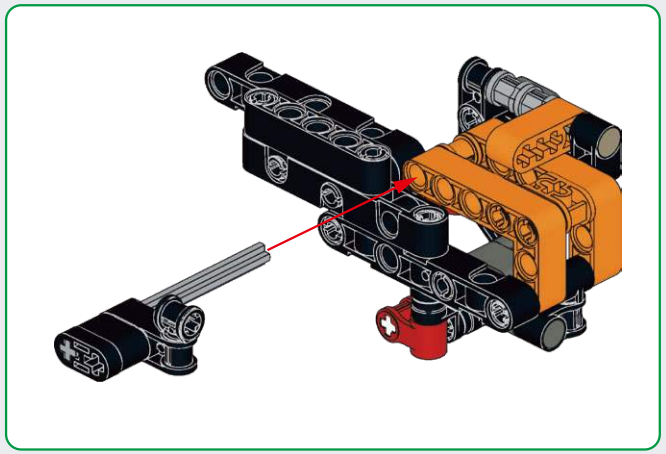

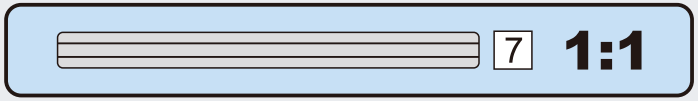

F41

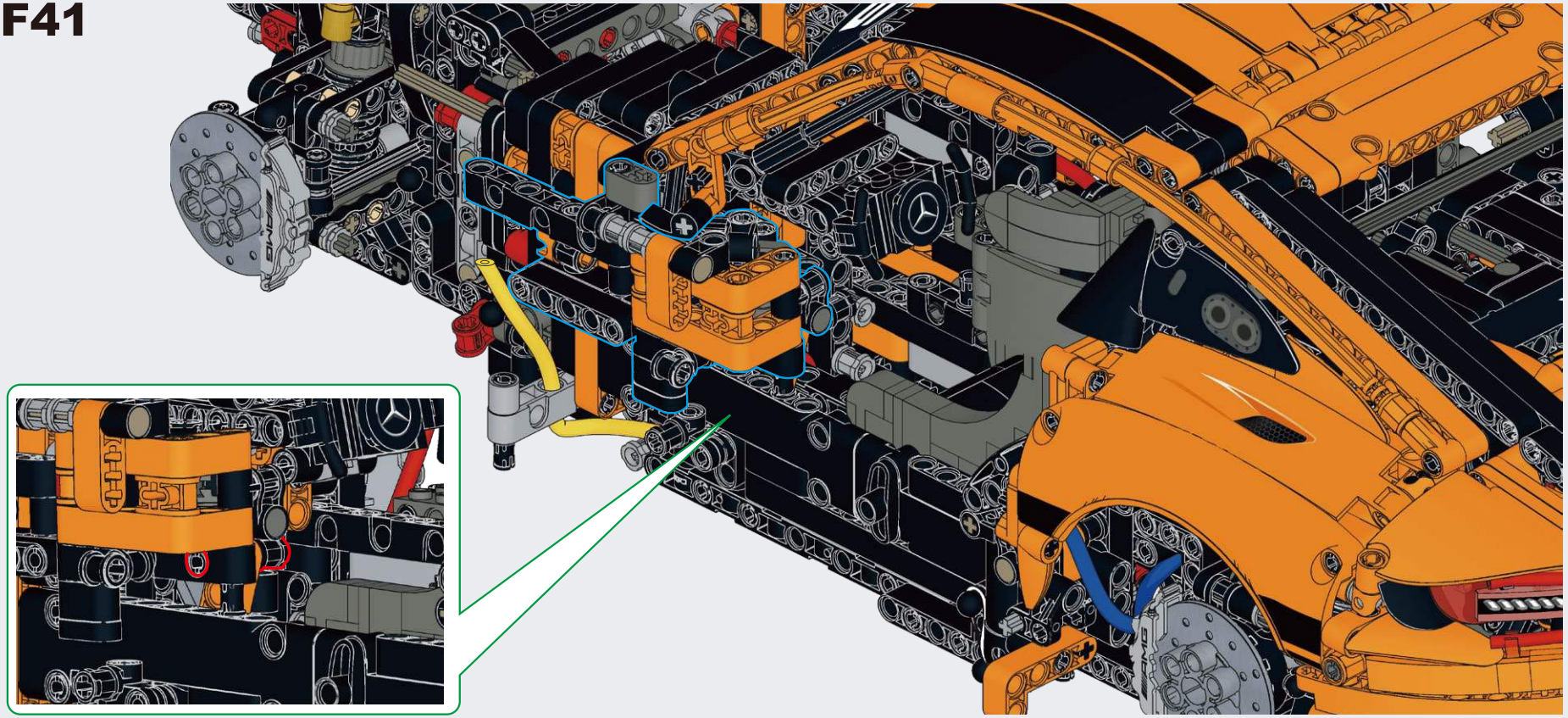

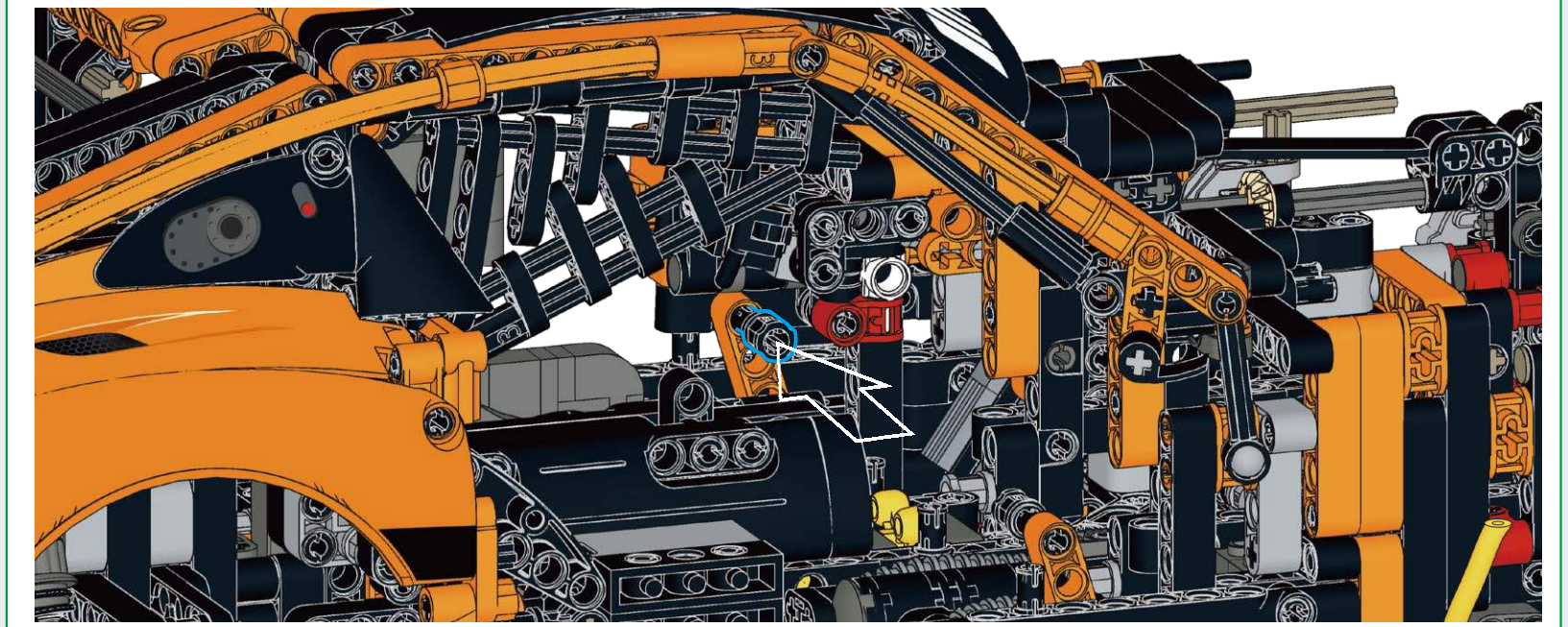

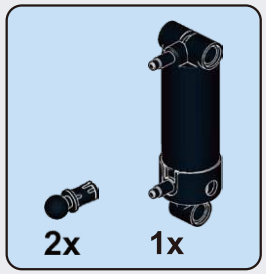

F42

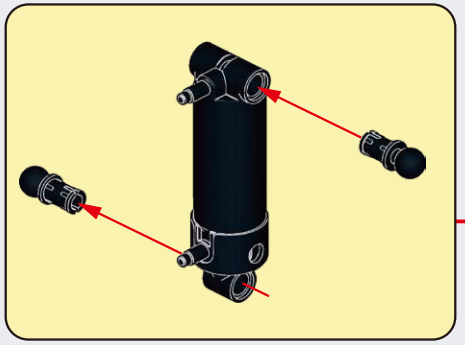

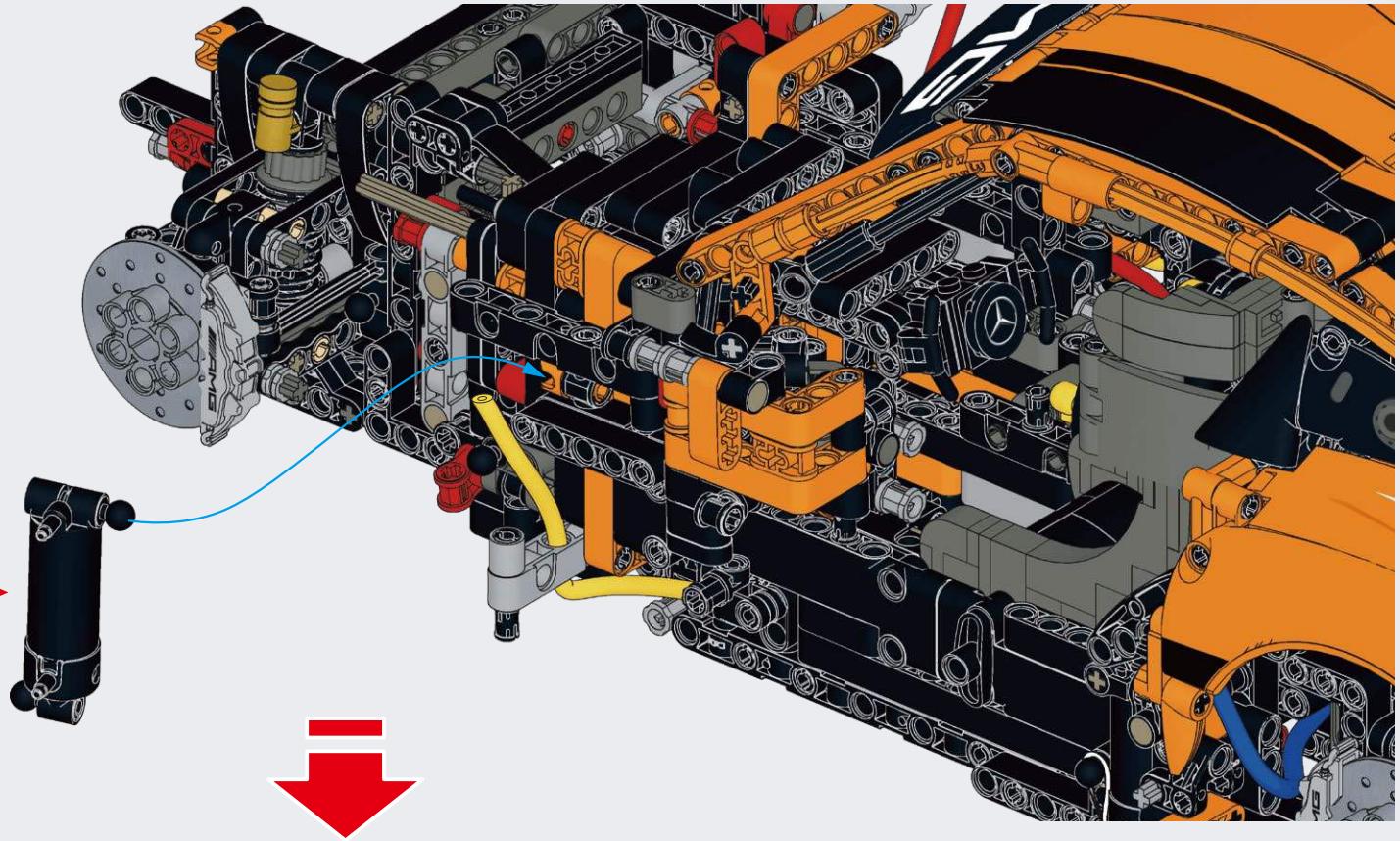

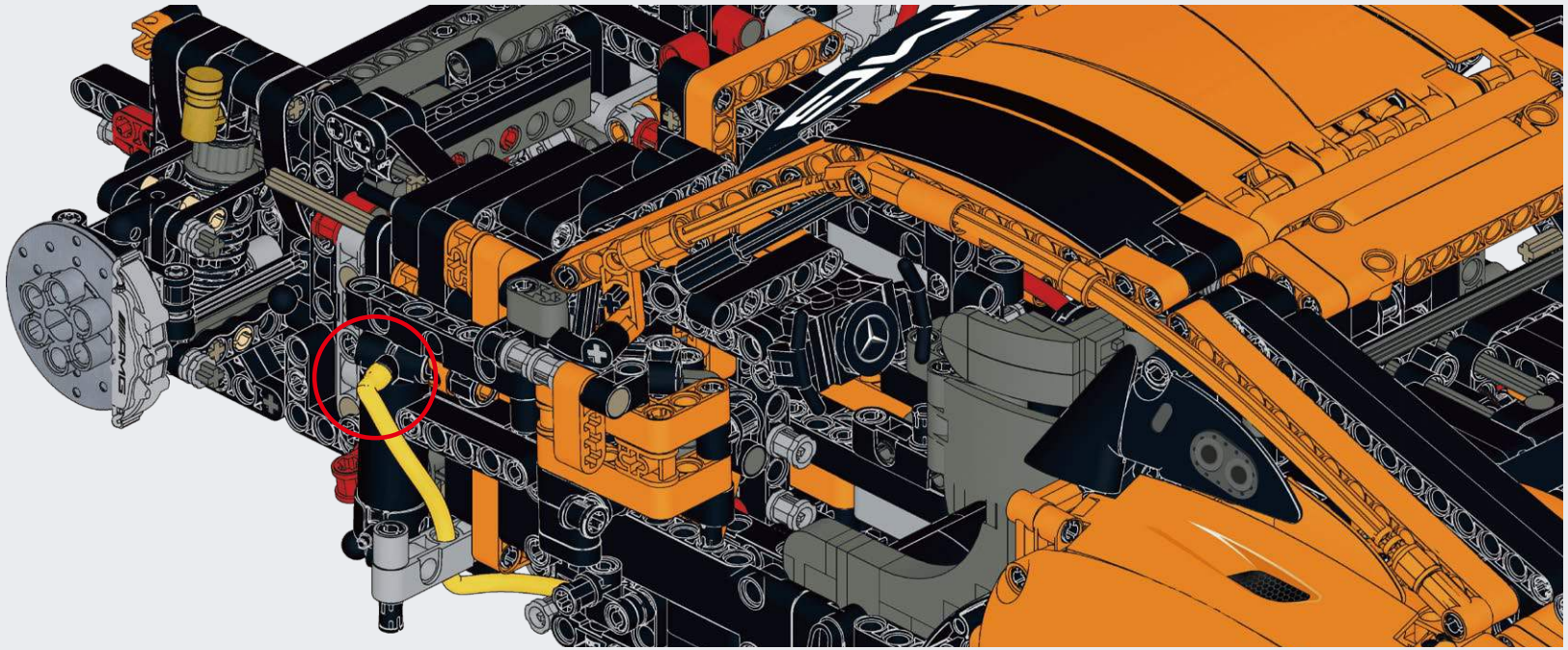

F43

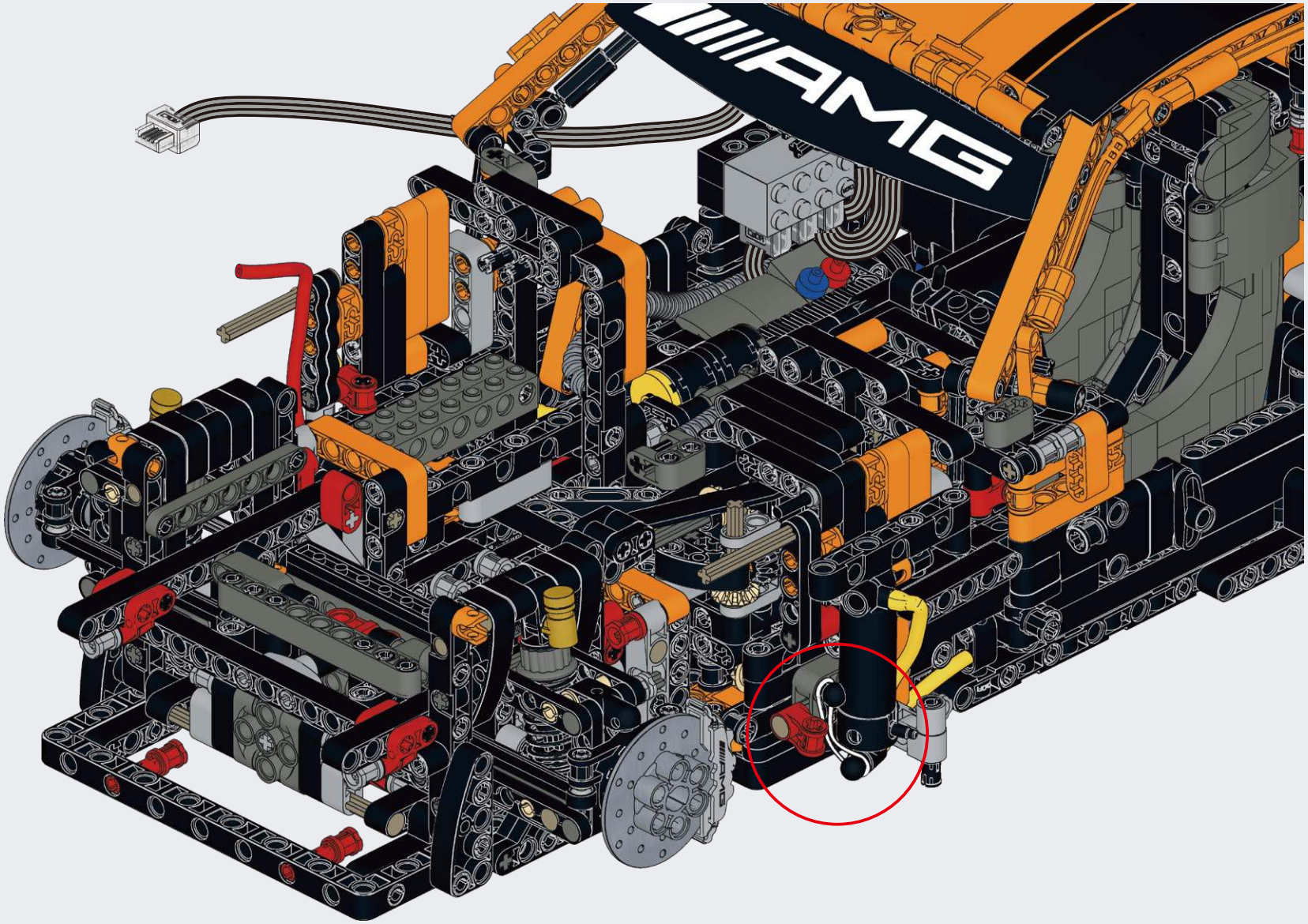

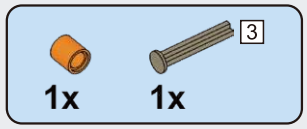

F44

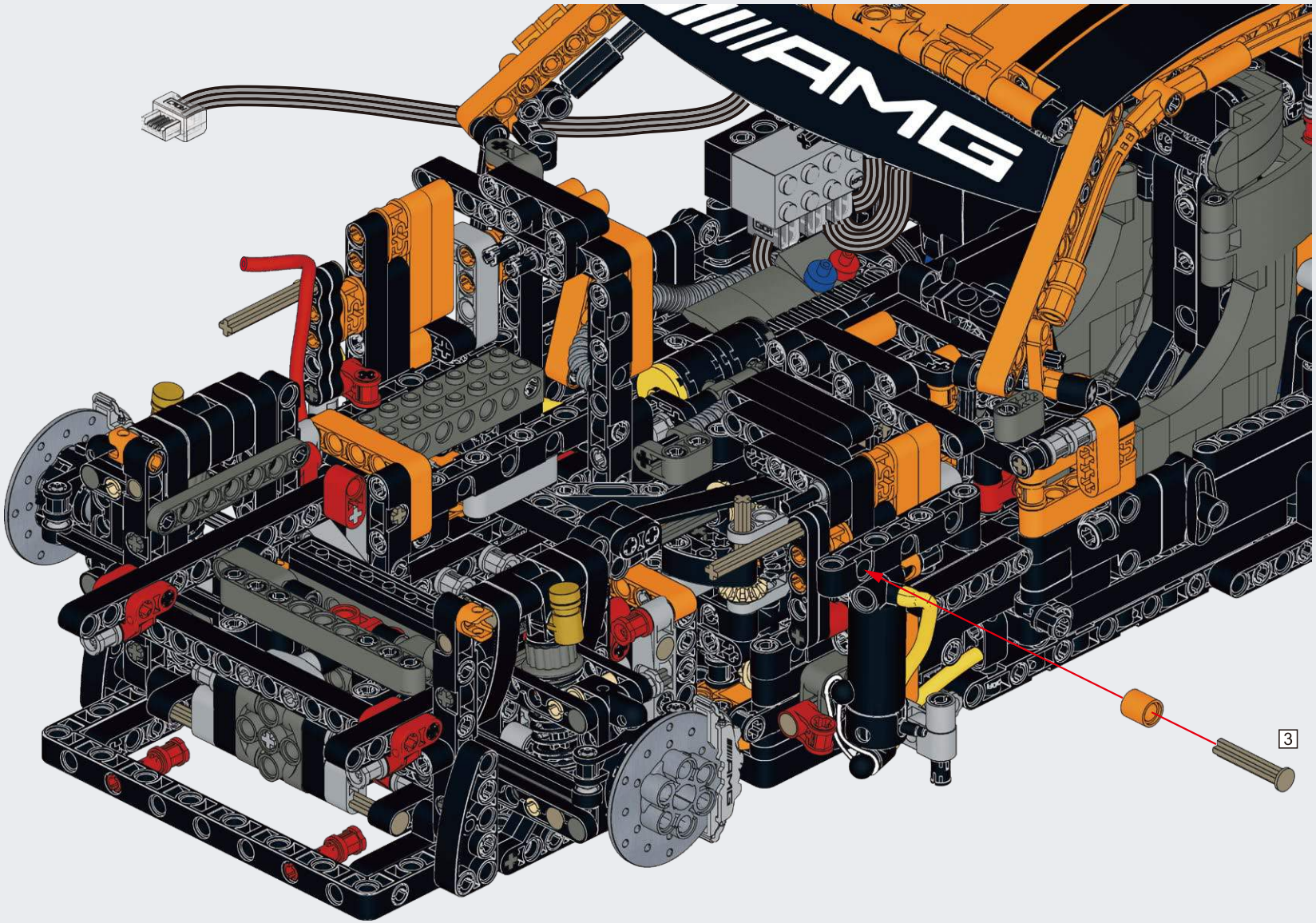

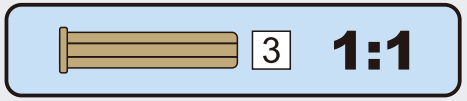

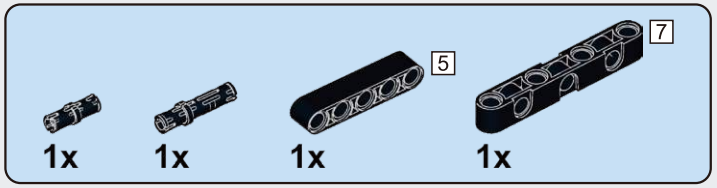

F45

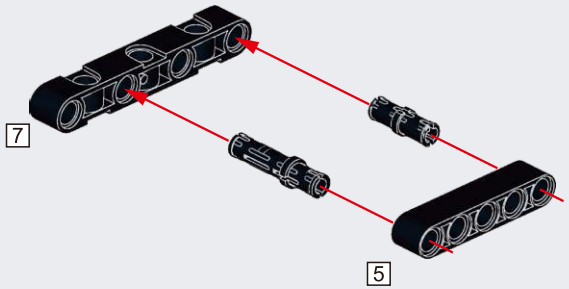

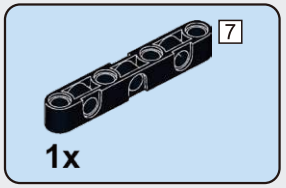

F46

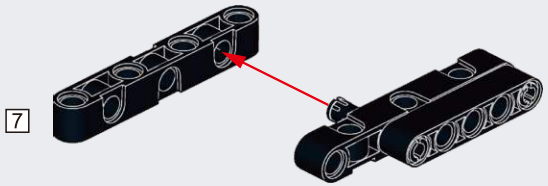

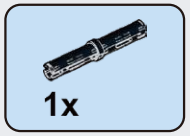

F47

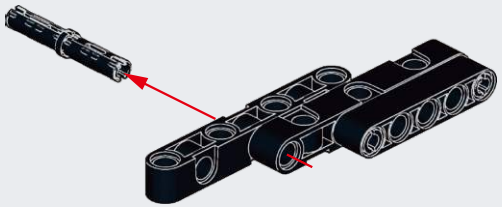

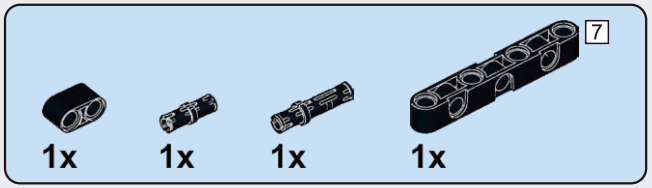

F48

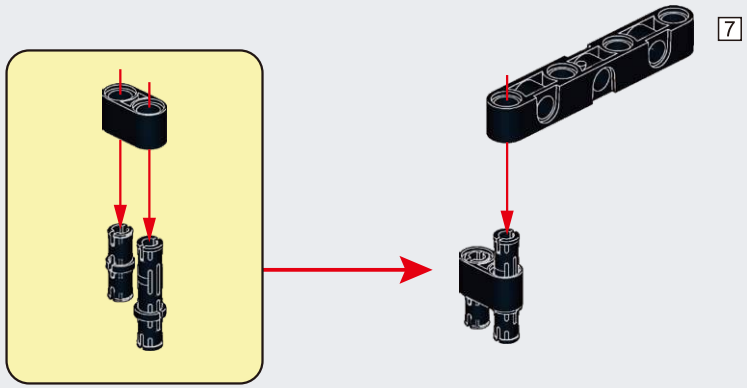

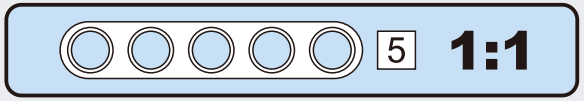

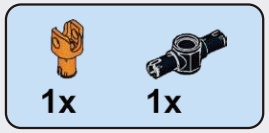

F49

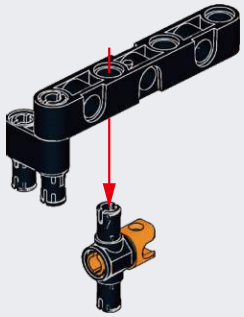

F50

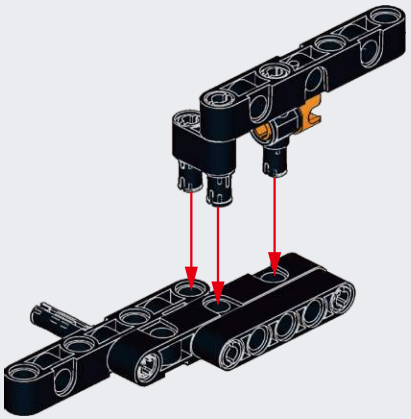

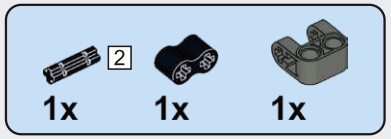

F51

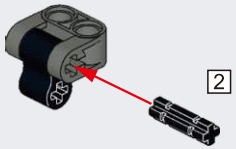

F52

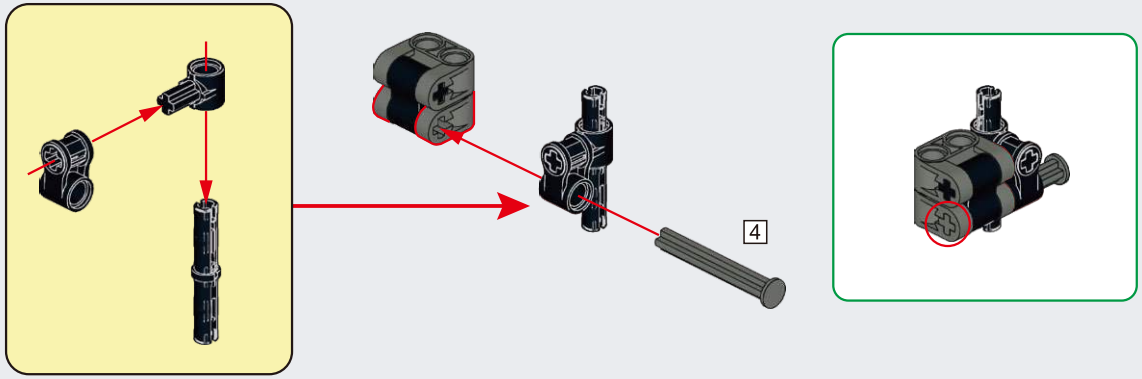

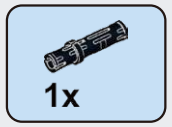

F53

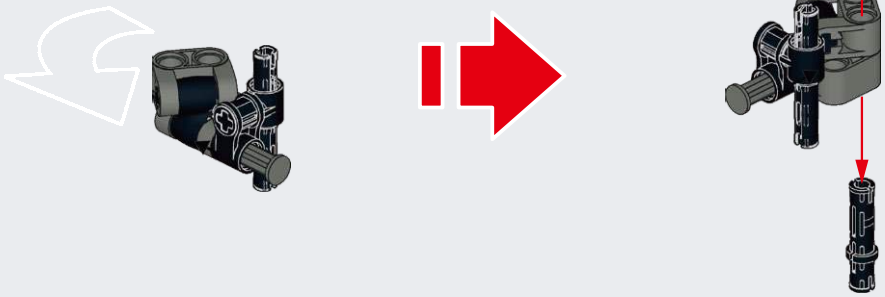

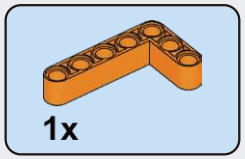

F54

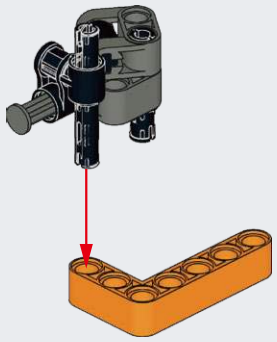

F55

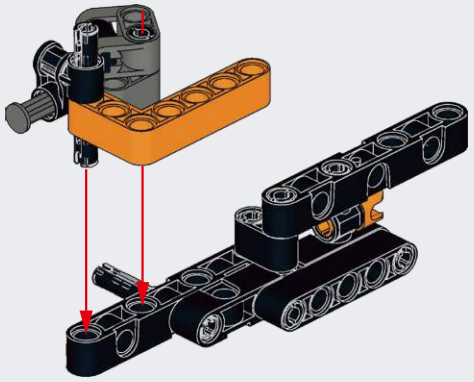

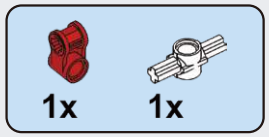

F56

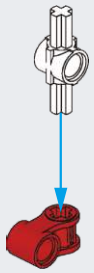

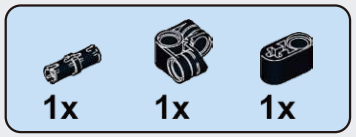

F57

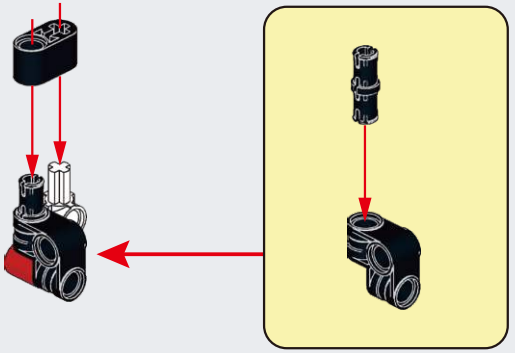

F58

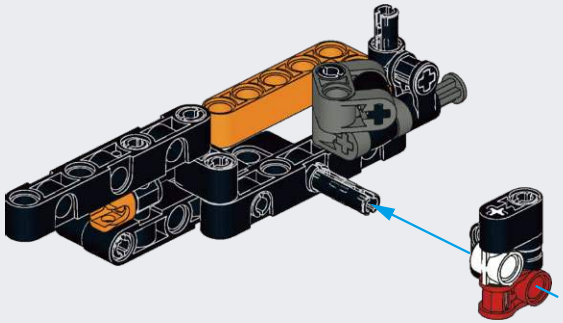

F59

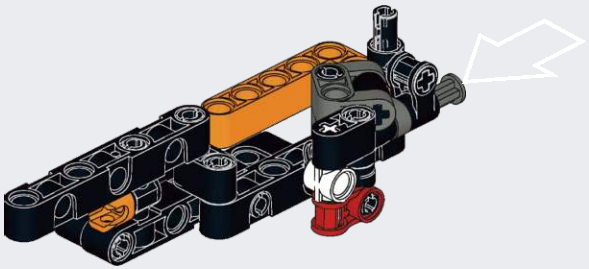

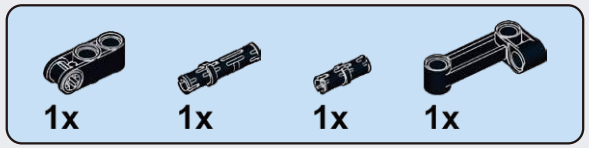

F60

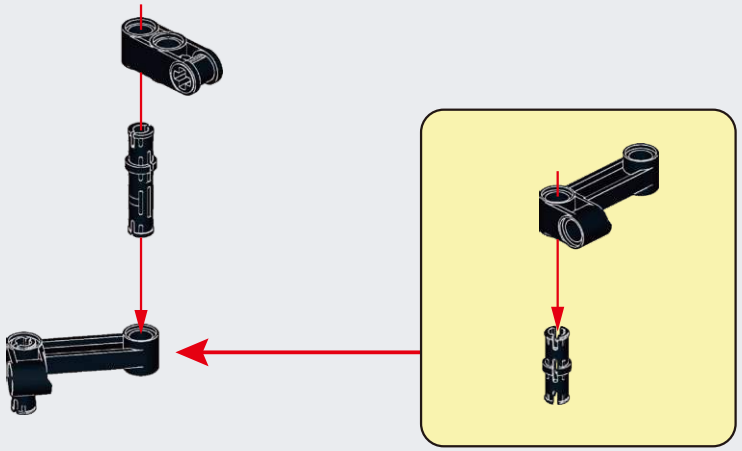

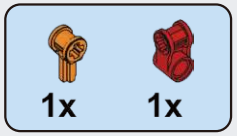

F61

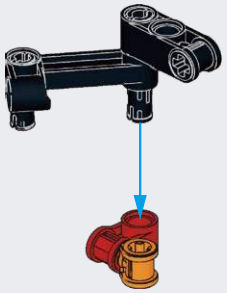

F62

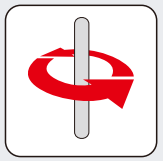

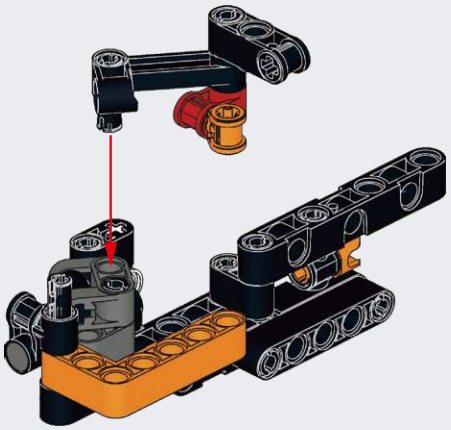

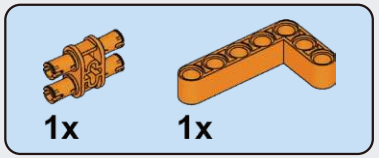

F63

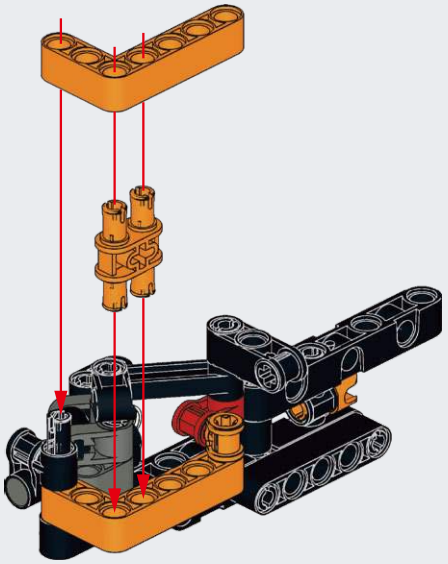

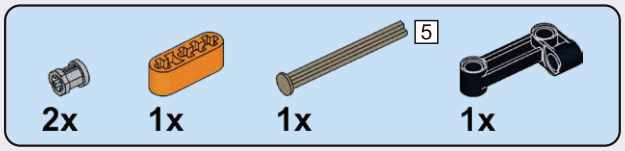

F64

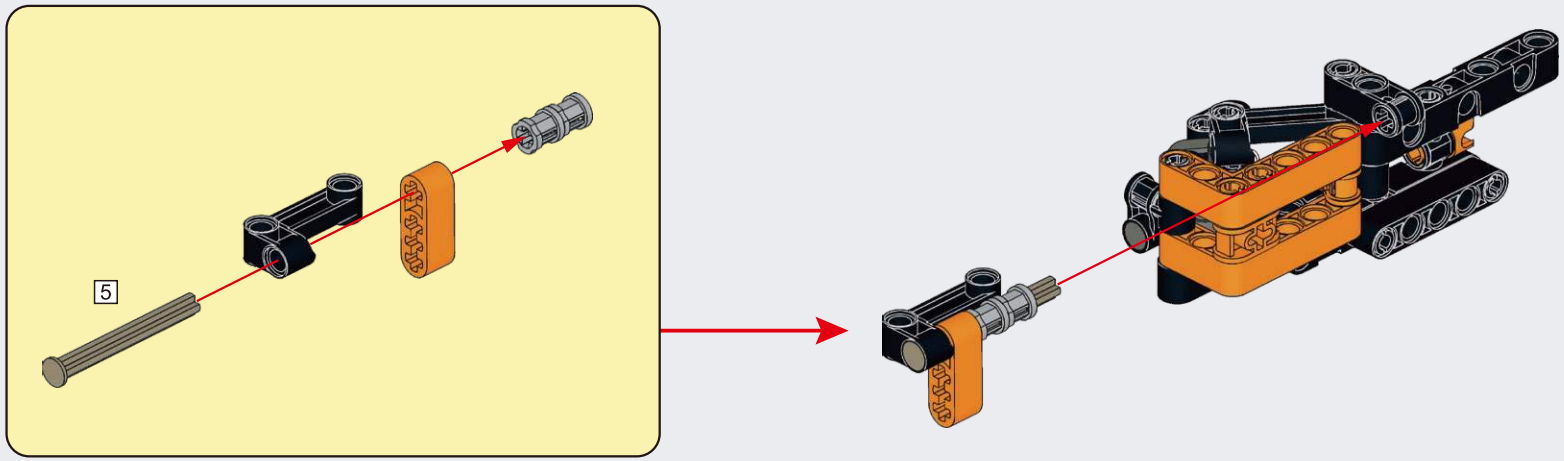

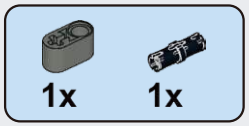

F65

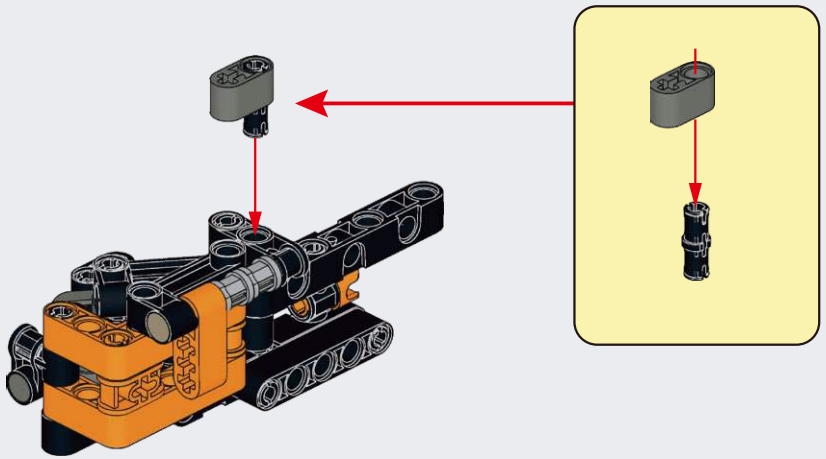

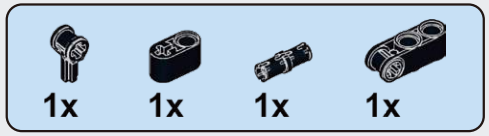

F66

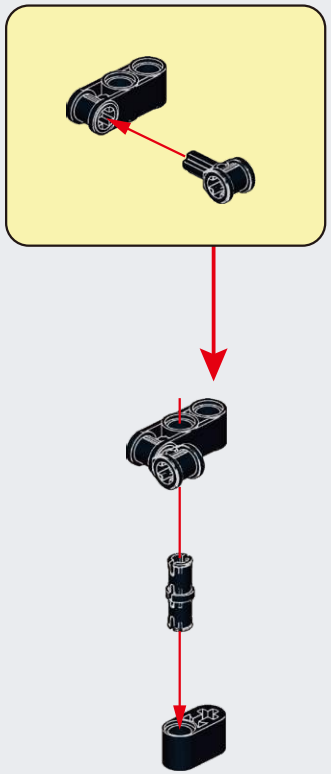

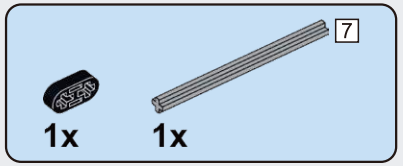

F67

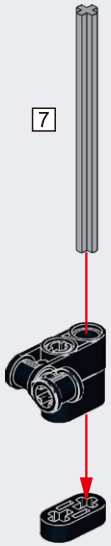

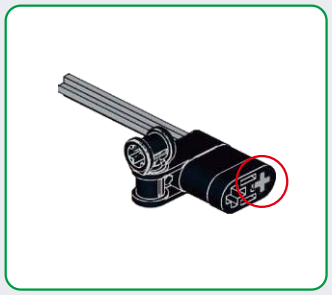

F68

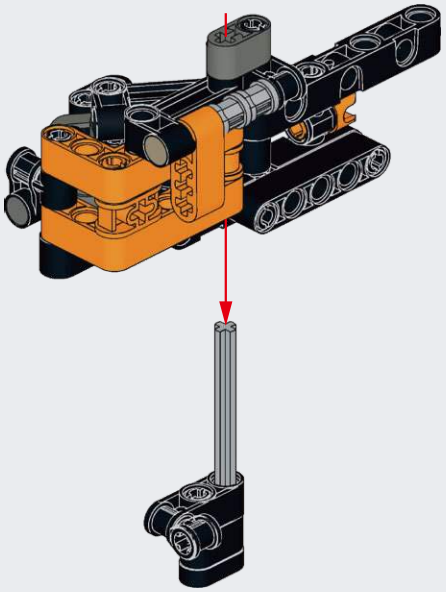

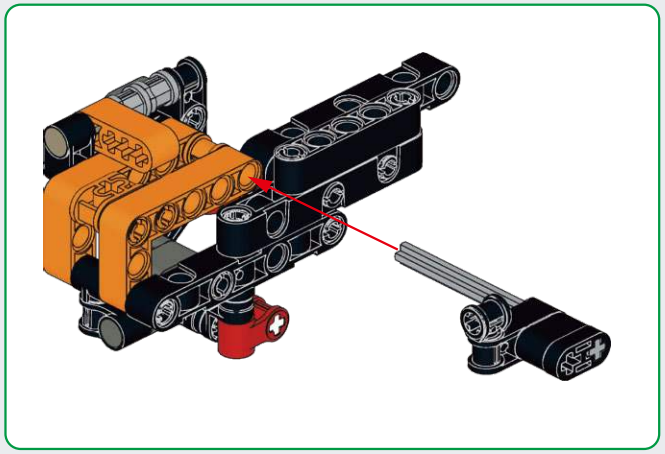

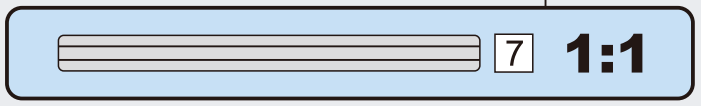

F69

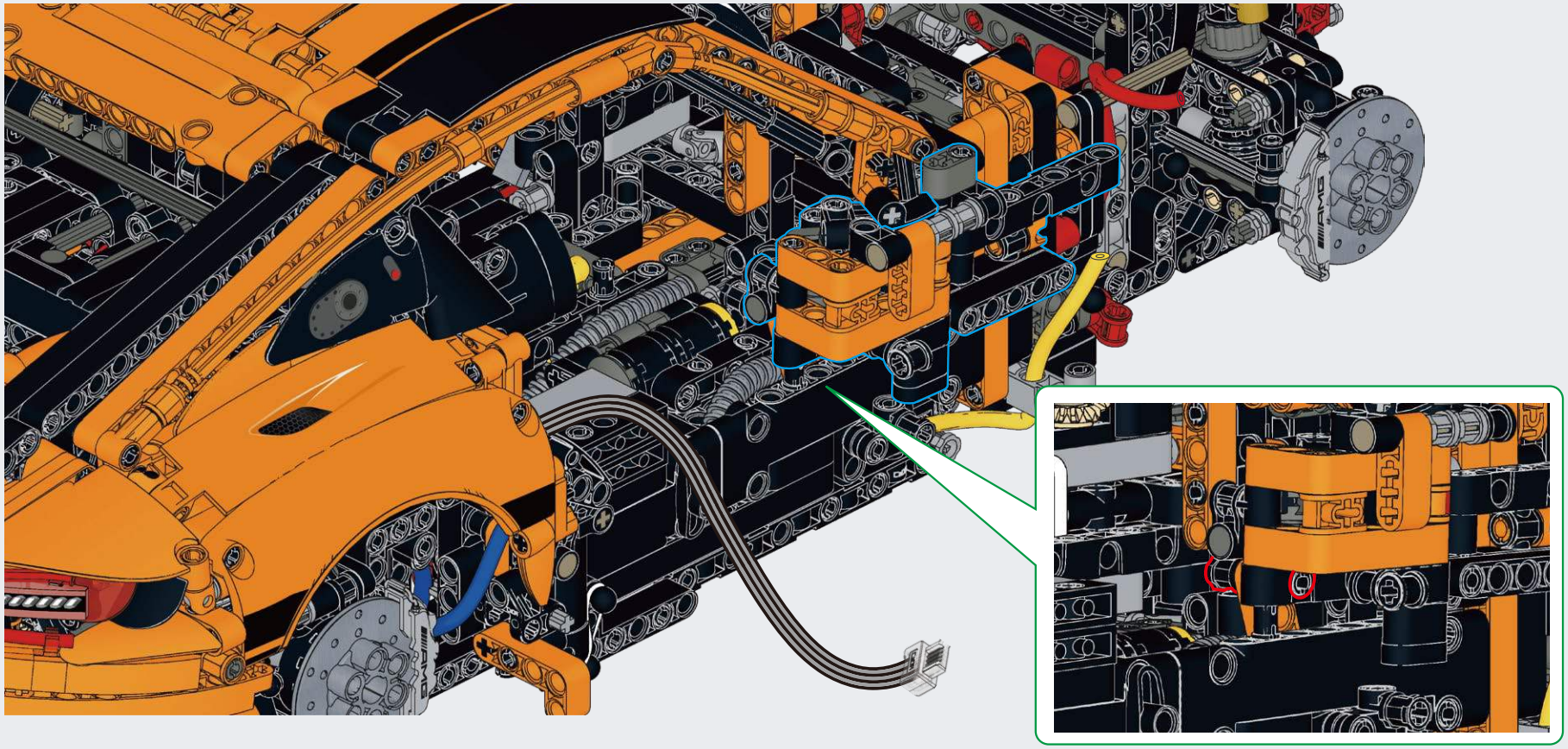

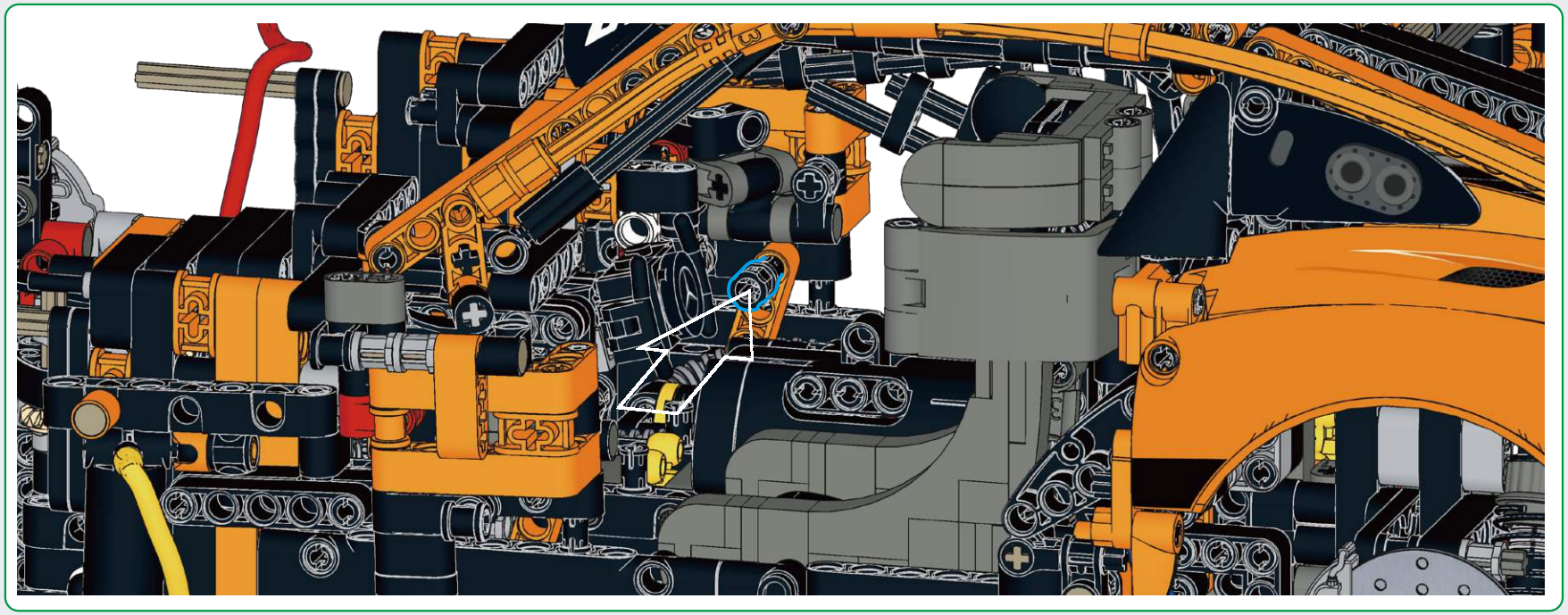

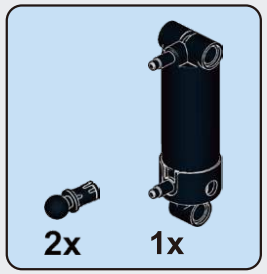

F70

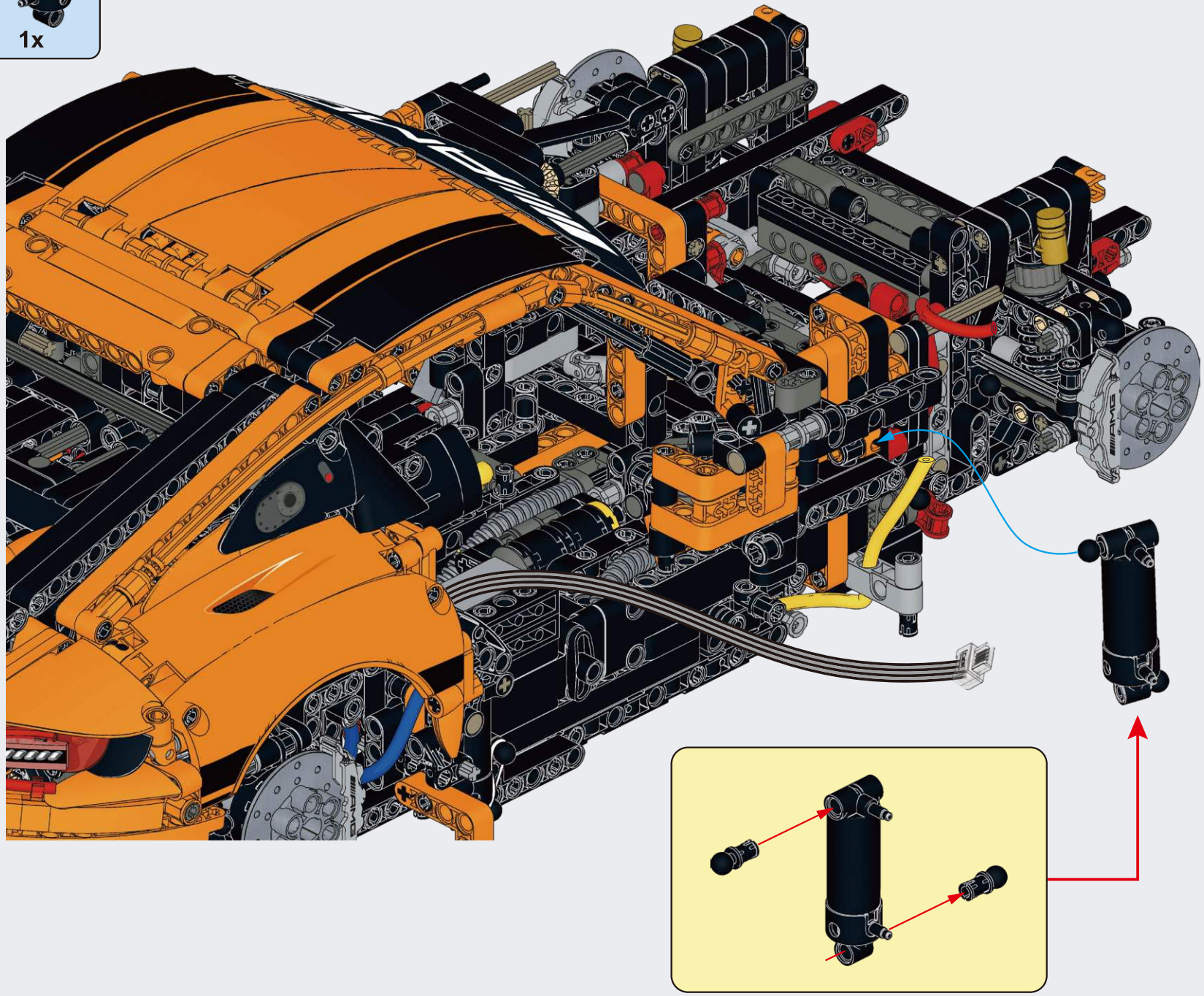

F71

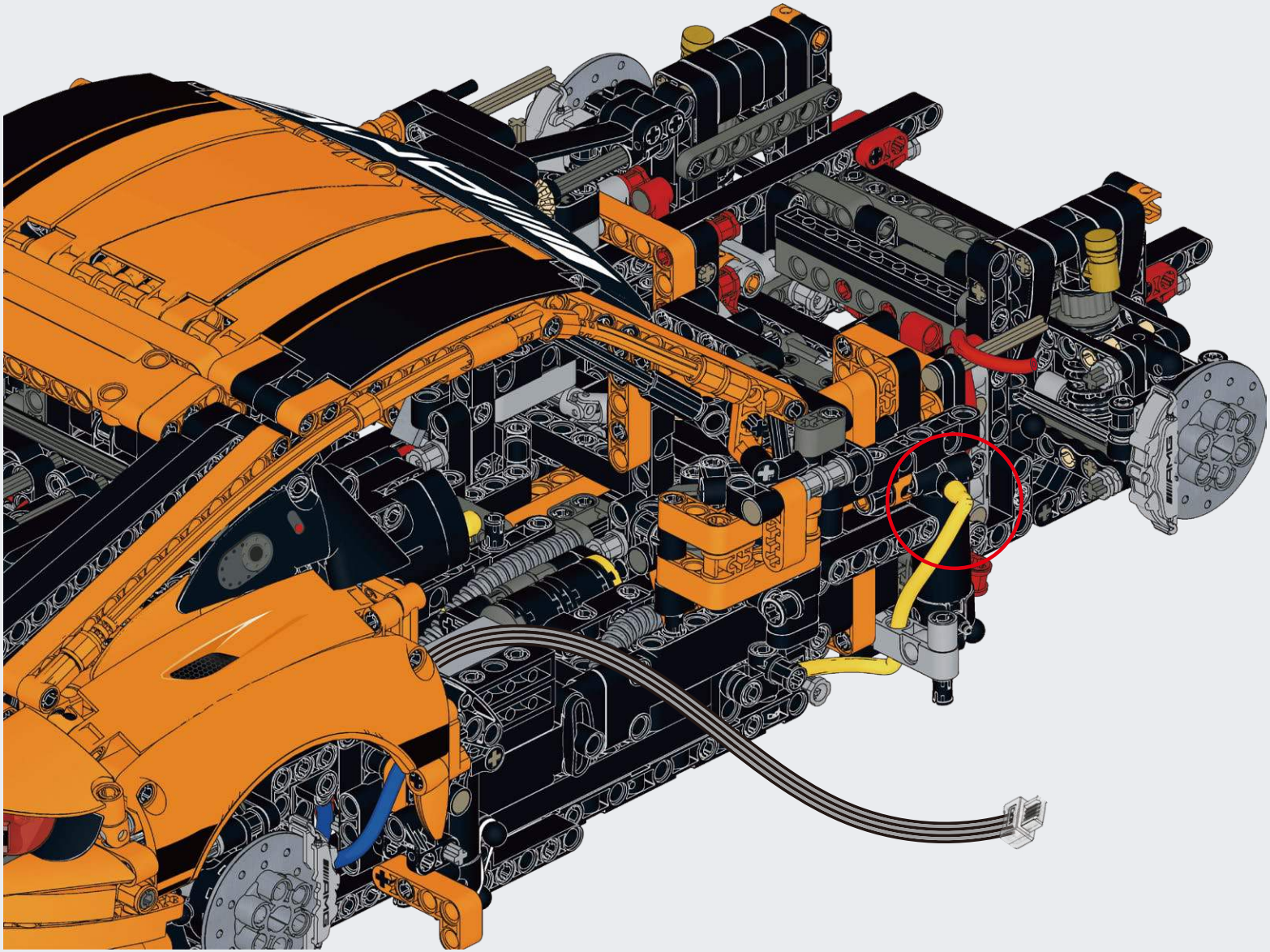

1x

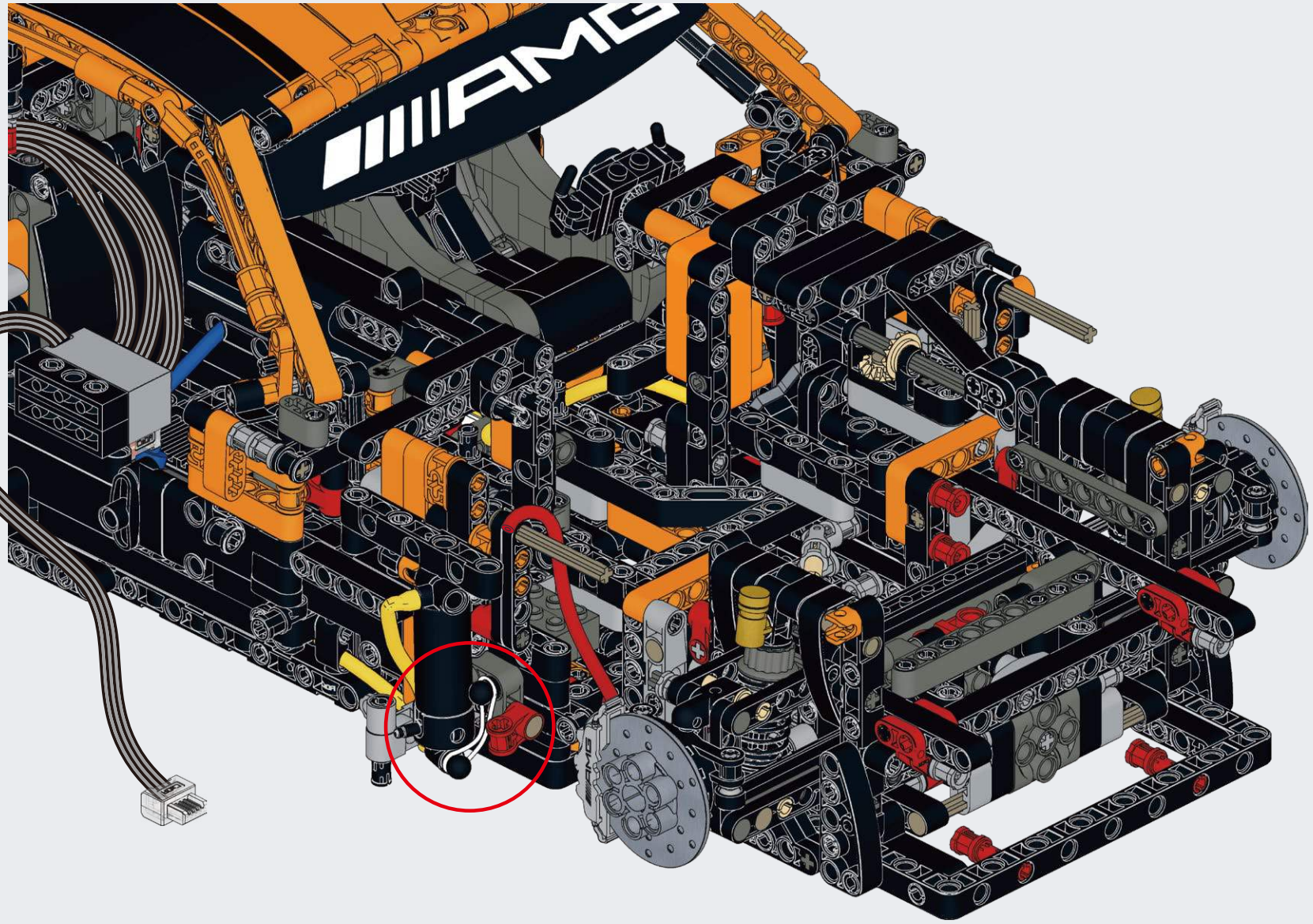
F72

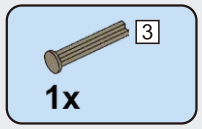

F73

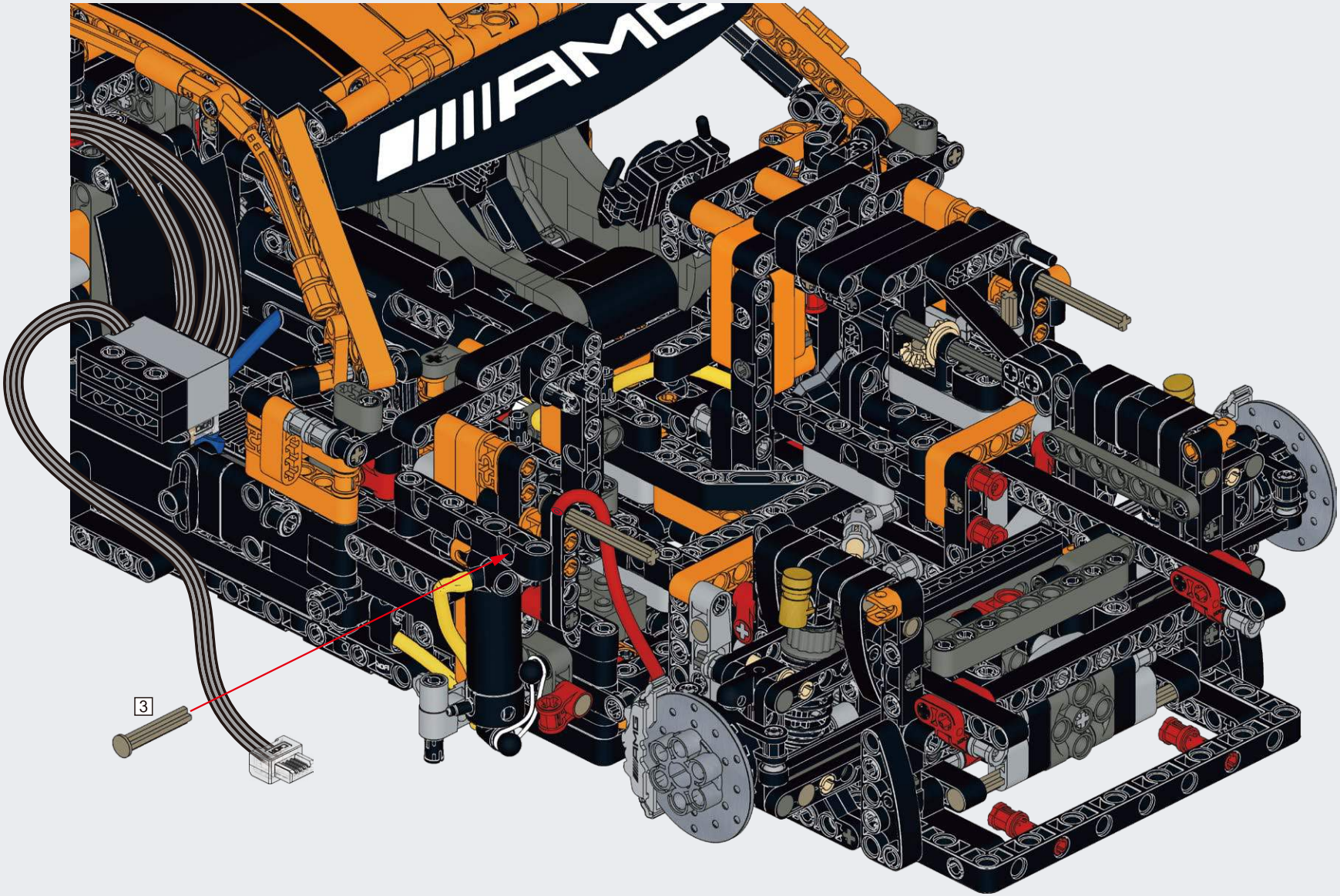

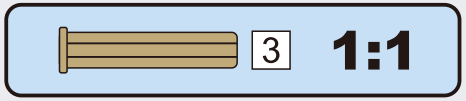

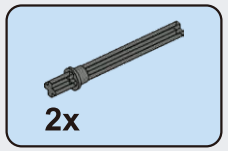

F74

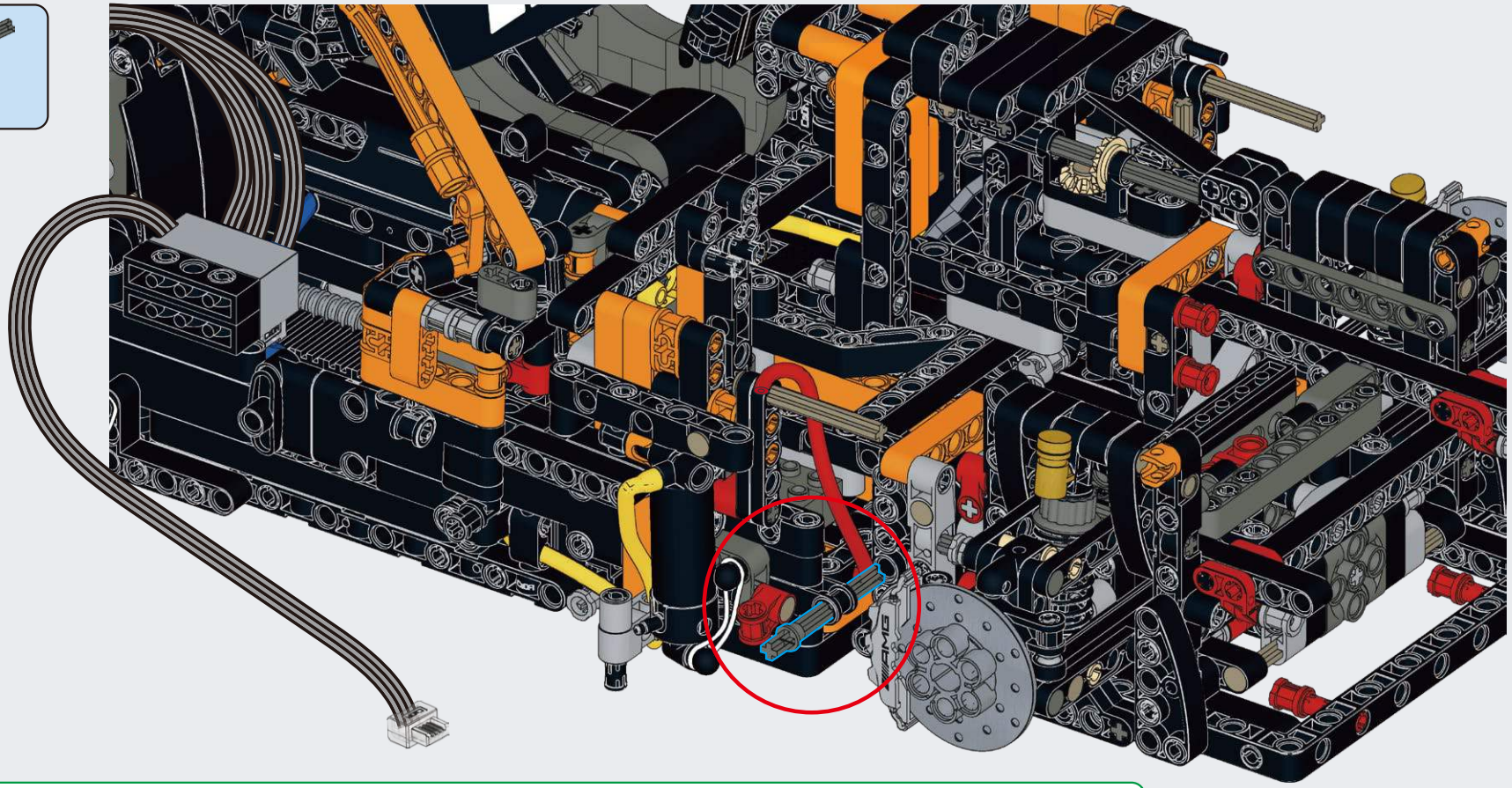

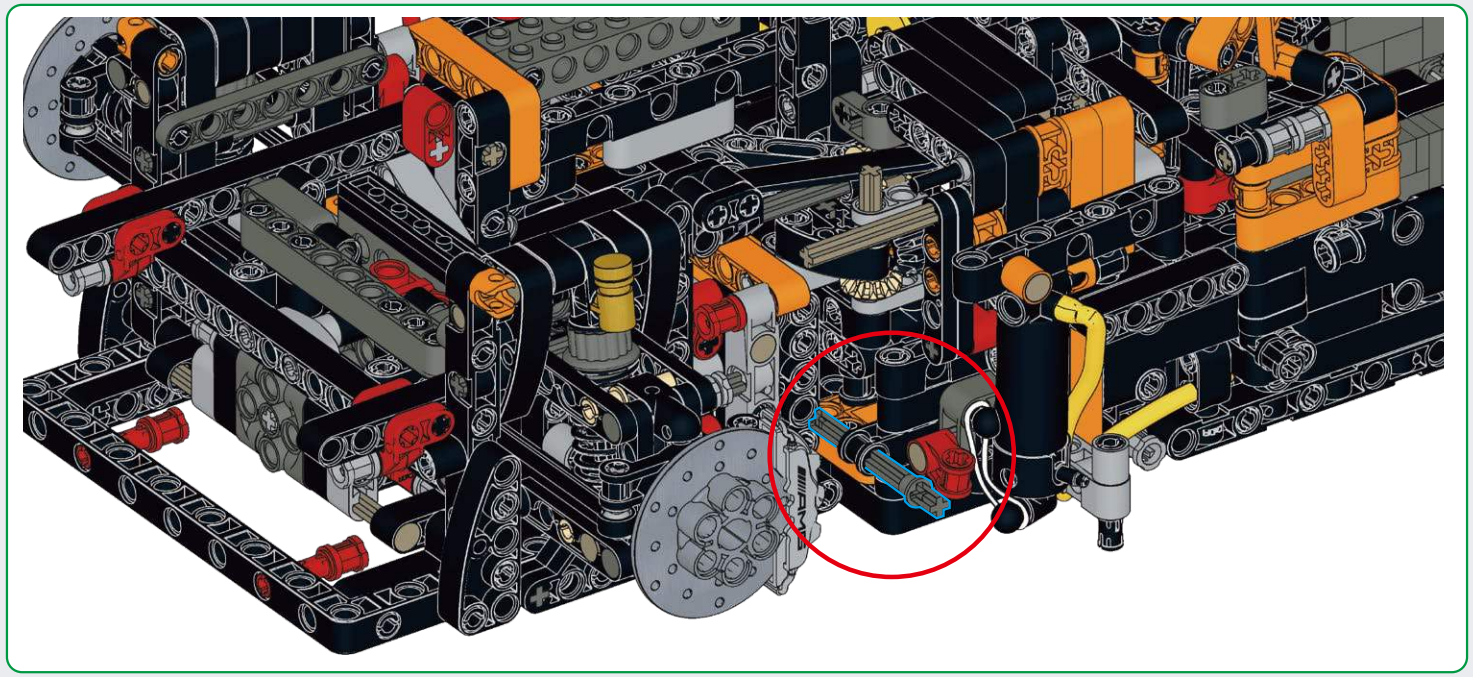

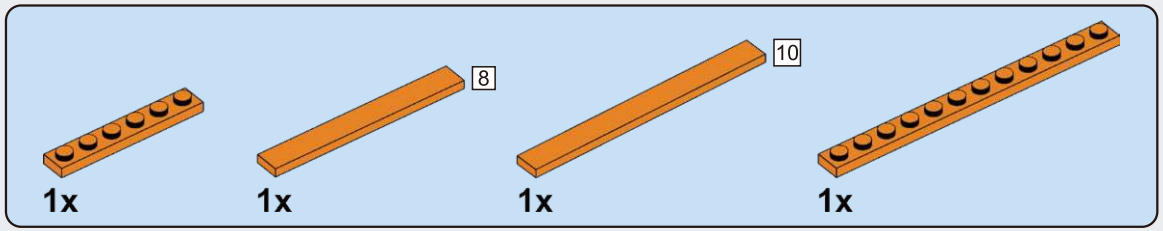

F75

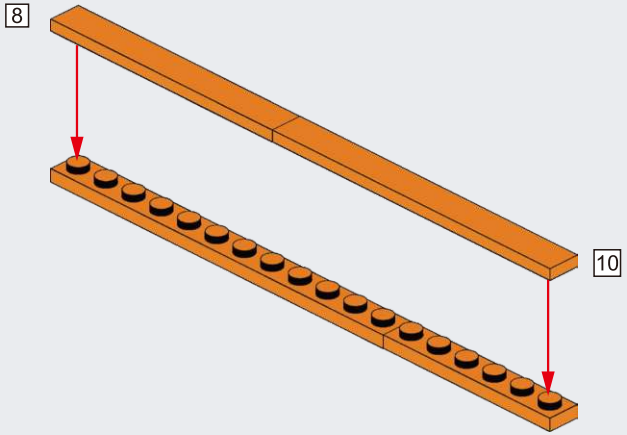

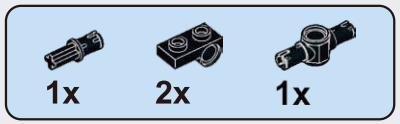

F76

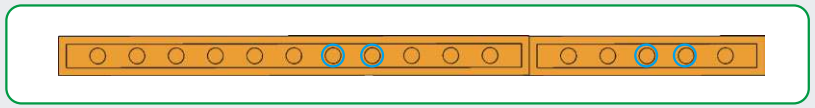

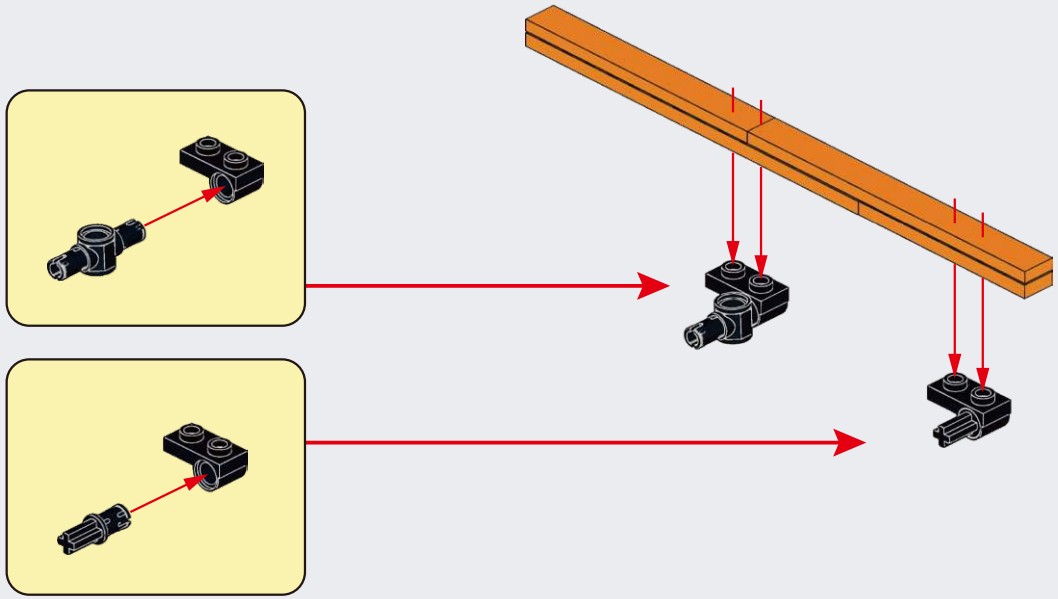

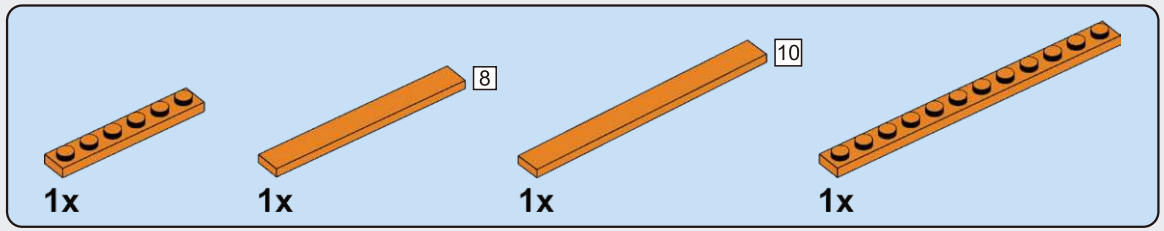

F77

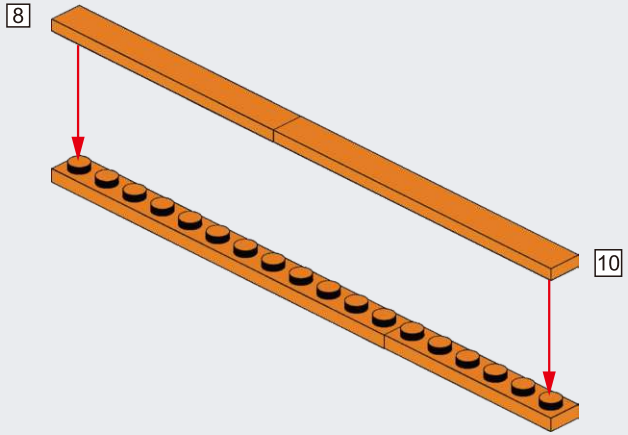

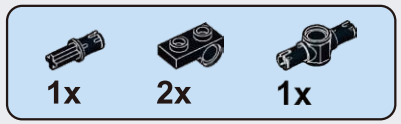

F78

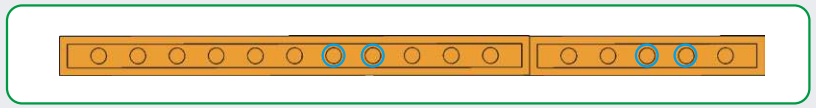

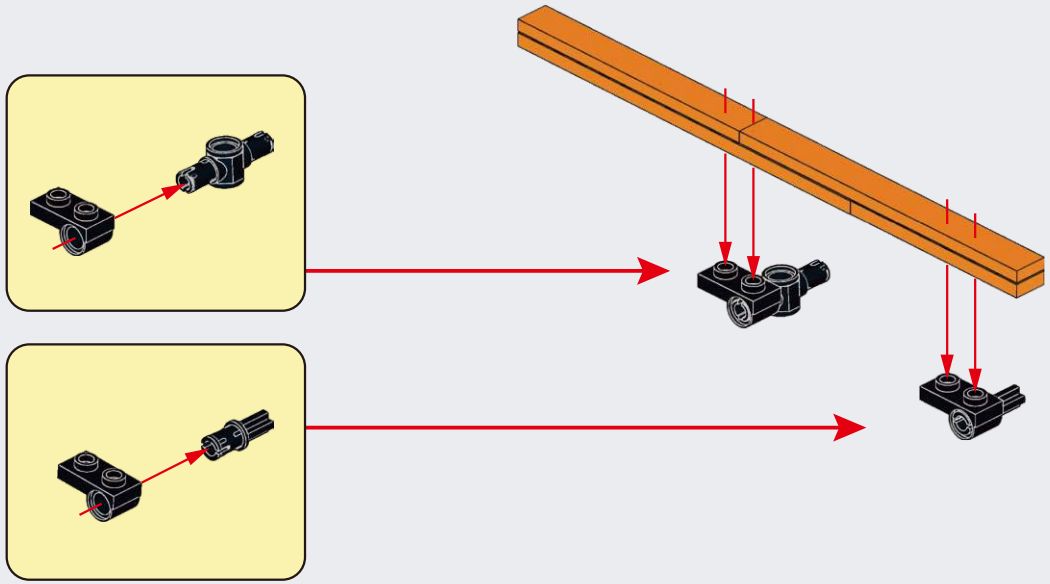

F79

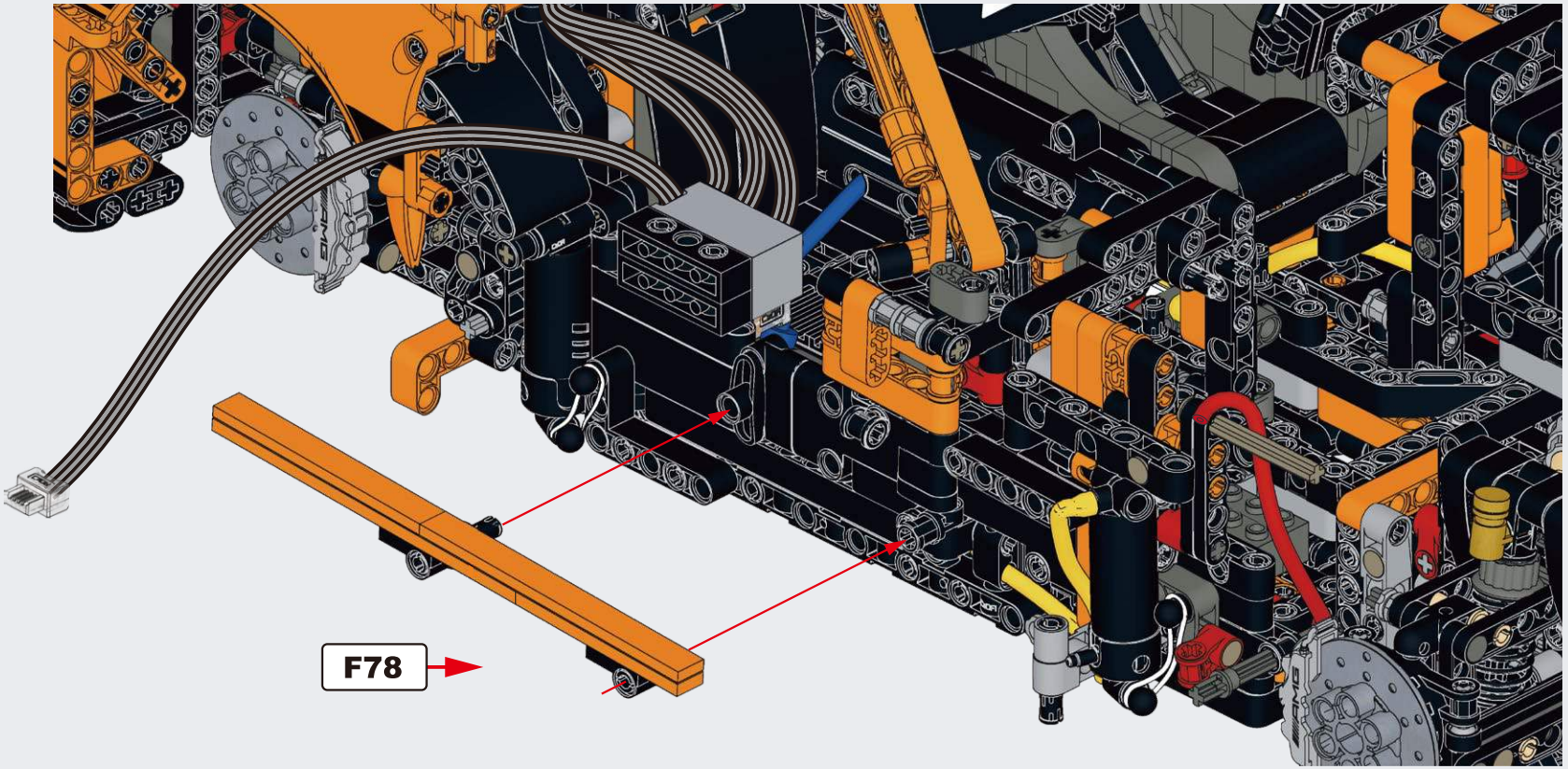

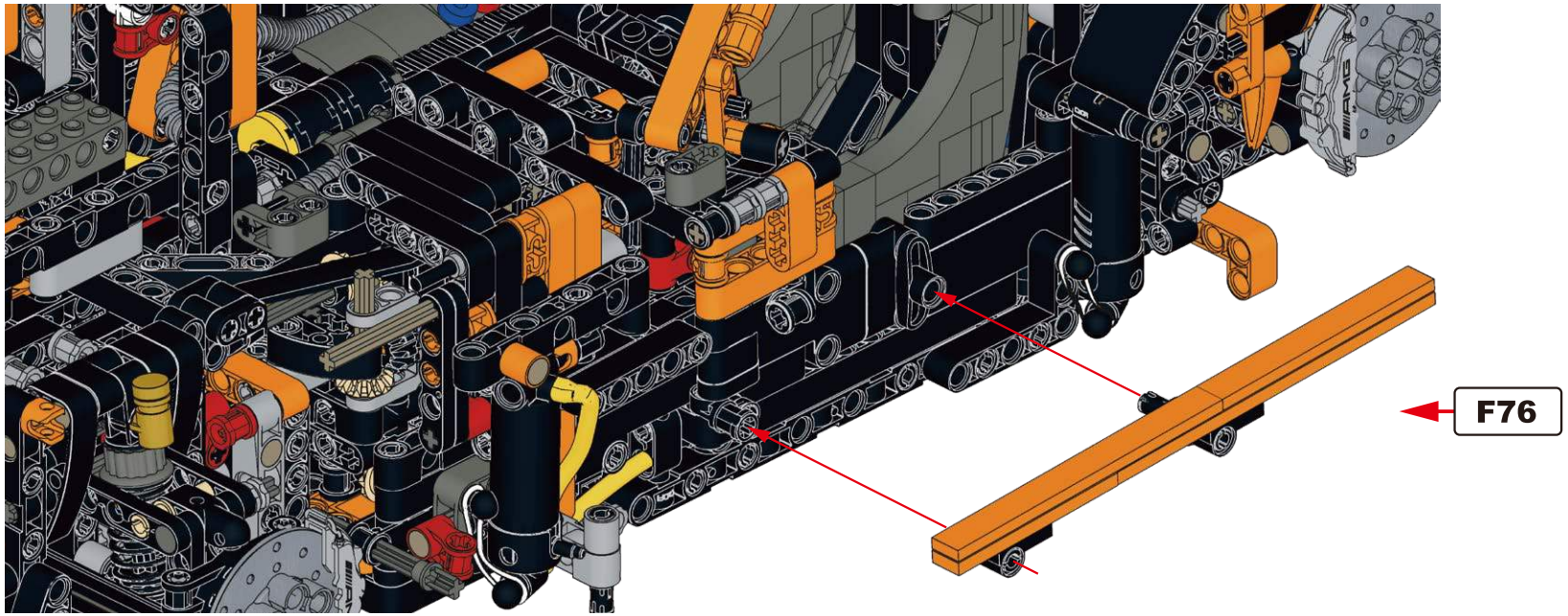

F80

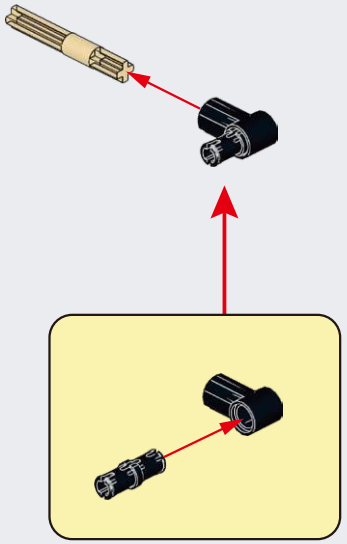

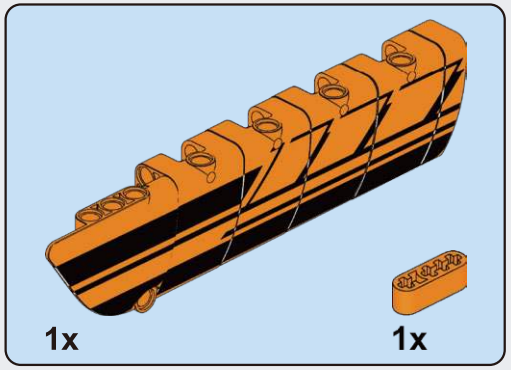

F81

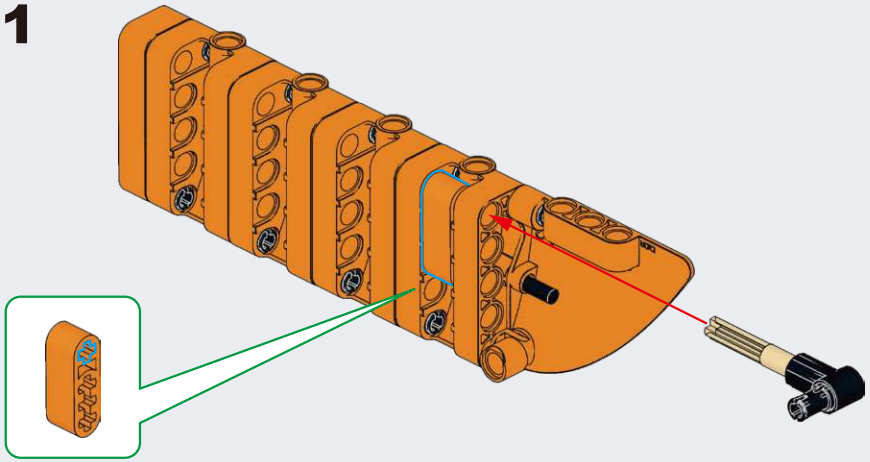

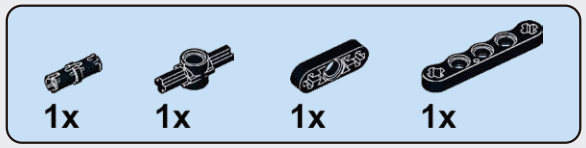

F82

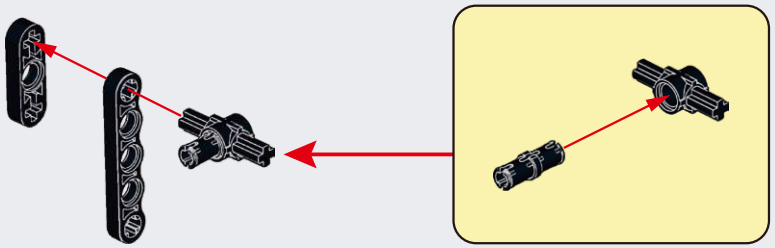

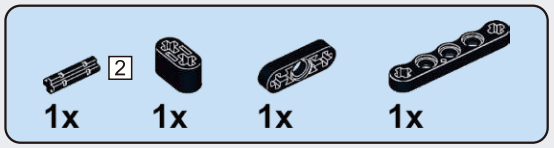

F83

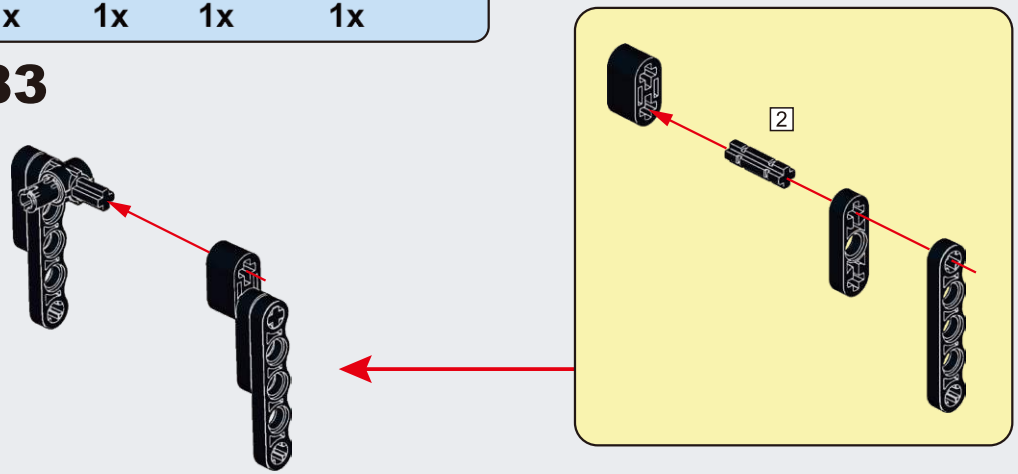

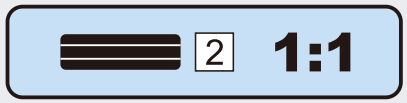

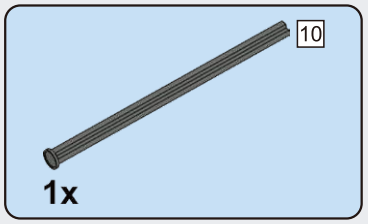

F84

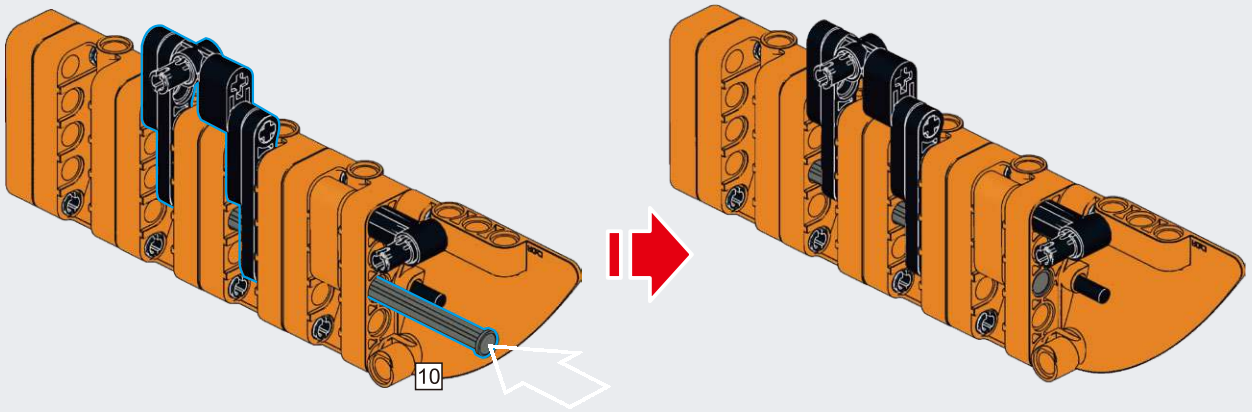

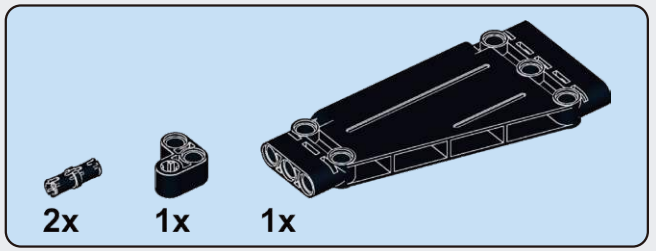

F85

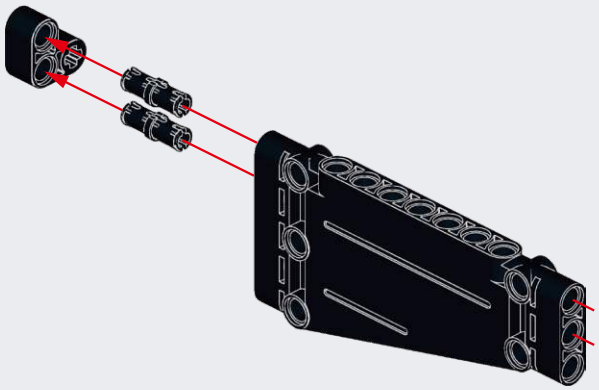

F86

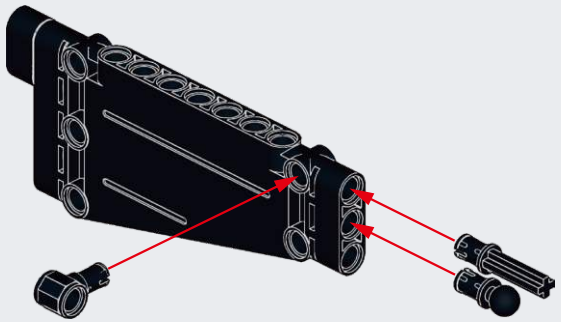

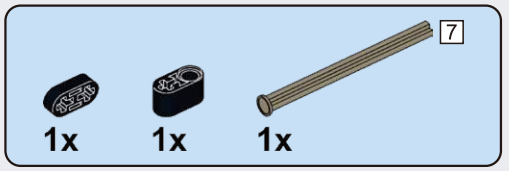

F87

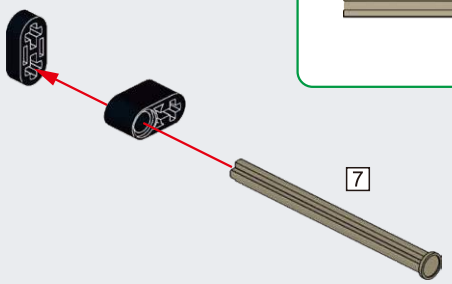

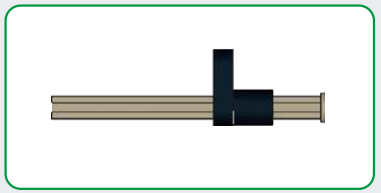

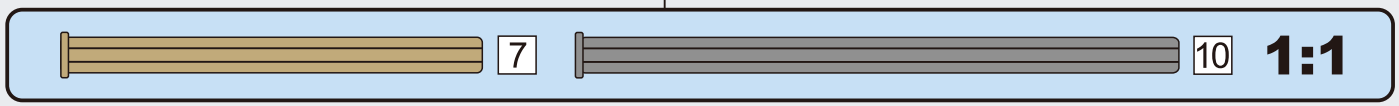

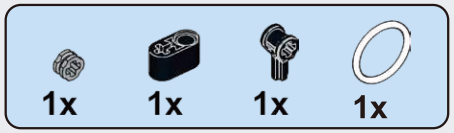

F88

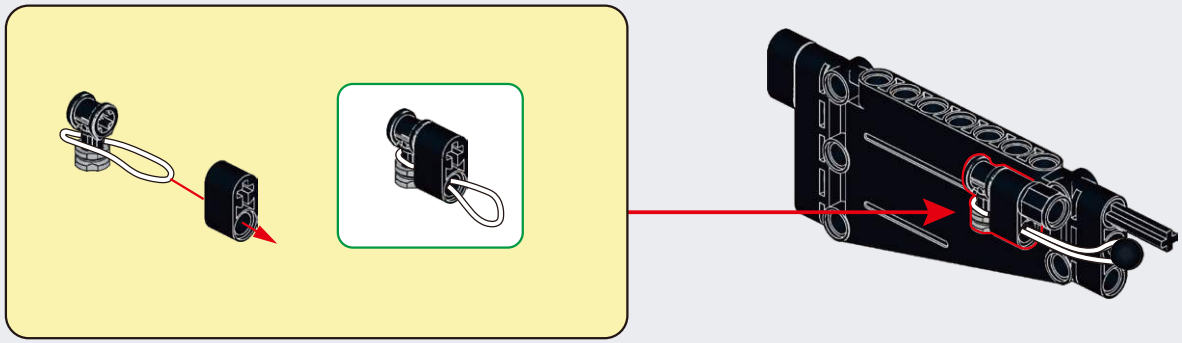

F89

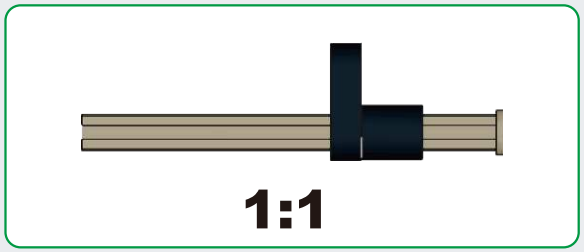

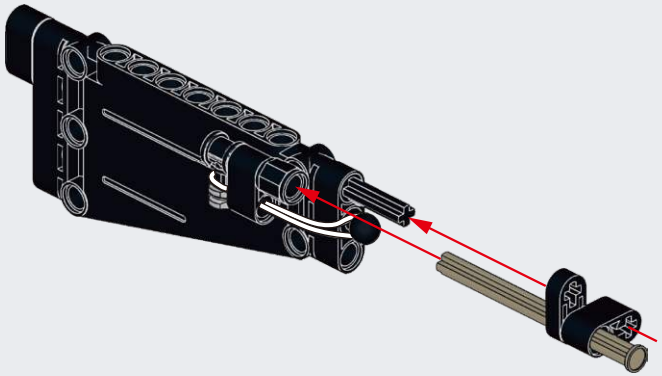

F90

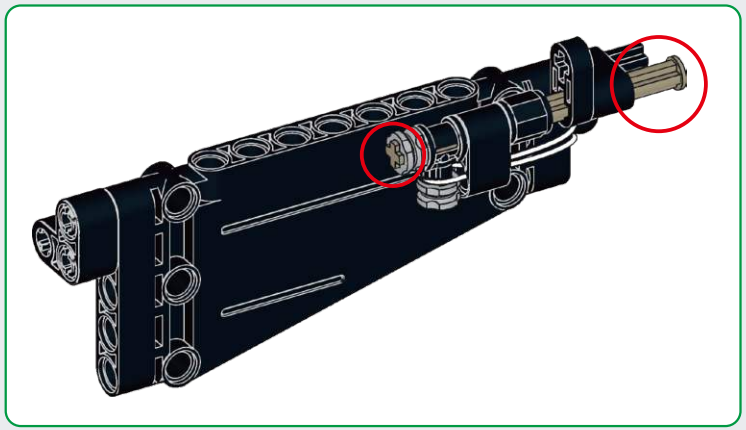

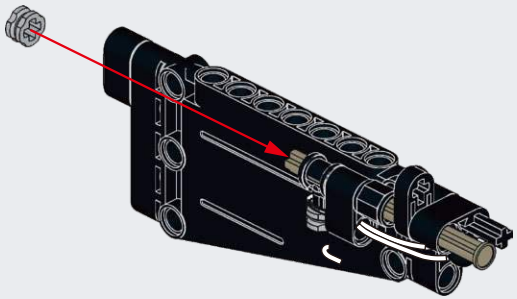

F91

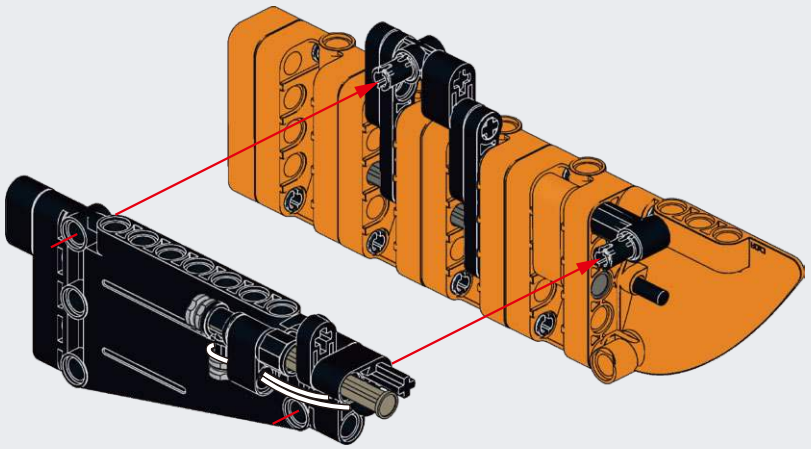

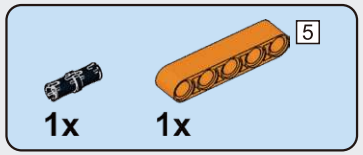

F92

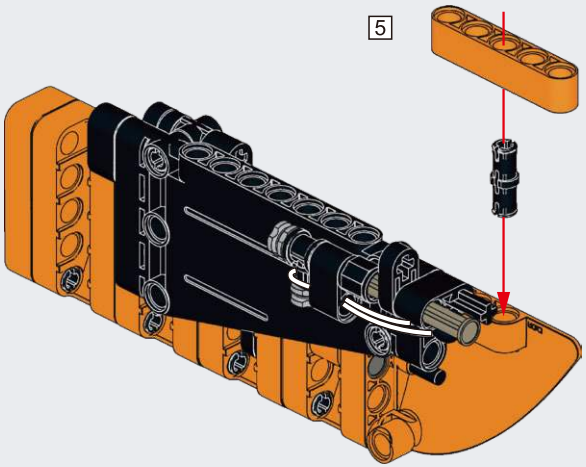

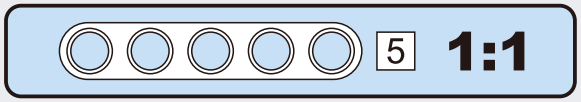

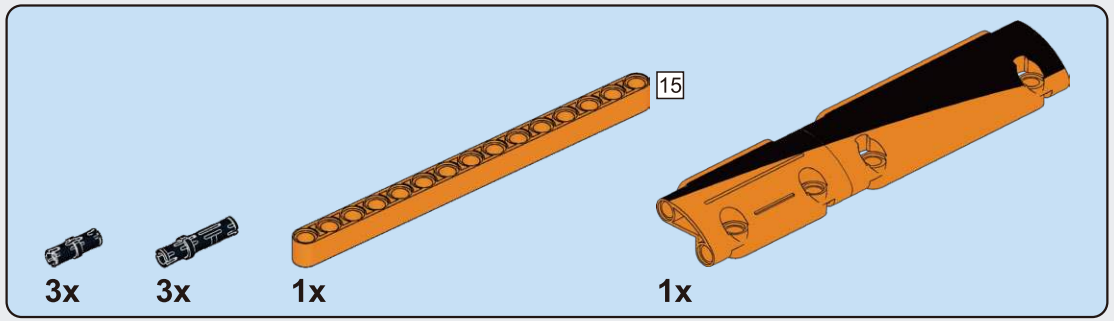

F93

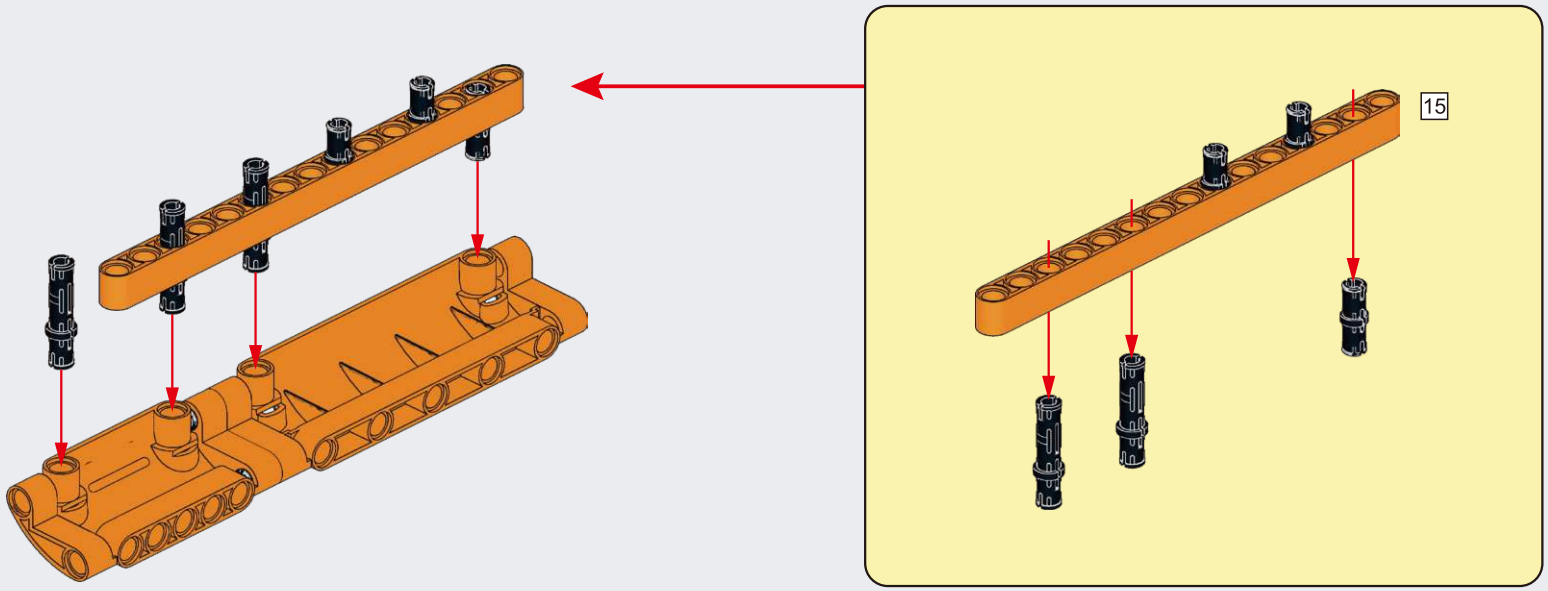

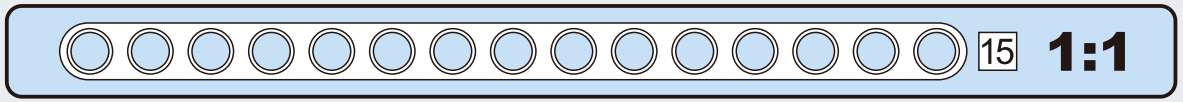

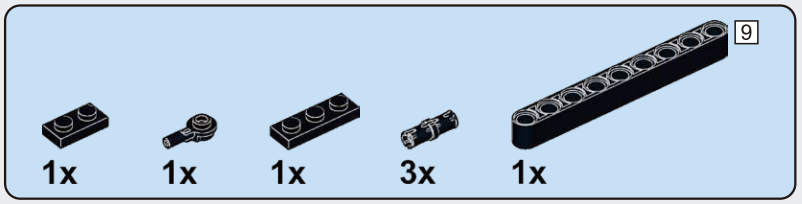

F94

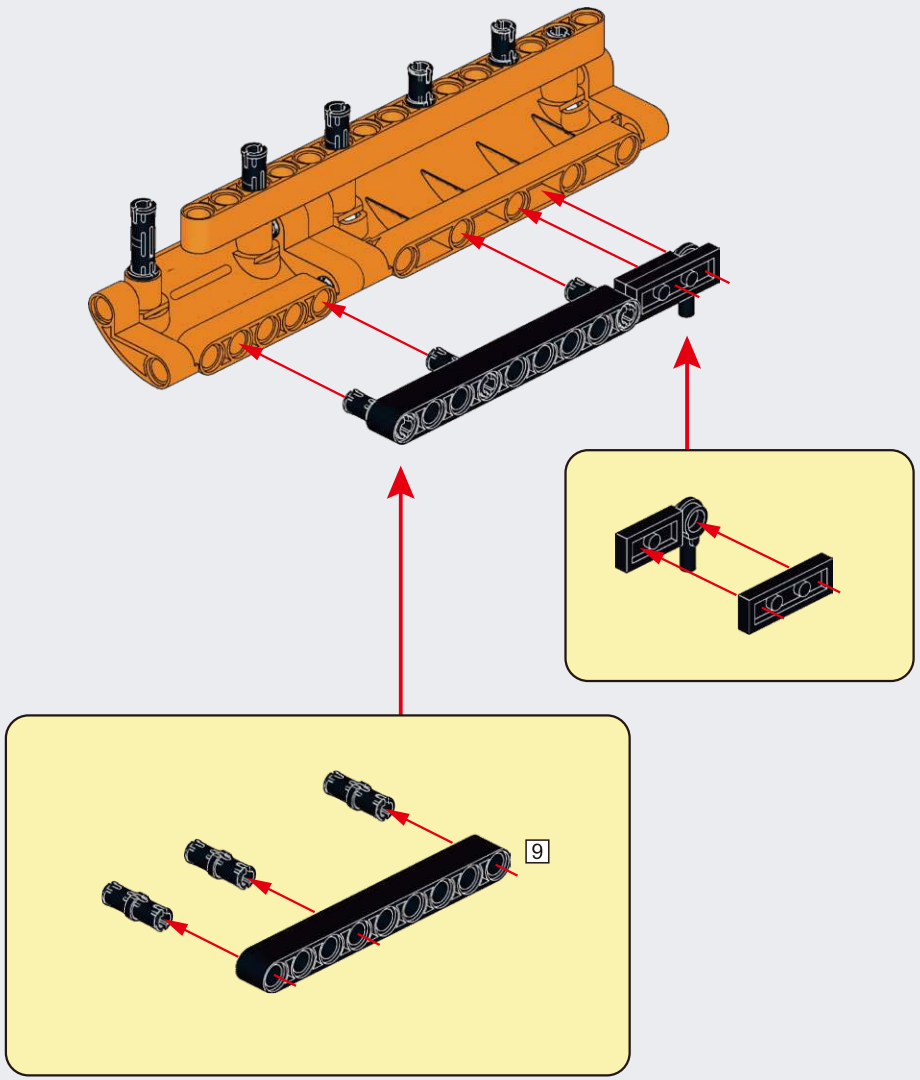

F95

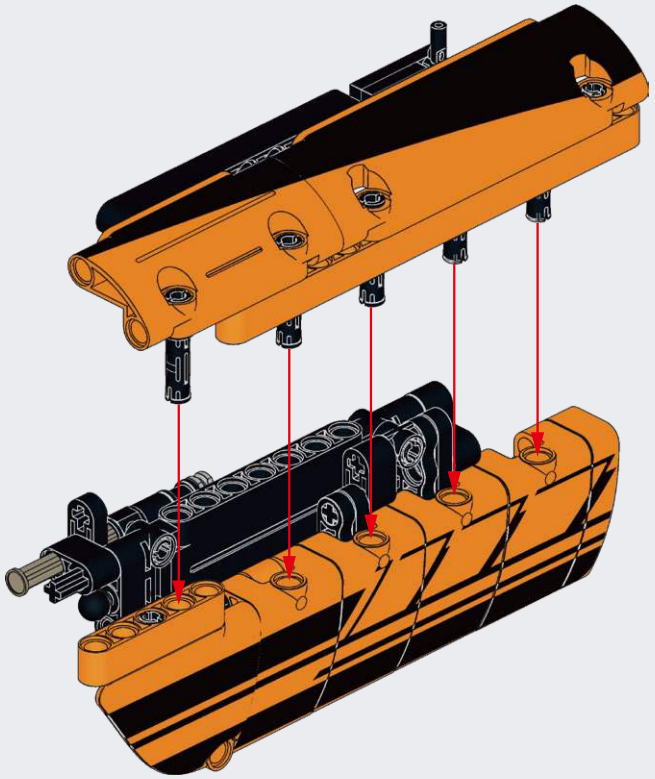

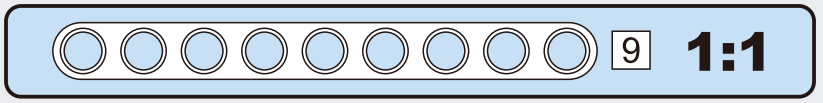

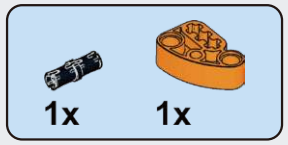

F96

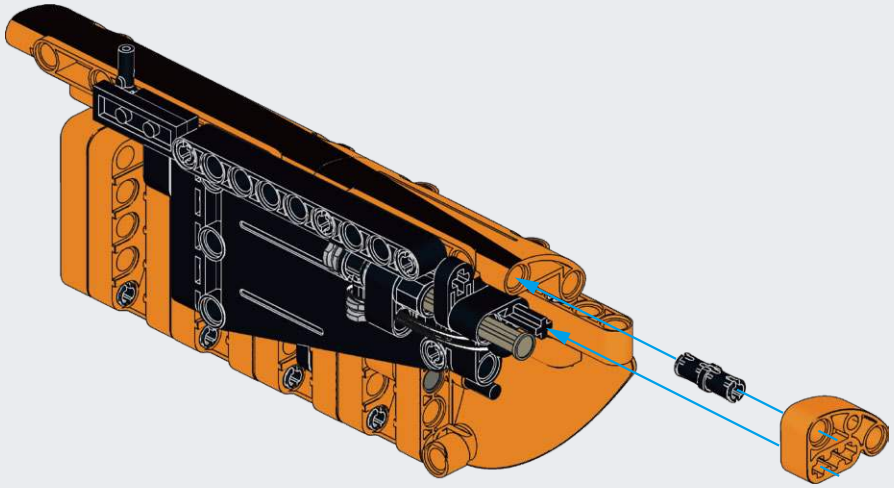

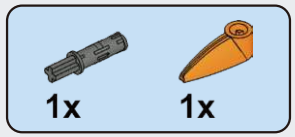

F97

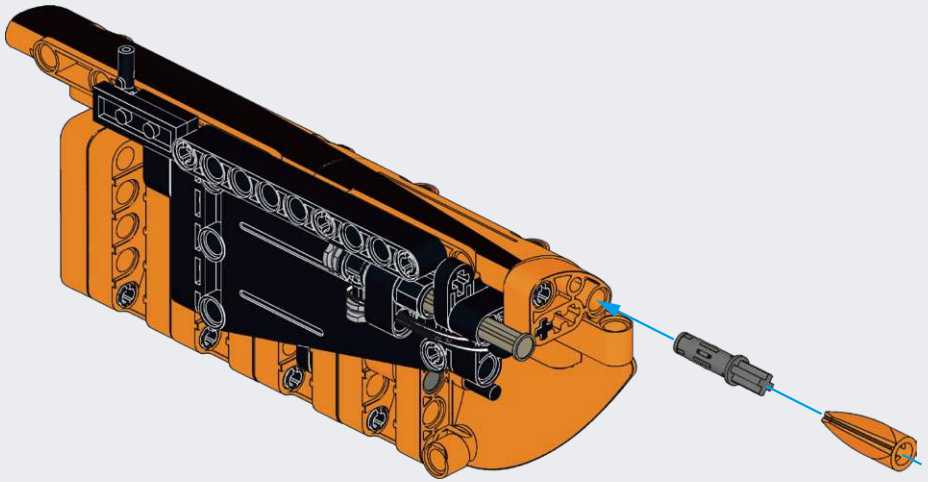

F98

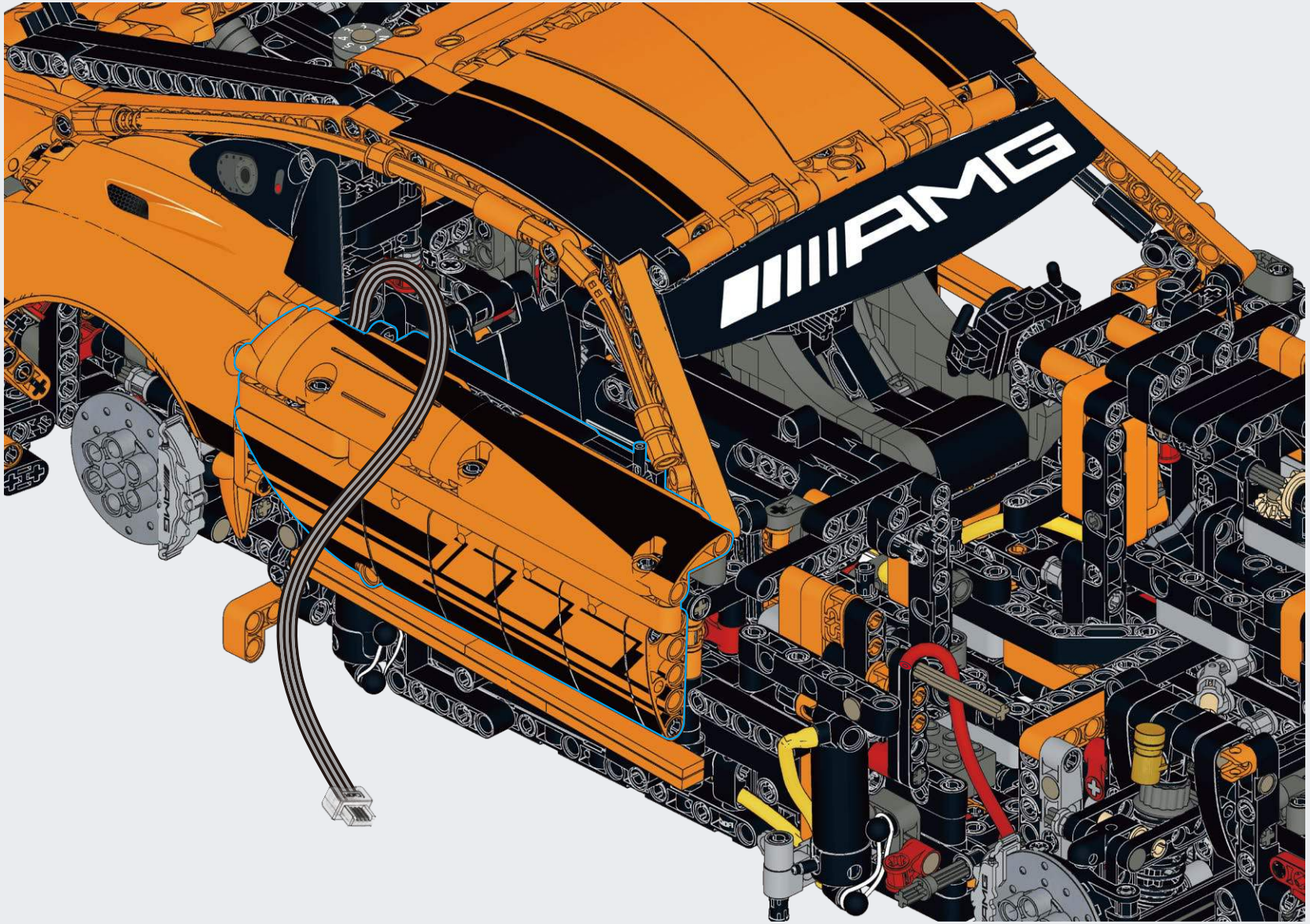

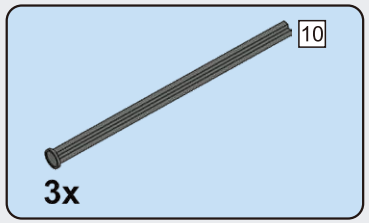

F99

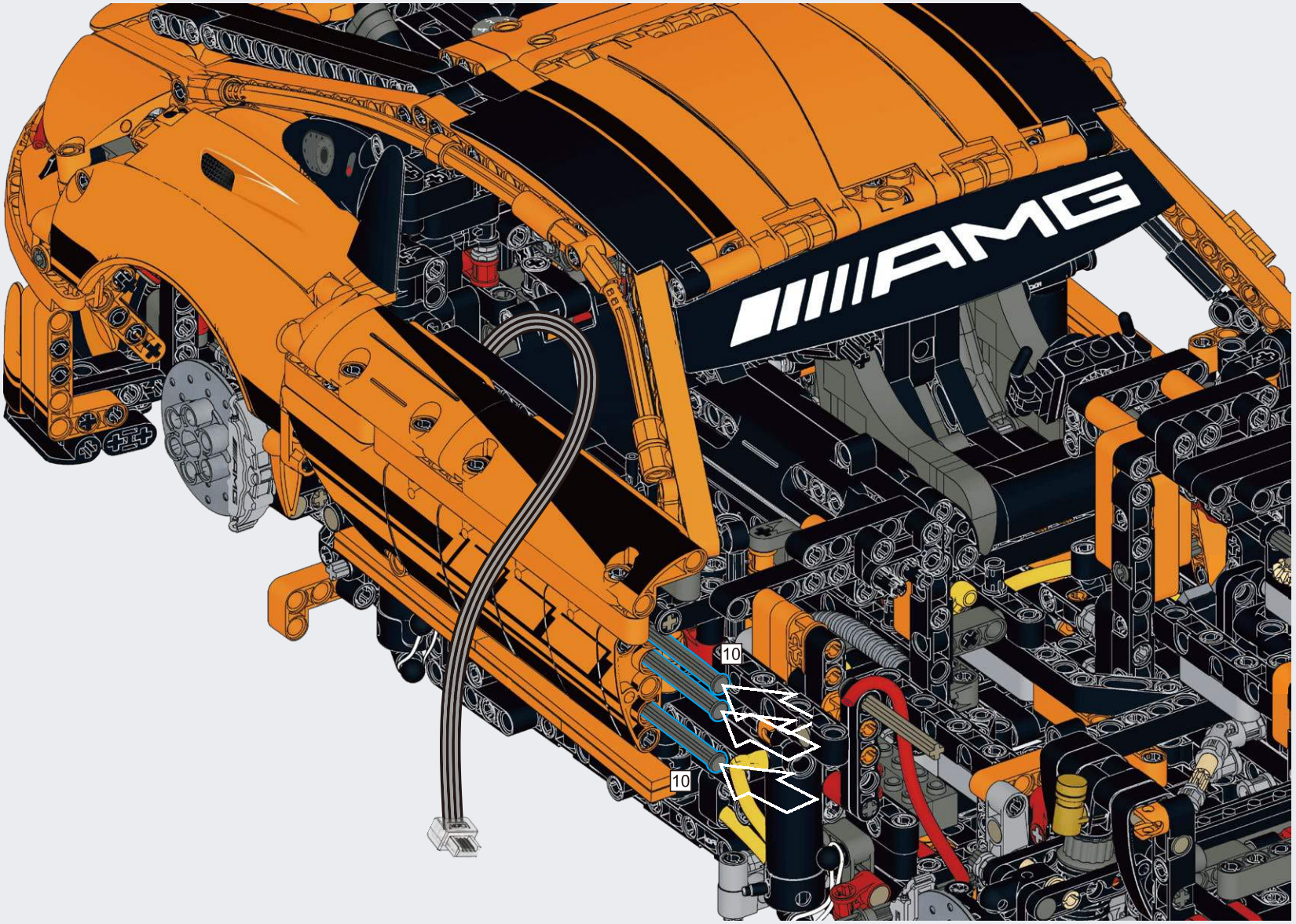

F100

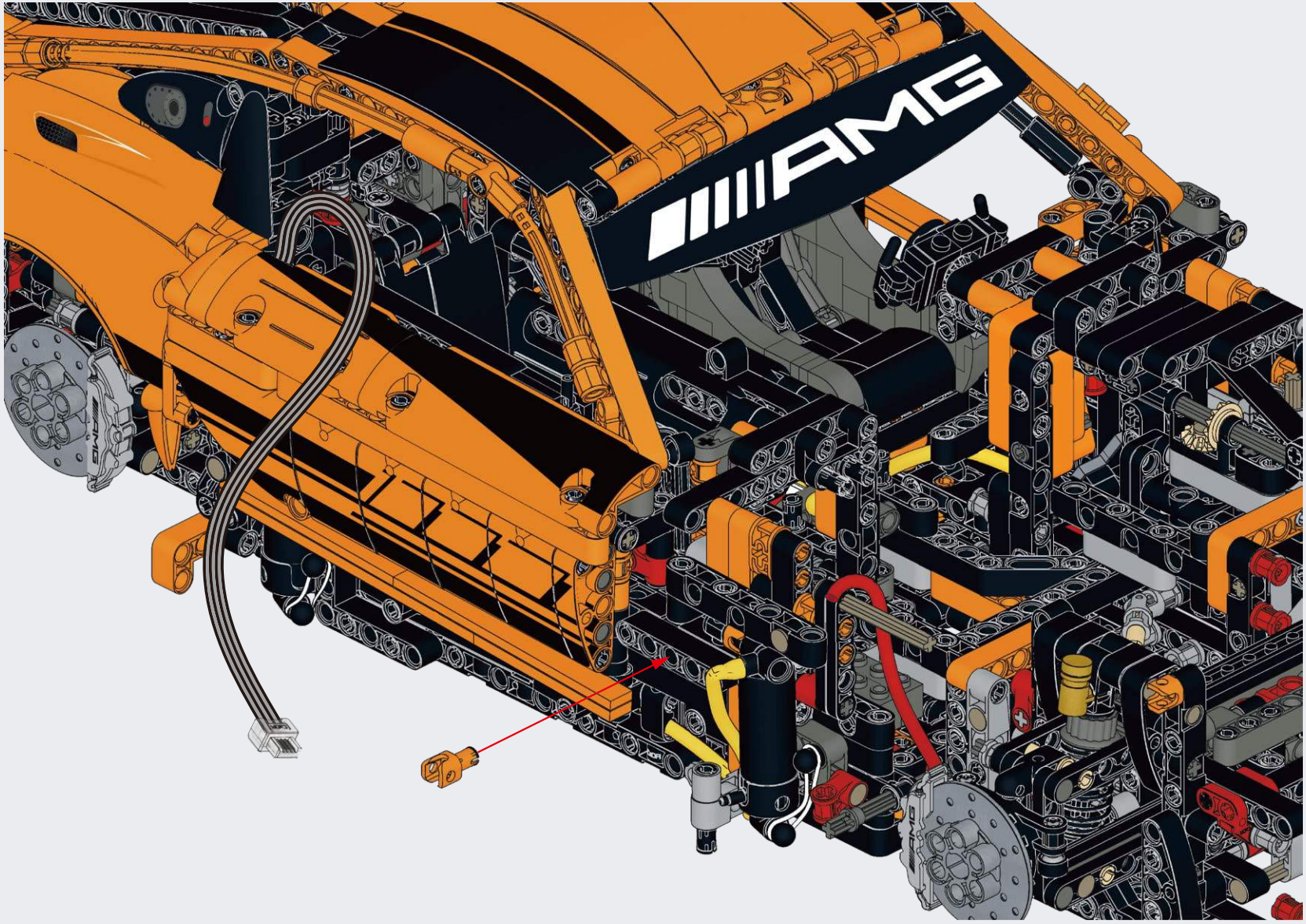

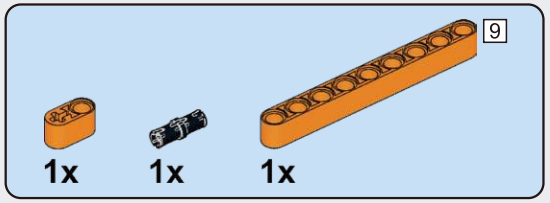

F101

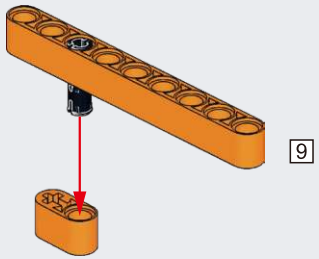

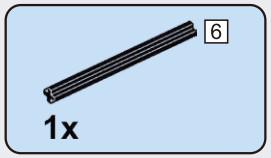

F102

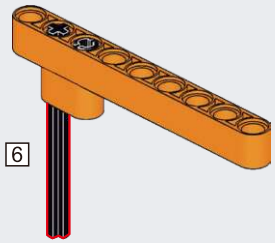

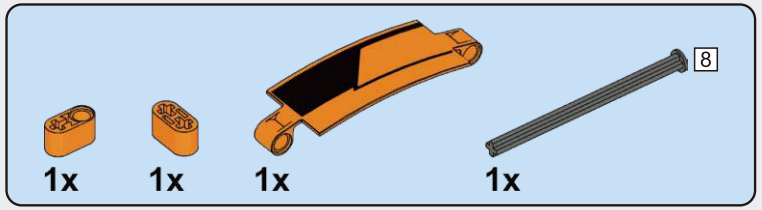

F103

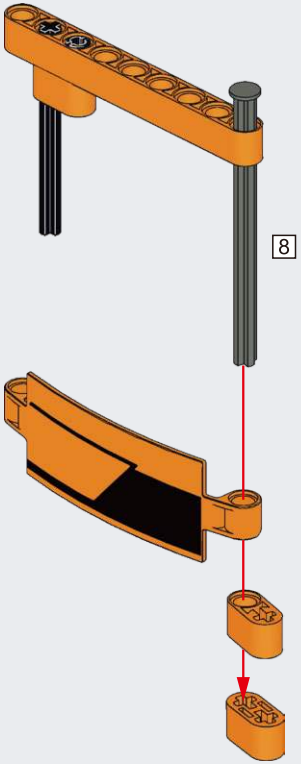

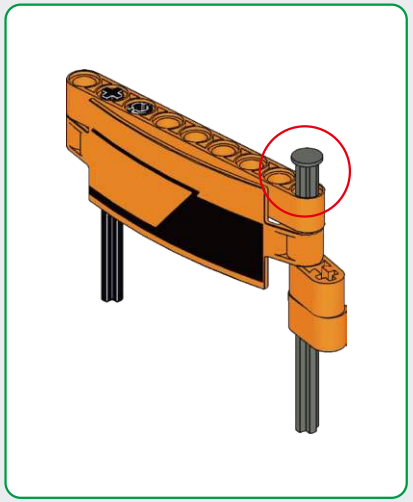

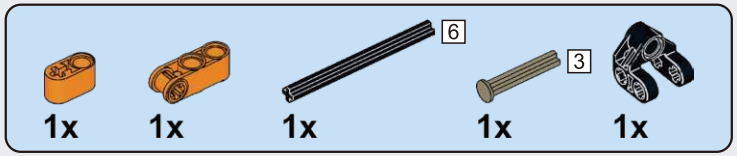

F104

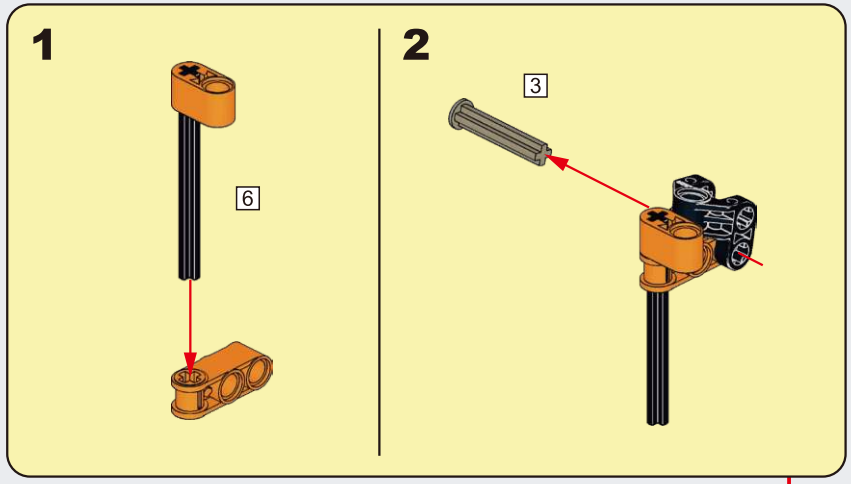

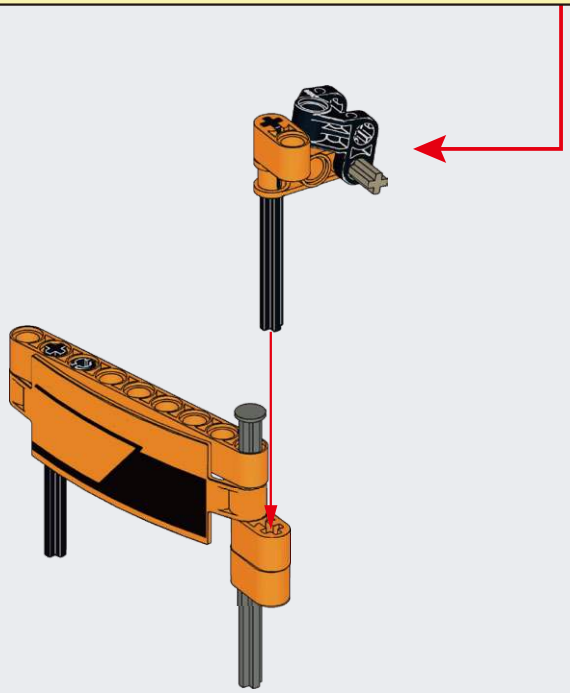

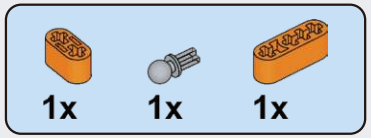

F105

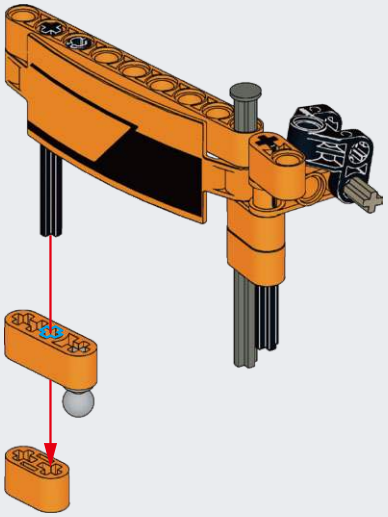

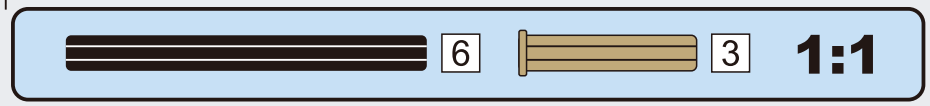

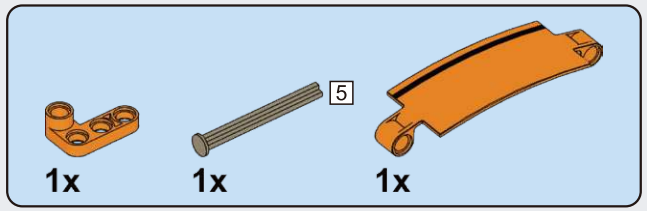

F106

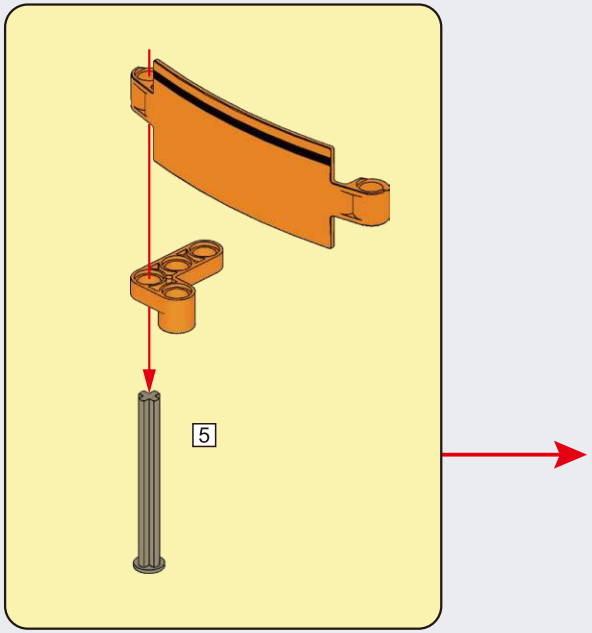

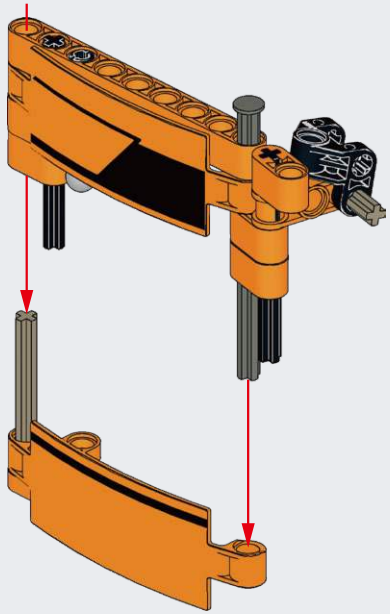

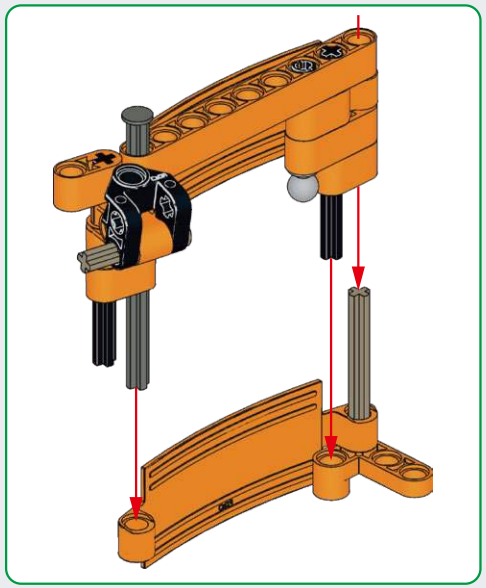

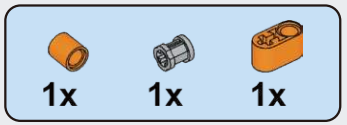

F107

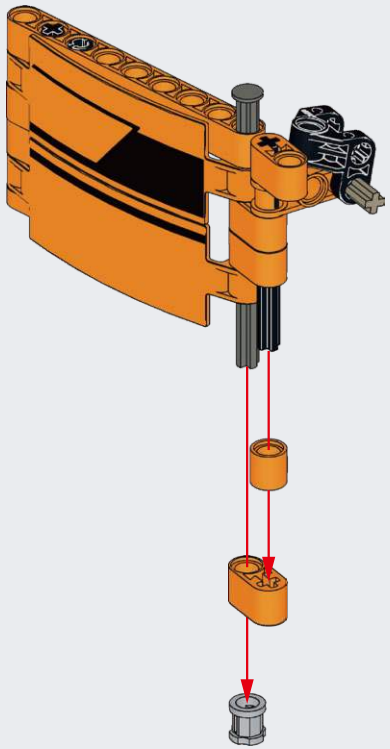

F108

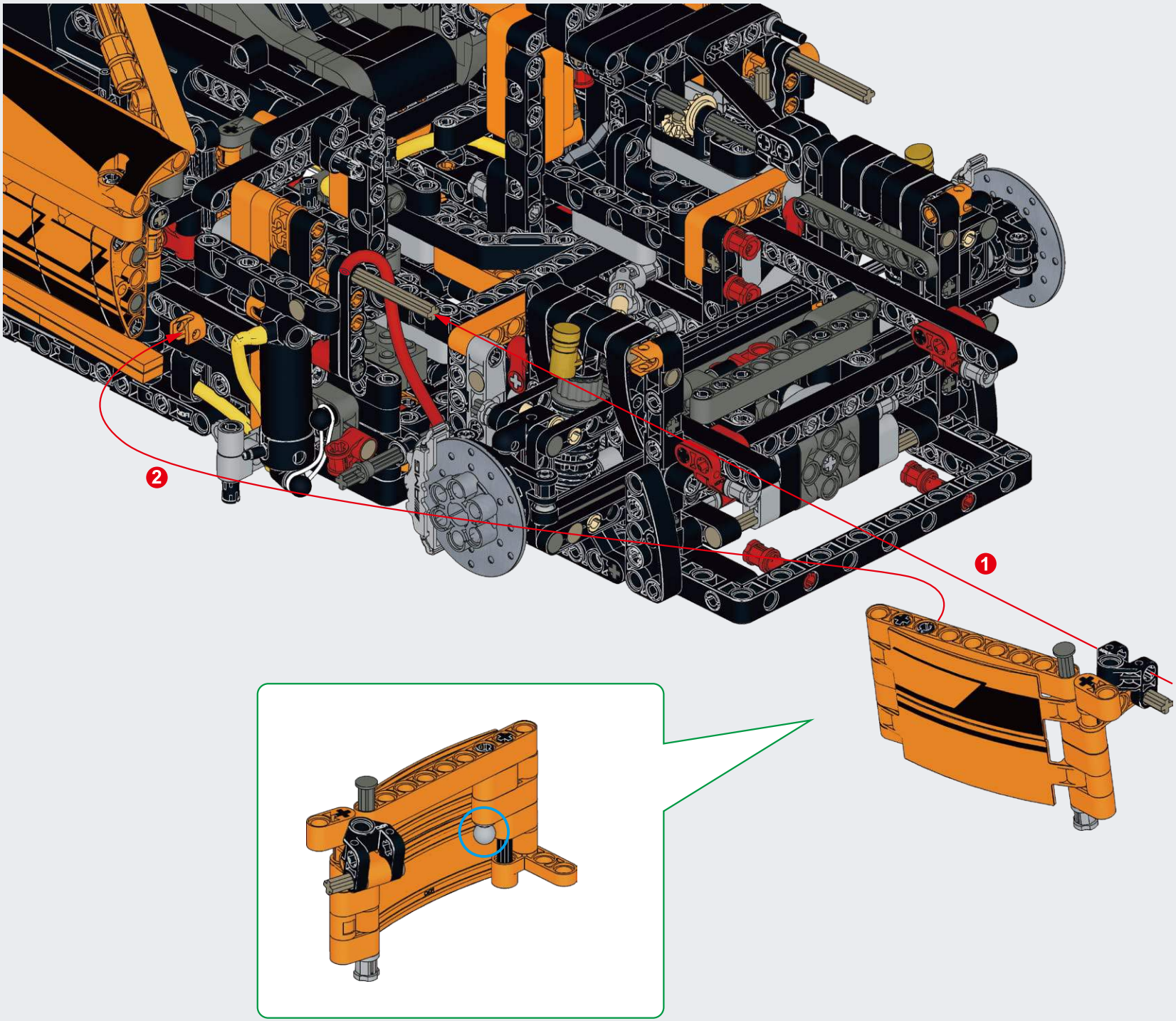

F109

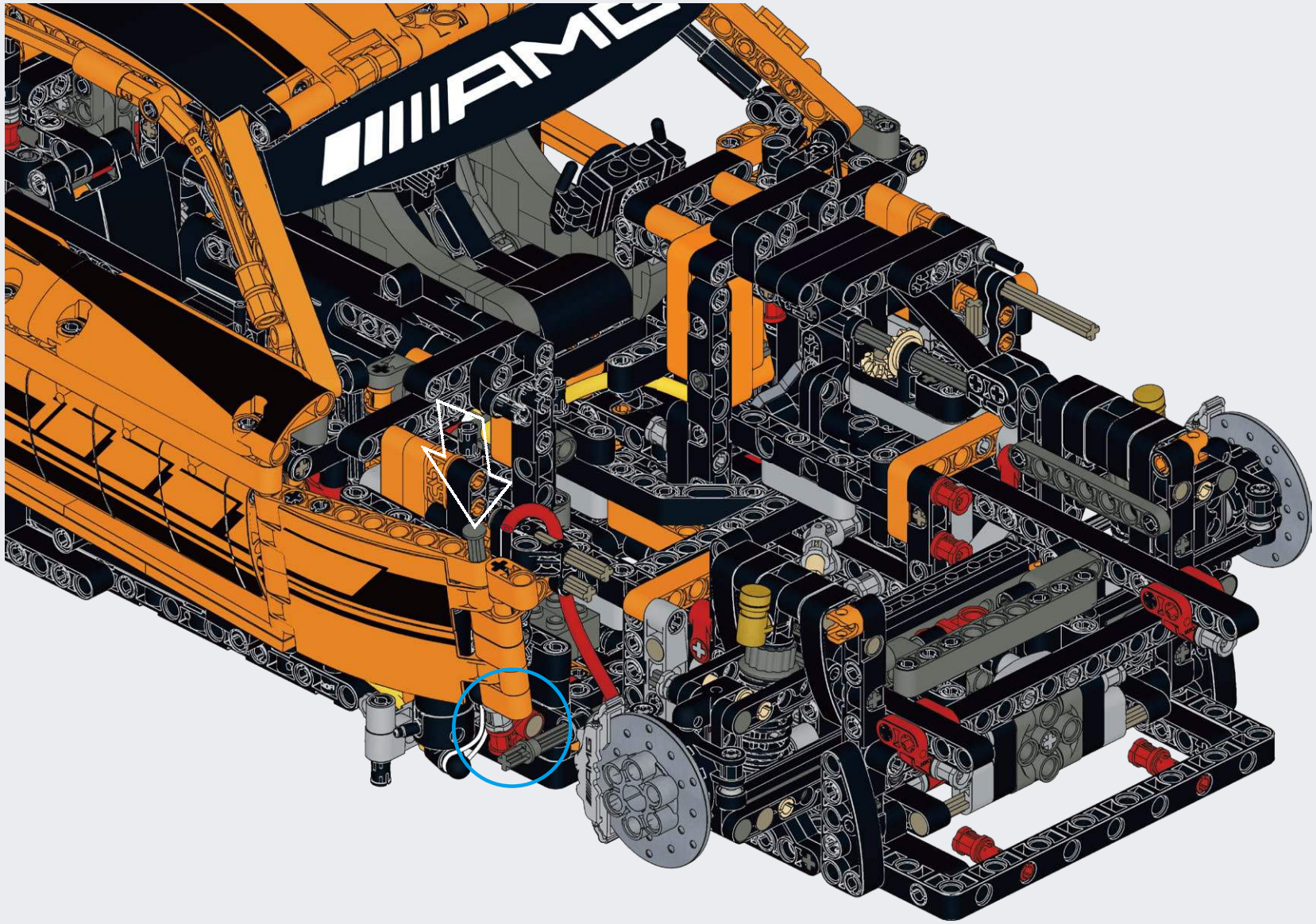

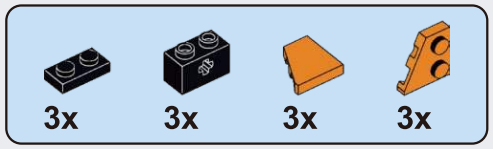

F110

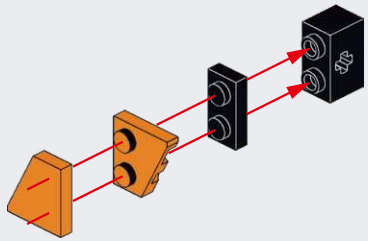

x3

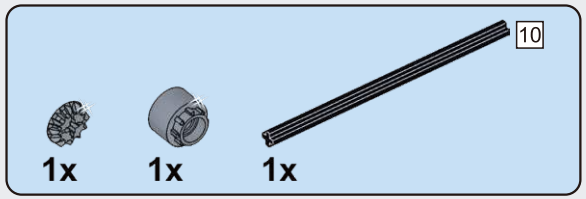

F111

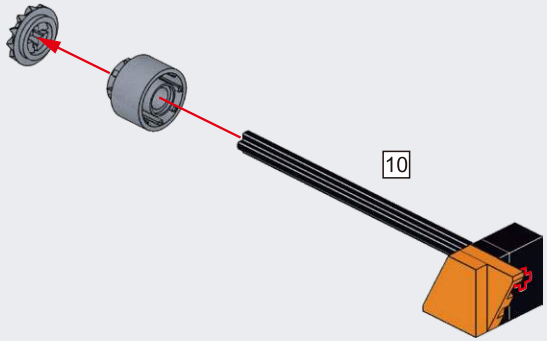

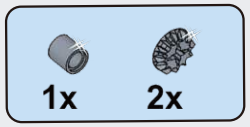

F112

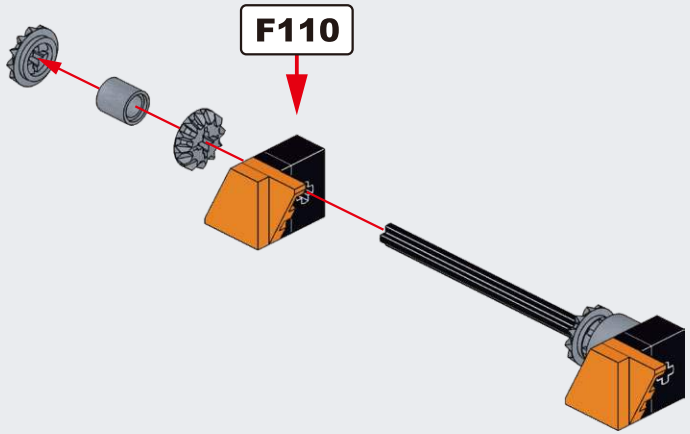

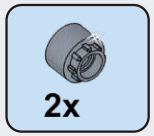

F113

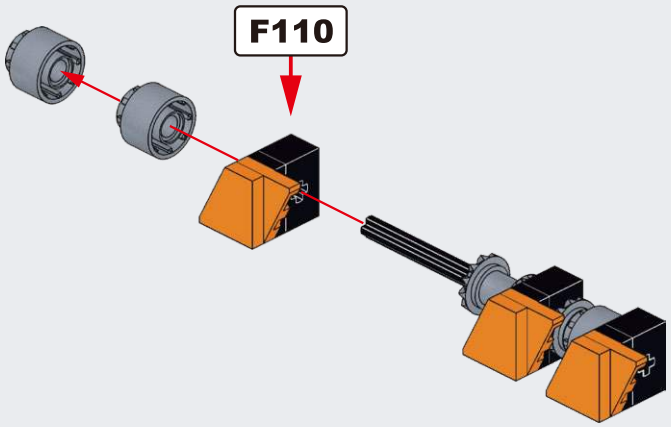

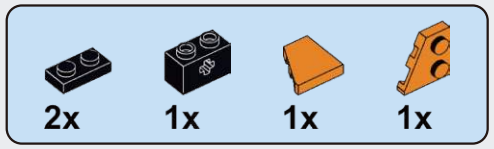

F114

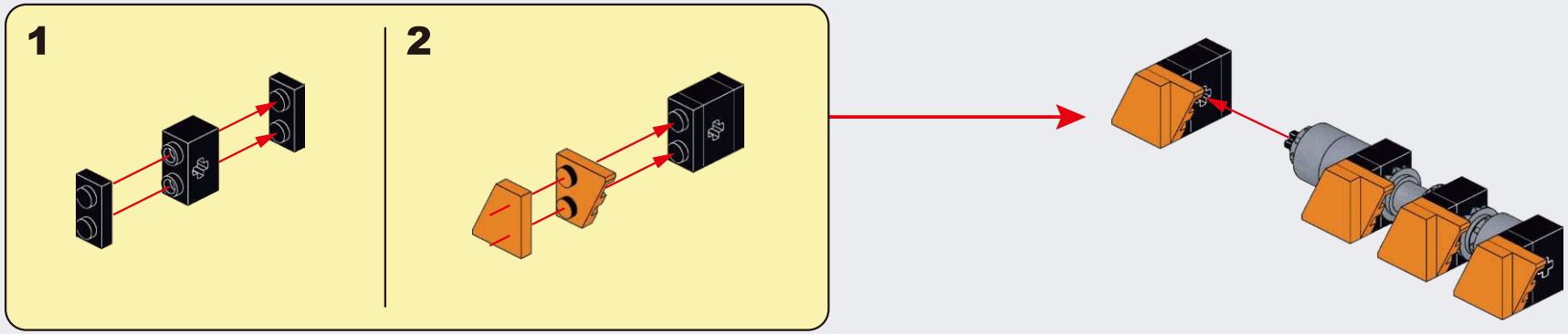

F115

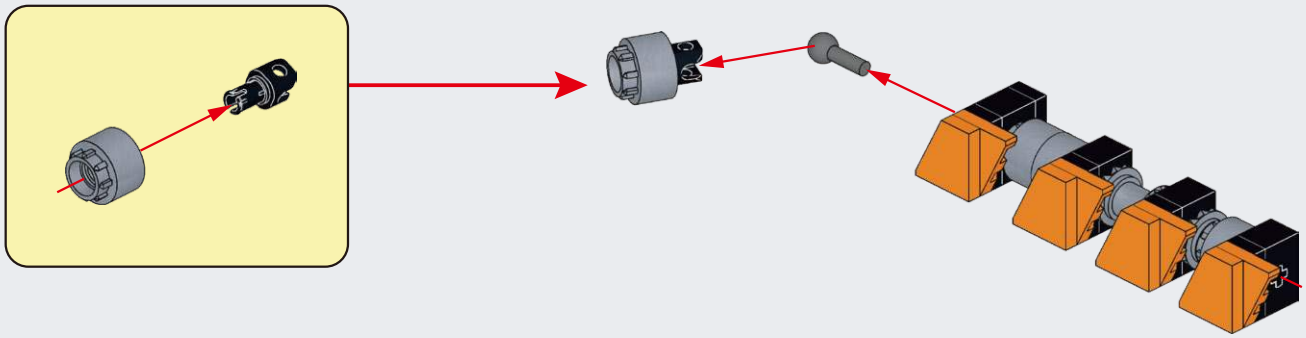

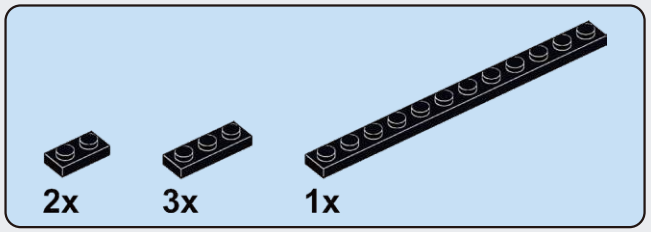

F116

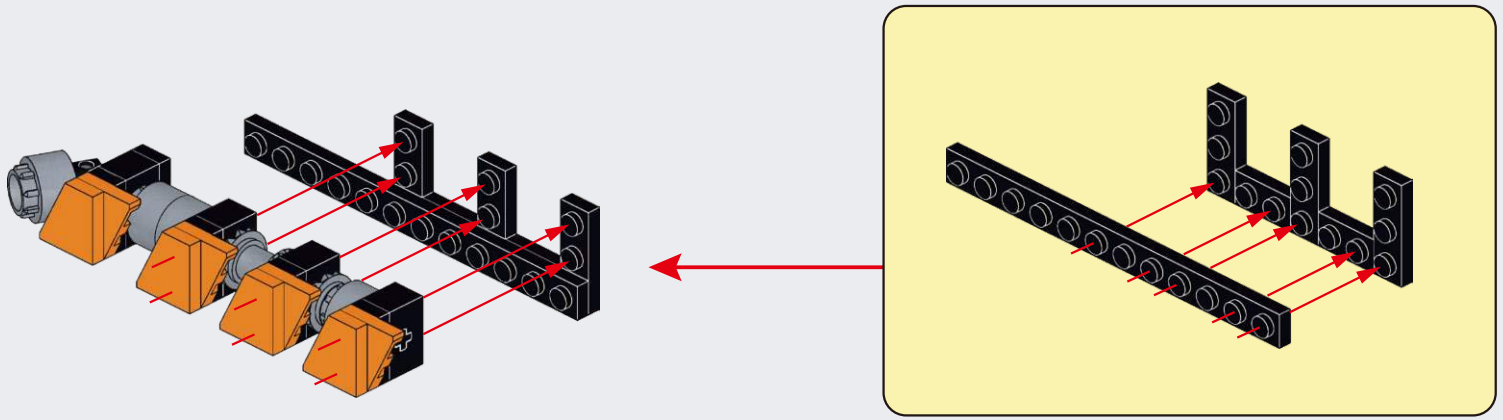

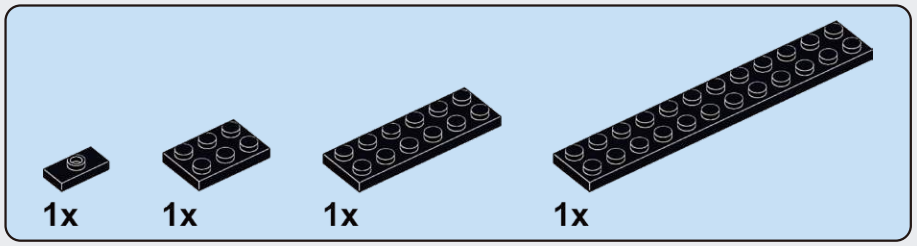

F117

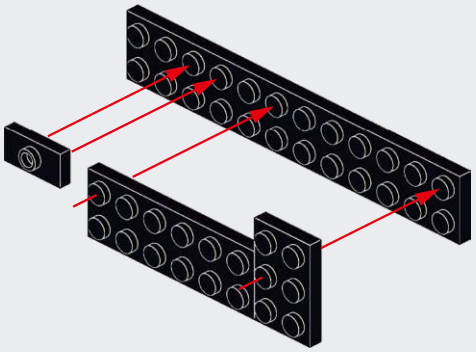

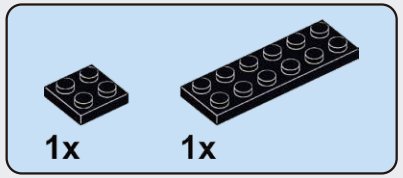

F118

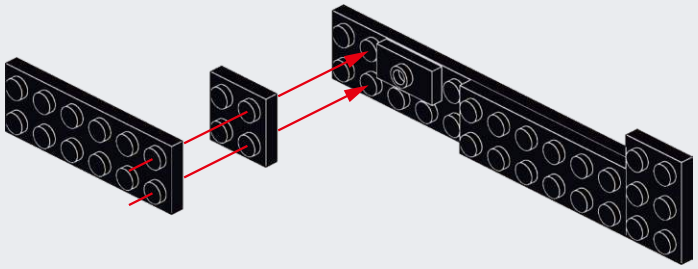

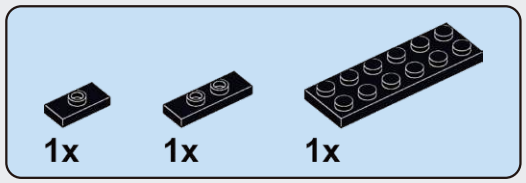

F119

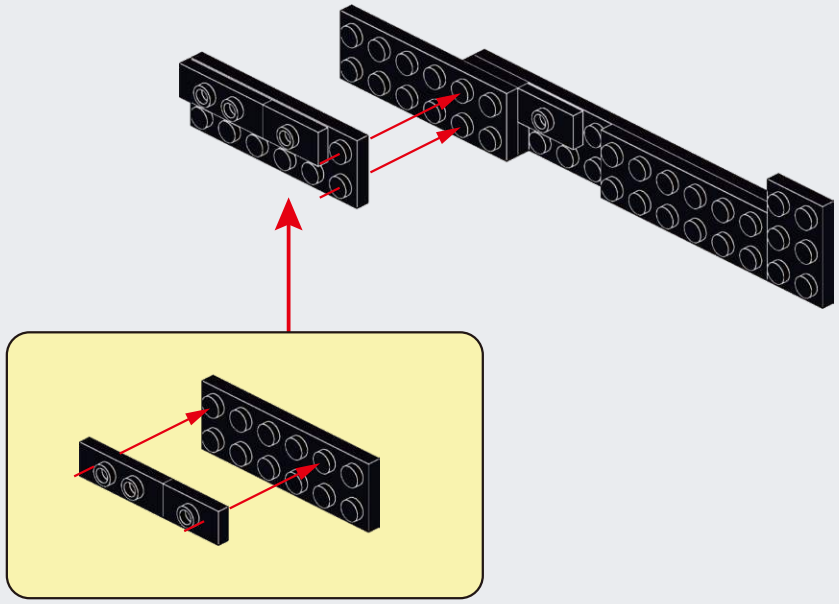

F120

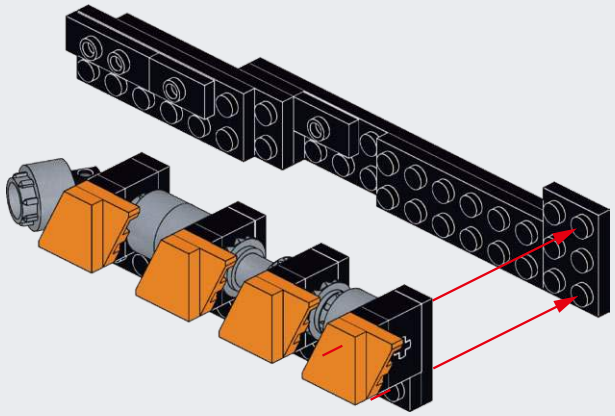

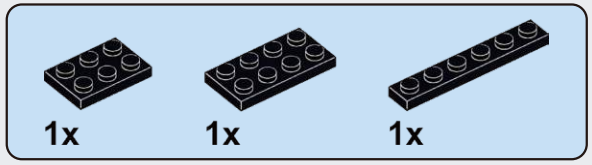

F121

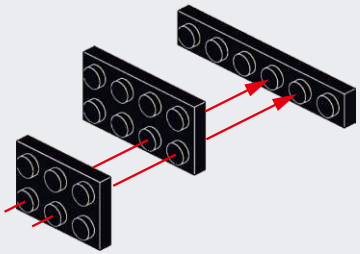

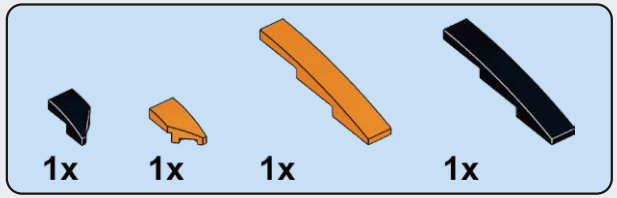

F122

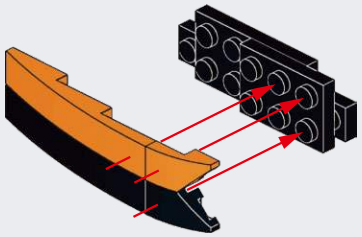

F123

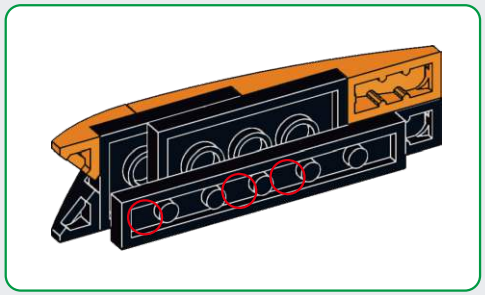

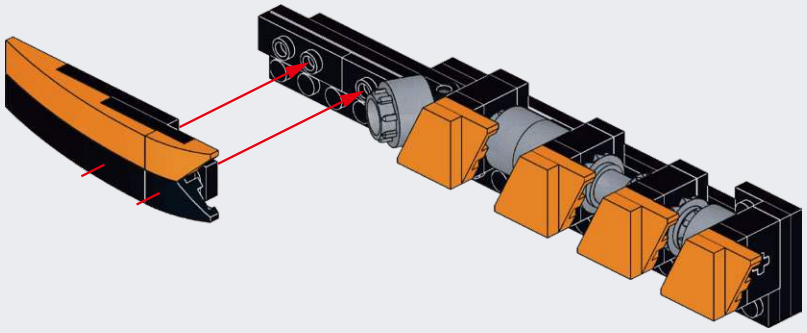

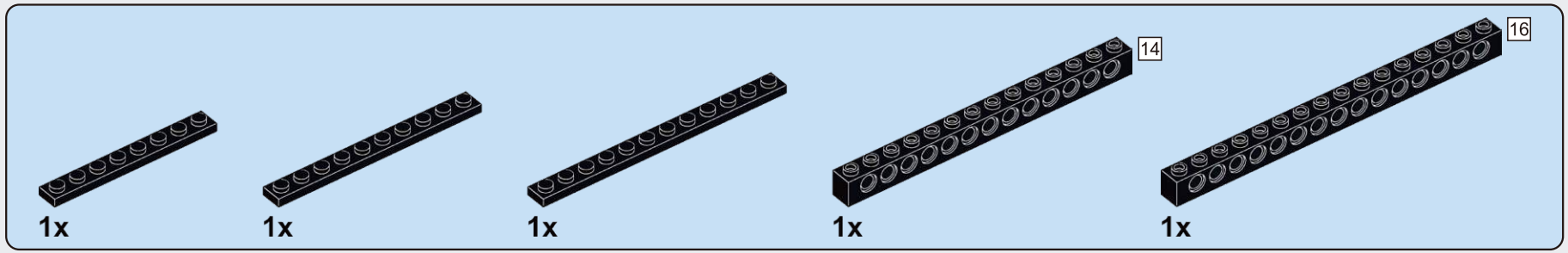

F124

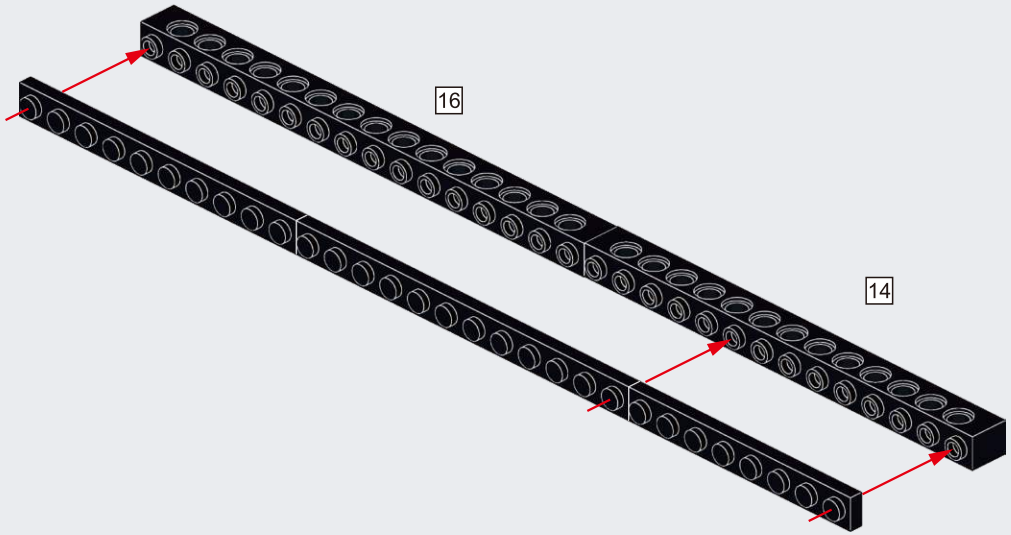

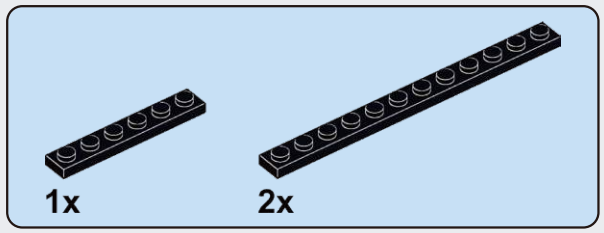

F125

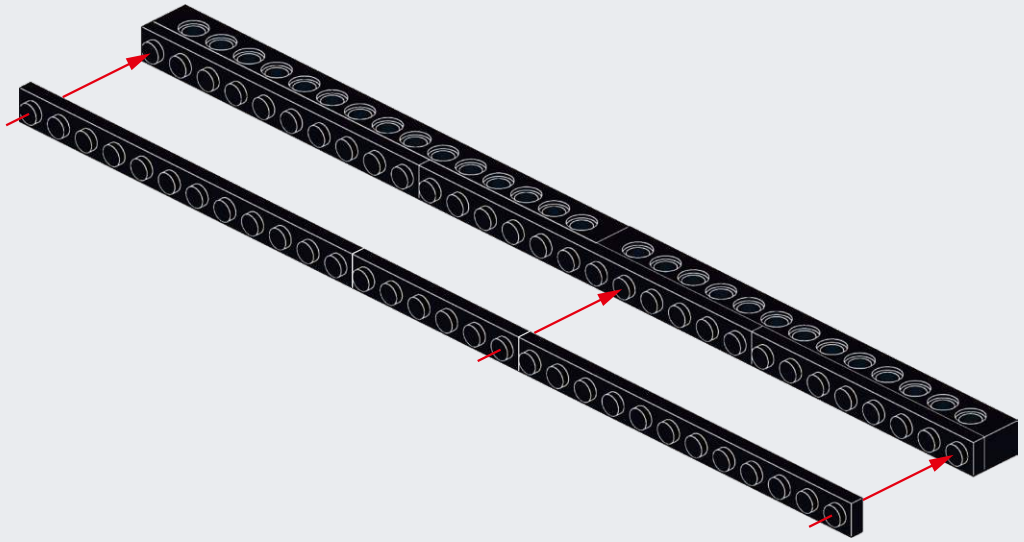

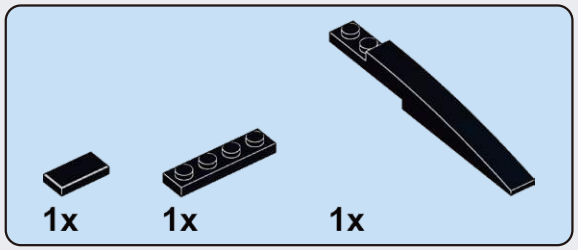

F126

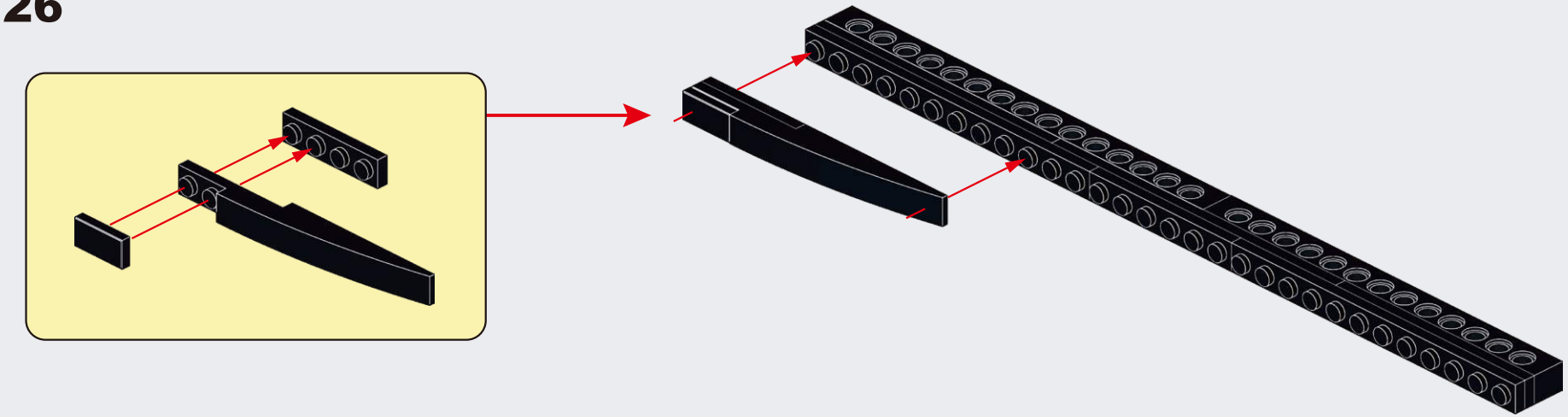

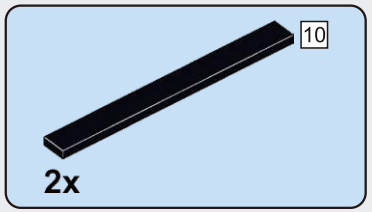

F127

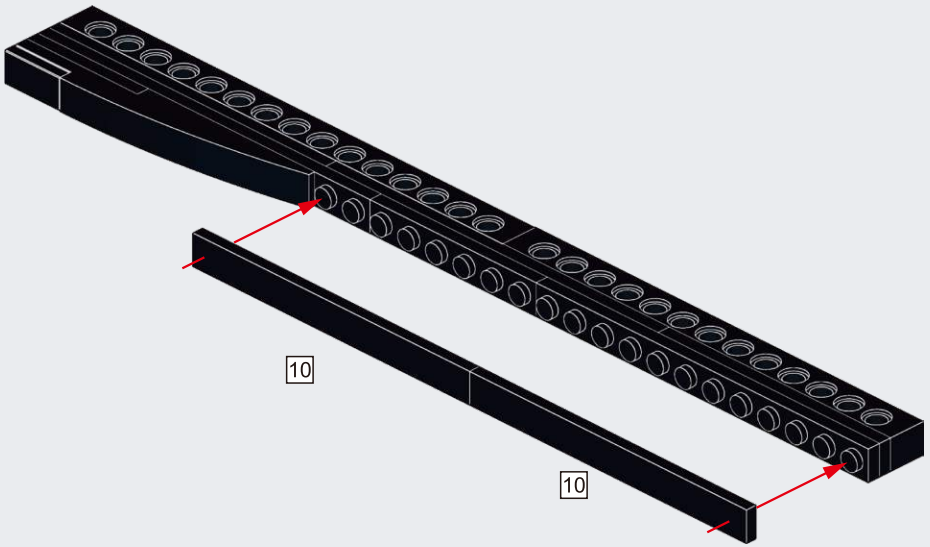

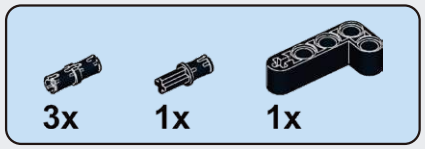

F128

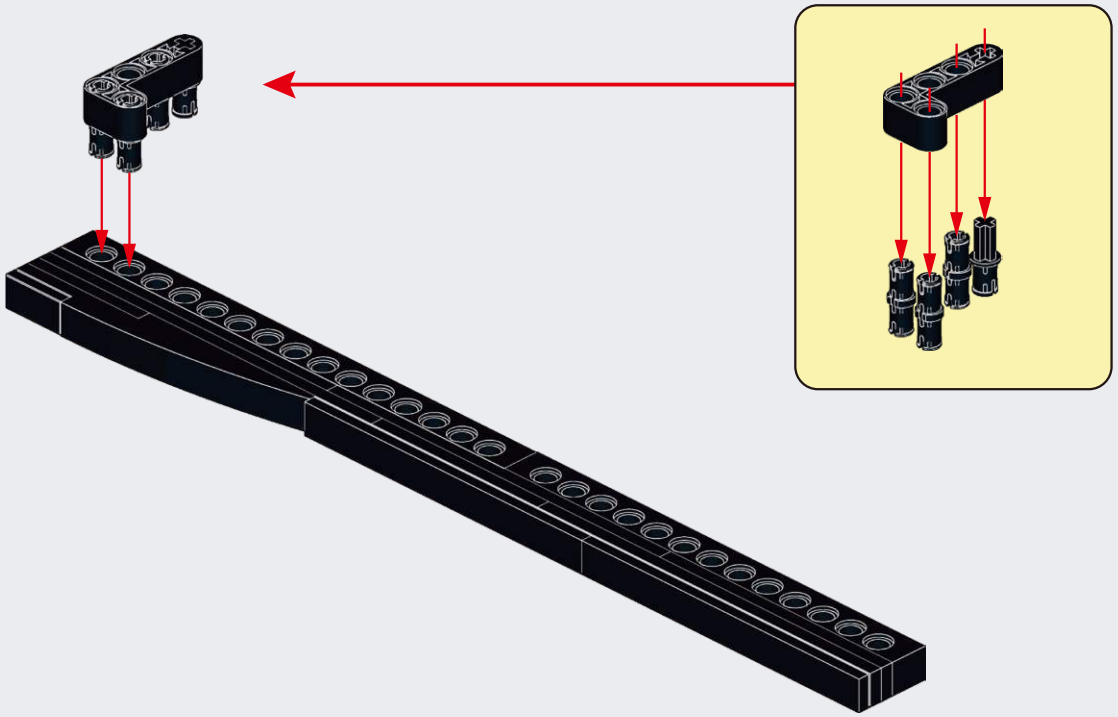

F129

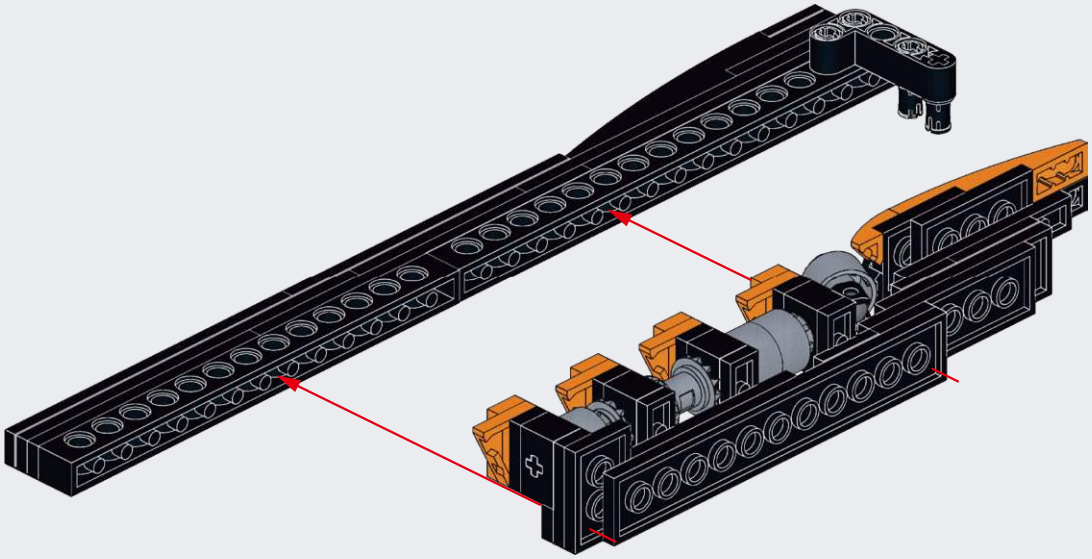

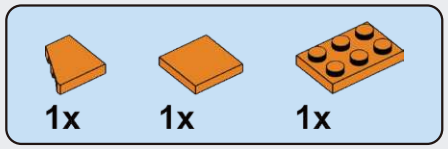

F130

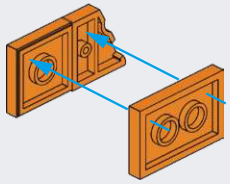

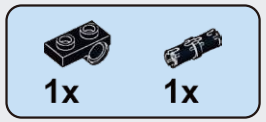

F131

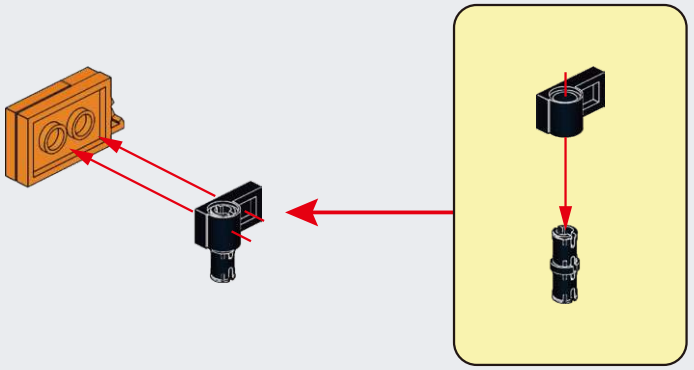

F132

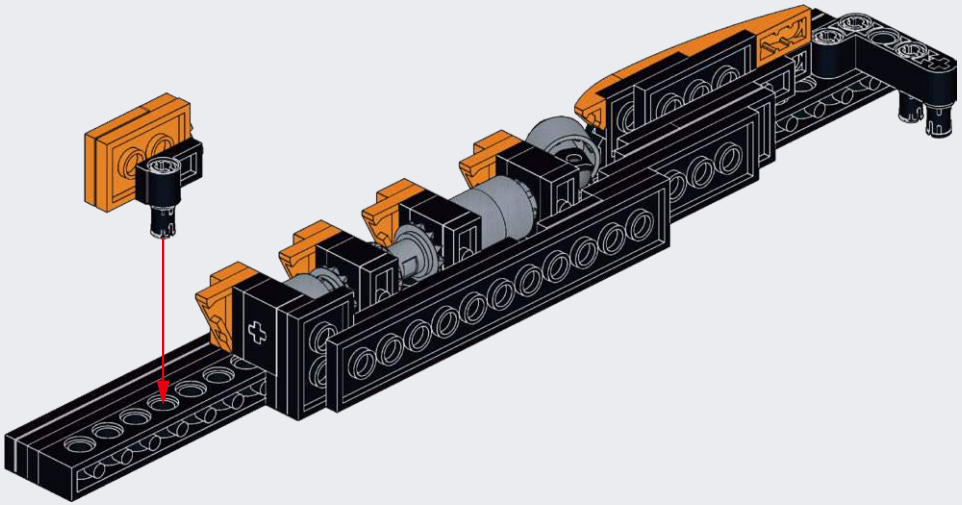

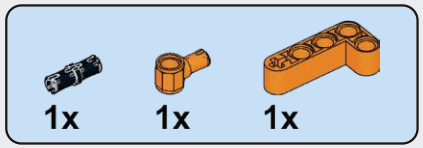

F133

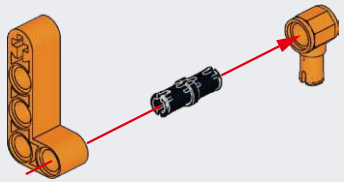

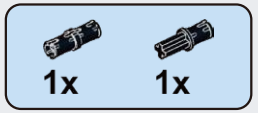

F134

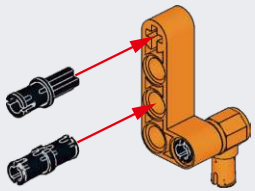

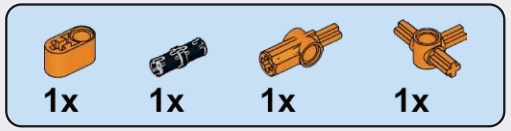

F135

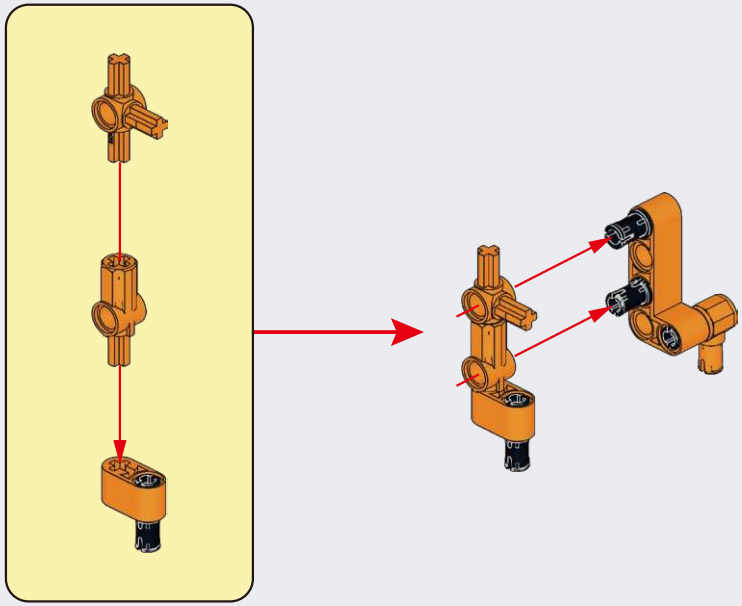

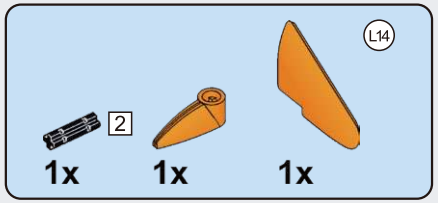

F136

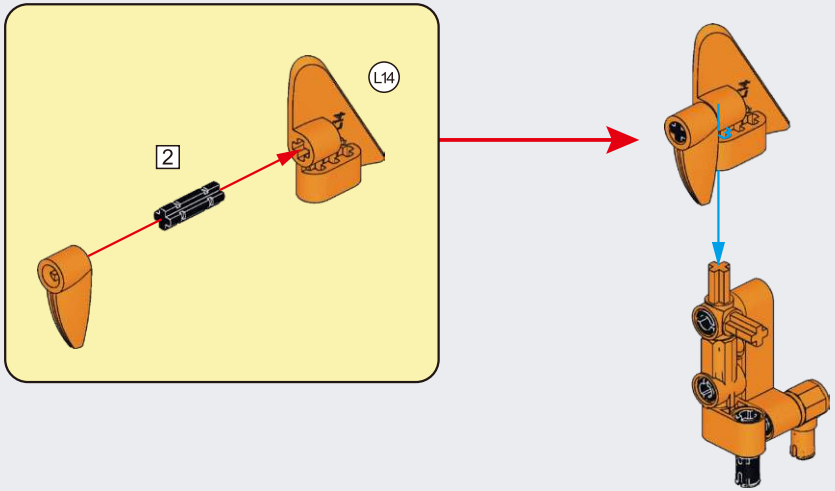

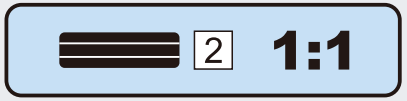

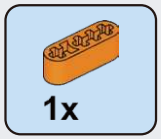

F137

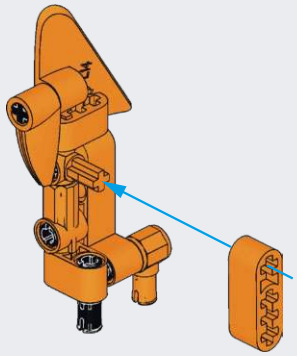

F138

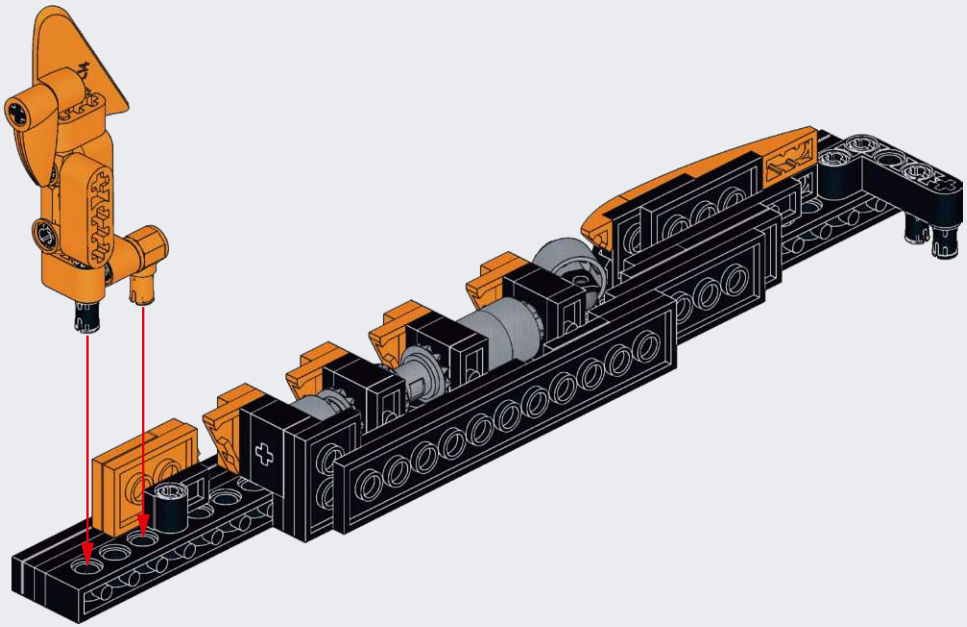

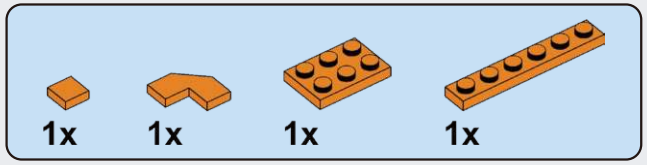

F139

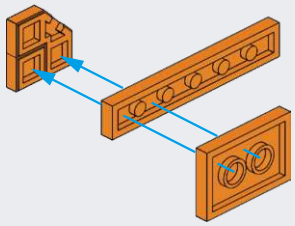

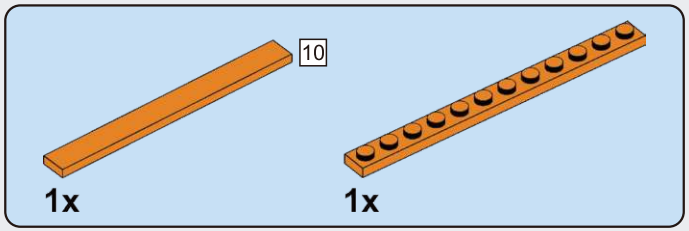

F140

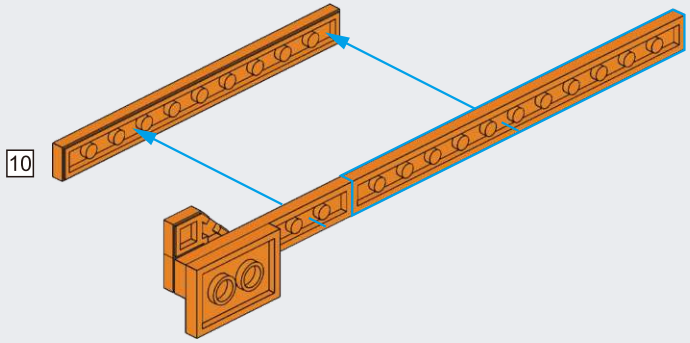

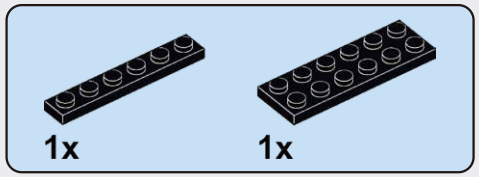

F141

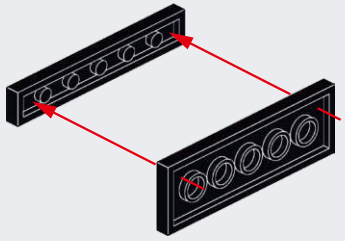

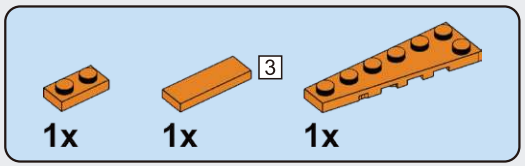

F142

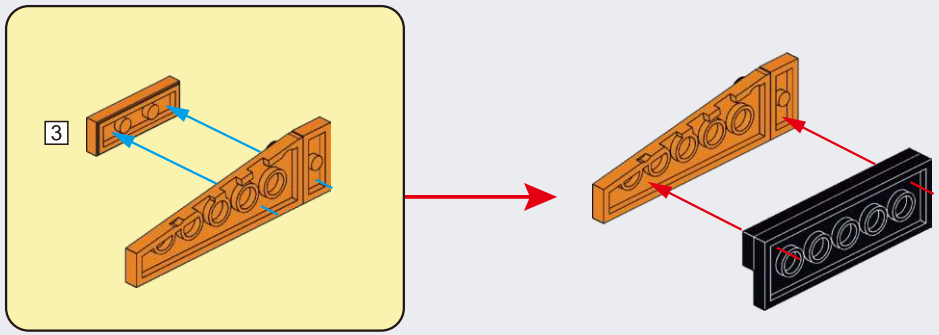

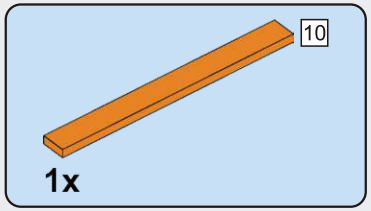

F143

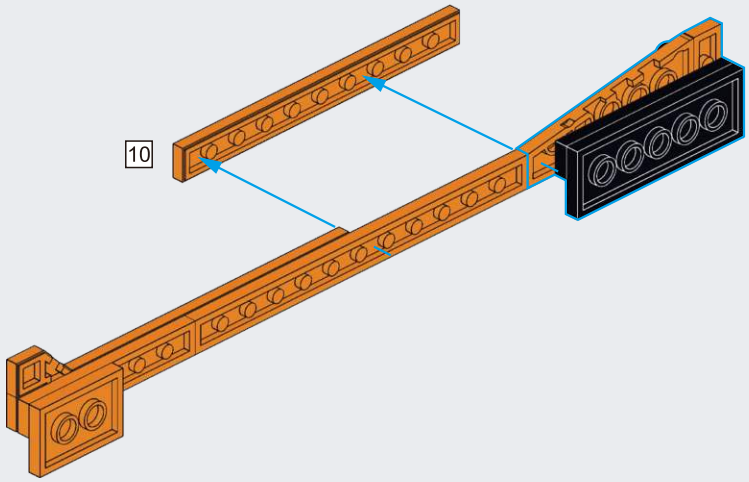

F144

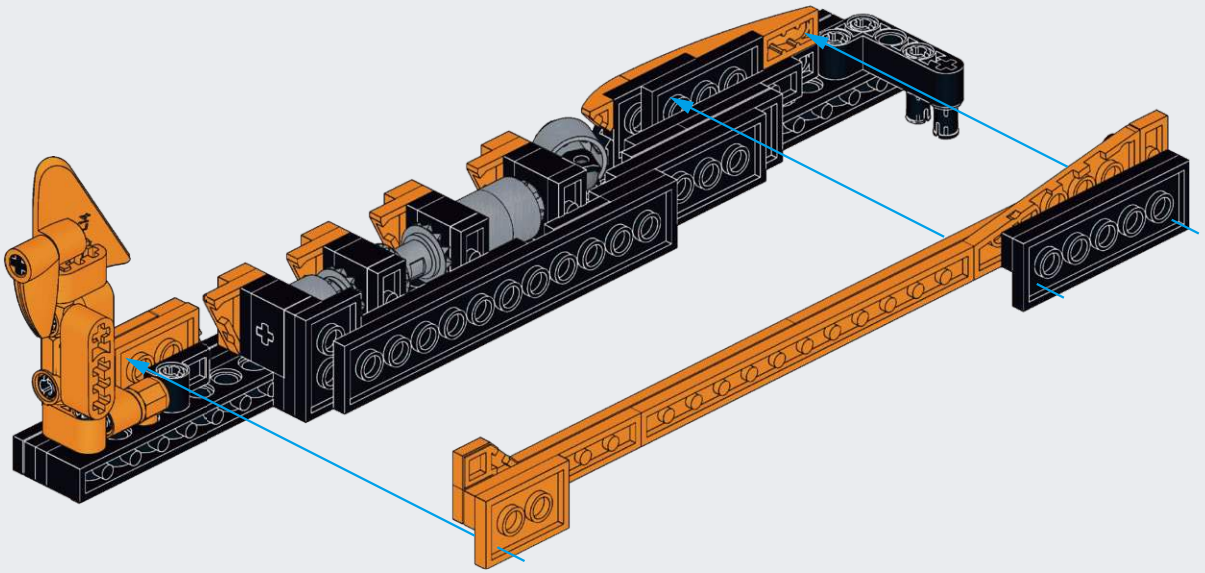

F145

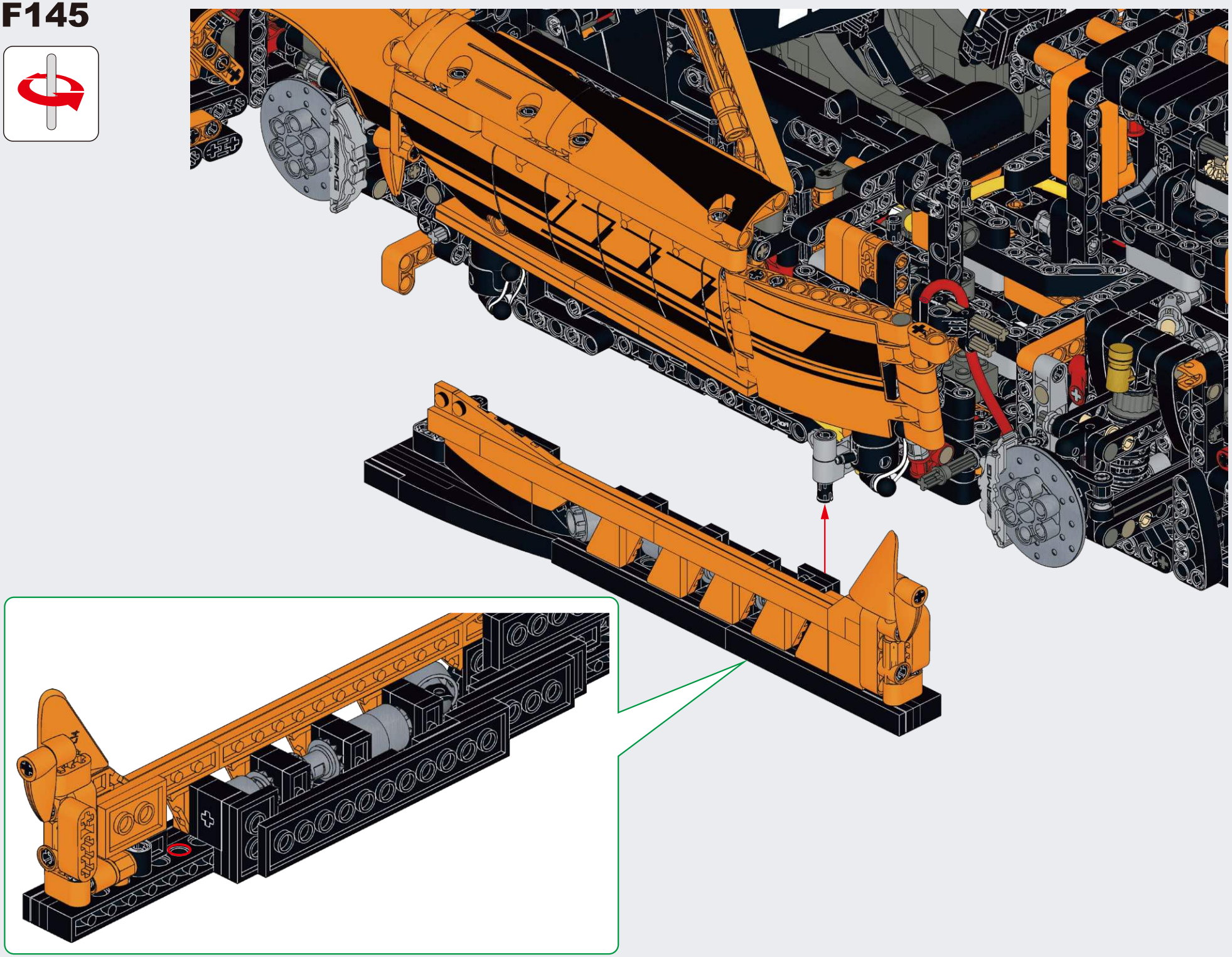

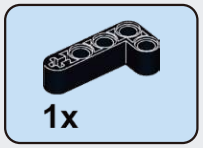

F146

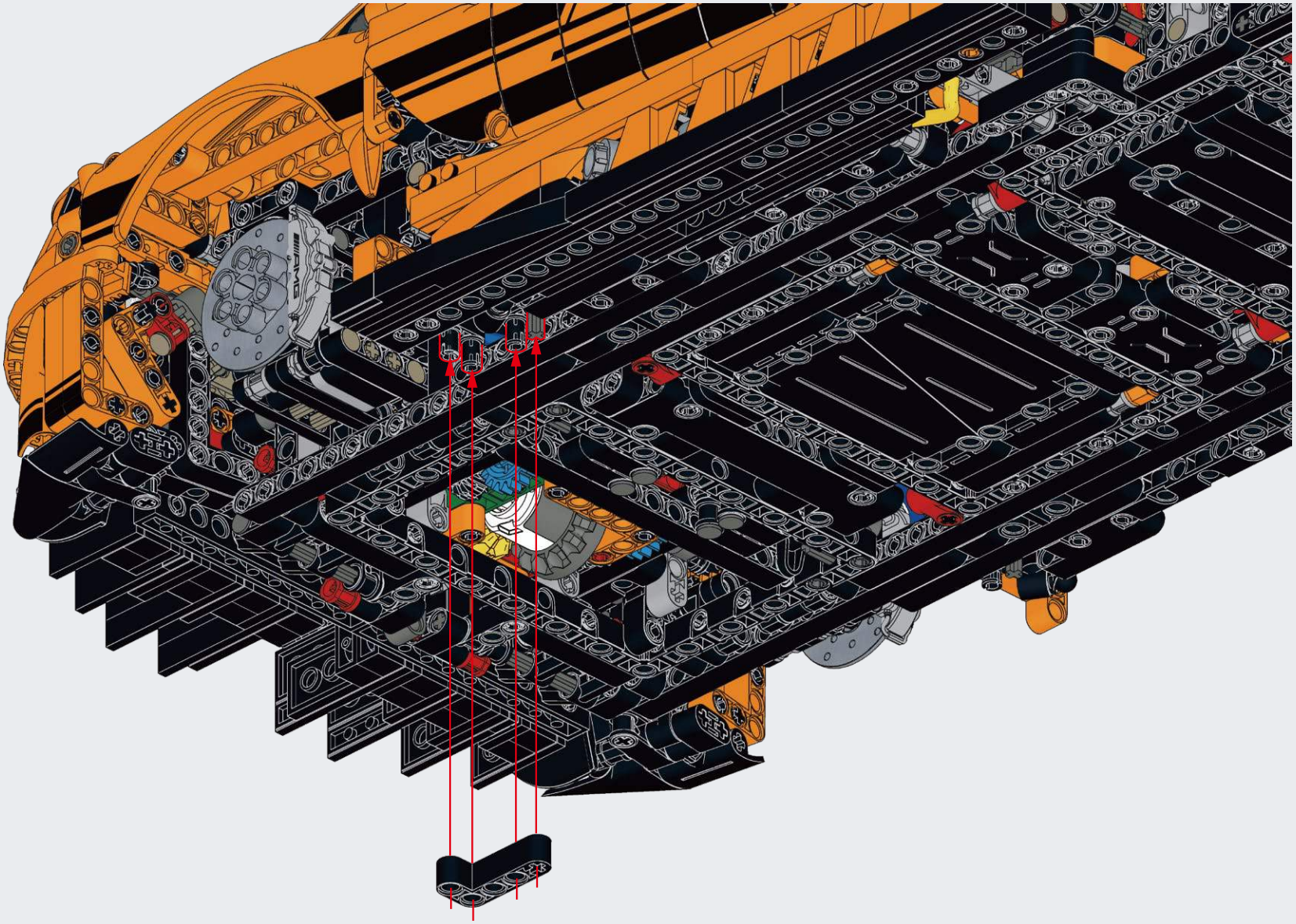

F147

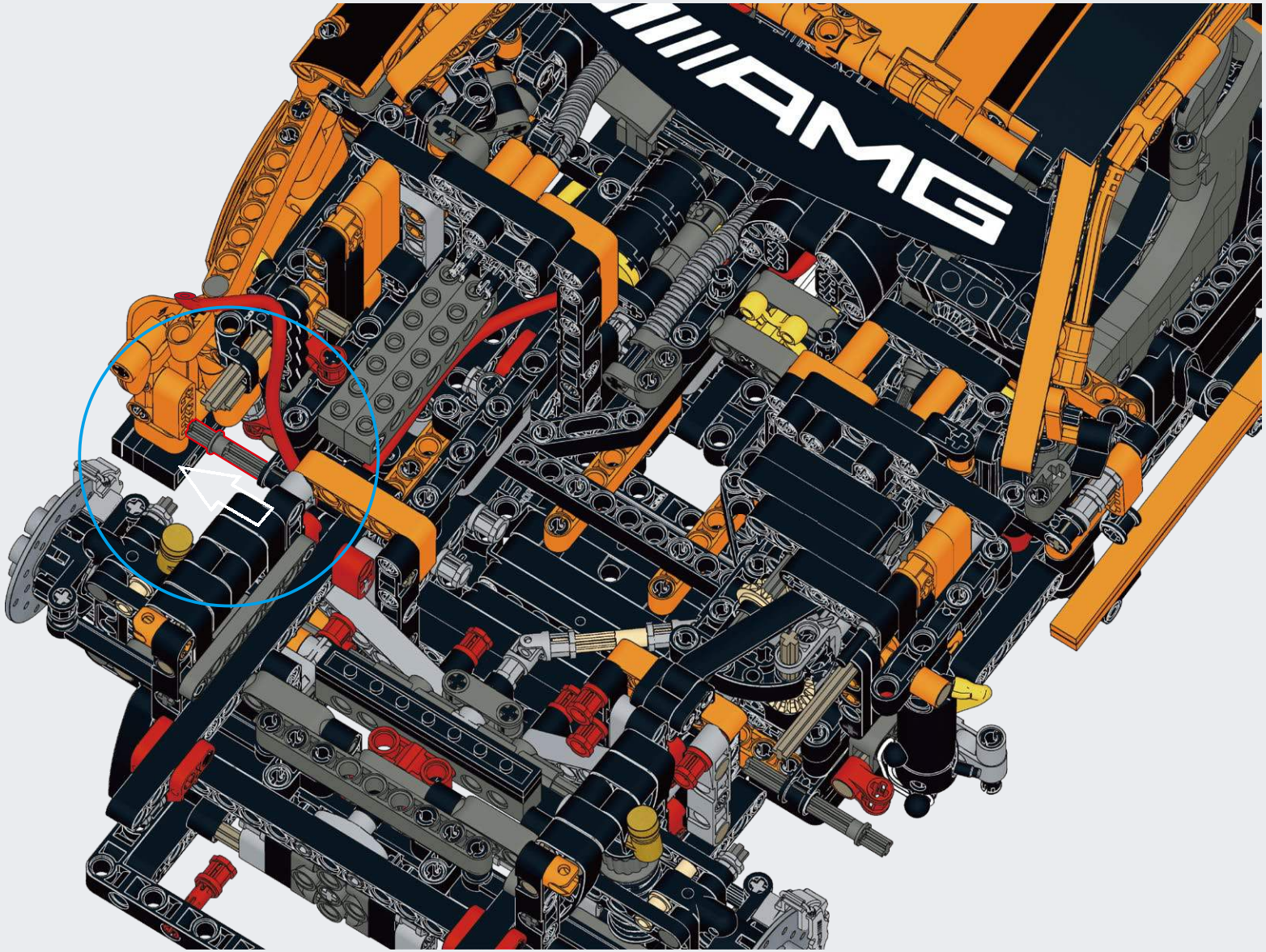

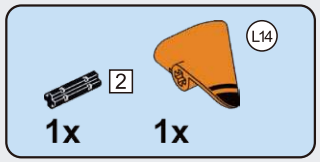

F148

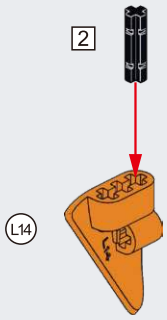

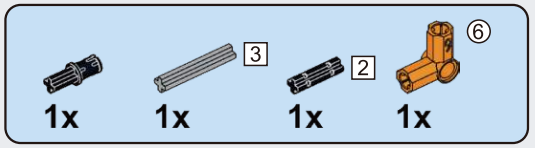

F149

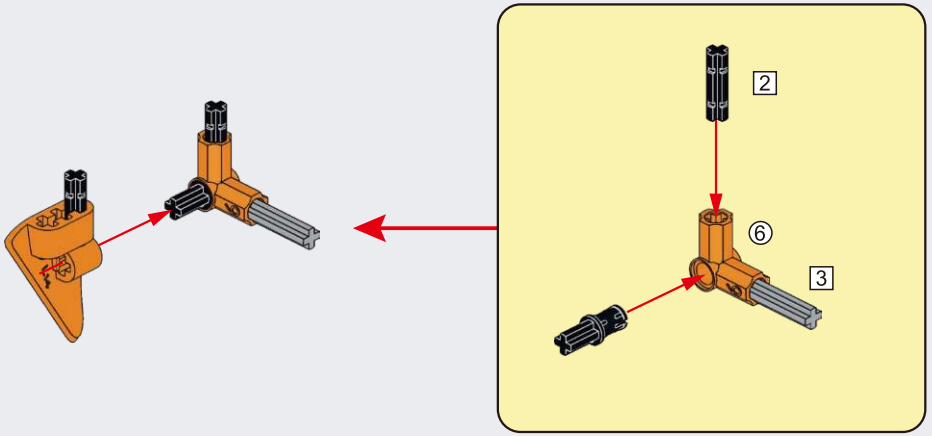

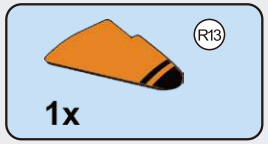

F150

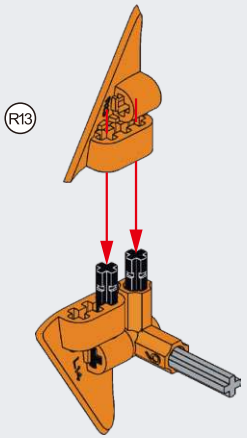

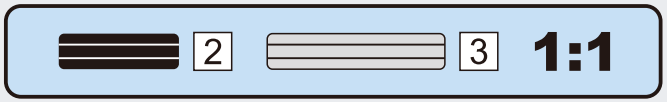

F151

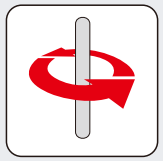

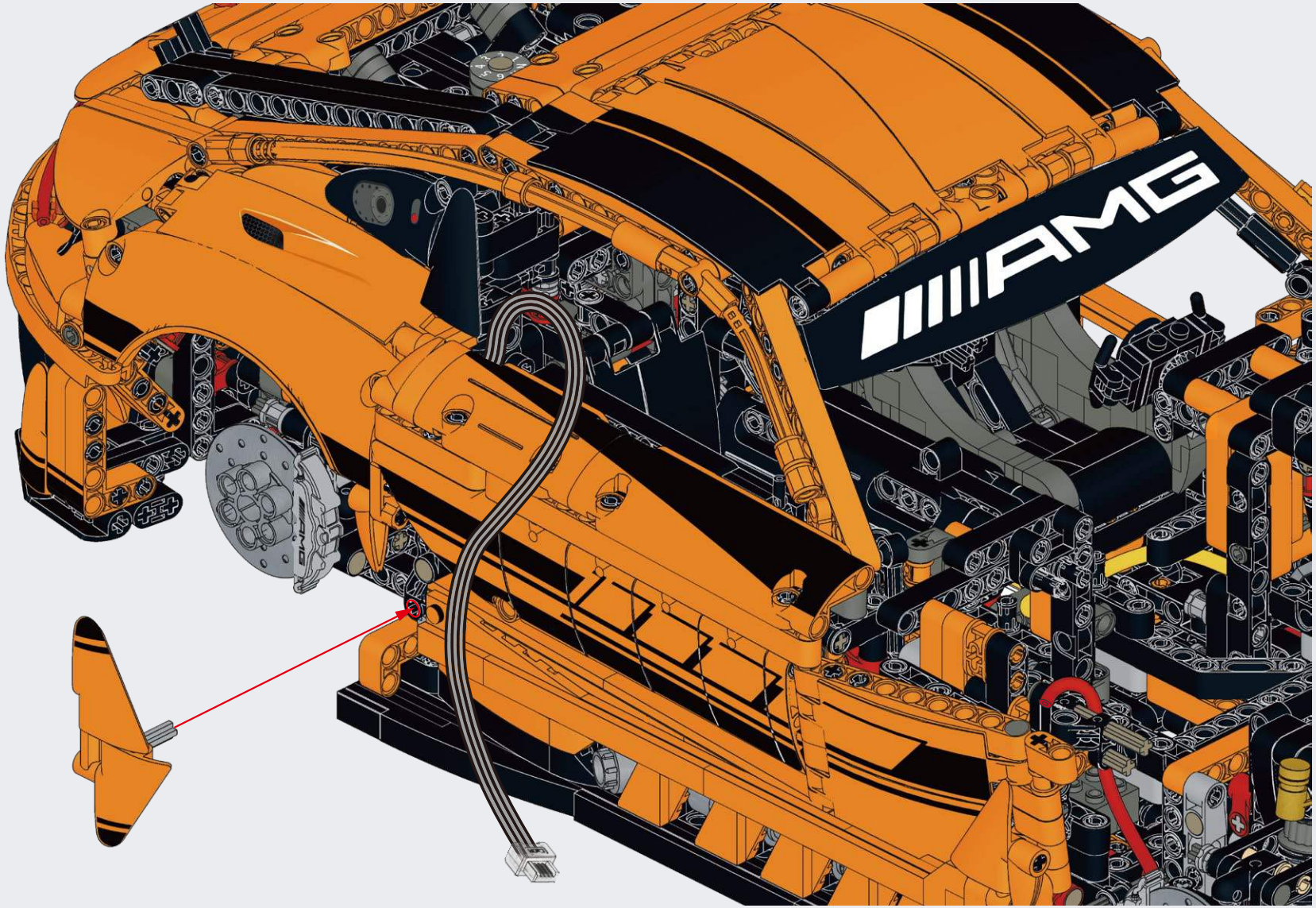

F152

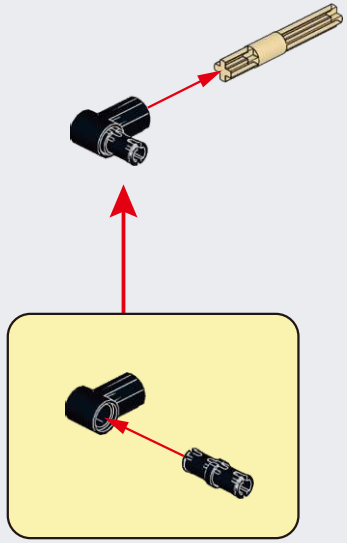

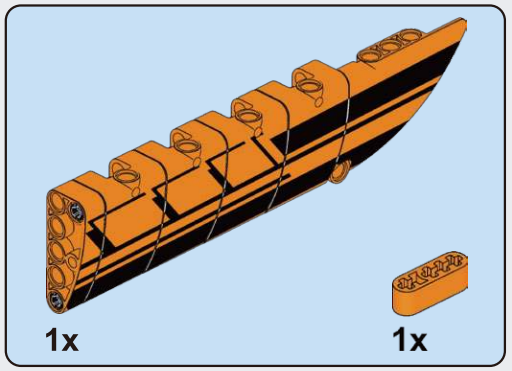

F153

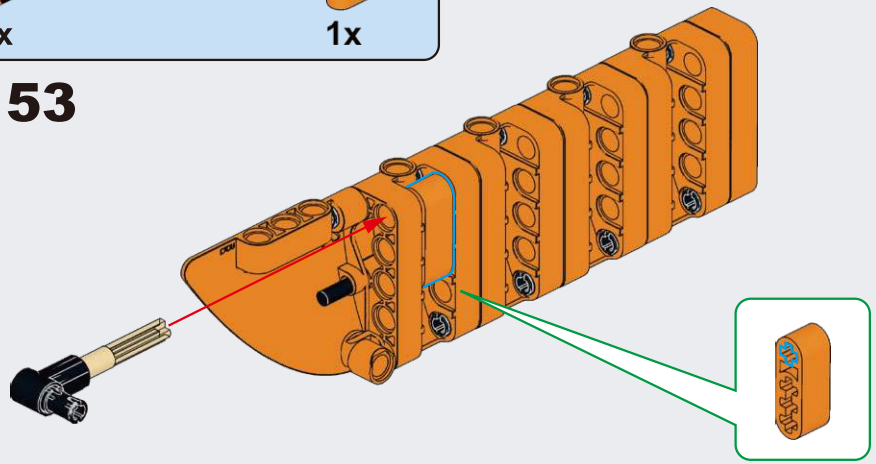

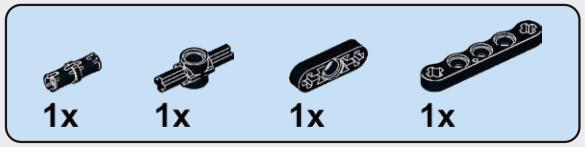

F154

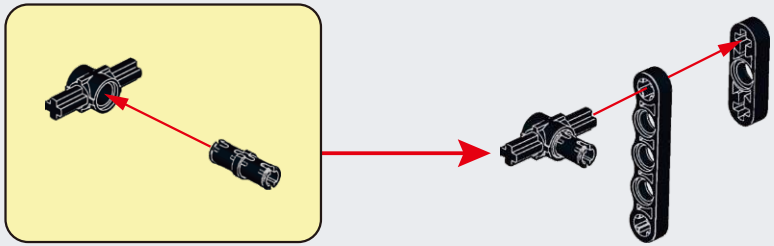

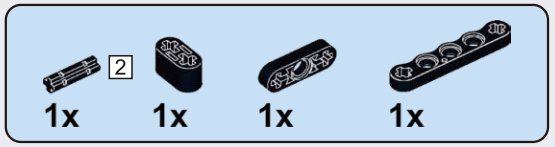

F155

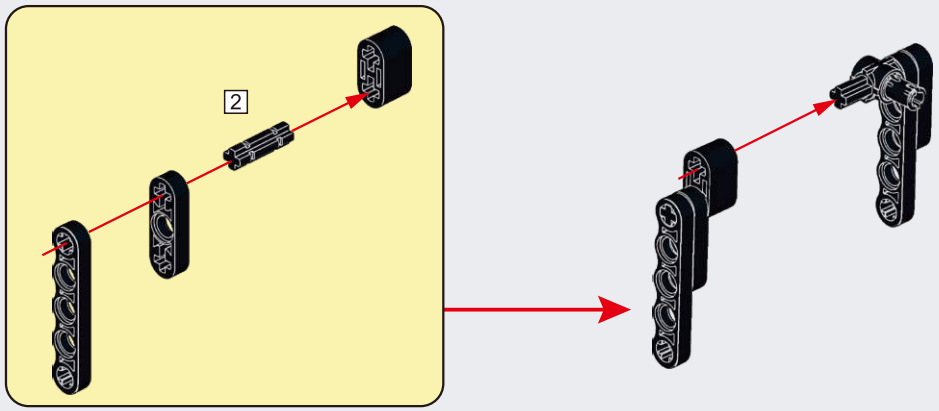

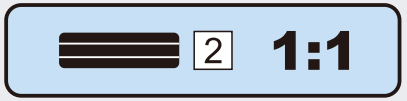

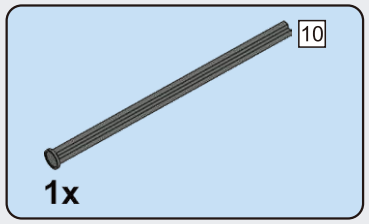

F156

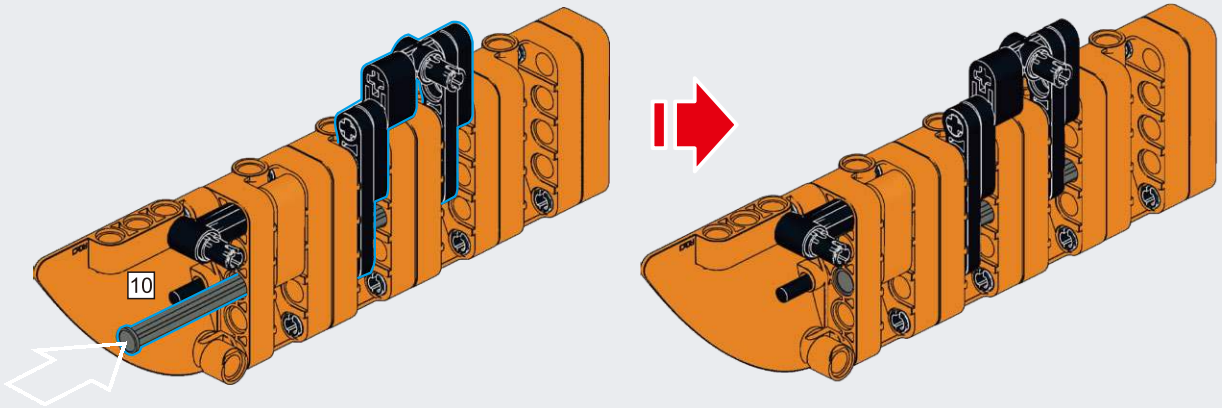

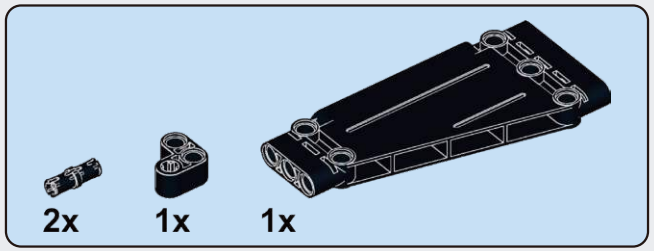

F157

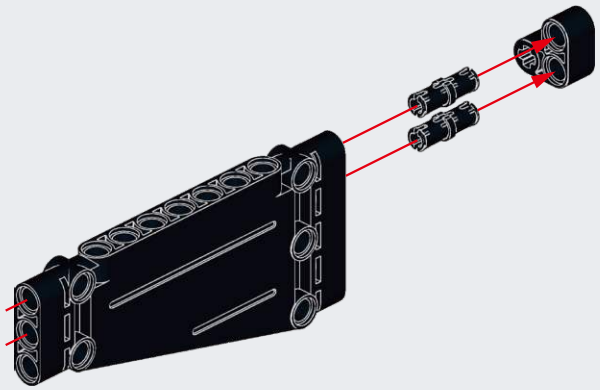

F158

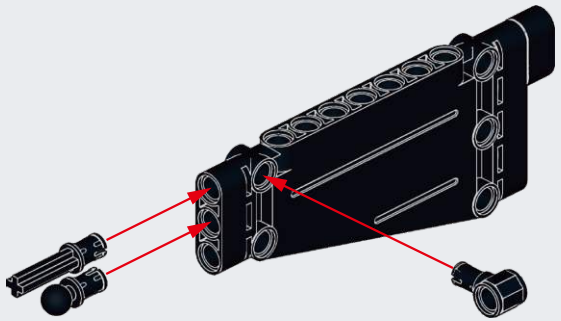

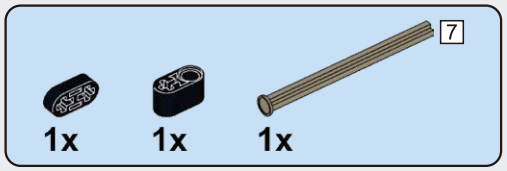

F159

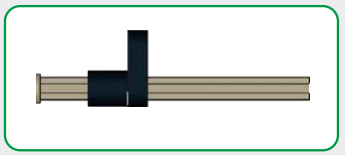

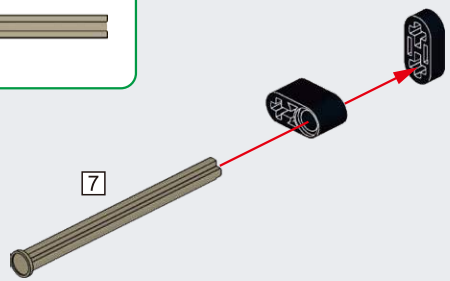

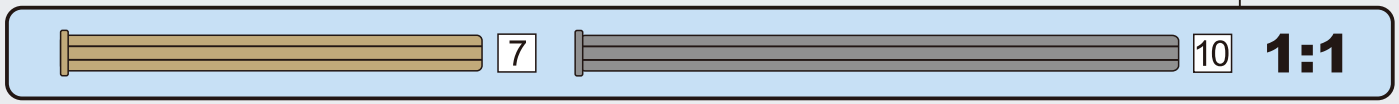

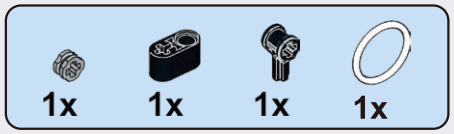

F160

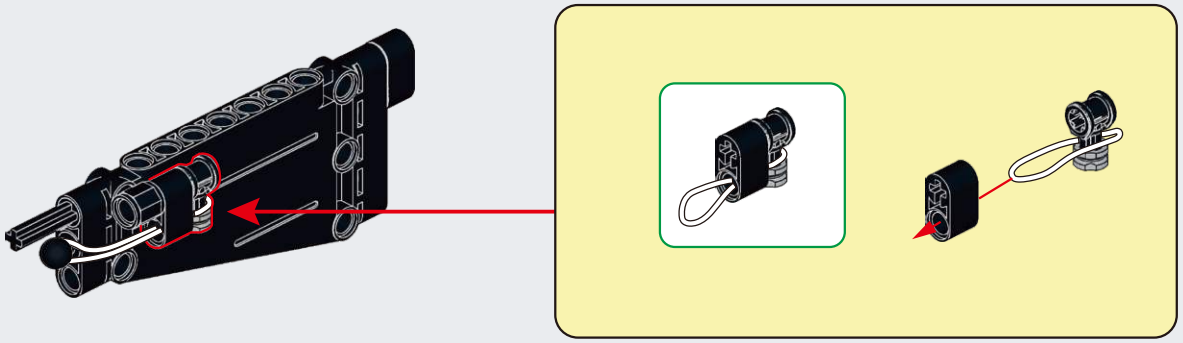

F161

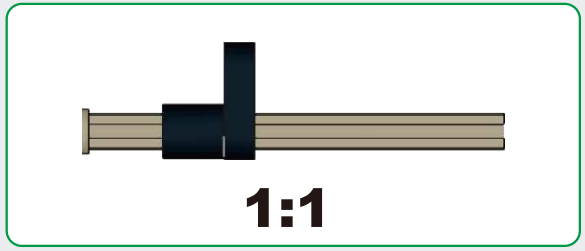

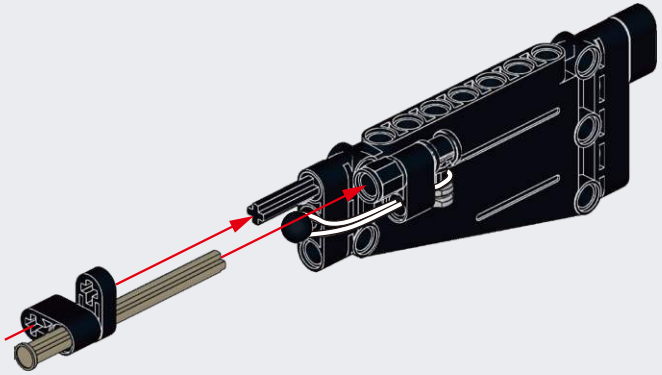

F162

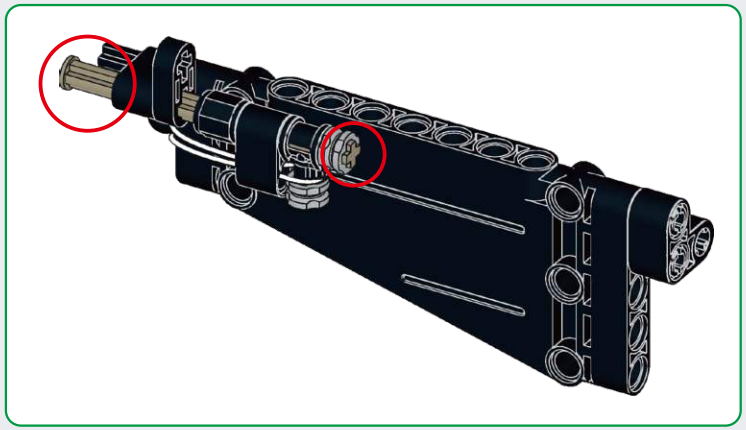

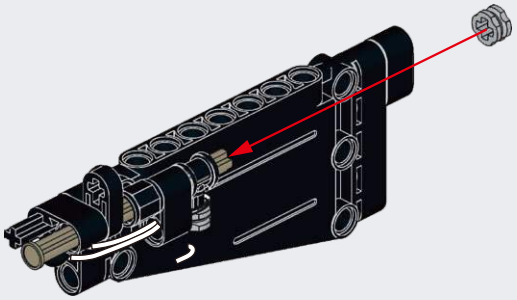

F163

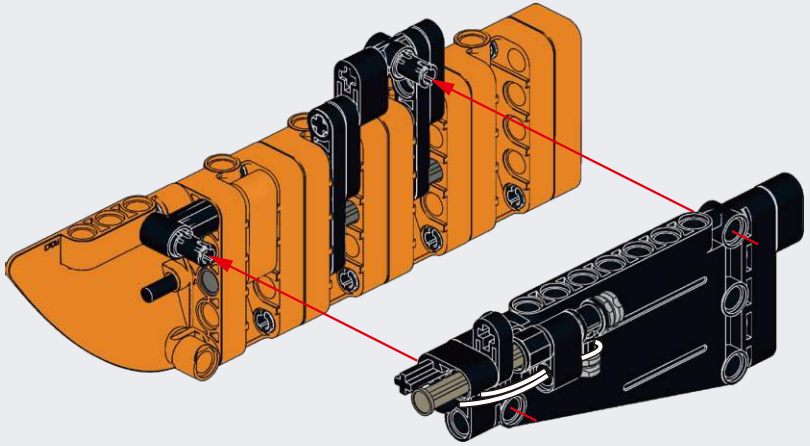

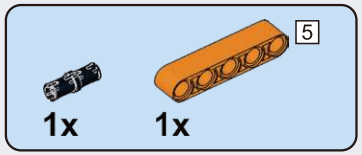

F164

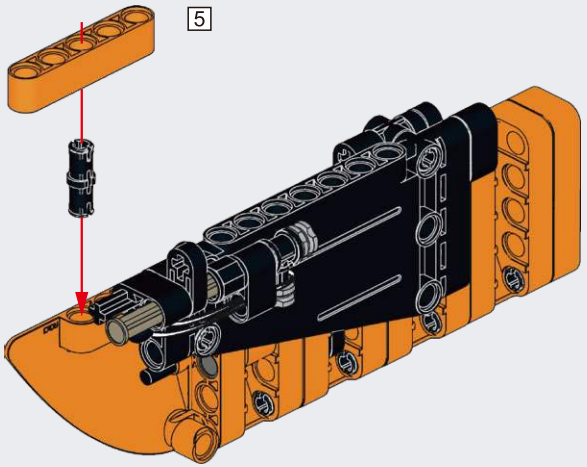

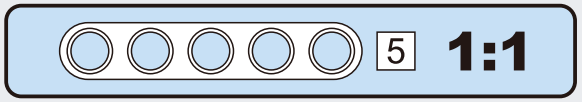

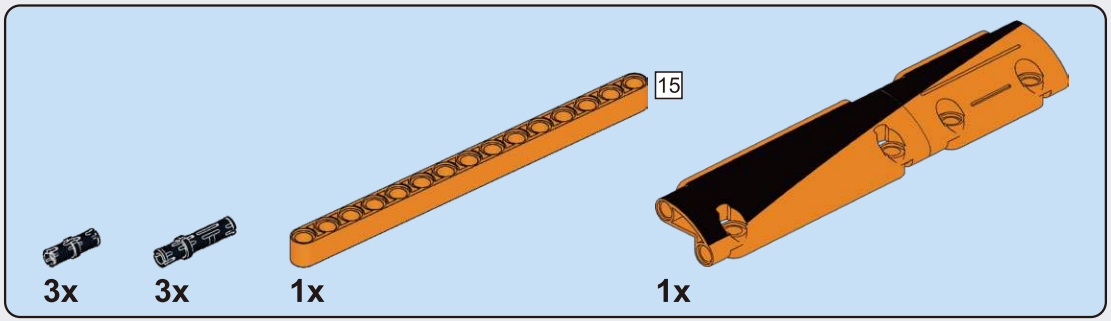

F165

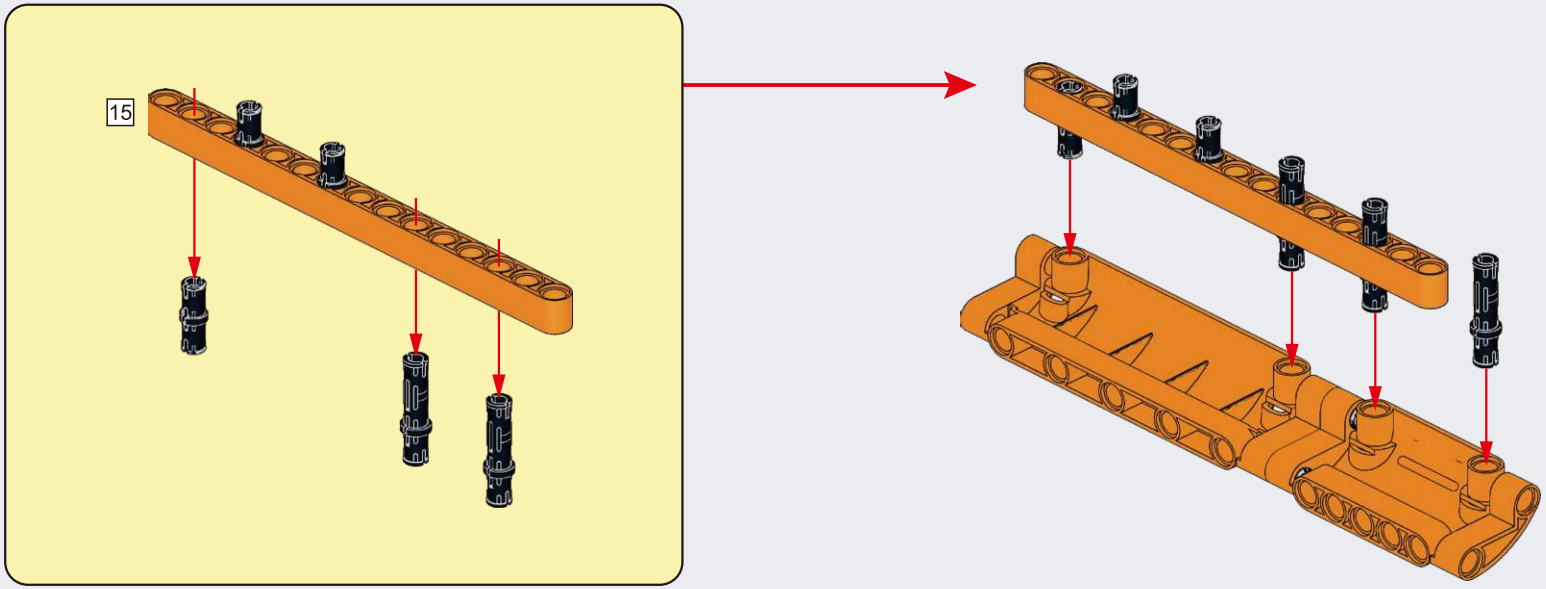

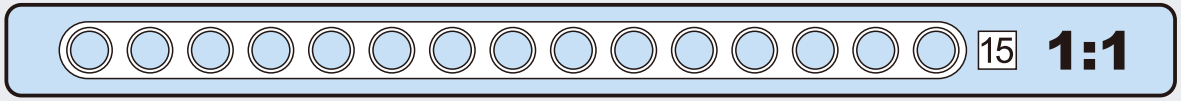

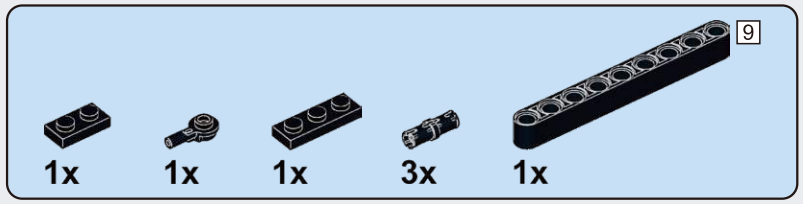

F166

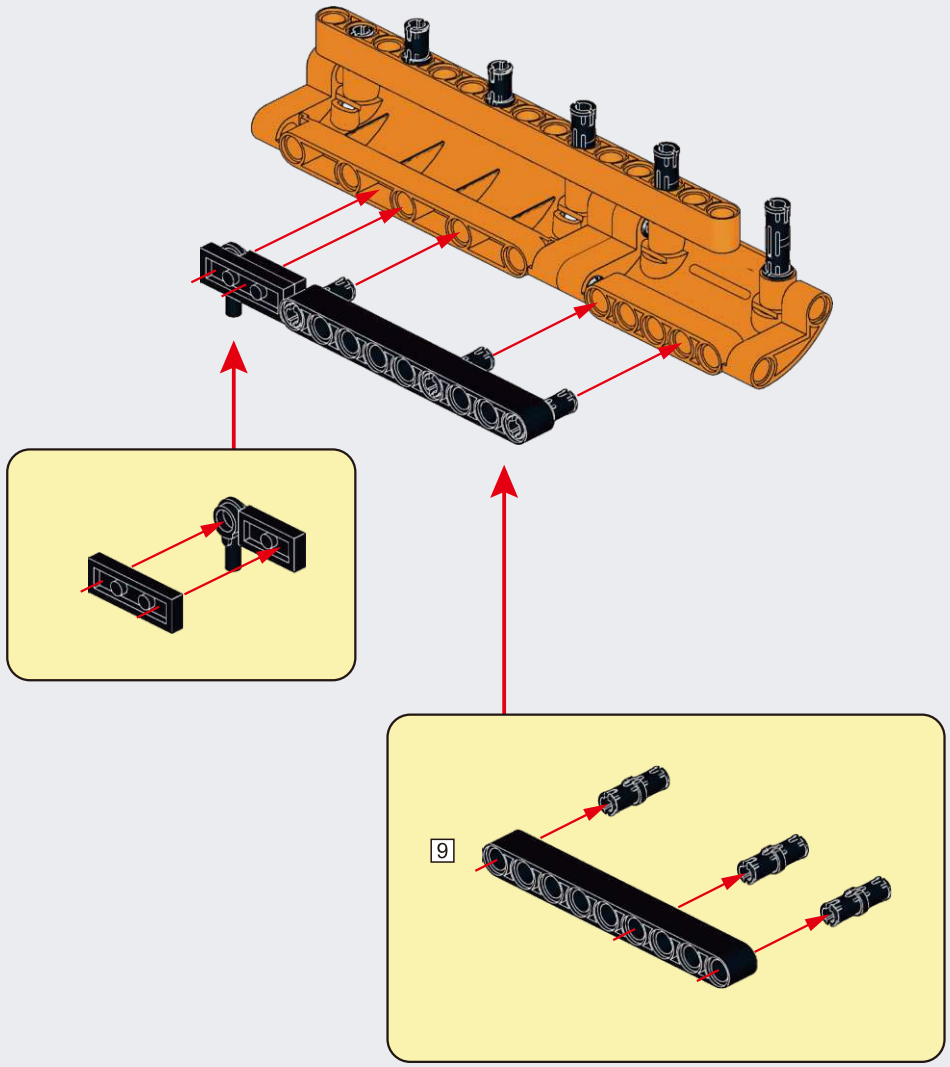

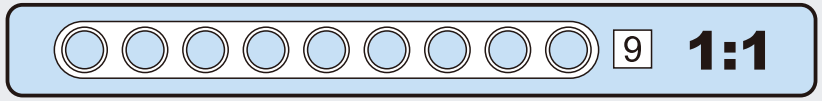

F167

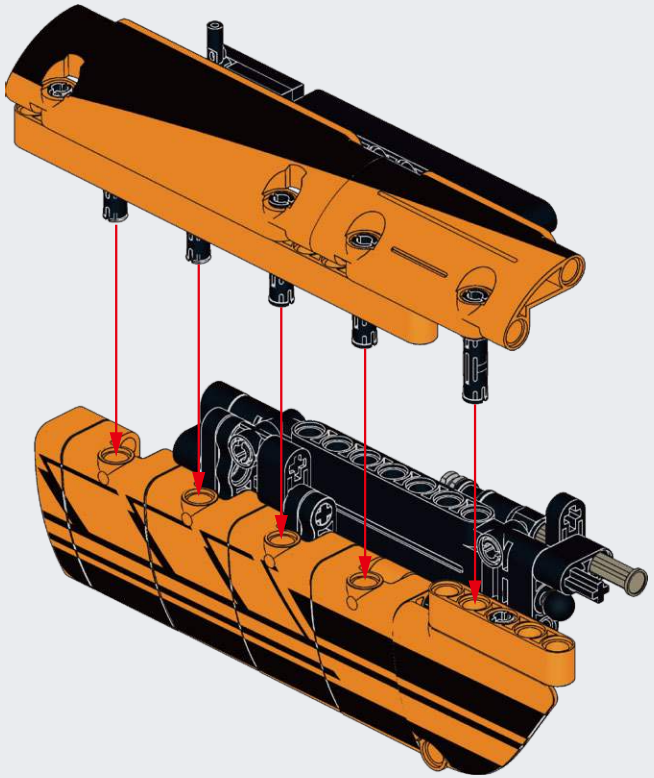

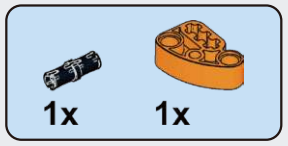

F168

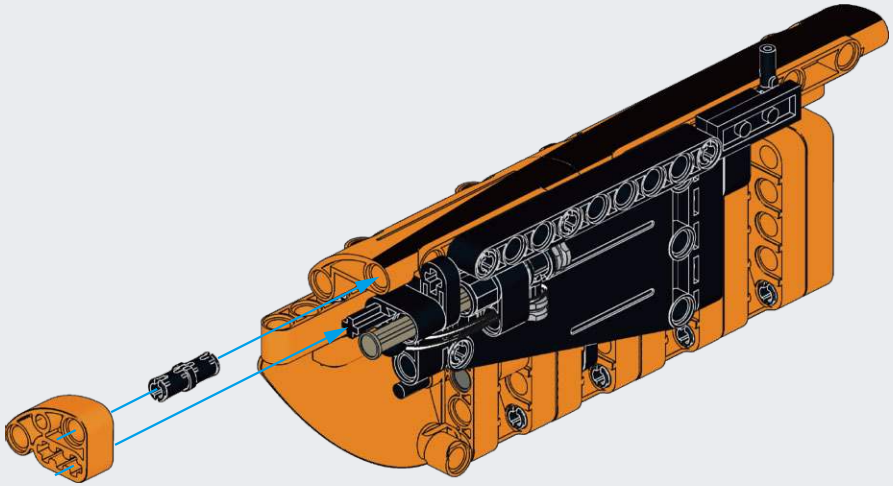

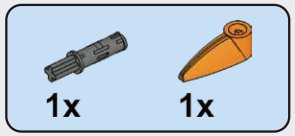

F169

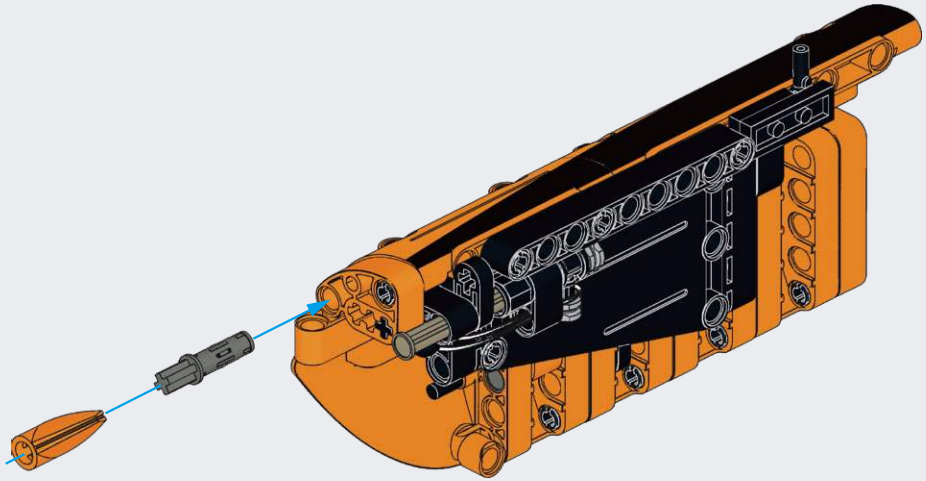

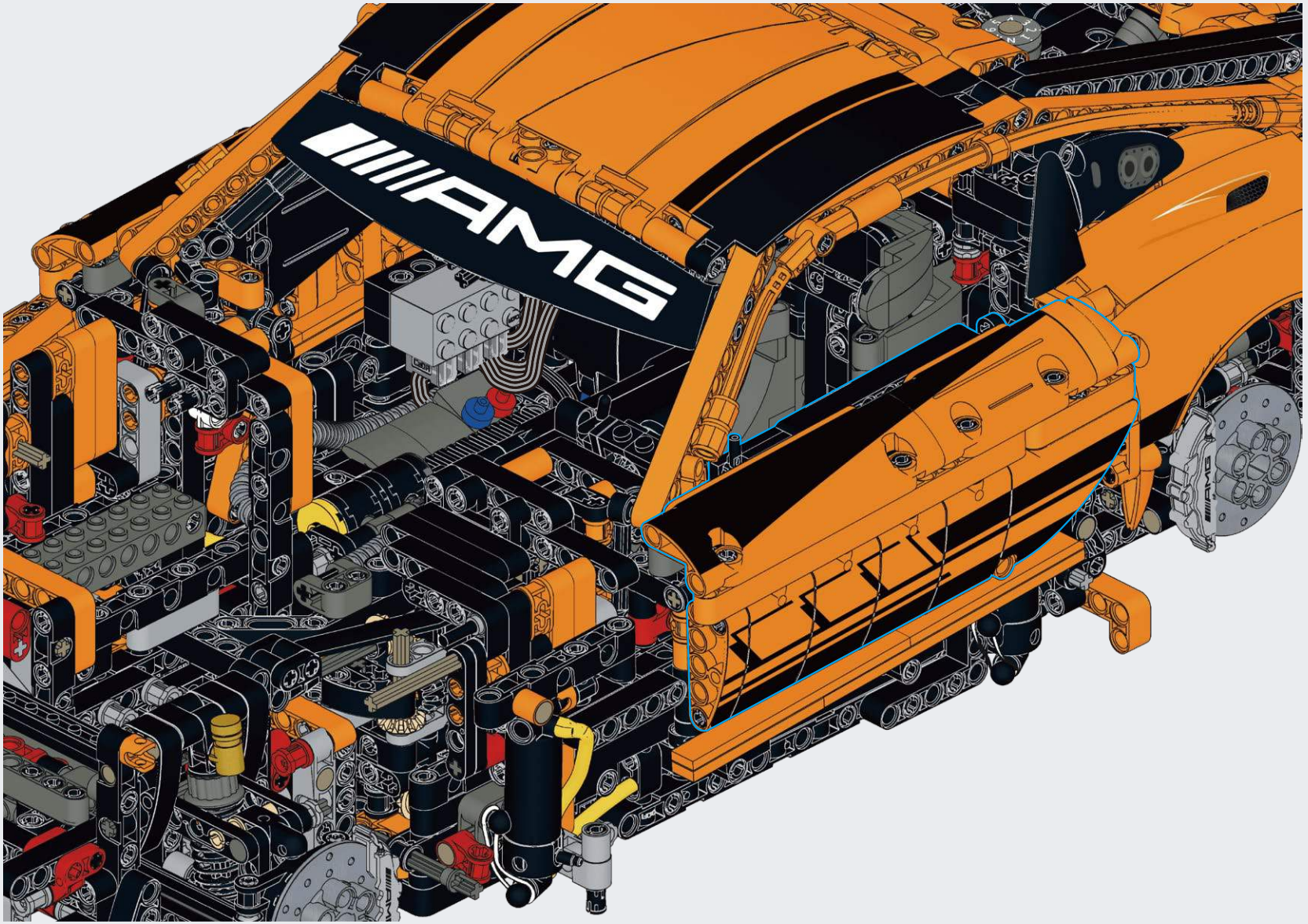
AMG

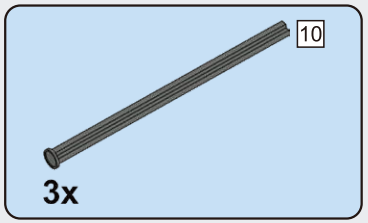

F171

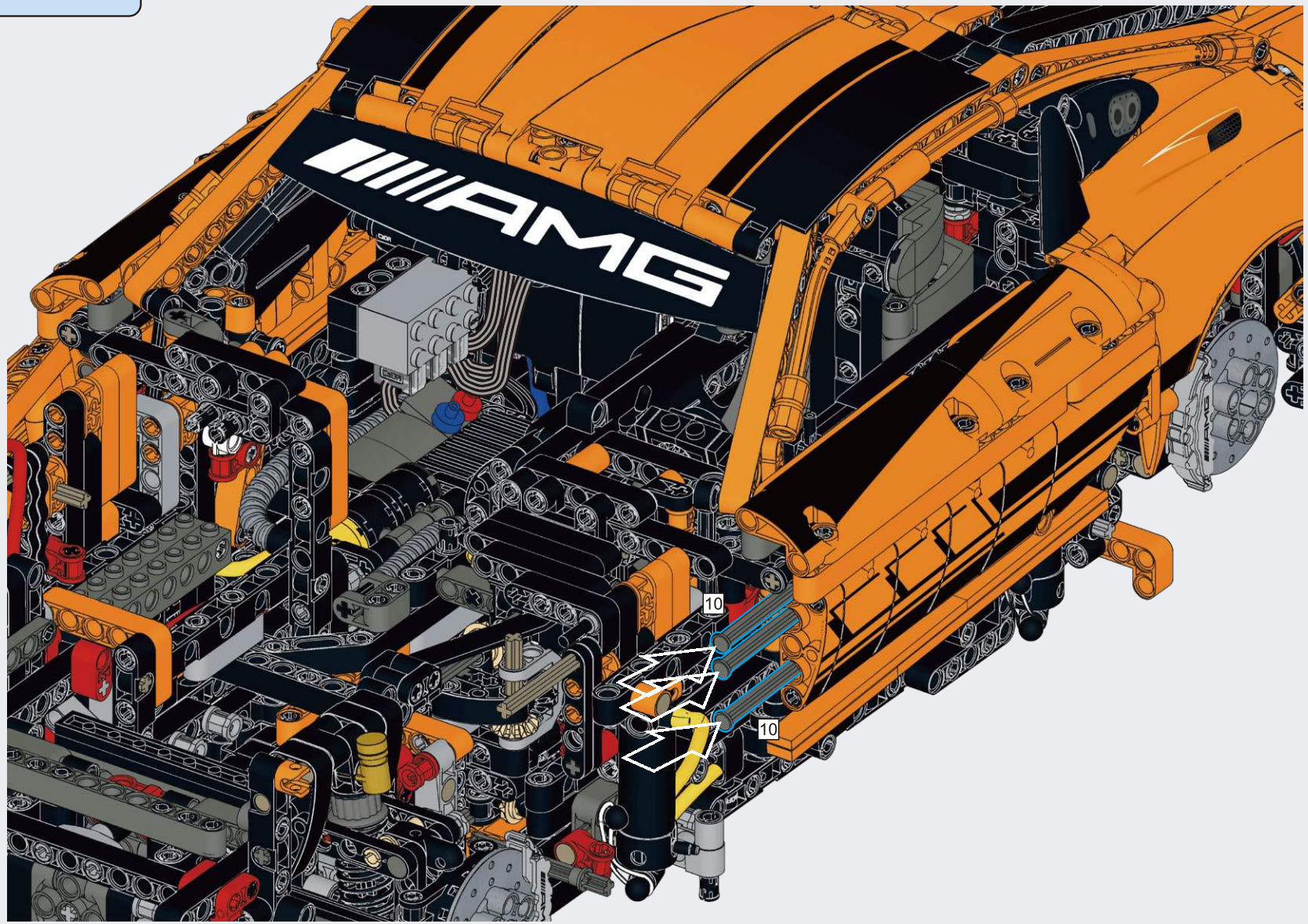

F172

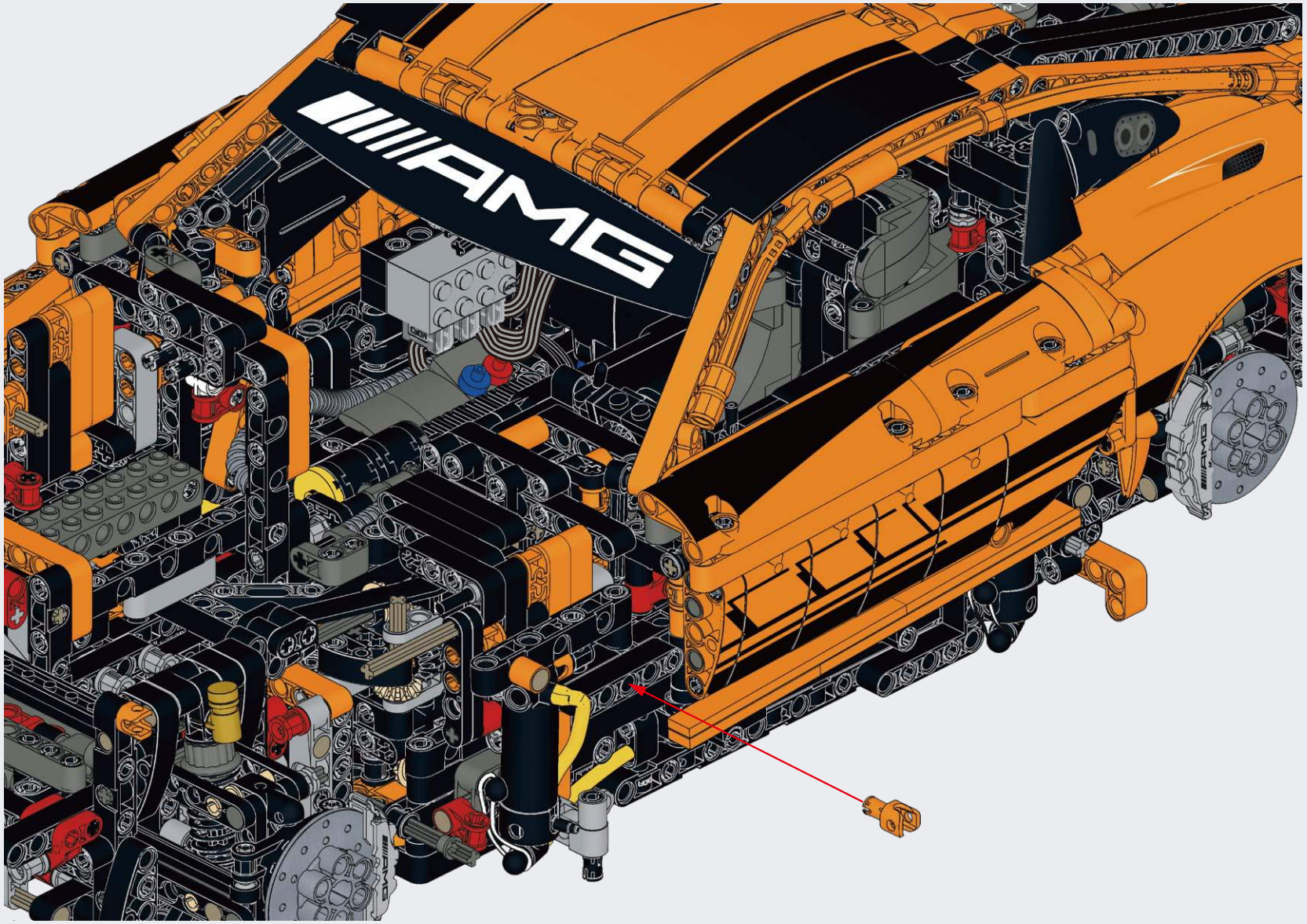

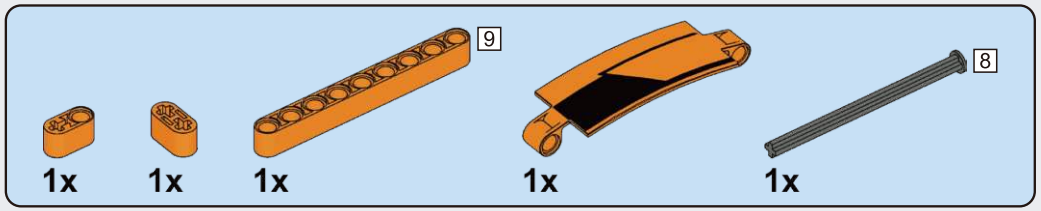

F173

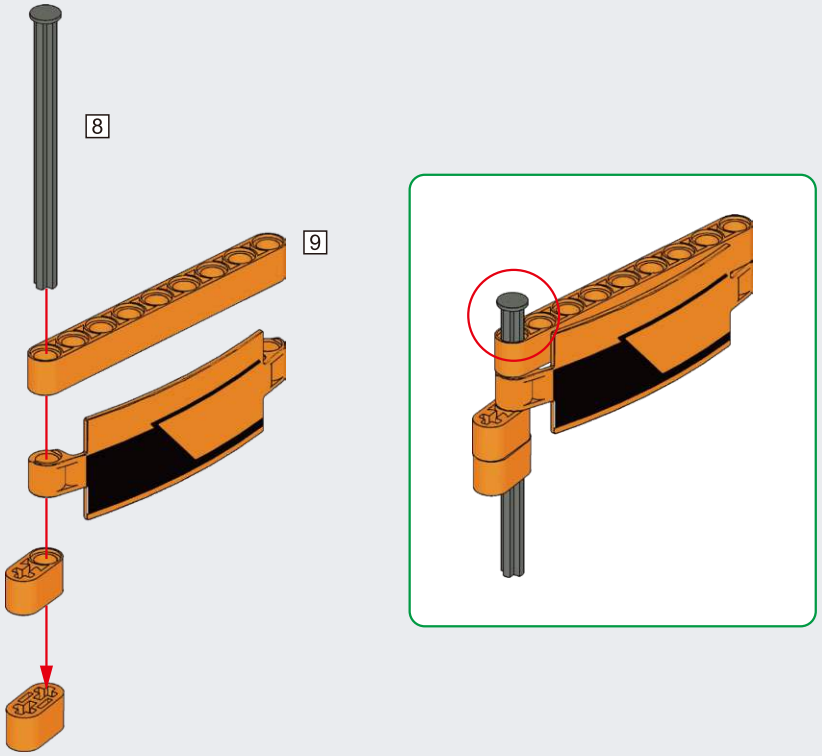

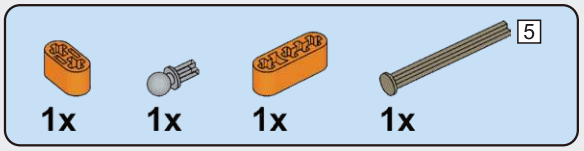

F174

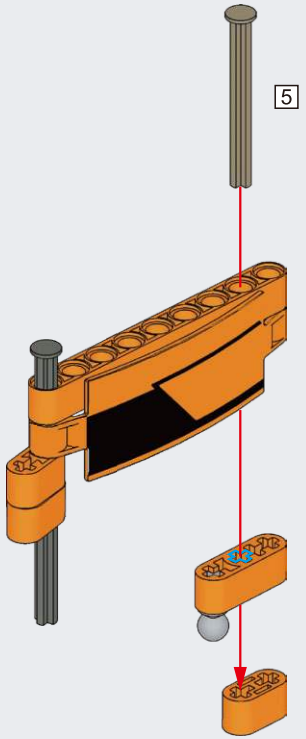

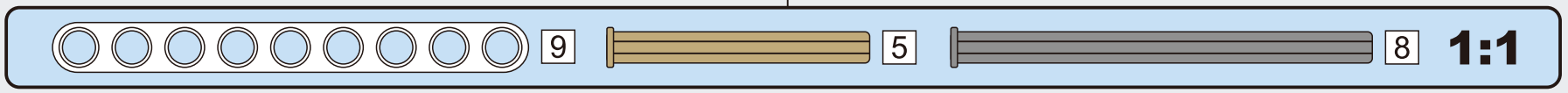

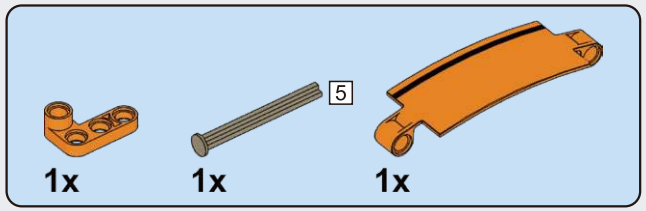

F175

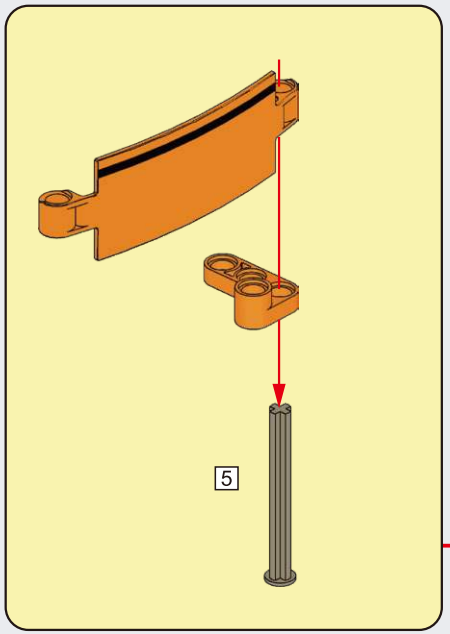

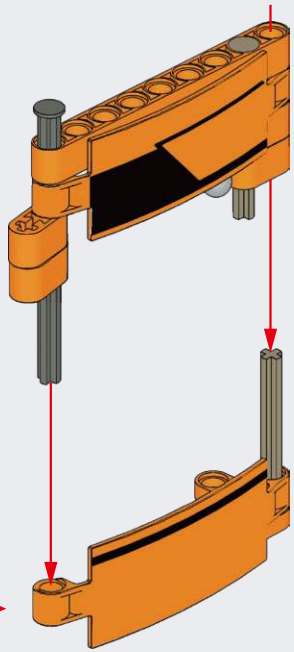

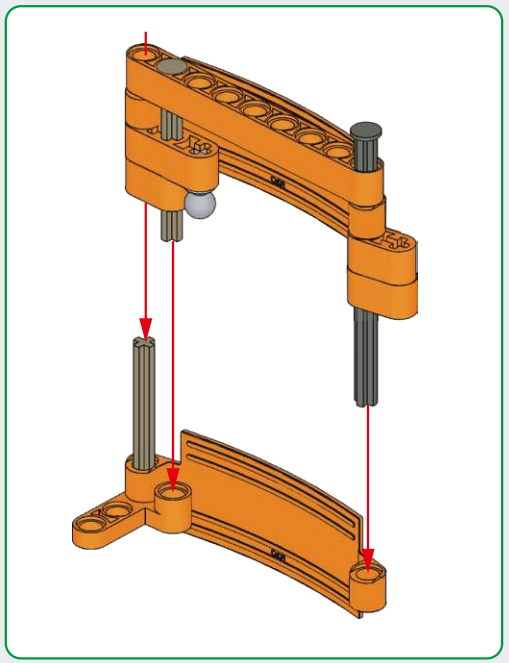

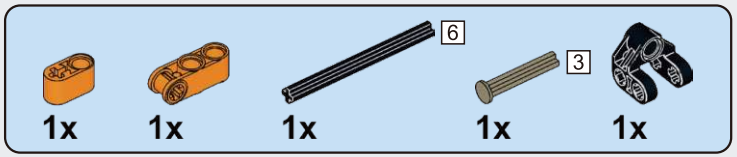

F176

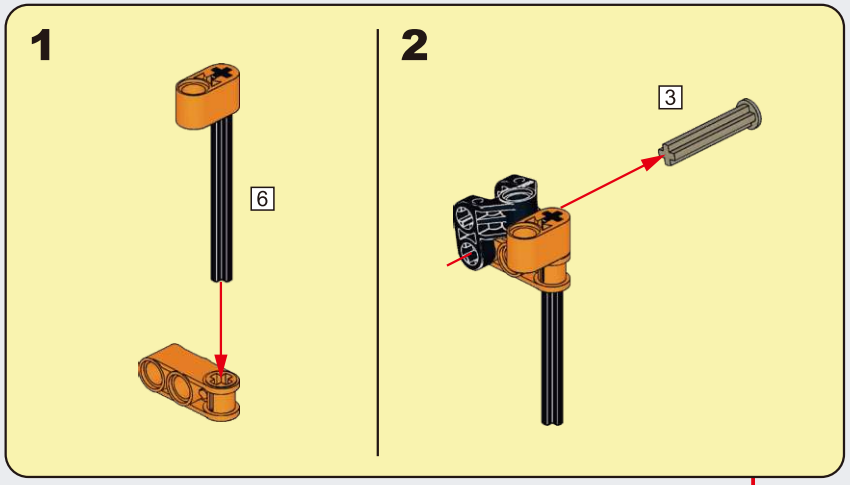

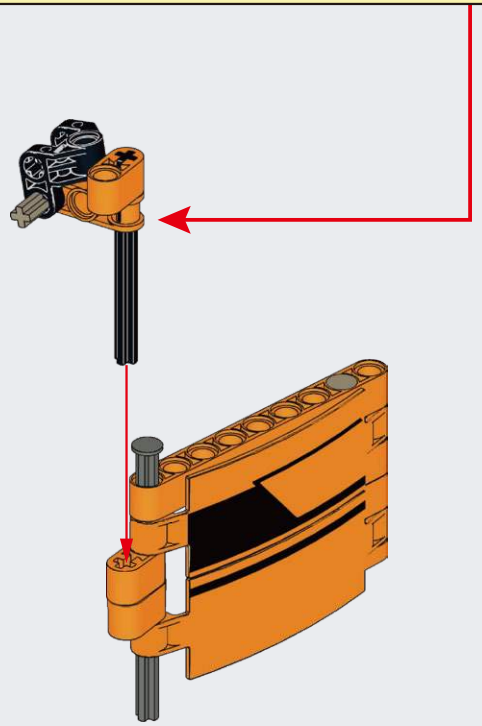

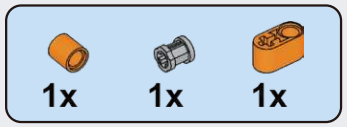

F177

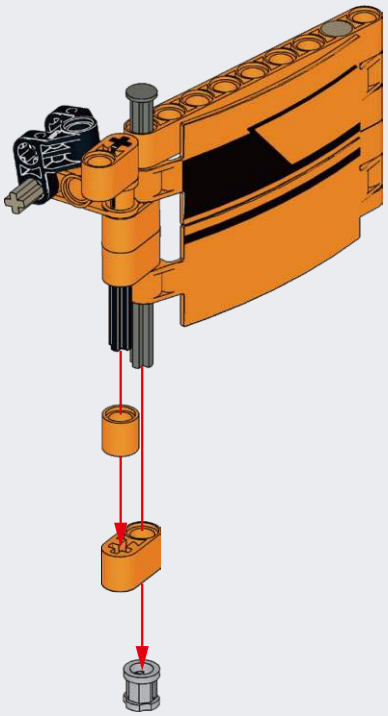

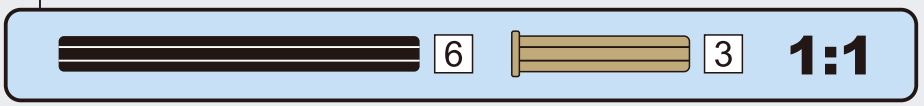

F178

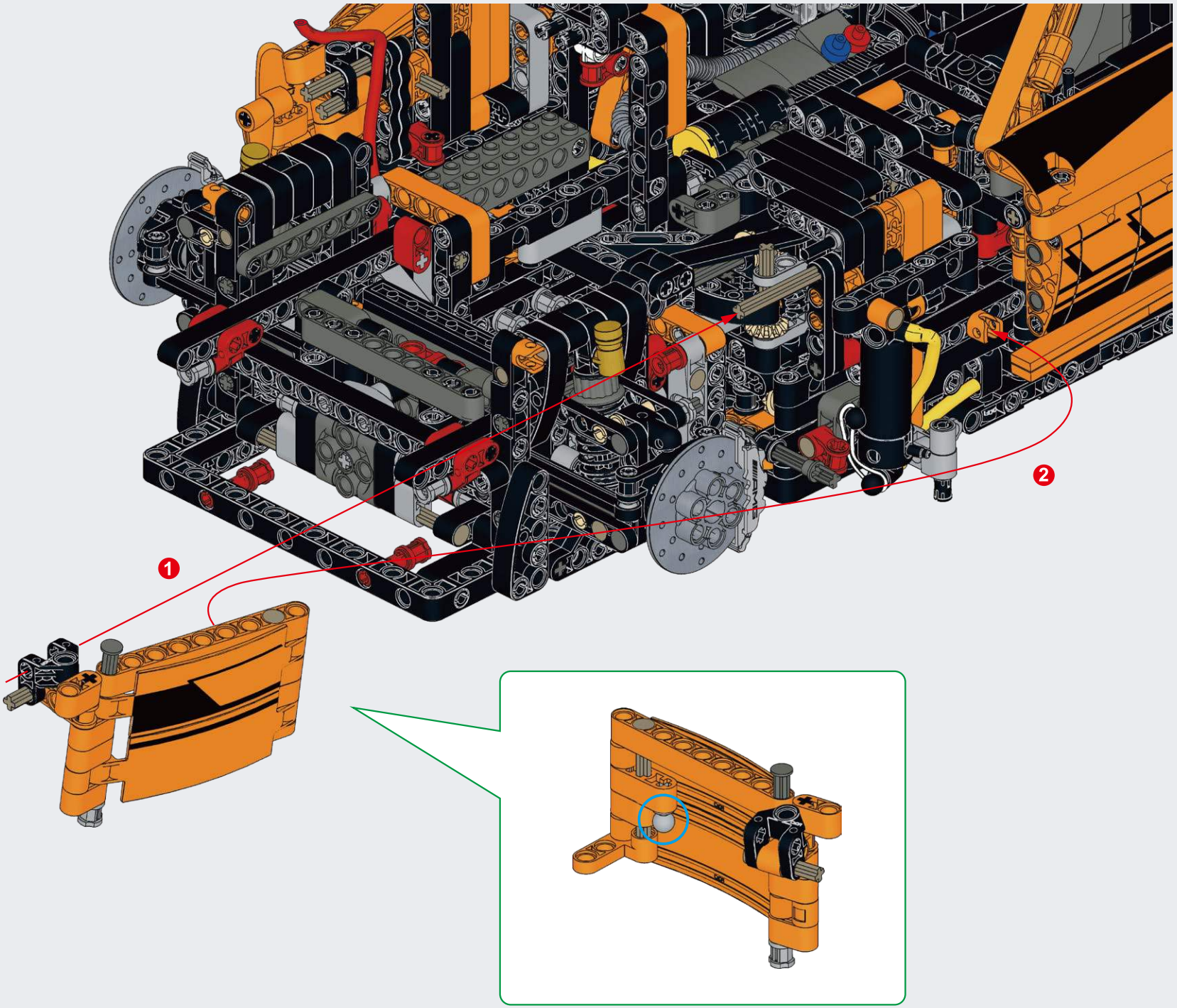

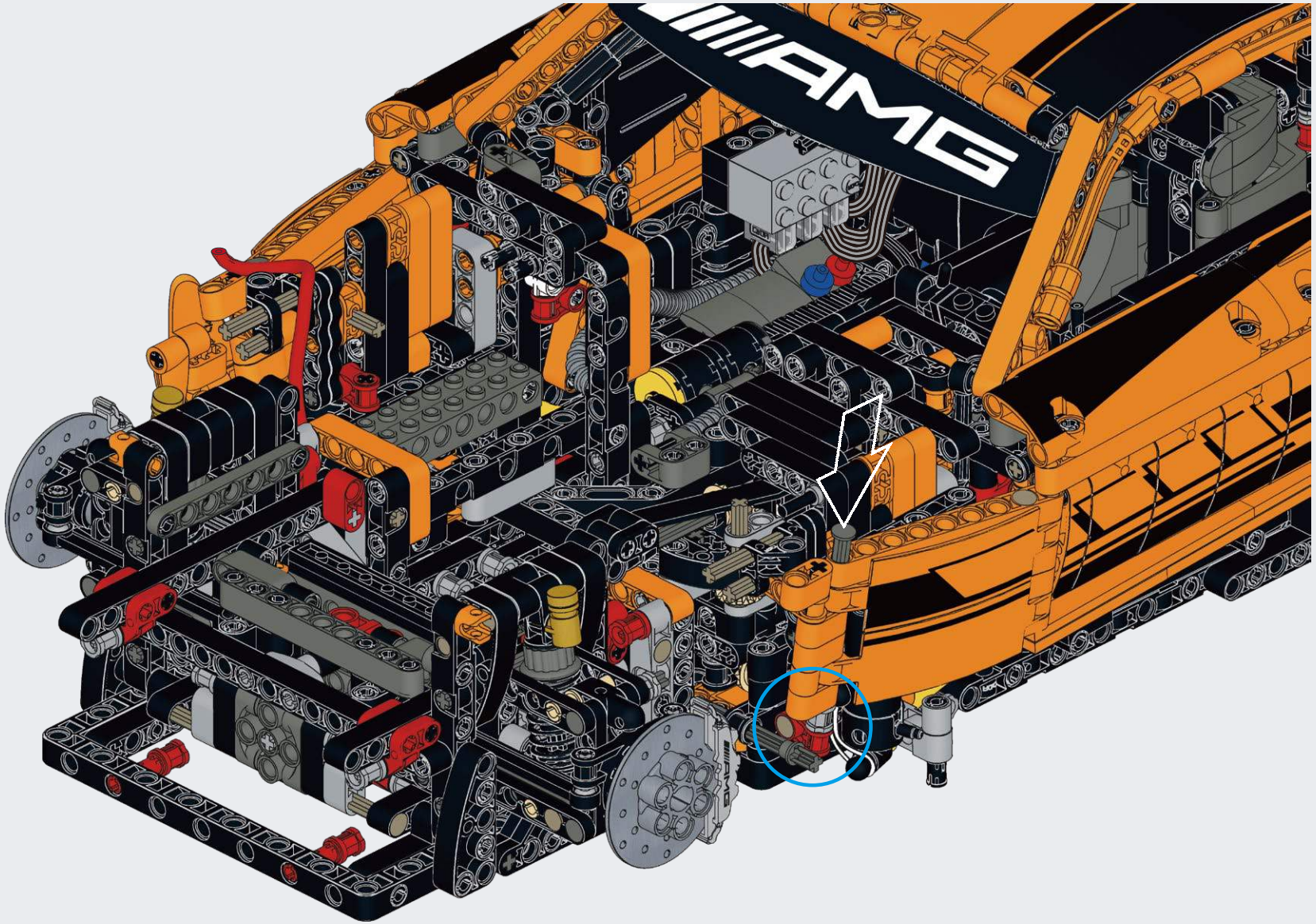
AMG

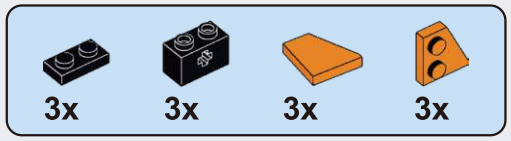

F180

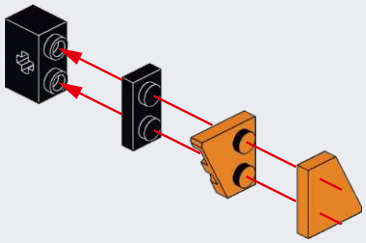

x3

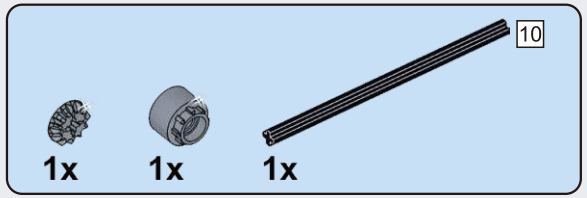

F181

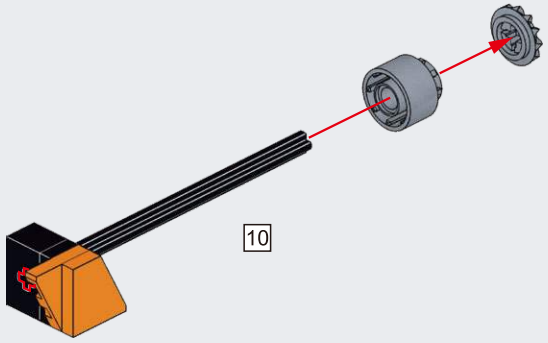

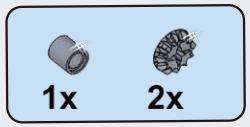

F182

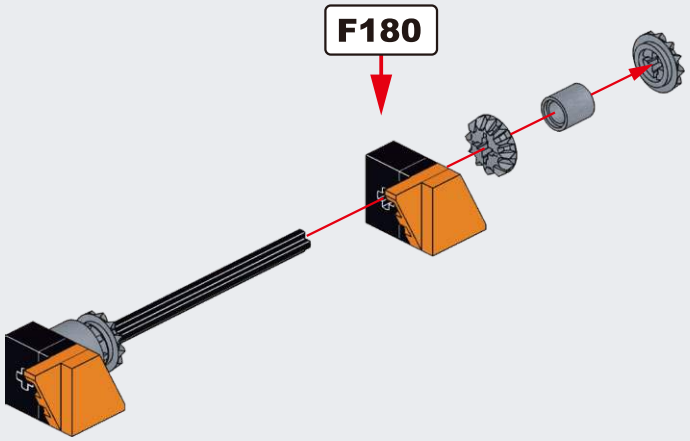

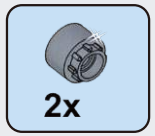

F183

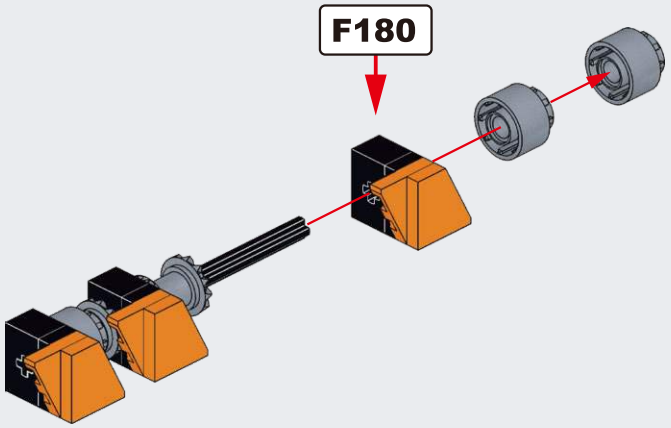

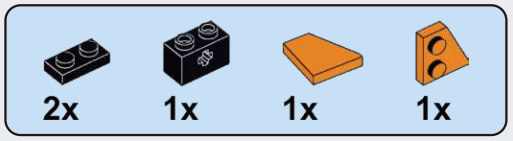

F184

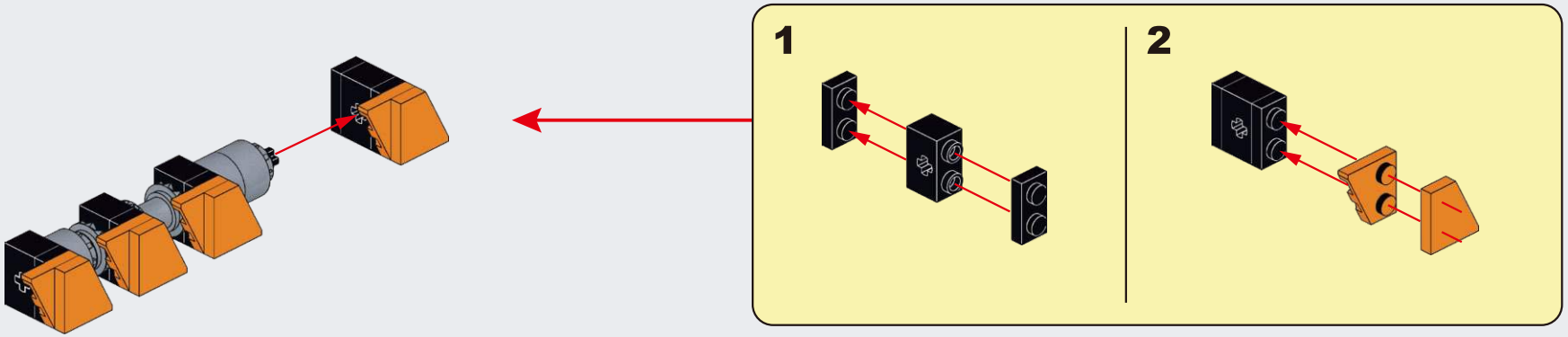

F185

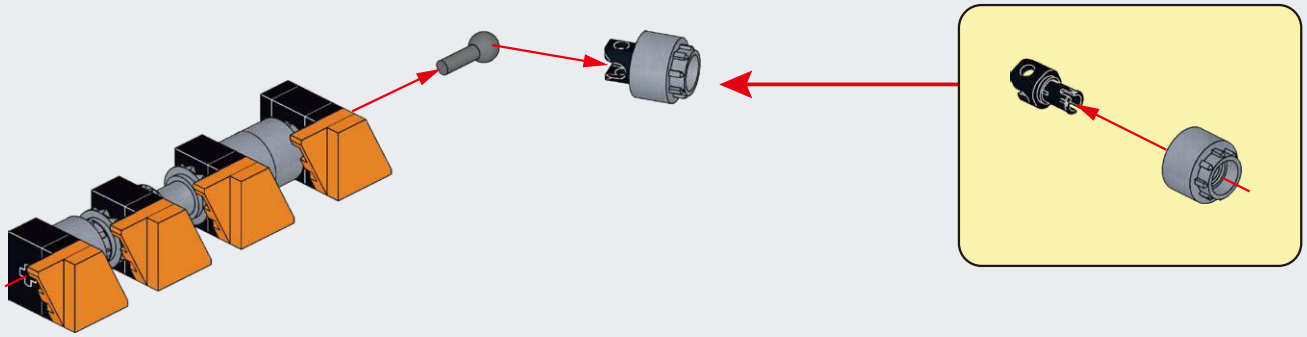

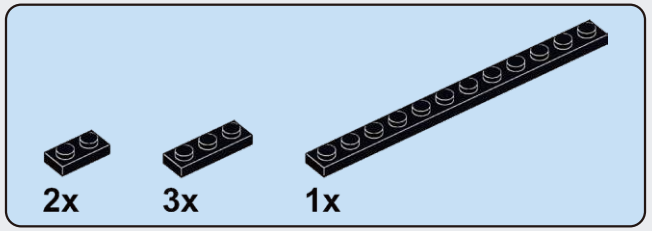

F186

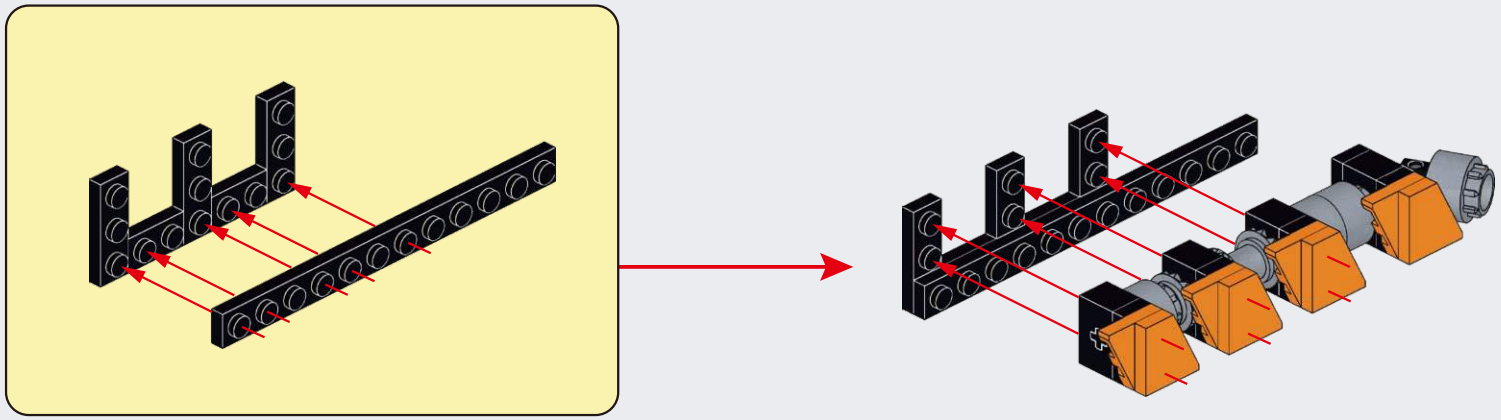

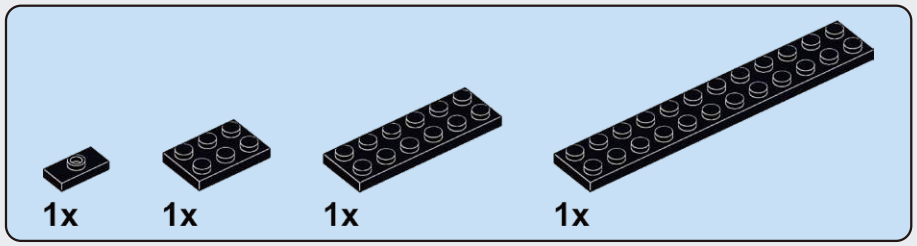

F187

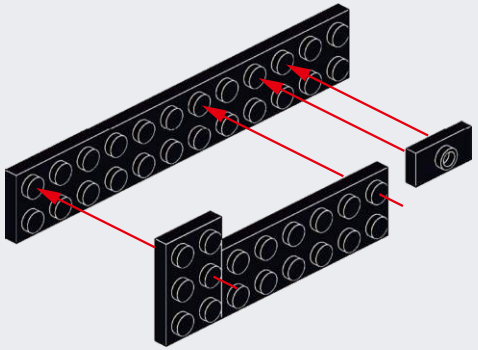

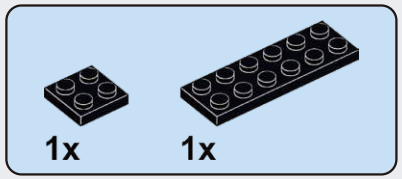

F188

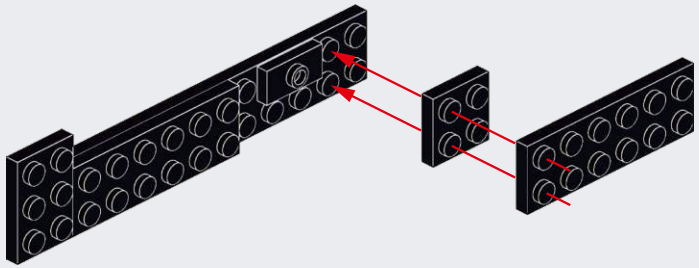

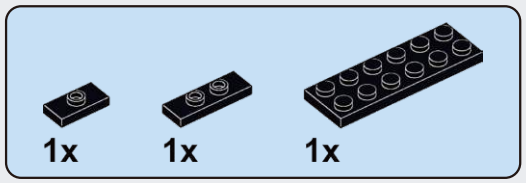

F189

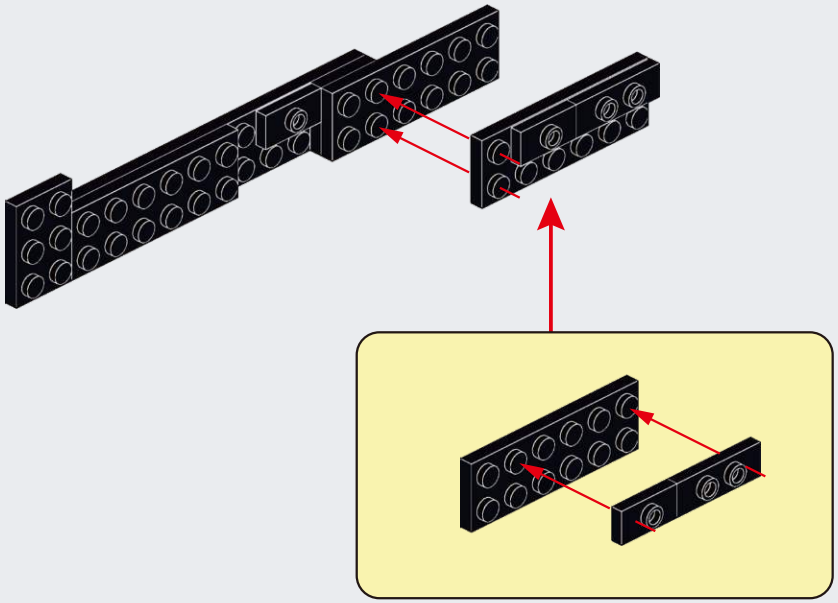

F190

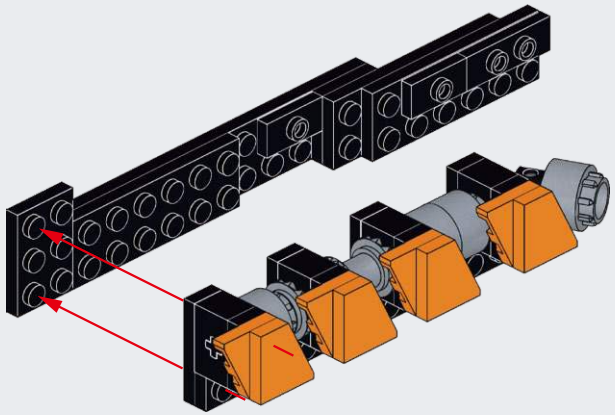

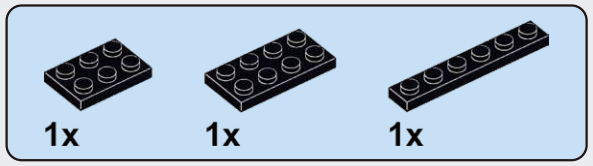

F191

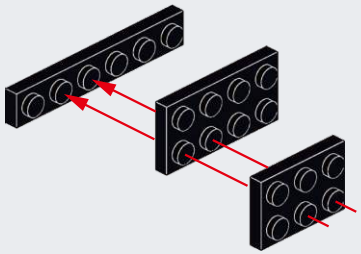

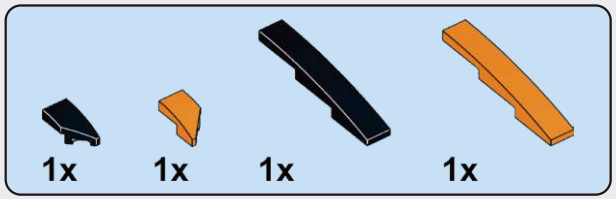

F192

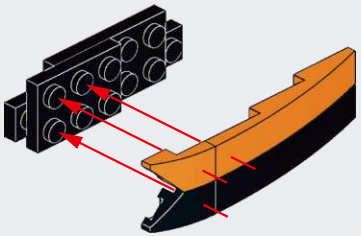

F193

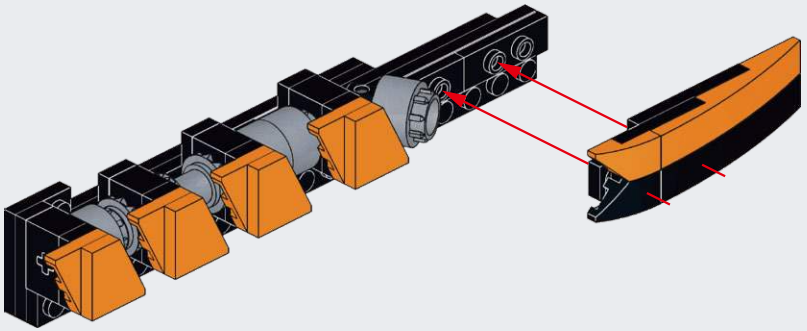

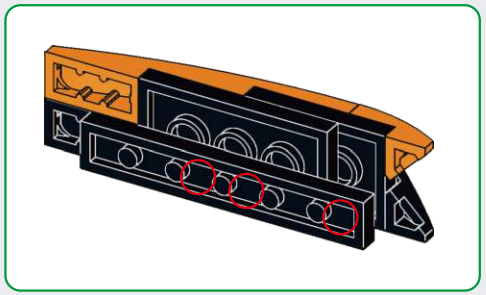

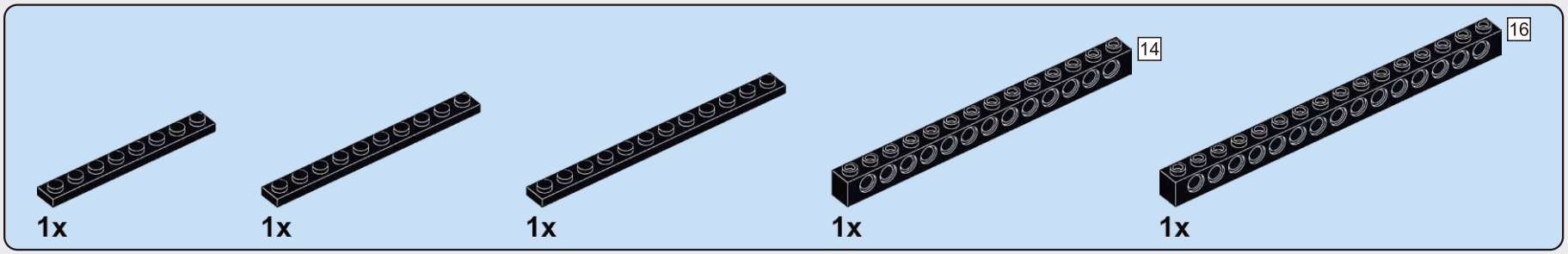

F194

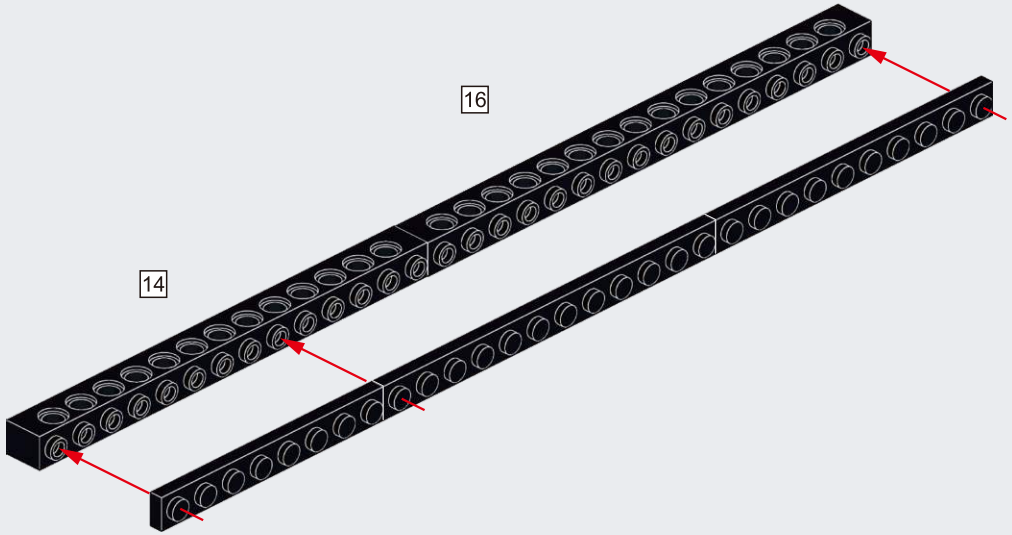

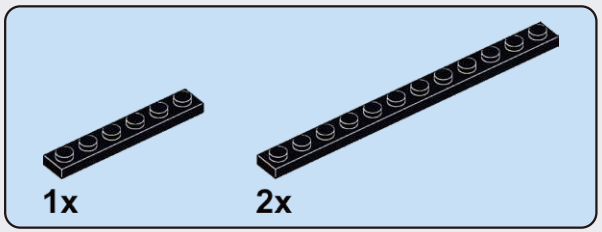

F195

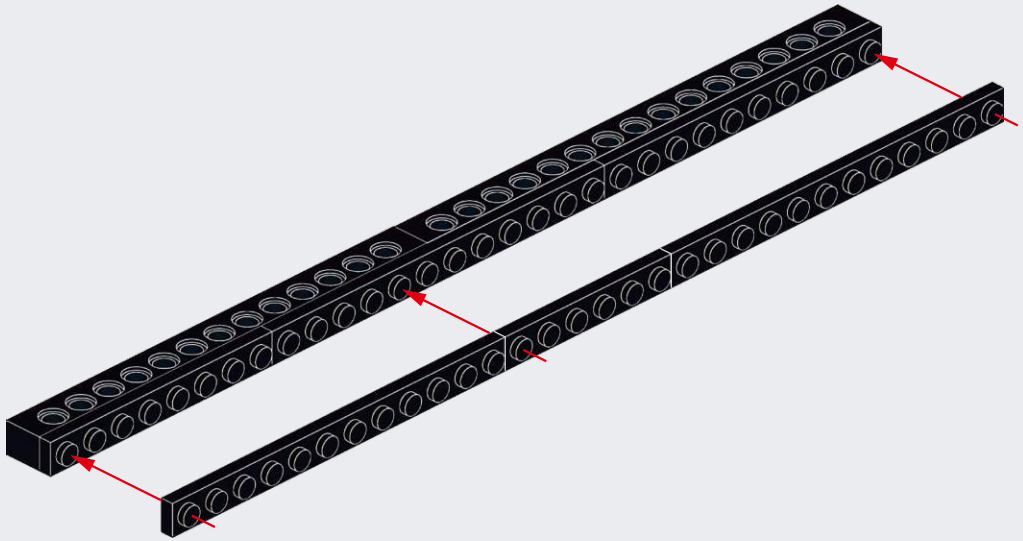

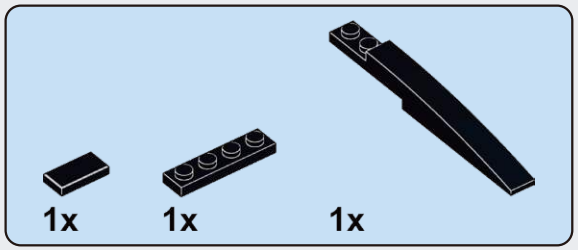

F196

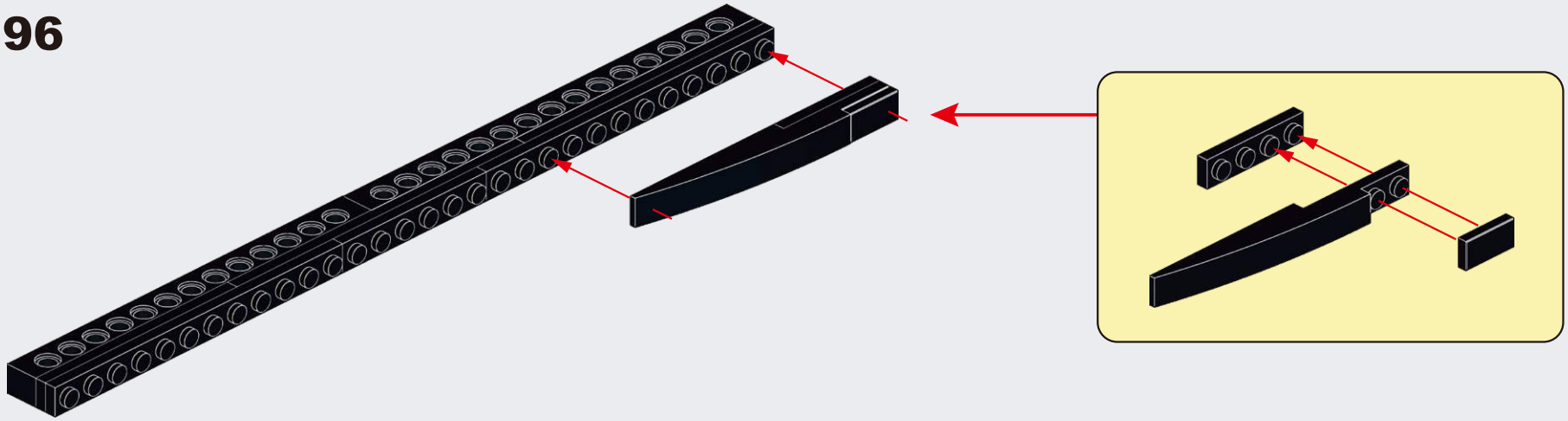

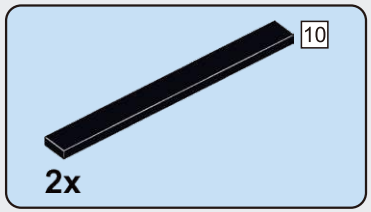

F197

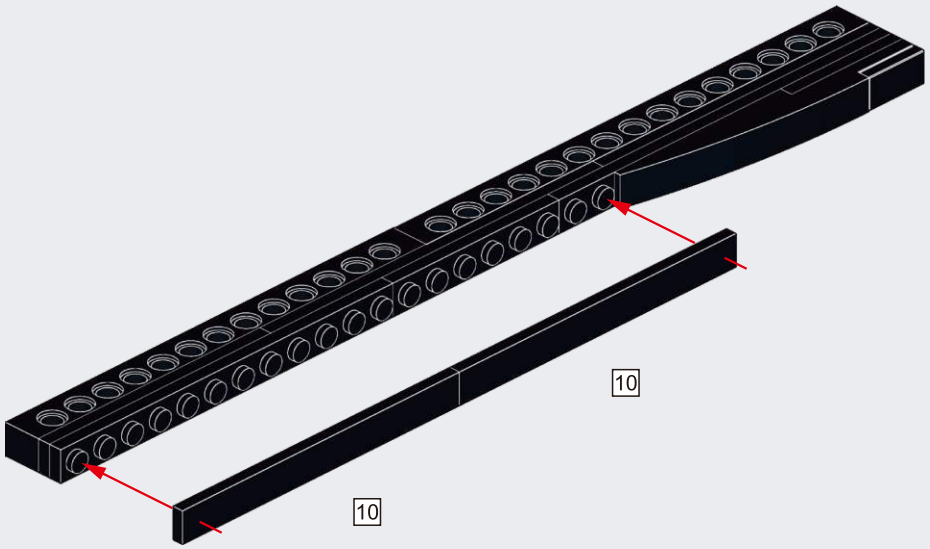

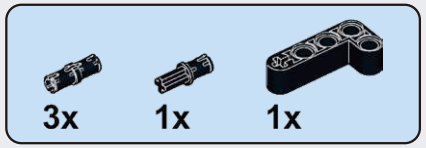

F198

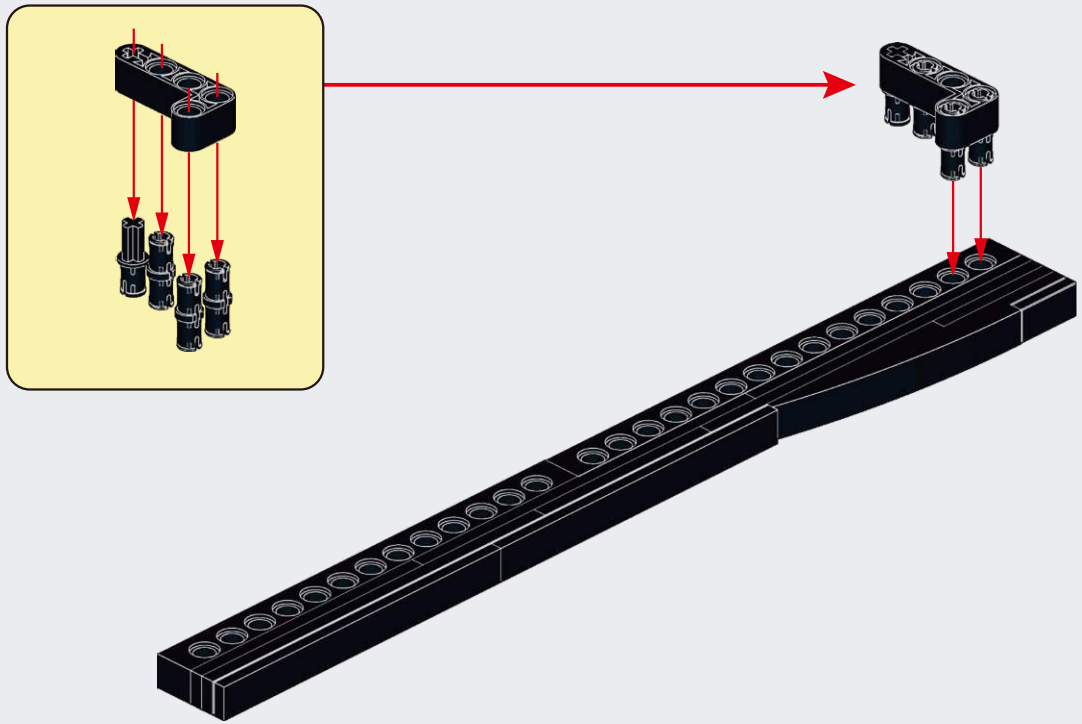

F199

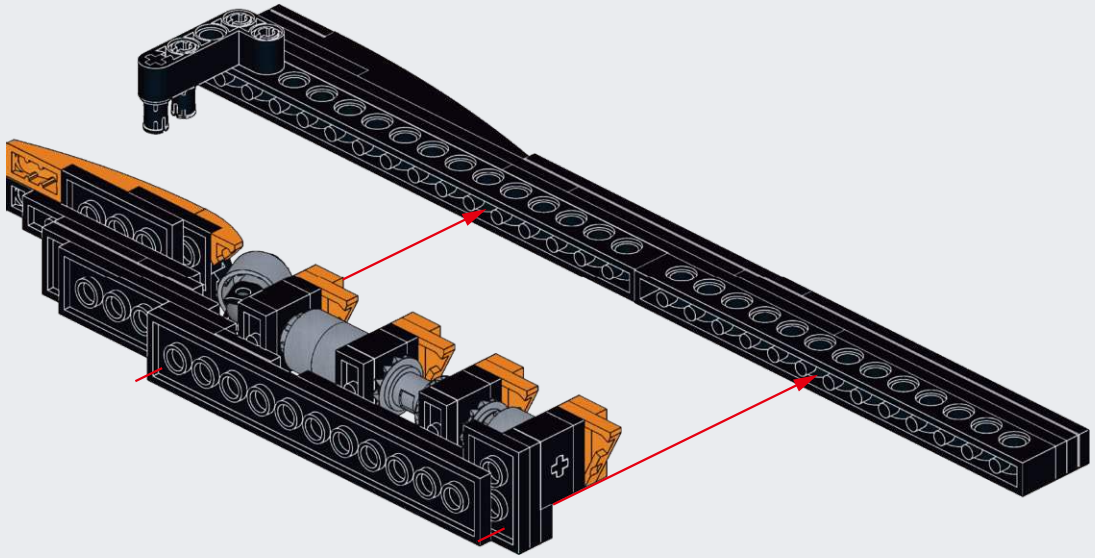

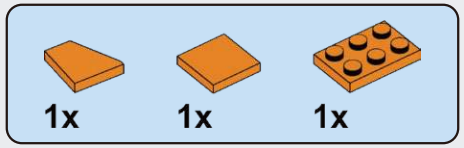

F200

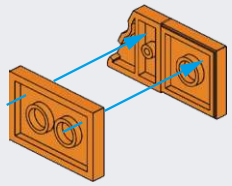

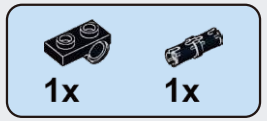

F201

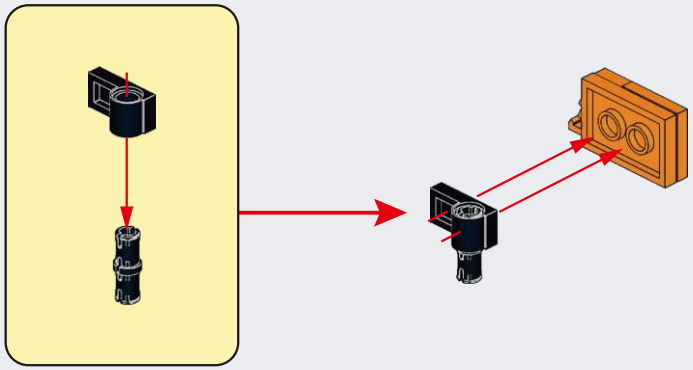

F202

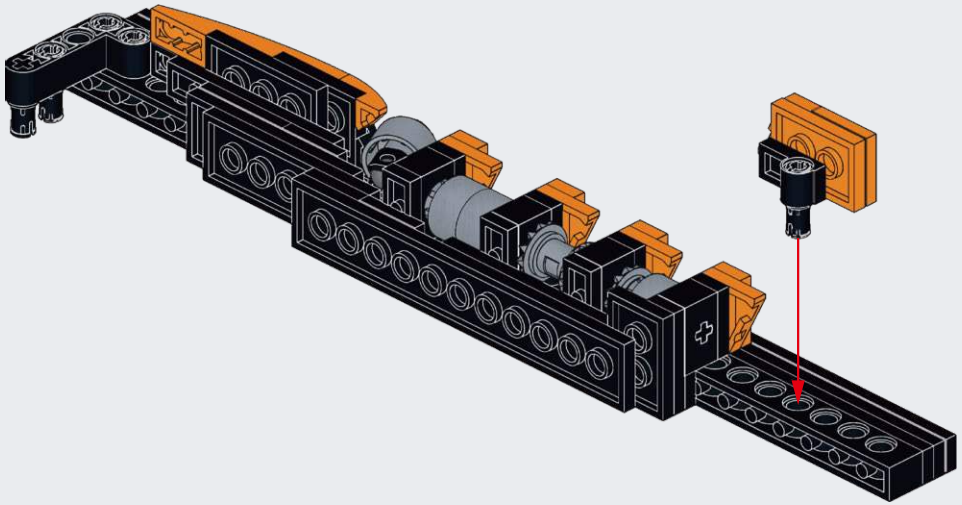

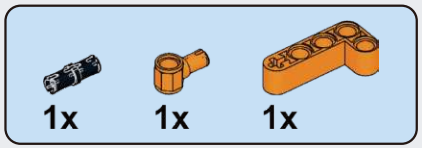

F203

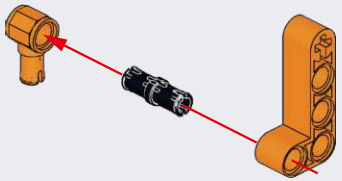

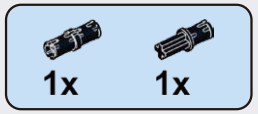

F204

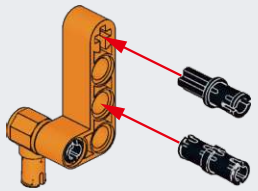

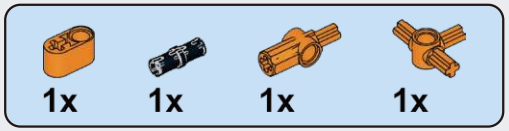

F205

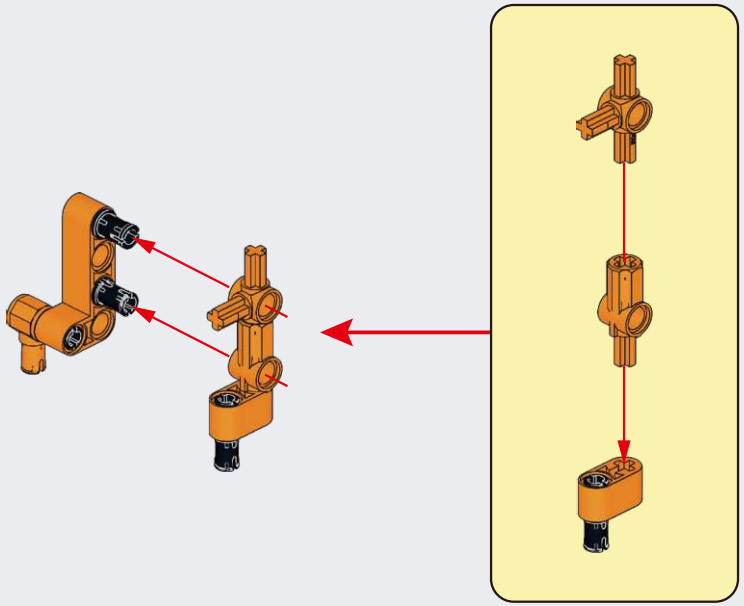

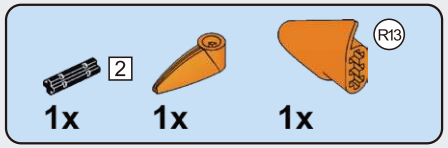

F206

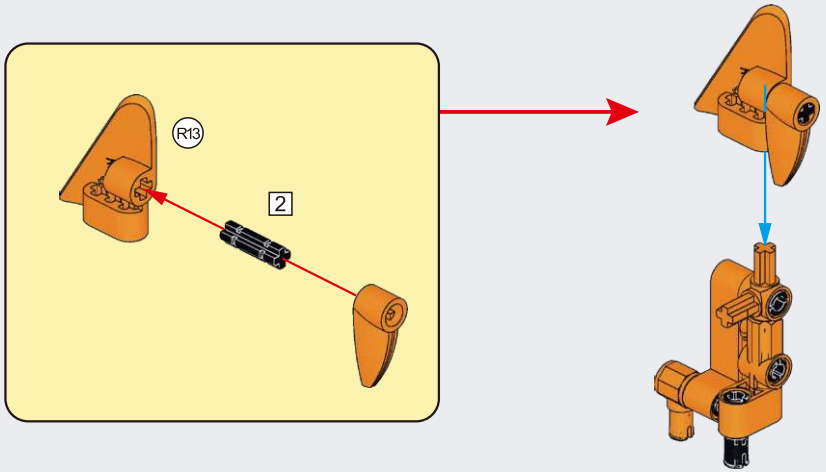

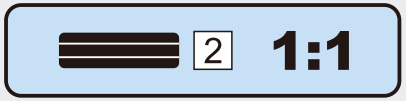

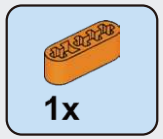

F207

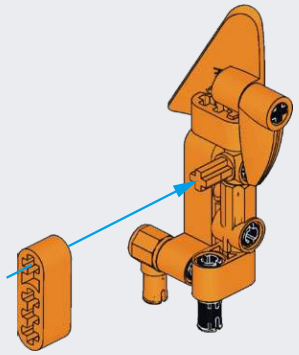

F208

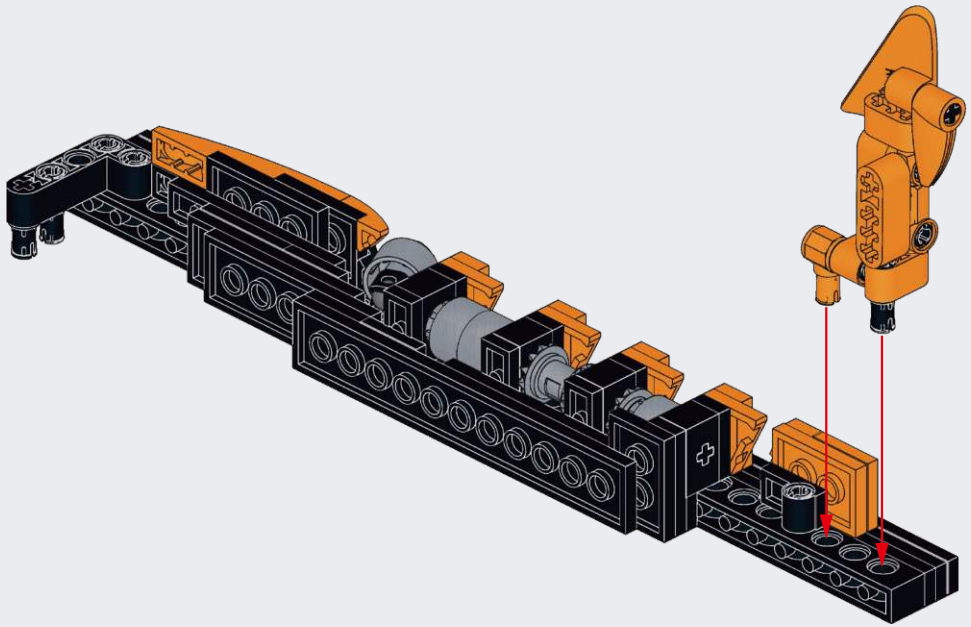

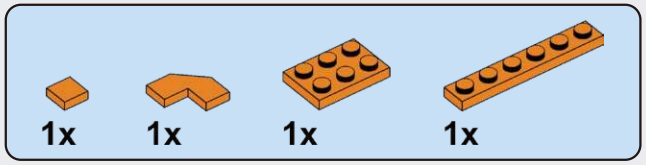

F209

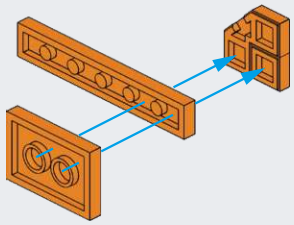

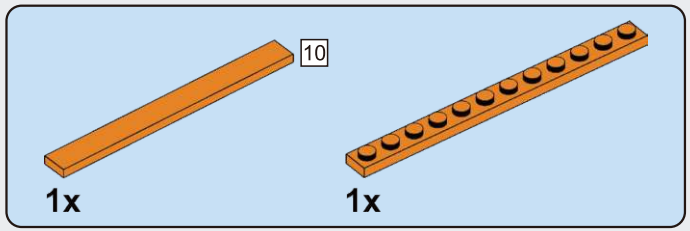

F210

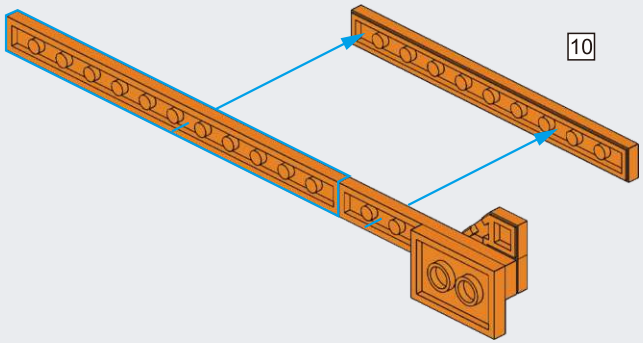

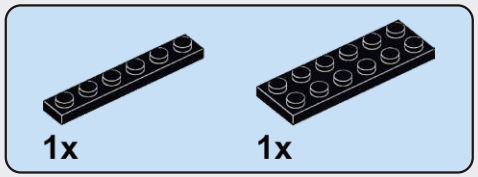

F211

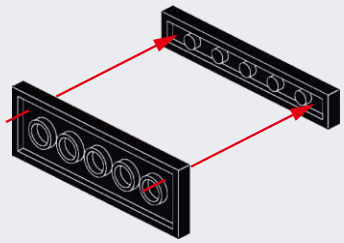

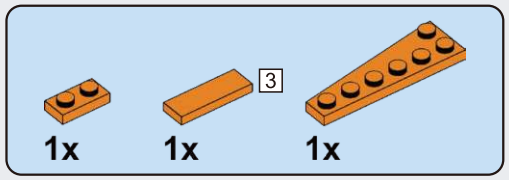

F212

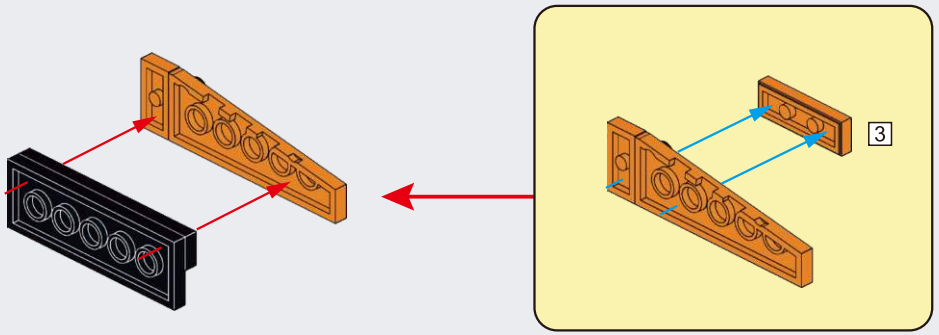

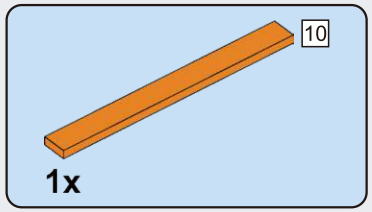

F213

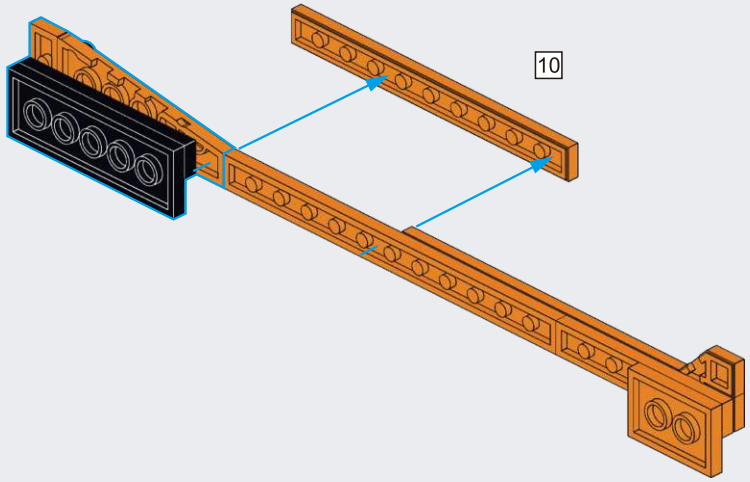

F214

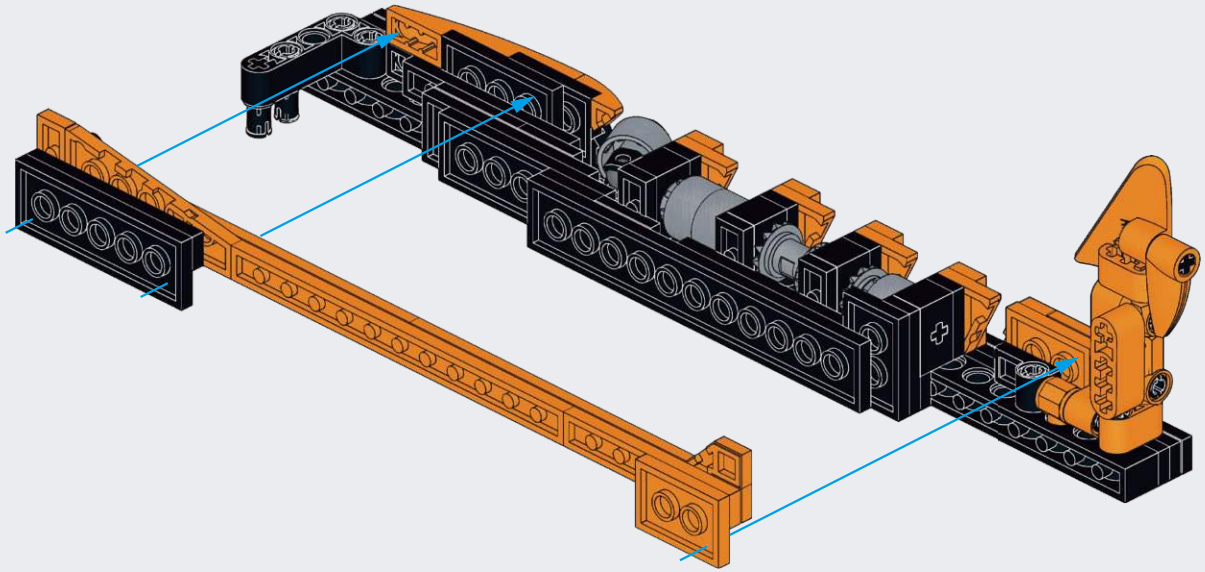

F215

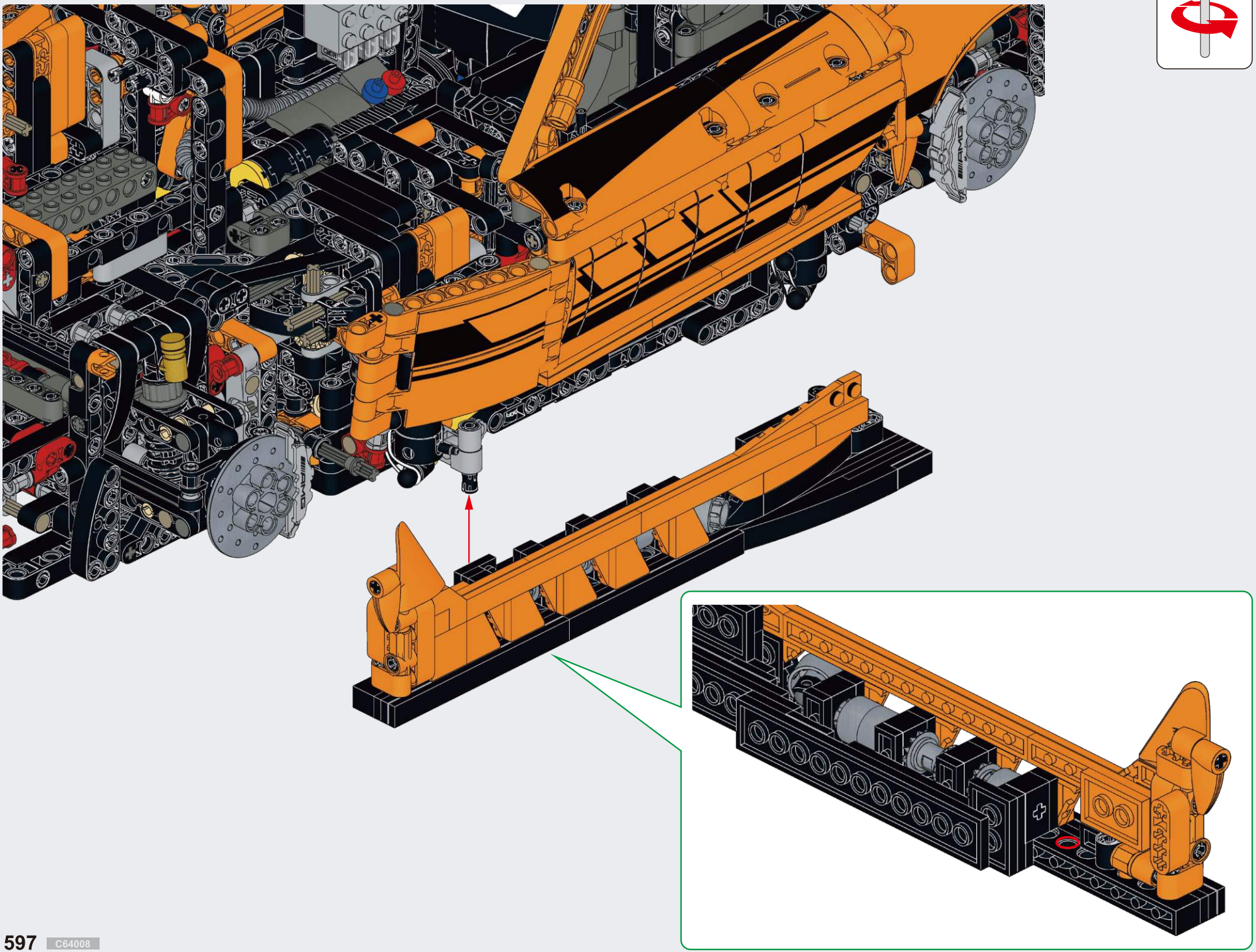

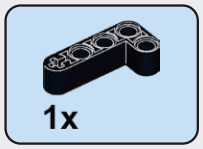

F216

F217

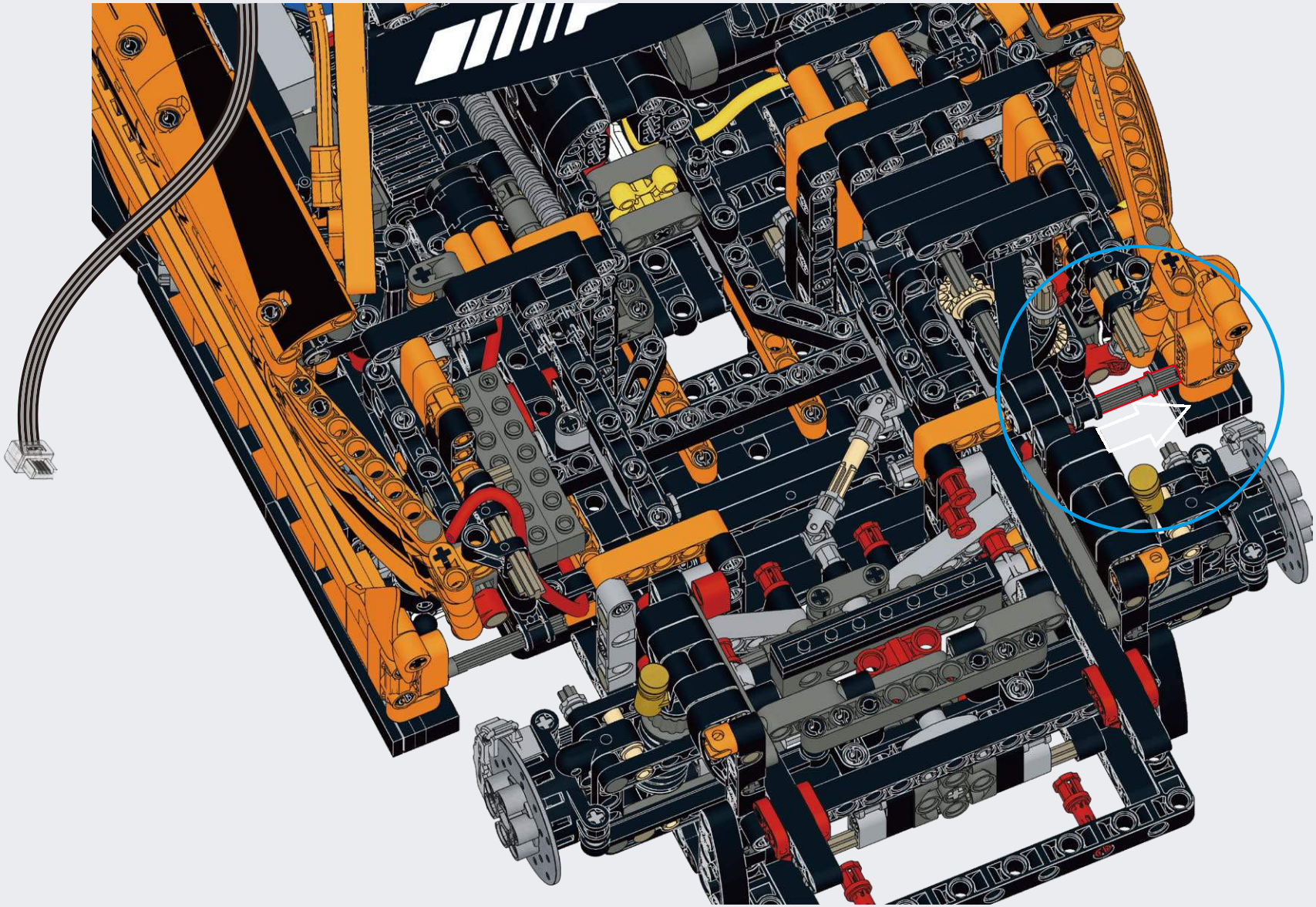

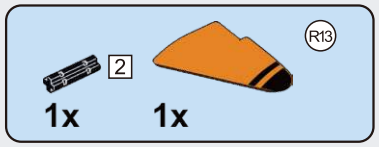

F218

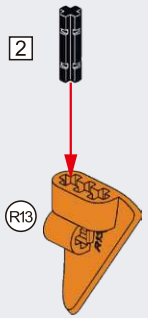

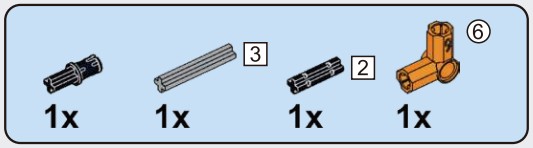

F219

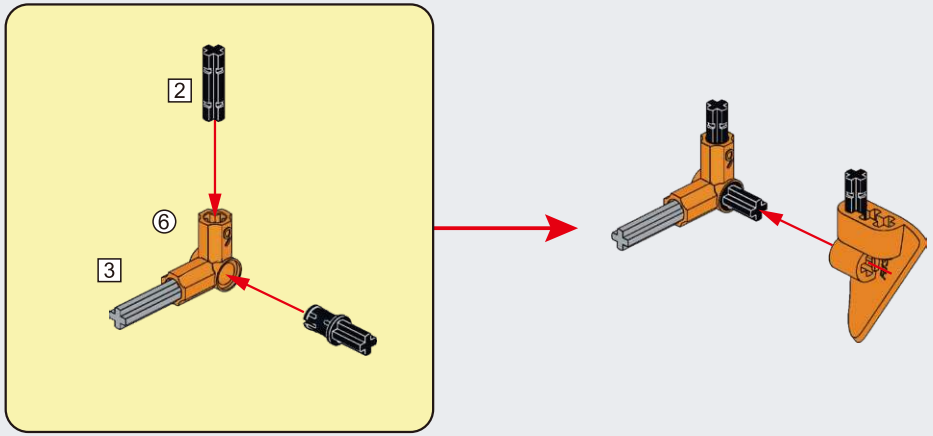

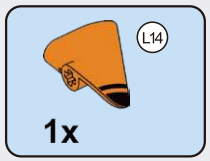

F220

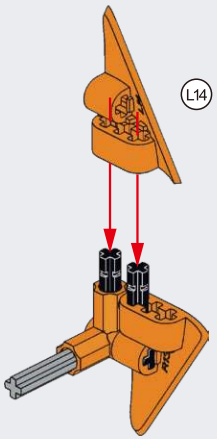

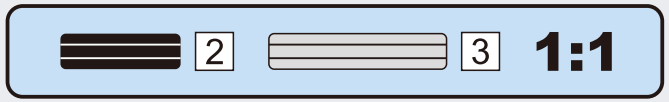

F221

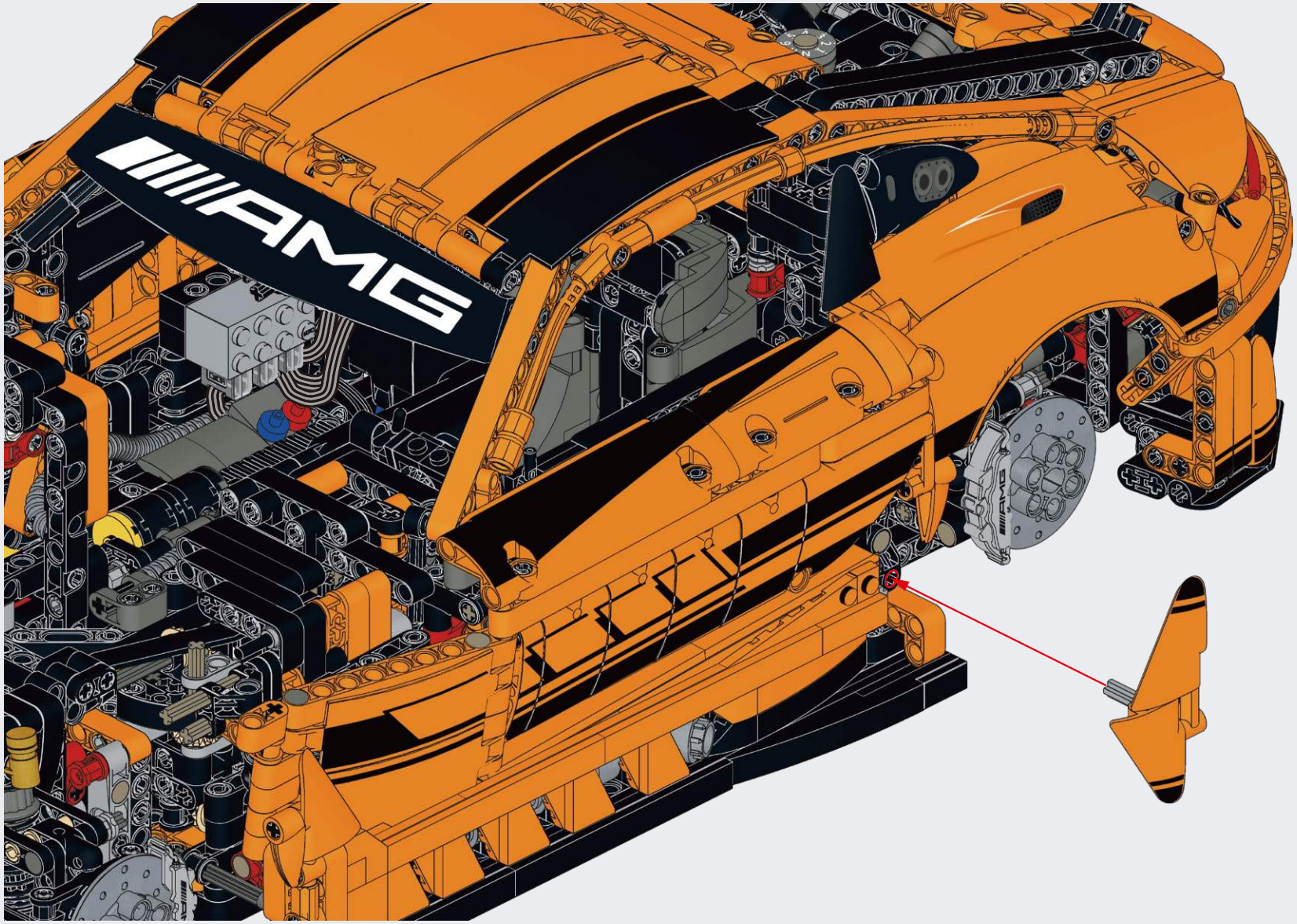

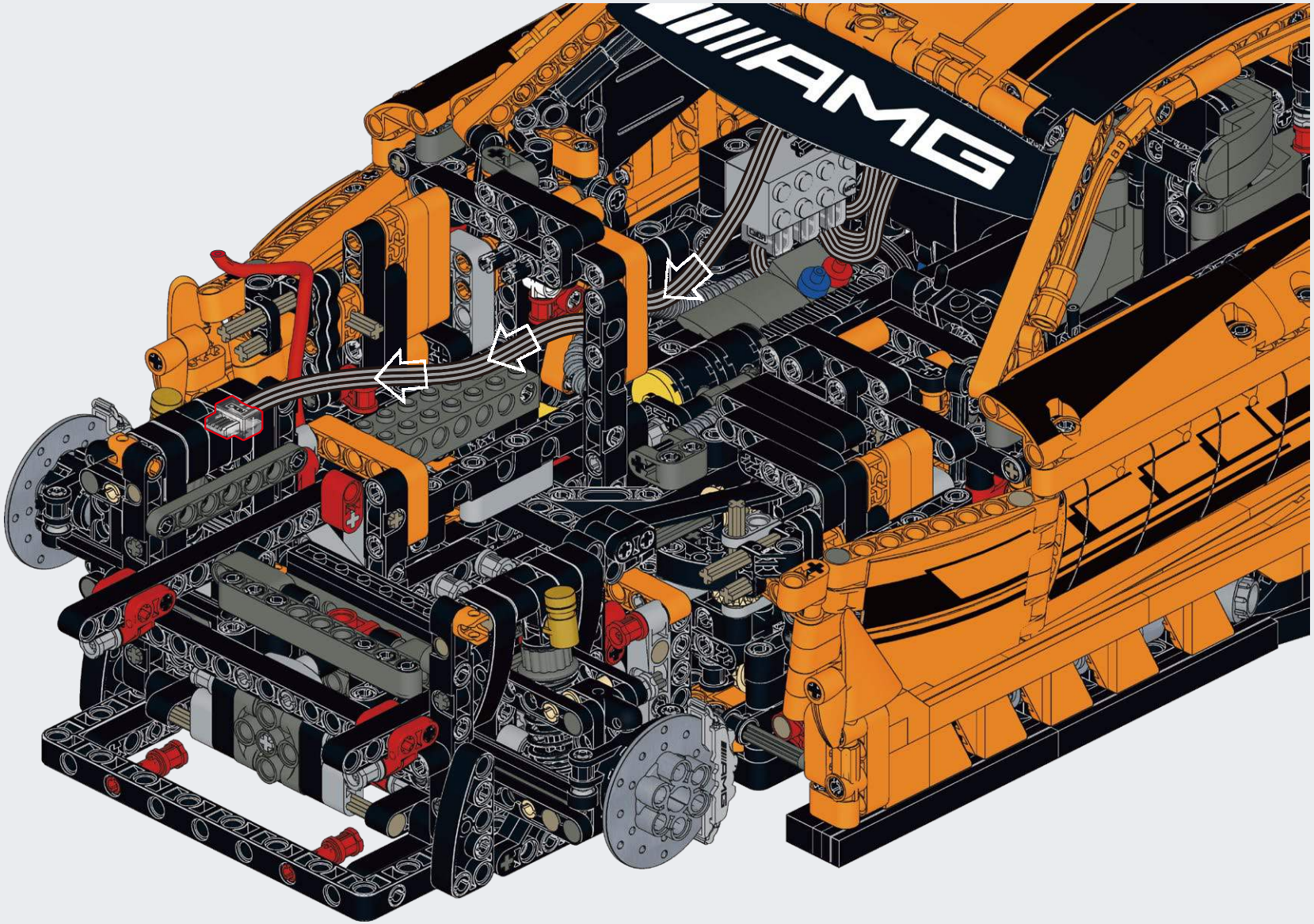
AMG

G

BOX 3 / BAG 7

3

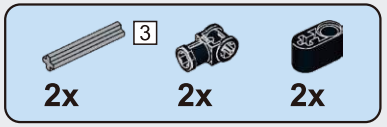

G1

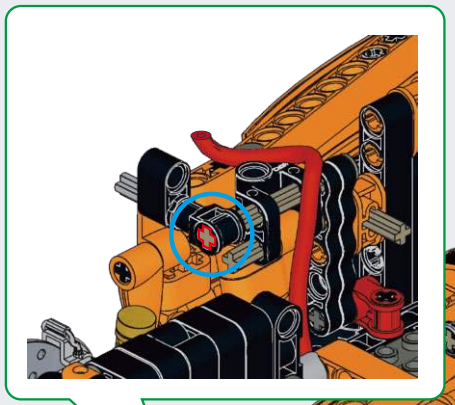

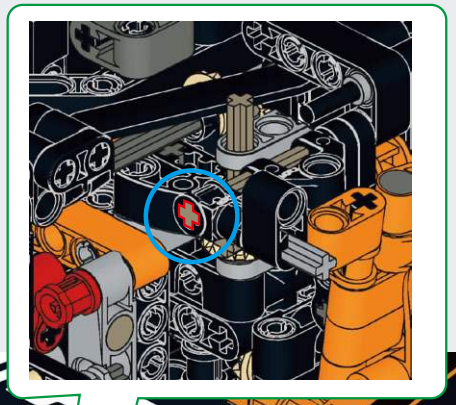

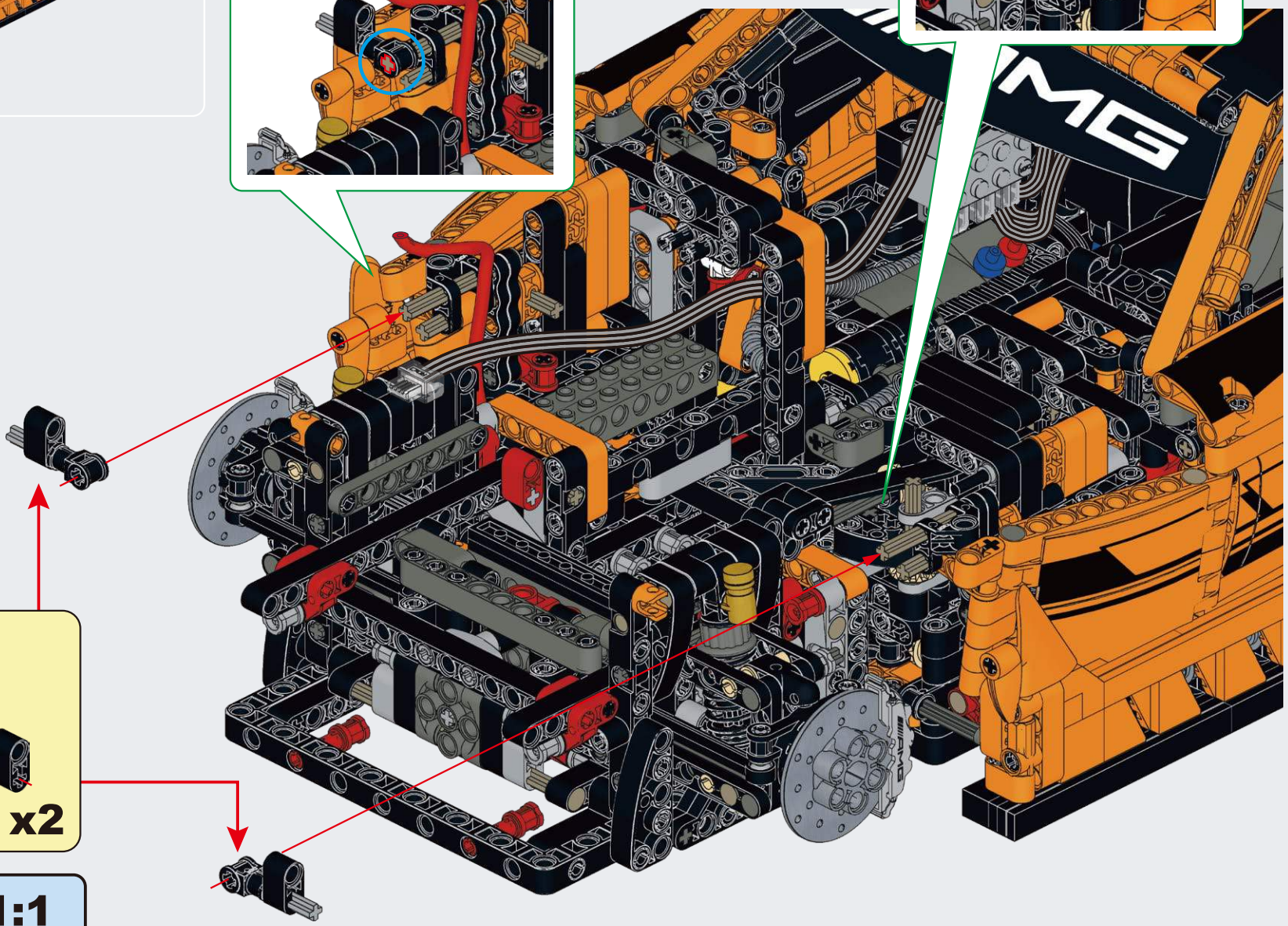

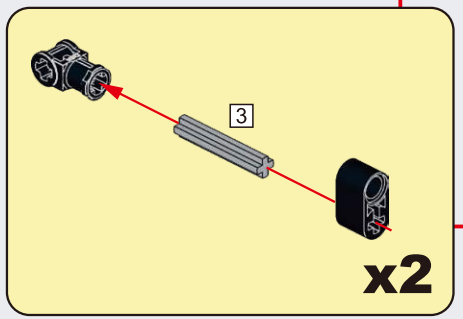

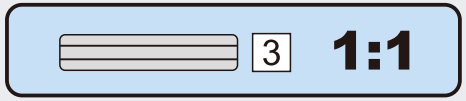

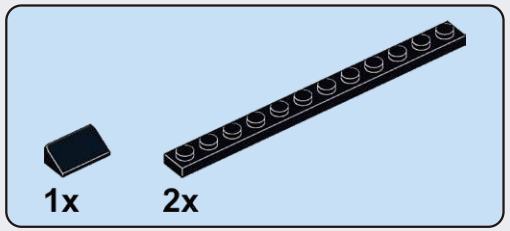

G2

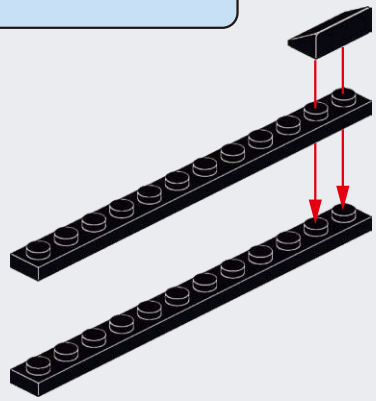

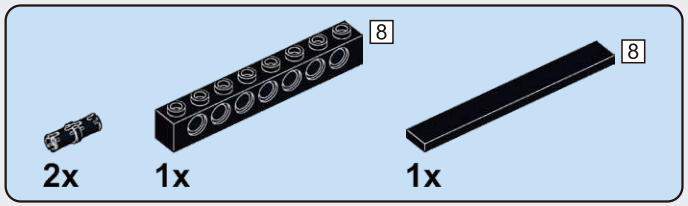

G3

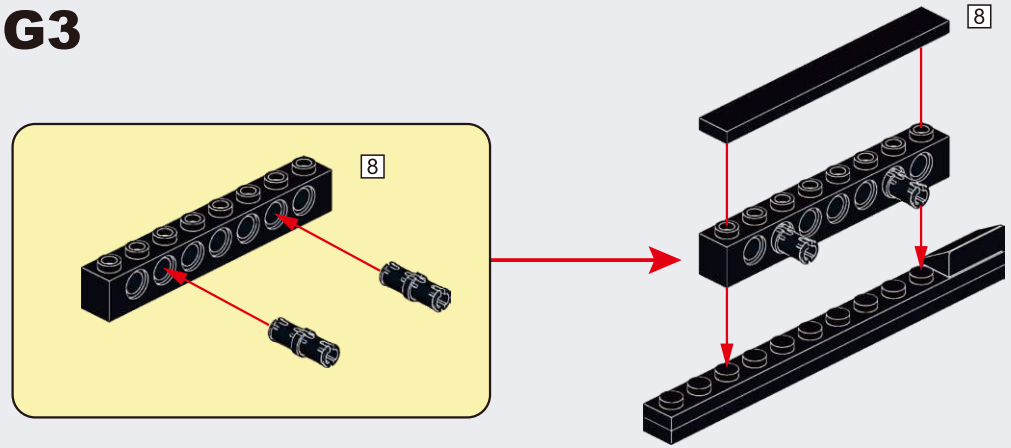

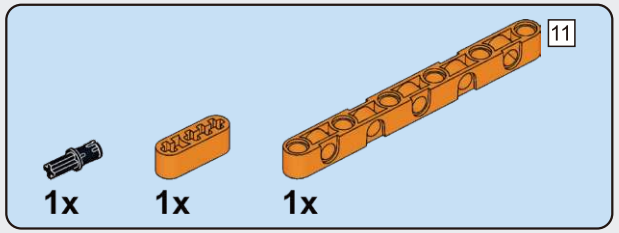

G4

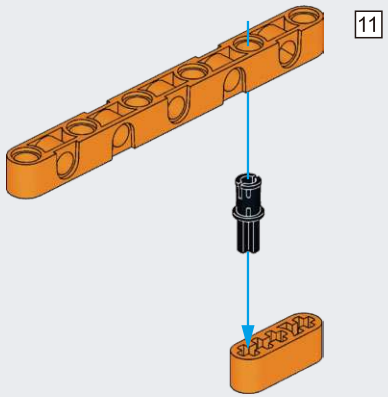

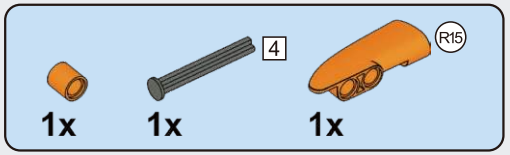

G5

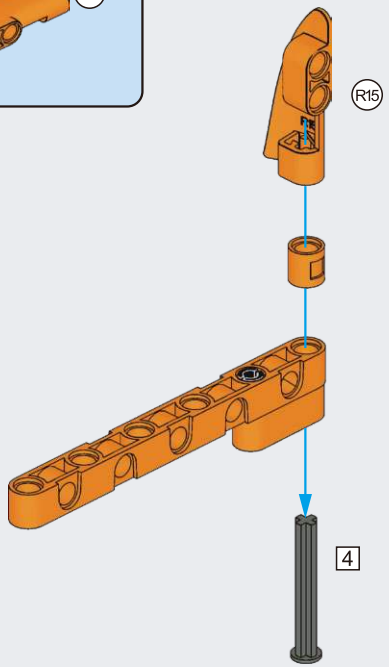

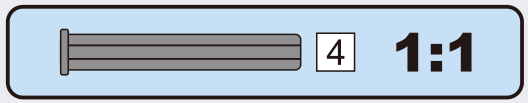

G6

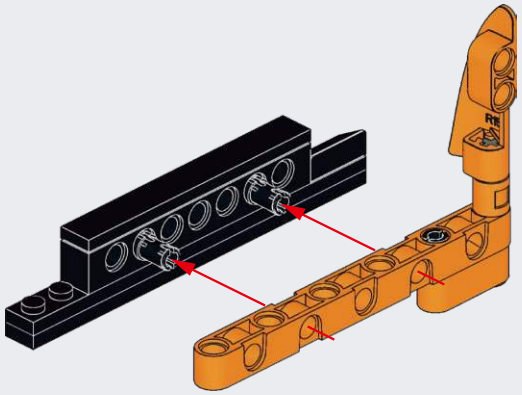

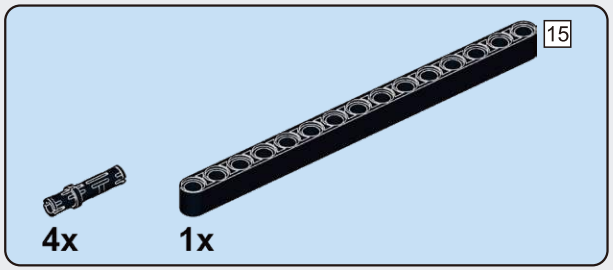

G7

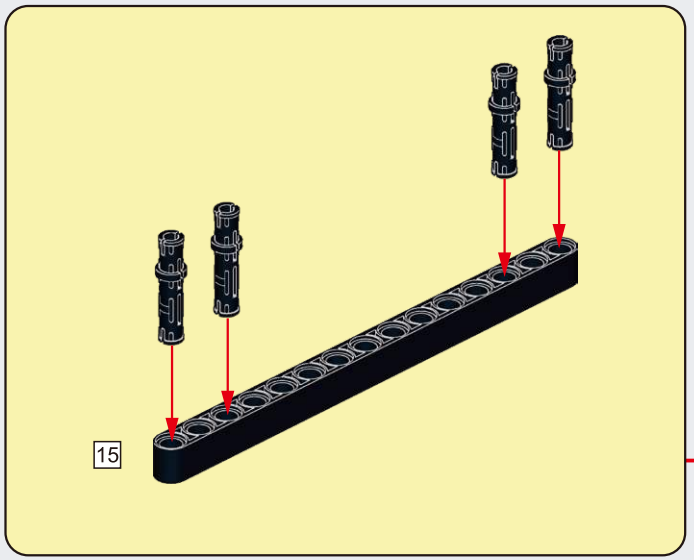

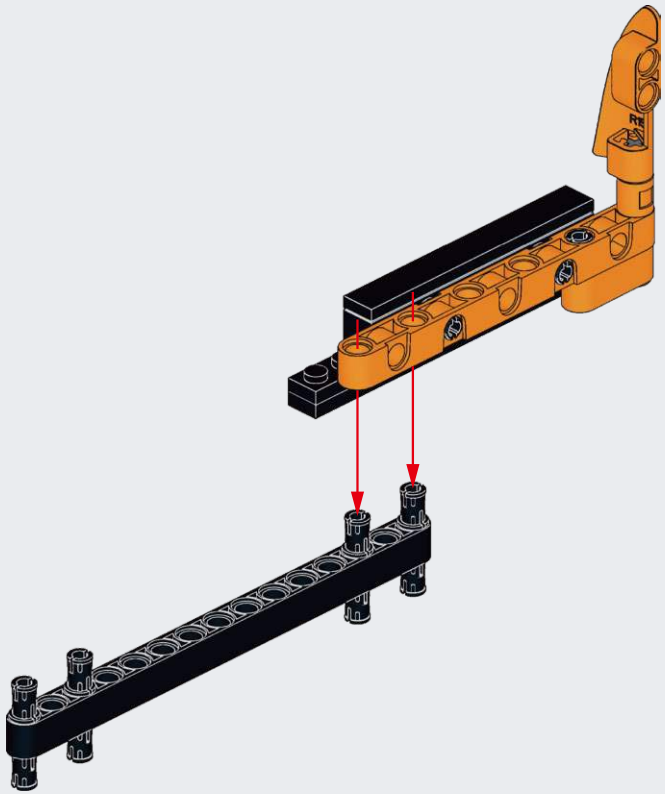

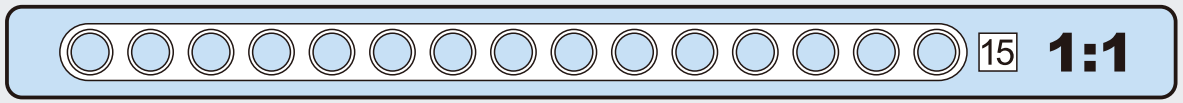

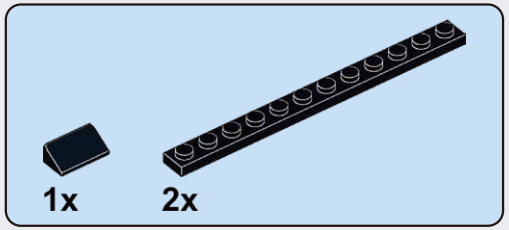

G8

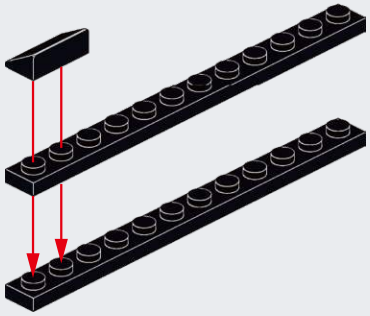

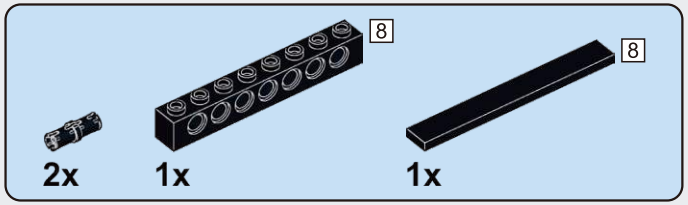

G9

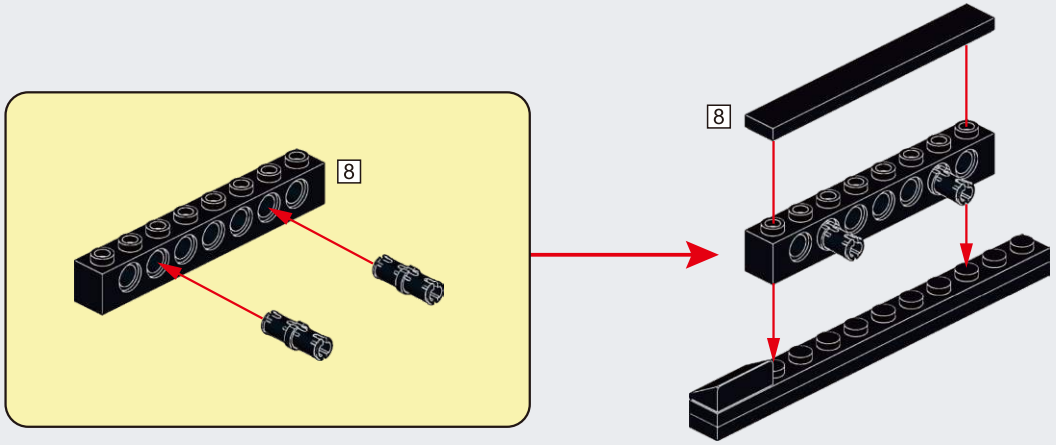

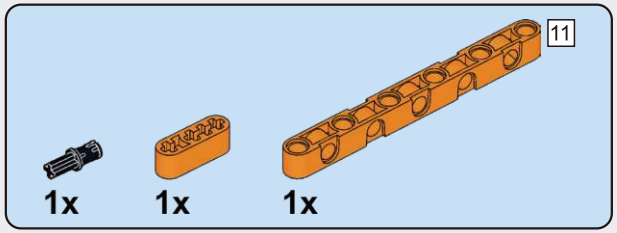

G10

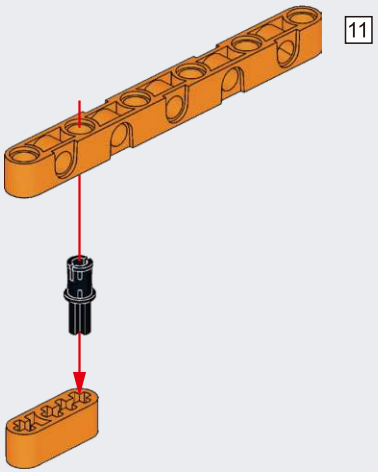

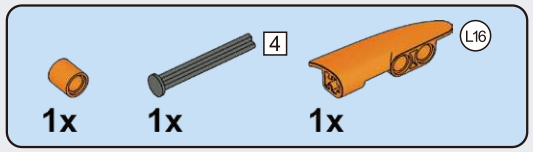

G11

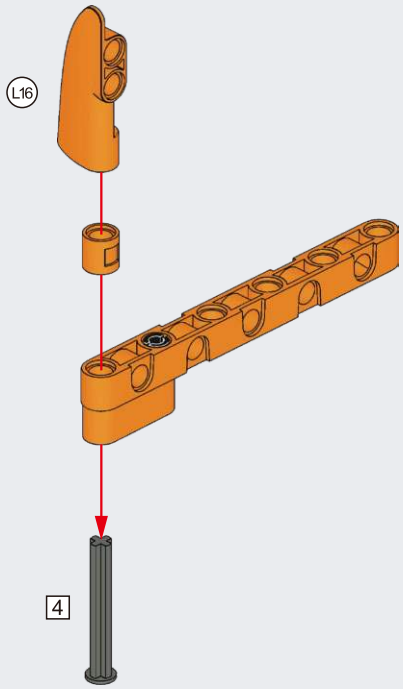

G12

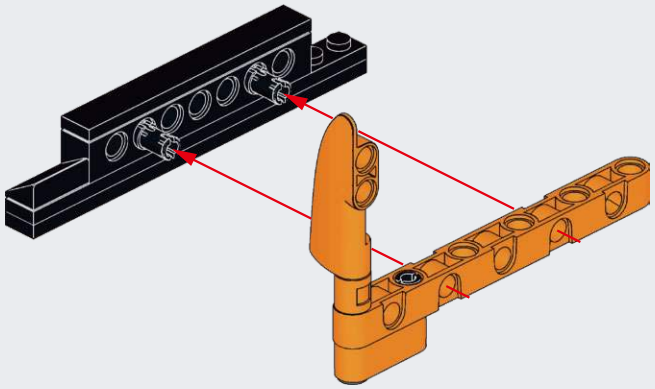

G13

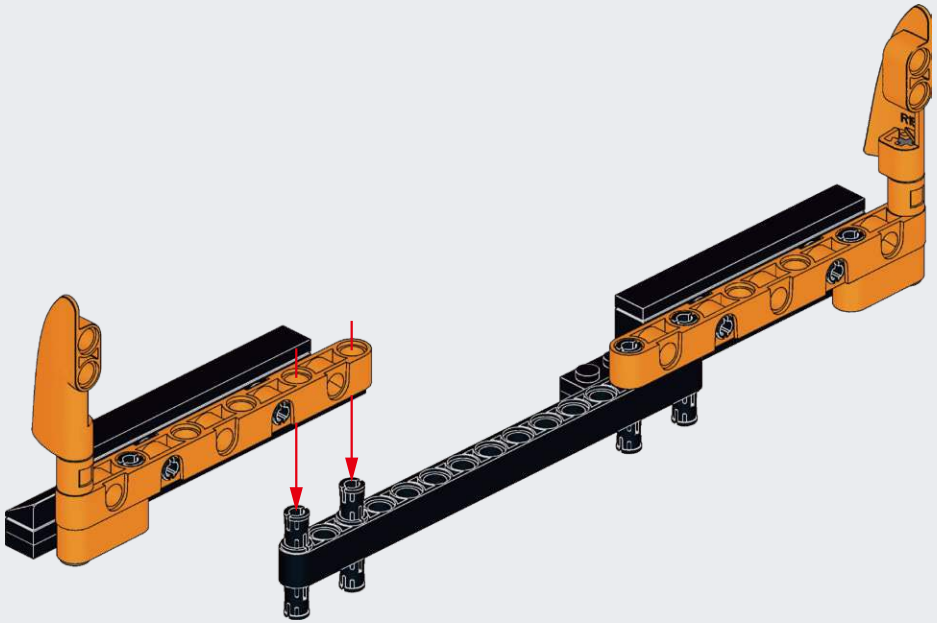

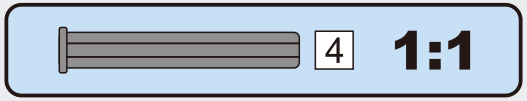

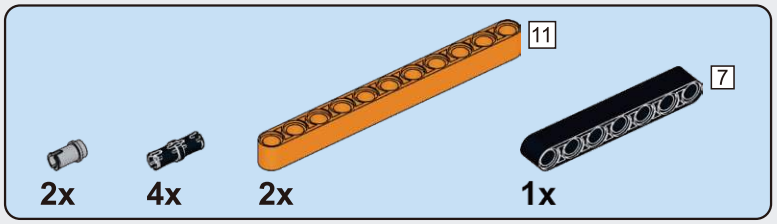

G14

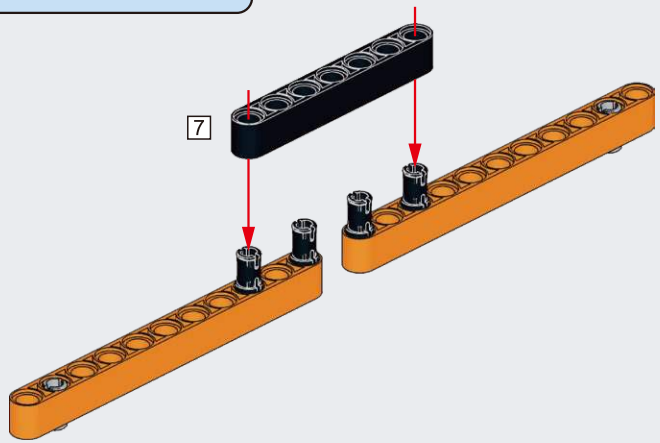

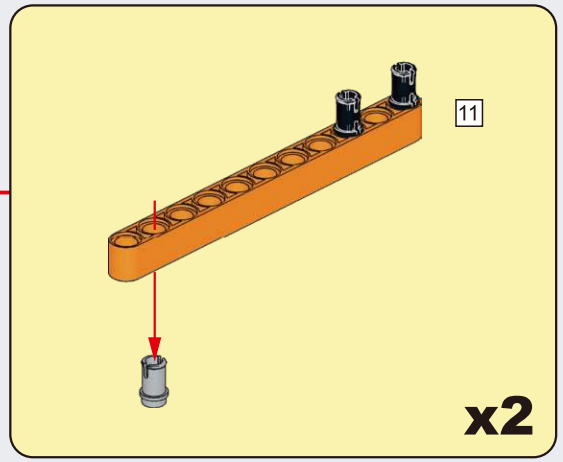

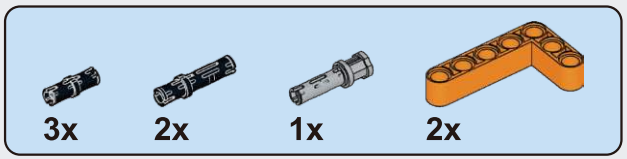

G15

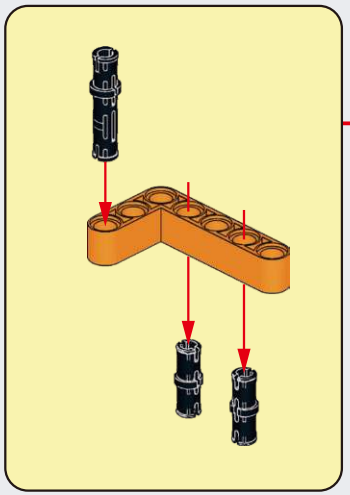

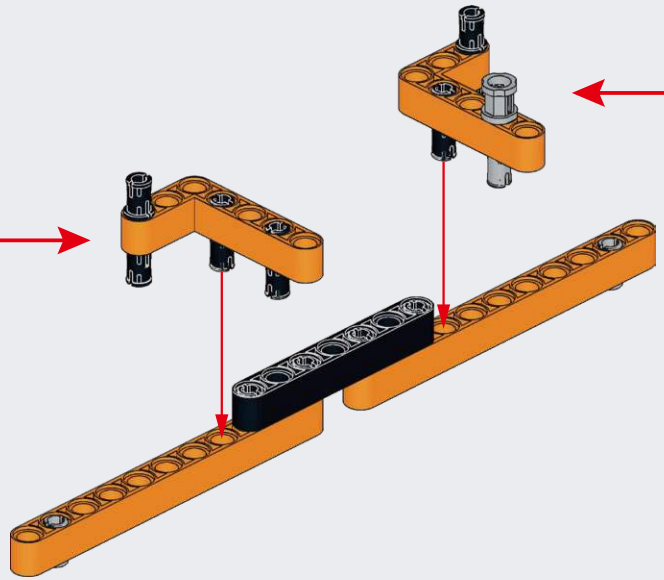

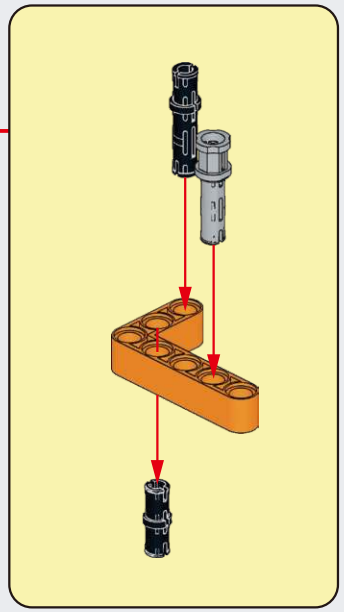

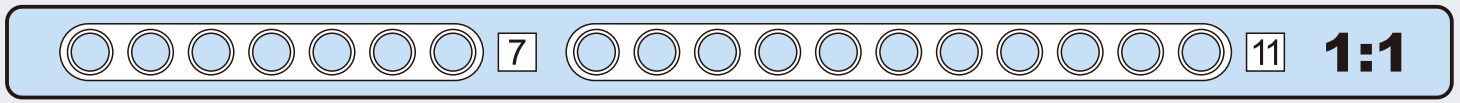

G16

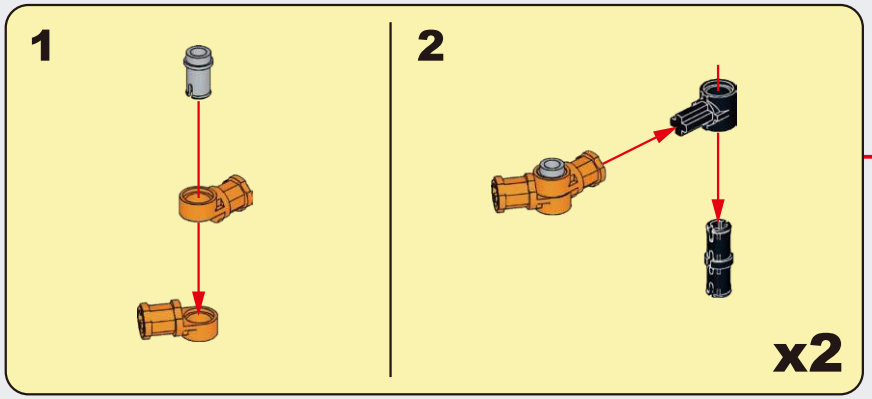

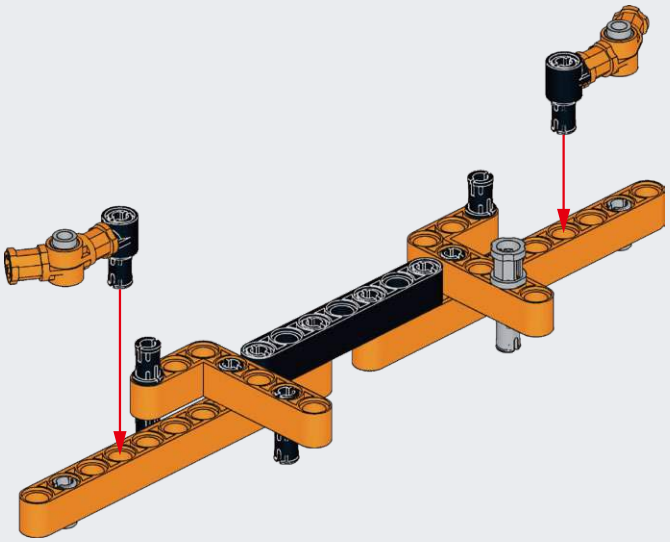

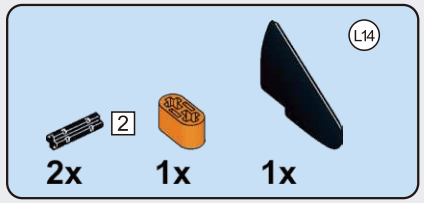

G17

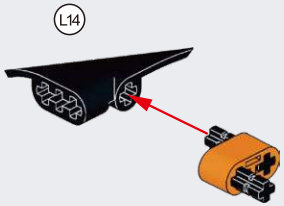

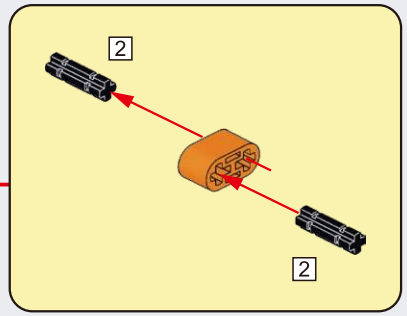

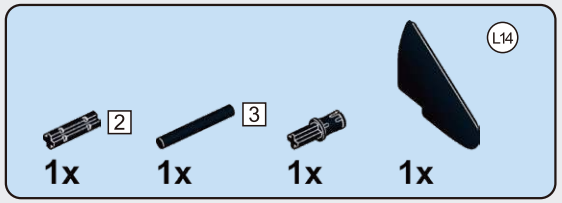

G18

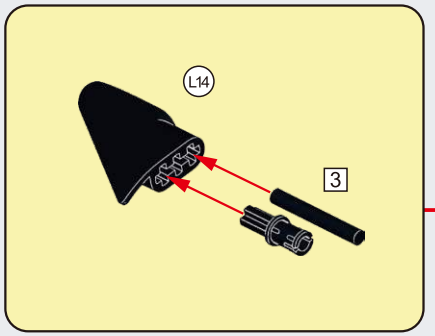

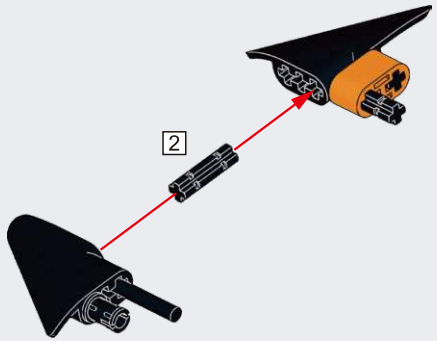

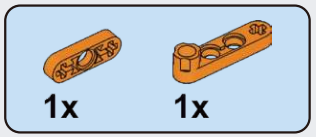

G19

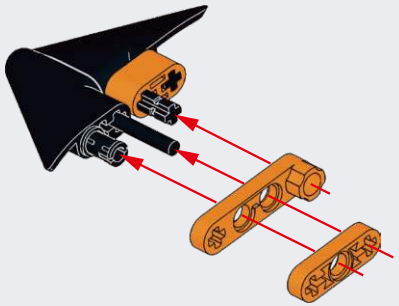

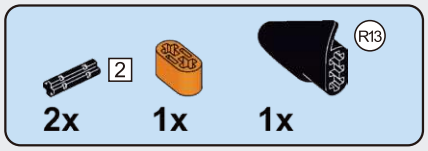

G20

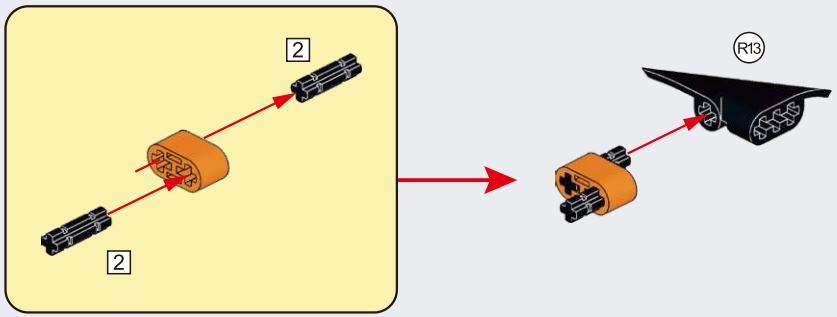

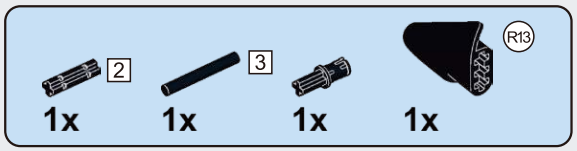

G21

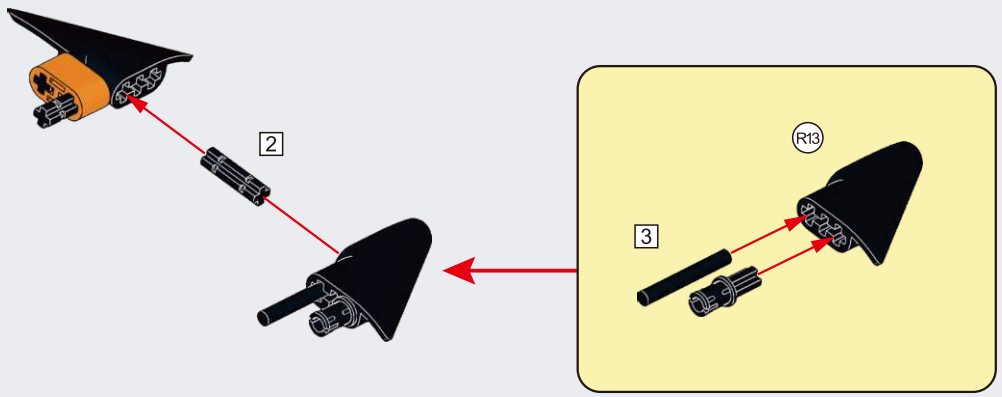

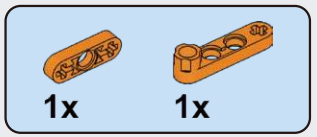

G22

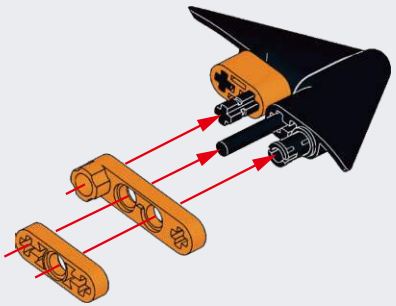

G23

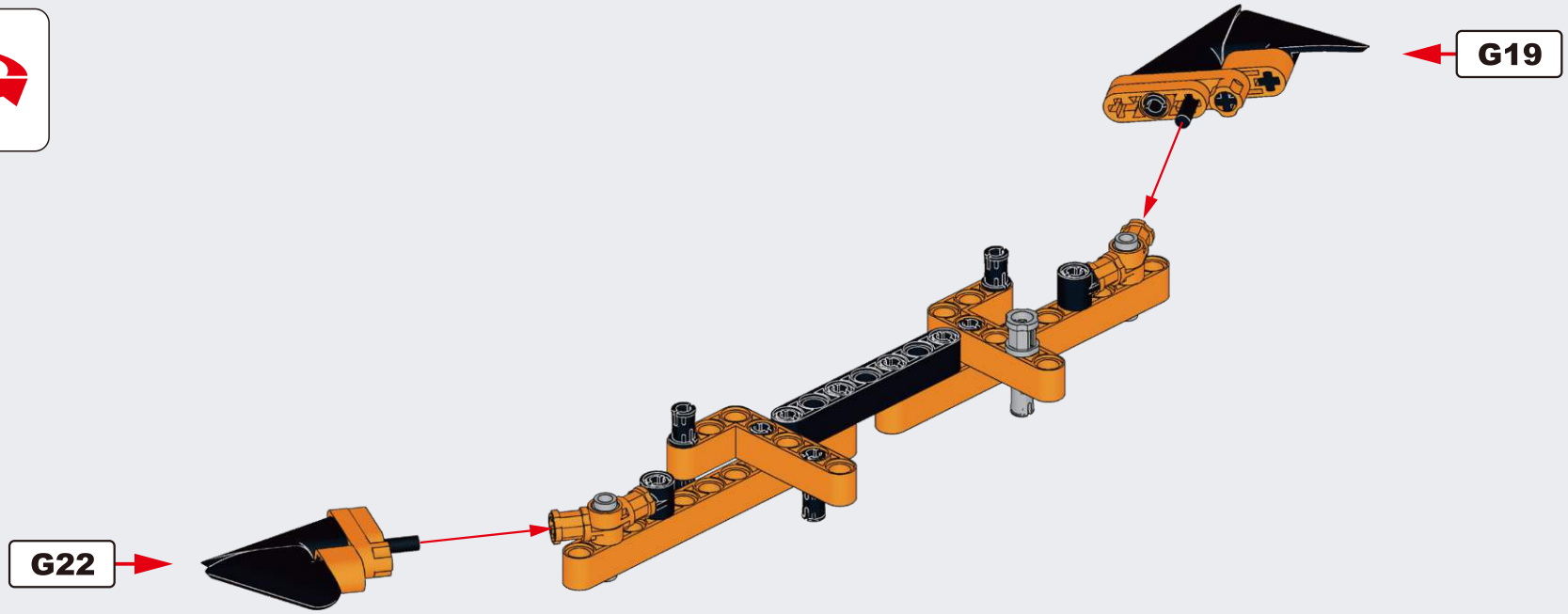

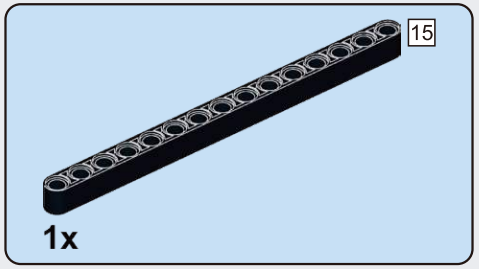

G24

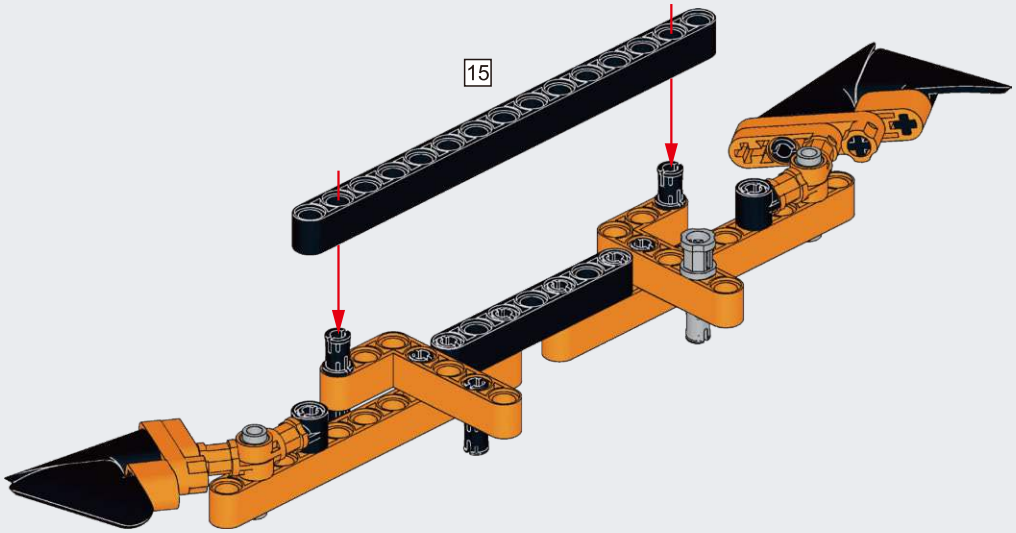

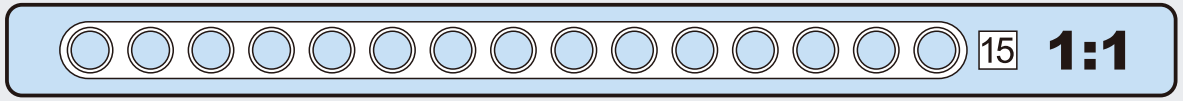

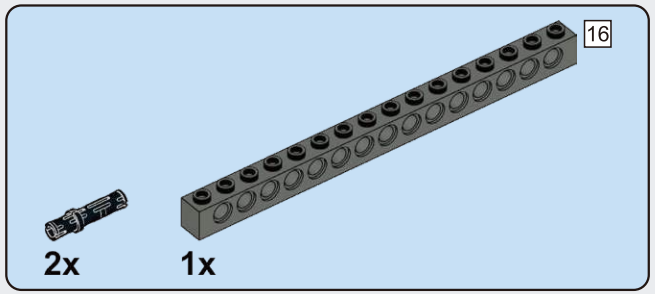

G25

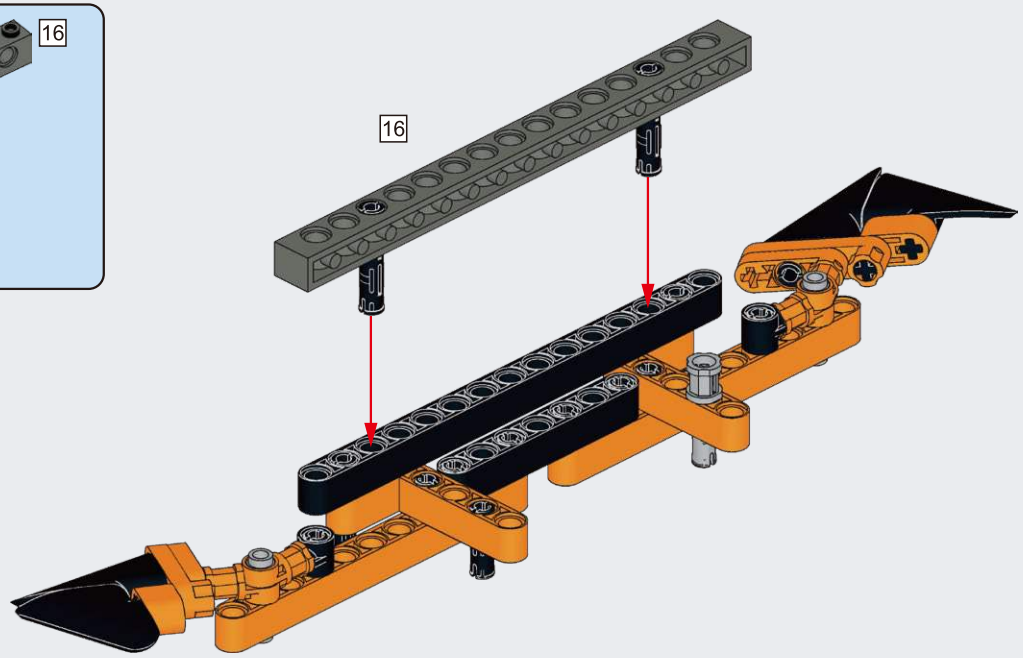

G26

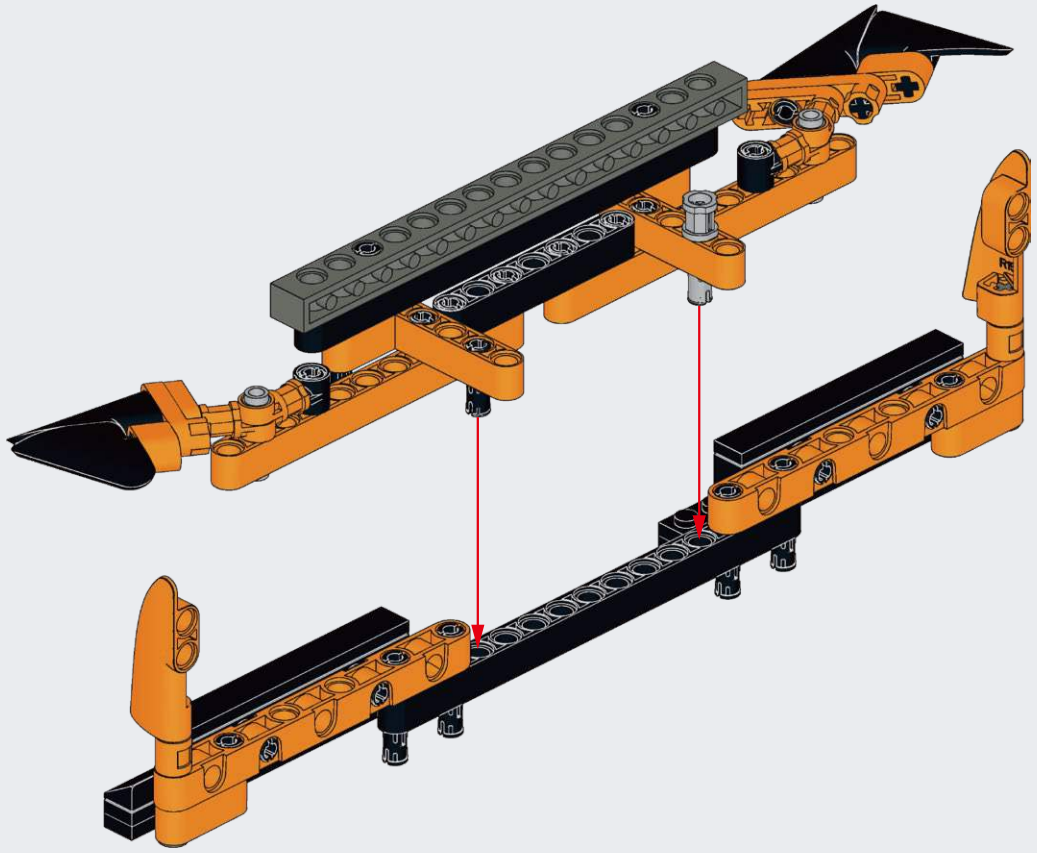

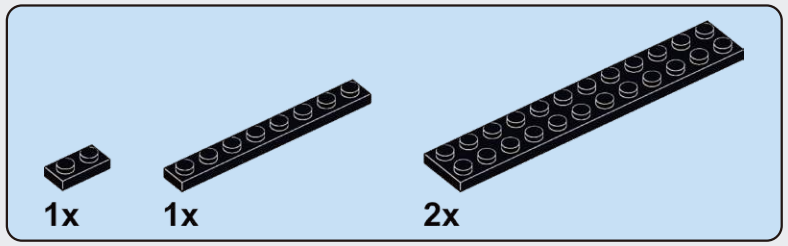

G27

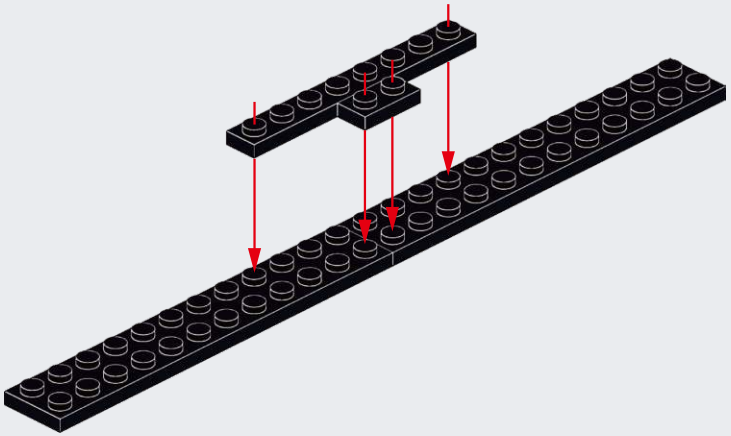

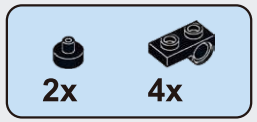

G28

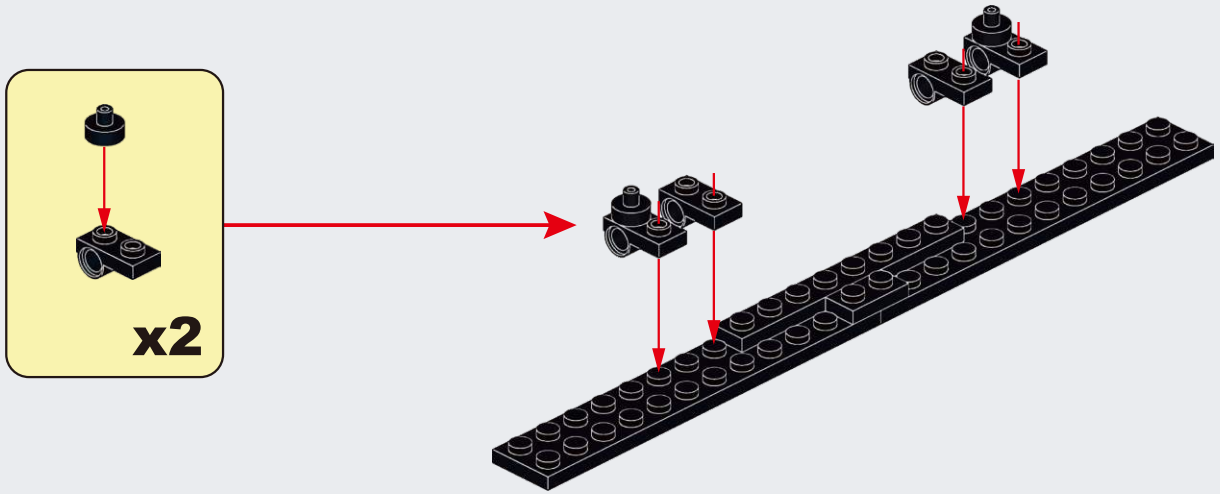

G29

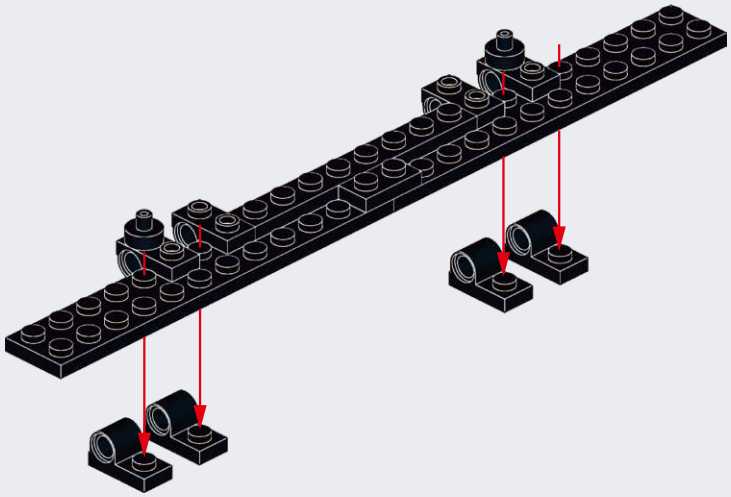

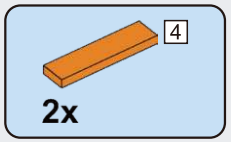

G30

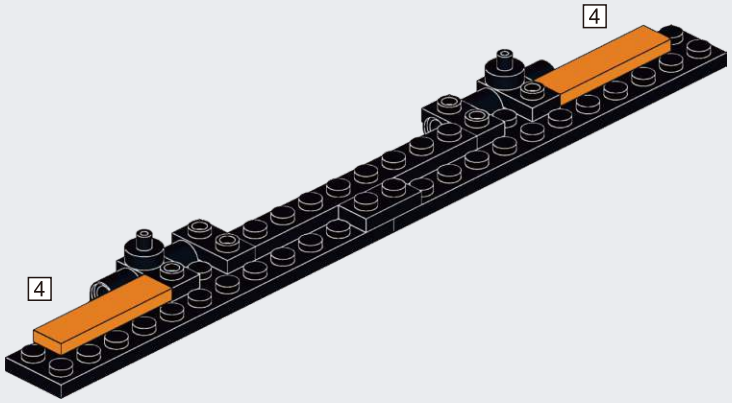

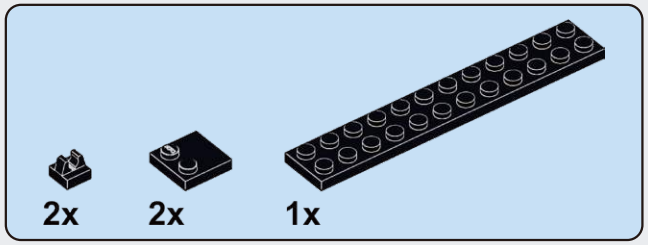

G31

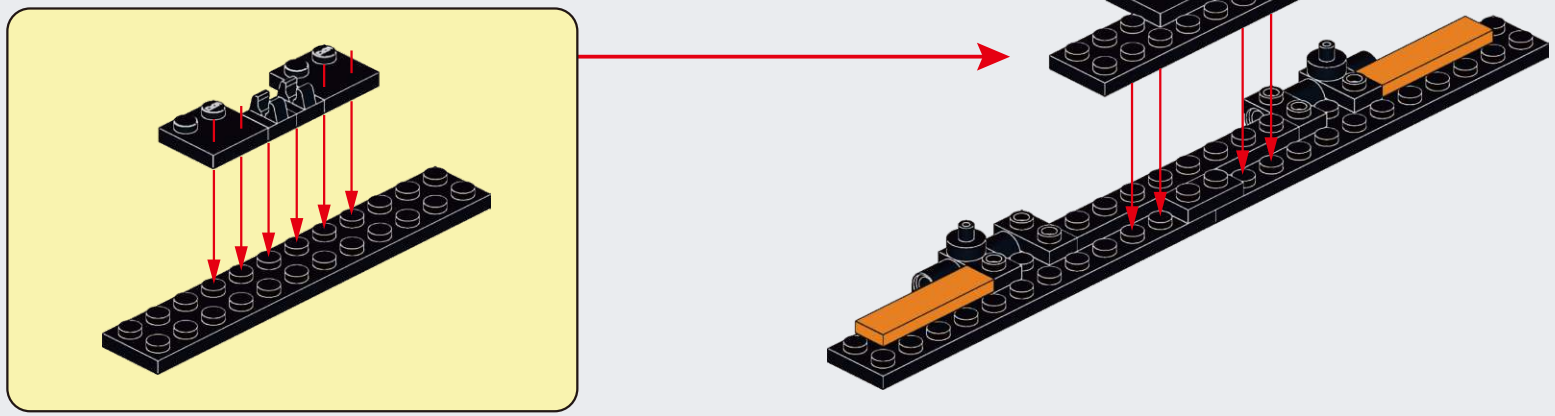

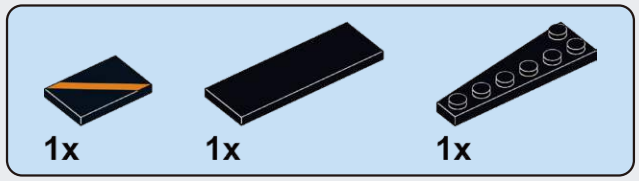

G32

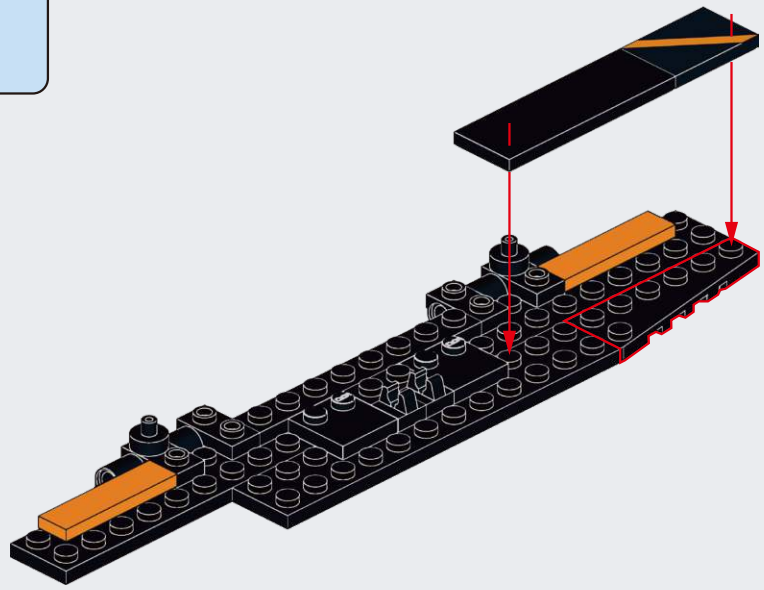

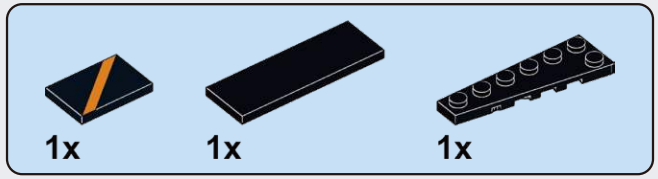

G33

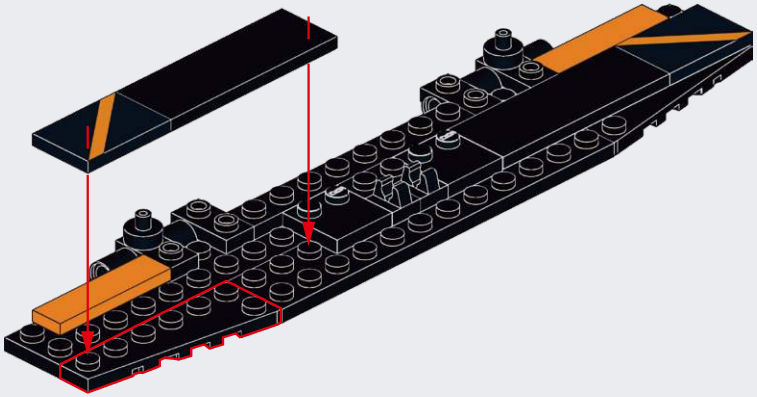

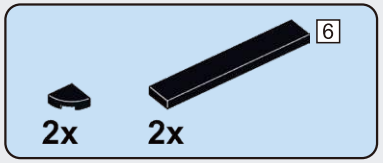

G34

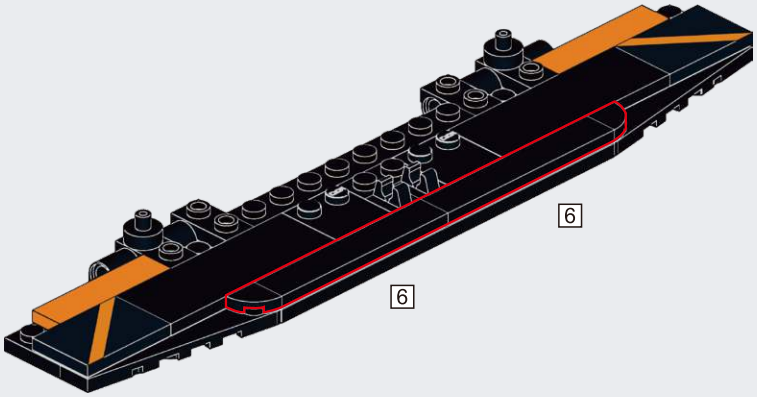

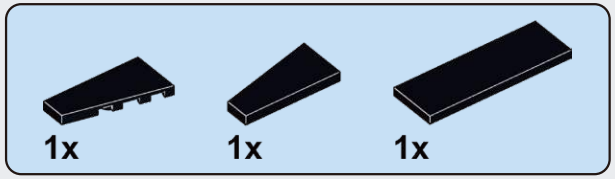

G35

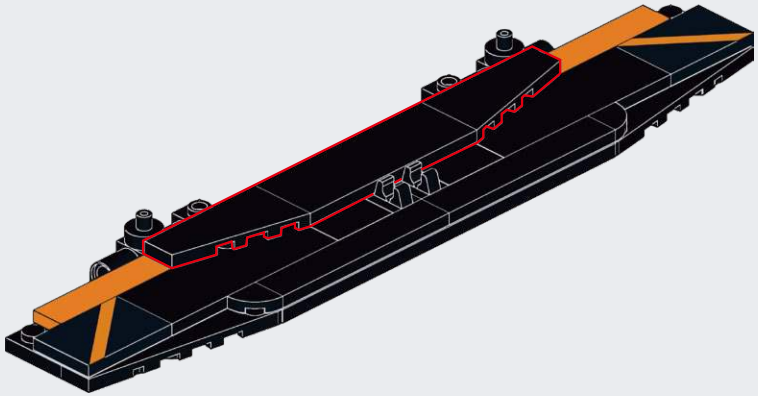

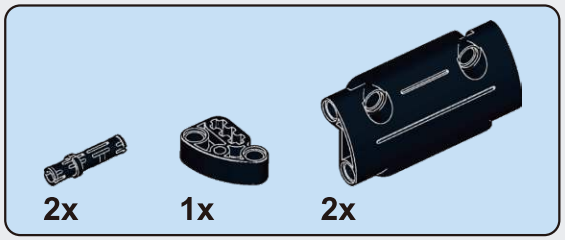

G36

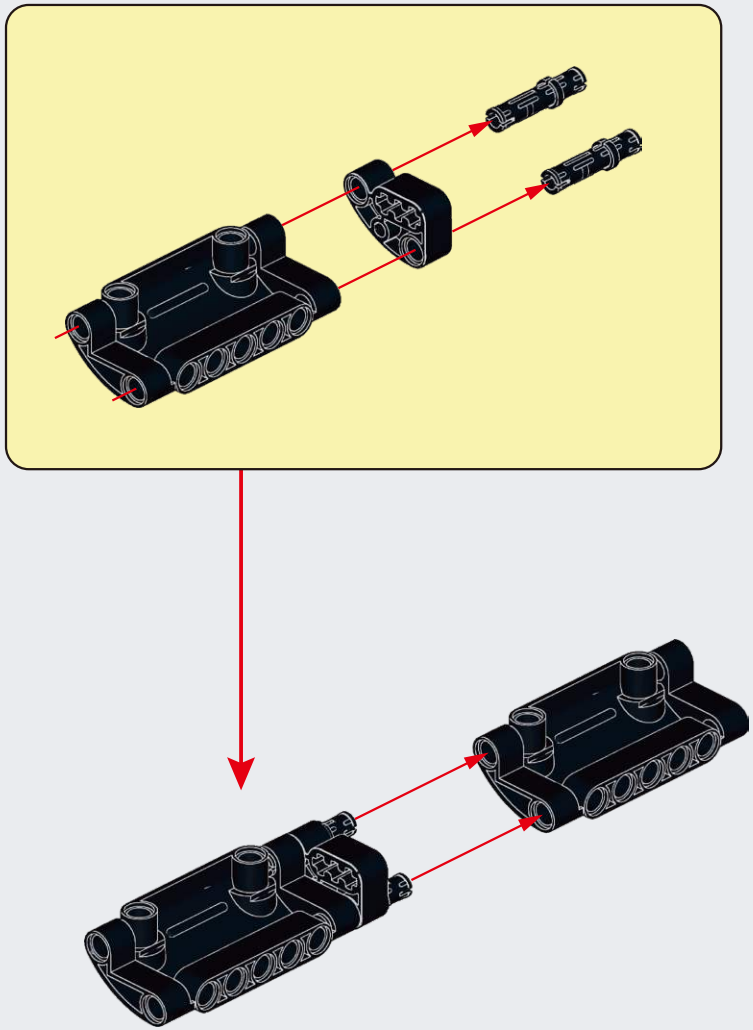

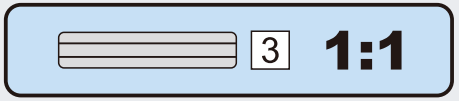

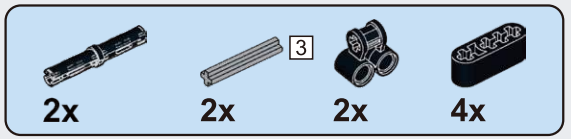

G37

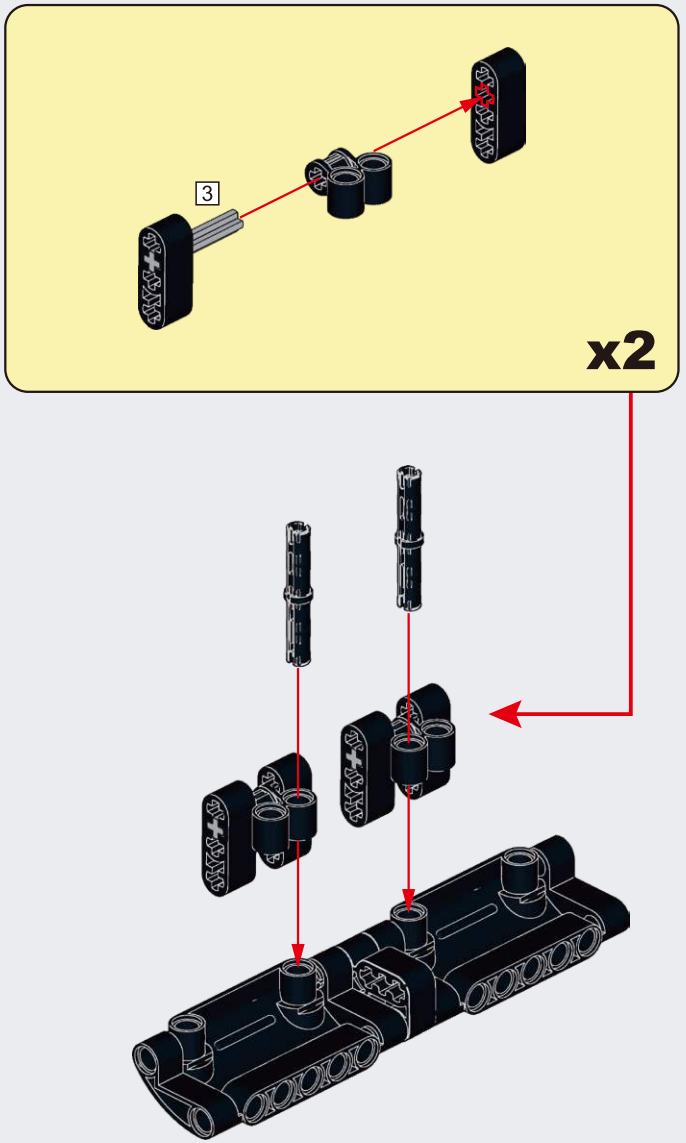

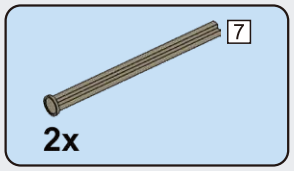

G38

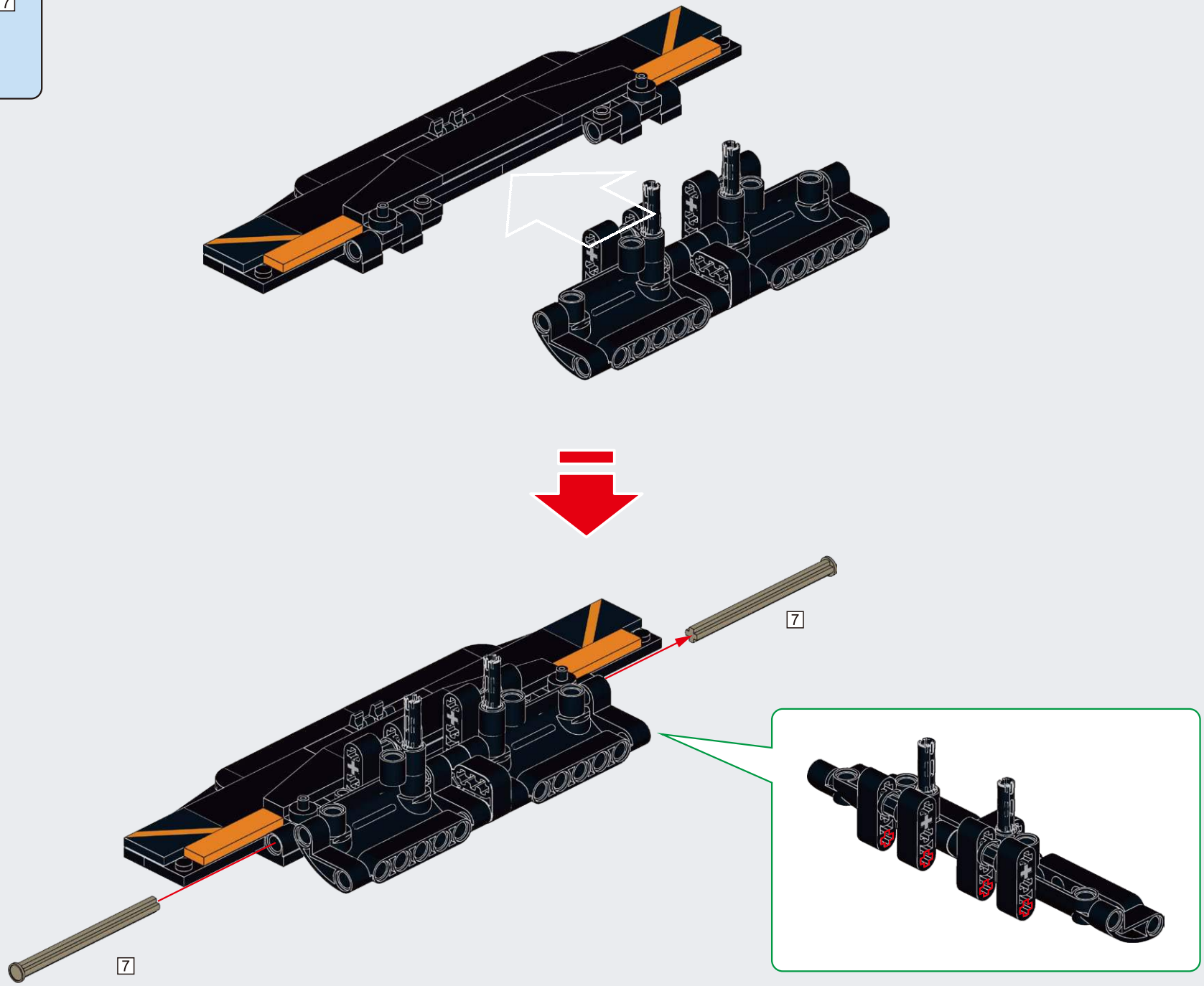

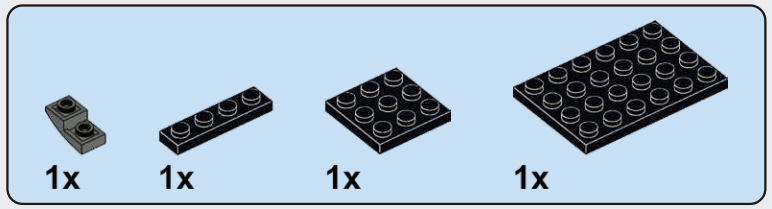

G39

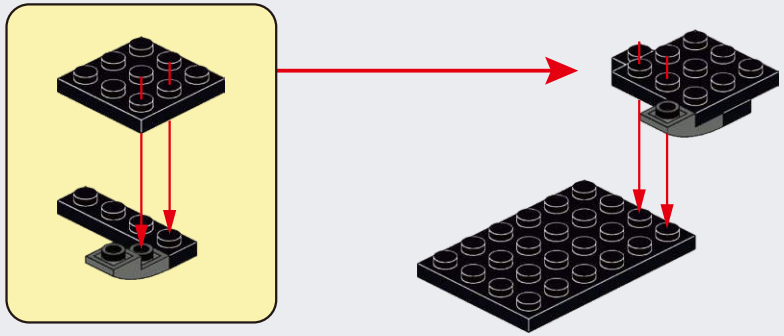

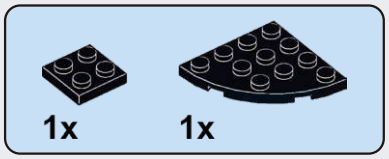

G40

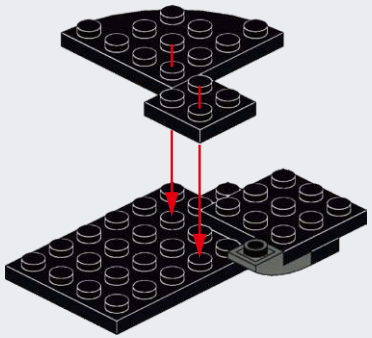

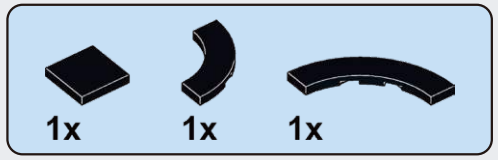

G41

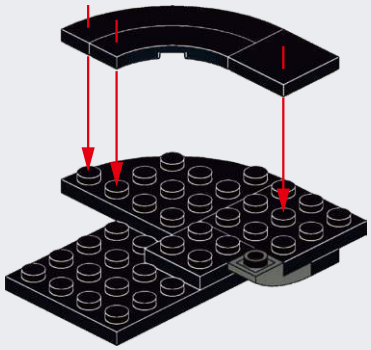

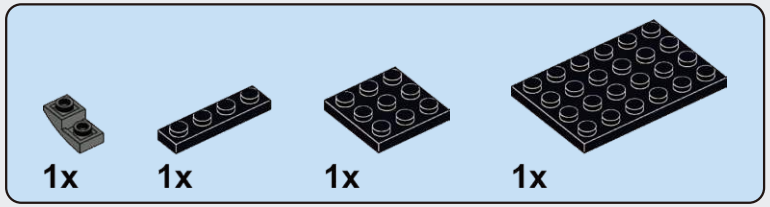

G42

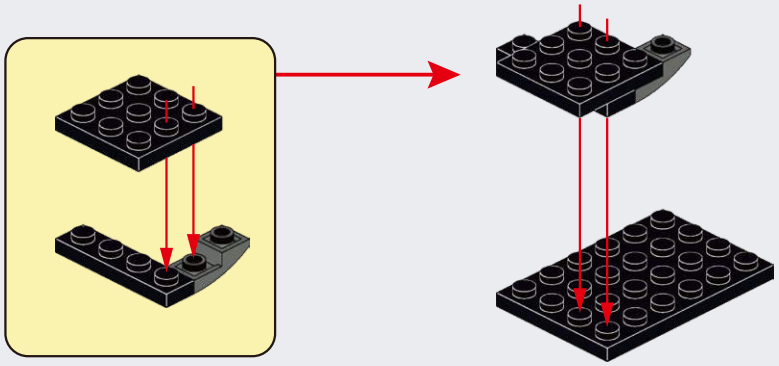

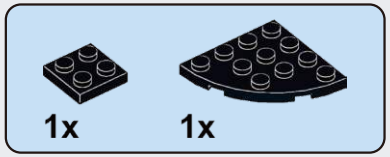

G43

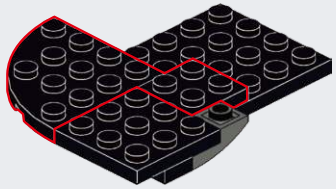

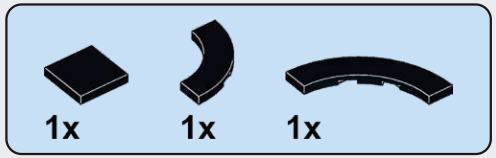

G44

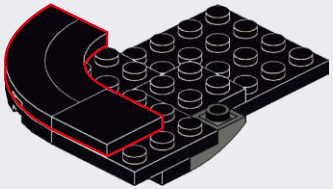

G45

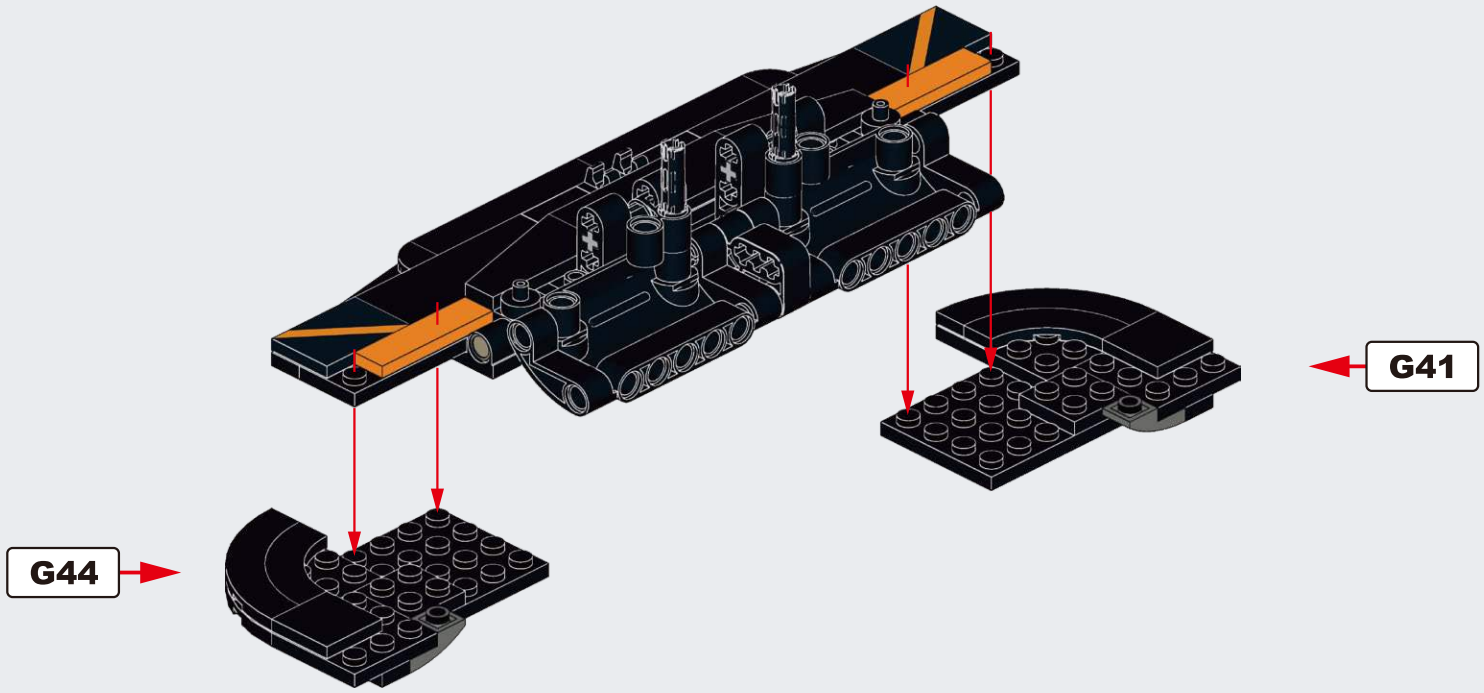

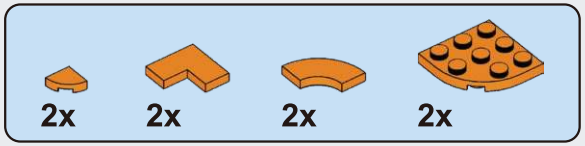

G46

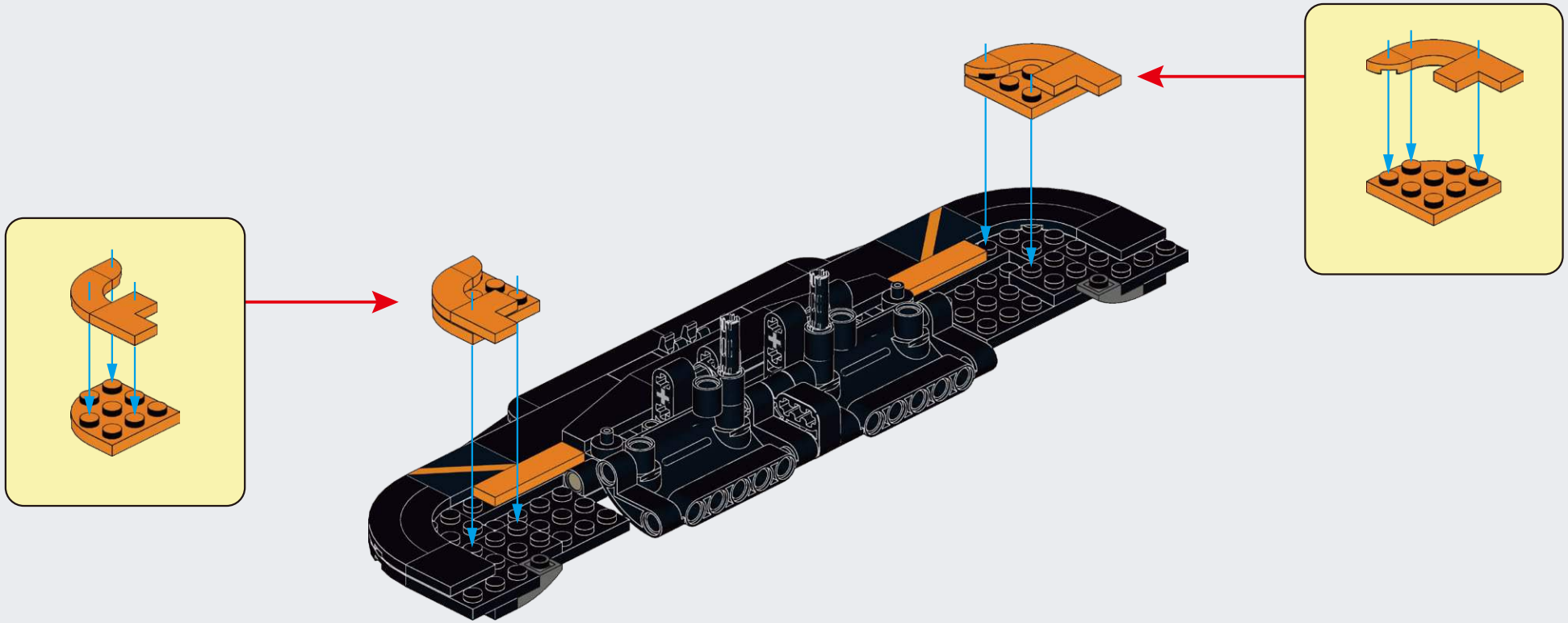

G47

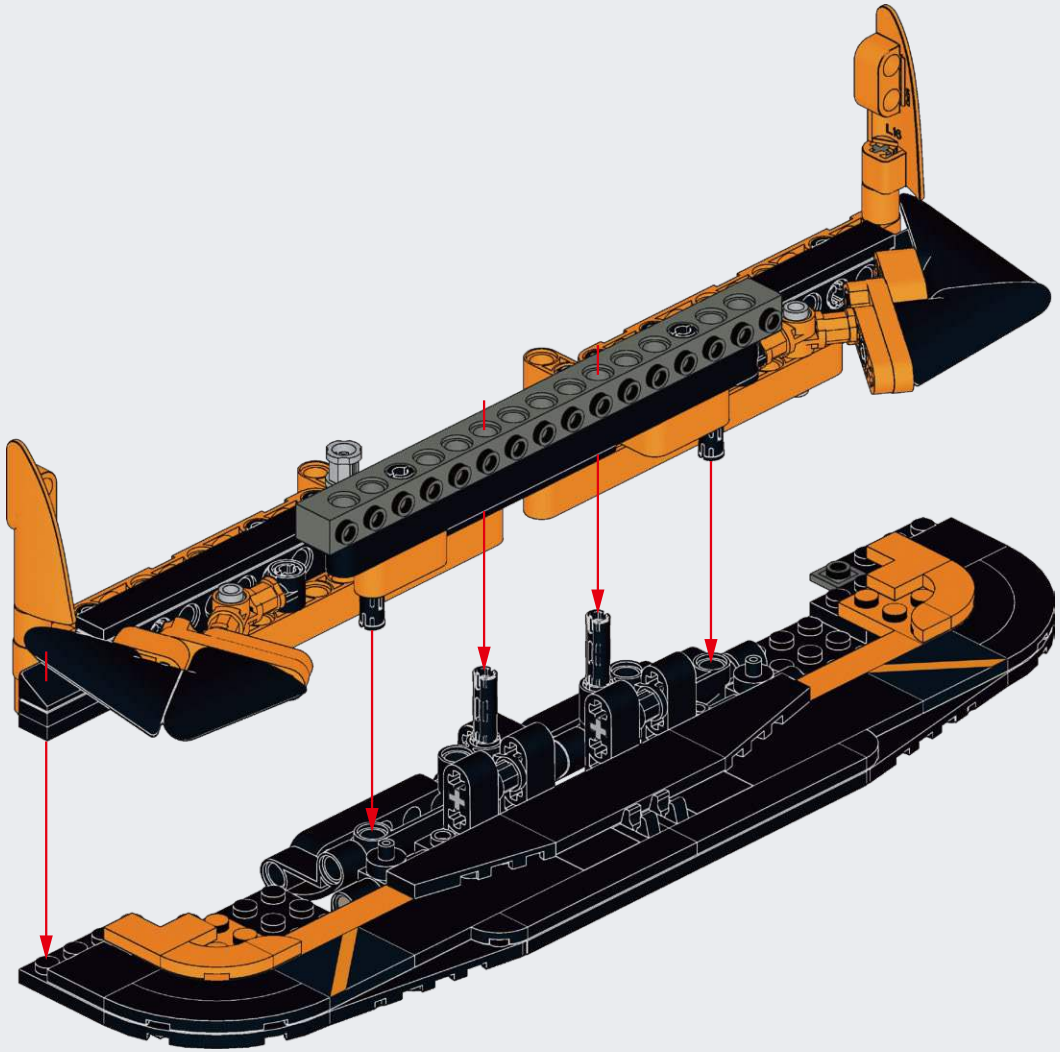

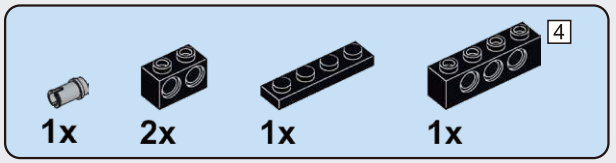

G48

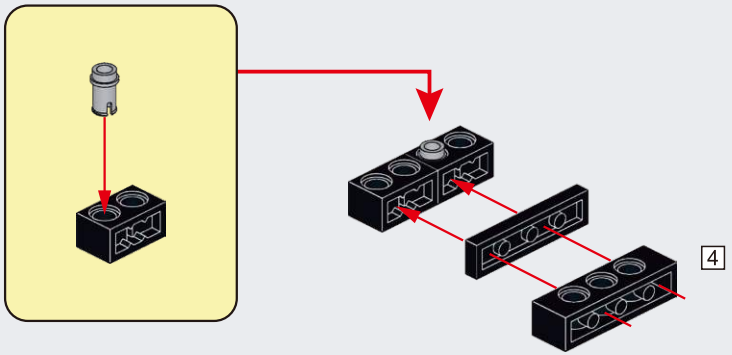

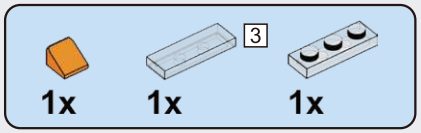

G49

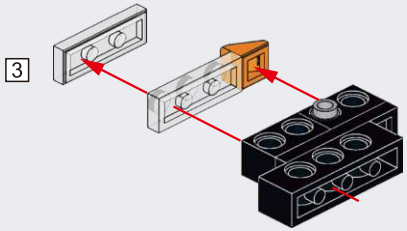

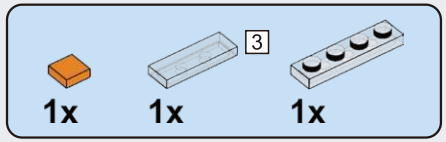

G50

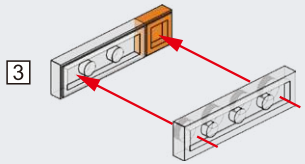

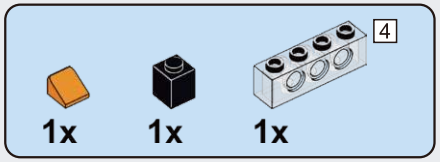

G51

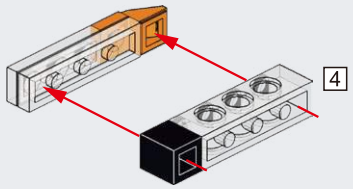

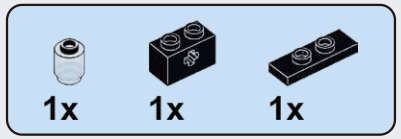

G52

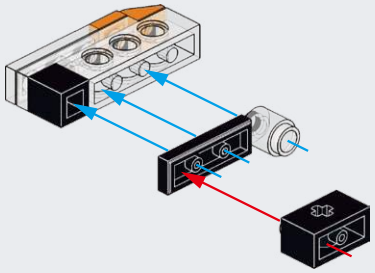

G53

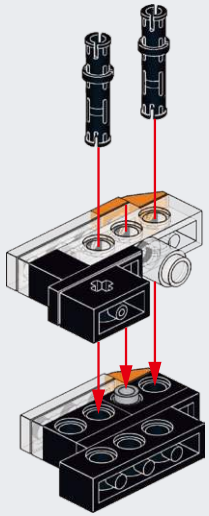

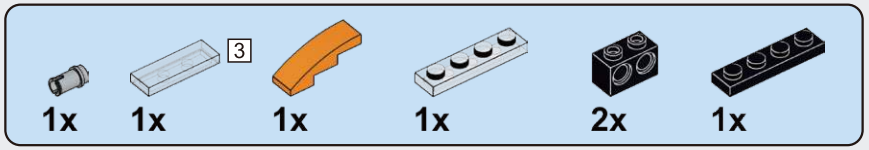

G54

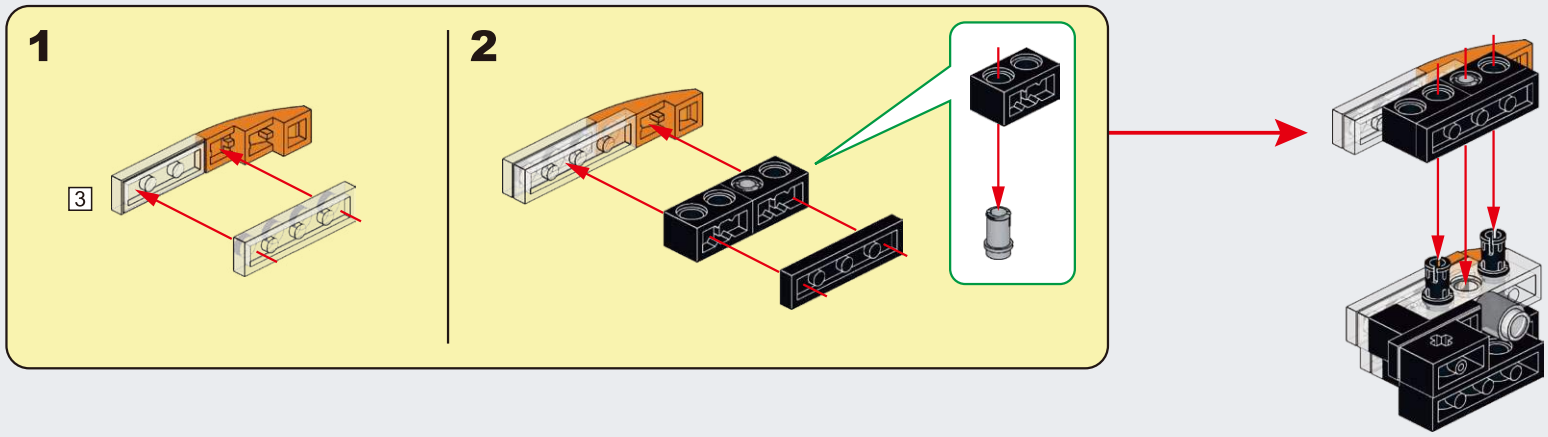

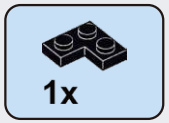

G55

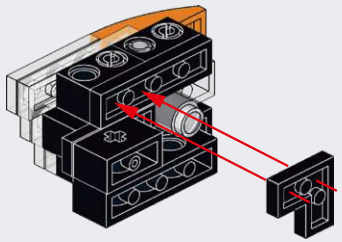

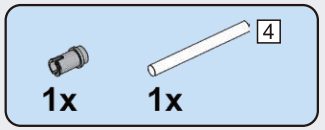

G56

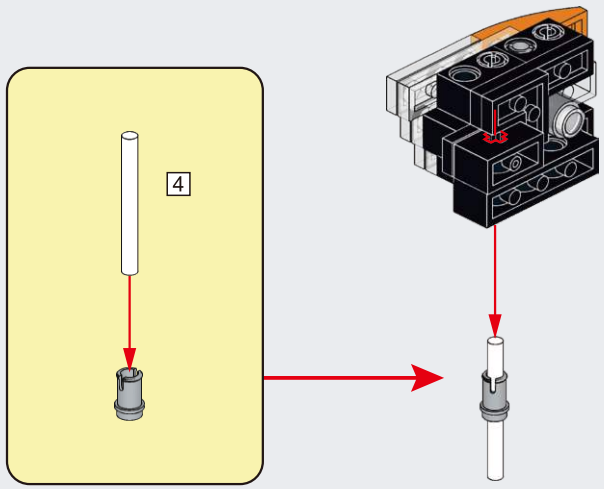

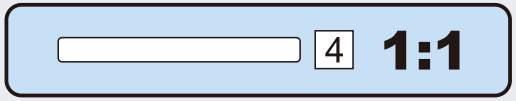

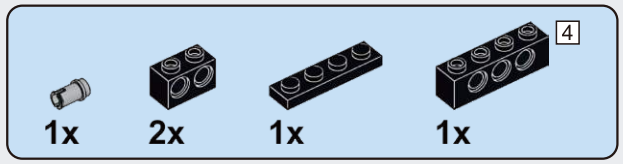

G57

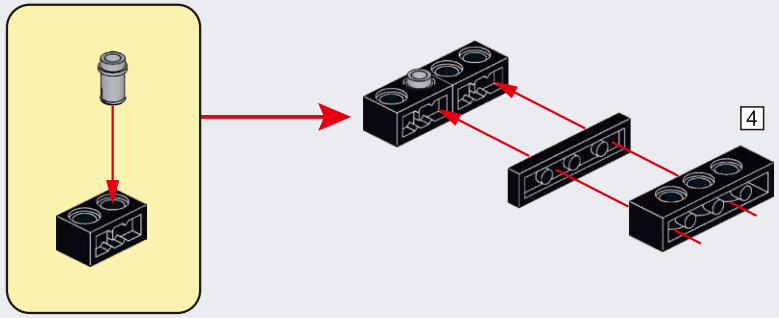

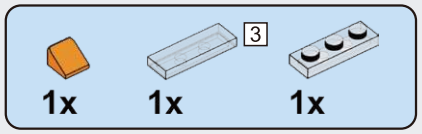

G58

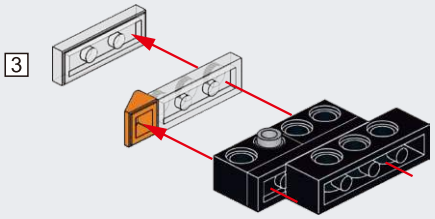

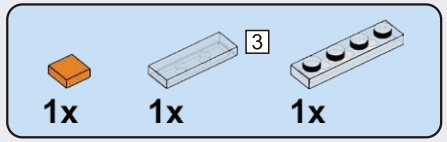

G59

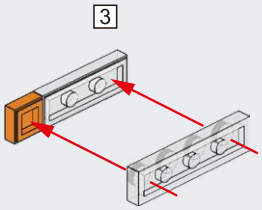

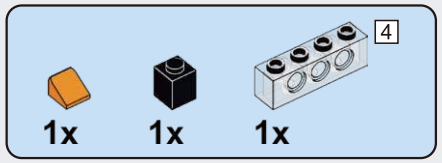

G60

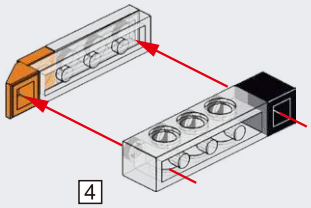

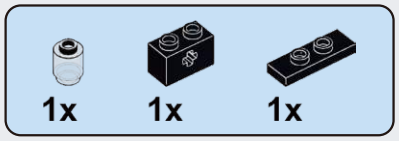

G61

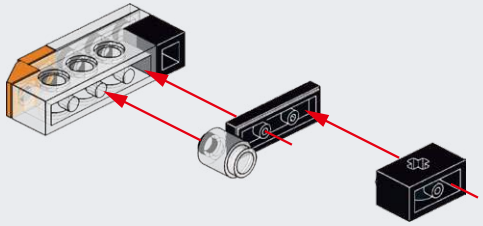

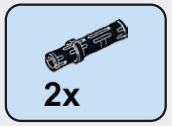

G62

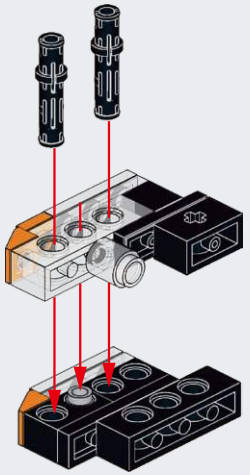

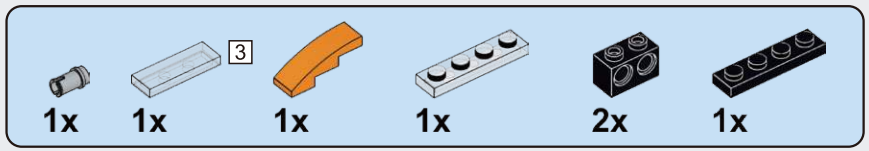

G63

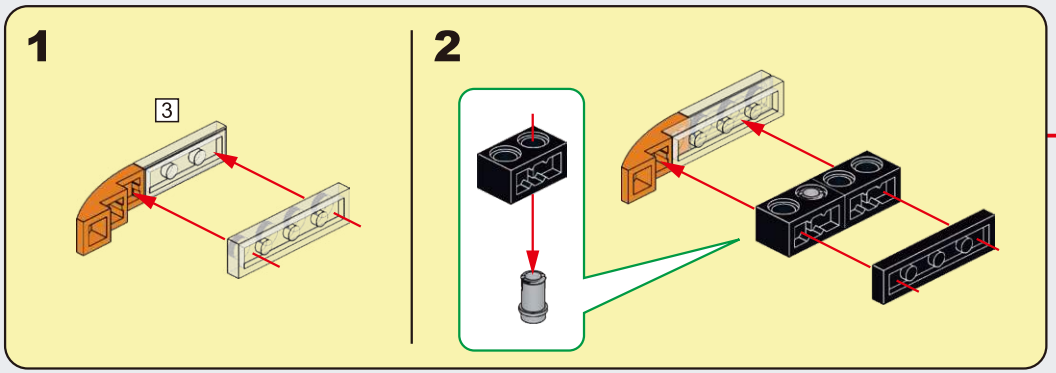

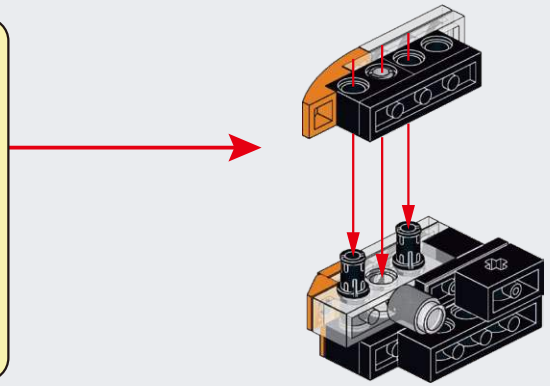

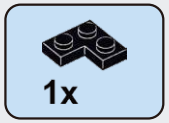

G64

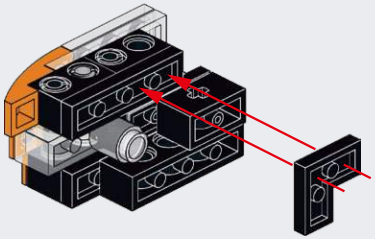

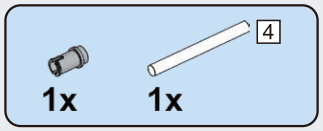

G65

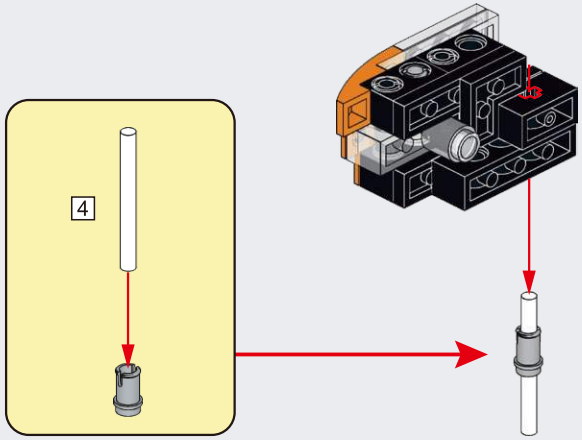

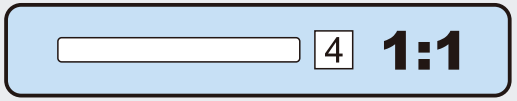

G66

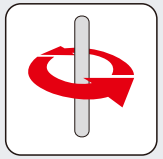

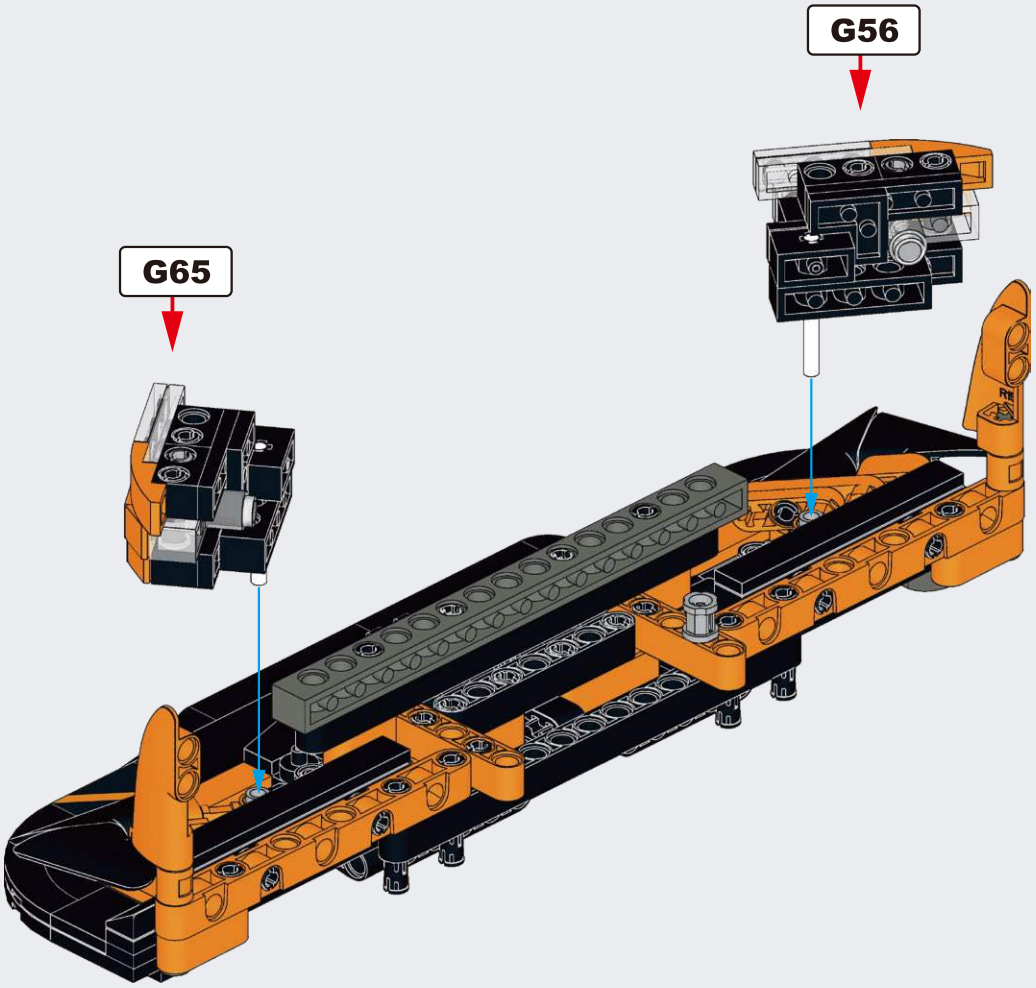

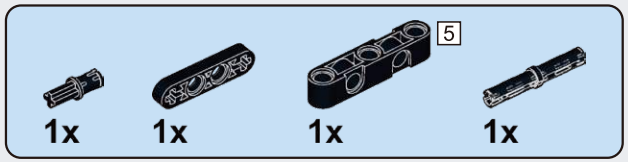

G67

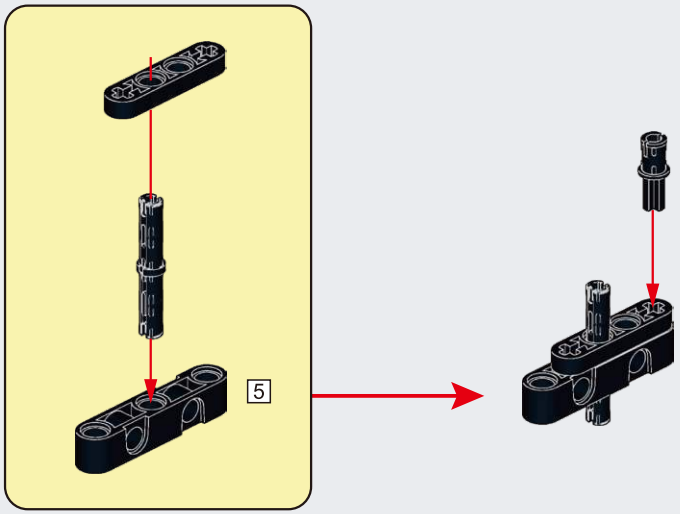

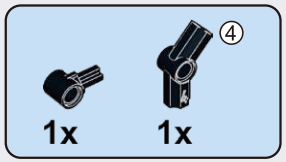

G68

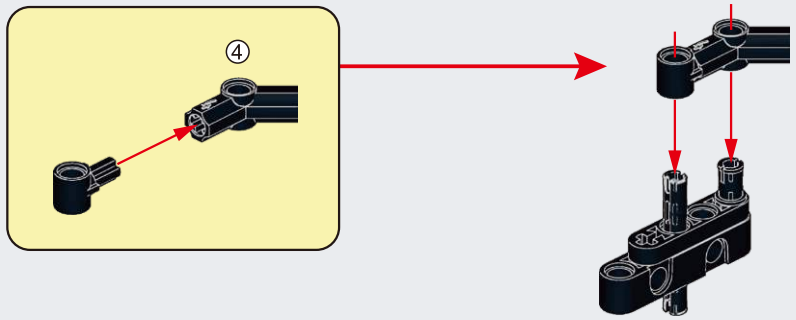

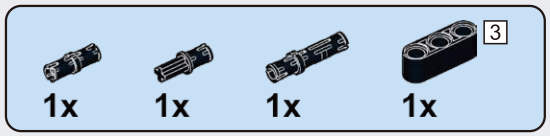

G69

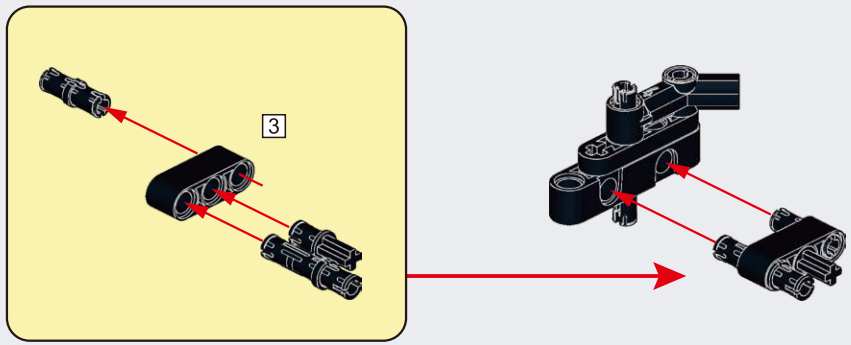

G70

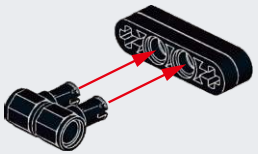

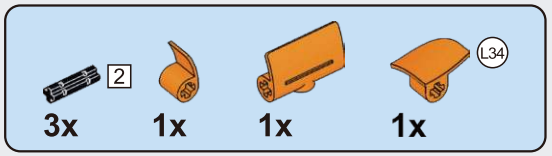

G71

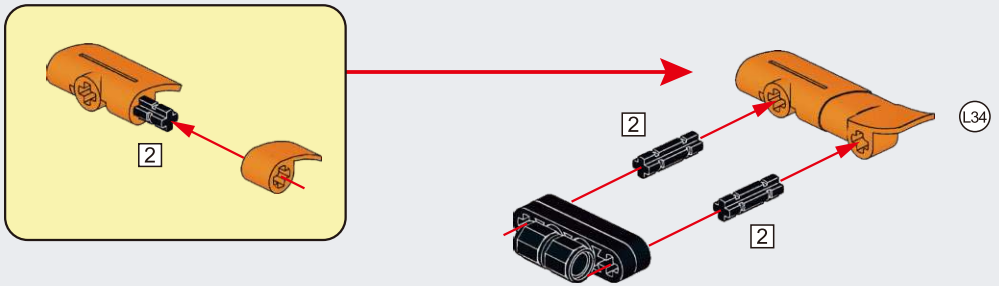

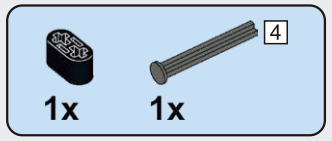

G72

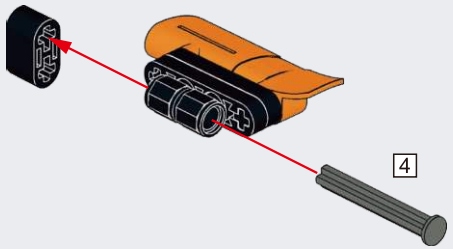

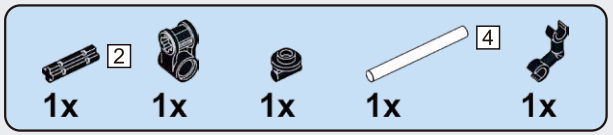

G73

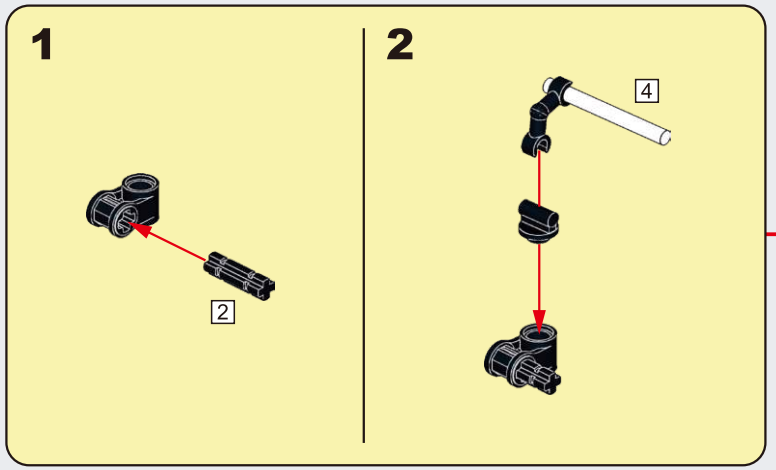

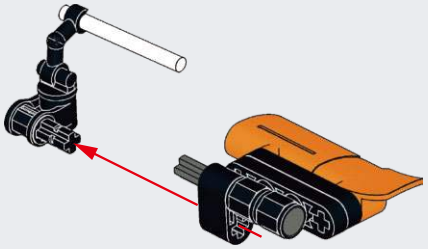

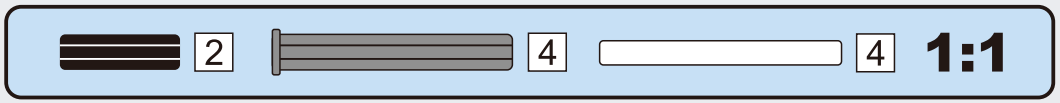

G74

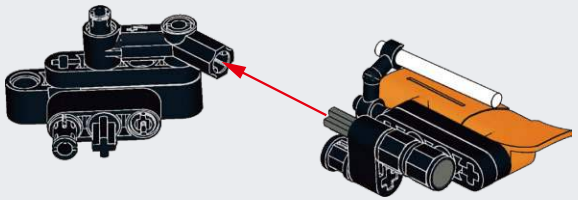

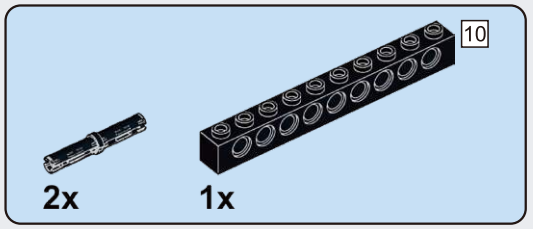

G75

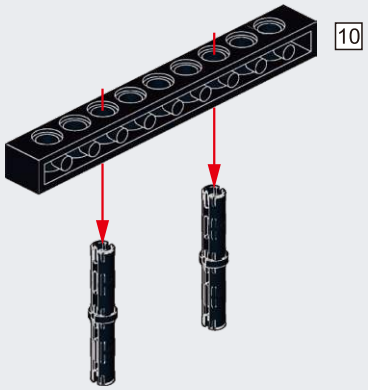

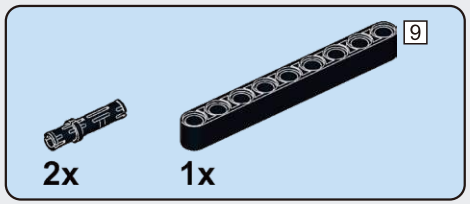

G76

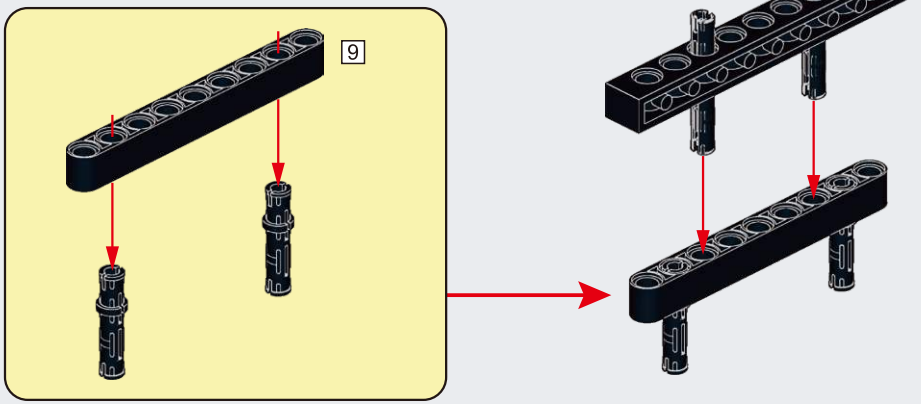

G77

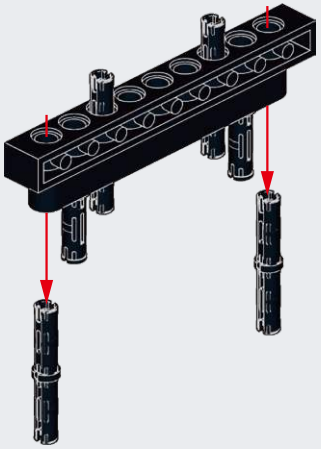

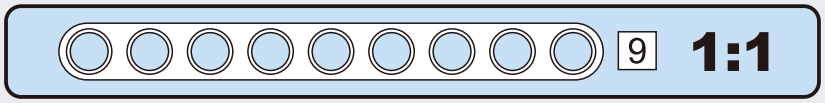

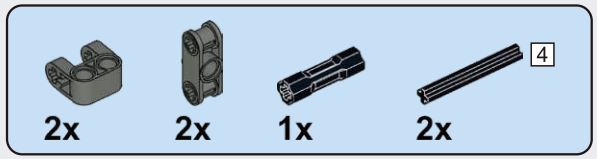

G78

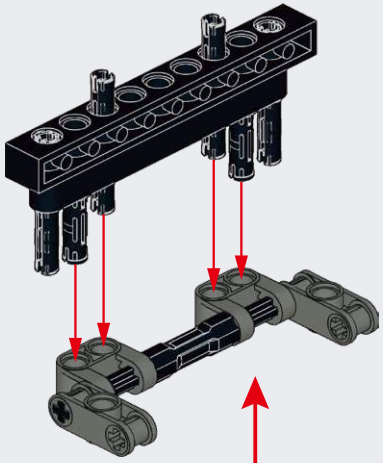

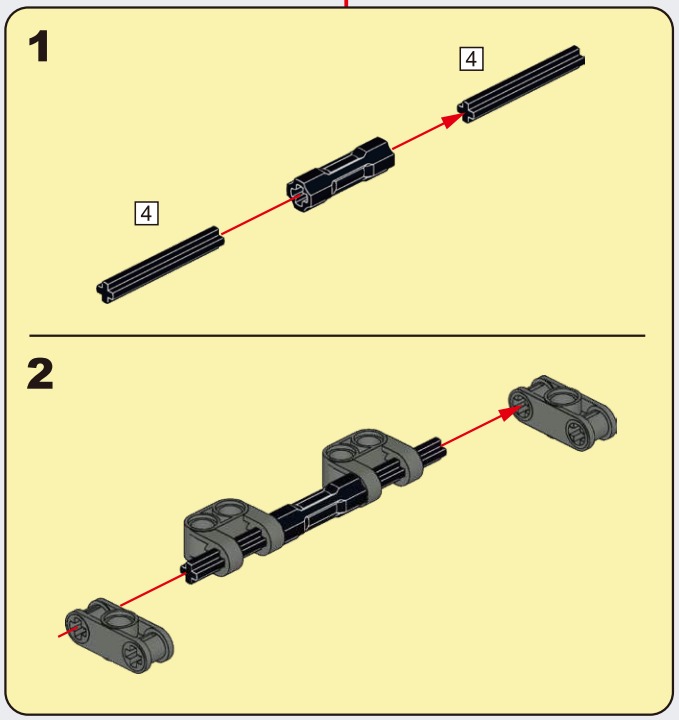

G79

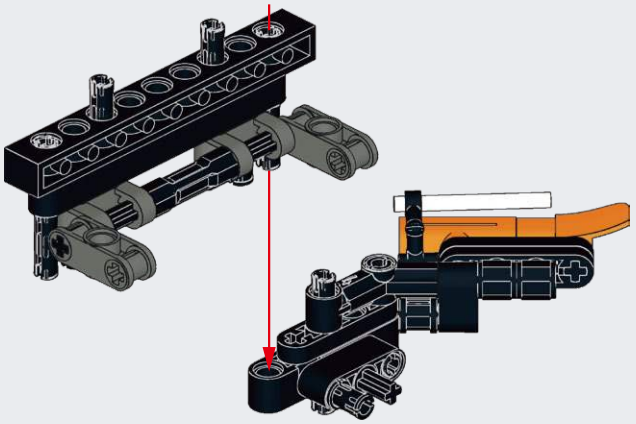

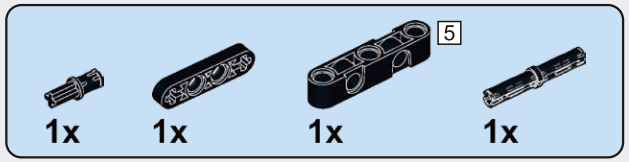

G80

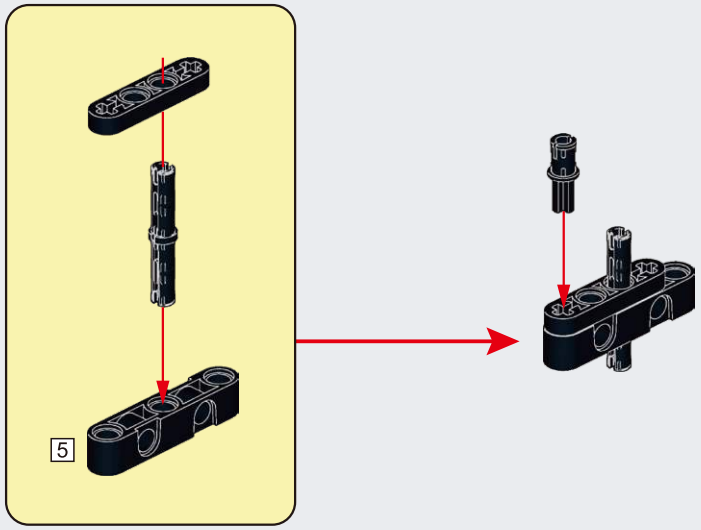

G81

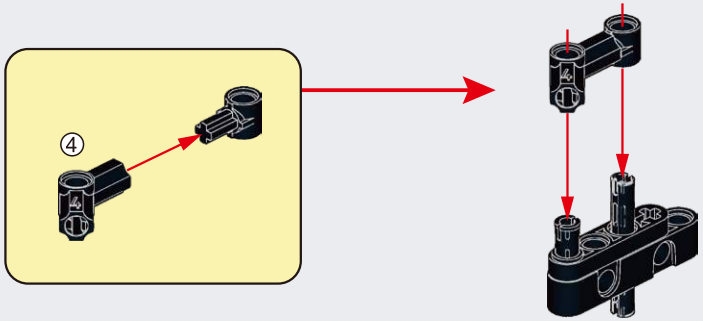

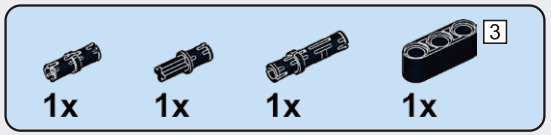

G82

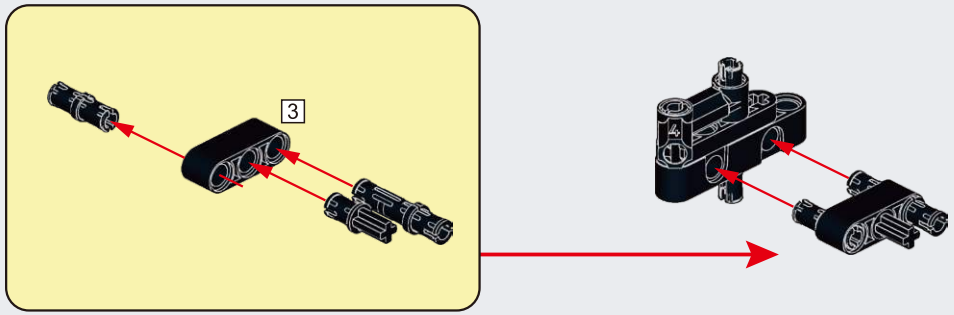

G83

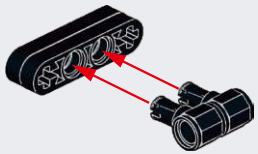

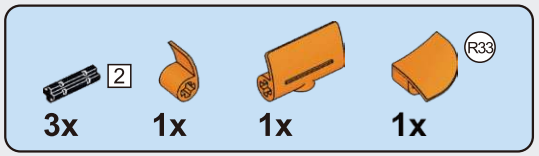

G84

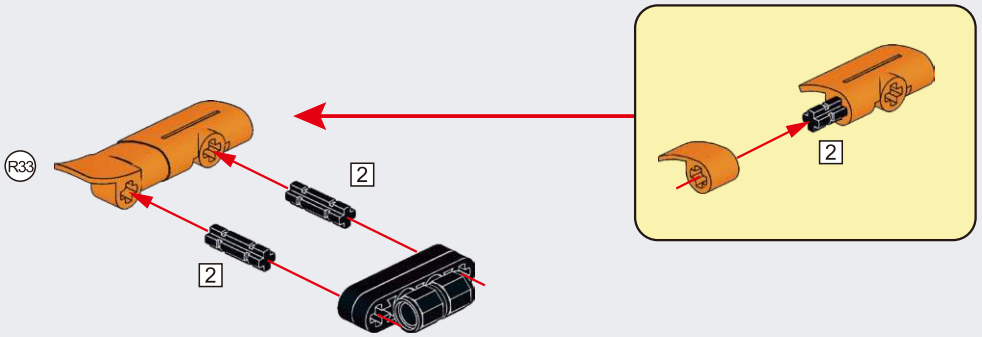

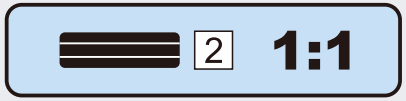

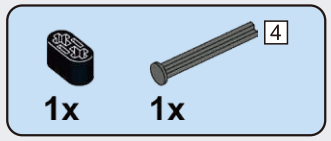

G85

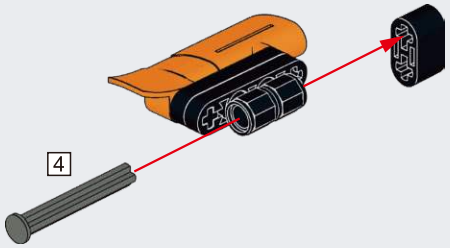

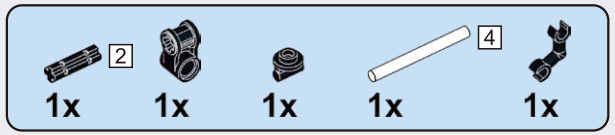

G86

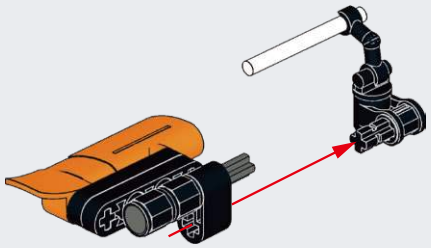

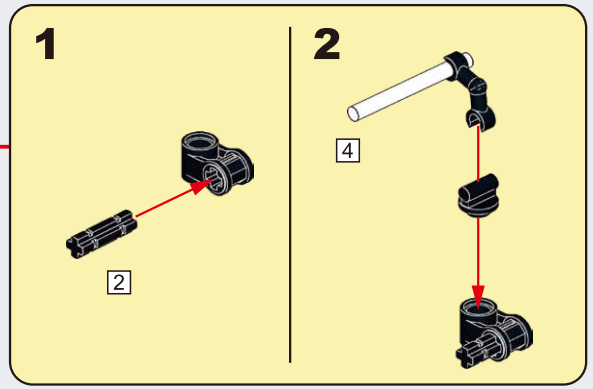

G87

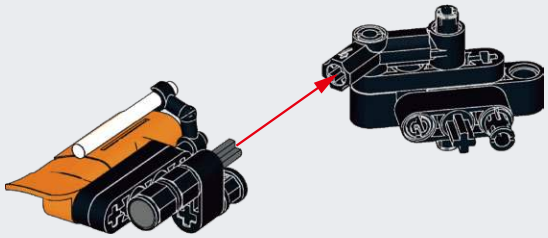

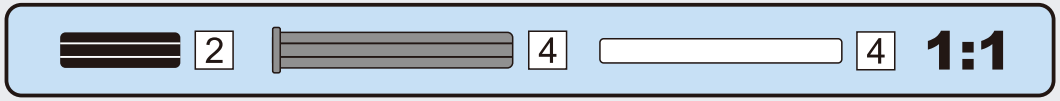

G88

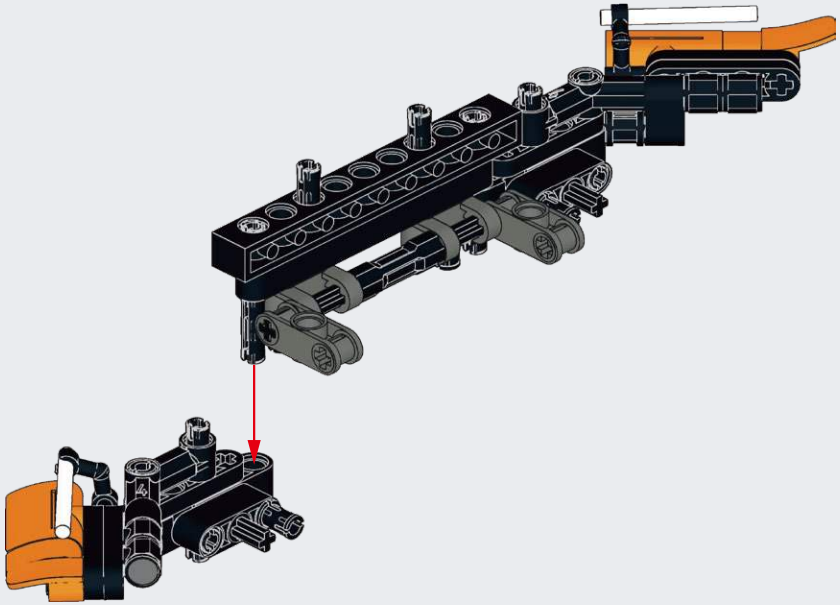

G89

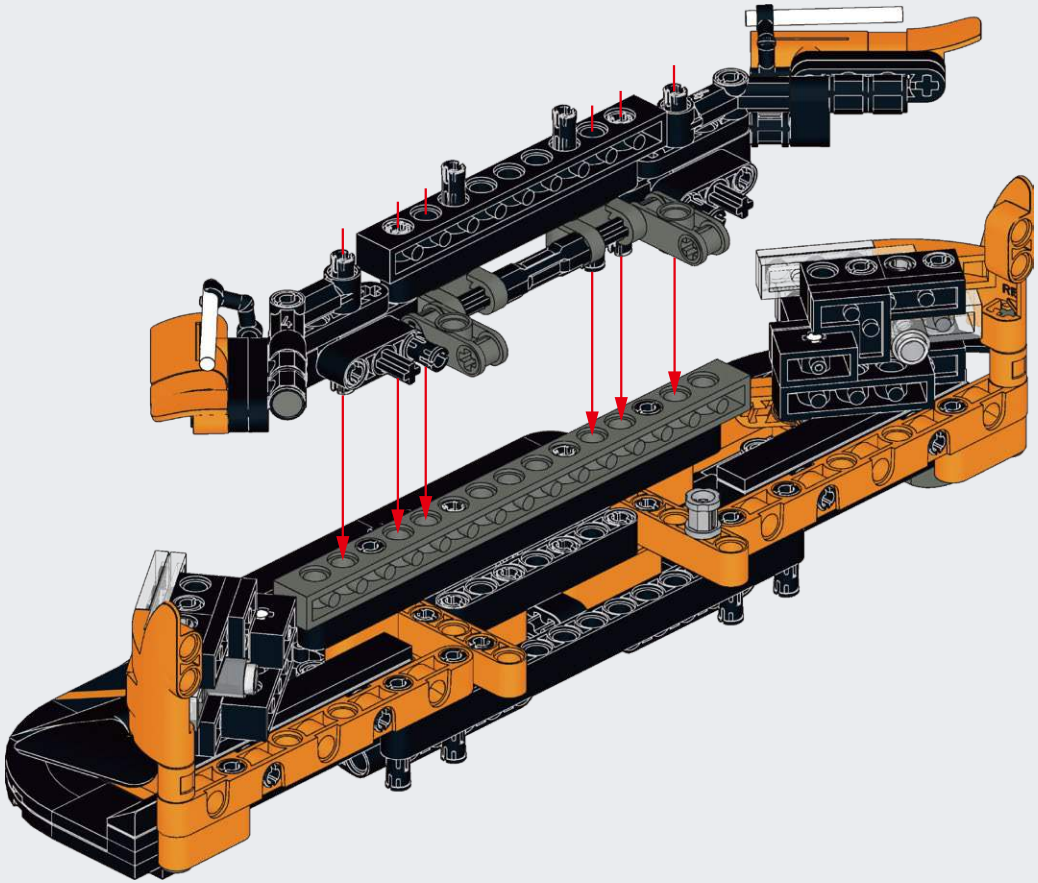

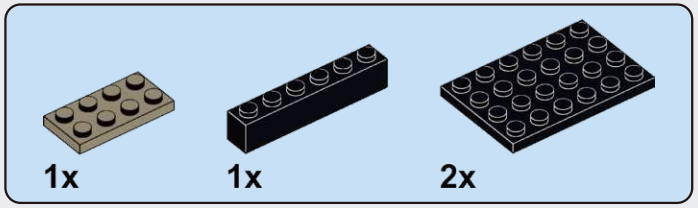

G90

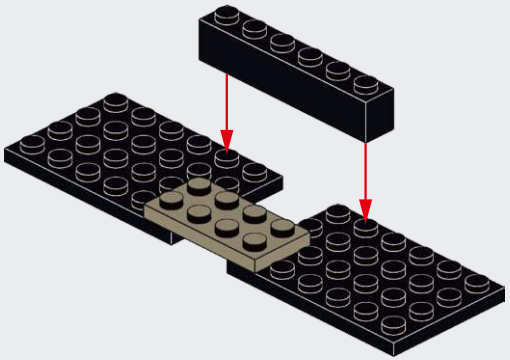

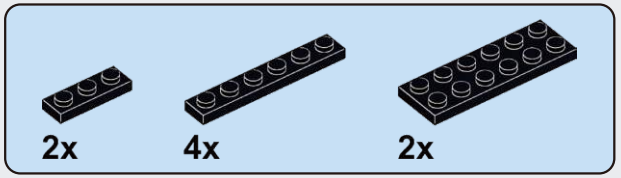

G91

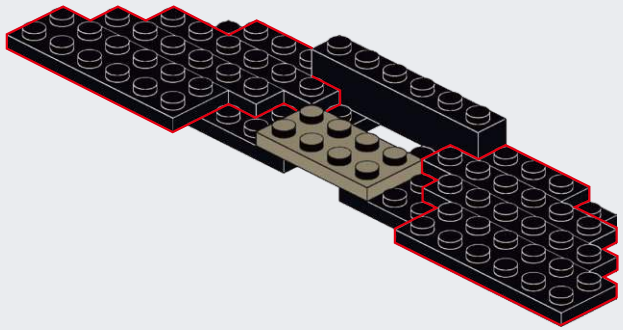

G92

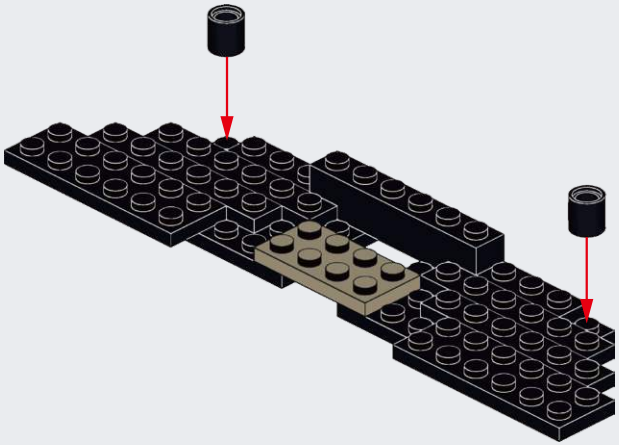

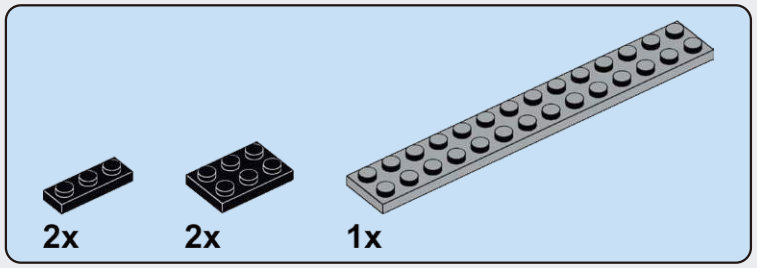

G93

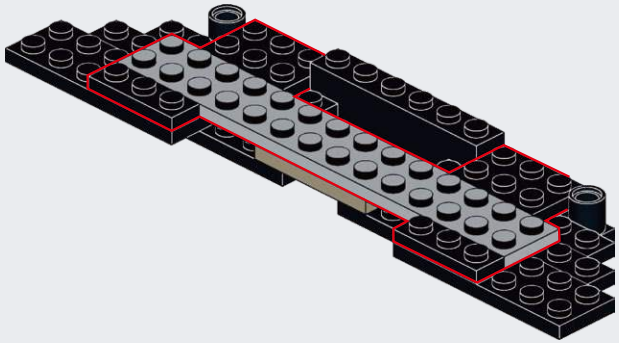

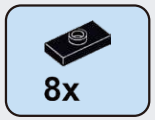

G94

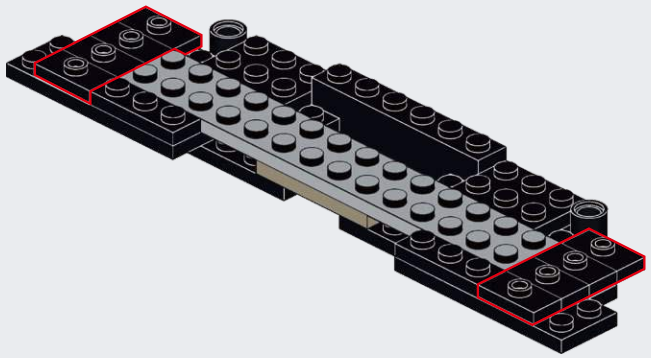

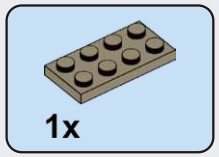

G95

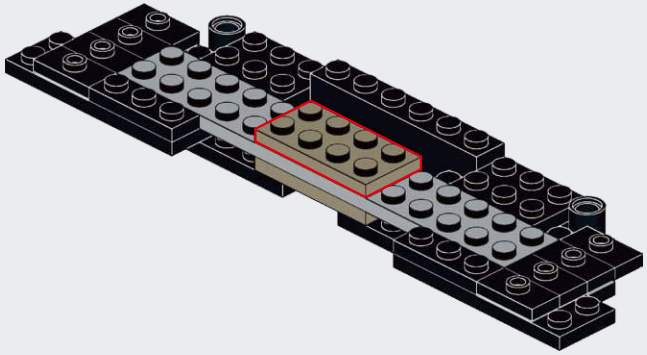

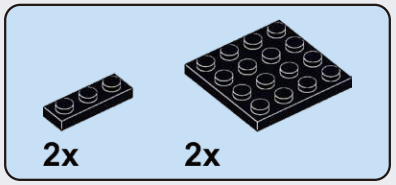

G96

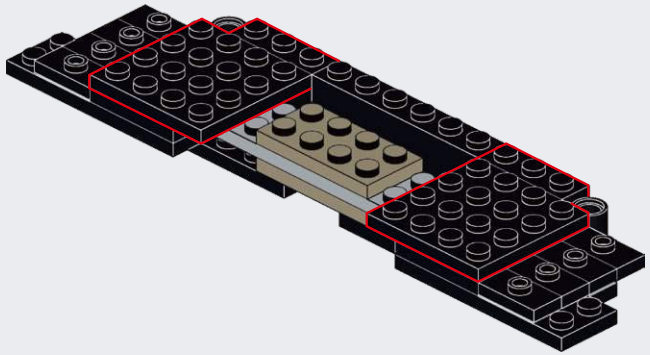

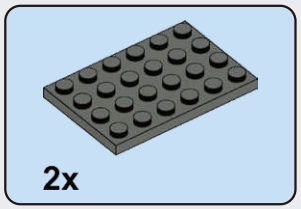

G97

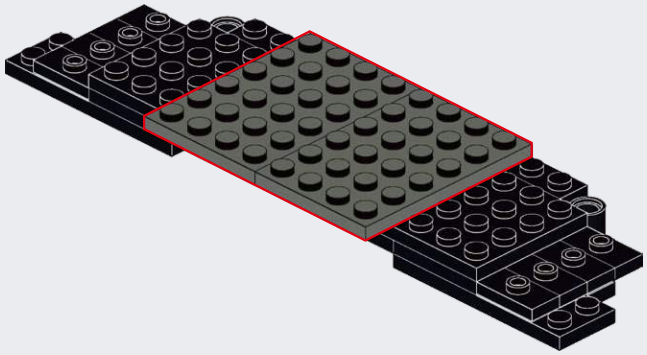

G98

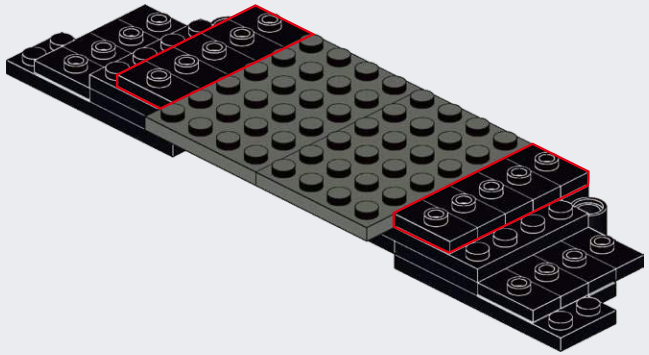

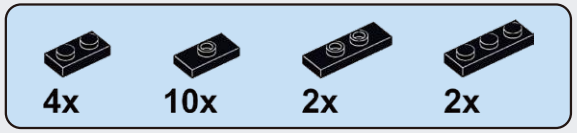

G99

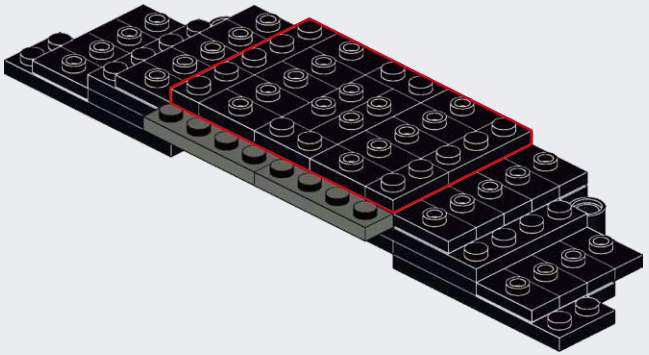

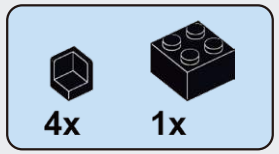

G100

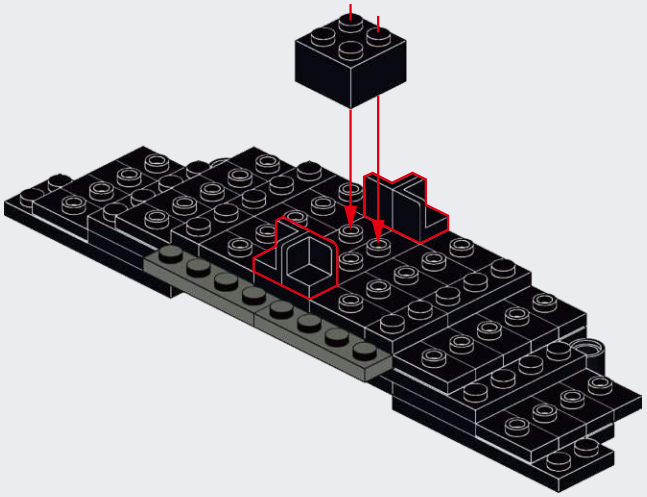

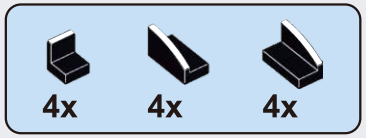

G101

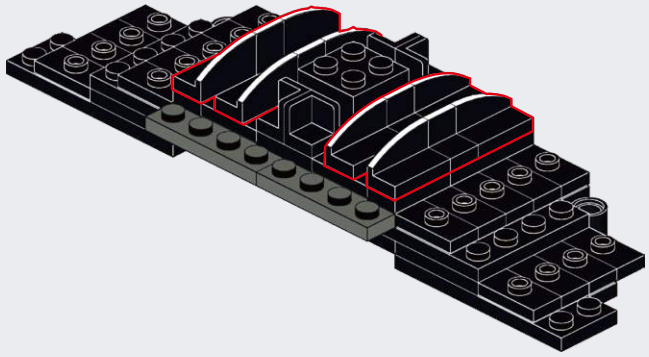

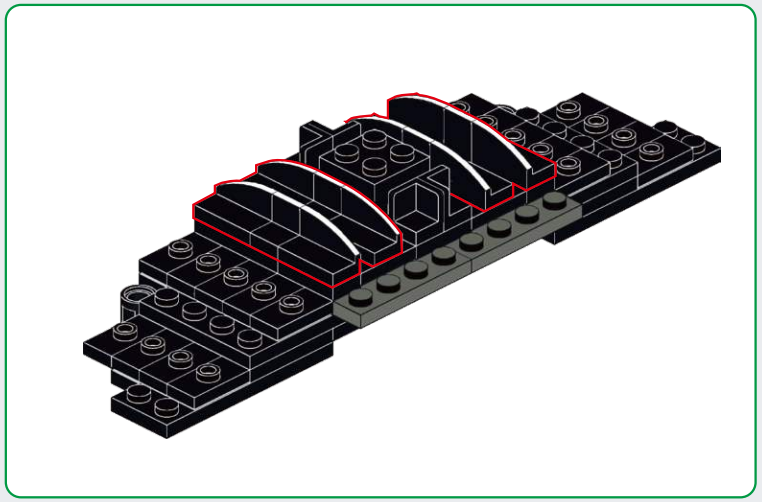

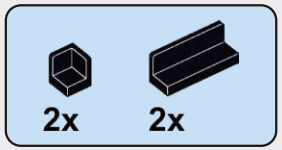

G102

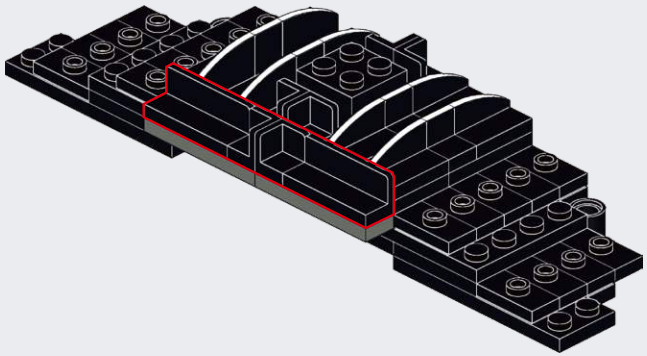

G103

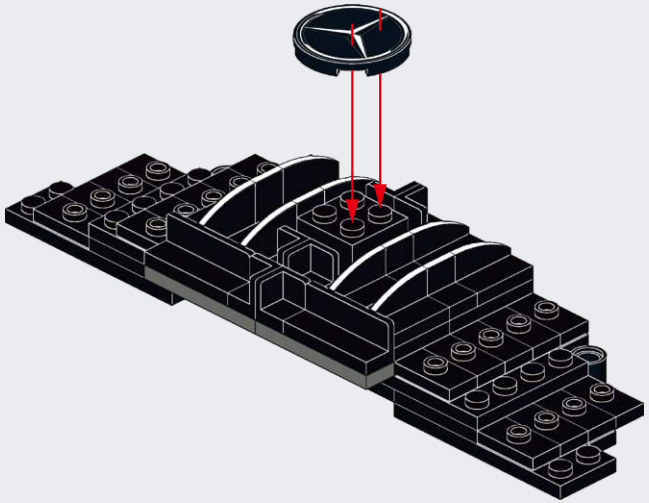

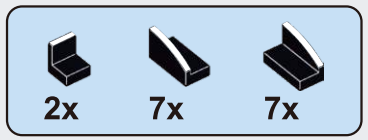

G104

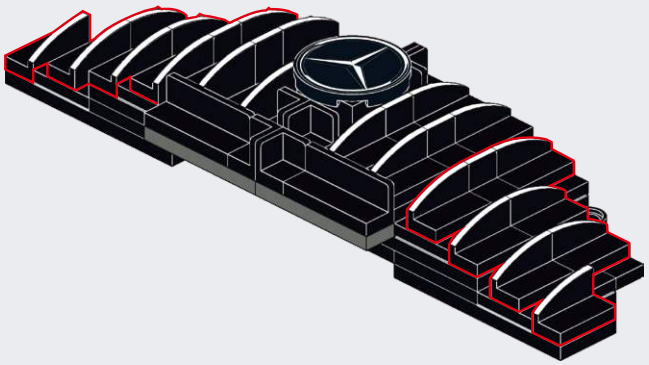

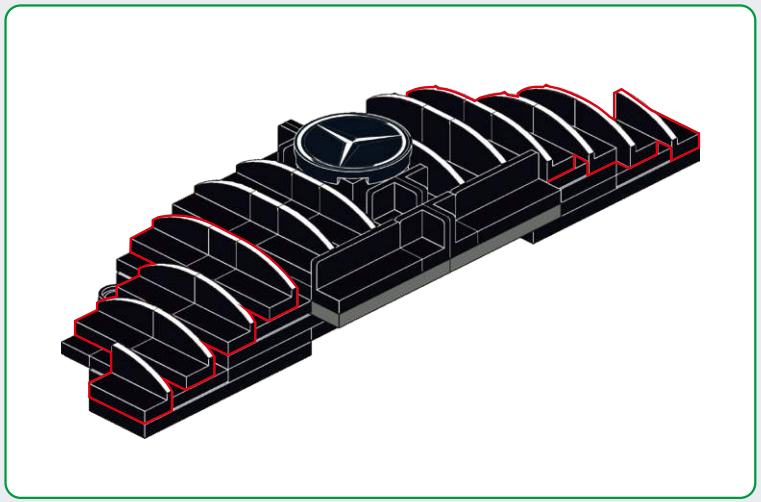

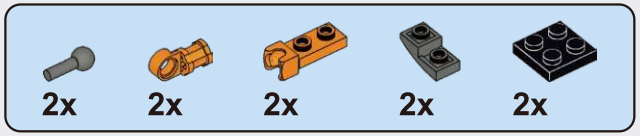

G105

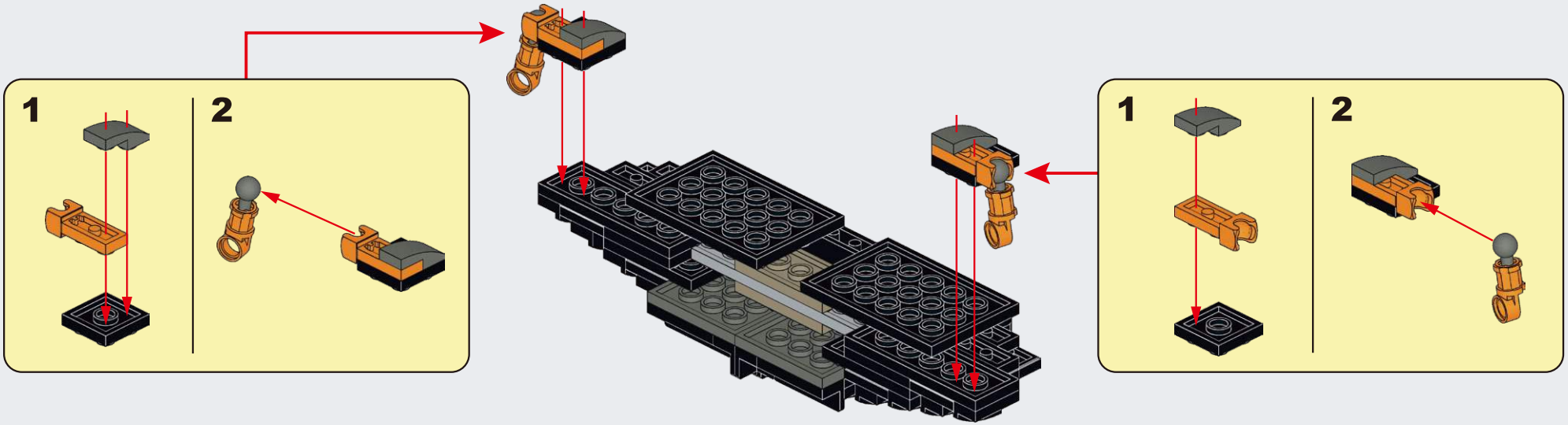

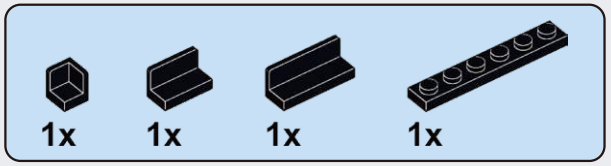

G106

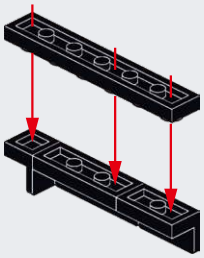

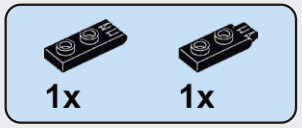

G107

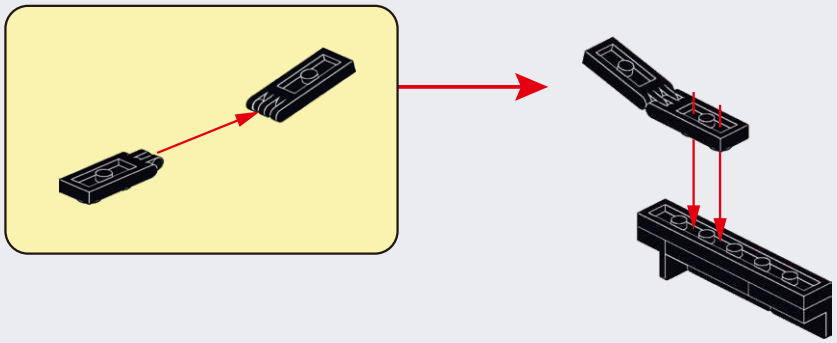

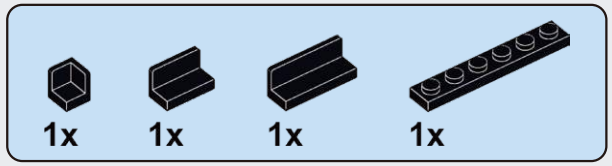

G108

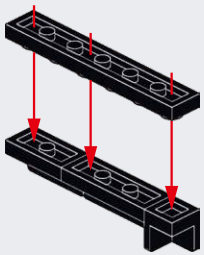

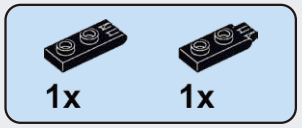

G109

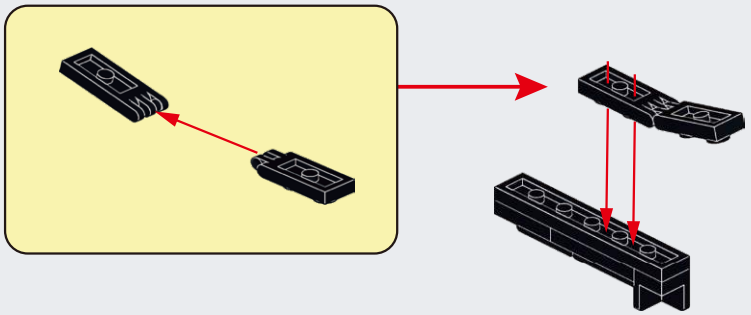

G110

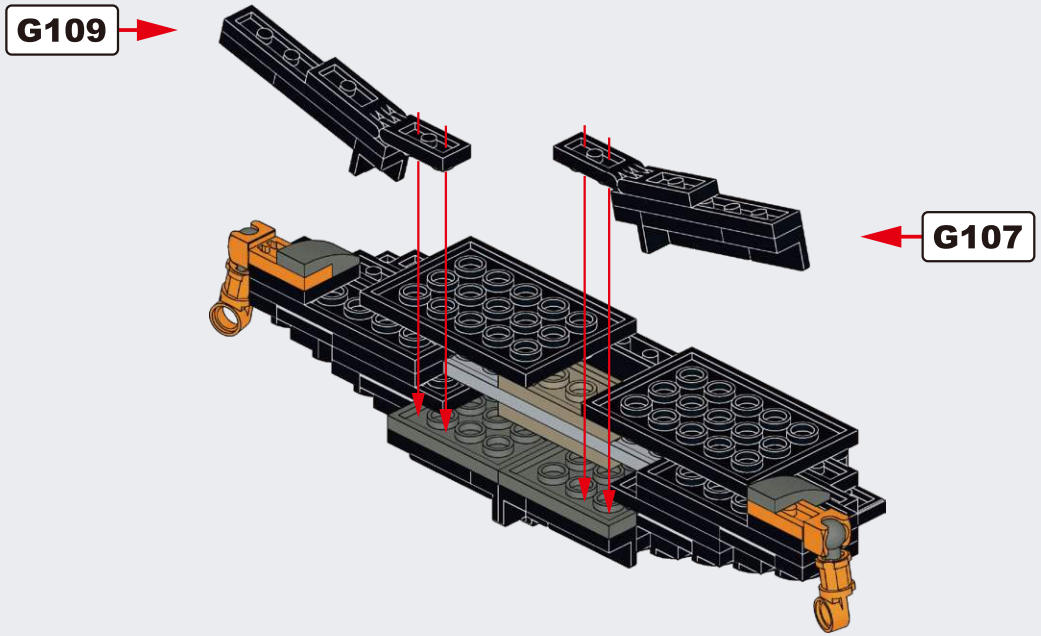

G111

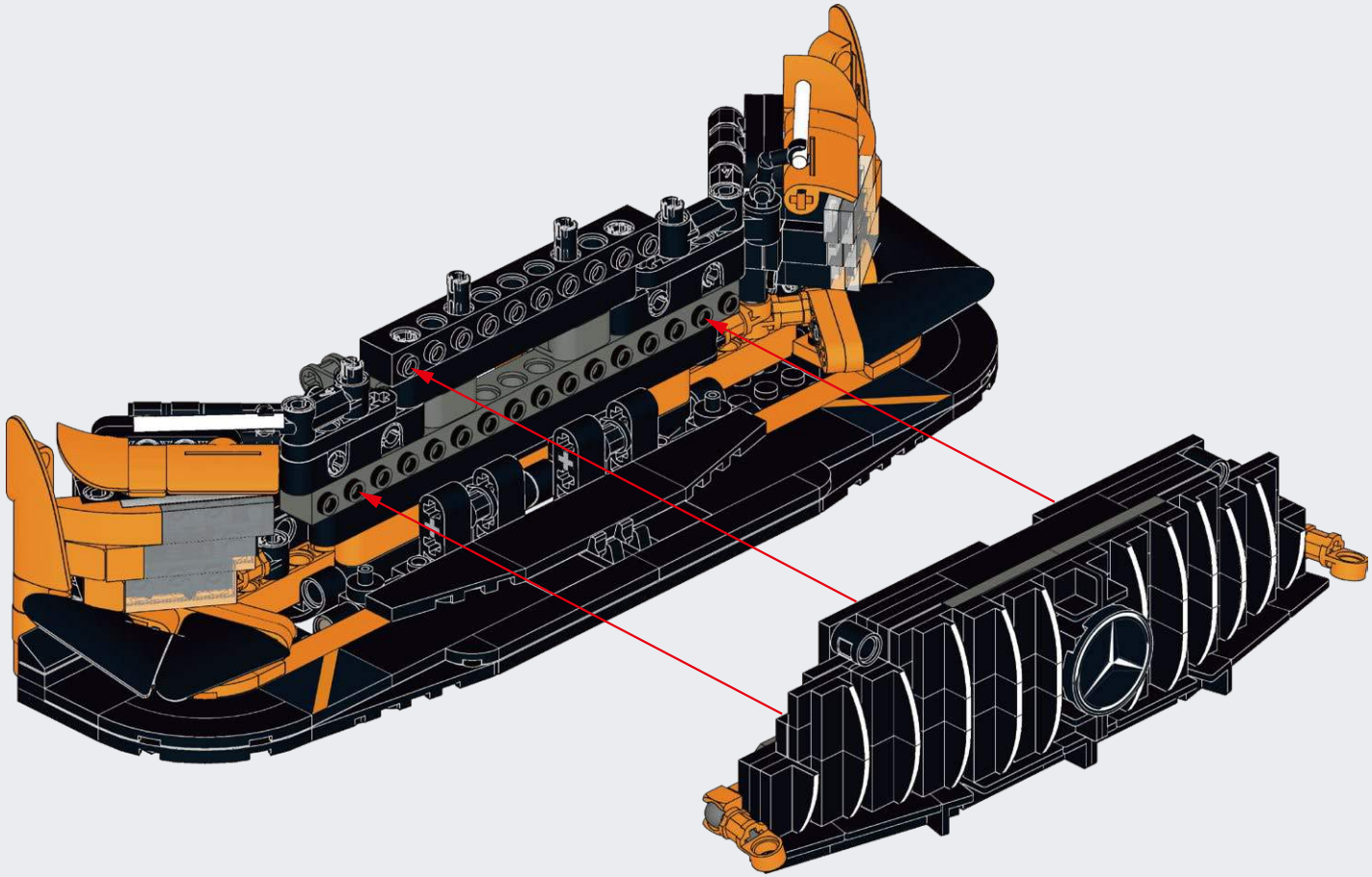

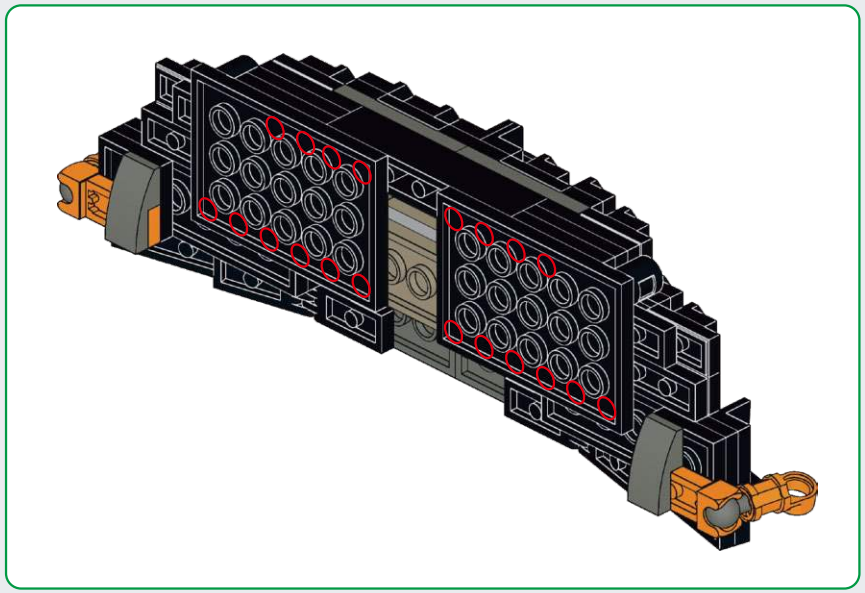

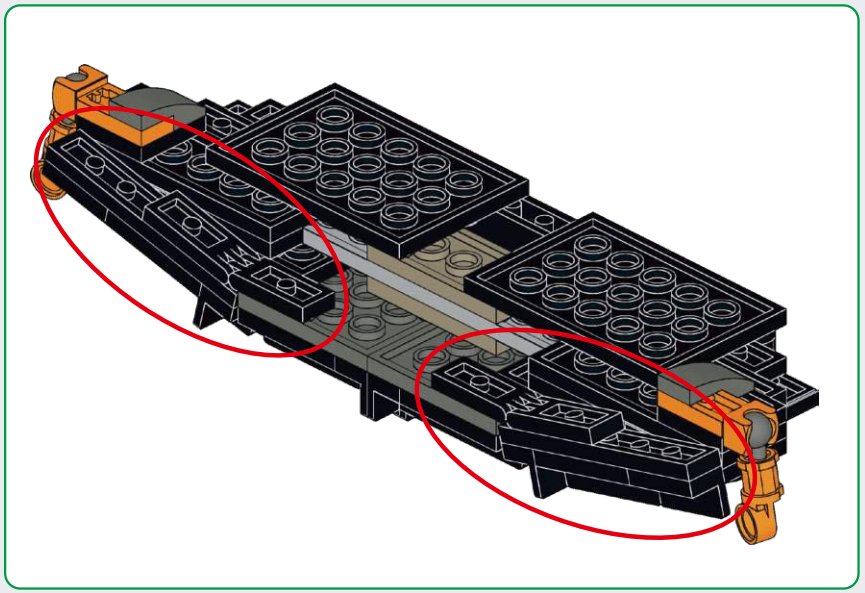

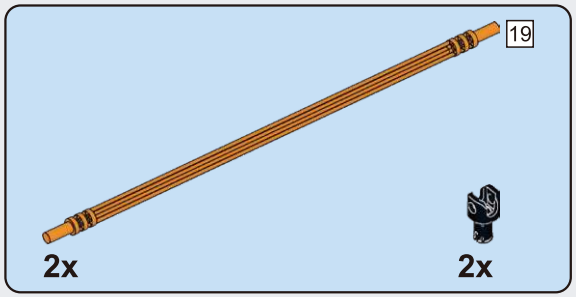

G112

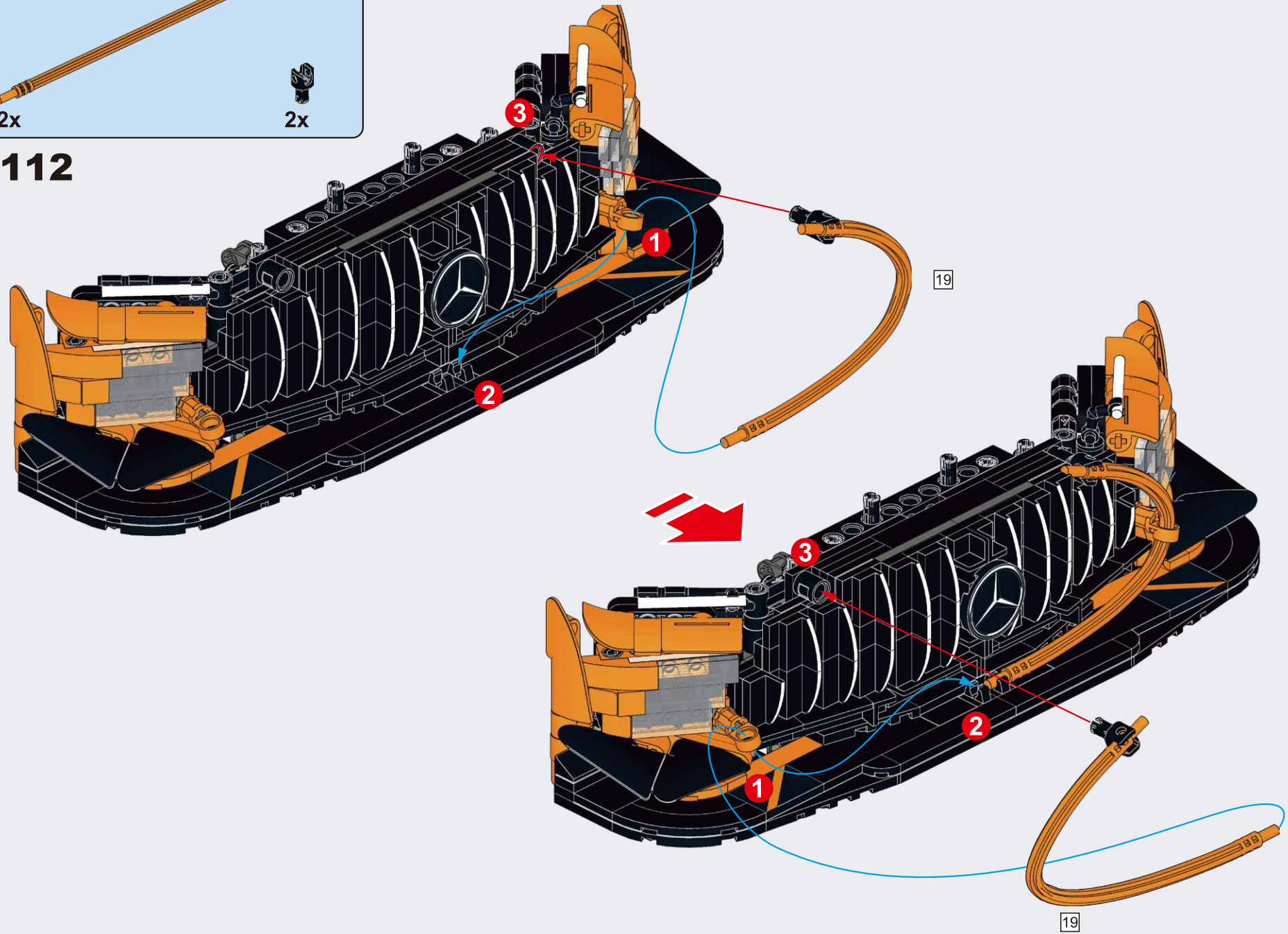

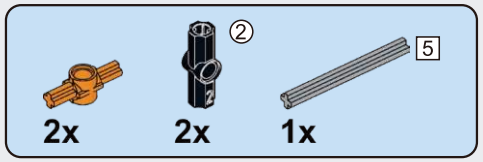

G113

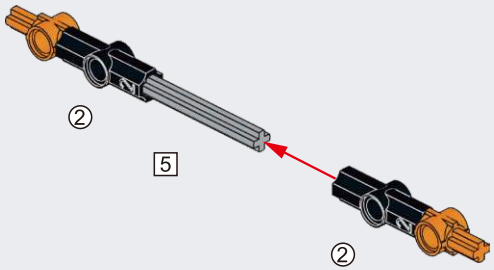

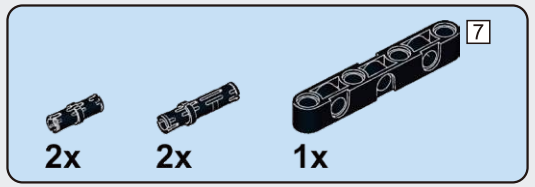

G114

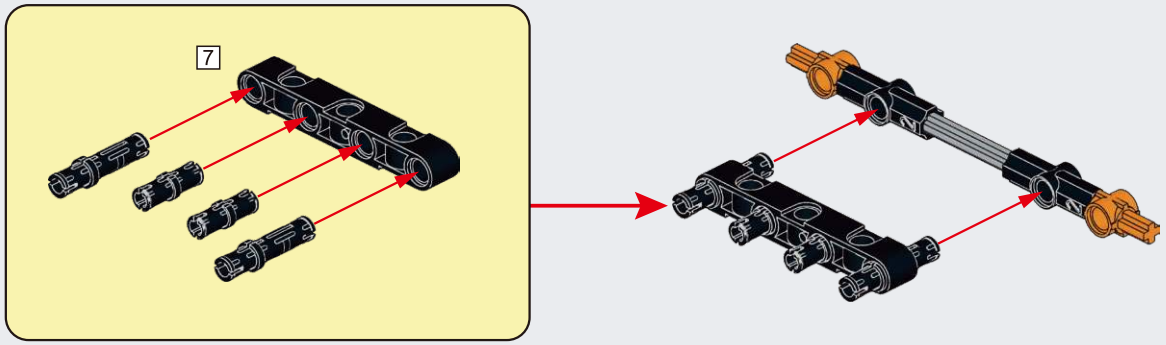

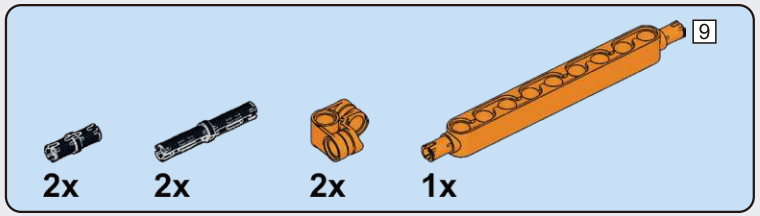

G115

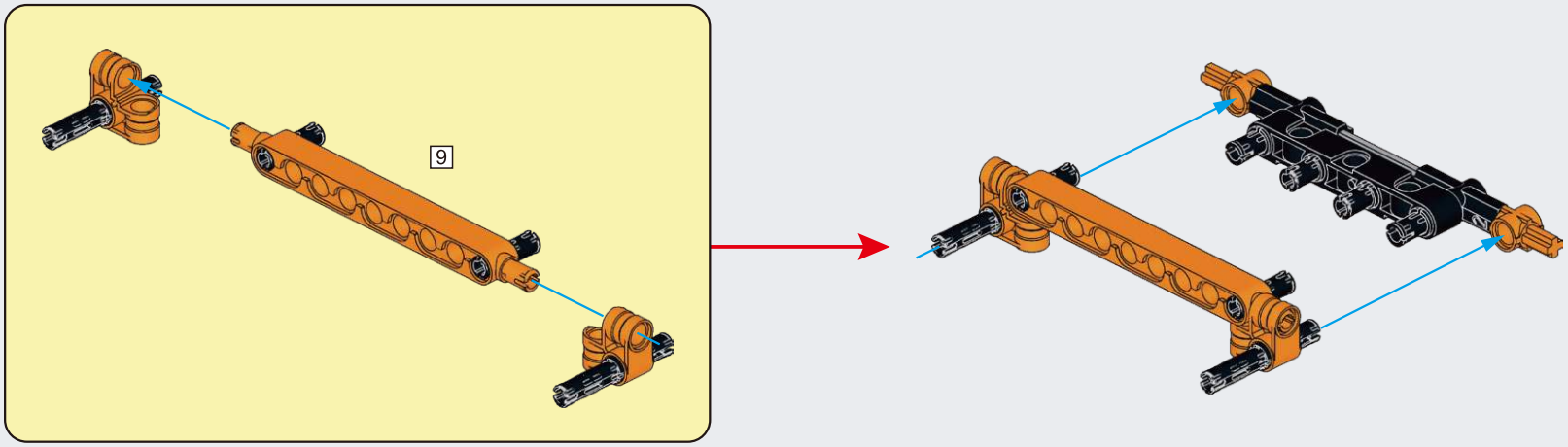

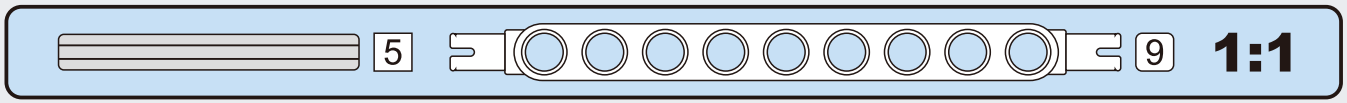

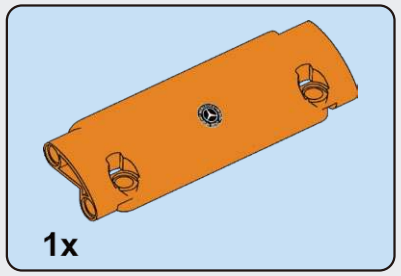

G116

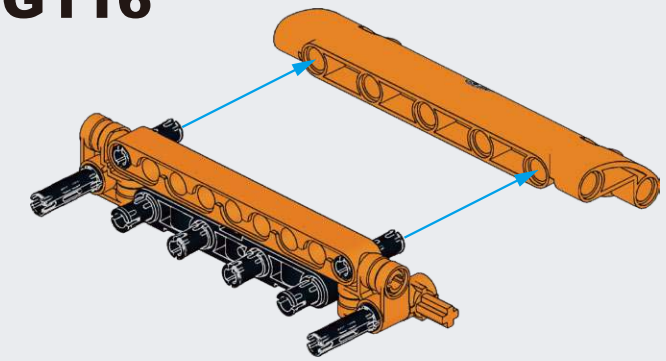

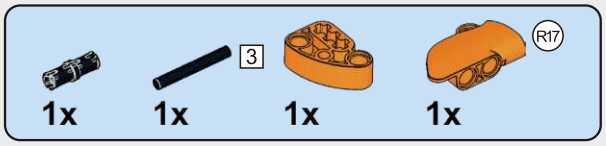

G117

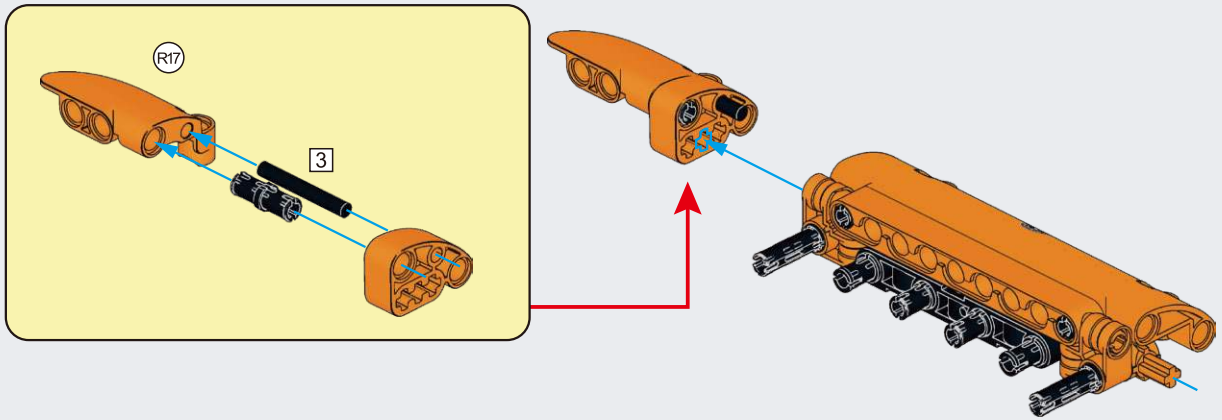

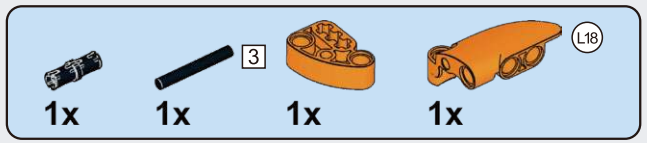

G118

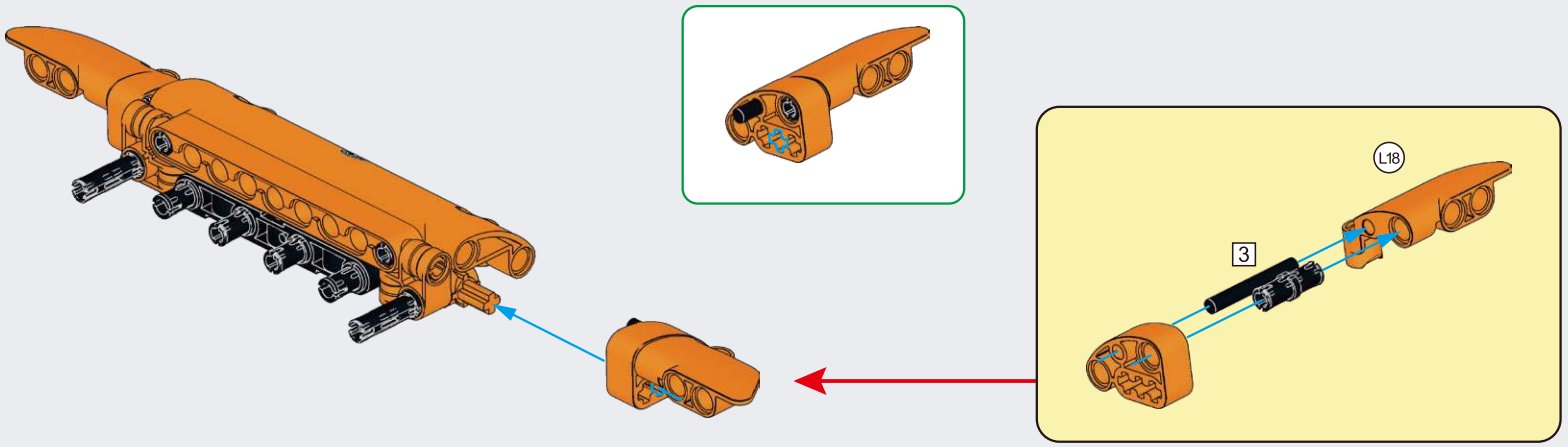

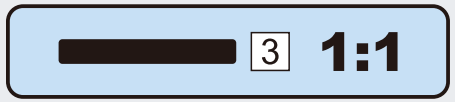

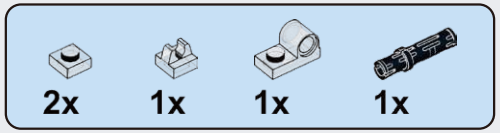

G119

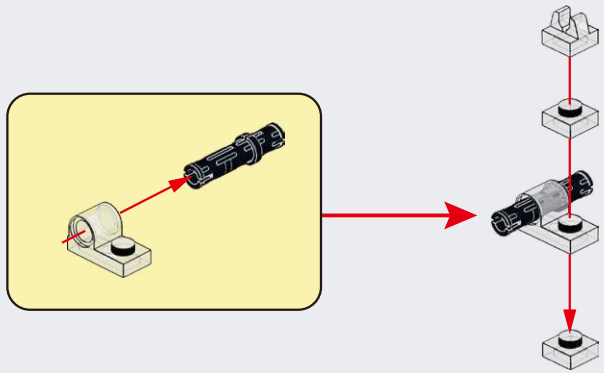

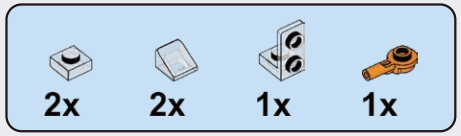

G120

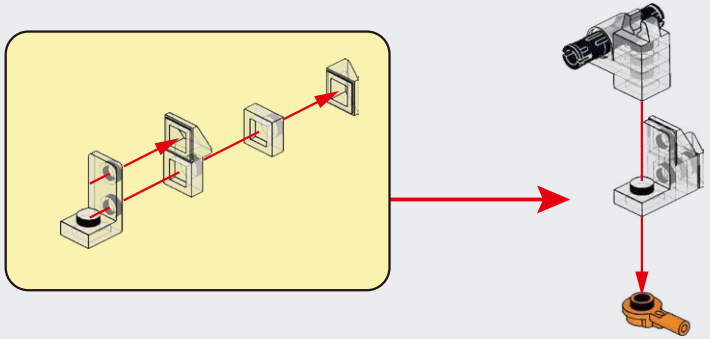

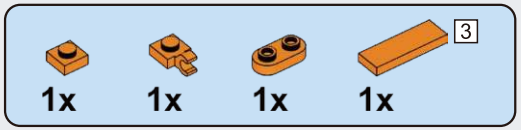

G121

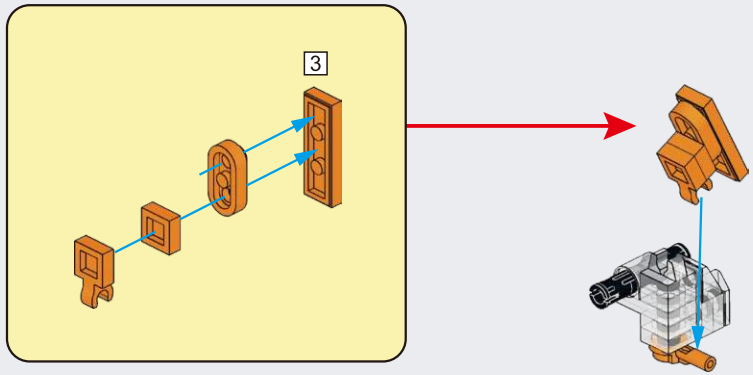

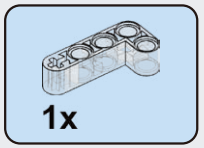

G122

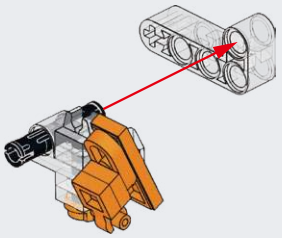

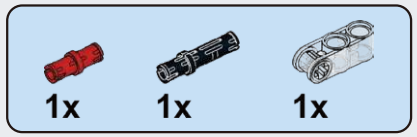

G123

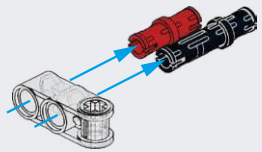

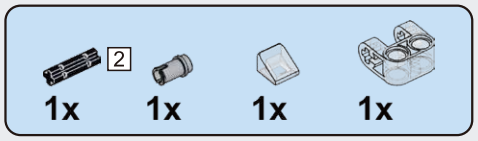

G124

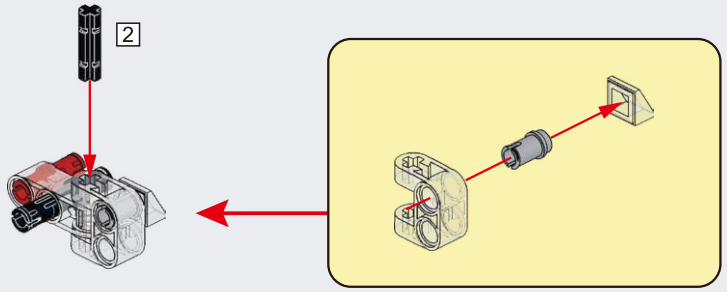

G125

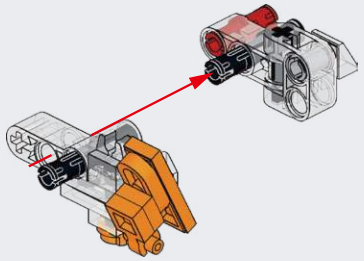

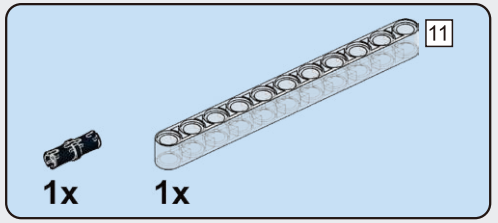

G126

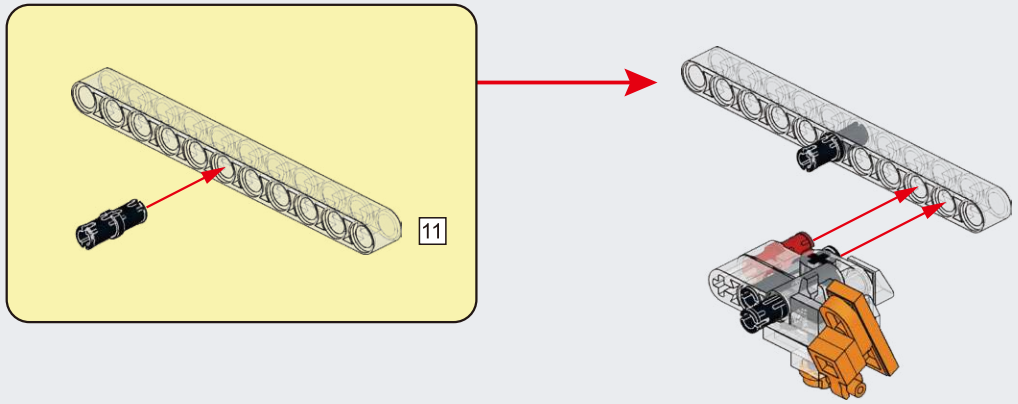

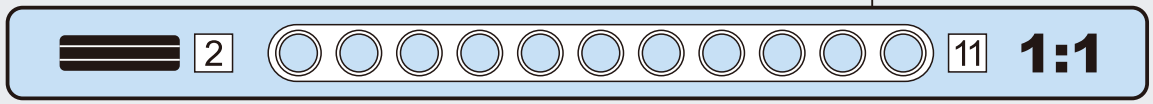

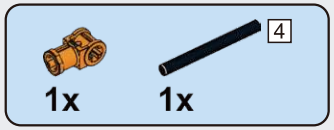

G127

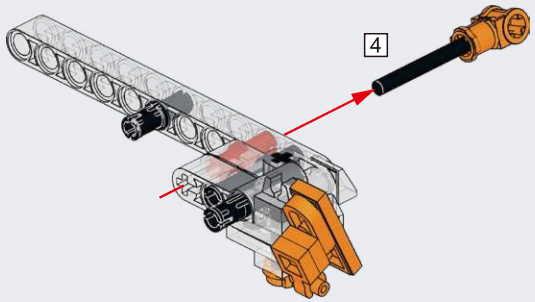

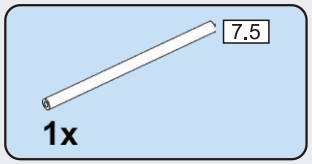

G128

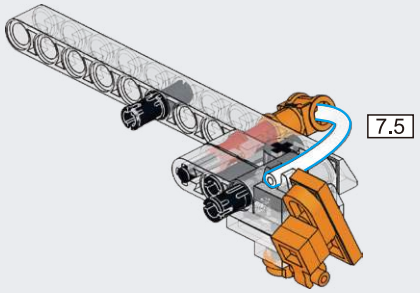

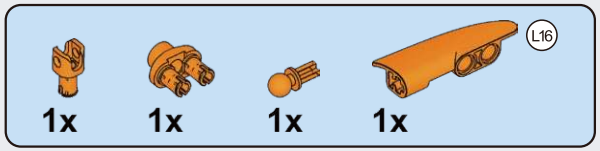

G129

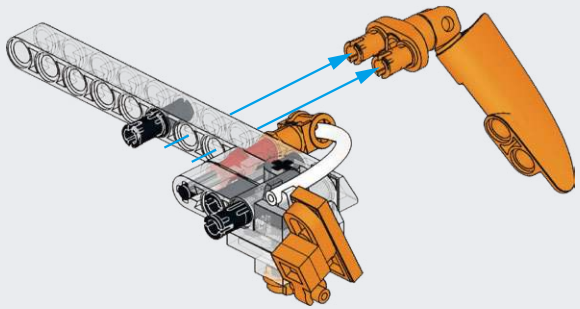

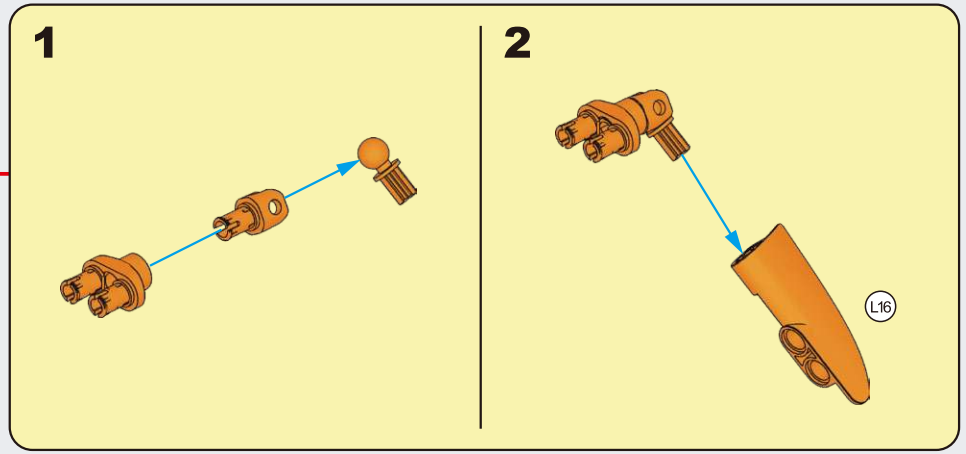

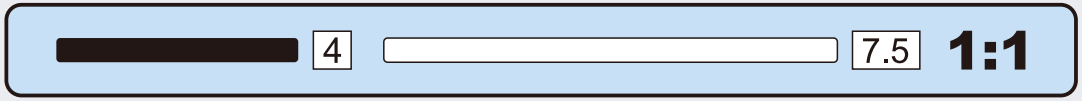

G130

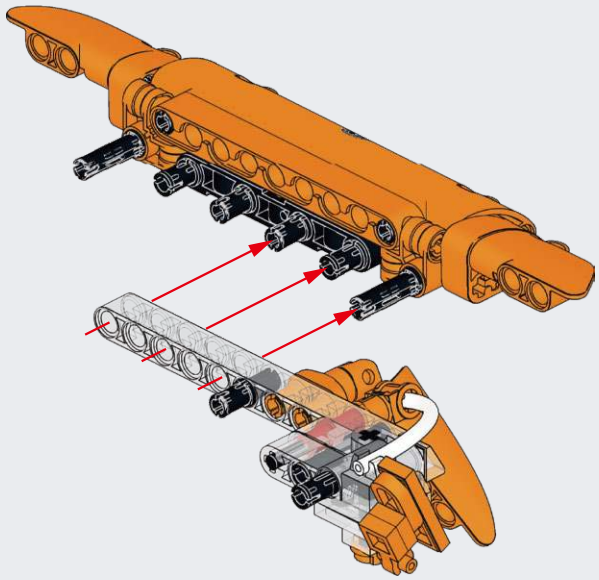

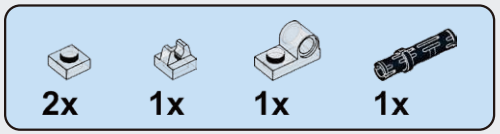

G131

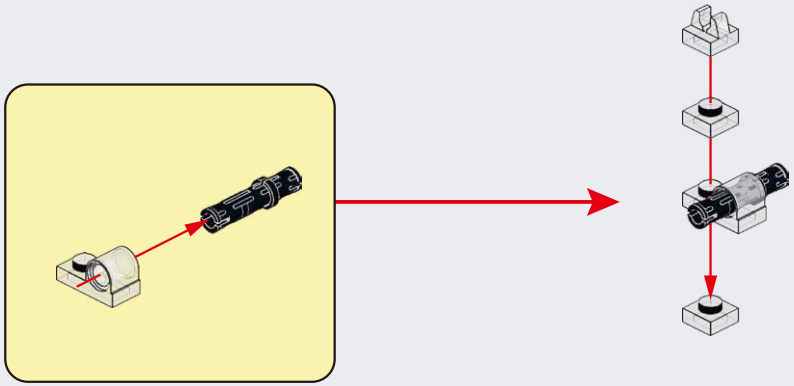

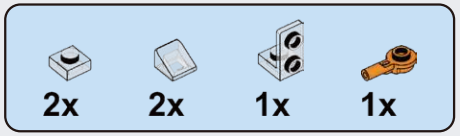

G132

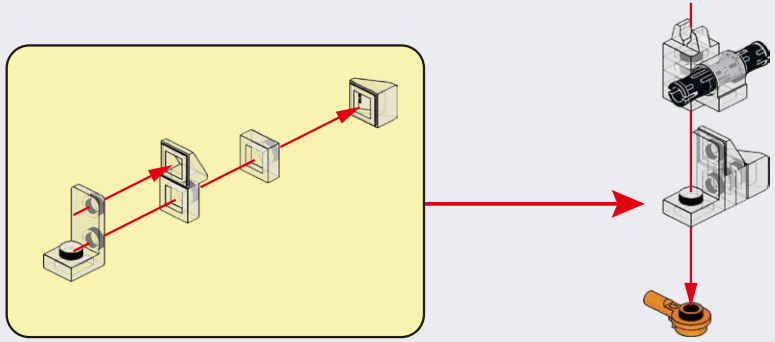

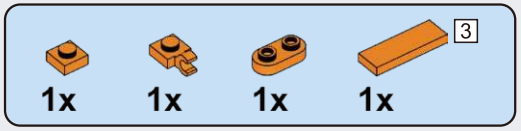

G133

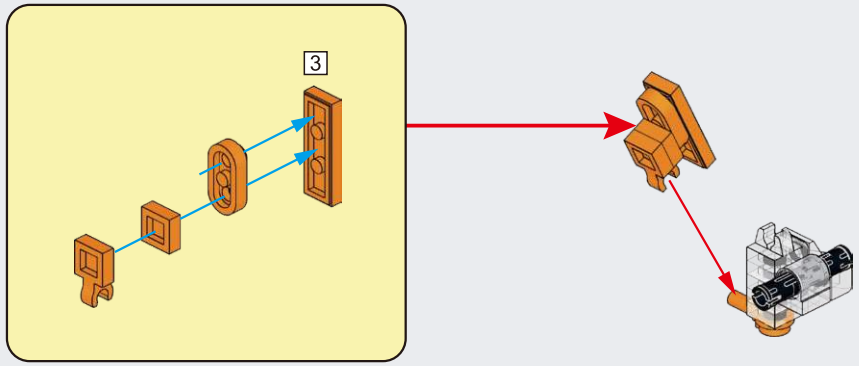

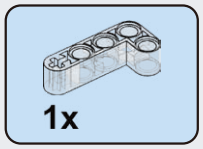

G134

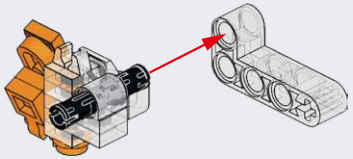

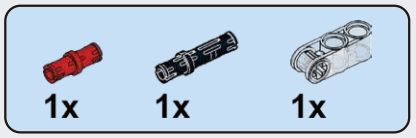

G135

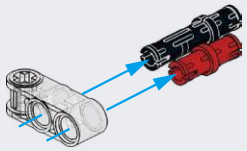

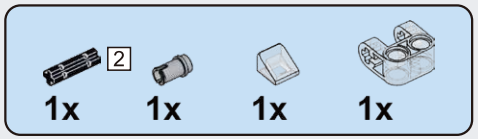

G136

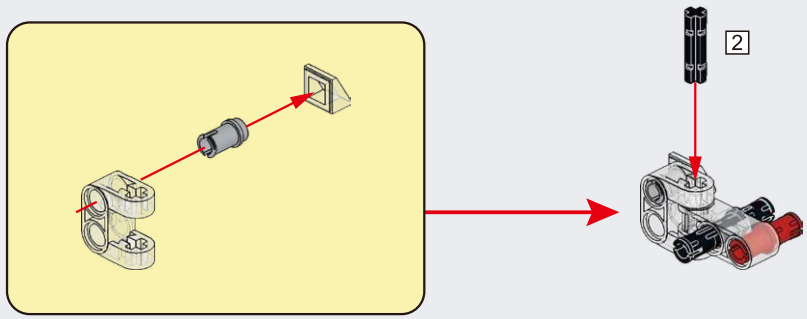

G137

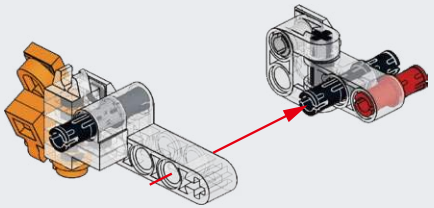

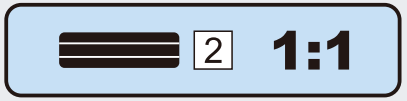

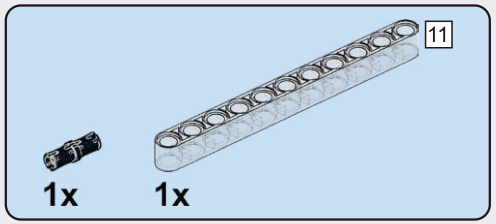

G138

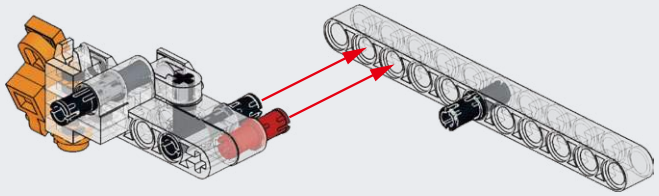

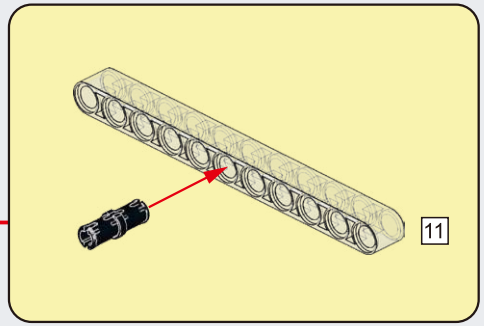

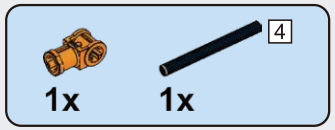

G139

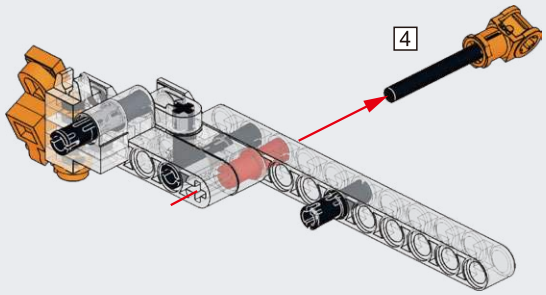

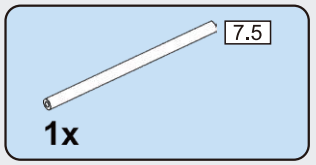

G140

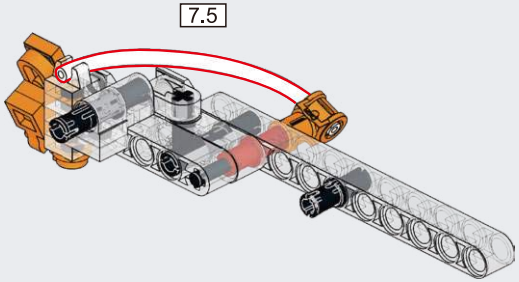

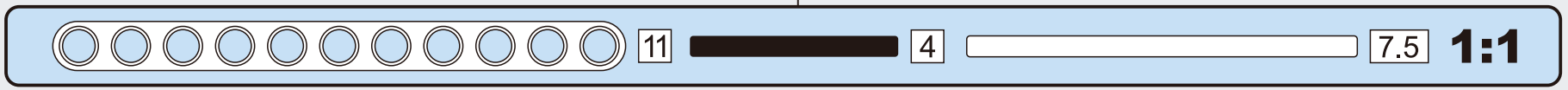

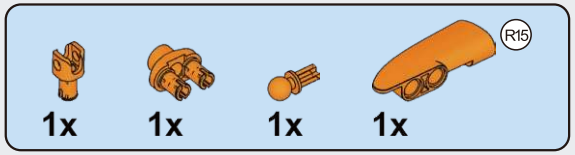

G141

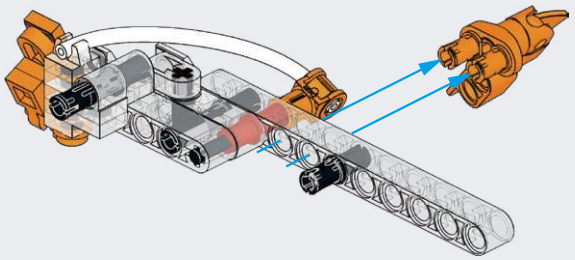

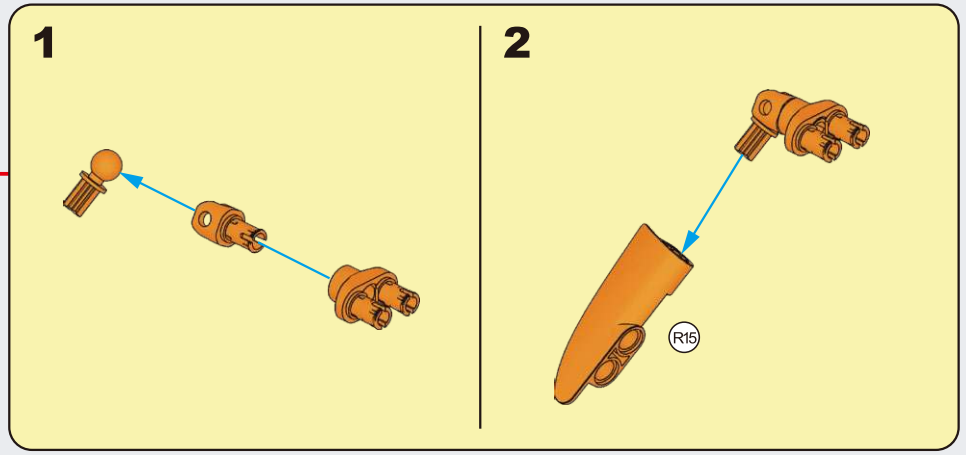

G142

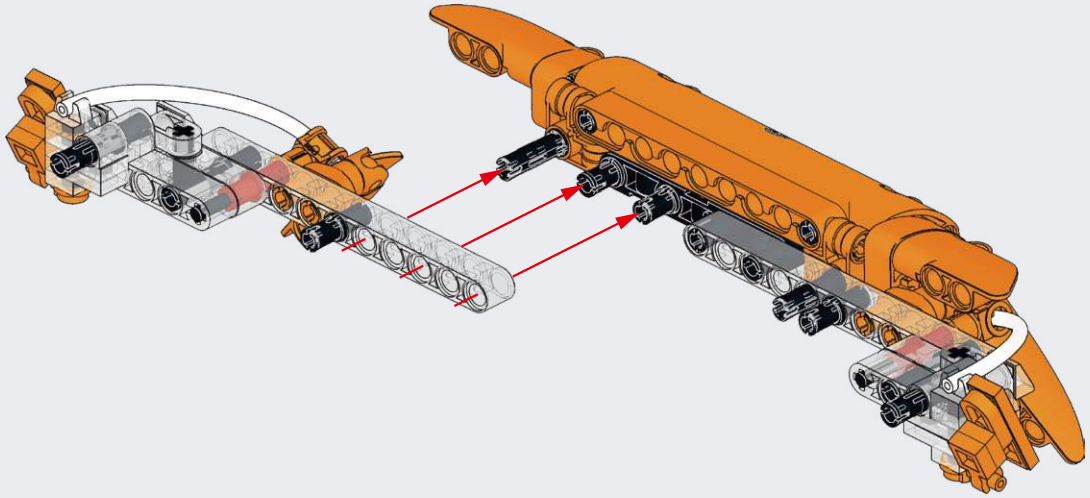

G143

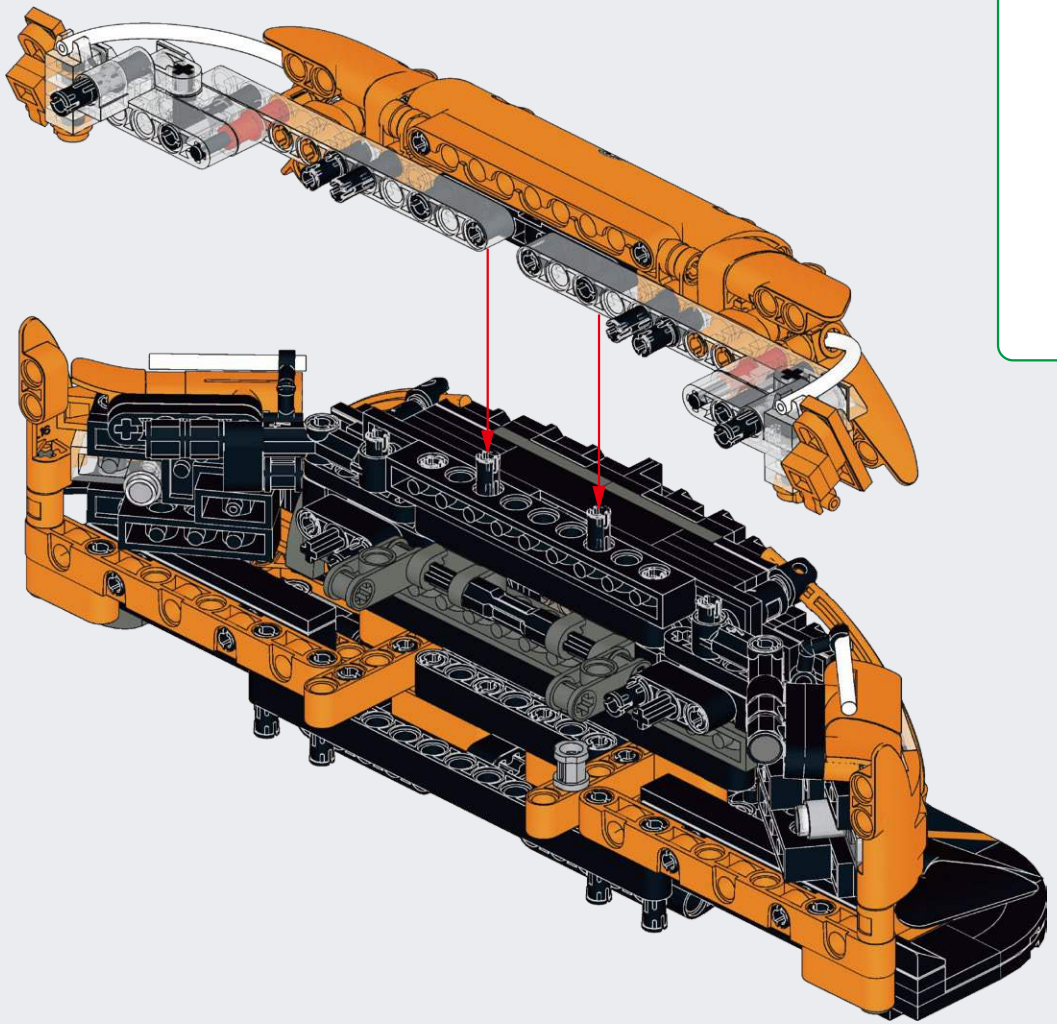

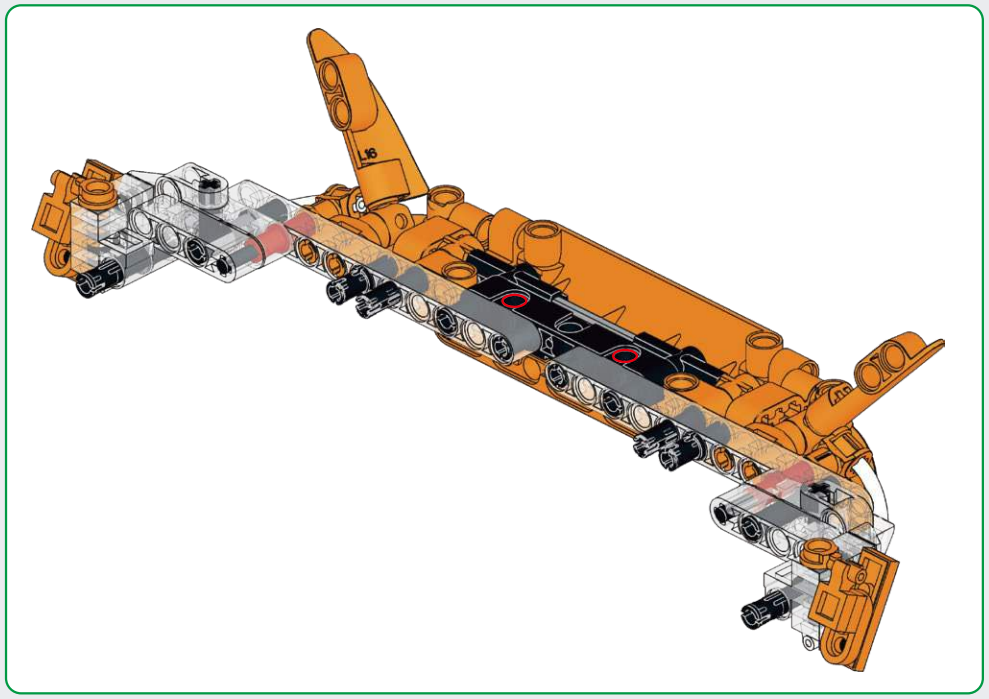

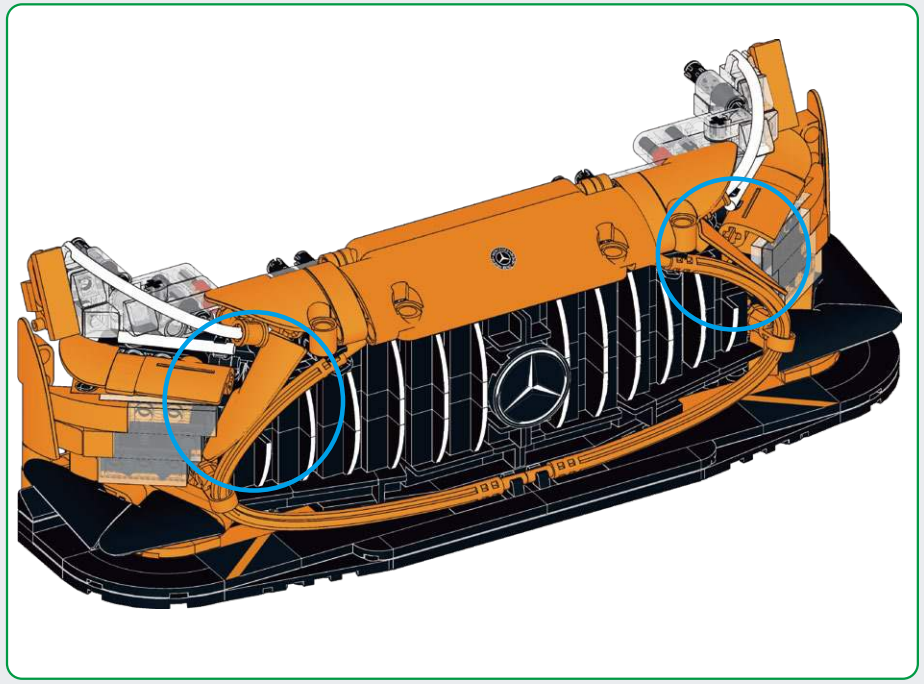

G144

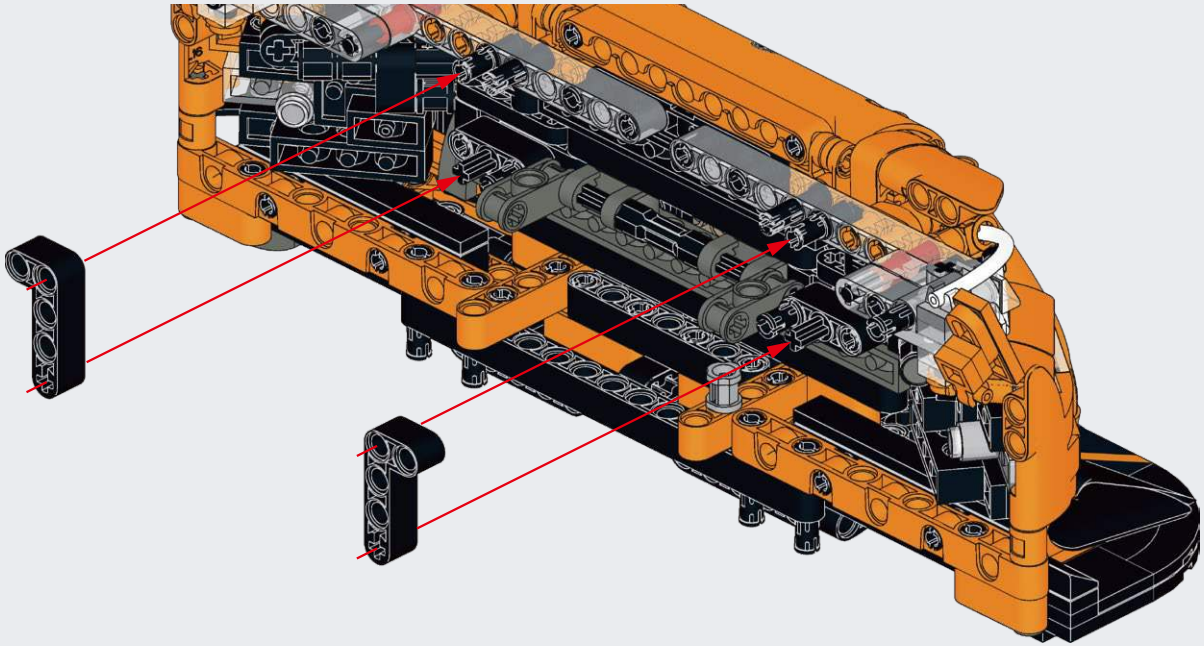

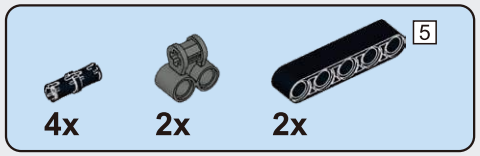

G145

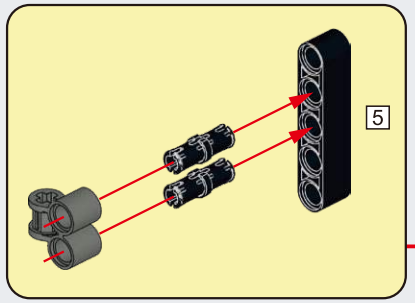

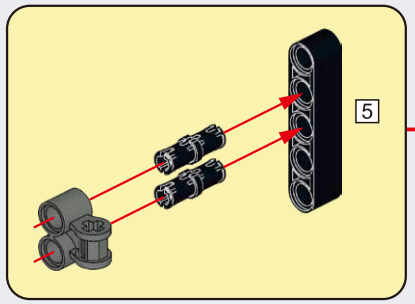

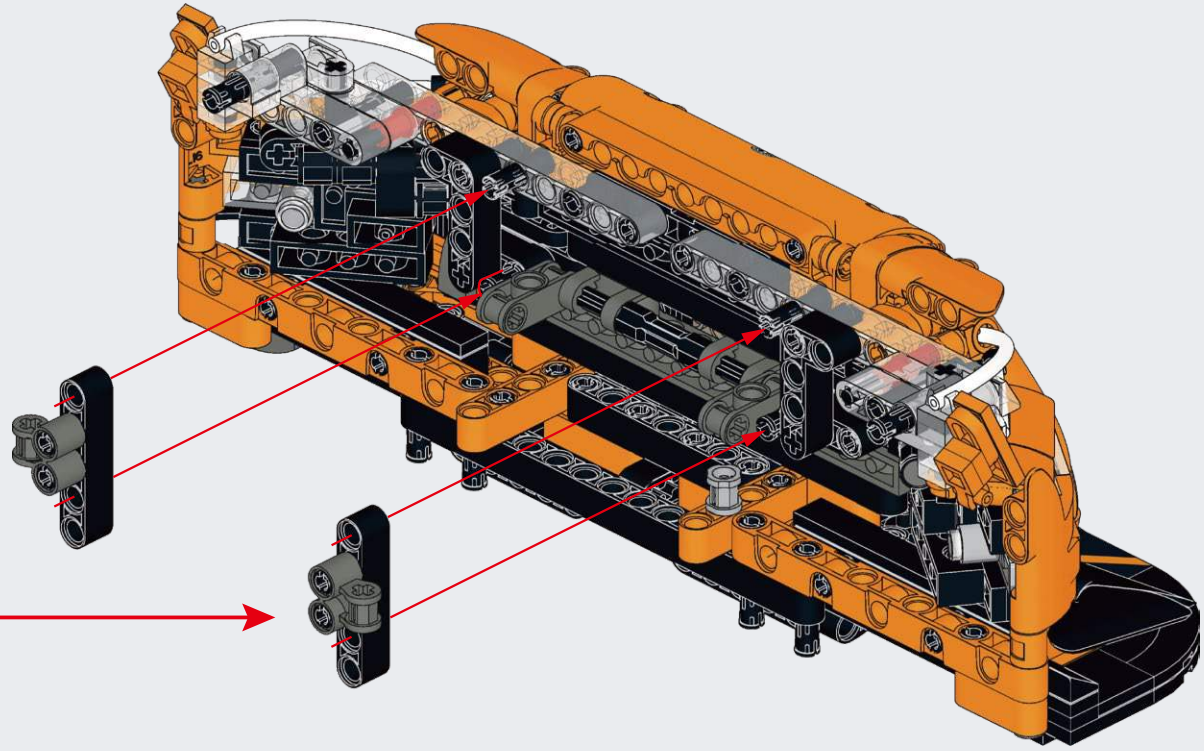

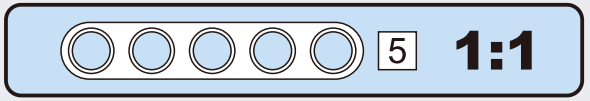

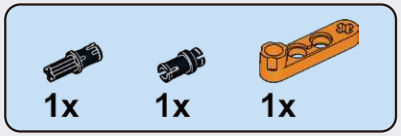

G146

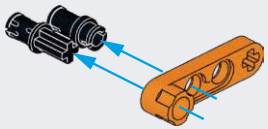

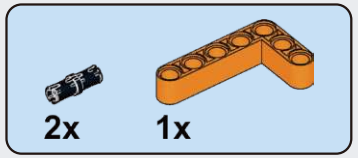

G147

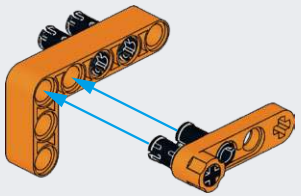

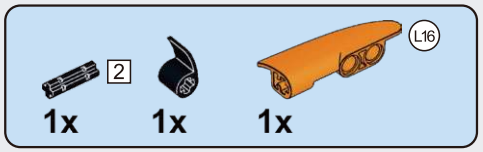

G148

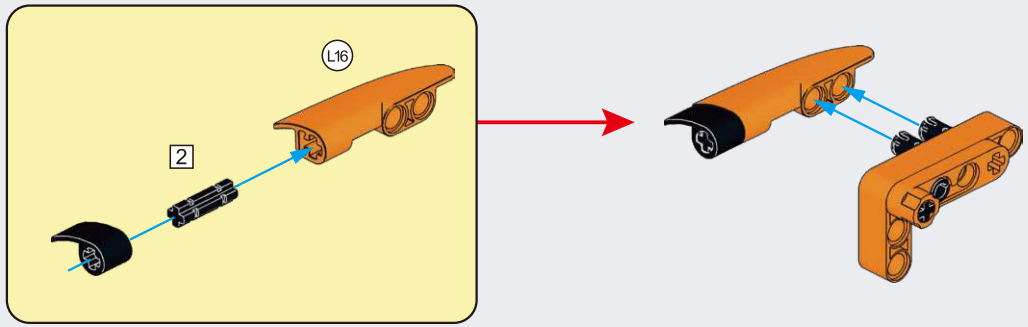

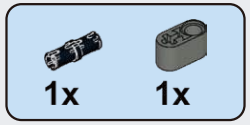

G149

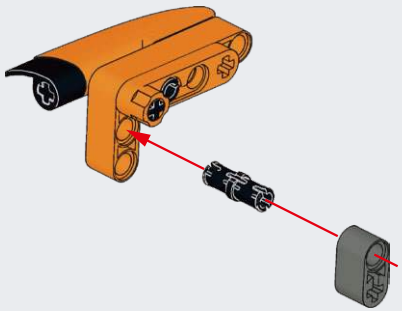

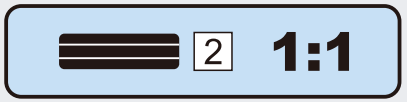

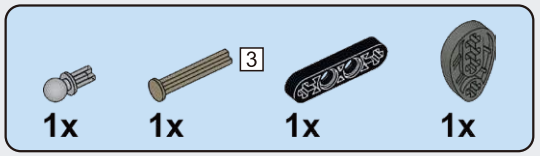

G150

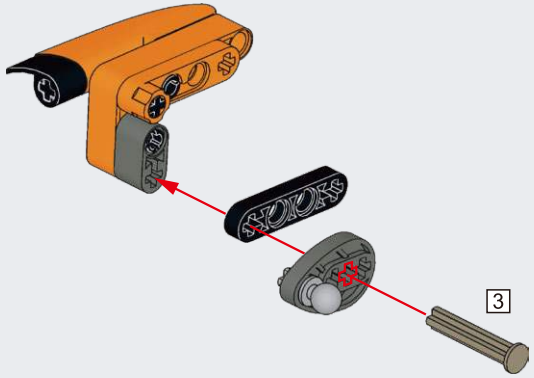

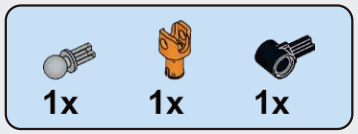

G151

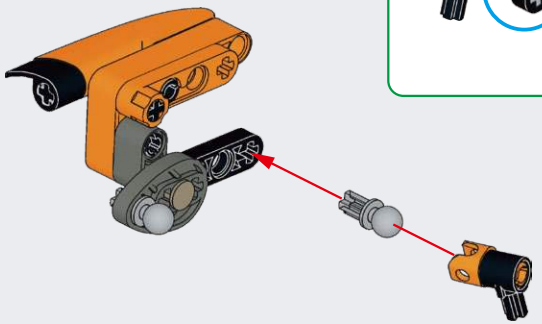

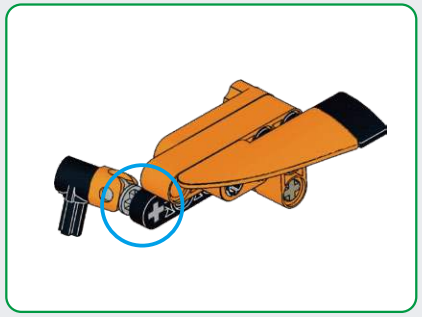

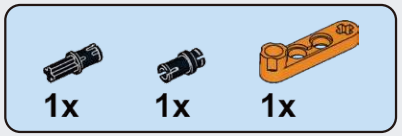

G152

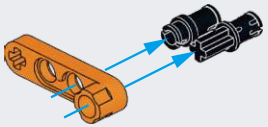

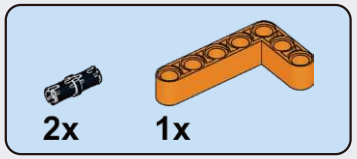

G153

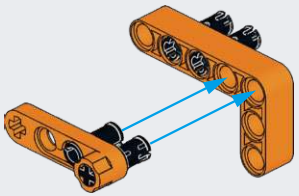

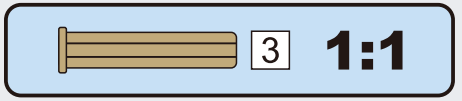

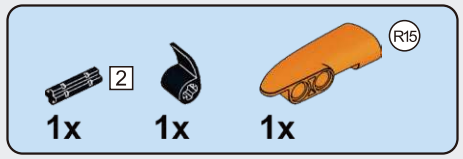

G154

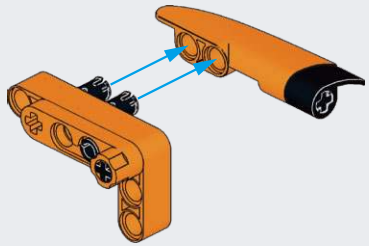

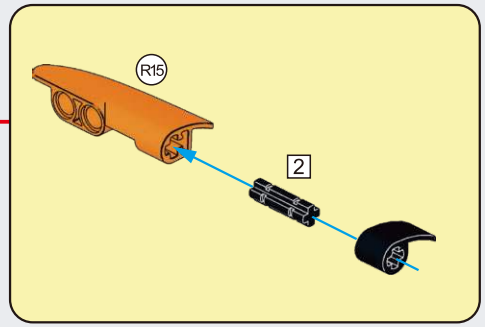

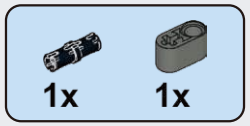

G155

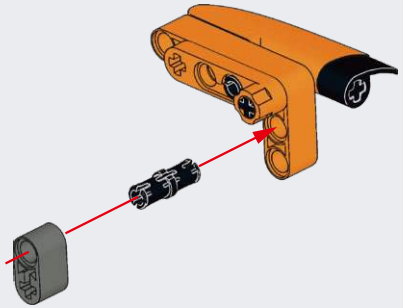

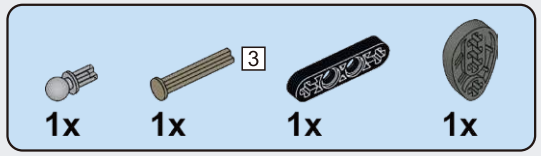

G156

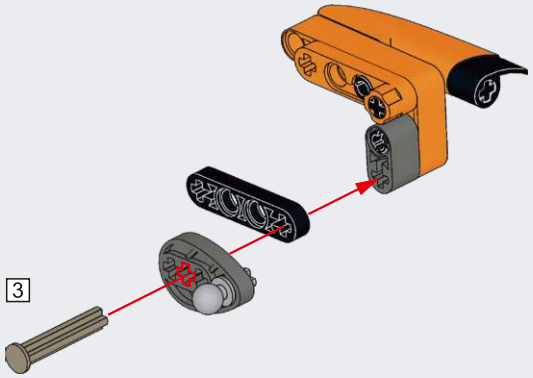

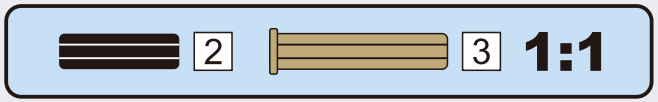

G157

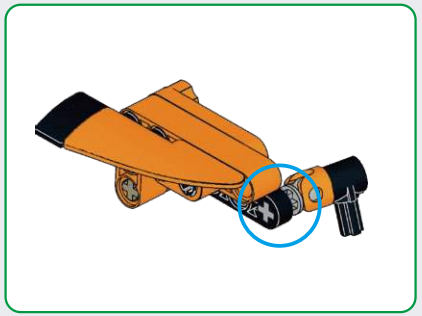

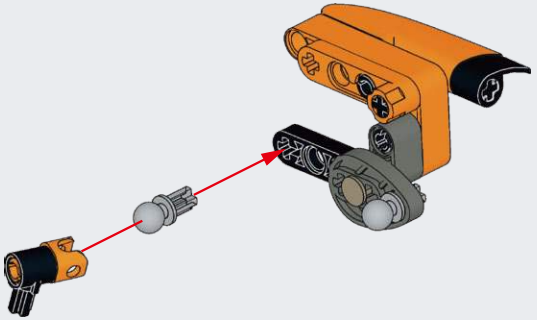

G158

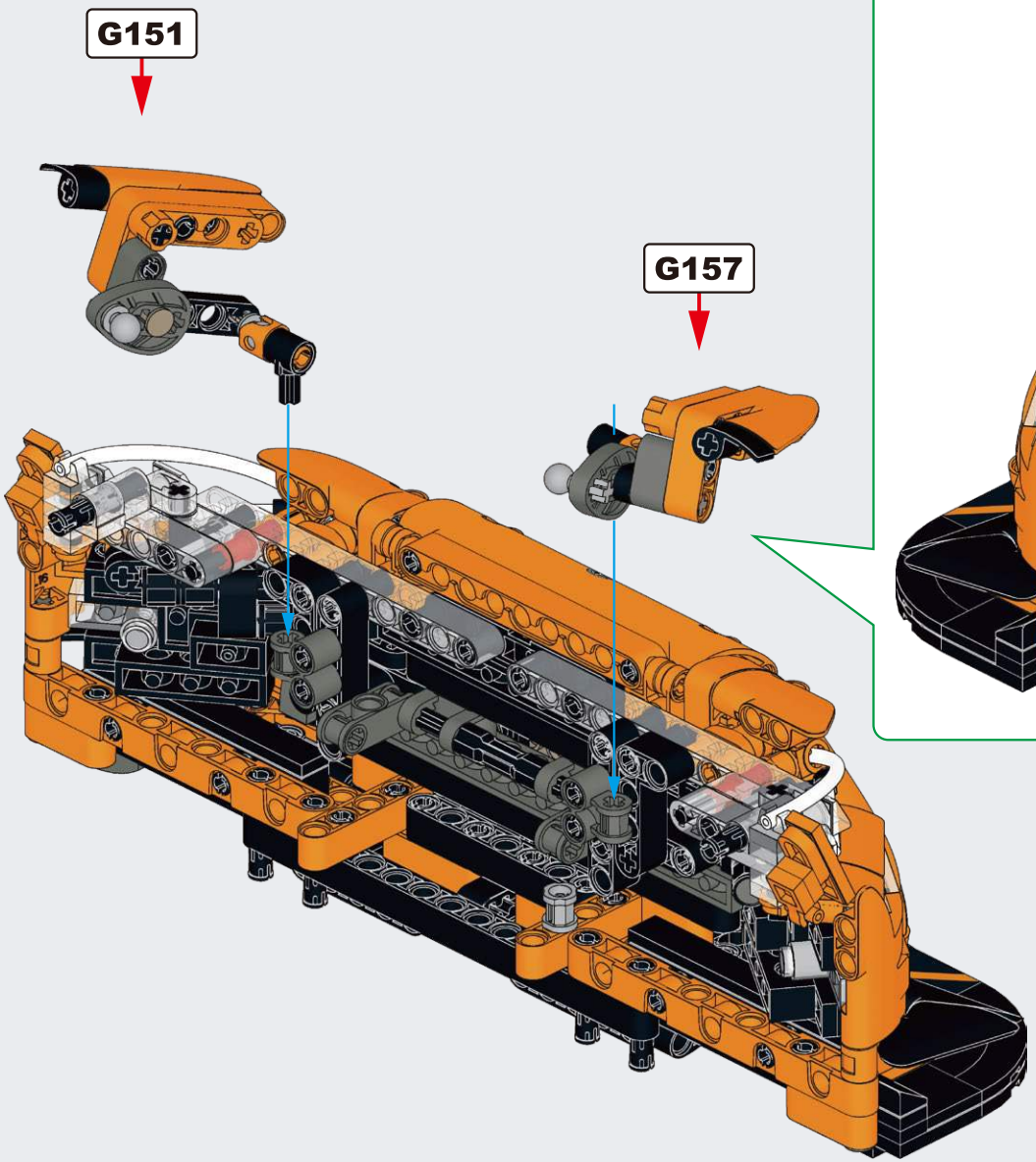

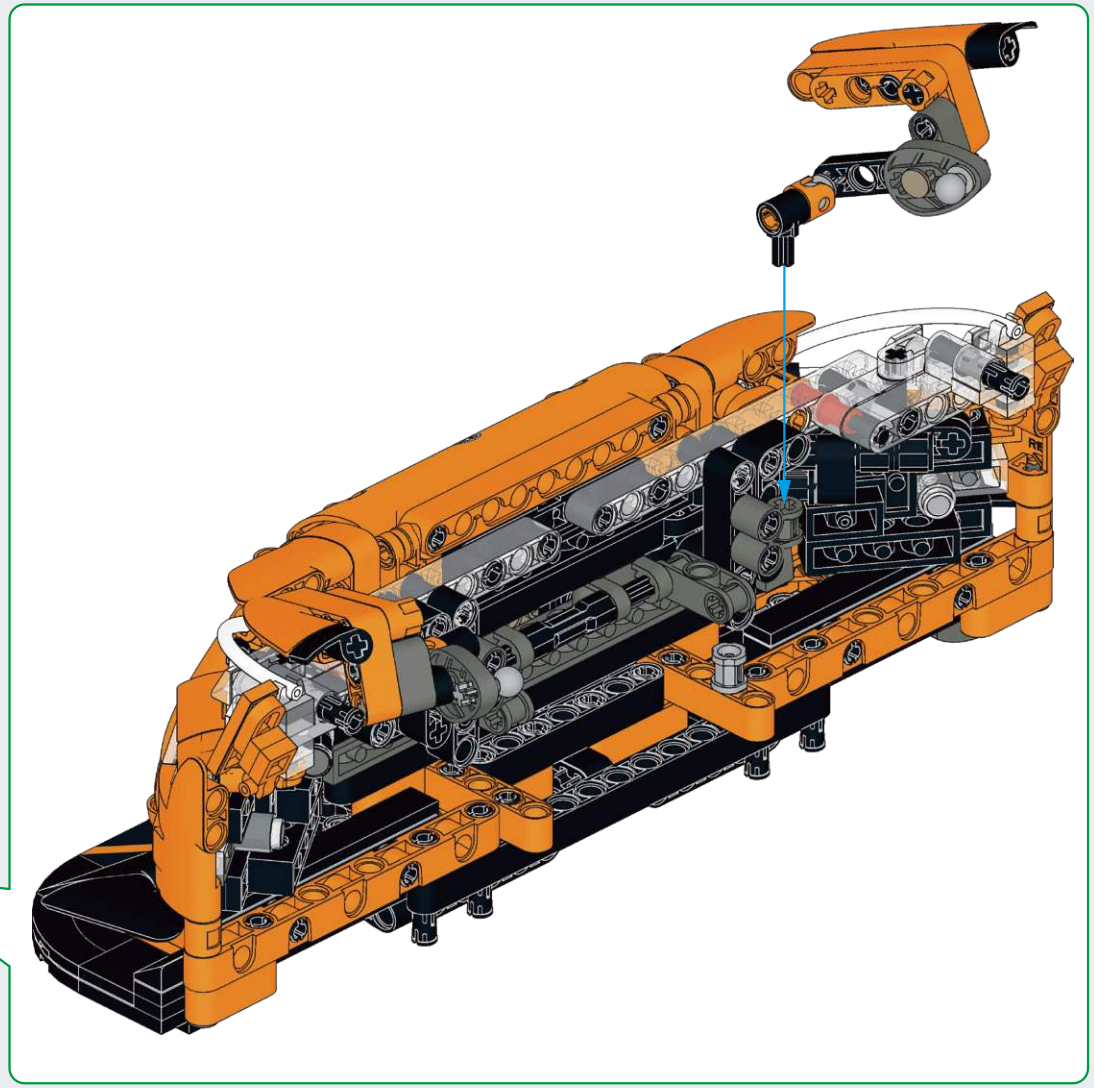

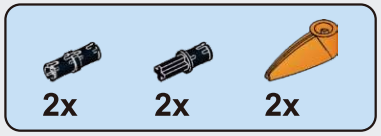

G159

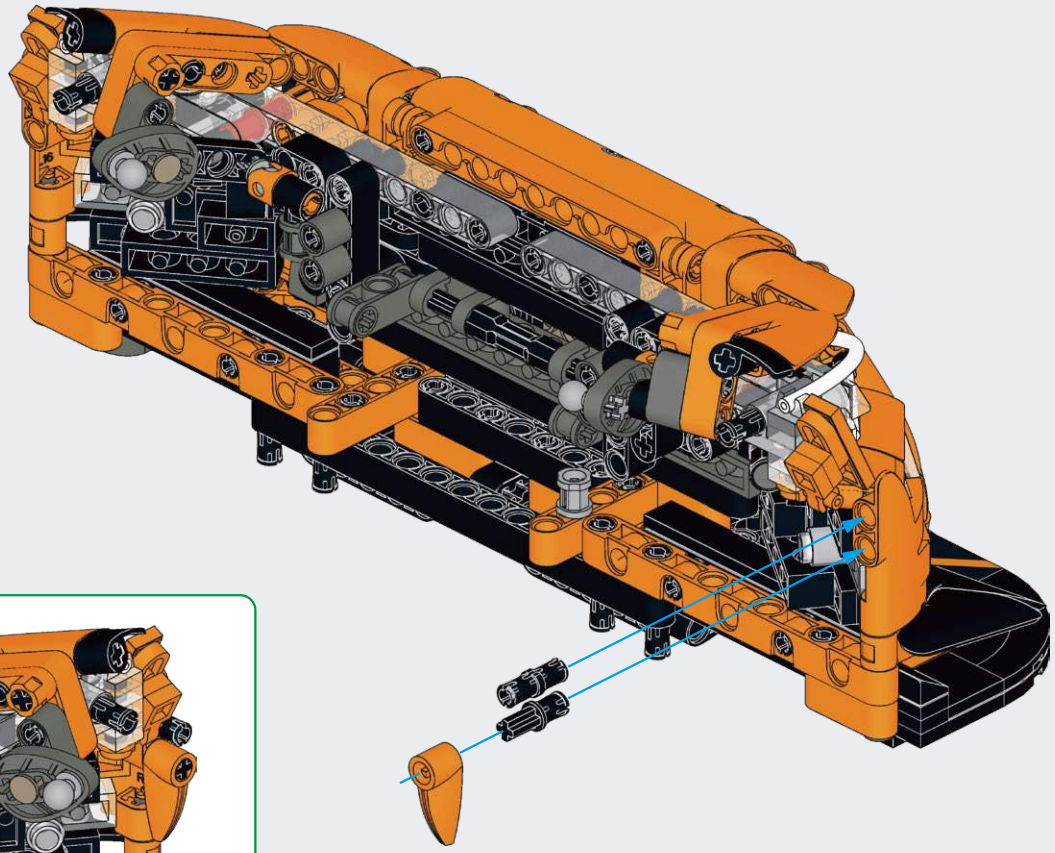

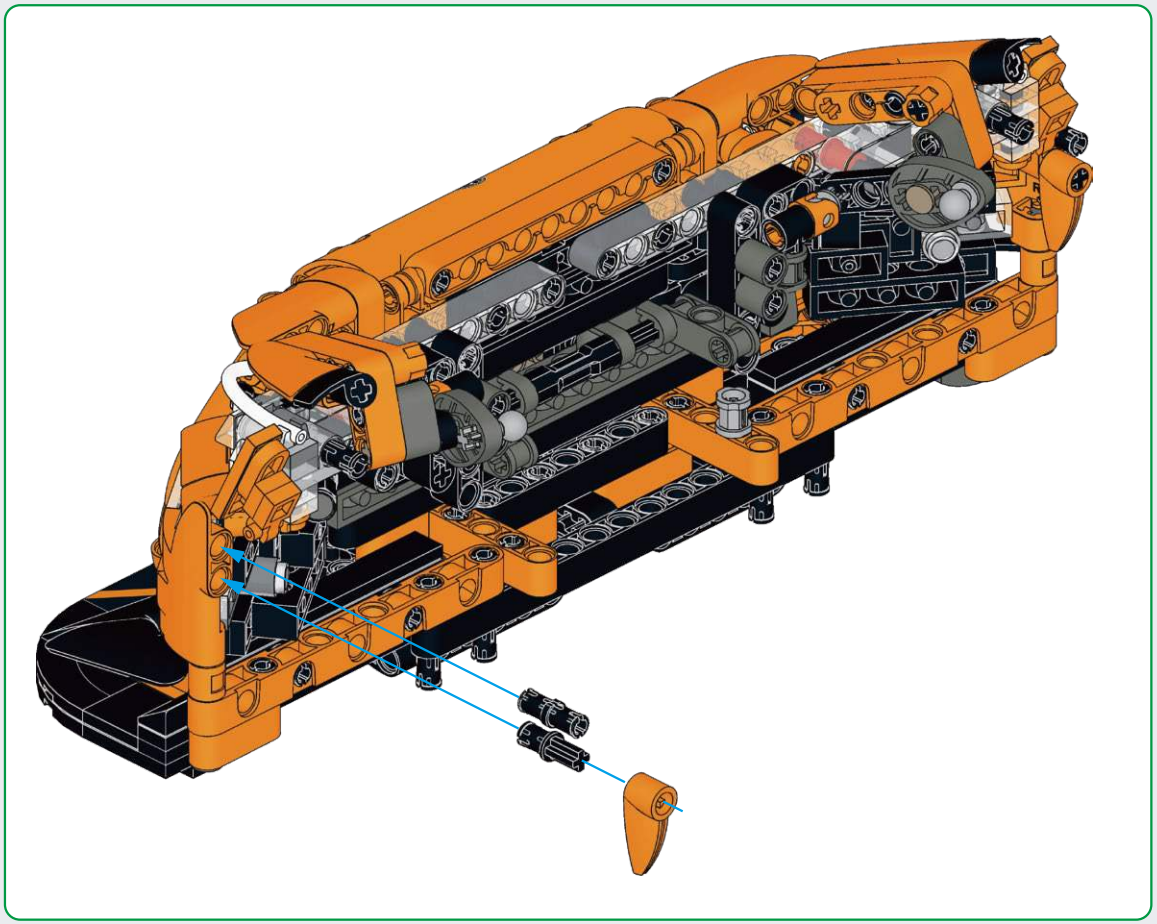

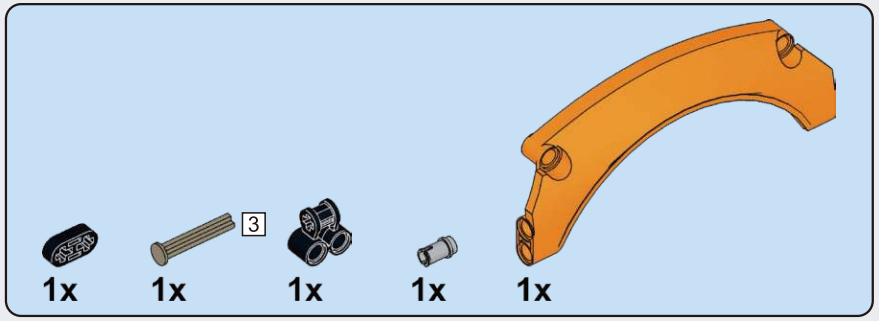

G160

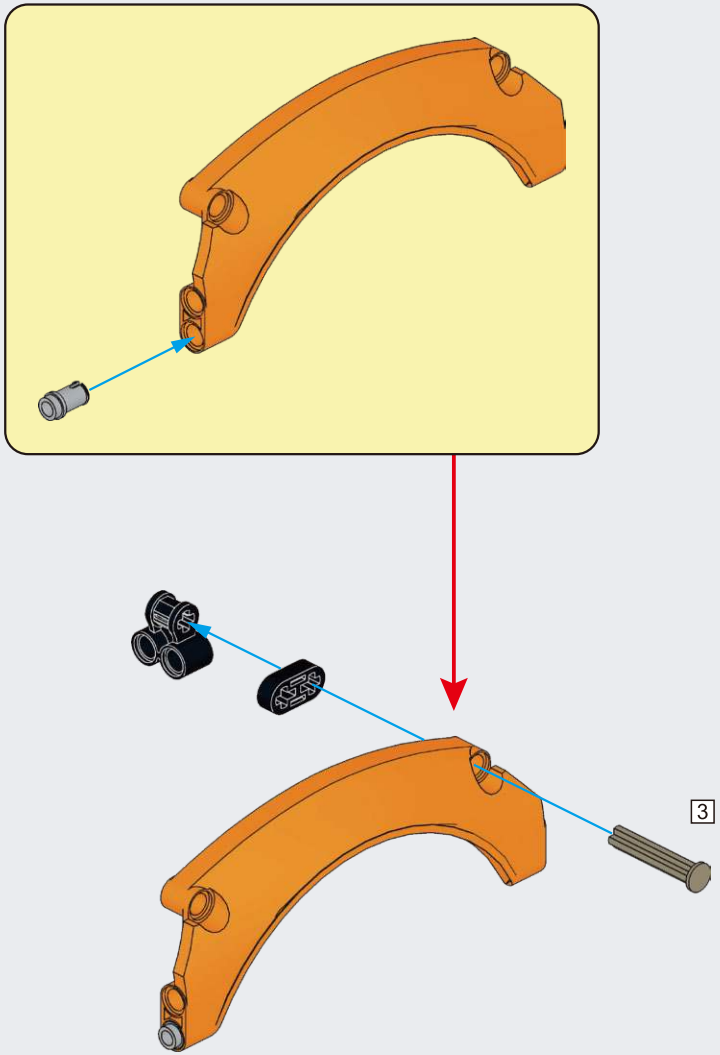

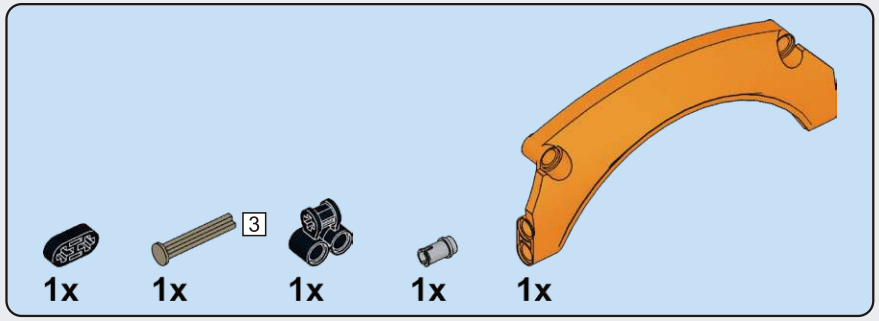

G161

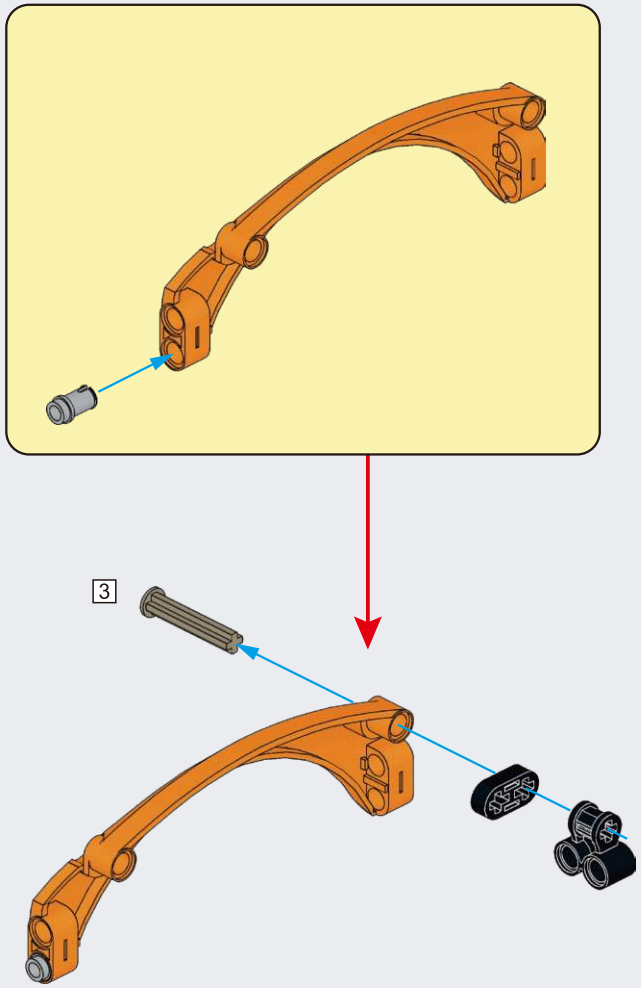

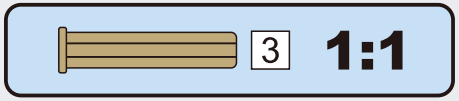

G162

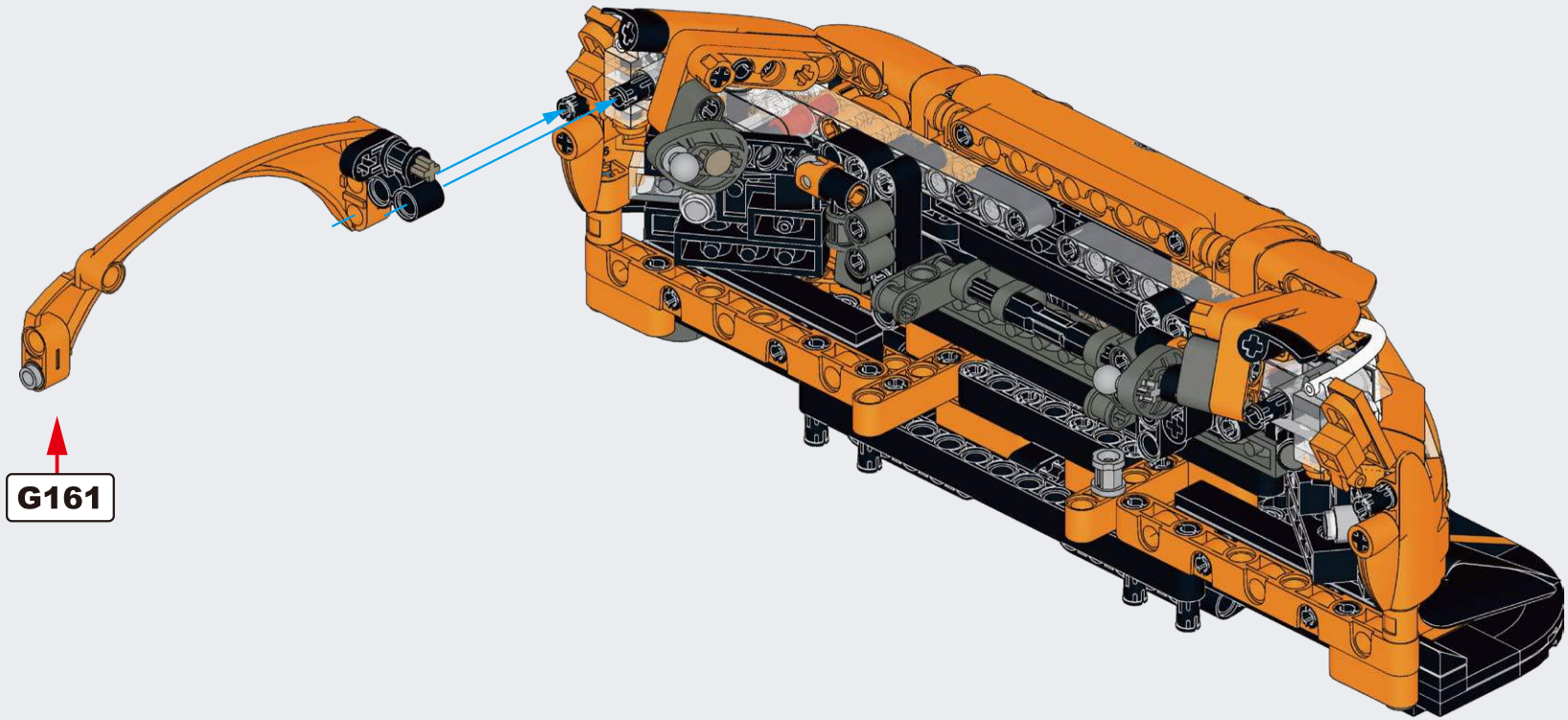

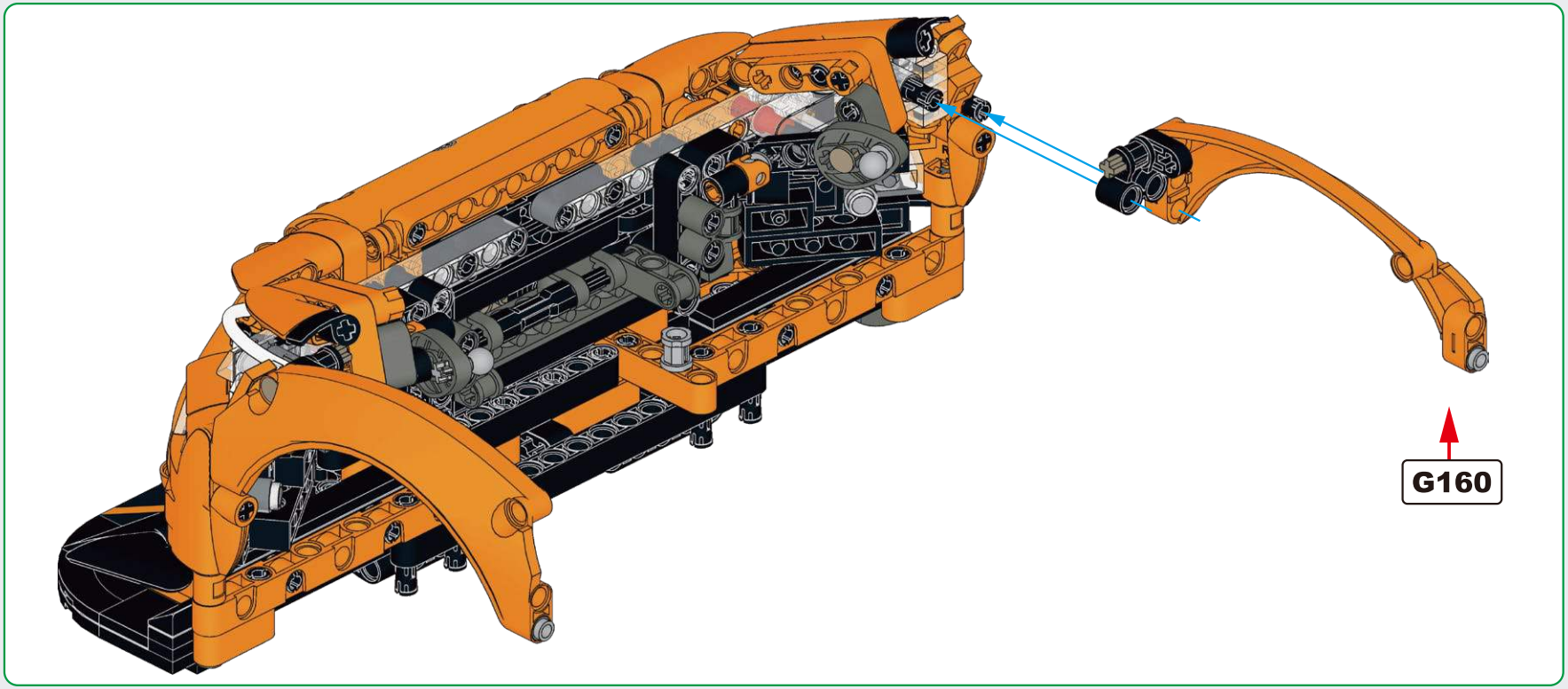

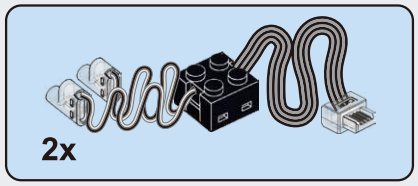

G163

G164

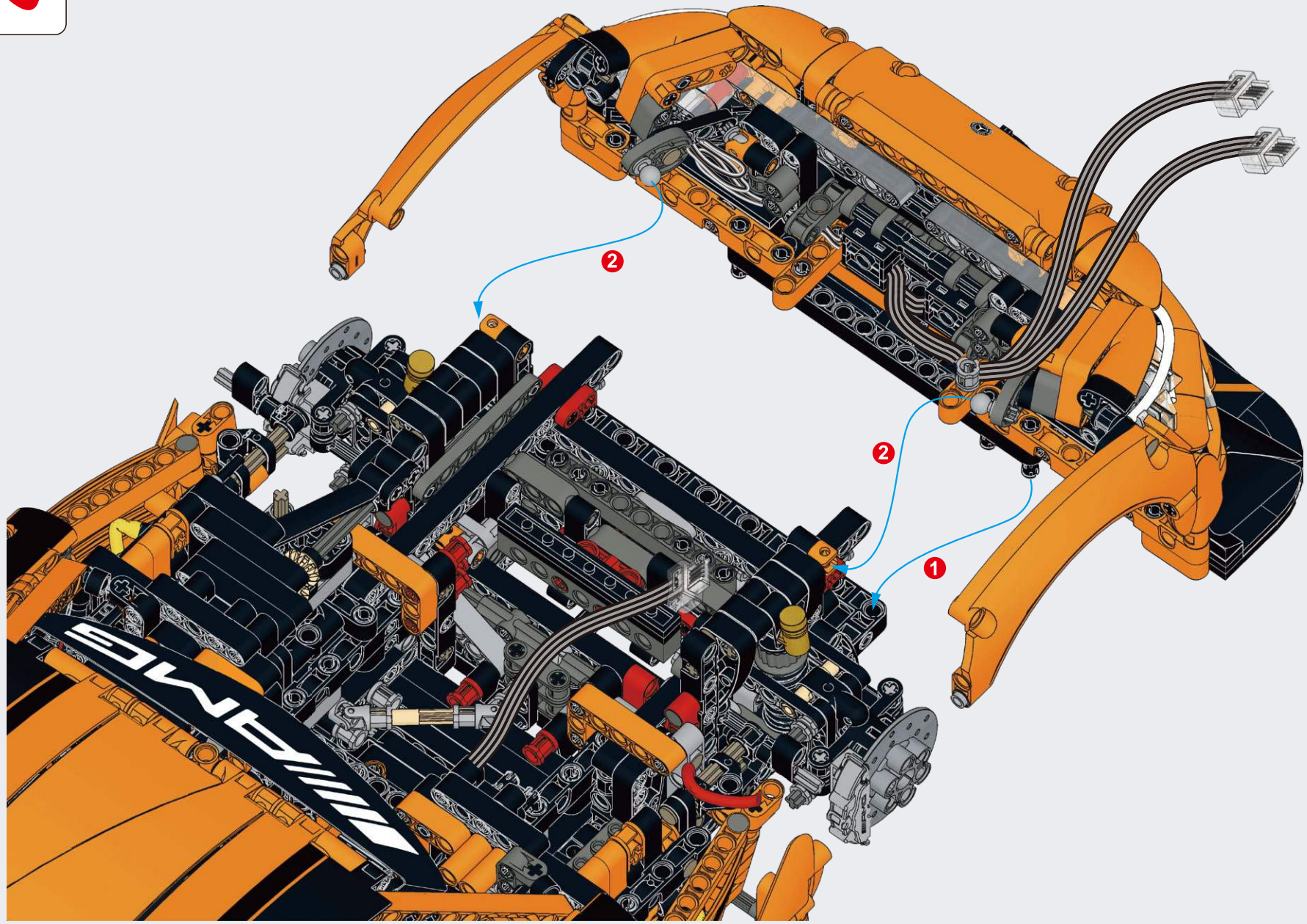

G165

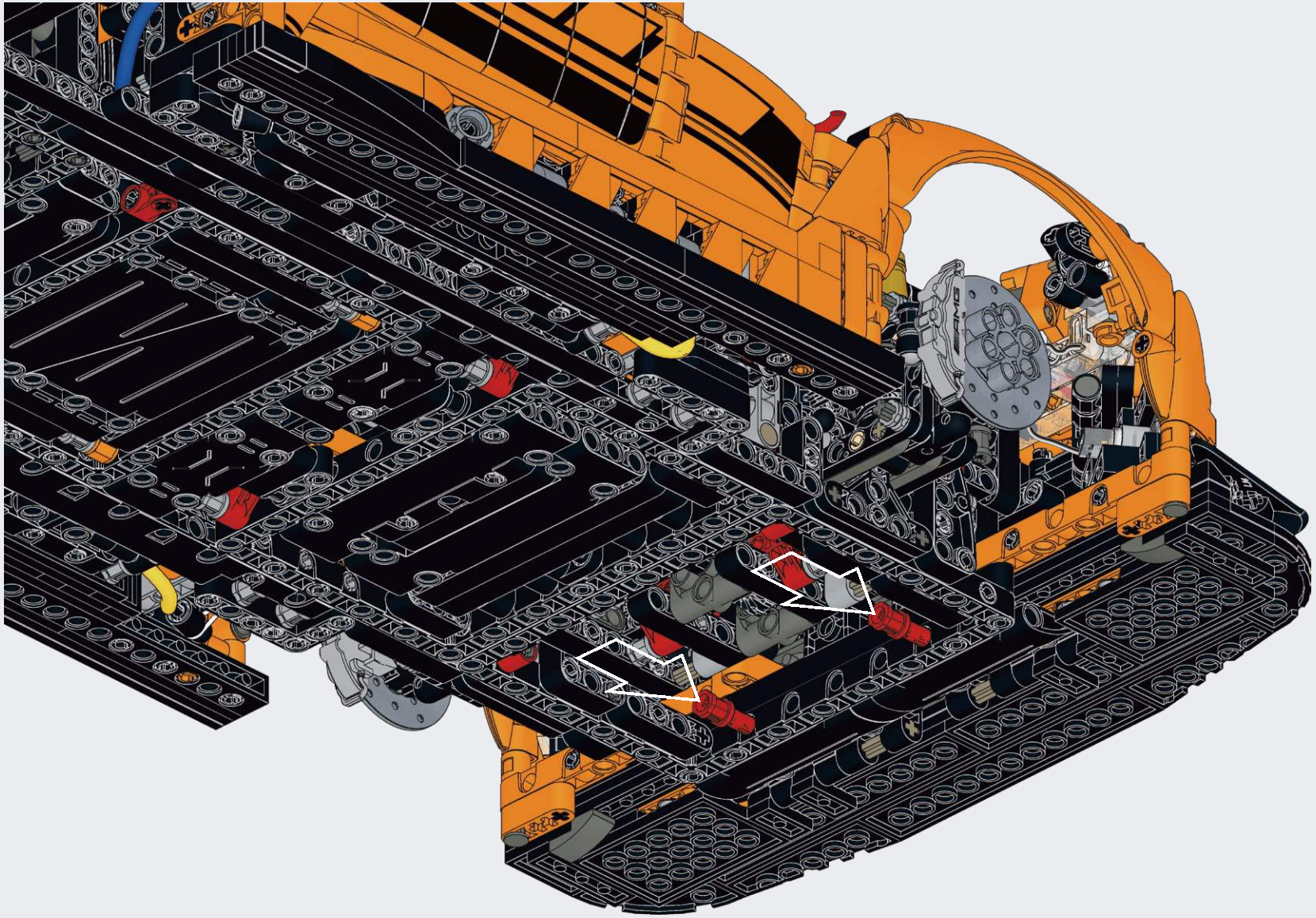

G166

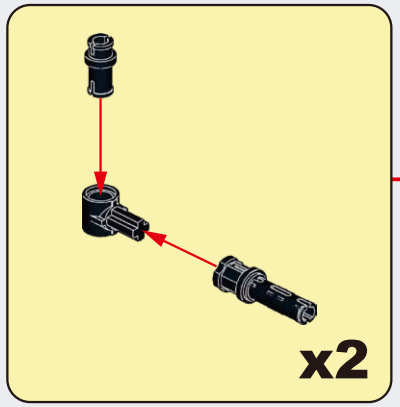

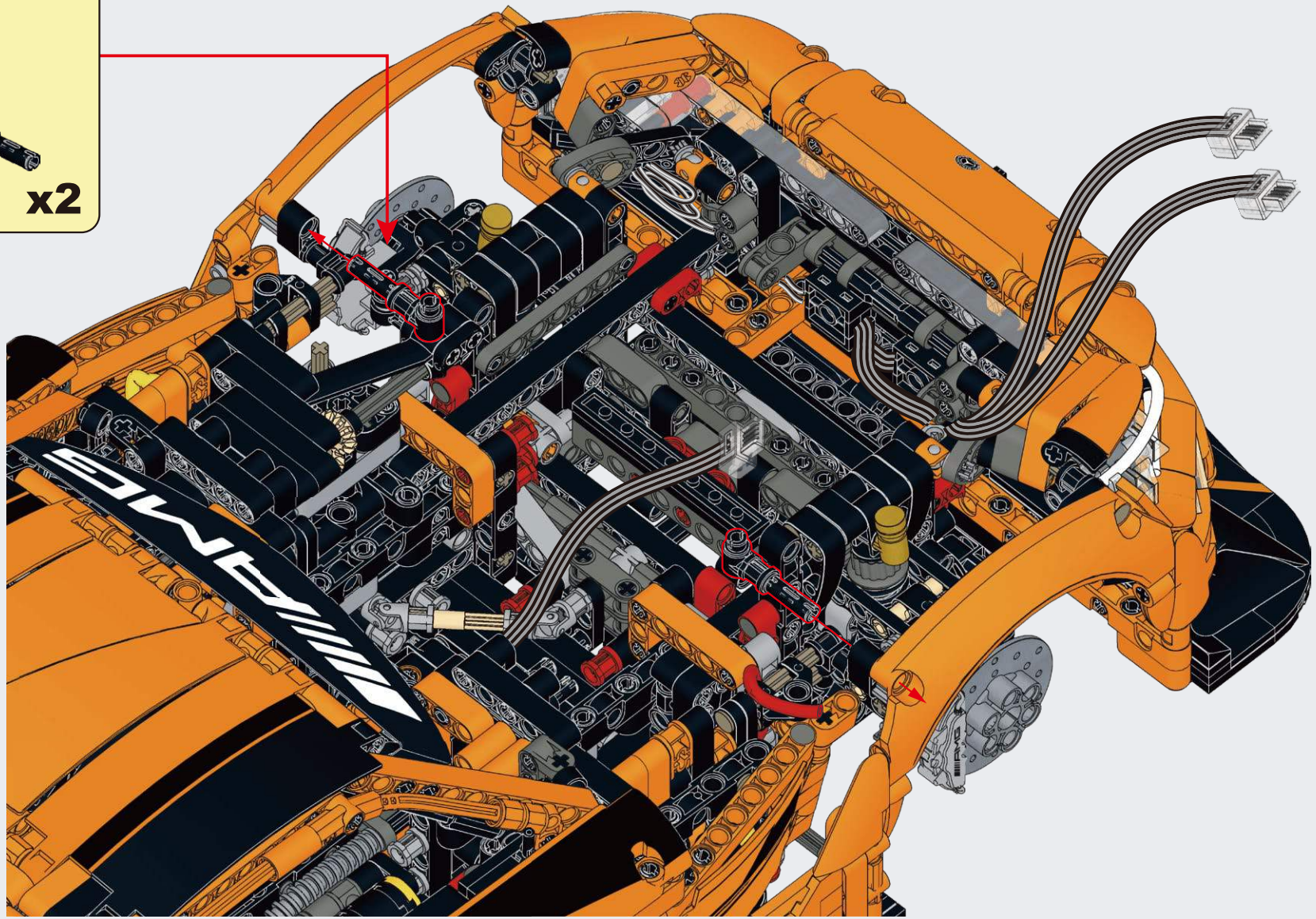

G167

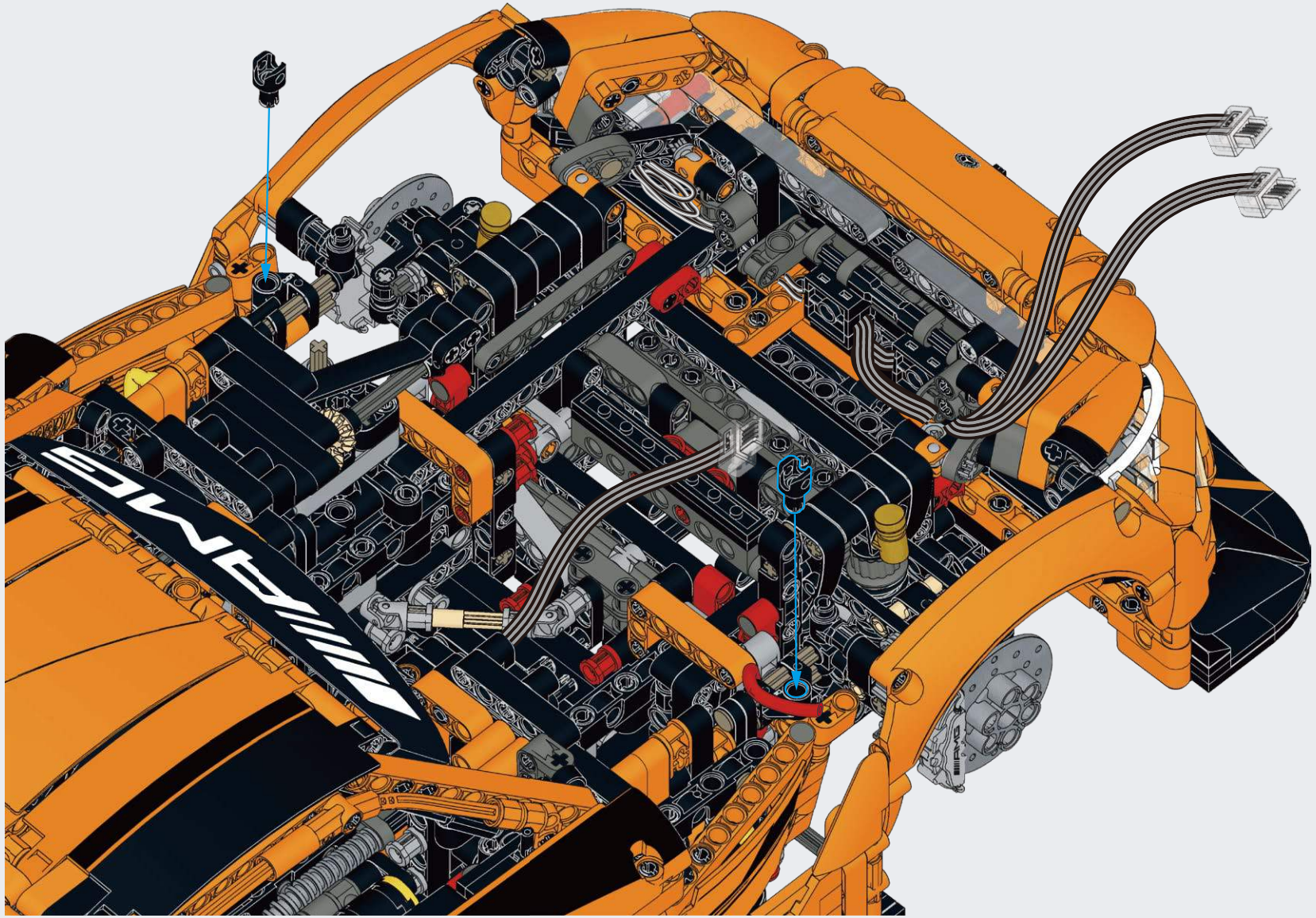

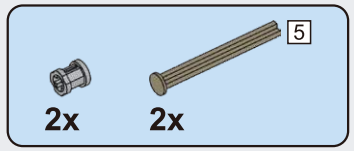

G168

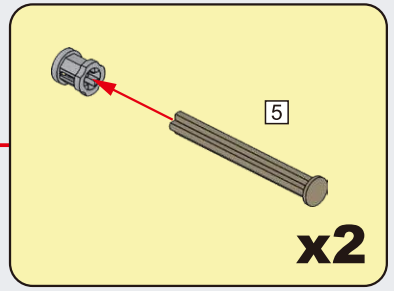

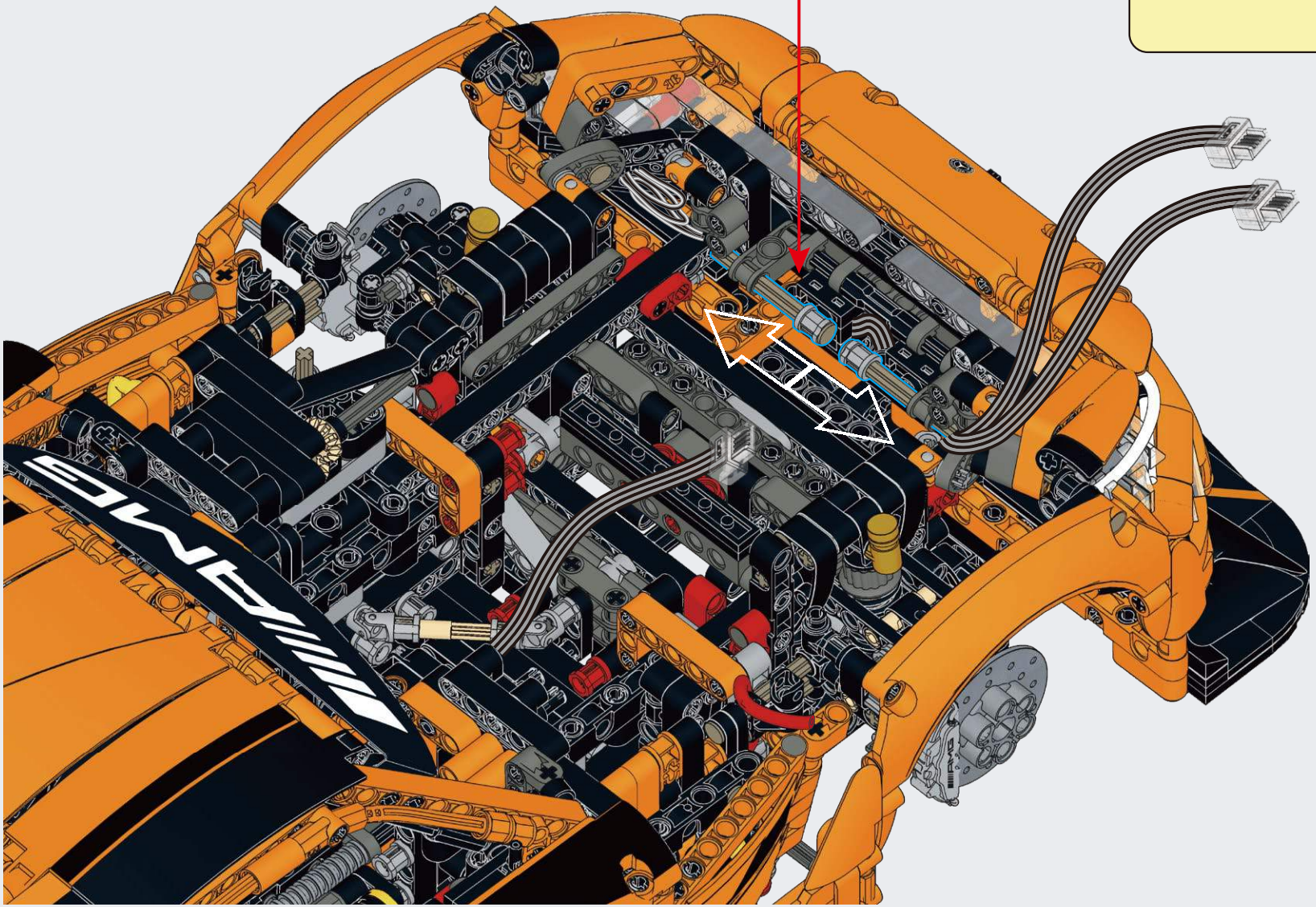

G169

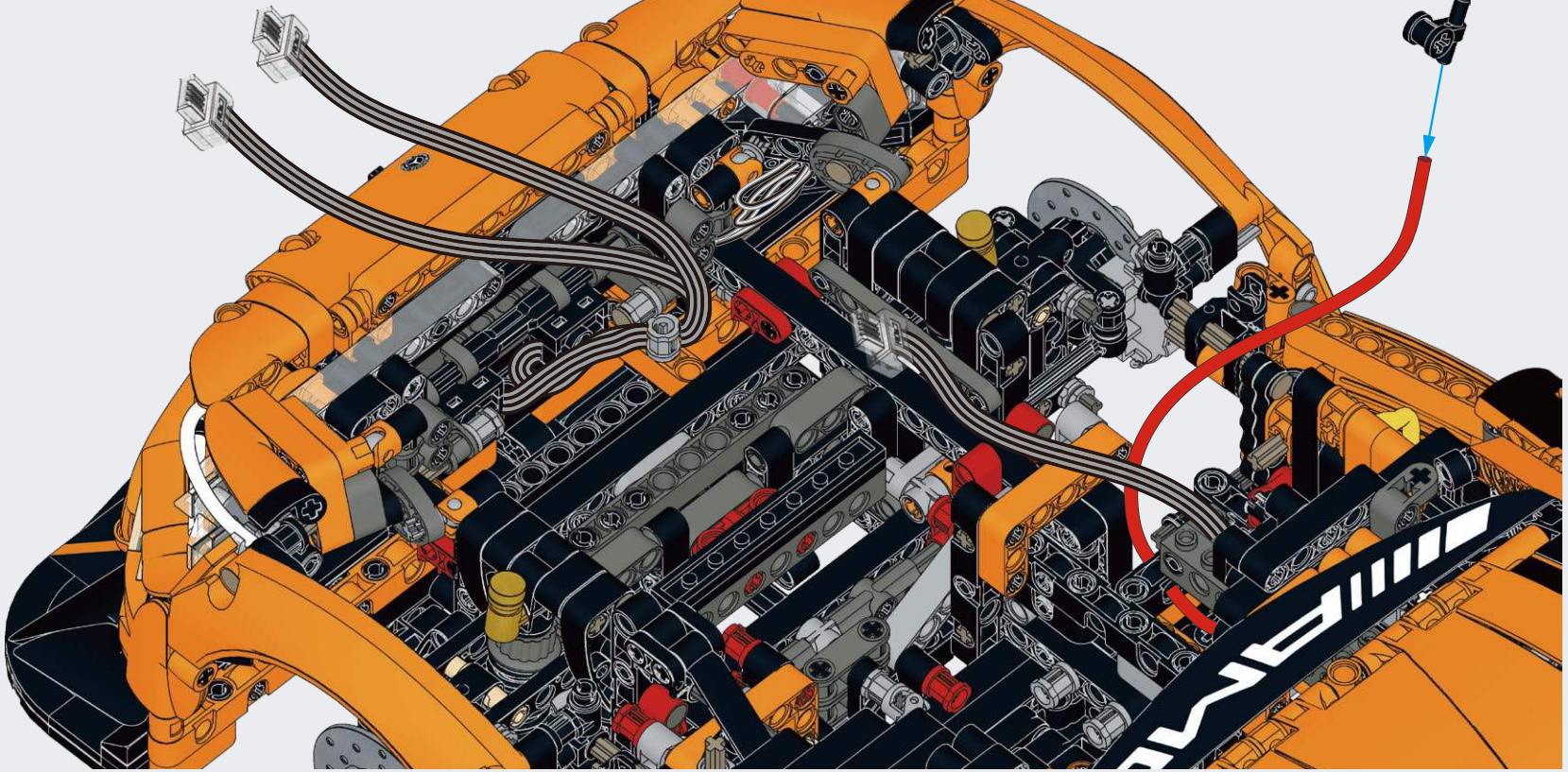

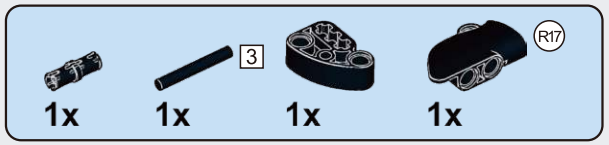

G170

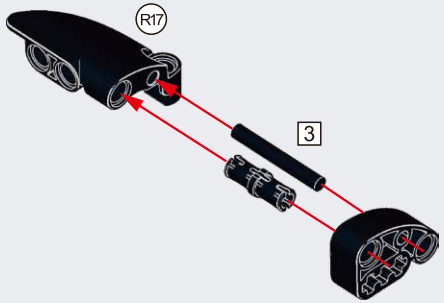

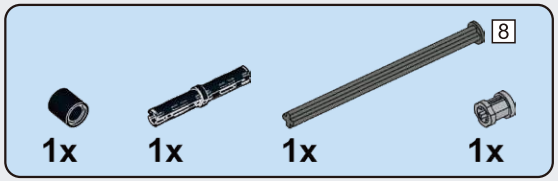

G171

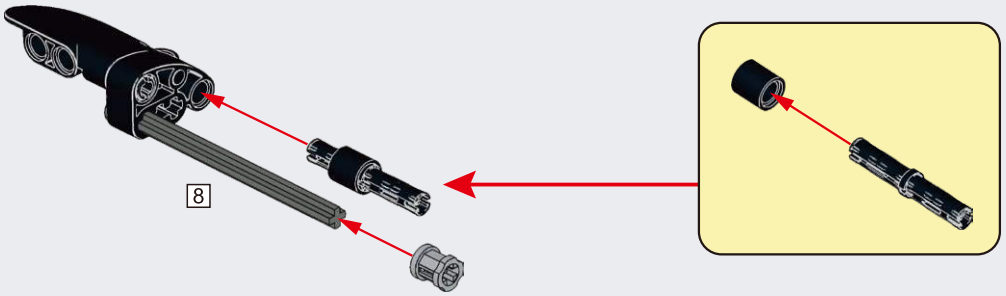

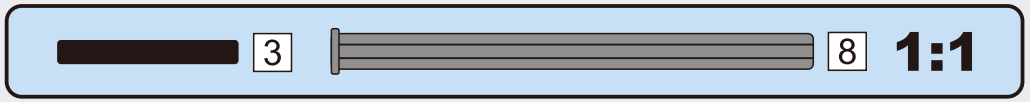

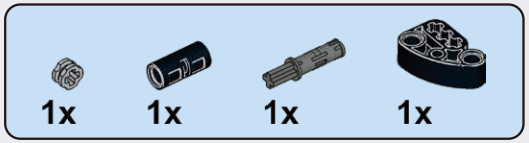

G172

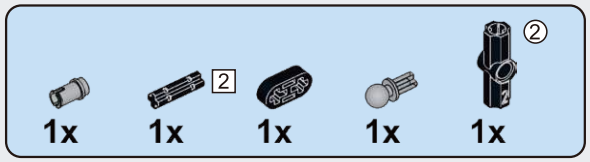

G173

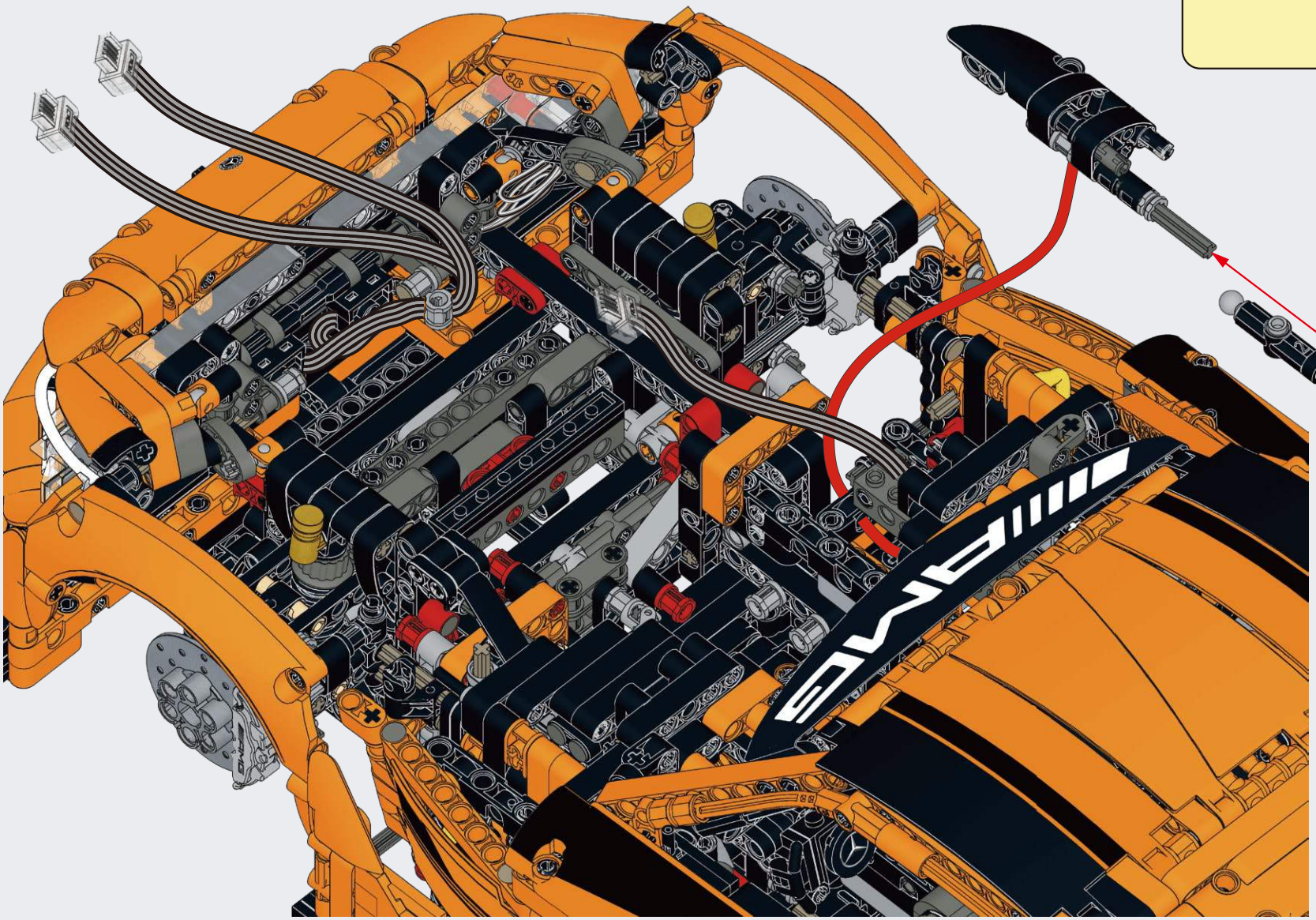

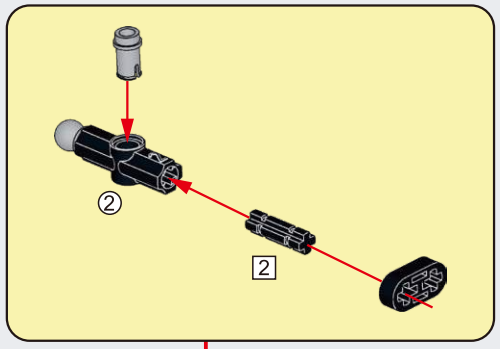

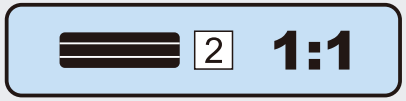

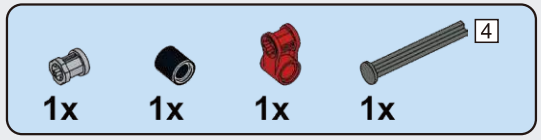

G174

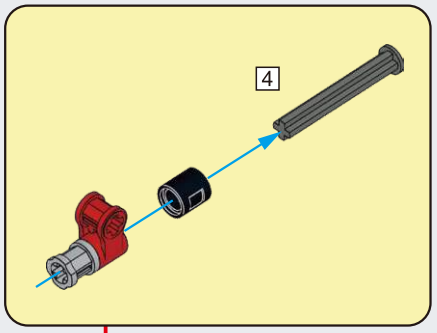

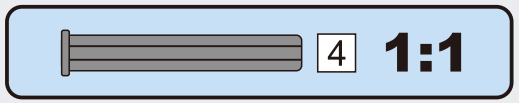

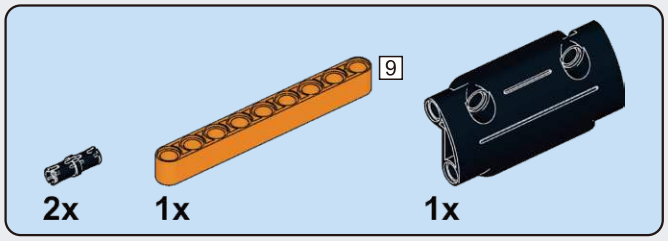

G175

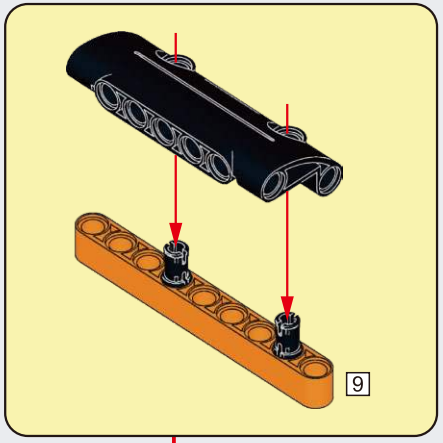

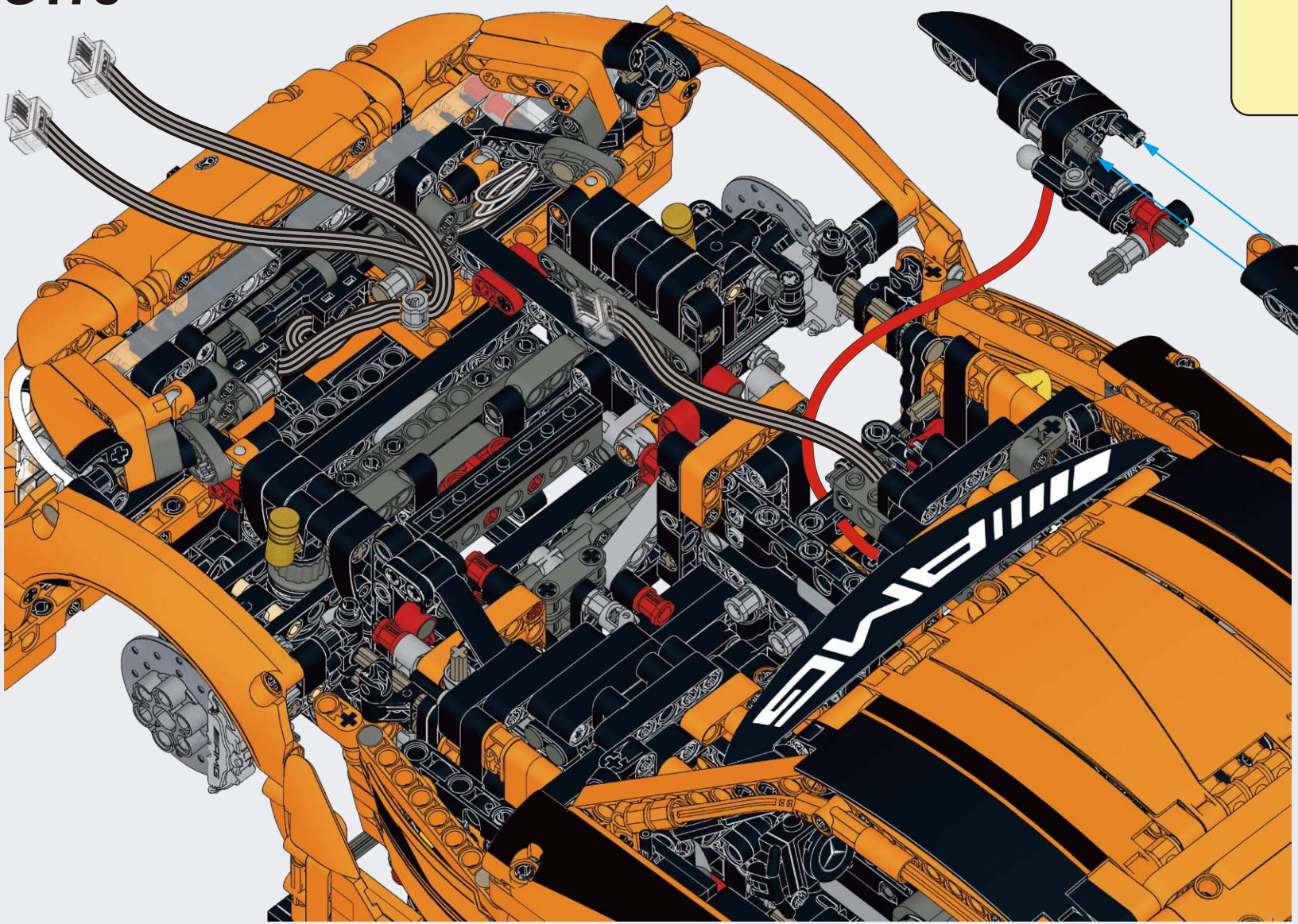

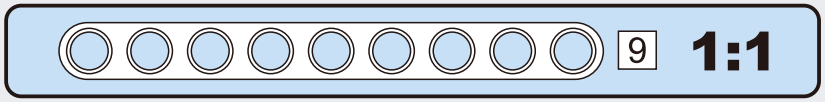

G176

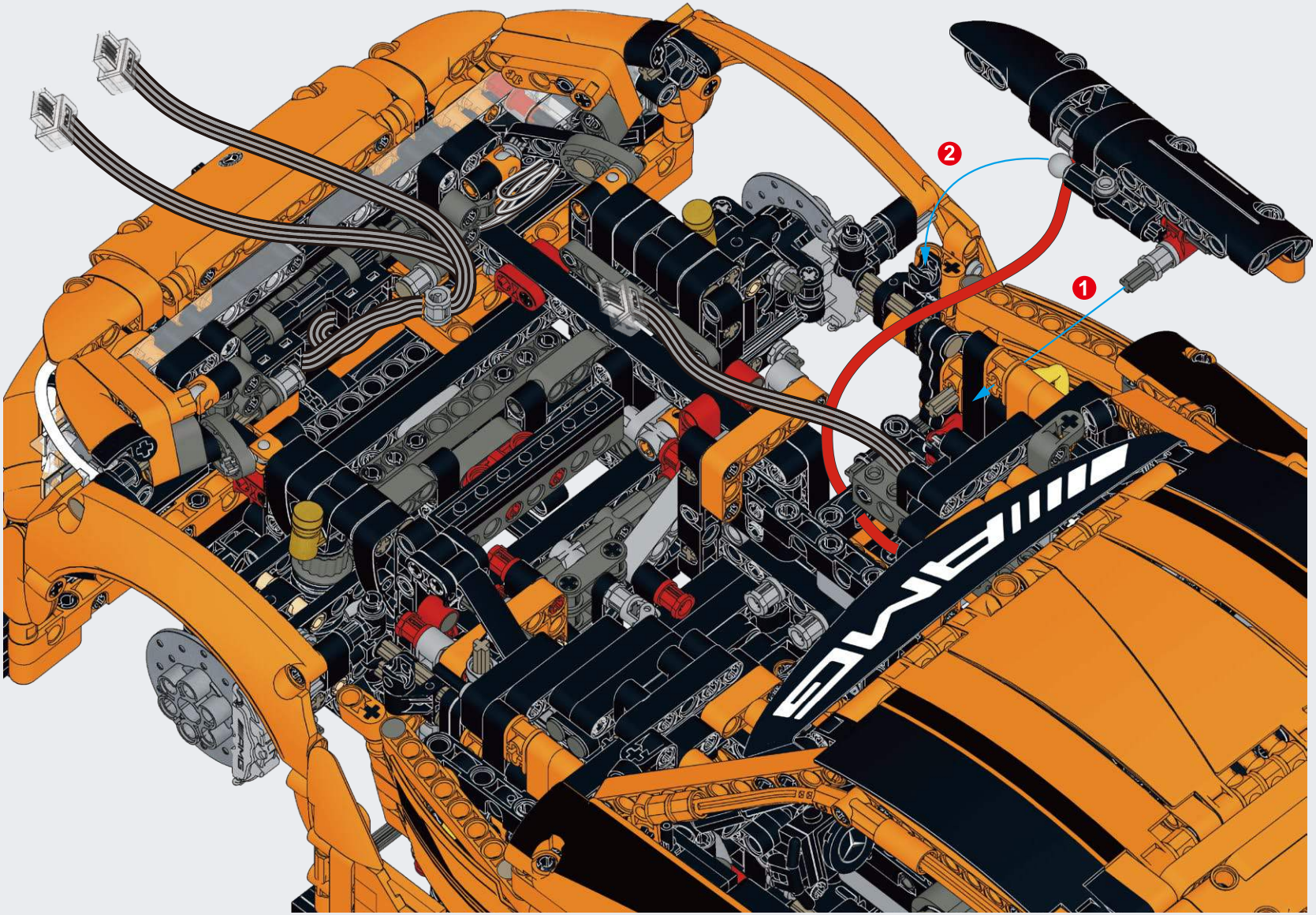

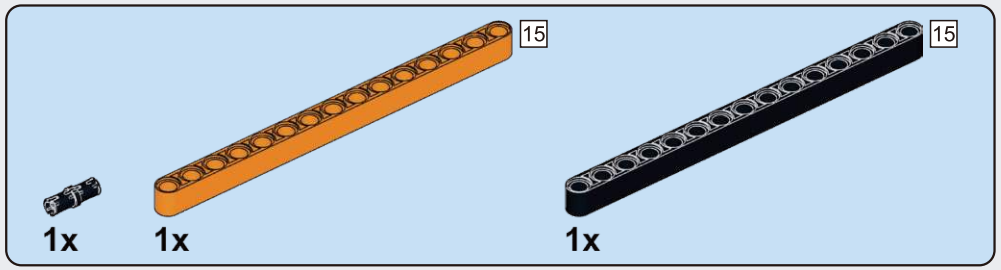

G177

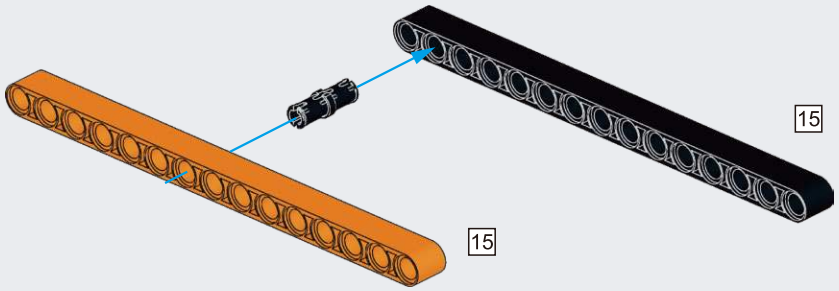

G178

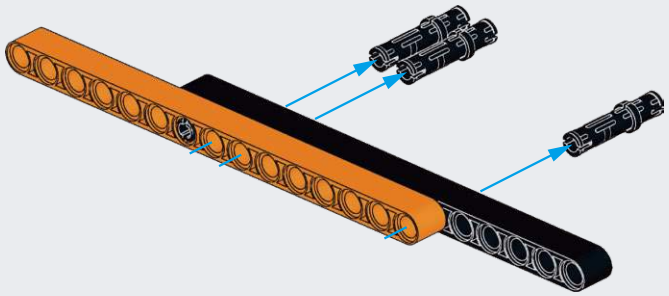

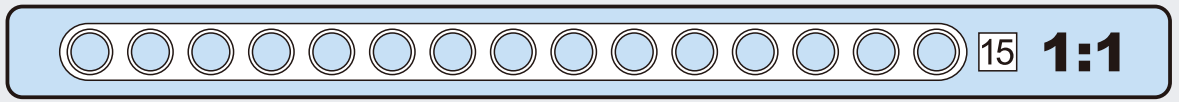

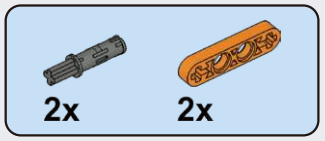

G179

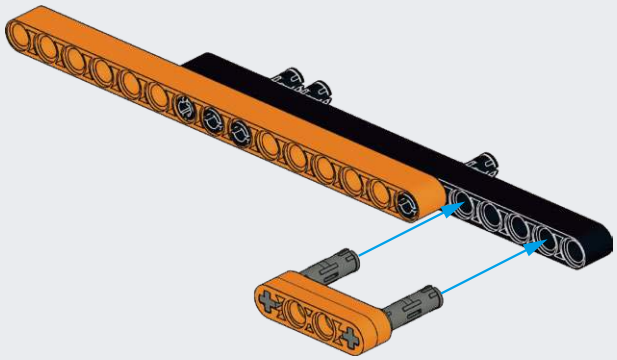

G180

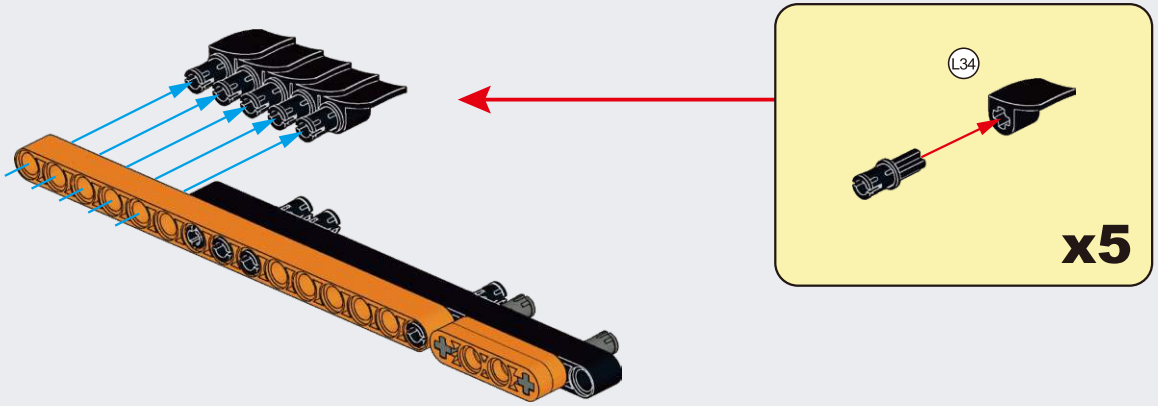

G181

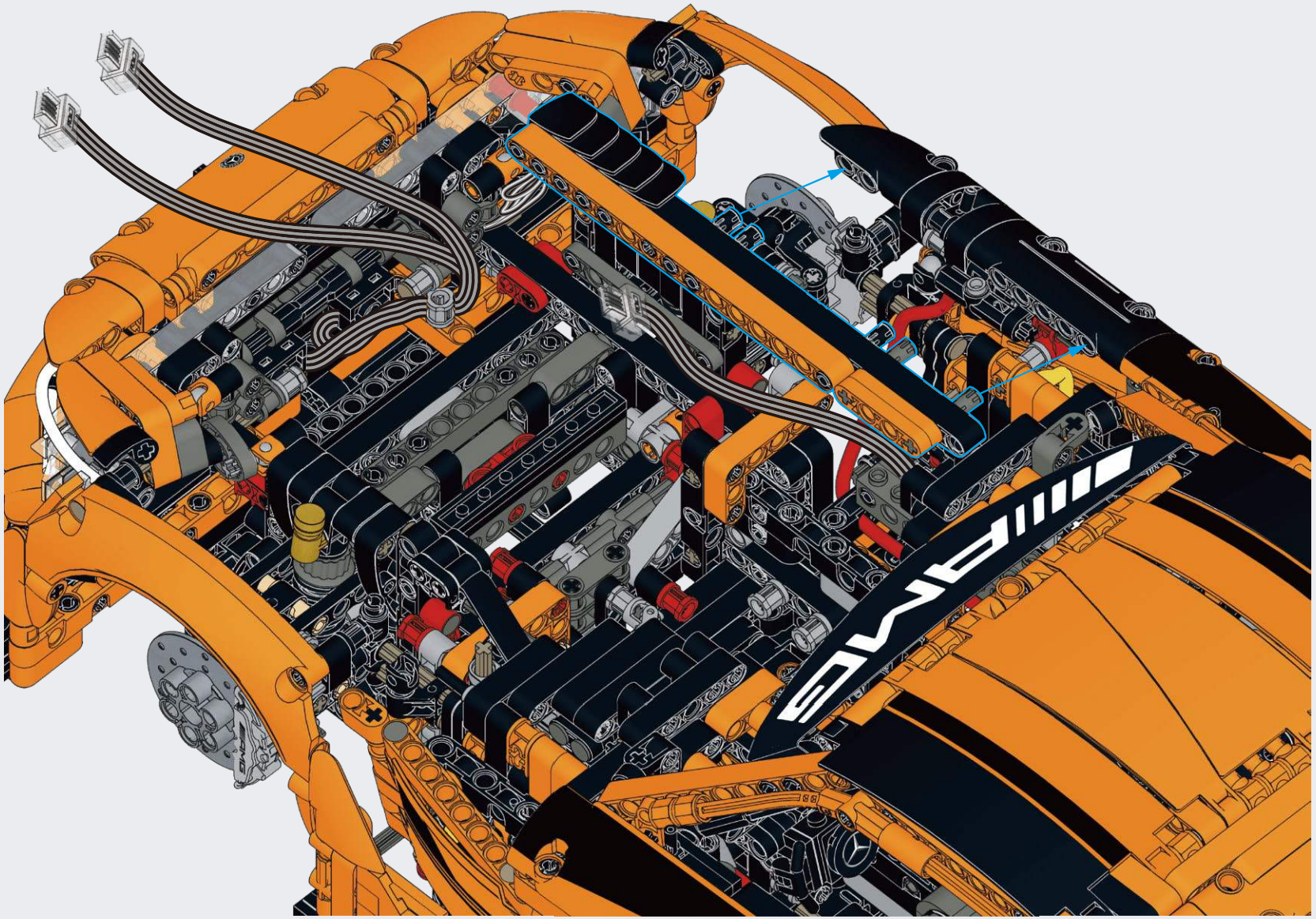

G182

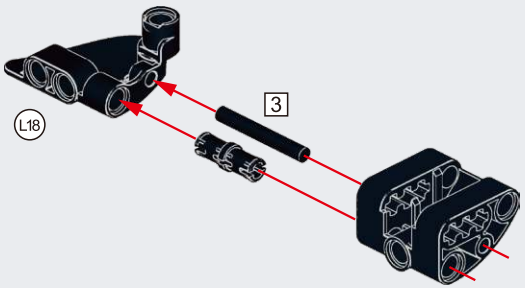

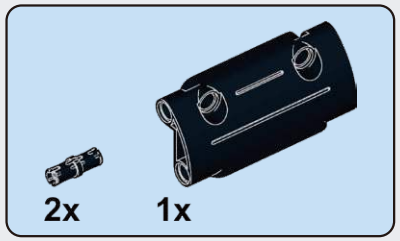

G183

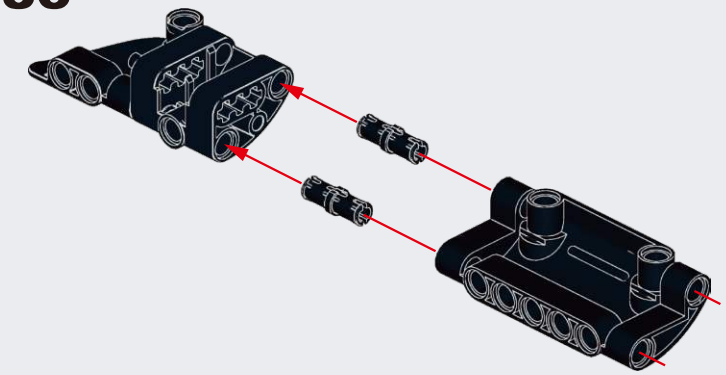

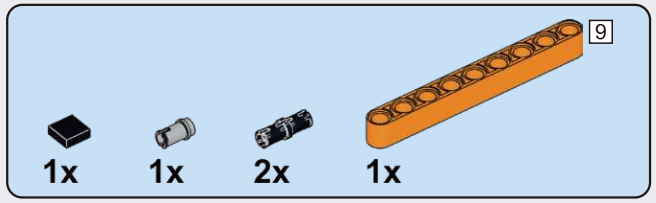

G184

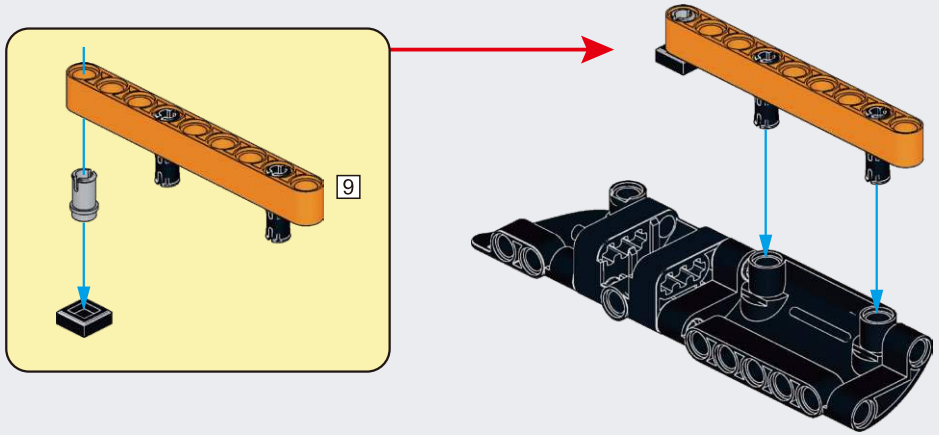

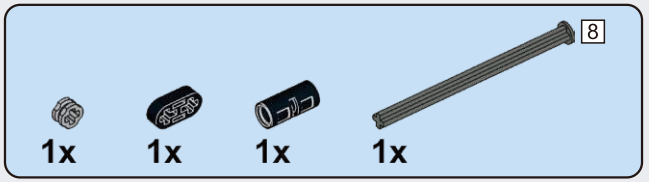

G185

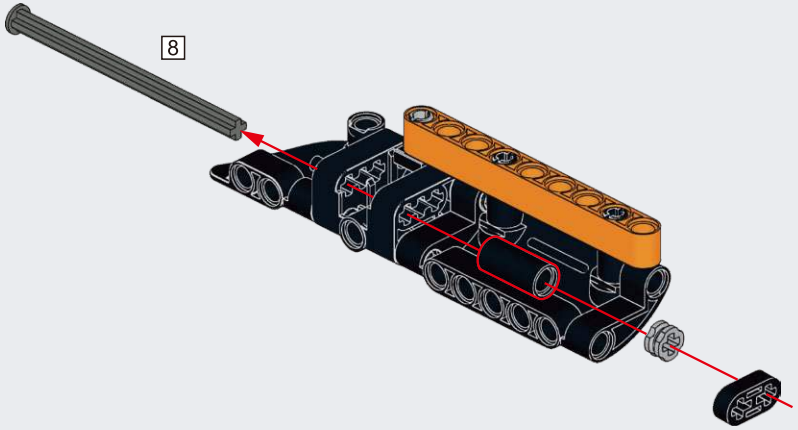

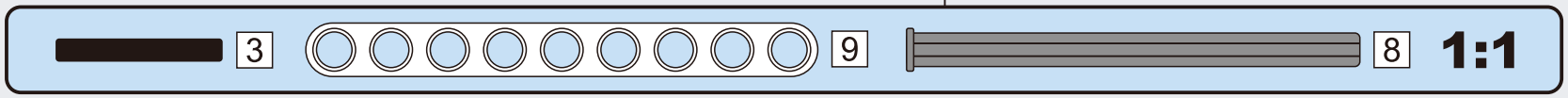

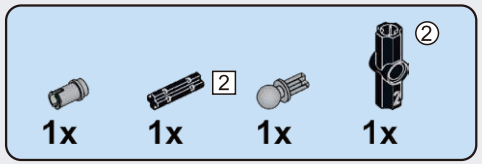

G186

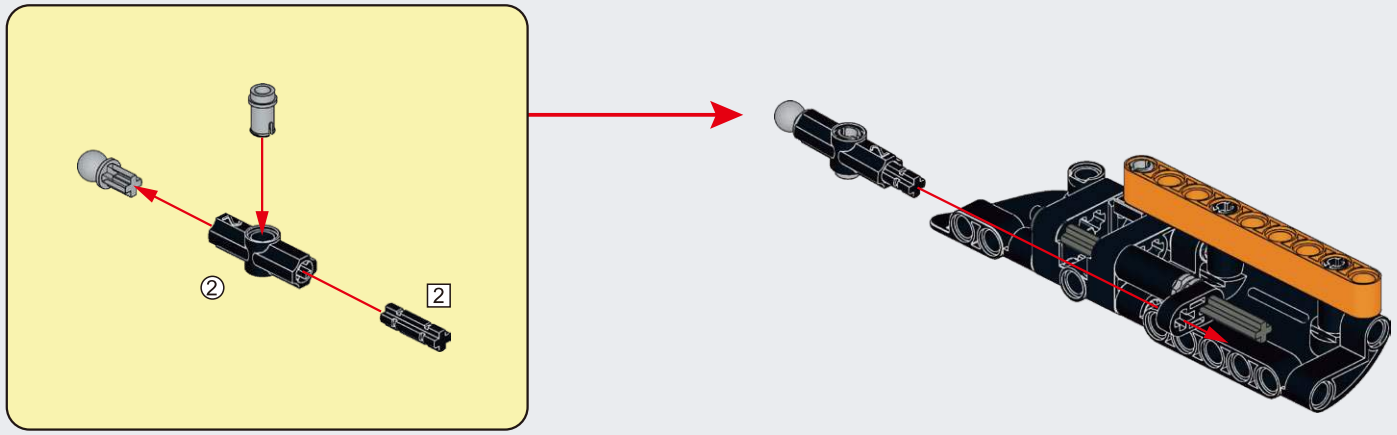

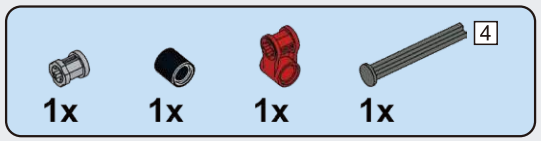

G187

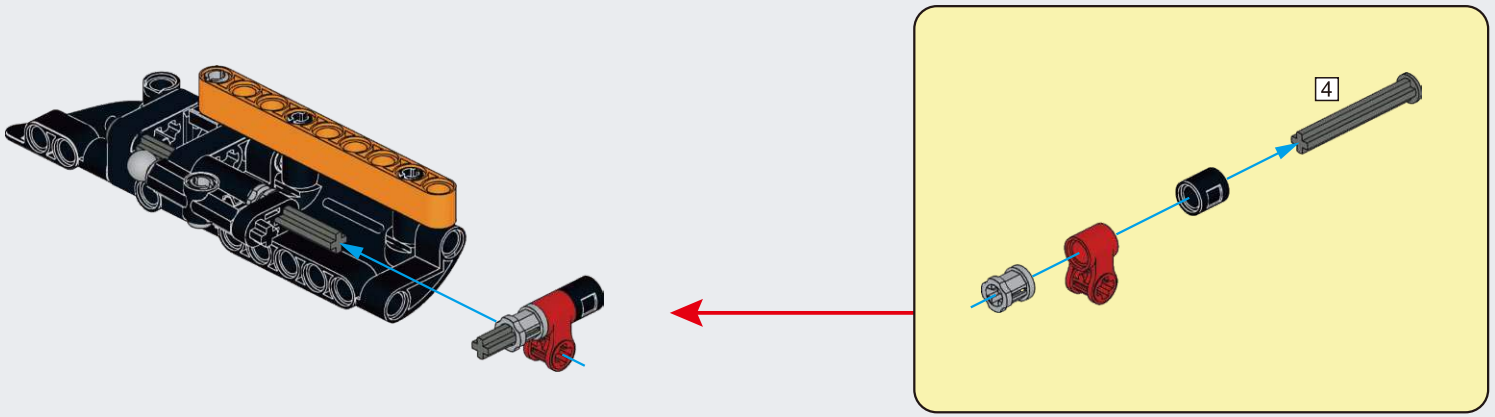

G188

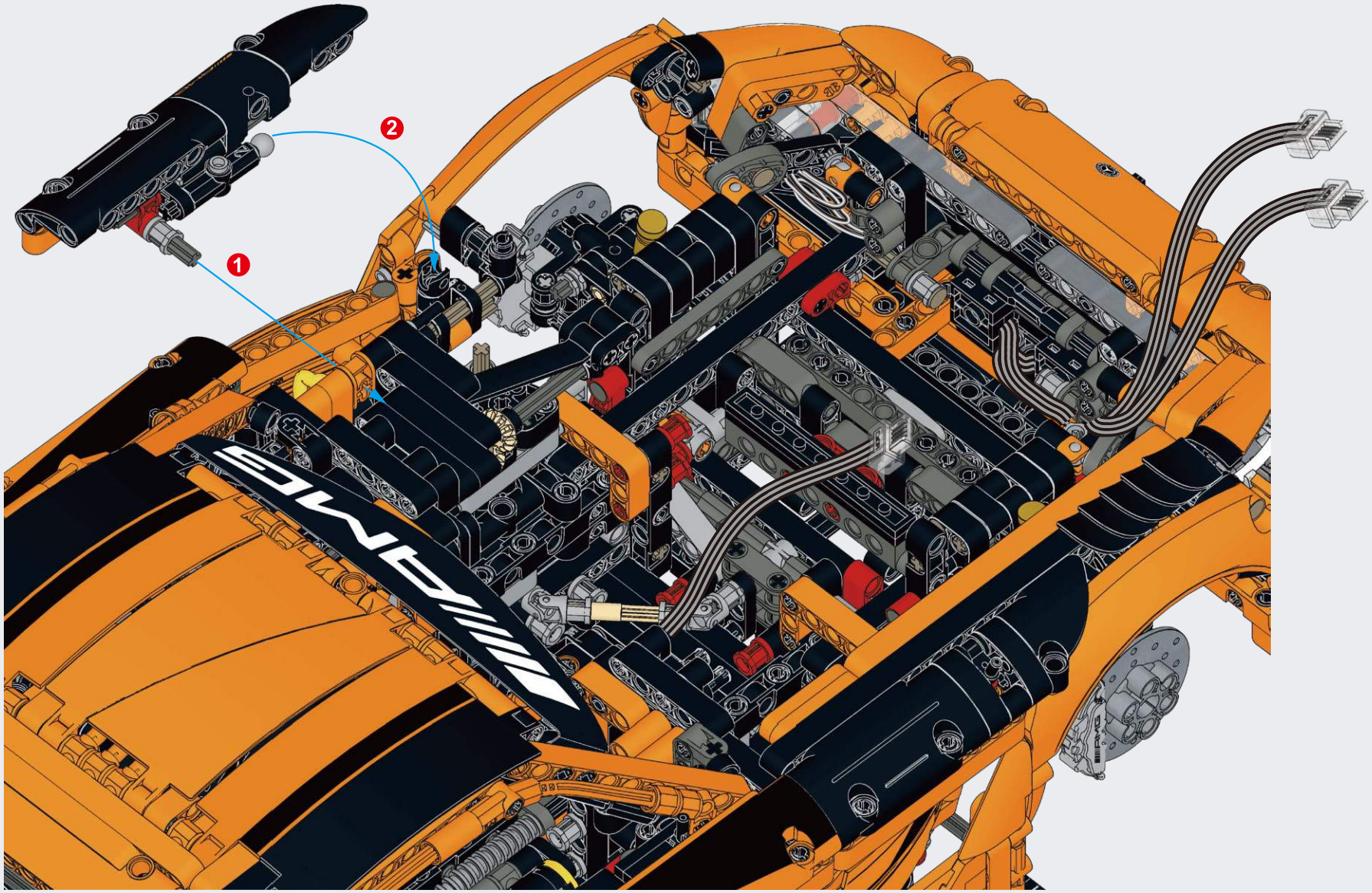

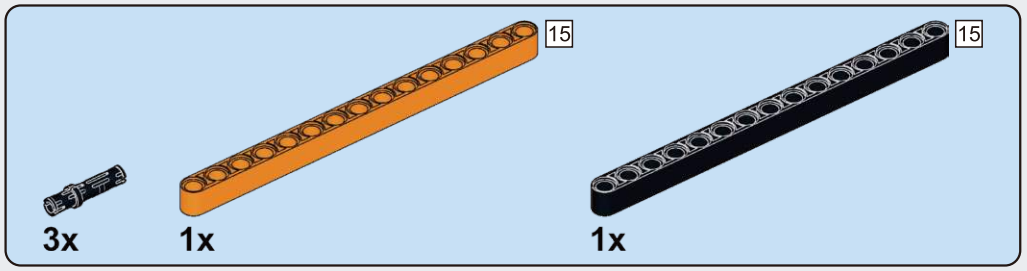

G189

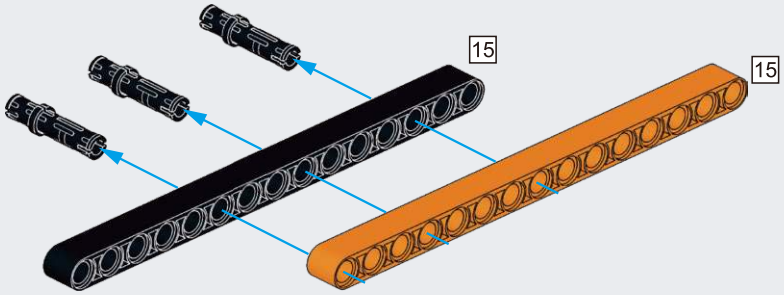

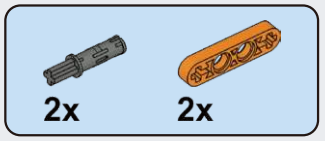

G190

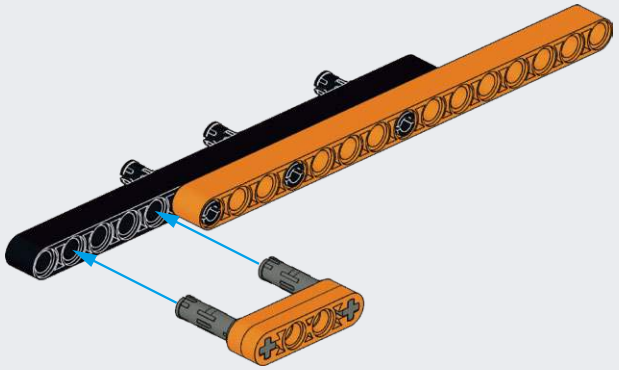

G191

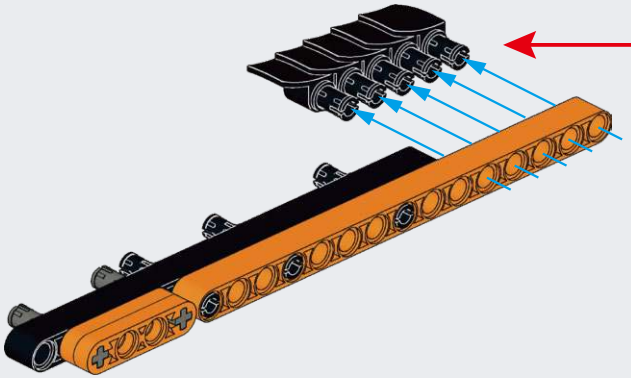

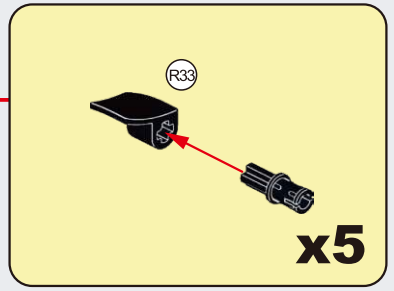

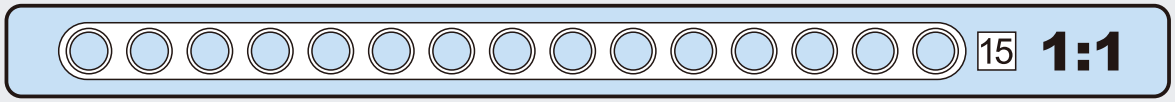

G192

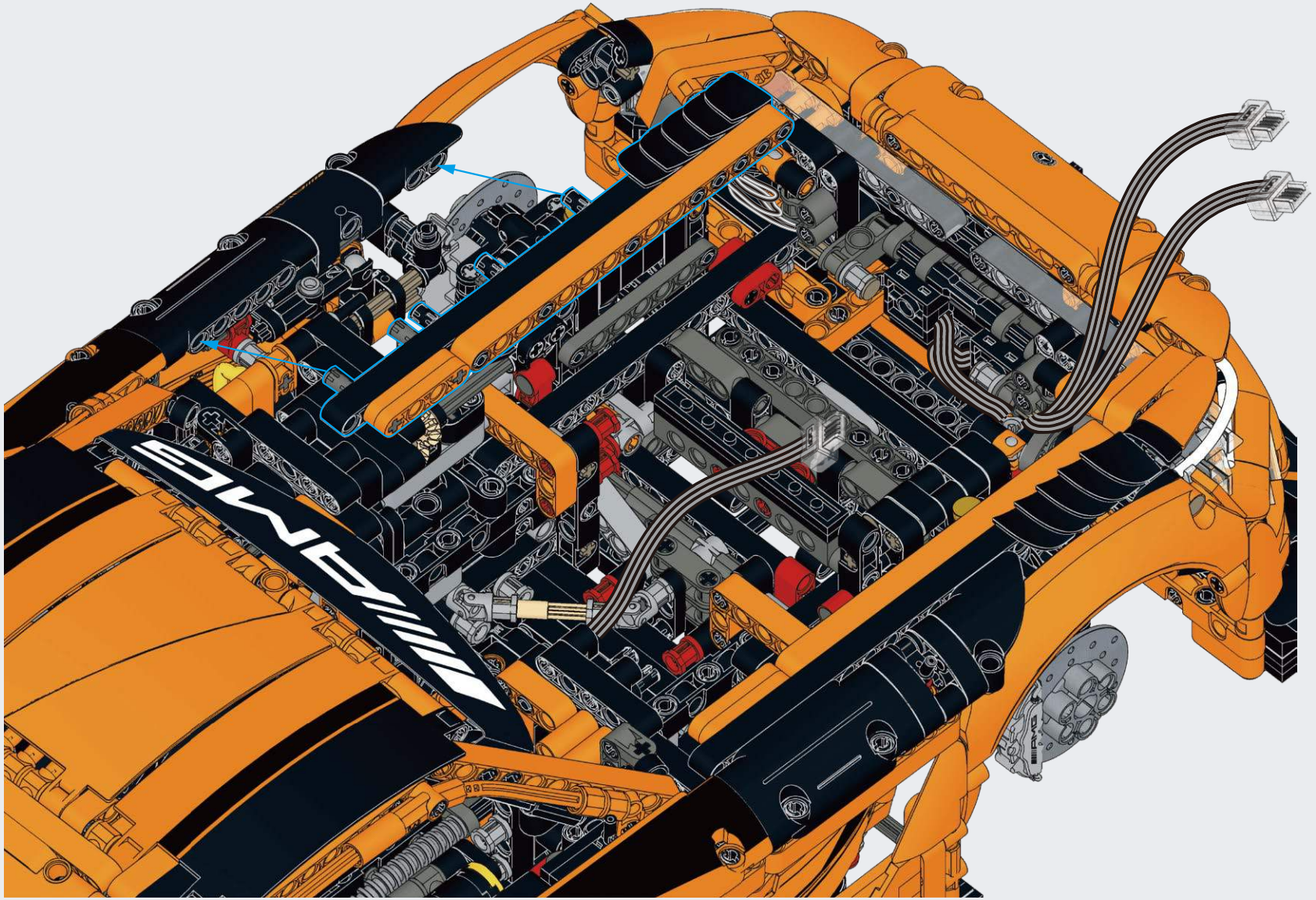

H

BOX 3 / BAG 8

3

H

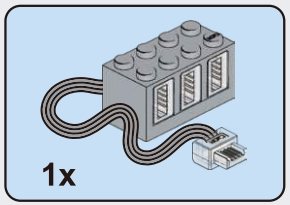

H1

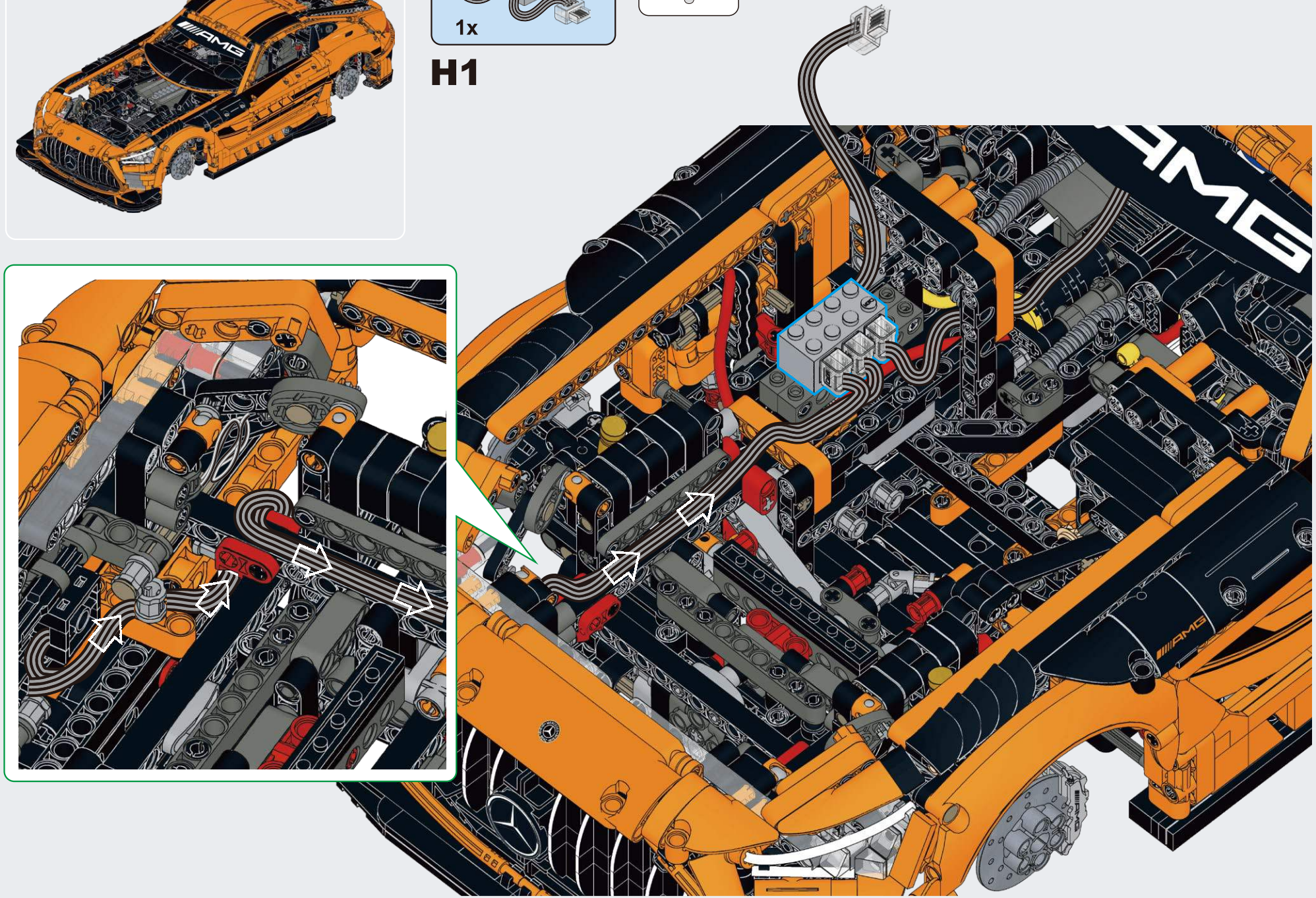

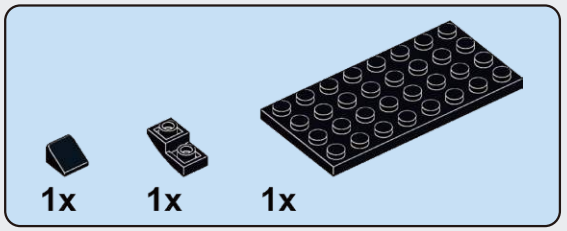

H2

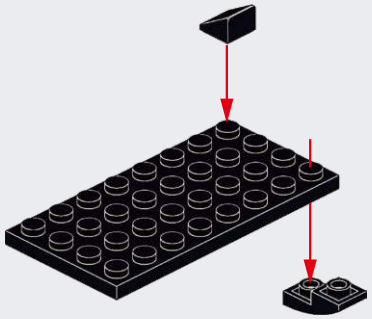

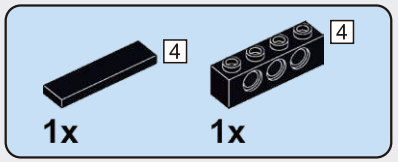

H3

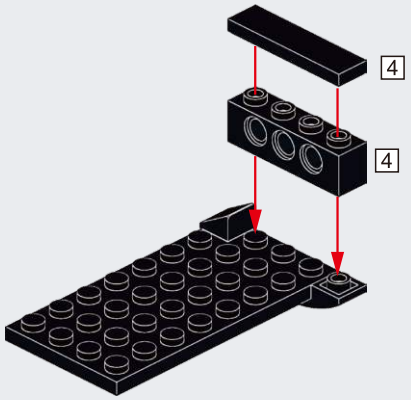

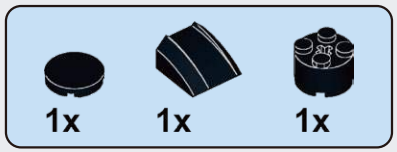

H4

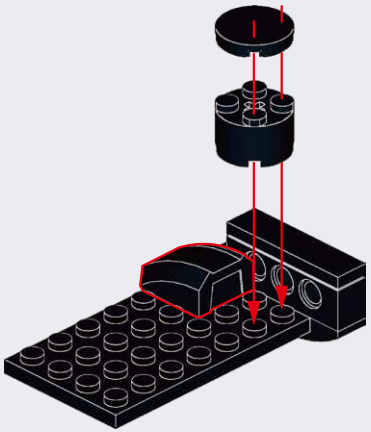

H5

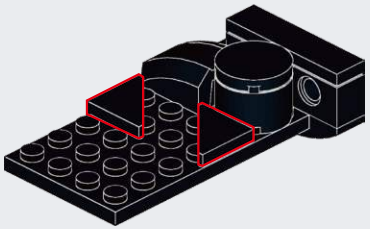

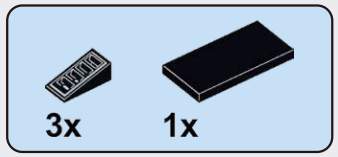

H6

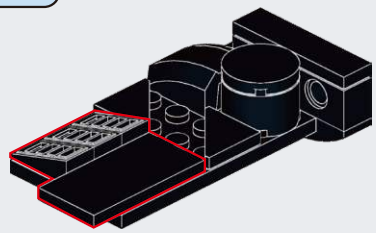

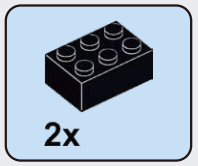

H7

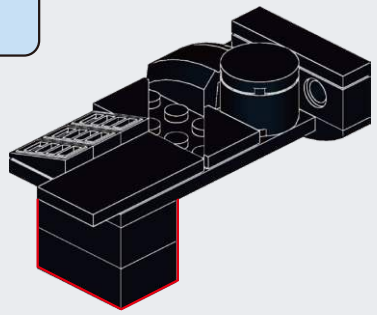

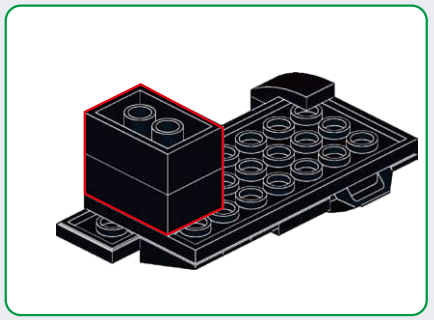

H8

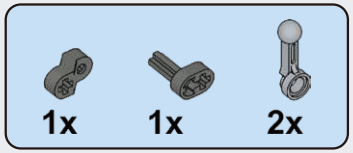

H9

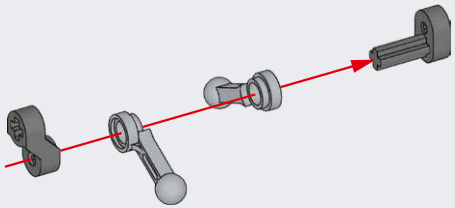

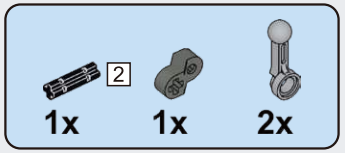

H10

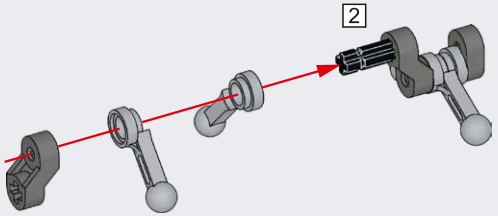

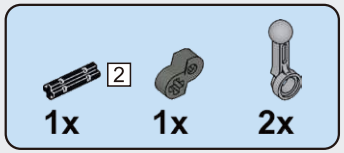

H11

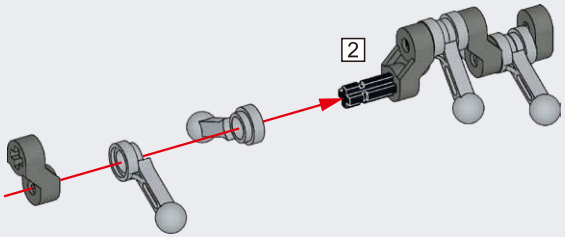

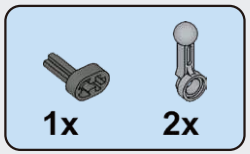

H12

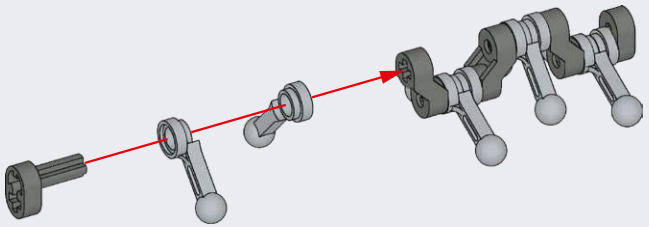

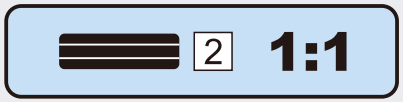

H13

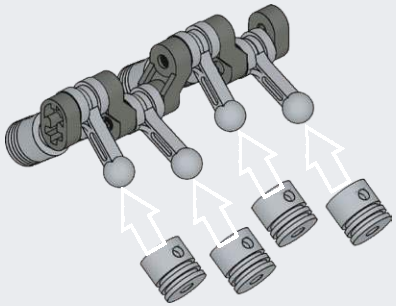

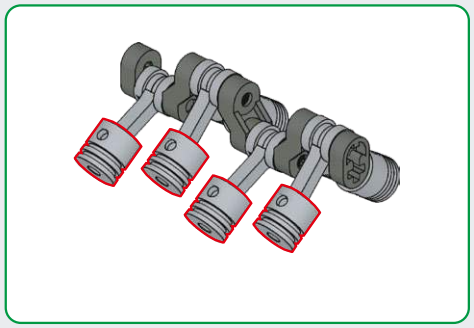

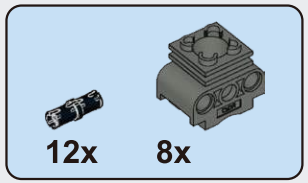

H14

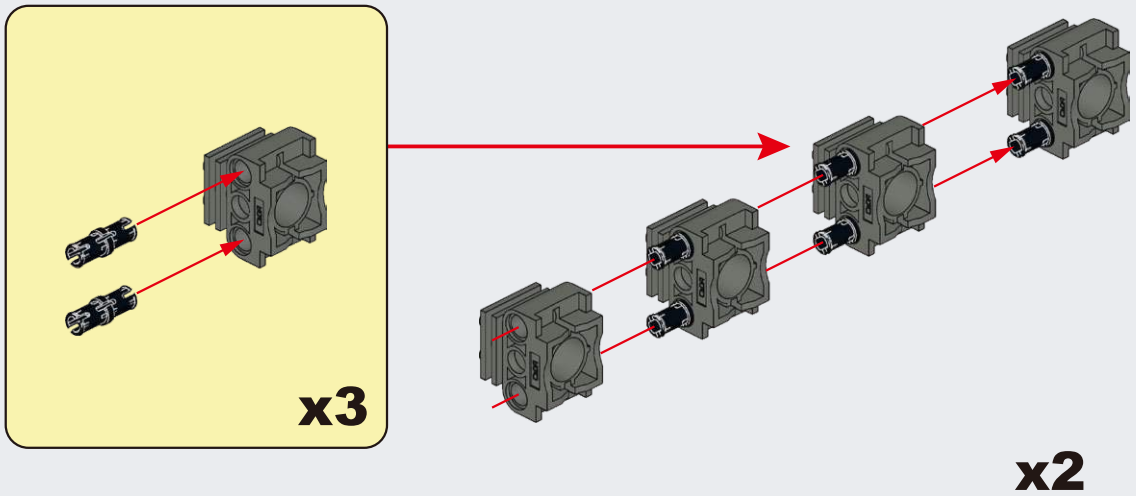

H15

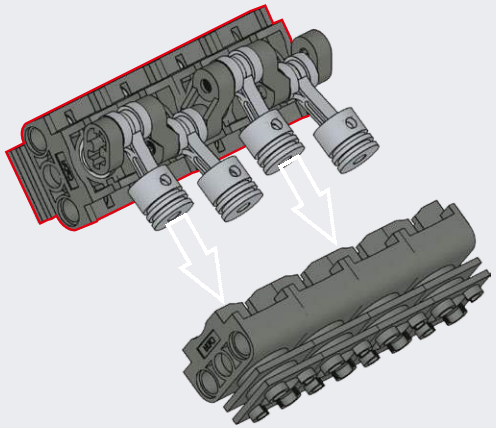

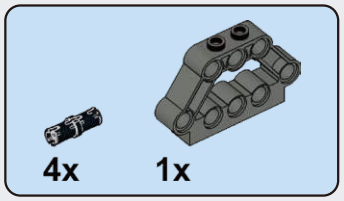

H16

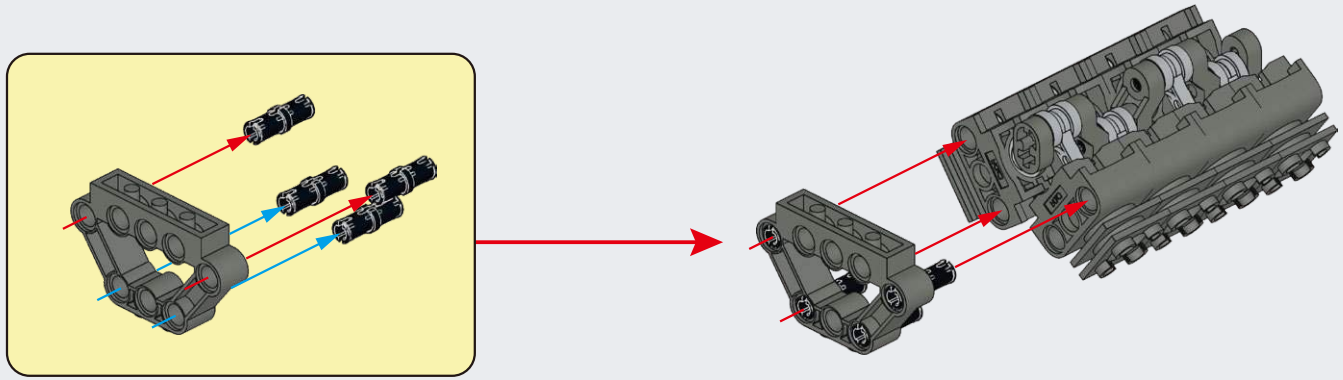

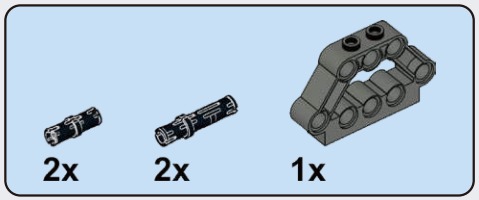

H17

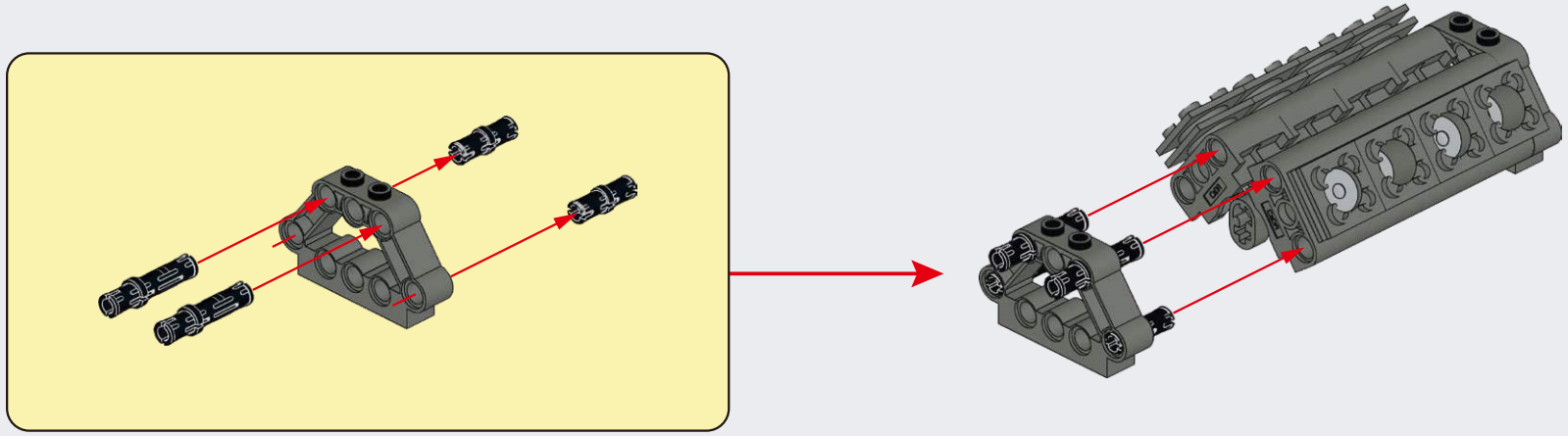

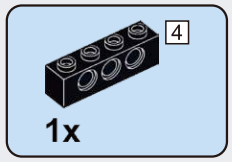

H18

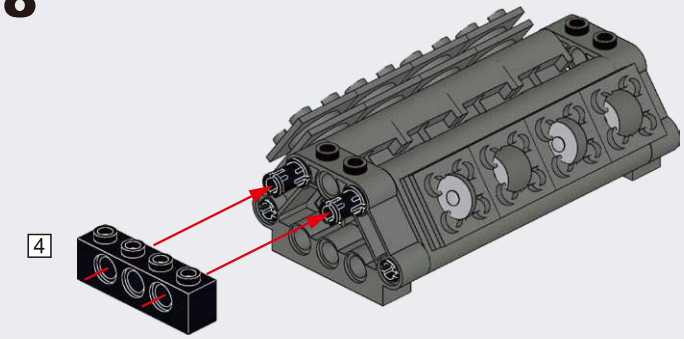

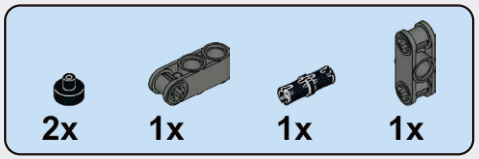

H19

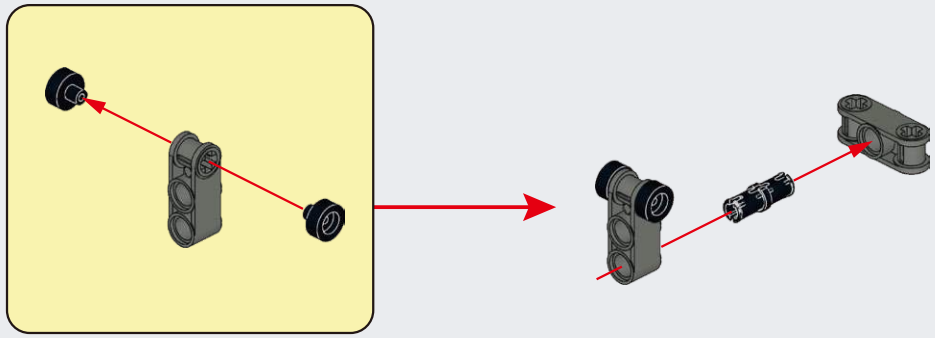

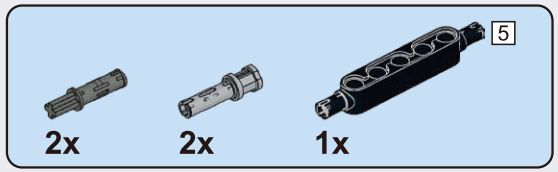

H20

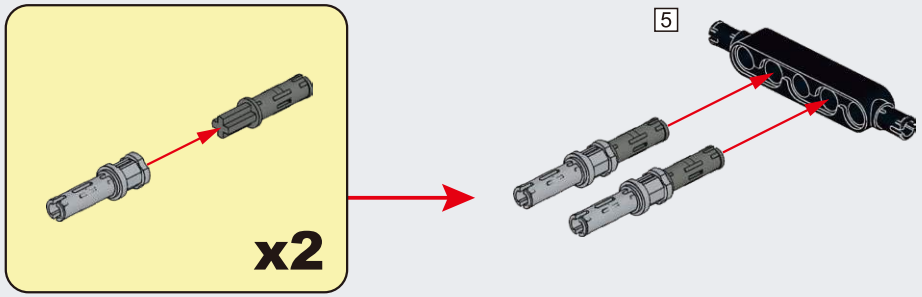

H21

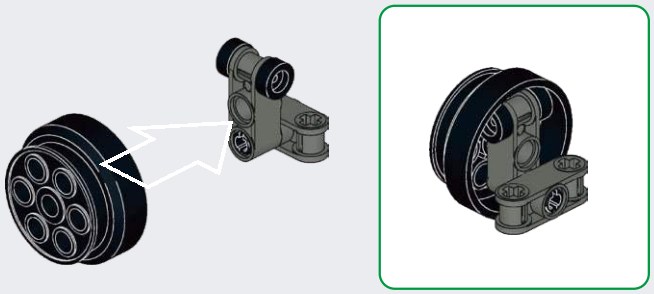

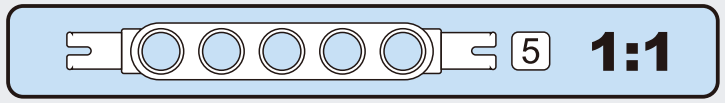

H22

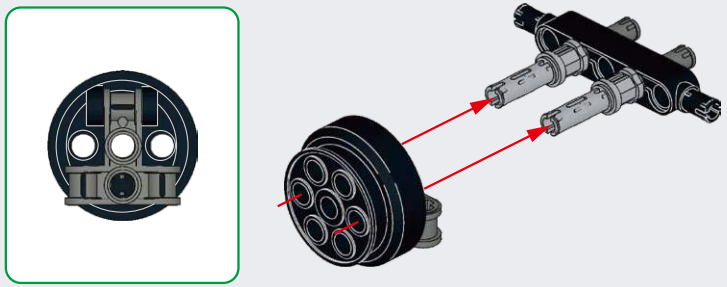

H23

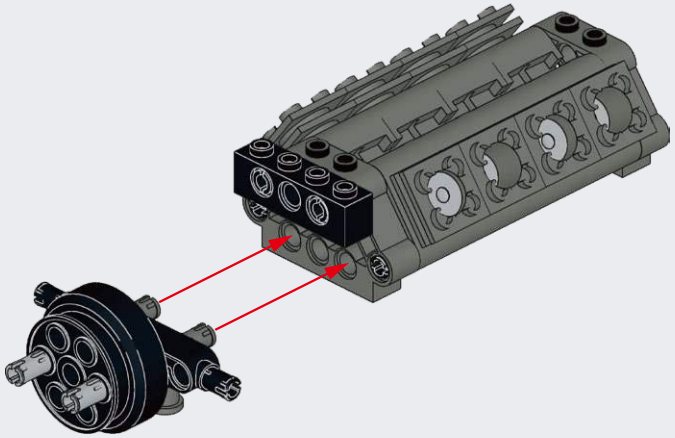

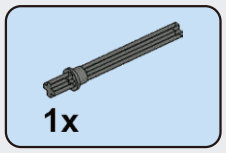

H24

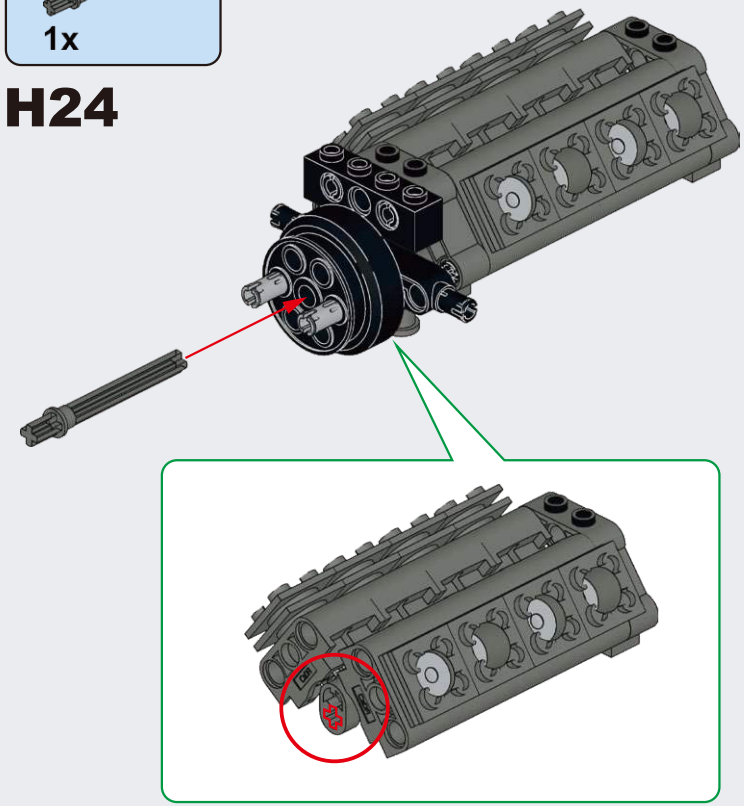

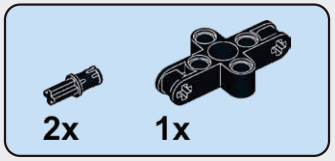

H25

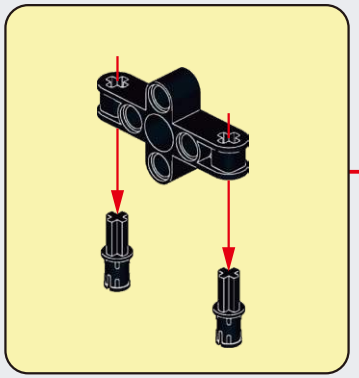

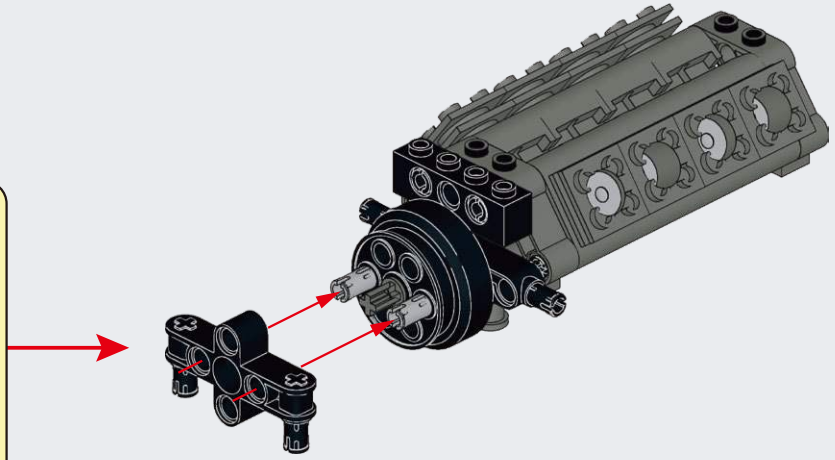

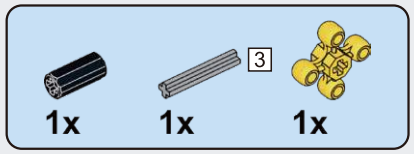

H26

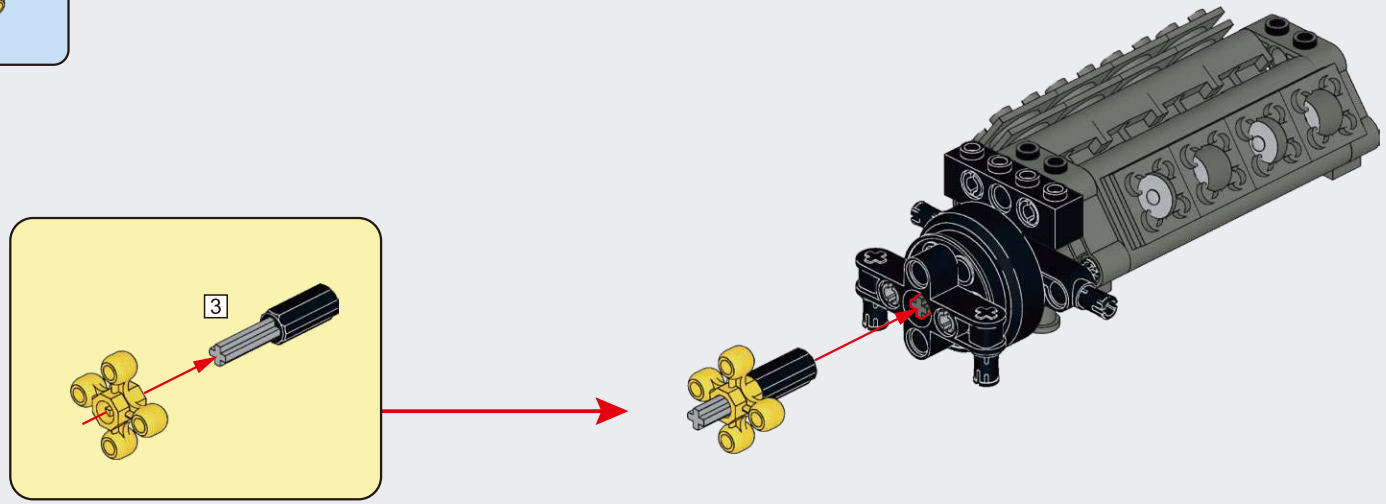

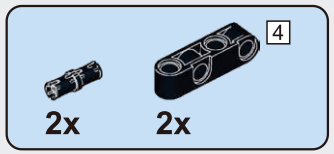

H27

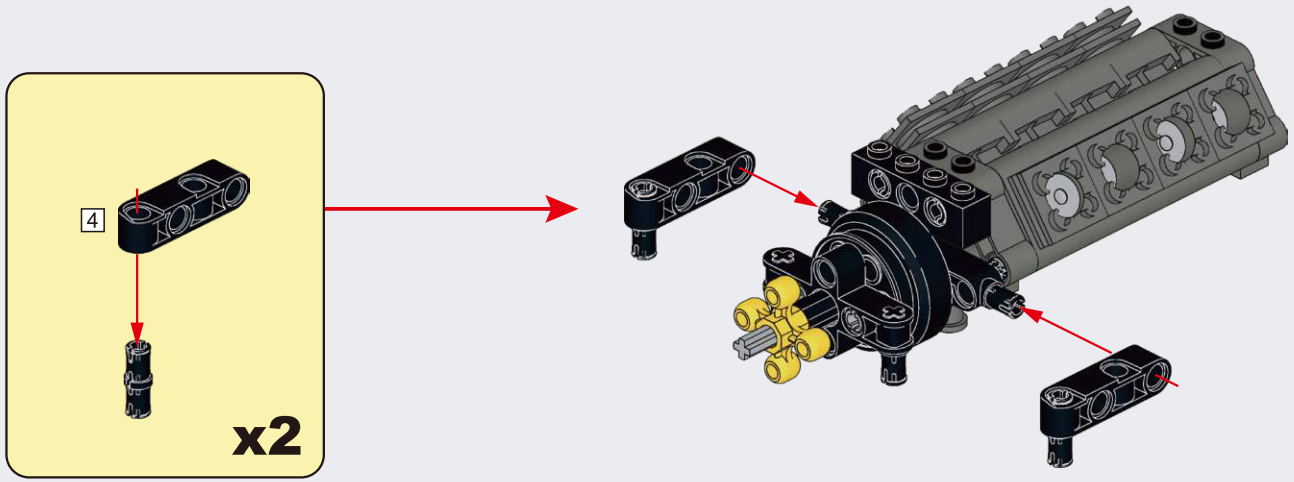

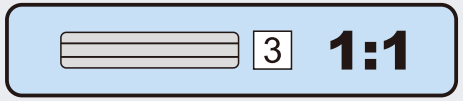

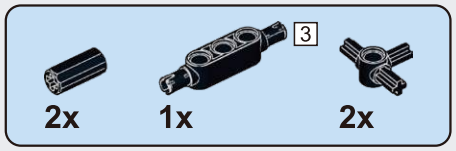

H28

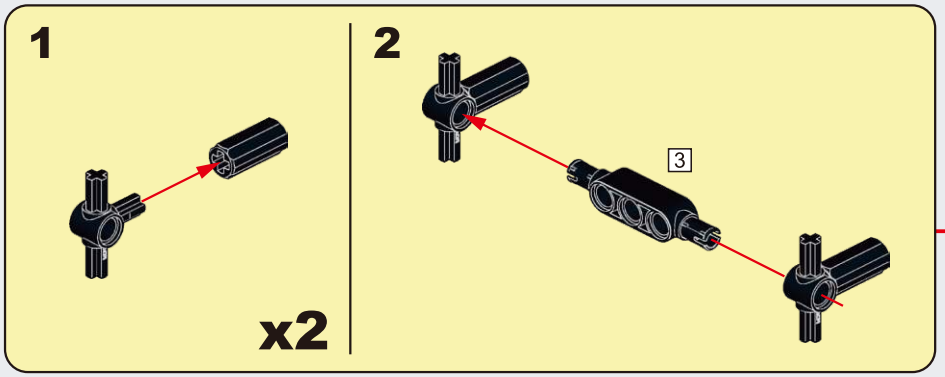

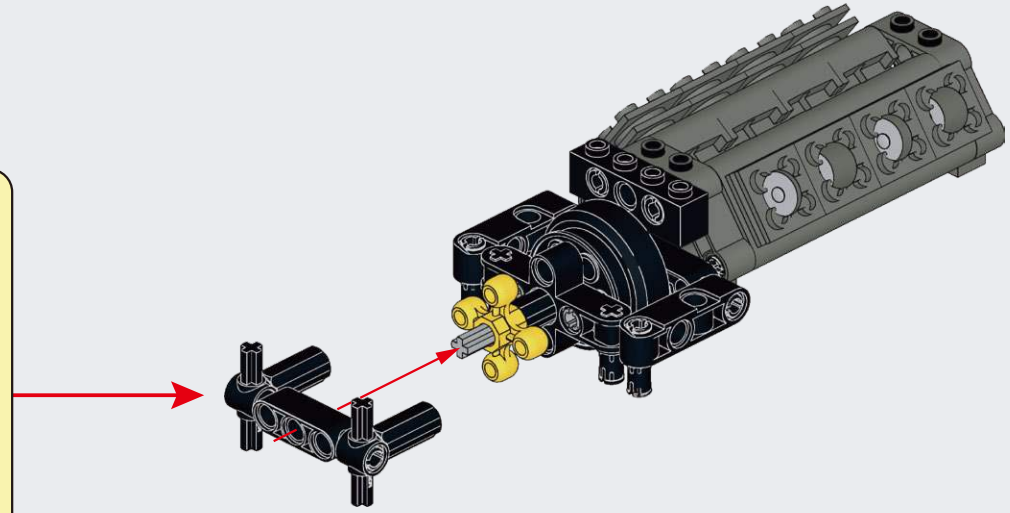

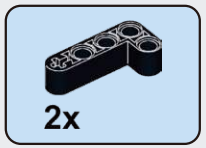

H29

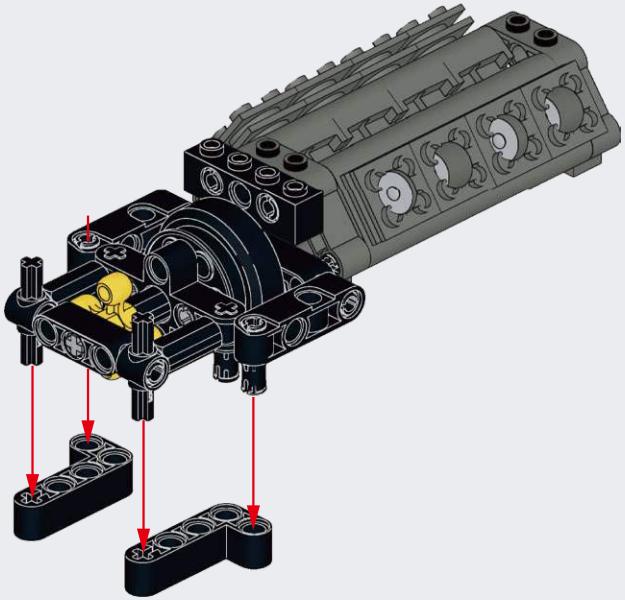

H30

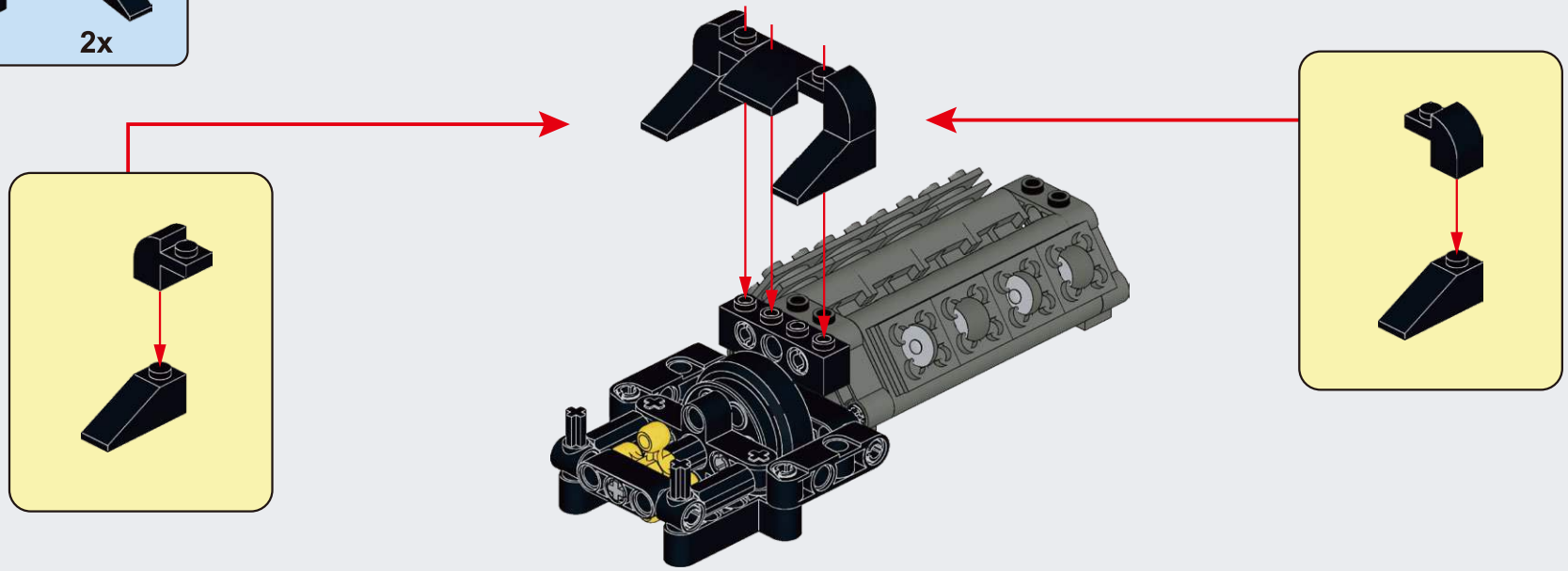

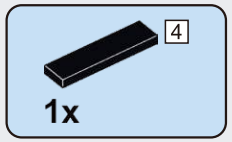

H31

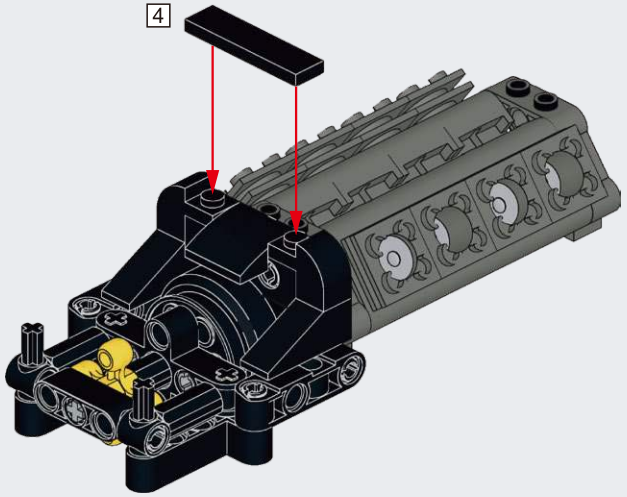

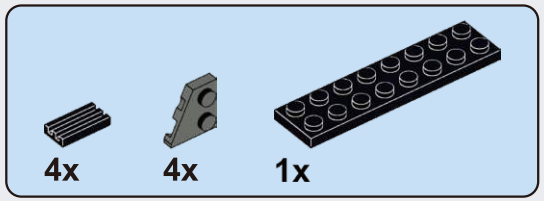

H32

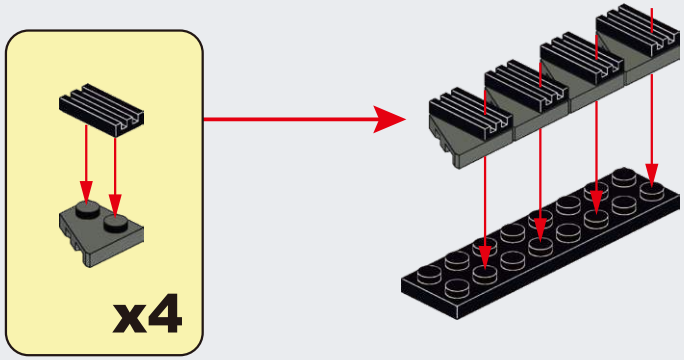

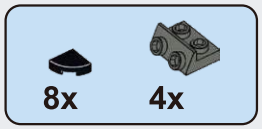

H33

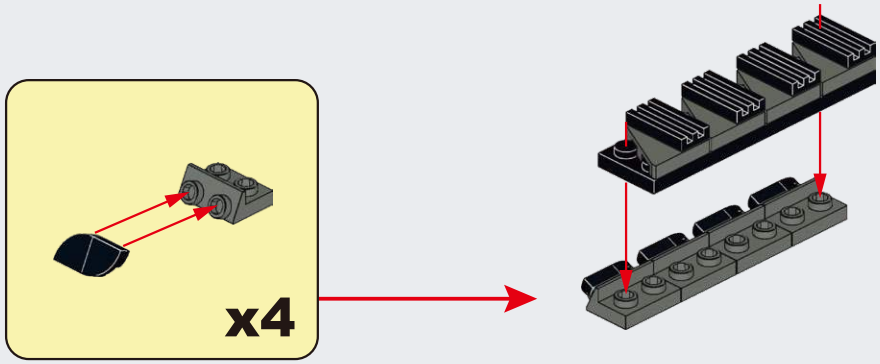

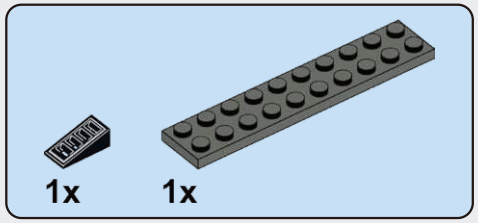

H34

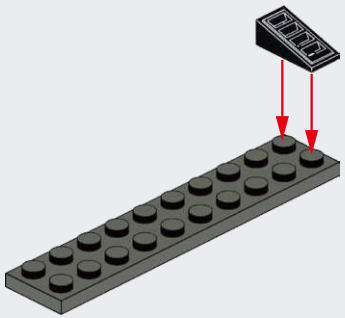

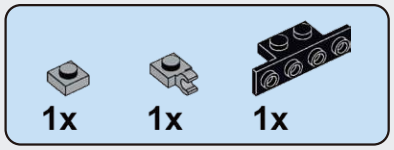

H35

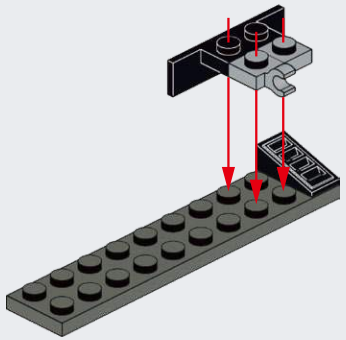

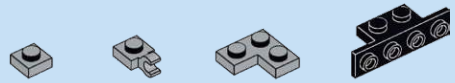

H36

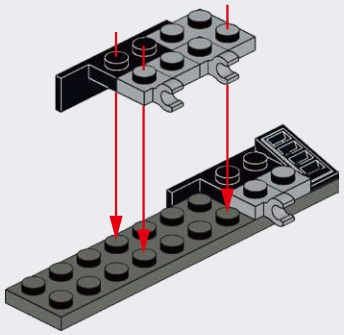

H37

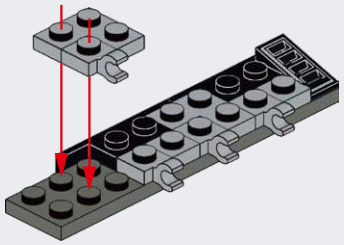

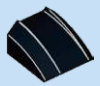

H38

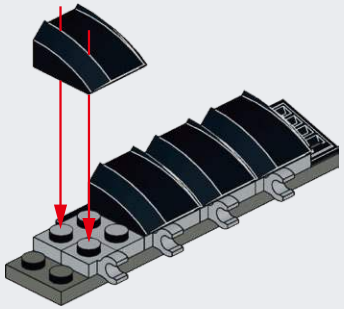

H39

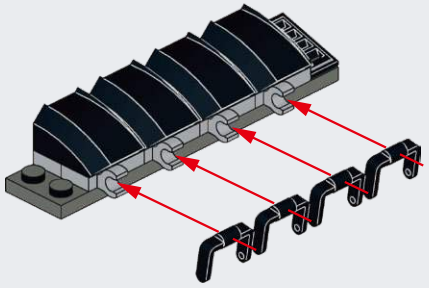

H40

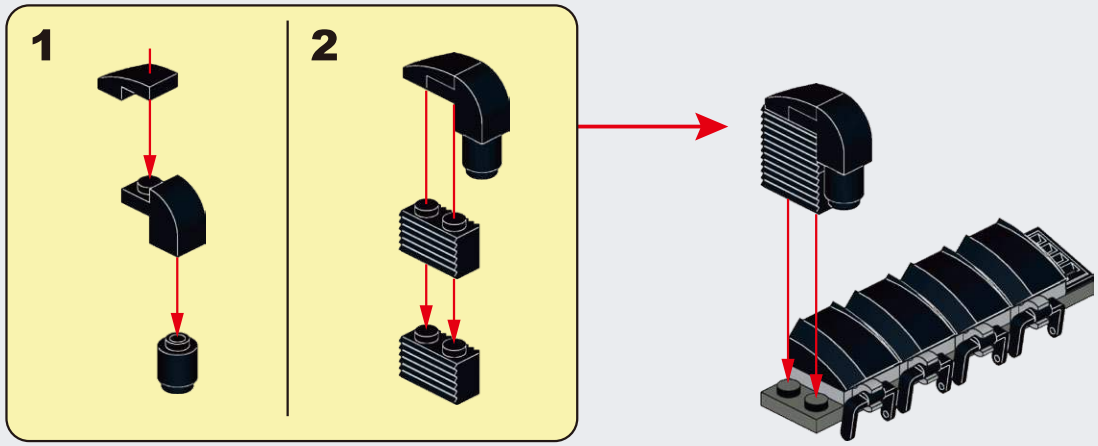

H41

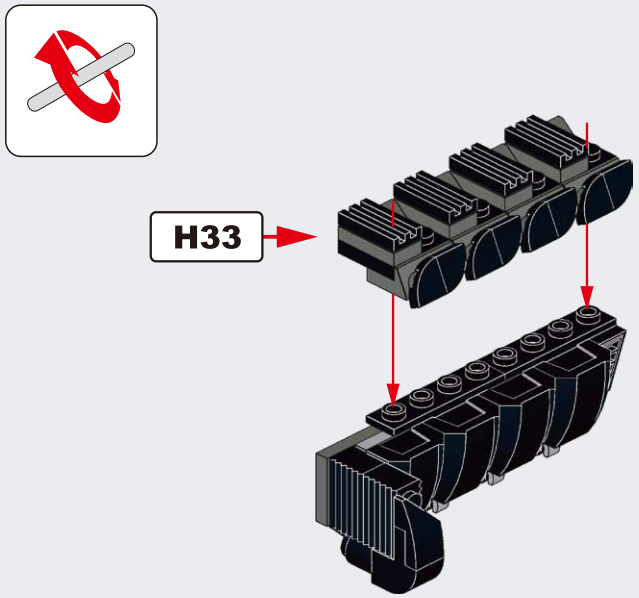

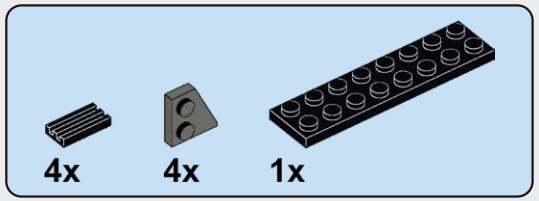

H42

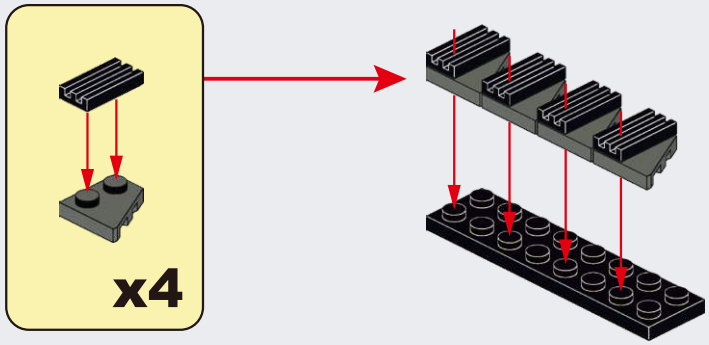

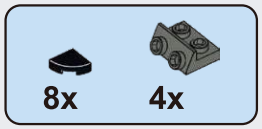

H43

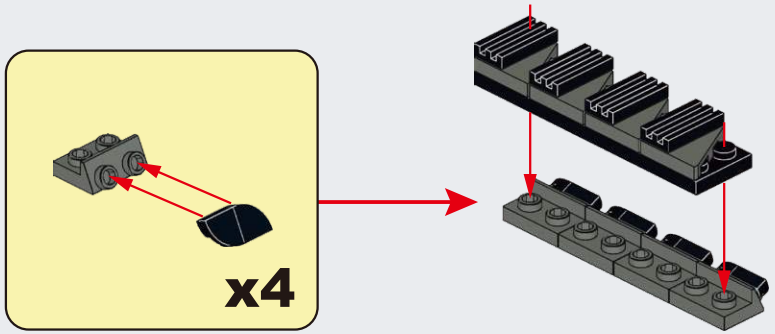

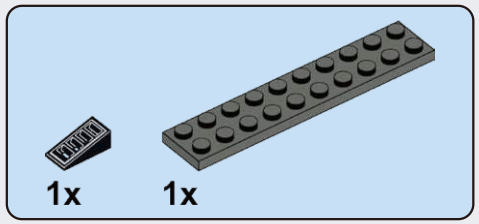

H44

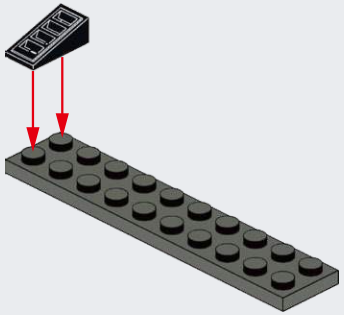

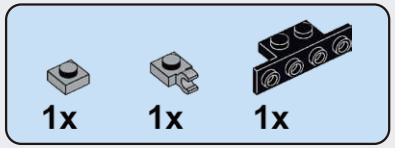

H45

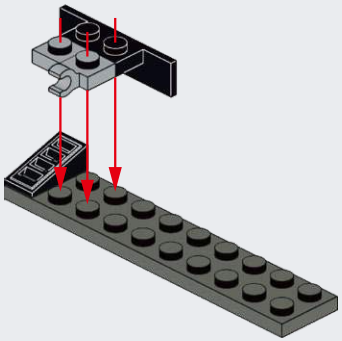

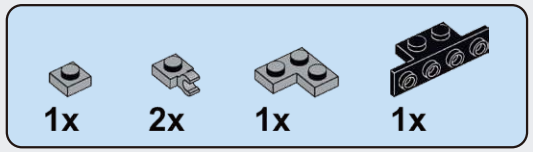

H46

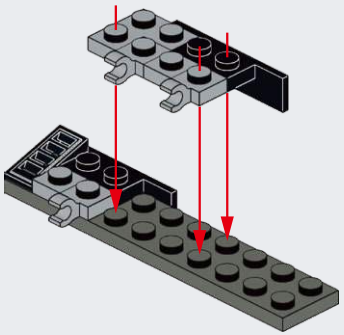

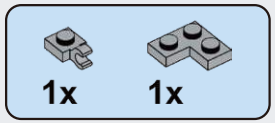

H47

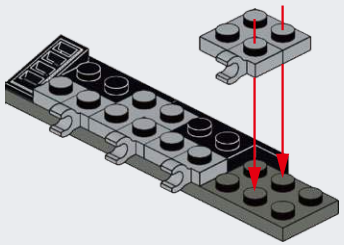

H48

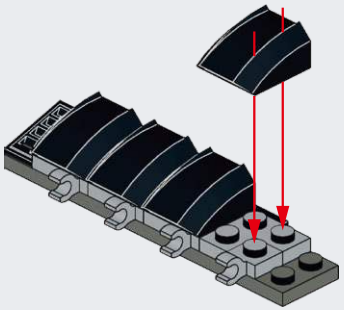

H49

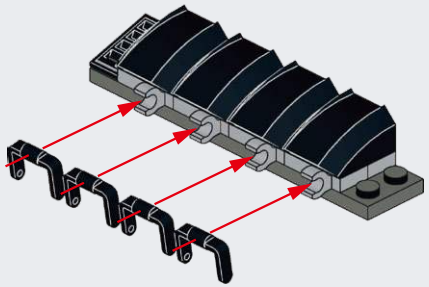

H50

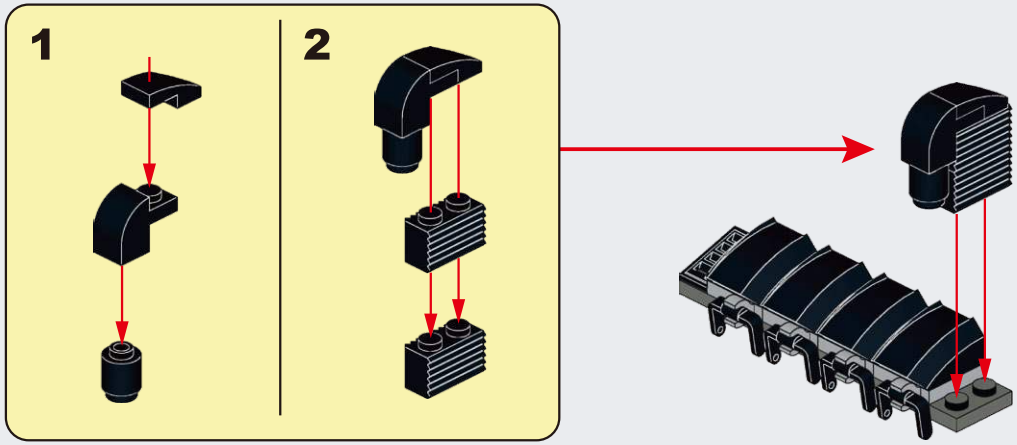

H51

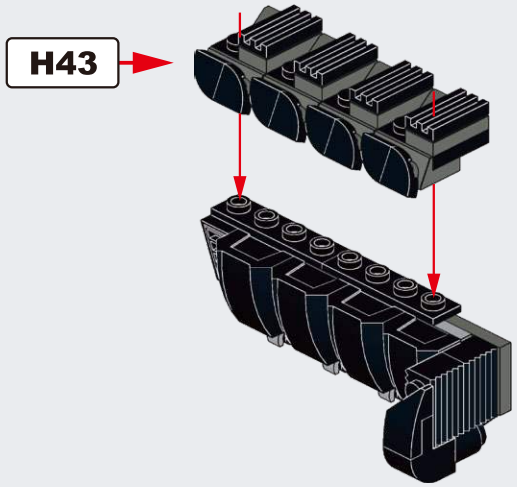

H52

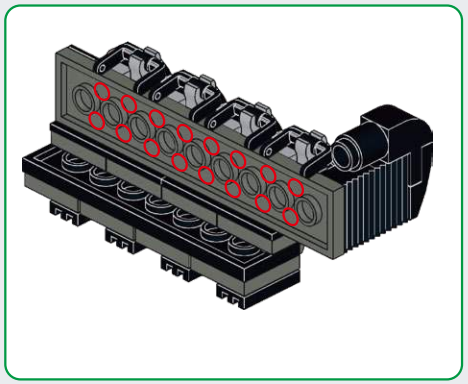

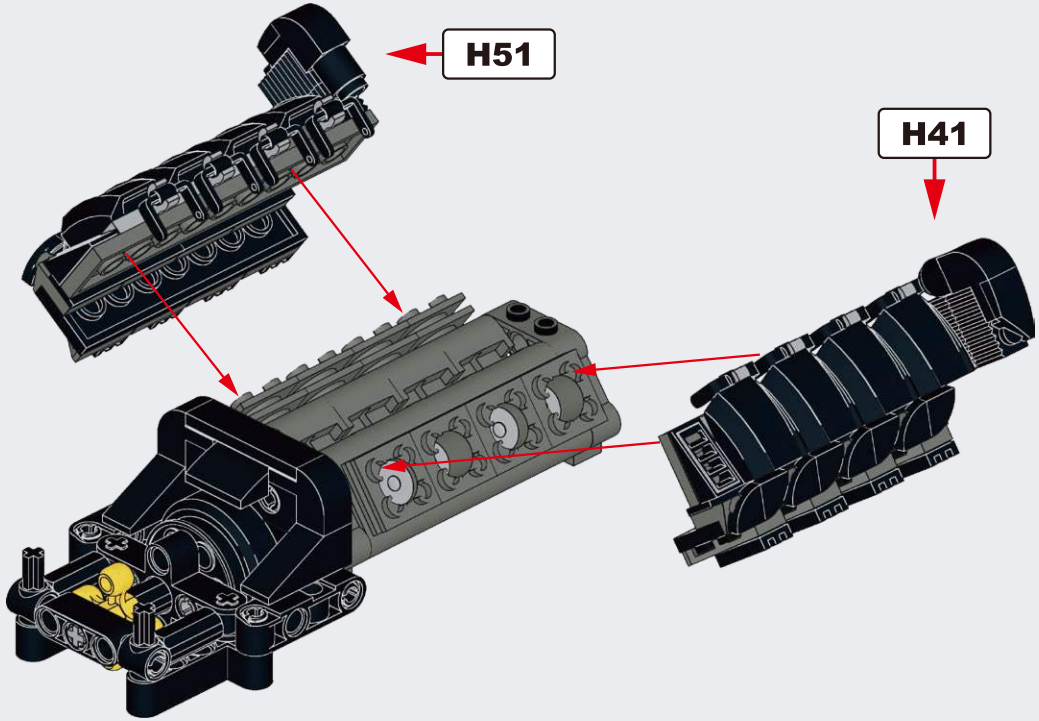

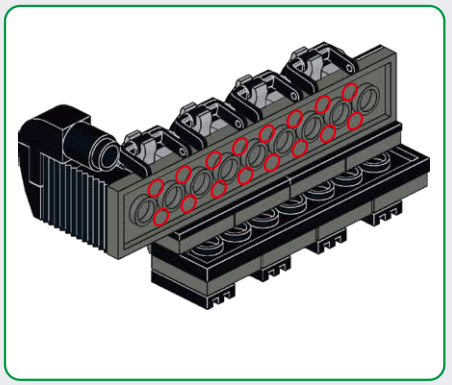

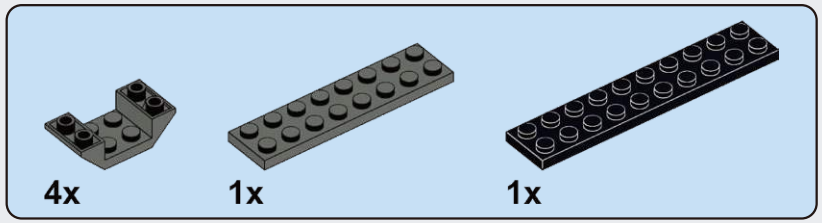

H53

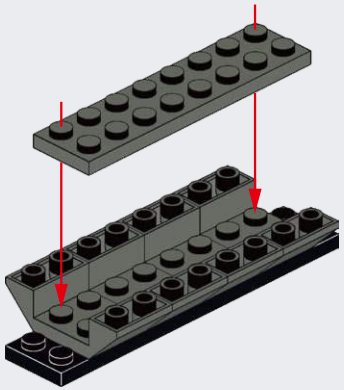

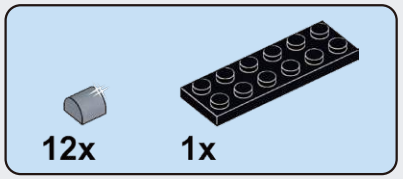

H54

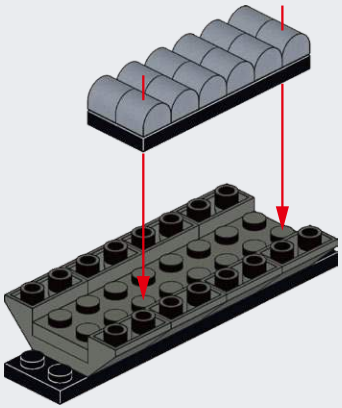

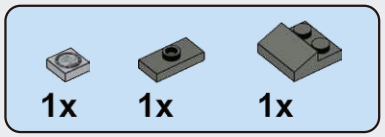

H55

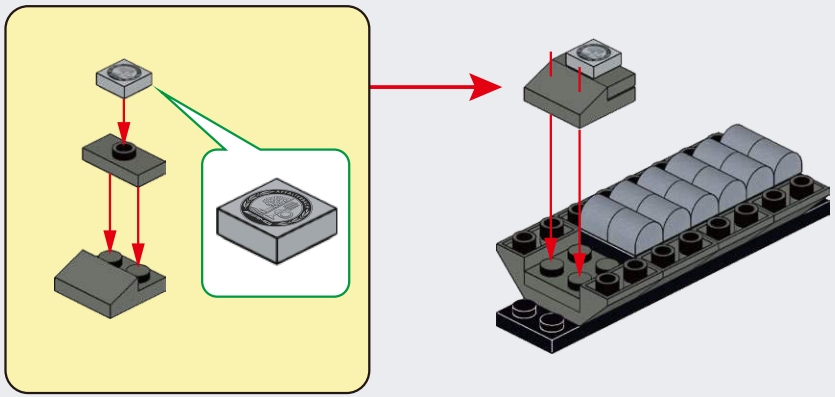

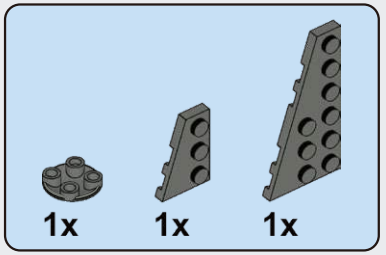

H56

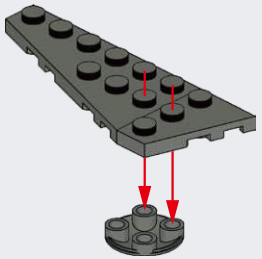

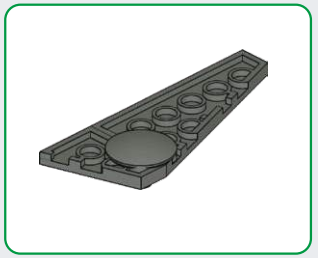

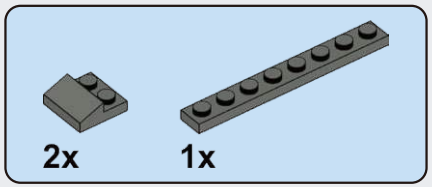

H57

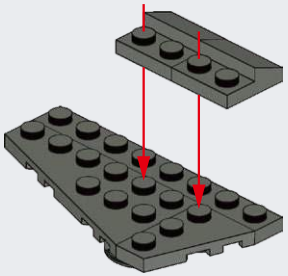

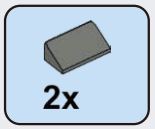

H58

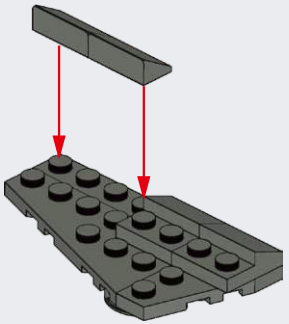

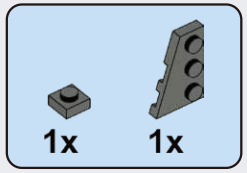

H59

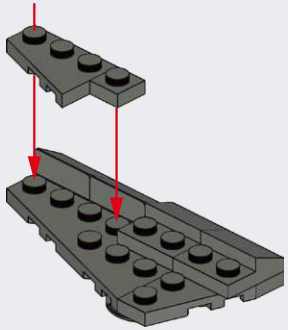

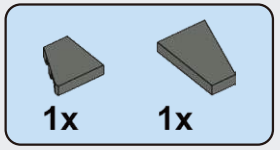

H60

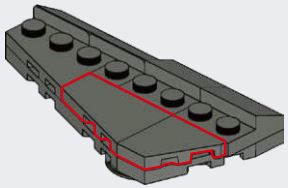

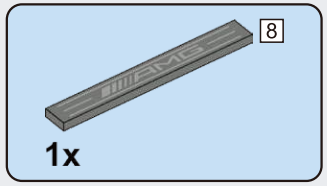

H61

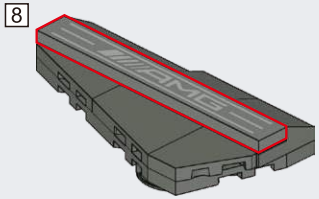

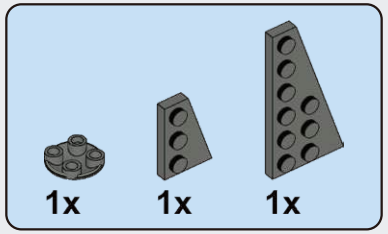

H62

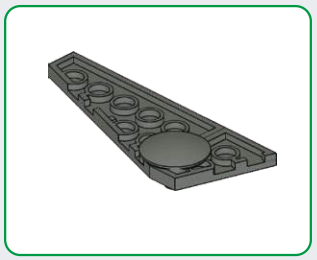

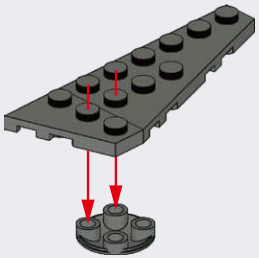

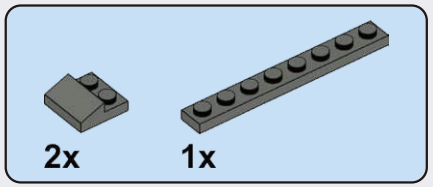

H63

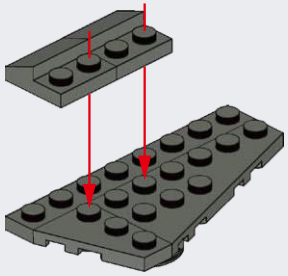

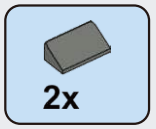

H64

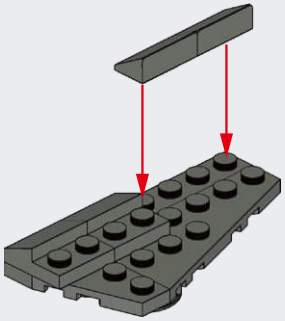

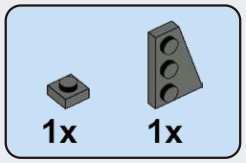

H65

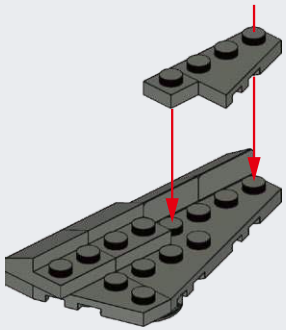

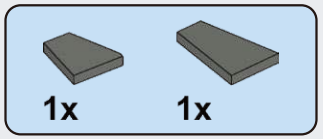

H66

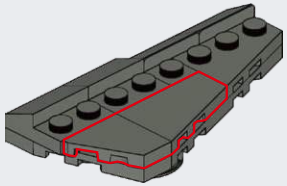

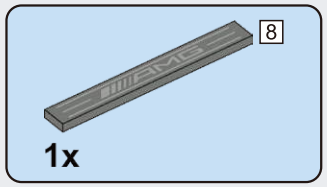

H67

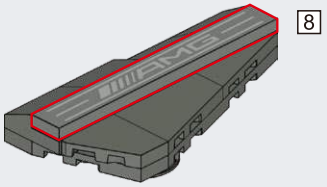

H68

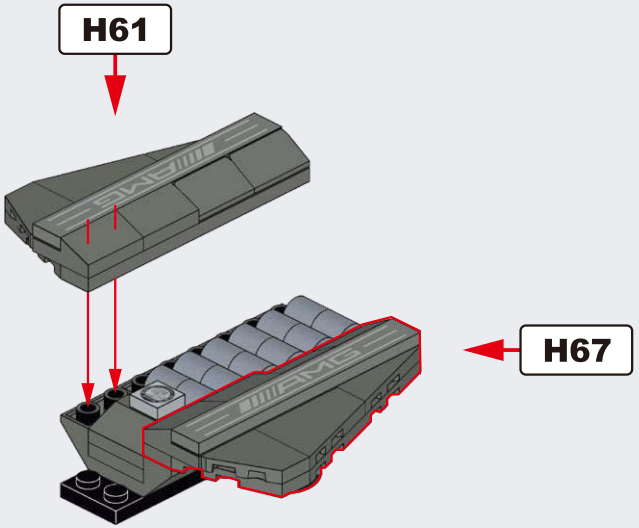

H69

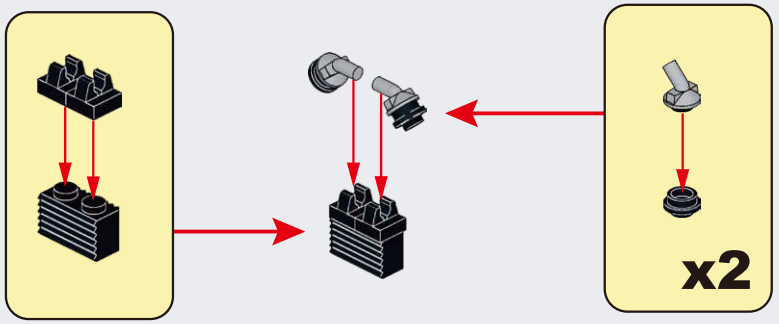

H70

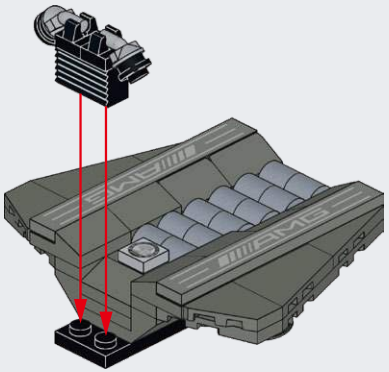

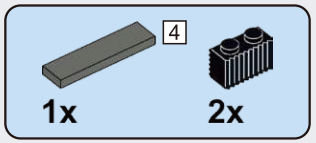

H71

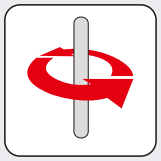

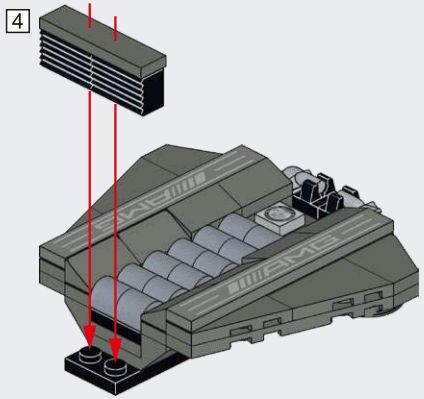

H72

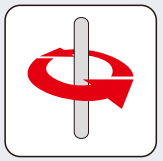

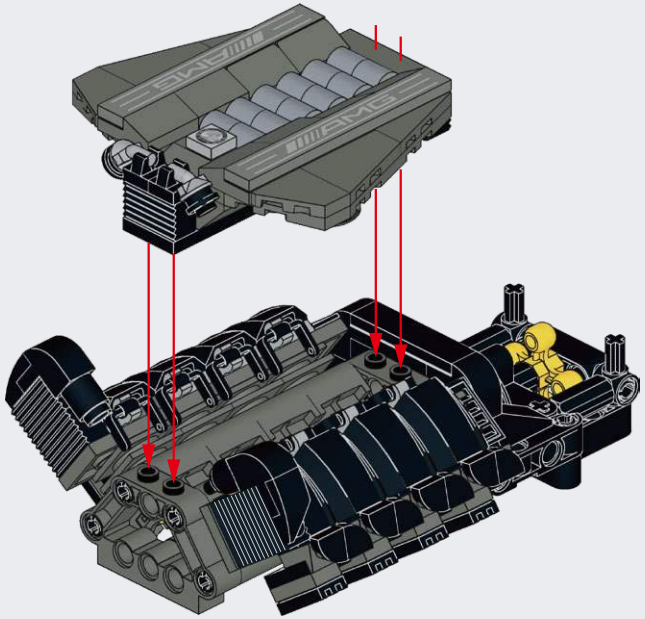

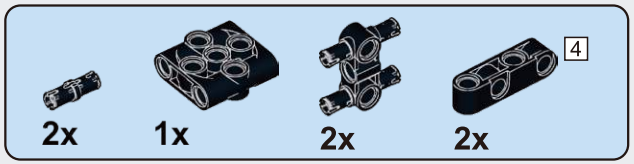

H73

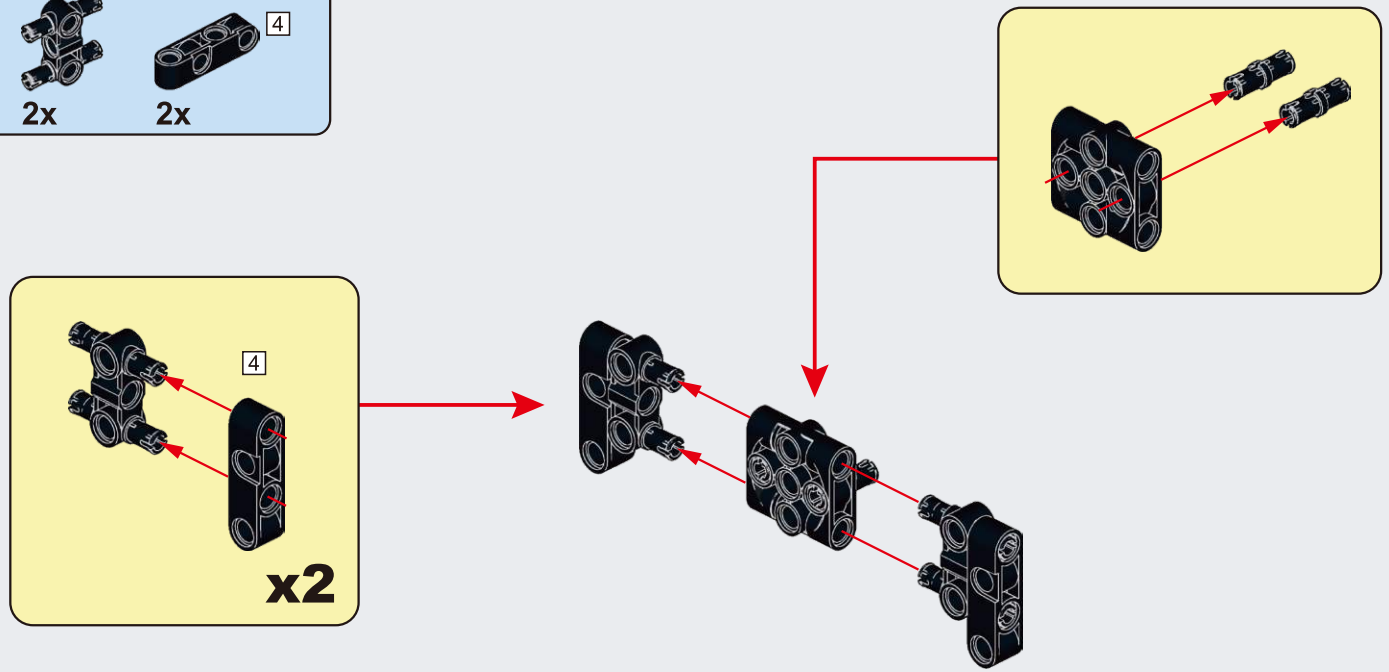

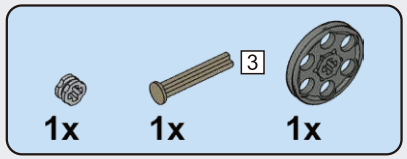

H74

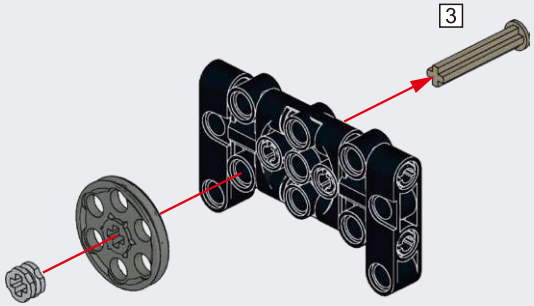

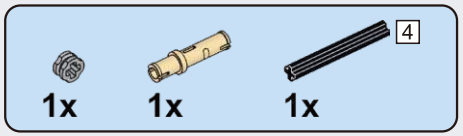

H75

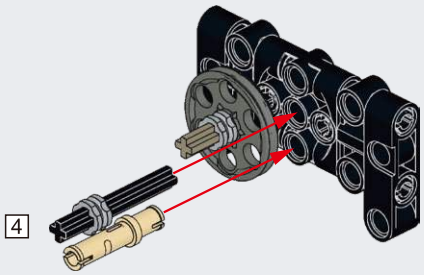

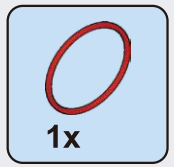

H76

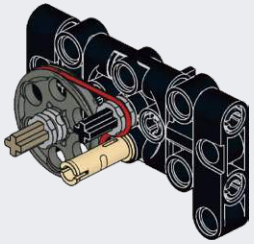

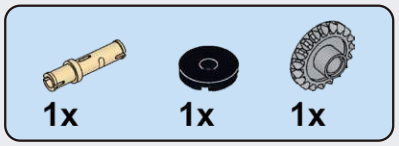

H77

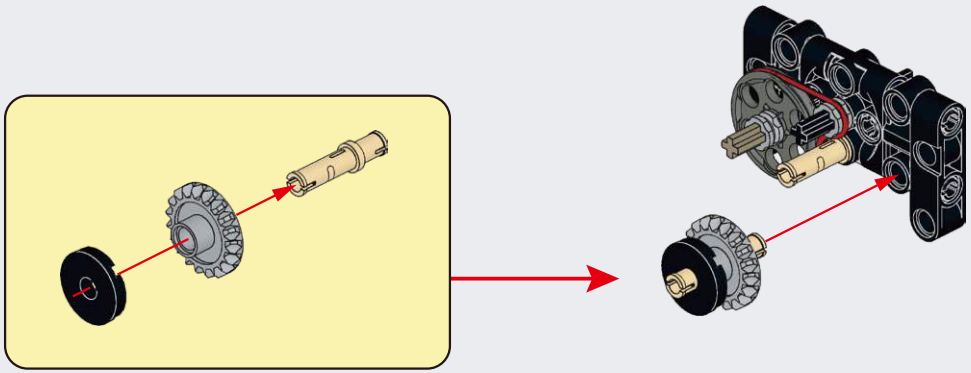

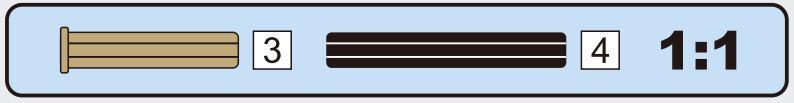

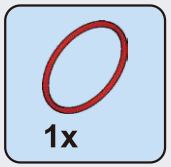

H78

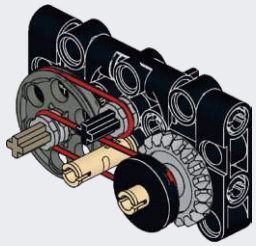

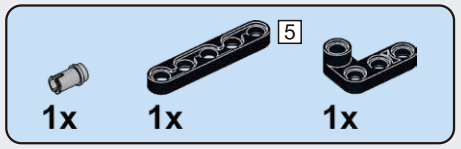

H79

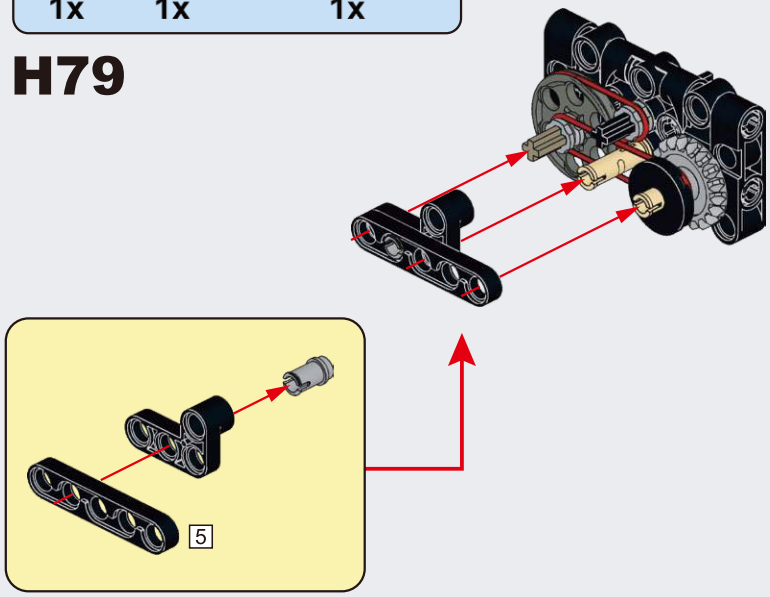

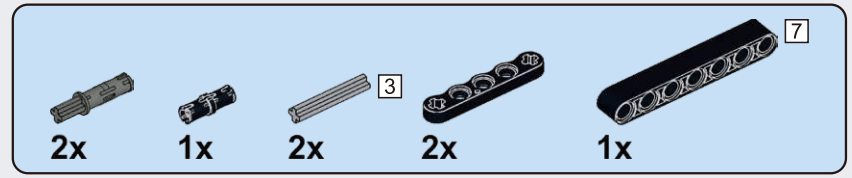

H80

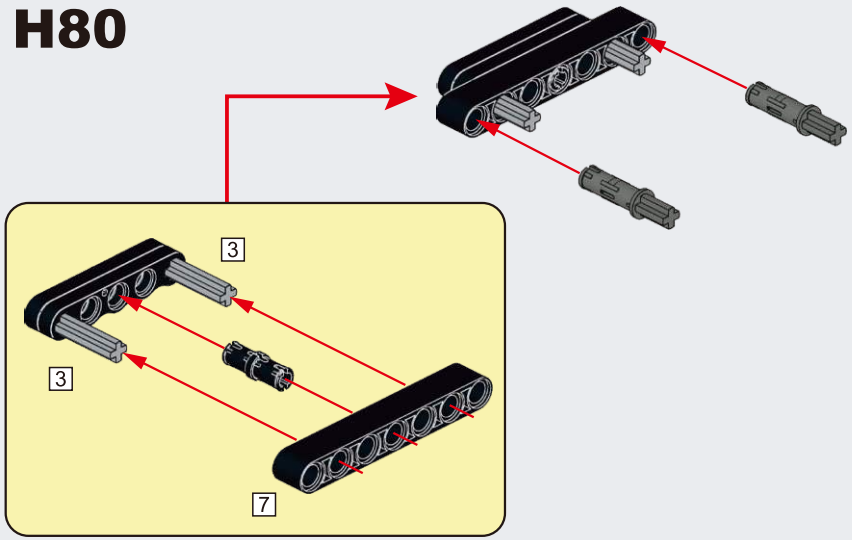

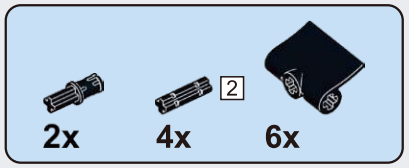

H81

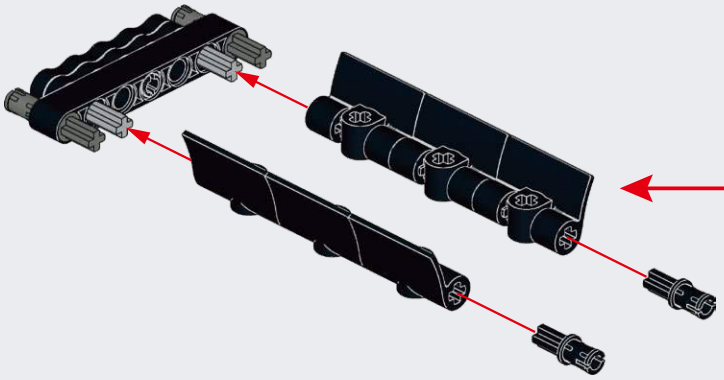

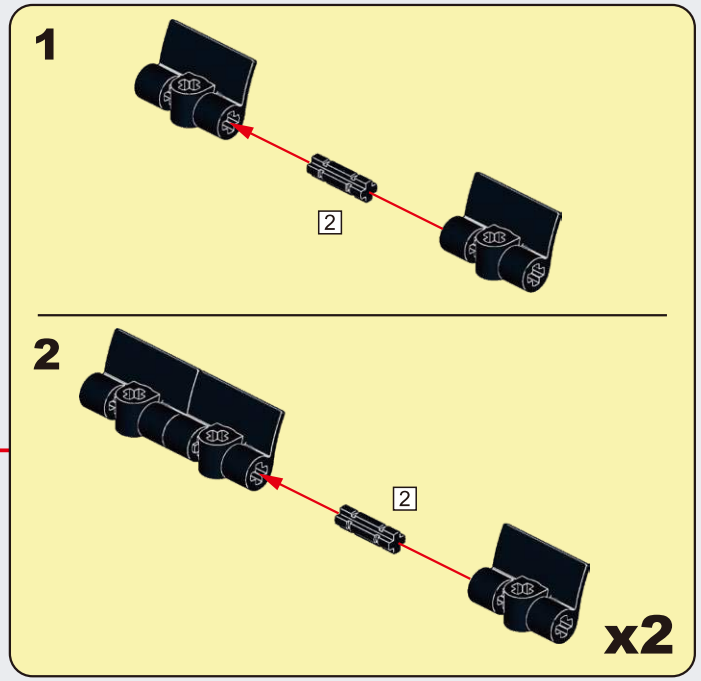

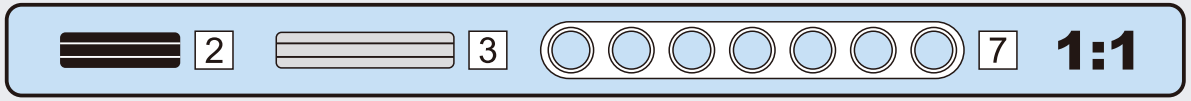

H82

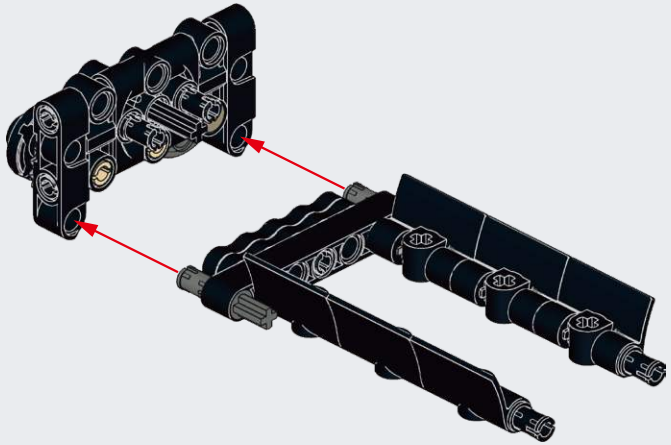

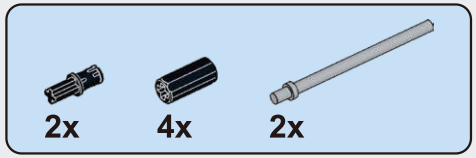

H83

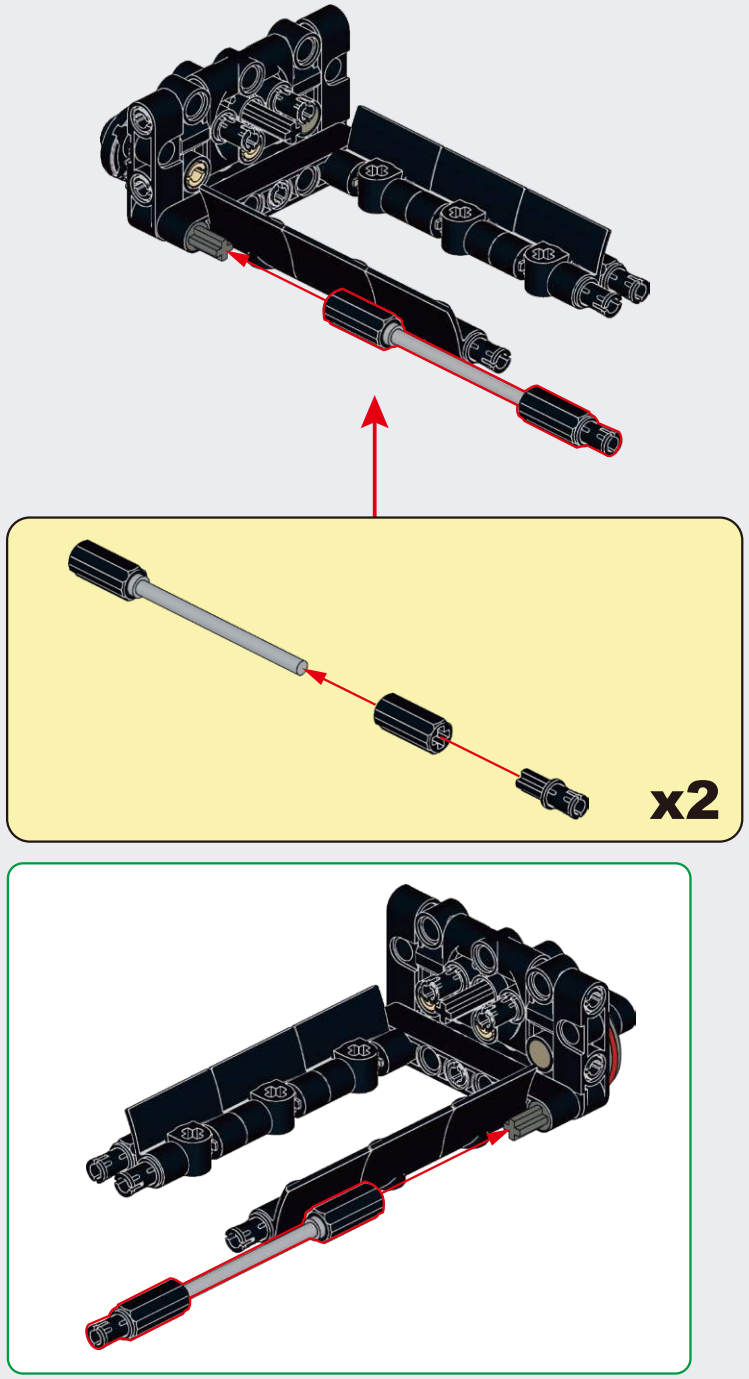

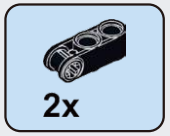

H84

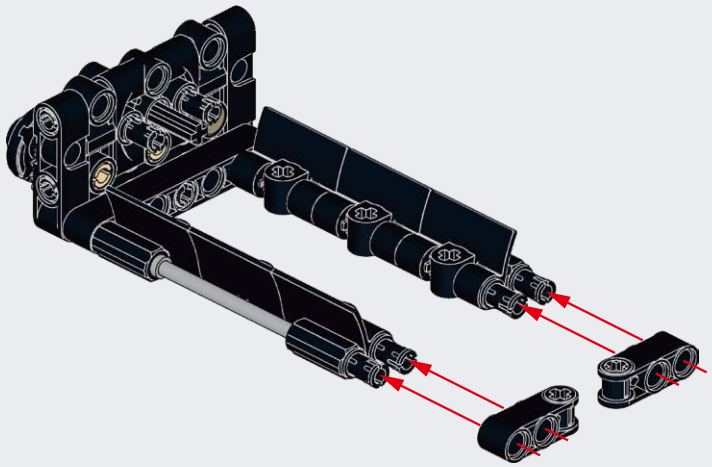

H85

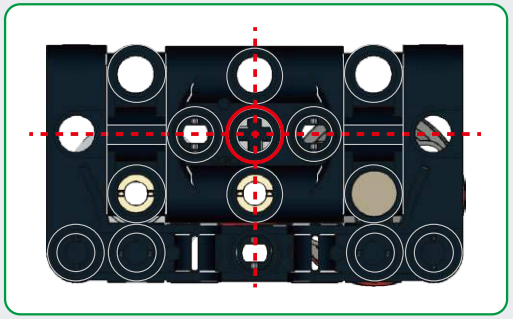

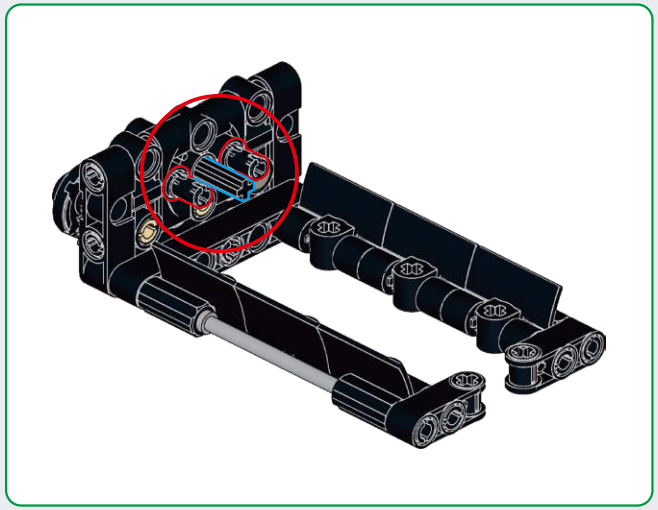

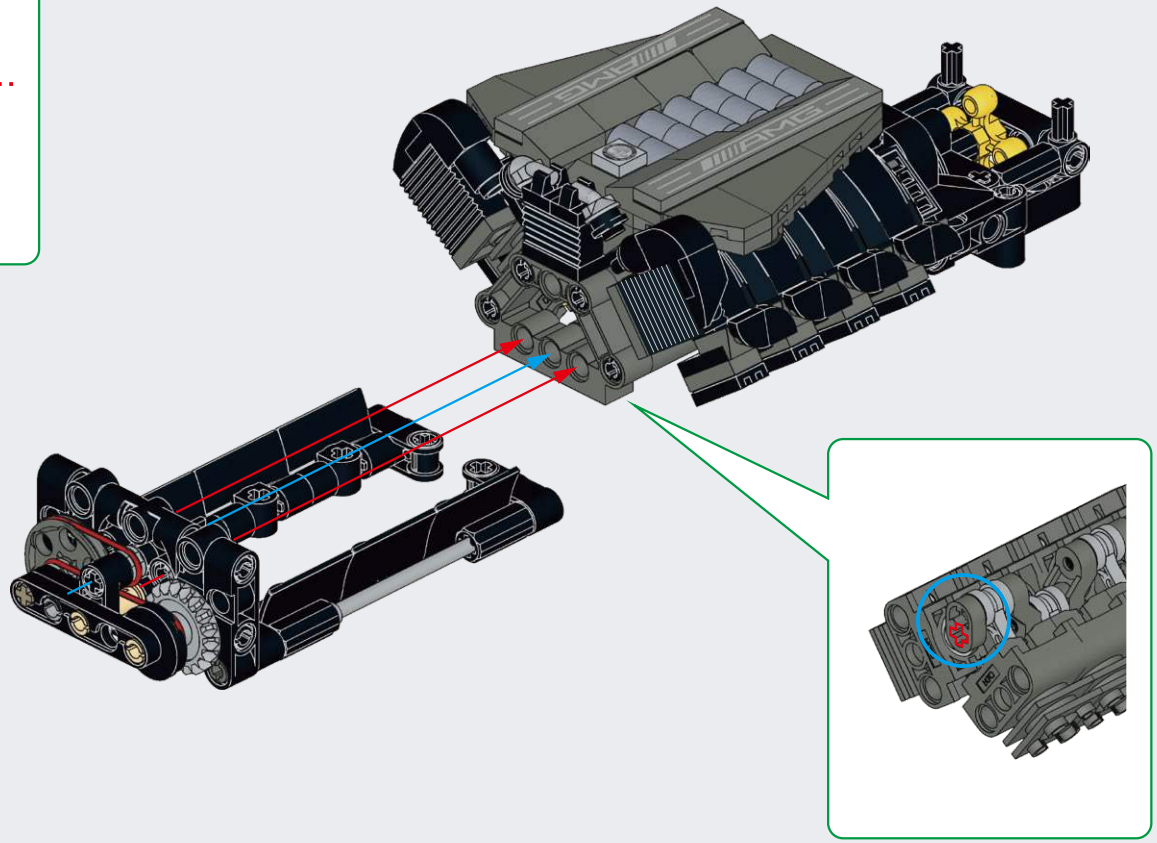

2x

H86

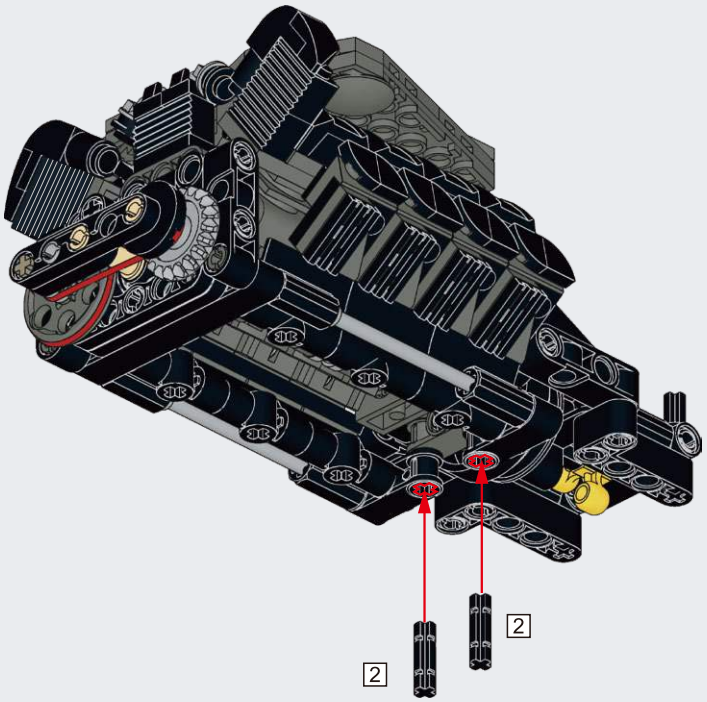

6x

H87

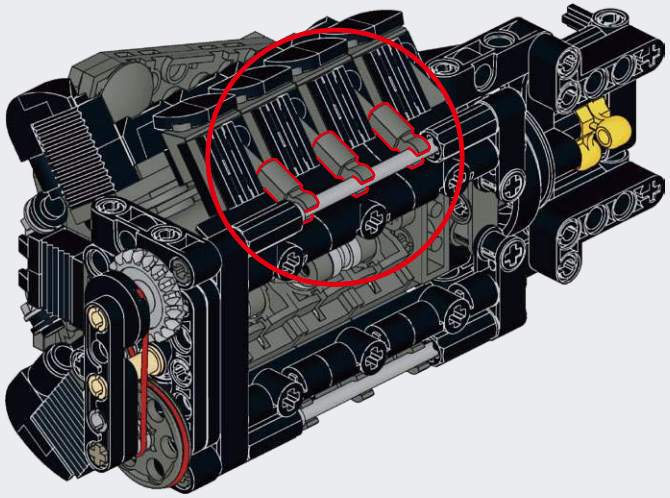

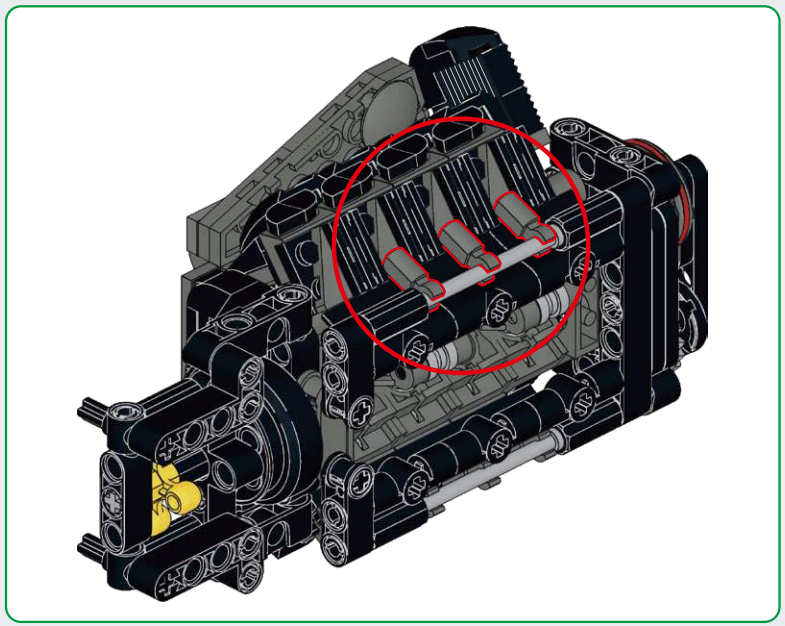

2 1:1

H88

H89

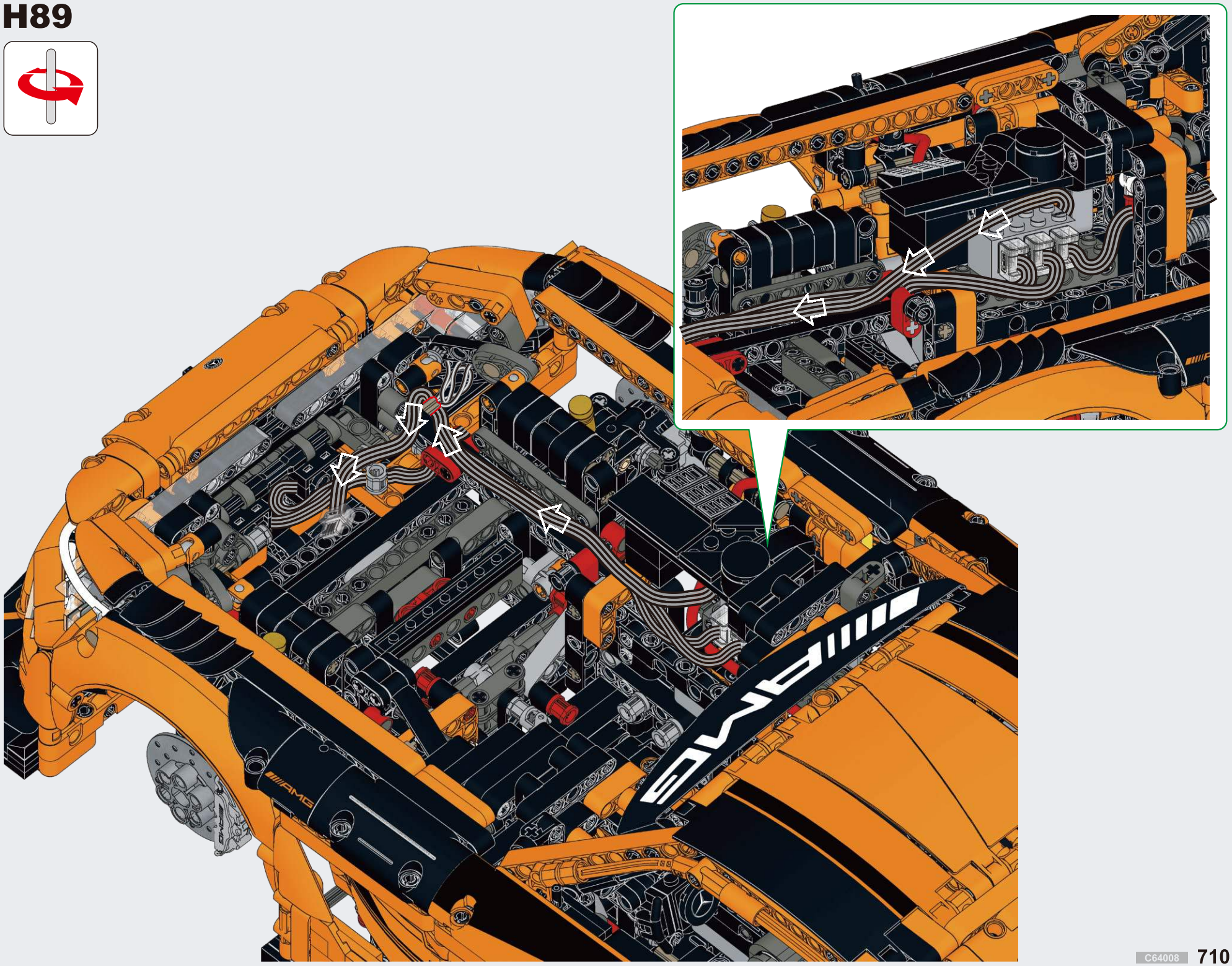

H90

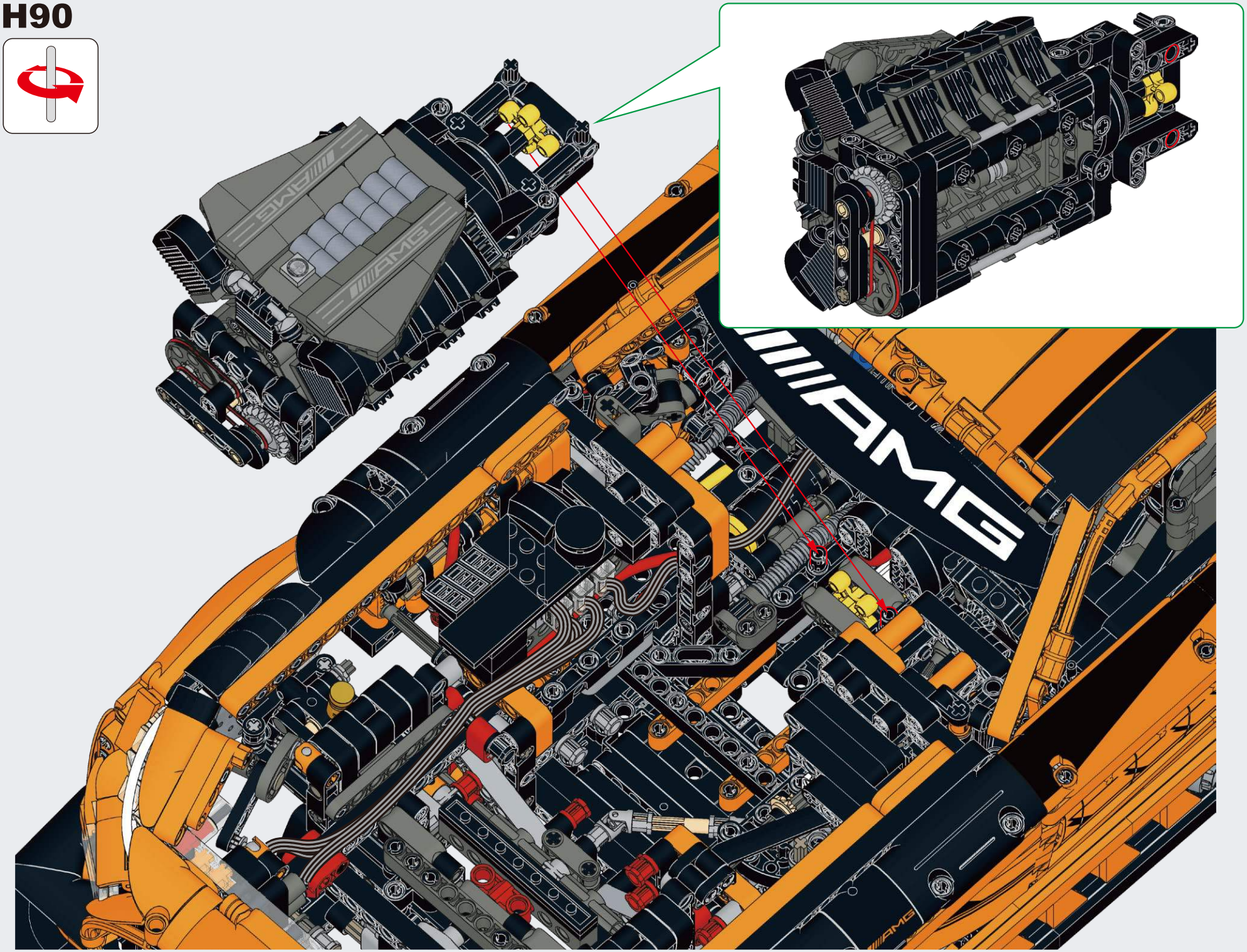

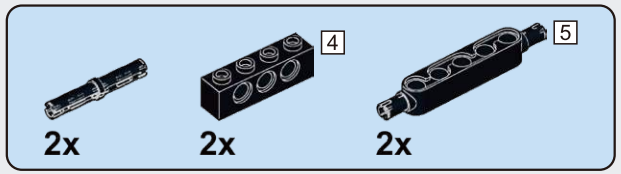

H91

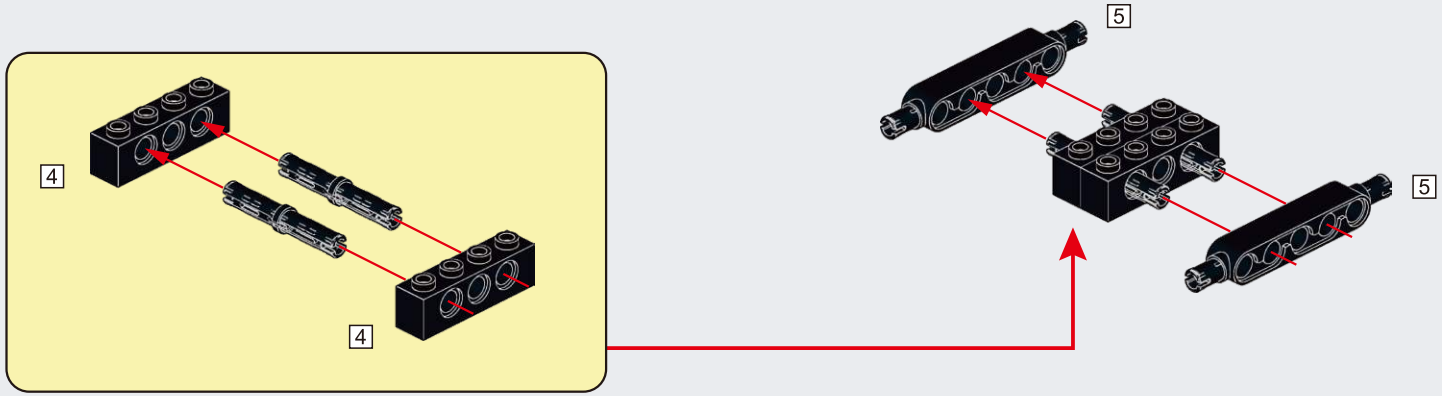

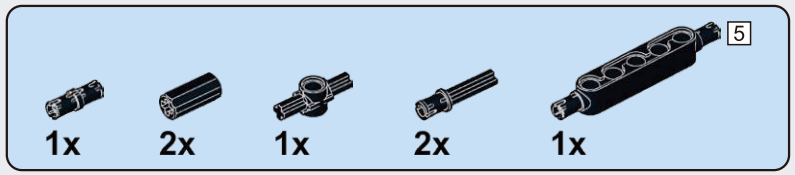

H92

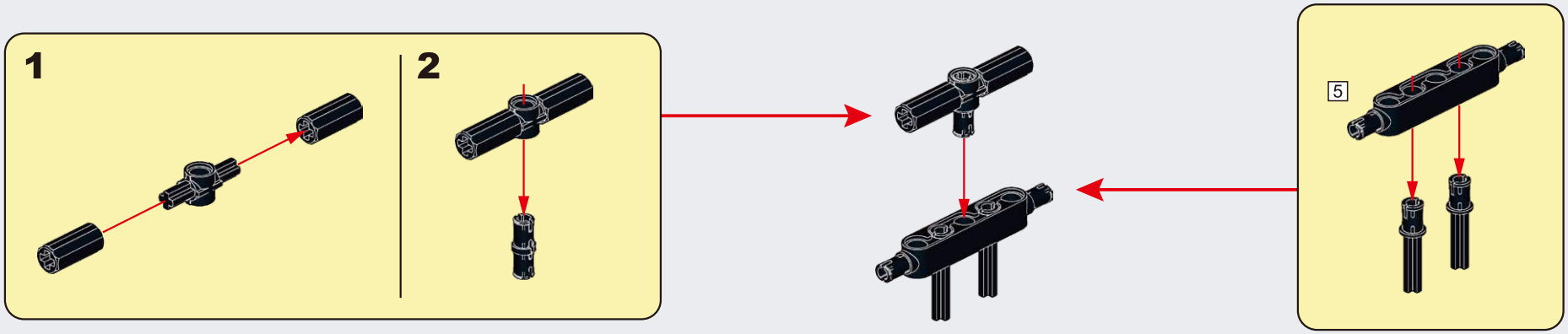

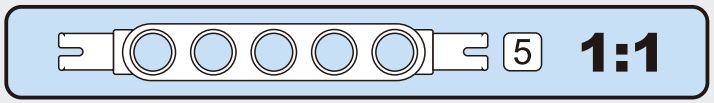

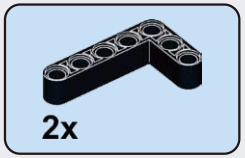

H93

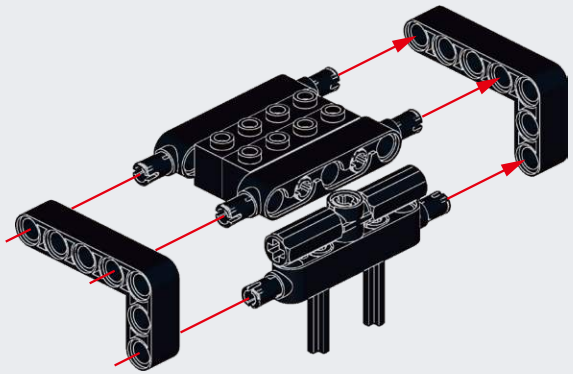

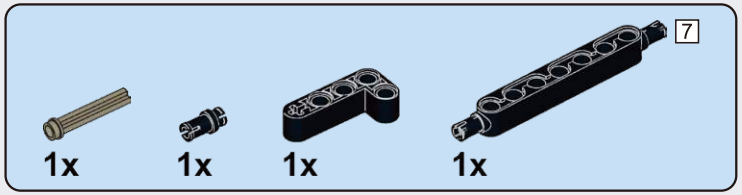

H94

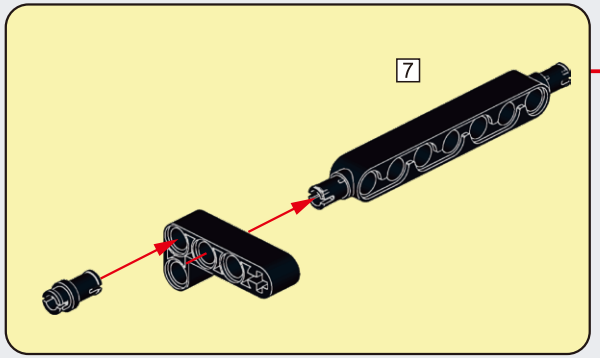

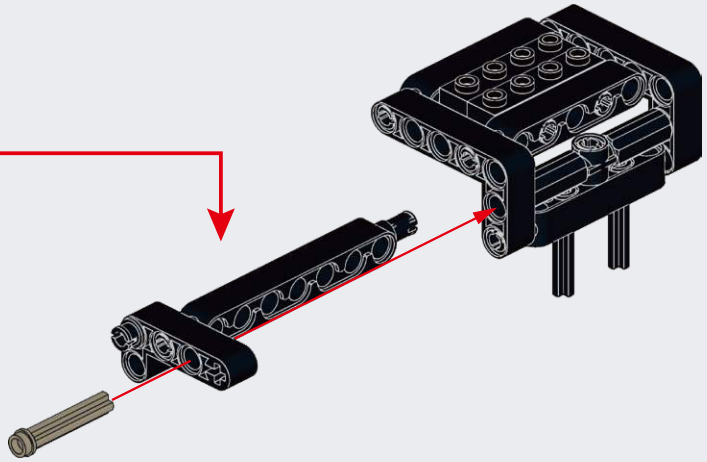

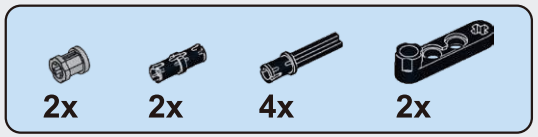

H95

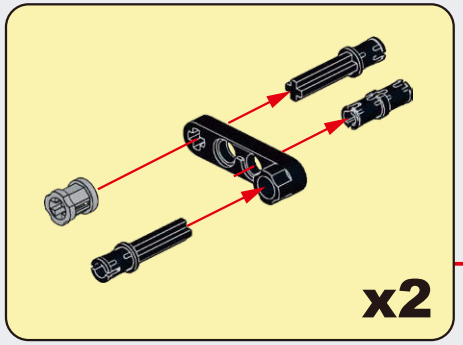

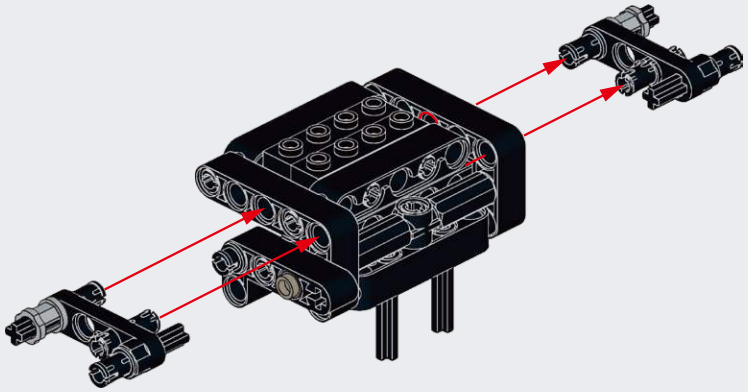

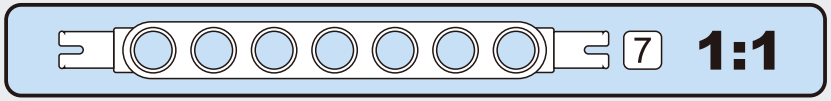

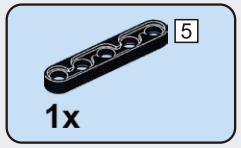

H96

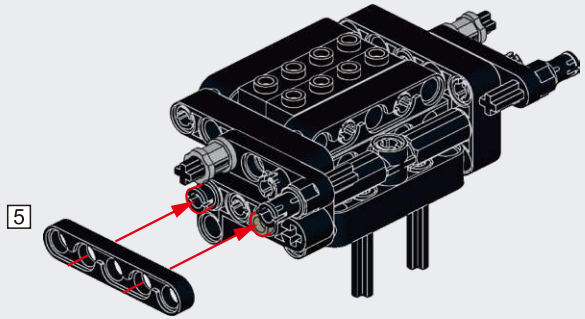

H97

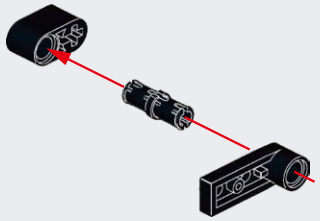

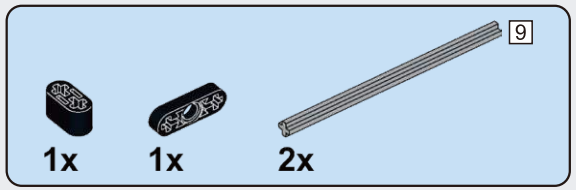

H98

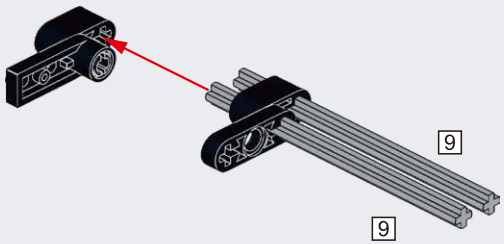

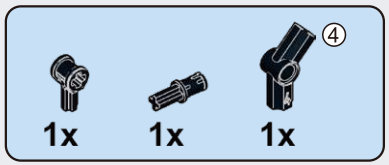

H99

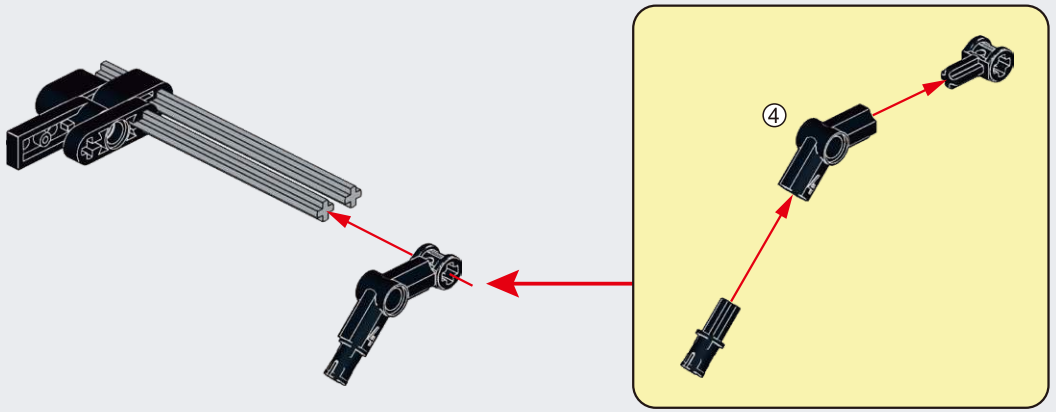

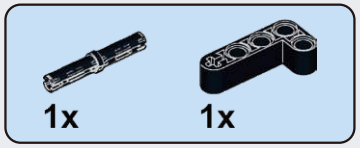

H100

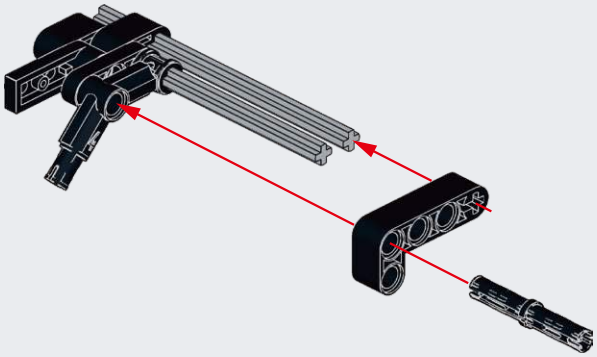

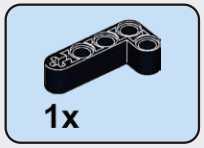

H101

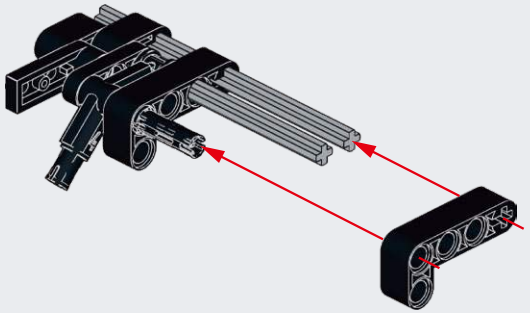

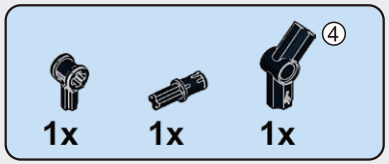

H102

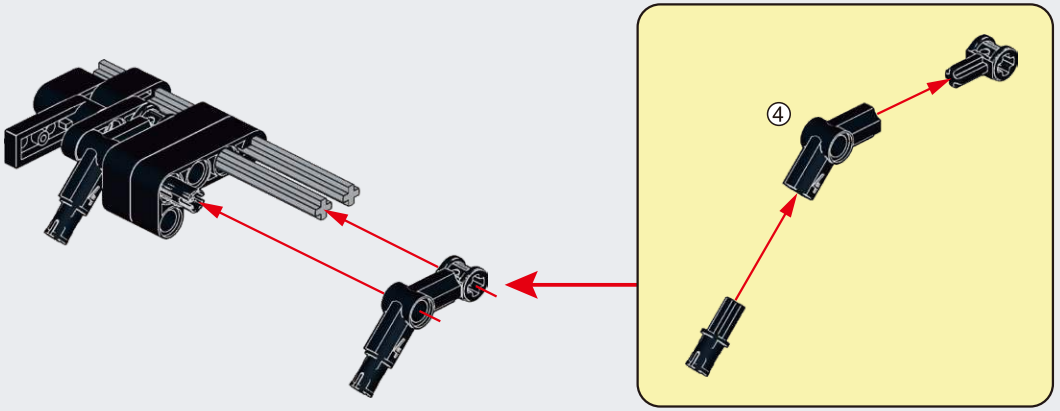

H103

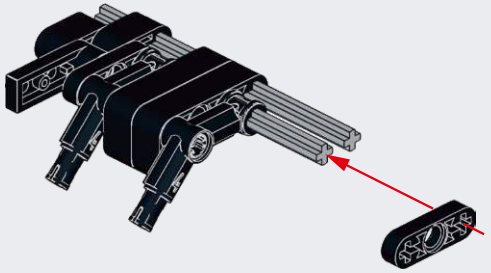

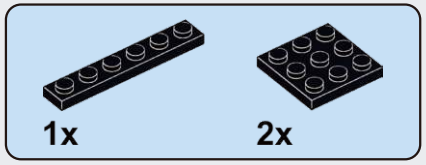

H104

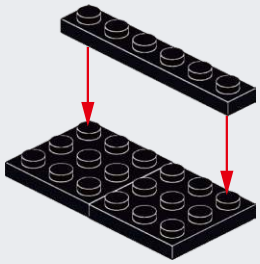

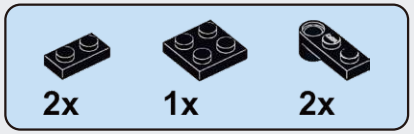

H105

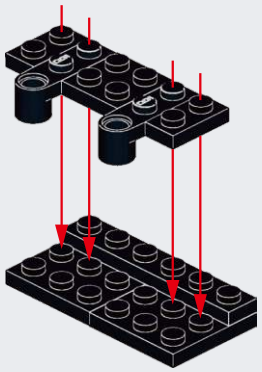

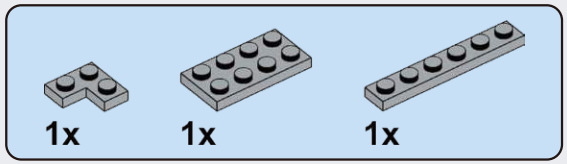

H106

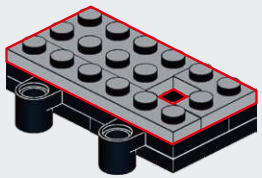

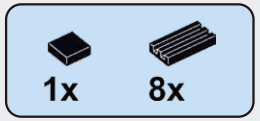

H107

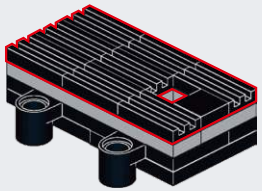

H108

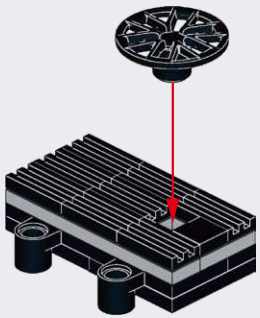

H109

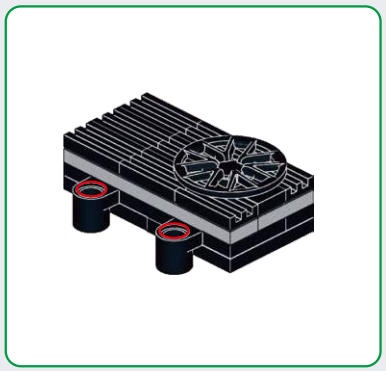

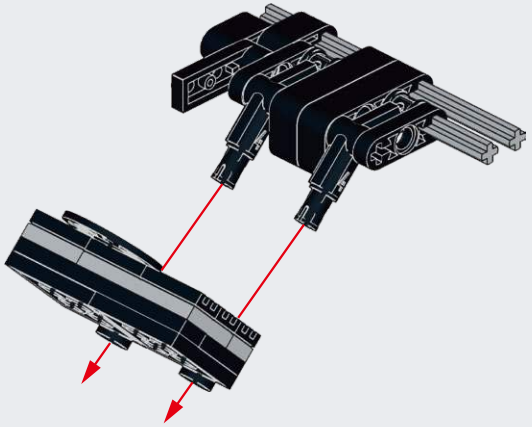

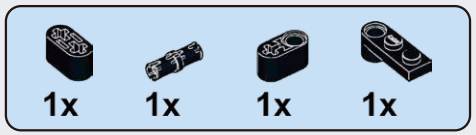

H110

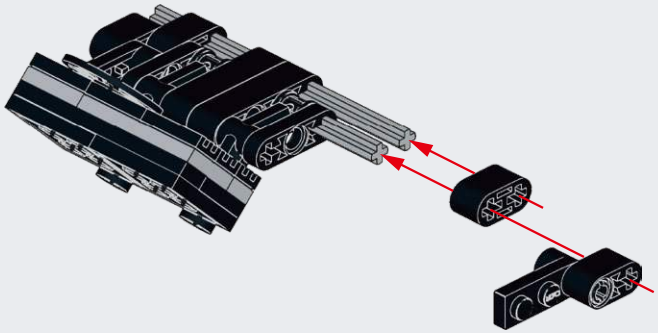

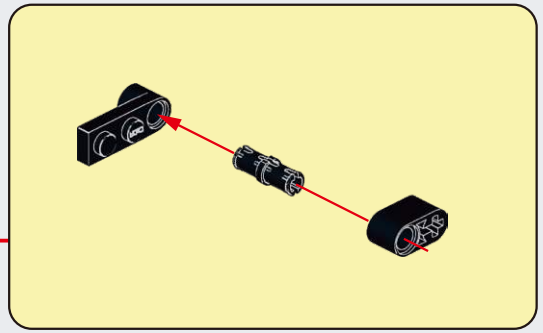

H111

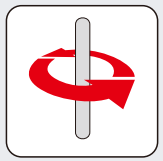

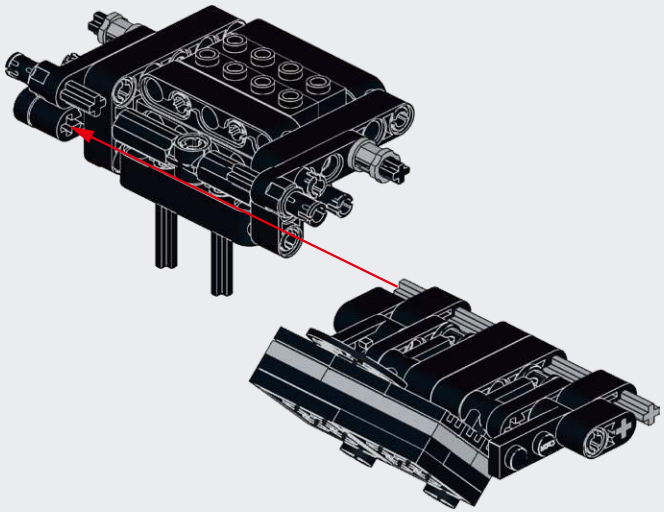

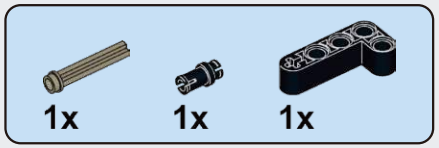

H112

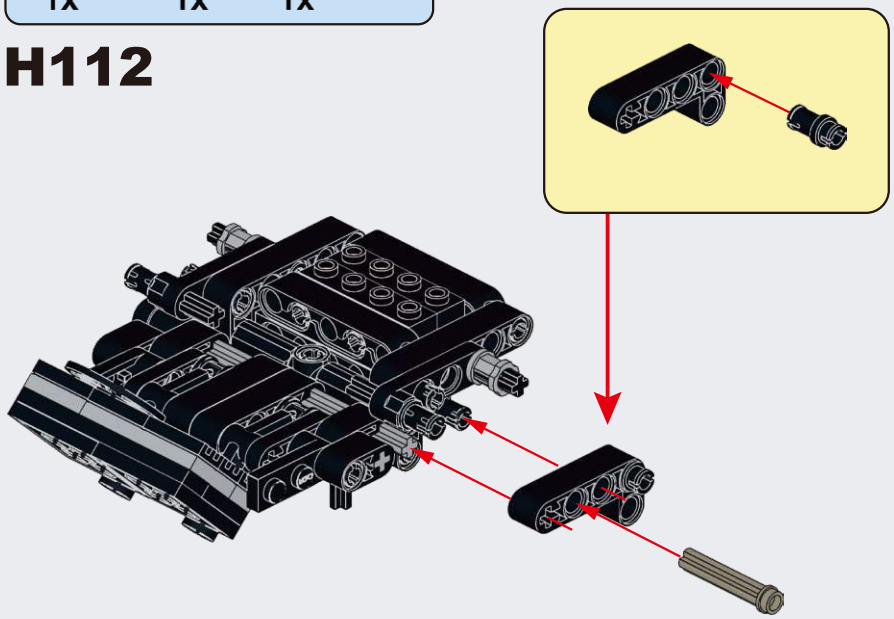

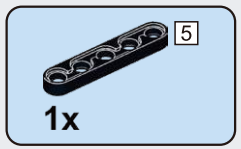

H113

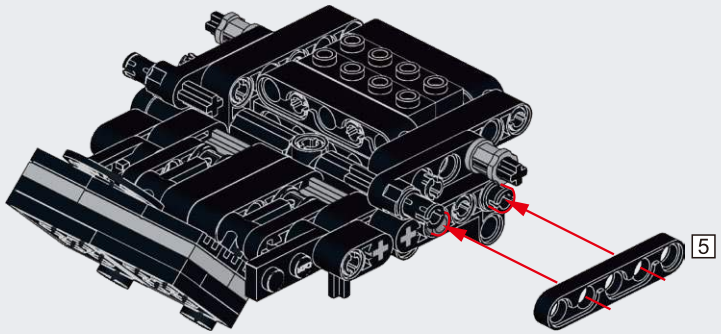

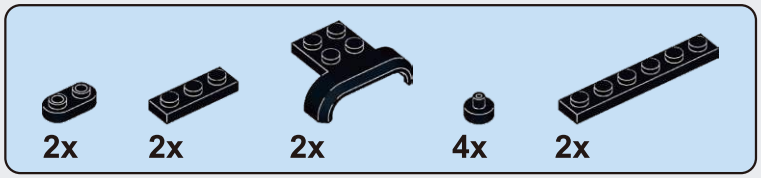

H114

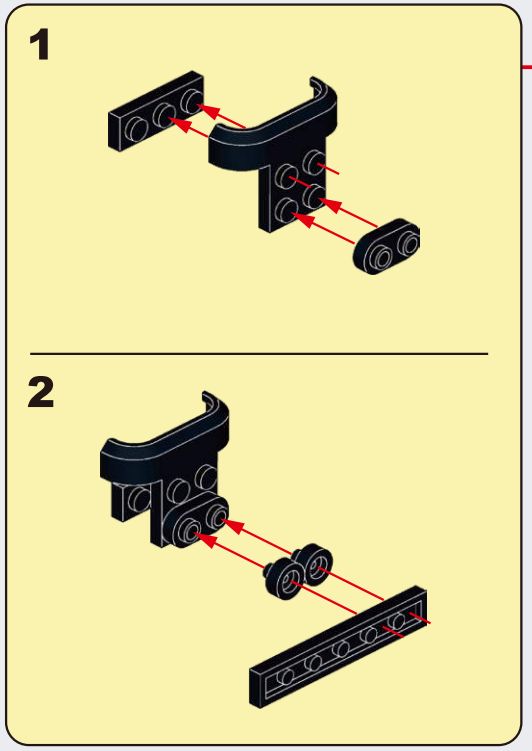

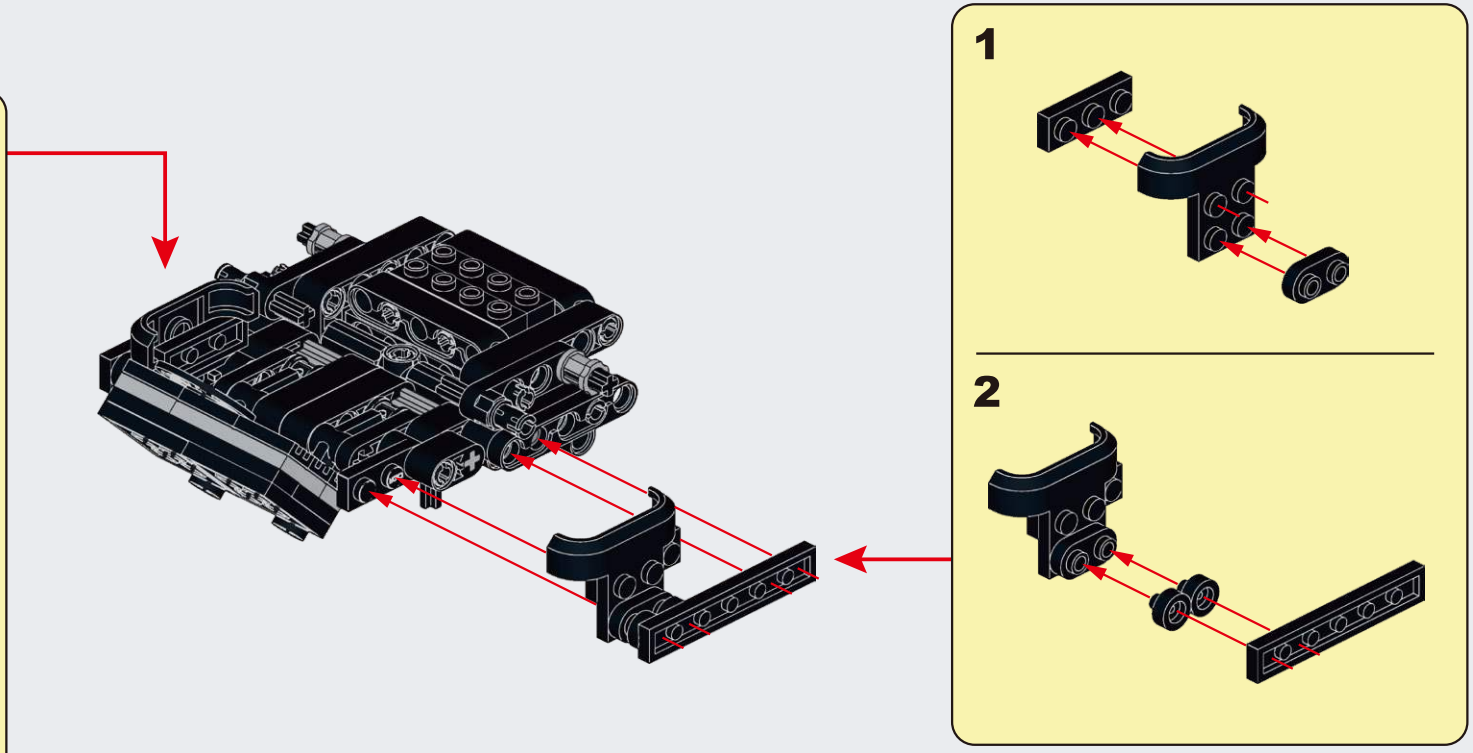

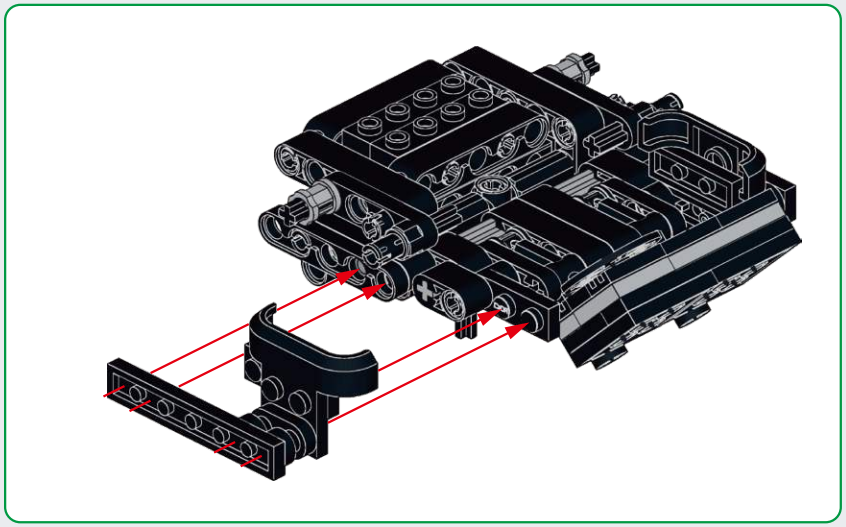

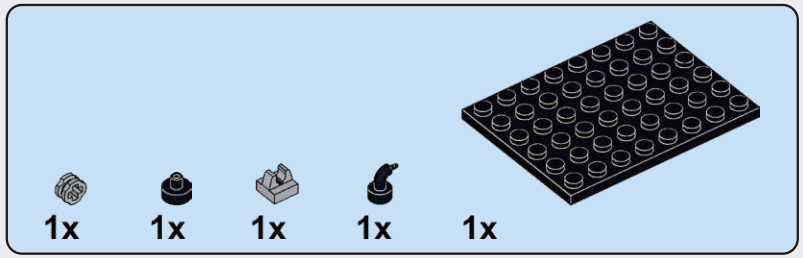

H115

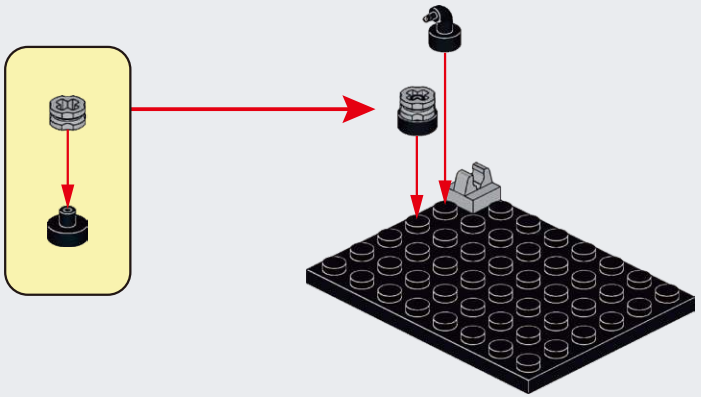

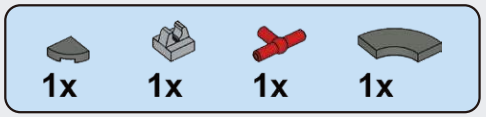

H116

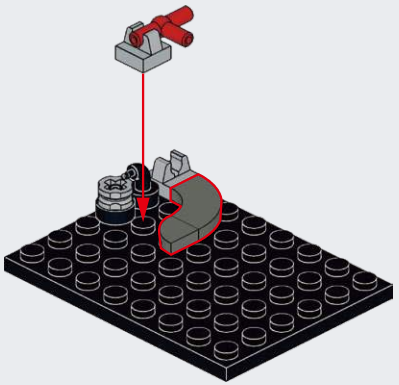

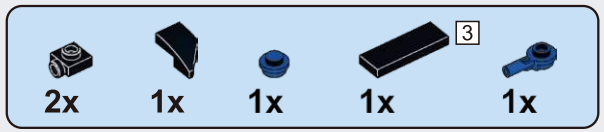

H117

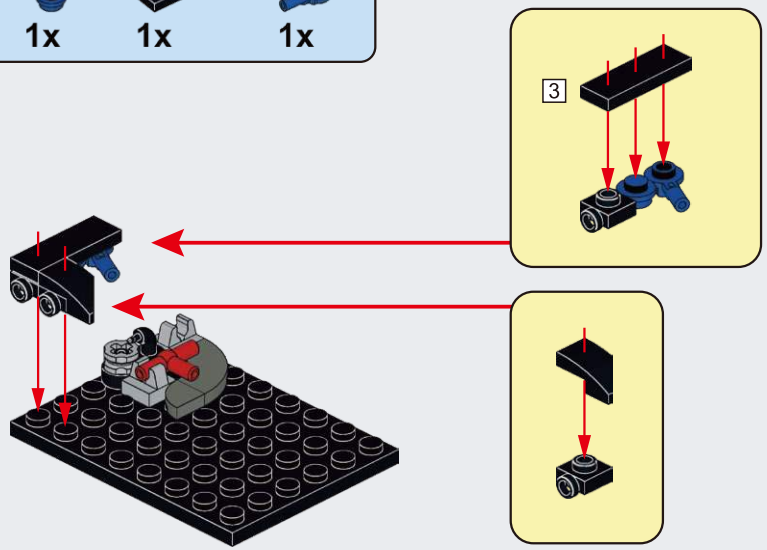

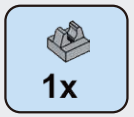

H118

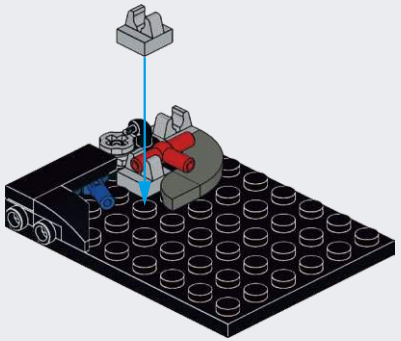

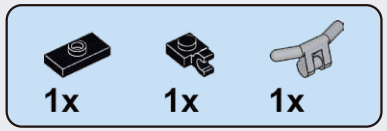

H119

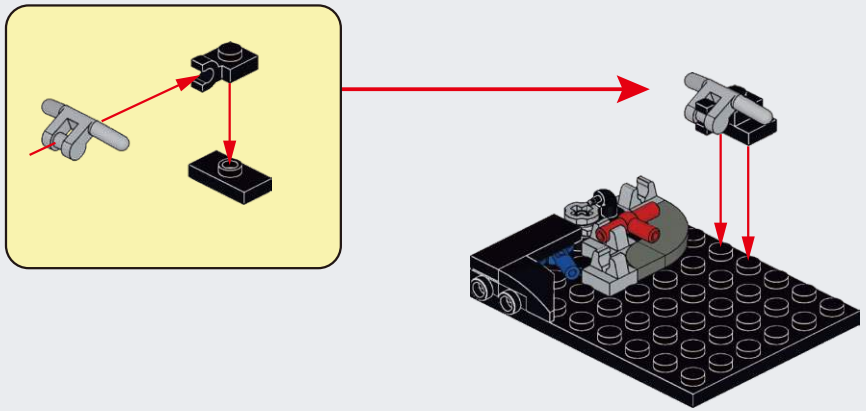

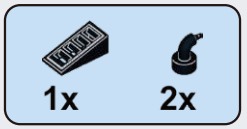

H120

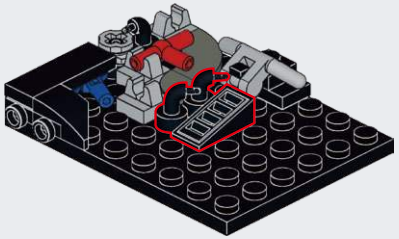

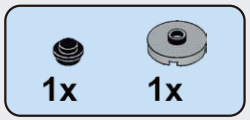

H121

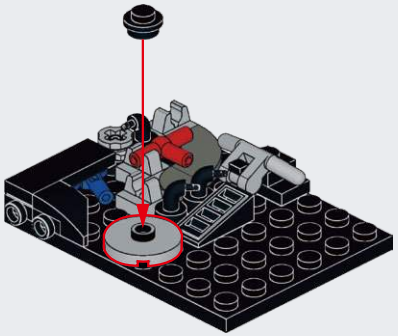

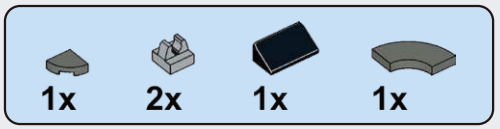

H122

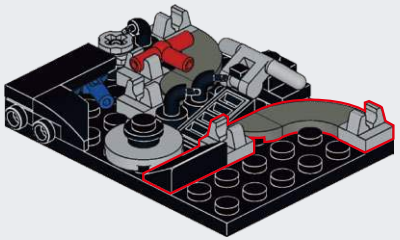

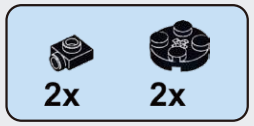

H123

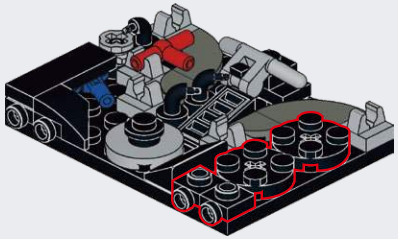

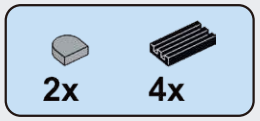

H124

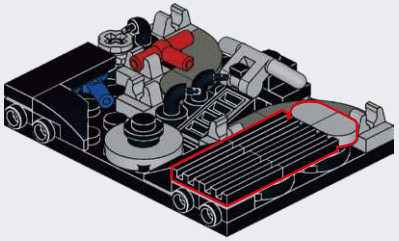

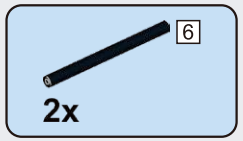

H125

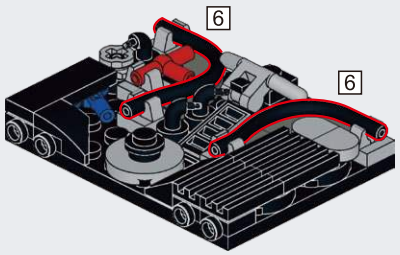

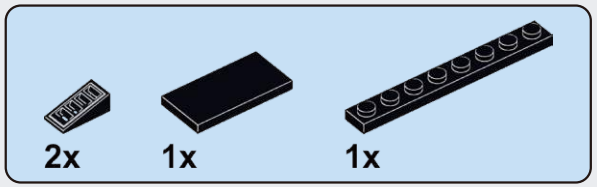

H126

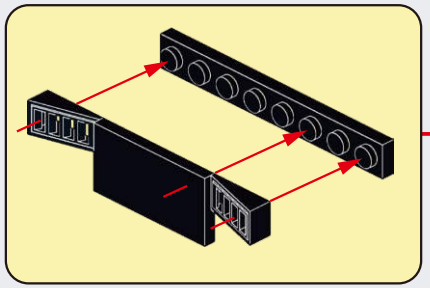

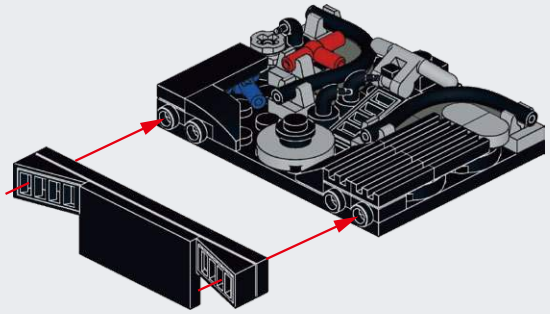

H127

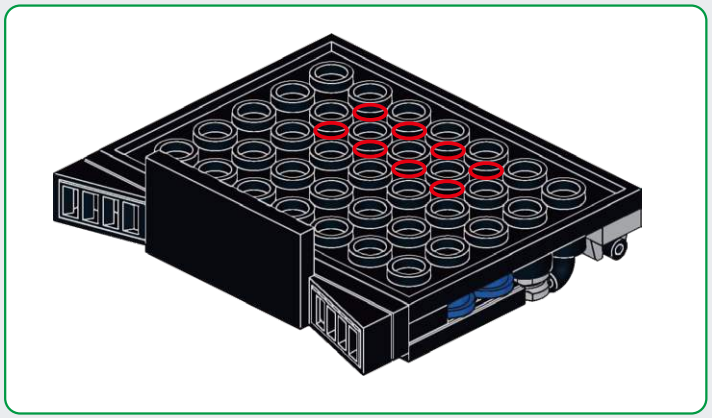

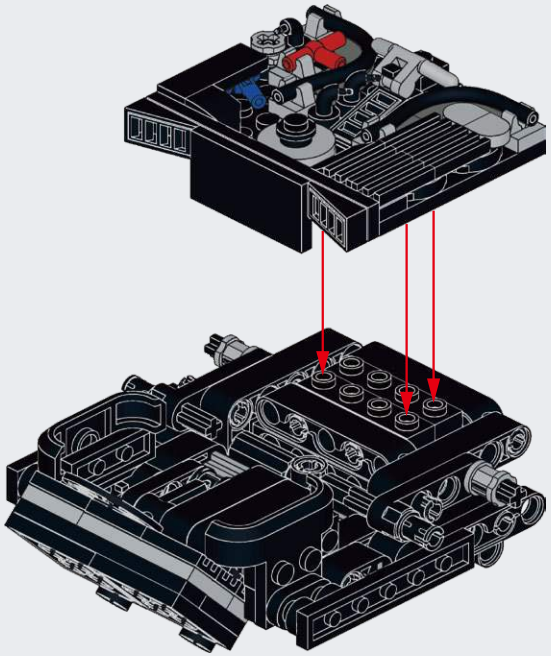

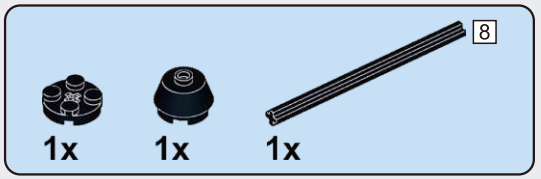

H128

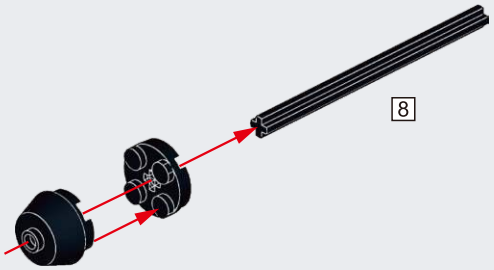

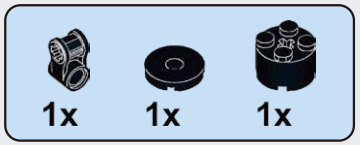

H129

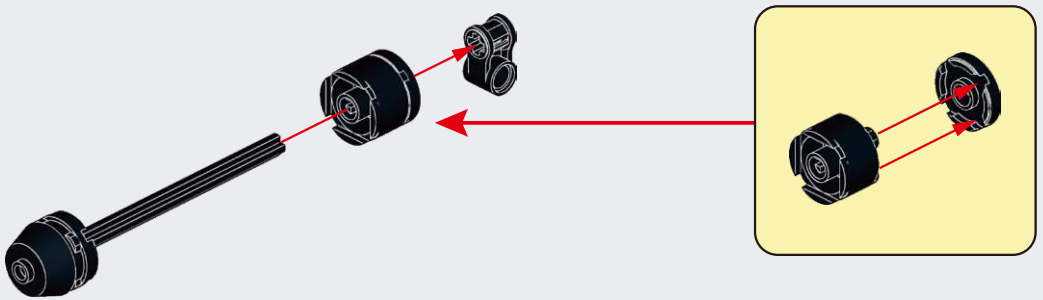

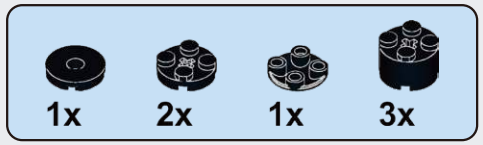

H130

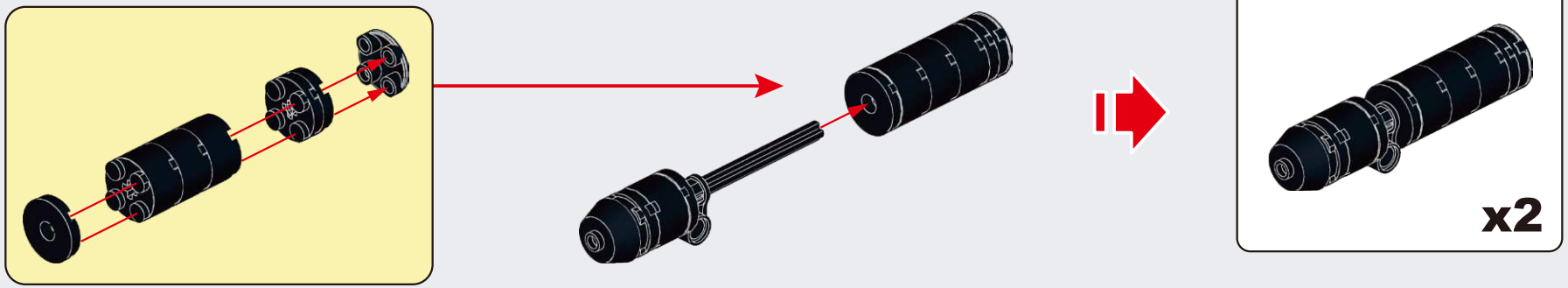

H131

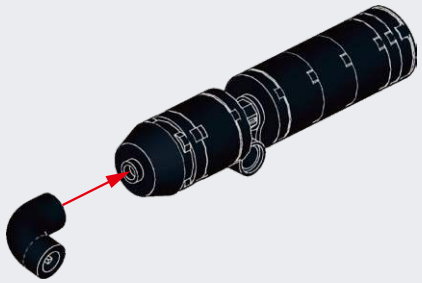

H132

H133

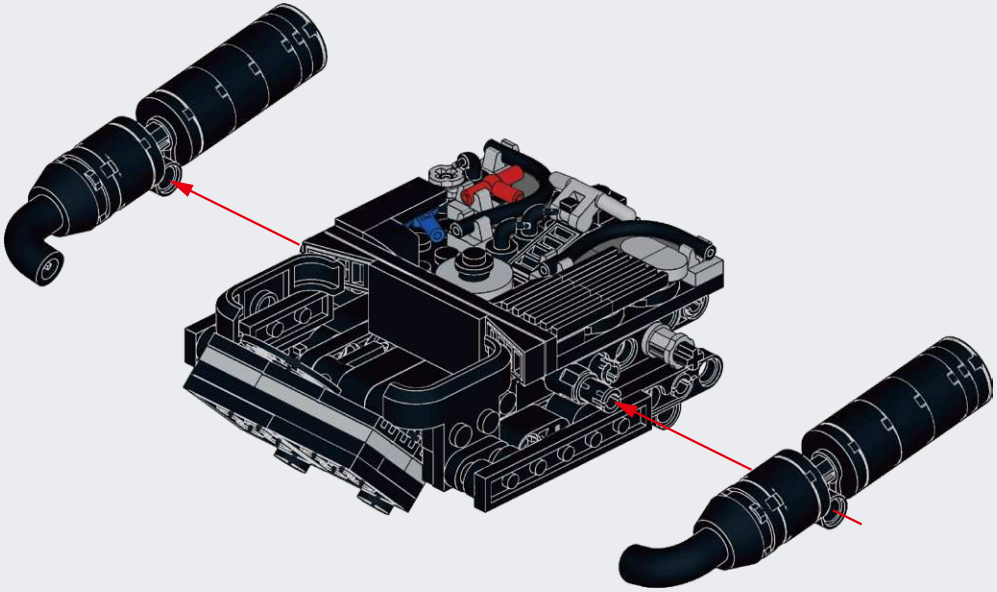

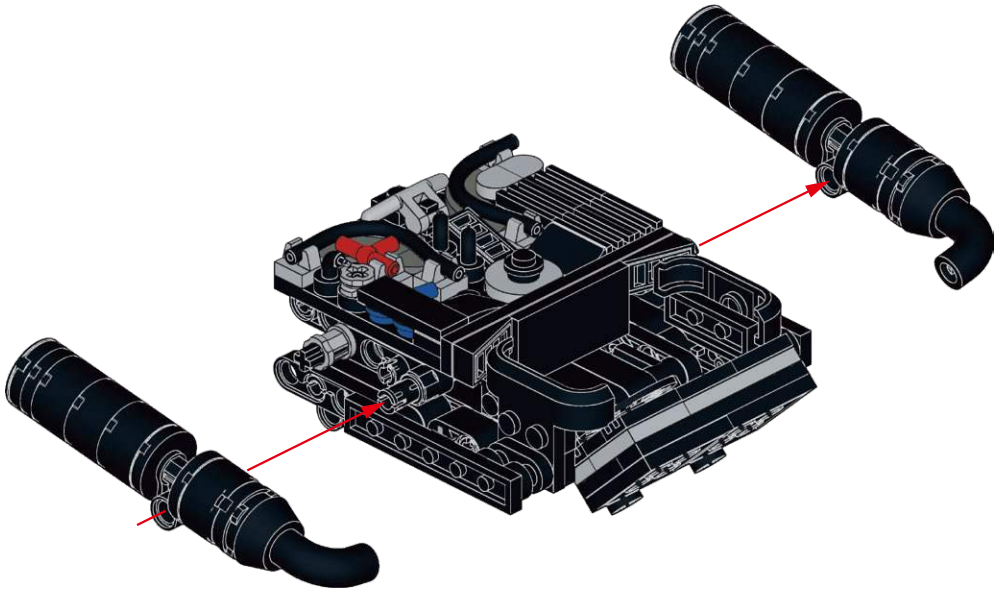

H134

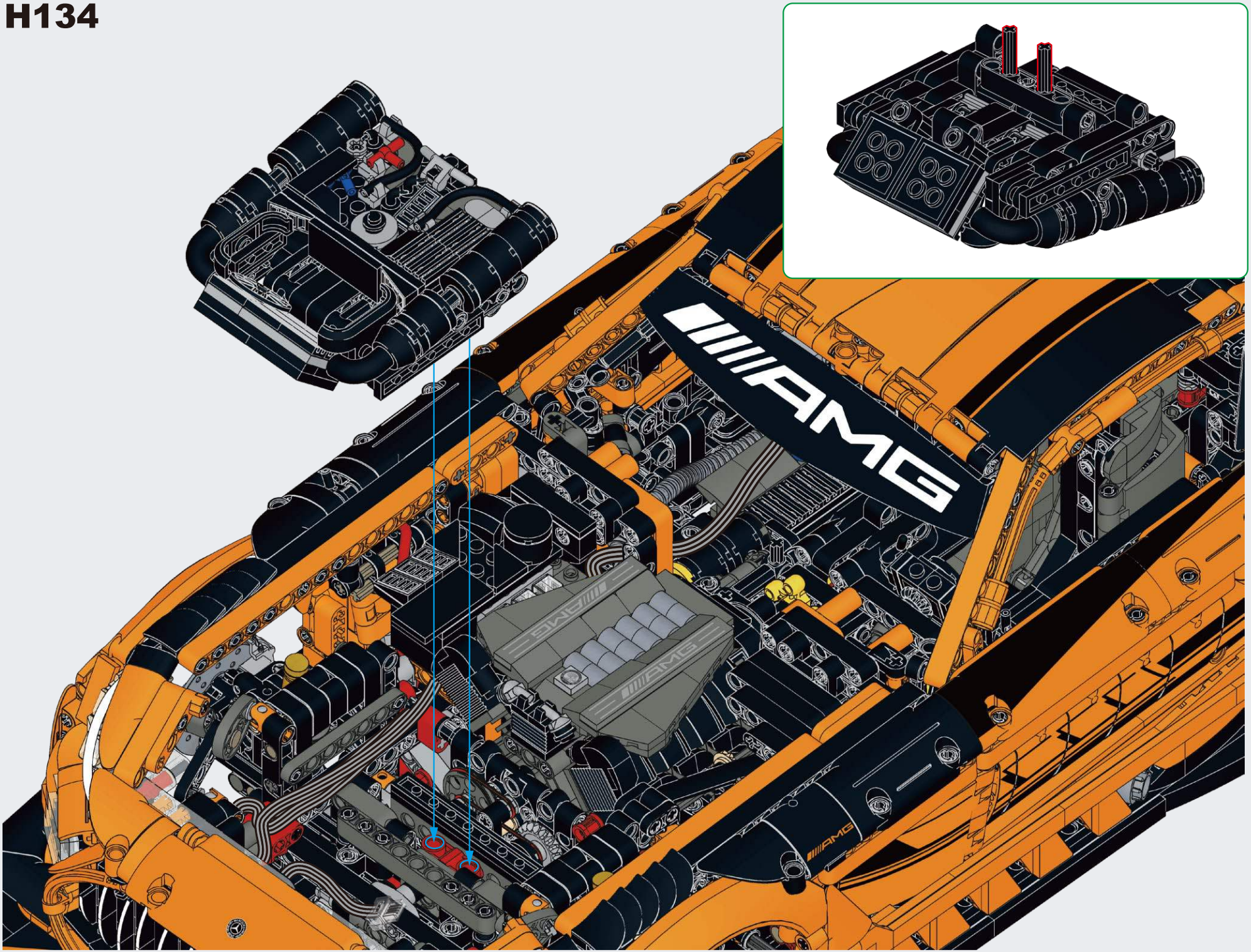

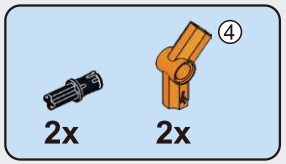

H135

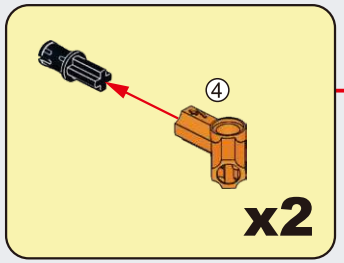

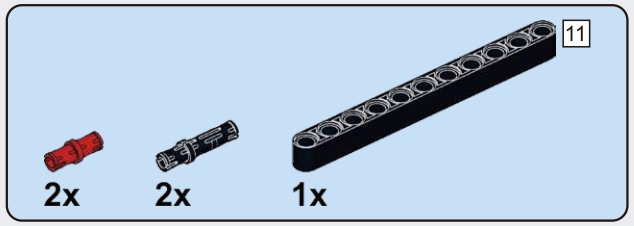

H136

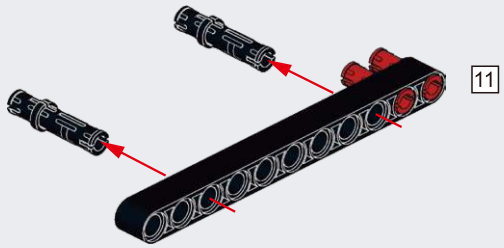

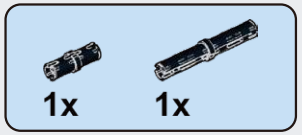

H137

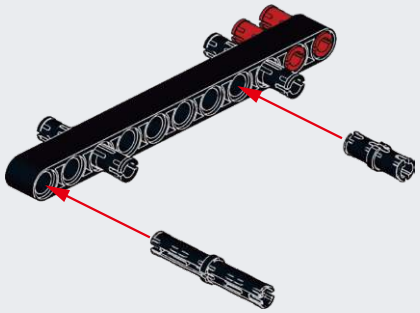

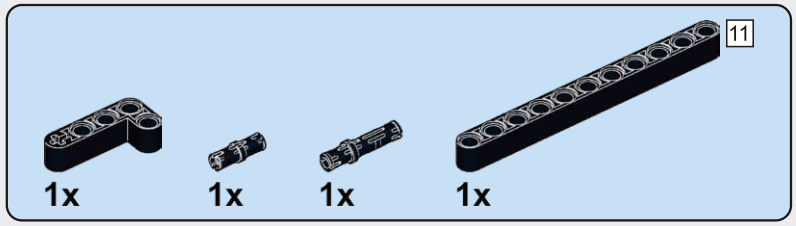

H138

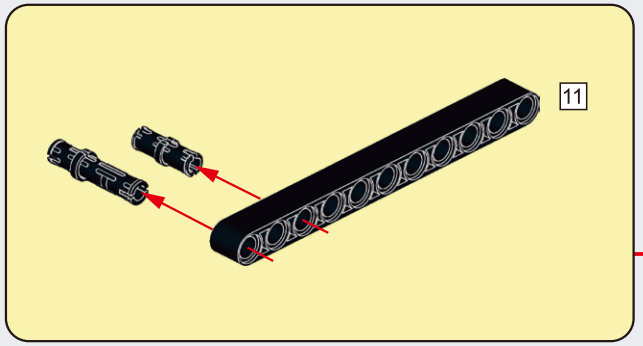

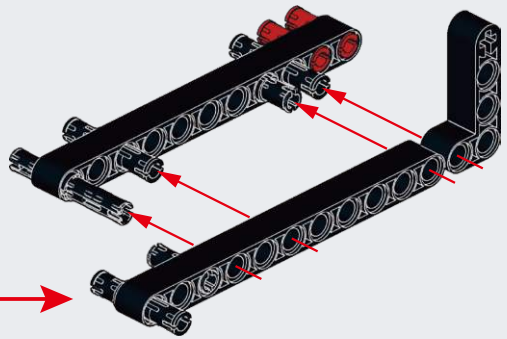

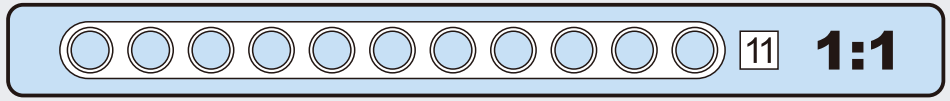

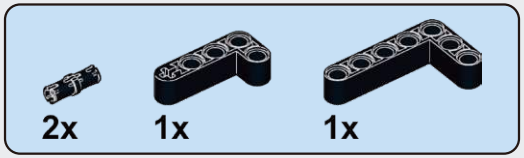

H139

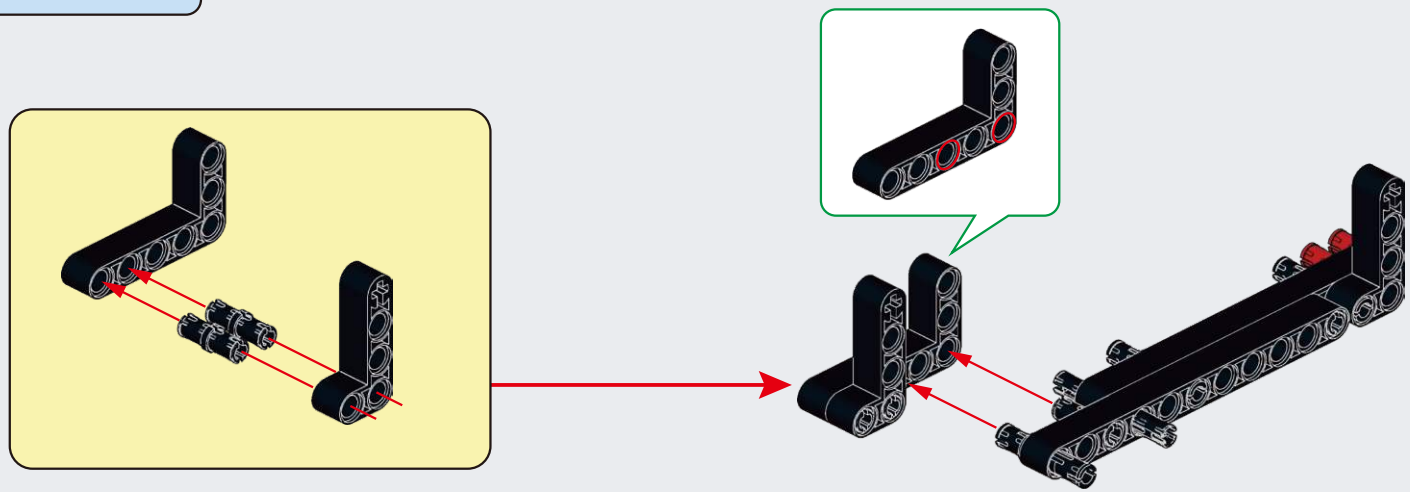

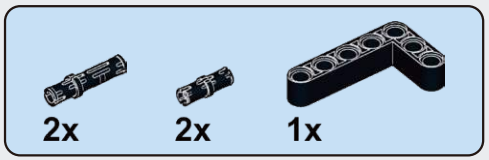

H140

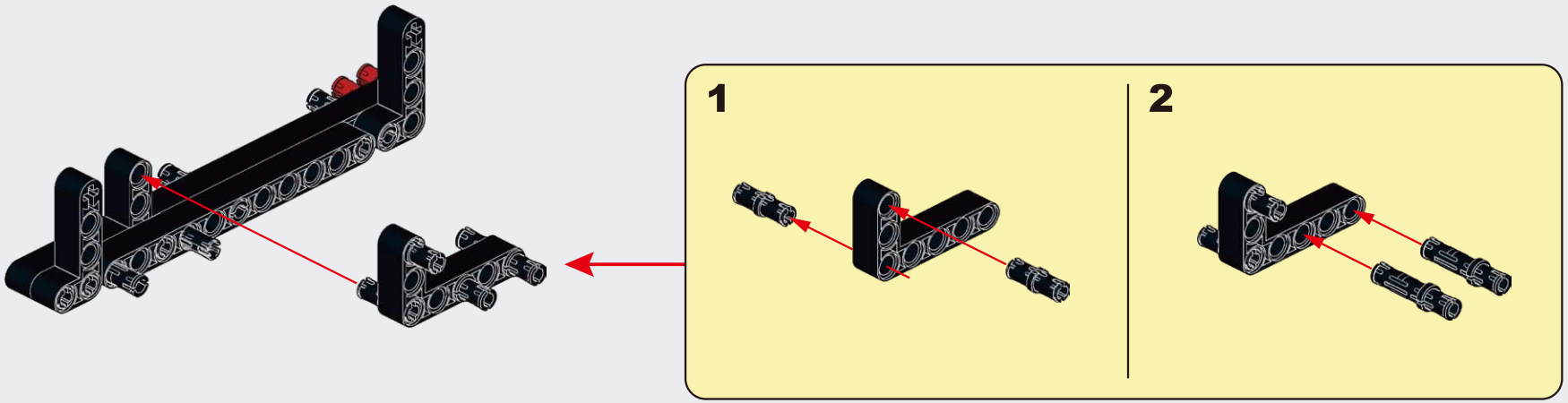

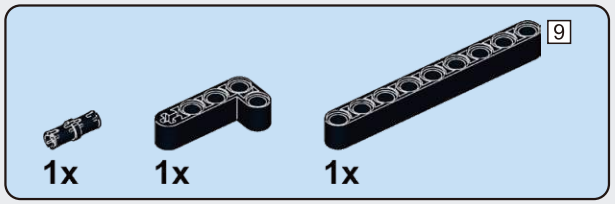

H141

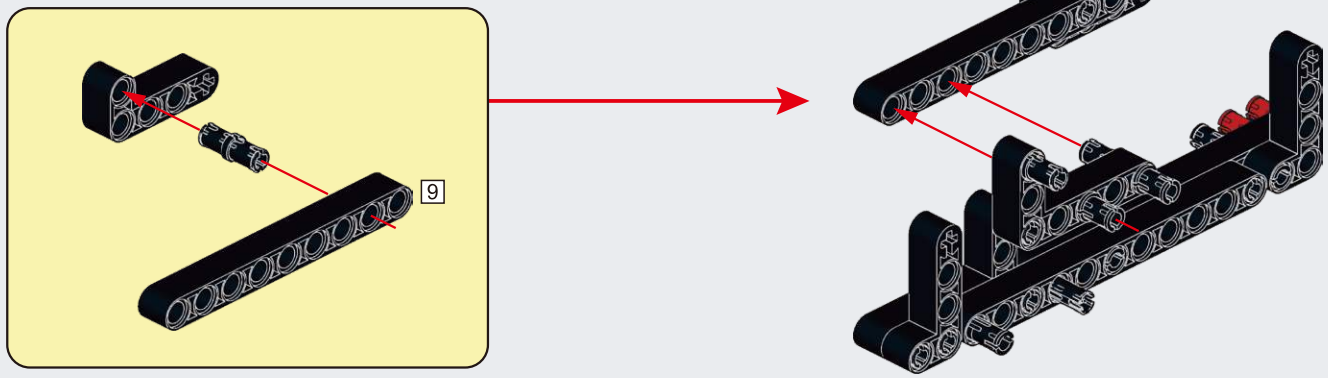

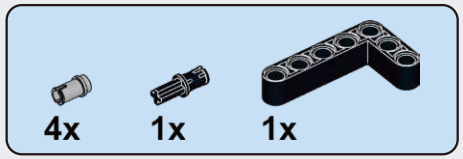

H142

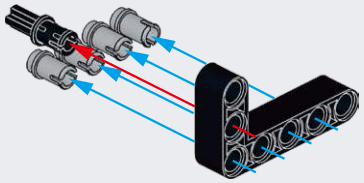

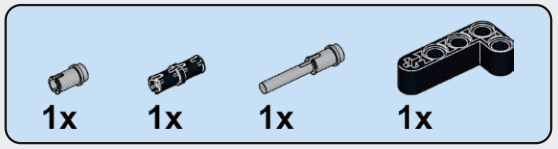

H143

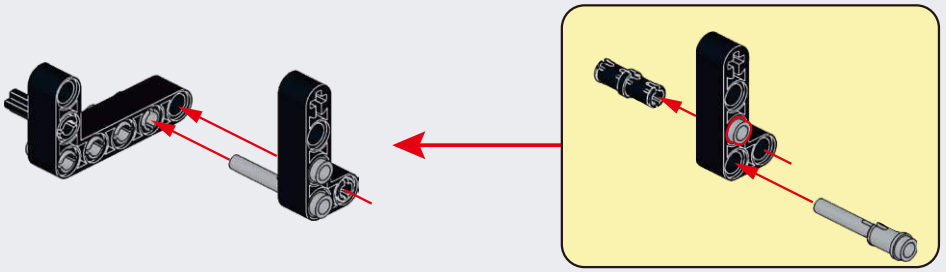

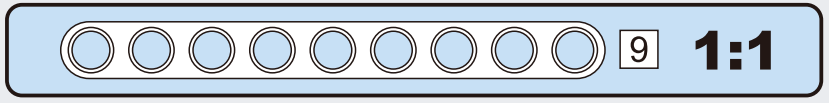

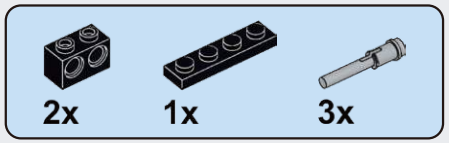

H144

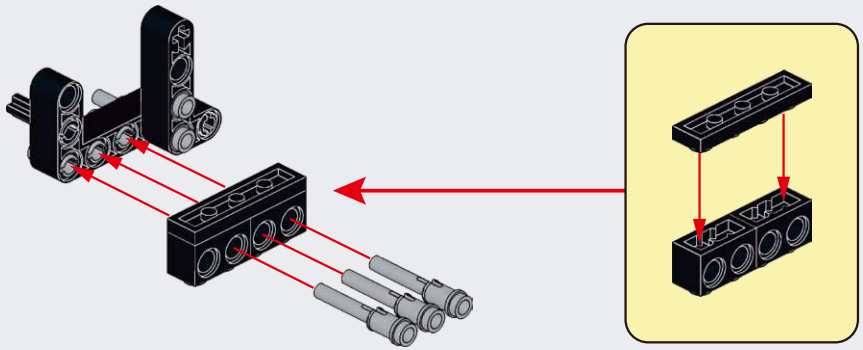

H145

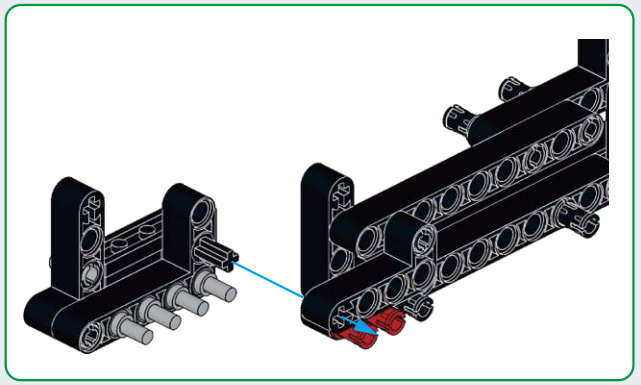

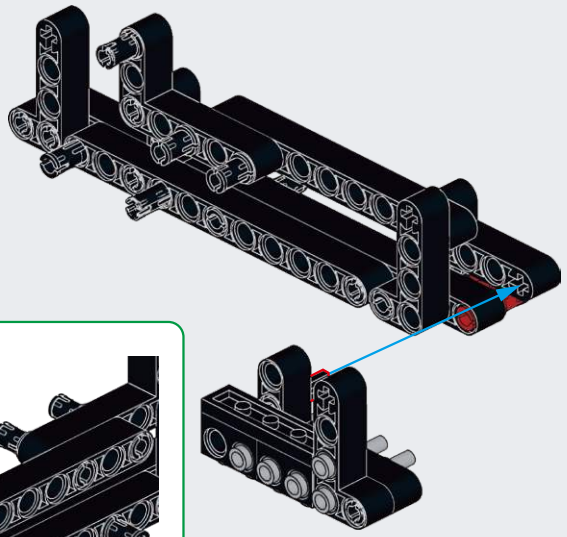

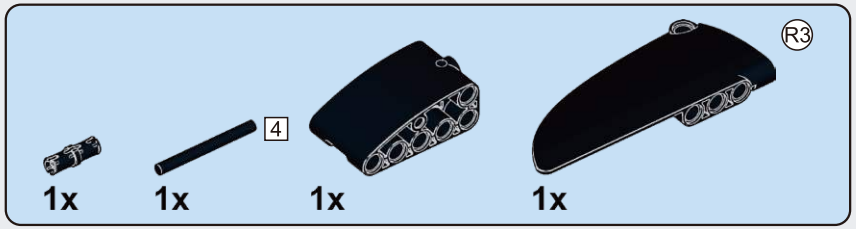

H146

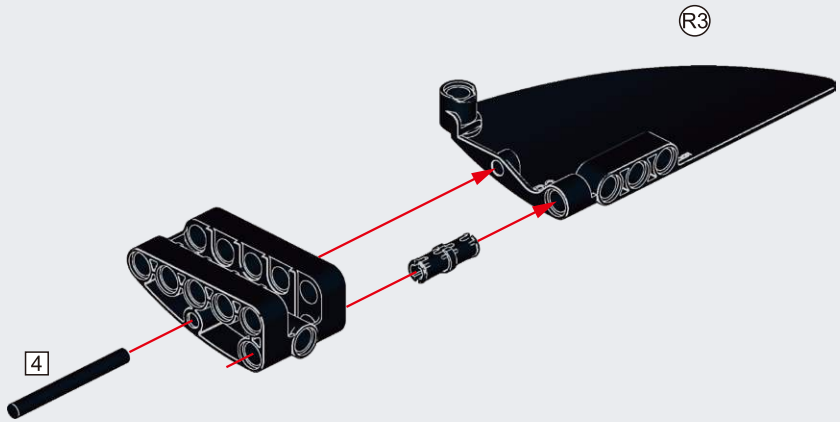

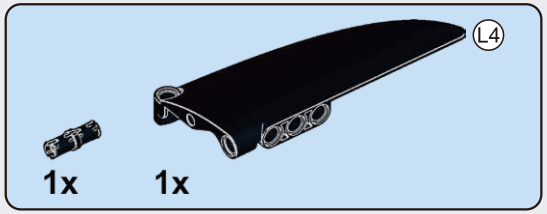

H147

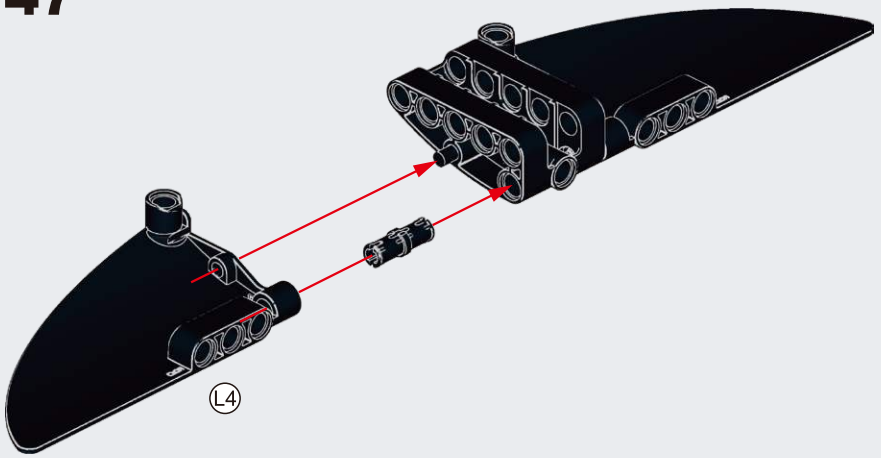

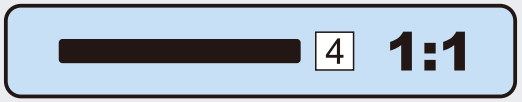

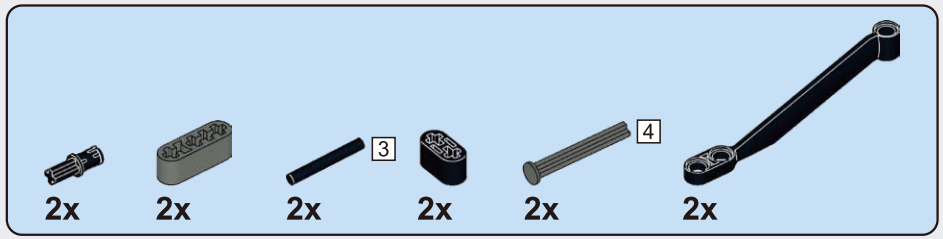

H148

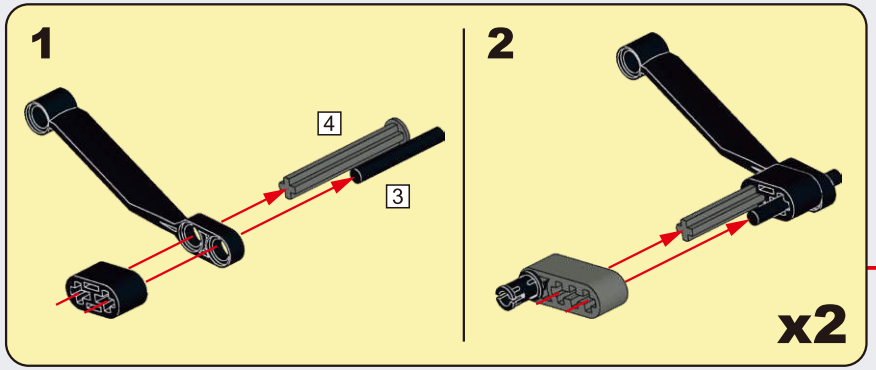

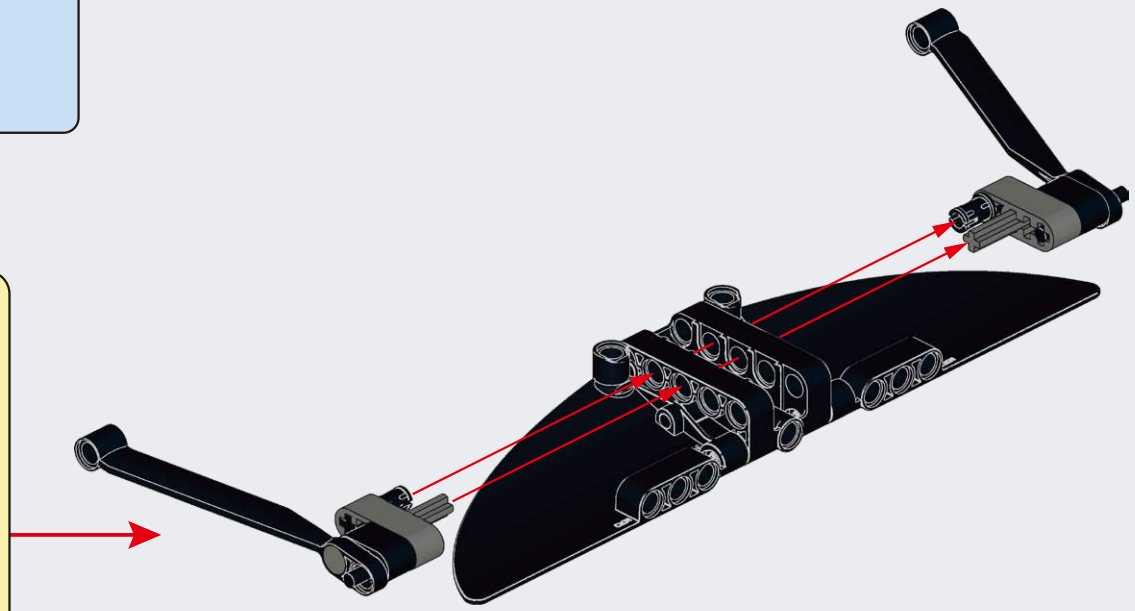

H149

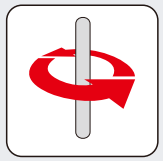

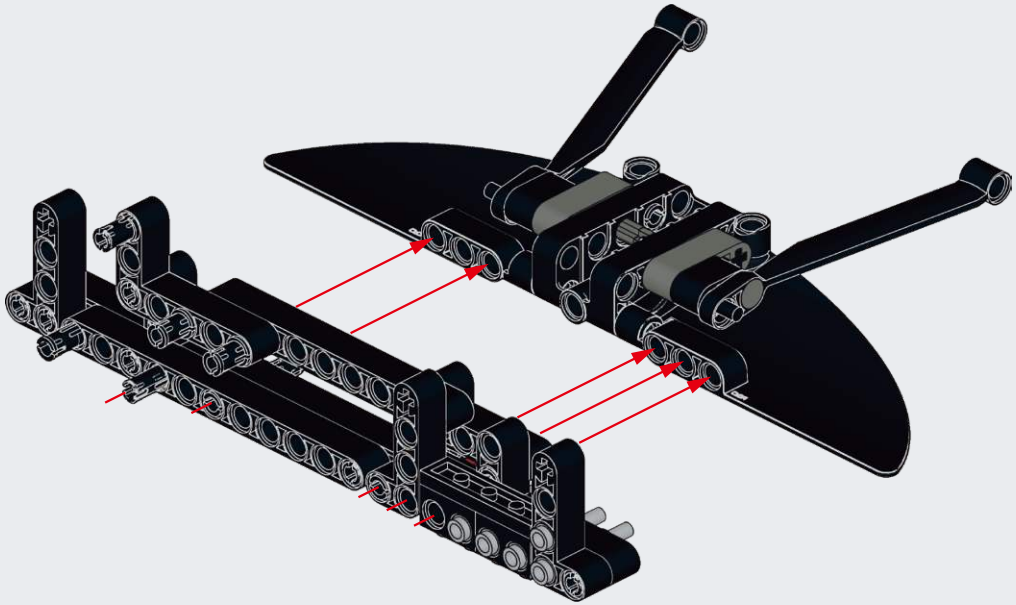

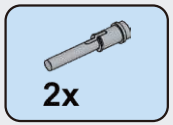

H150

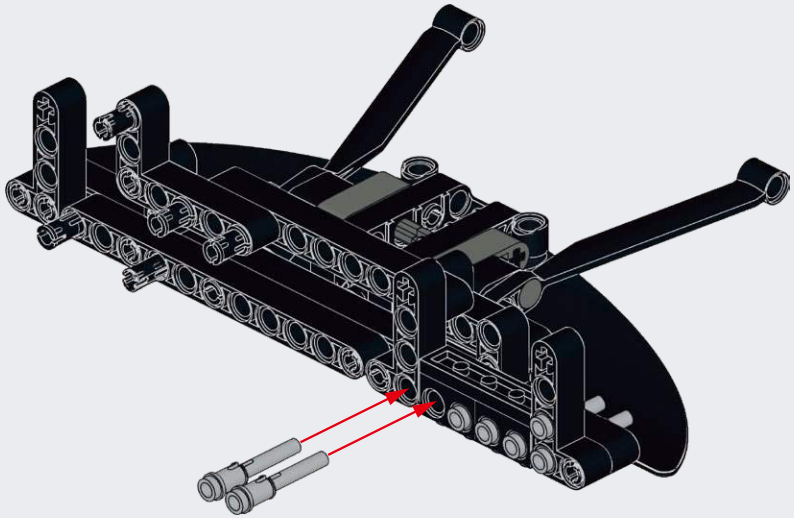

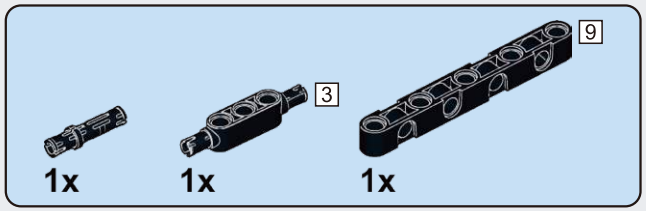

H151

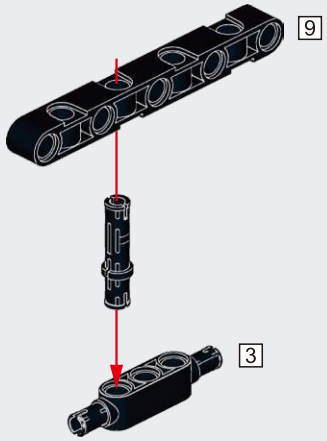

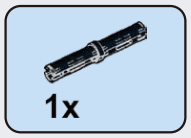

H152

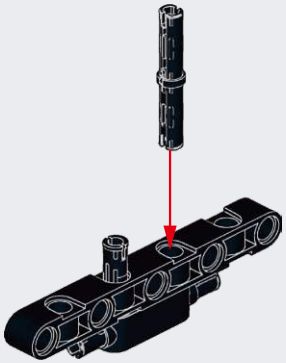

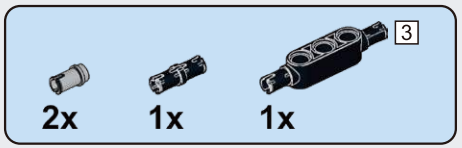

H153

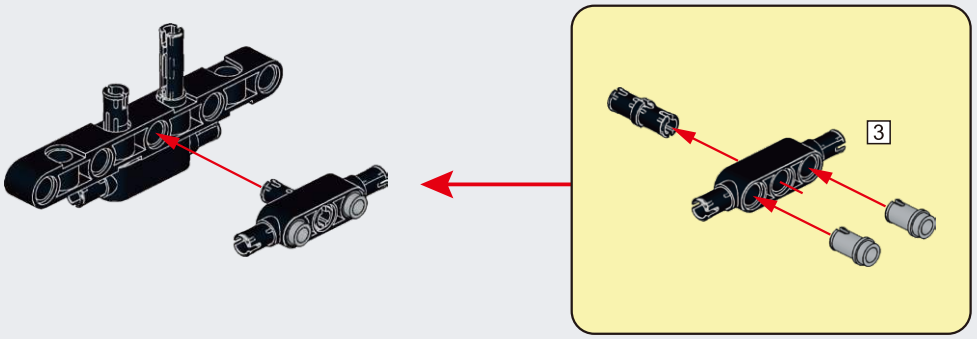

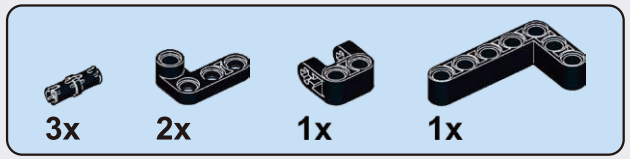

H154

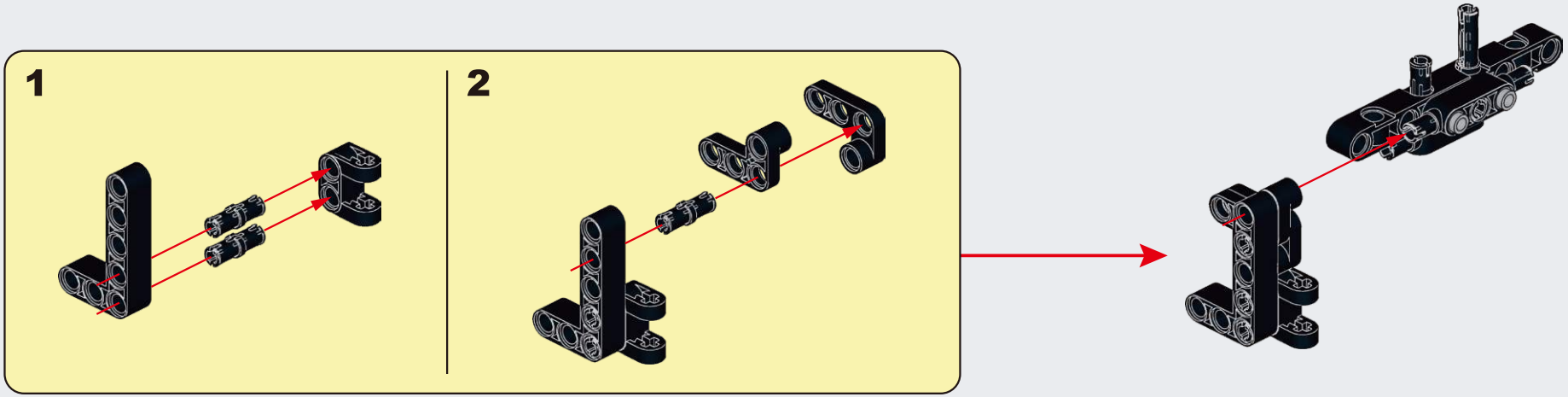

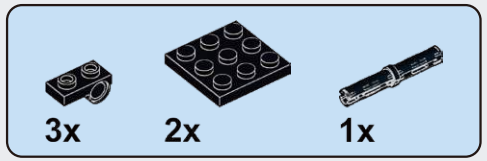

H155

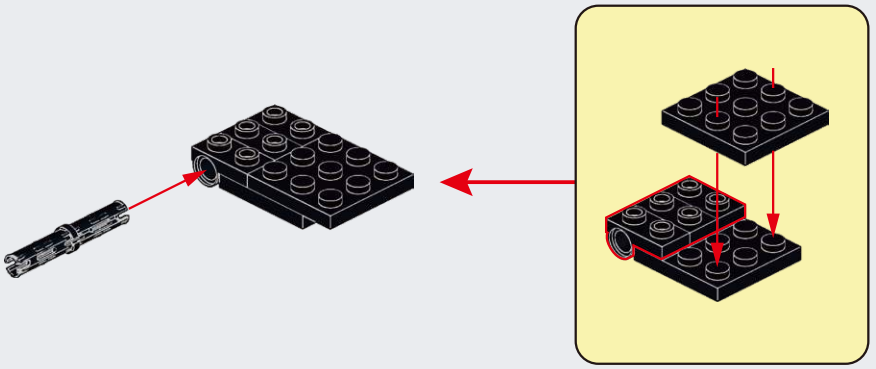

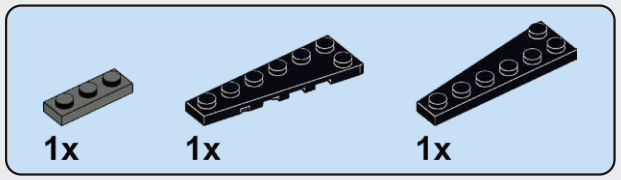

H156

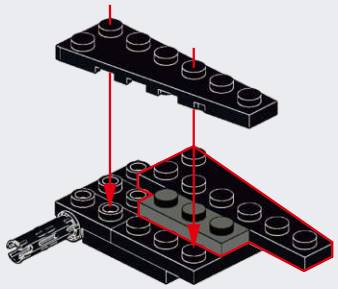

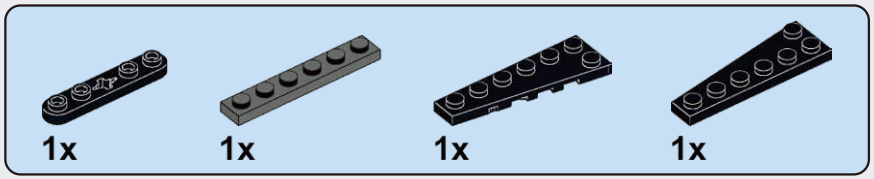

H157

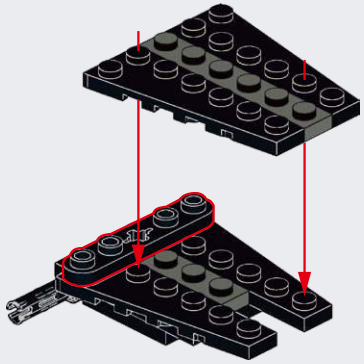

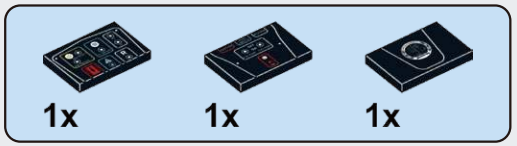

H158

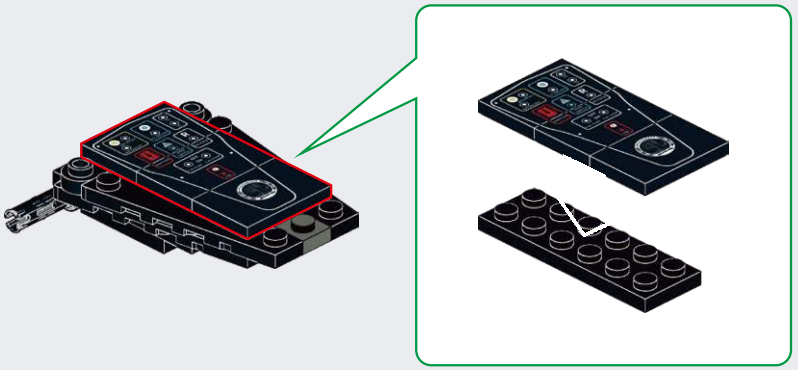

H159

H160

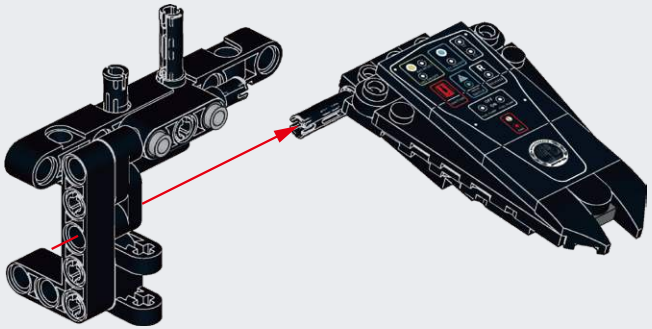

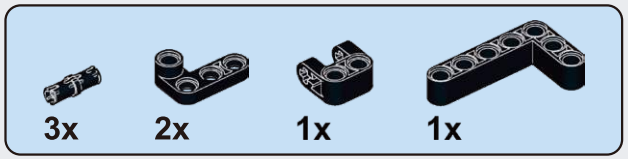
3x
2x
1x
1x

H161

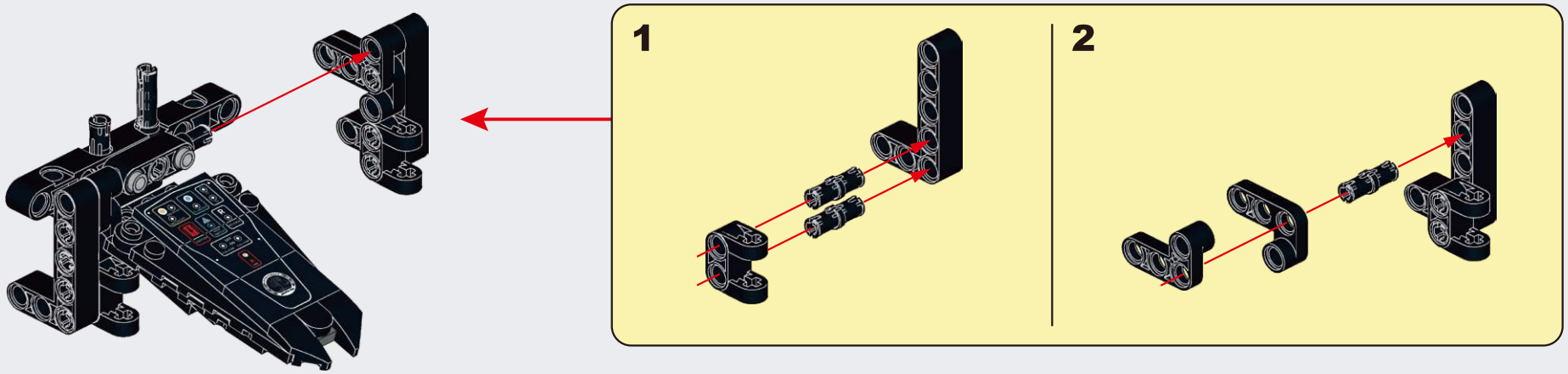
1
2

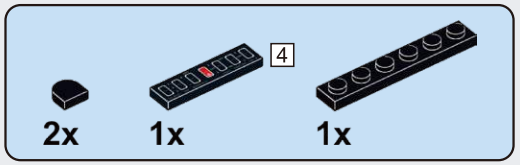
2x
1x
4
1x

H162

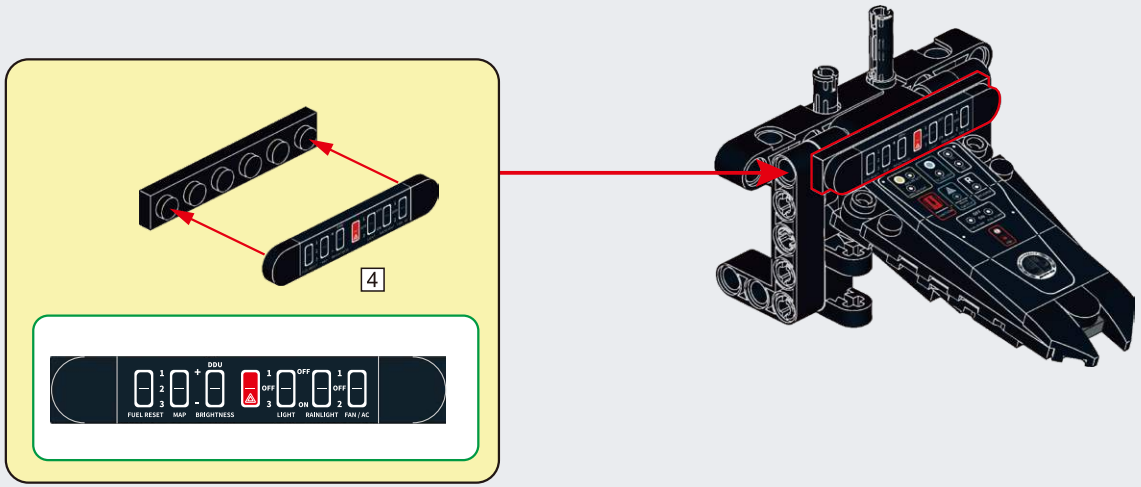
4
DDU
FUEL RESET
MAP
BRIGHTNESS
LIGHT
RAINLIGHT
FAN / AC

H163

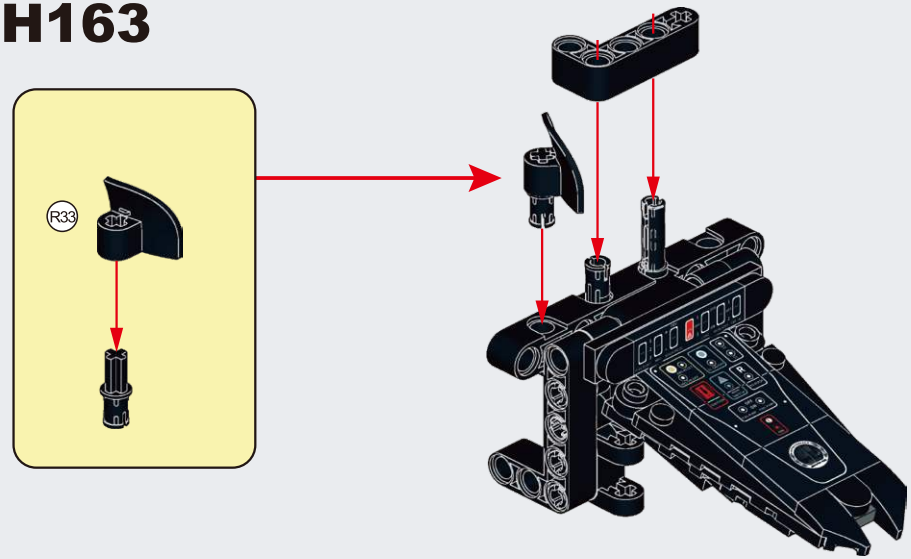

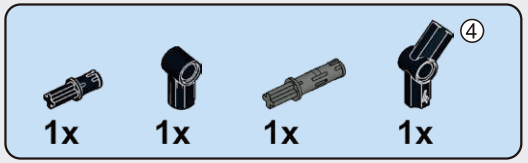

H164

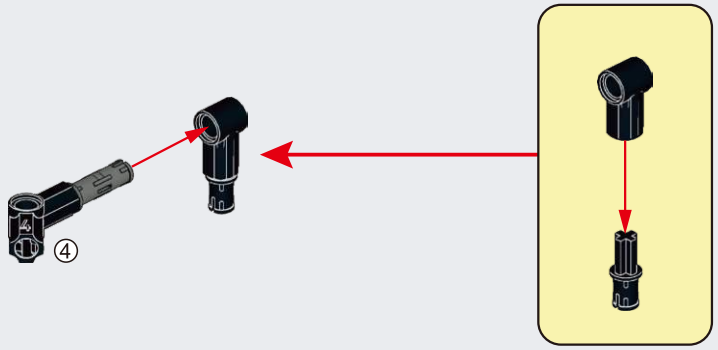

H165

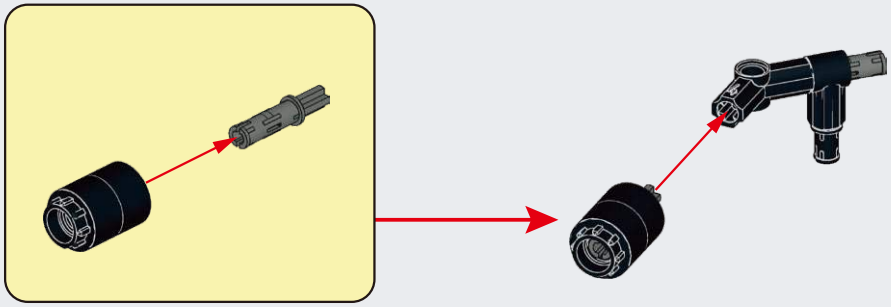

H166

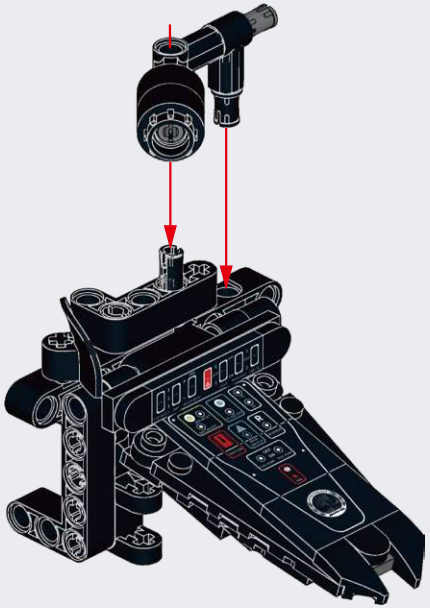

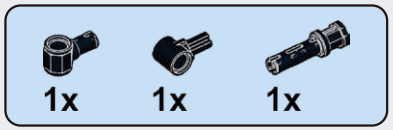

H167

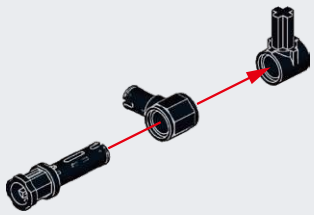

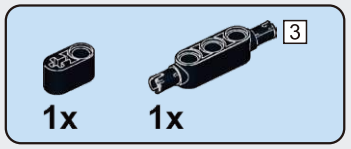

H168

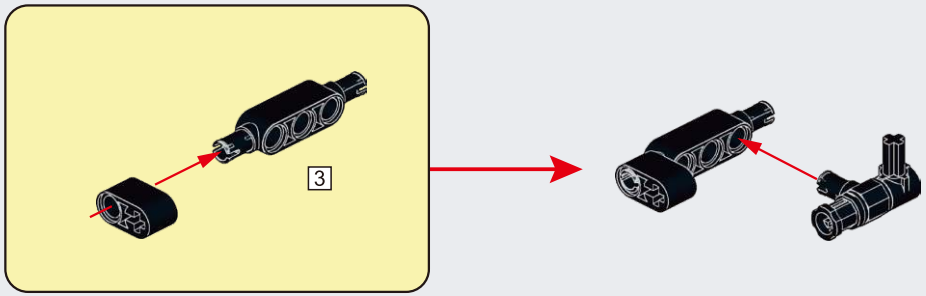

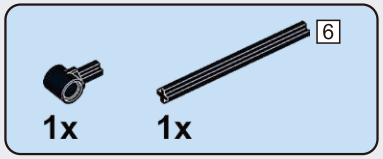

H169

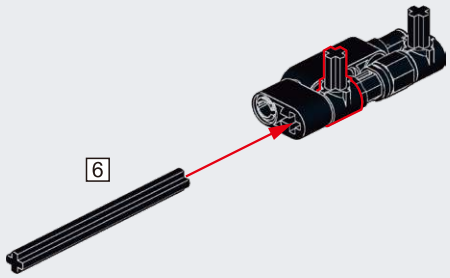

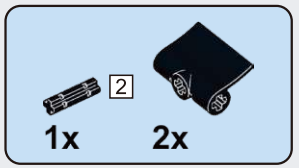

H170

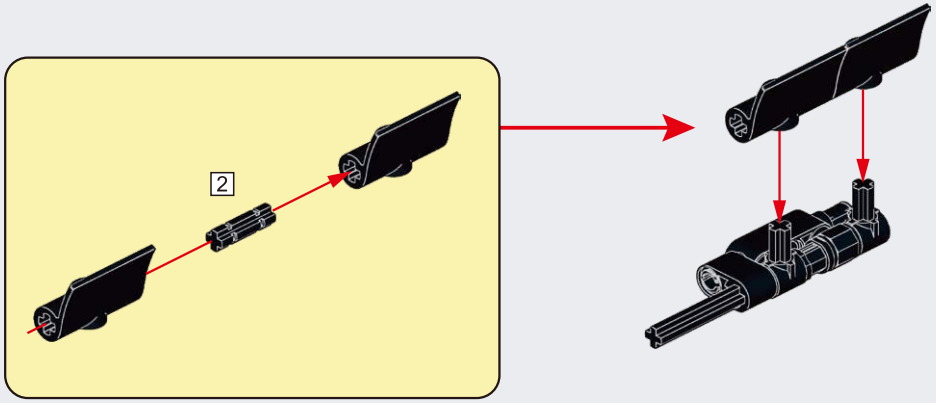

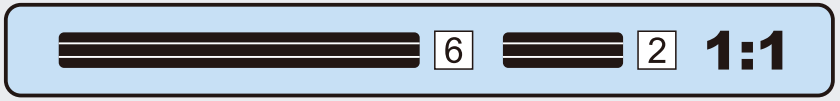

H171

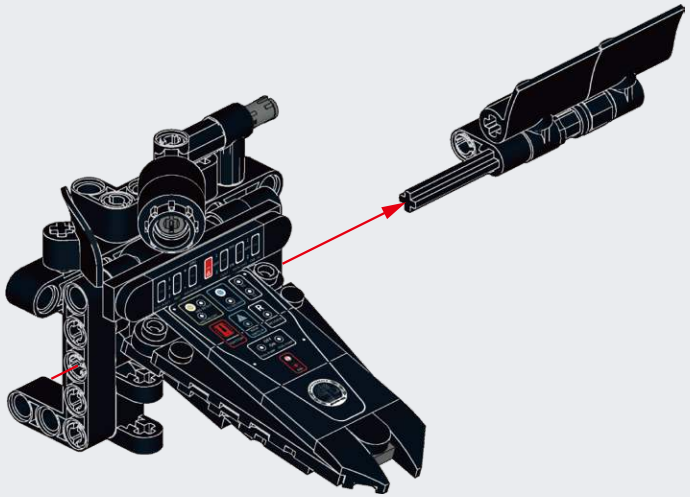

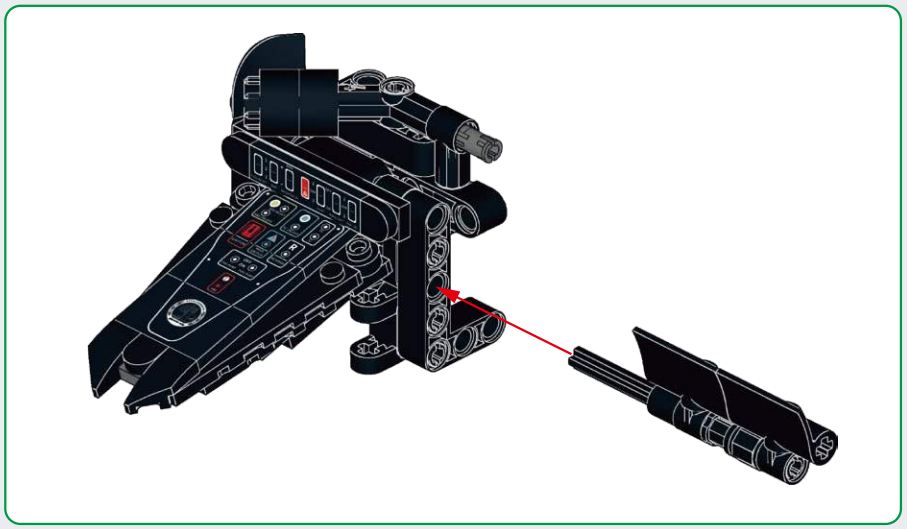

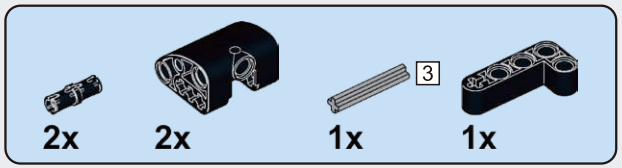

H172

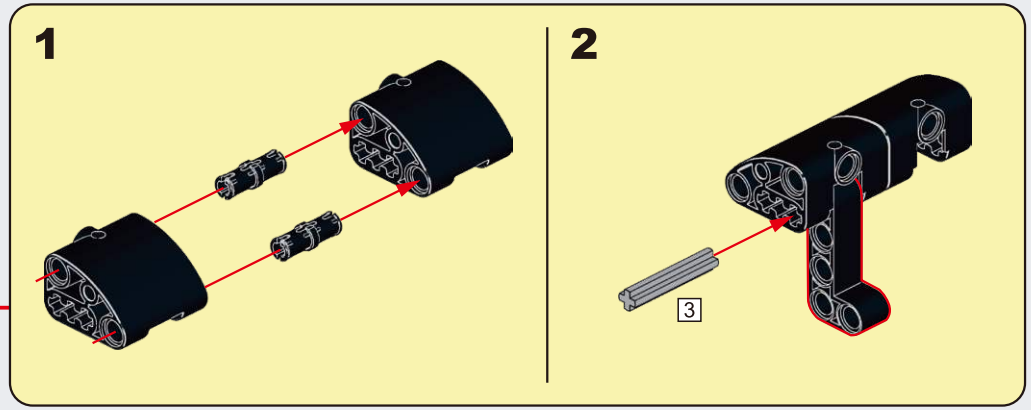

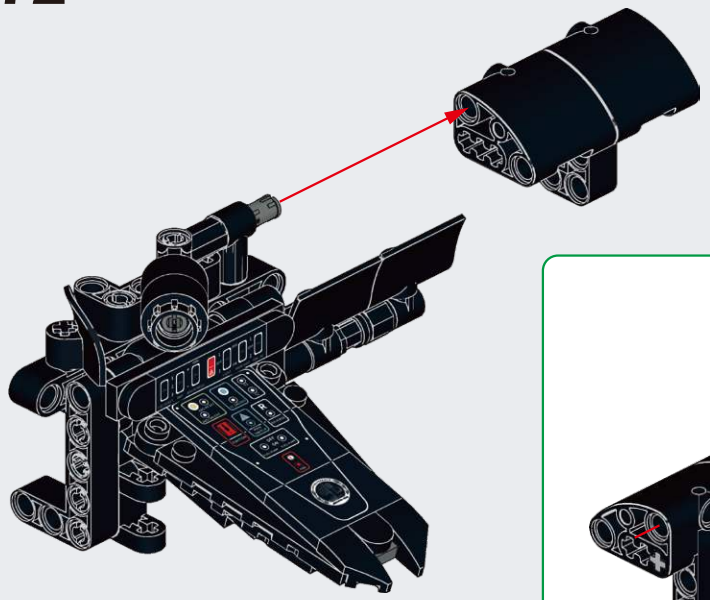

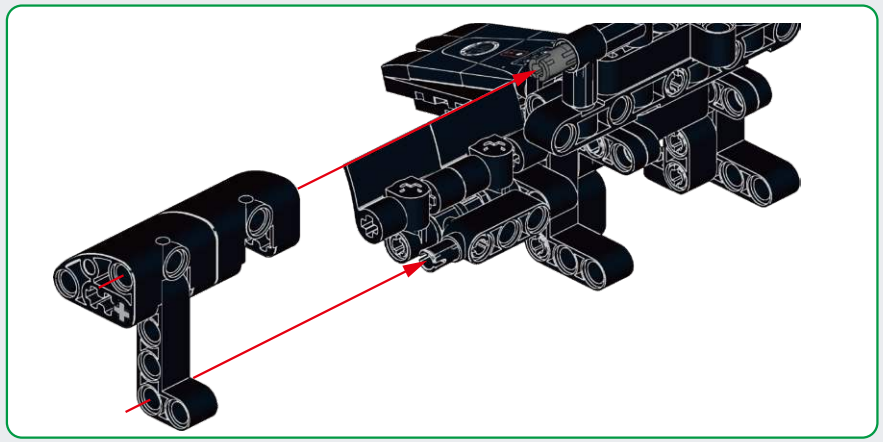

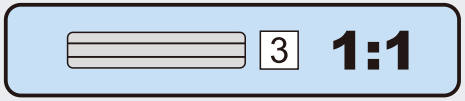

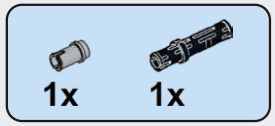

H173

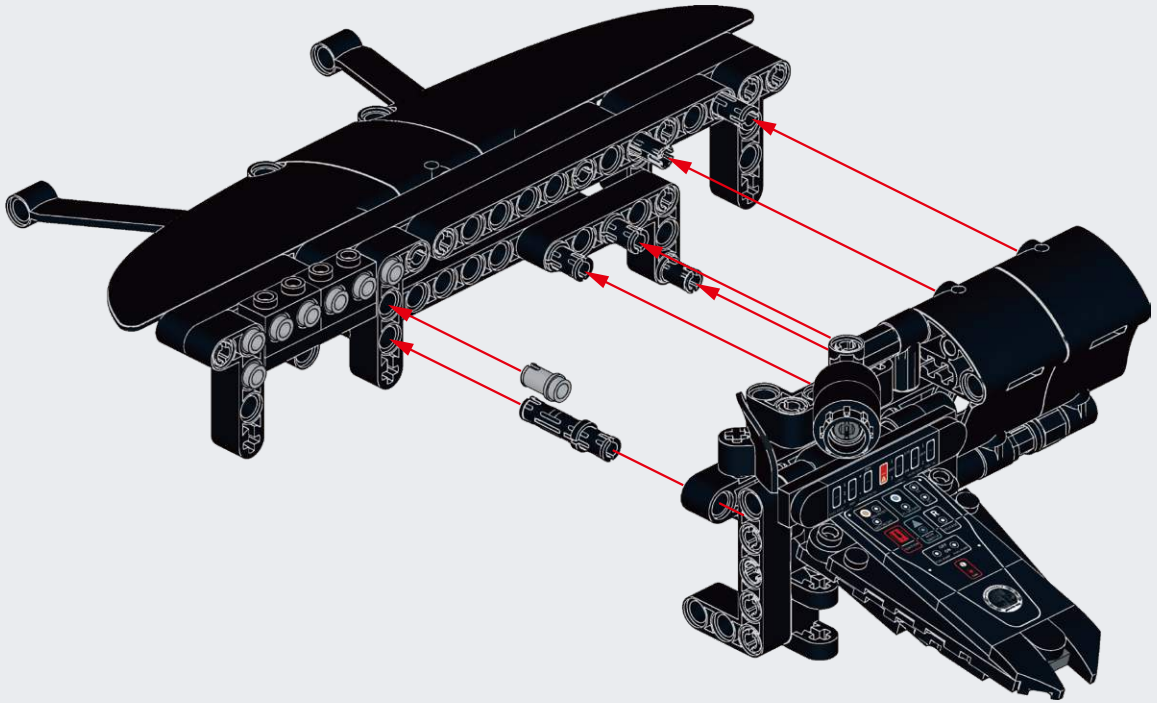

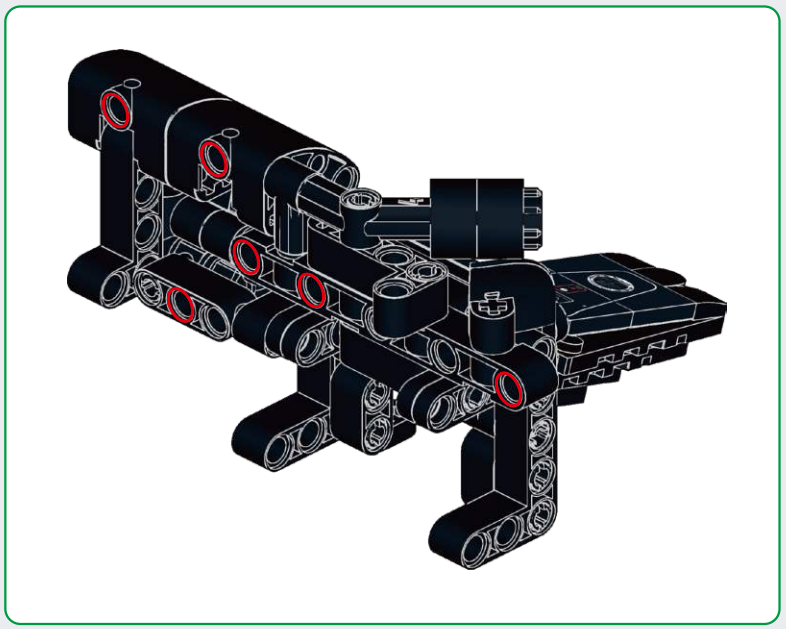

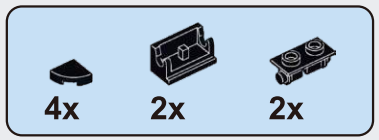

H174

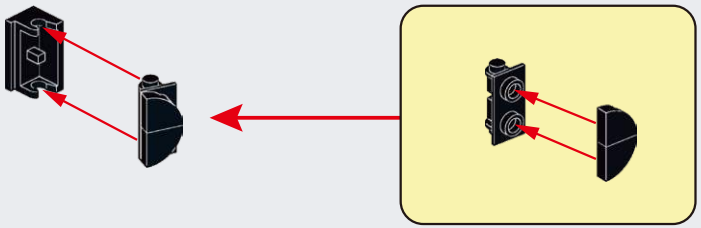

x2

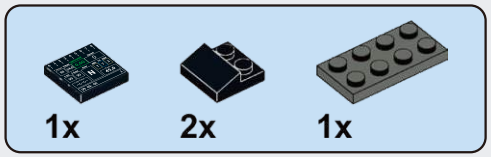

H175

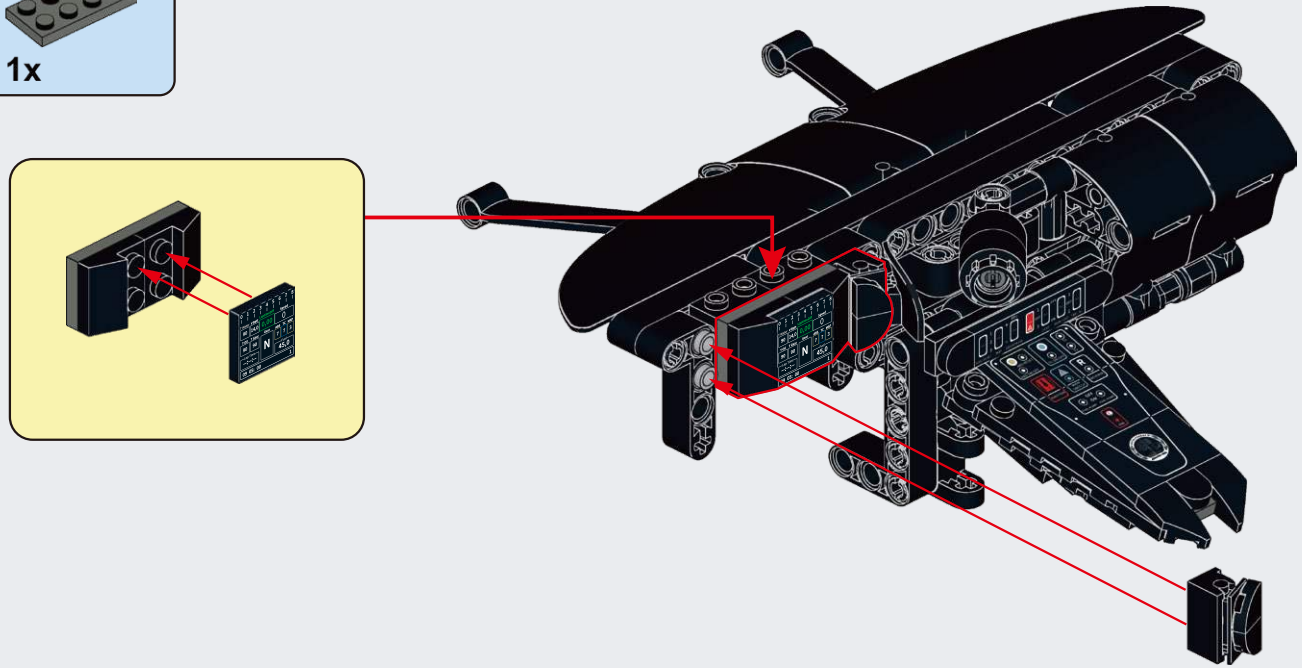

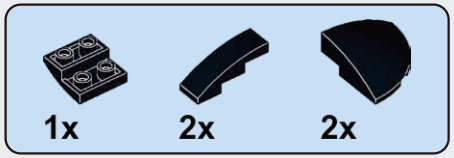

H176

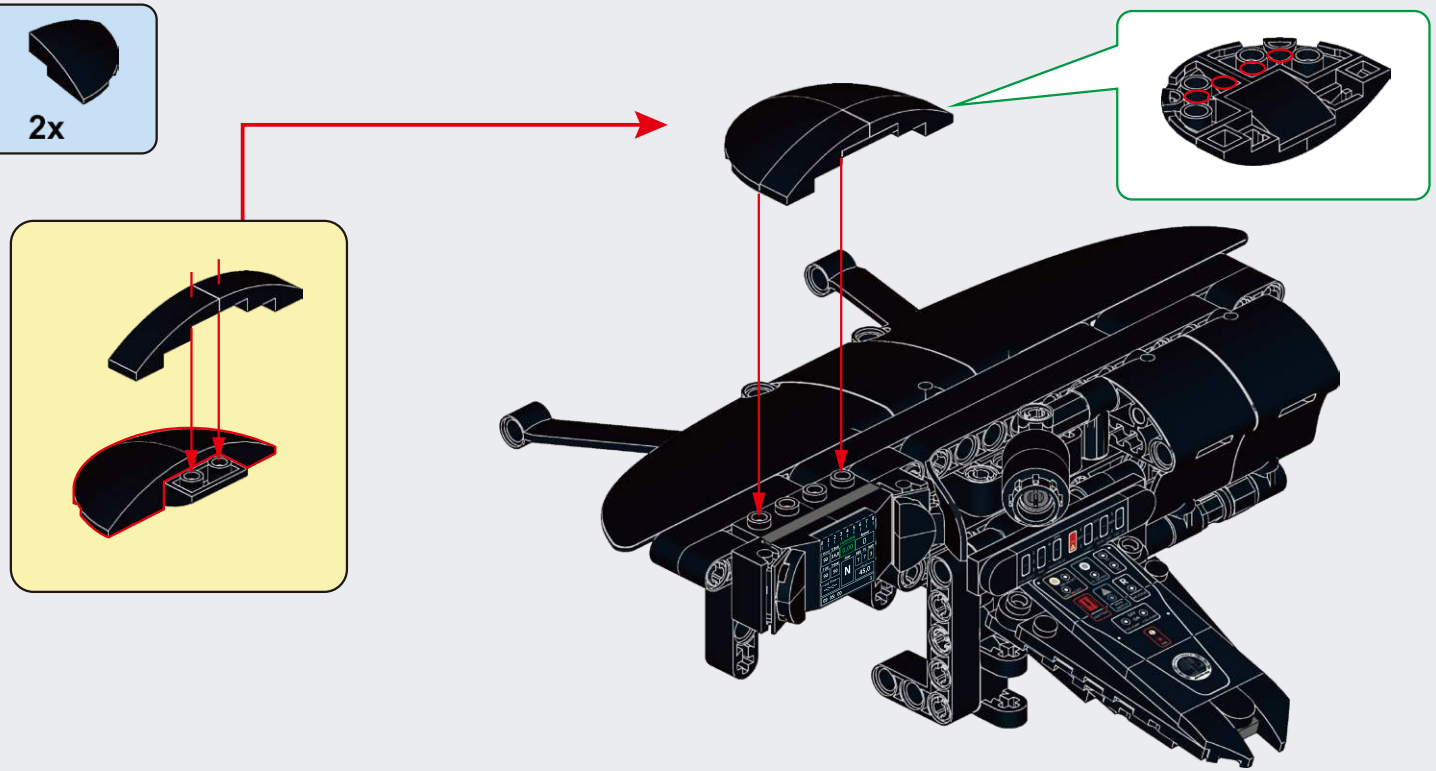

H177

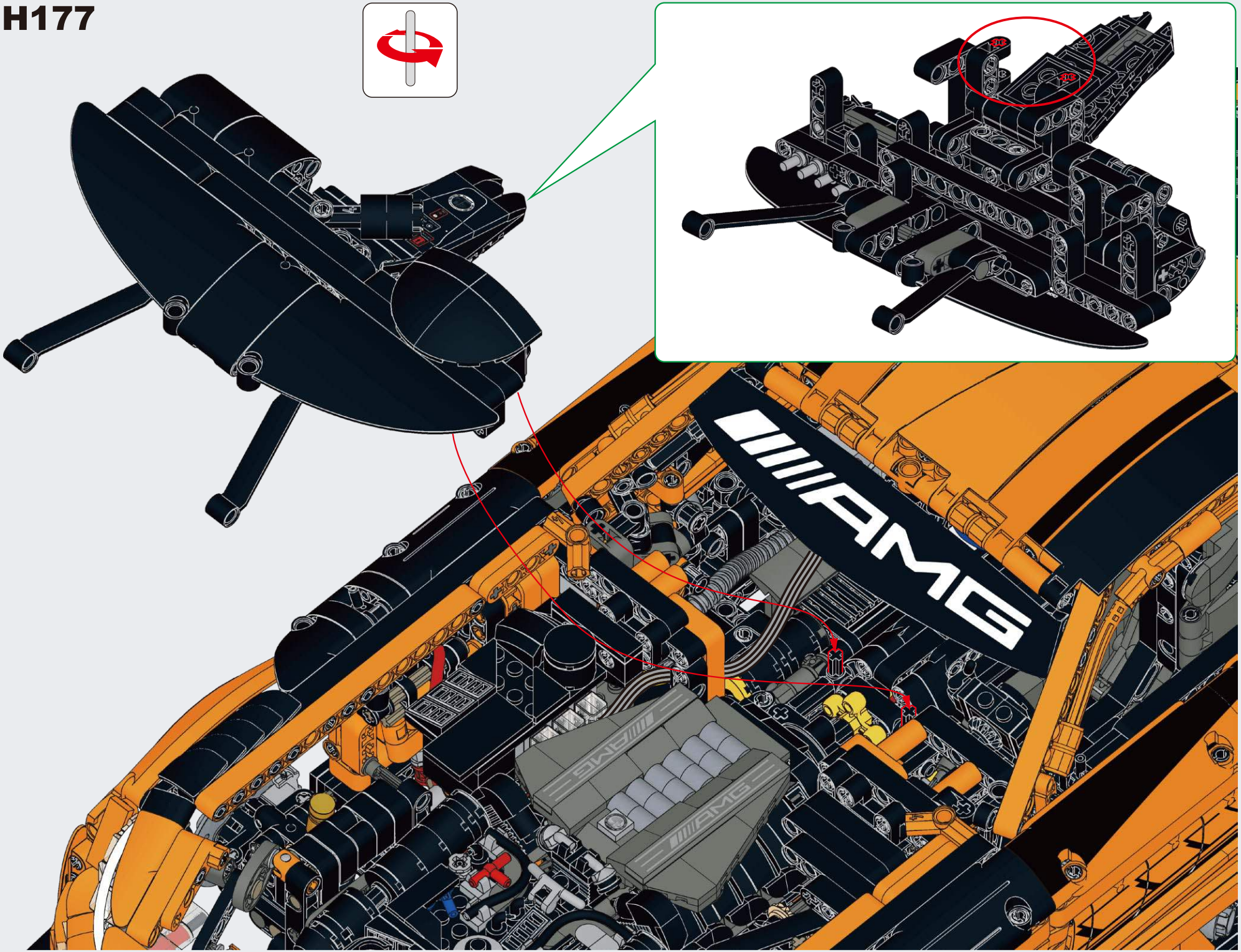

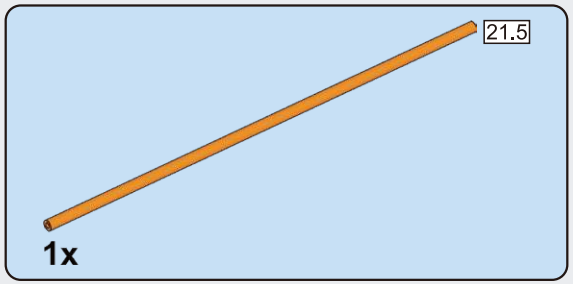

H178

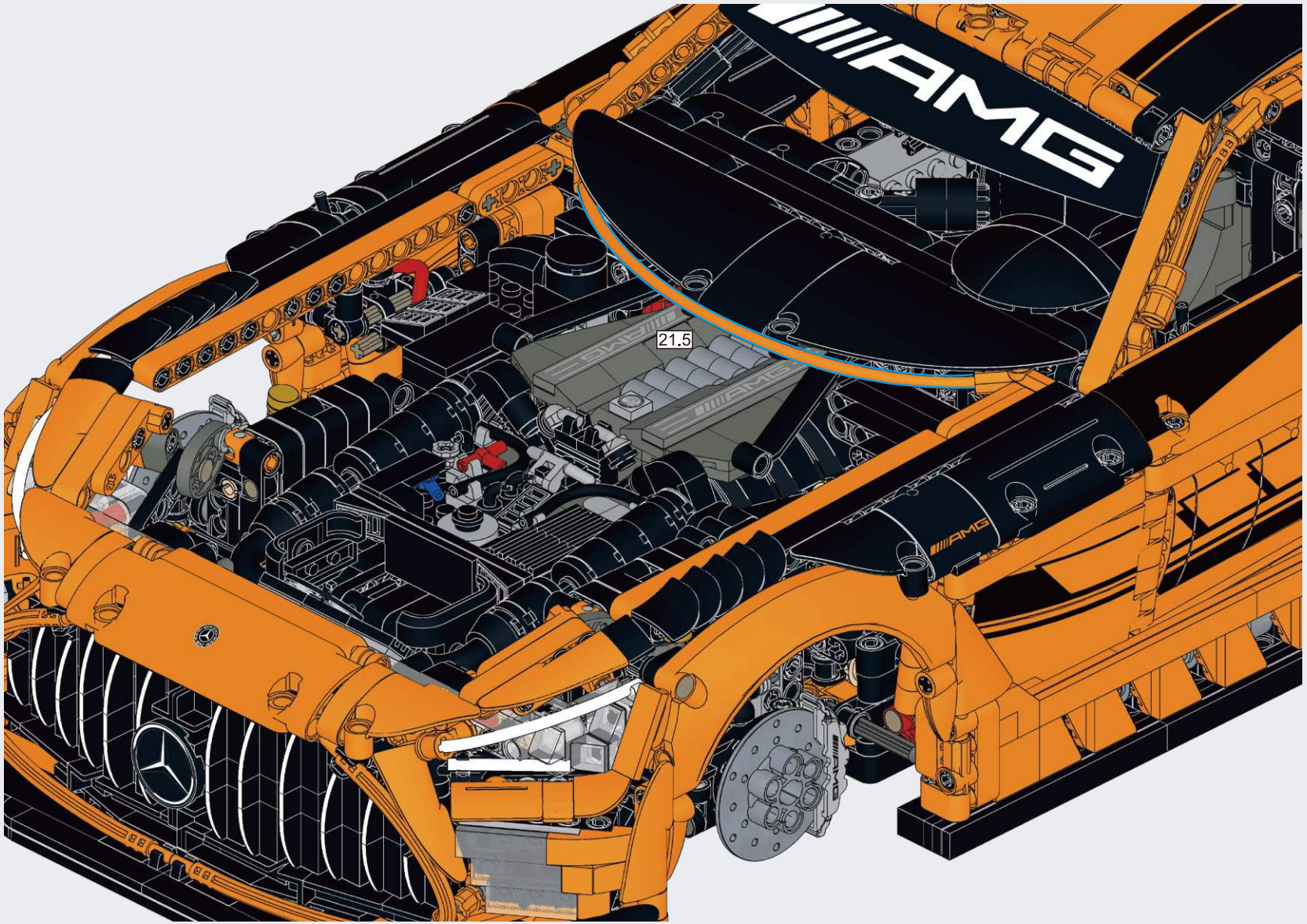

BOX 3 / BAG 9

3

I

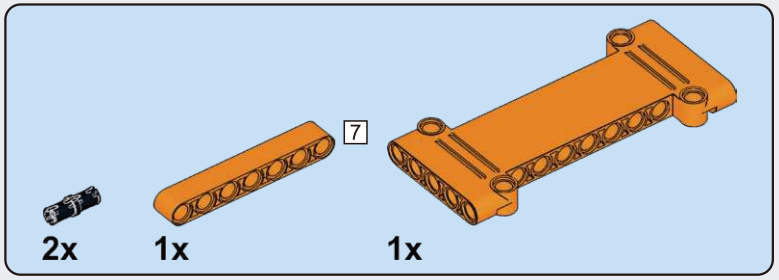

I1

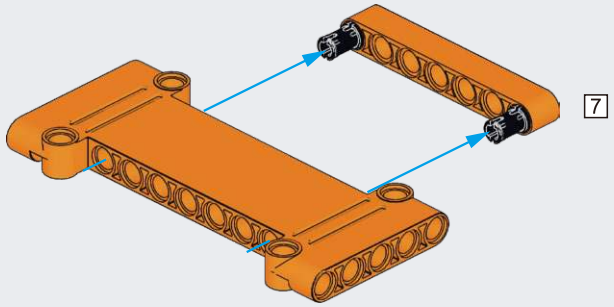

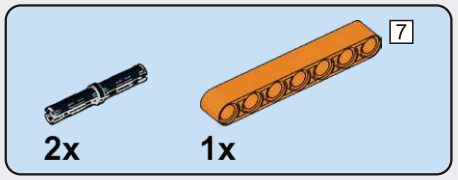

I2

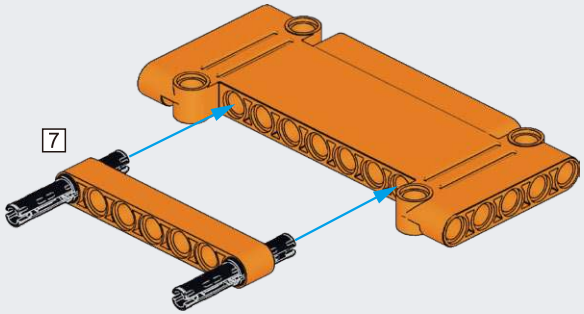

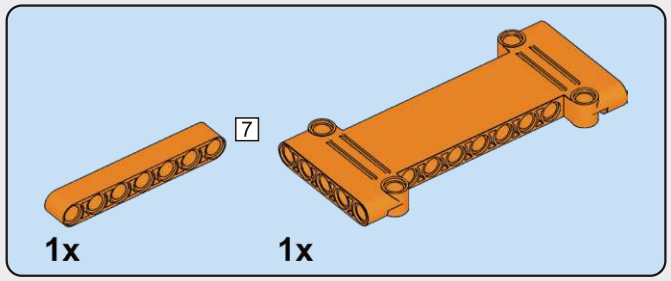

I3

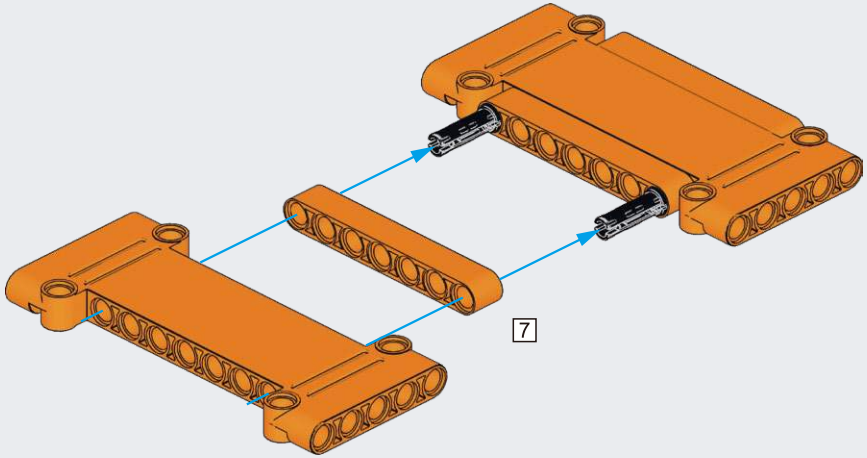

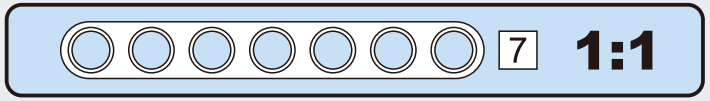

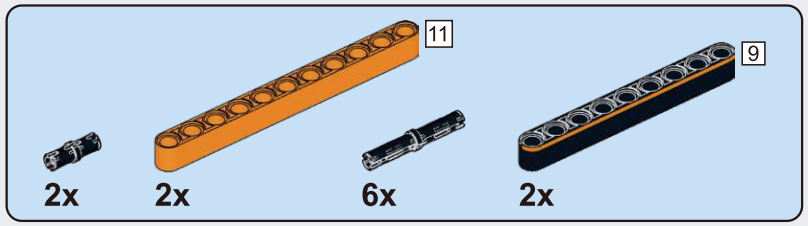

I4

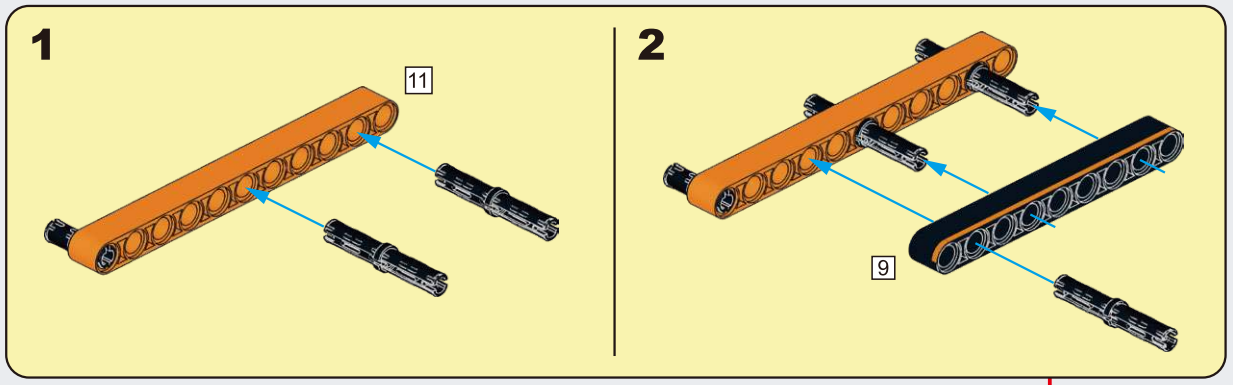

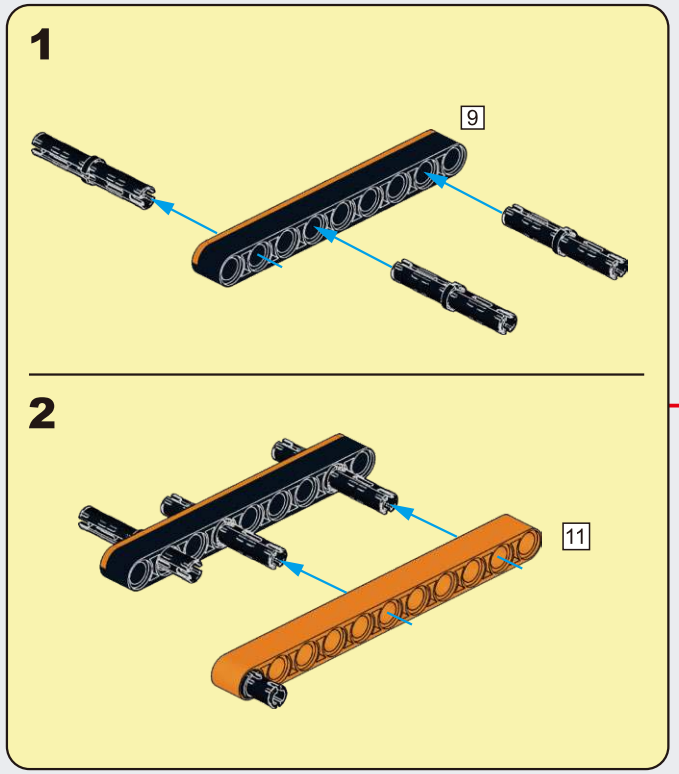

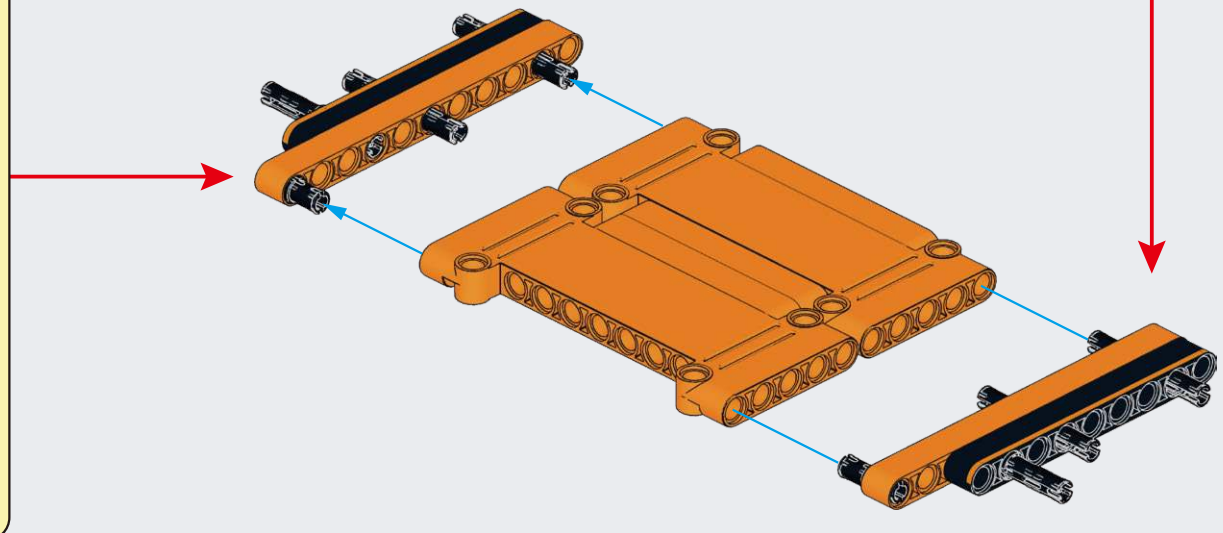

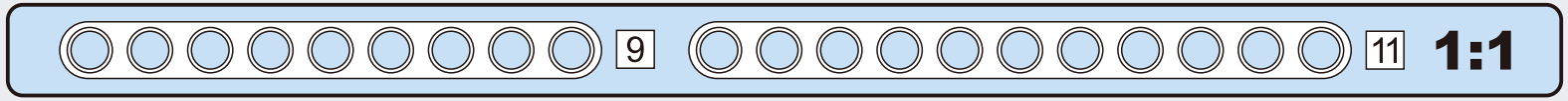

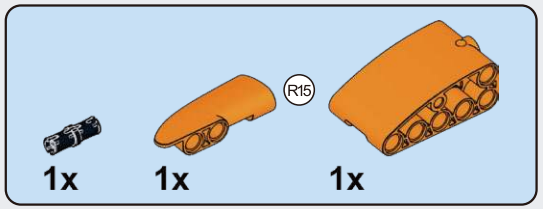

15

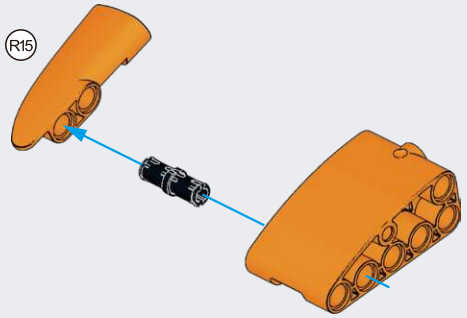

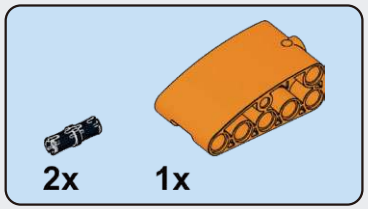

16

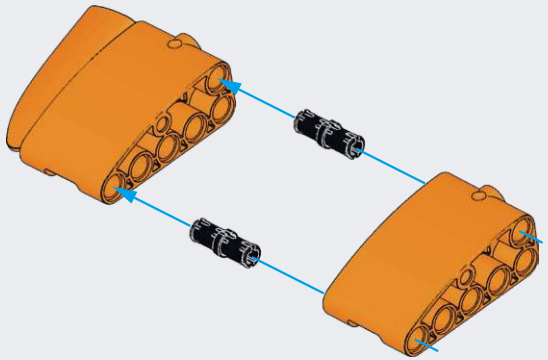

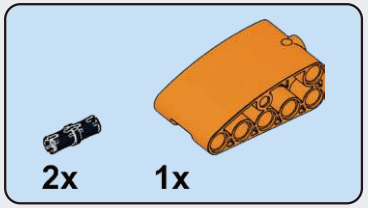

17

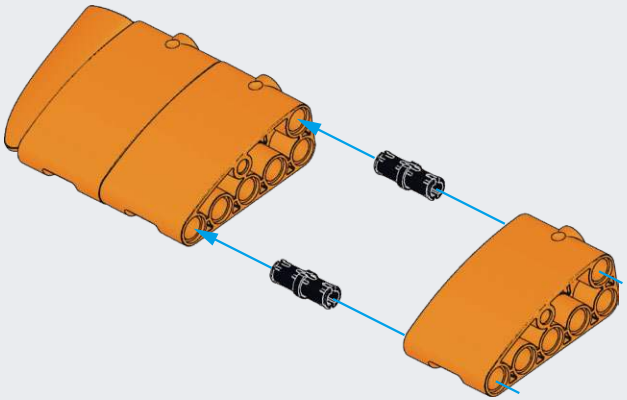

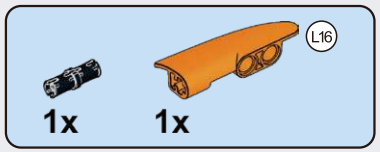

18

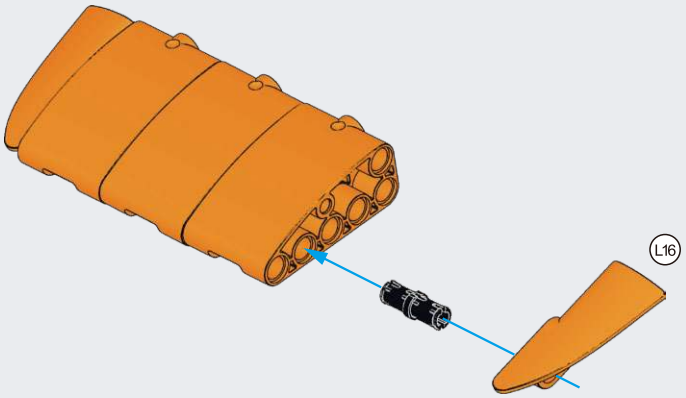

I9

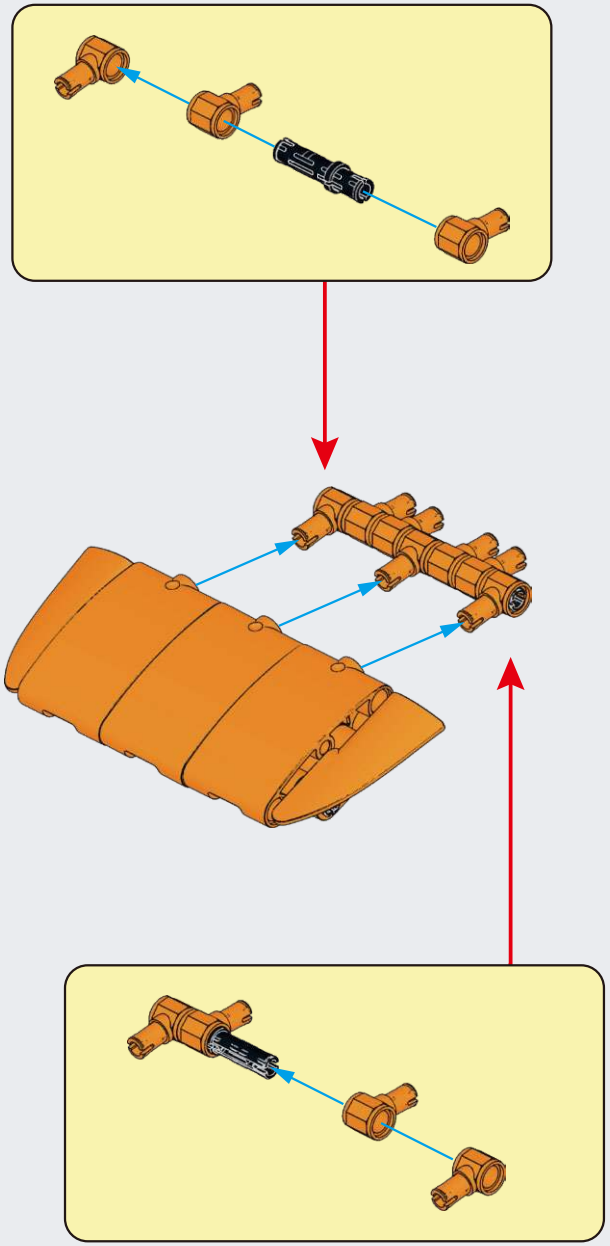

I10

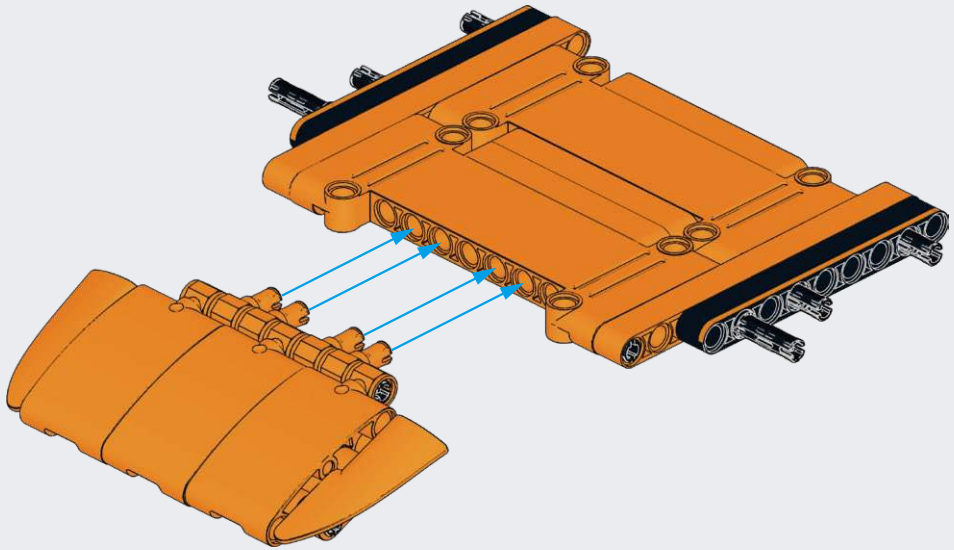

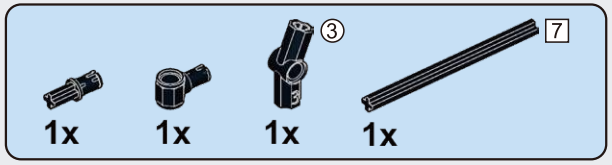

I11

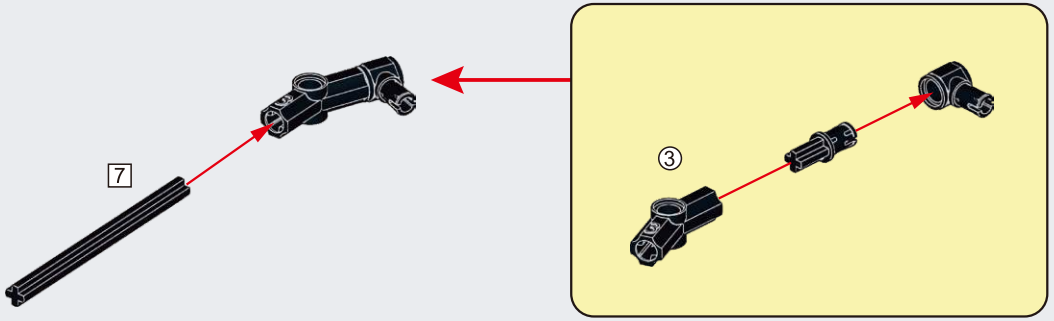

I12

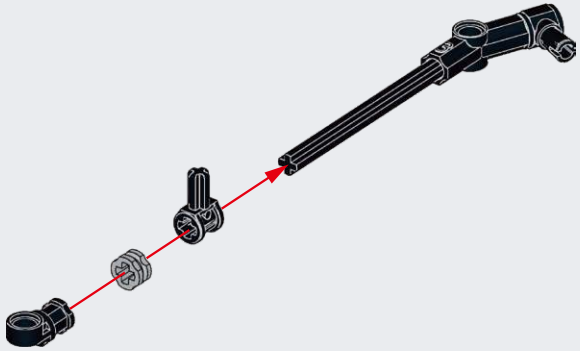

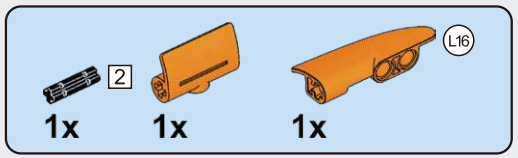

I13

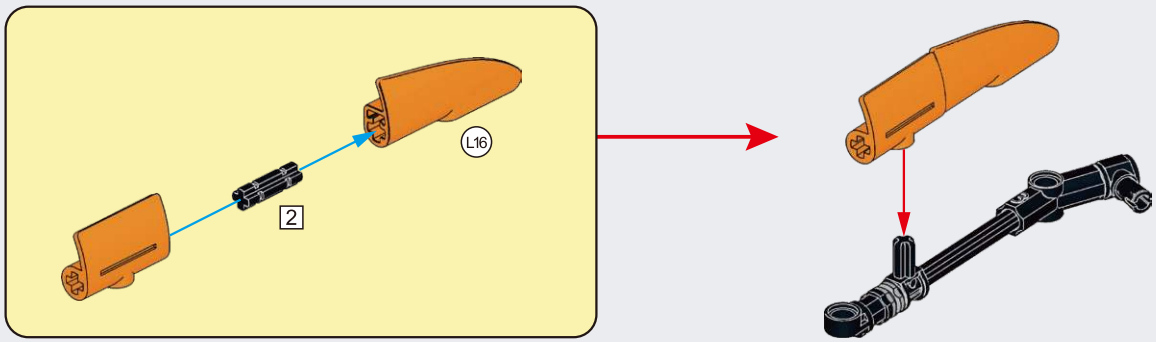

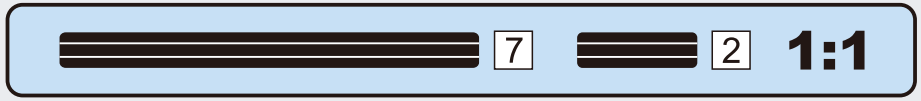

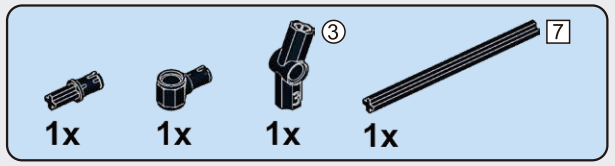

I14

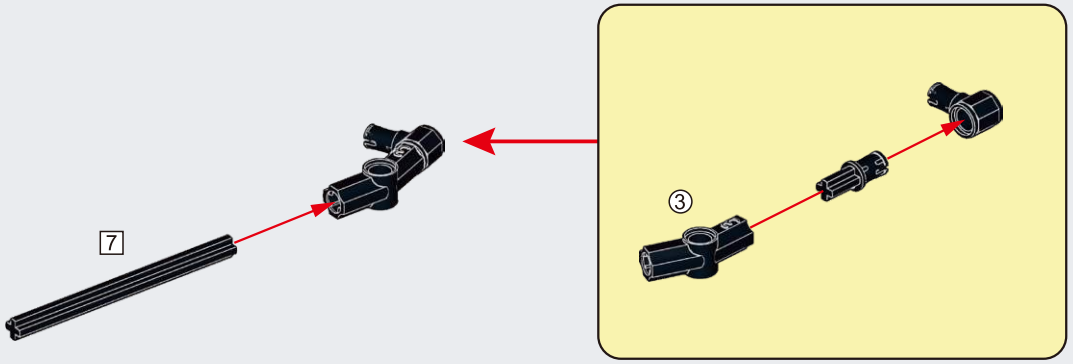

I15

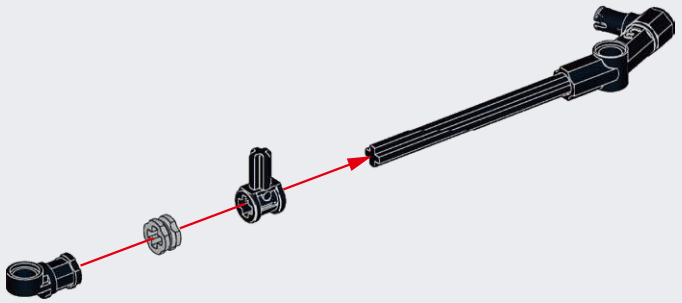

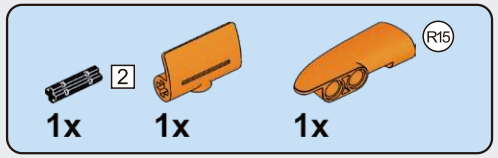

I16

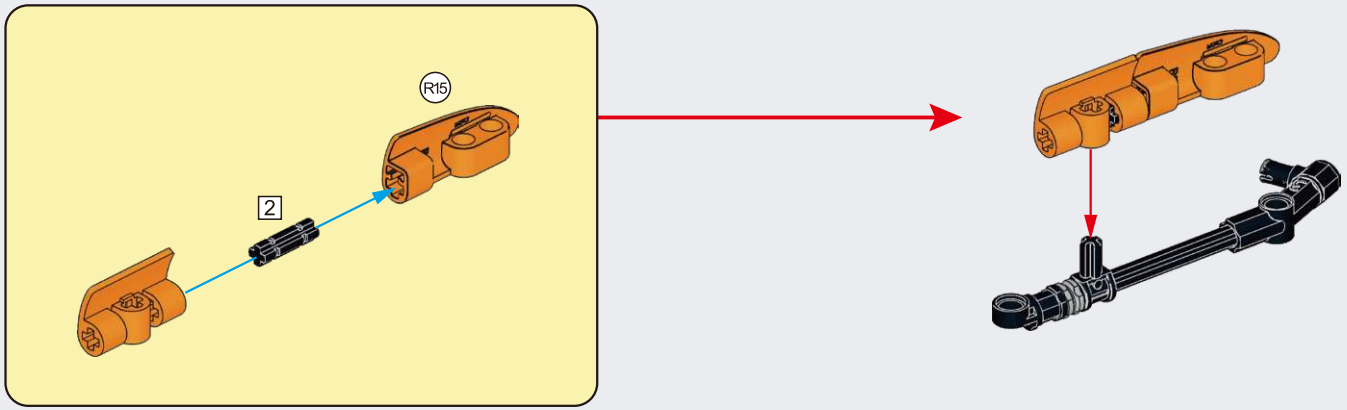

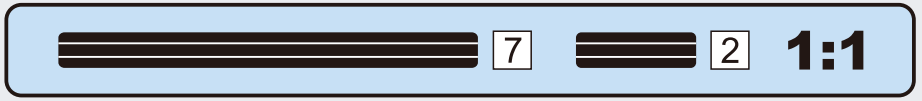

I17

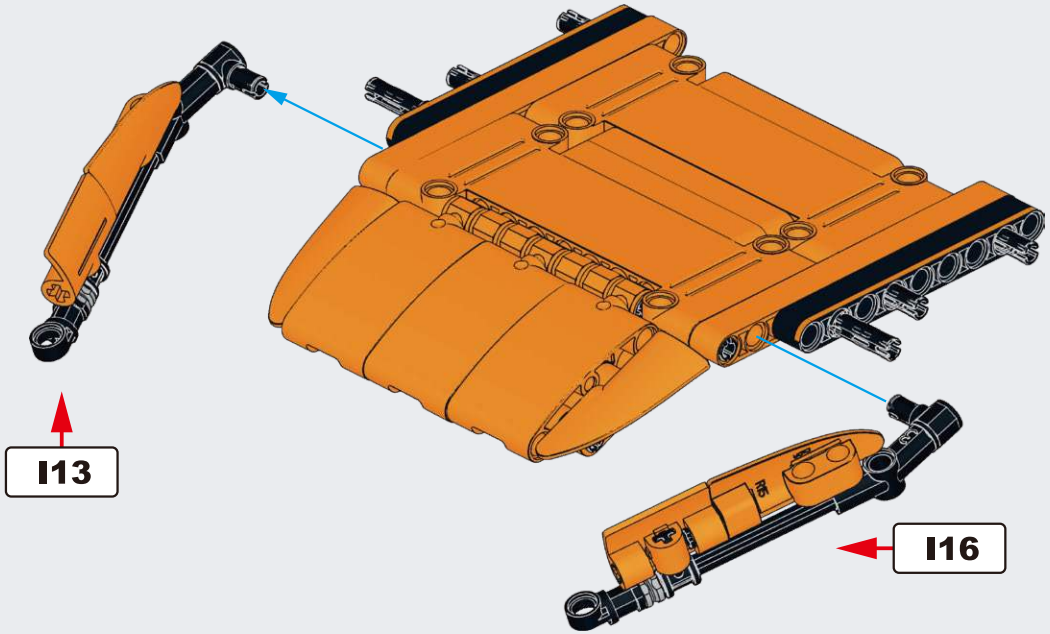

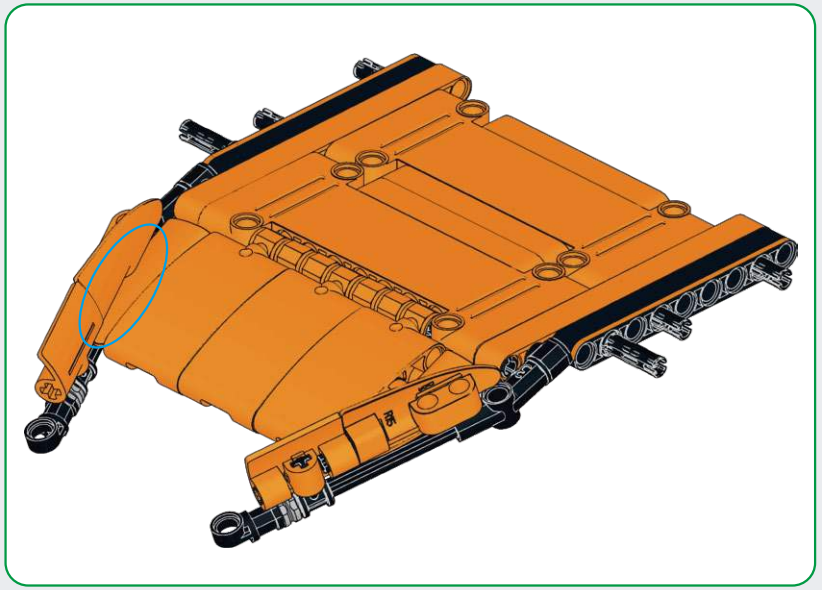

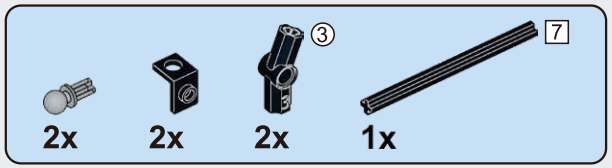

I18

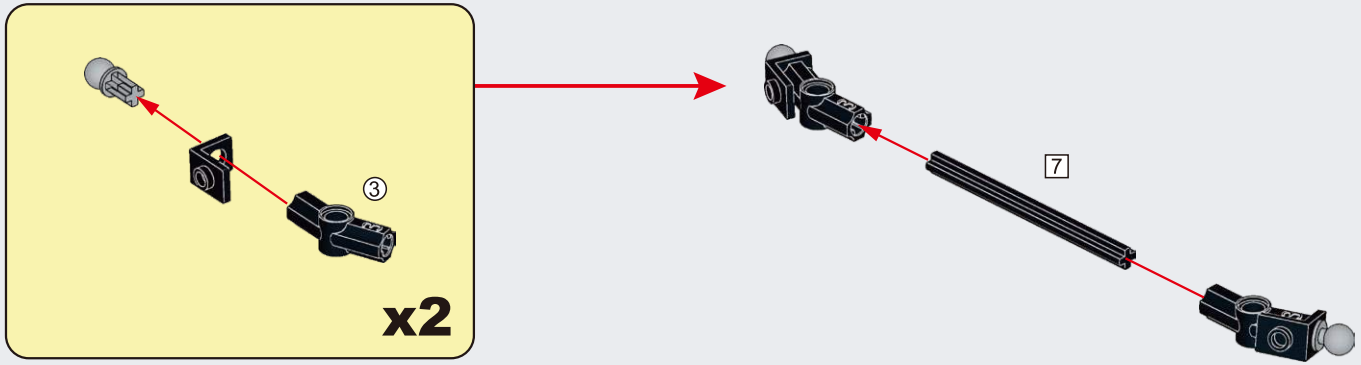

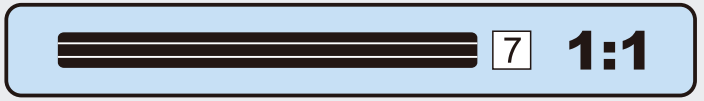

I19

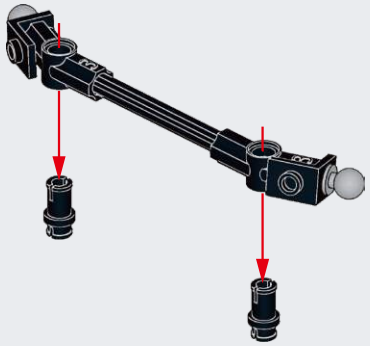

I20

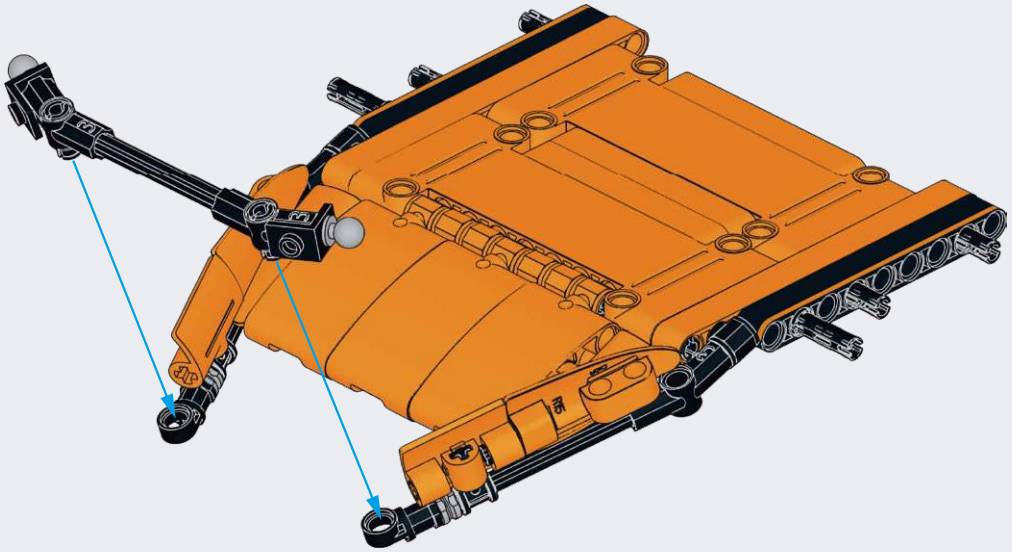

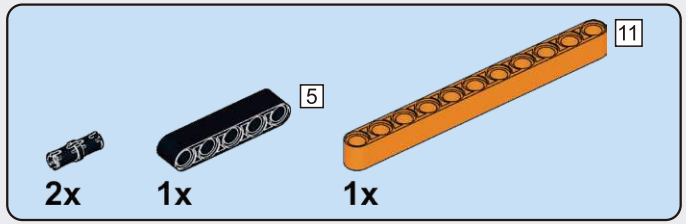

I21

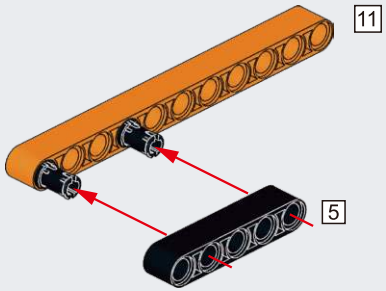

I22

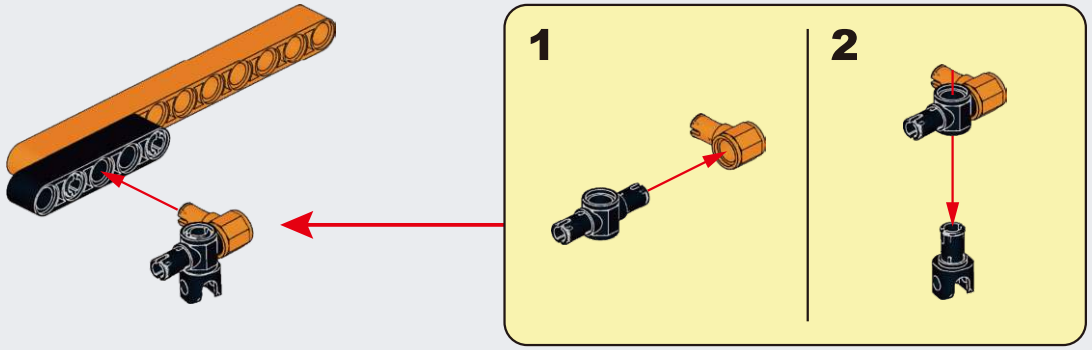

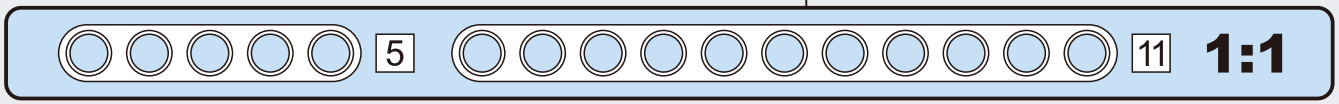

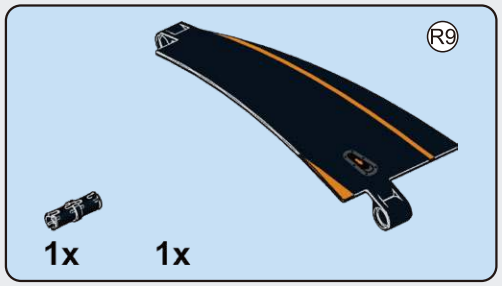

I23

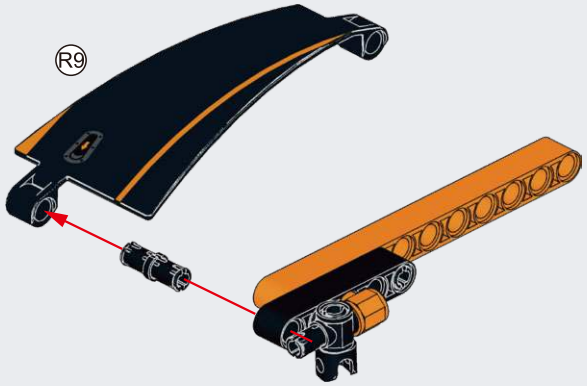

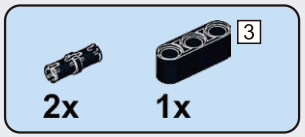

I24

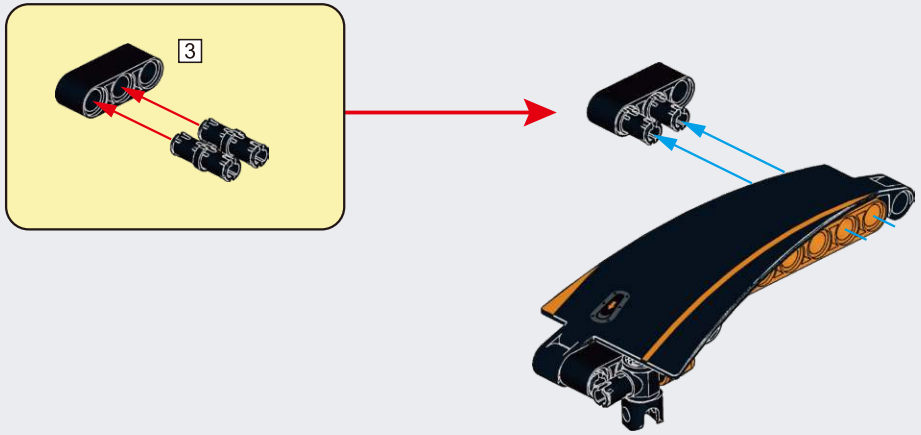

I25

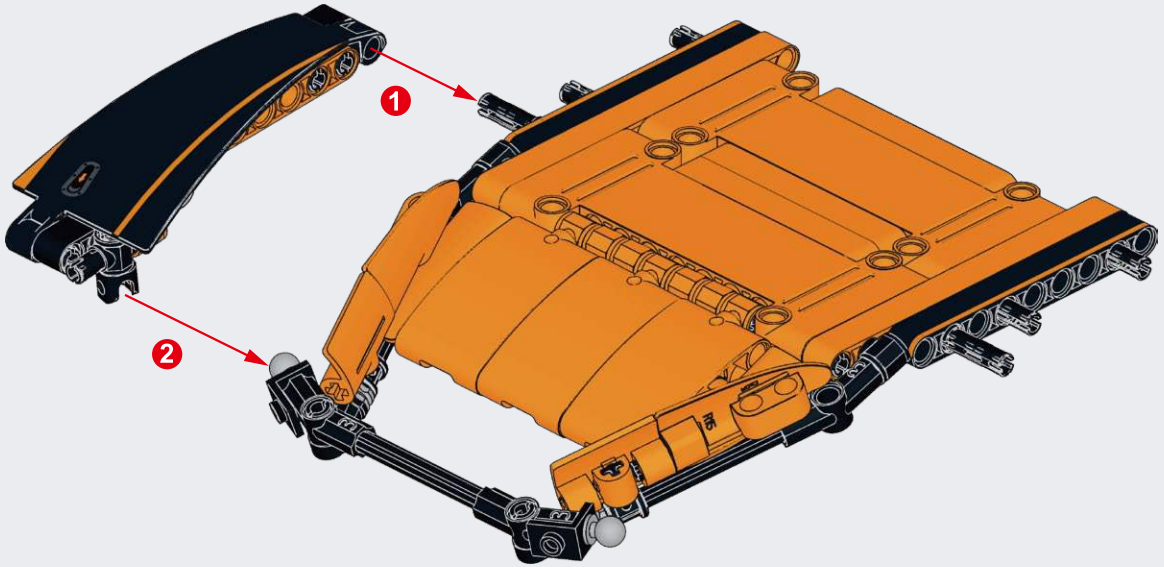

I26

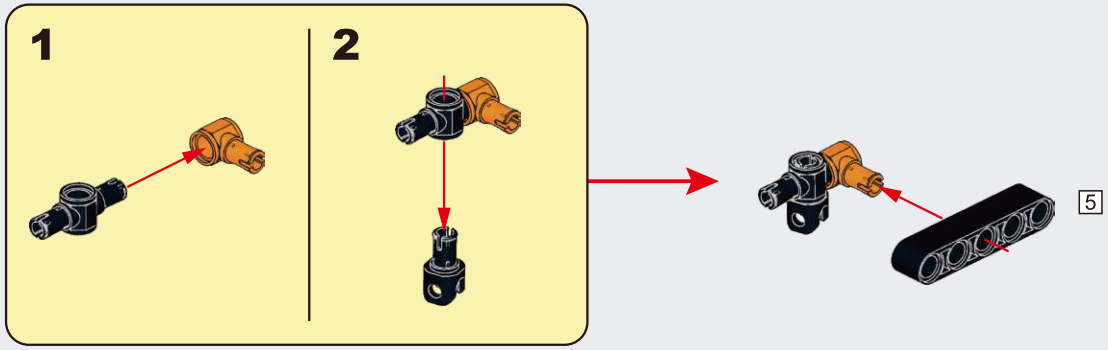

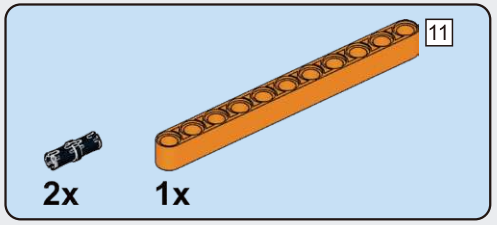

I27

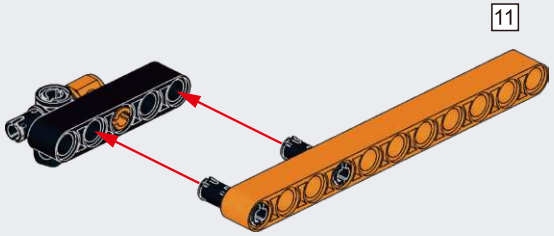

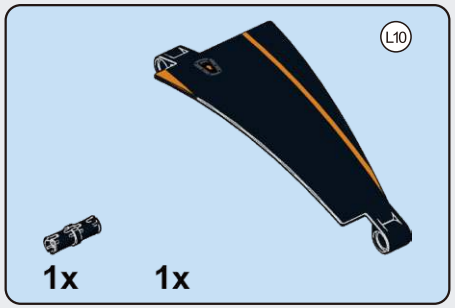

I28

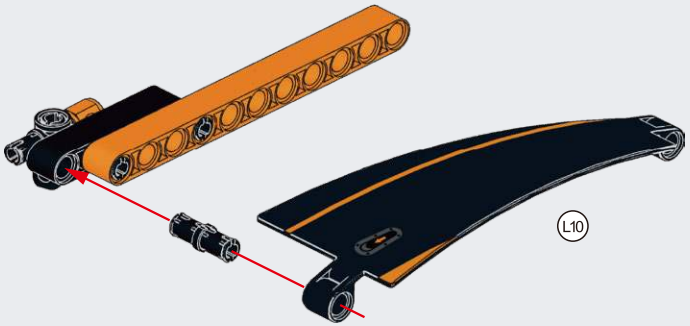

I29

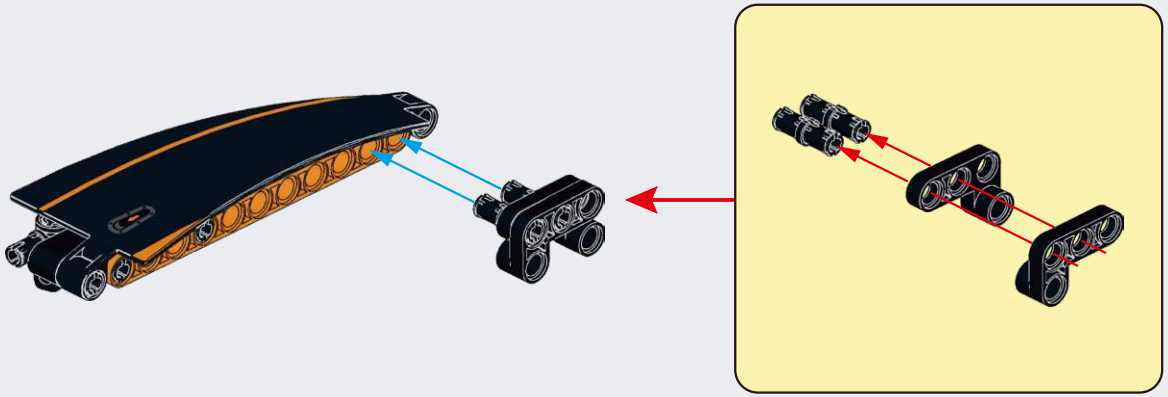

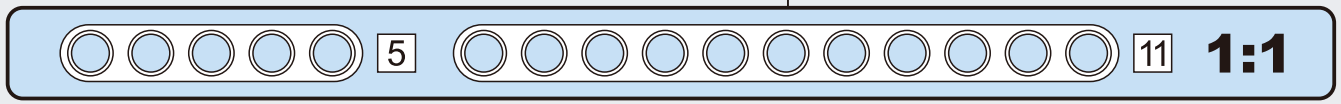

I30

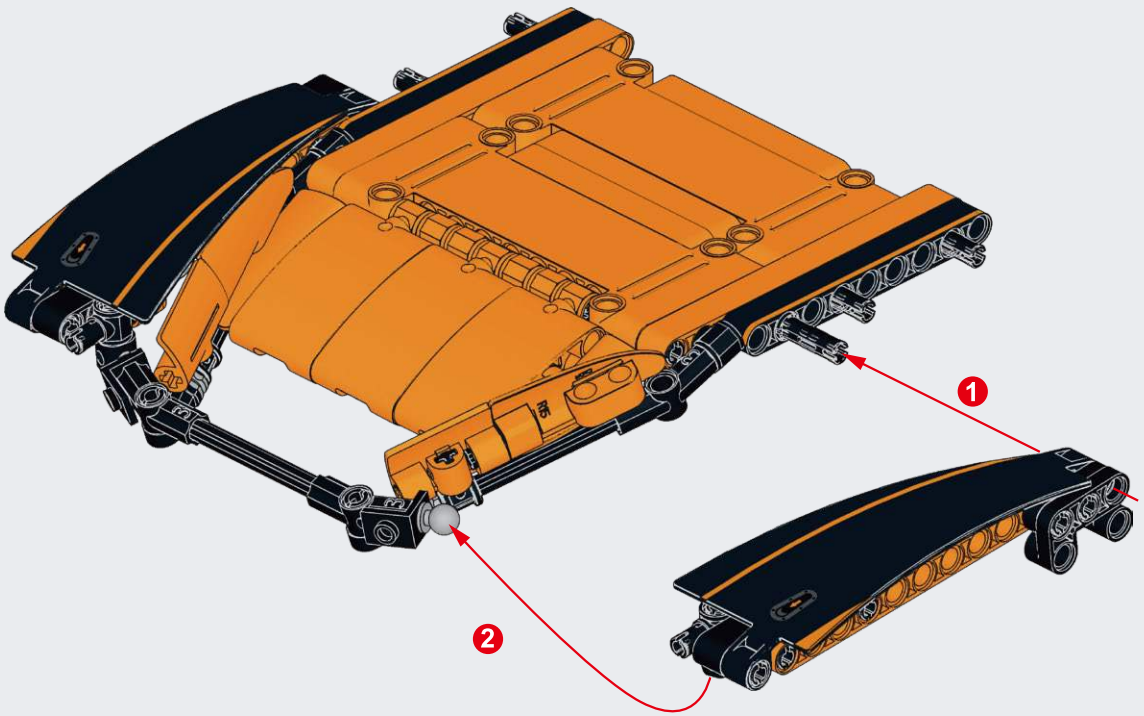

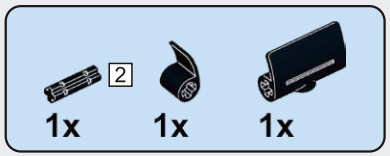

I31

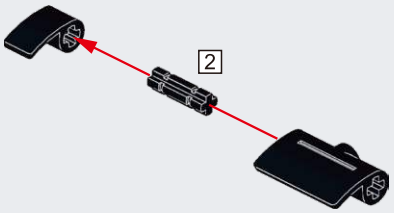

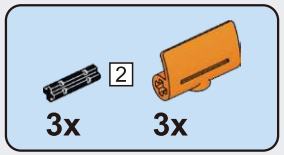

I32

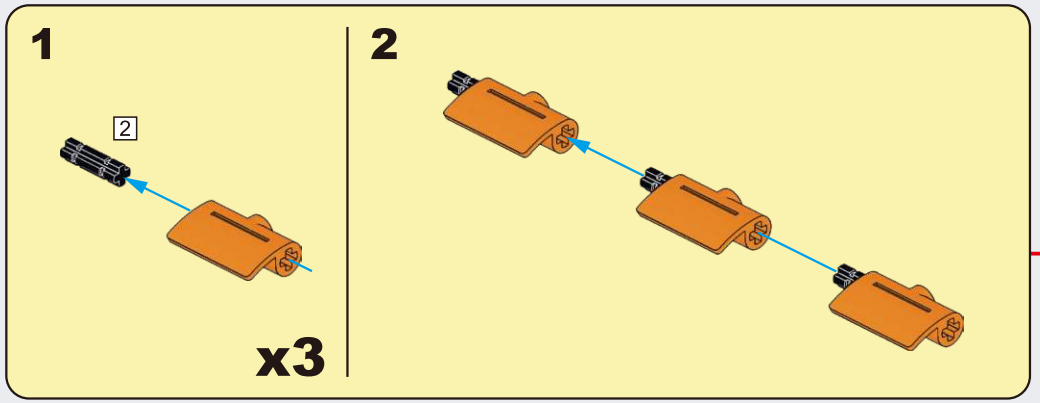

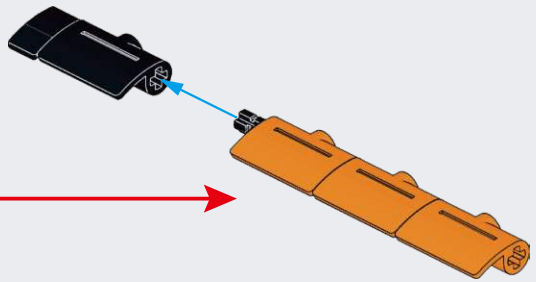

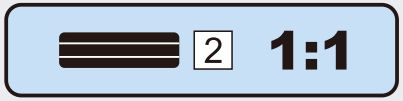

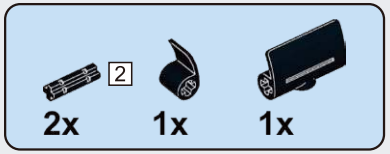

I33

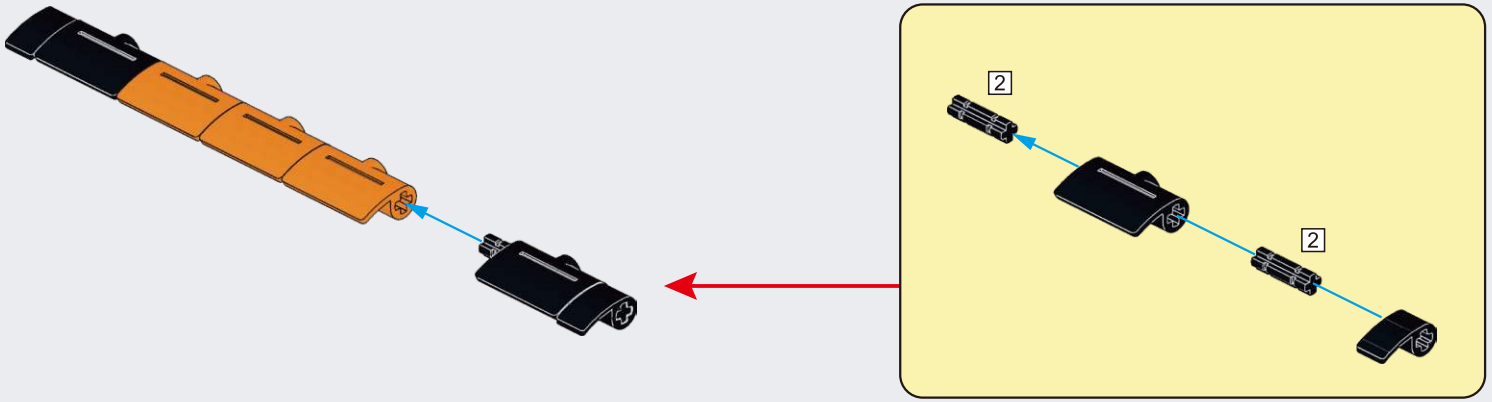

I34

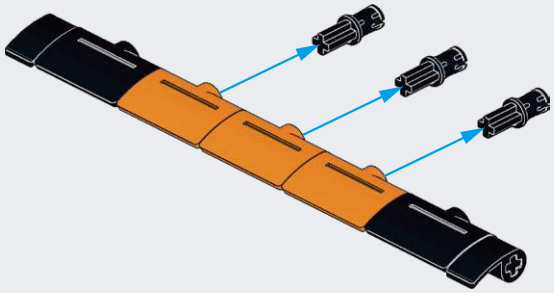

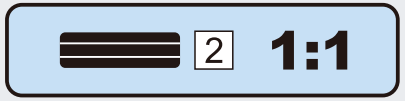

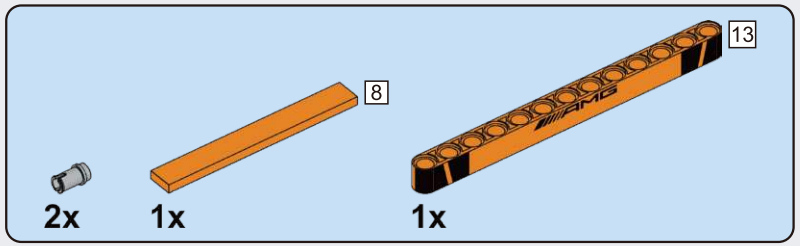

I35

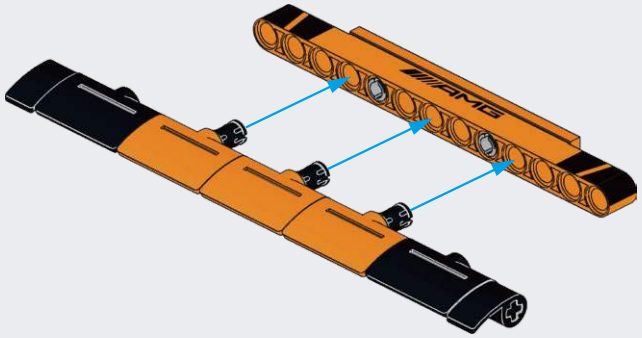

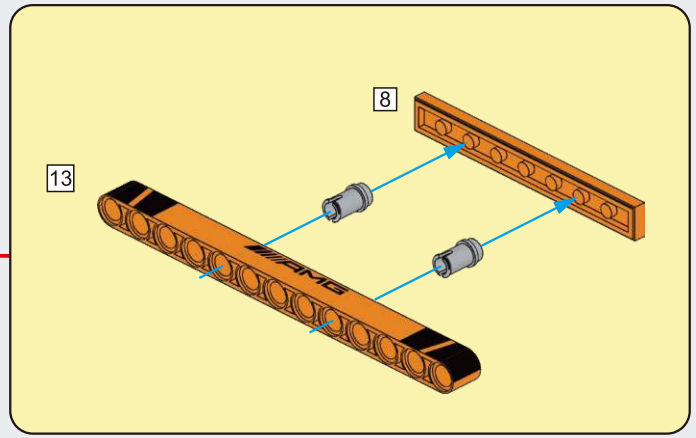

I36

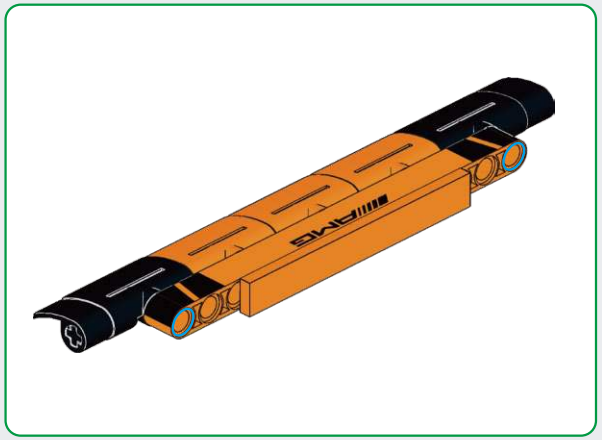

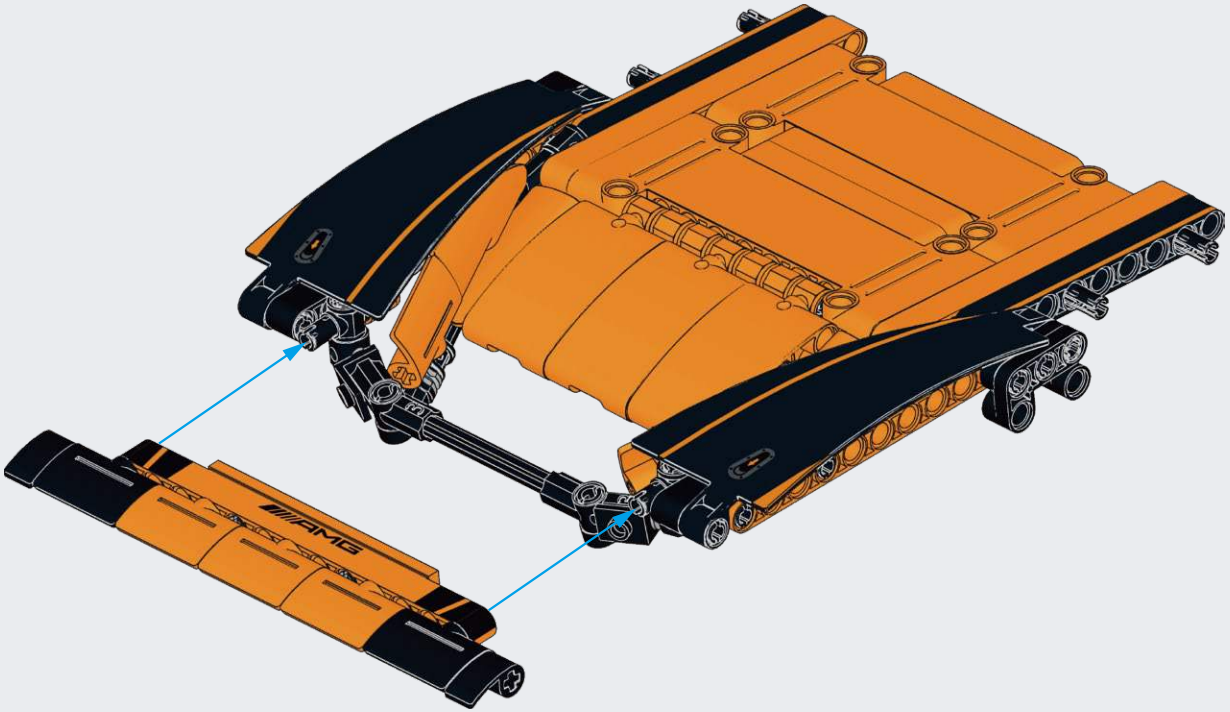

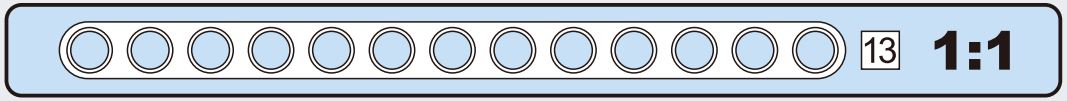

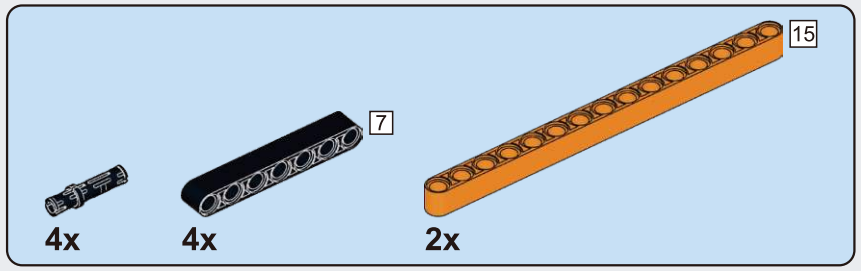

I37

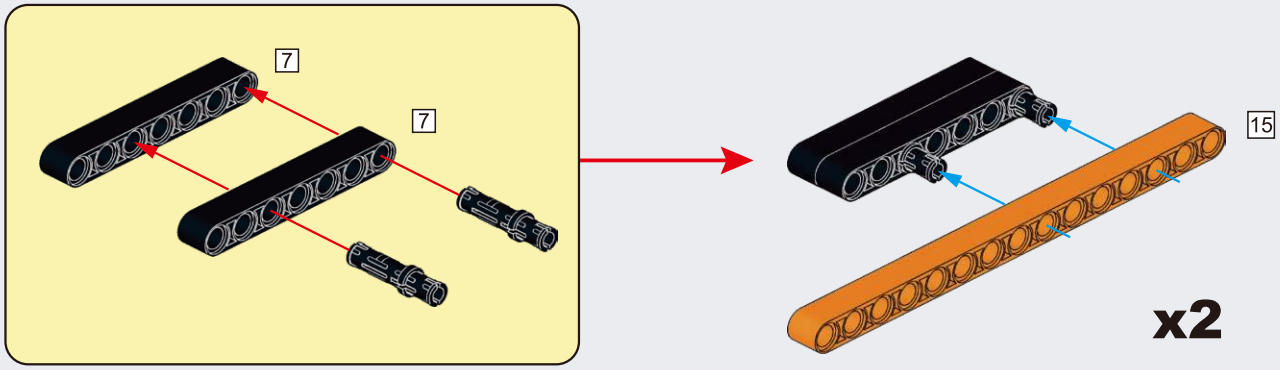

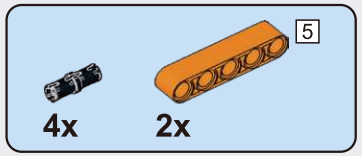

I38

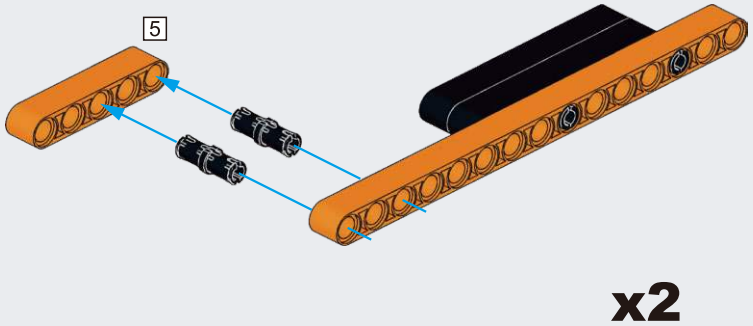

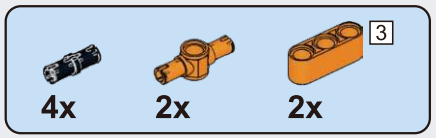

I39

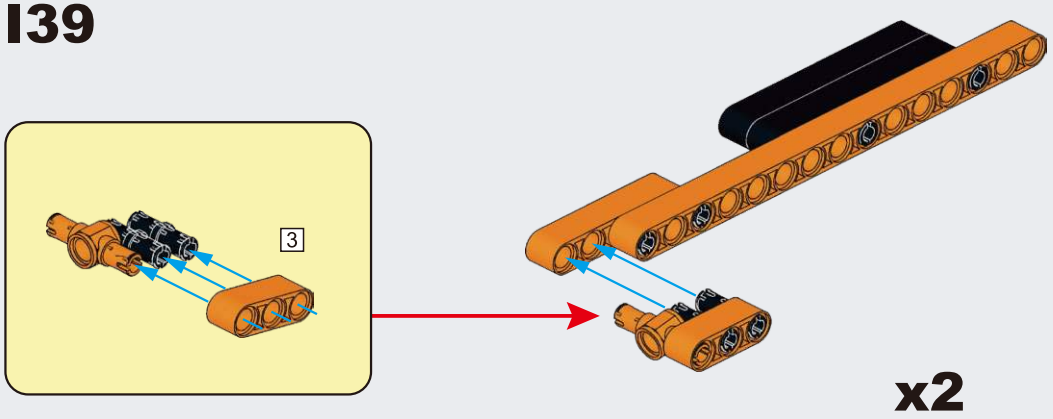

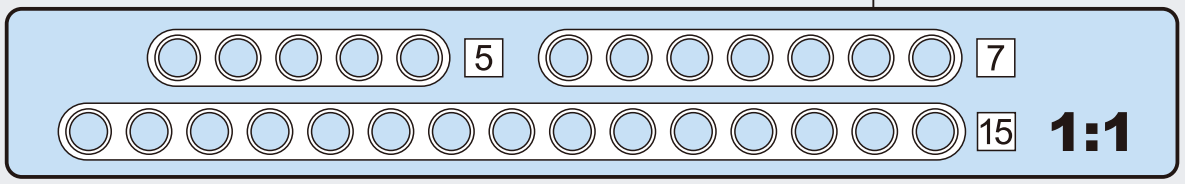

140

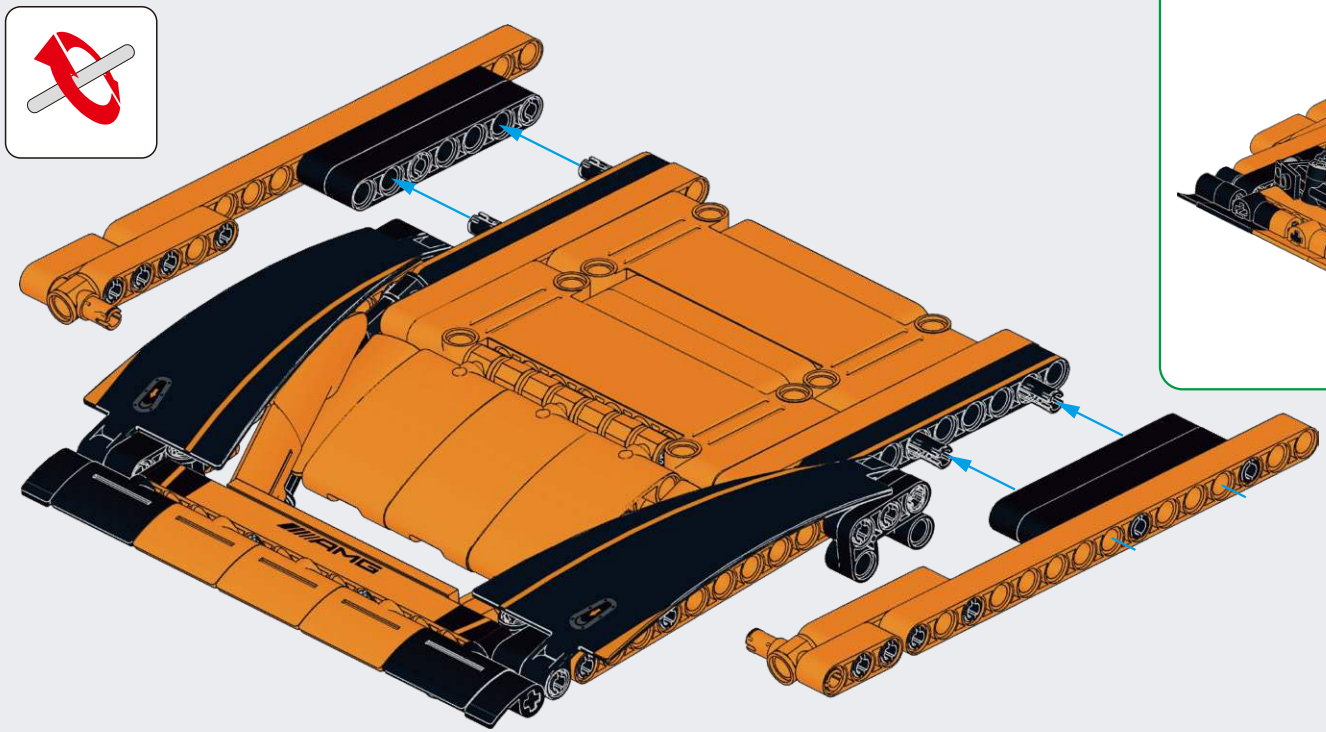

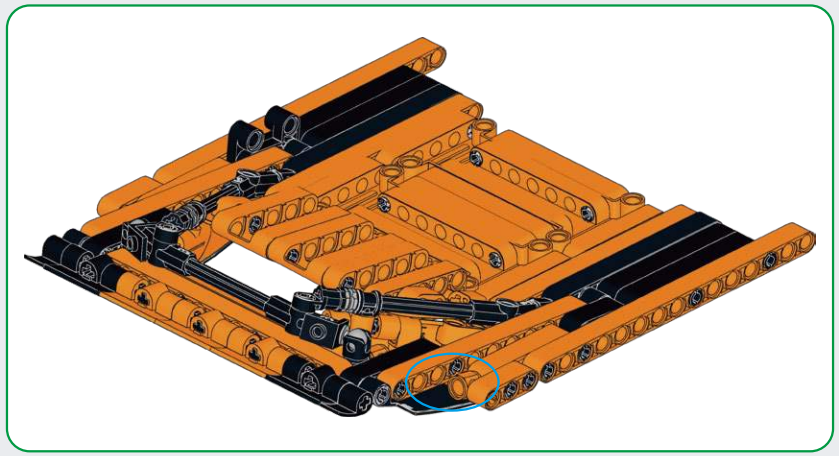

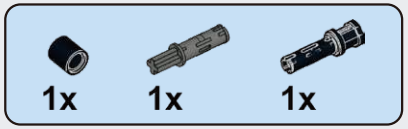

141

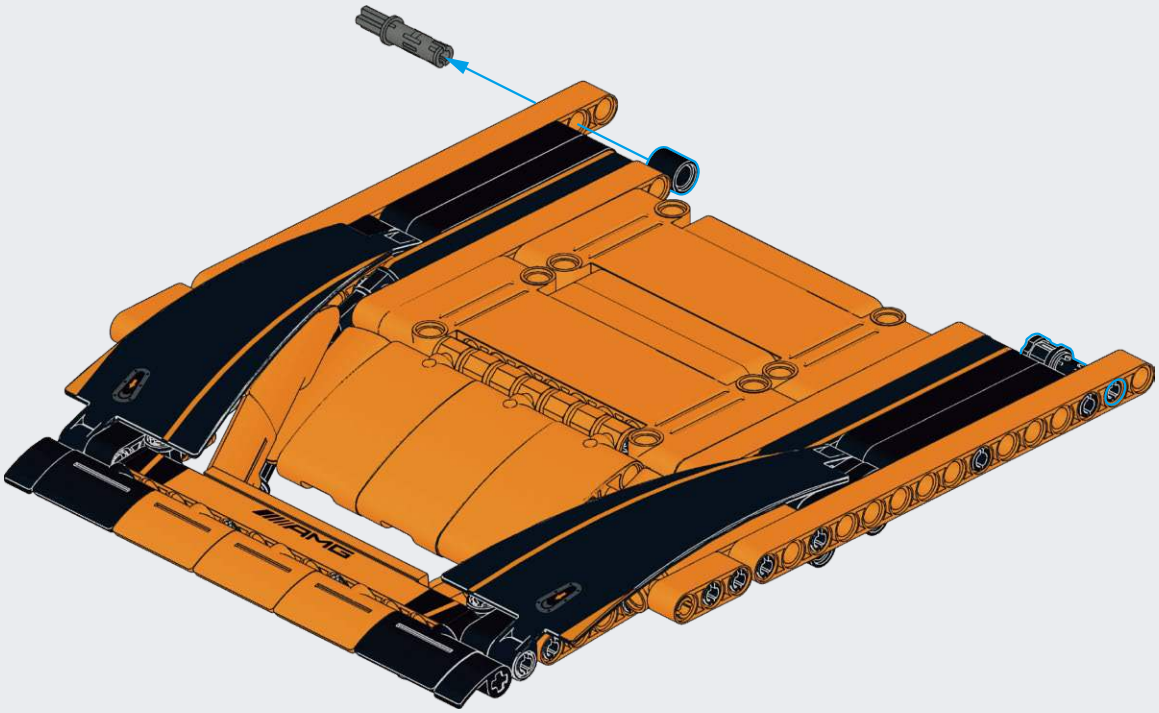

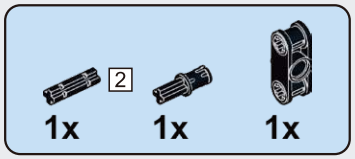

142

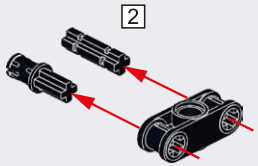

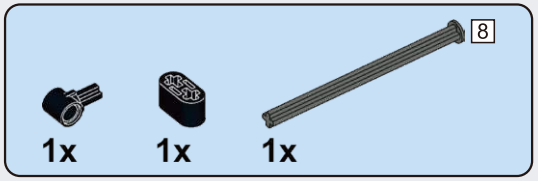

143

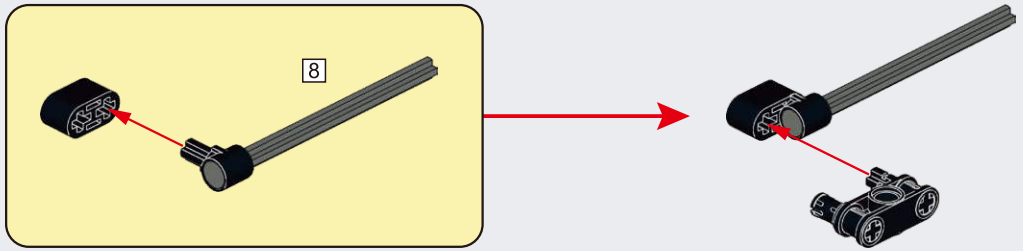

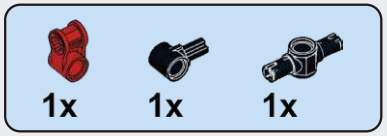

144

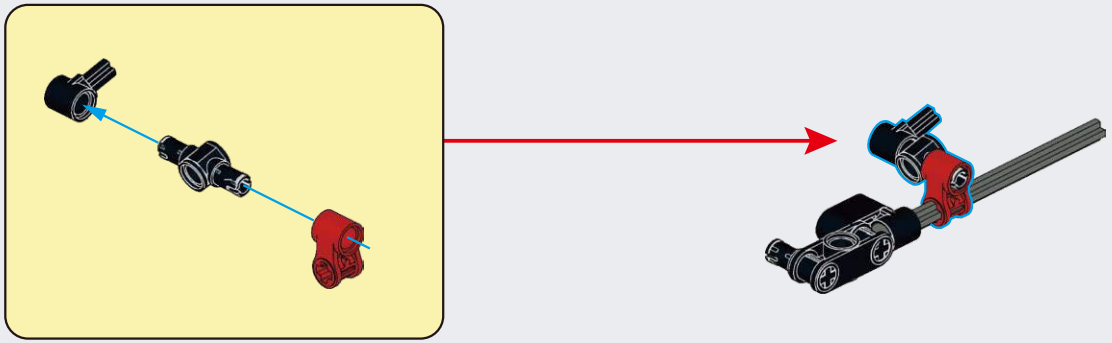

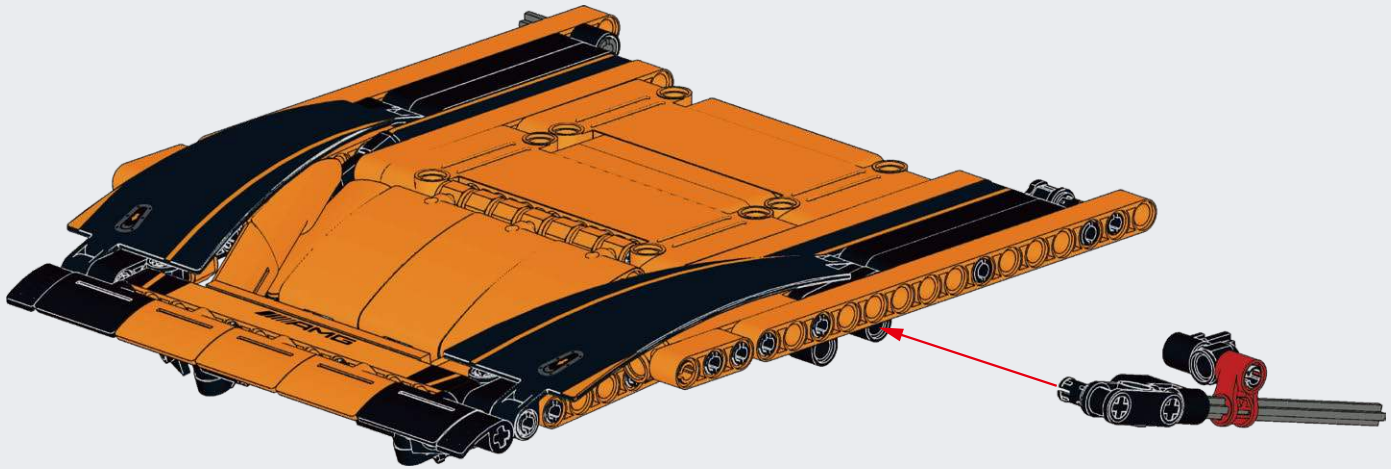

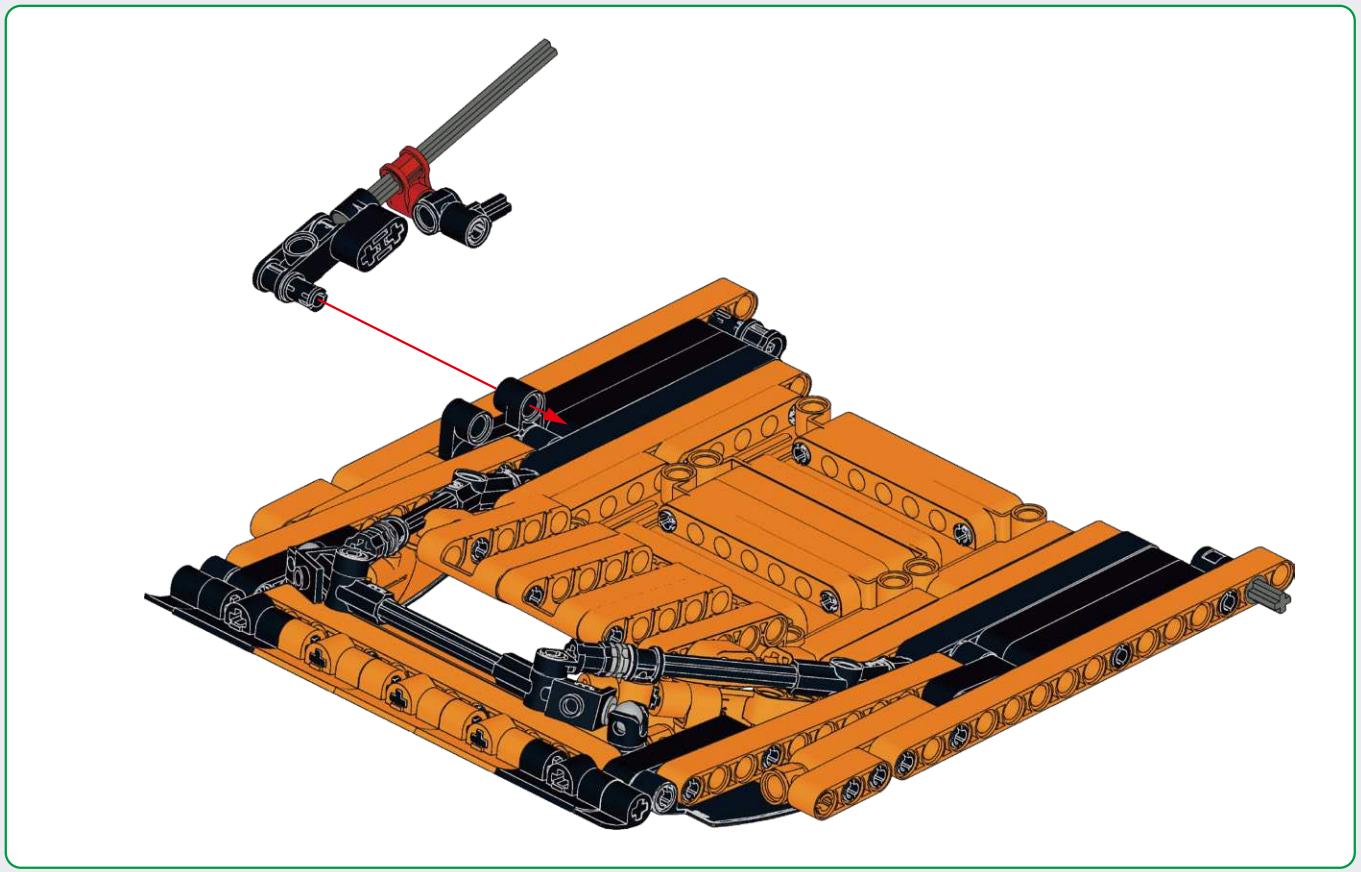

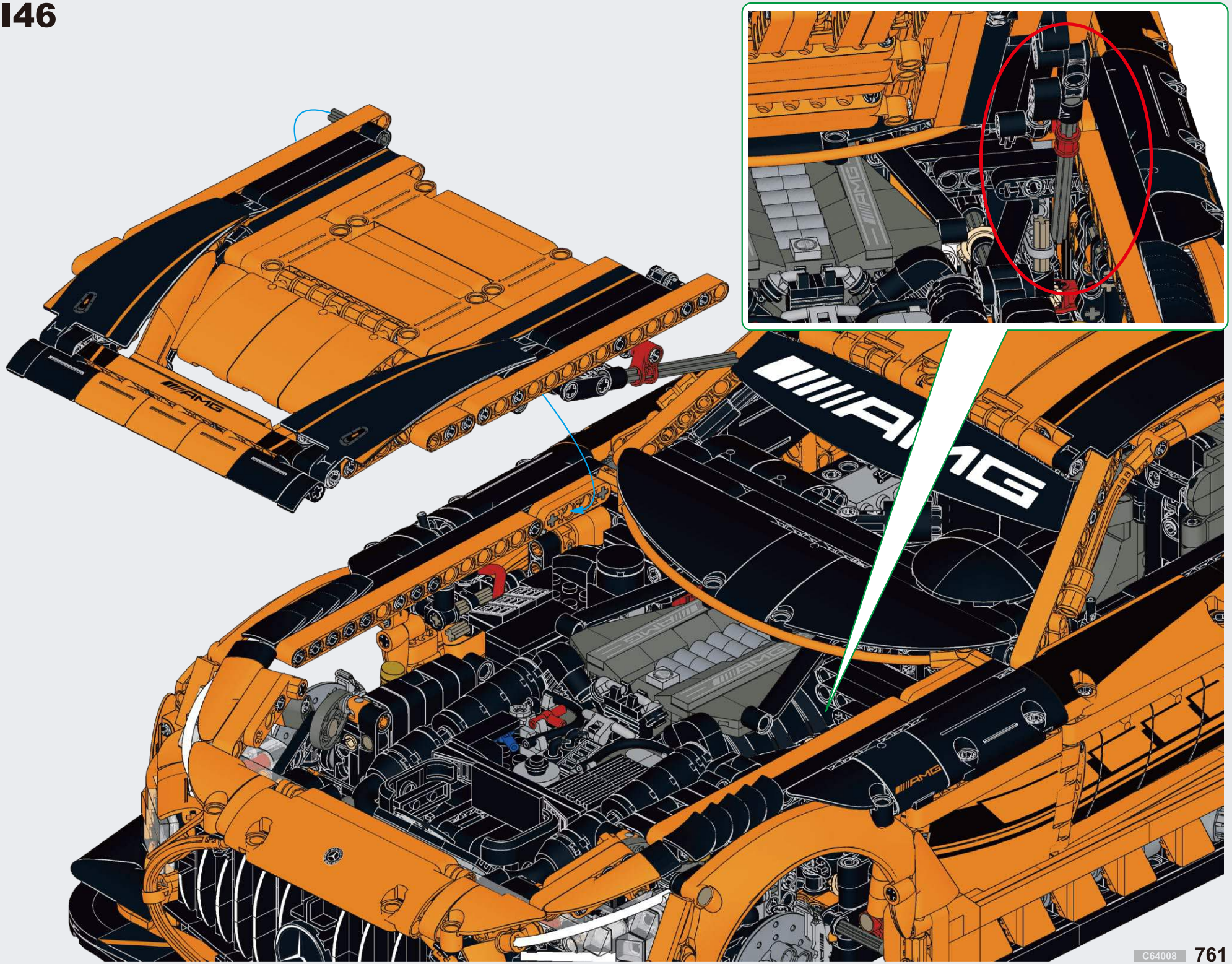
AMG

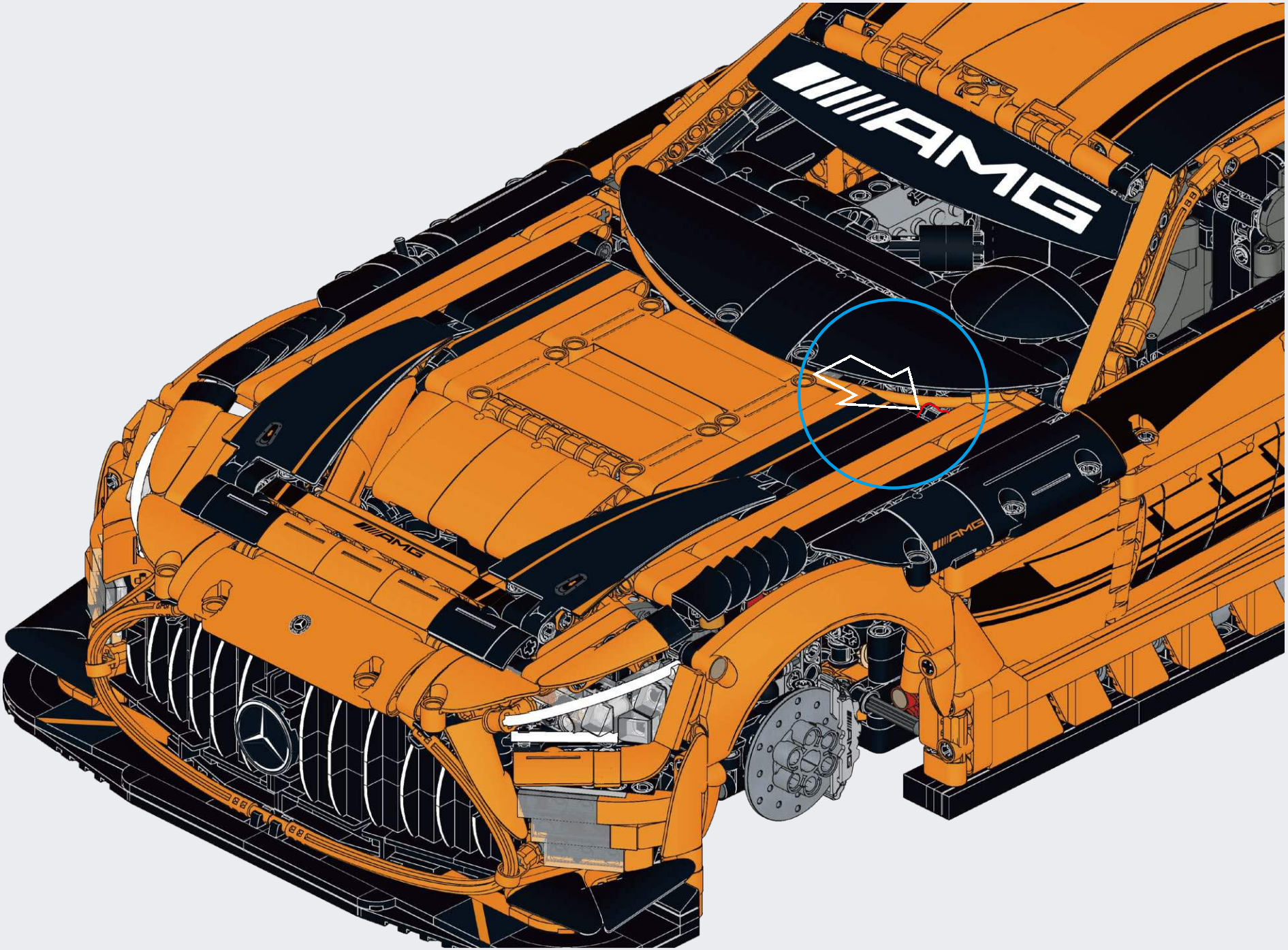
AMG
AMG
AMG

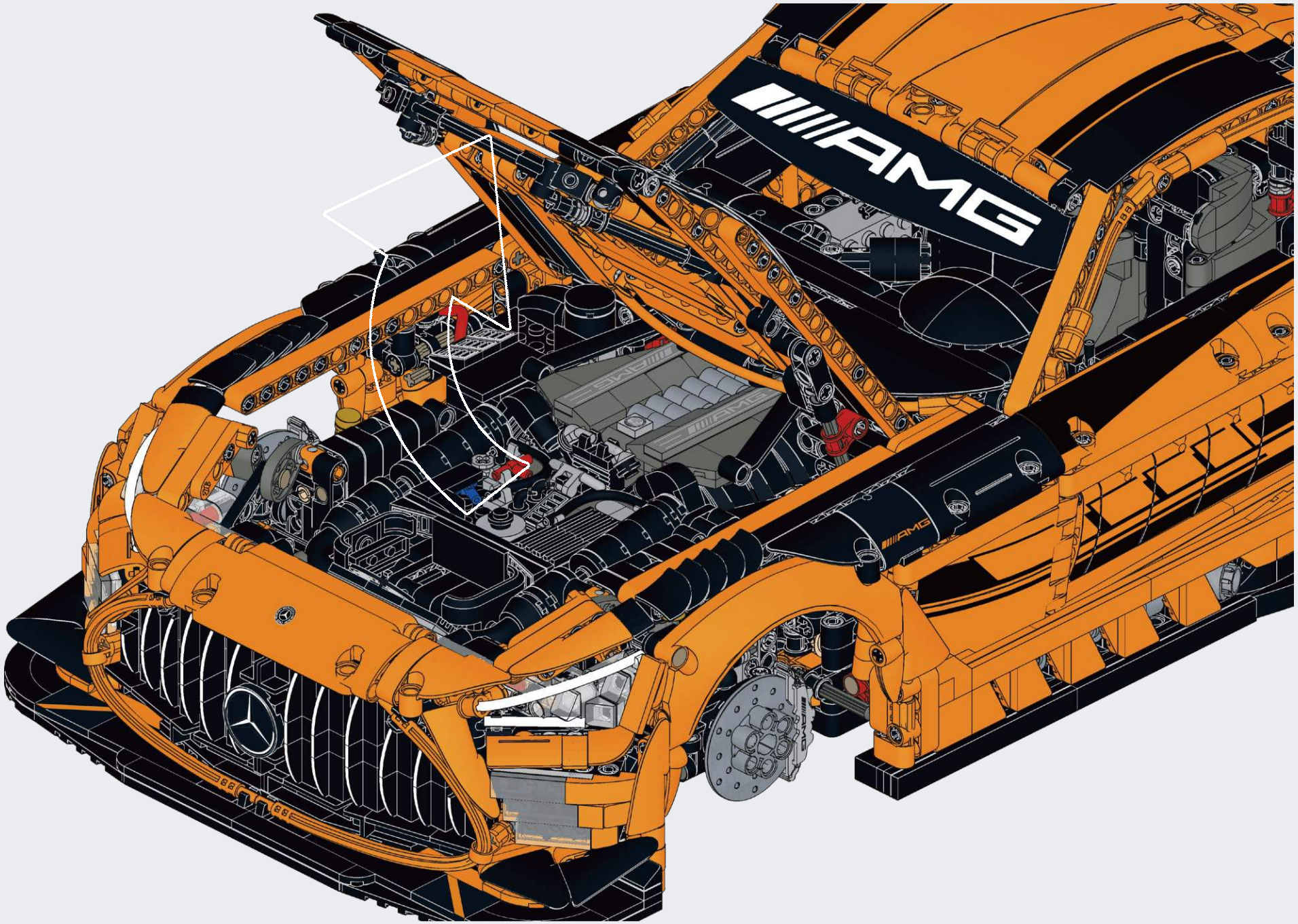
AMG

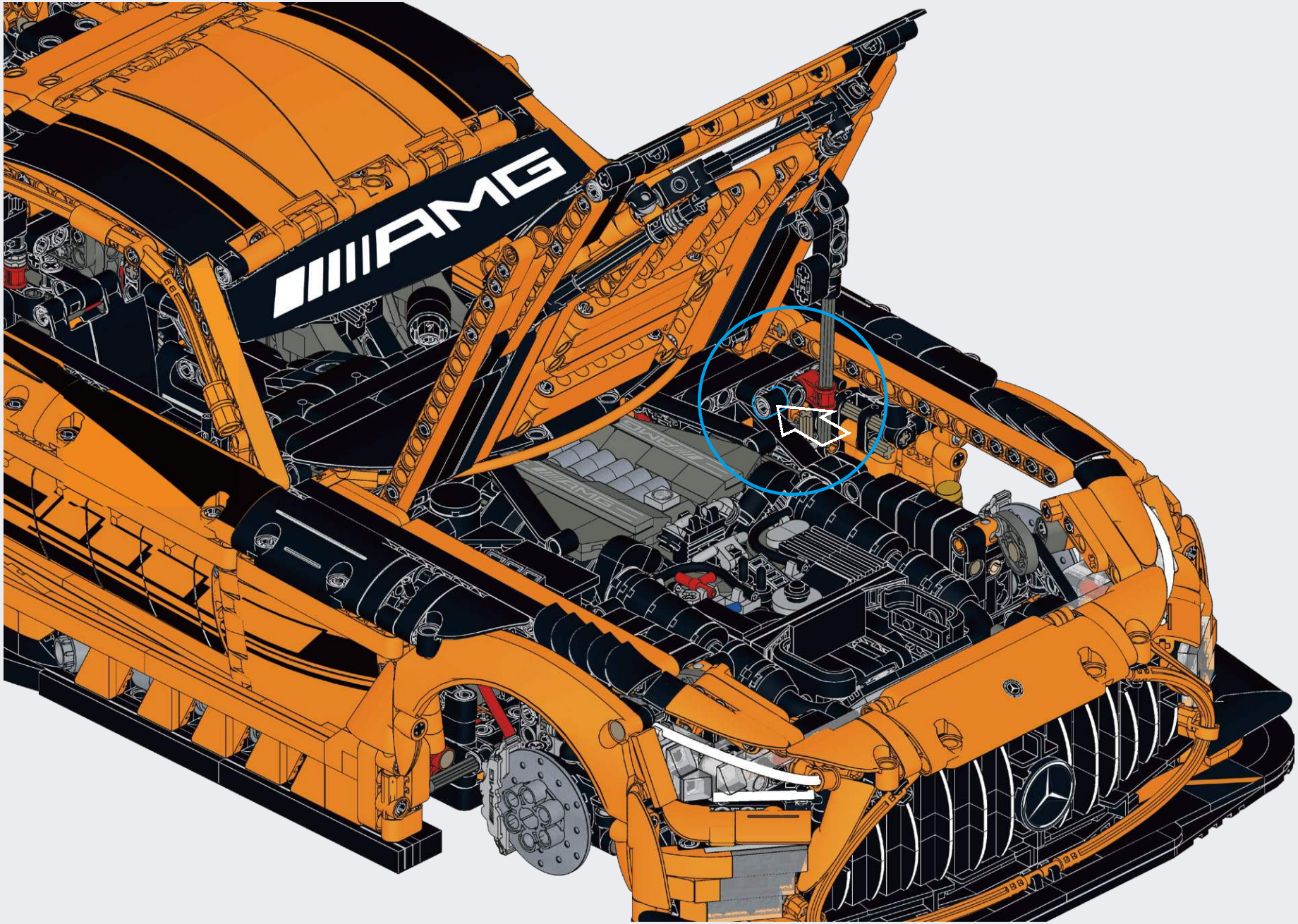
AMG

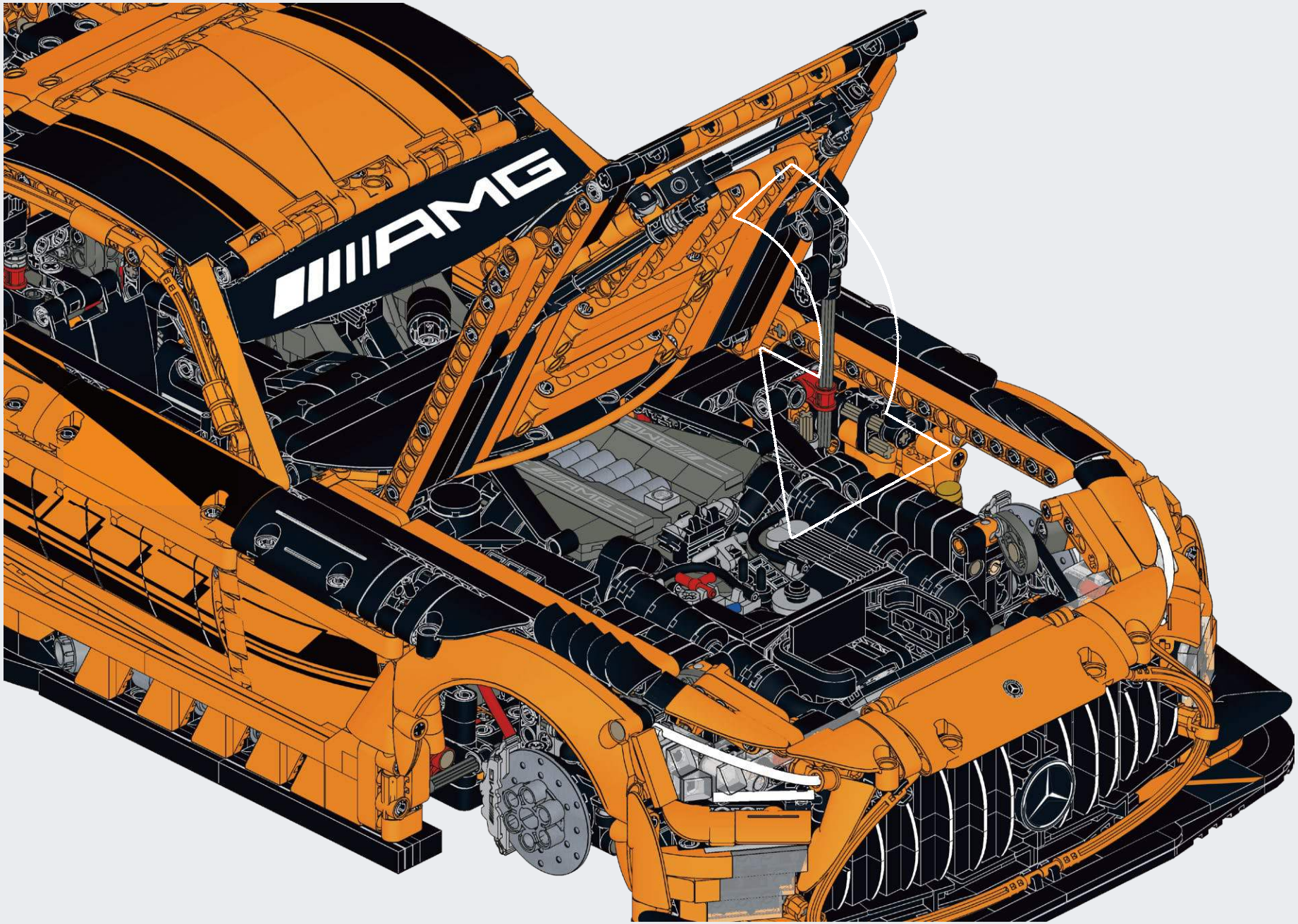
AMG

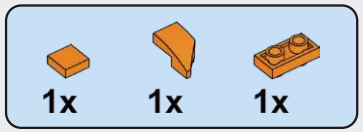

I51

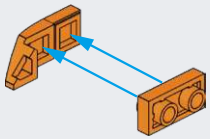

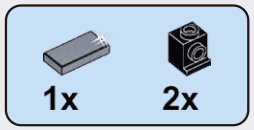

I52

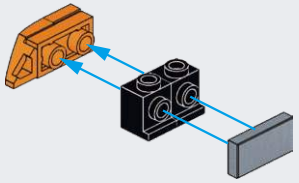

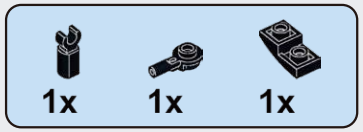

I53

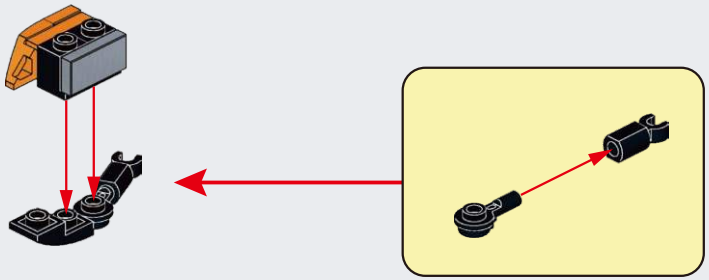

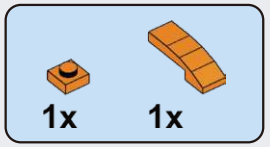

I54

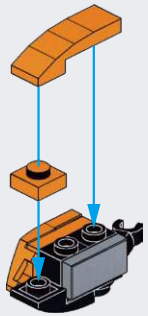

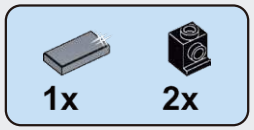

155

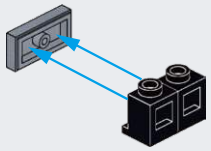

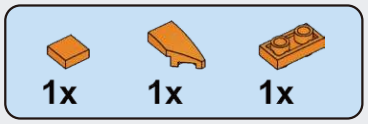

156

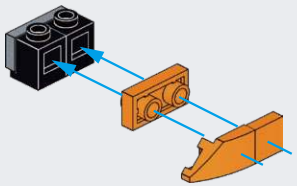

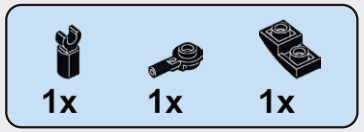

157

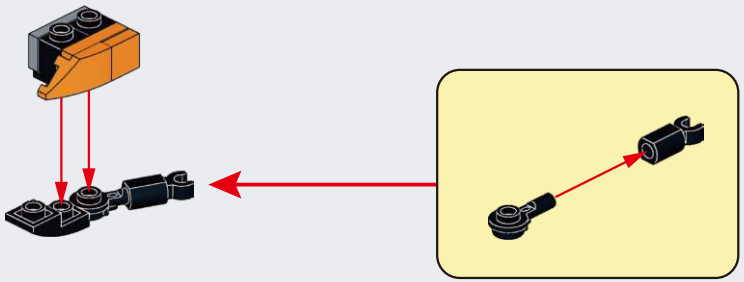

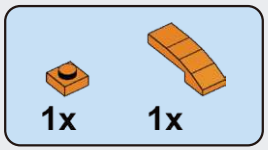

158

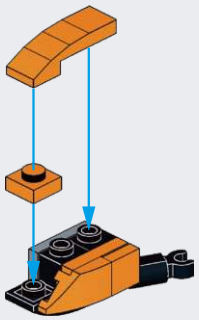

I59

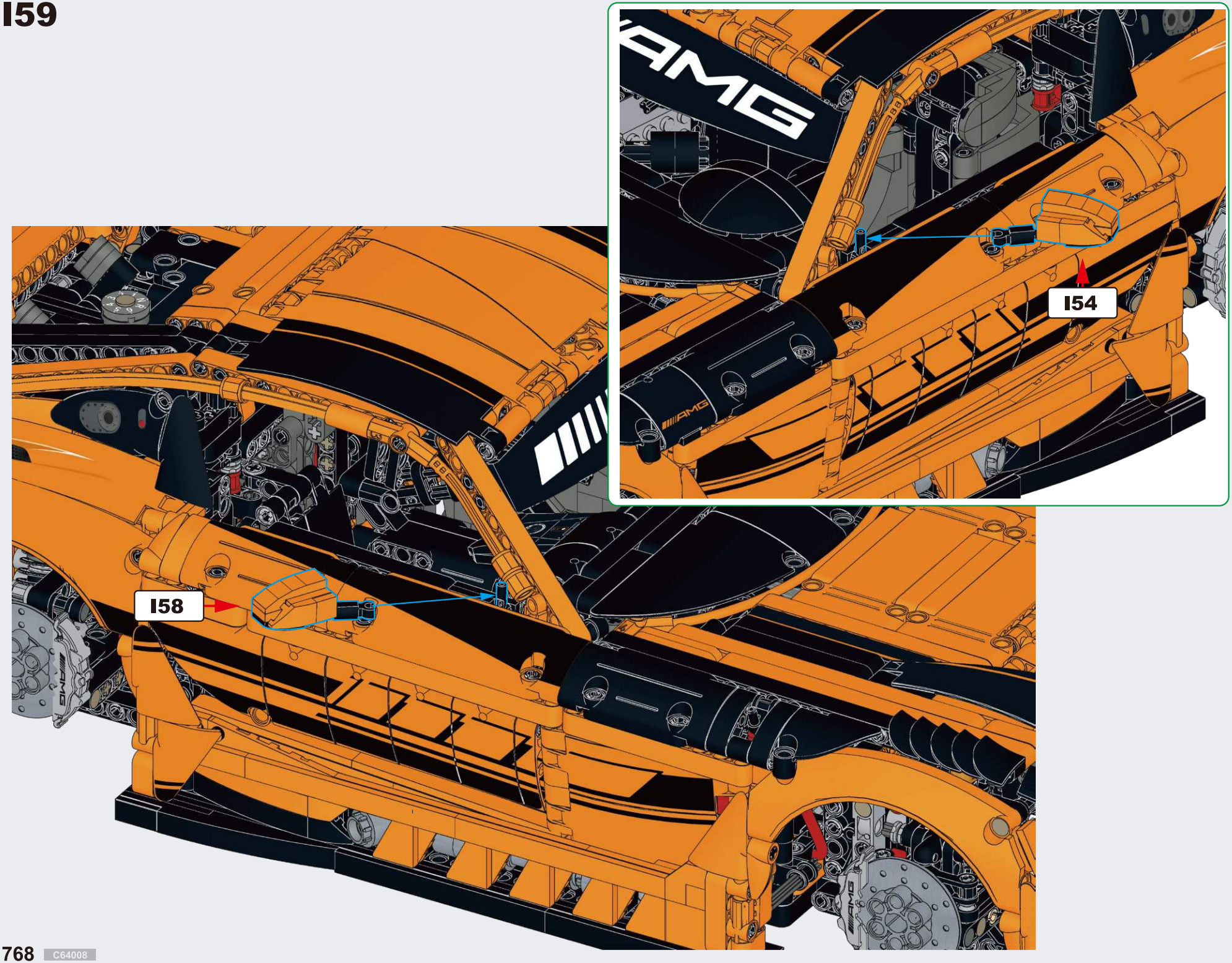

I60

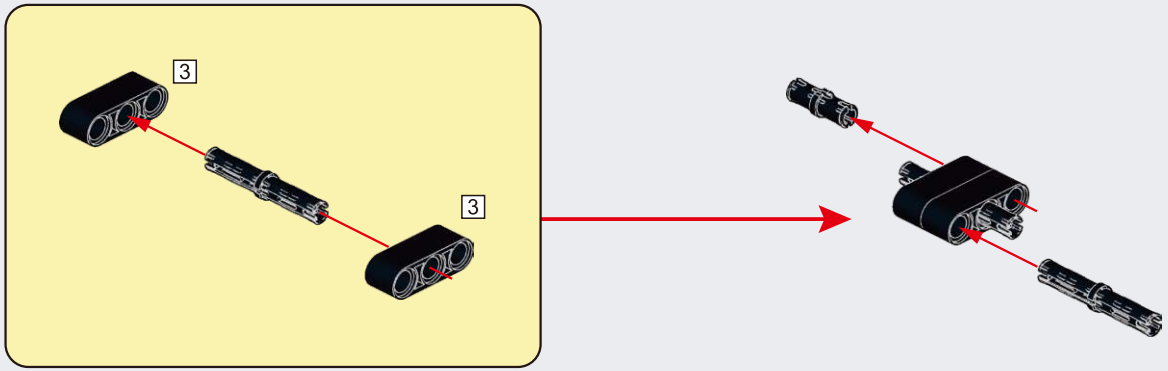

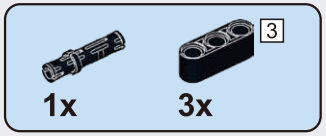

I61

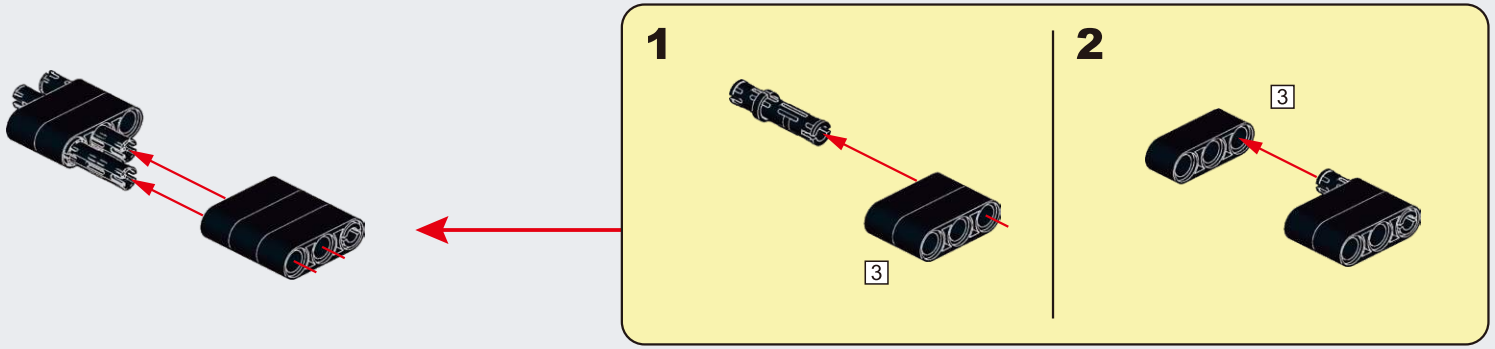

I62

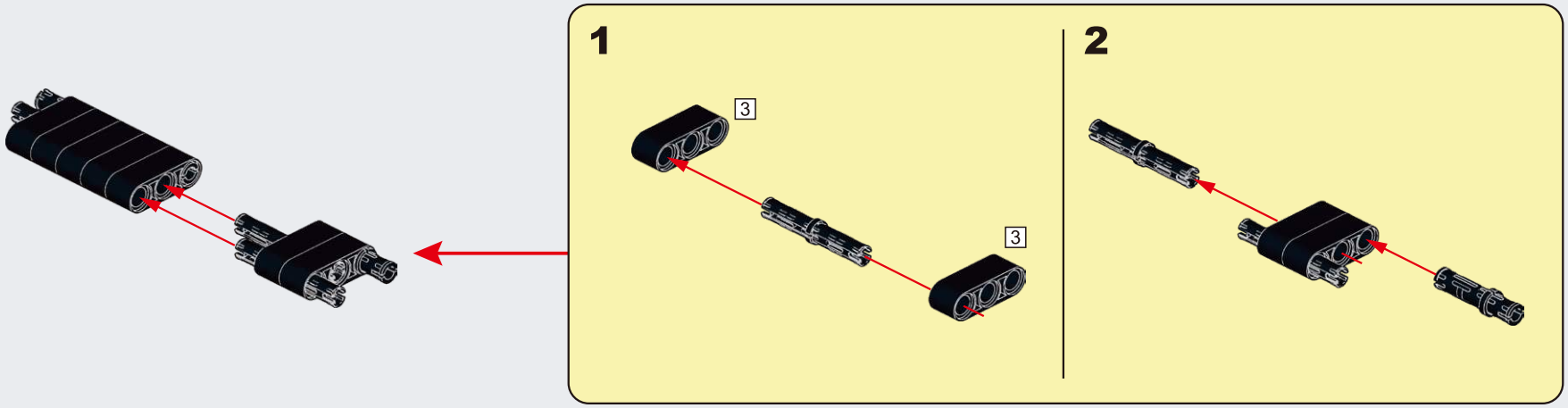

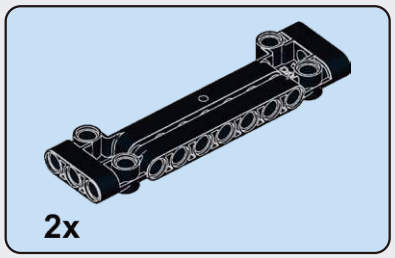

I63

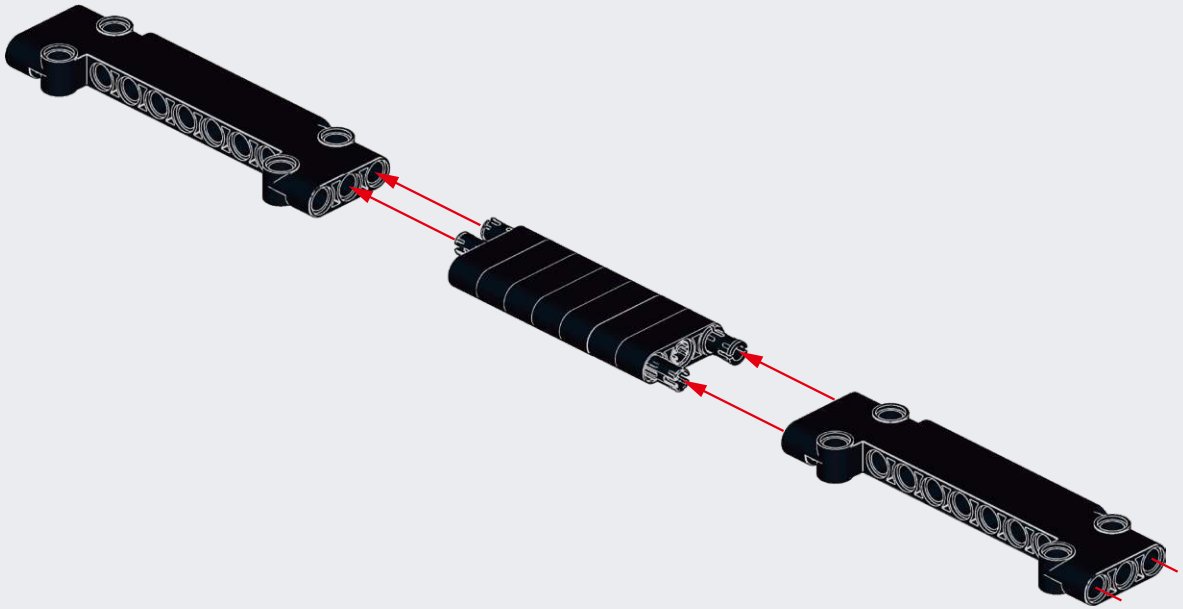

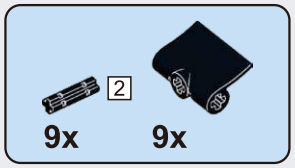

I64

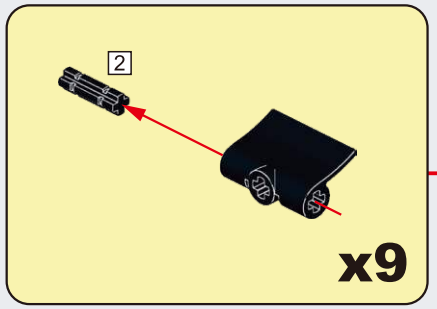

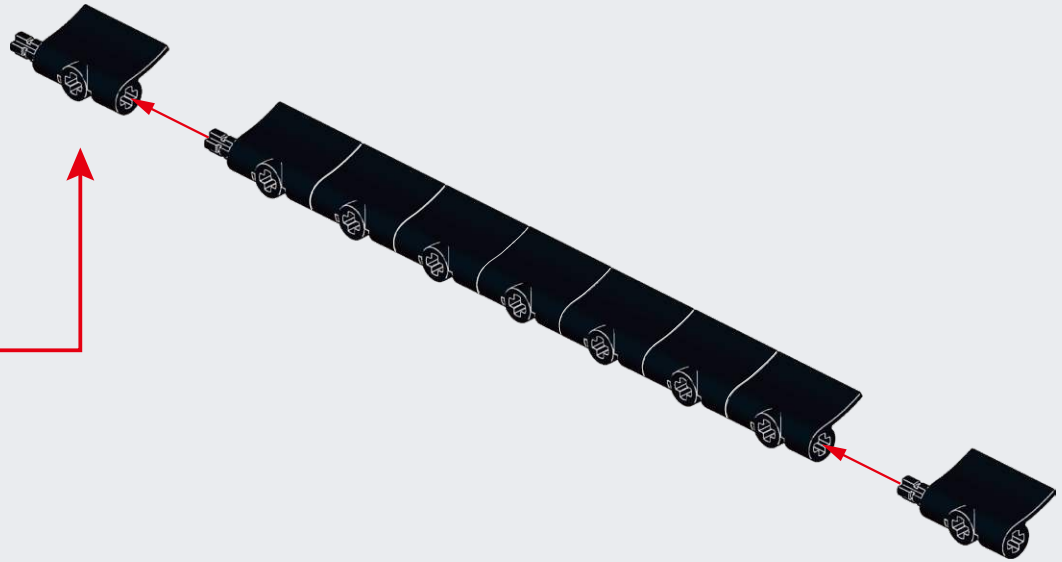

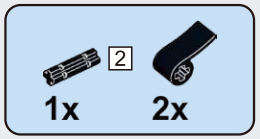

I65

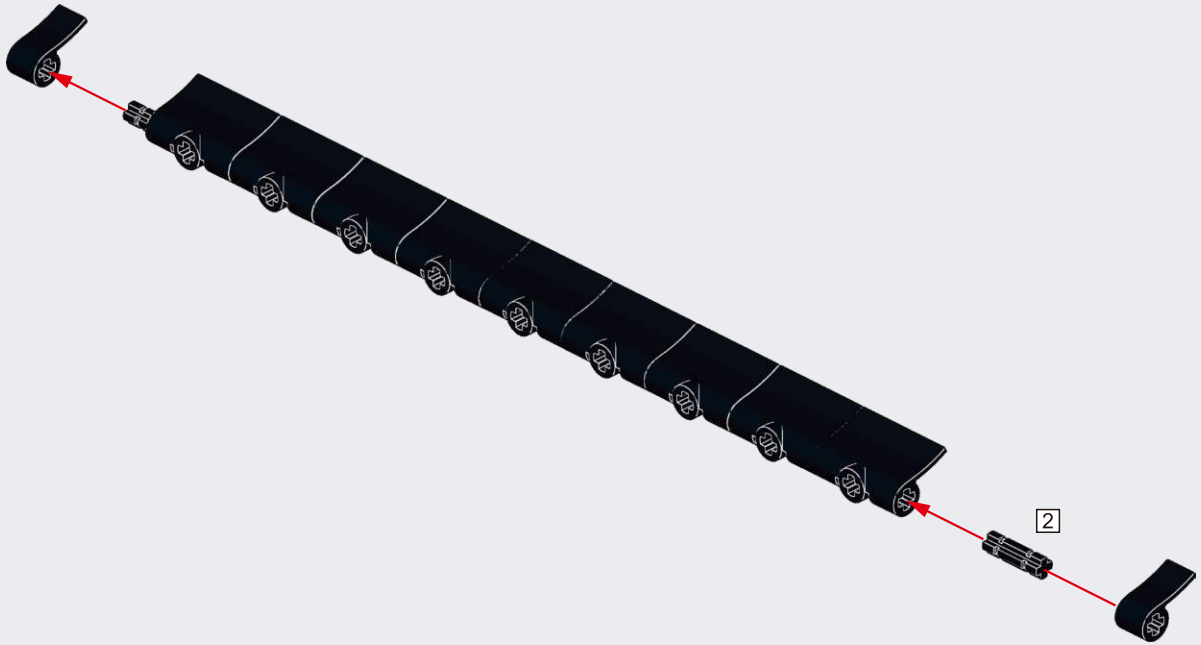

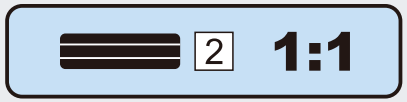

I66

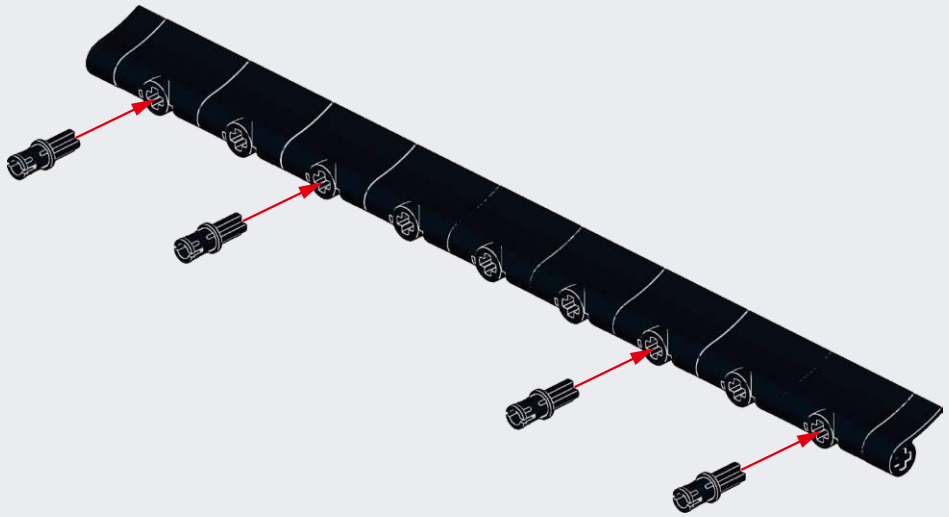

I67

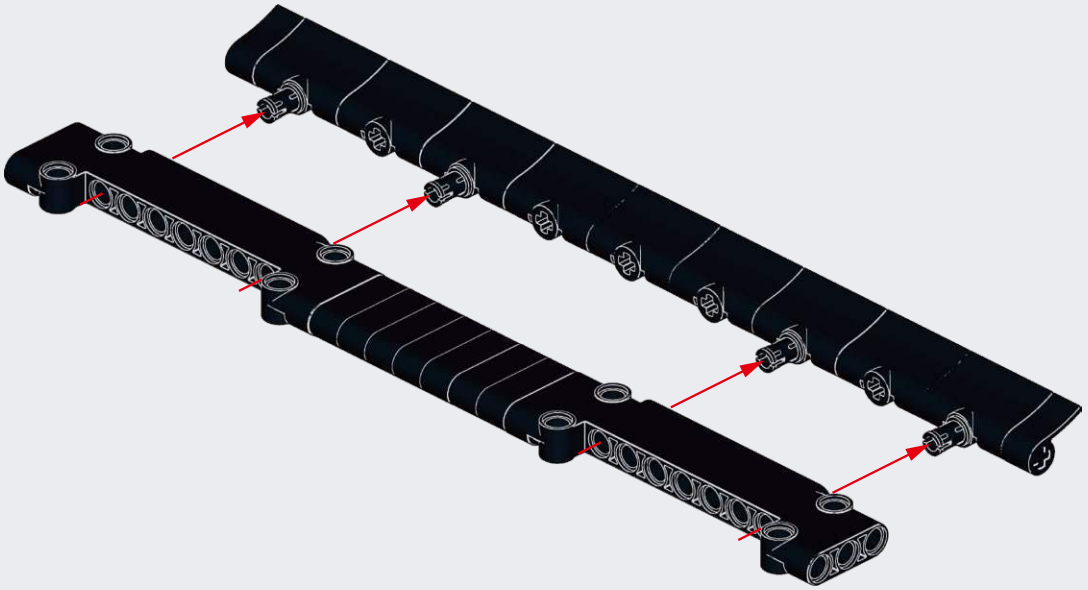

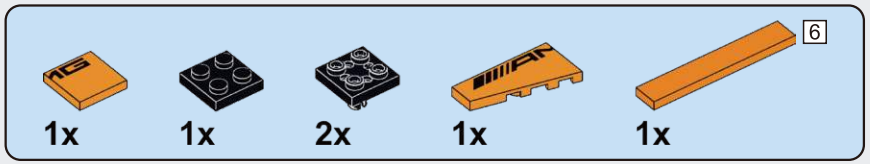

I68

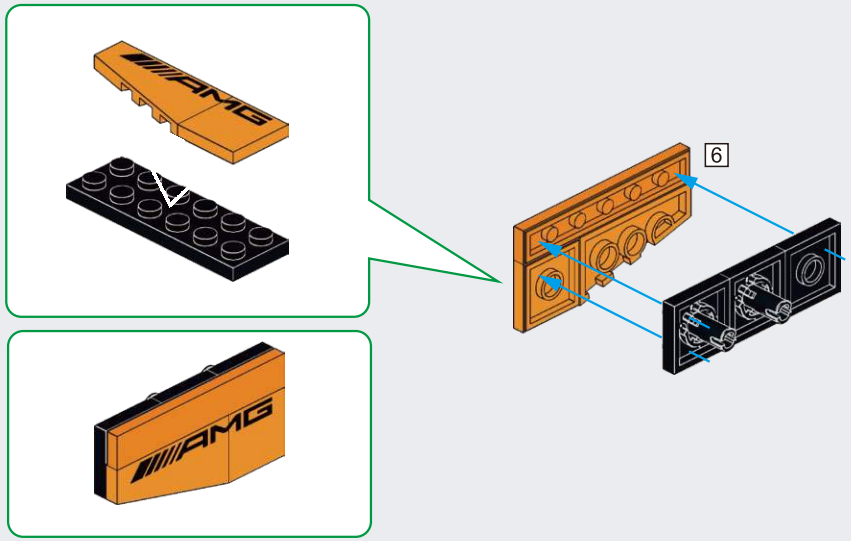

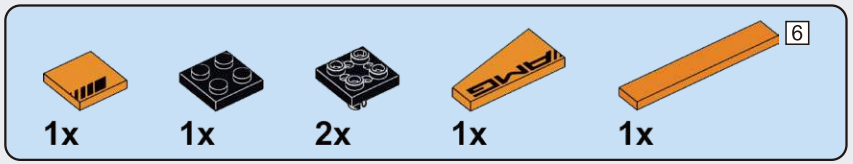

I69

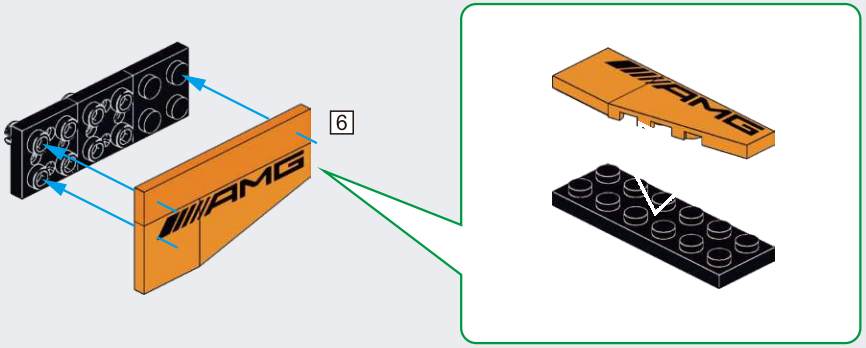

I70

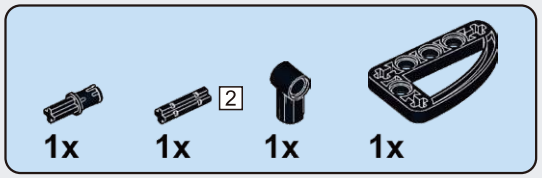

I71

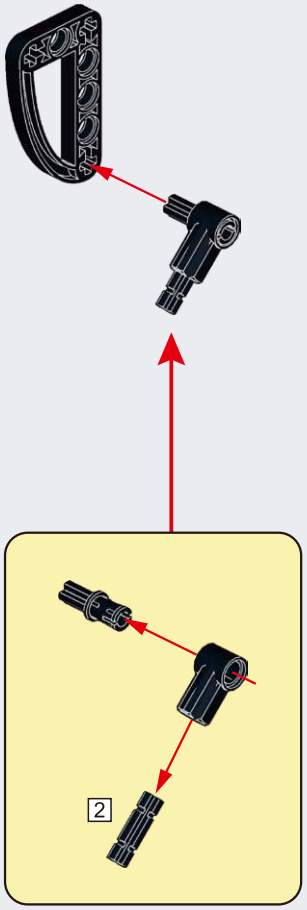

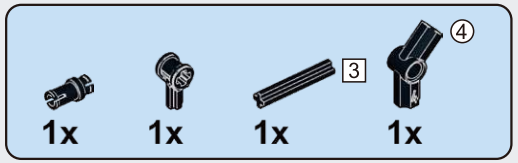

I72

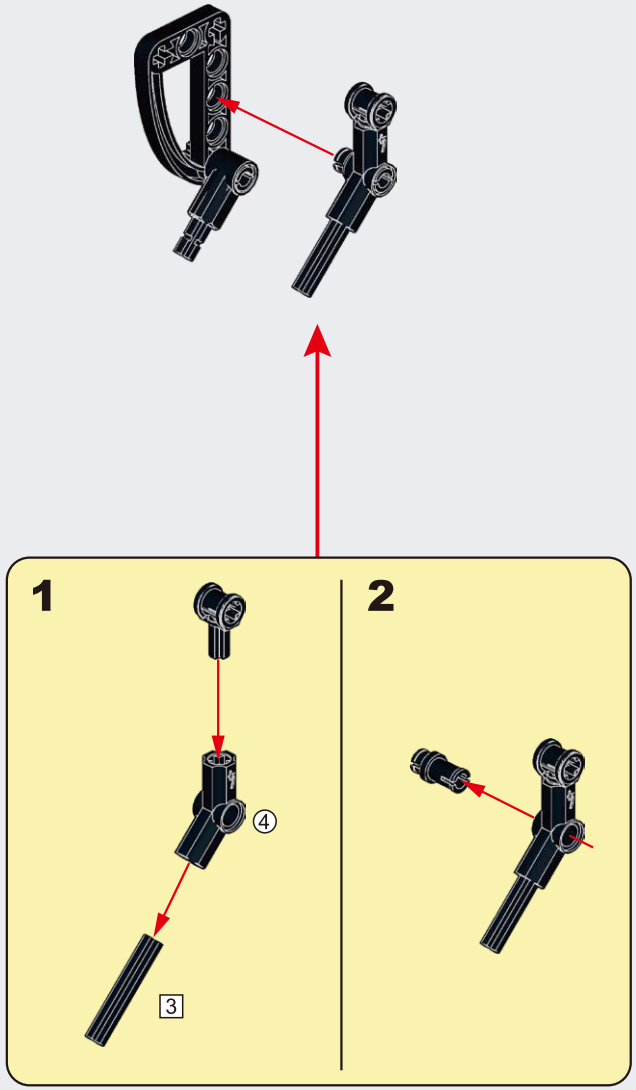

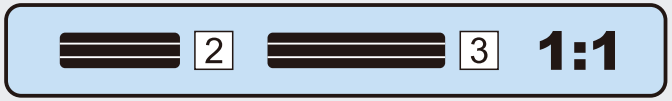

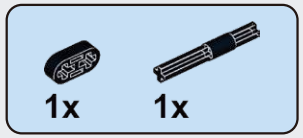

173

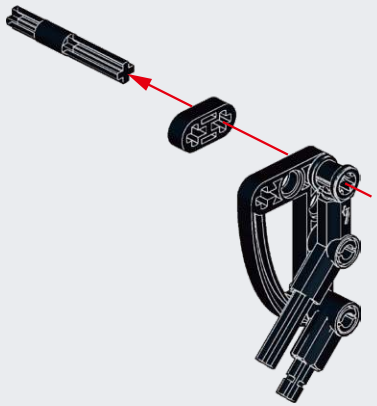

174

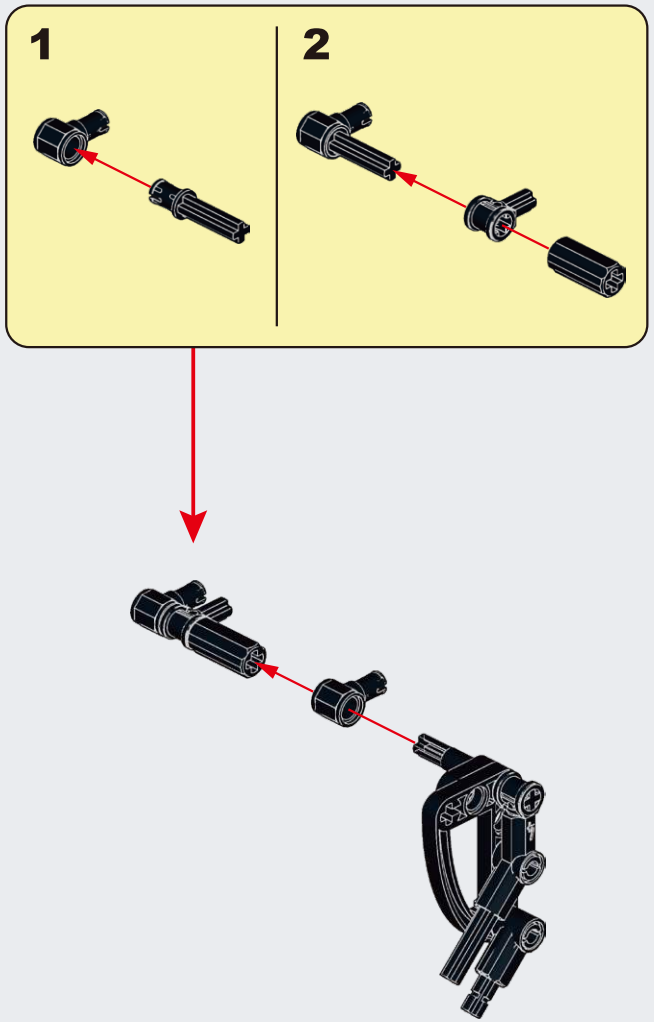

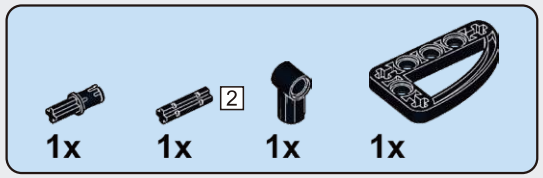

I75

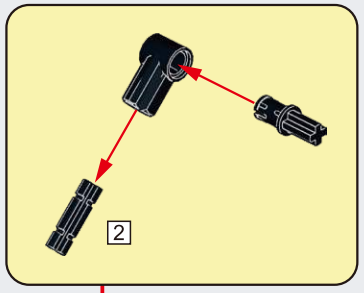

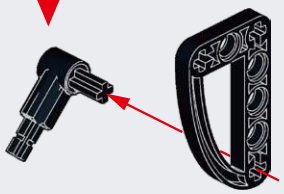

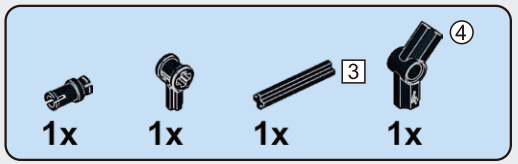

I76

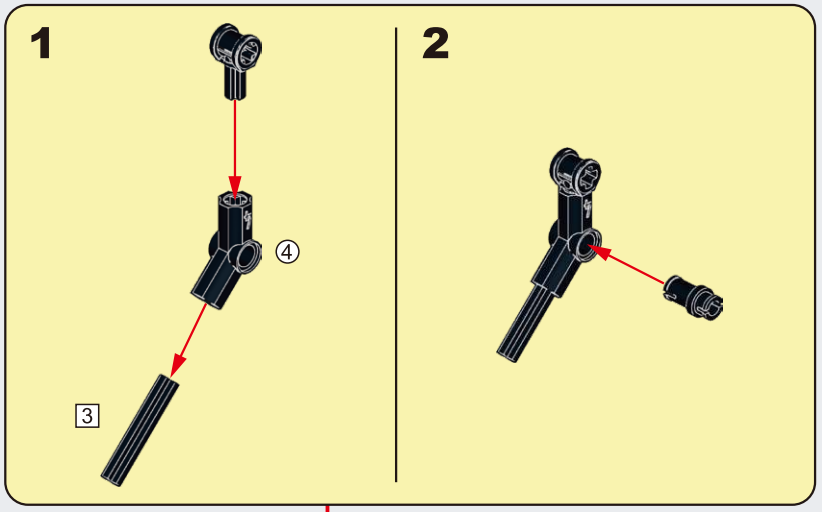

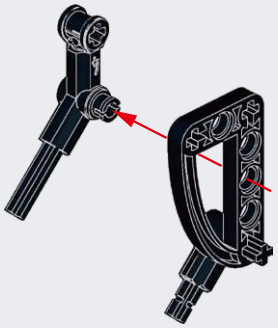

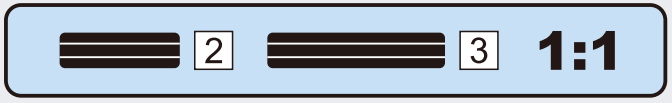

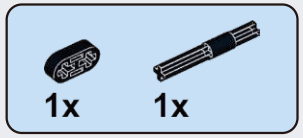

I77

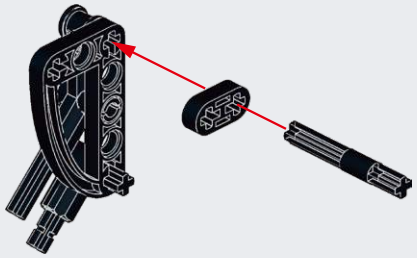

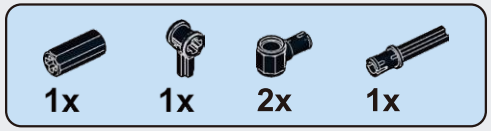

I78

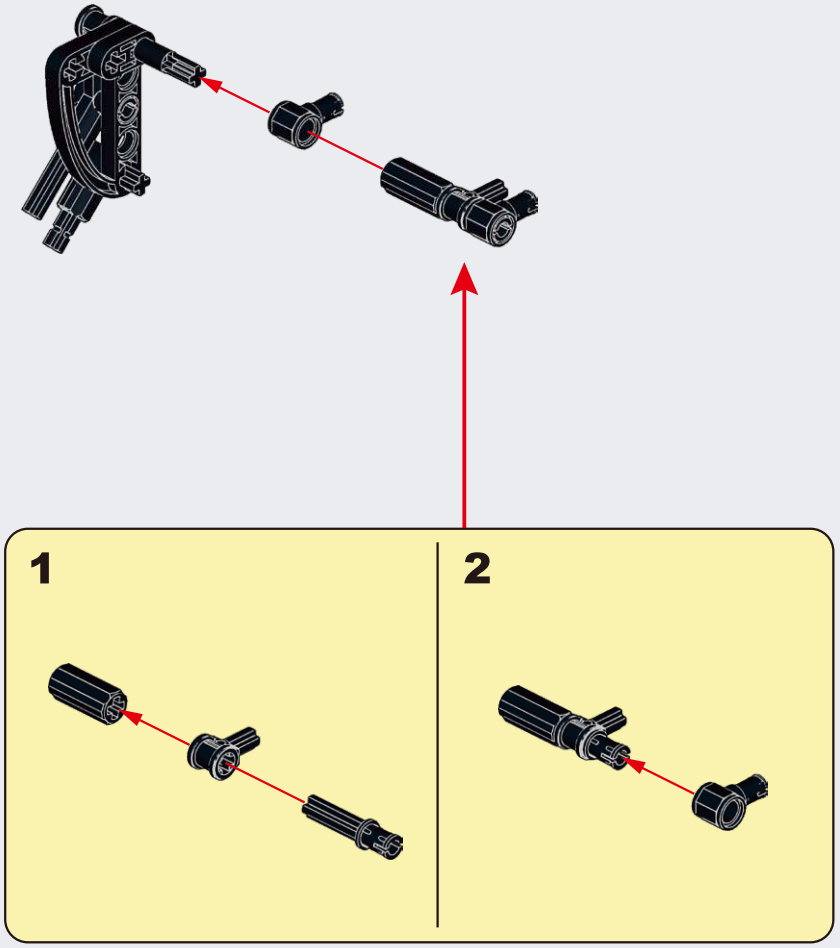

179

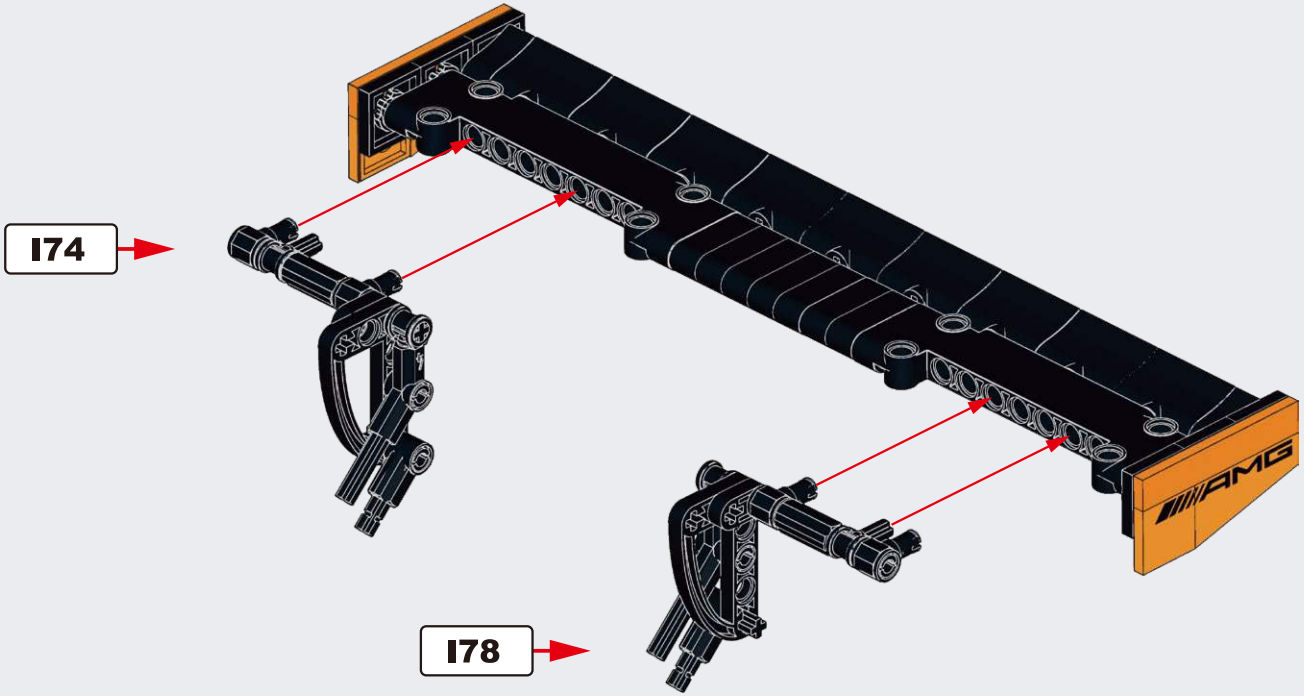

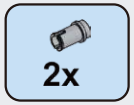

180

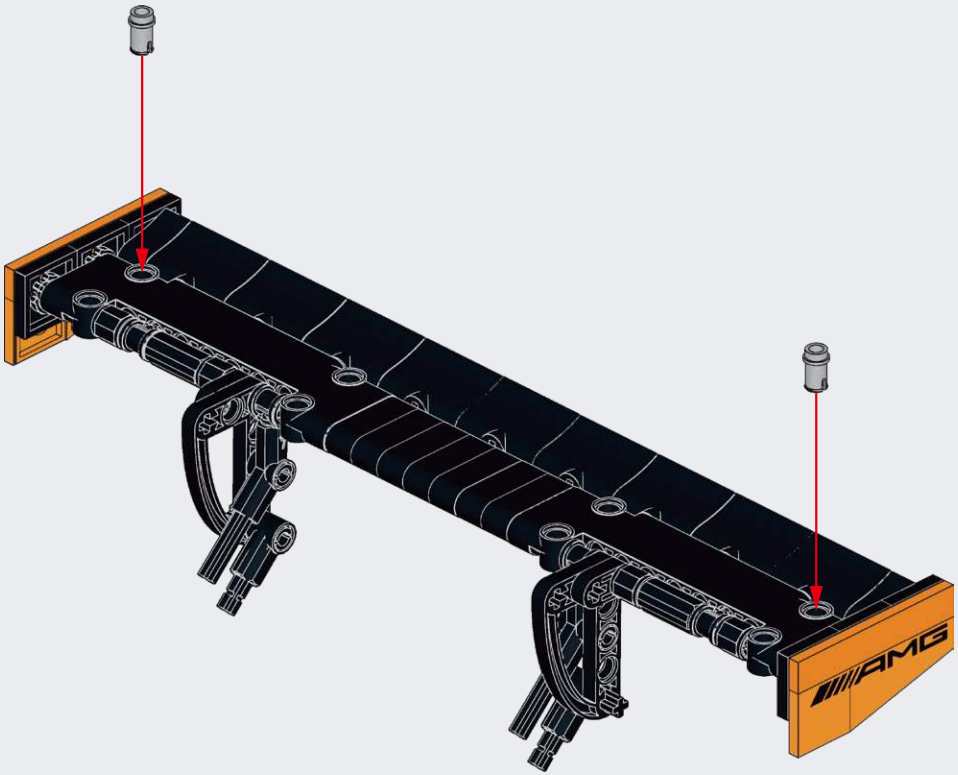

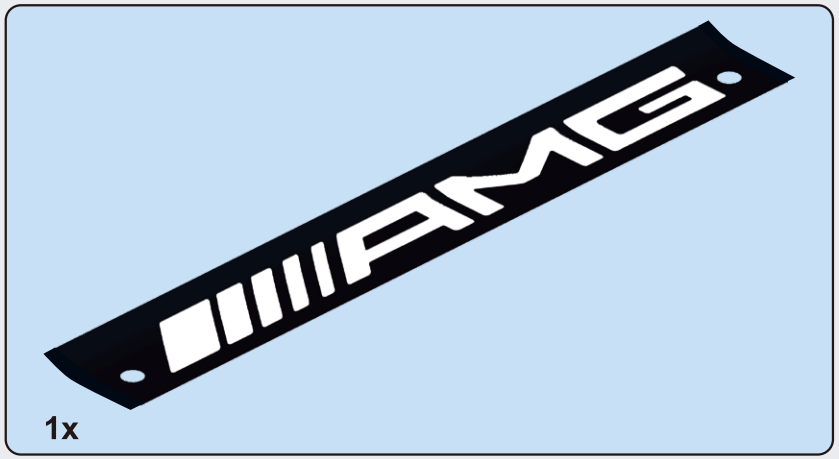

I81

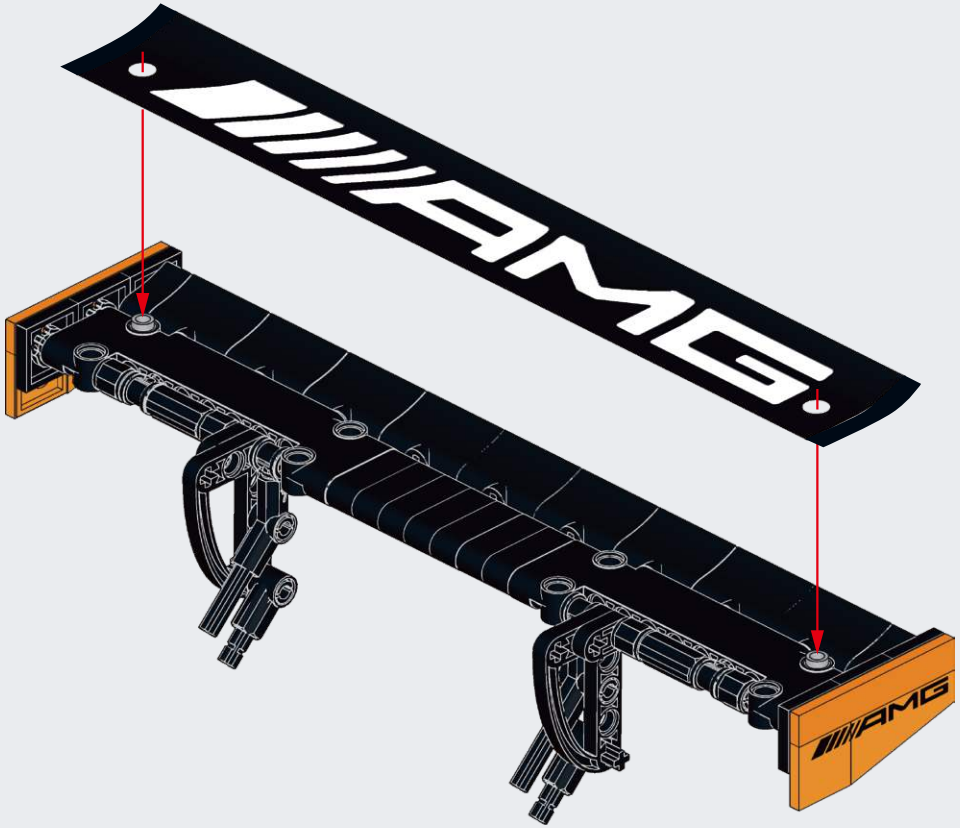

I82

I83

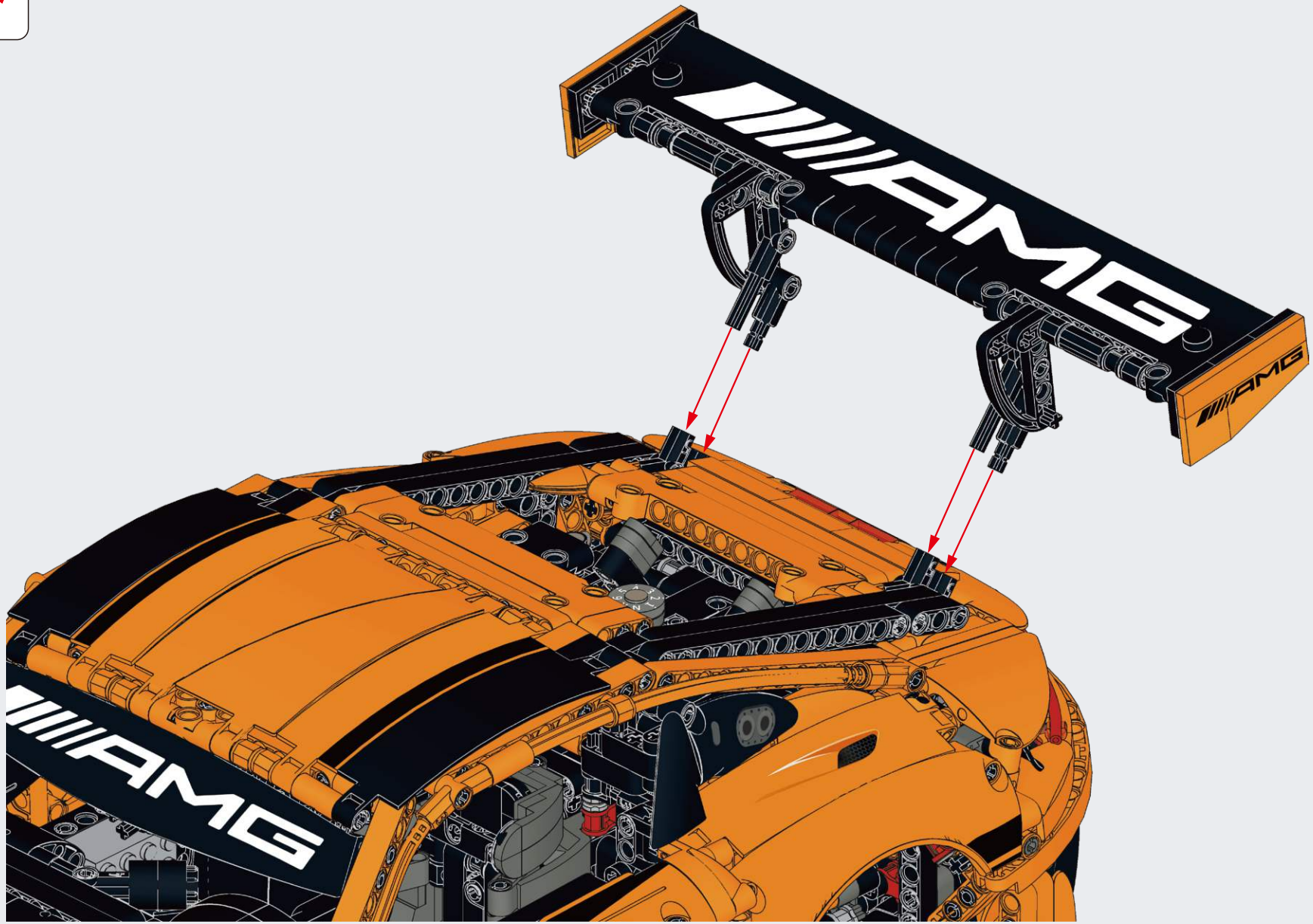

184

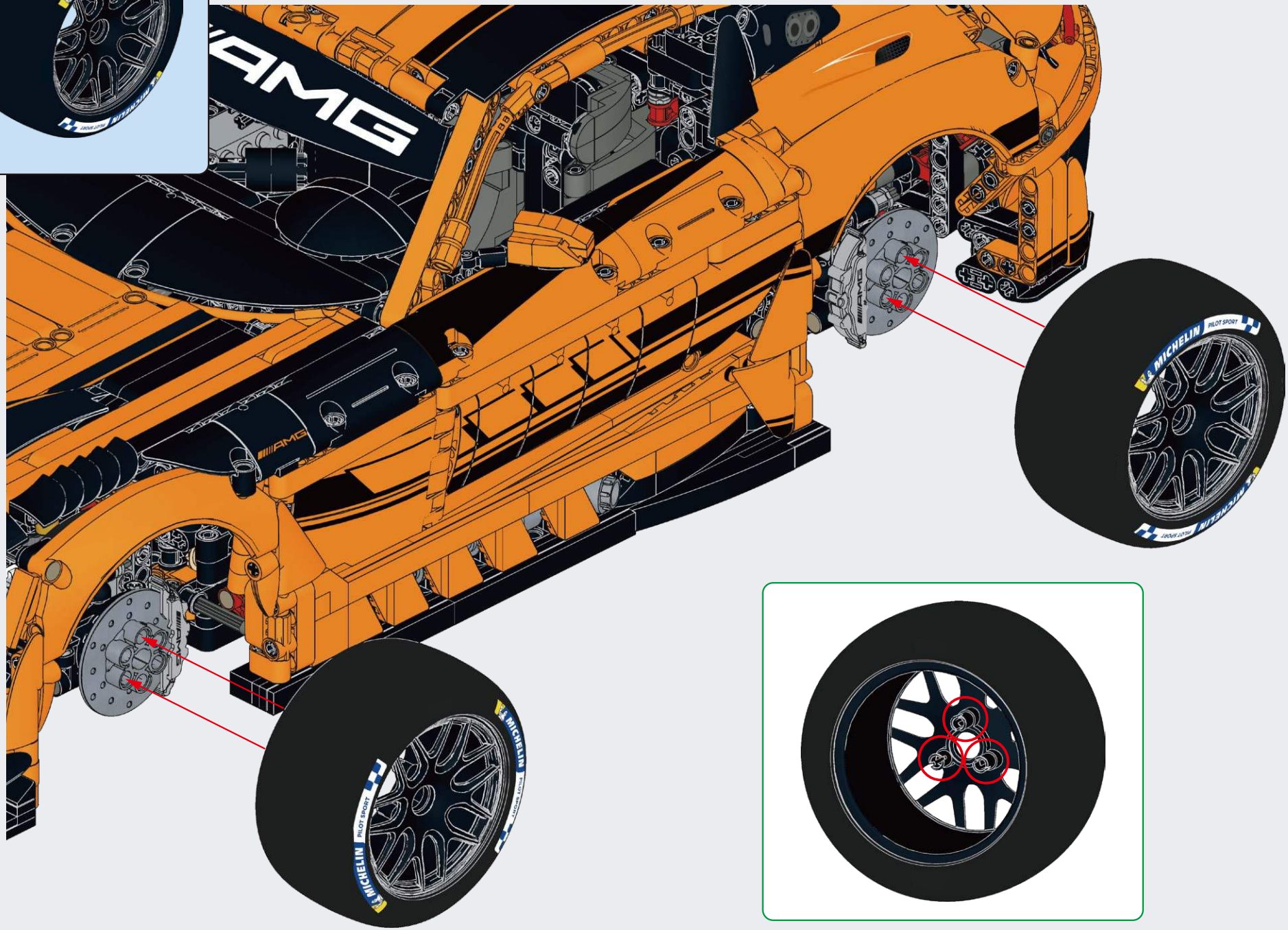

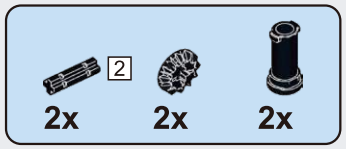

185

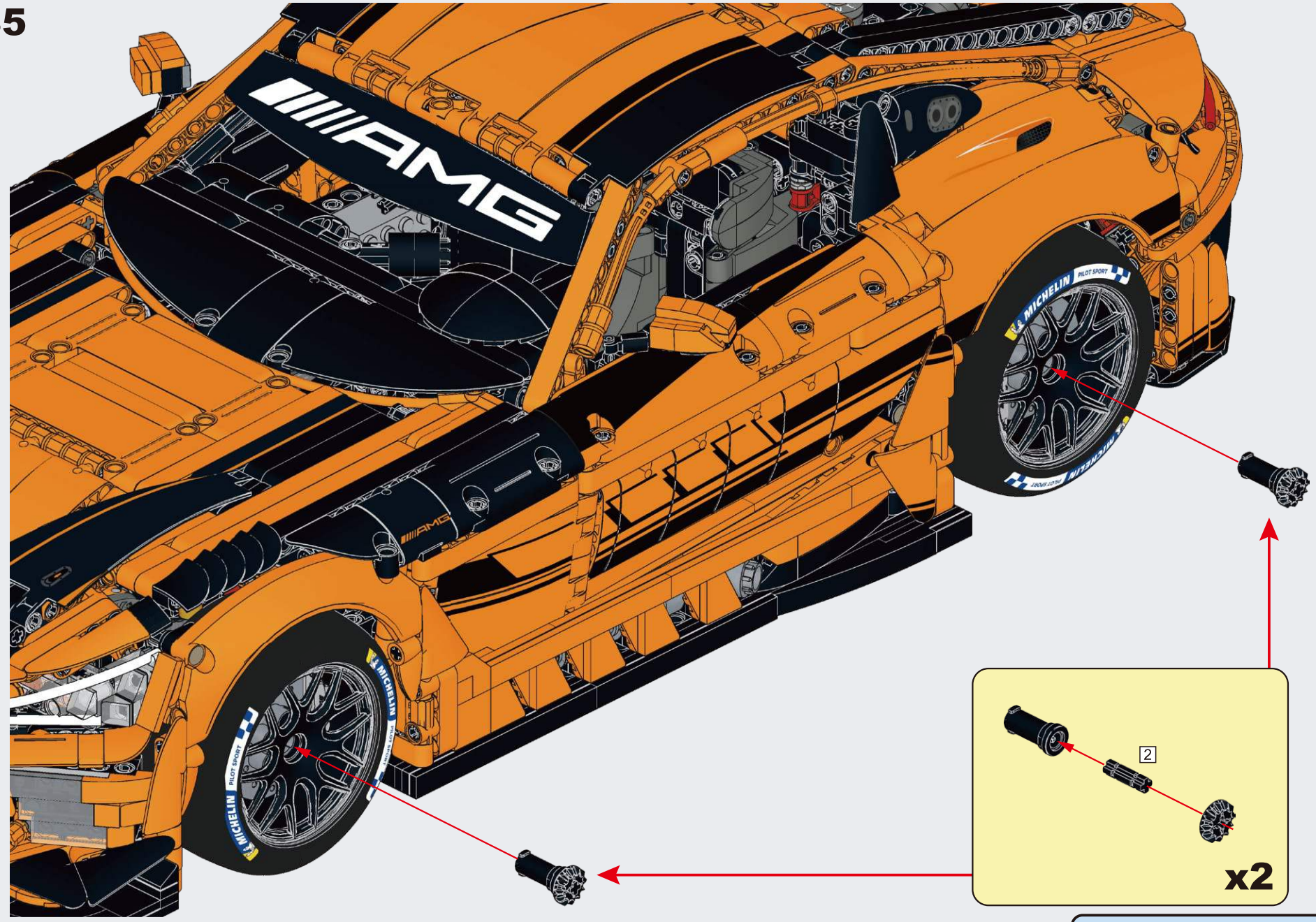

2 1:1

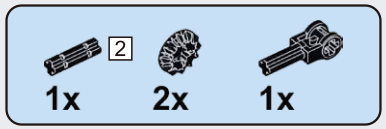

I86

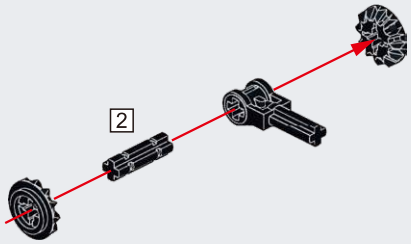

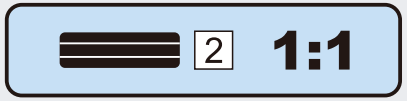

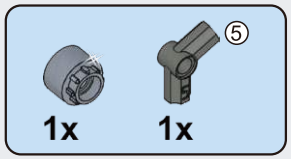

I87

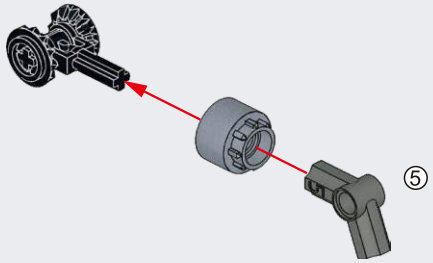

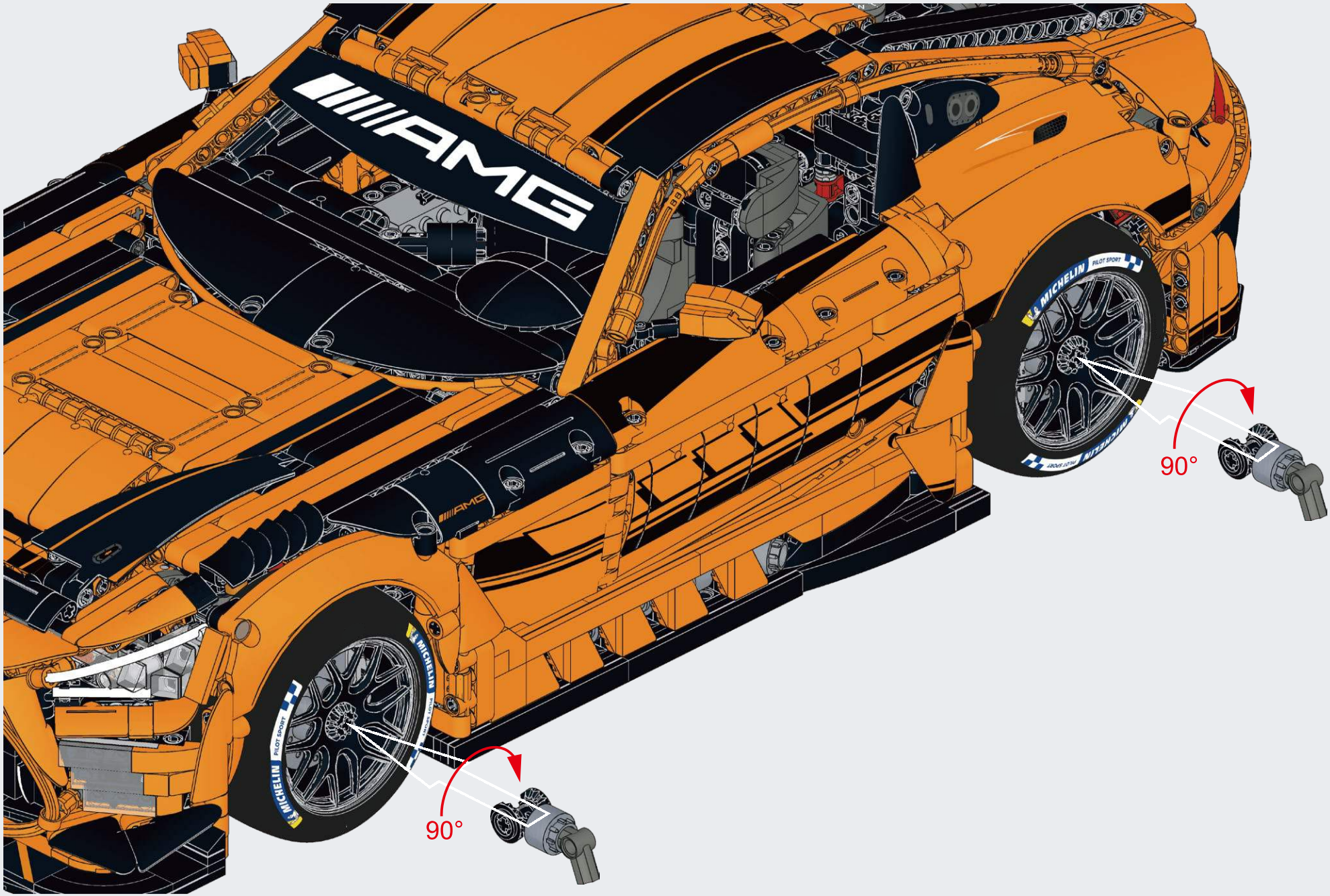
AMG
MICHELIN
PILOT SPORT
90°
90°

189

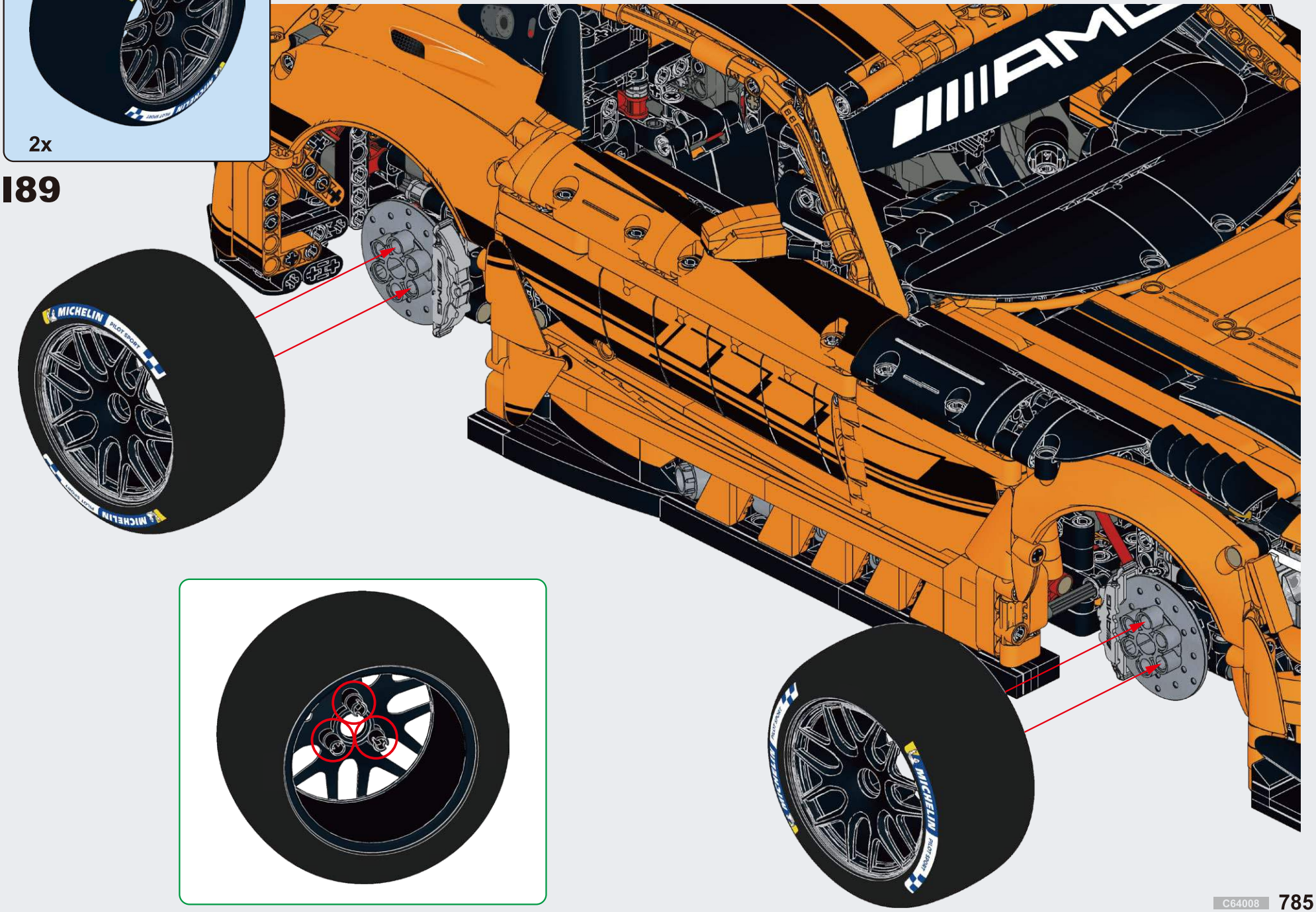

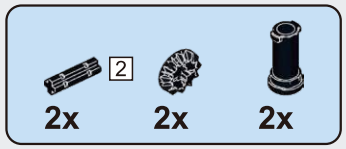

I90

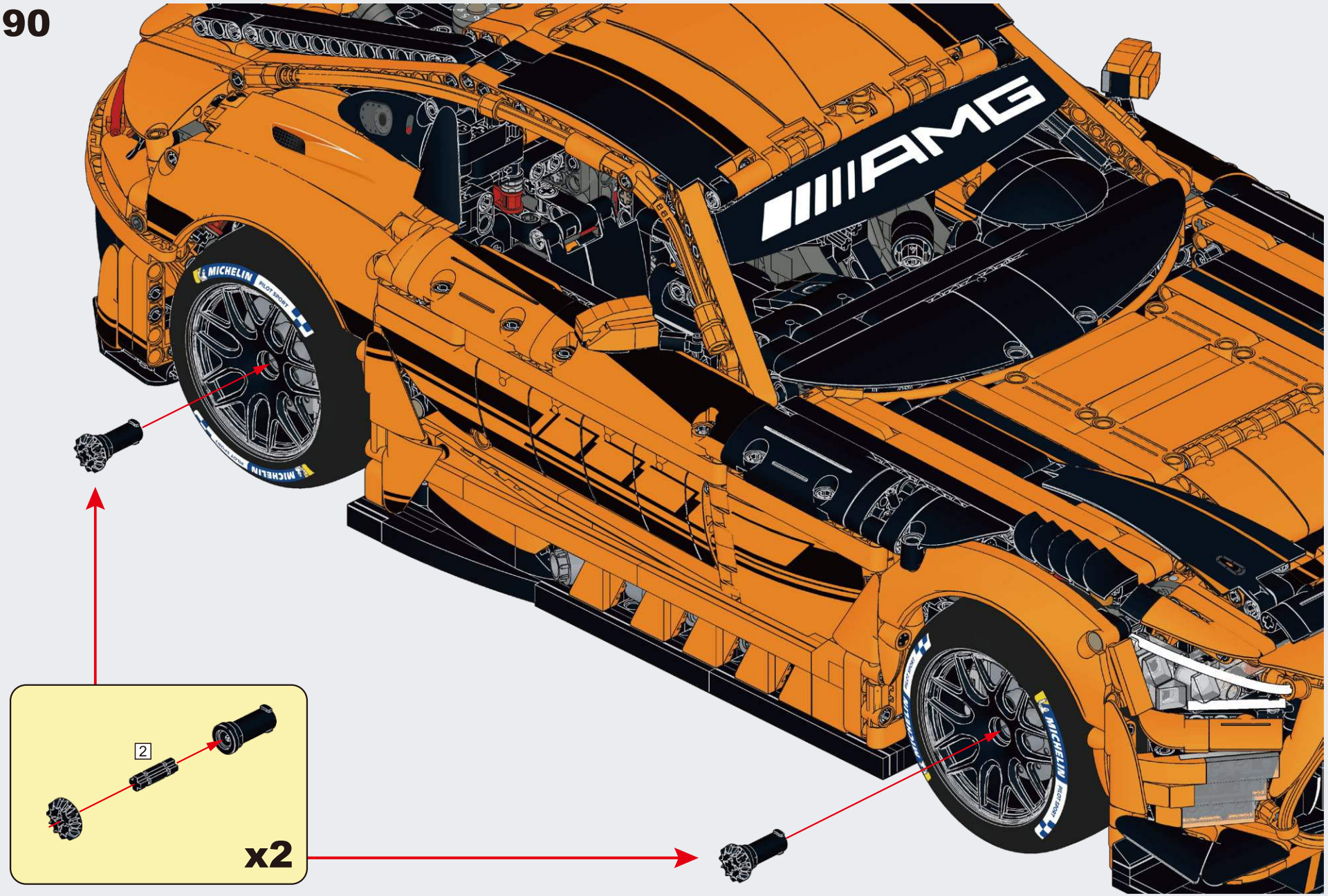

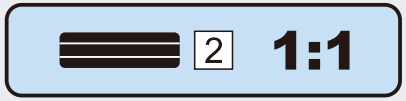

I91

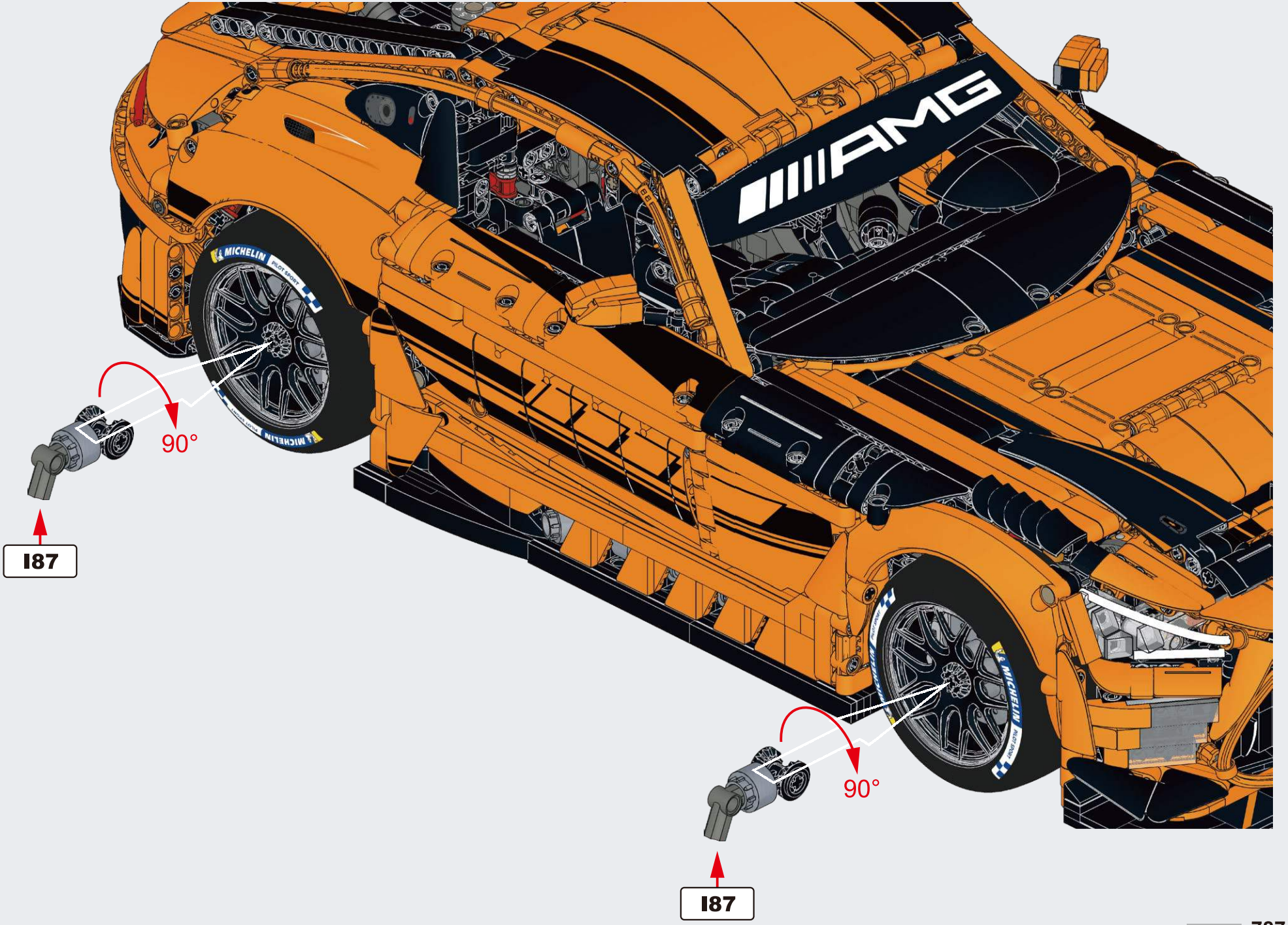

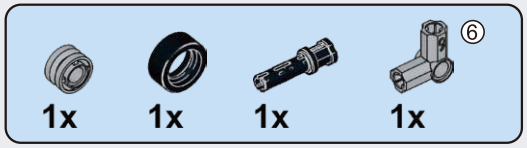

I92

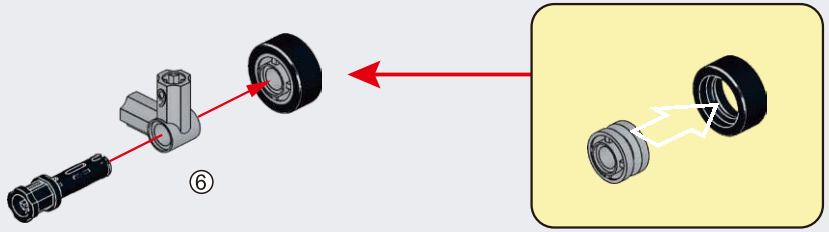

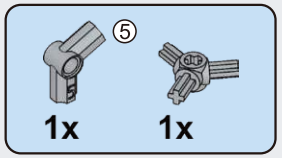

I93

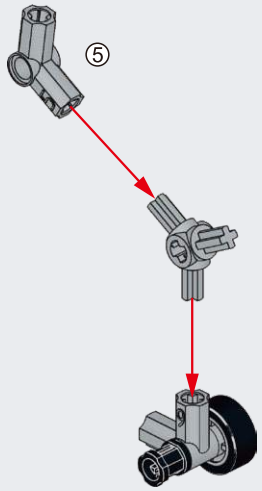

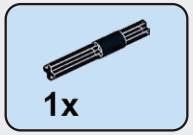

I94

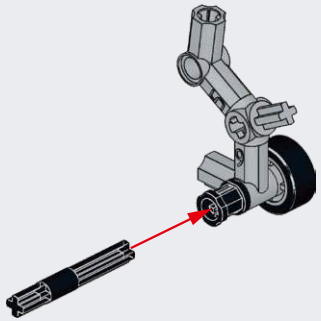

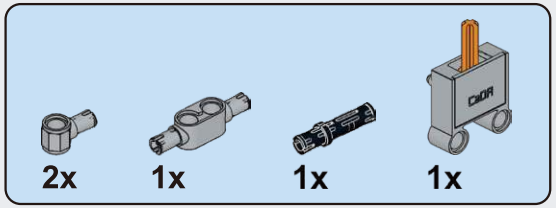

I95

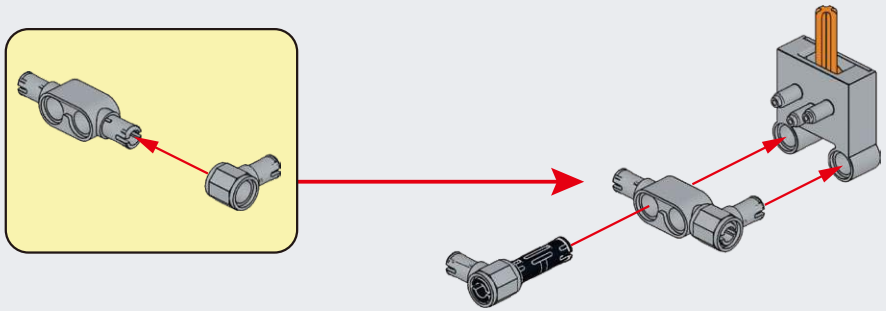

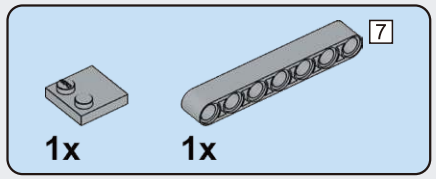

196

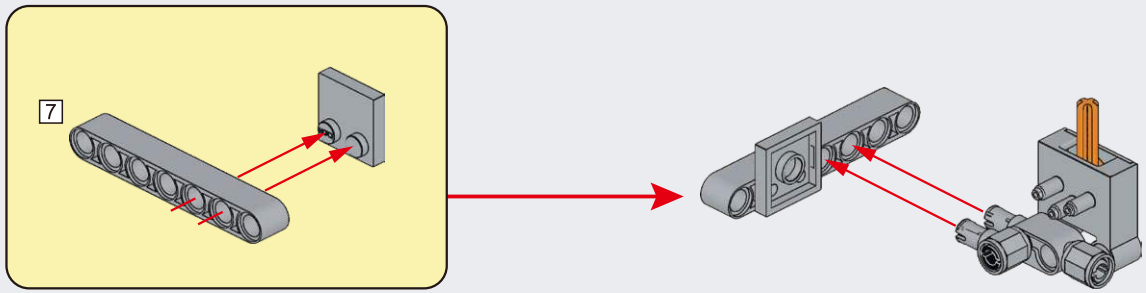

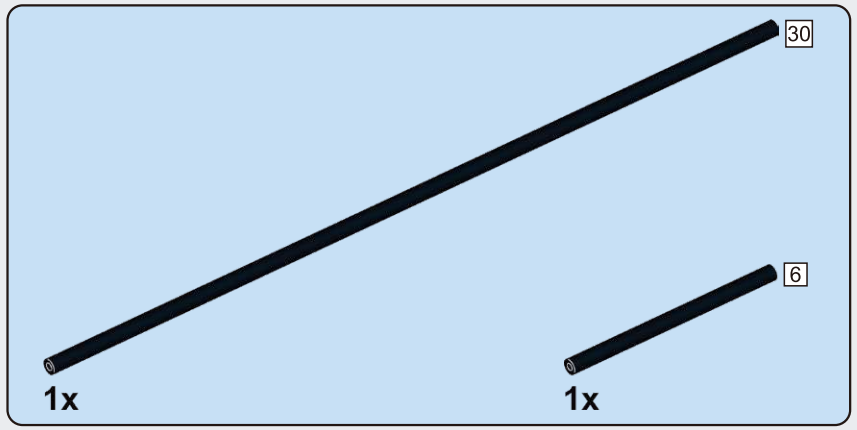

197

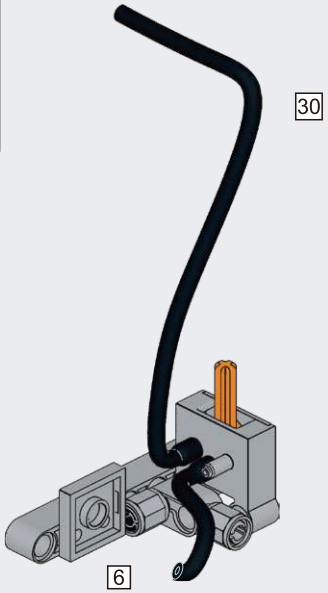

198

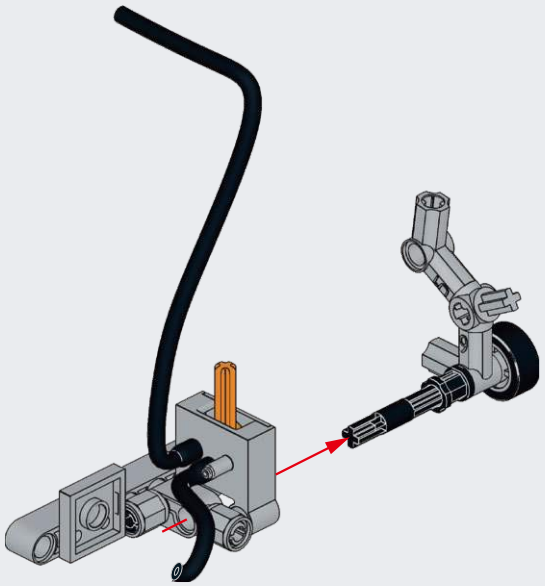

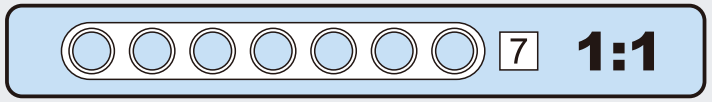

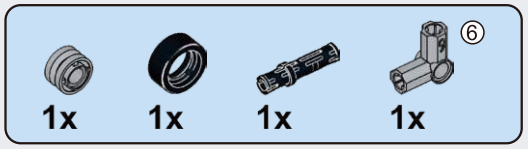

I99

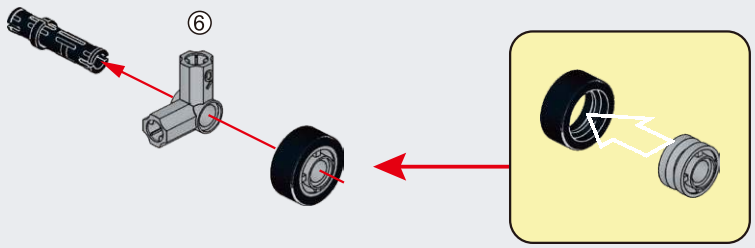

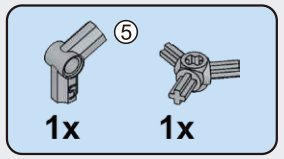

I100

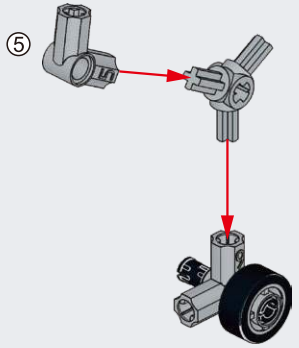

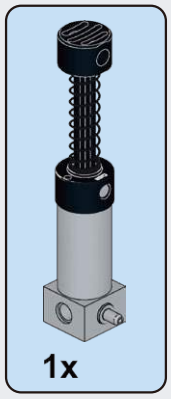

I101

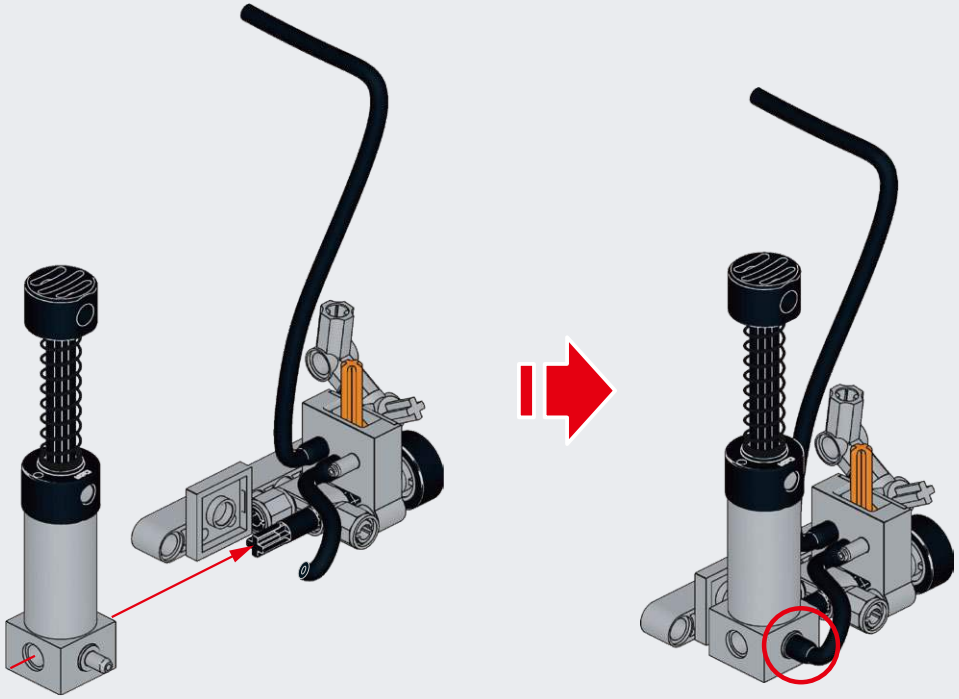

I102

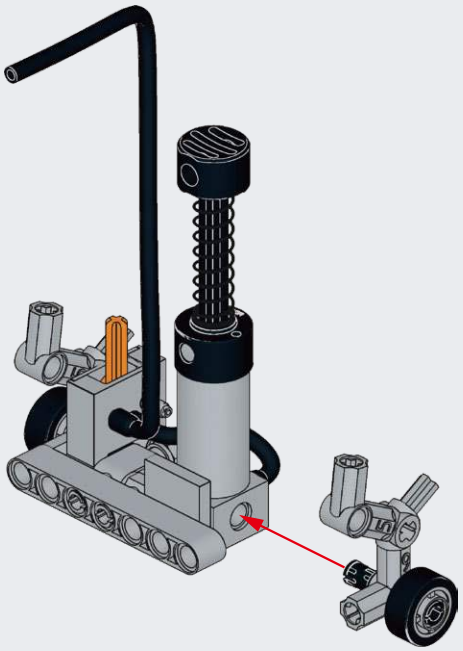

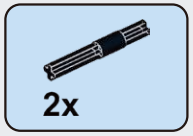

I103

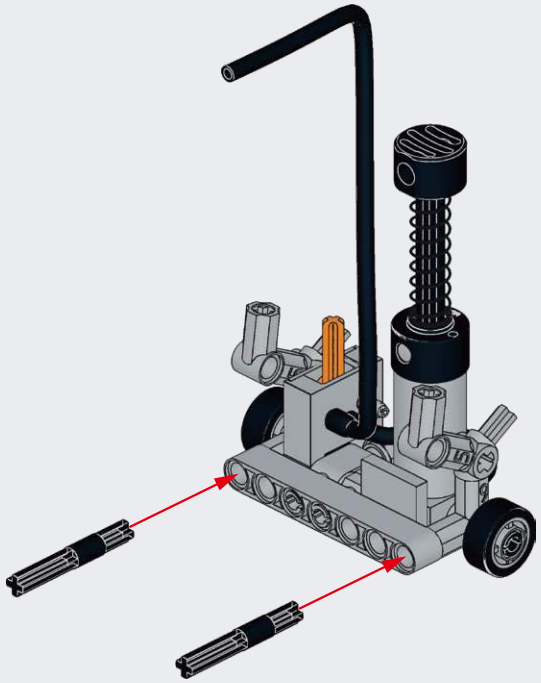

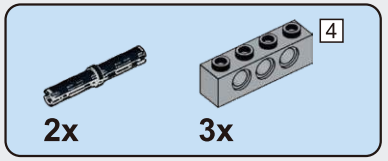

I104

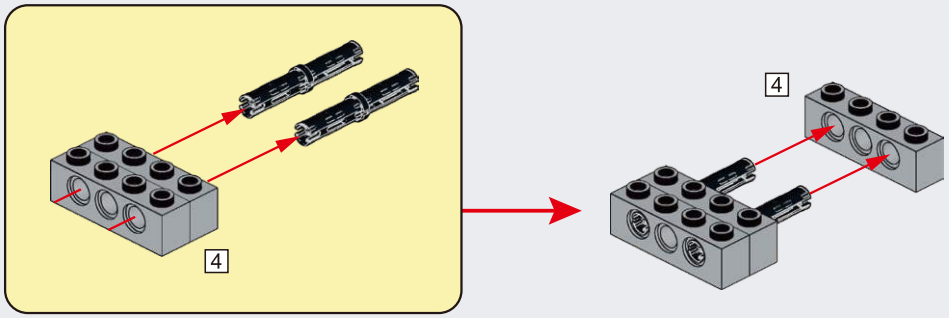

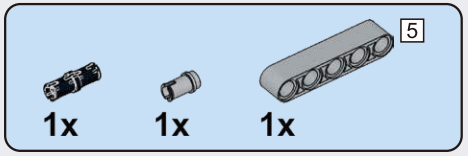

I105

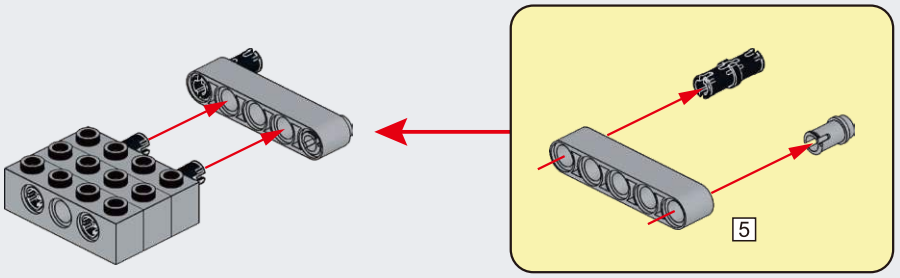

I106

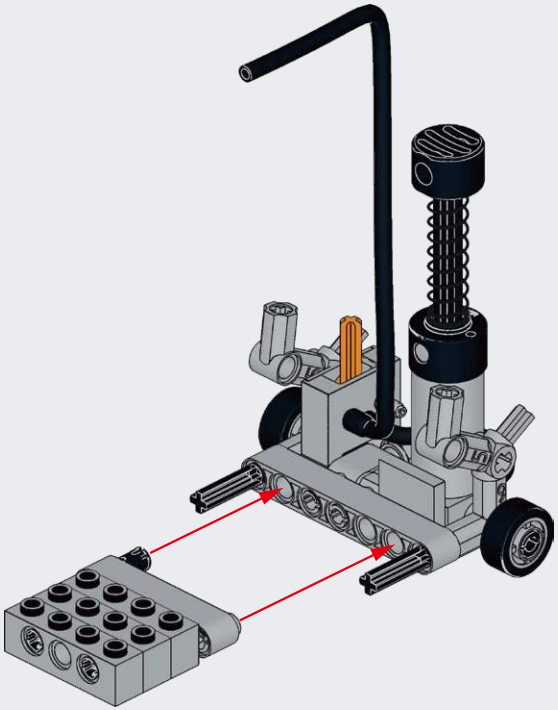

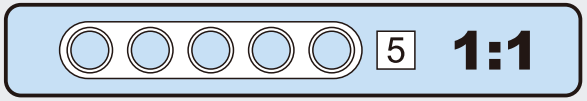

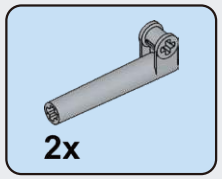

I107

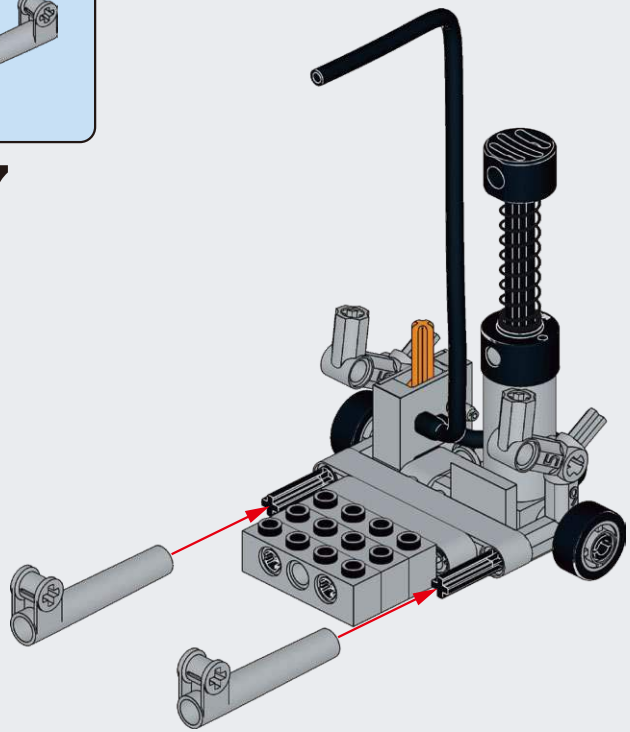

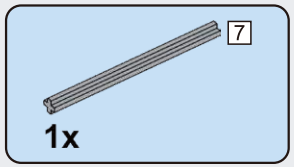

I108

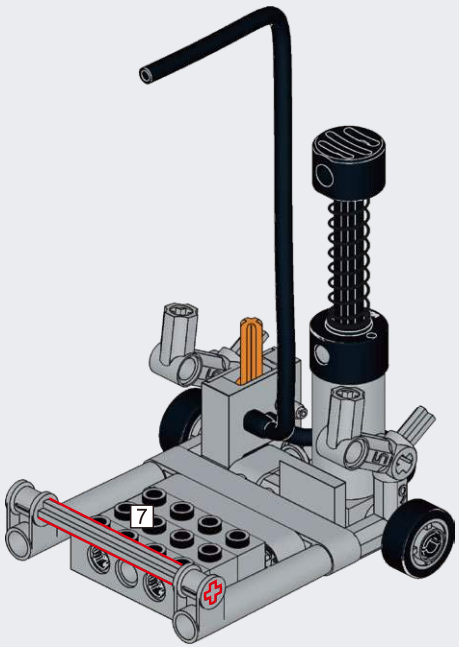

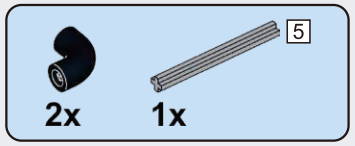

I109

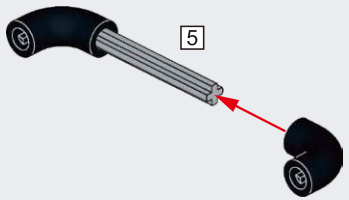

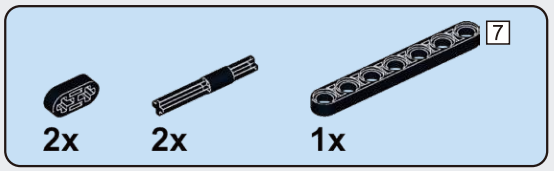

I110

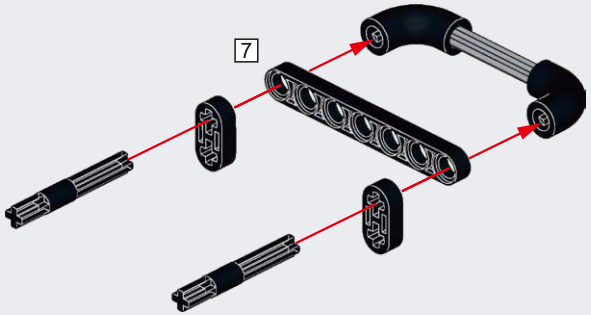

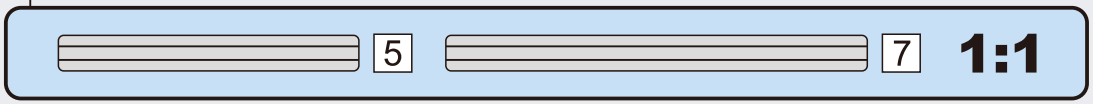

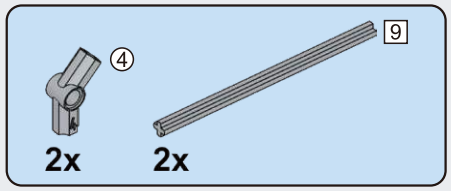

I111

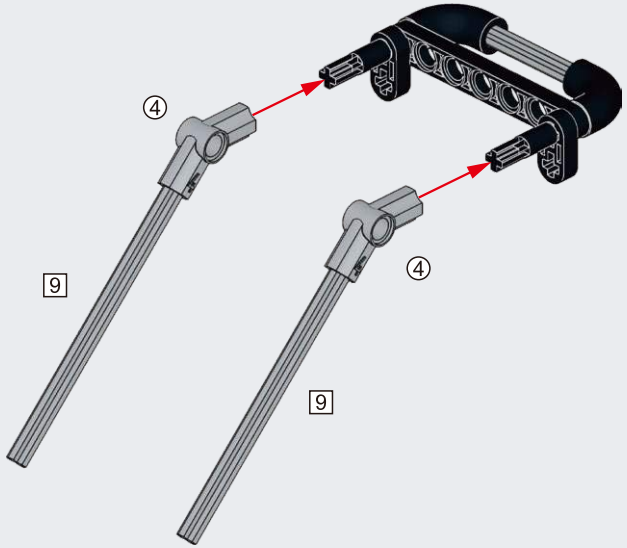

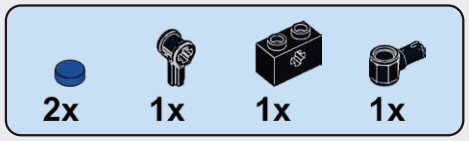

I112

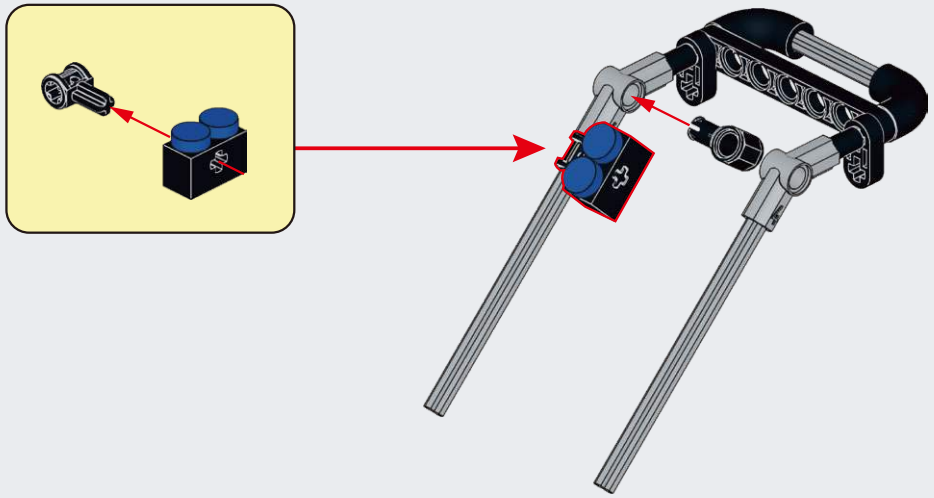

I113

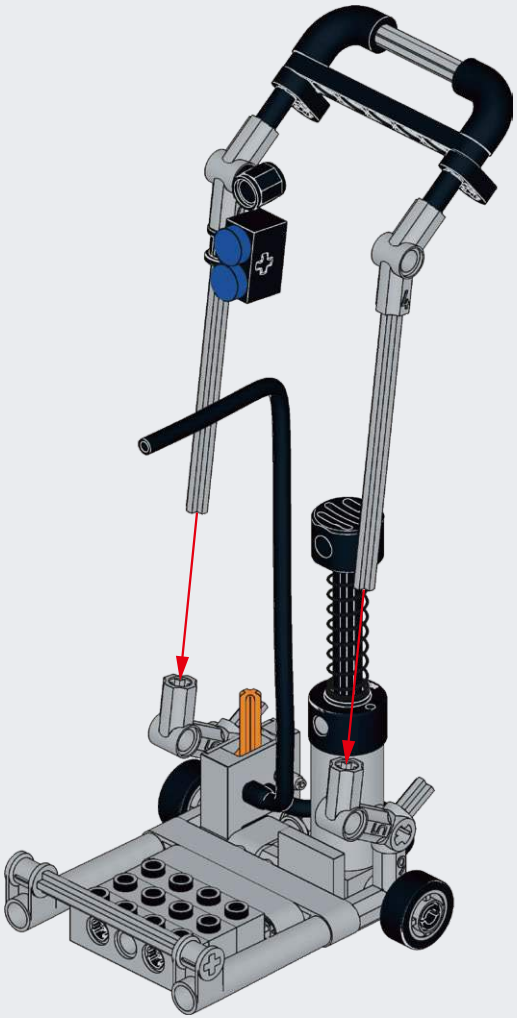

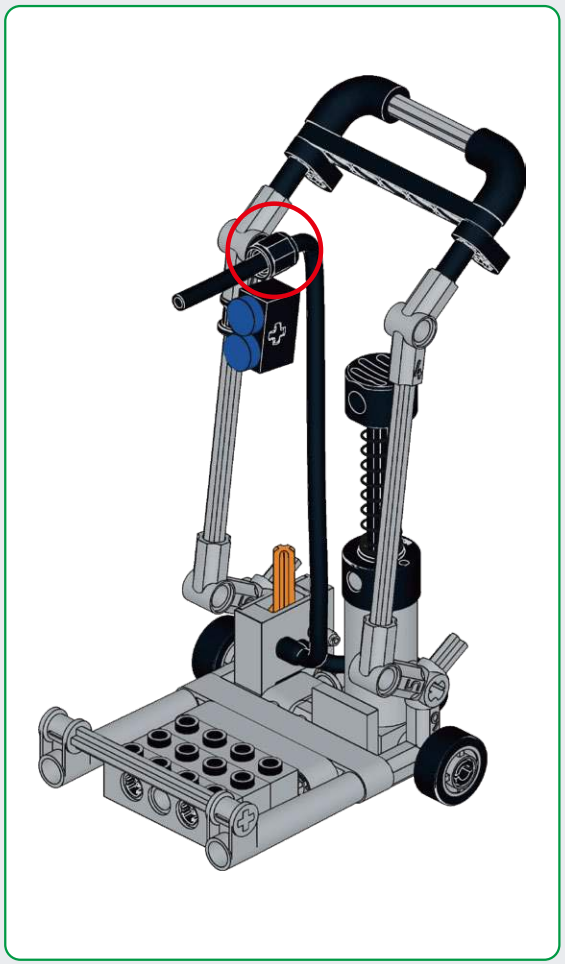

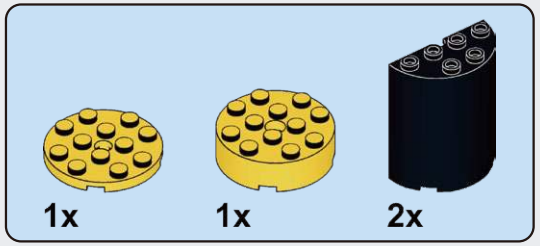

I114

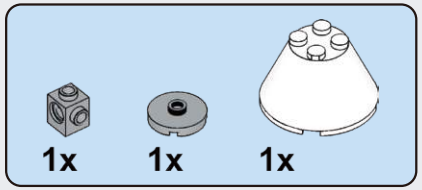

I115

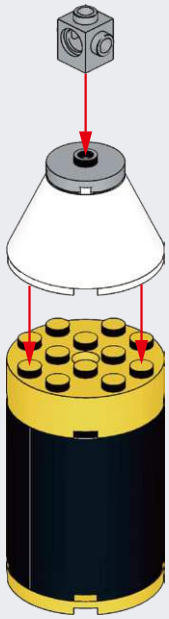

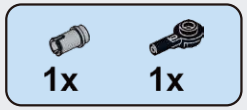

I116

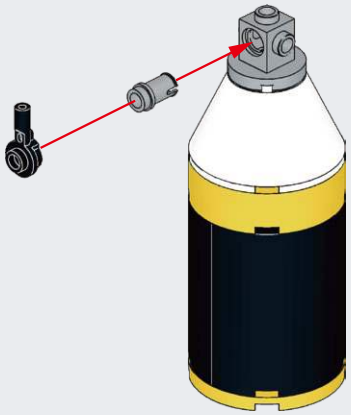

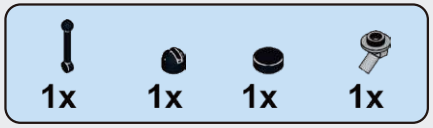

I117

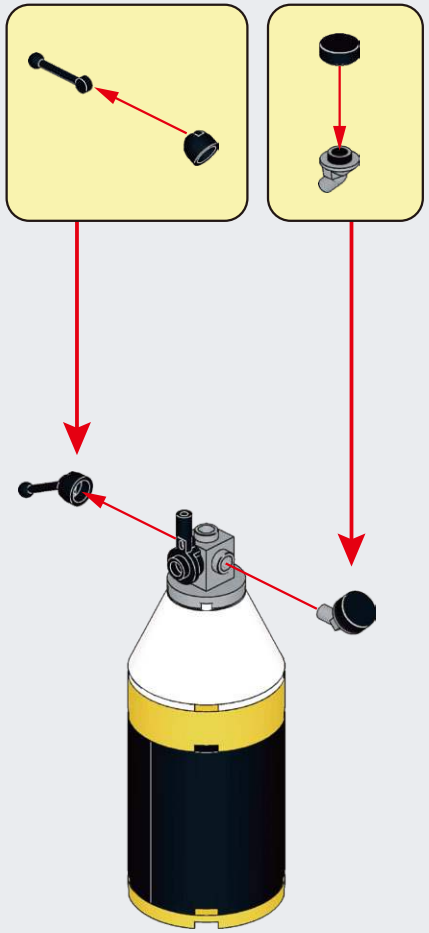

I118

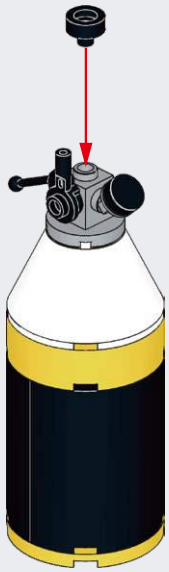

I119

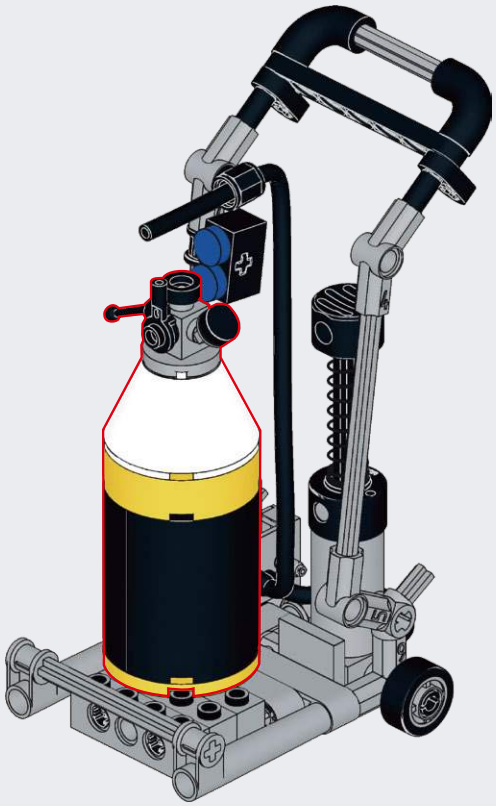

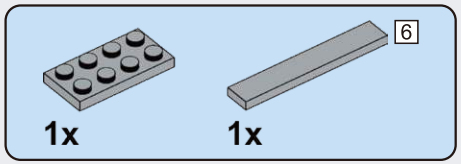

I120

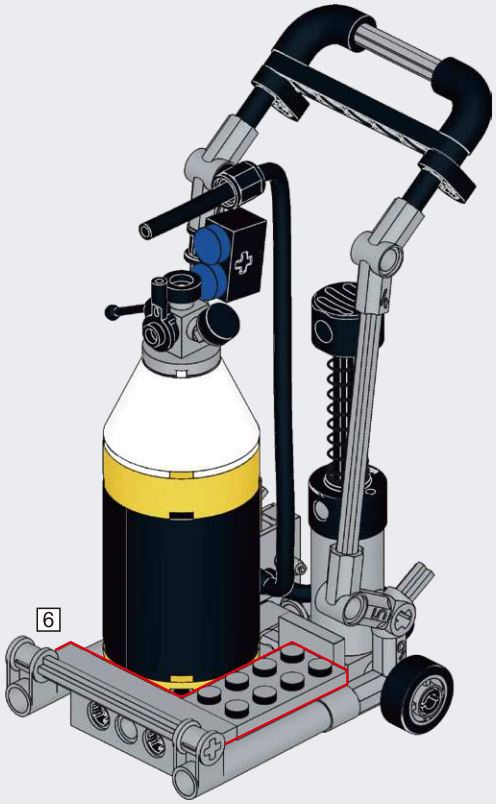

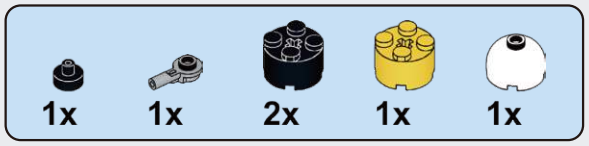

I121

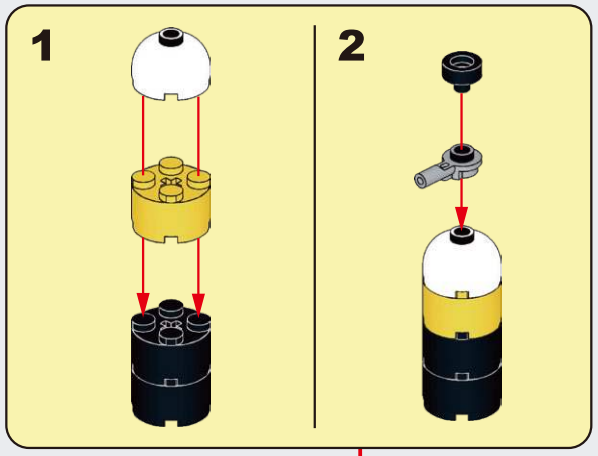

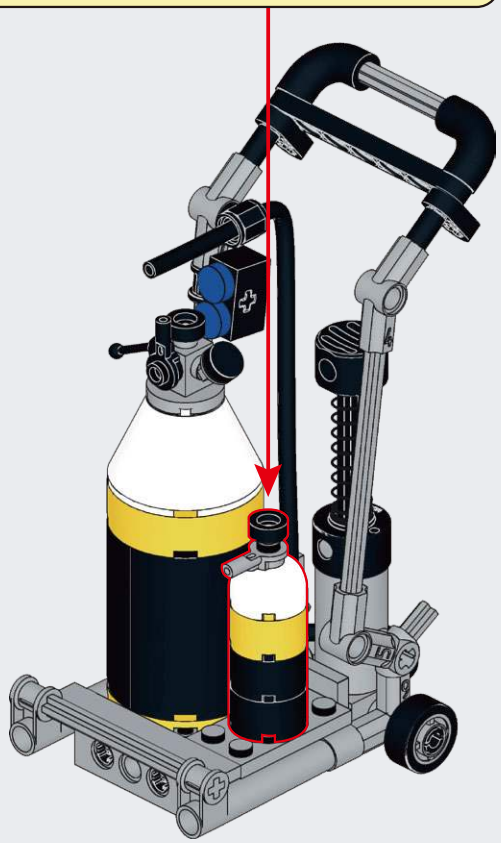

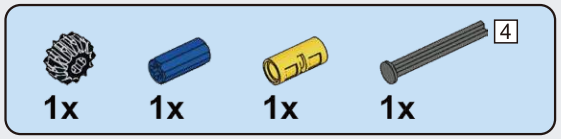

I122

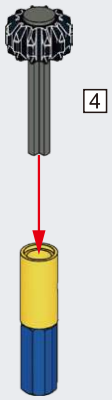

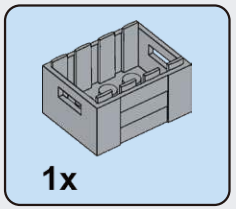

I123

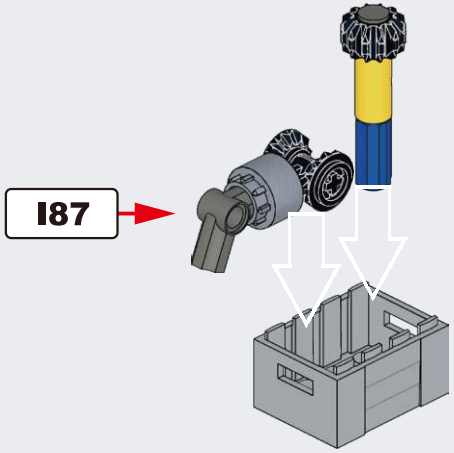

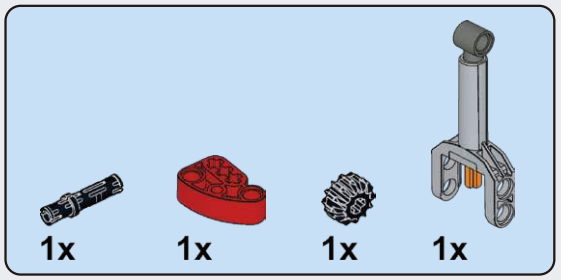

I124

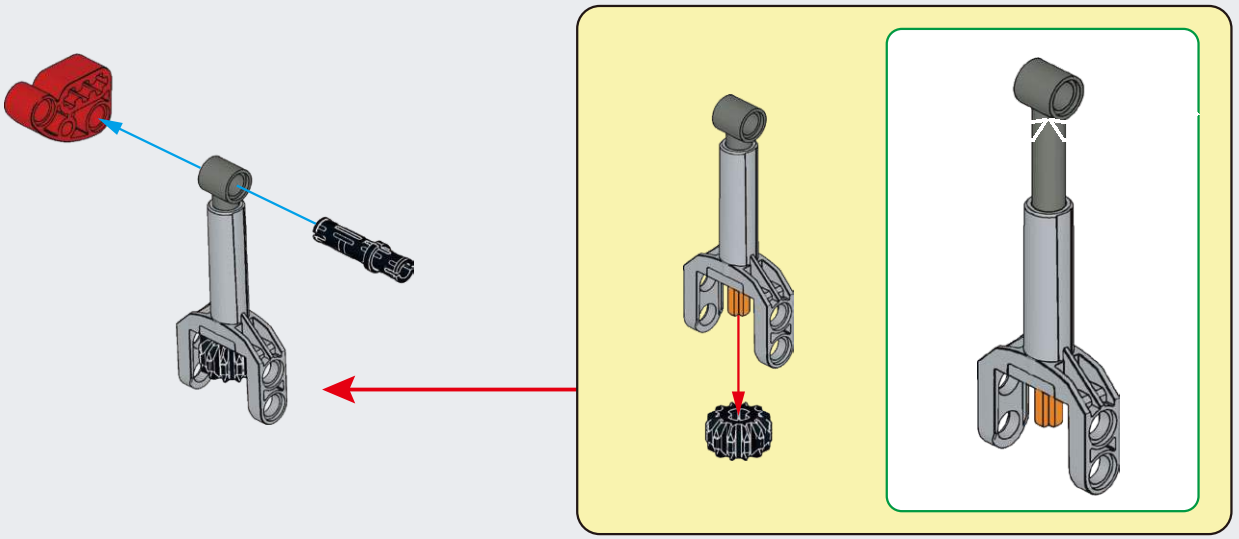

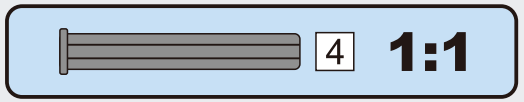

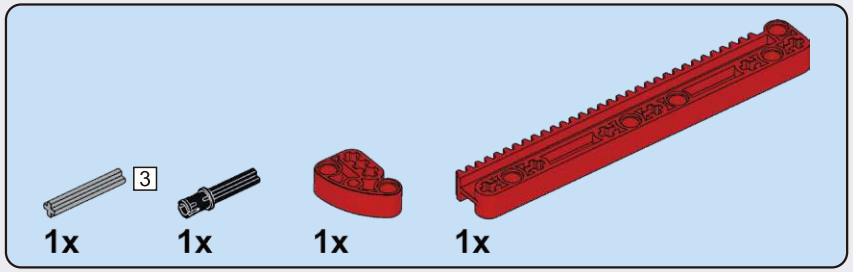

I125

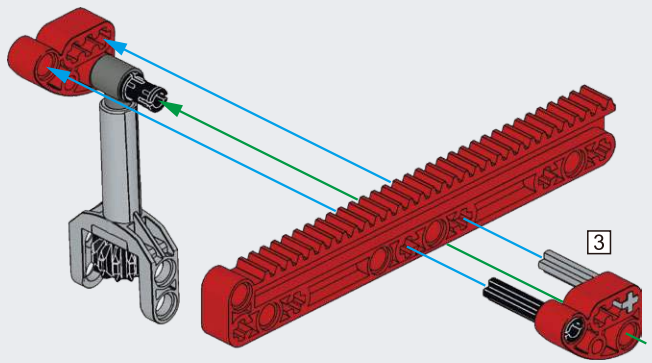

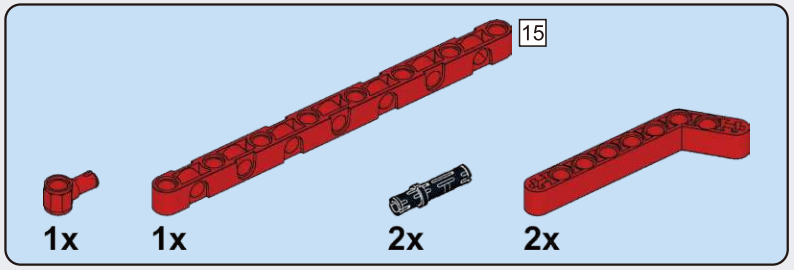

I126

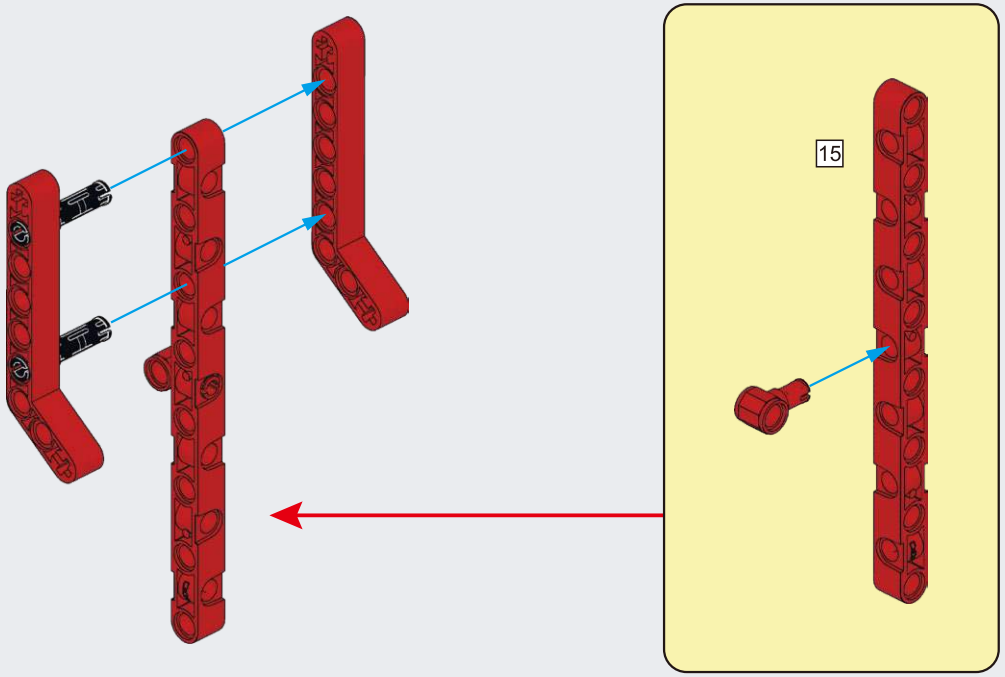

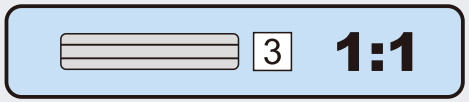

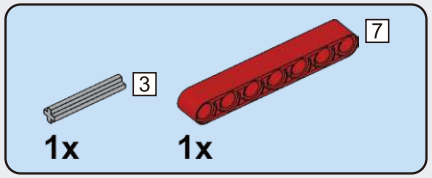

I127

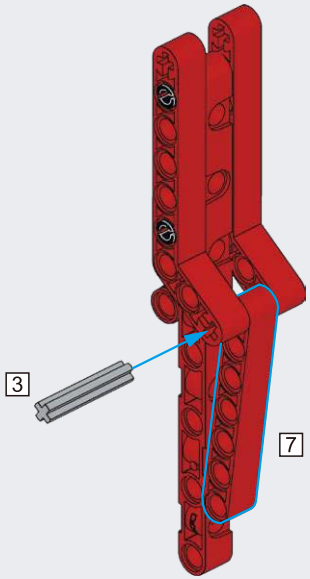

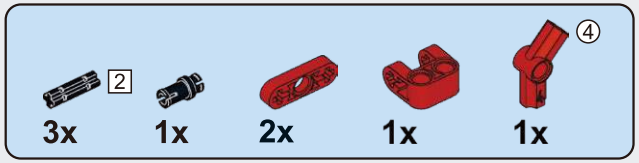

I128

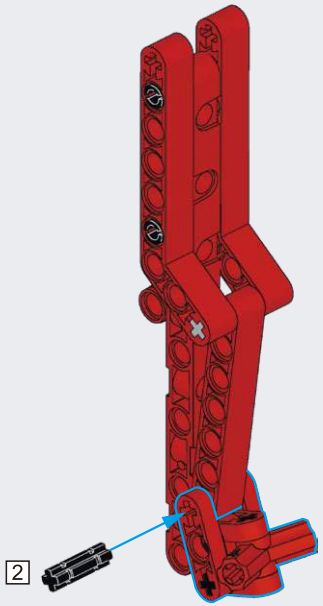

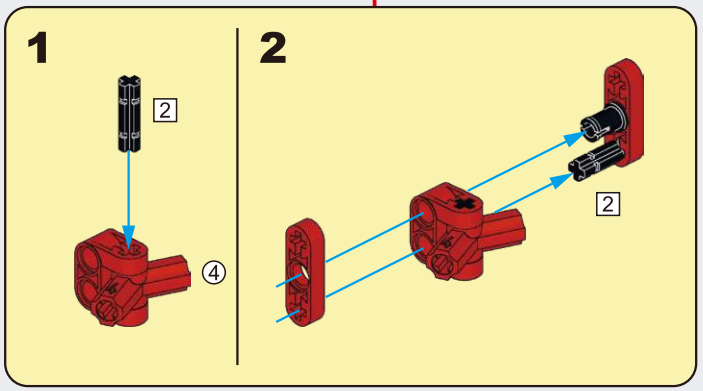

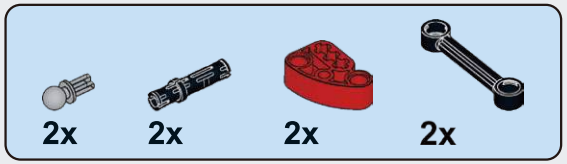

I129

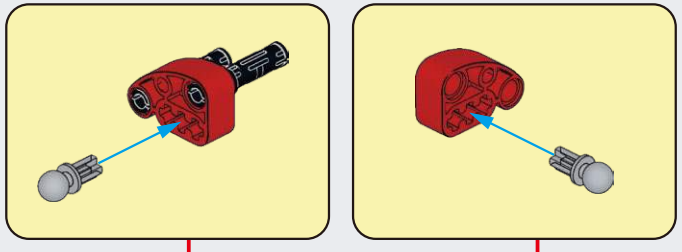

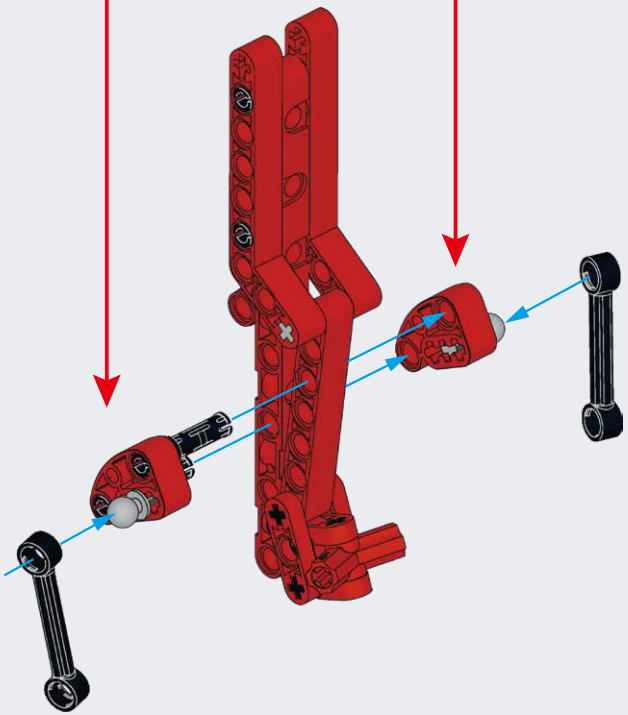

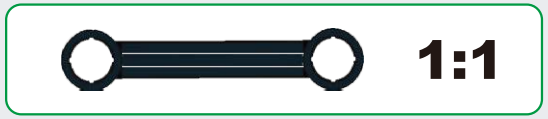

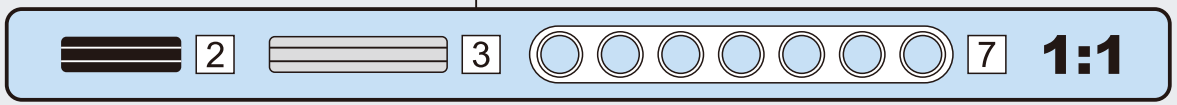

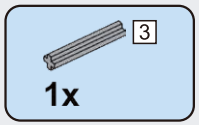

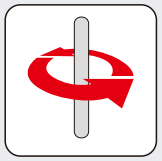

I130

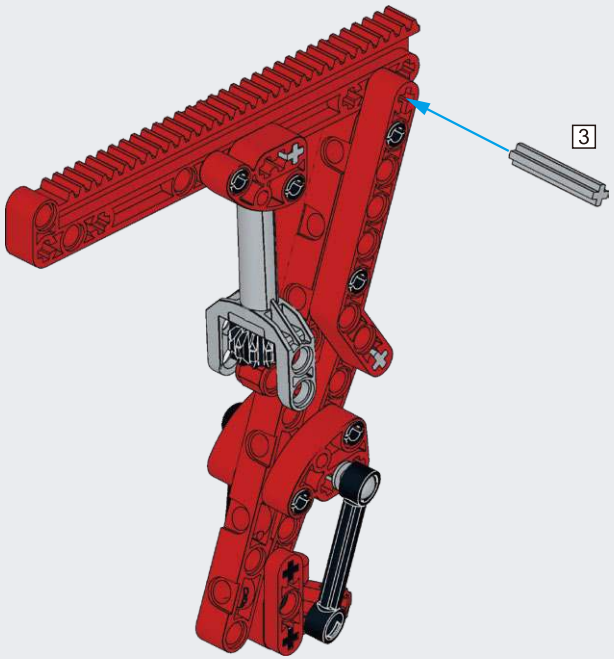

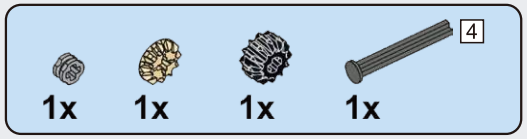

I131

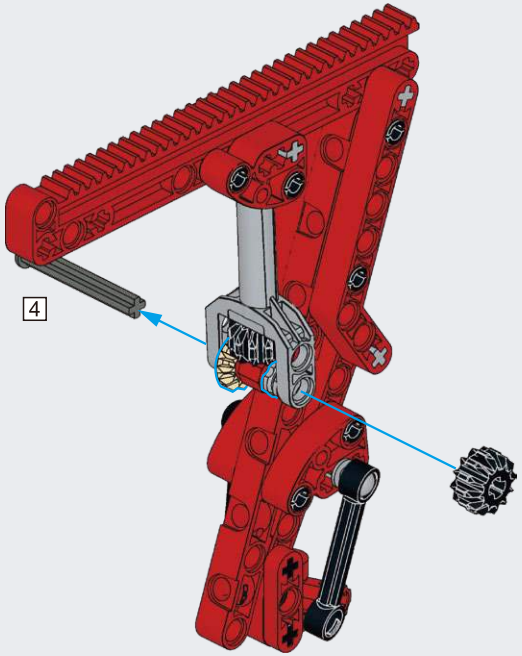

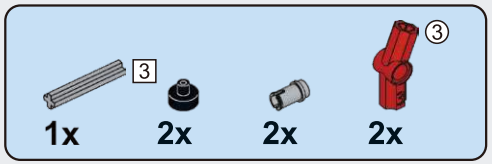

I132

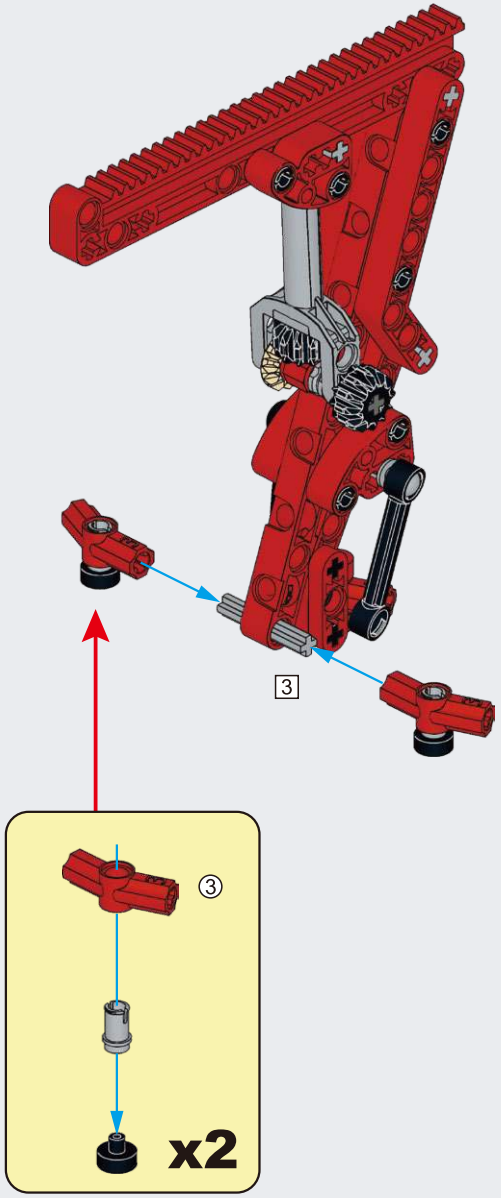

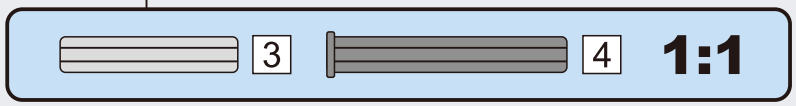

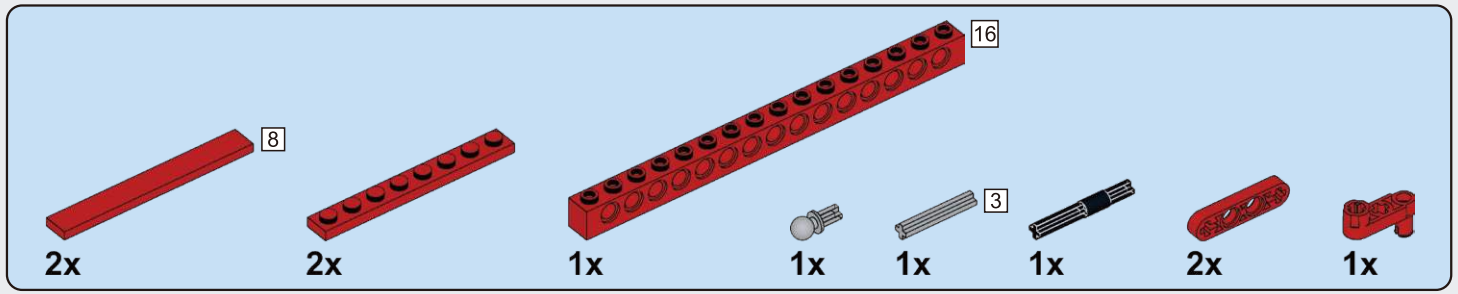

I133

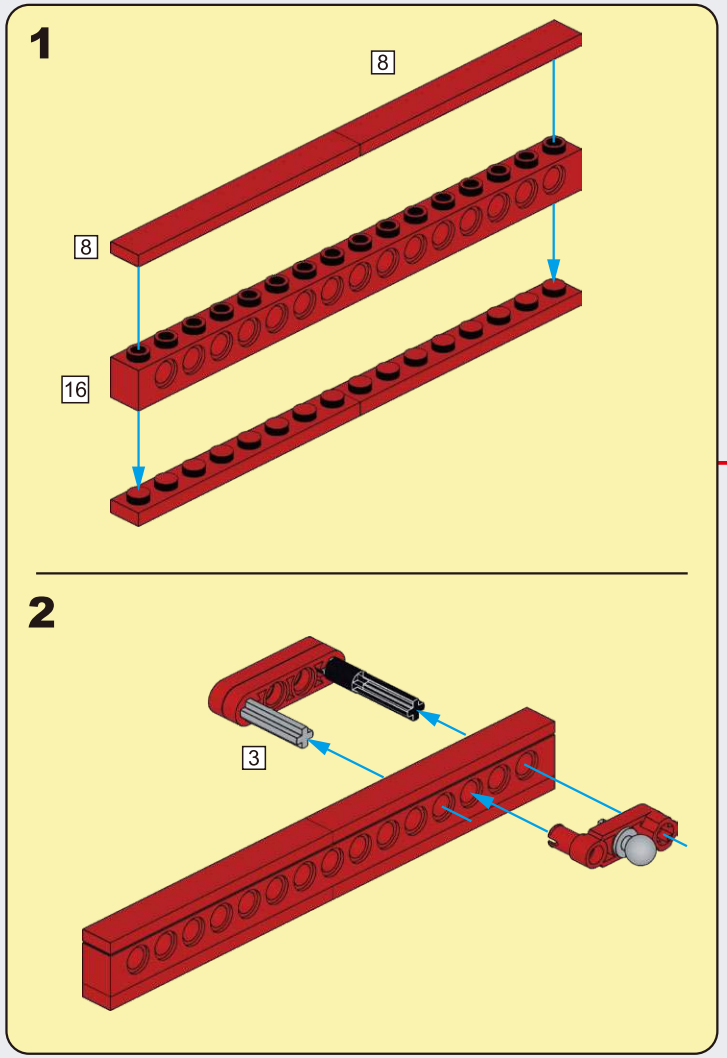

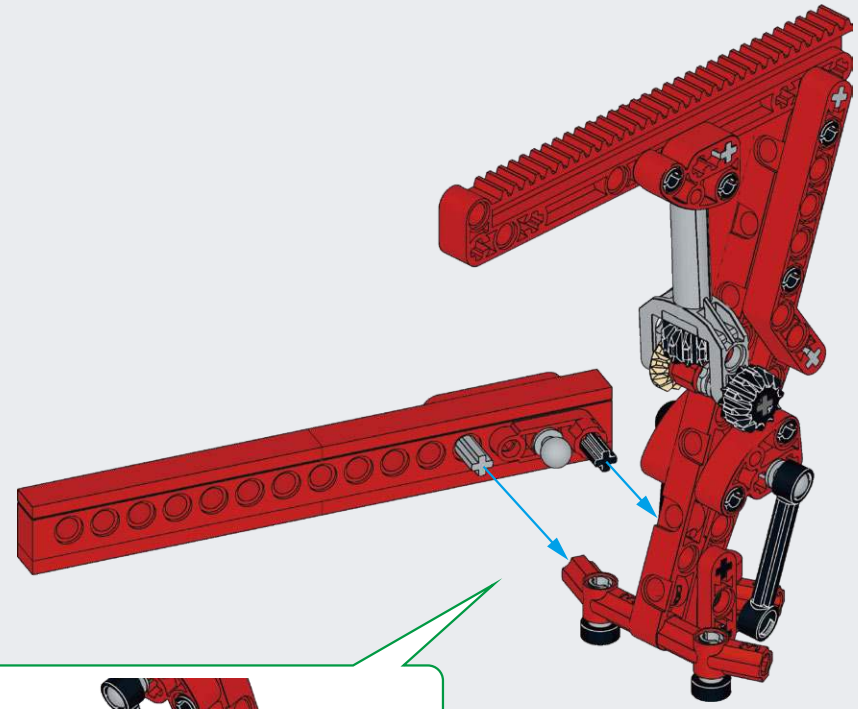

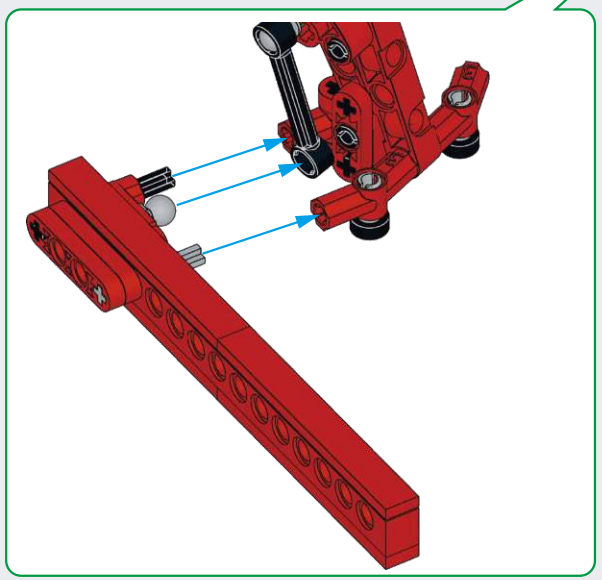

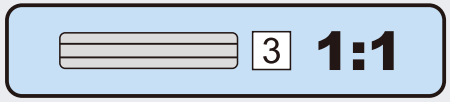

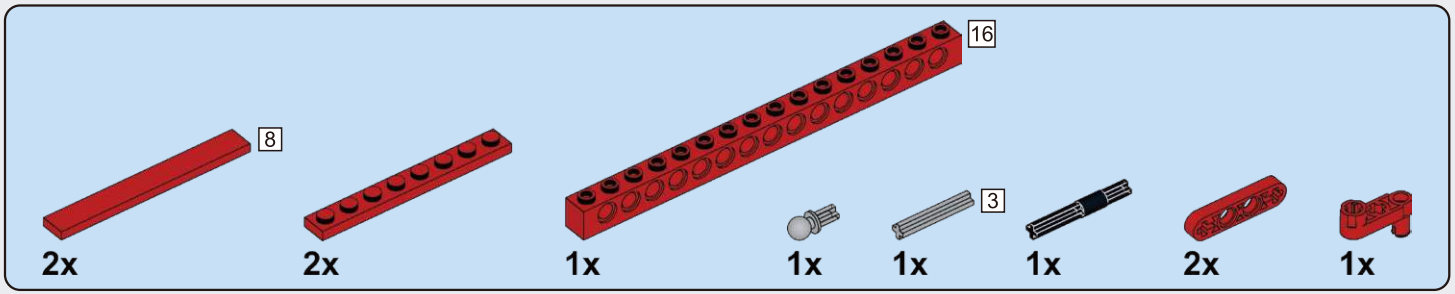

I134

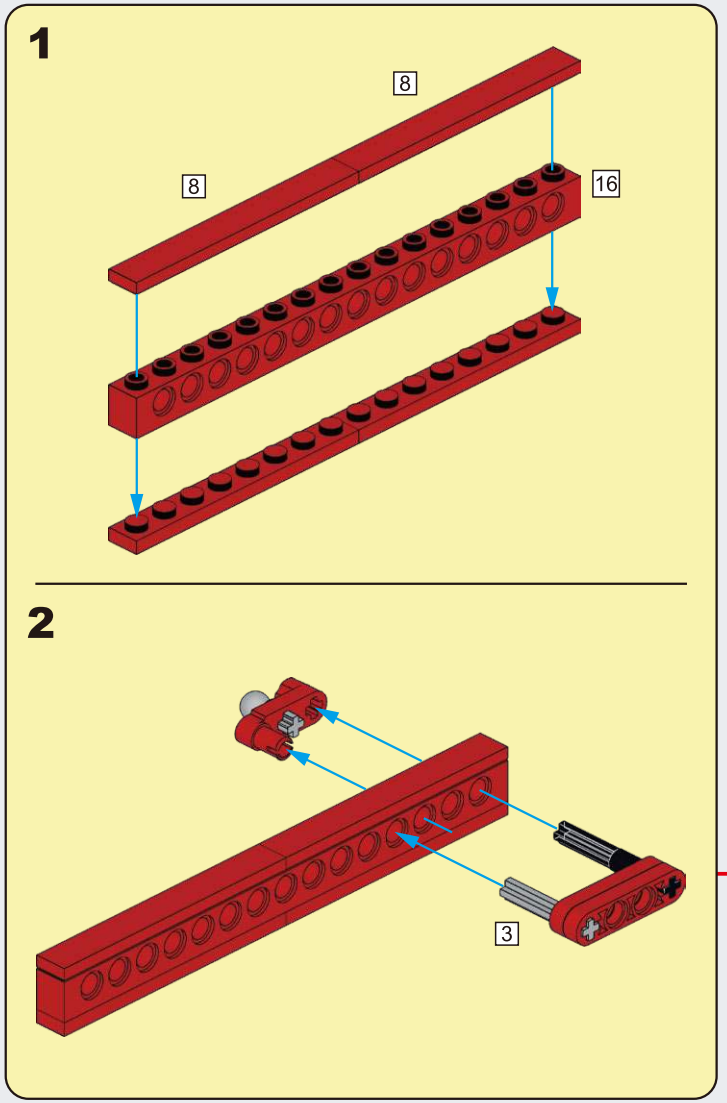

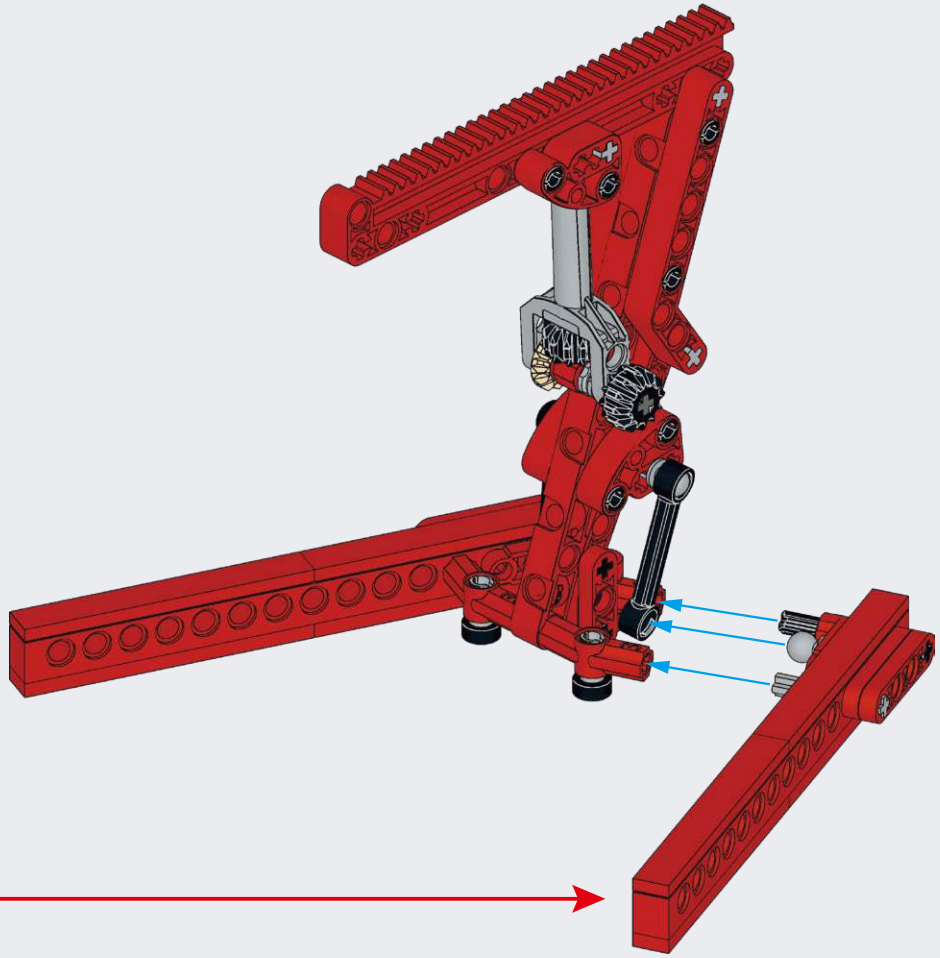

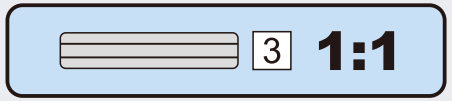

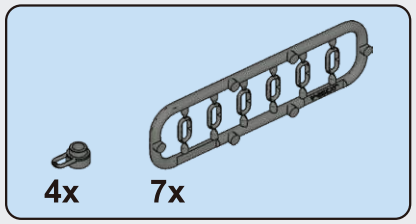

I135

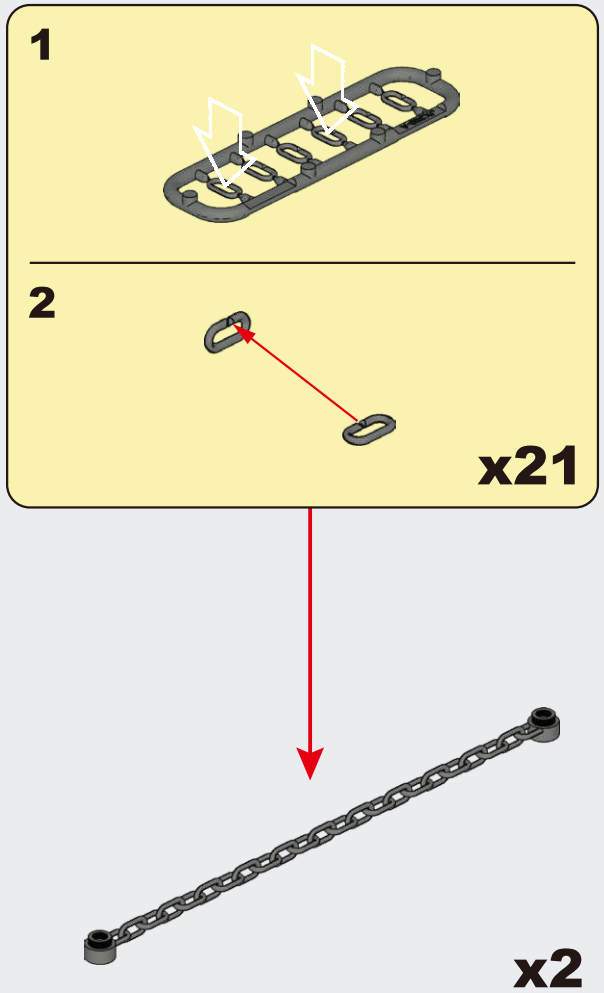

I136

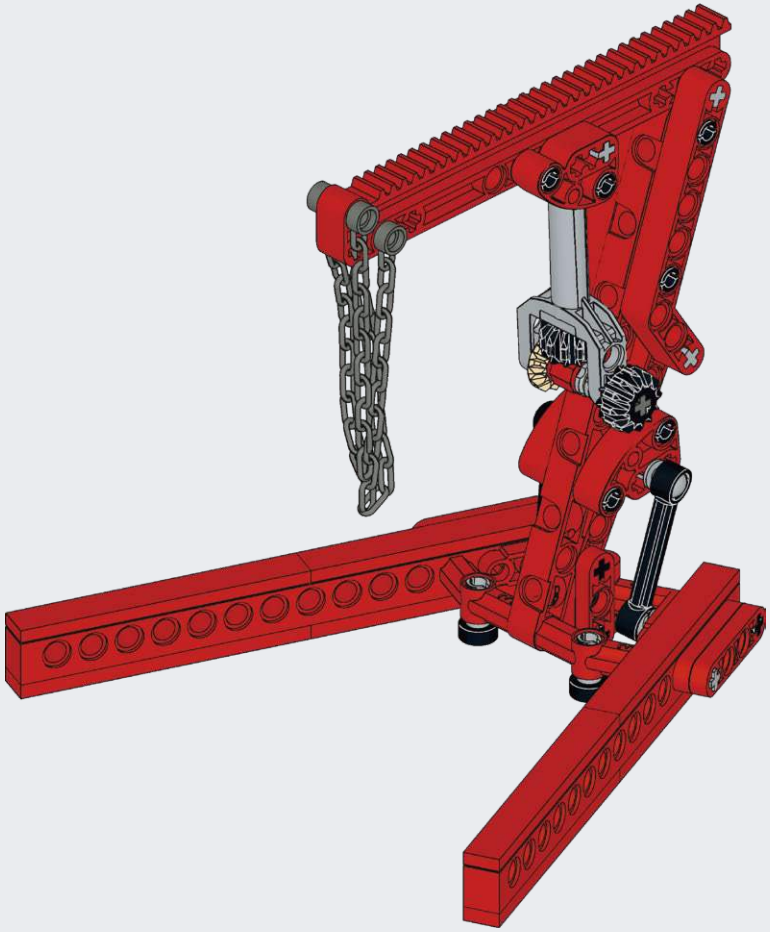

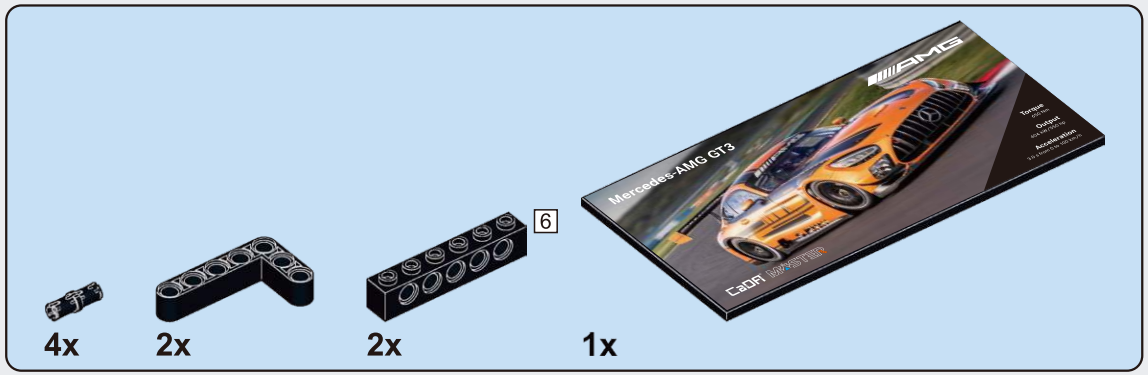
4x
2x
2x
6
1x
Mercedes-AMG GT3
AMG
CaDA MASTER

I137

Mercedes-AMG GT3
AMG
Torque
Output
Acceleration
CaDA MASTER

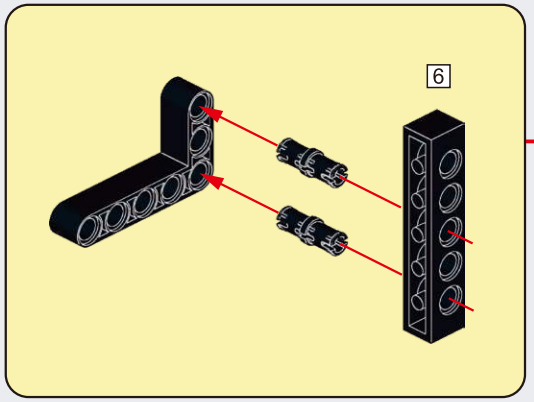
6

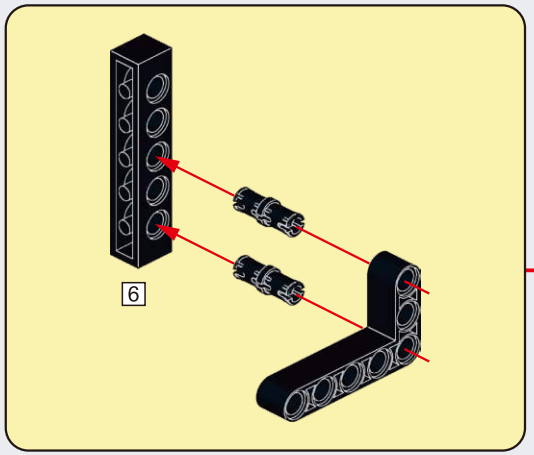
6

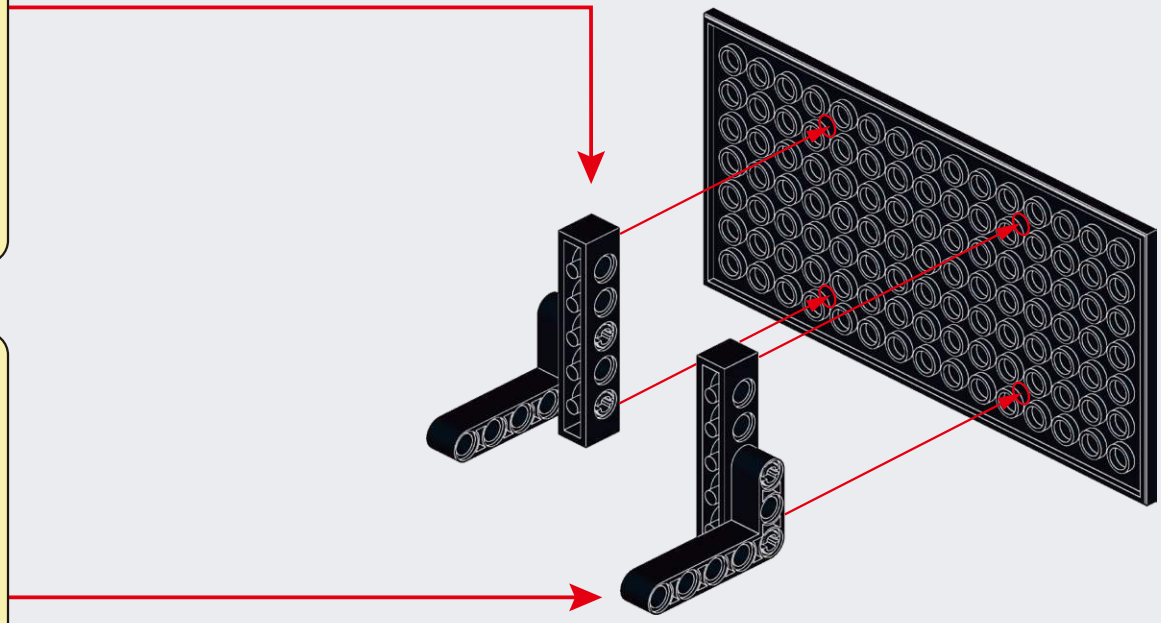

I138

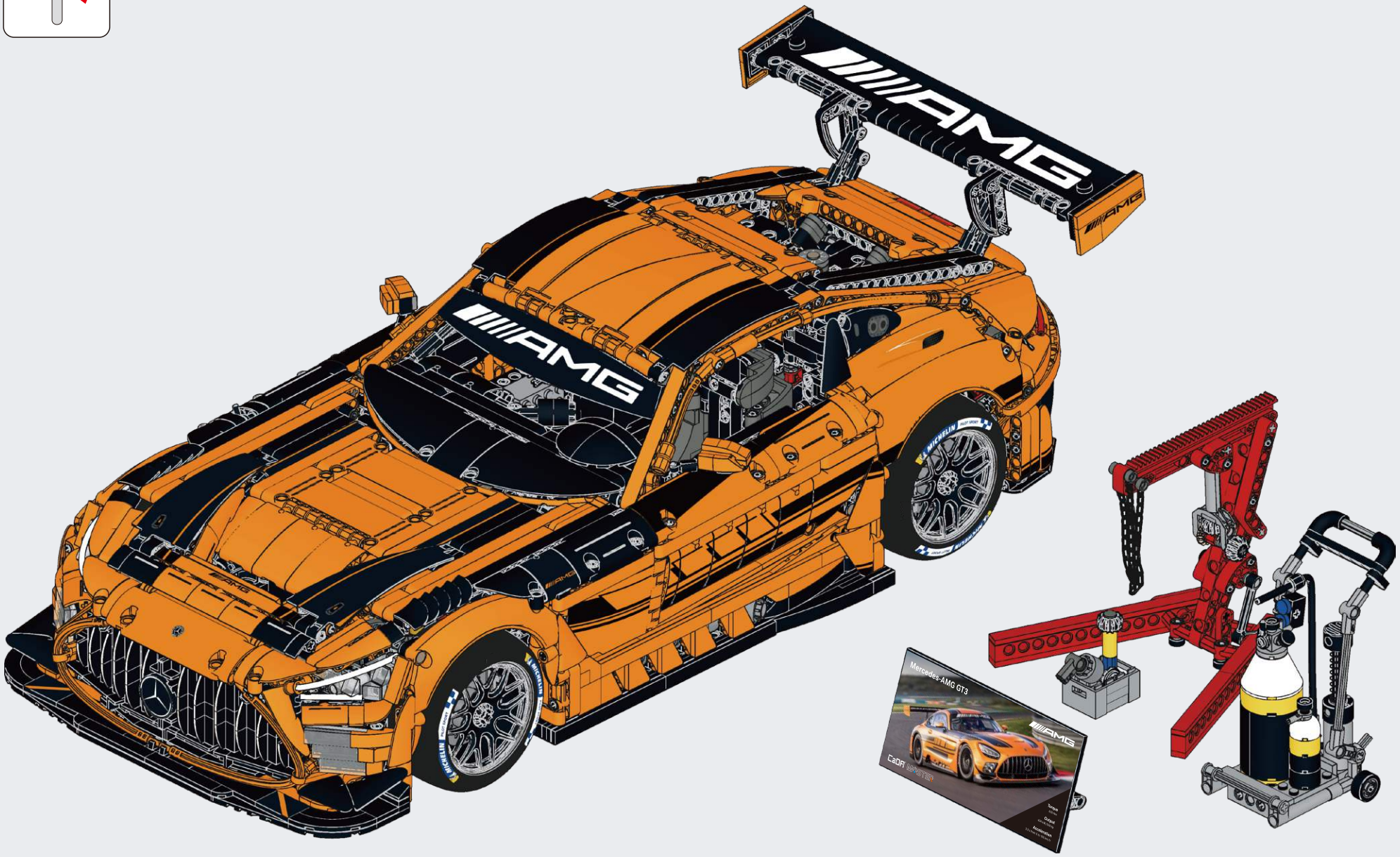

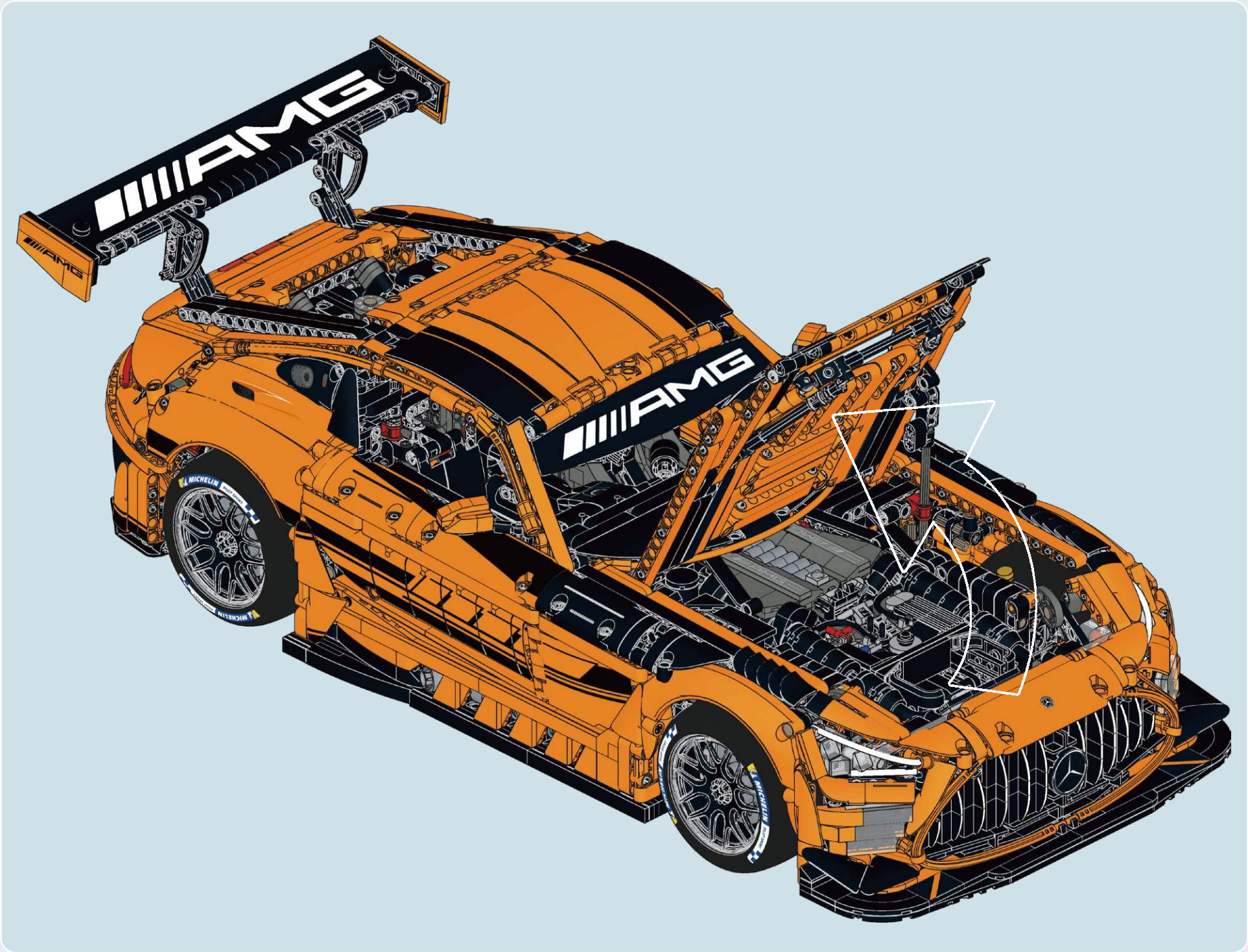
AMG
AMG
AMG
MICHELIN

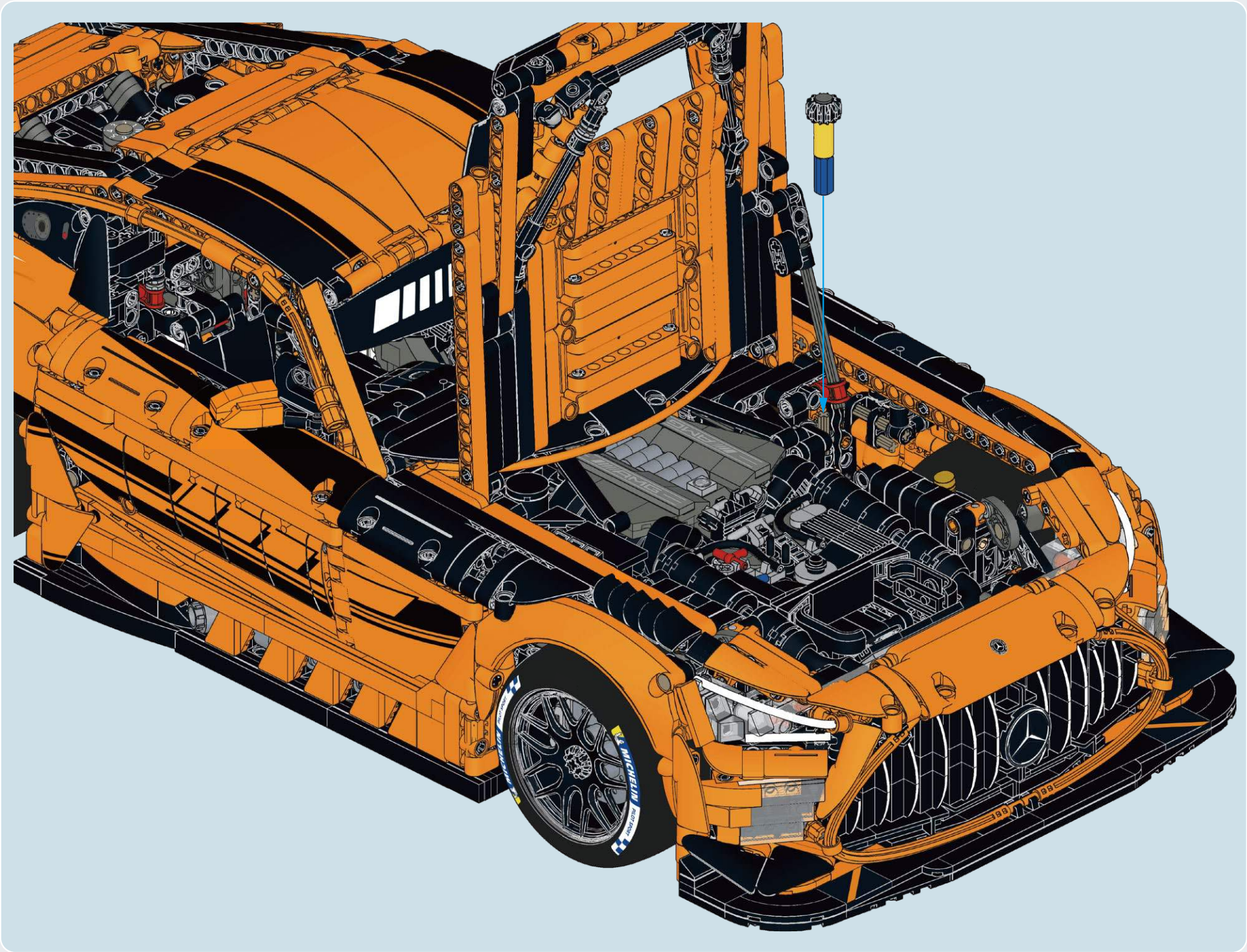
MICHELIN
PILOT SPORT

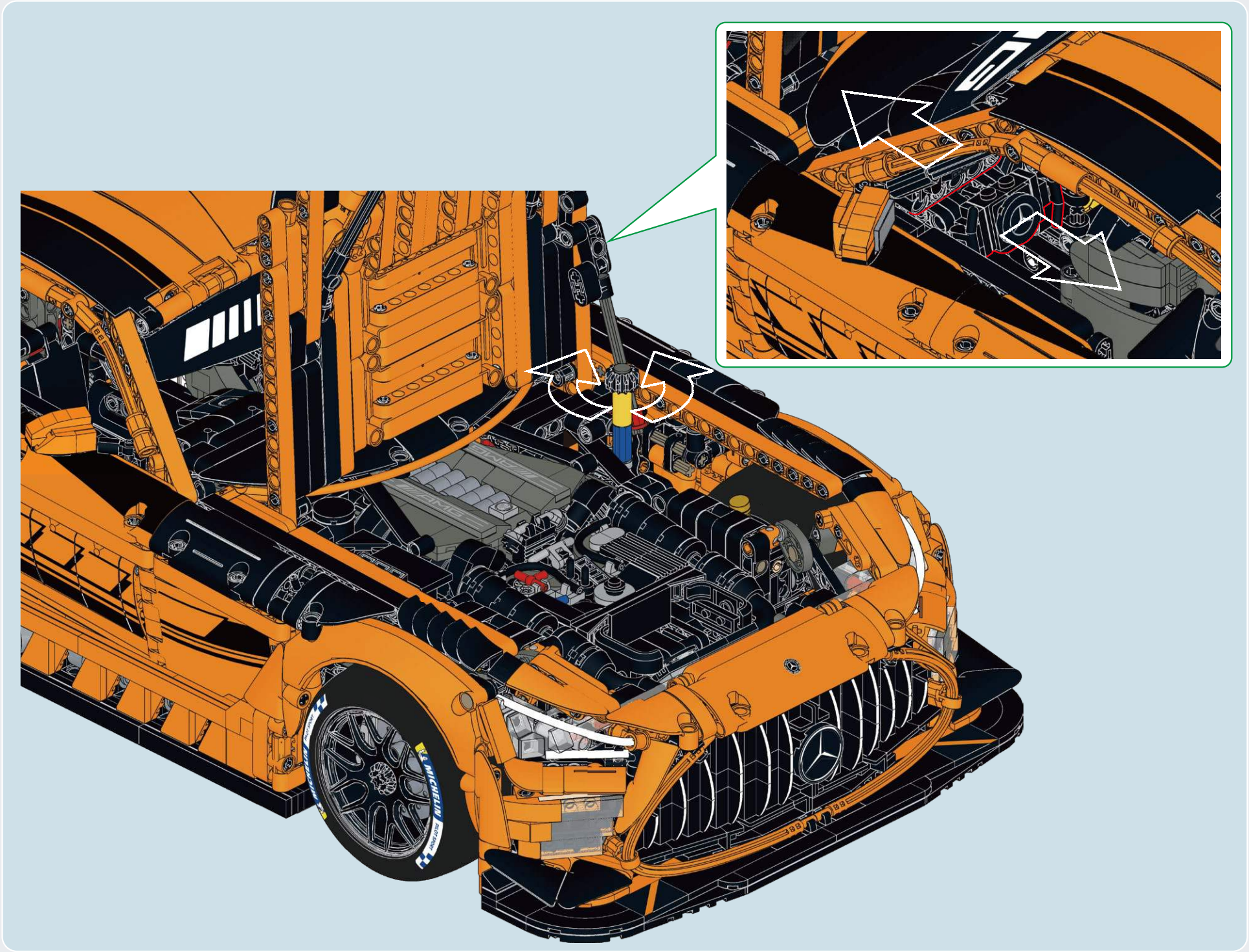
MICHELIN

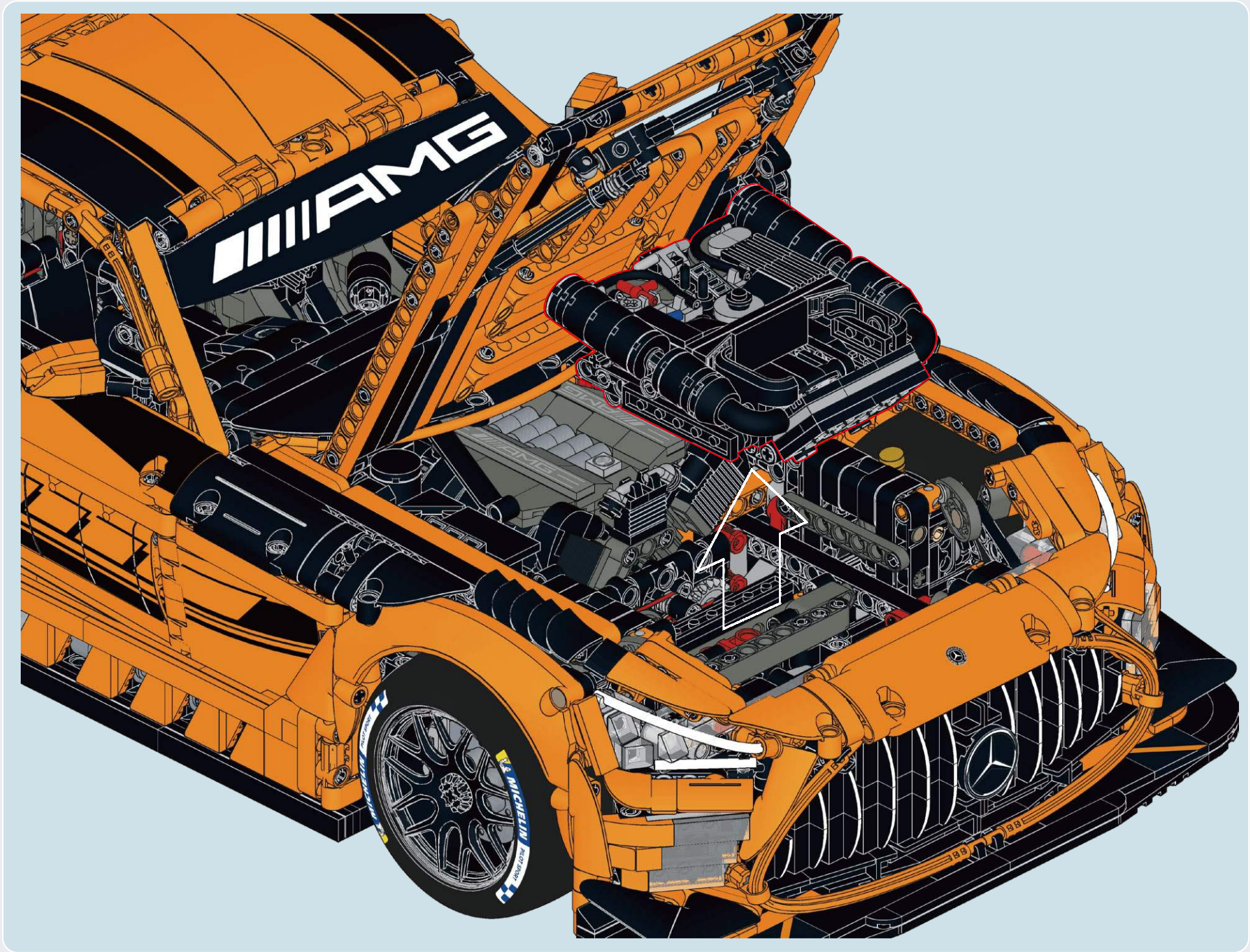
AMG
MICHELIN
PILOT SPORT

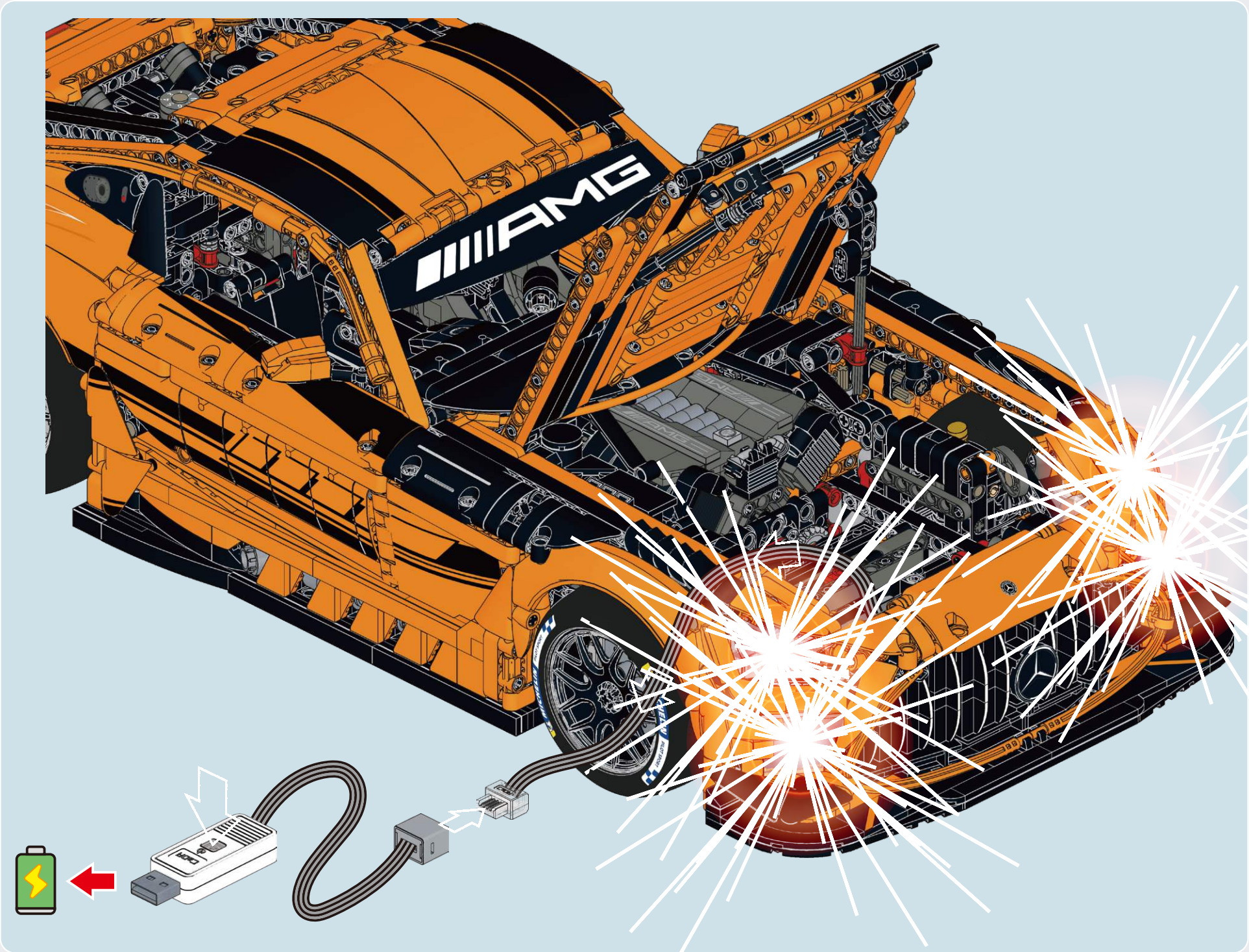
AMG

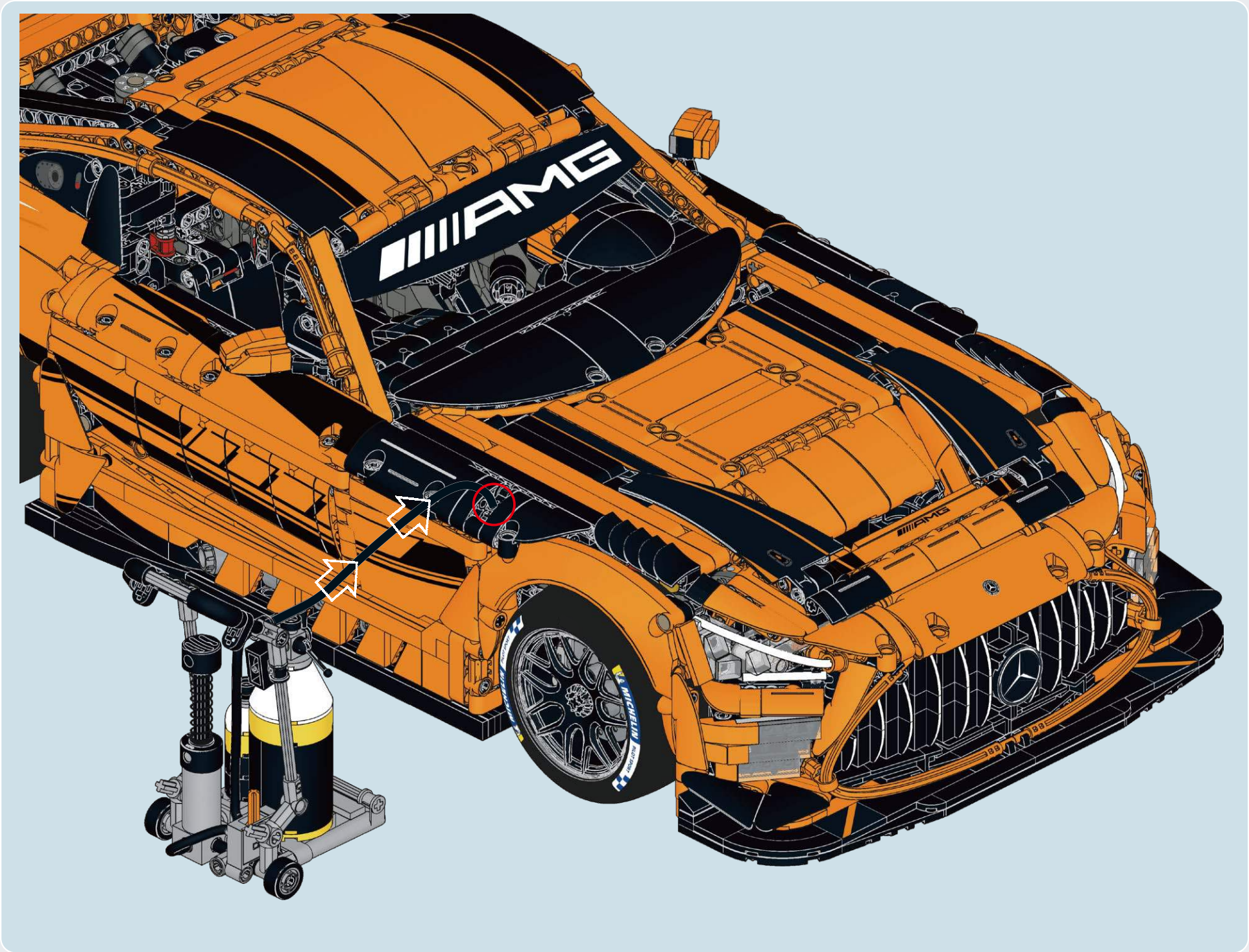
AMG
MICHELIN

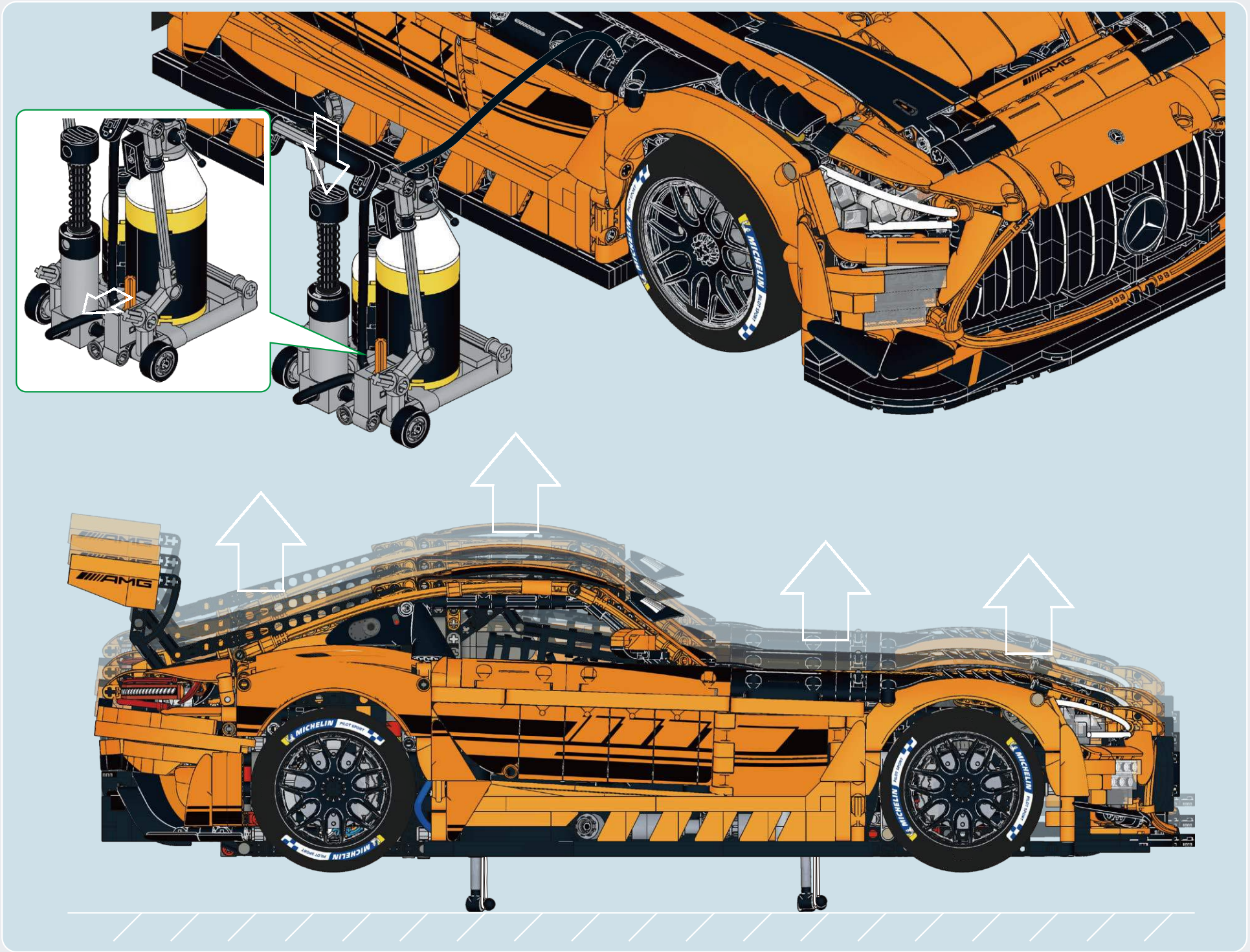
AMG
MICHELIN
PILOT SPORT

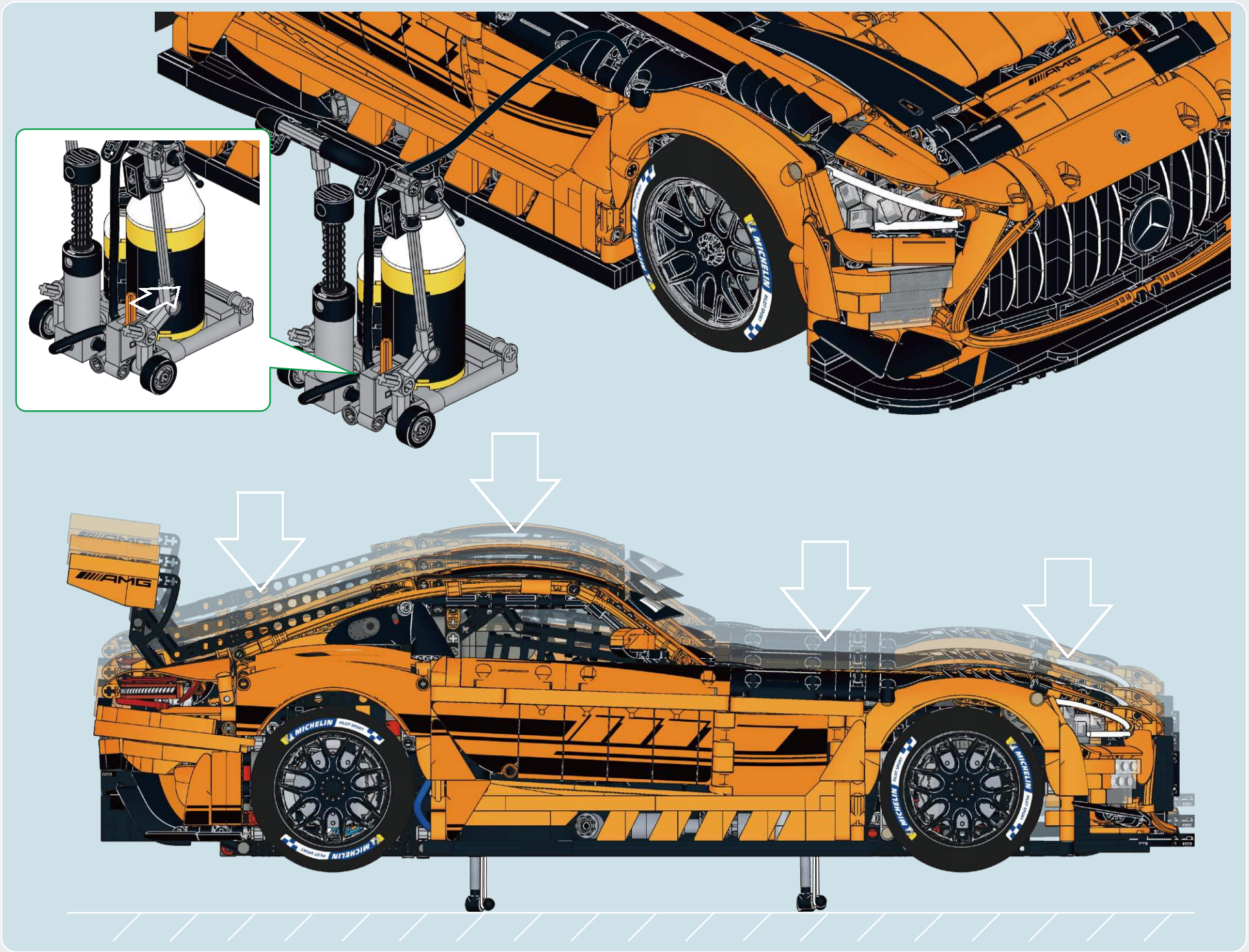
AMG
MICHELIN
PILOT SPORT

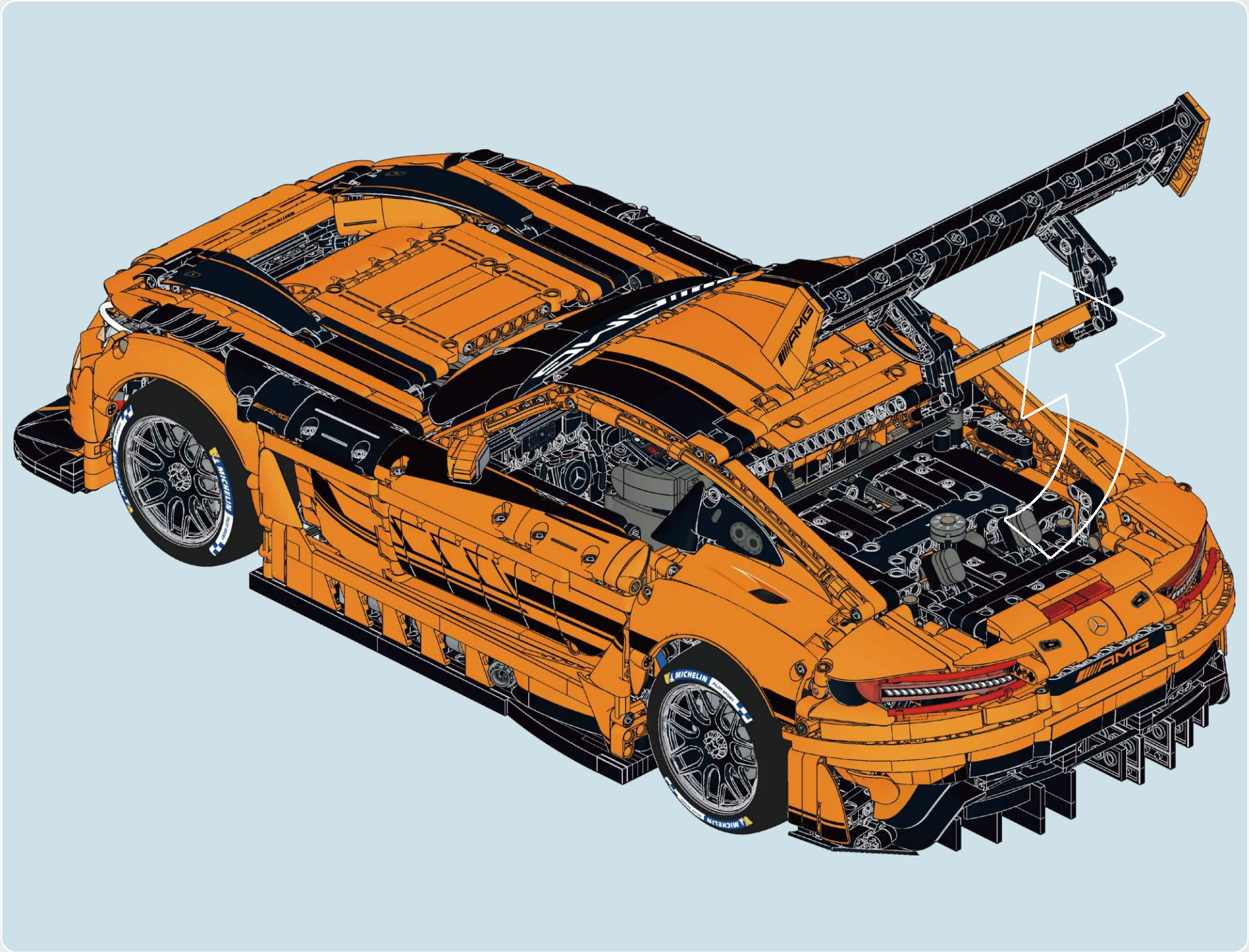
AMG
MICHELIN

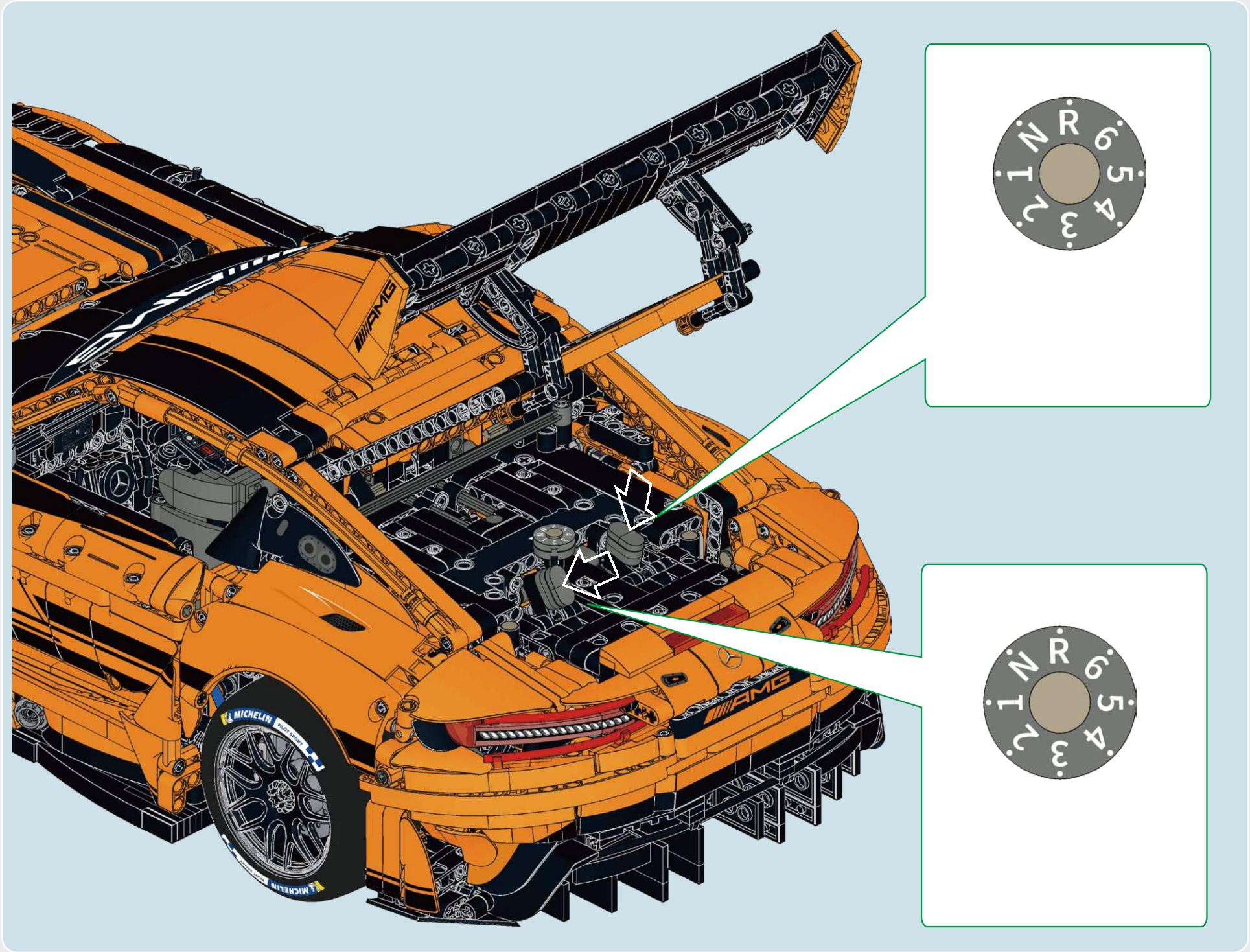
R
6
5
4
3
2
1
N
R
6
5
4
3
2
1
N
AMG
AMG
MICHELIN
MICHELIN

2x JR50220001
1x JX80840001
4x JB10010002
2x JF11160002
13x JF10700002
3x JB10160003
3x JA30590005
5x JA30280016
2x JA10150009
4x JF01260004
8x JF20110001
26x JA30580001

28x JH20140002
5x JD10010005
25x JH10790001
3x JF91100001
2x JX80950001
1x JX80850001
4x JX80750001
2x JB20020001
12x JF40450001
15x JH51100002
6x 202RJA31040001
8x JA30600001

2x JG20150002
25x JH50860002
5x JX81340001
2x JF10850004
8x JK50110004
6x JX41850002
2x JA20170001
4x JF00650002
4x JF00810002
2x JF01060002
8x JH90730004

144x JH50010002
24x JF30440001
540x JH20250001
123x JH00110001 (2)
16x JH50410001
4x JC00100002
3x JC00110002
1x JF20260001
1x JH90910003
7x JM00170008
2x JE90220006
36x JJ40220001

8x JH50260001
4x JM31170001
6x JH60270001 (2)
11x JH60310001 (3)
14x JH60300001 (4)
6x JH60290001 (5)
2x JF11220002
2x JF11210001
2x JH60380002

27x JA10140001
35x JA40360001
4x JA30290001
26x JX80010001
2x JF10930001
2x JF00990001
13x JH41110003
2x JG20250001
5x JD10020001
2x JH30210002
8x JX80020001
9x JC00150002
1x JC00590002

29x JJ60190001
30x JJ60180004
23x JH10190002
10x JJ60030003
2x JH60510001
2x JR50210001
31x JH50320001
14x JM00150001
2x JF30710002
4x JH40870002
2x JX42480001
4x JB40150009
2x JB30320001

2x JA30680008
10x JF80730002
25x JF80720002
2x JA30570001
11x 202RJA31030001
11x 202RJA31020001
2x JF20120001
7x JX31050002
28x JJ00570005
10x JJ00200001
3x JA20180001
9x JH60400001
5x JC10030001

1x 202RJB10040011
2x JR40200001
5x JB10190002
1x JB10040006
14x JB10120005
2x JM90980002
20x JJ70850001
1x JF80610003
4x JH40220001
7x JH60500001
5x JC00410002
4x JC00080003

2x JE30150002
7x JX42410002 (R33)
6x JX42420002 (L34)
2x JD20060001
4x JF81270002
2x JF00140001
4x JA40770003
11x JA10080002
3x JA30340001
1x 202RJA30340011
11x JB20090008
2x JB20250007

297x JH20160002
1x JM90420002
2x JH61090001
49x JH50640001
2x JH00130002 (3)
9x JF10890001 (3)
2x JK40120004
3x JH60850002
26x JH60480003
10x JH50200002
9x JH50540001
2x JF61000001
2x JF61010001

4x
JF81230002

4x
JH60990002

18x
JJ40250002

27x
JA10130002

6x
JA40480005

3
1x
JA30300002

3x
JA20190007

12x
JJ60590001

3
30x
JJ60040001

42x
JH60390001

3
9x
JJ60310002

4x
JF41280001

4x
JA30850004

2x
JE30230018

1x
JA20230001

2x
JD20050005

9x
JX80030008

6x
JH60650002

1x
JH60820003

2x
JH60490001

5x
JH61080001

2x
JC00200004

30x
JJ70820001

1x
202RJA30350015

1x
202RJA30350014

2x
JA30350007

14x
JA10070001

17x
JX42390001

4x
JX41360002

2x
JH60360001

2x
JA31010001

2x
JH61070001

2x
JC00470004

1x
202RJB10360004

1x
JM90680002

15x
JH60350001

6x
JJ50460003

6x
JJ50710001

4x
JJ60340001

2x
JJ50260001

2x
JA20240001

120x
JH21030001

4
14x
JH00050001

27x
JH00930001

4
3x
JF10460002

4
1x
202RJA30310006

13x
JA10120001

4
4x
JA30310002

4x
JH60900001

4x
JF00010001

4x
JJ20640001

14x
JJ40240001

4
11x
JJ60390001

1x
JF00780009

4
8x
JJ00420010

2x
JA20200009

10x
JA10160005

6x
JA10060002

6x
JA30410008

4x
JH40950001

4x
JC00020001

4x
JF40760001

5
22x
JJ40300001

5
23x
JJ60050001

25x
JJ40730002

2x
JF80870002

3
5x
JJ60350004

2x
JE20390008

2x
JE20380009

1x
JC10160003

46x
JJ70110002

L18
1x
JX41950003

R17
1x
JX41960003

R13
4x
JX41890002

L14
4x
JX41880002

1x
JM30820002

1x
204RC640080001

4x
JJ50440001

6x
JJ50270002

6x
JH60340001

2x
JX12400001

2x
JX42060001

1x
202RJX42060002

5
10x
JJ60320002

1x
JJ70600002

2x
JA30700002

2x
JC00530002

10x
JJ50720001

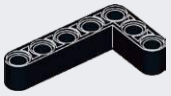
33x
JJ70120002

2x
JE00490001

4x
JA10020002

R5
1x
202RJX41660002

L6
1x
202RJX41670002

4x
205RJV90470003

4x
JM81190001

2x
JE50430004

6
14x
JH00060001

2x
JF40480001

6
6x
JJ40290001

17x
JA10110001

6
7x
JA30320005

6
2x
206RJT10030012

6
1x
206RJT10040016

2x
JF40540001

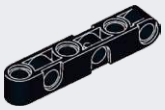
6
3x
JJ60400001

1x
JA20210009

6
2x
JJ00210001

5
8x
JJ60360003

7
6x
JJ40280001

3x
JE20670002

3x
JE20660002

1x
JM00340001

14x
JA10050006

7
23x
JJ60060001

7
3x
JH00070004

7
1x
JJ00620002

7
24x
JJ60330001

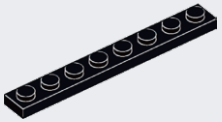
6x
JA10100003

8
2x
JA30330004

8
6x
JH00080001

2x
JJ70130002

8
2x
JJ00430009

2x
JF40530001

7
3x
JJ60370001

9
15x
JJ60070001

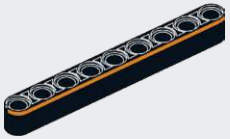
9
2x
202RJJ60070003

9
1x
202RJJ60070002

9
14x
JJ60380004

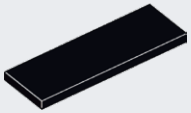
9x
JA30930005

3x
JX42070002

2x
JX41120003

4x
JX40540001

4x
JA10010002

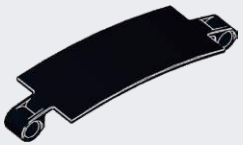
2x
JX41790002

3x
JX41540001

1x
202RJX41990002

1x
202RJX42000002

1x
JX42000001

1x
JX41990001

2x
JC00120004

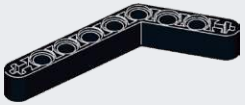
1x
JJ70140003

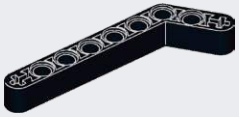
4x
JJ70150002

2x
JA10040003

1x
JA10420008

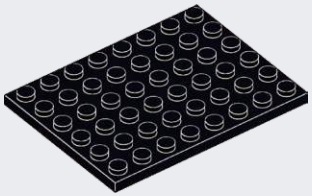
1x
JA10520012

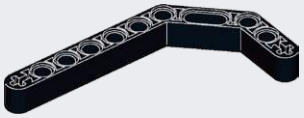
7x
JJ70160001

4x
JH00100001

4x
JA30380005

2x
JA10090004

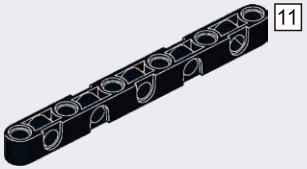

5x
JJ60500001

15x
JJ60080002

7x
JJ00530004

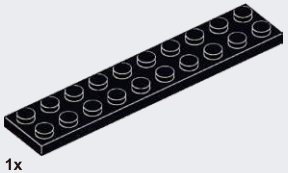
1x
JA10030005

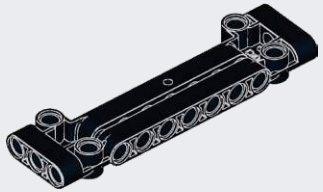
11x
JX41930001

1x
202RJX41930001

2x
JX40400008

1x
JX41640007

1x
JX41650007

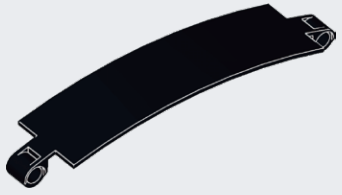
2x
JX40600003

4x
JH00120001

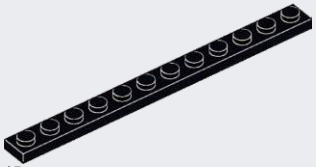

15x
JA10660001

1x
JJ00540005

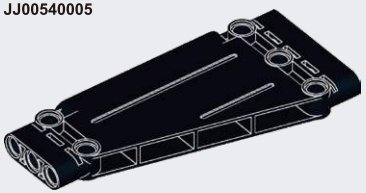

4x
JX40630003

1x
202RJX41500001

1x
202RJX41490001

4x
204RC640080011

1x
202RJA30880023

1x
206RJT50150001

1x
206RJT10030041

9x
JJ60090002

5x
JA10400005

7x
JJ60790001

24x
JJ60100003

2x
JJ00550004

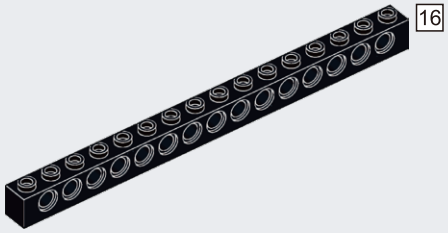

2x
JJ00560004

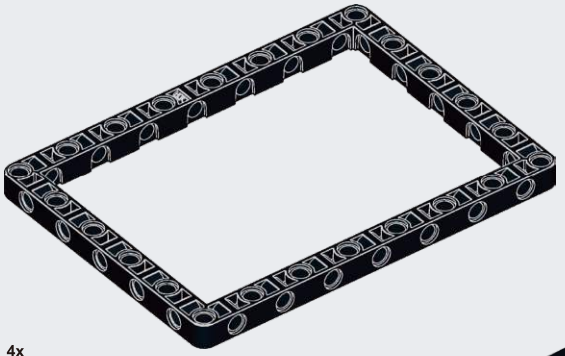

4x
JJ20800001

1x
206RJT50160001

30

1x
206RJT10040020

3x
JH60840002

4x
205RJH81120001

1x
205RJV90540001

4x
JX31200004

4x
JA10150004

4x
JA30590003

6x
JA30580008

2x
JA30280012

1x
JH10790006

2x
JM00100001

6x
JX80950003

8x
JJ00010010

1x
JF00650007

4x
JF31070001

3x
JH51100009

4x
JF11220007

7x
JH60380005

2x
JH50860007

1x
JH50320008

4x
JE90220020

4x
JF00990006

1x
JA40360003

6x
JA10140010

10x
JJ60180007

1x
JJ60030007

4x
JD10020006

1x
JC00110005

1x
JC00100005

4x
JF80720006

4x
JC00150005

2x
JA30500002

3x
JX40580004

2x
JH50740005

②

2x
JH60270006

③

4x
JH60310011

⑤

1x
JH60290013

2x
JM60460002

2x
JC10030016

5x
JM00540001

1x
202RJB10190002

1x
JB10120002

3x
JB40150002

11x
JF01150008

4x
JE20180017

4x
JE20170017

1x
JE20600007

1x
JE20610007

25x
JH60500010

4x
JA20180013

4x
JH60400005

2x
JC00080007

52x
JH50440001

5x
JD20060010

1x
JA40770011

1x
JA10080014

1x
JE20370008

2x
JH91180001

2x
JE20070009

2x
JE20080009

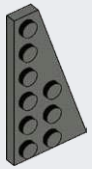

1x
JE20030004

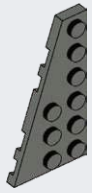

1x
JE20040003

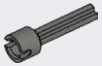

1x
JH90880002

1x
JA10130015

18x
JJ60590010

1x
JH60390005

3

4x
JJ60040006

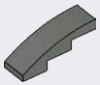

4x
JC00200002

1x
JH90890001

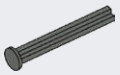

4

40x
JH00460001

4

1x
JA30310004

4x
JJ40240005

4

2x
206RJT10040017

4x
JJ70820006

1x
JM30090006

4x
JM90400001

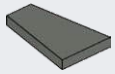

1x
JE20360012

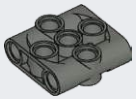

2x
JJ20640002

4

1x
JJ00420013

3

9x
JJ60350006

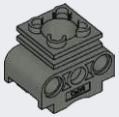

8x
JX40520007

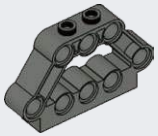

2x
JJ20480004

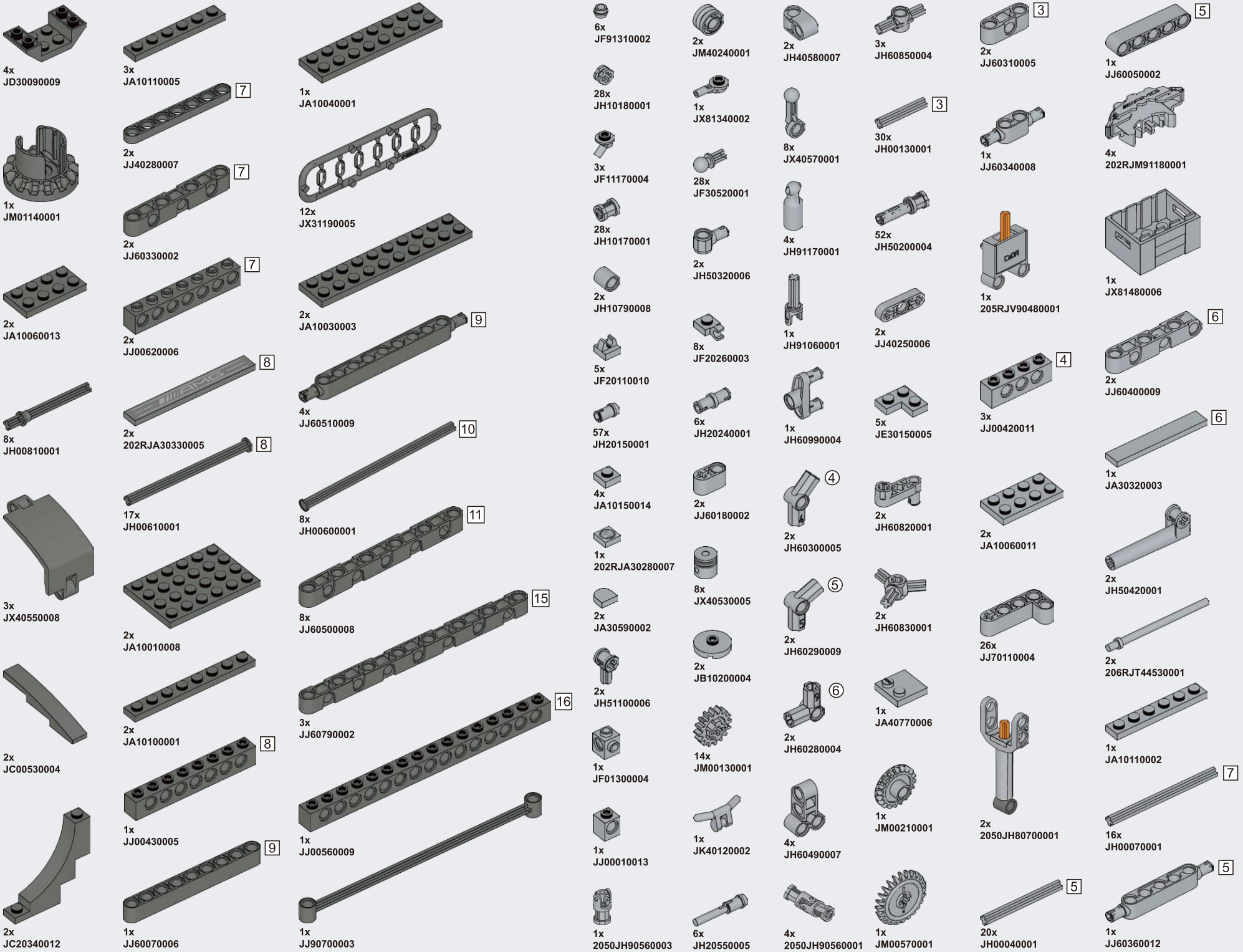
4x JD30090009
1x JM01140001
2x JA10060013
8x JH00810001
3x JX40550008
2x JC00530004
2x JC20340012
3x JA10110005
2x JJ40280007 7
2x JJ60330002 7
2x JJ00620006 7
2x 202RJA30330005 8
17x JH00610001 8
2x JA10010008
2x JA10100001
1x JJ00430005 8
1x JJ60070006 9
1x JA10040001
12x JX31190005
2x JA10030003
4x JJ60510009 9
8x JH00600001 10
8x JJ60500008 11
3x JJ60790002 15
1x JJ00560009 16
1x JJ90700003
6x JF91310002
28x JH10180001
3x JF11170004
28x JH10170001
2x JH10790008
5x JF20110010
57x JH20150001
4x JA10150014
1x 202RJA30280007
2x JA30590002
2x JH51100006
1x JF01300004
1x JJ00010013
1x 2050JH90560003
2x JM40240001
1x JX81340002
28x JF30520001
2x JH50320006
8x JF20260003
6x JH20240001
2x JJ60180002
8x JX40530005
2x JB10200004
14x JM00130001
1x JK40120002
6x JH20550005
2x JH40580007
8x JX40570001
4x JH91170001
1x JH91060001
1x JH60990004
2x JH60300005 4
2x JH60290009 5
2x JH60280004 6
4x JH60490007
4x 2050JH90560001
3x JH60850004
30x JH00130001 3
52x JH50200004
2x JJ40250006
5x JE30150005
2x JH60820001
2x JH60830001
1x JA40770006
1x JM00210001
1x JM00570001
2x JJ60310005 3
1x JJ60340008
1x 205RJV90480001
3x JJ00420011 4
2x JA10060011
26x JJ70110004
2x 2050JH80700001
20x JH00040001 5
1x JJ60050002 5
4x 202RJM91180001
1x JX81480006
2x JJ60400009 6
1x JA30320003 6
2x JH50420001
2x 206RJT44530001
1x JA10110002
16x JH00070001 7
1x JJ60360012 5

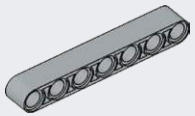

3x
JJ60060004

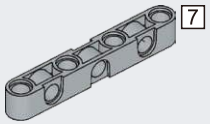

2x
JJ60330006

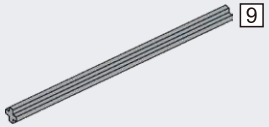

6x
JH00090001

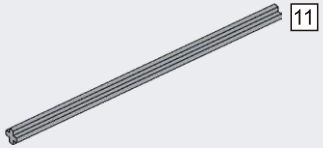

2x
JH00940001

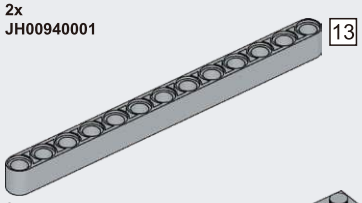

2x
JJ60090003

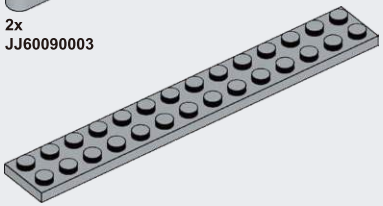
1x
JA10830003

8x
206RJT00010005

1x
JB40050014

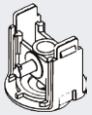
1x
JM00960001

5x
JH60850001

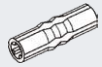
4x
JM90410001

4x
JF10460007

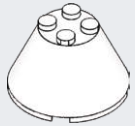
1x
JB30060007

2x
206RJT10030043

1x
JF10700001

1x
JB40350002

4x
JH20030002

4x
JF10850012

4x
JQ90150001

1x
JH50320007

8x
JH50260011

38x
JH50410012

1x
JJ40220009

1x
JJ60180005

2x
JH60310005

1x
JH60300008

7x
JM00440001

6x
206RJT00010006

2x
JH60820005

1x
JH60500006

6x
JH60650005

4x
JJ40240006

12x
JH50200001

4x
JM90420001

2x
JJ40250009

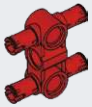
1x
JH60350002

4x
JJ50710006

2x
JJ50460007

4x
206RJT10030047

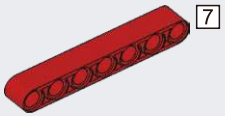

1x
JJ60060002

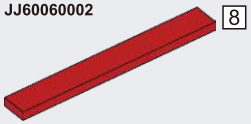

4x
JA30330005

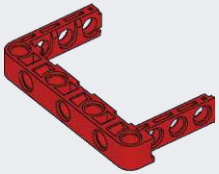
1x
JJ20760004

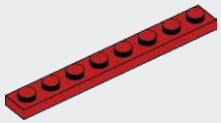
4x
JA10100008

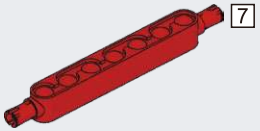

2x
JJ60370005

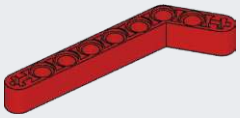
2x
JJ70150006

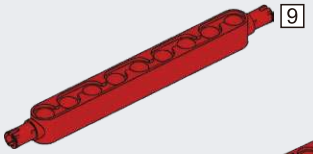

1x
JJ60510001

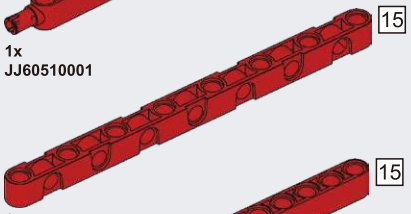

1x
JJ60790007

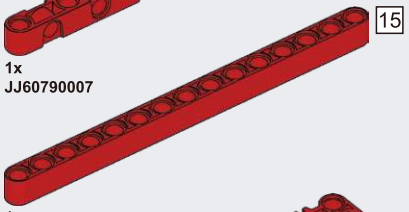

1x
JJ60100001

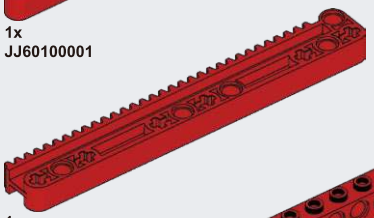
1x
JM00870004

2x
JJ00560003

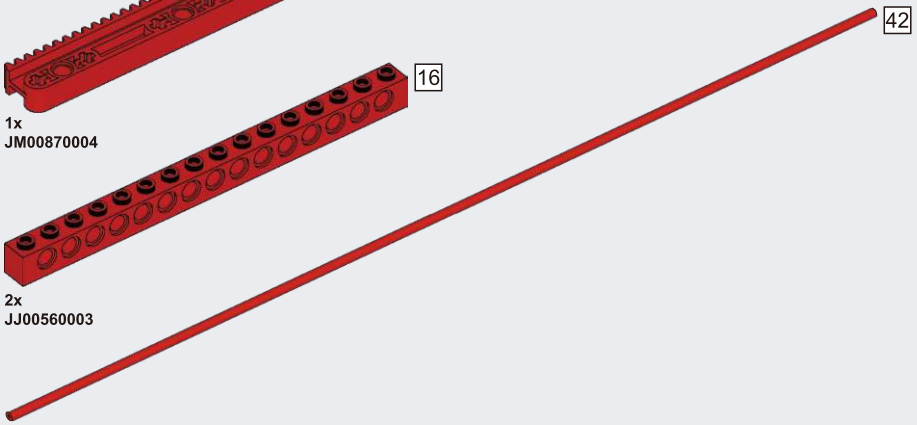

1x
206RJT10040019

2x JA30580010
10x JA10150021
11x JA30280006
2x JF20260016
6x JD10010007
17x JH10790012
2x JF30520008
2x JX81340011
6x JH90730001
6x JH50860003
18x JF40450011
6x JH51100008
2x JH50410007
4x JH50260004

4x JJ40220016
2x JE90220015
34x JH50320002
11x JJ60180001
3x JC00110016
3x JC00100016
8x JA10140014
2x JF00990020
2x JJ60030006
8x JJ60190014
8x JH30210010
2x JH41110006
2x JC00580002

1x 202RJC00580001
1x 202RJC00580002
3x JX41850005
② 1x JH60270011
③ 2x JH60310017
④ 4x JH60300011
⑥ 4x JH60280008
2x JF80730019
5x JE20610009
5x JE20600009
2x JA30500017

2x JH60400007
2x JH40220013
4x JE20170008
4x JE20180008
2x JH61080002
4x JH61150001
2x JA30490021
2x JA30780023
1x JM01030001
2x JF81270001
2x JA30340002

10x JX40420012
2x JC00590001
2x JH60850013
3 5x JA30300018
4x JA10130009
5x JH60480010
2x JH61090002
L34 3x JX42420003
R33 3x JX42410003
2x JF40970002
6x JH60820006
2x JJ40250004

14x JJ60590007
3 8x JJ60040008
2x JH60390006
7x JA10070015
12x JH60360013
4x JC00200019
1x JA30850010
7x JX41360010
R17 1x JX41960006
L18 1x JX41950006
4x JJ40240003

4x JJ50710009
2x JJ70820009
3x JJ50260008
4x JJ50460002
6x JA10120006
4 4x JA30310005
10x JJ70110008
2x JE00160017
1x JJ20640012
1x 204RC640080006
1x 204RC640080007

R15 7x JX41980001
L16 7x JX41970001
L16 1x 202RJX41970002
R15 1x 202RJX41980002
L14 2x JX41880005
R13 2x JX41890005
L14 2x 202RJX41880001
R13 2x 202RJX41890001
R1 1x JX41620011
L2 1x JX41630011

2x JA30910012
5 3x JJ40300012
3 4x JJ60350011
2x JH40950002
5 19x JJ60050008
40x JJ70120008
6 6x JJ40290003
6 2x JA30320017
6x JA10110004
7 2x JR30250011

10x JC00020013
2x JC00530005
1x 202RJX42060003
1x 202RJX42060001
1x 202RJX42060004
1x 204RC640080008
1x 204RC640080012
3x JX42070001

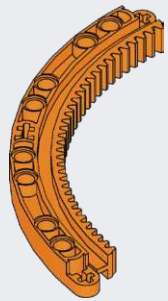
2x
JM00880004

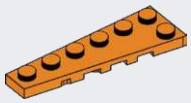
1x
JE20660001

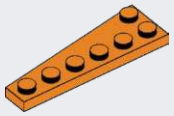
1x
JE20670001

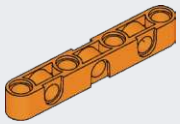
7
2x
JJ60330005

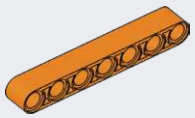
7
6x
JJ60060008

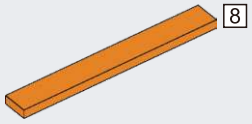
8
3x
JA30330016

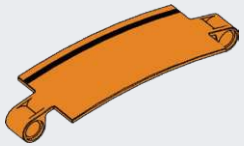
2x
202RJX41790002

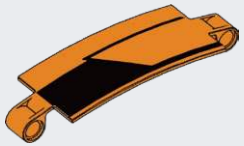
1x
202RJX41790003

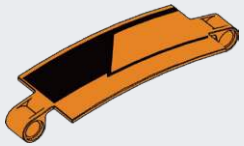
1x
202RJX41790004

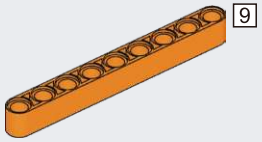
9
9x
JJ60070008

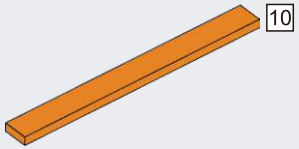
10
6x
JA30380018

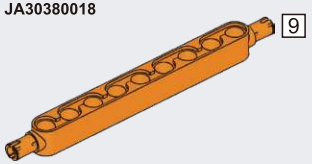
9
1x
JJ60510011

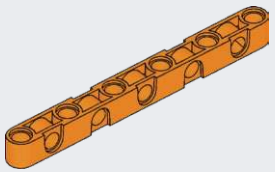
11
6x
JJ60500013

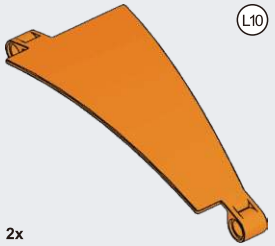
L10
2x
JX41500006

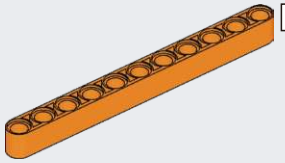
11
15x
JJ60080009

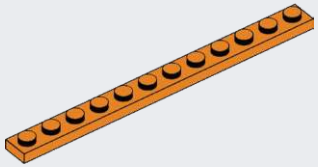
4x
JA10660015

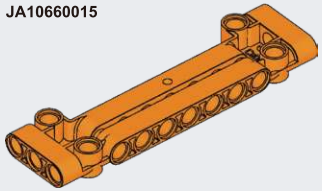
2x
JX41930004

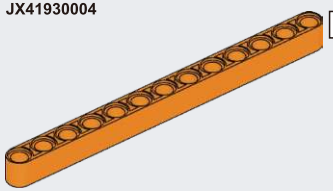
13
2x
JJ60090007

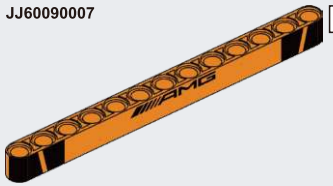

13
1x
202RJJ60090001

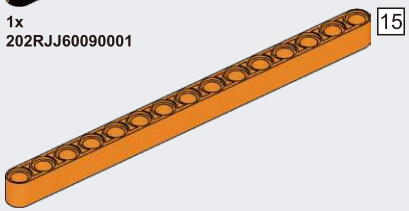
15
6x
JJ60100007

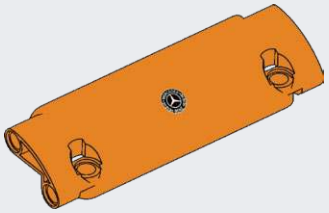
1x
202RJX40660003

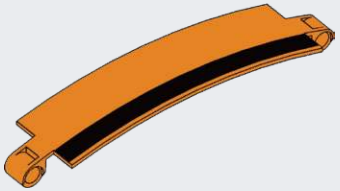
2x
202RJX40600007

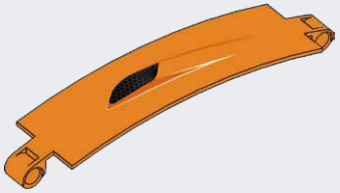
1x
202RJX40600005

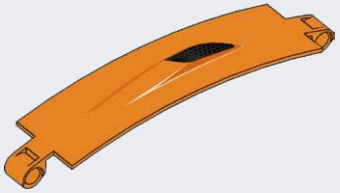
1x
202RJX40600006

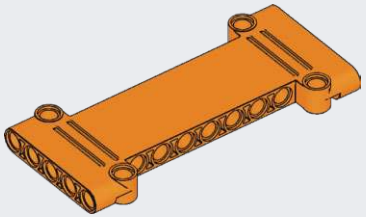
2x
JX41610006

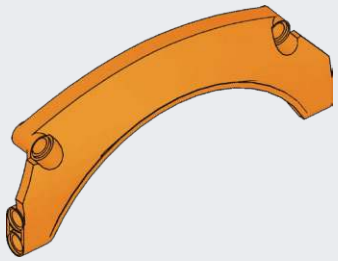
2x
JX41350008

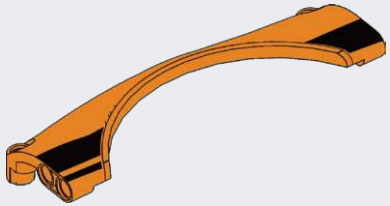
1x
202RJX41570001

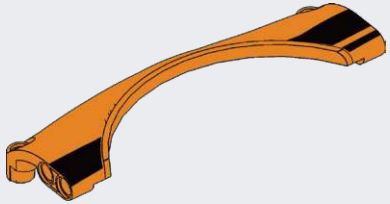
1x
202RJX41570002

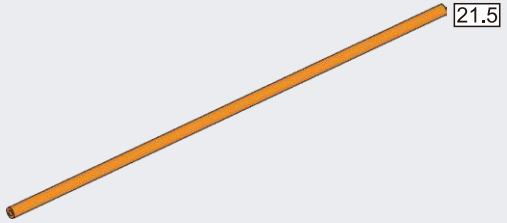
21.5
1x
206RJT10030044

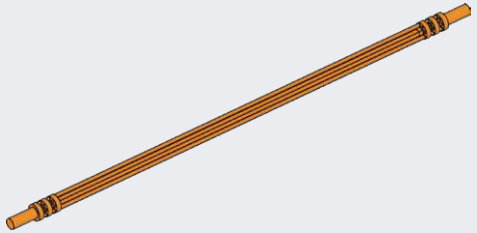
19
4x
JR30240010

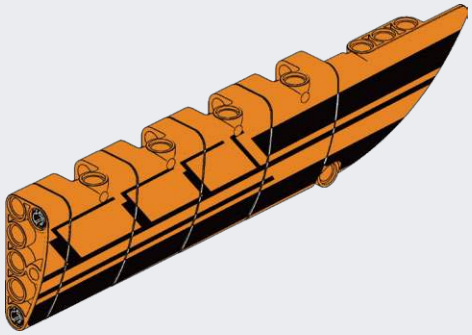

1x
204RC640080009

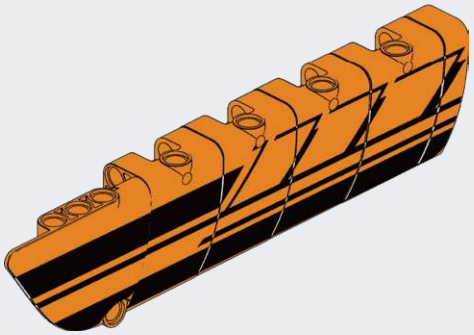

1x
204RC640080010

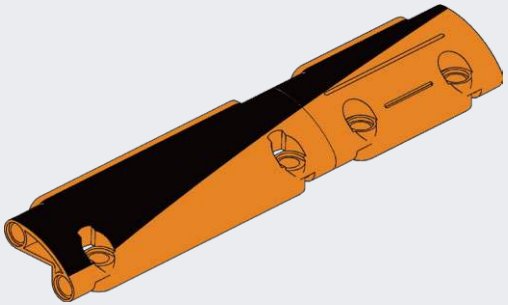

1x
204RC640080005

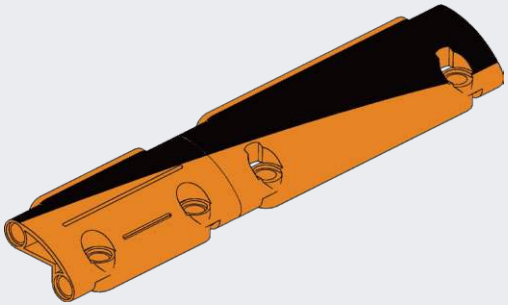

1x
204RC640080004

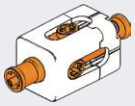

2x
205RJQ90160001

4x
JH20140001

3x
JH50780001

12x
JM00170001

15x
JH20430001

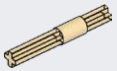

3x
JH00930002

3x
JM00160001

4x
JH50450001

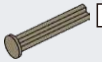

3

26x
JH00630001

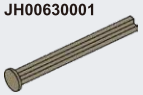

5

48x
JH00470001

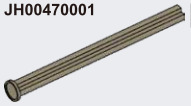

7

15x
JH00620001

2x
JA10060009

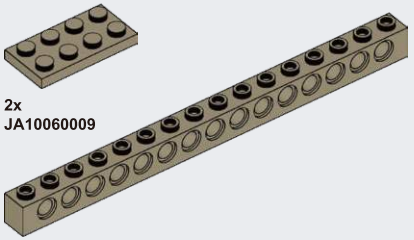

16

1x
JJ00560015

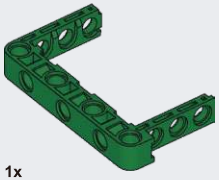

1x
JJ20760001

8x
JA10150016

2x
JF20110020

6x
JD10010016

2x
JB20020005

2x
JF11220003

2x
JA10140013

2x
JF80730020

4x
JA10130019

2x
JH60390021

3

6x
JA30300009

2x
JH60500015

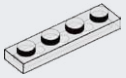

4x
JA10120018

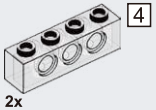

4

2x
JJ00420021

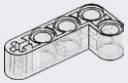

2x
JJ70110022

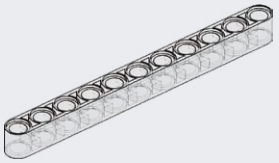

11

2x
JJ60080017

4x
JF20260029

1x
JA30290004

2x
JA40770033

L34

1x
JX42420001

R33

1x
JX42410001

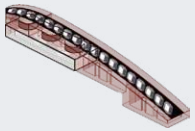

1x
204RC640080002

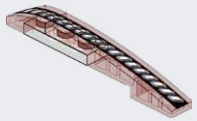

1x
204RC640080003

2x
202RJB10010001

2x
202RJB10160012

2x
202RJH50860002

2x
202RJH10790001

12x
202RJC00260001

1x
202RJA30280004

6x
202RJM00170001

2x
202RJA30290001

1x
202RJX80010001

9x
202RJM90980001

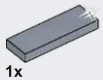
3
1x
202RJA30300003

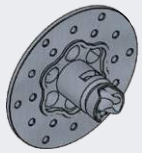
4x
JM31160002

13
1x
206RJT10010013

14
1x
206RJT10010016

2x
JB40350001

1x
JH30210005

1x
JB10200010

1x
JM01150001

1x
JB20090010

9x
JH90660002

1x
JB10180006

1x
JB20100008

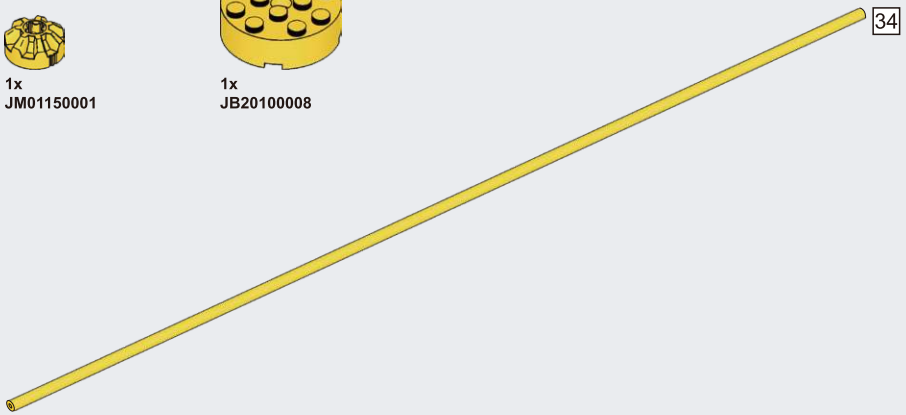
34
2x
206RJT10040018

2x
JB10160018

1x
JB10010014

1x
JF10700003

1x
JX81340009

1x
JH10190001

4x
JM00660001

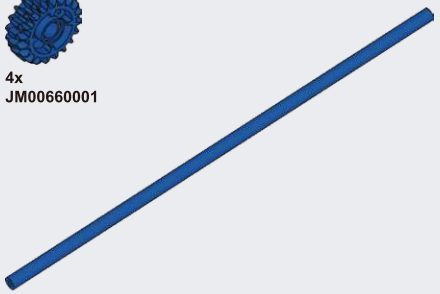
18
2x
206RJT10040009

2x
JM01120002

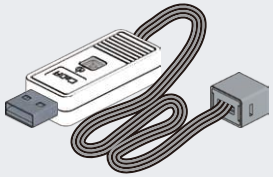
1x
JV9091

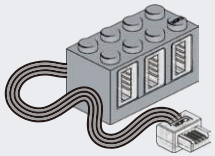
2x
JV9080

5x
JV3072

CaDA® MASTER

AMG

Mercedes-AMG GT3

www.doubleeagle-group.com

DE TWO

403ARC640080006