MOULD KING®

宇 星 模 王

CREATIVE IDEA

百变创意

绘图机

NO.Plotter

13181

3088+ Pcs/Pza

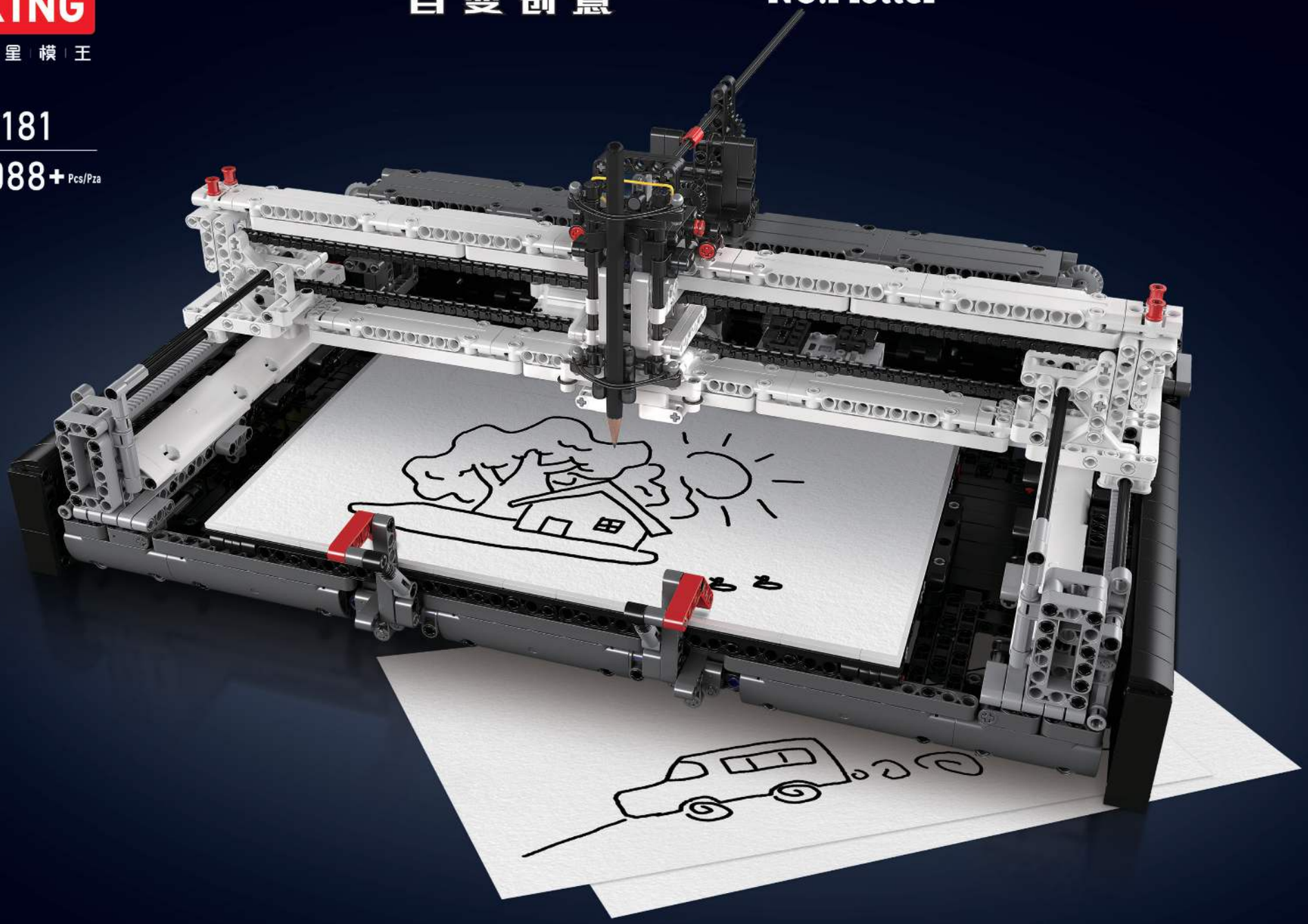

APP

Qr code APP (APP二维码)

Need the apple version 9.0 and above,the android version 5.0 and above.

* This APP supports most of the mainstream Android models on the market, but due to the large number of Android models, different models of systems and hardware reasons, there may be some models do not support, specificaccording to the actual test!

广东宇星科技
Mould King

产品资讯　积木补件　售后服务

Customer Service 客户服务 www.yx-mk.com

酷砖家 BriXpert

"酷砖家"是宇星模王设立的特殊标识，代表着产品的独特性和原创性。每一款带有"酷砖家"标志的积木套装，都由宇星的原创团队或者与宇星有密切合作的全球顶尖设计师亲自设计或授权。这个标识是我们对消费者的承诺，确保他们可以享受到独一无二且高品质的积木拼搭体验。

“Bri X pert”is a special mark established by MOULD KING, representing the uniqueness and originality of the product. Every building set with the "Bri X pert" logo is personally designed or authorized by MOULD KING's innovative team or world-class designers who work closely with MOULD KING. This logo is our commitment to consumers, ensuring that they can enjoy a unique and high-quality building experience.

OPEN

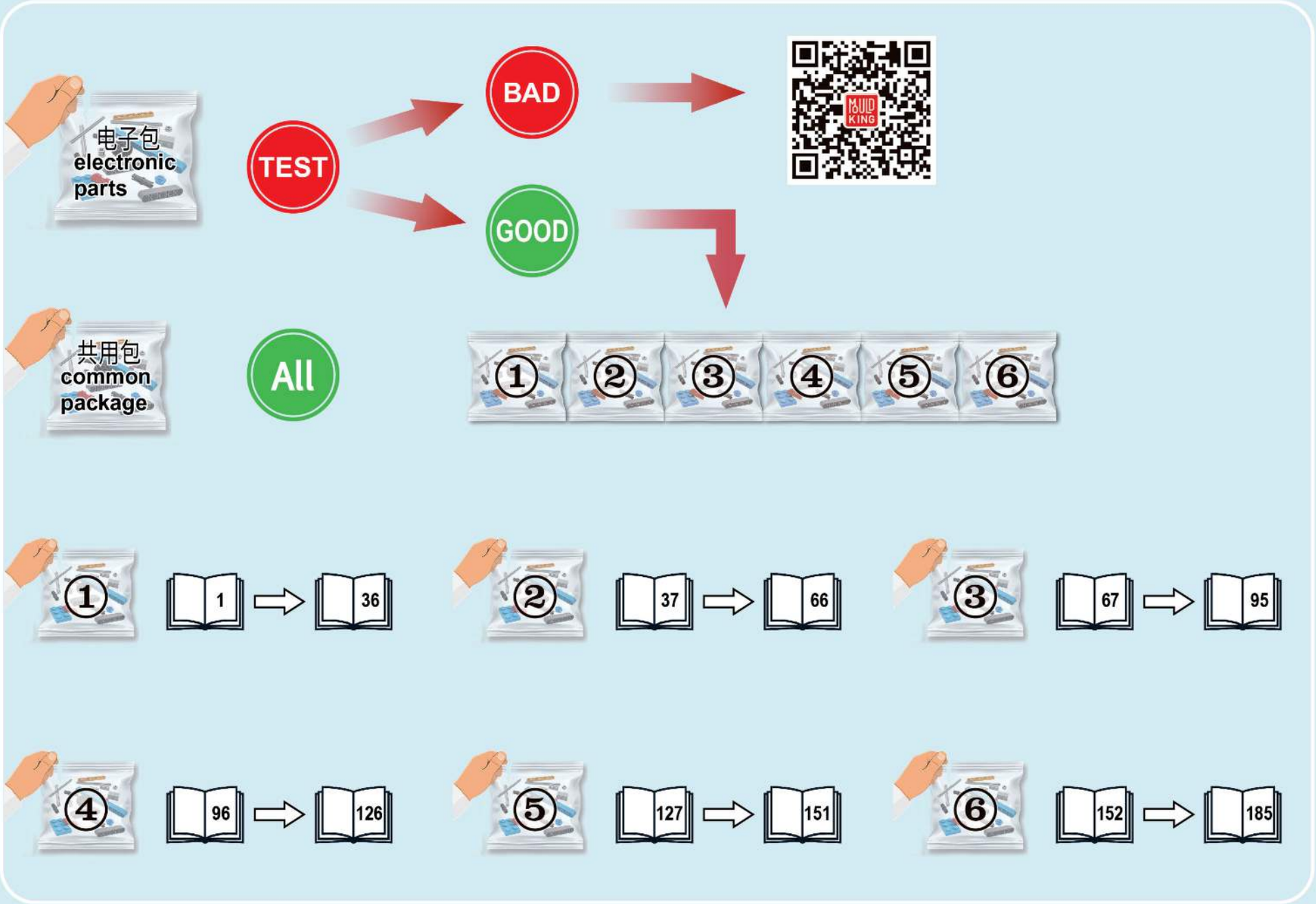
电子包
electronic parts
TEST
BAD
GOOD
共用包
common package
All
1
2
3
4
5
6
1
36
37
66
67
95
96
126
127
151
152
185

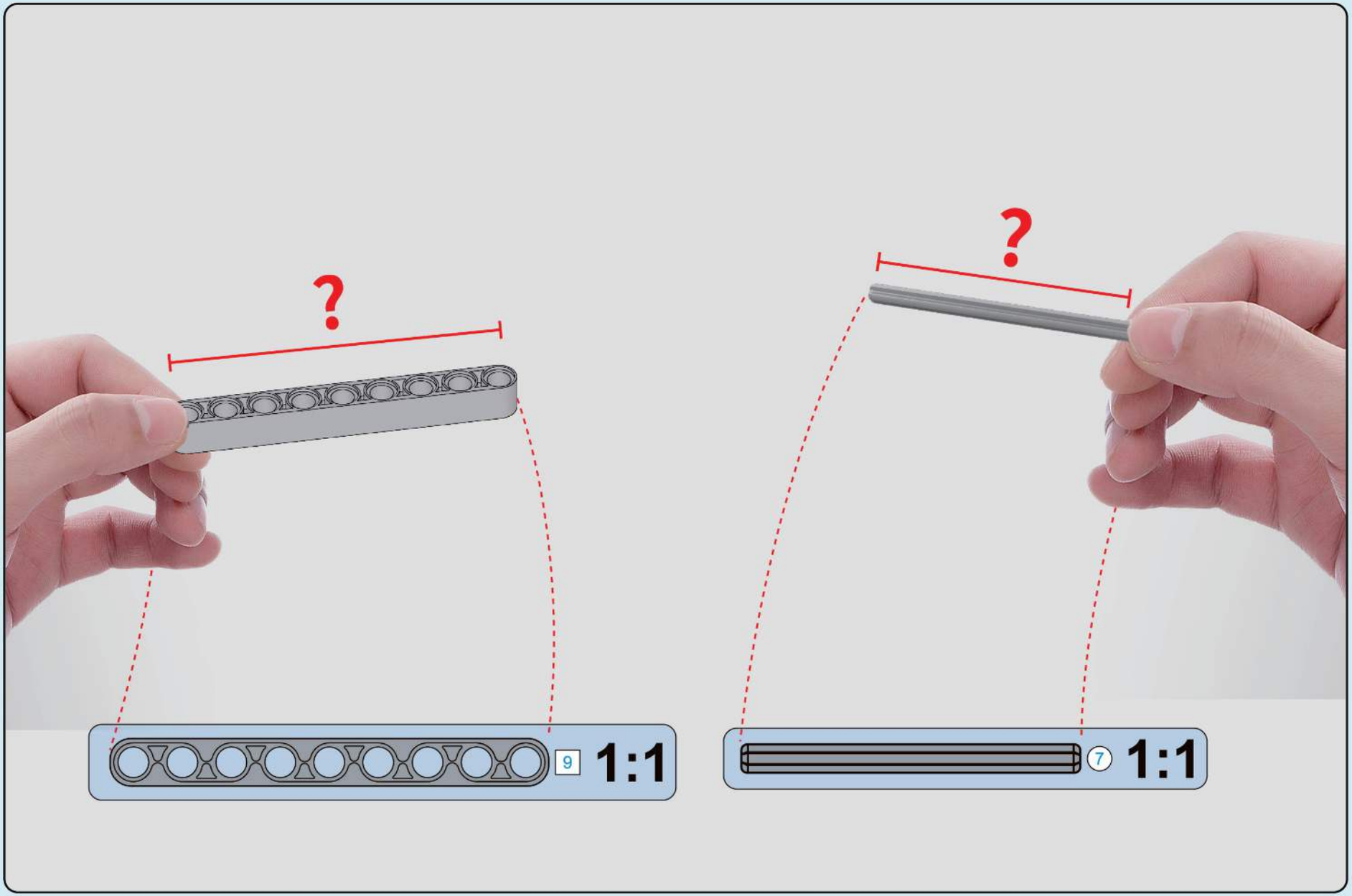
?
9
1:1
?
7
1:1

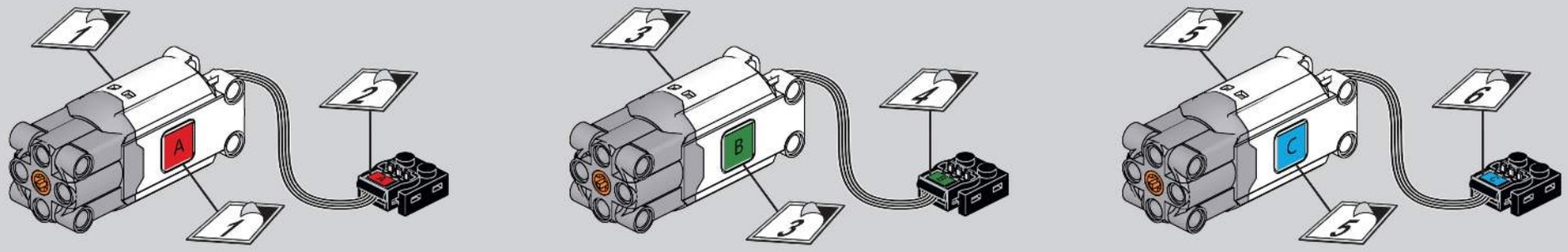
1
2
A
1
3
4
B
3
5
6
C
5

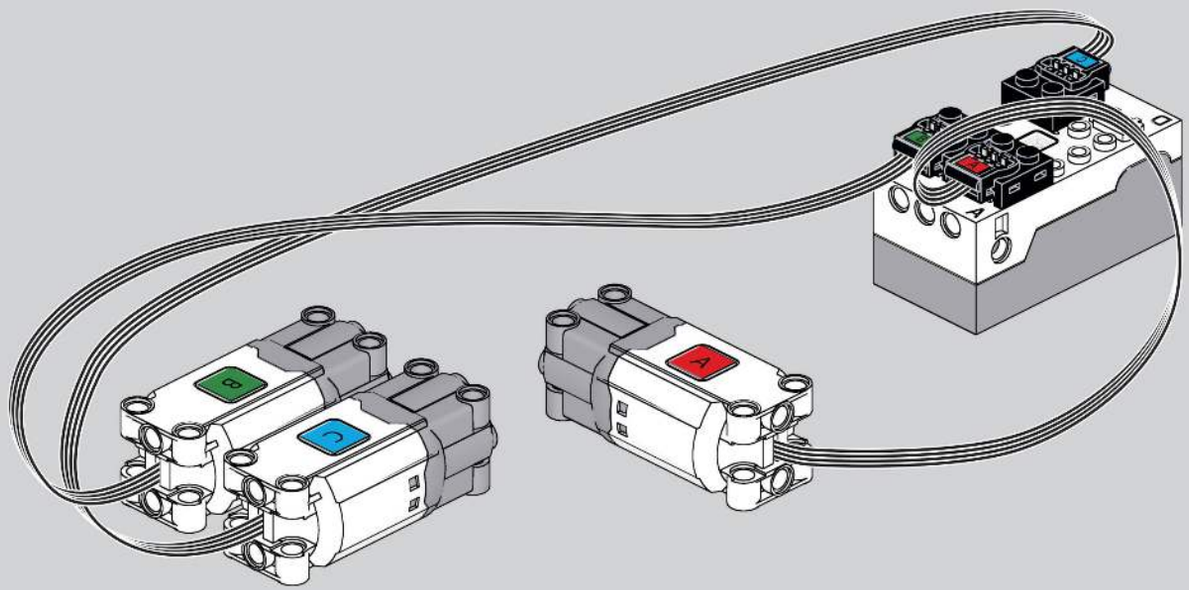
B
C
A

Main Control Module | H4.0模块

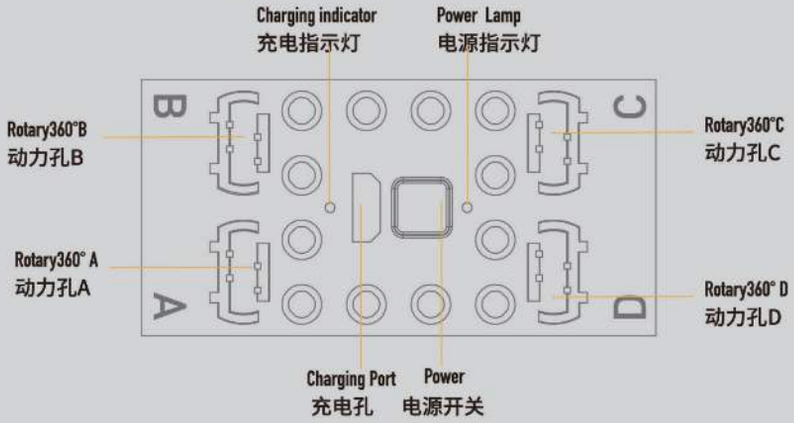

Charging Operation | 充電操作

Connect the charging port of the H4.0 module, USB connects the interface of the computer terminal. Whencharging, the indicator lights of the H4.0 module flicker. After charging, the indicator lights will be on for a longtime. The charging time is about 150-180 minutes. Please dial out the connector after charging.

连接H4.0模块充电口,USB连接电脑端接口,充电时H4.0模块指示灯闪烁,充电完成后指示灯长亮。充电时间大约为150-180分钟,充电完成后请拨出接头。

NOTE: The charging input voltage should not exceed 5V and the current should not exceed 1A.

注意:USB充电接口输入电压不能超过5V,电流不能超过1A。

1

进入APP，点击左上角图标

Enter the APP and click the icon in the upper left corner

2

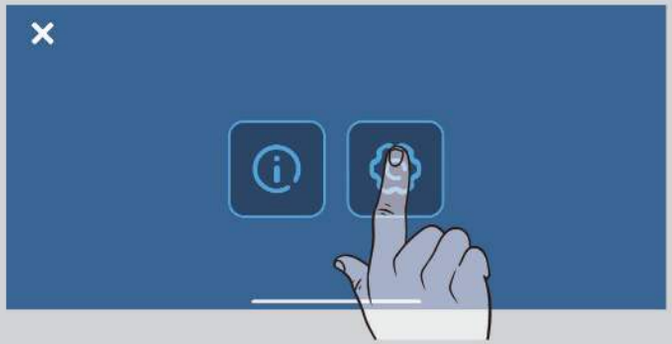

点击进入设置

Click to enter settings

3

点击系统语言

Click on the system language

4

请选择适用语言后返回首页

Please select the applicable language and return to the homepage

5

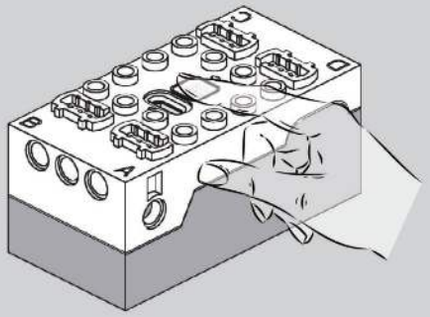

打开模块电源，打开手机蓝牙
Turn on the module power and turn on the phone Bluetooth

6

进入APP，点击手动选择设备
Enter the APP and click to select the device manually

7

选择H4. 0模块
Select H4.0 module

8

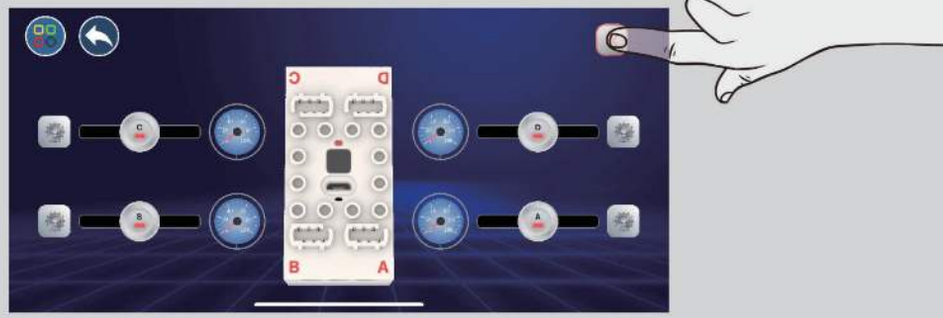

点击右上角红色蓝牙
Click the red Bluetooth in the upper right corner

9

点击YX-XXXXX
Click on YX-XXXXX

10

右上角显示蓝色蓝牙既连接成功，模块指示灯长亮
The blue Bluetooth is displayed in the upper right corner, indicating successful connection and the module indicator light is permanently on

11

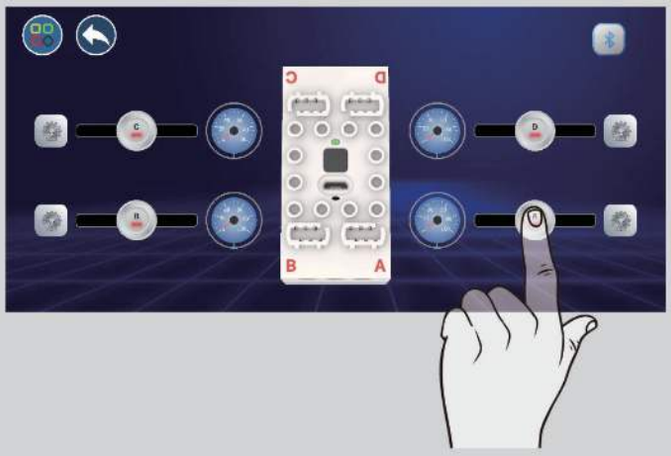

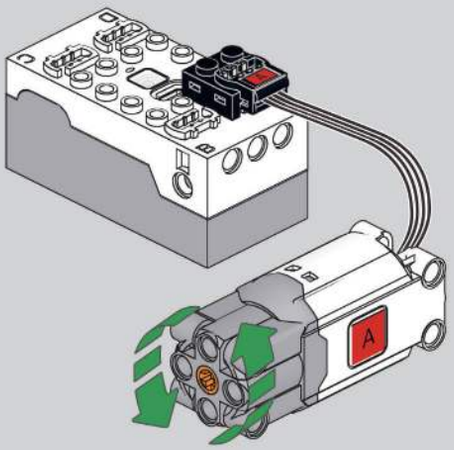

取出A号电机，连接模块A接口，APP操作界面将A摇杆往右移动，电机向左旋转

Remove Motor A#; connect Module A interface; move the Joystick A to the right on the APP operation interface, and the motor will rotate to the left

---

12

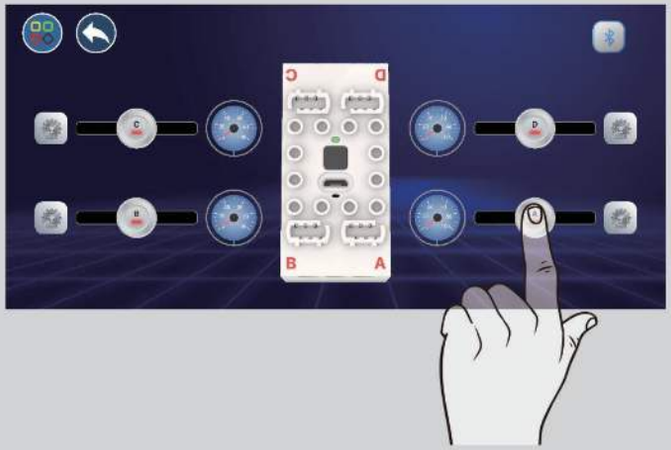

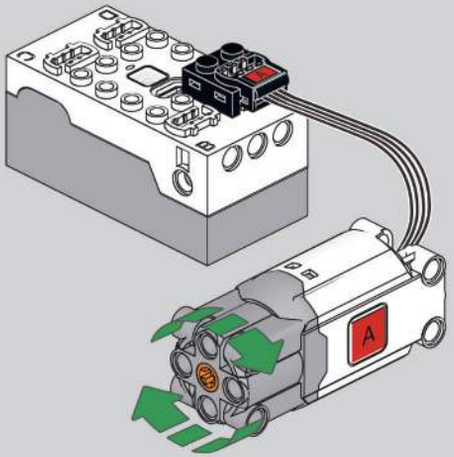

APP操作界面将A摇杆往左移动，电机向右旋转，A号电机运行正常便可从模块取下

The APP operation interface: move the Joystick A to the left, and the motor will rotate to the right; the Motor A# can be removed from the module when it operates well

13

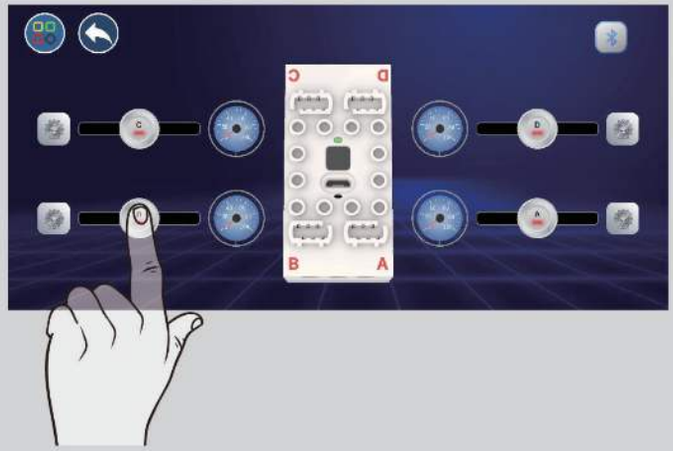

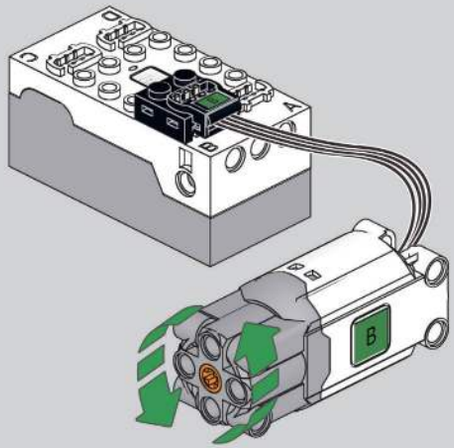

取出B号电机，连接模块B接口，APP操作界面将B摇杆往右移动，电机向左旋转

Remove Motor B#; connect Module B interface; move the Joystick B to the right on the APP operation interface, and the motor will rotate to the left

---

14

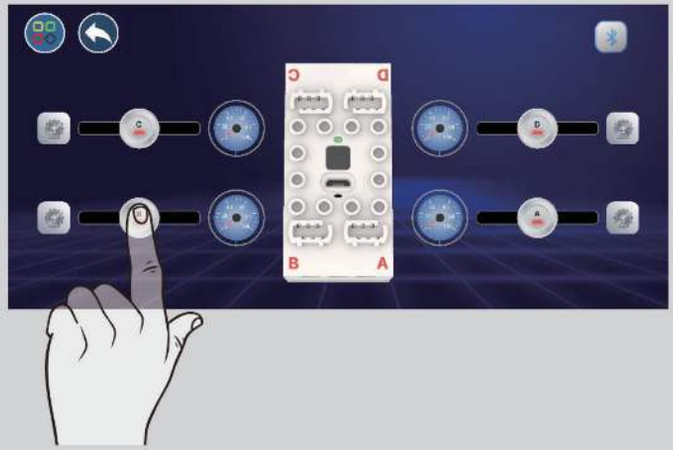

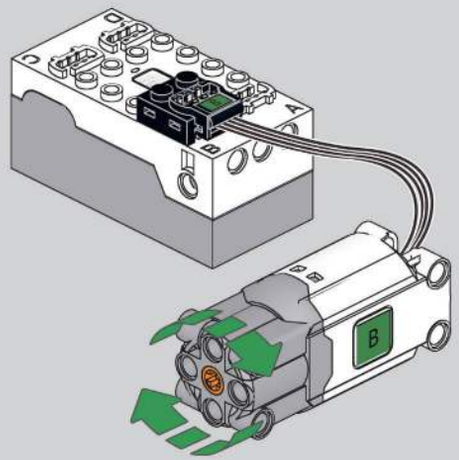

APP操作界面将B摇杆往左移动，电机向右旋转，B号电机运行正常便可从模块取下

The APP operation interface: move the Joystick B to the left, and the motor will rotate to the right; the Motor B# can be removed from the module when it operates well

15

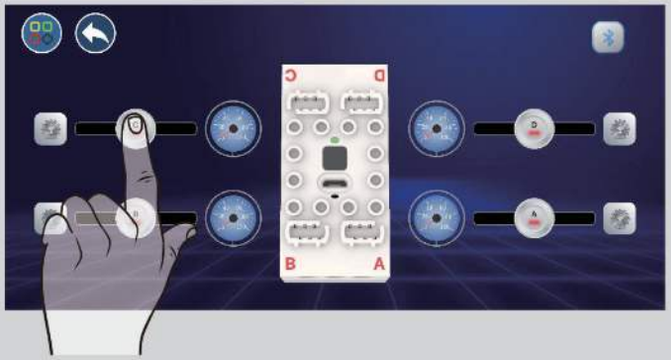

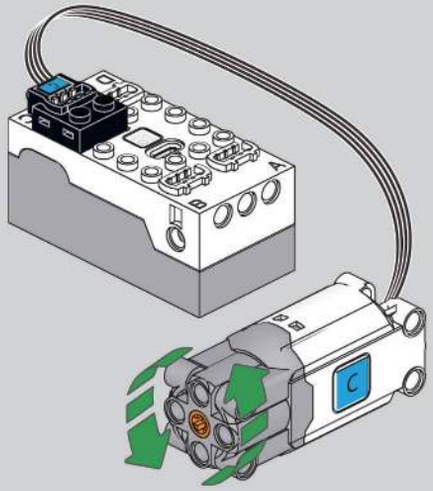

取出C号电机，连接模块C接口，APP操作界面将C摇杆往右移动，电机向左旋转

Remove Motor C#; connect Module C interface; move the Joystick C to the right on the APP operation interface, and the motor will rotate to the left

---

16

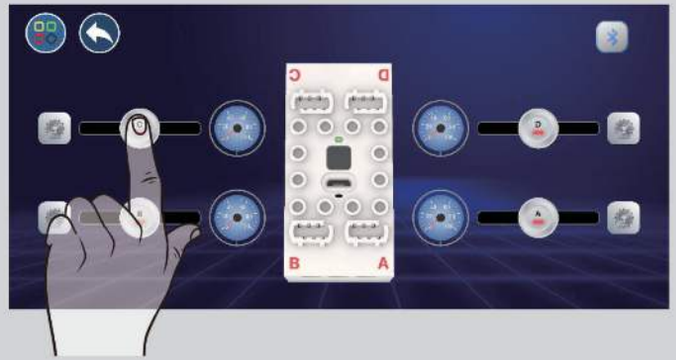

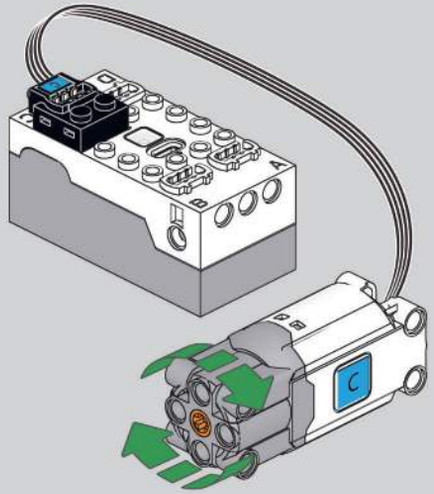

APP操作界面将C摇杆往左移动，电机向右旋转，C号电机运行正常便可从模块取下

The APP operation interface: move the Joystick C to the left, and the motor will rotate to the right; the Motor C# can be removed from the module when it operates well

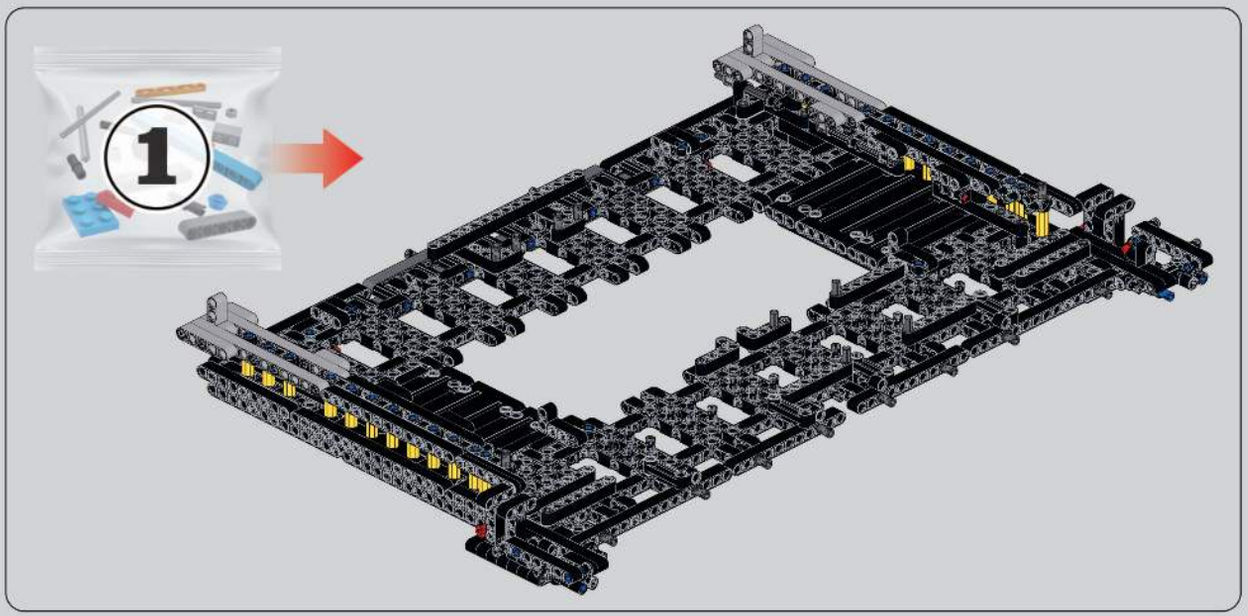

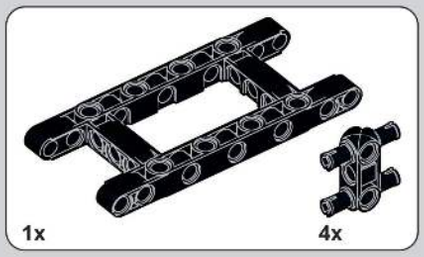

1

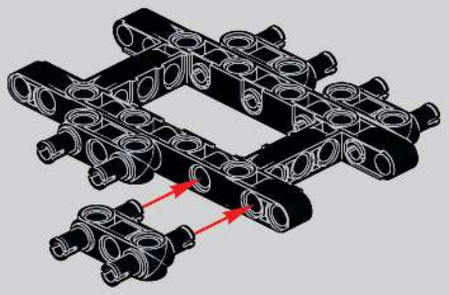

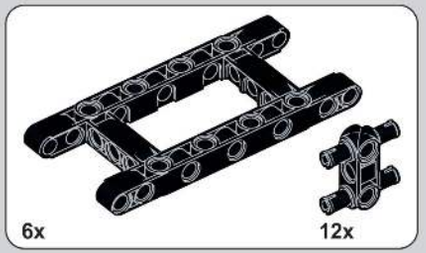

2

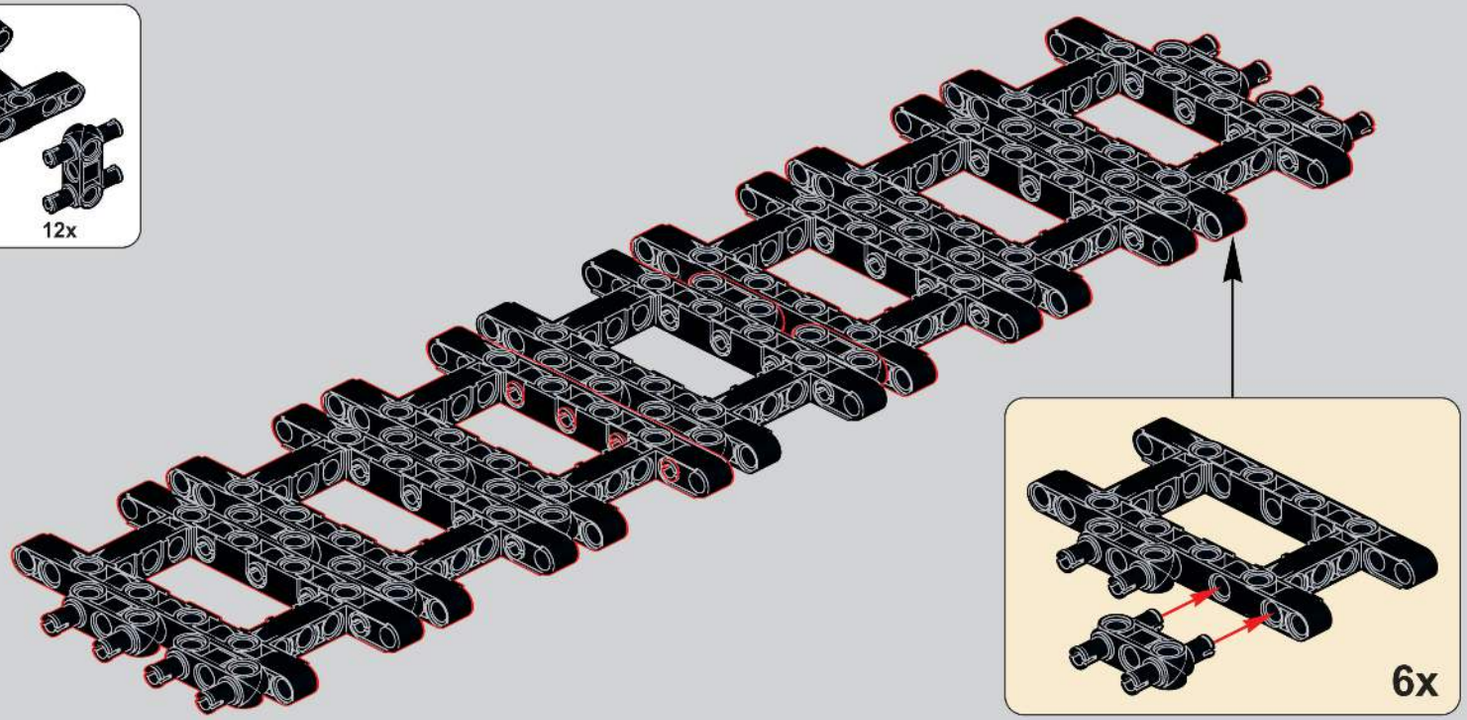

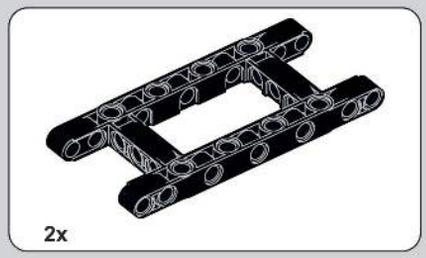

3

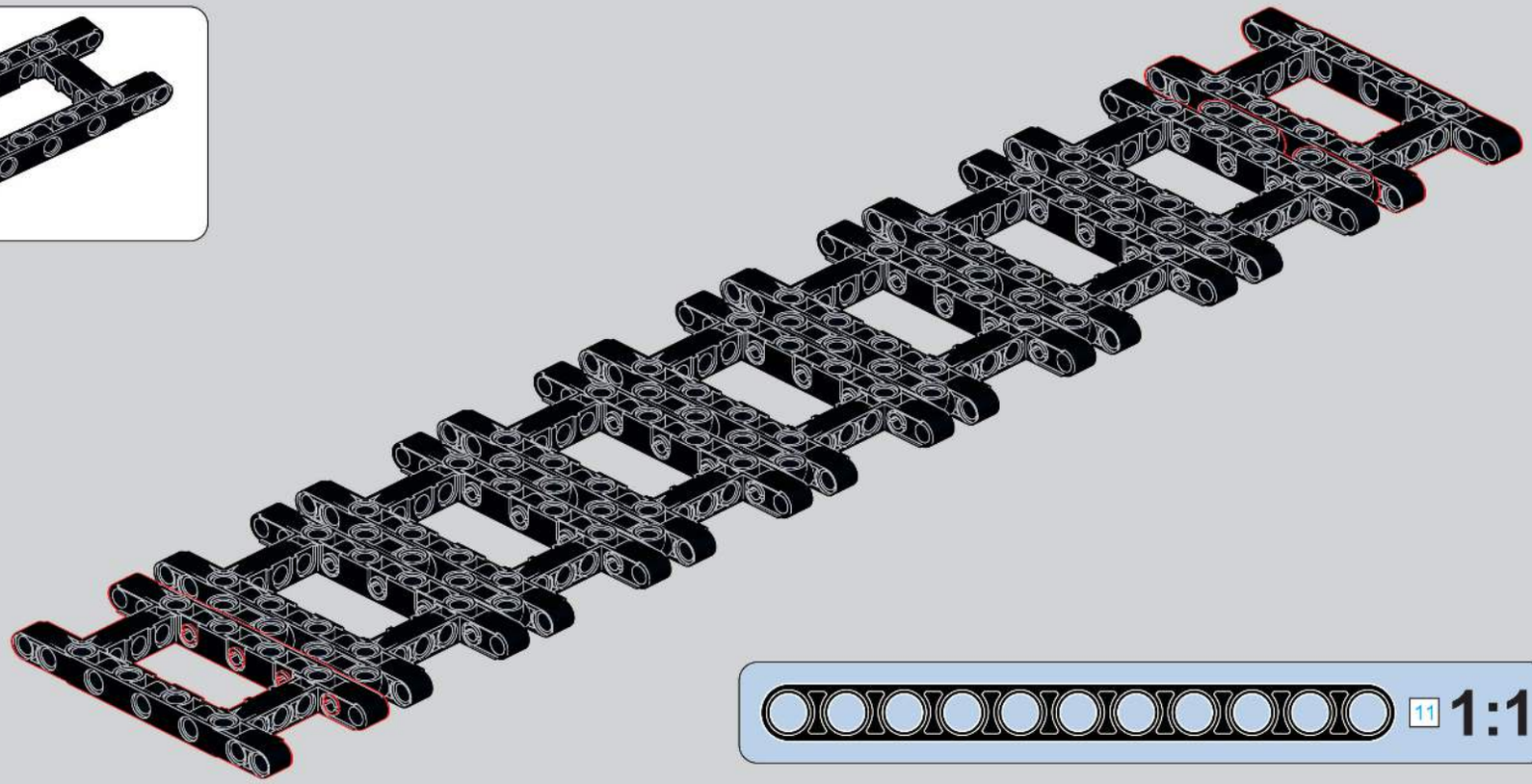

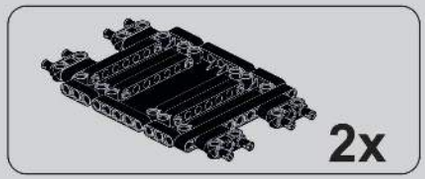

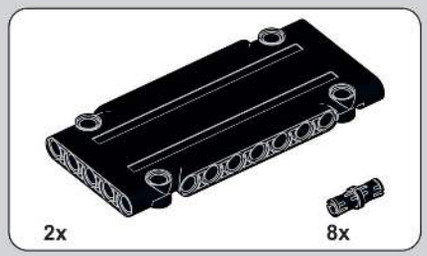

4

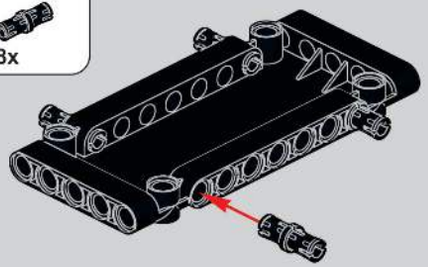

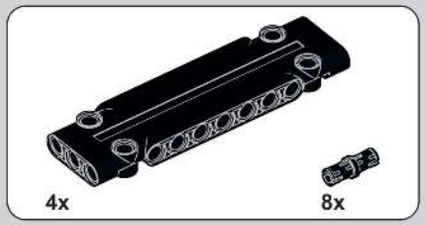

5

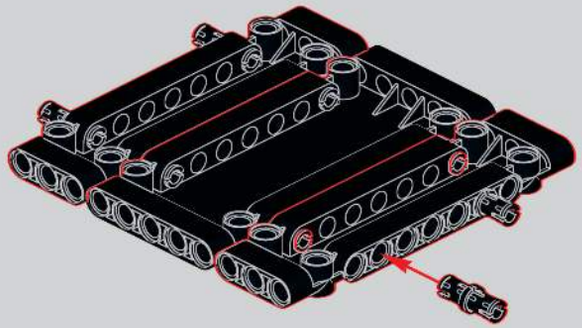

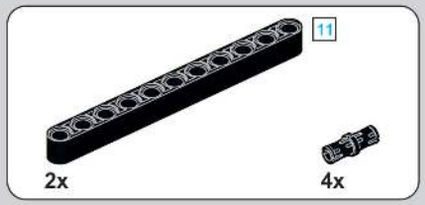

6

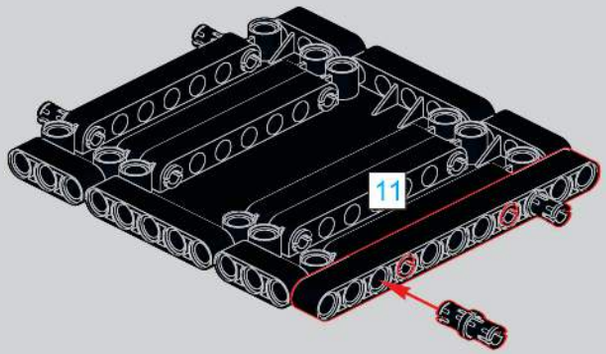

7

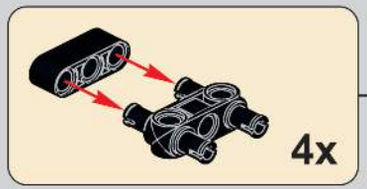

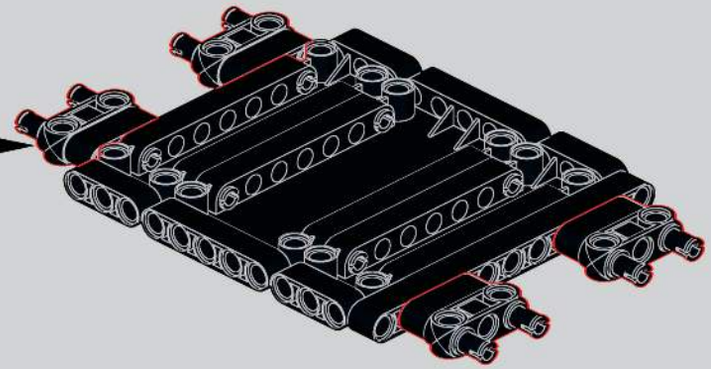

2x

8

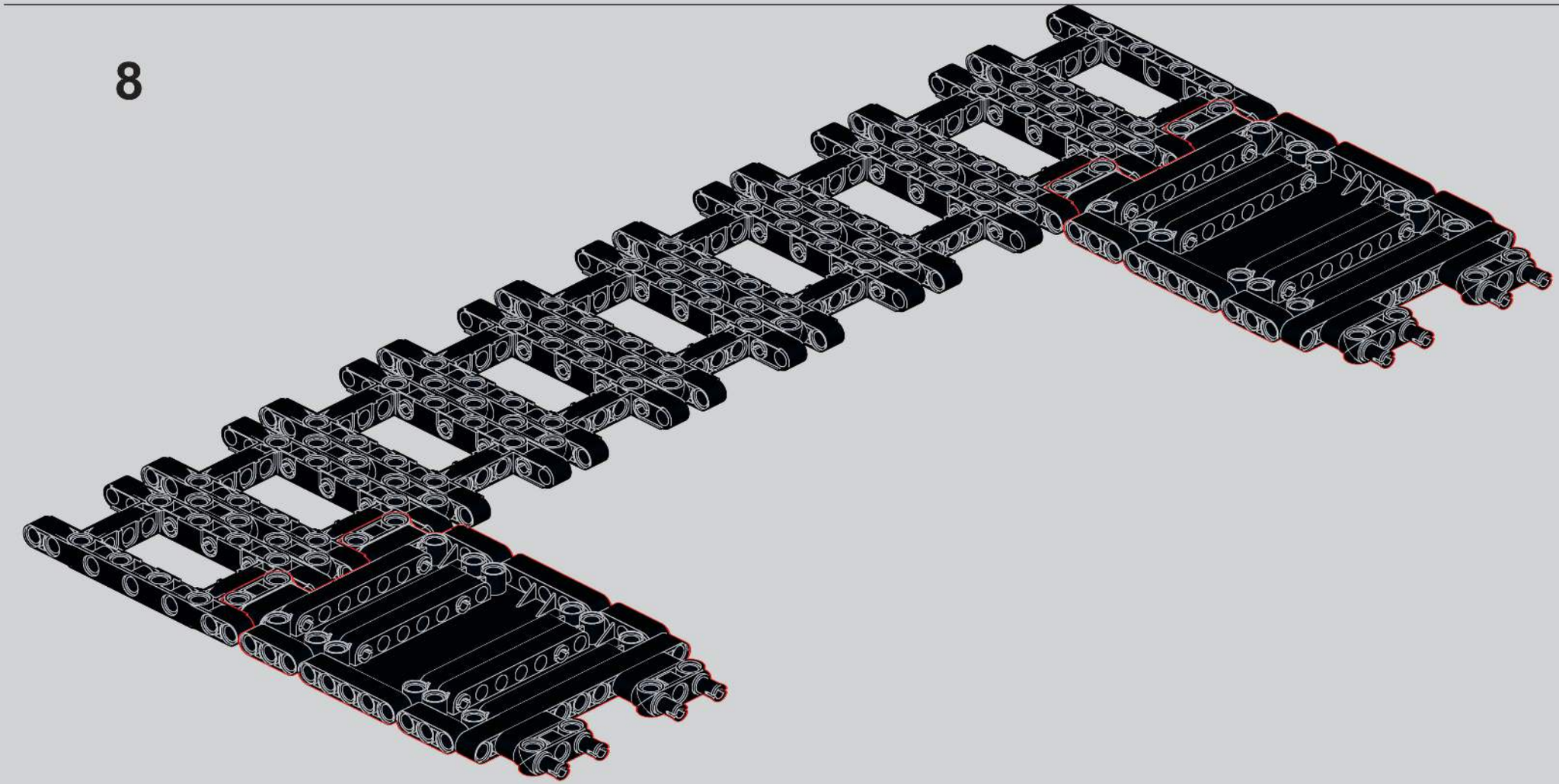

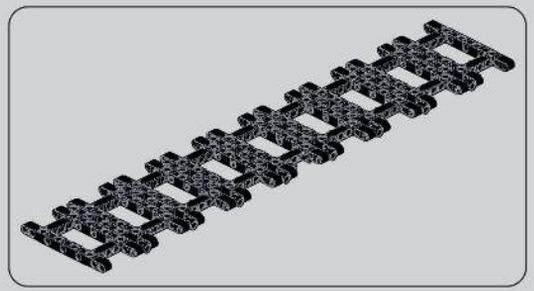

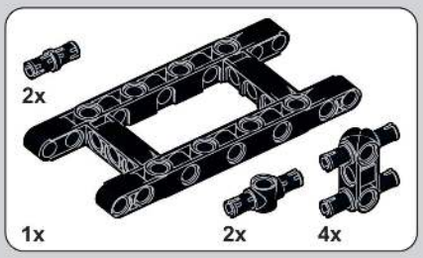

9

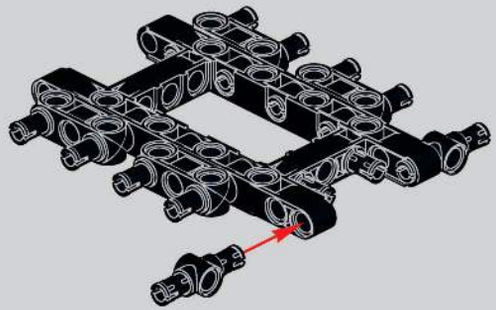

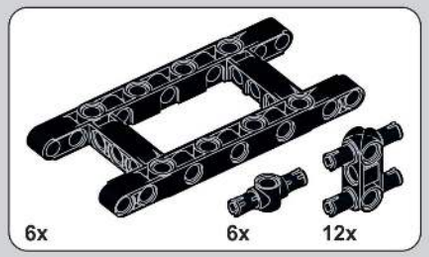

10

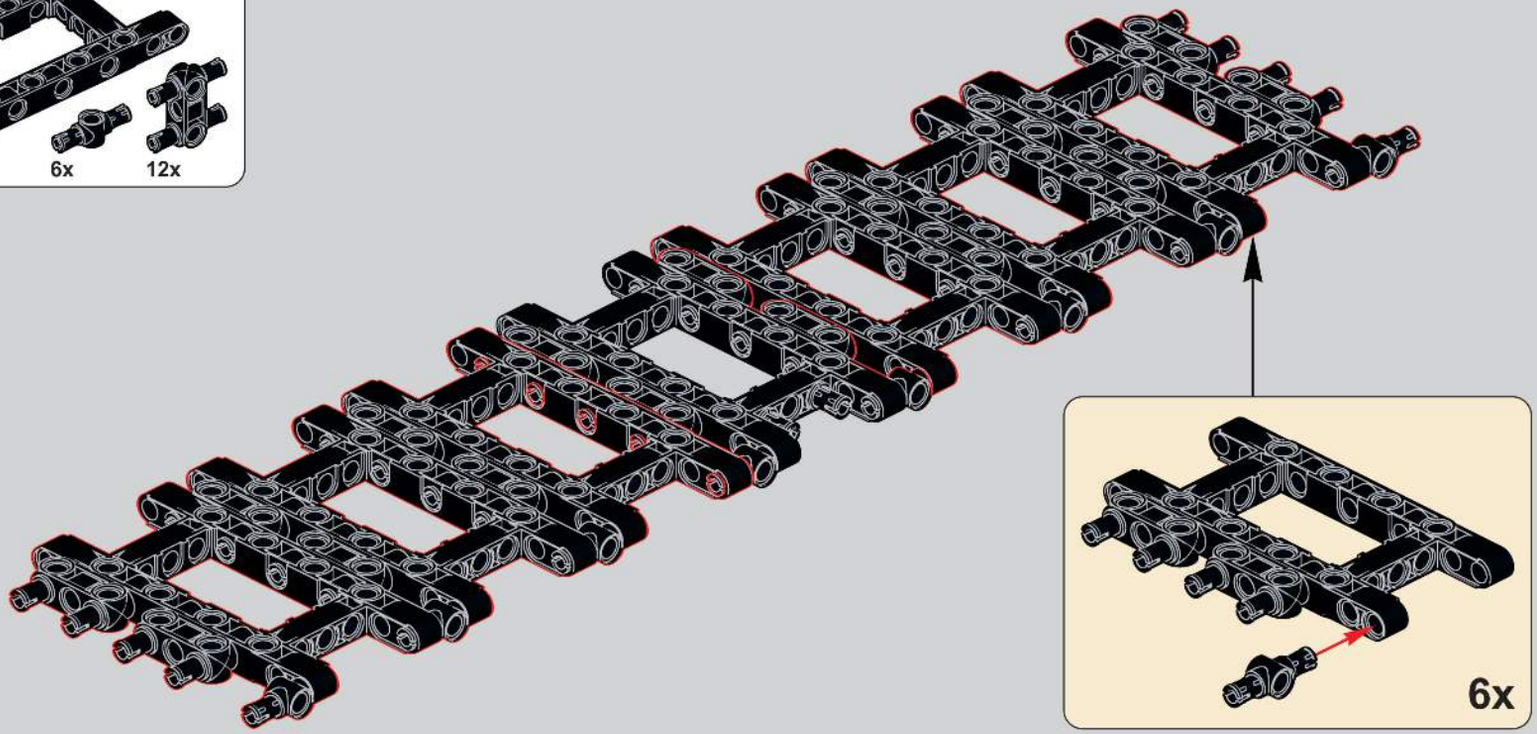

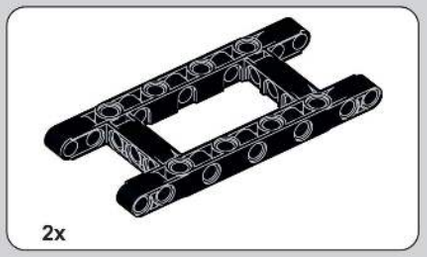

11

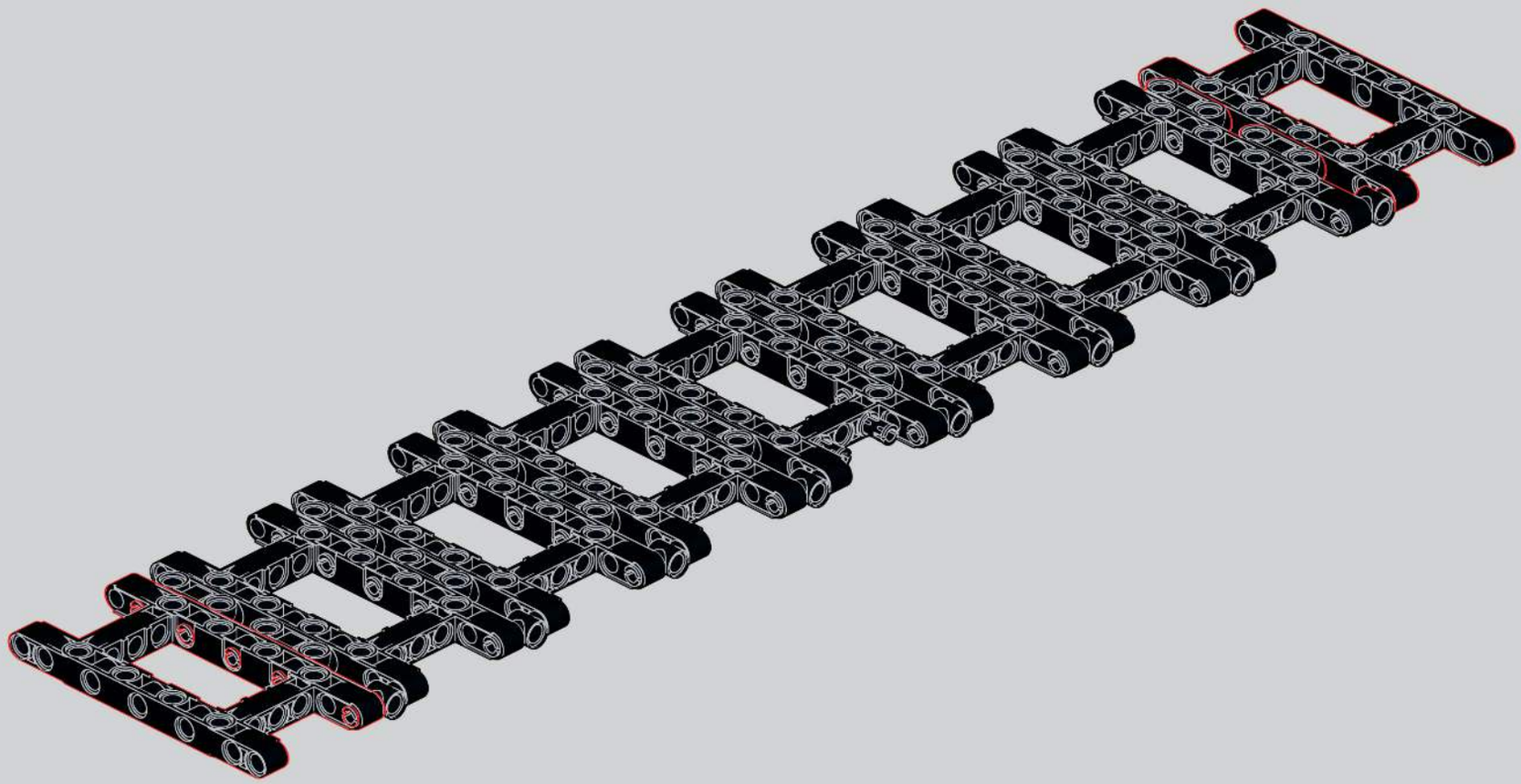

12

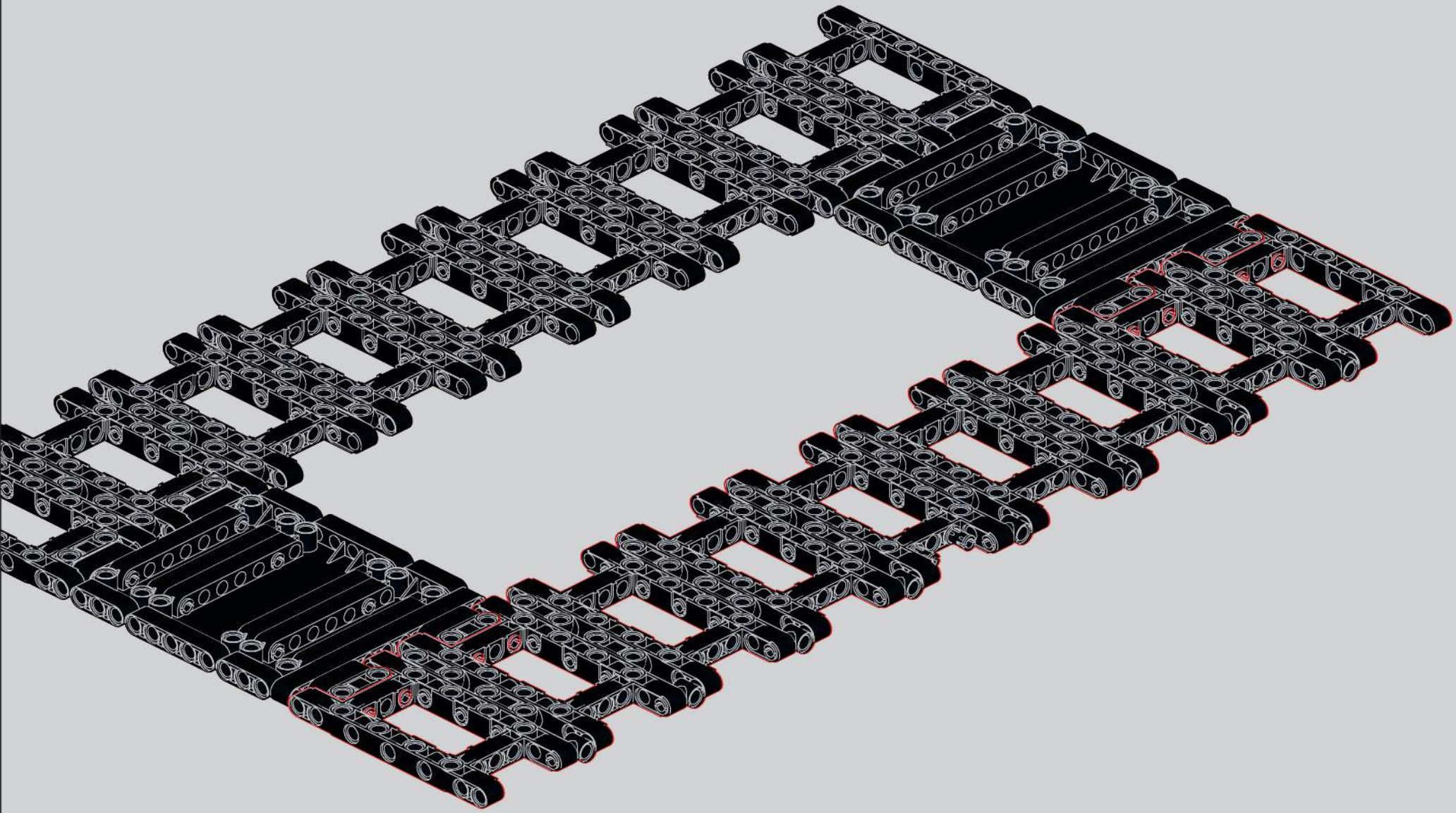

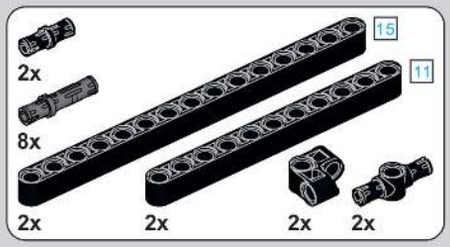

13

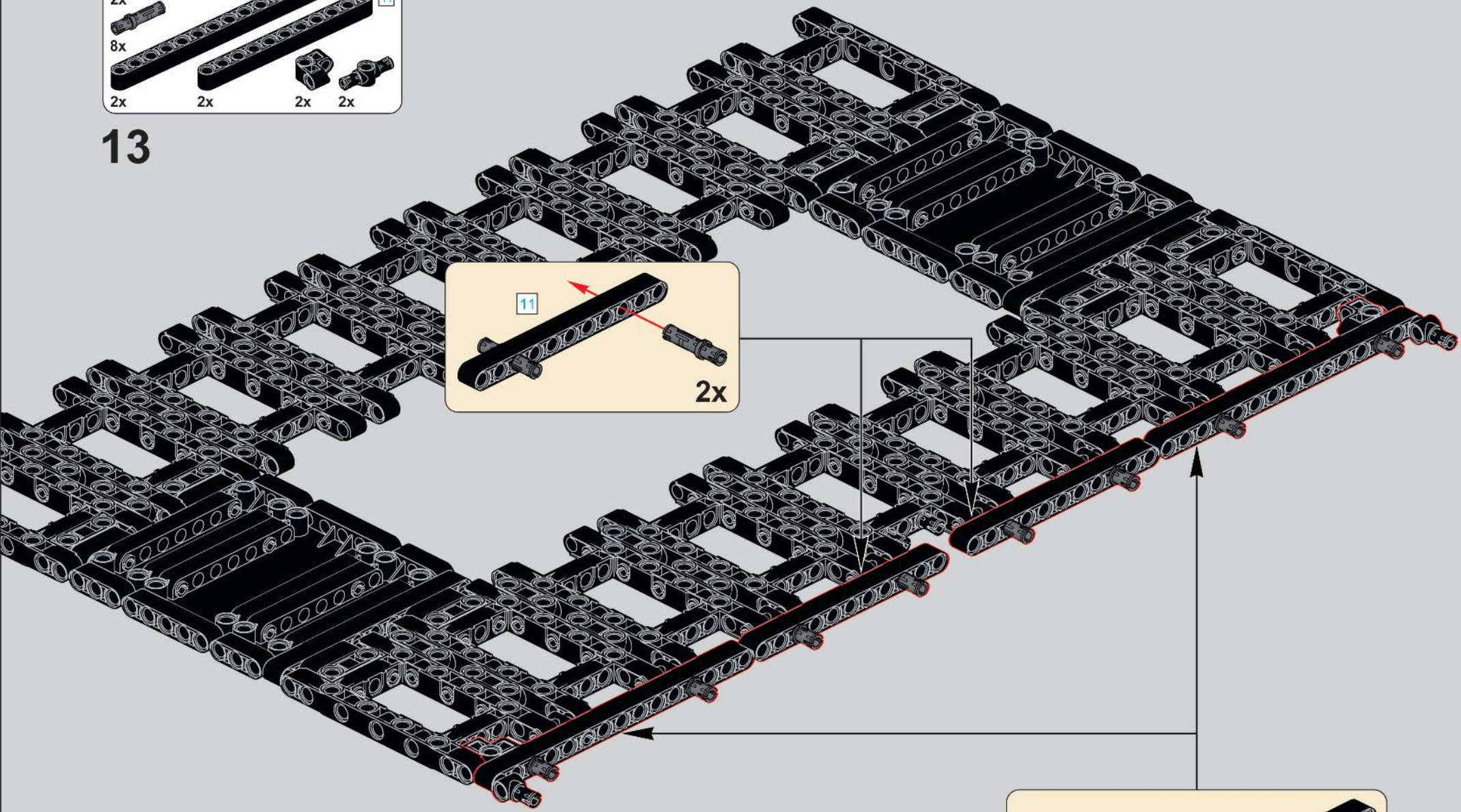

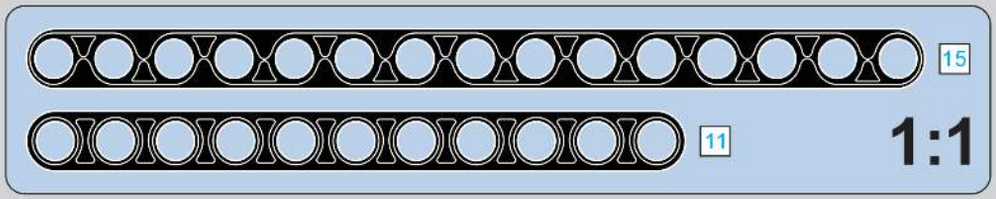

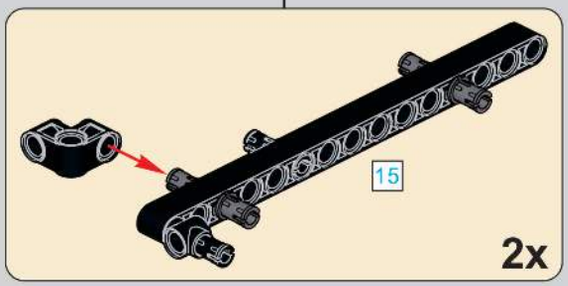

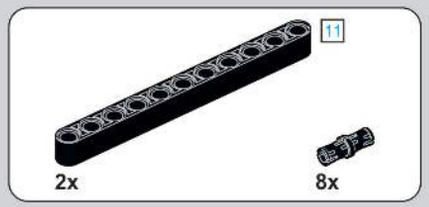

14

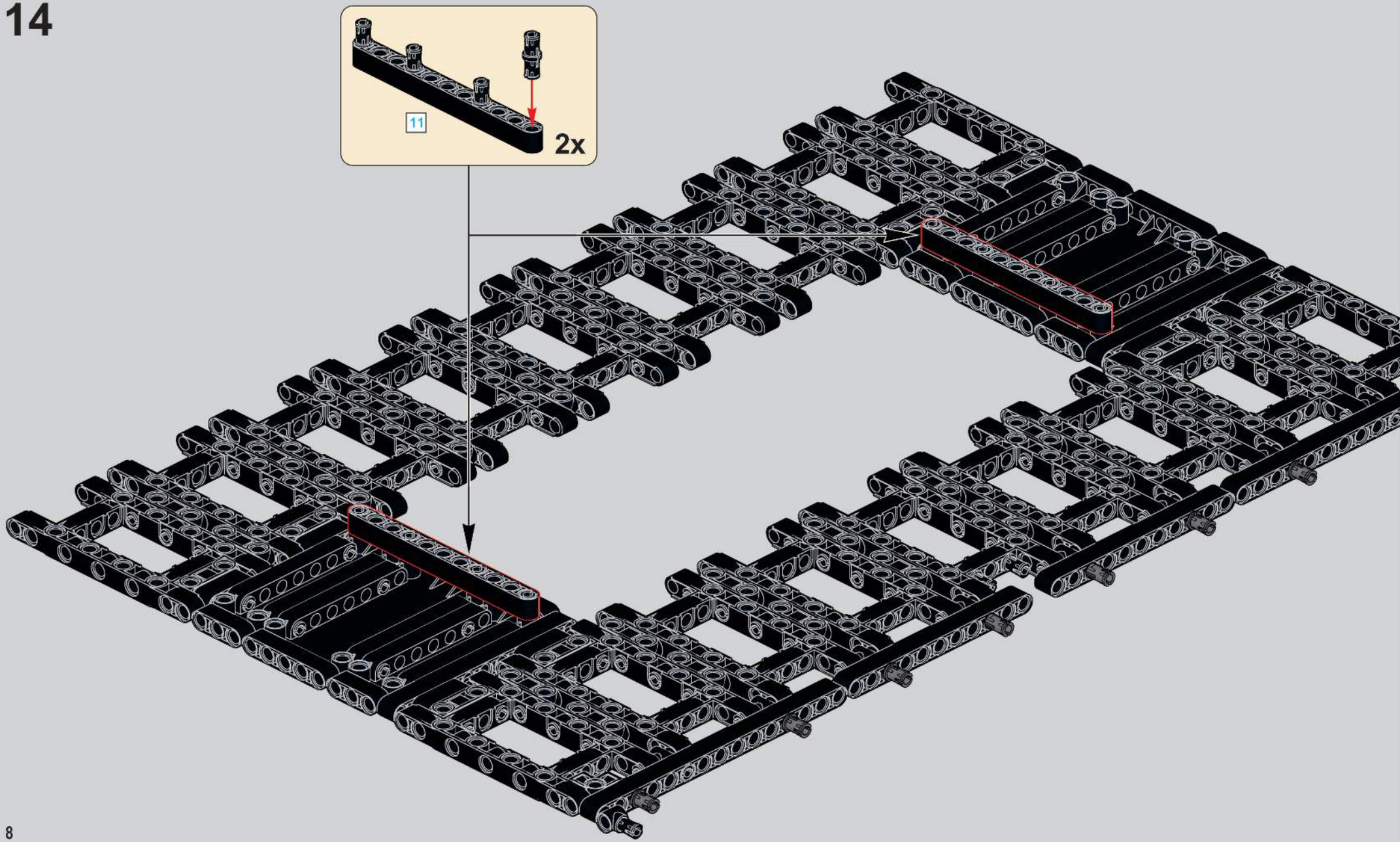

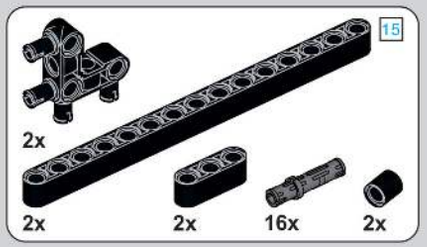

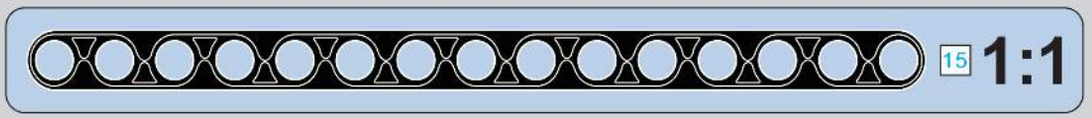

15

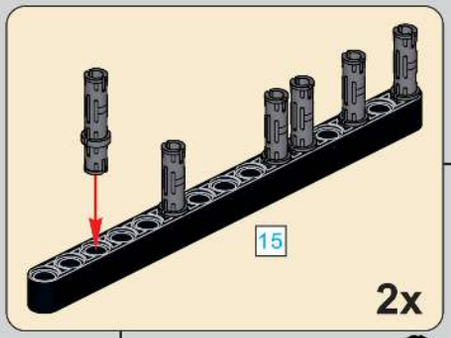

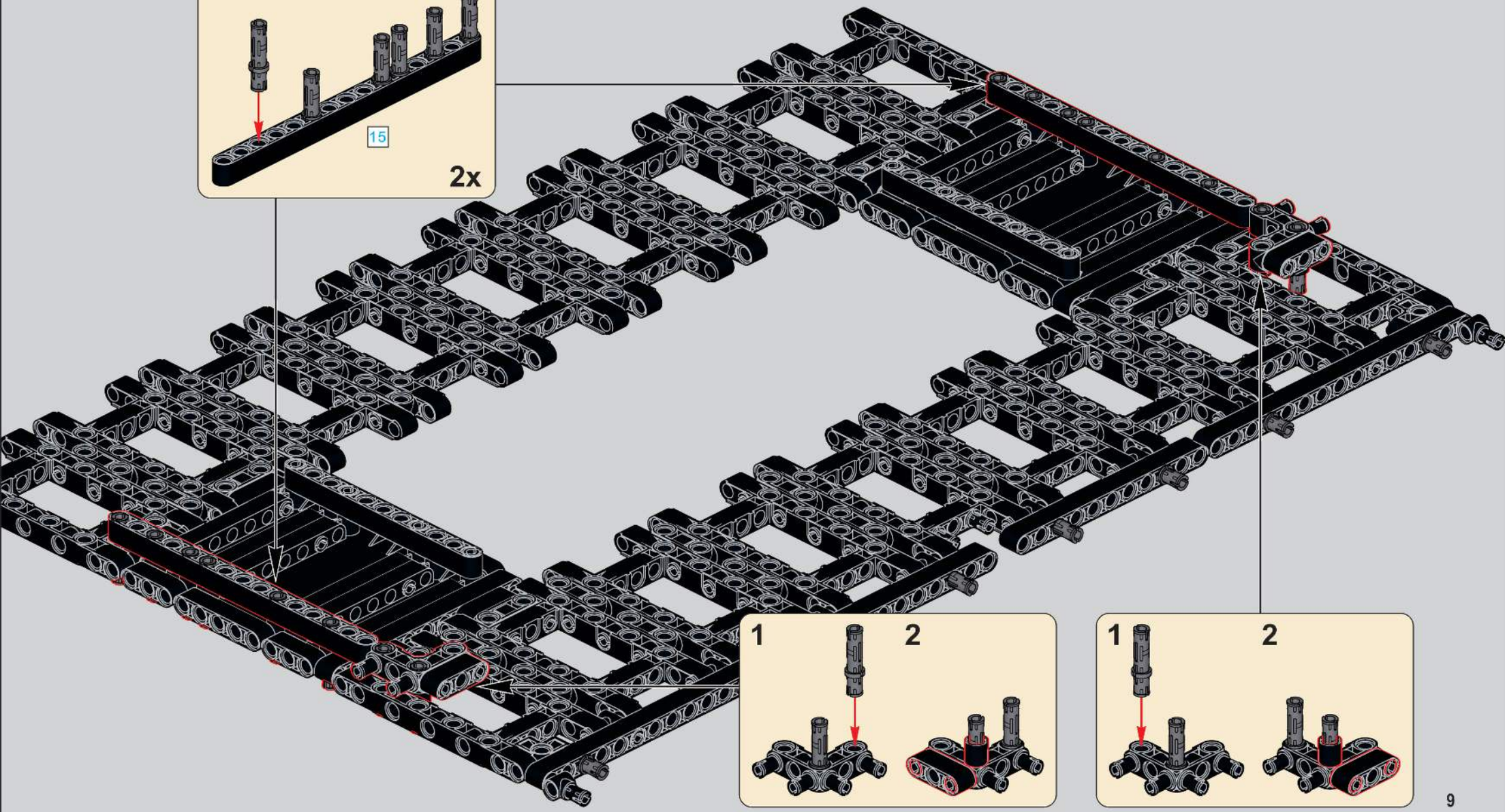

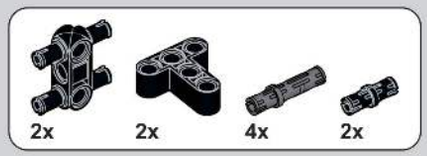

16

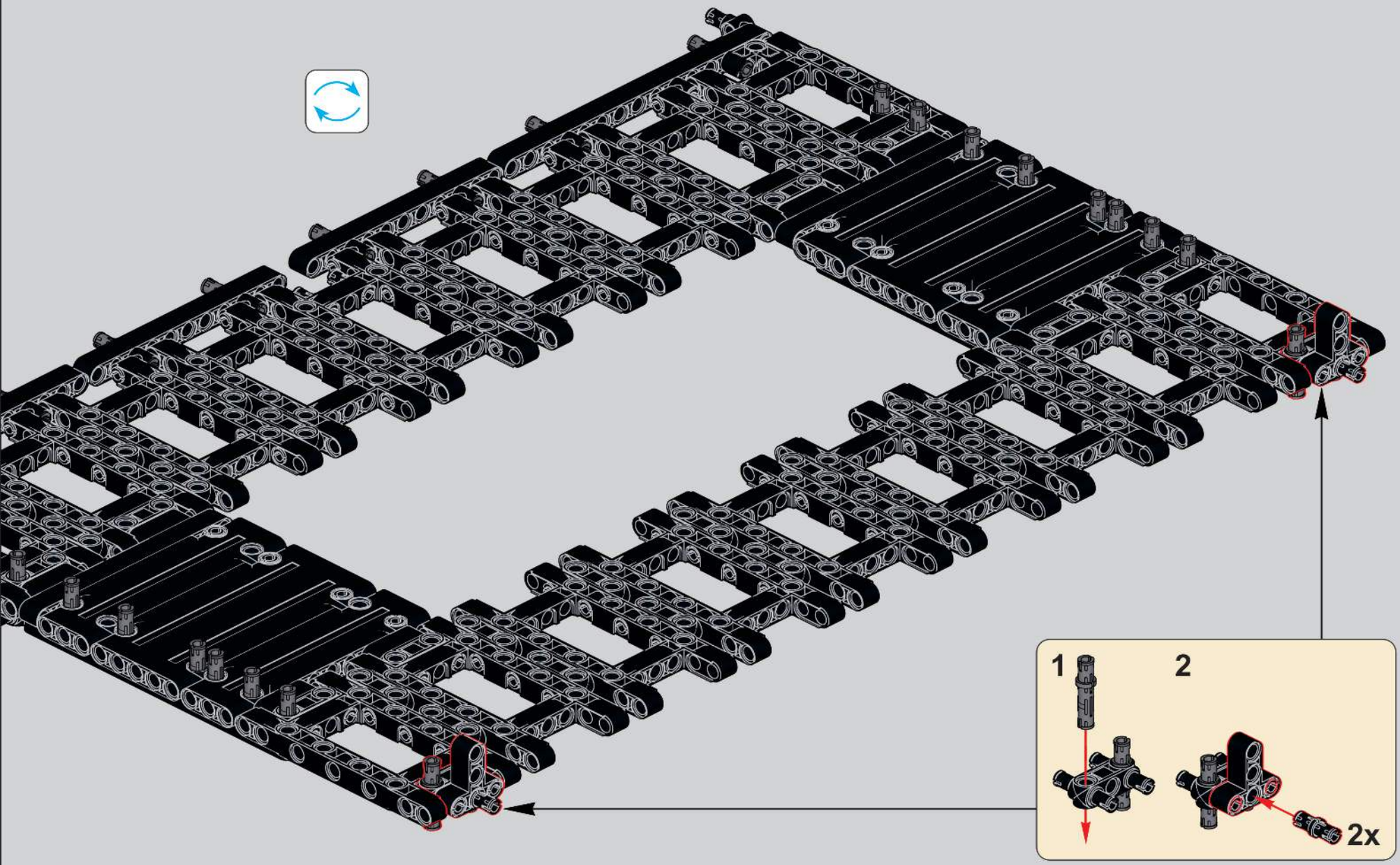

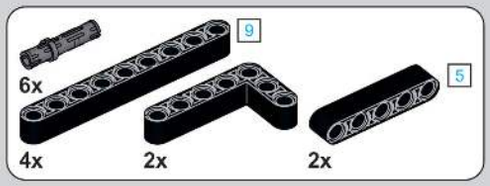

17

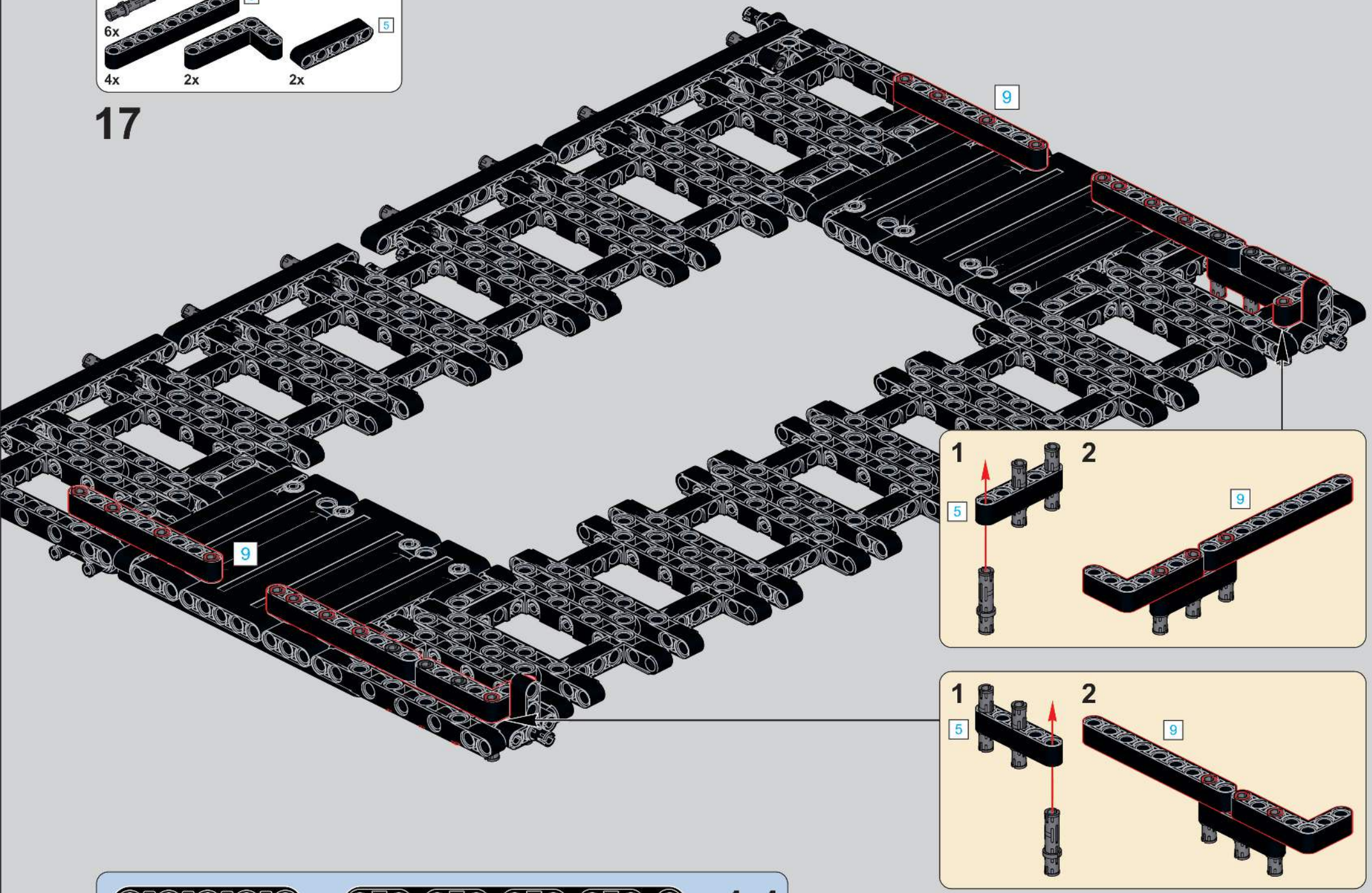

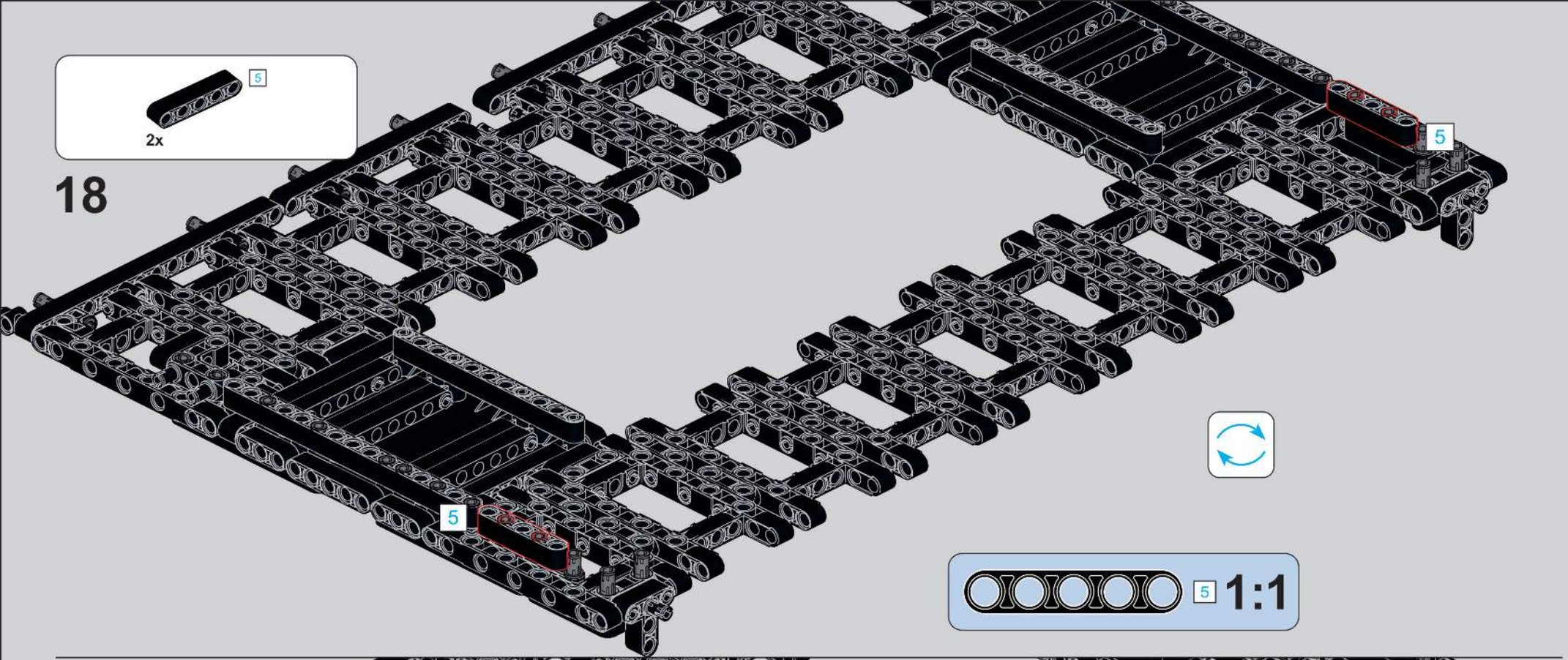
5
2x
18
5
5
5
1:1

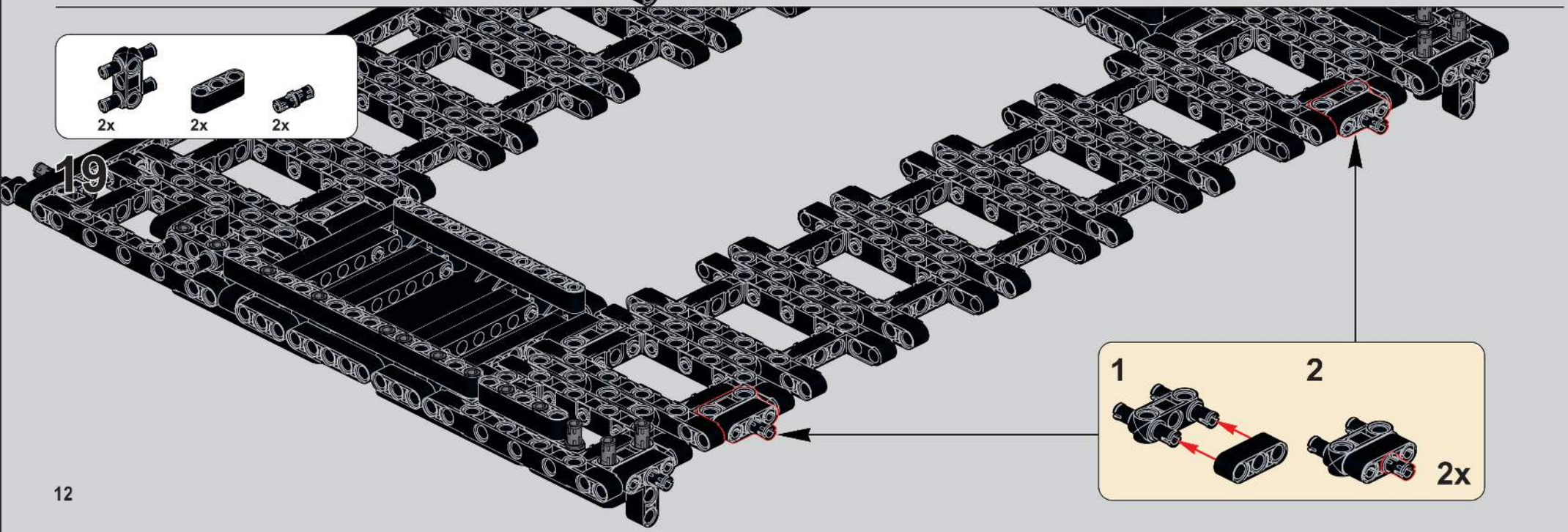
2x
2x
2x
19
1
2
2x

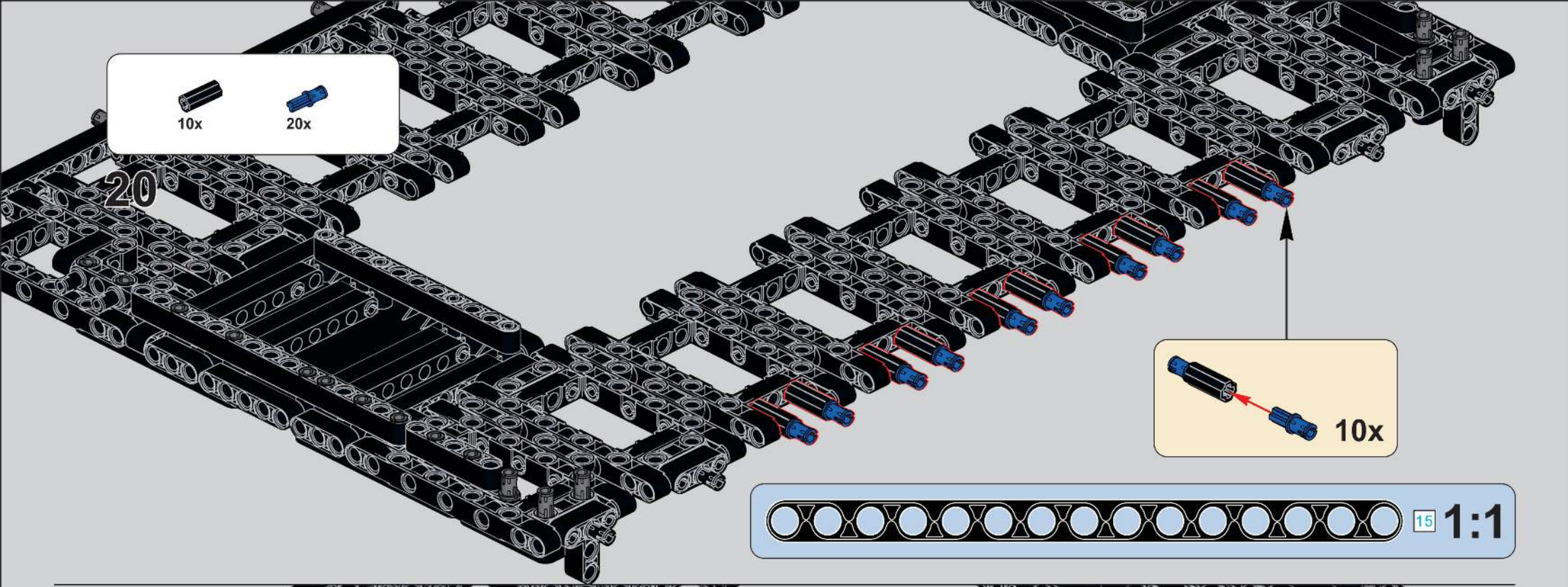
10x
20x
20
10x
15
1:1

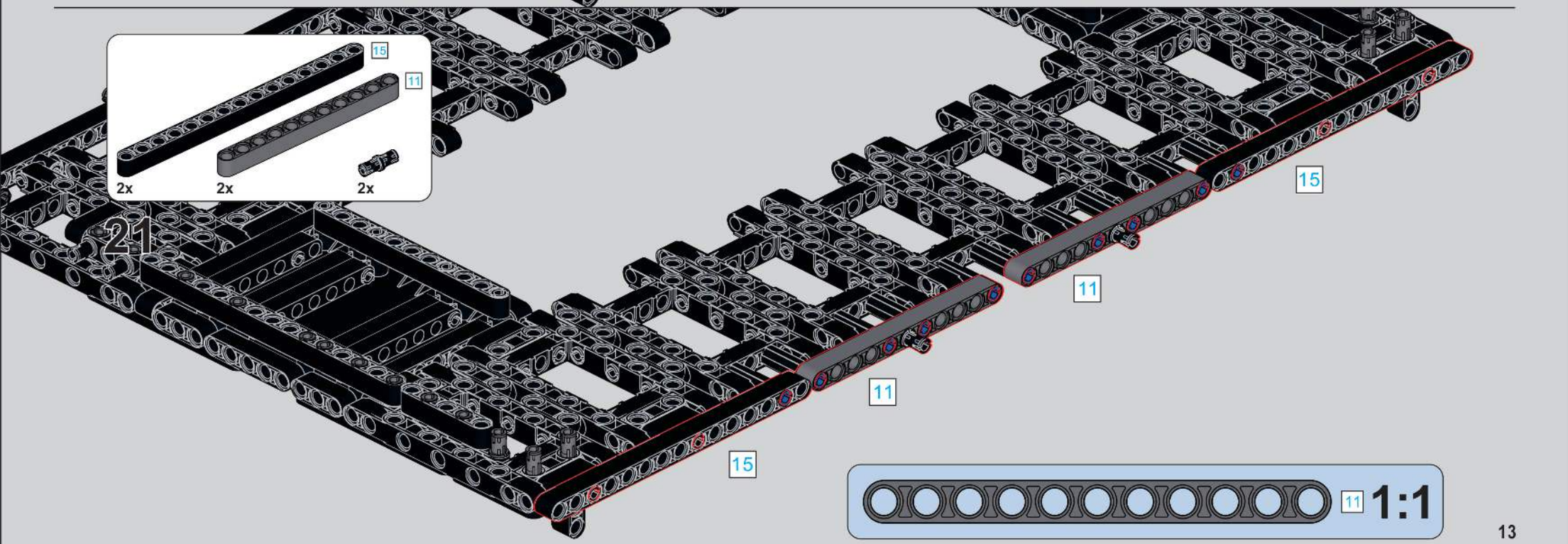
15
11
2x
2x
2x
21
15
11
11
15
11
1:1

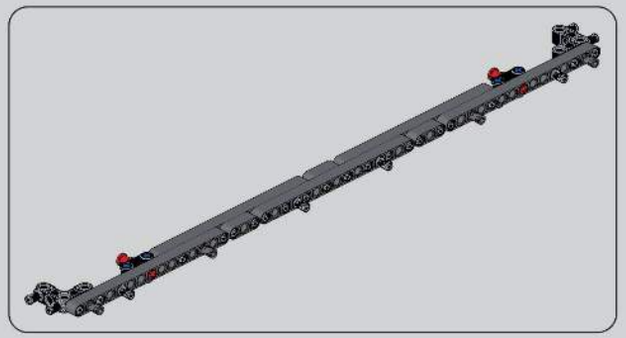

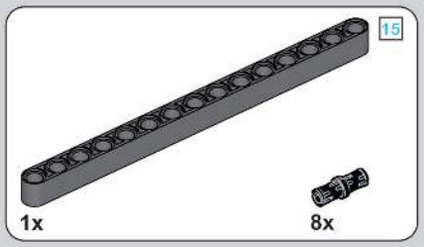

22

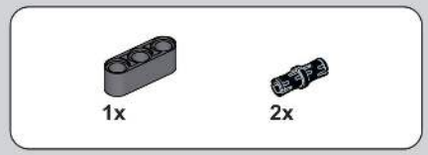

23

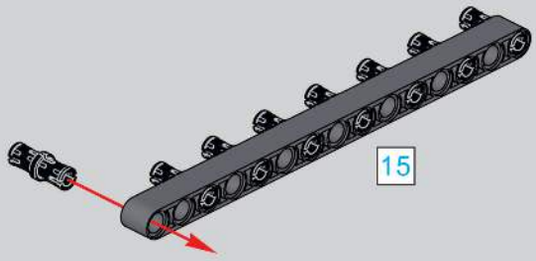

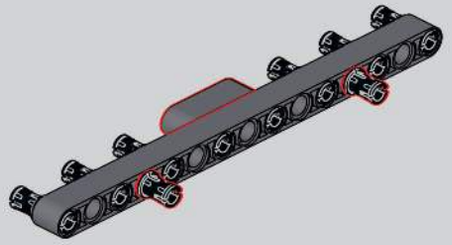

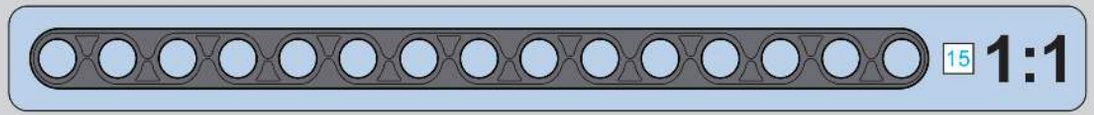

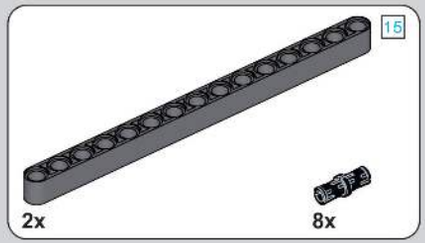

24

25

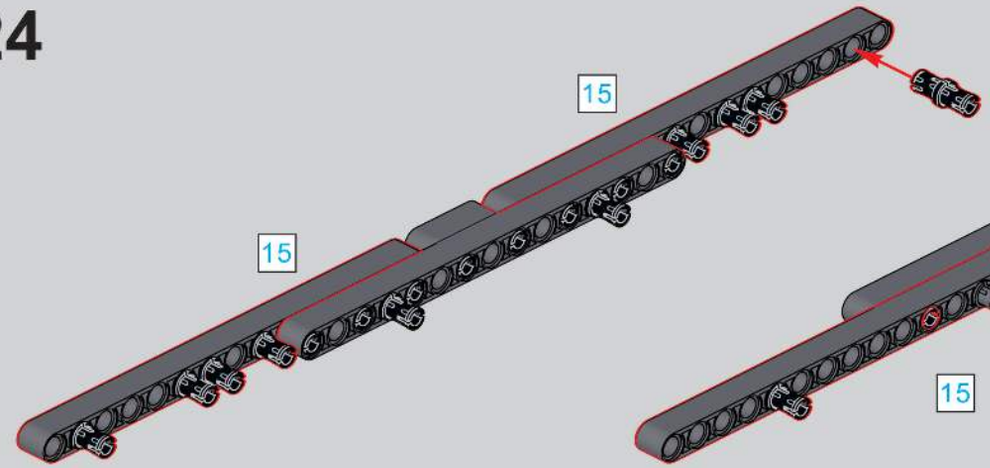

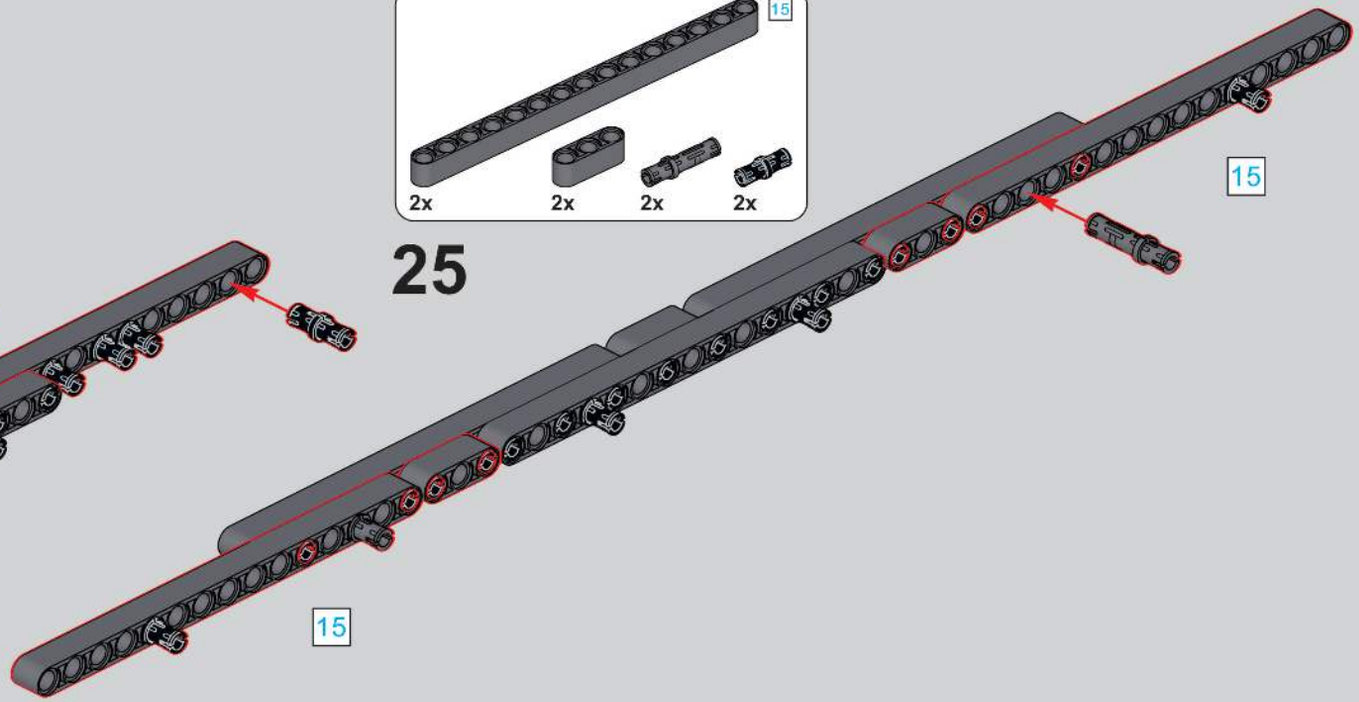

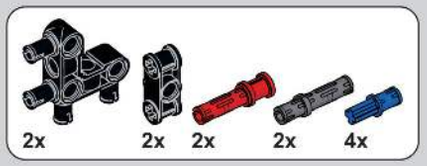

26

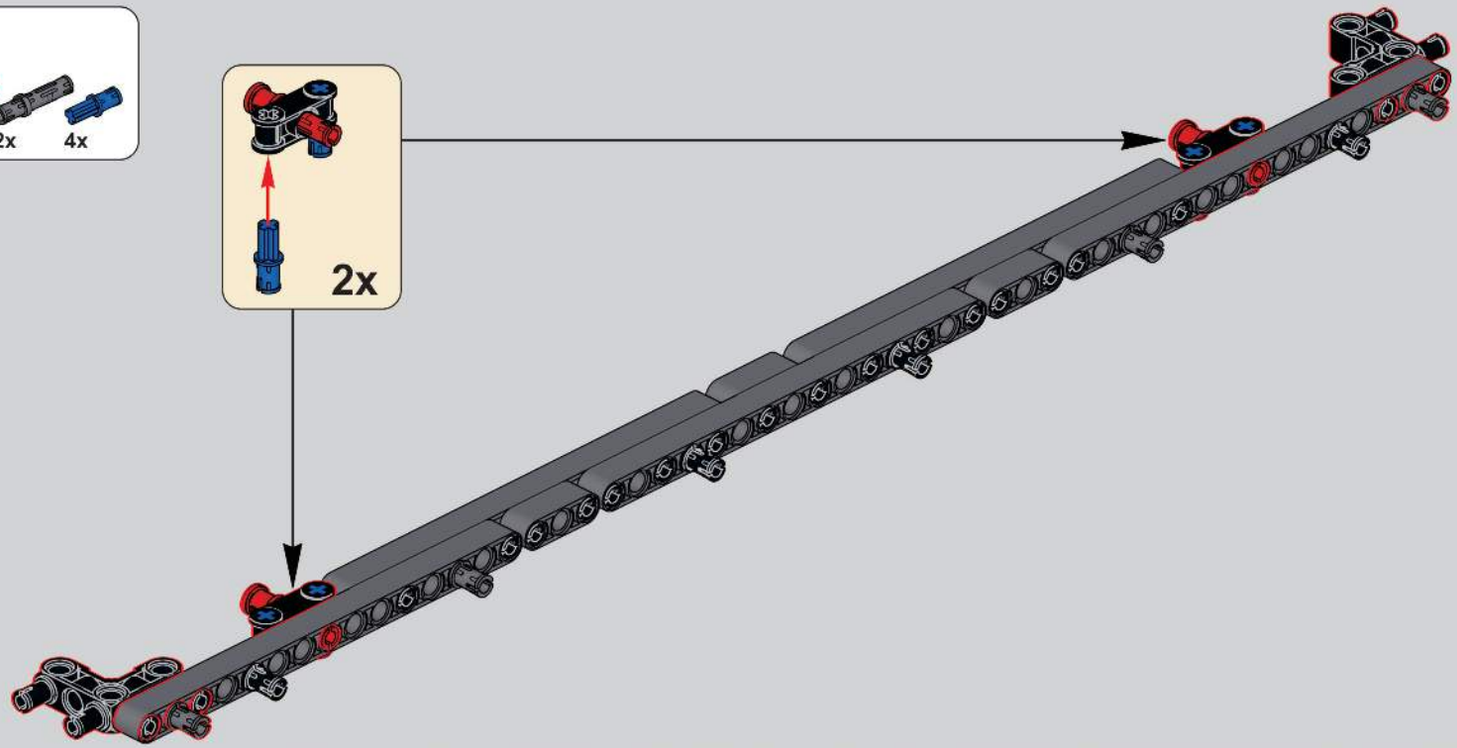

27

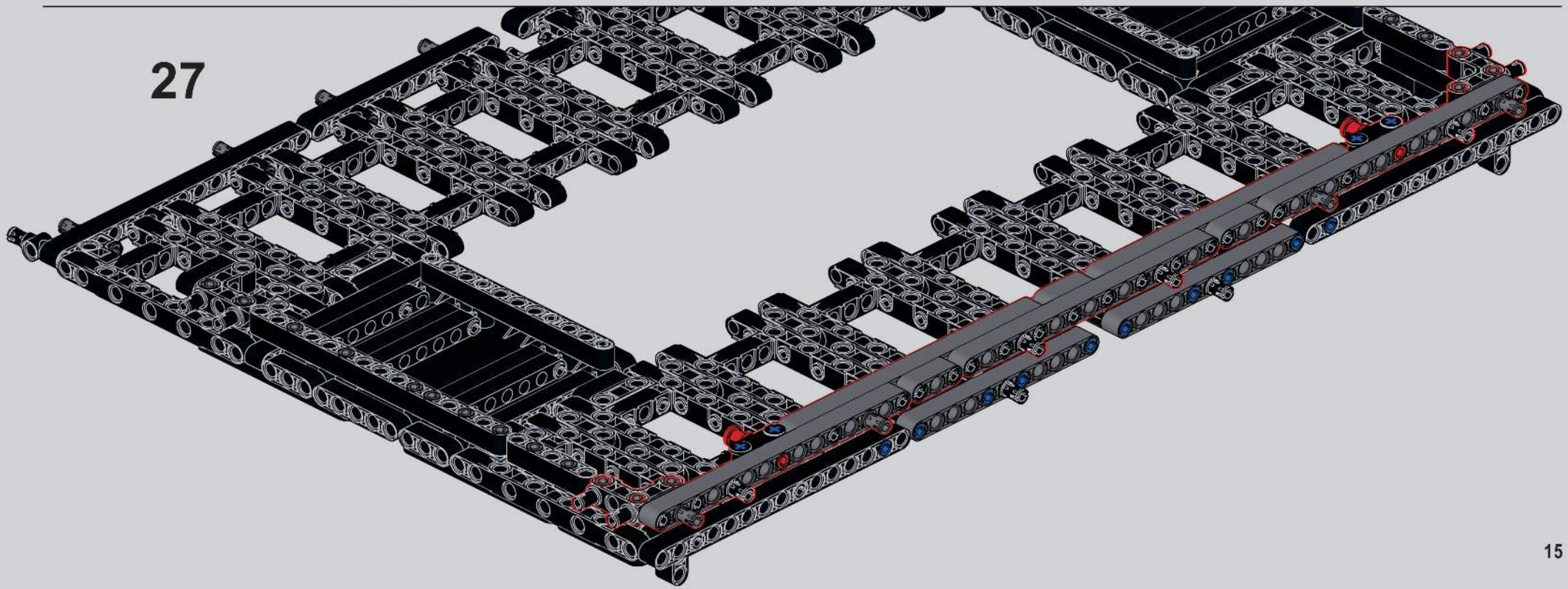

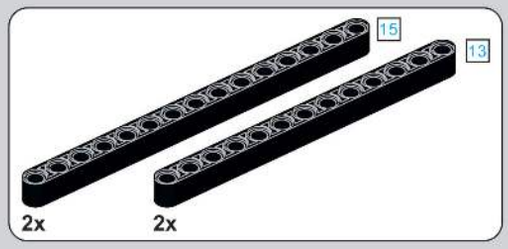

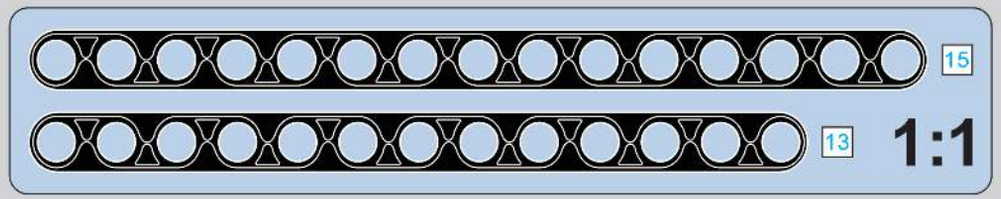

28

29

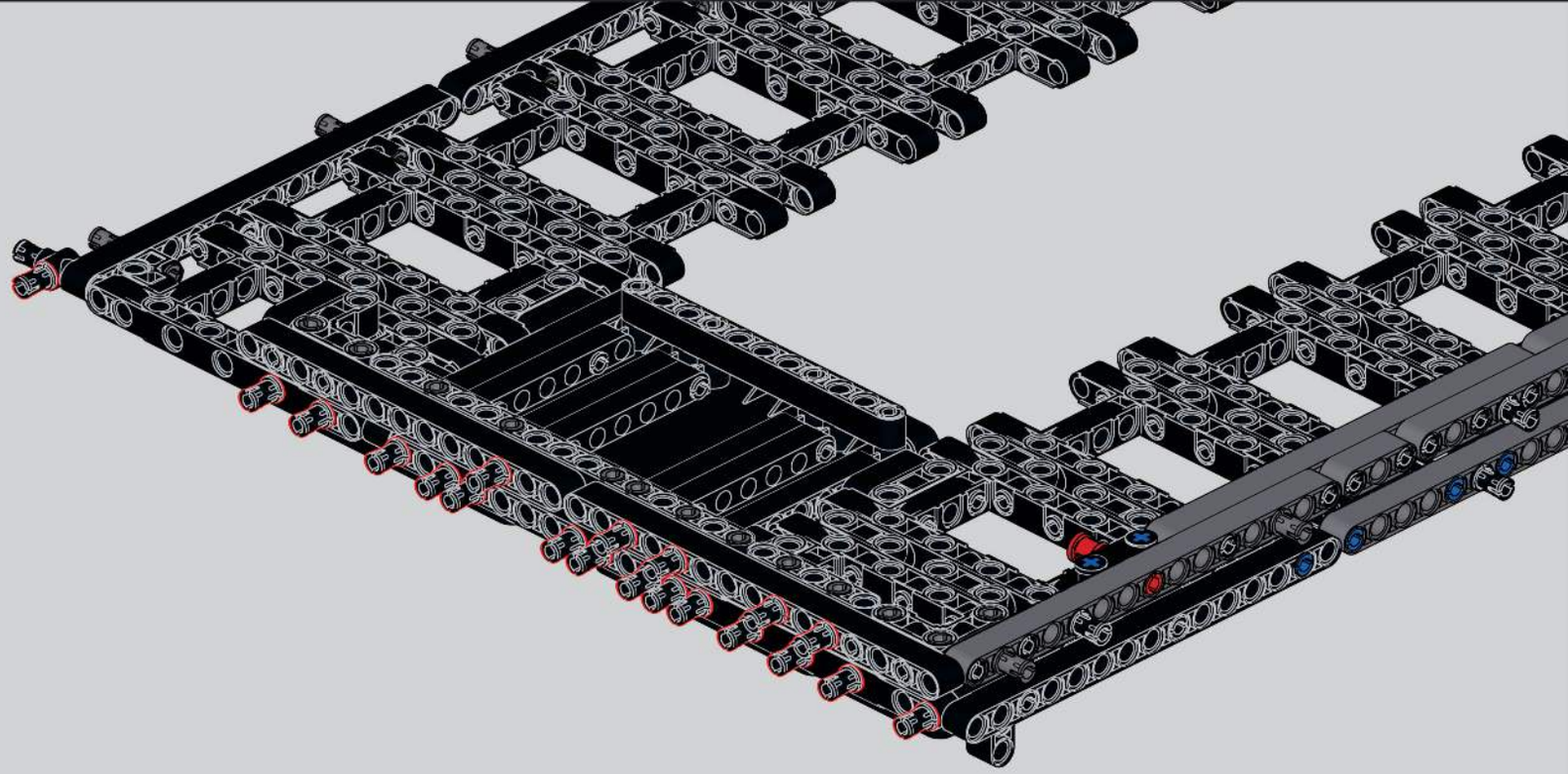

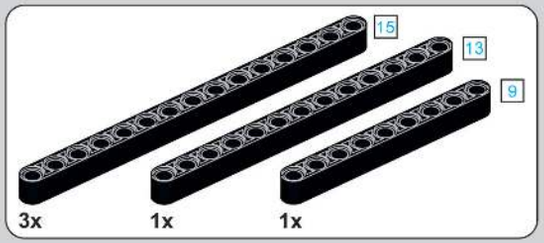

30

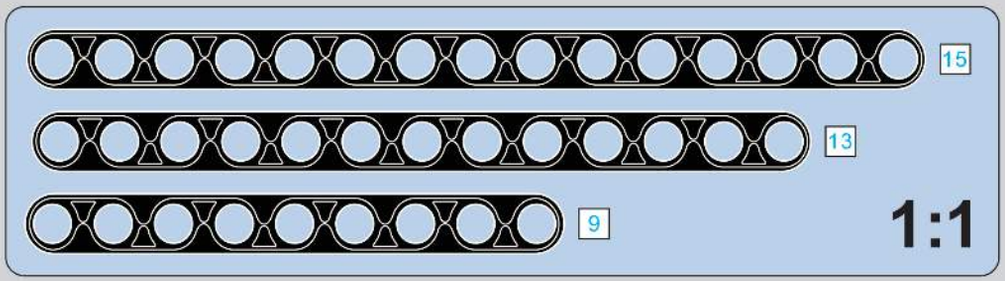

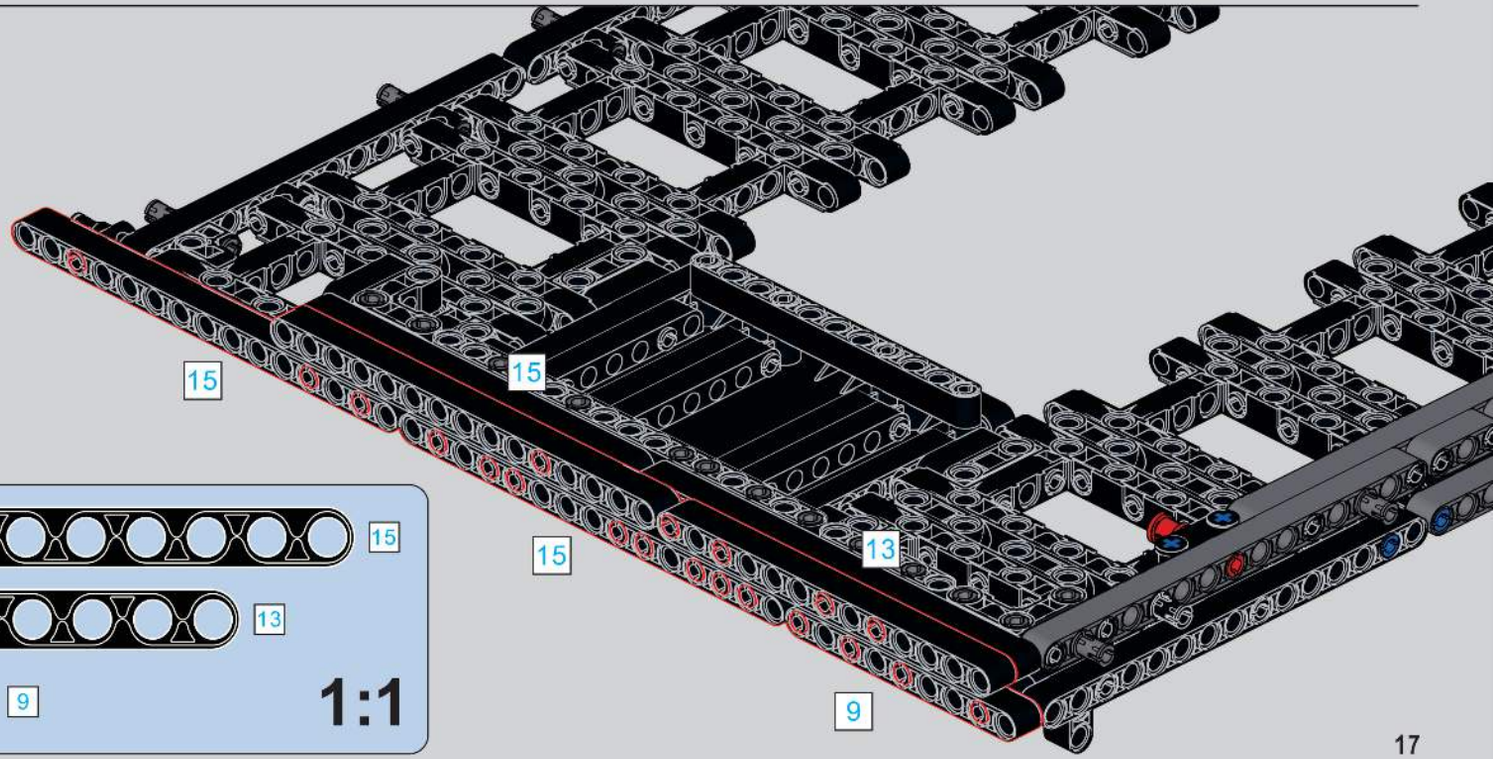

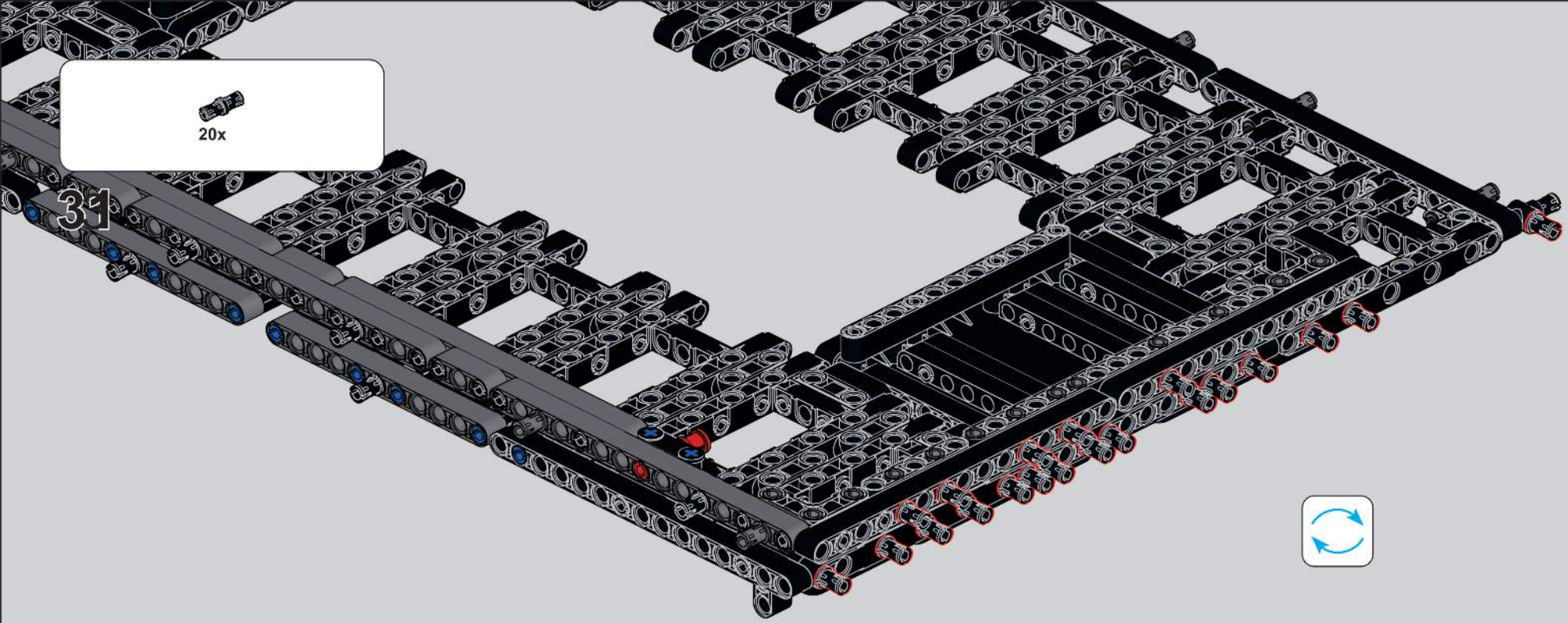
20x
31

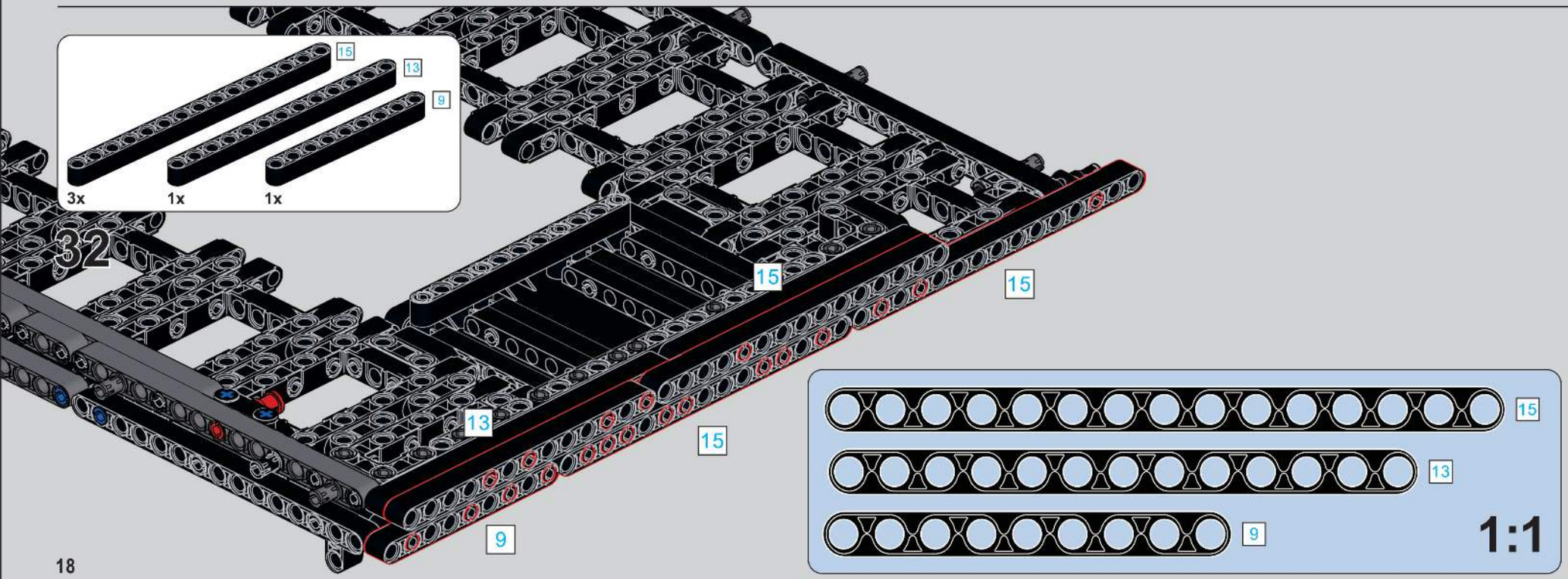
15
13
9
3x
1x
1x
32
15
15
13
15
9
15
13
9
1:1

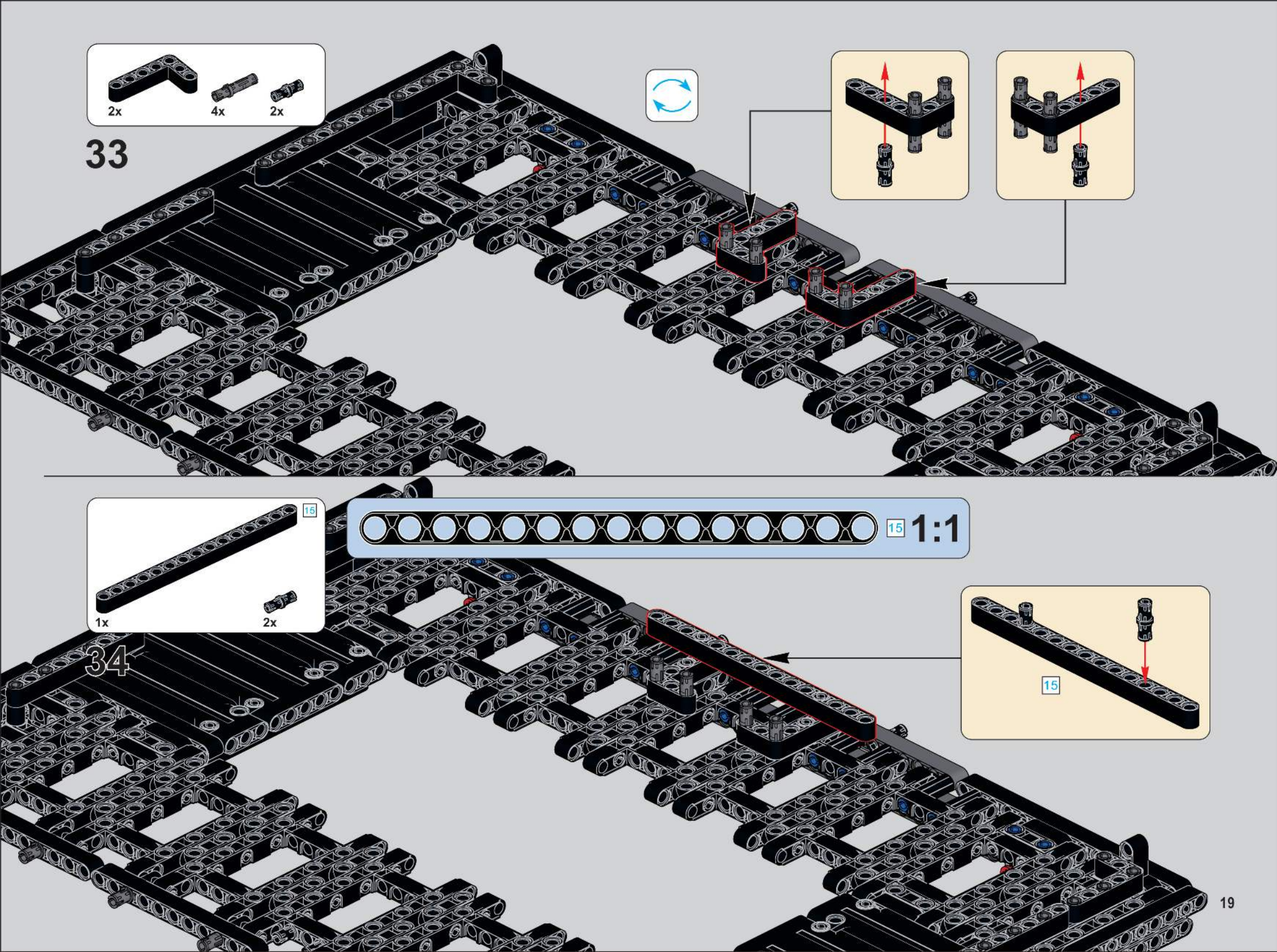
2x
4x
2x
33
15
1x
2x
34
15
1:1
15

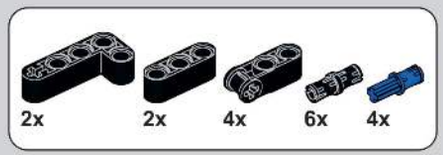

35

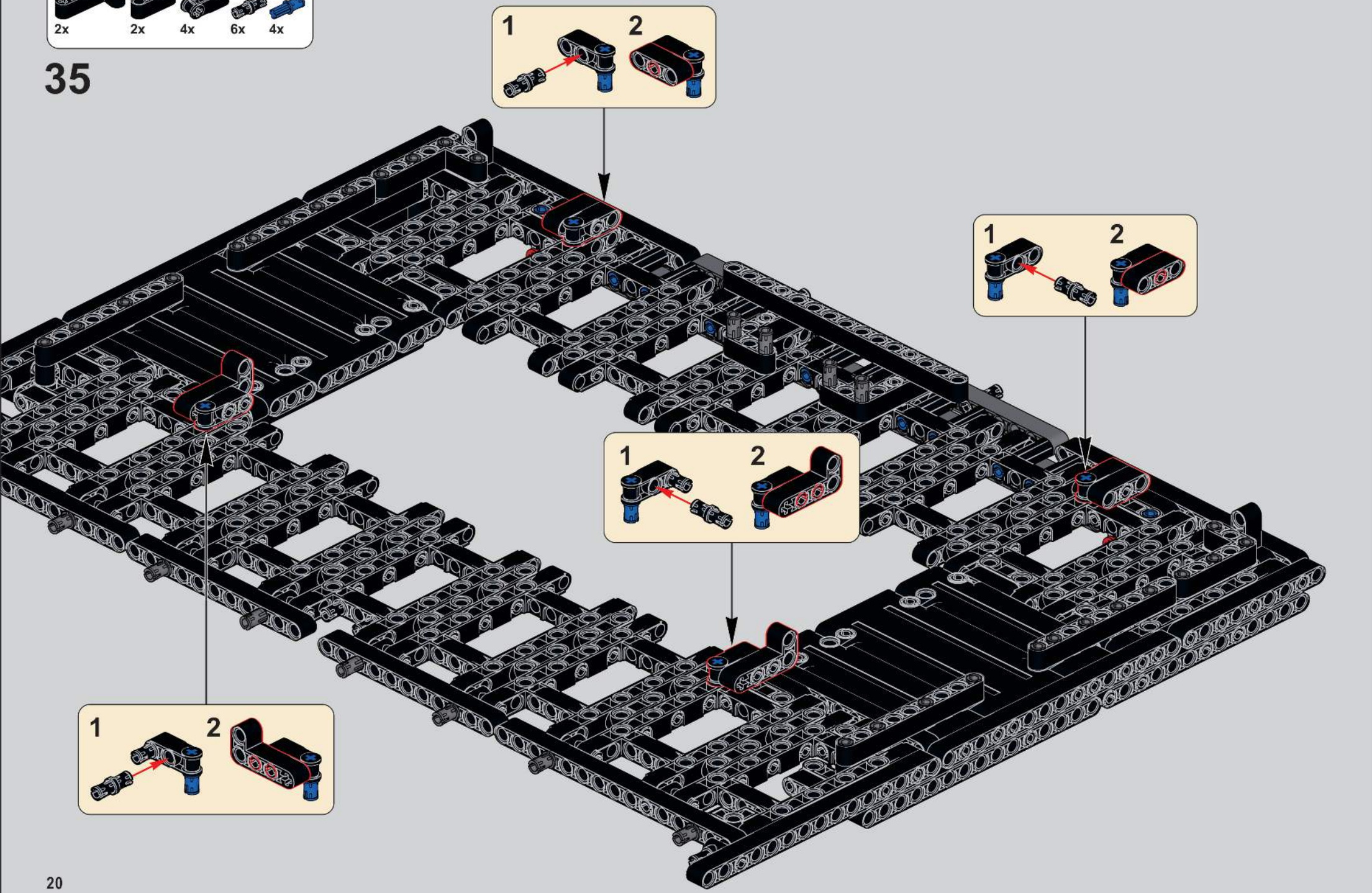

36

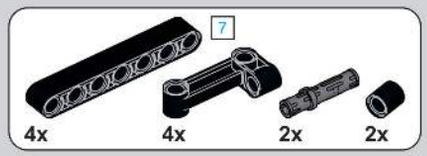

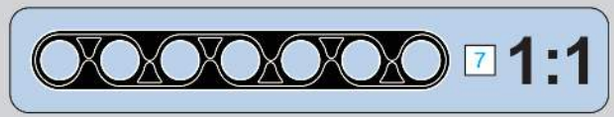

37

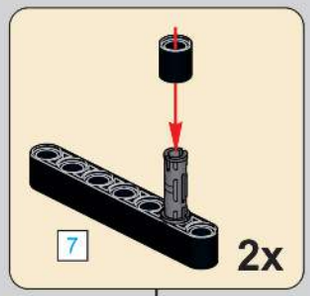

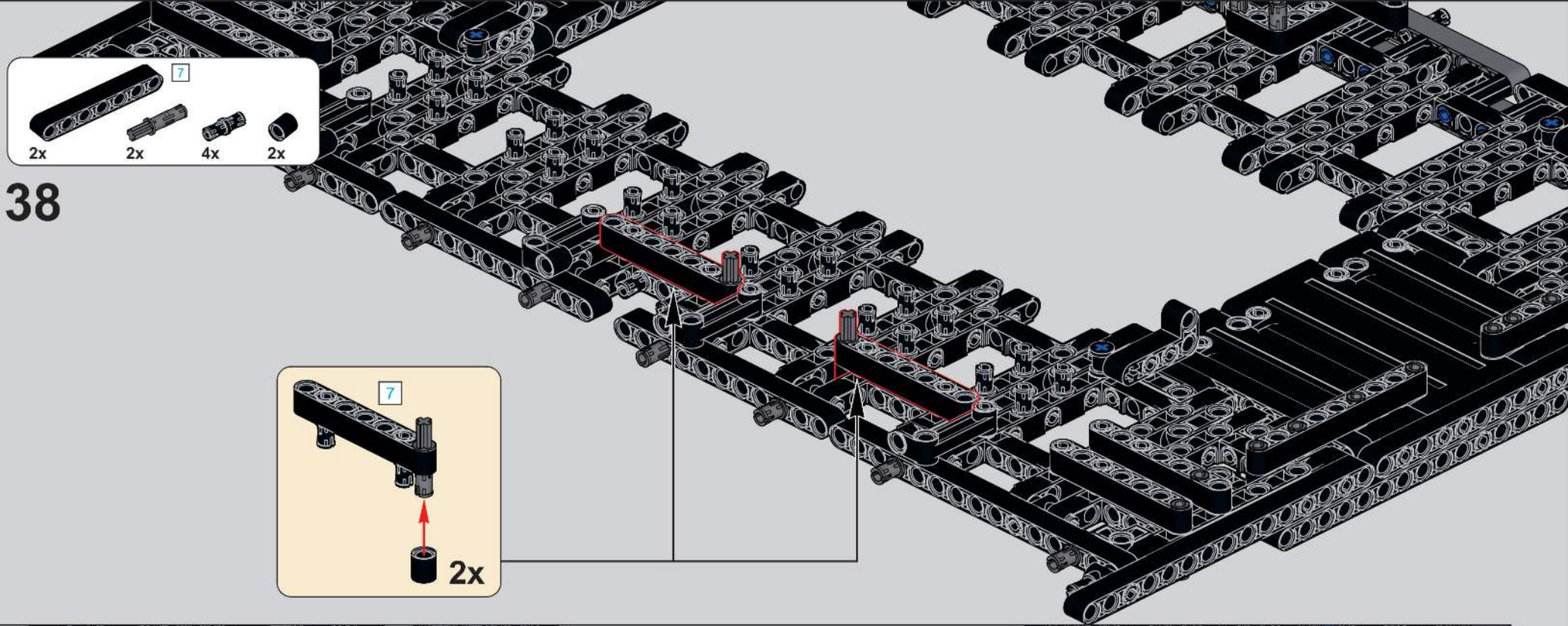
7
2x
2x
4x
2x
38
7
2x

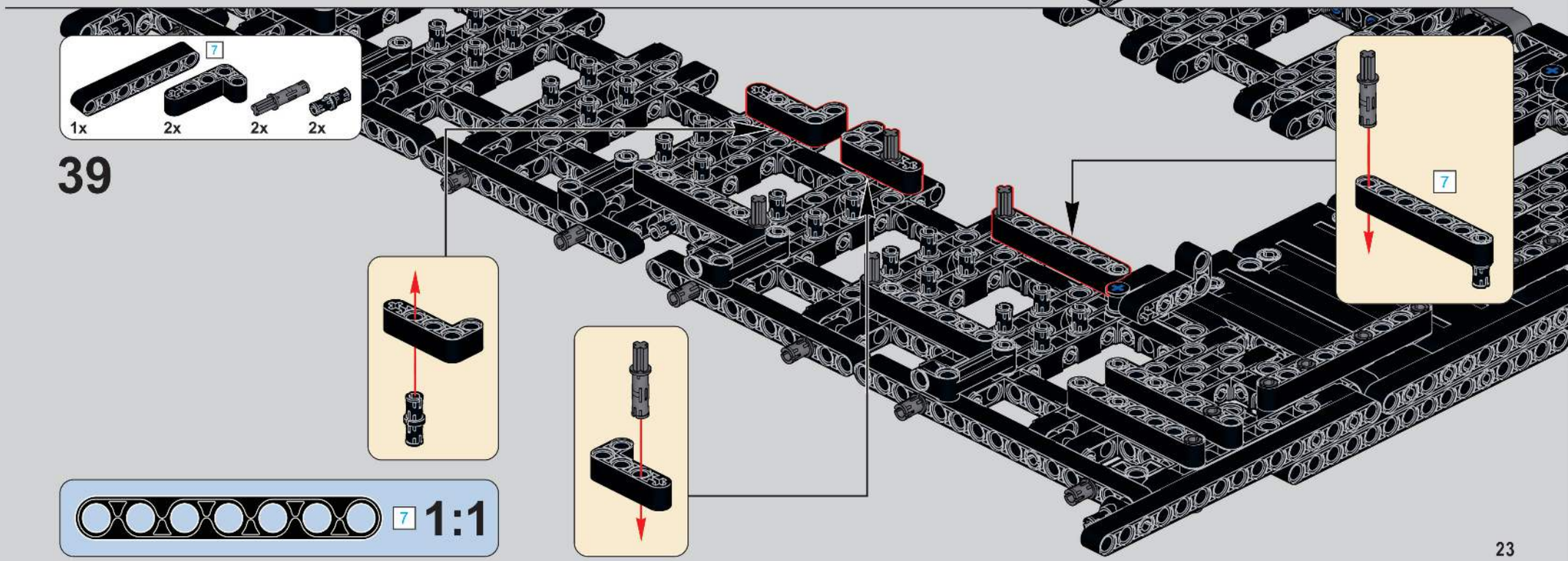
7
1x
2x
2x
2x
39
7
7
1:1

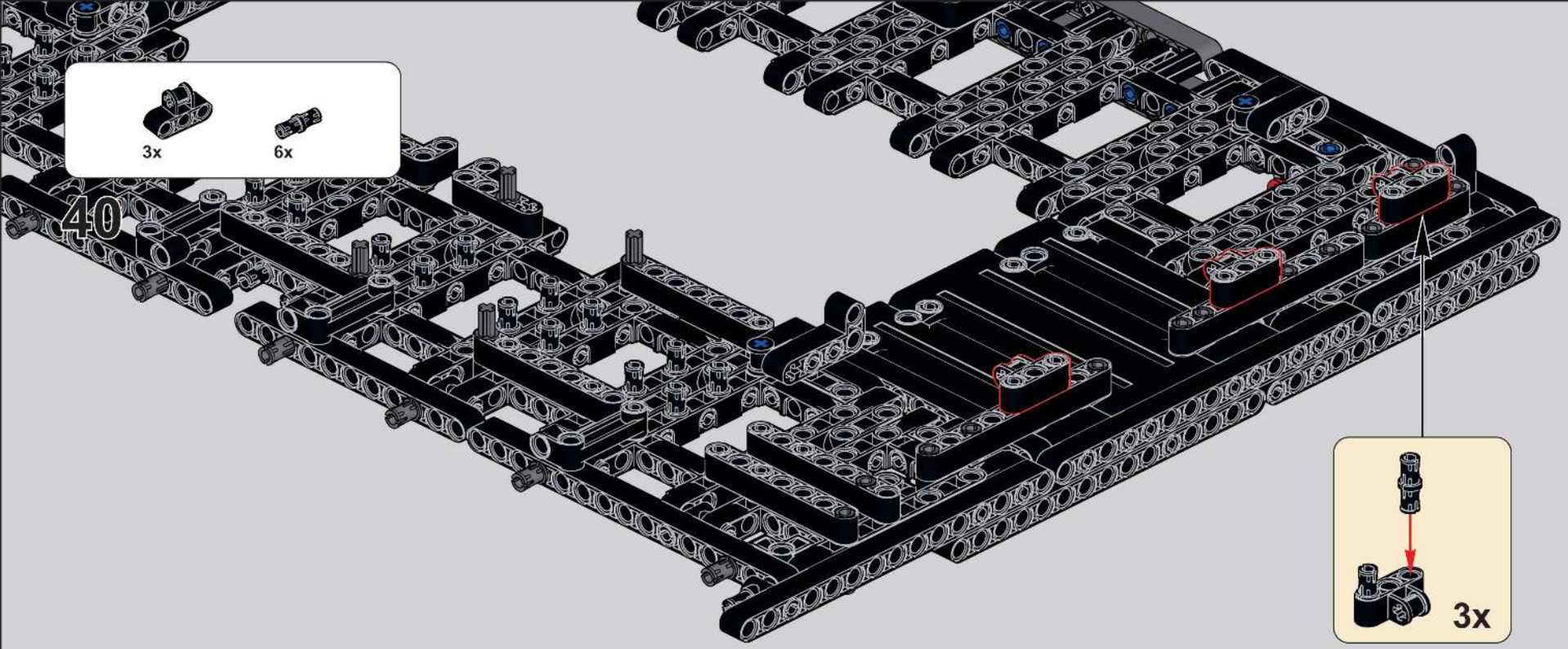

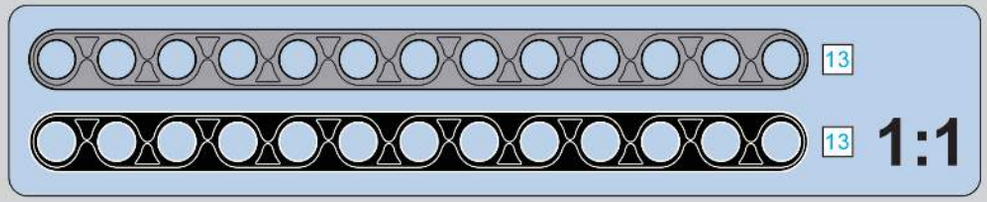

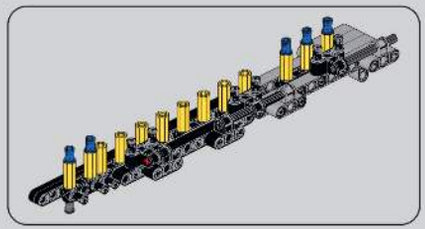

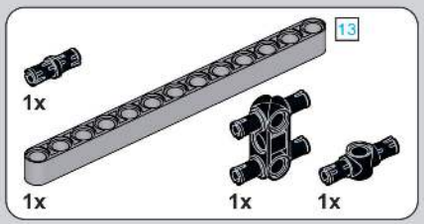

41

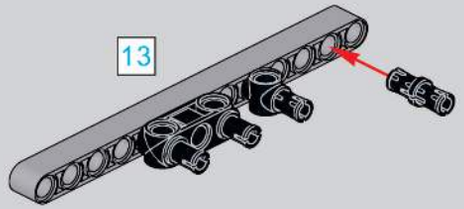

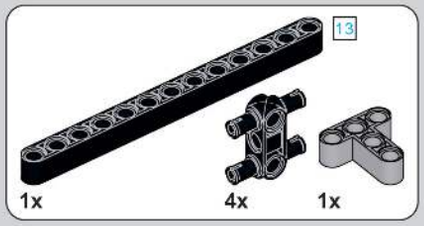

42

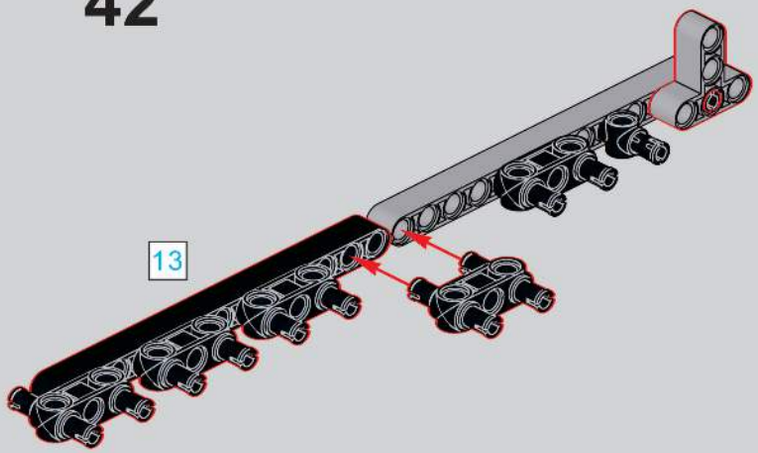

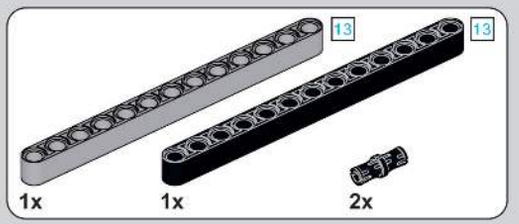
13
13
1x
1x
2x

43

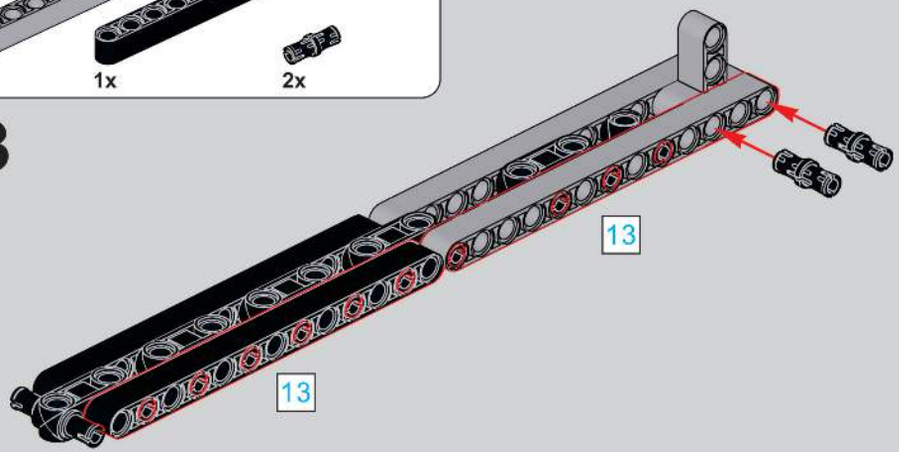
13
13

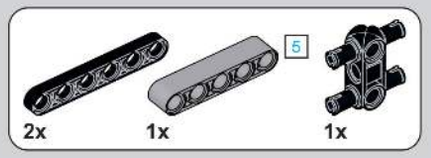
5
2x
1x
1x

44

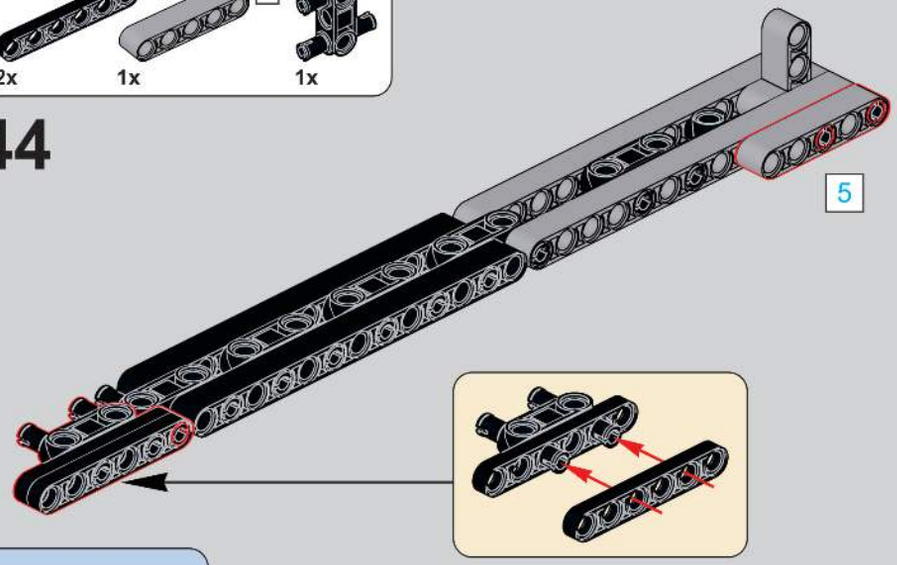
5

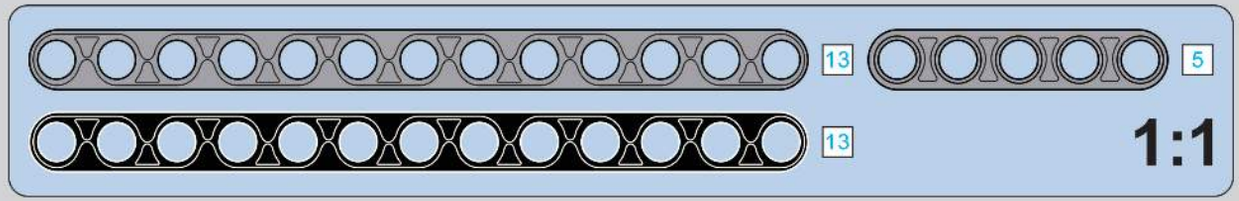
13
5
13
1:1

7
6
1:1

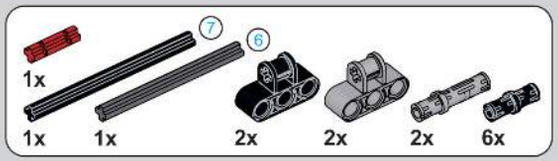
7
6
1x
1x
1x
2x
2x
2x
6x

45

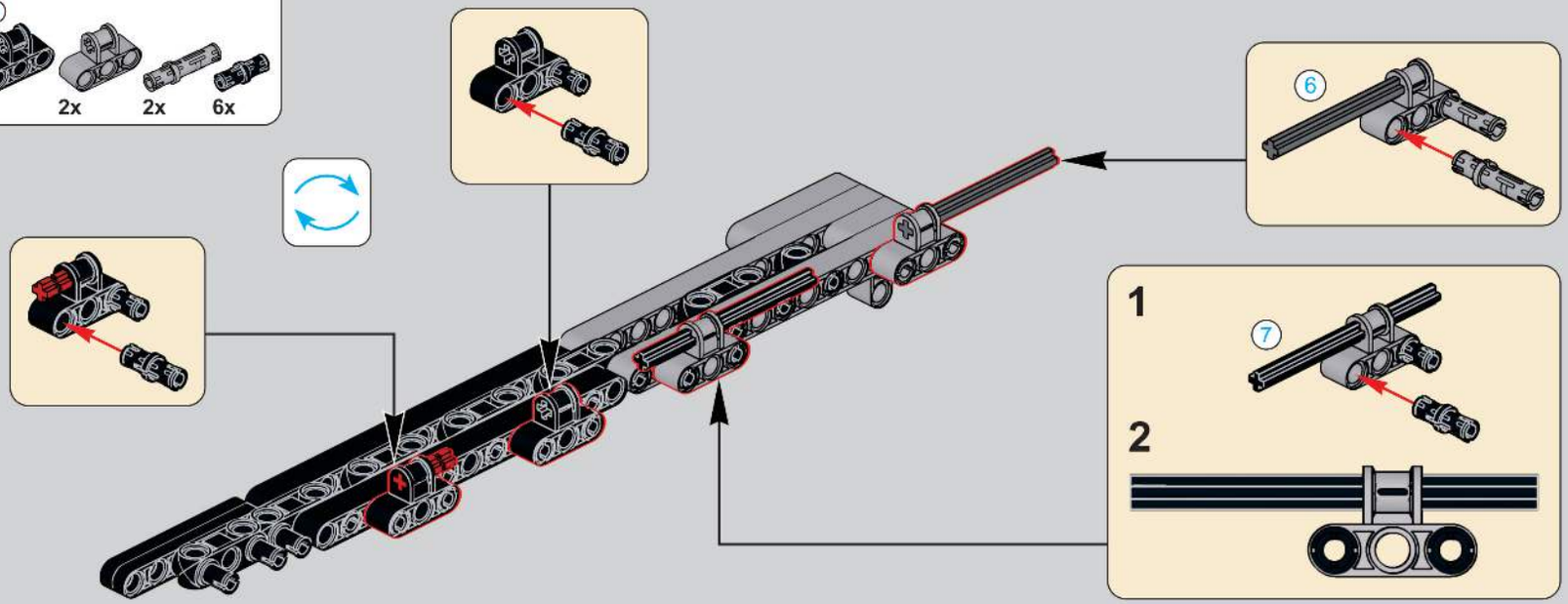
6
1
7
2

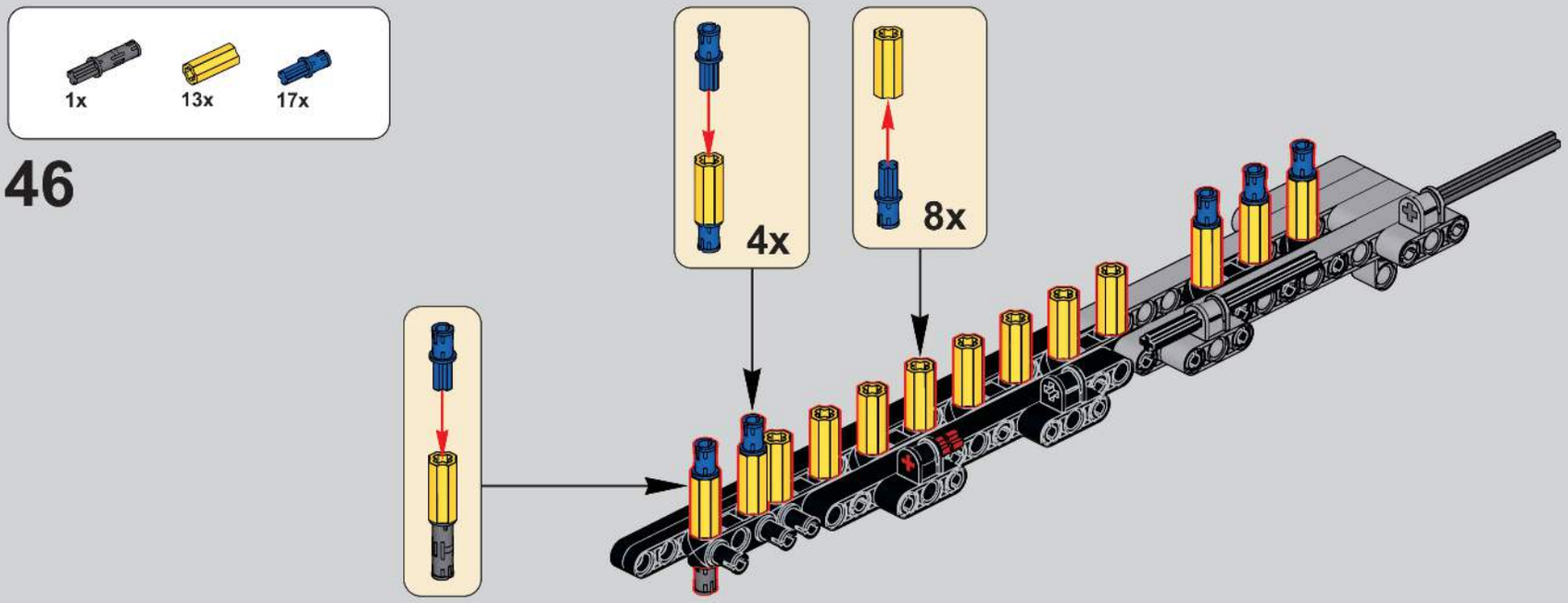
1x
13x
17x
46
4x
8x

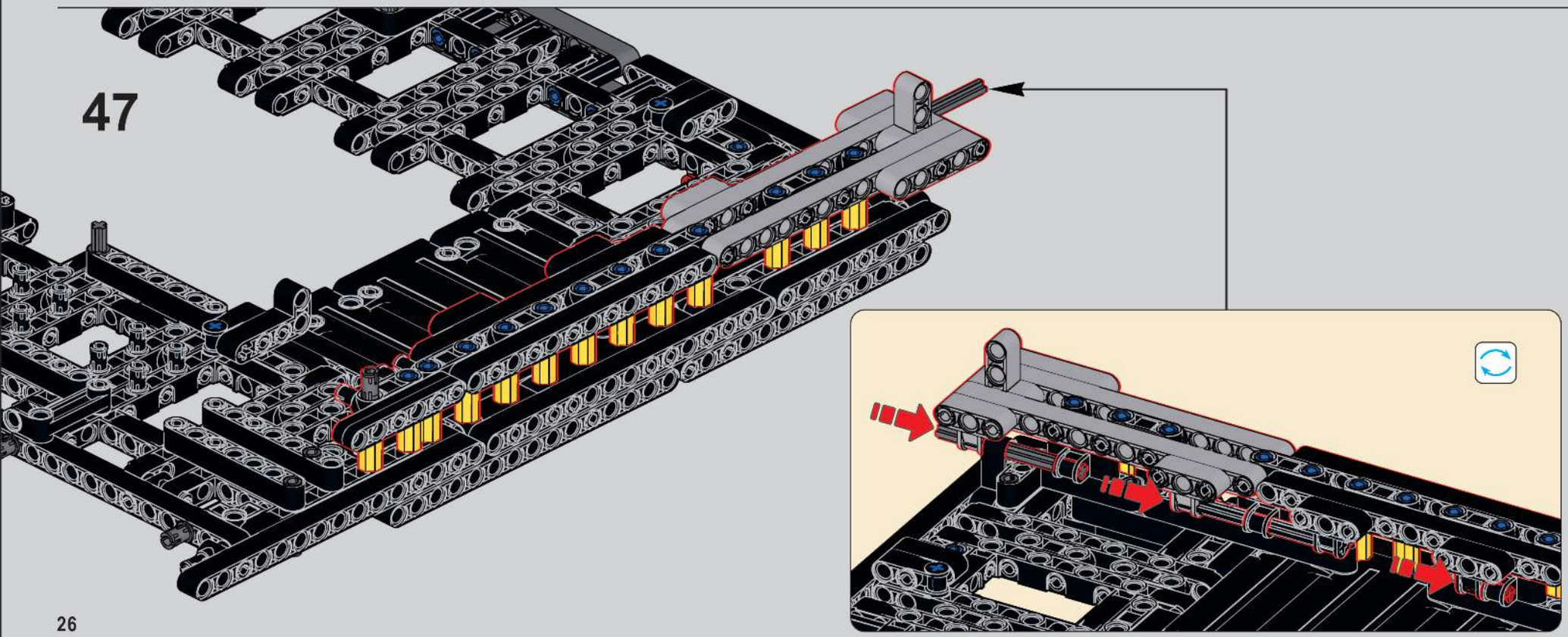
47

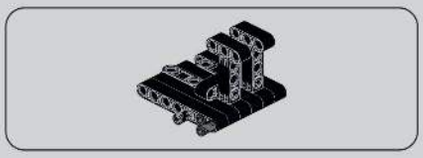

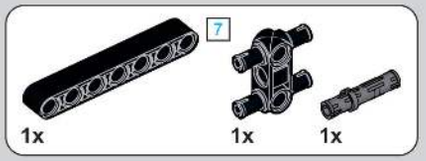

48

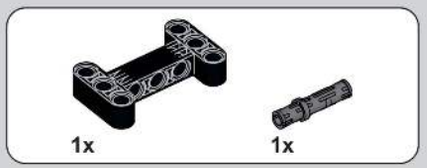

49

50

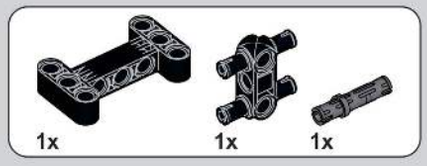

51

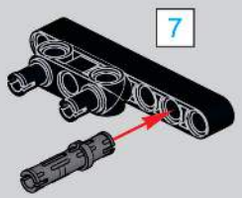

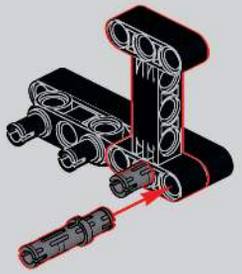

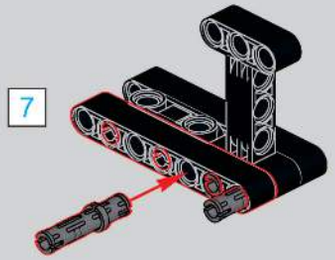

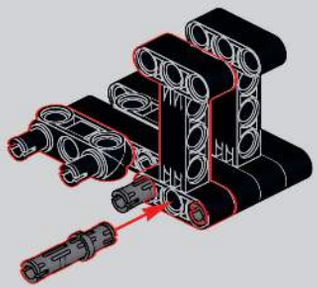

52

53

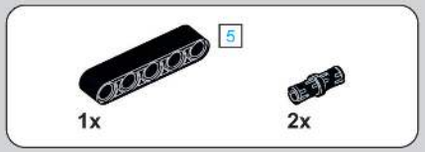

54

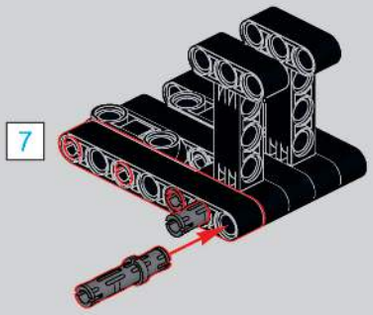

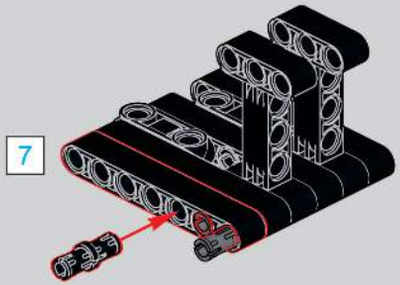

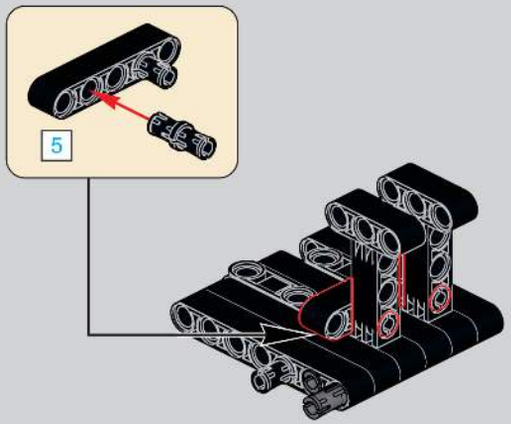

55

56

2x 1x

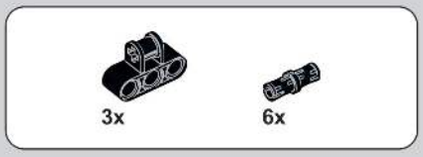

57

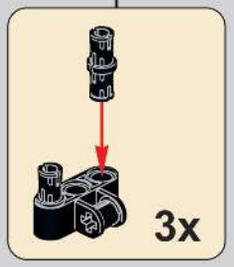

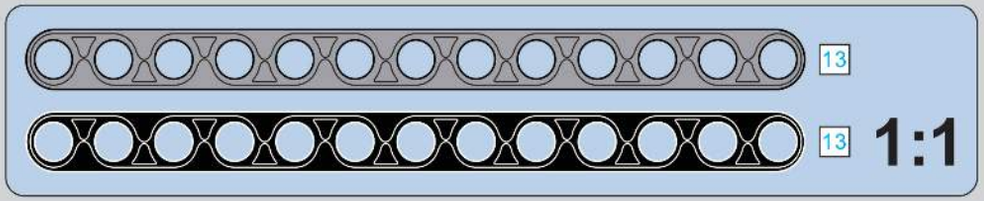

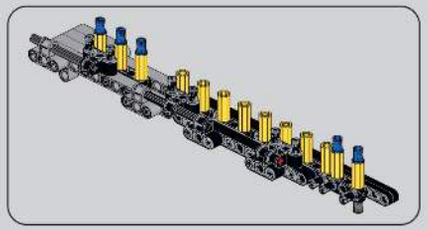

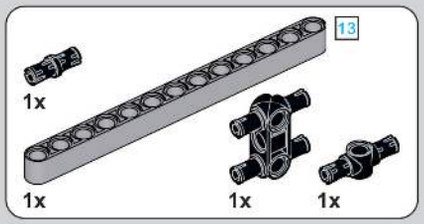

58

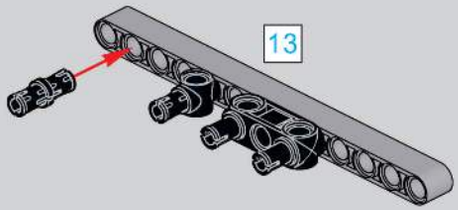

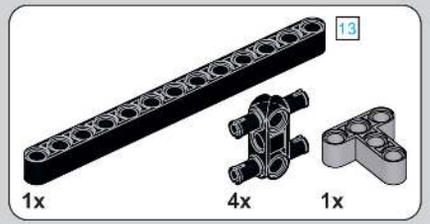

59

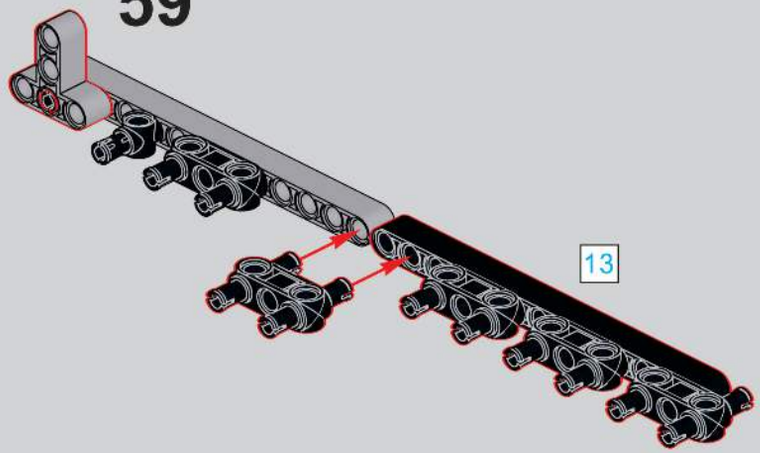

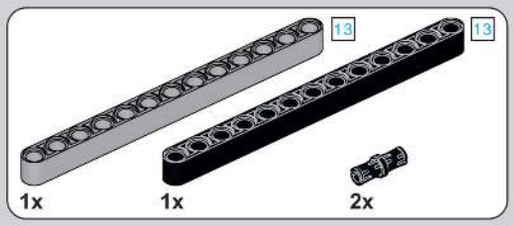
13
13
1x
1x
2x

60

7
6
1:1

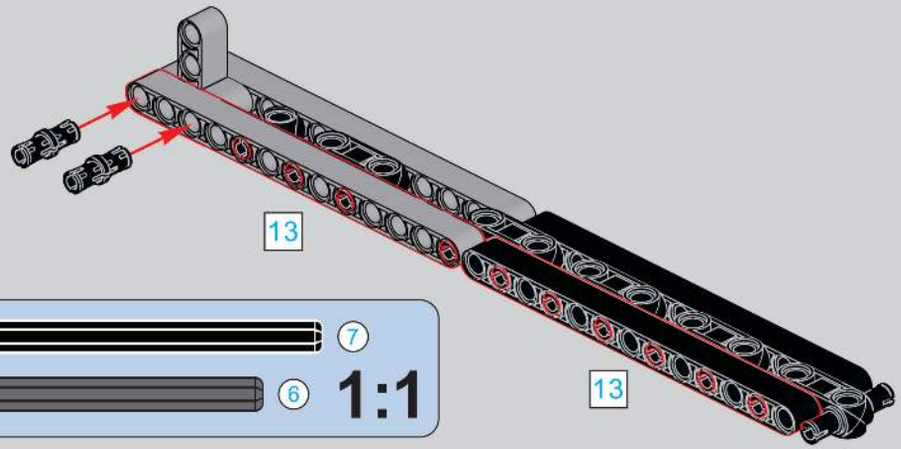
13
13

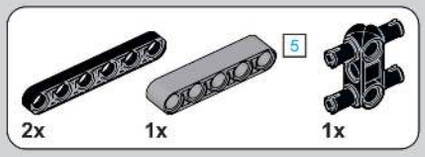
5
2x
1x
1x

61

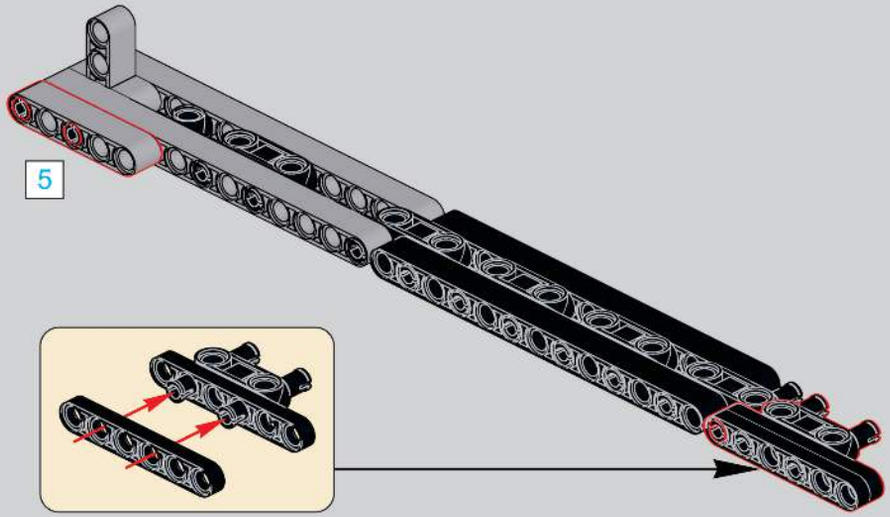
5

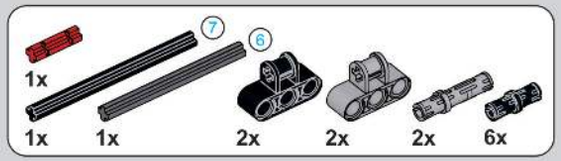
7
6
1x
1x
1x
2x
2x
2x
6x

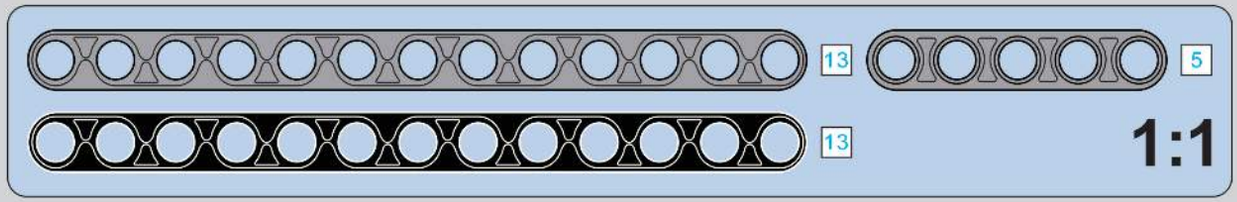
13
5
13
1:1

62

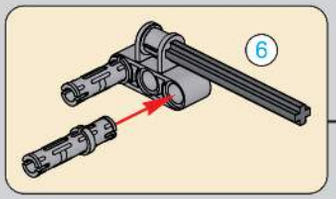
6

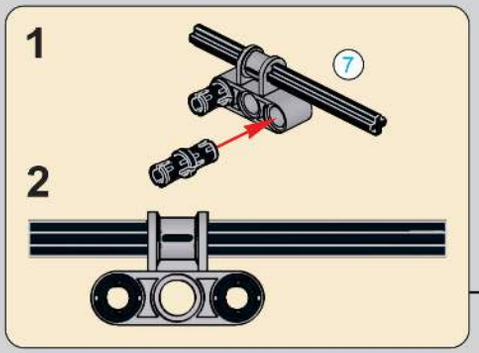
1
7
2

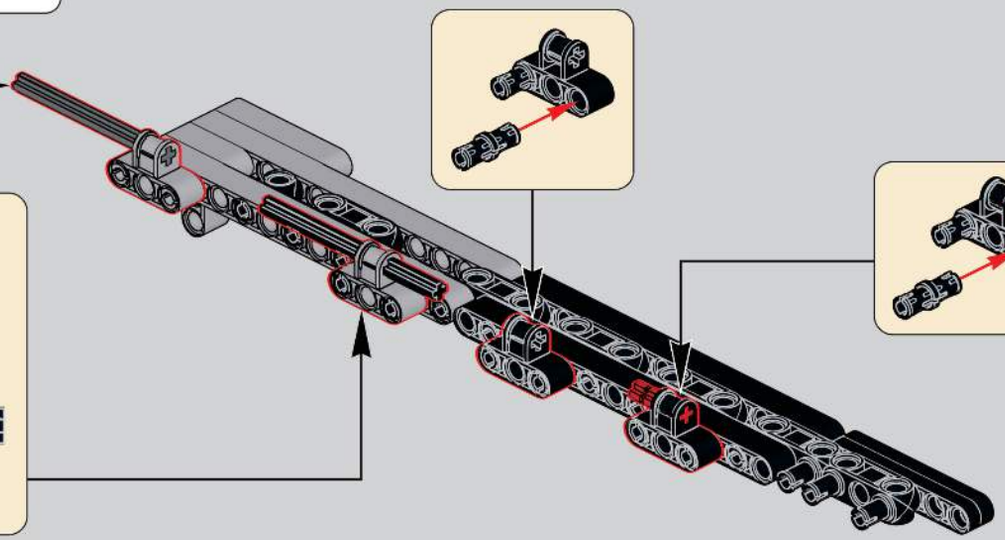

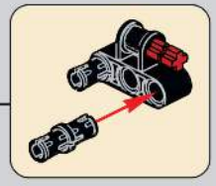

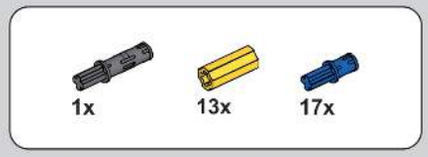

63

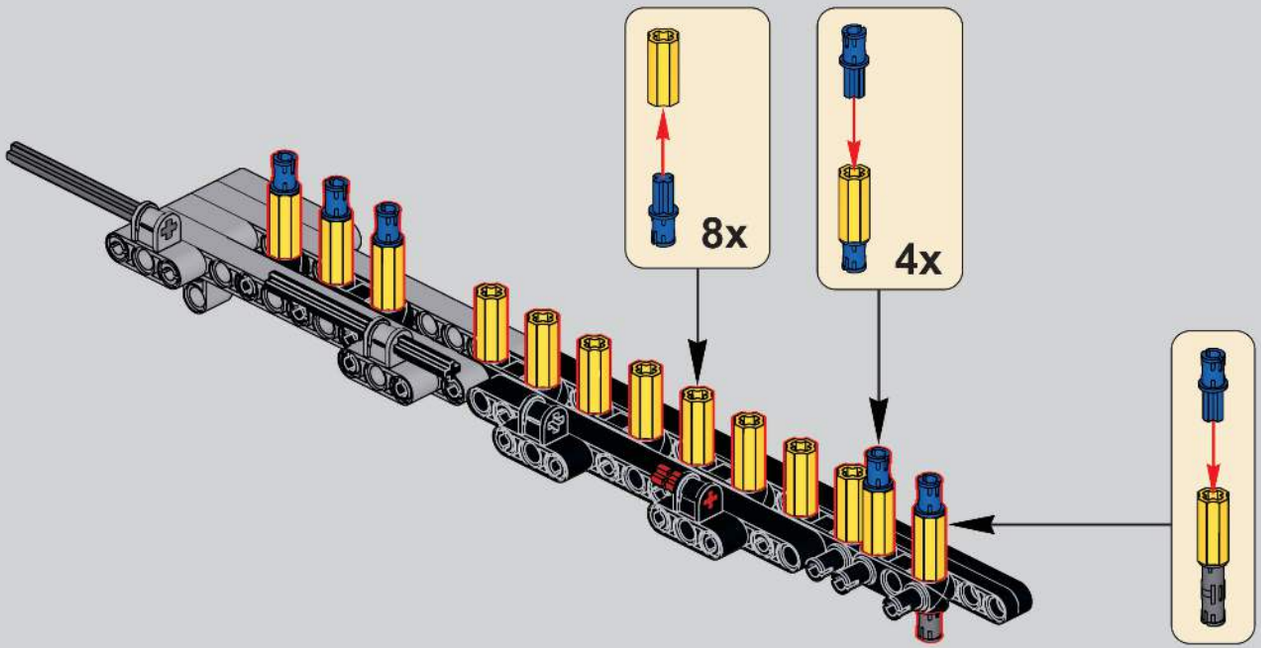

64

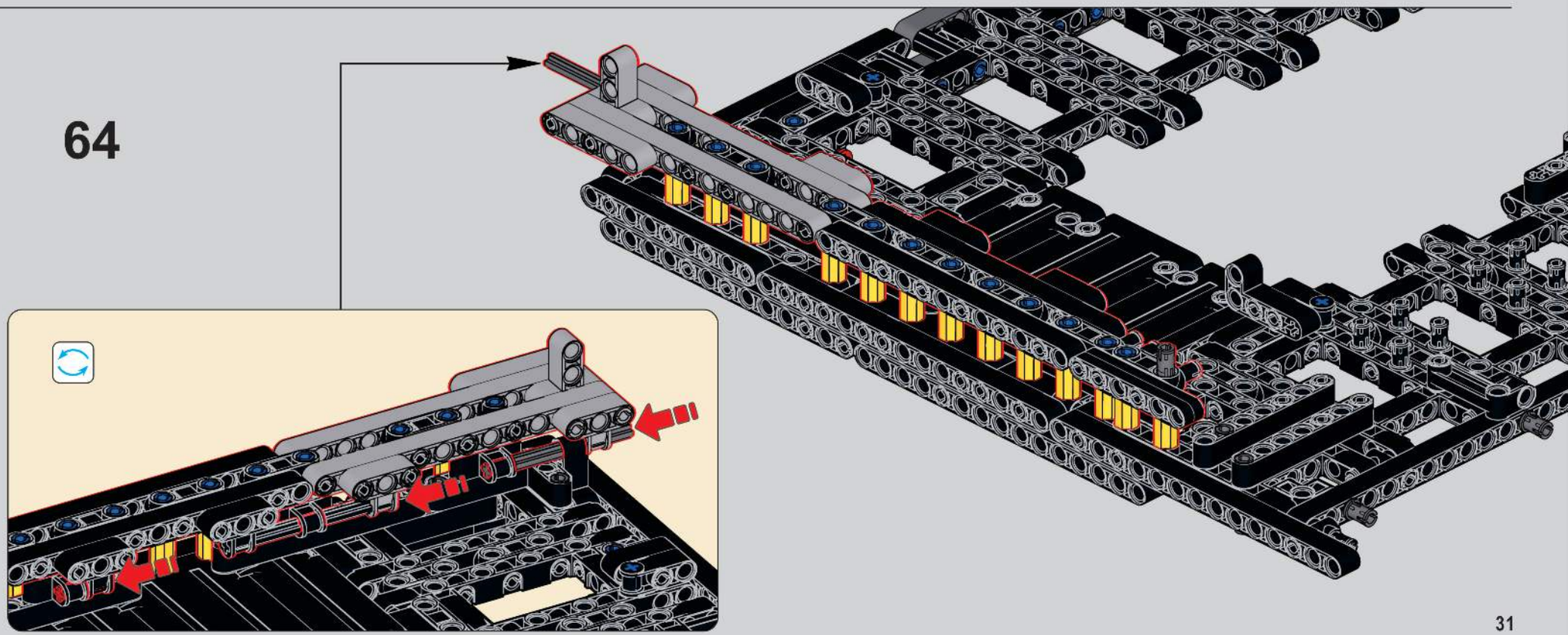

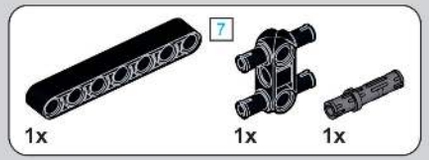

65

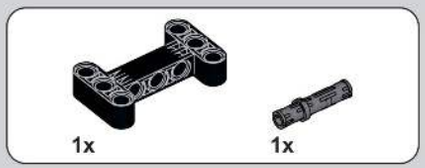

66

67

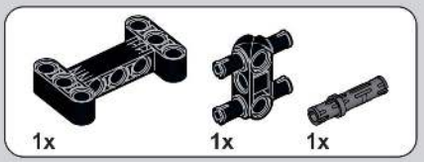

68

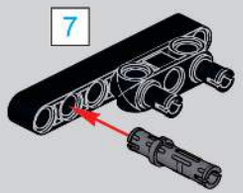

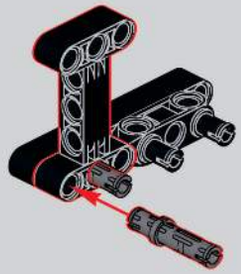

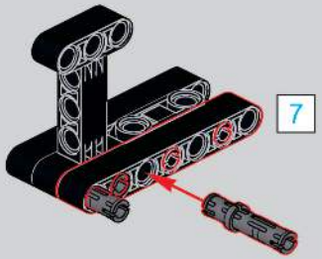

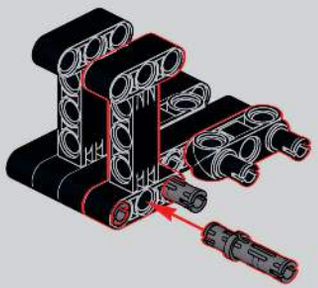

69

70

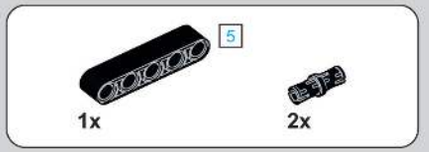

71

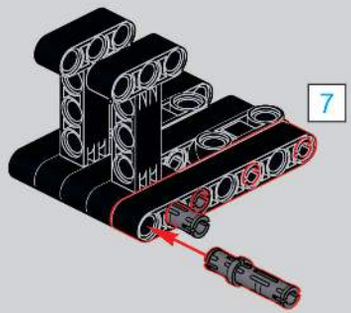

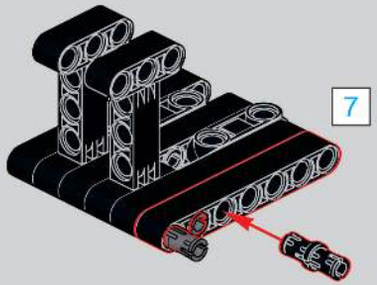

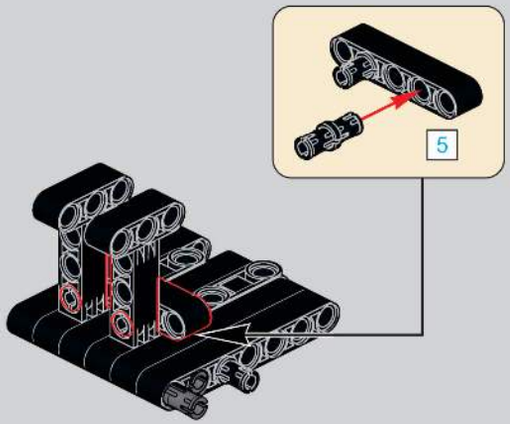

72

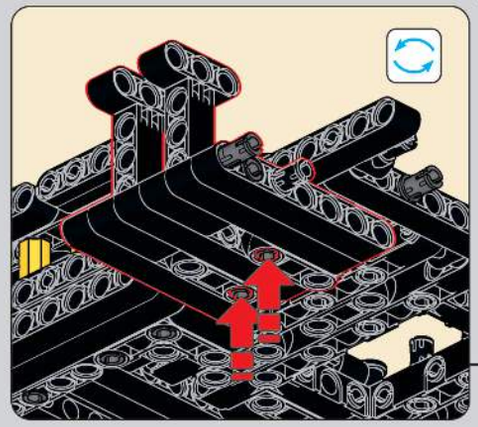

73

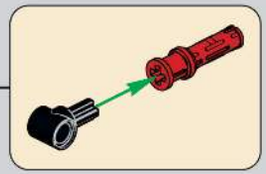

74

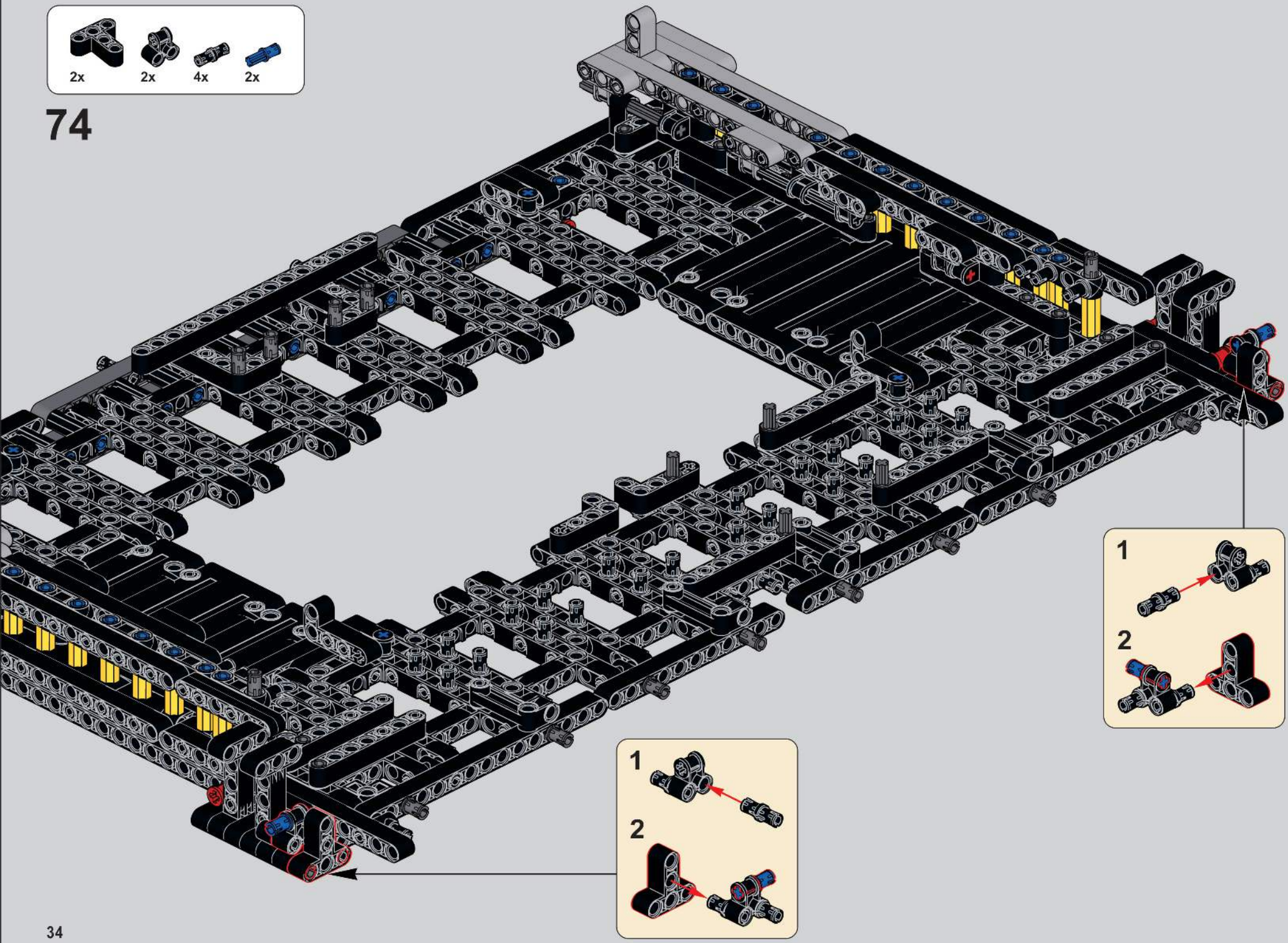

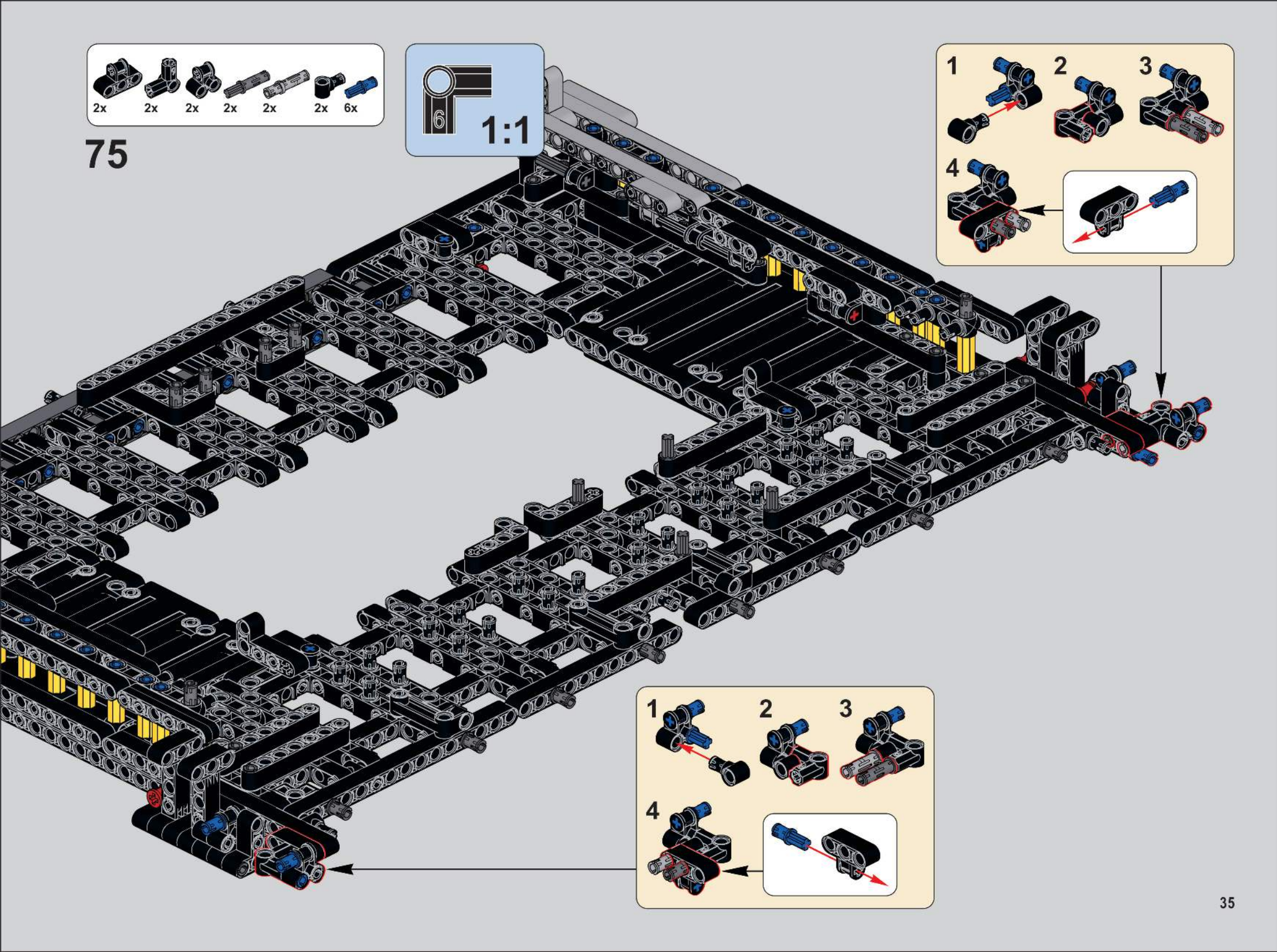
2x
2x
2x
2x
2x
2x
6x
75
6
1:1
1
2
3
4
1
2
3
4

76

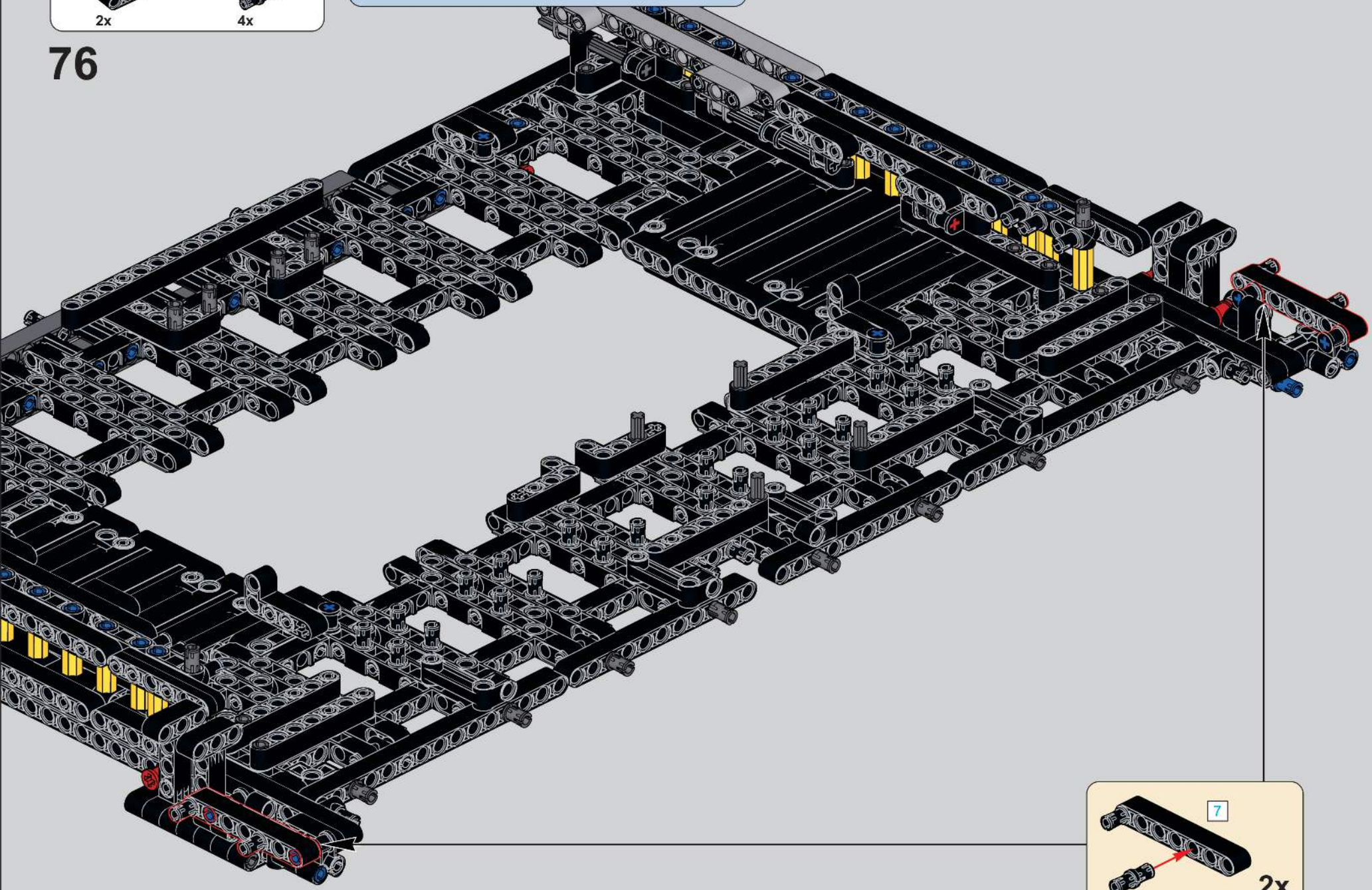

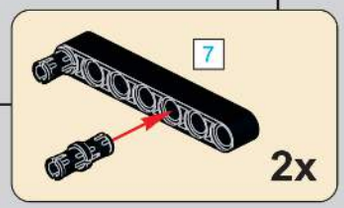

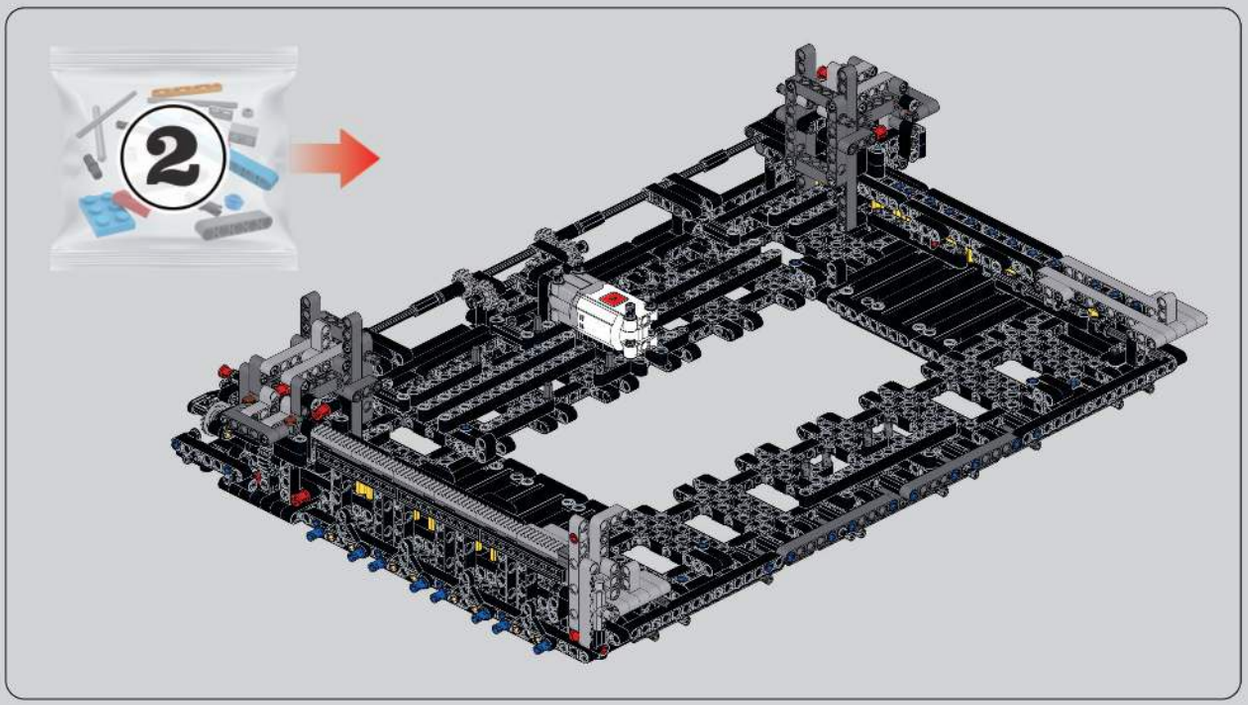

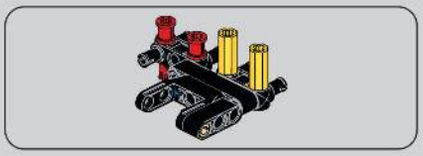

77

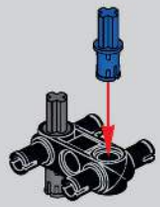

78

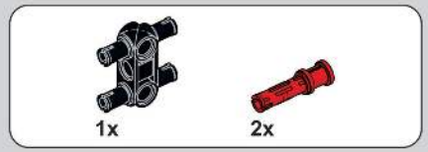

79

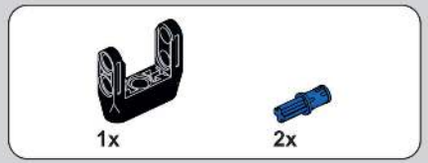

80

81

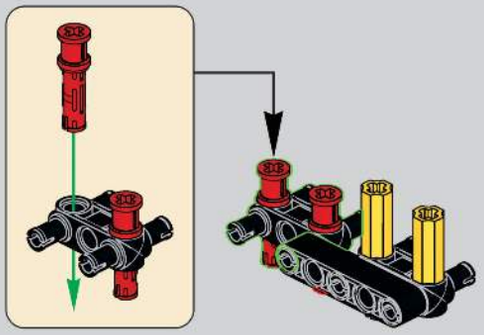

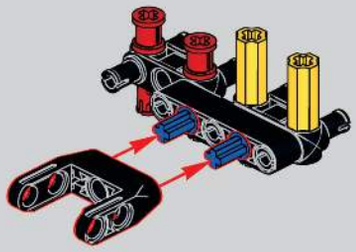

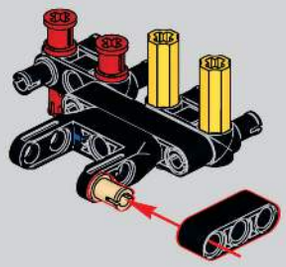

82

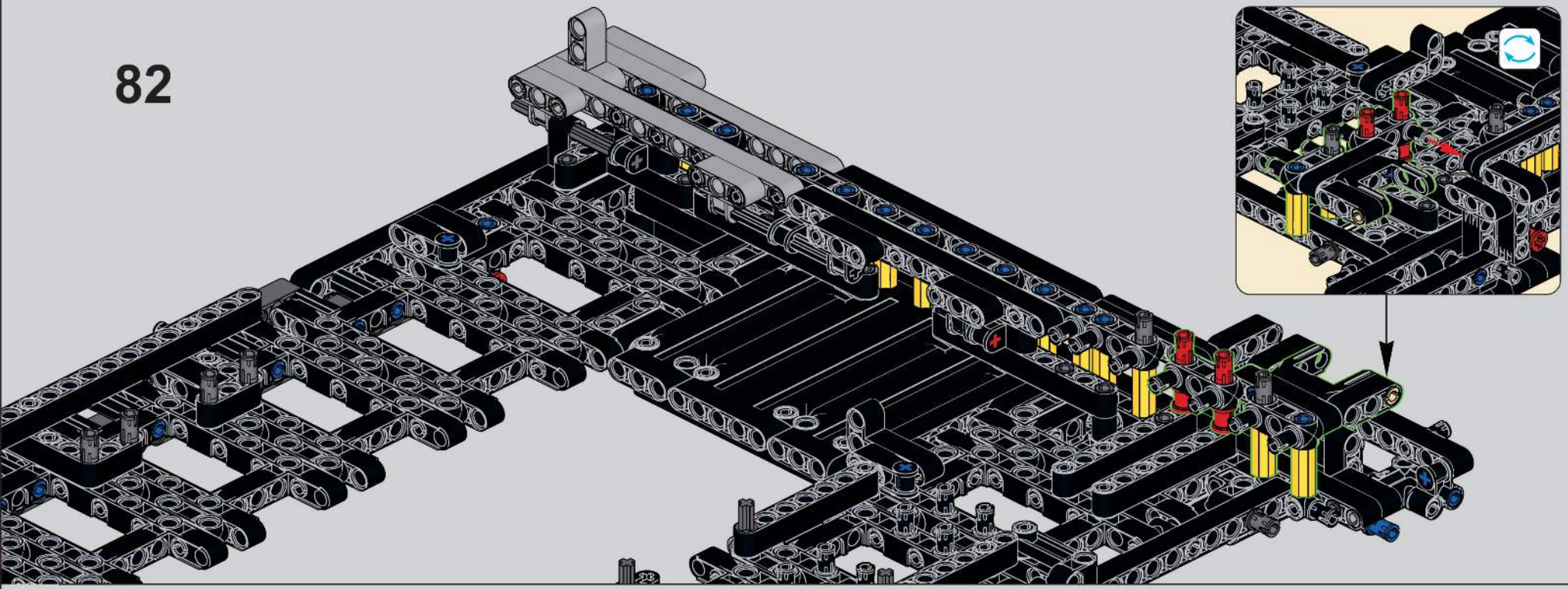

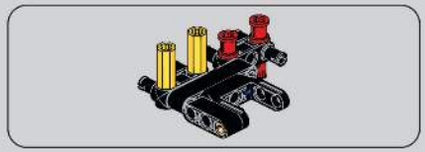

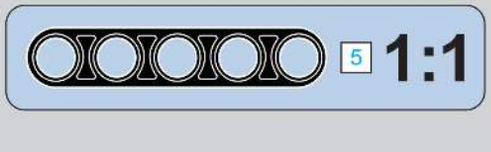

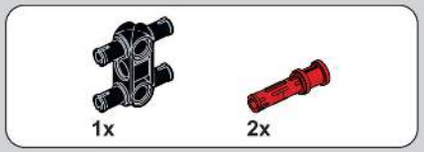

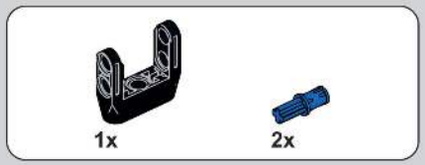

83

84

85

86

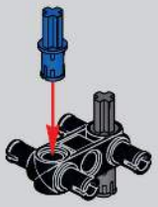

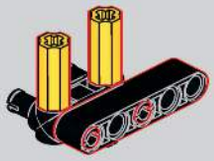

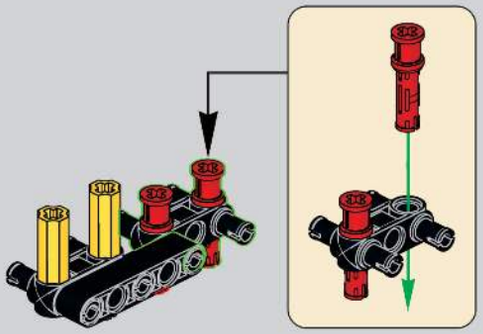

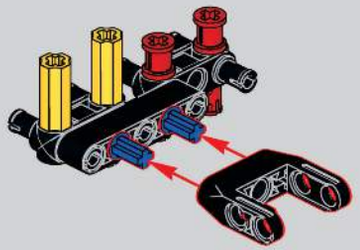

87

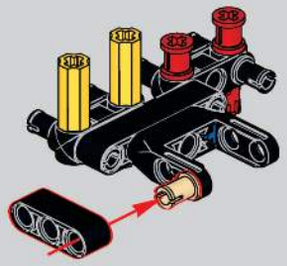

88

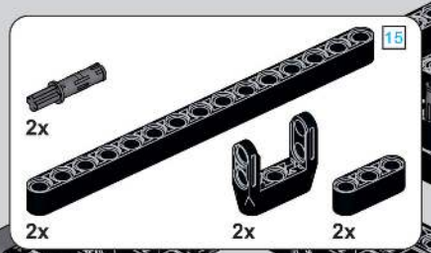

89

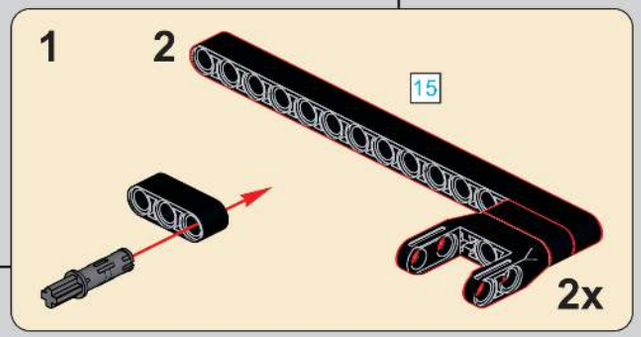

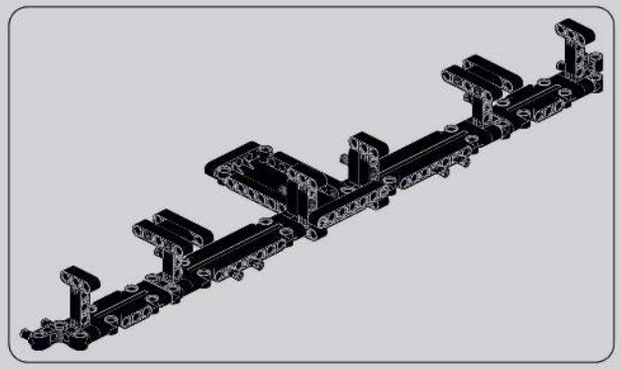

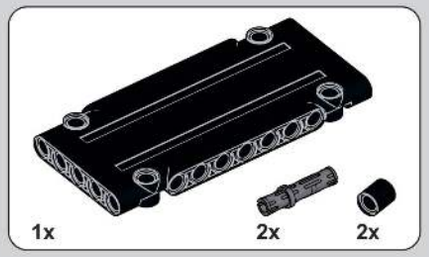

90

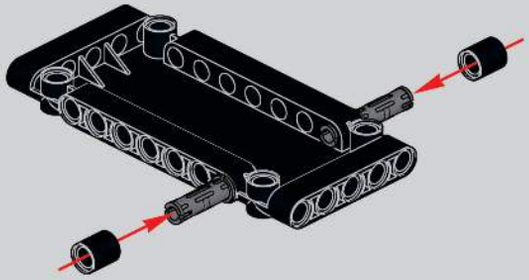

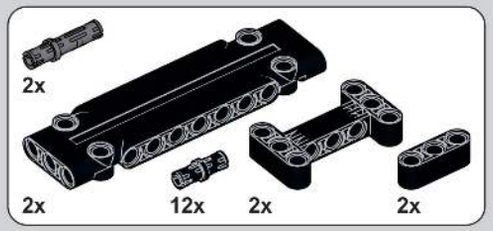

91

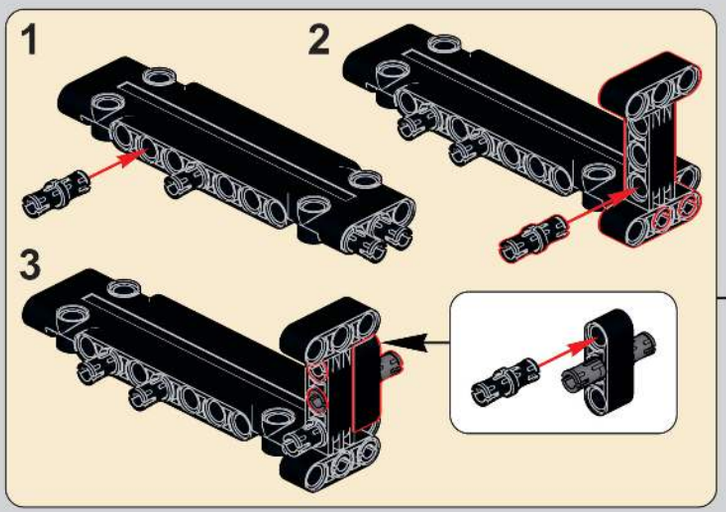

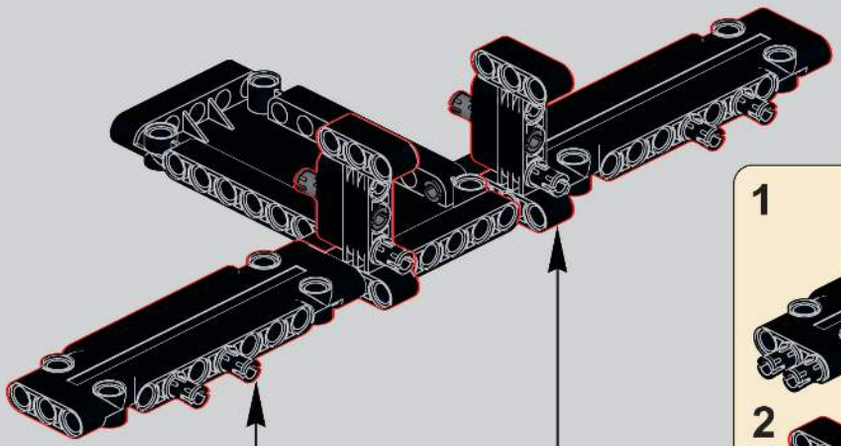

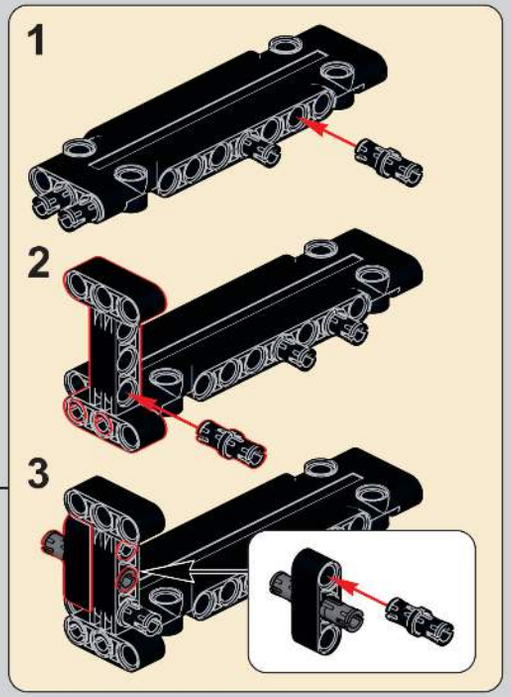

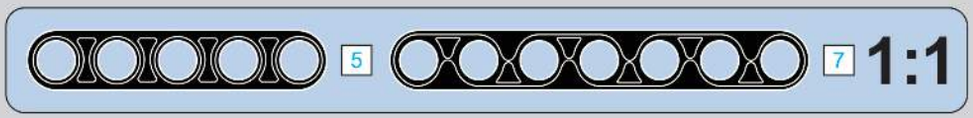

92

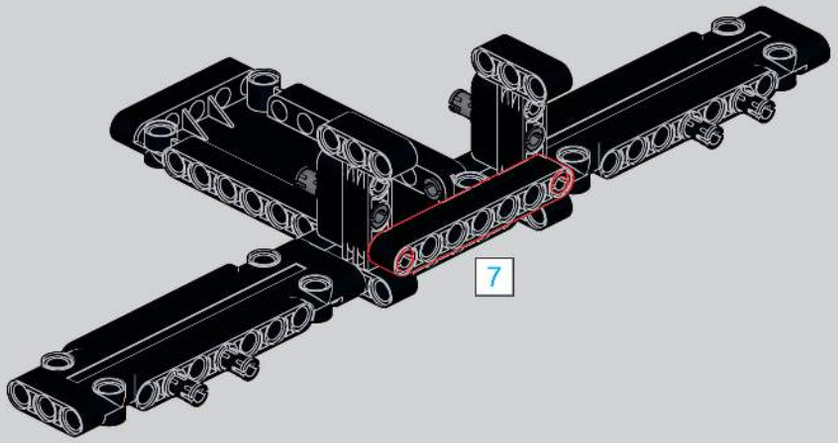

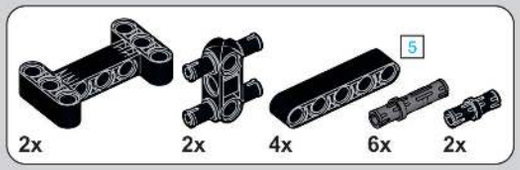

93

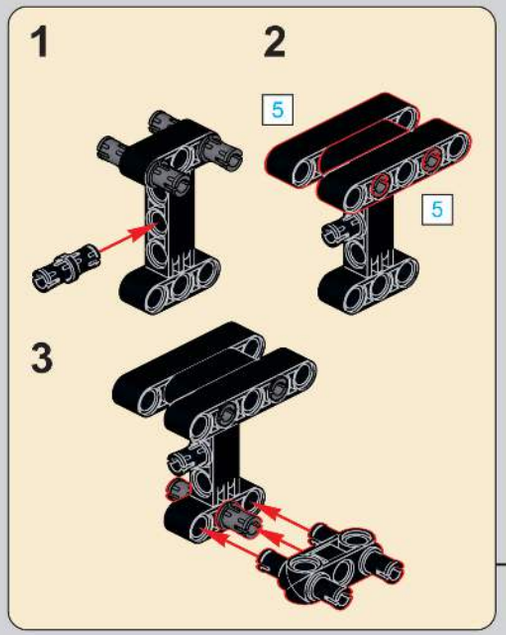

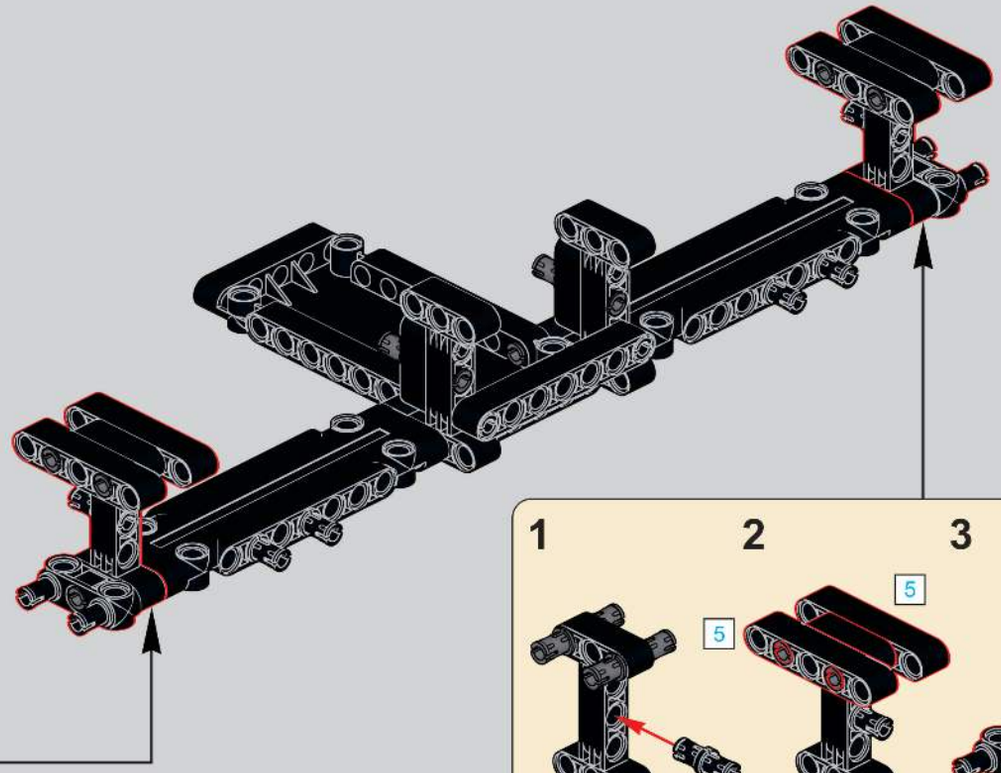

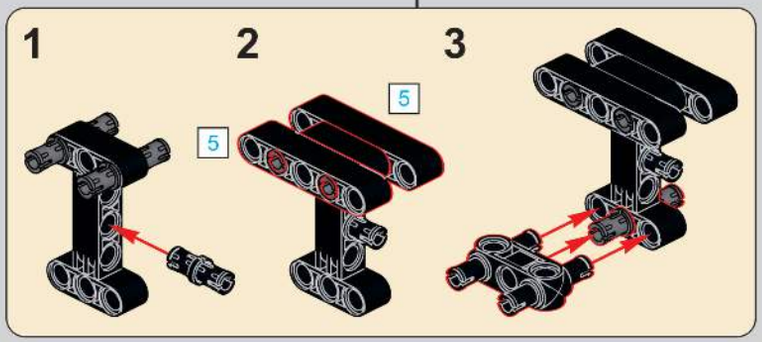

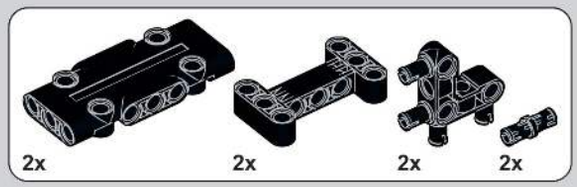

94

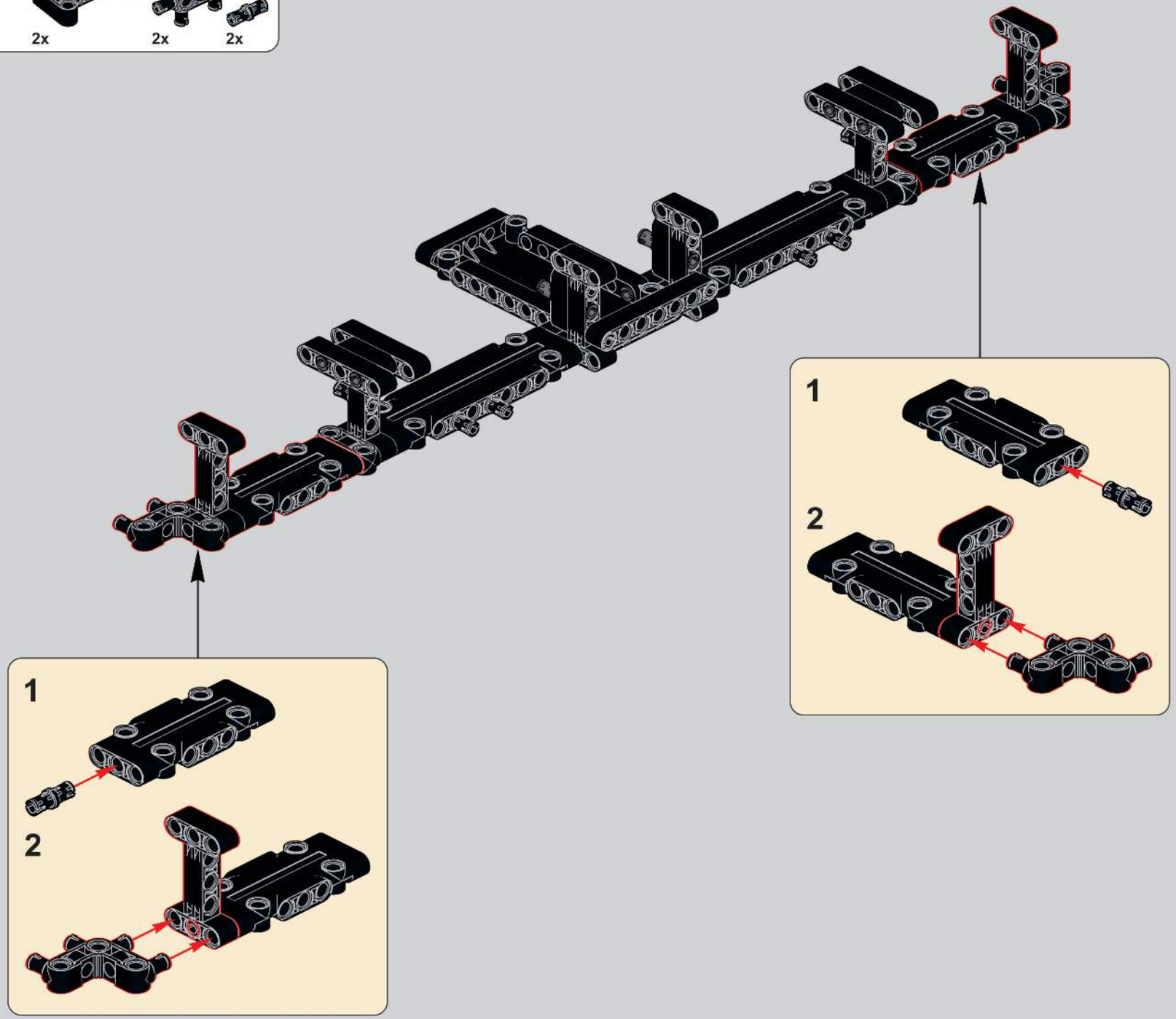

95

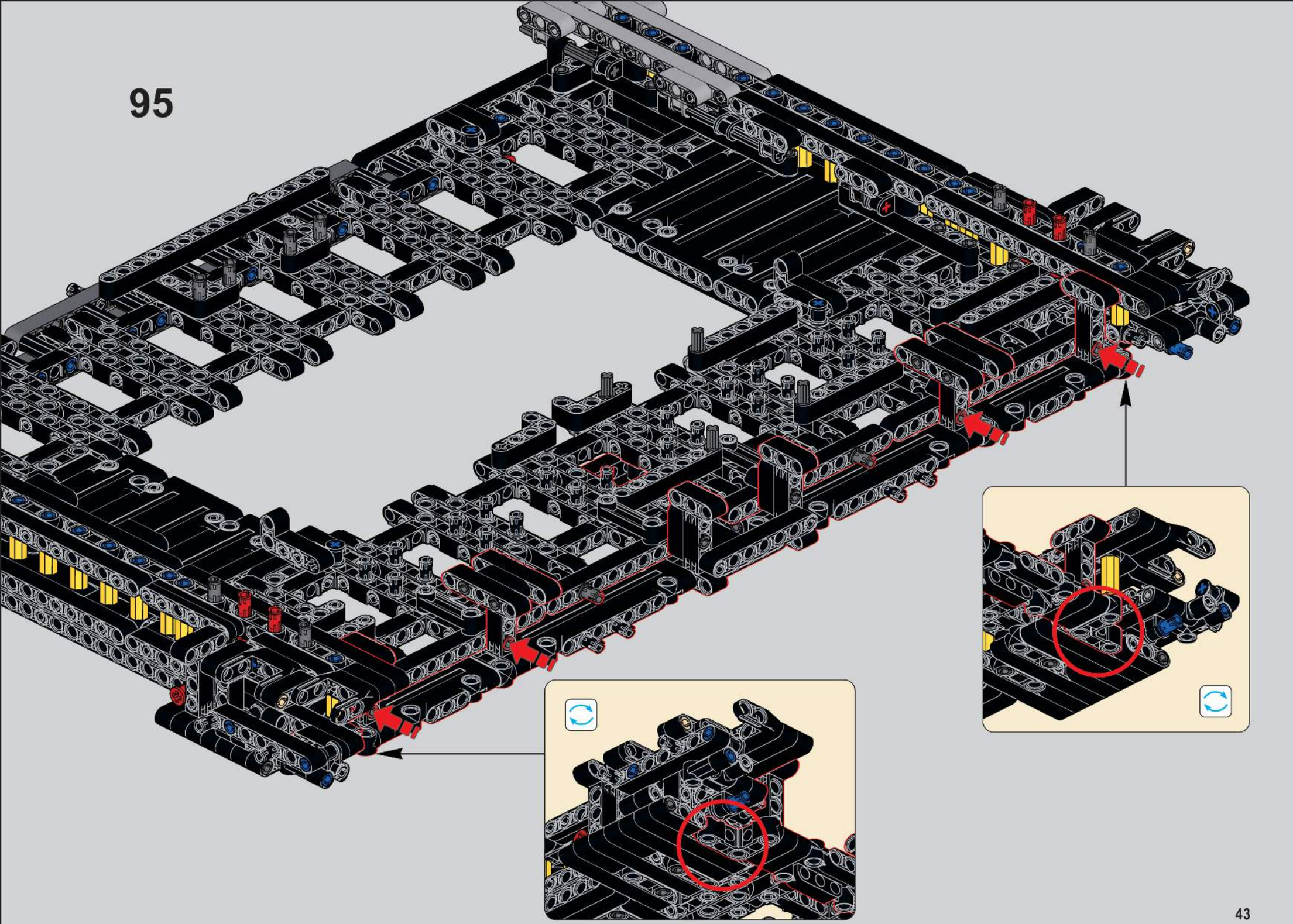

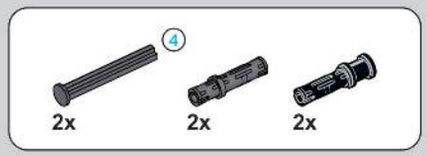

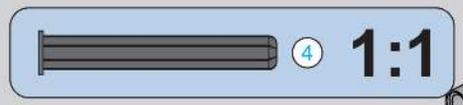

96

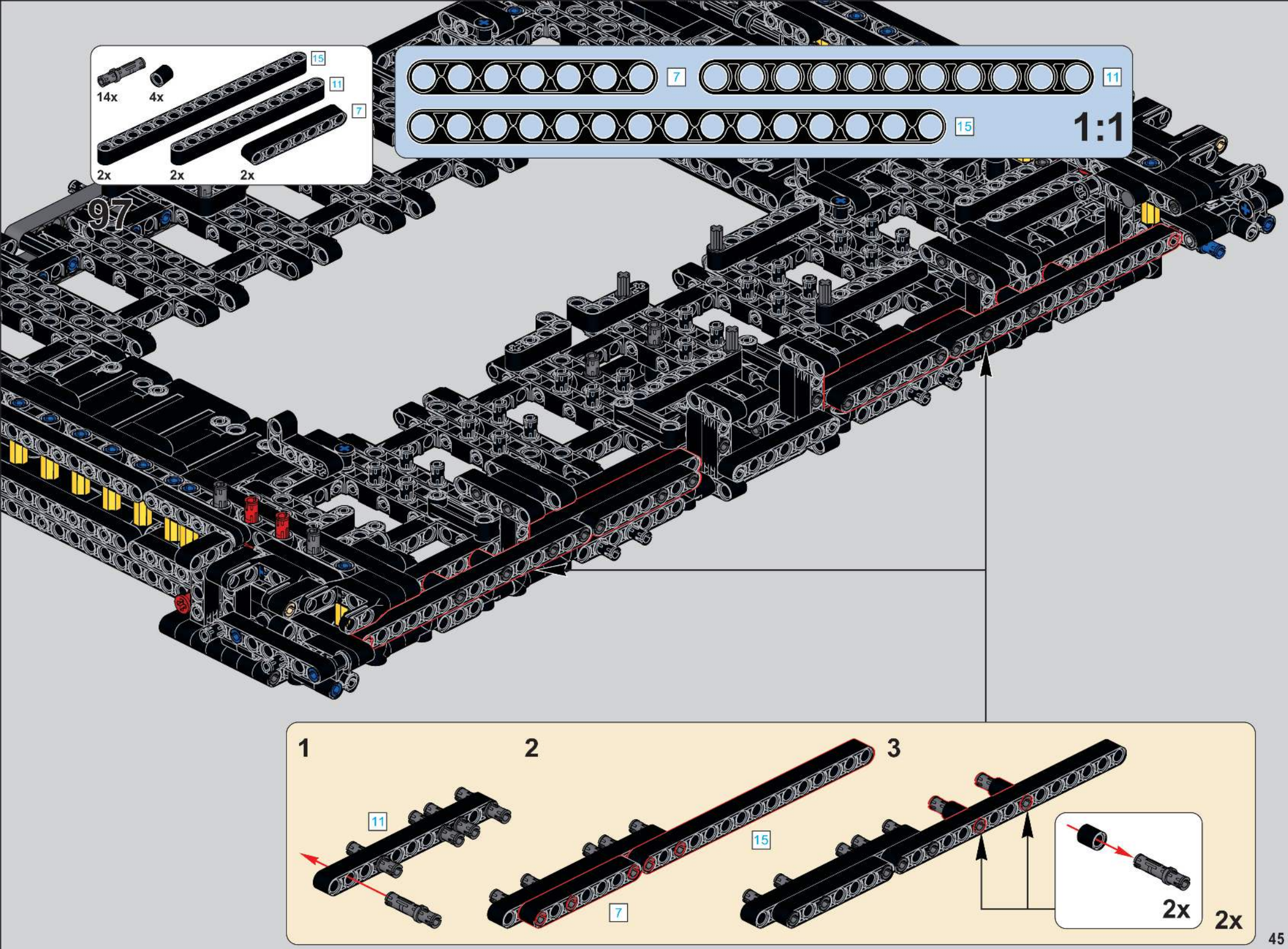
14x
4x
15
11
7
2x
2x
2x
97
7
11
15
1:1
1
11
2
15
7
3
2x
2x

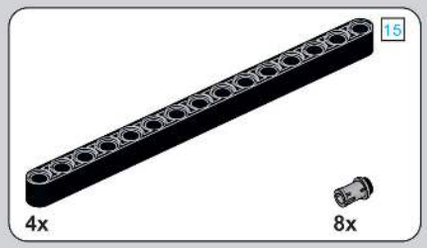

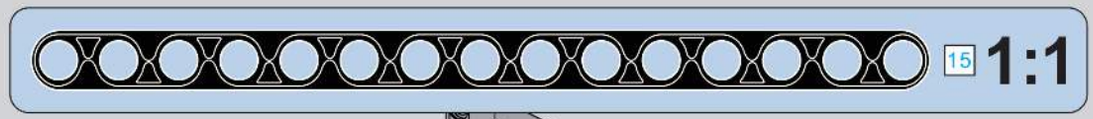

98

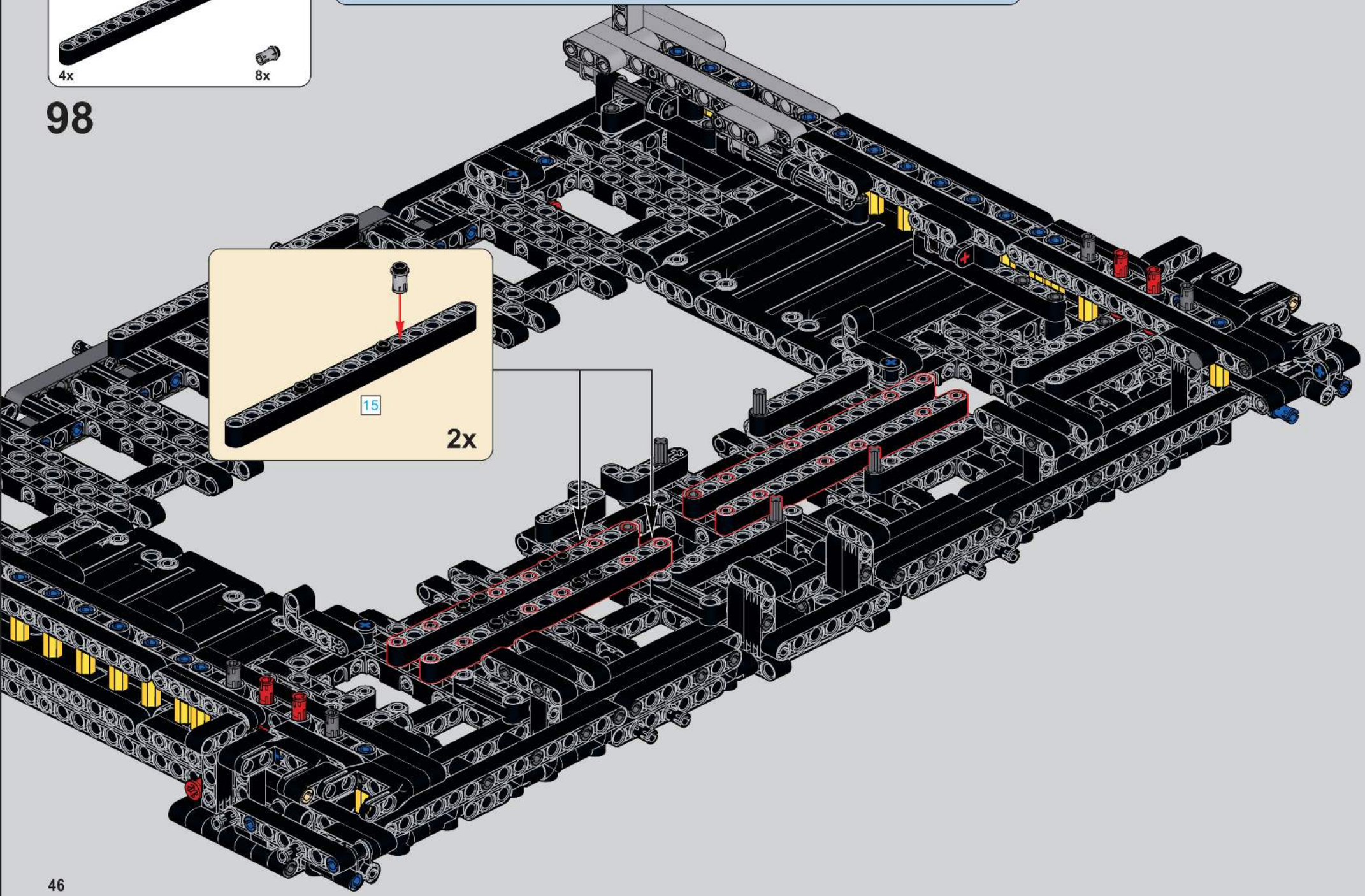

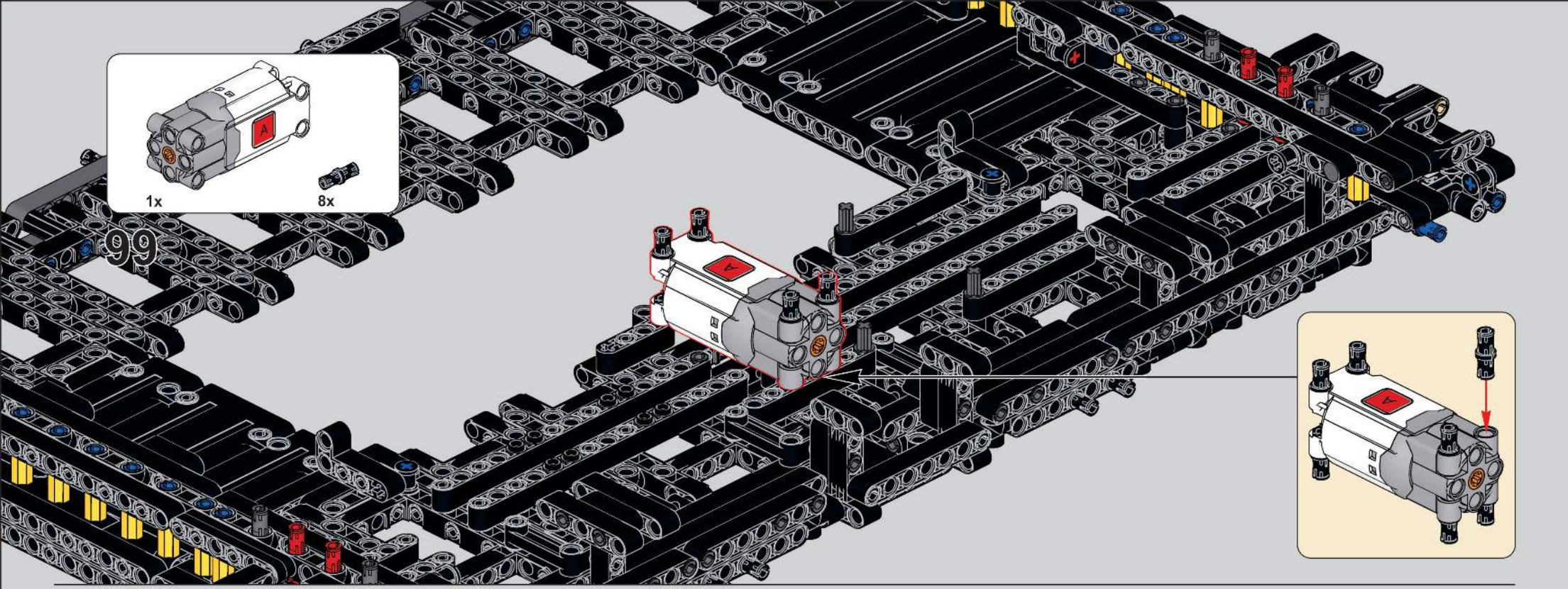
1x
8x
99

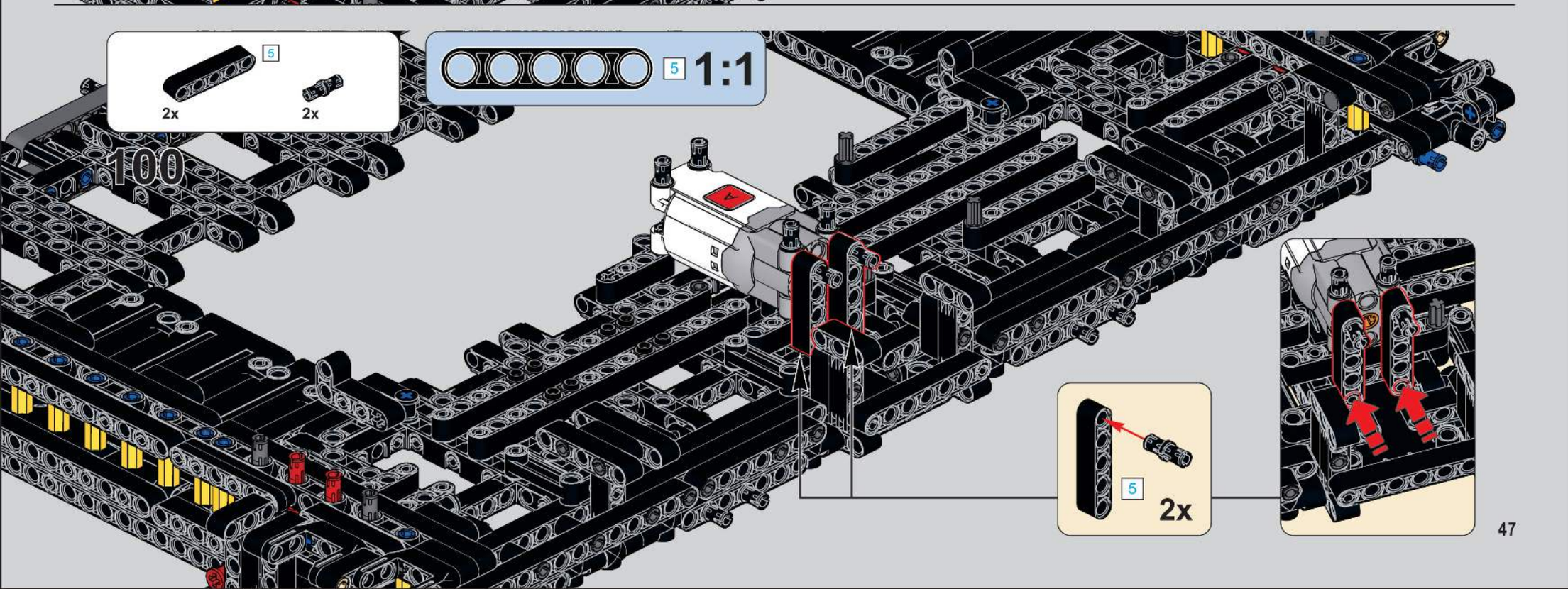
5
2x
2x
5 1:1
100
5
2x

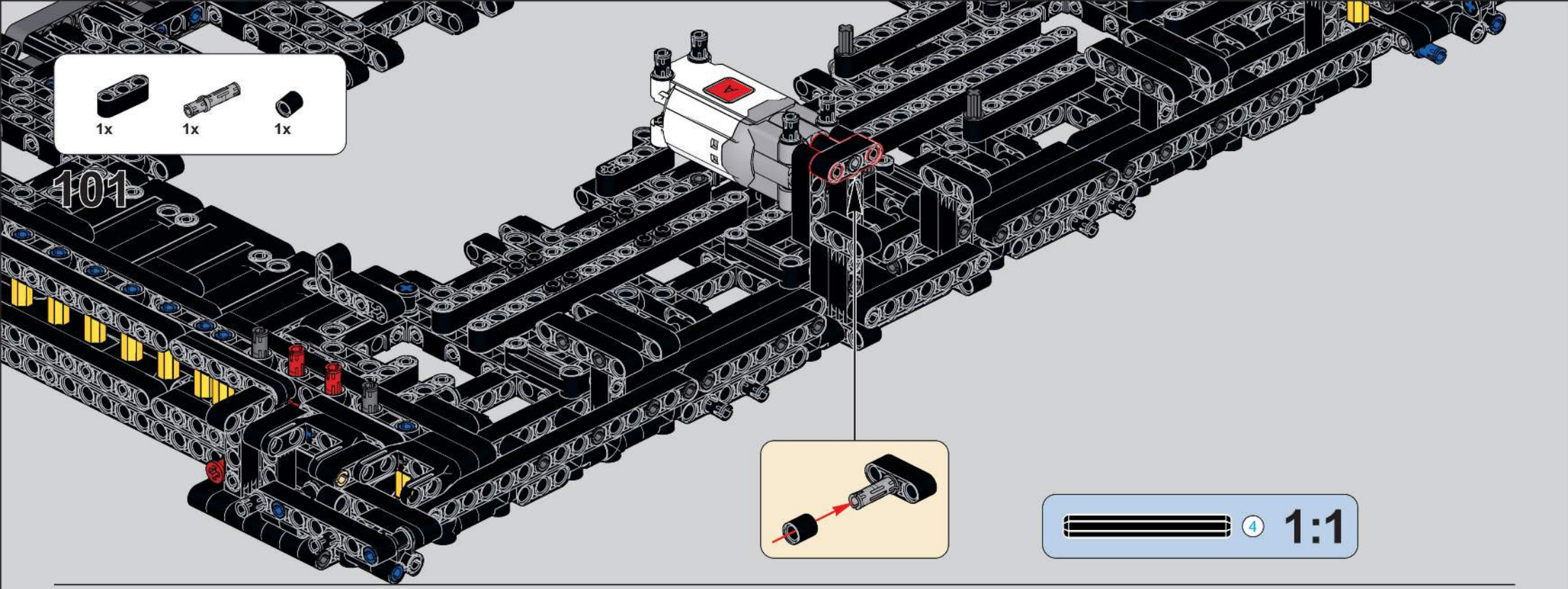
1x
1x
1x
101
4
1:1

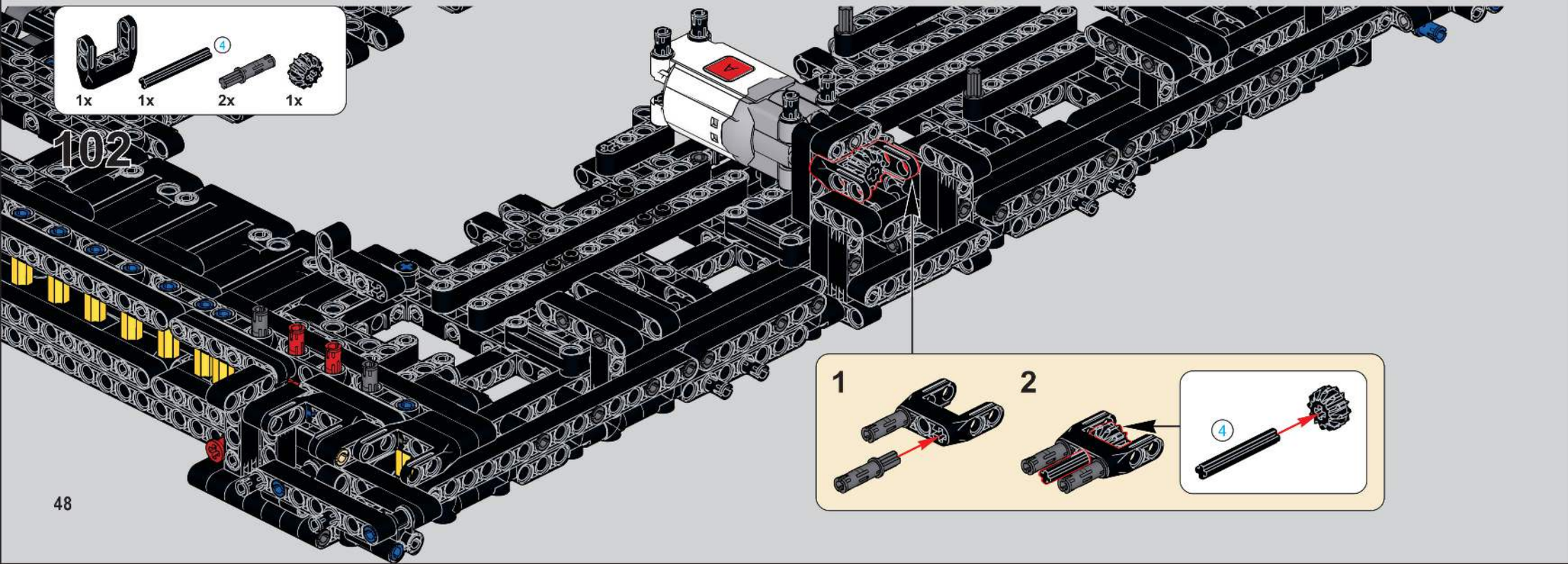
1x
1x
4
2x
1x
102
1
2
4

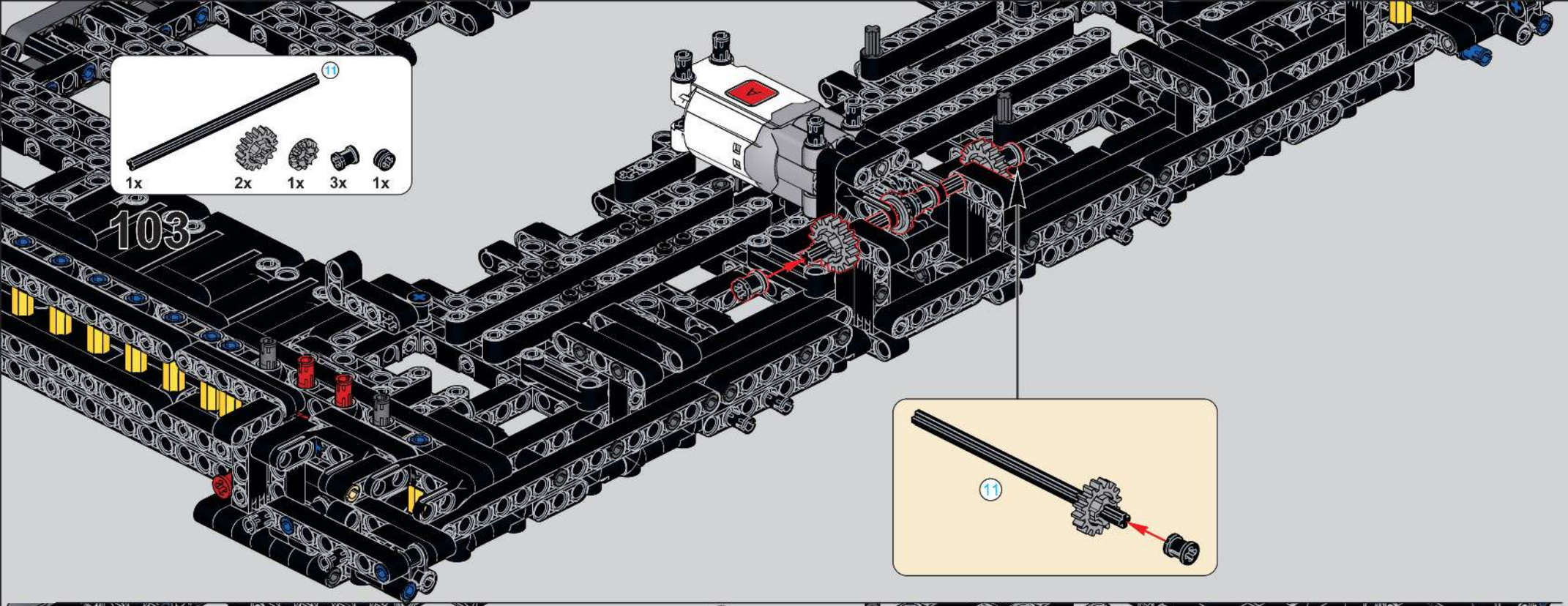
11
1x
2x
1x
3x
1x
103
11

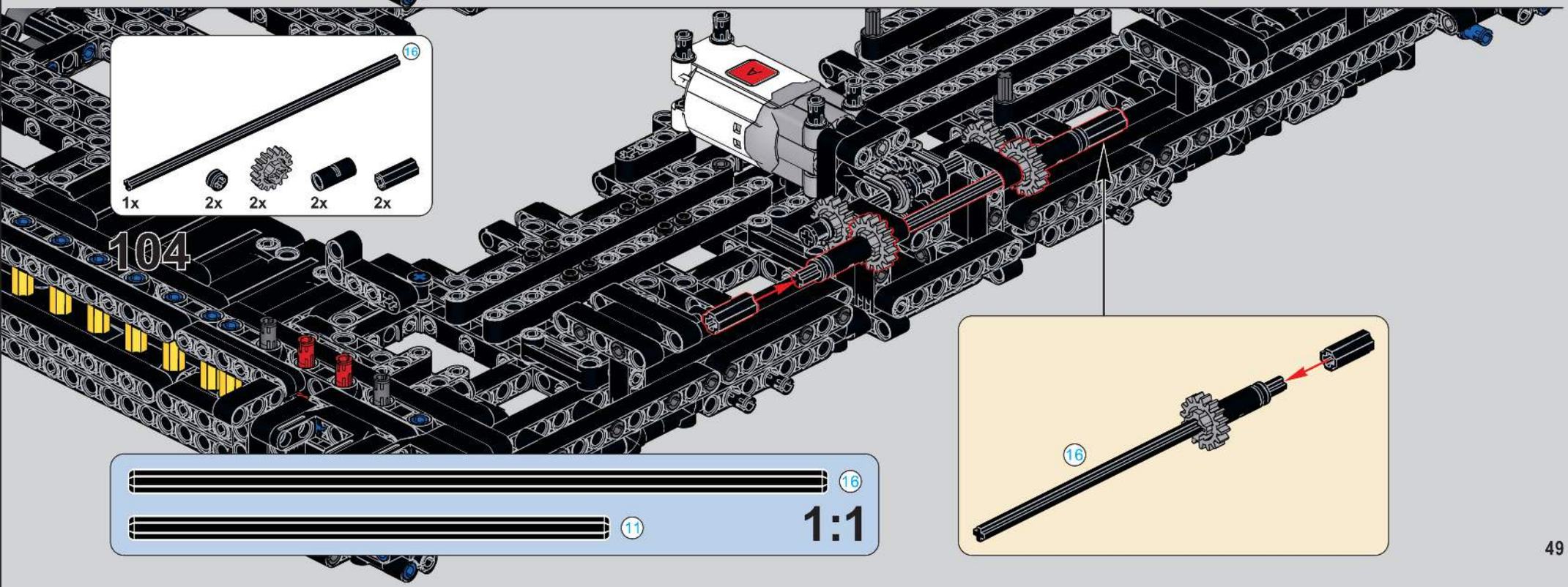
16
1x
2x
2x
2x
2x
104
16
16
11
1:1

105

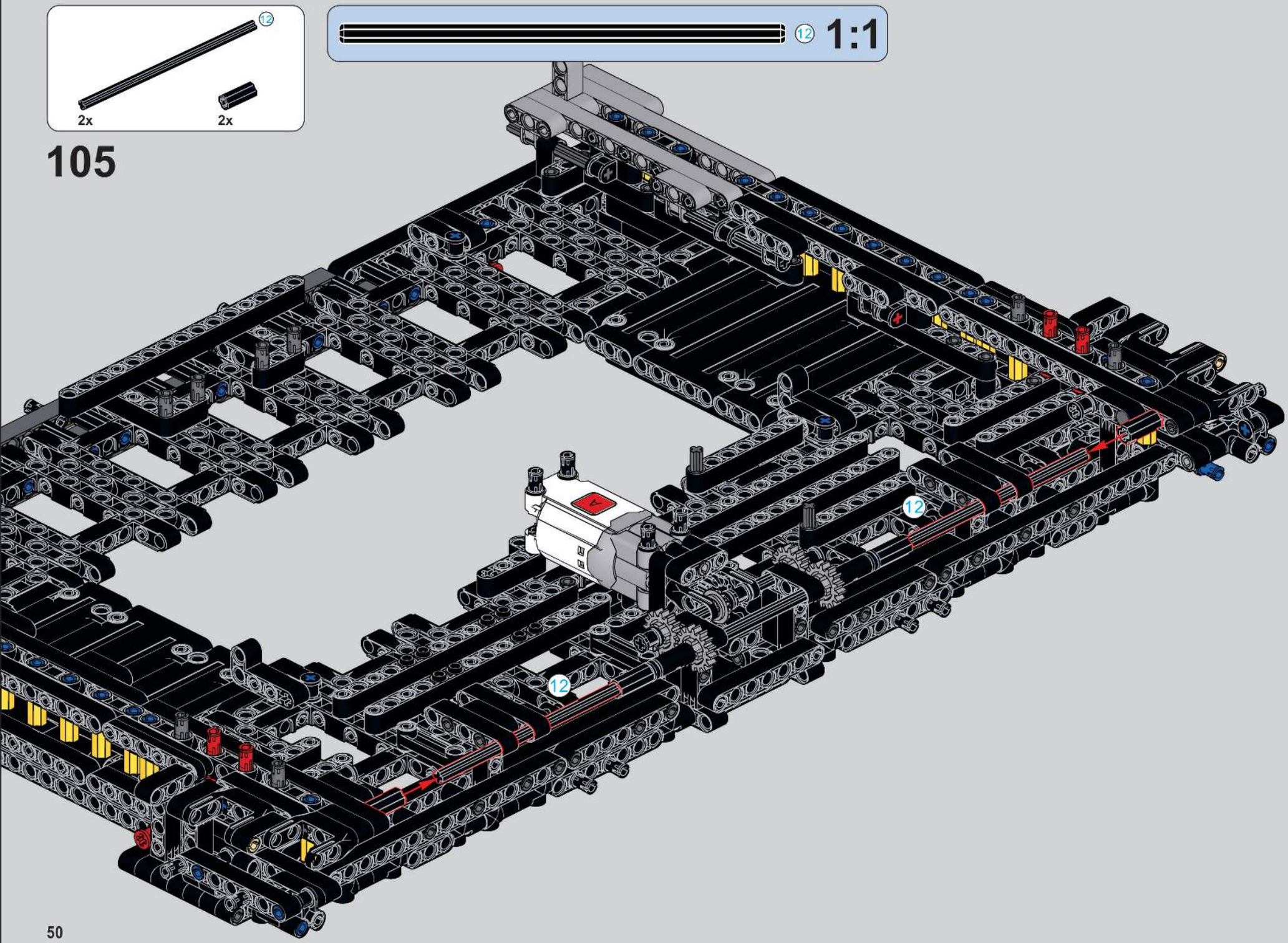

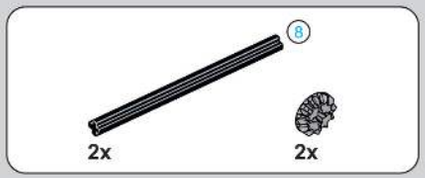

106

107

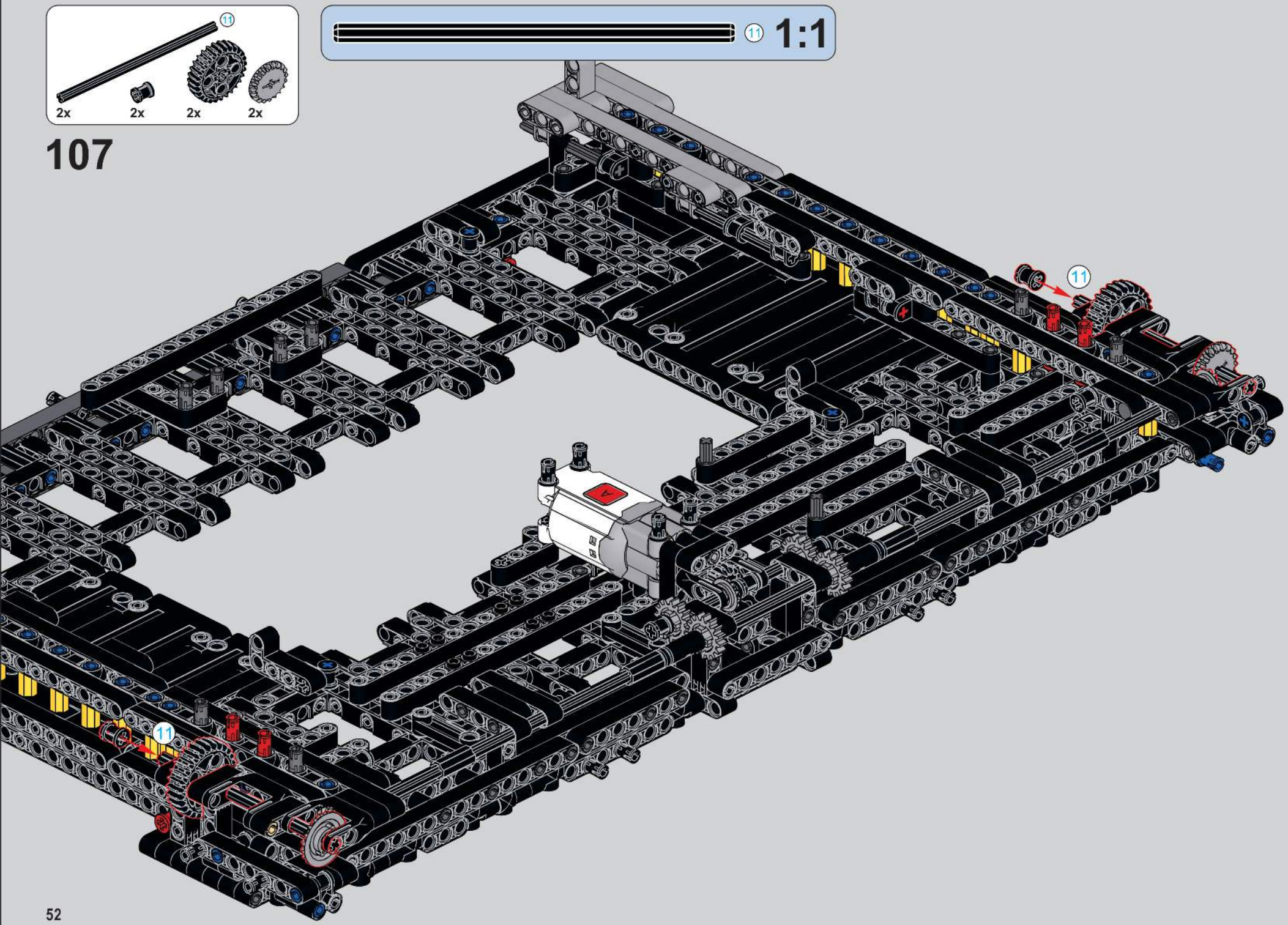

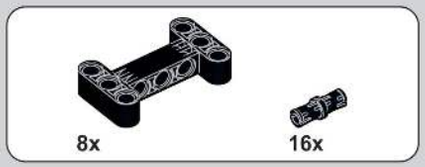

108

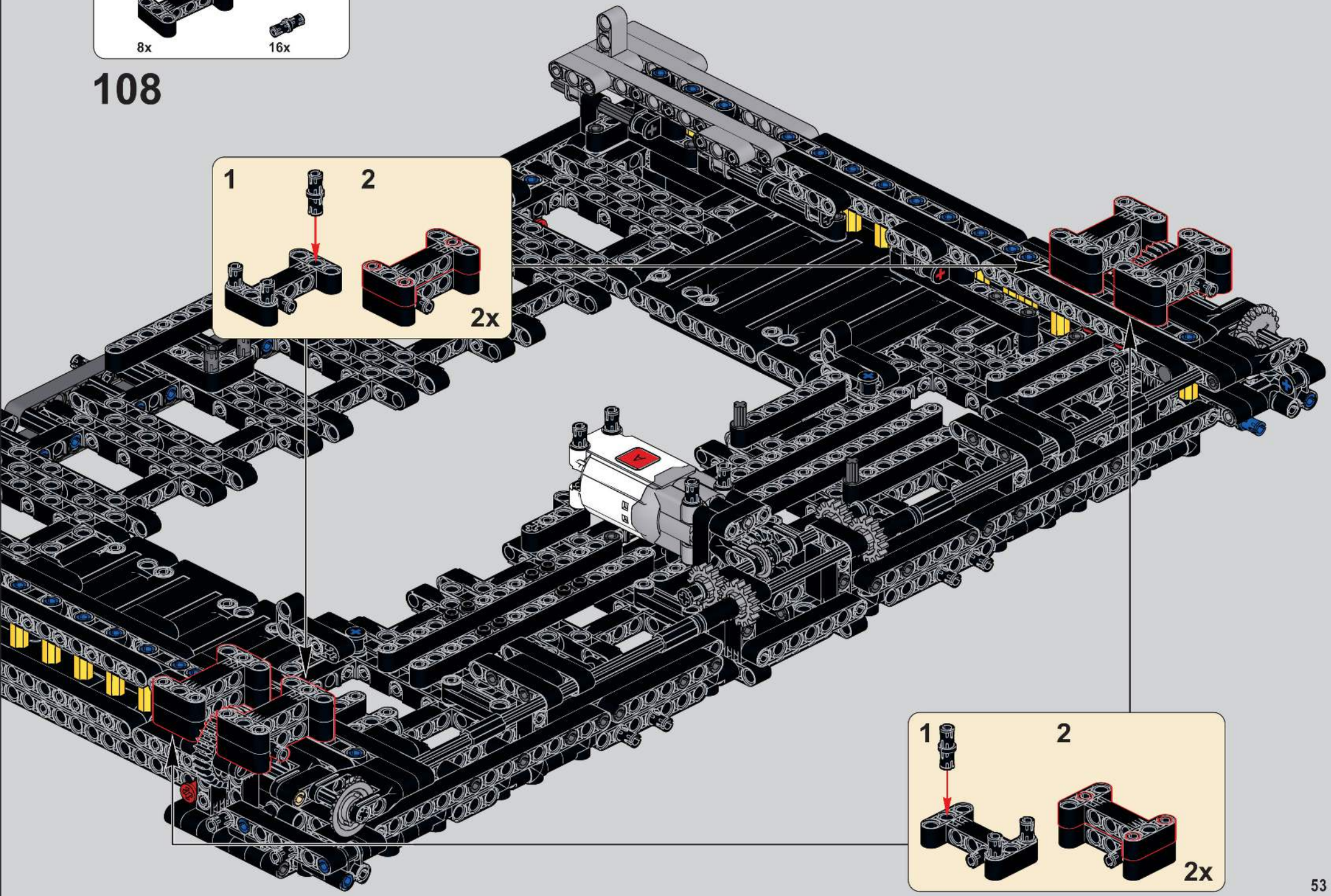

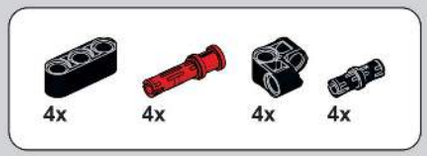

109

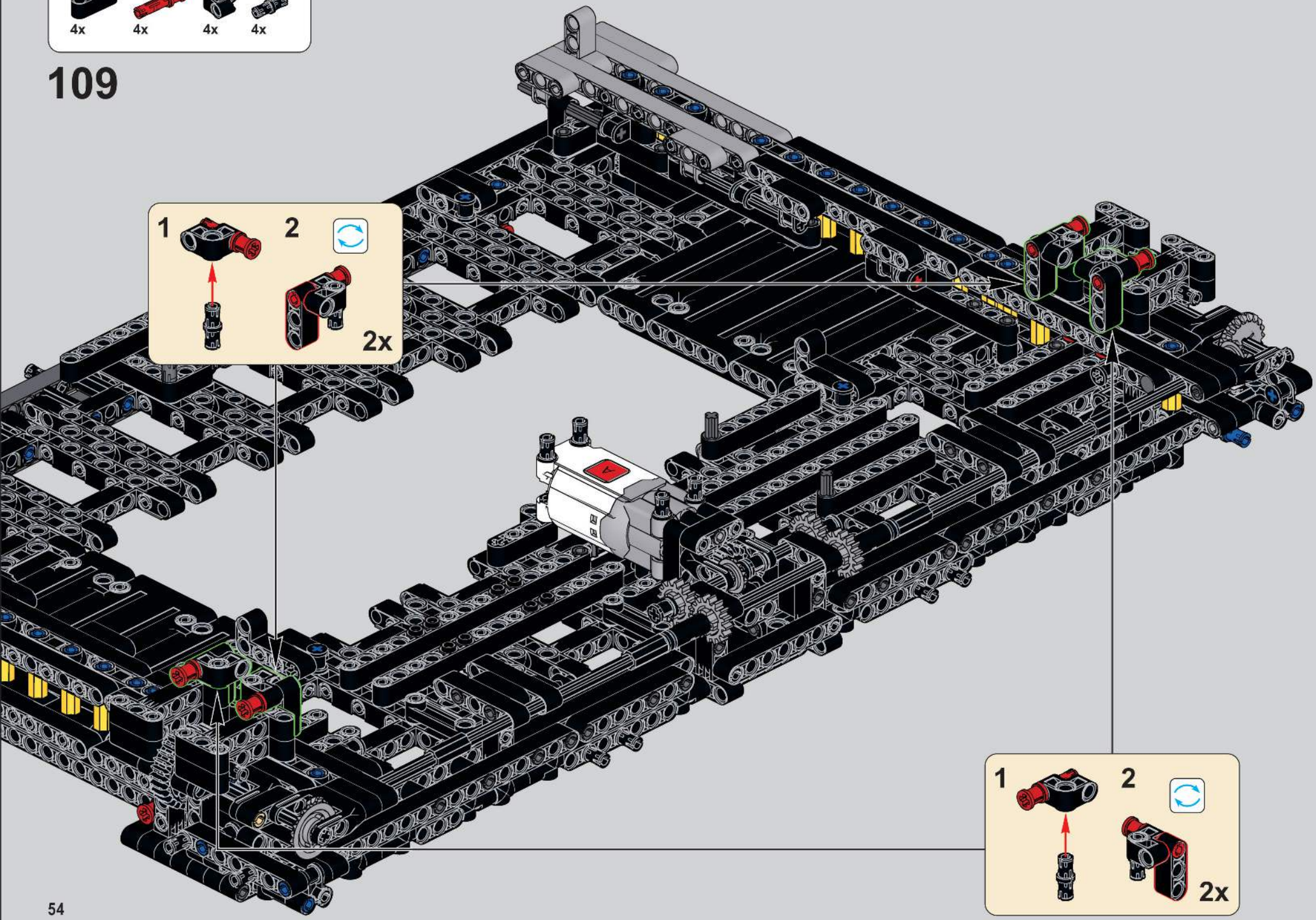

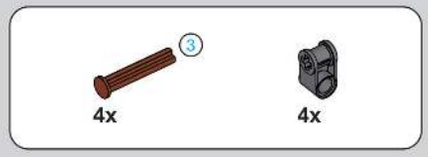

110

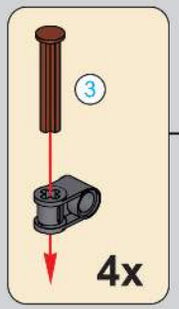

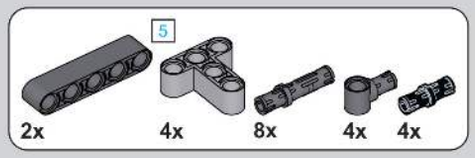

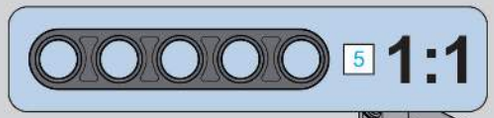

111

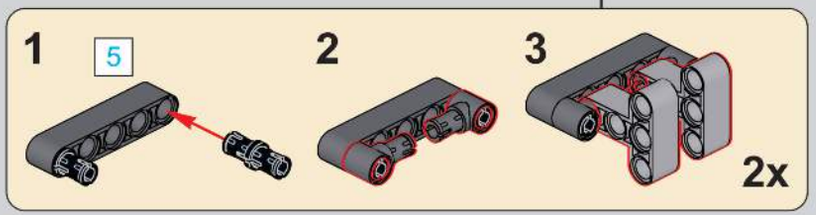

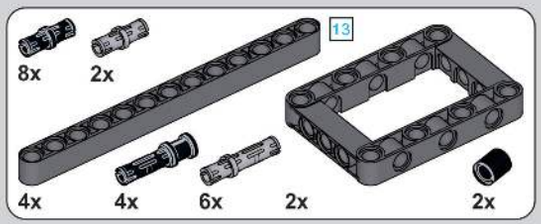

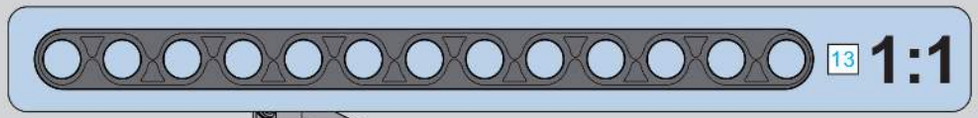

112

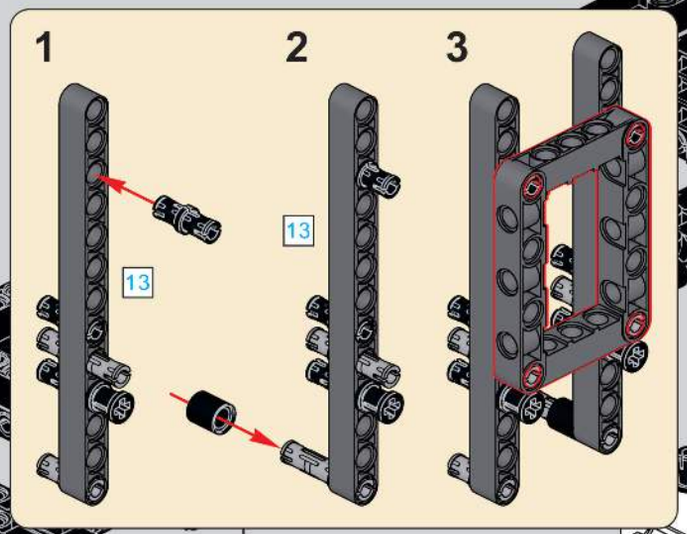

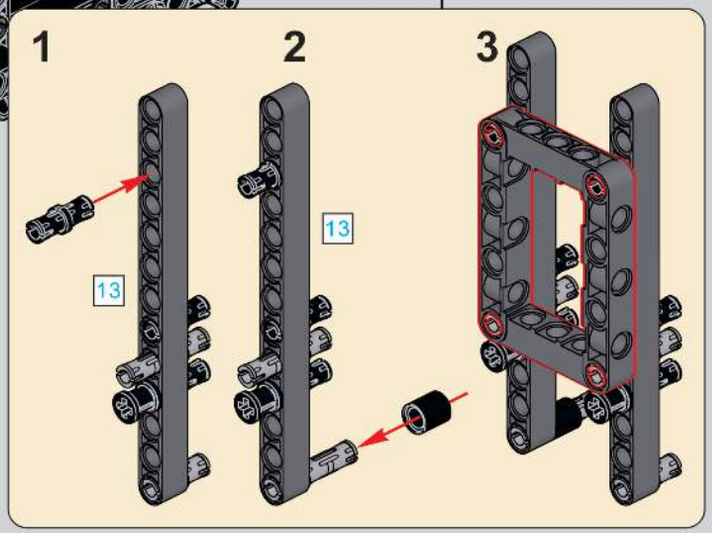

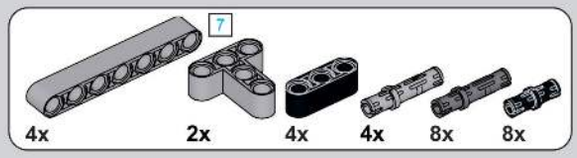

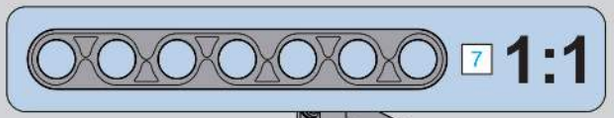

113

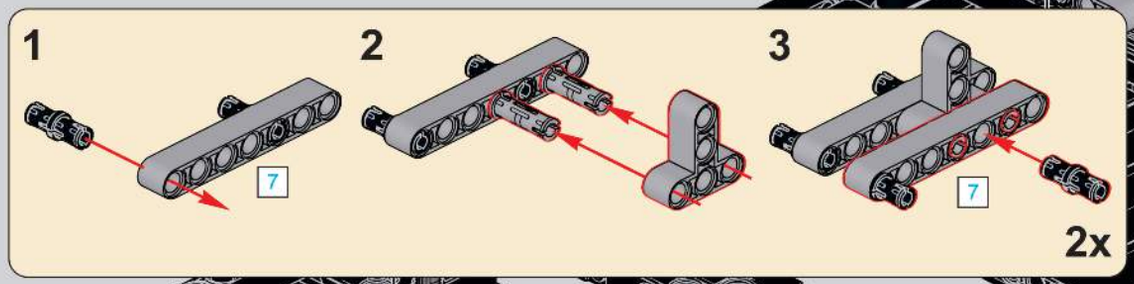

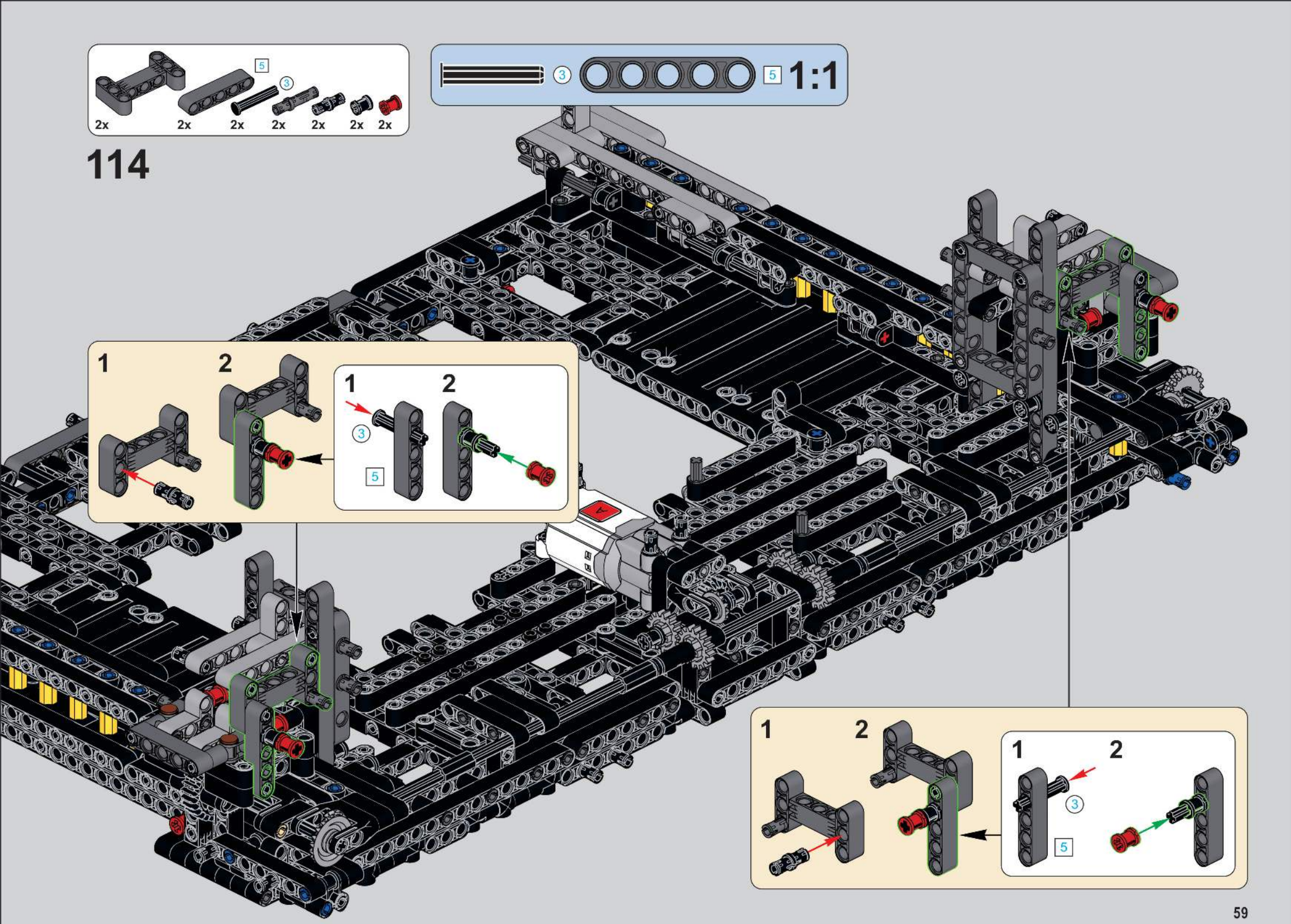
5
3
2x
2x
2x
2x
2x
2x
2x
3
5
1:1
114
1
2
1
2
3
5
1
2
1
2
3
5

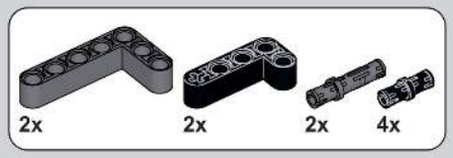

115

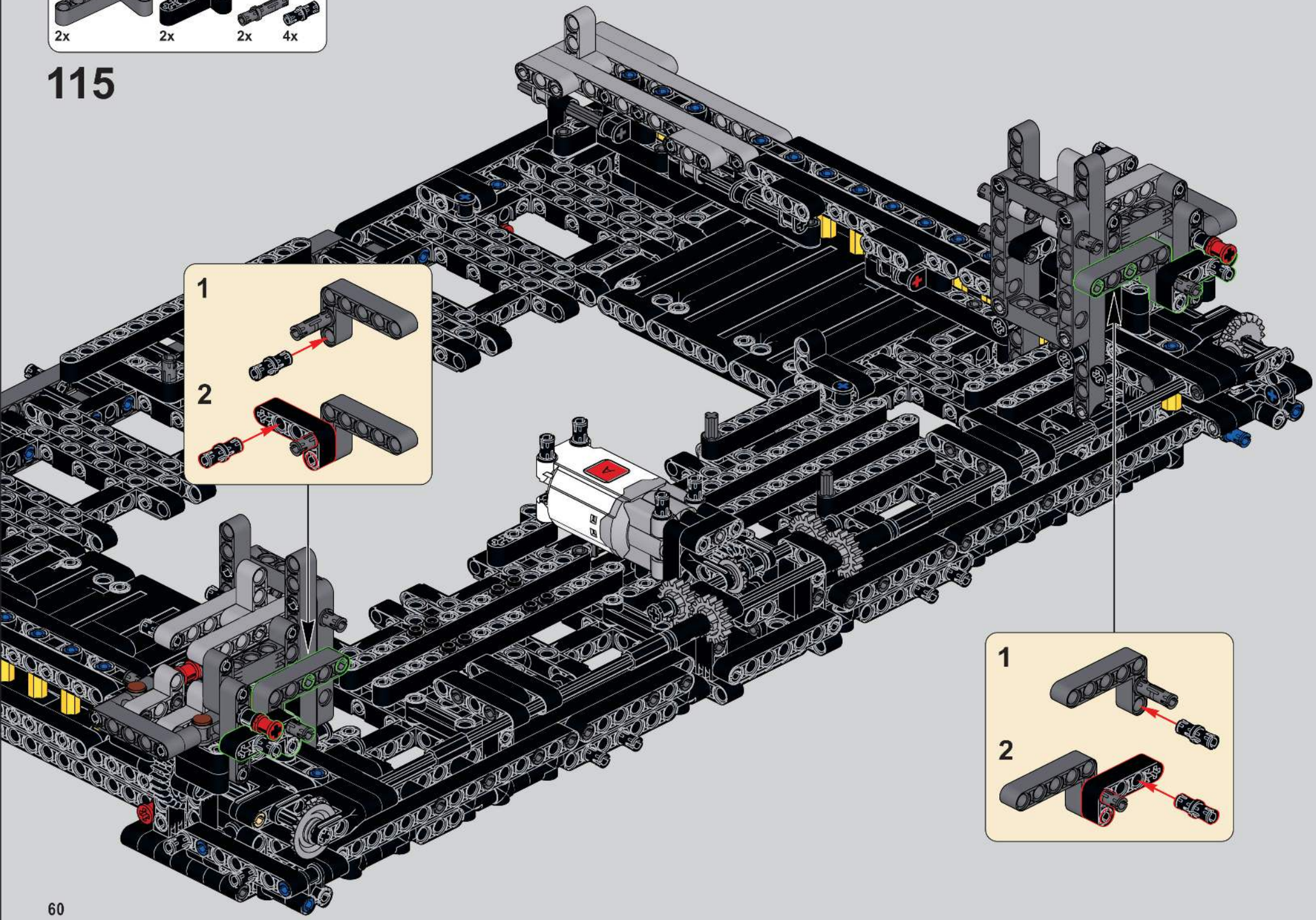

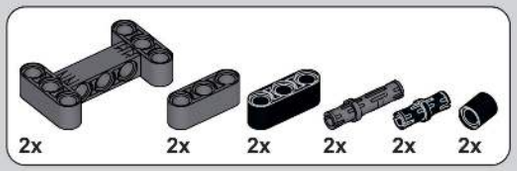

116

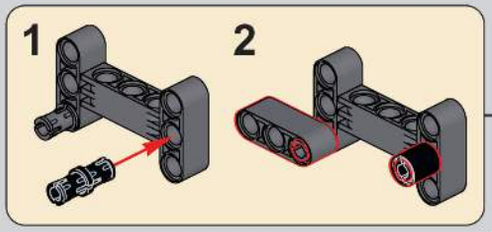

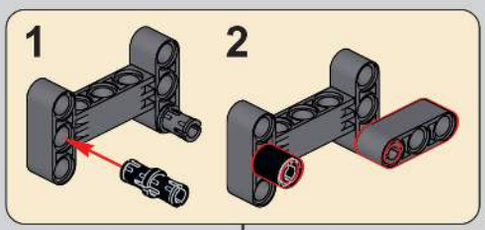

117

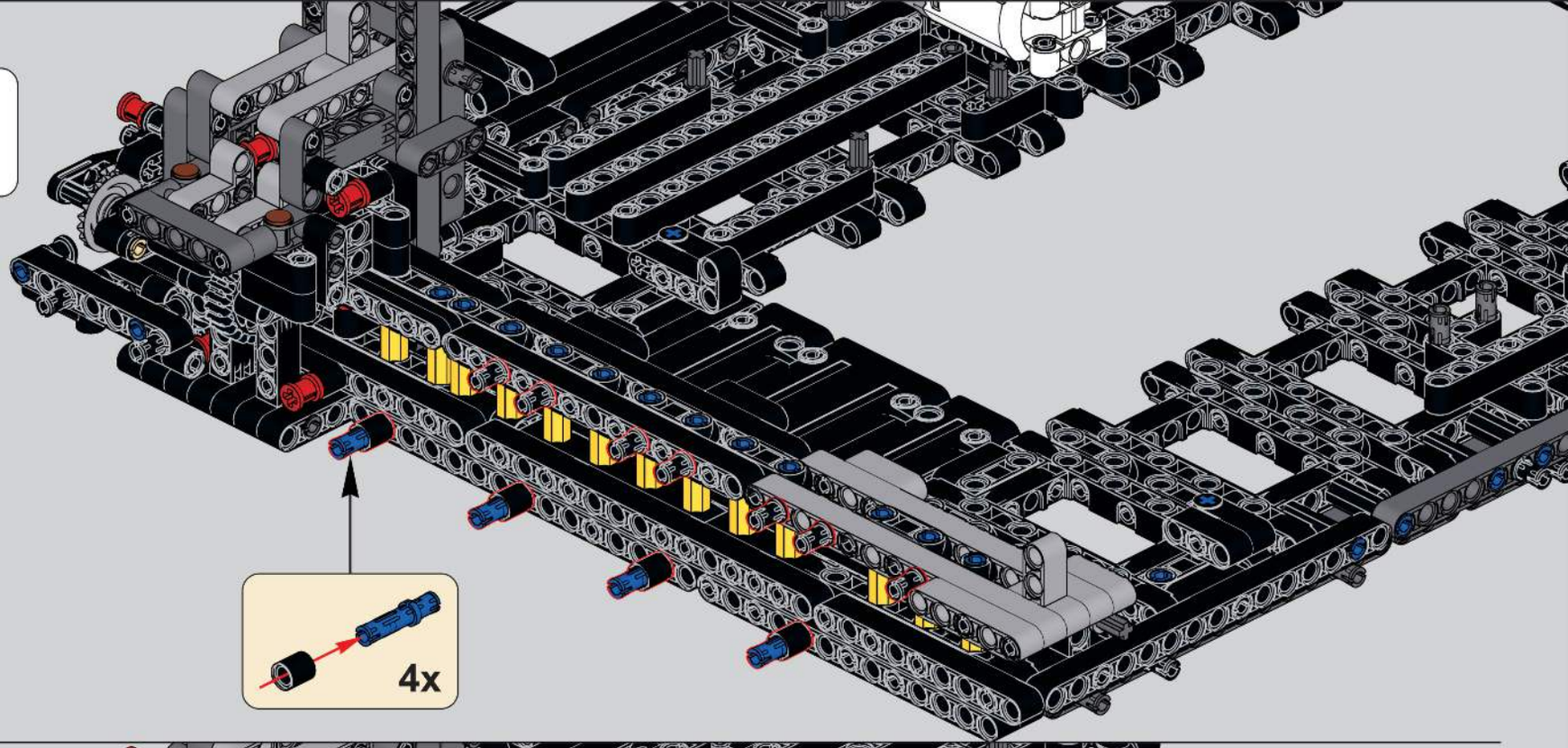

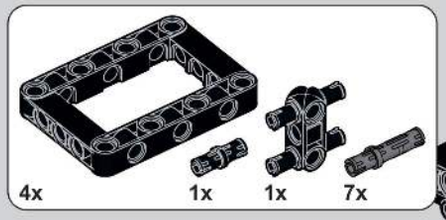

118

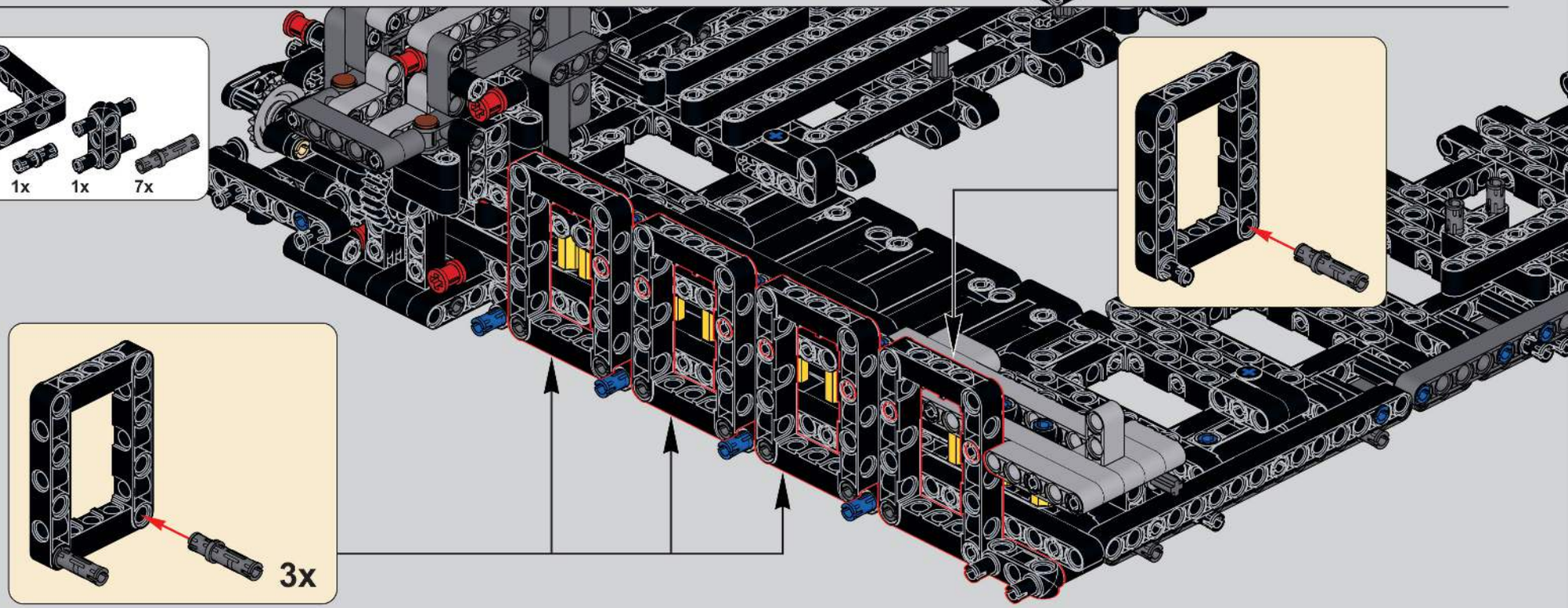

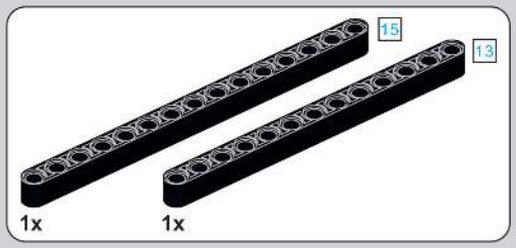

119

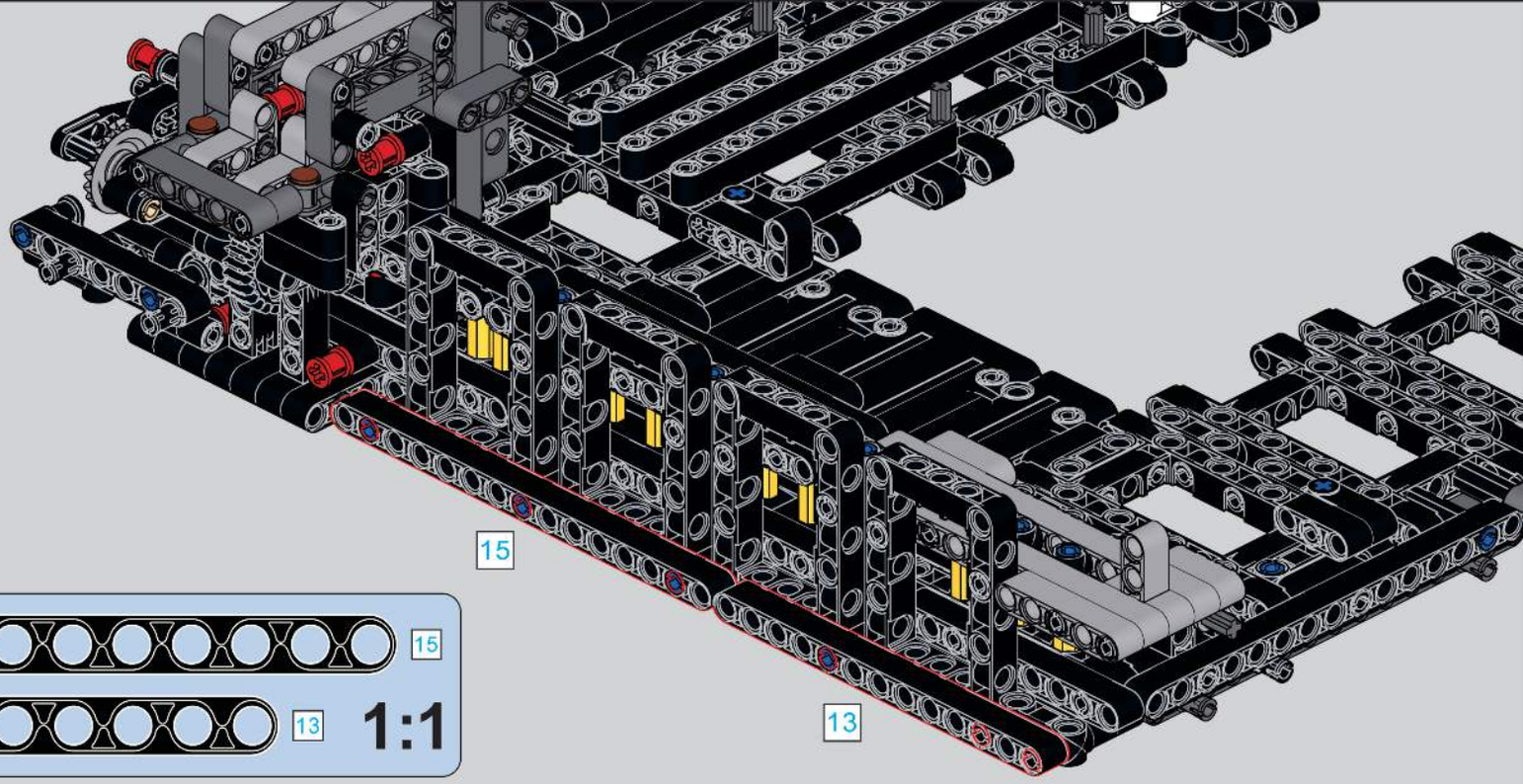

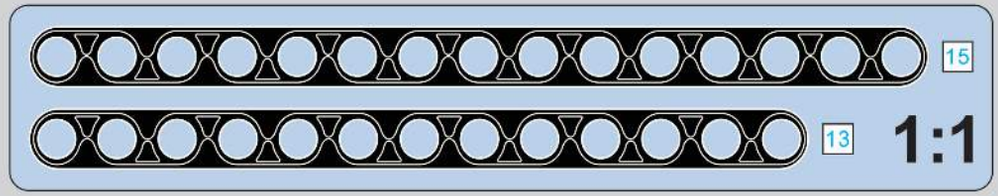

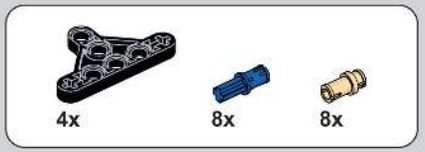

120

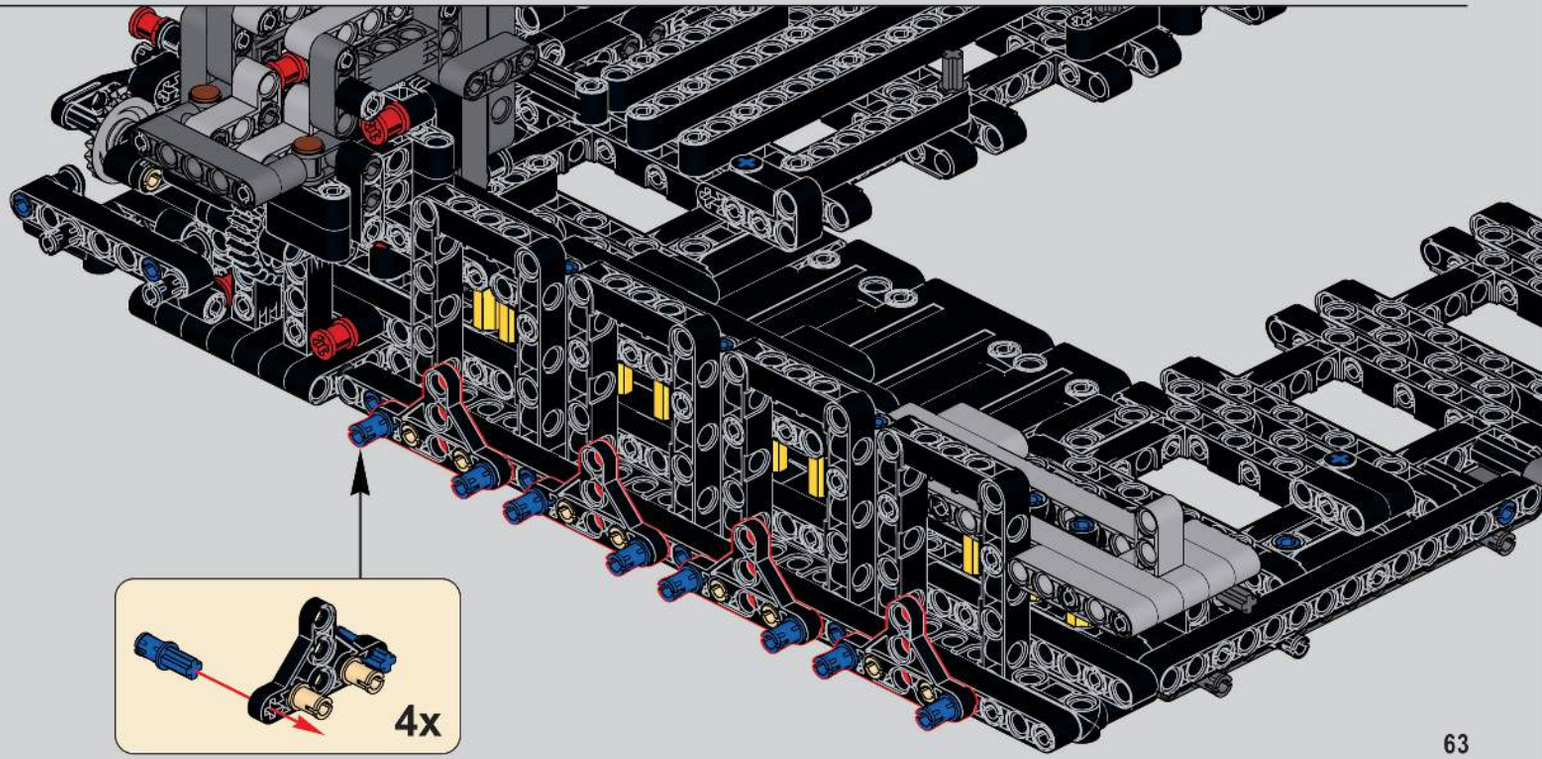

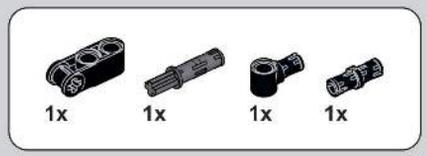

121

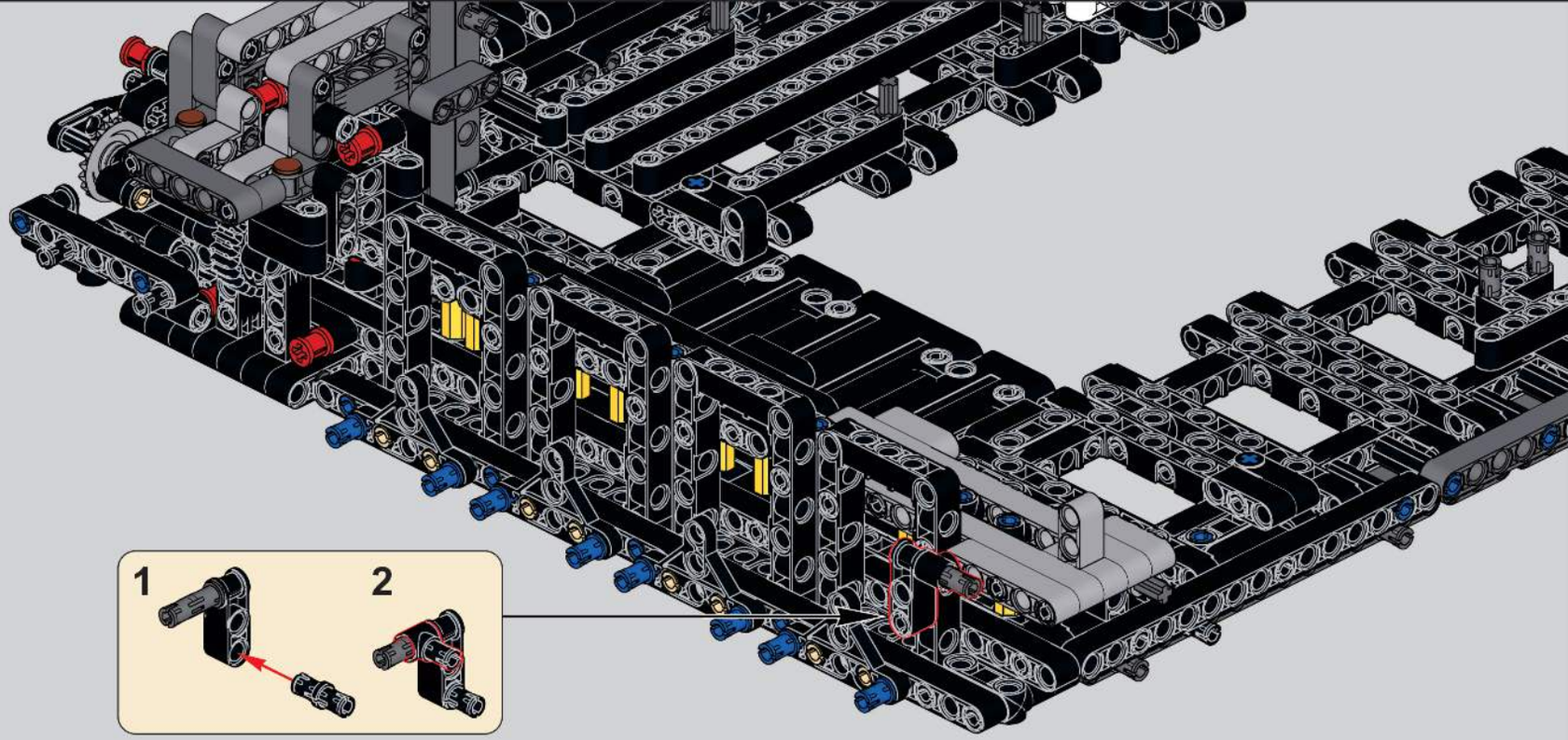

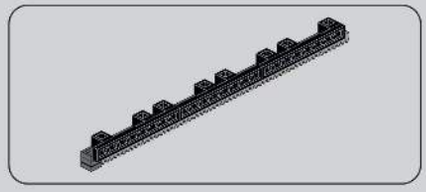

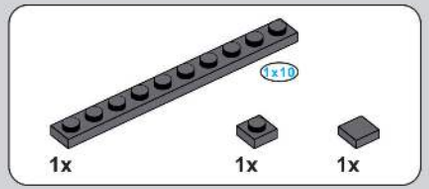

122

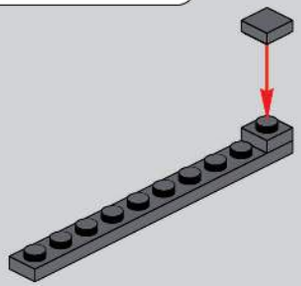

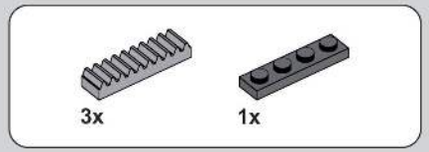

123

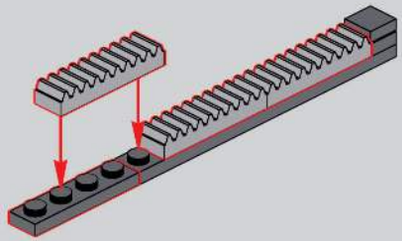

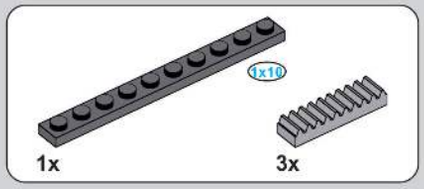

124

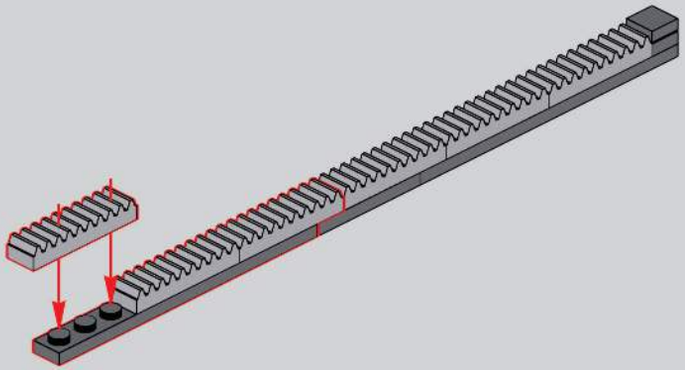

125

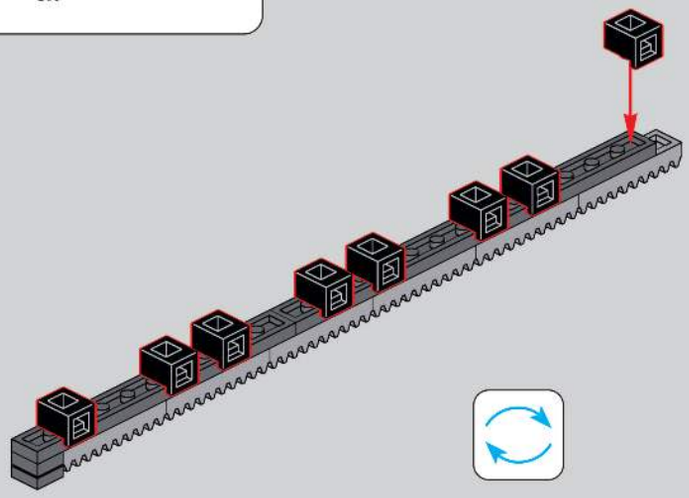

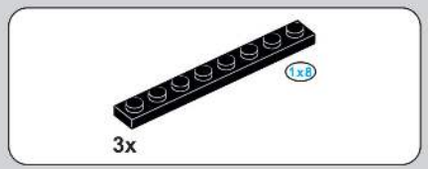

126

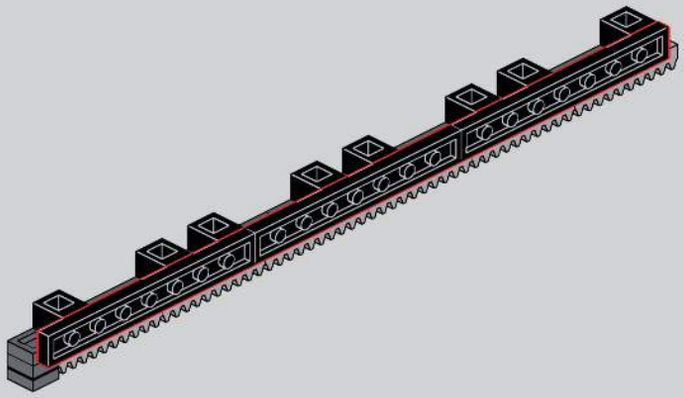

127

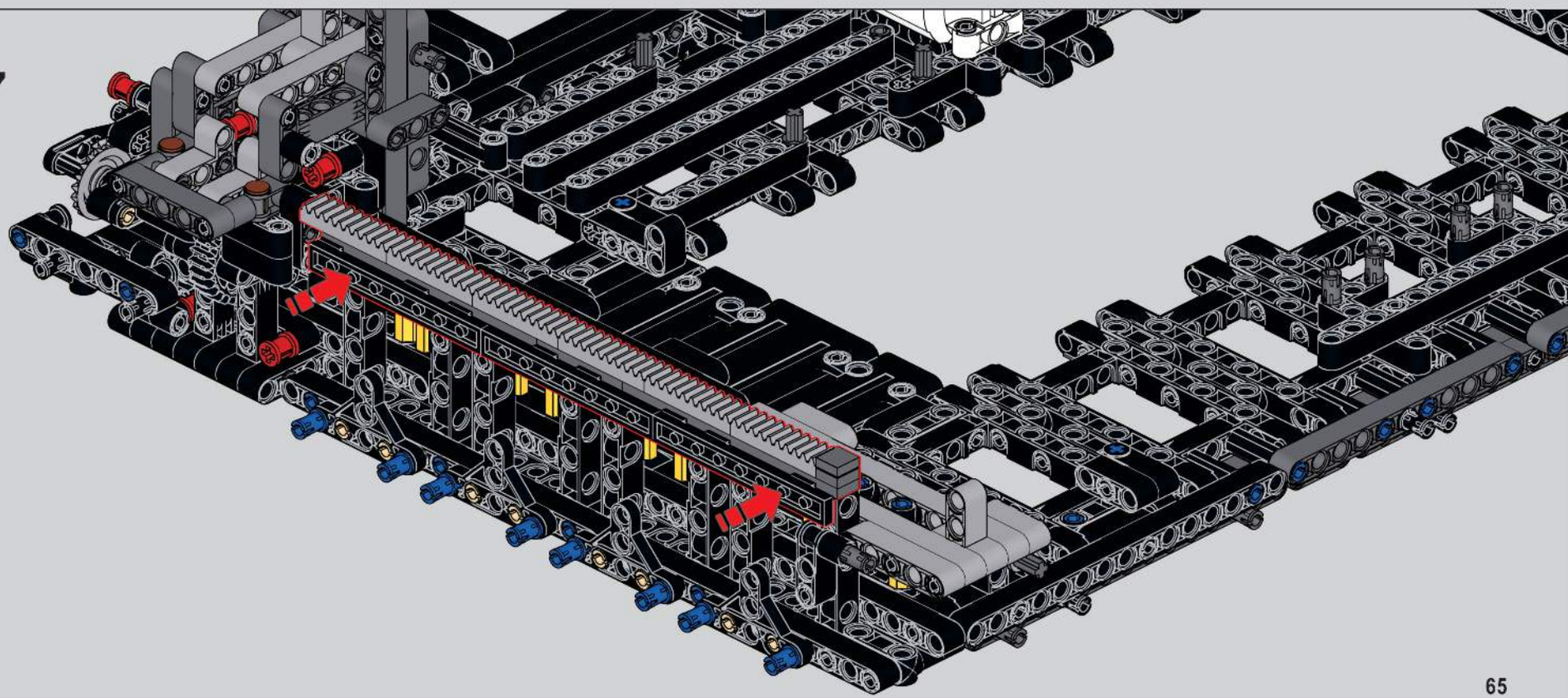

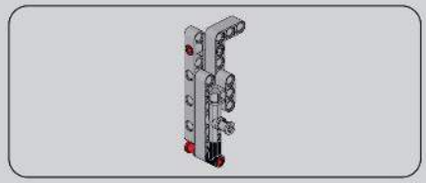

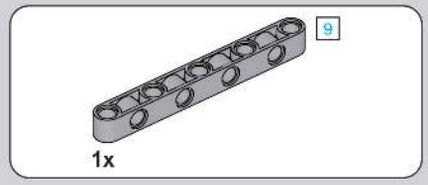

129

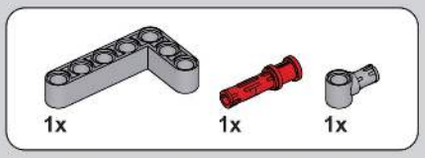

130

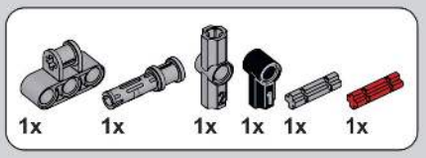

131

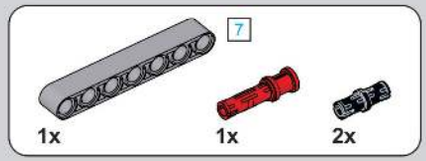

128

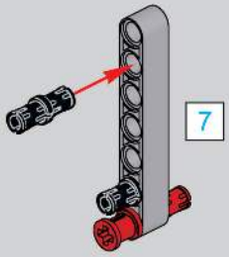

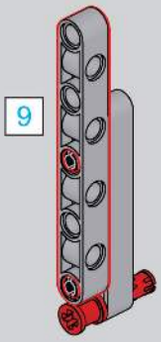

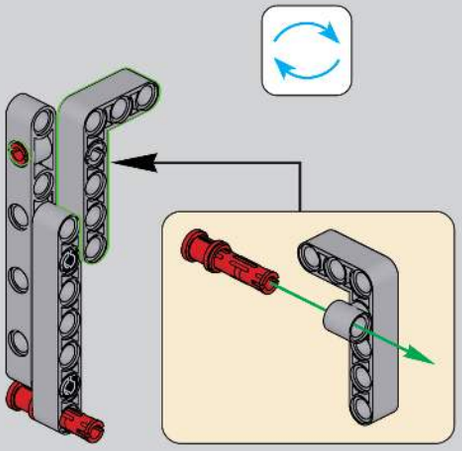

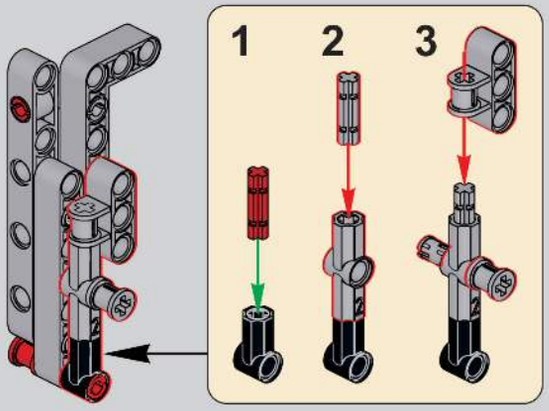

132

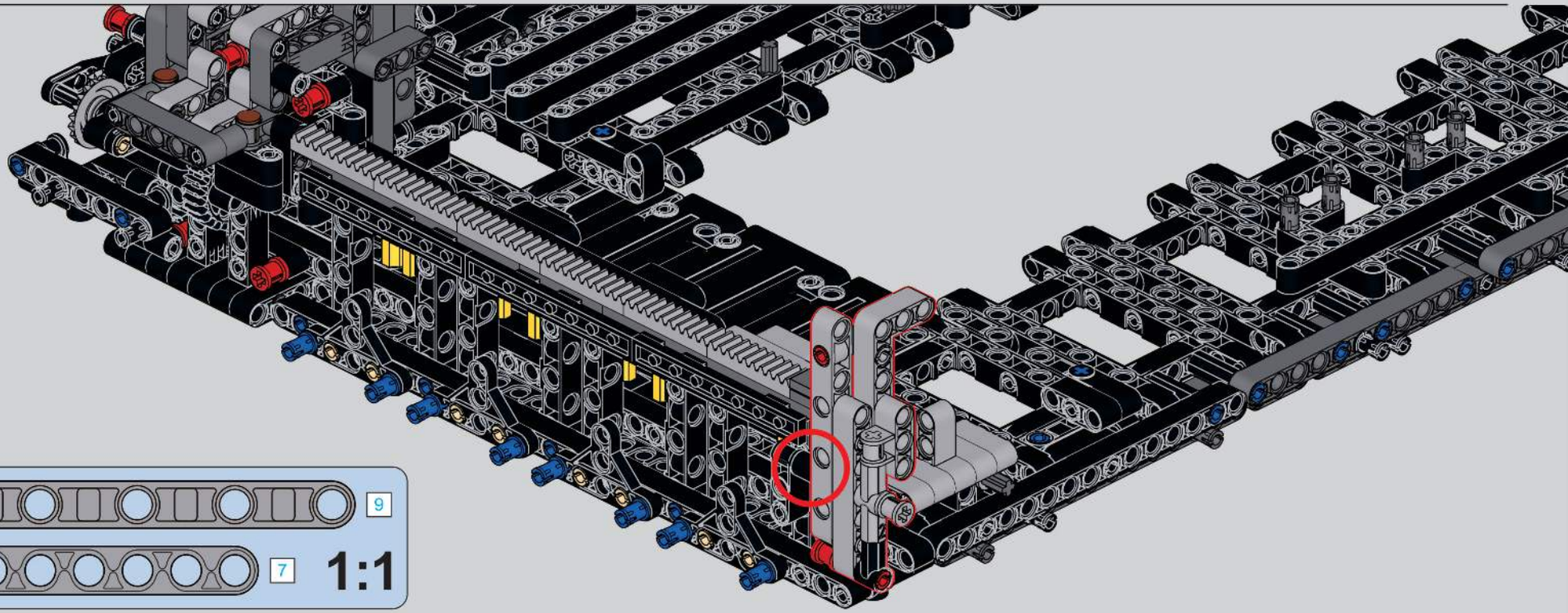

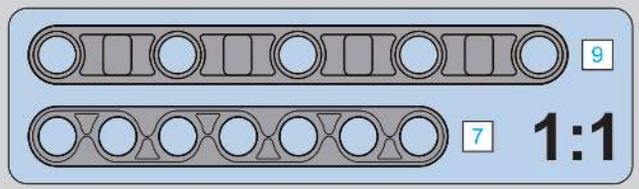

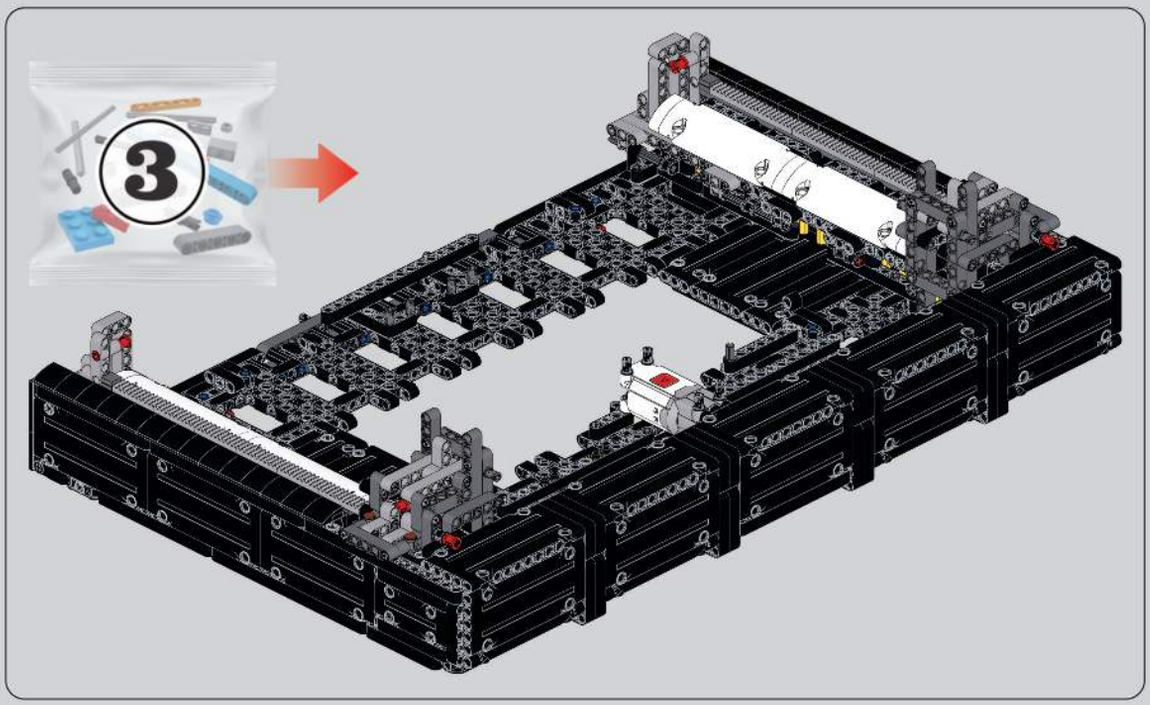

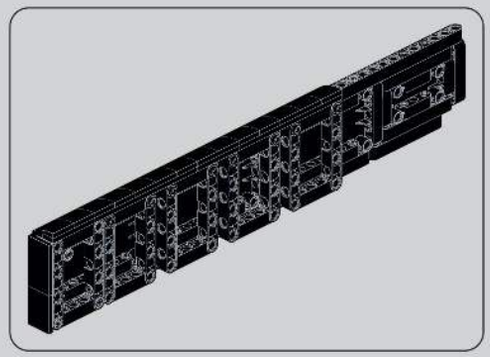

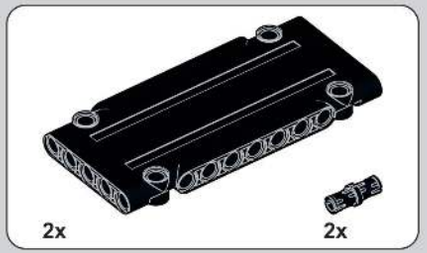

133

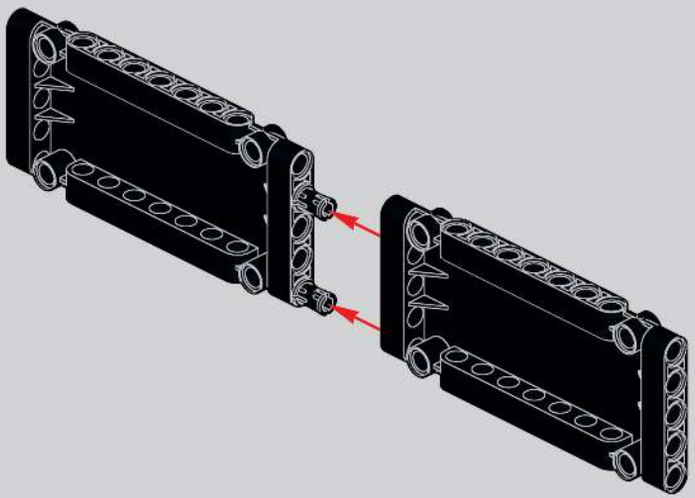

134

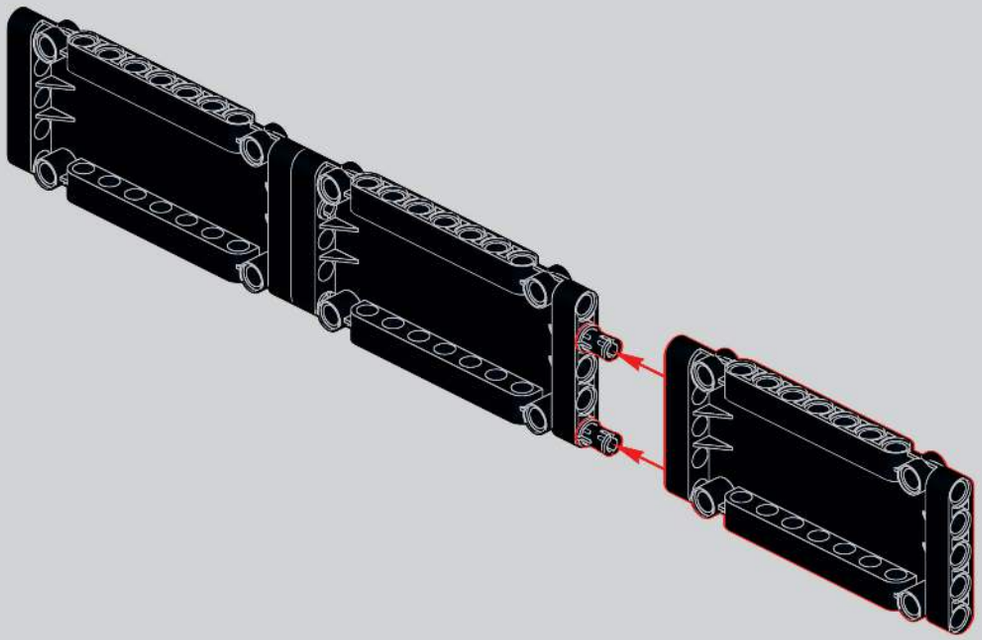

135

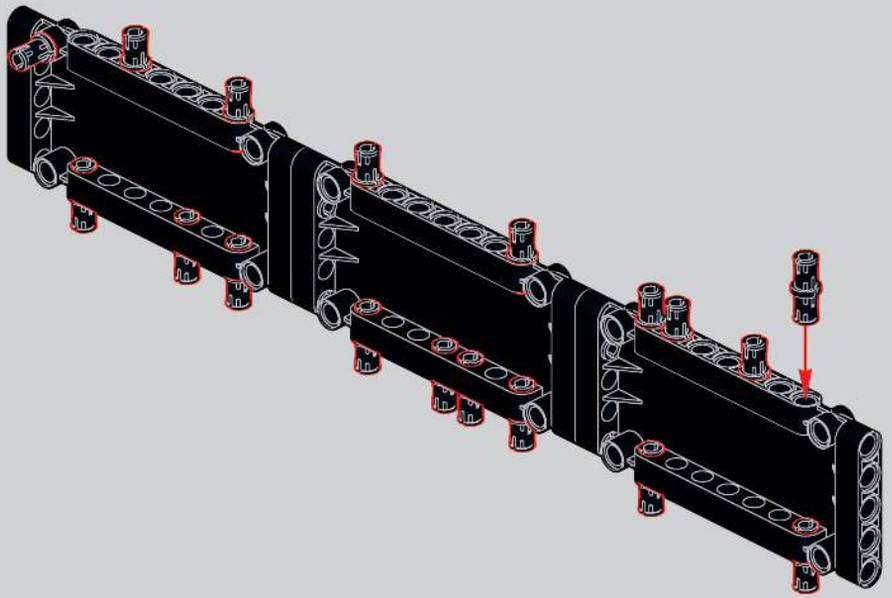

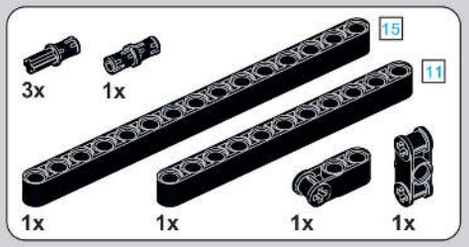

136

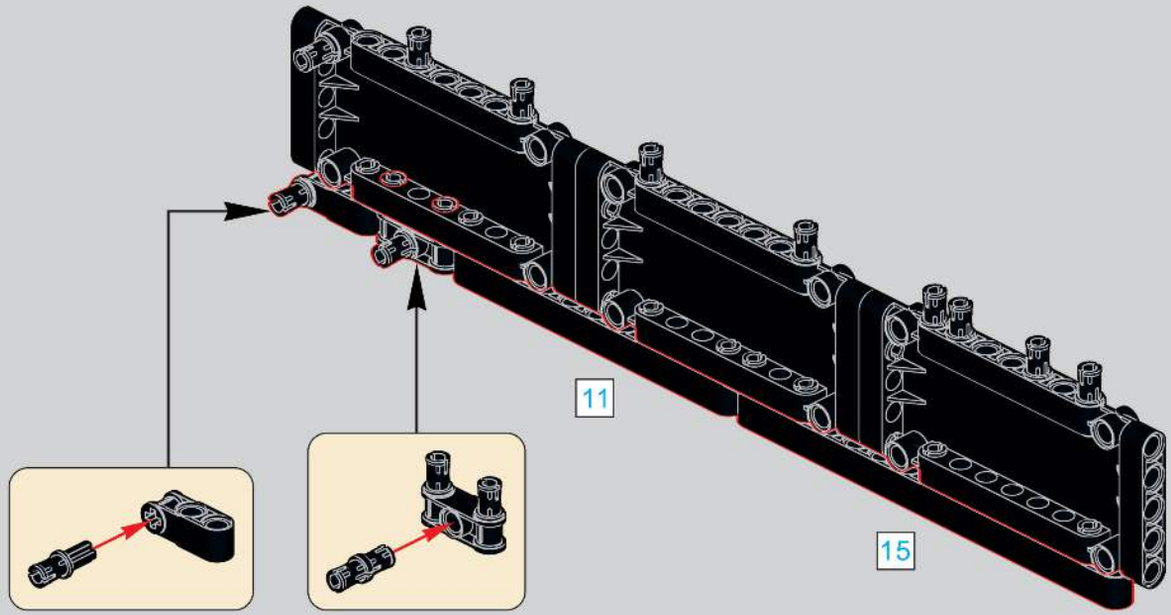

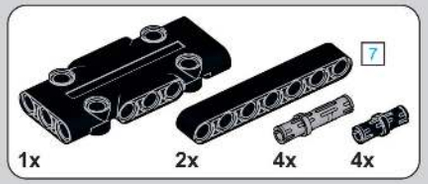

137

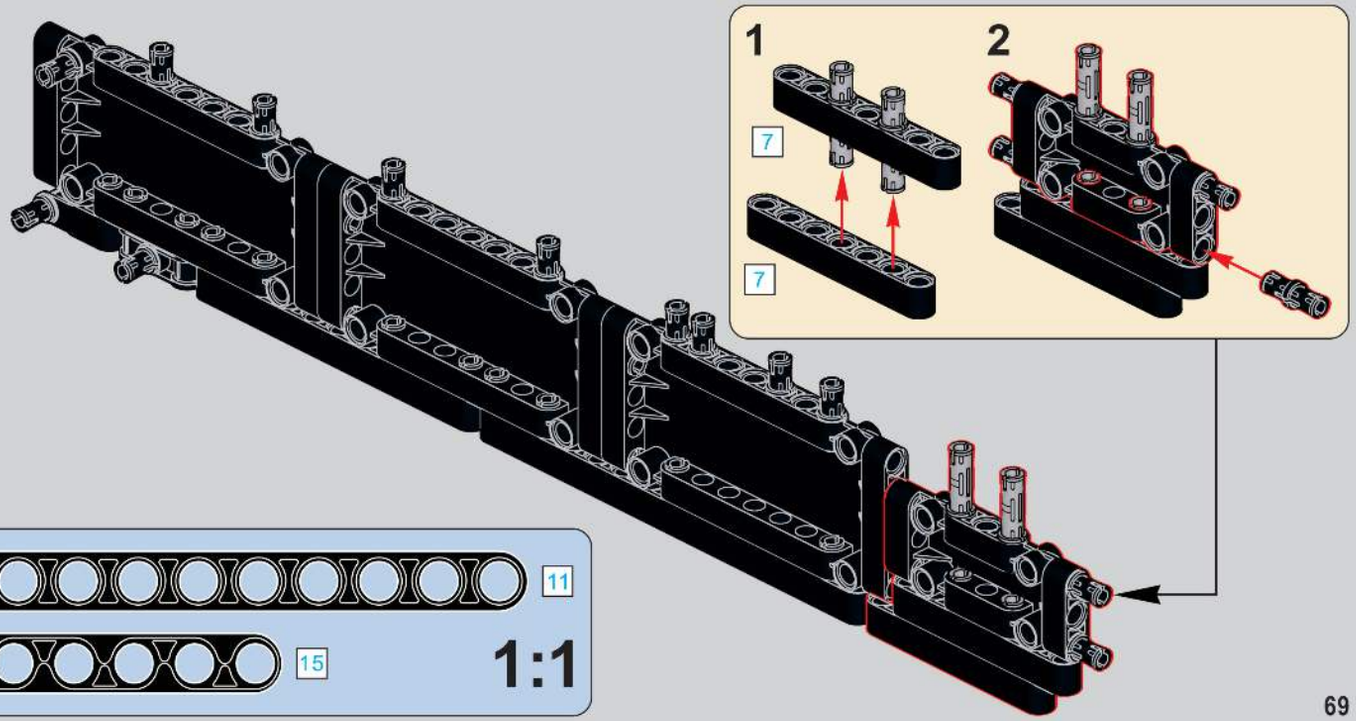

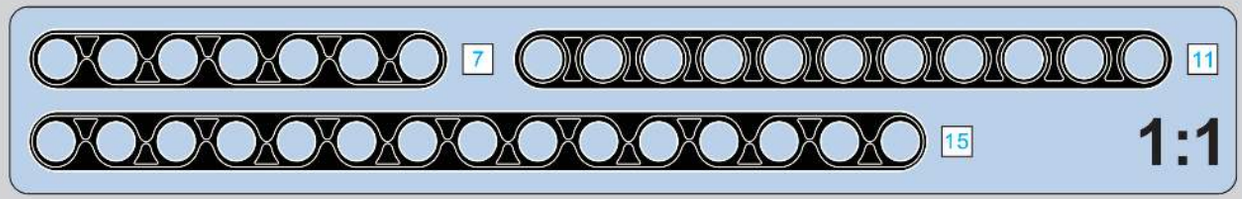

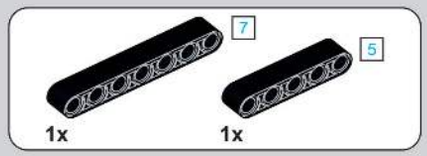

138

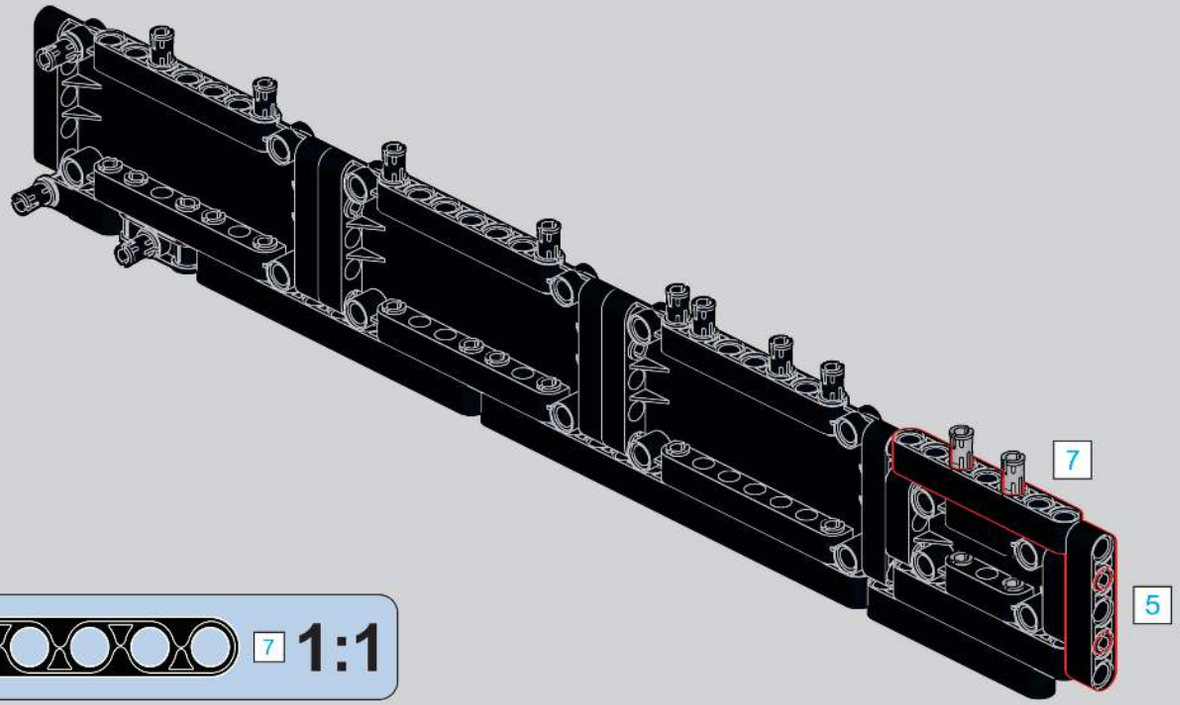

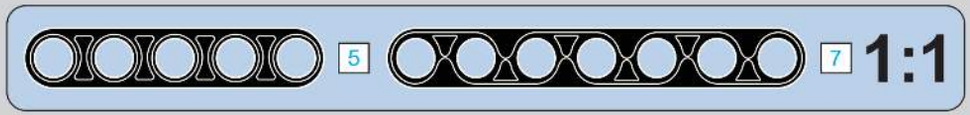

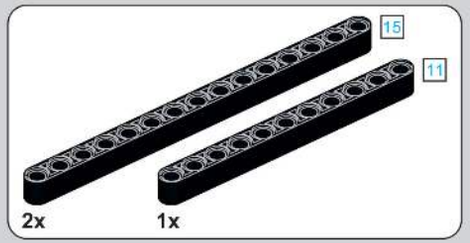

139

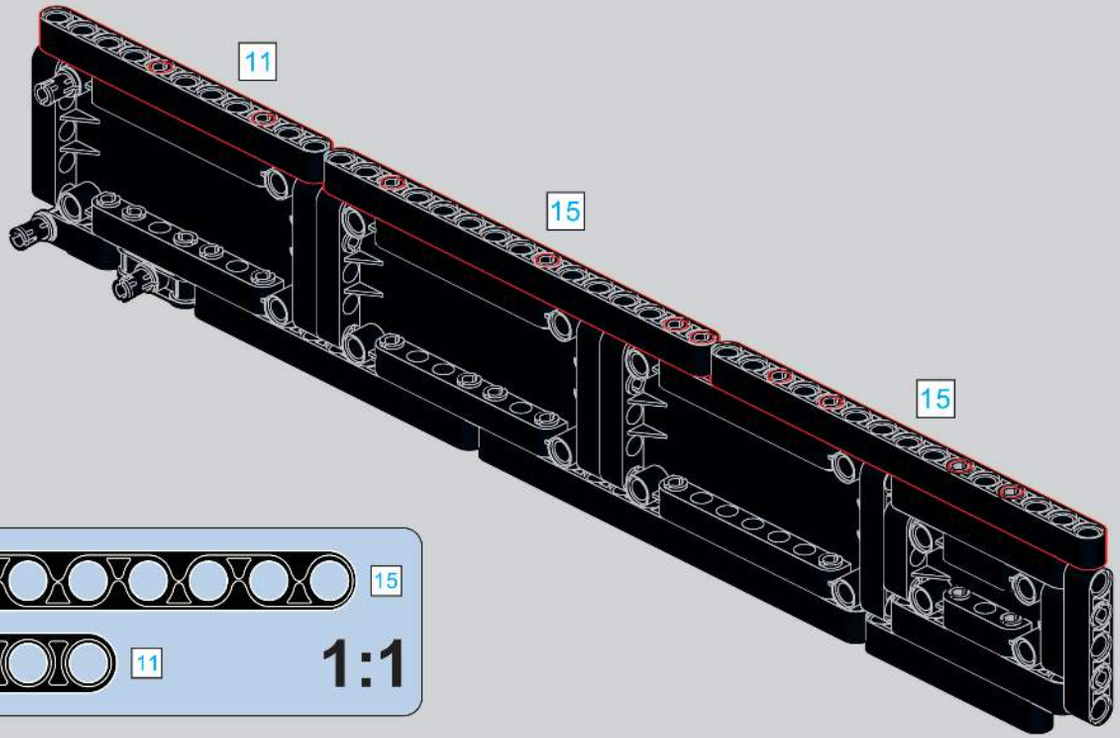

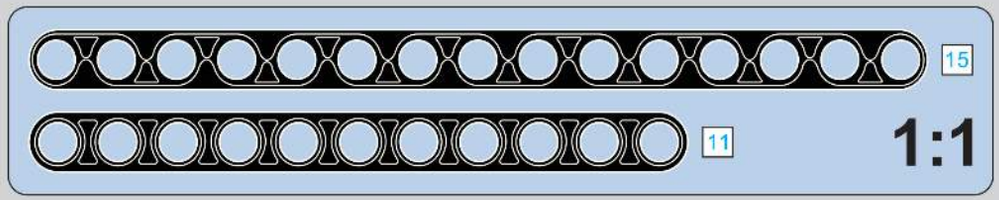

140

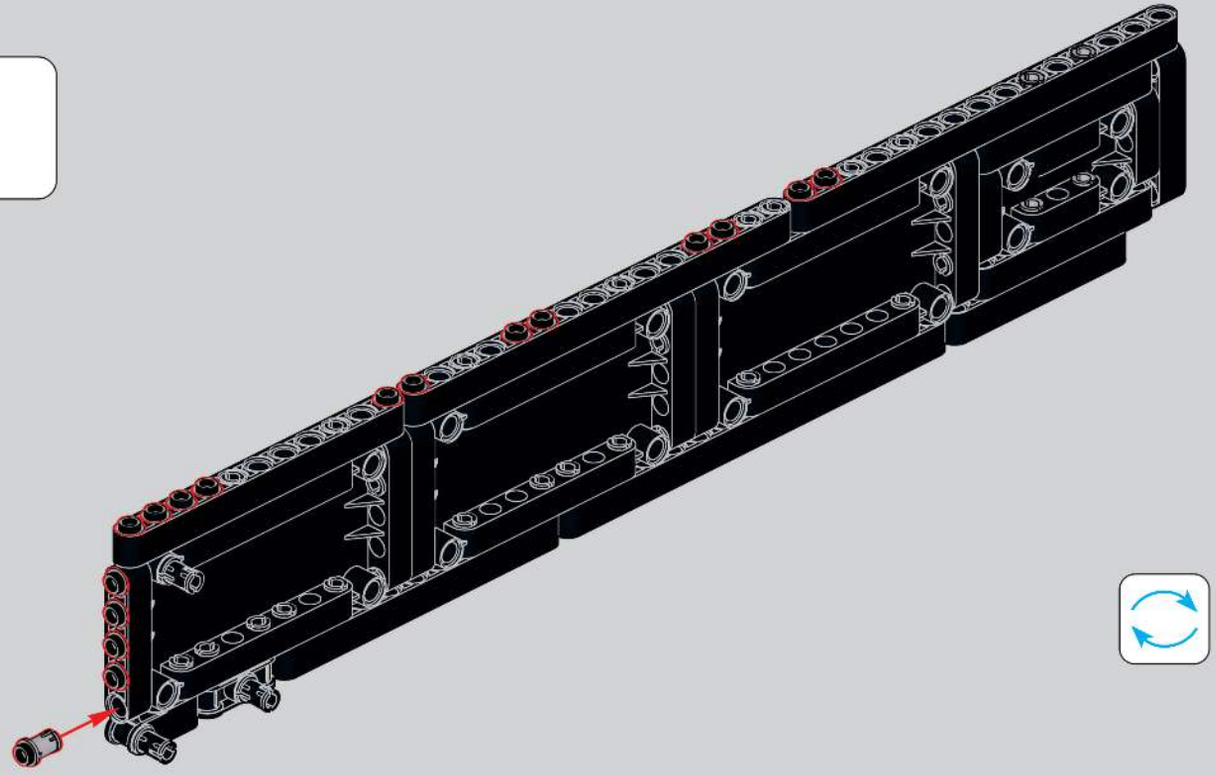

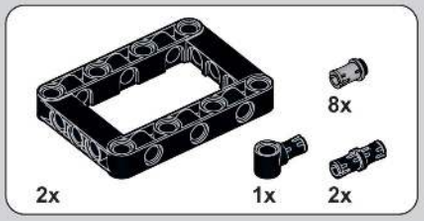

141

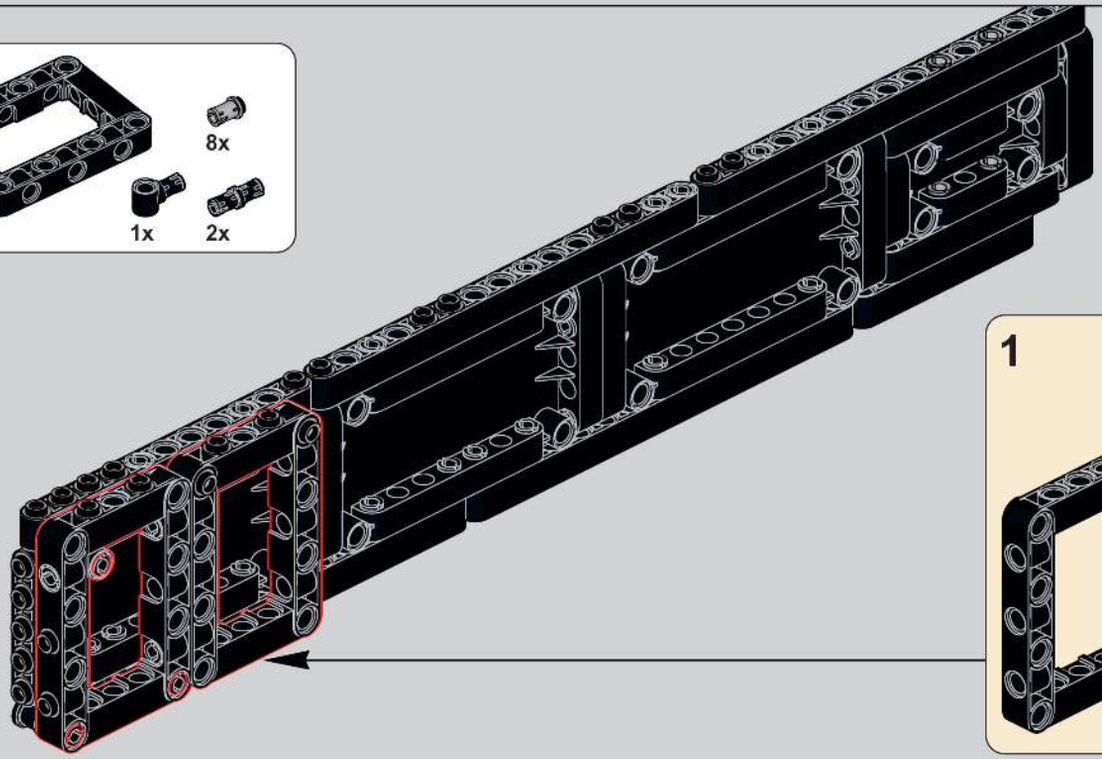

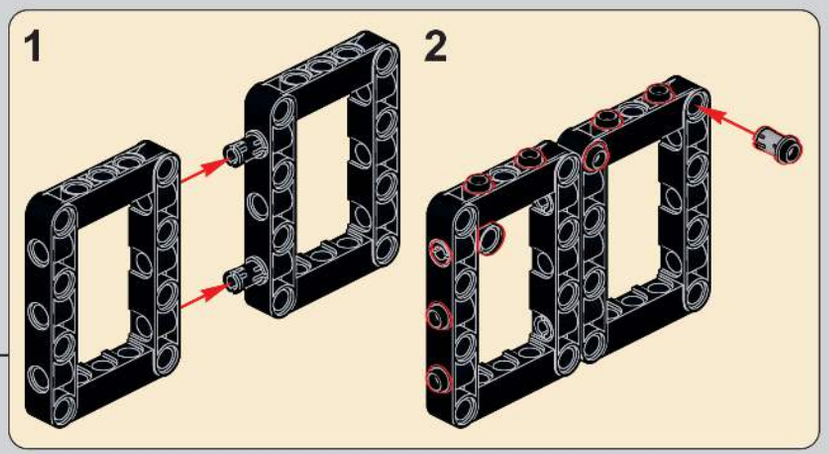

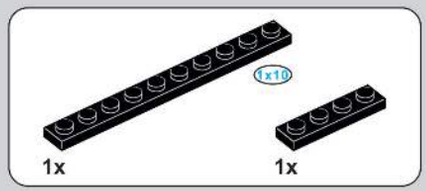

142

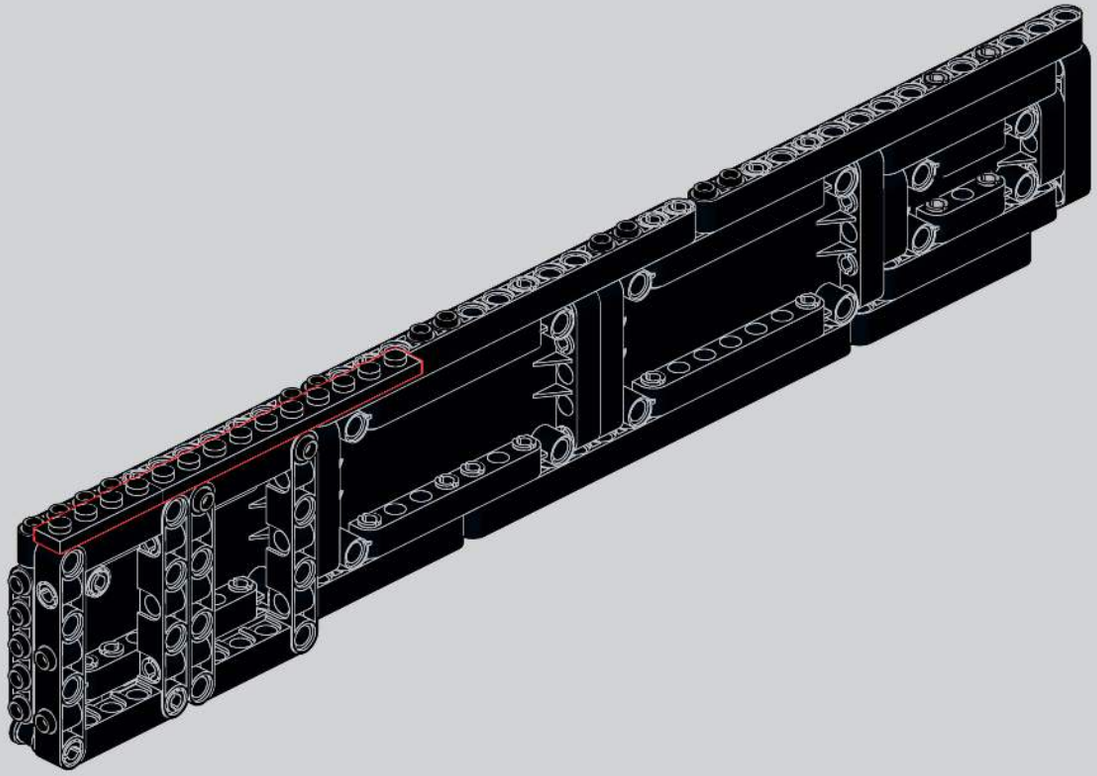

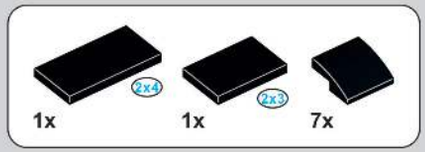

143

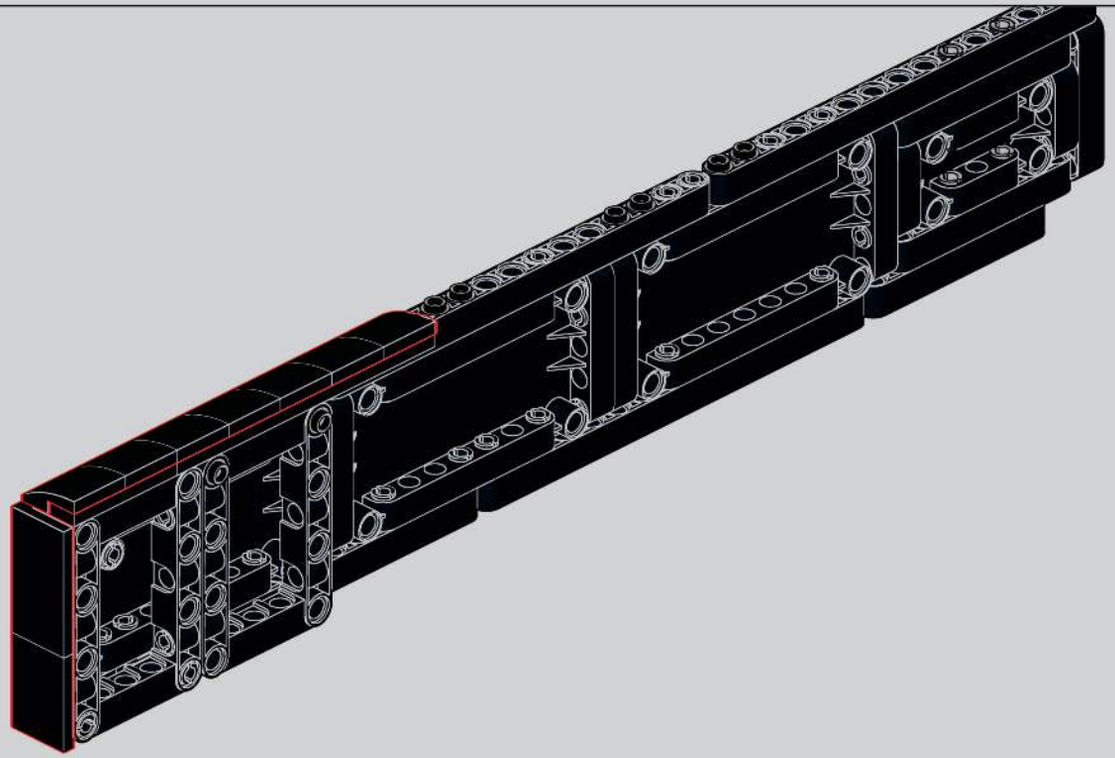

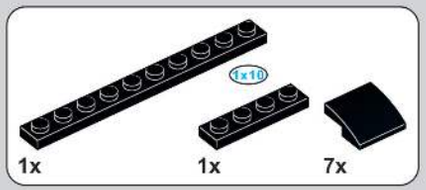

144

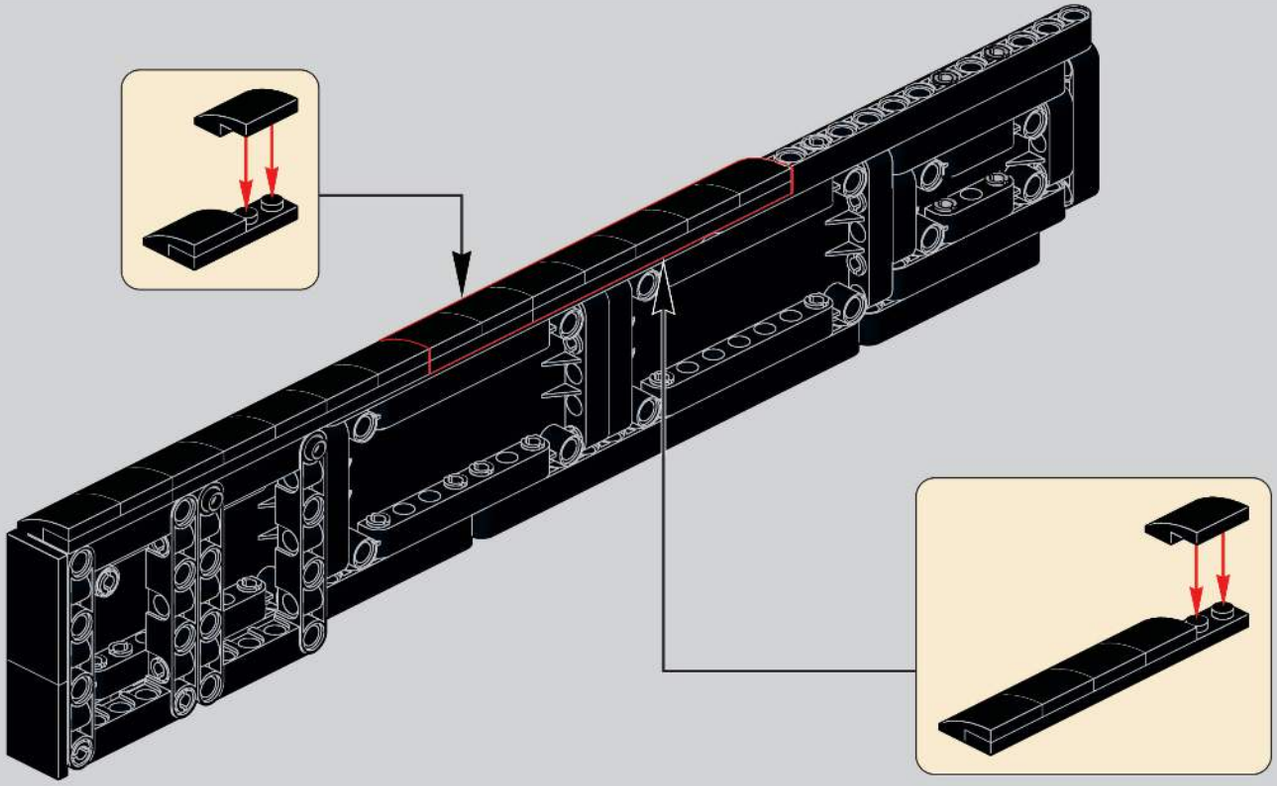

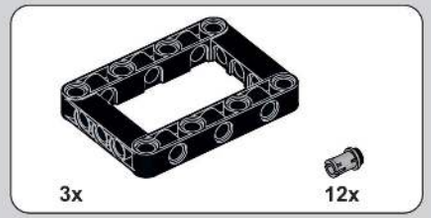

145

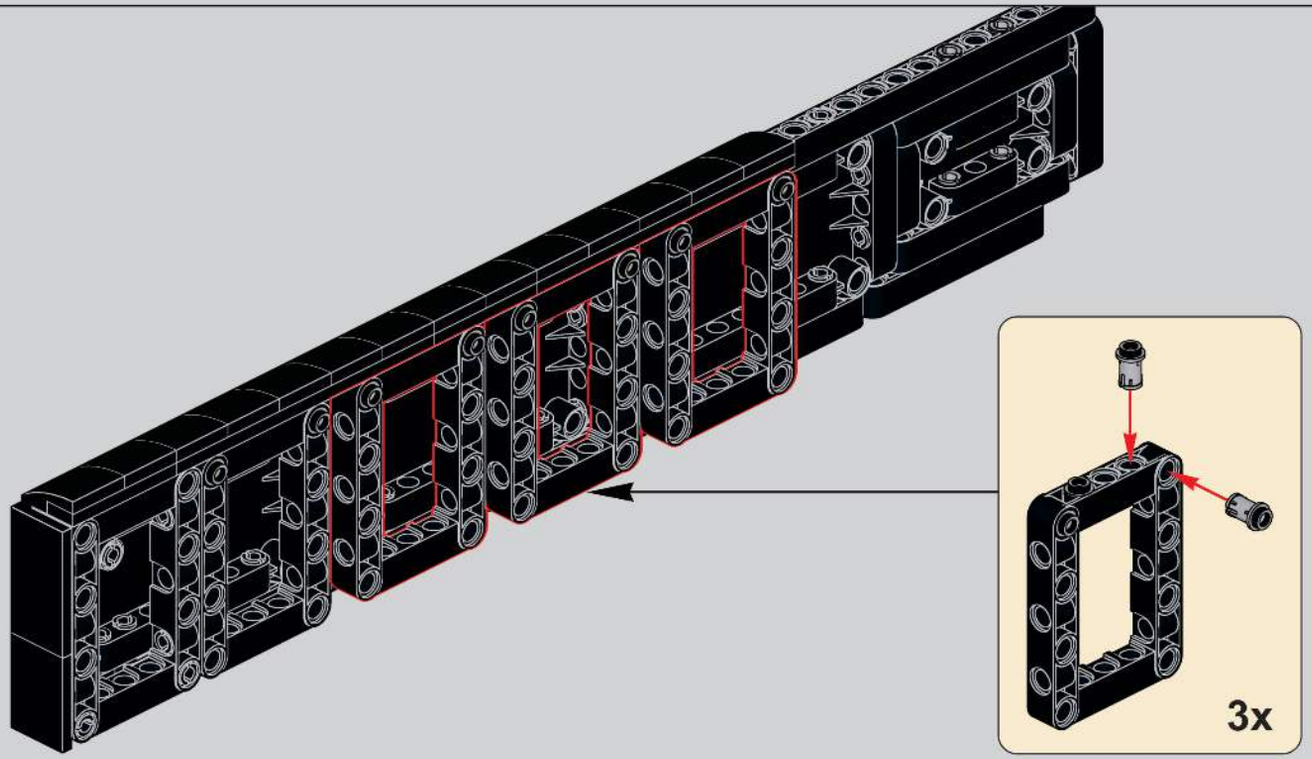

146

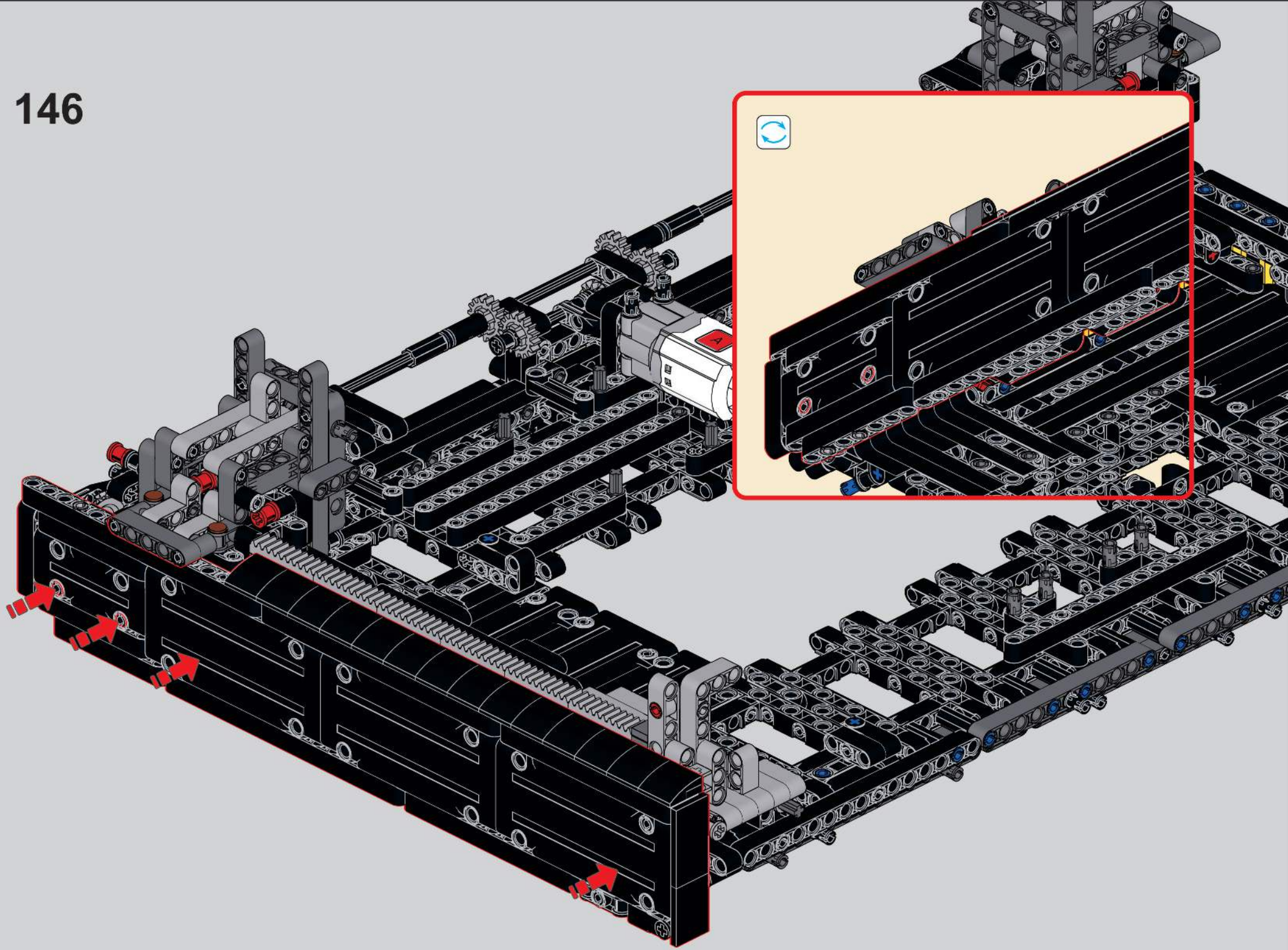

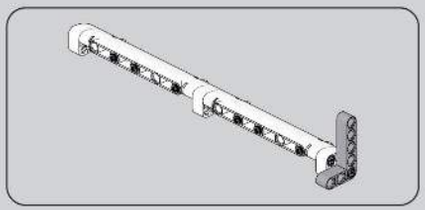

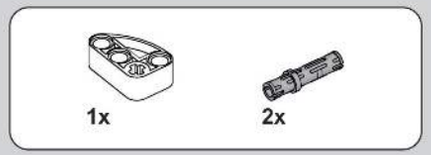

147

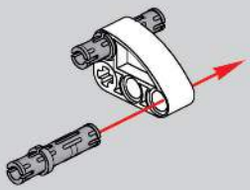

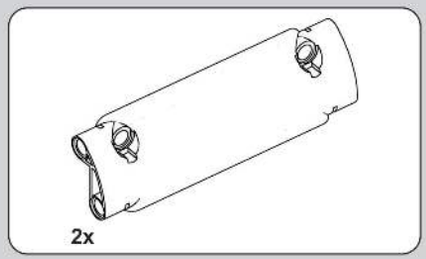

148

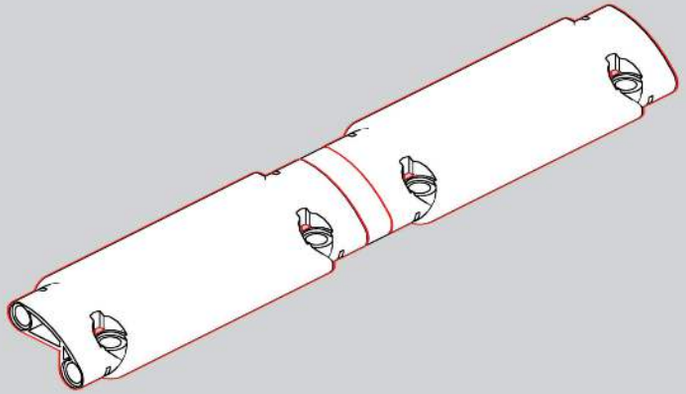

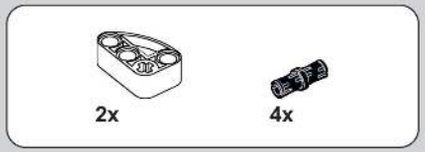

149

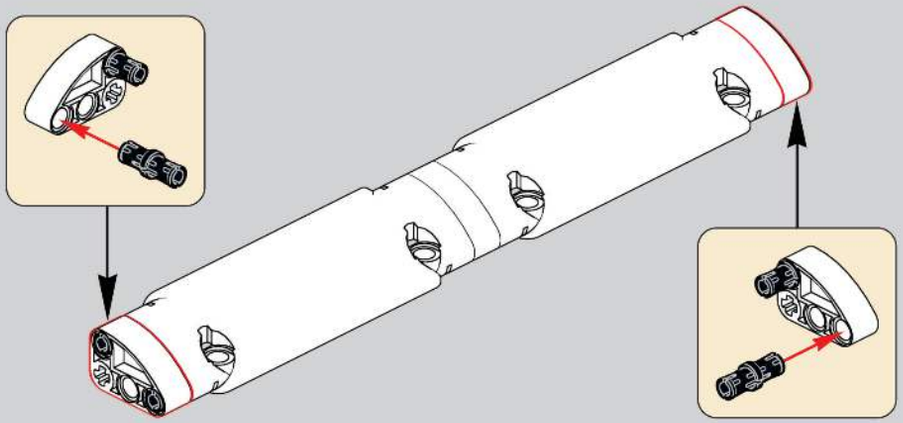

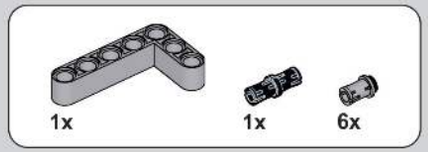

150

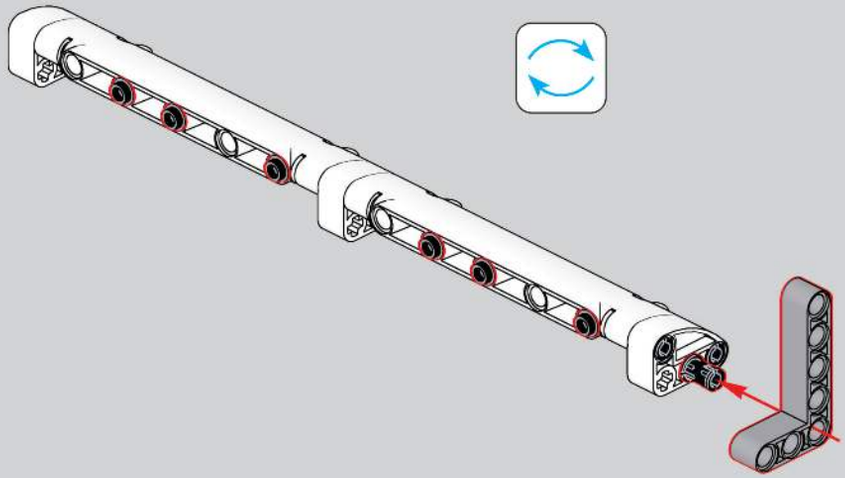

151

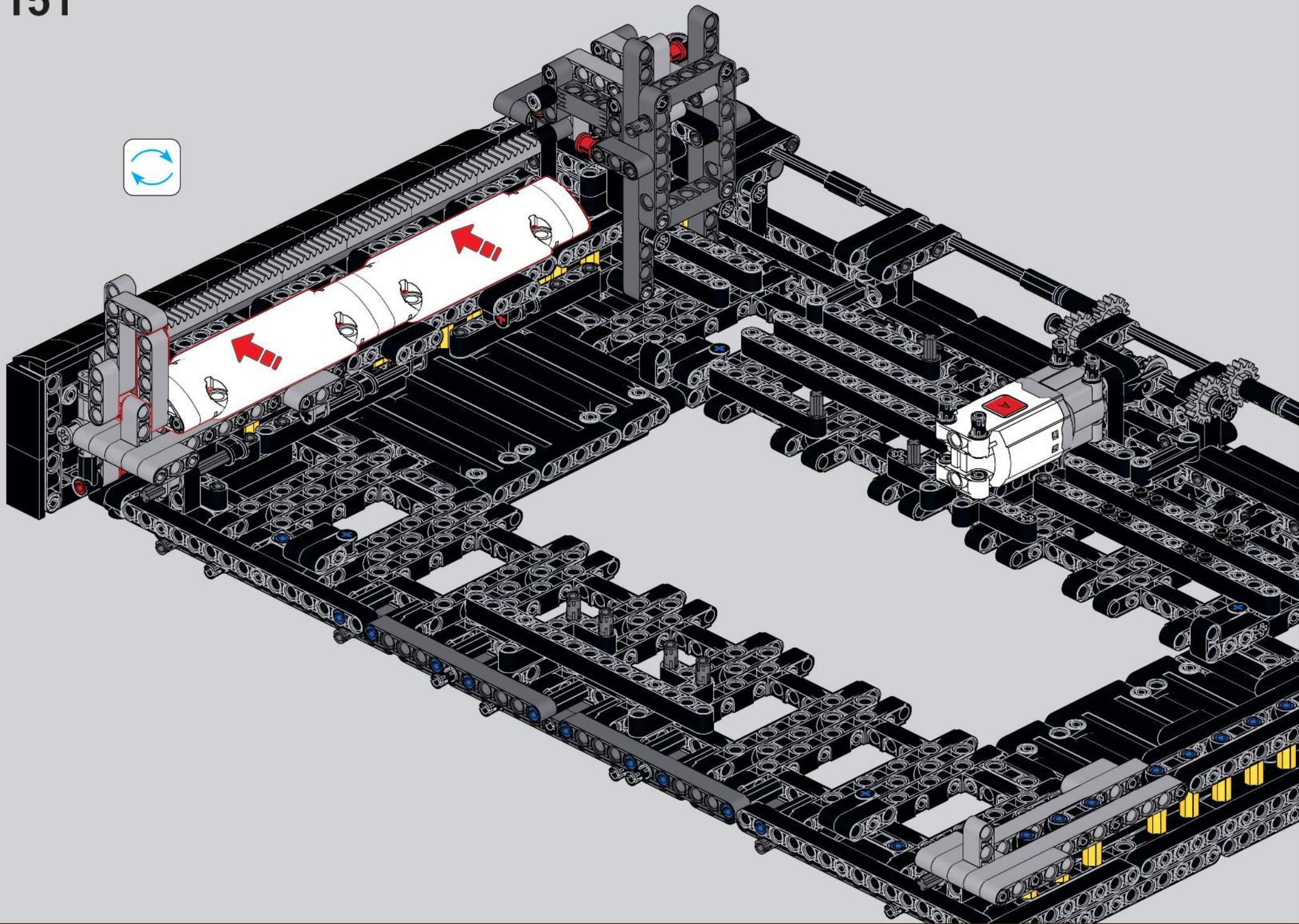

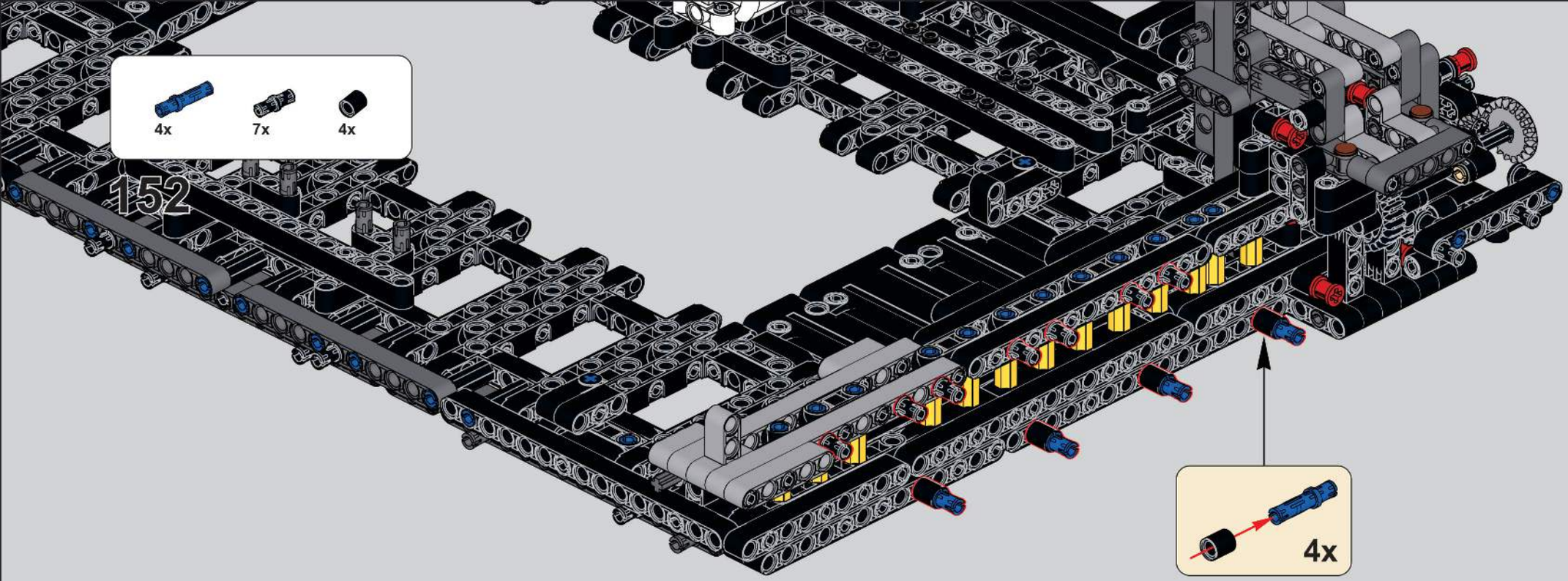
4x
7x
4x
152
4x

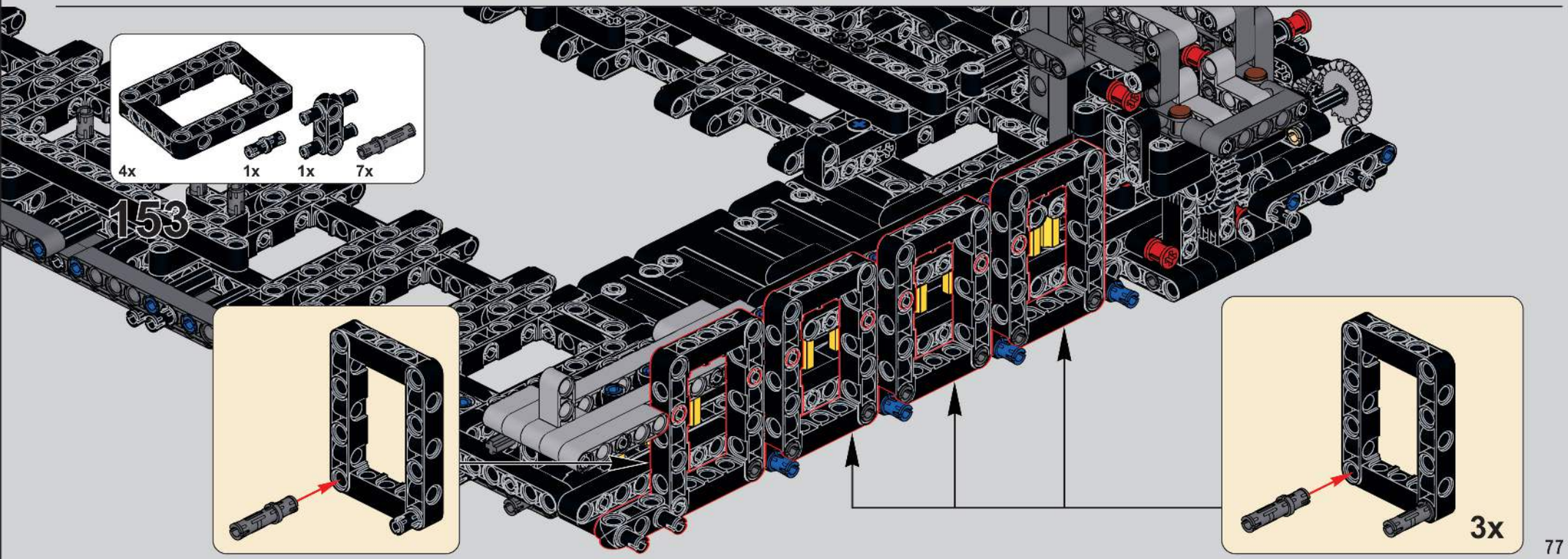
4x
1x
1x
7x
153
3x

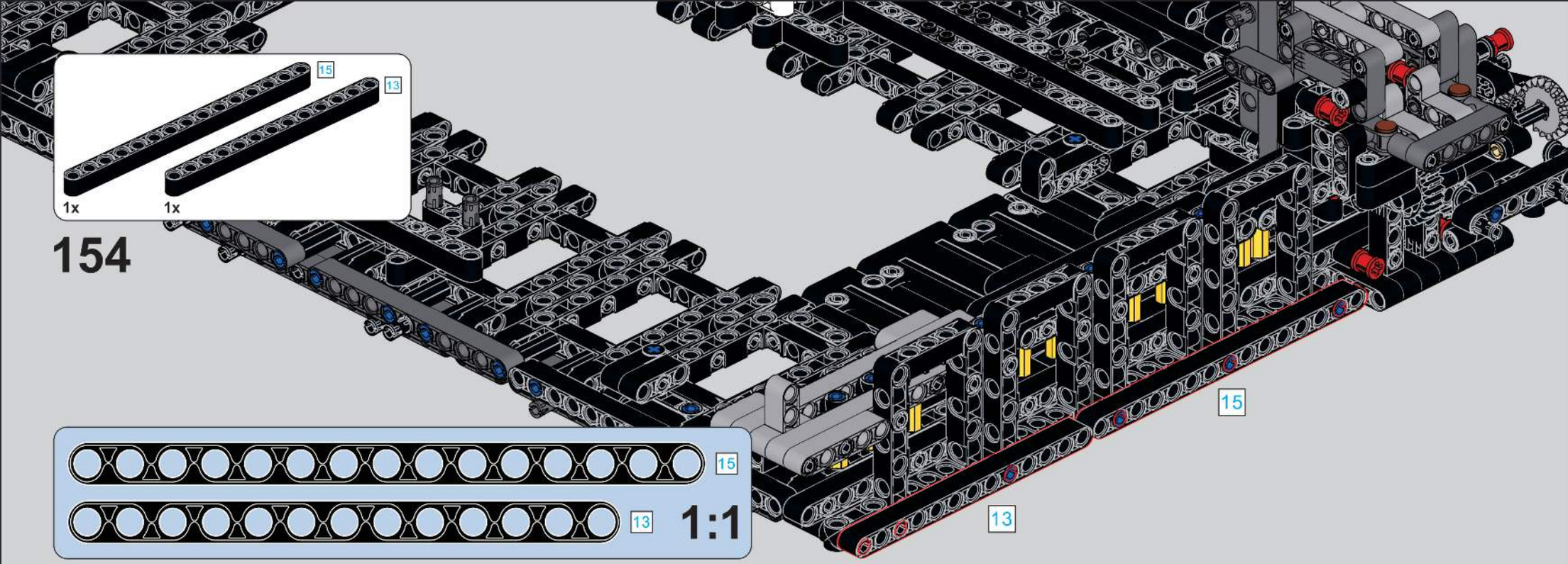
15
13
1x
1x
154
15
13
15
13
1:1

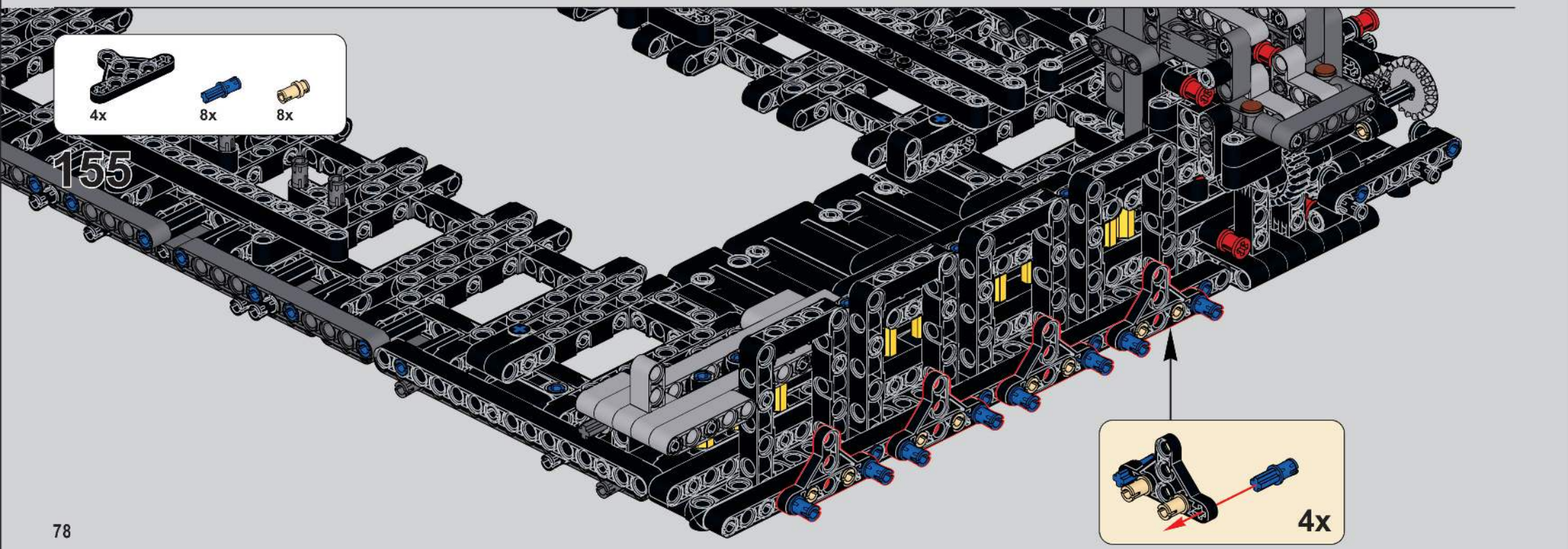
4x
8x
8x
155
4x

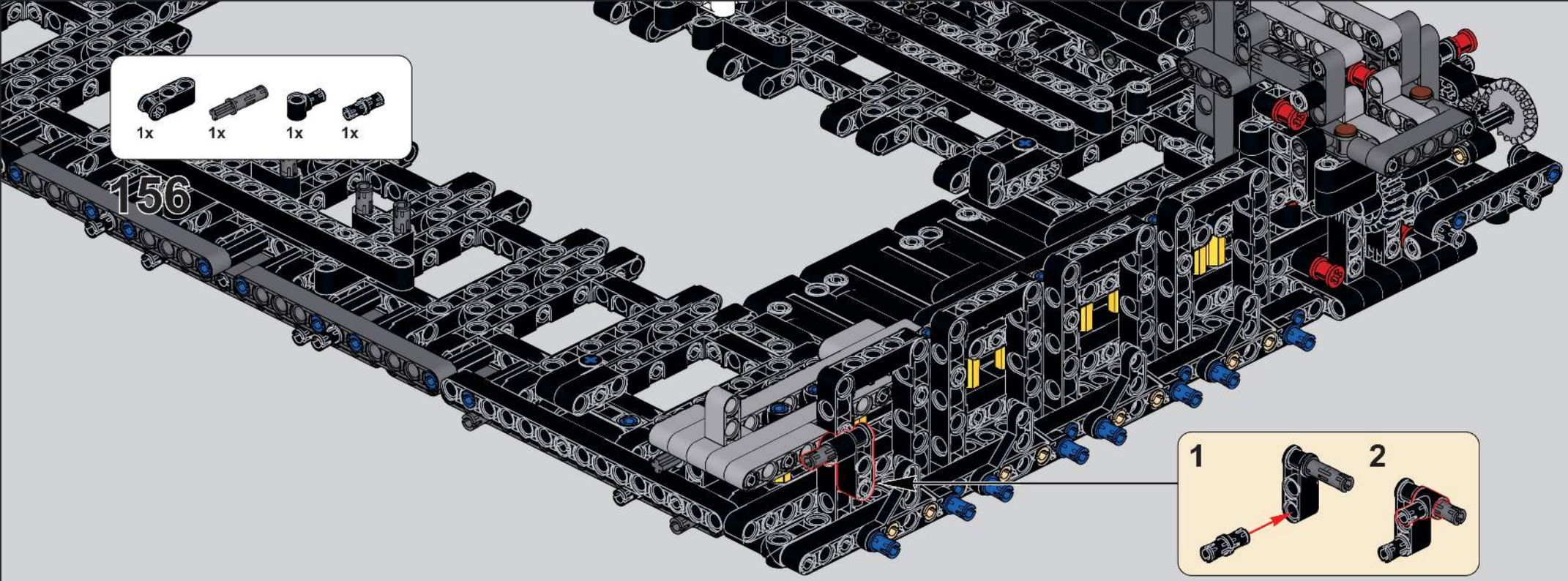

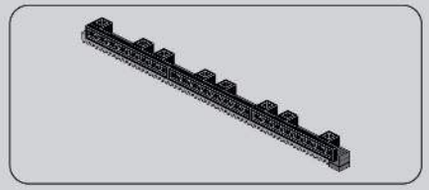

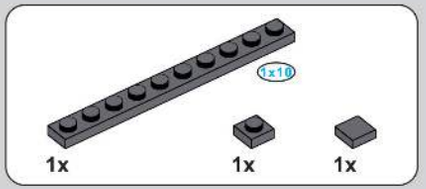

157

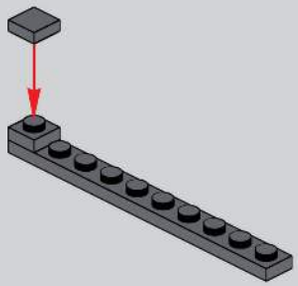

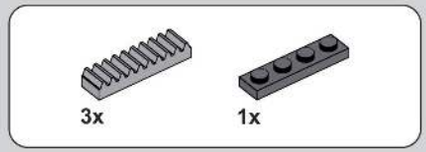

158

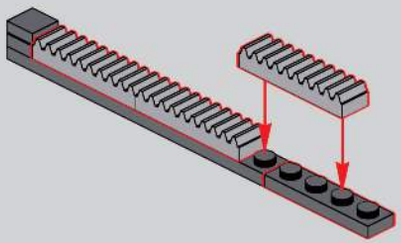

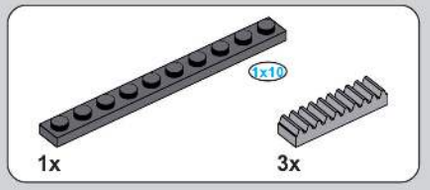

159

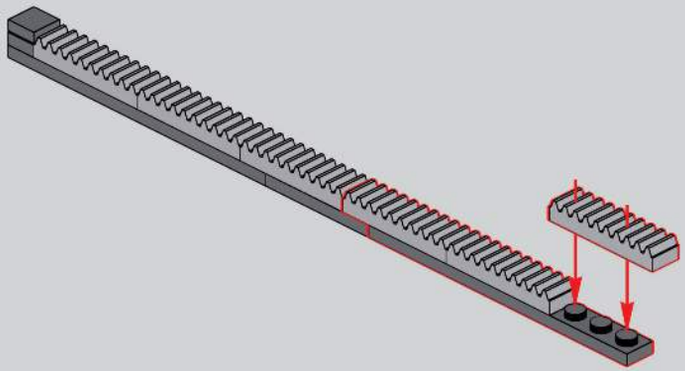

160

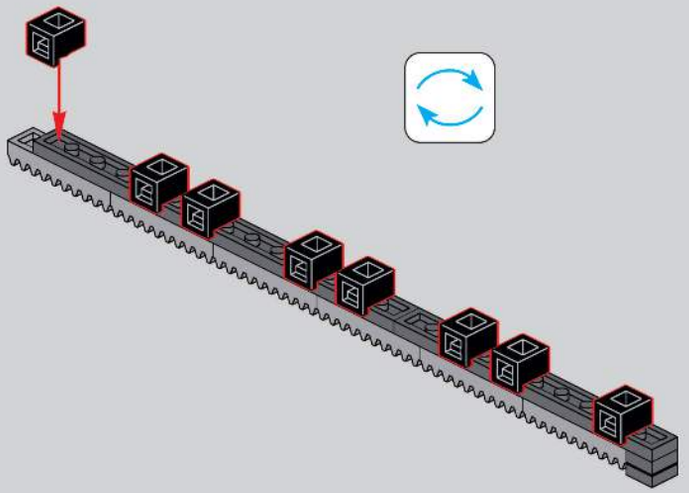

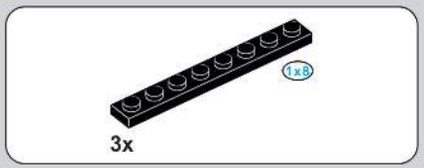

161

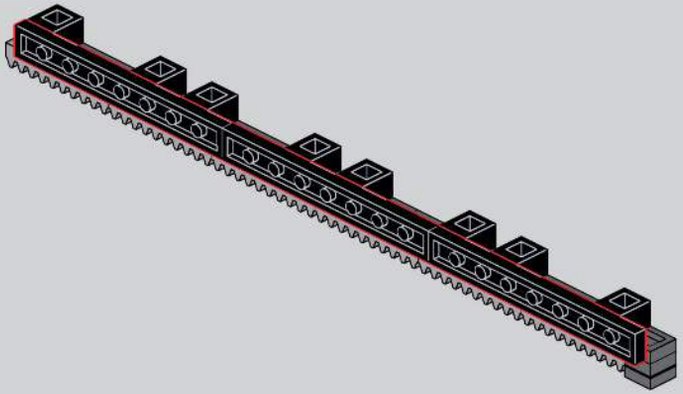

162

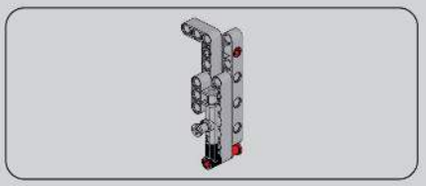

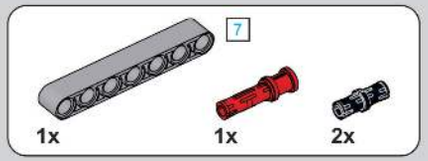

163

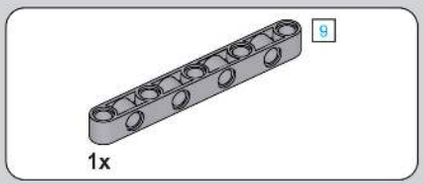

164

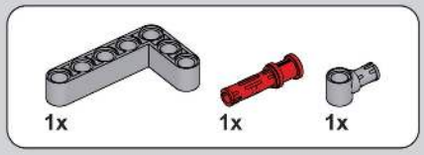

165

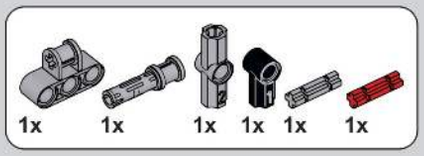

166

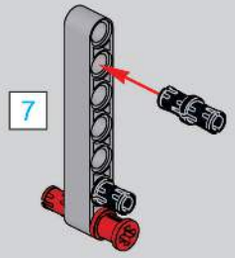

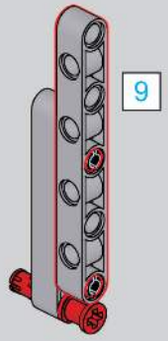

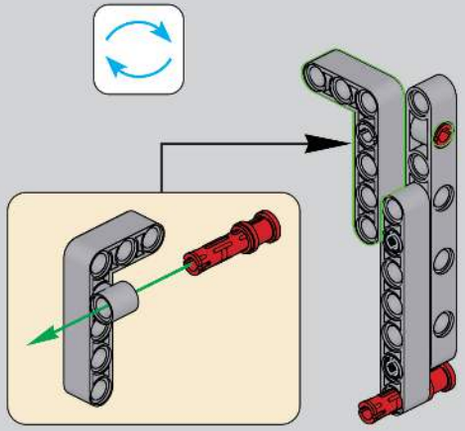

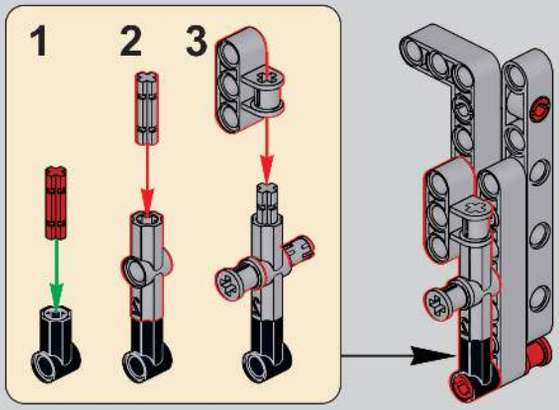

167

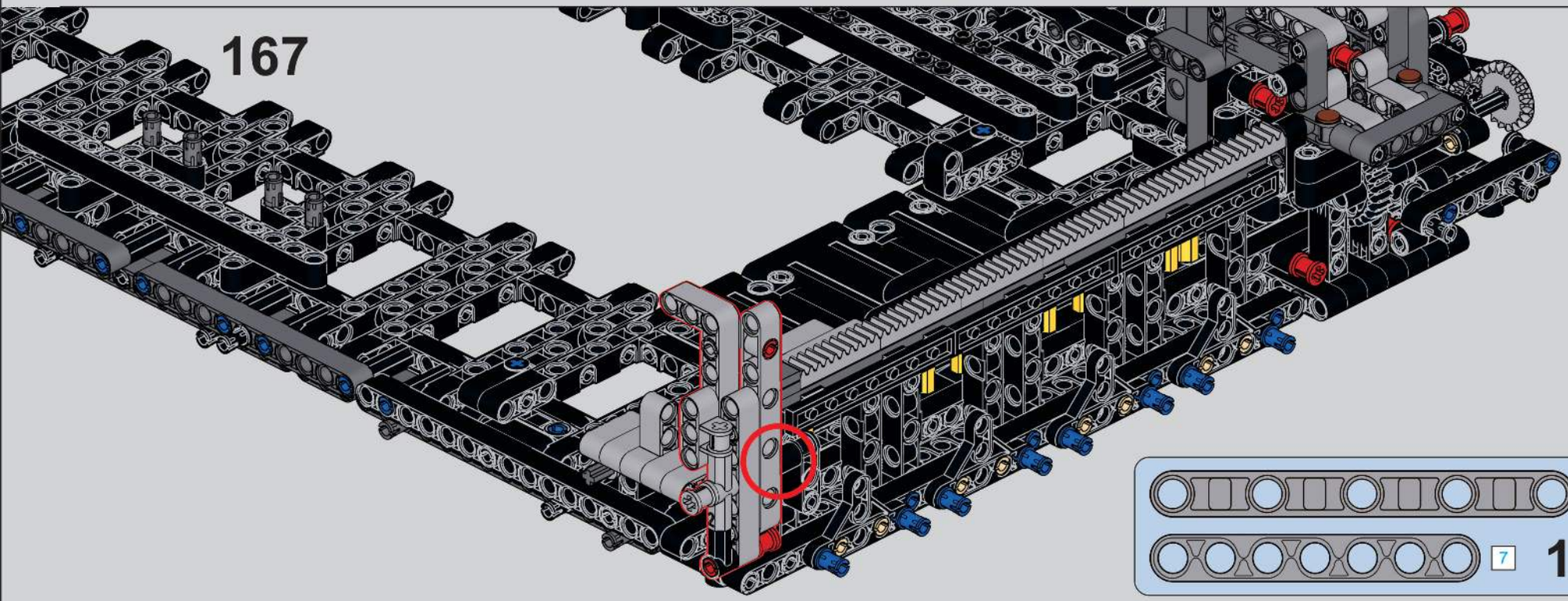

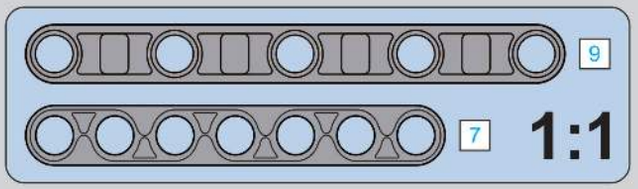

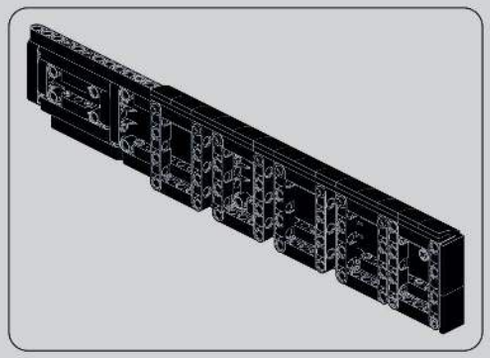

168

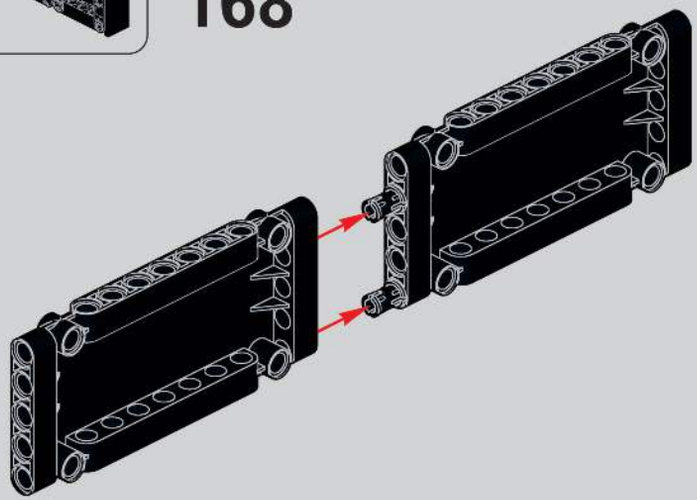

169

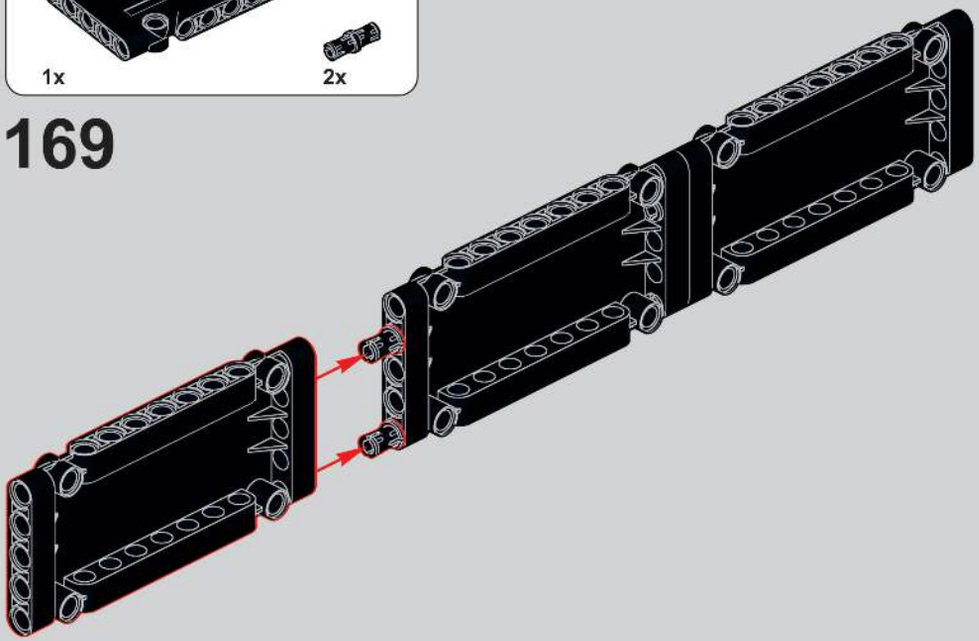

170

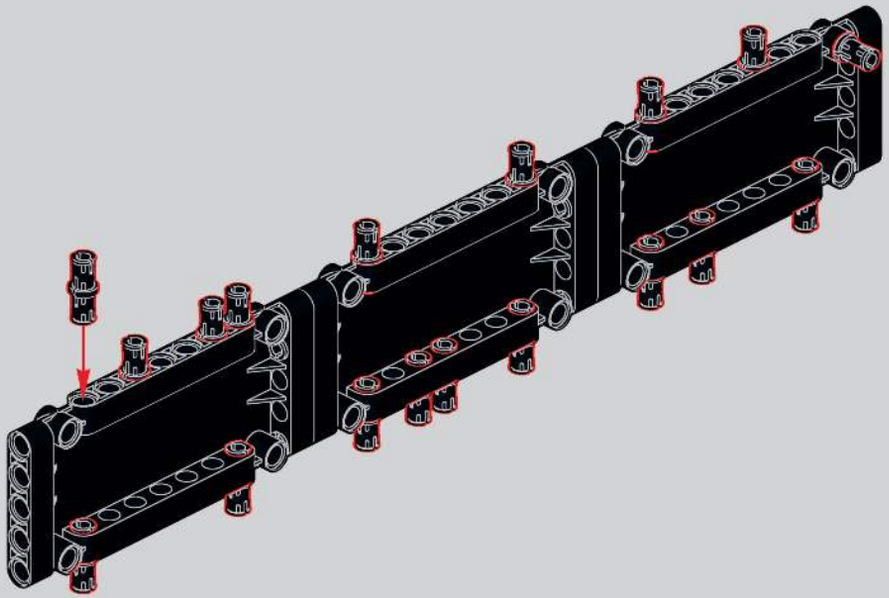

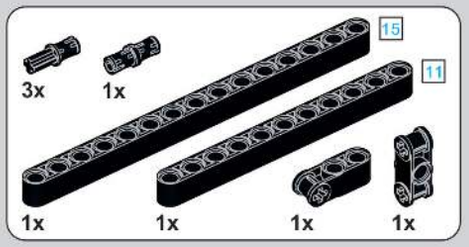

171

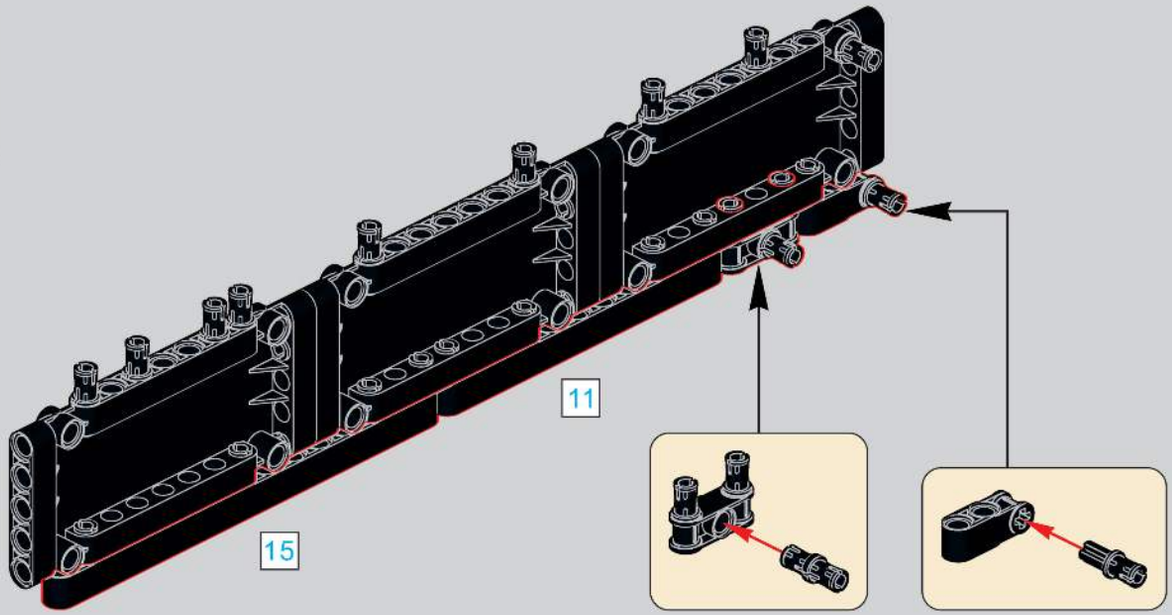

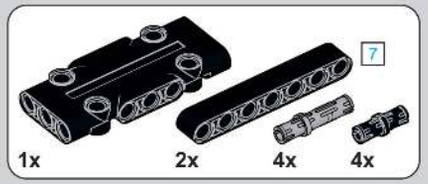

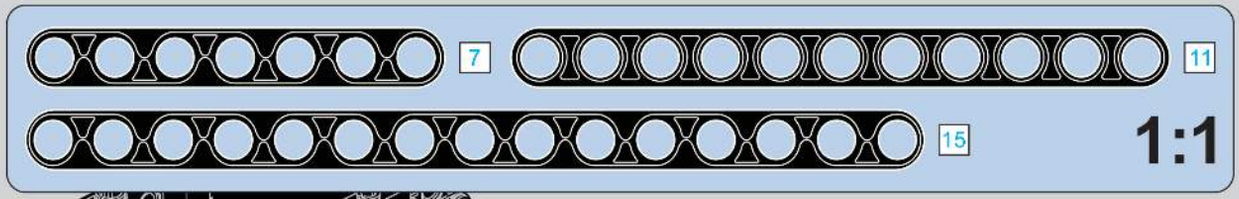

172

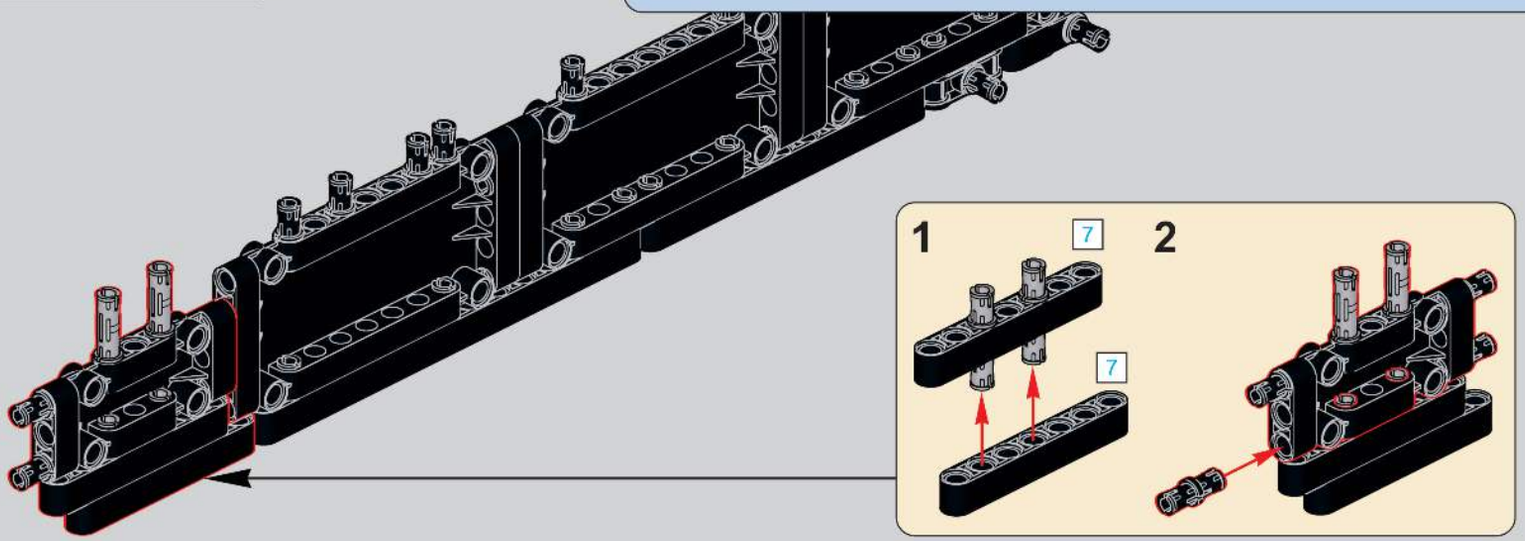

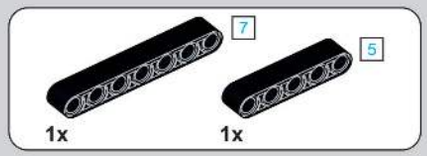

173

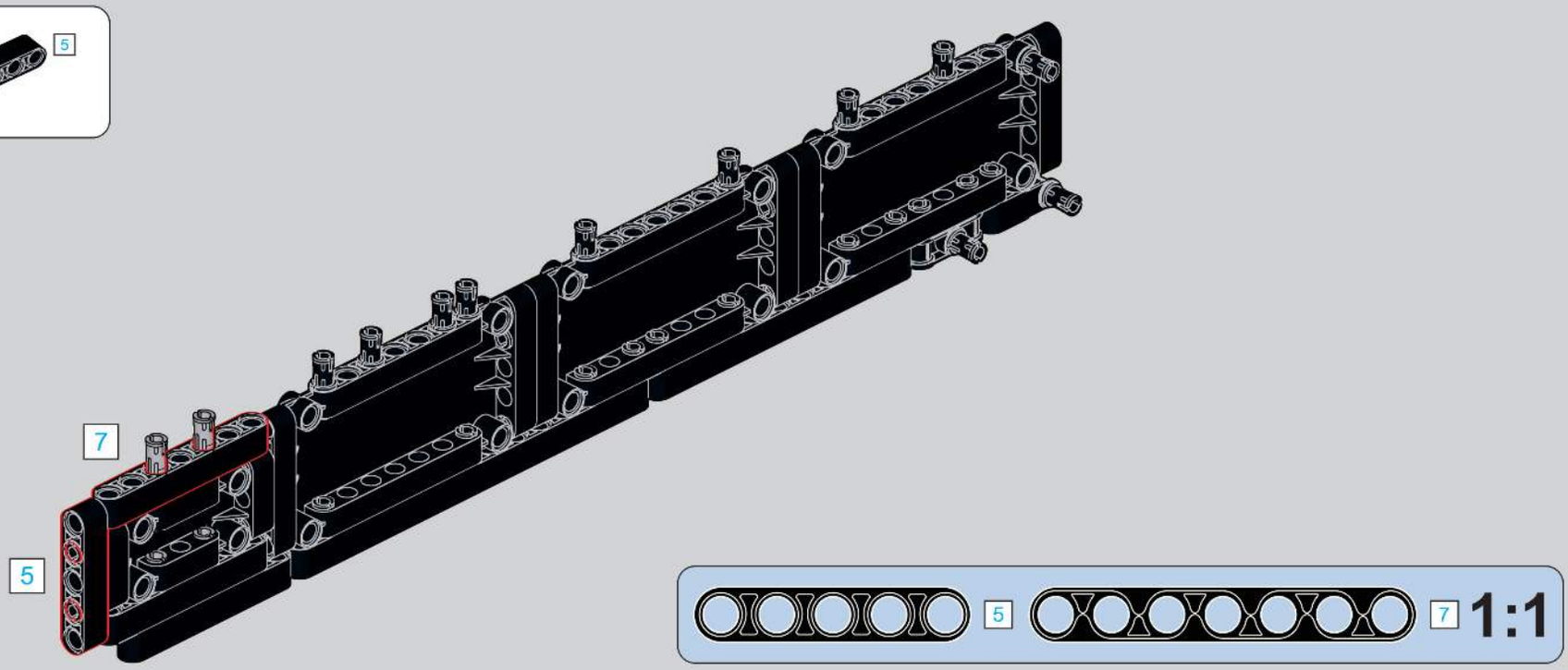

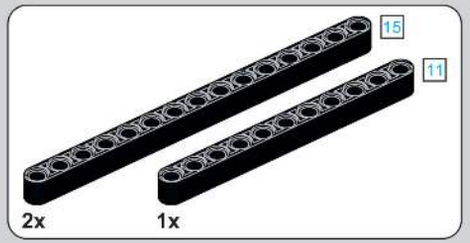

174

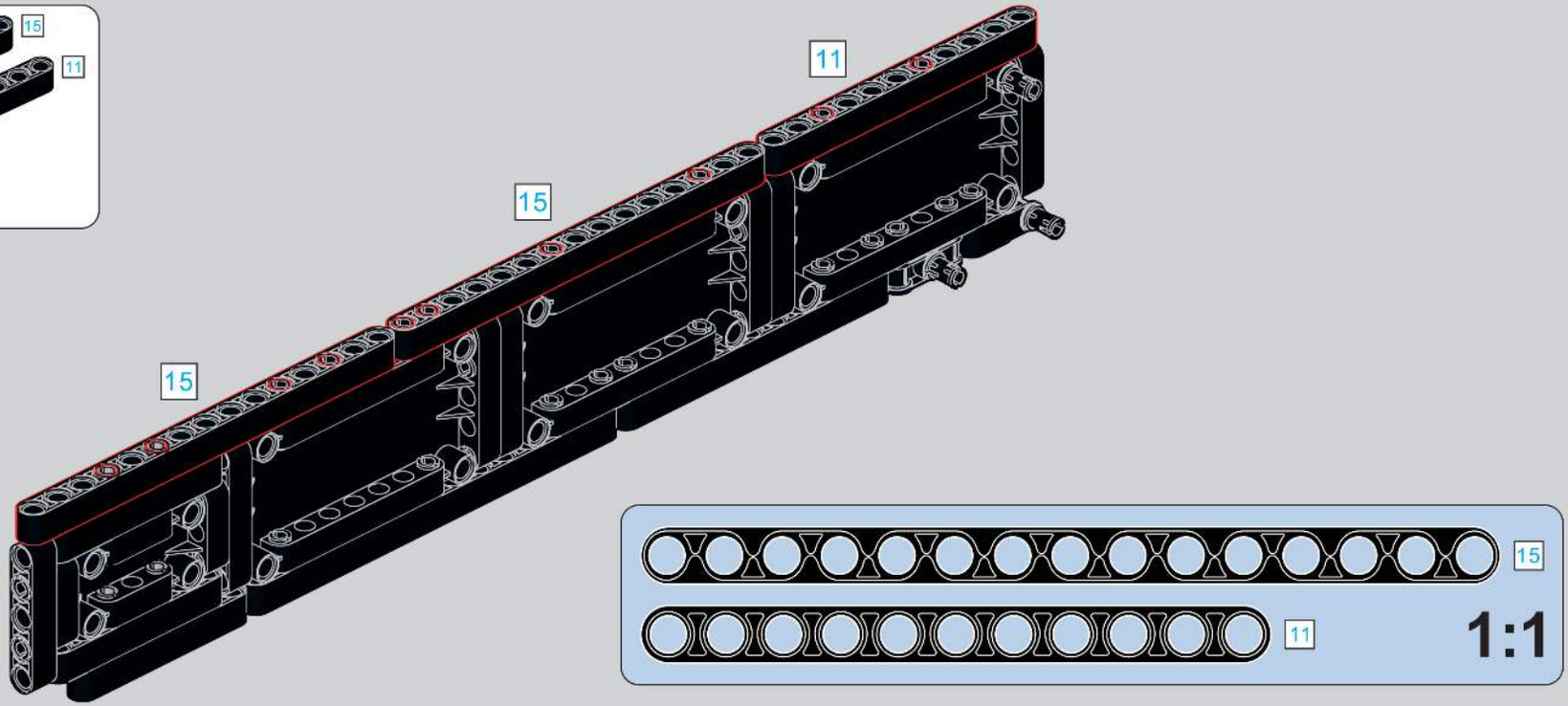

175

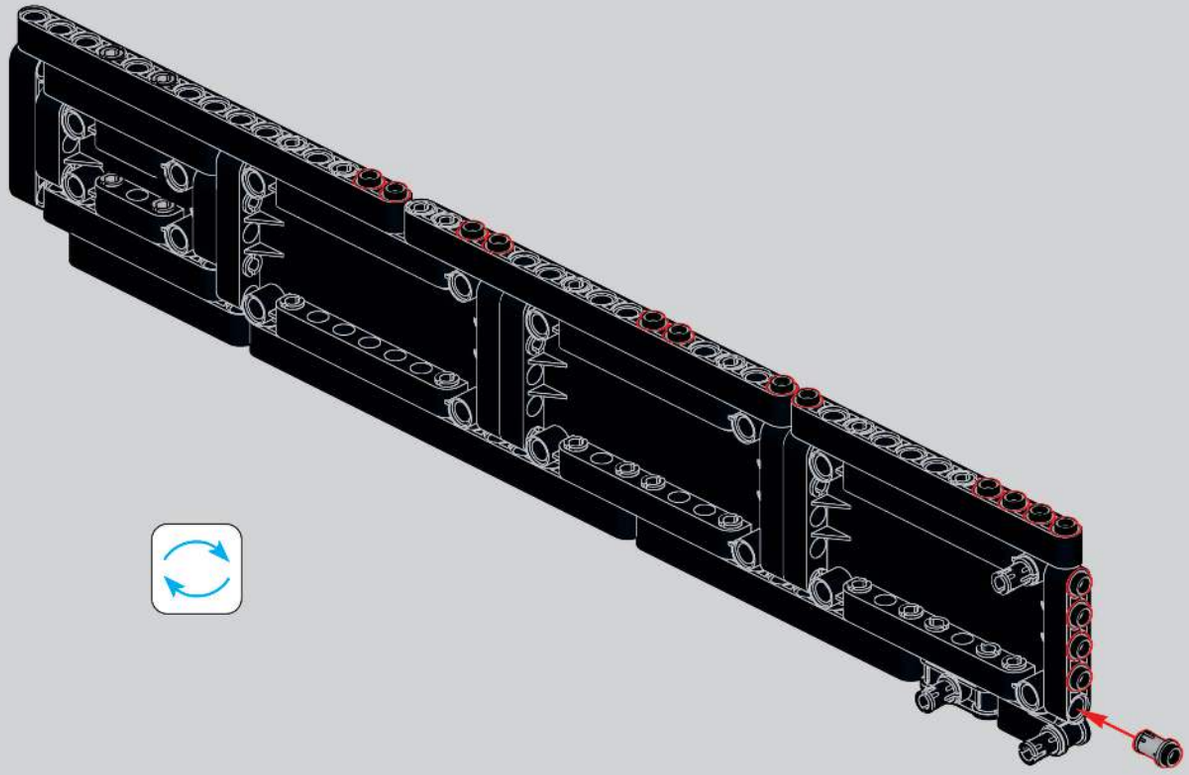

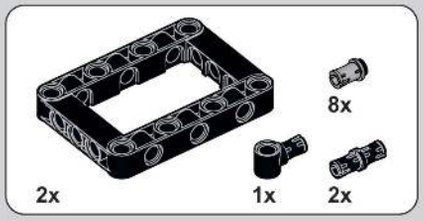

176

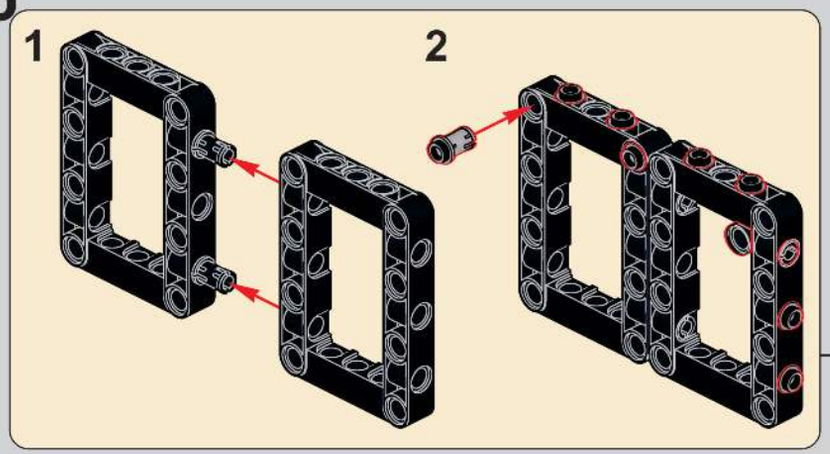

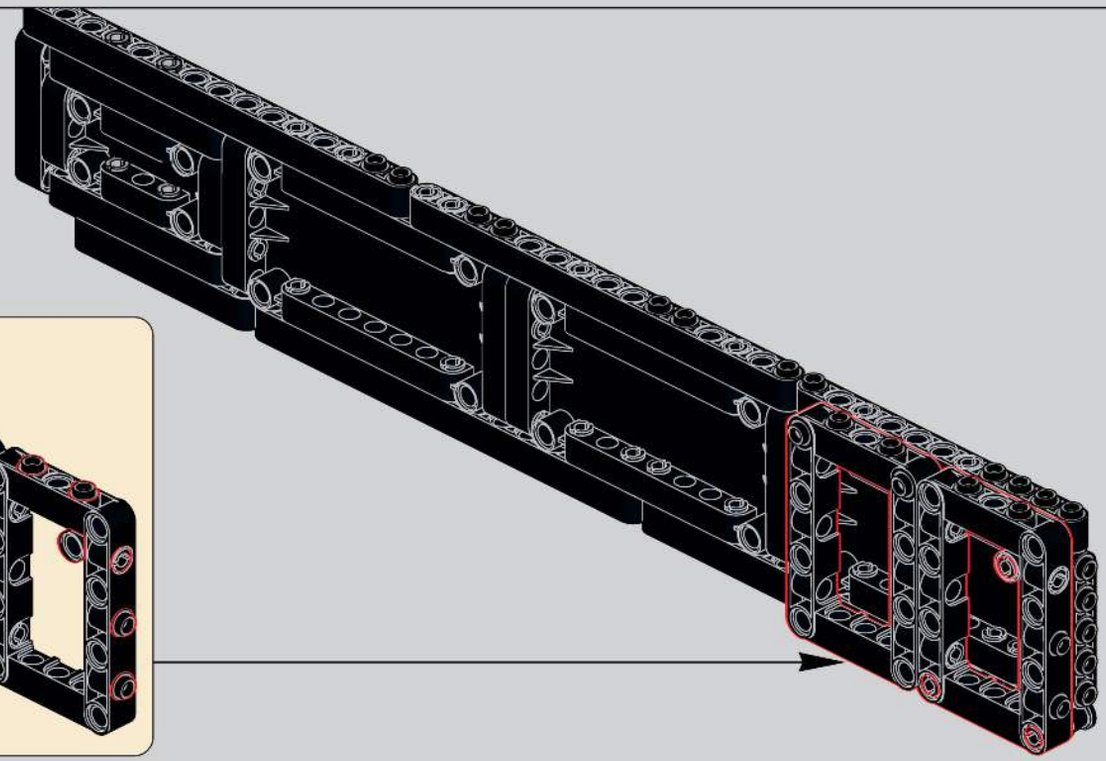

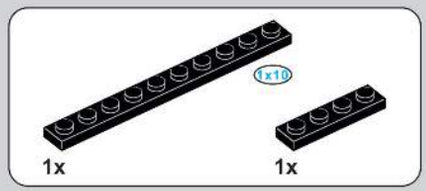

177

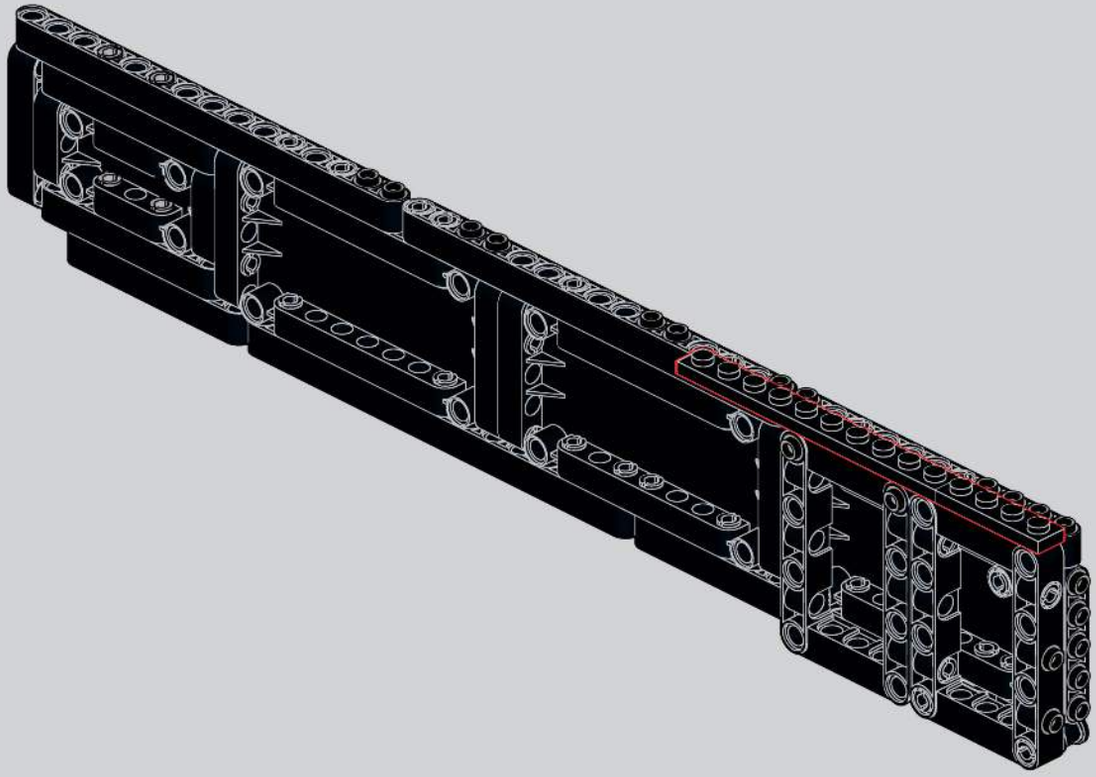

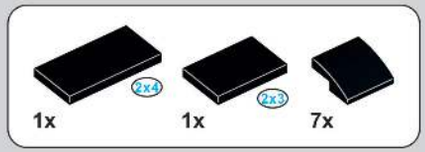

178

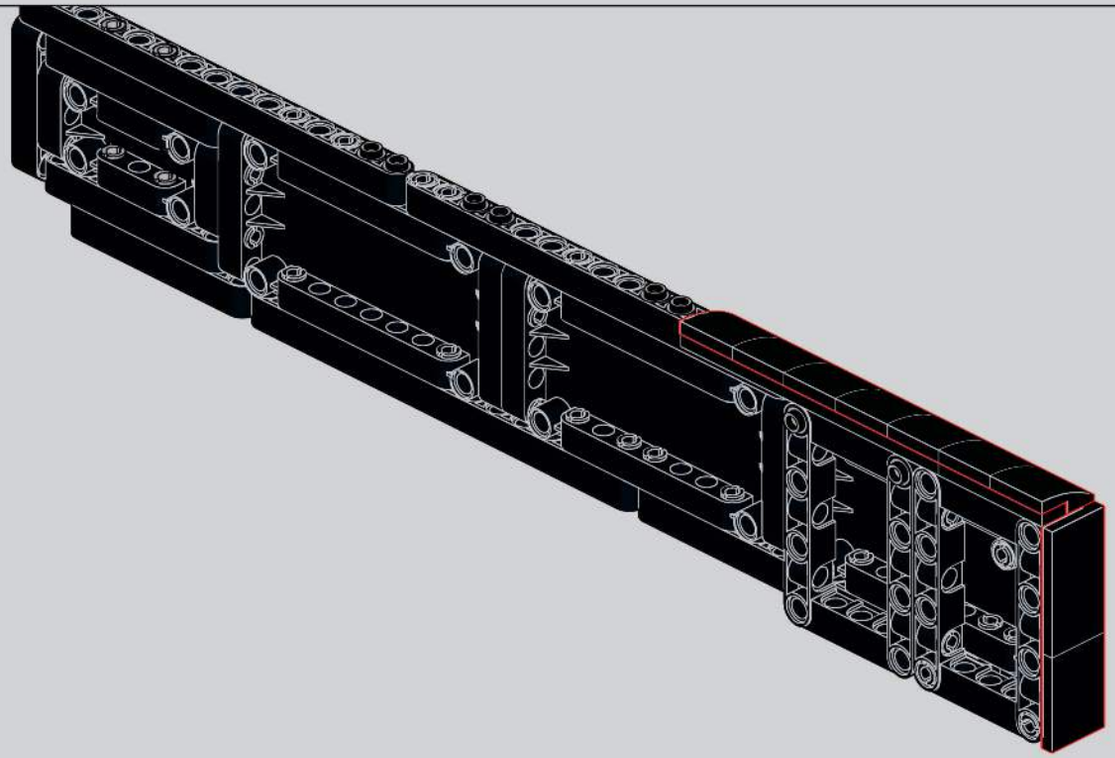

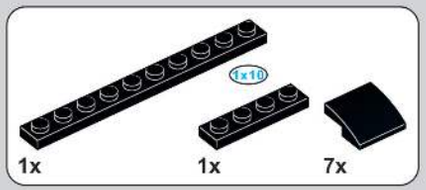

179

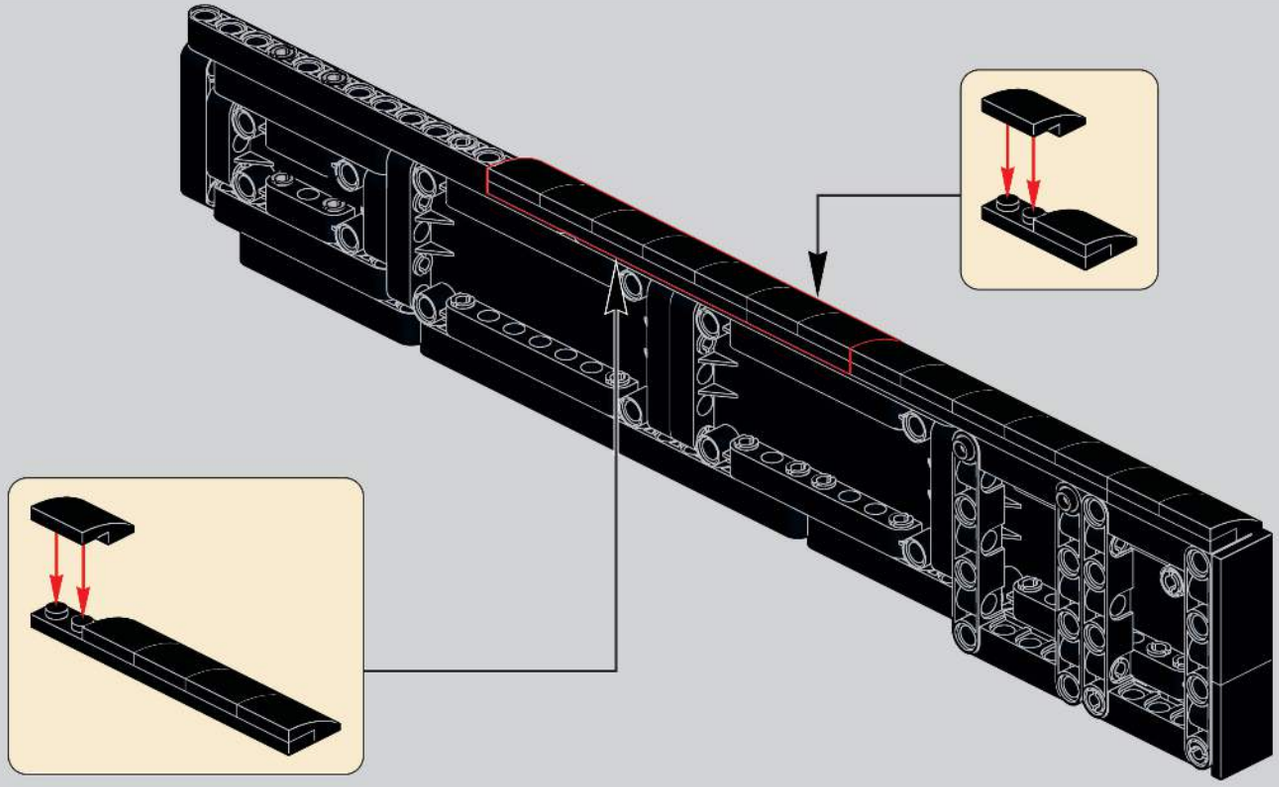

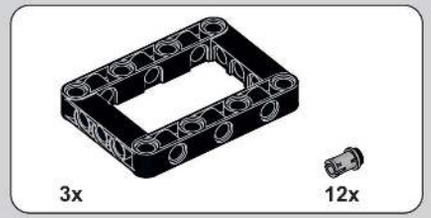

180

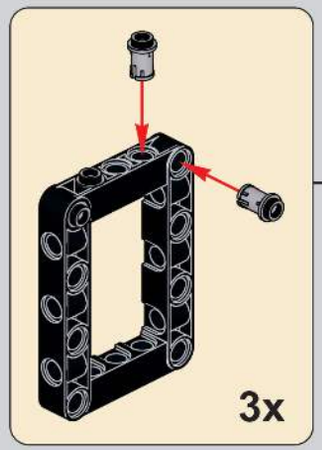

181

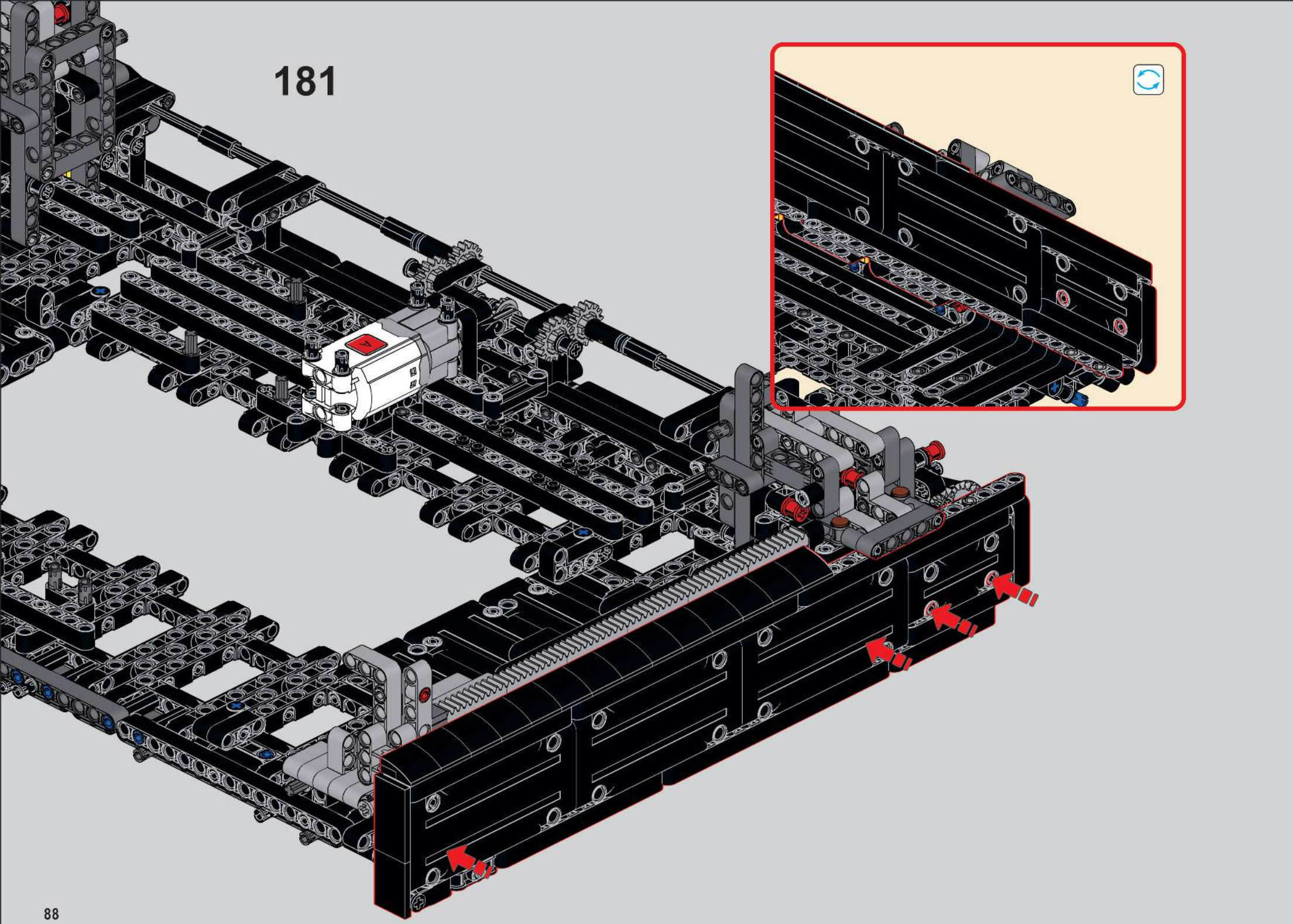

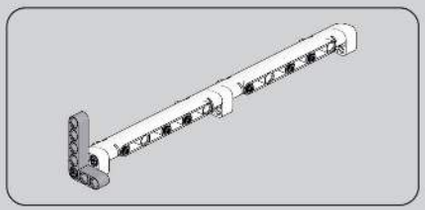

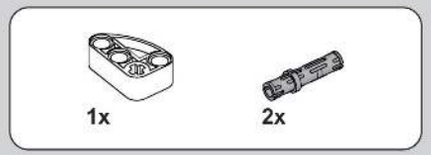

182

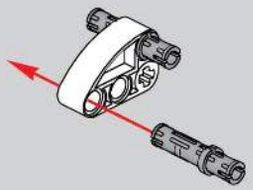

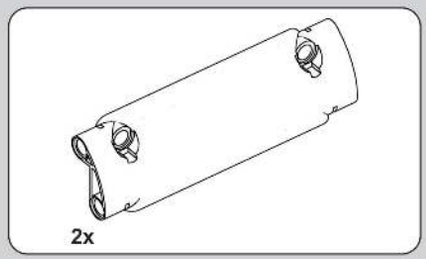

183

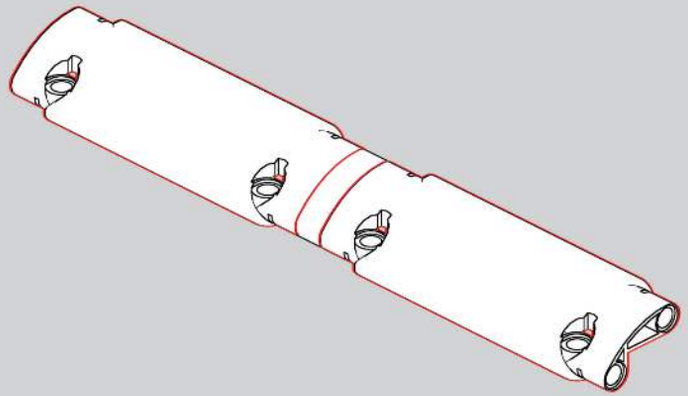

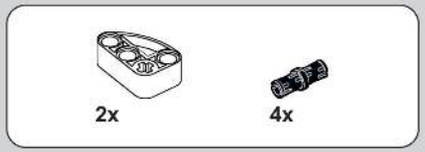

184

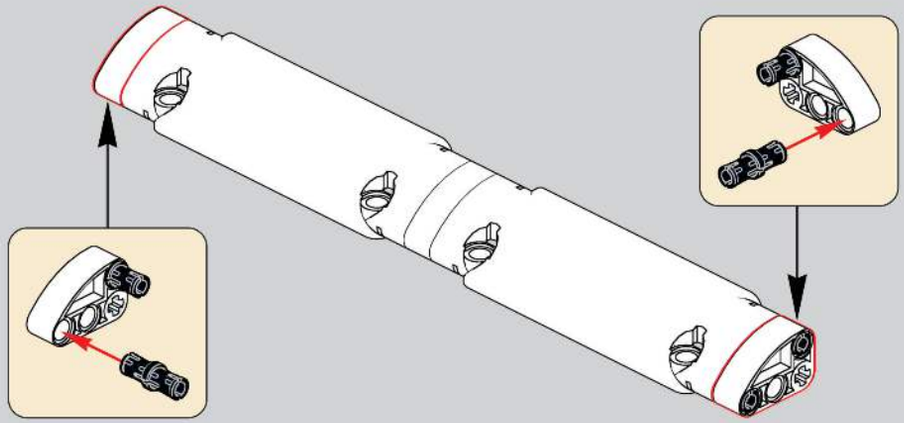

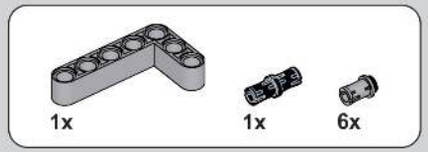

185

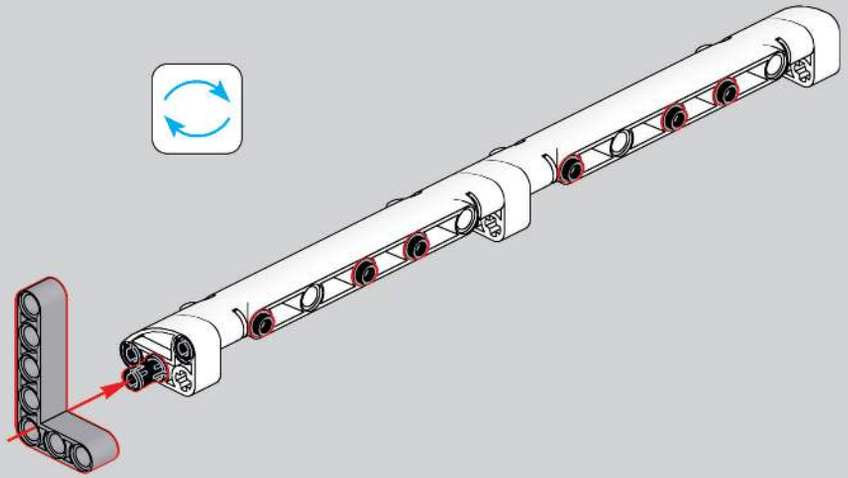

186

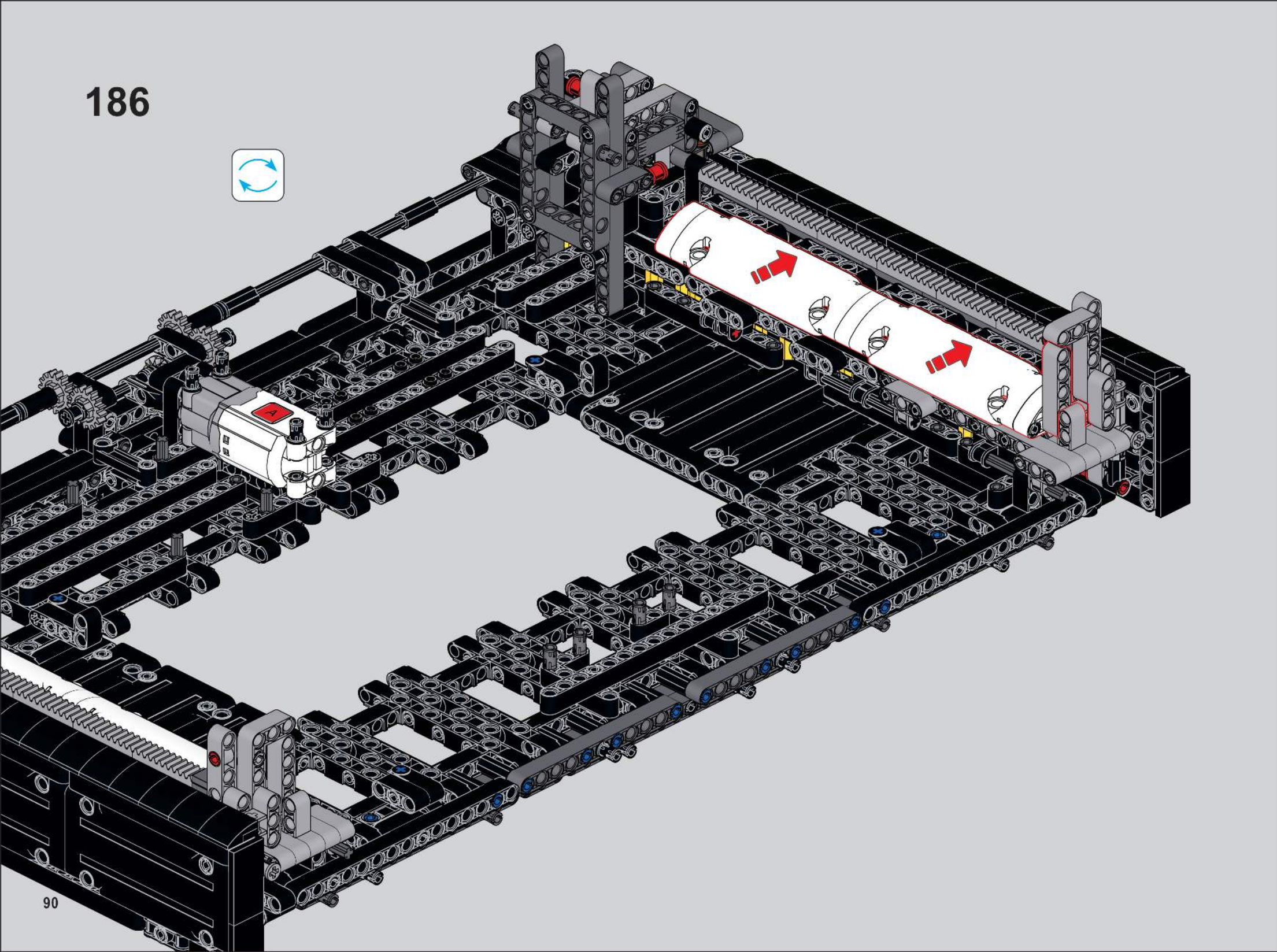

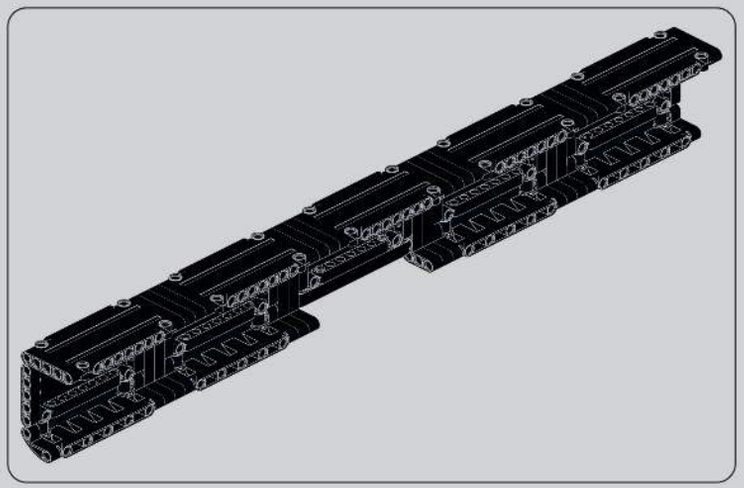

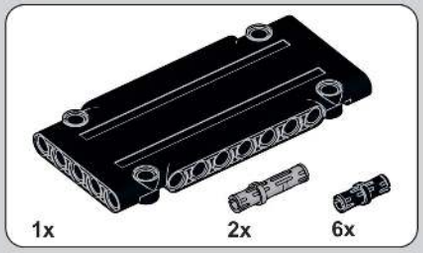

187

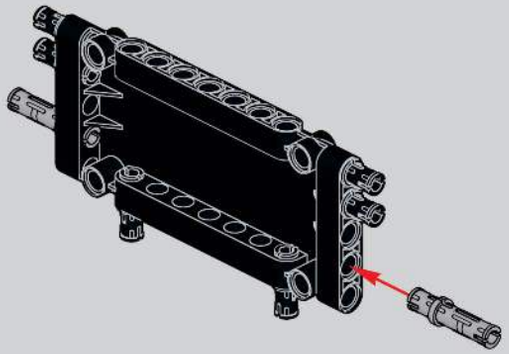

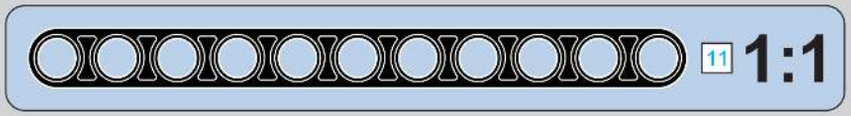

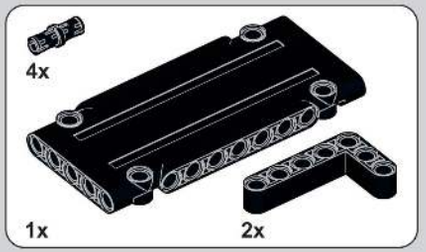

188

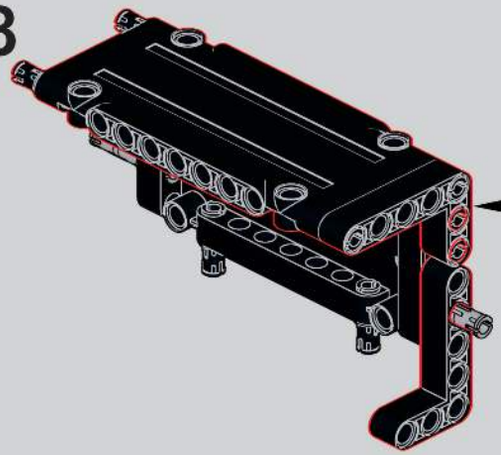

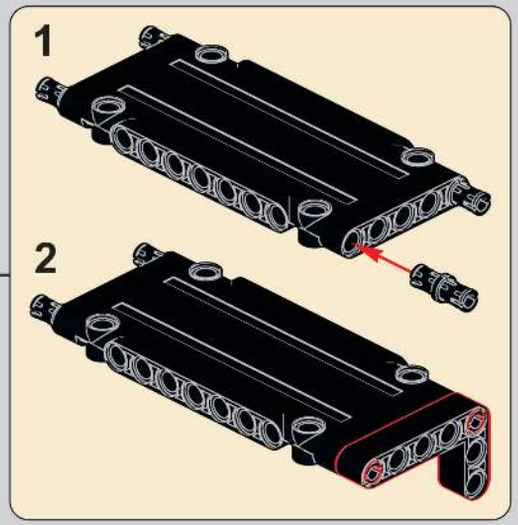

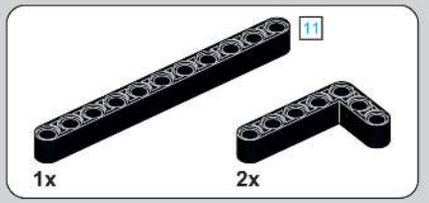

189

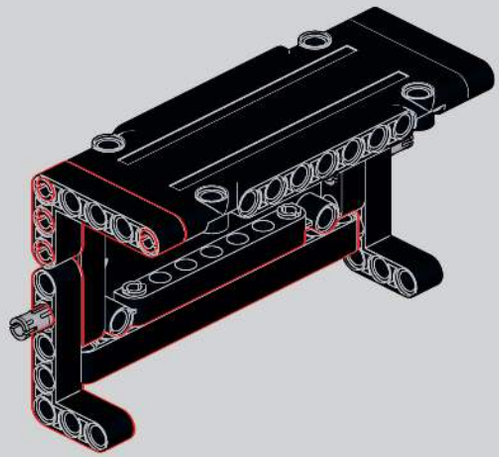

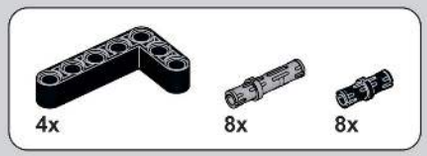

190

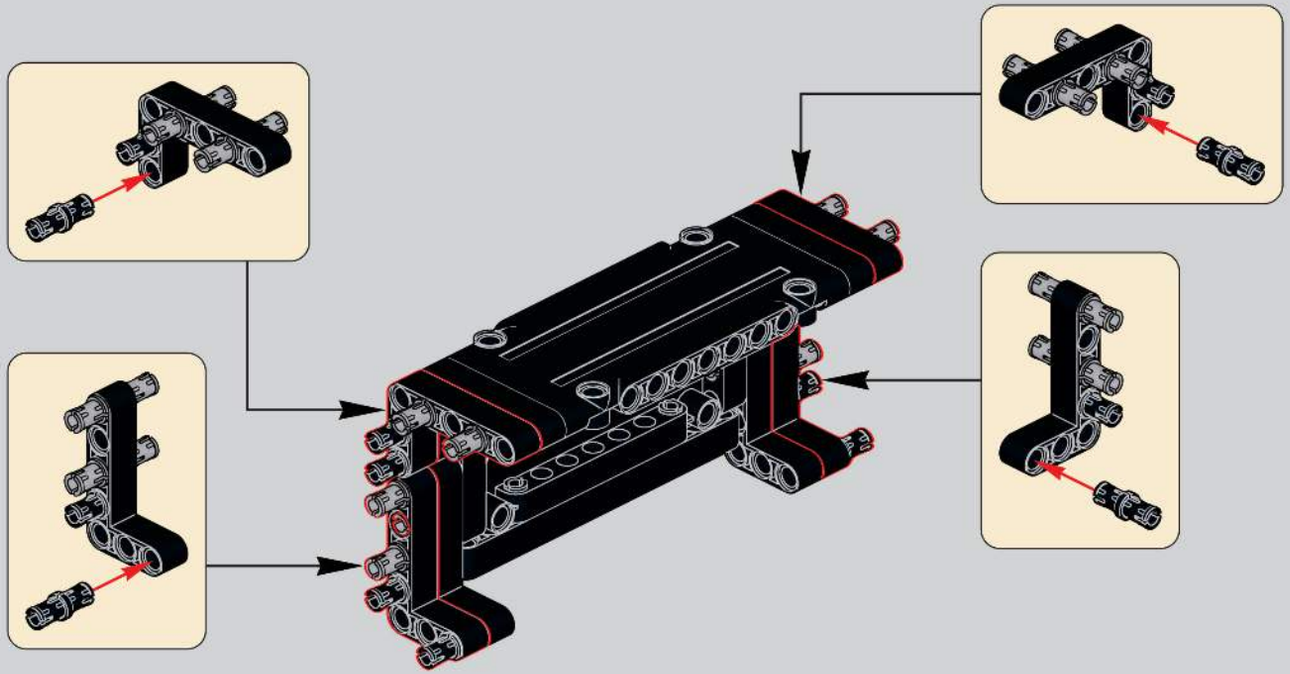

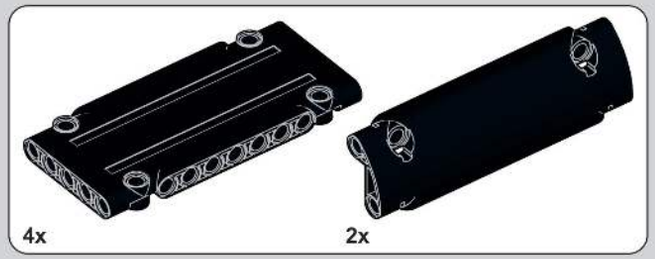

191

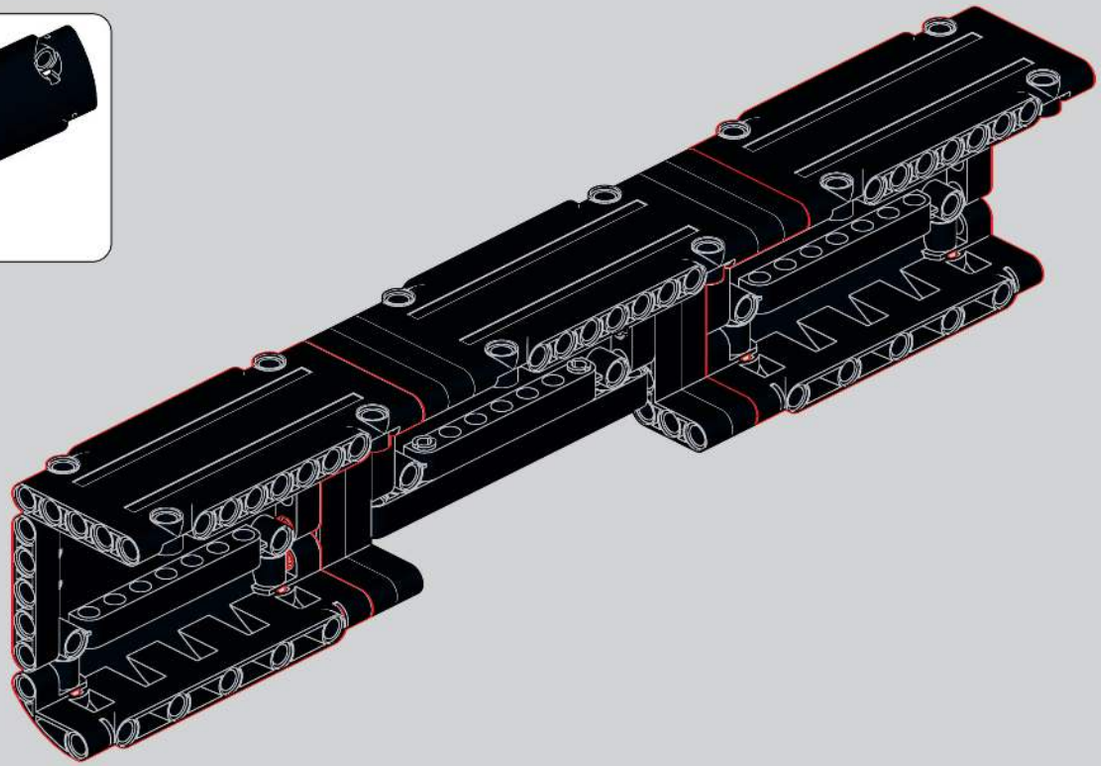

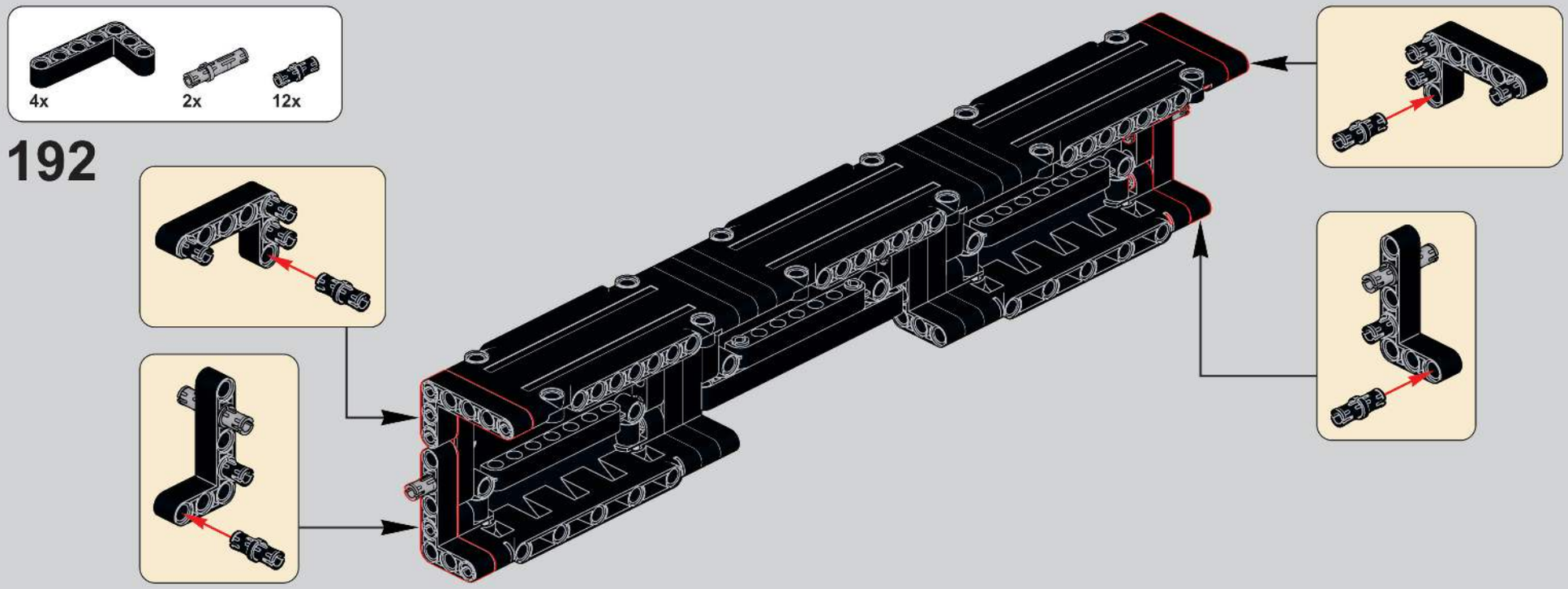
4x
2x
12x
192

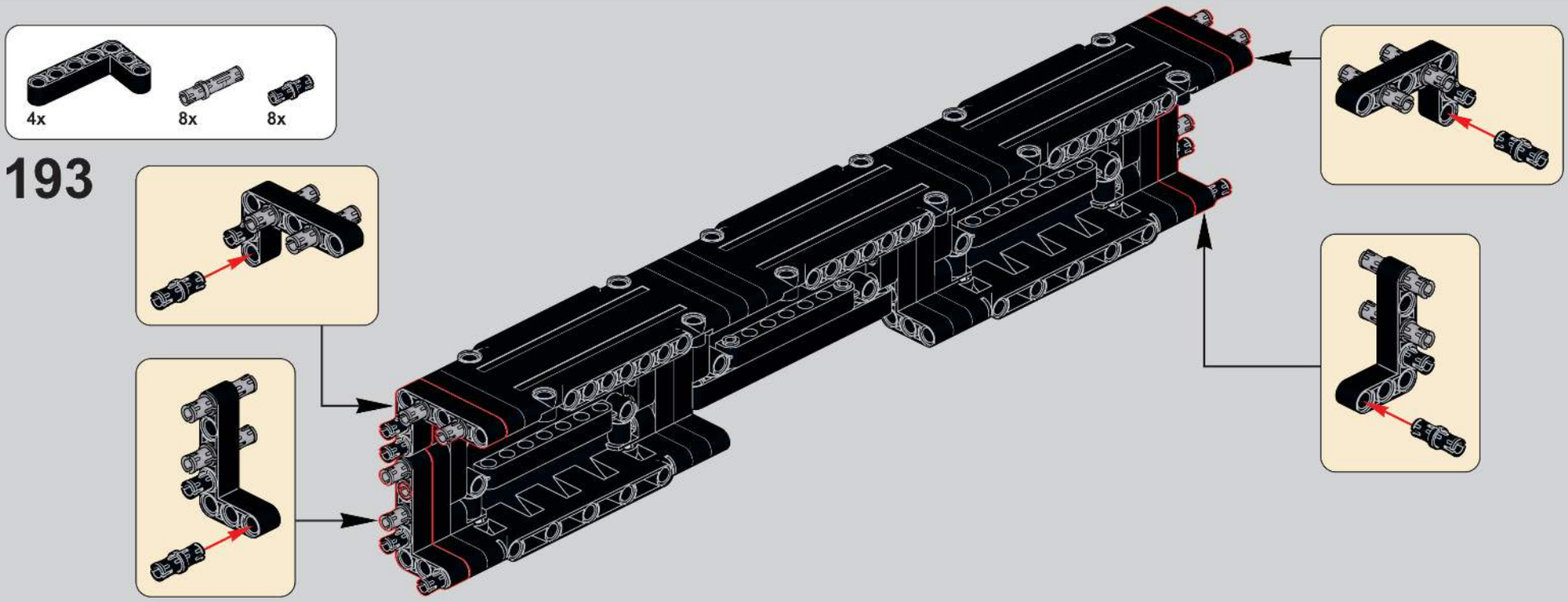
4x
8x
8x
193

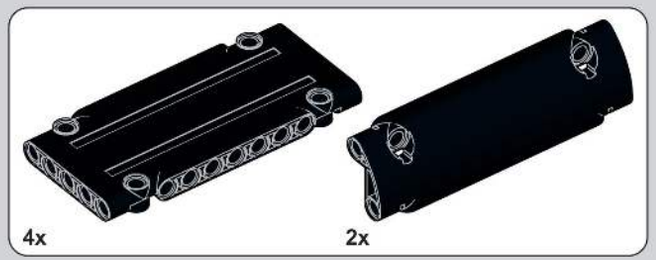

194

195

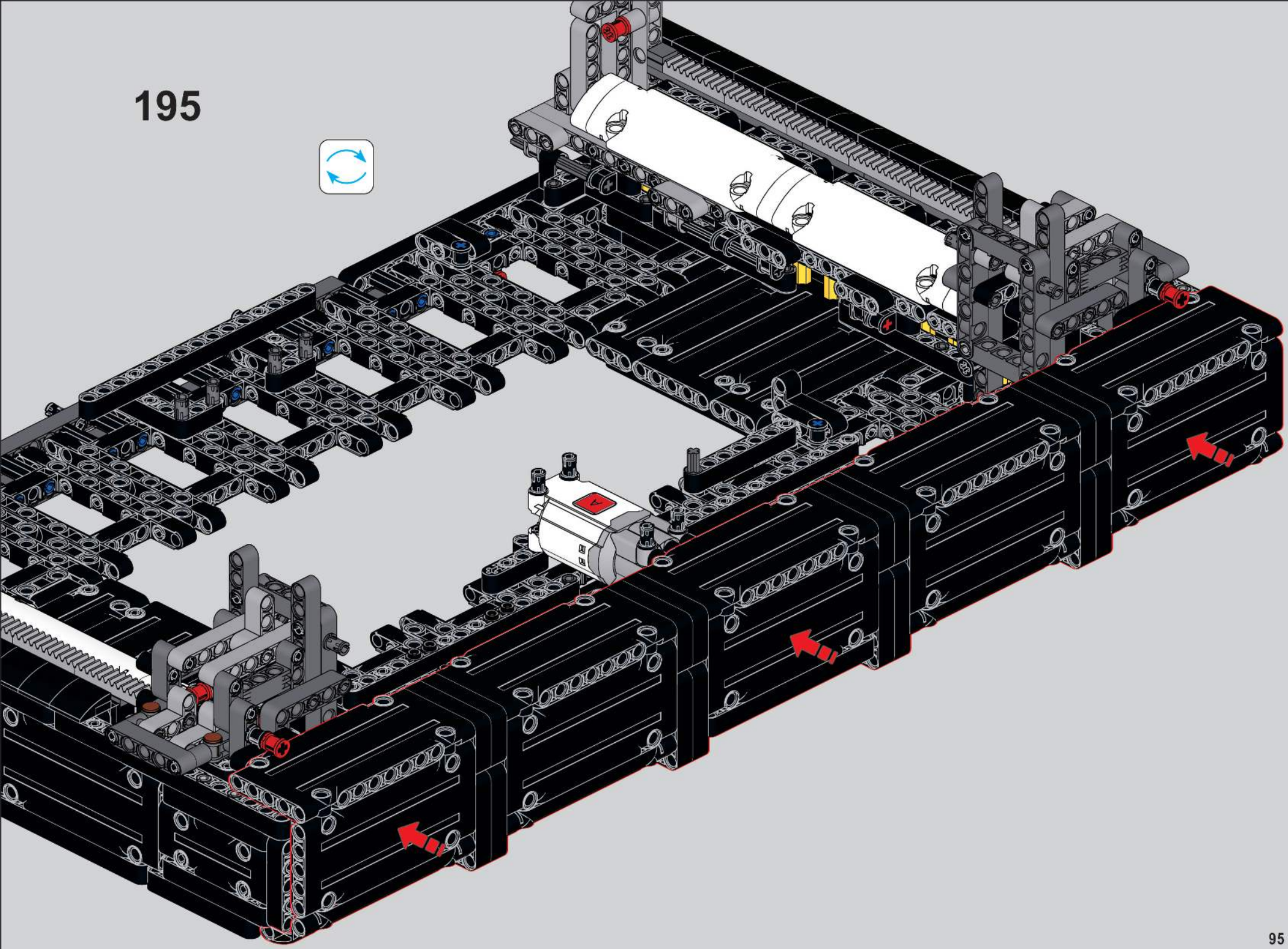

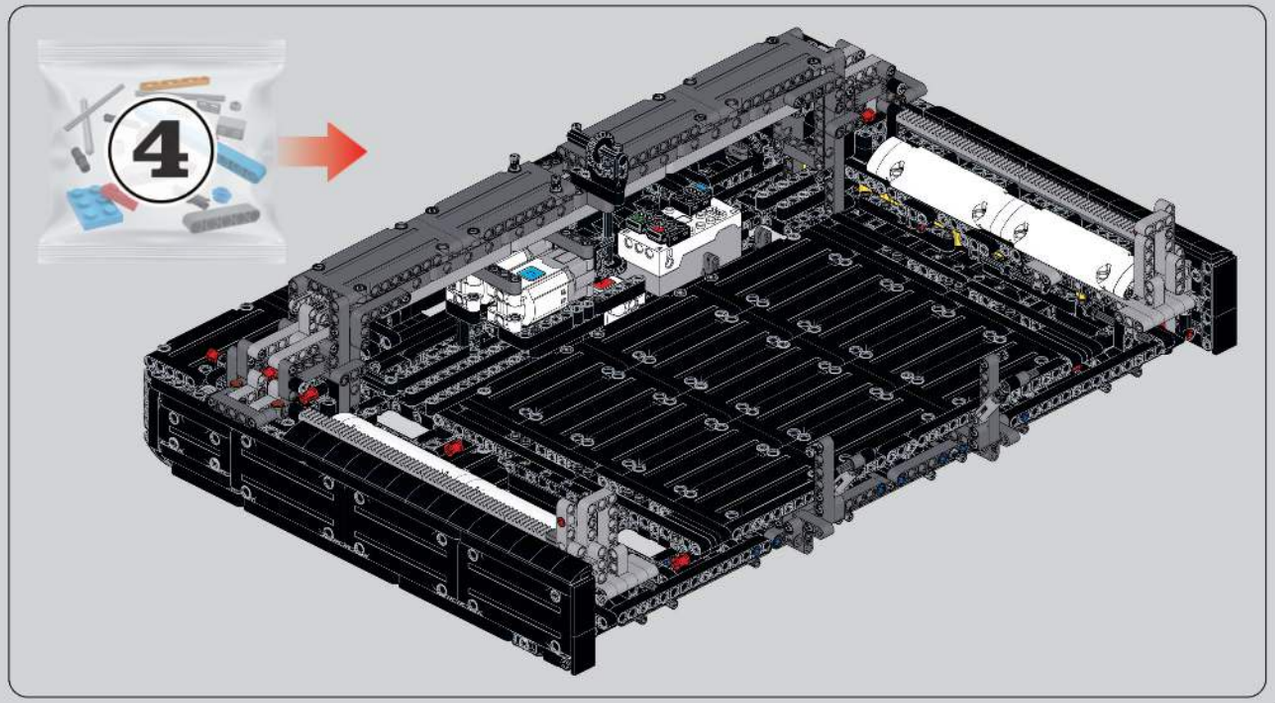

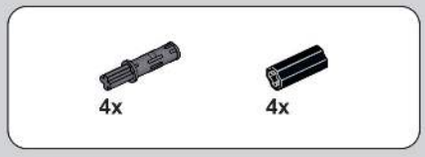

196

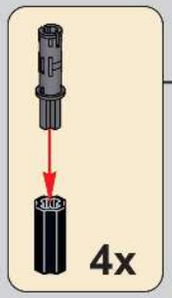

197

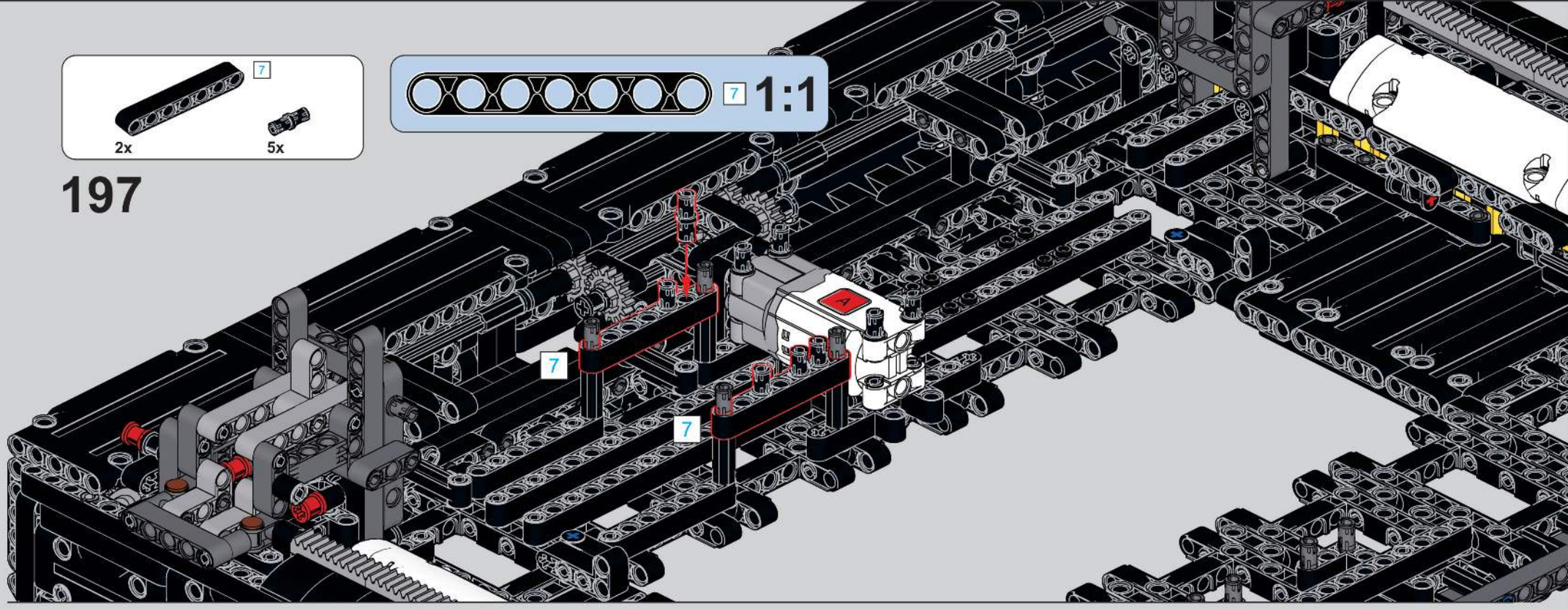

198

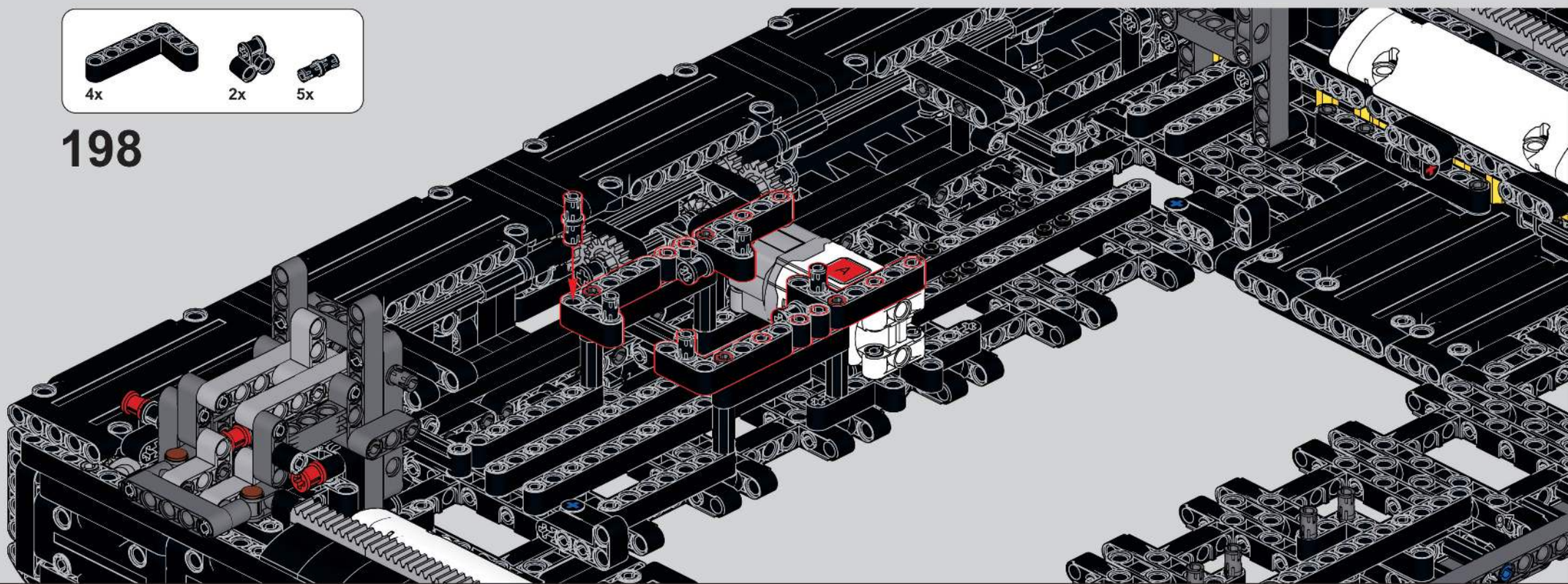

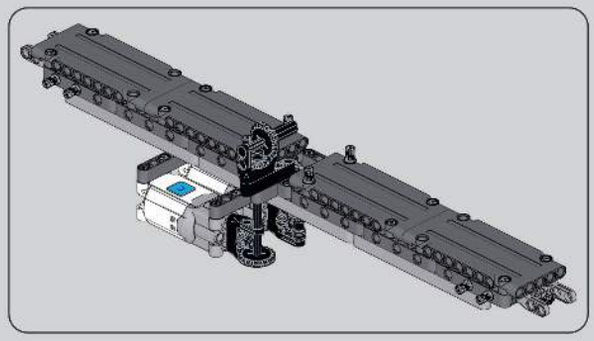

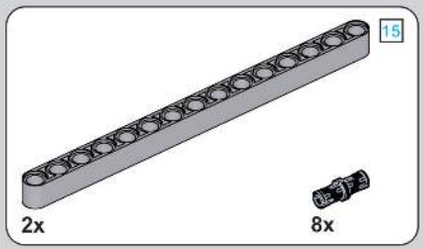

199

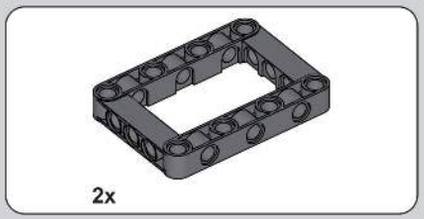

200

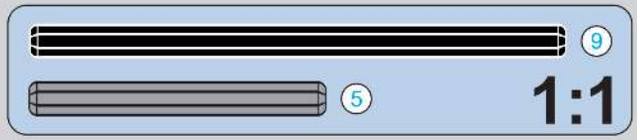

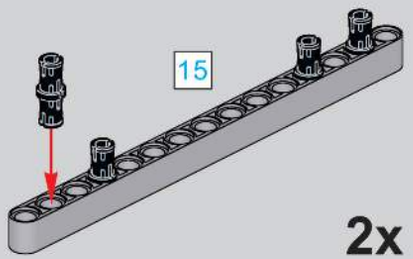

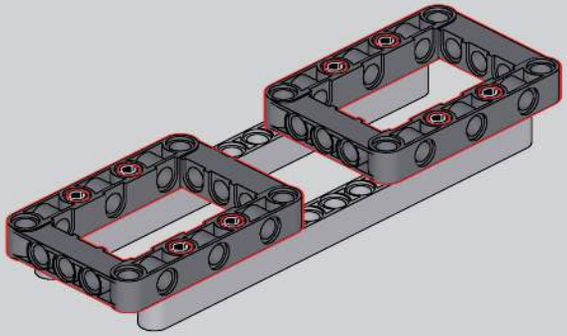

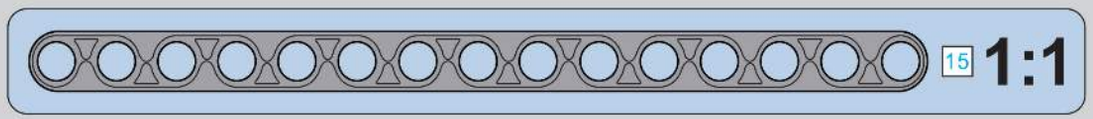

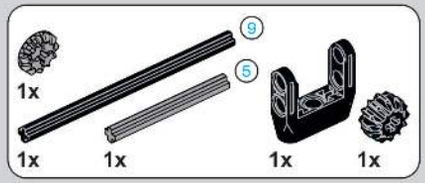

201

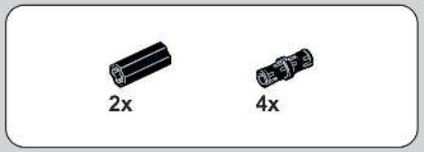

202

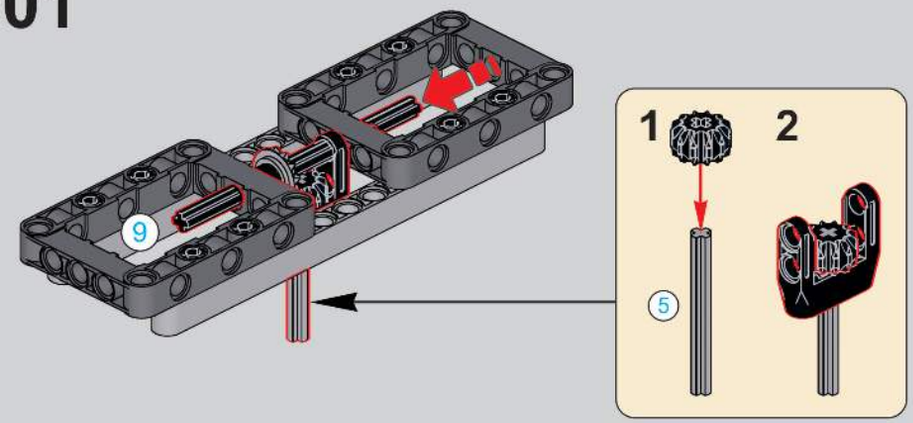

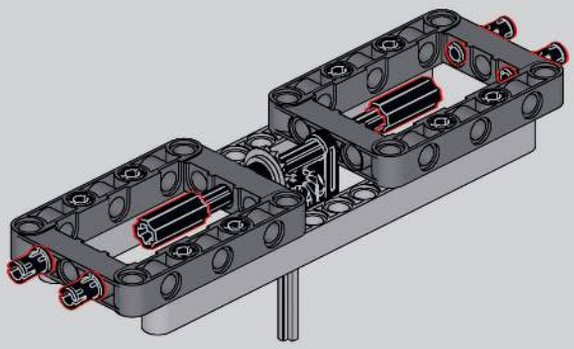

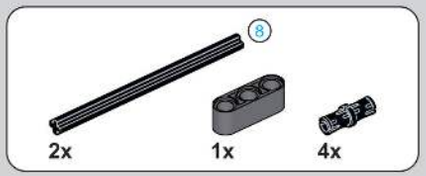

203

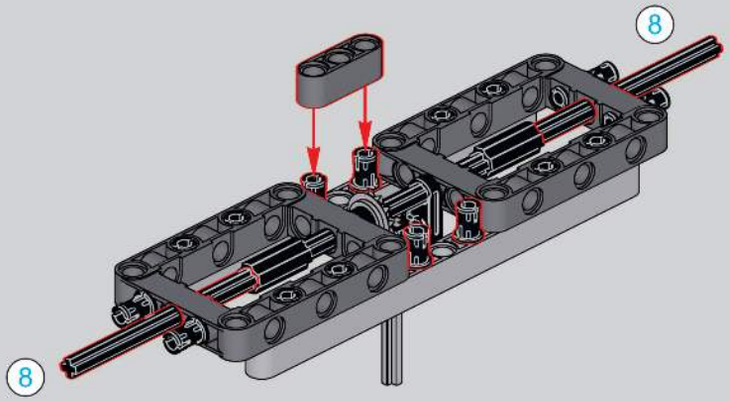

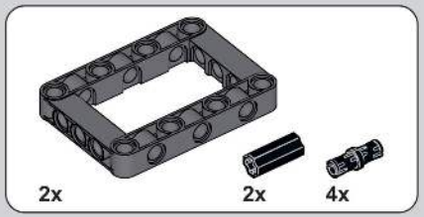

204

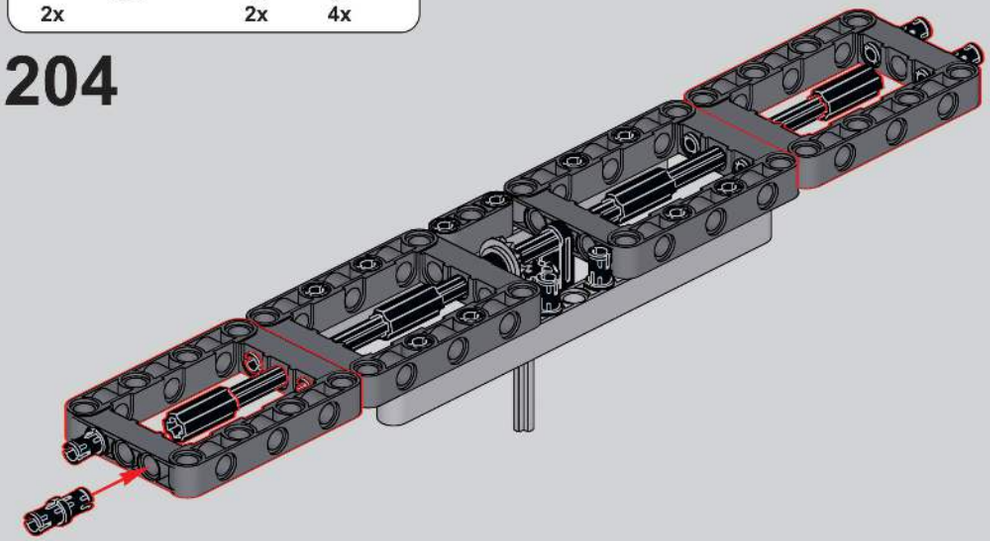

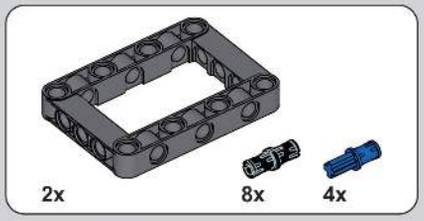

205

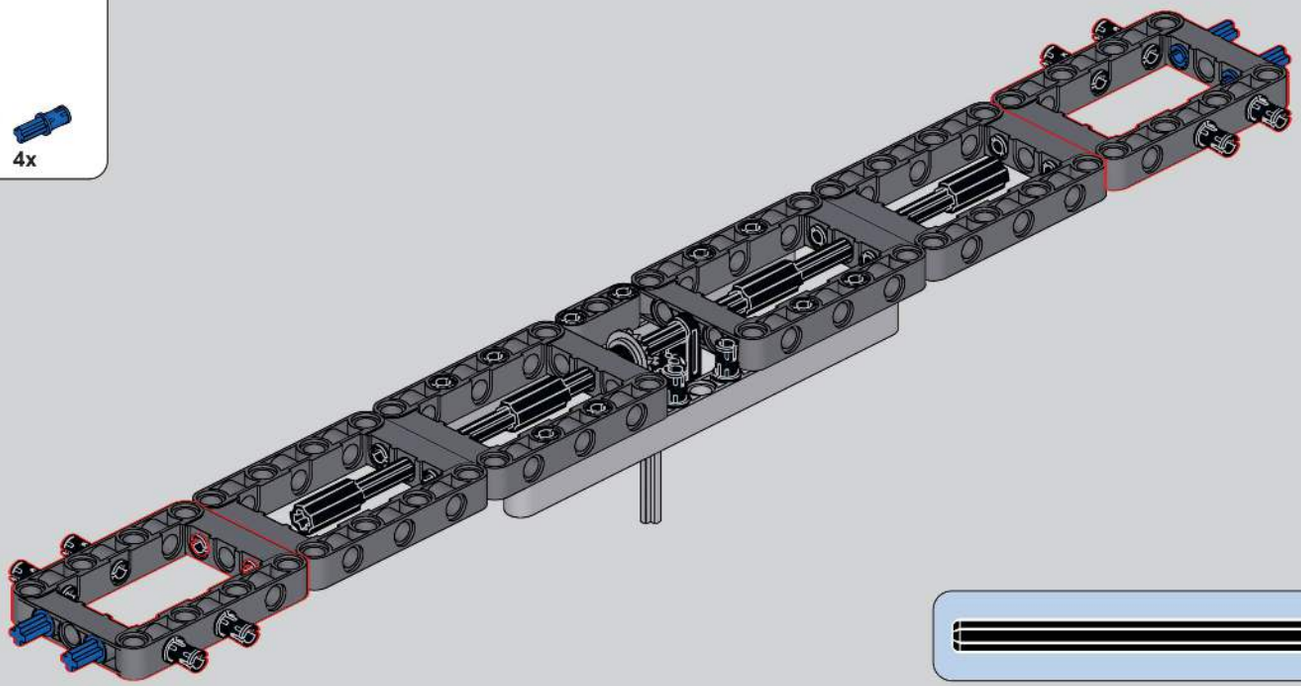

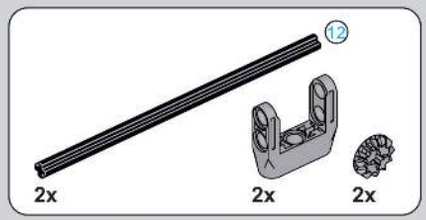

206

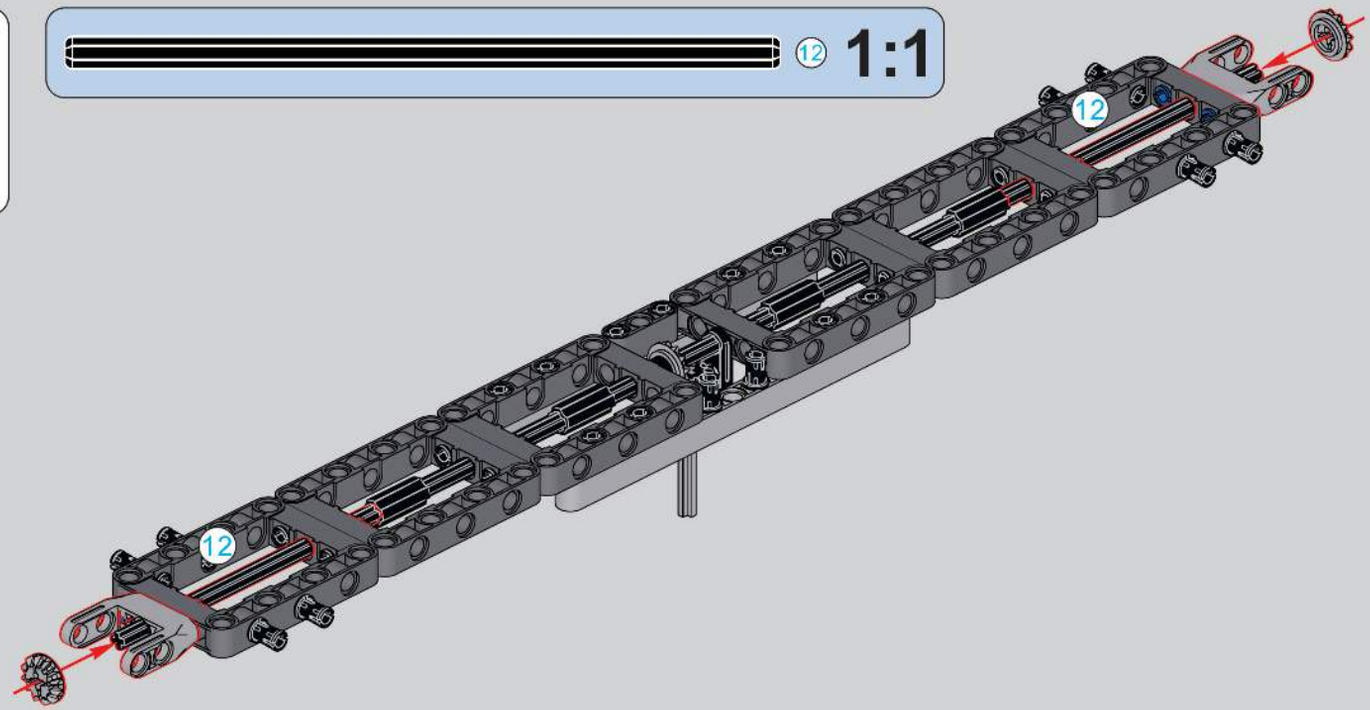

207

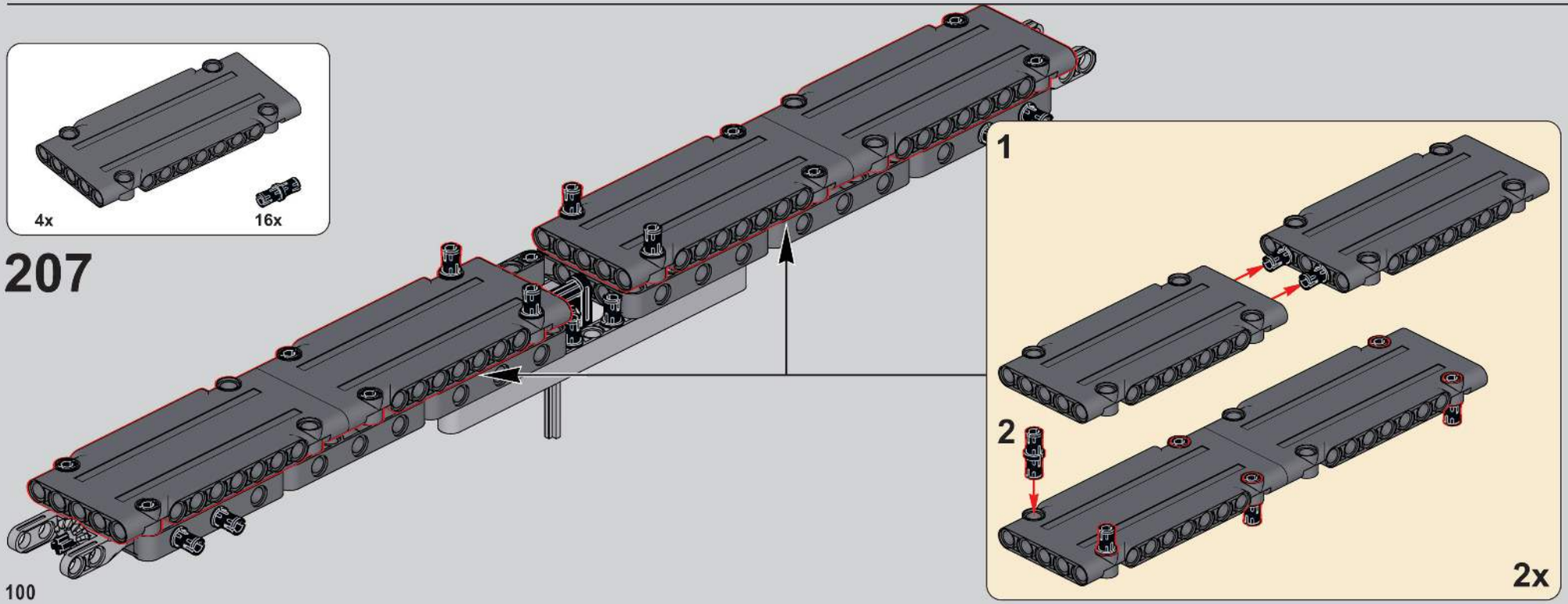

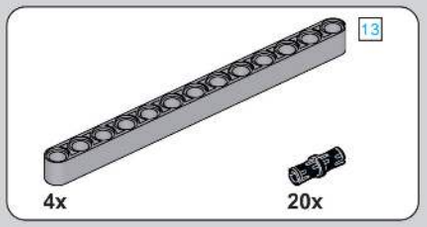

208

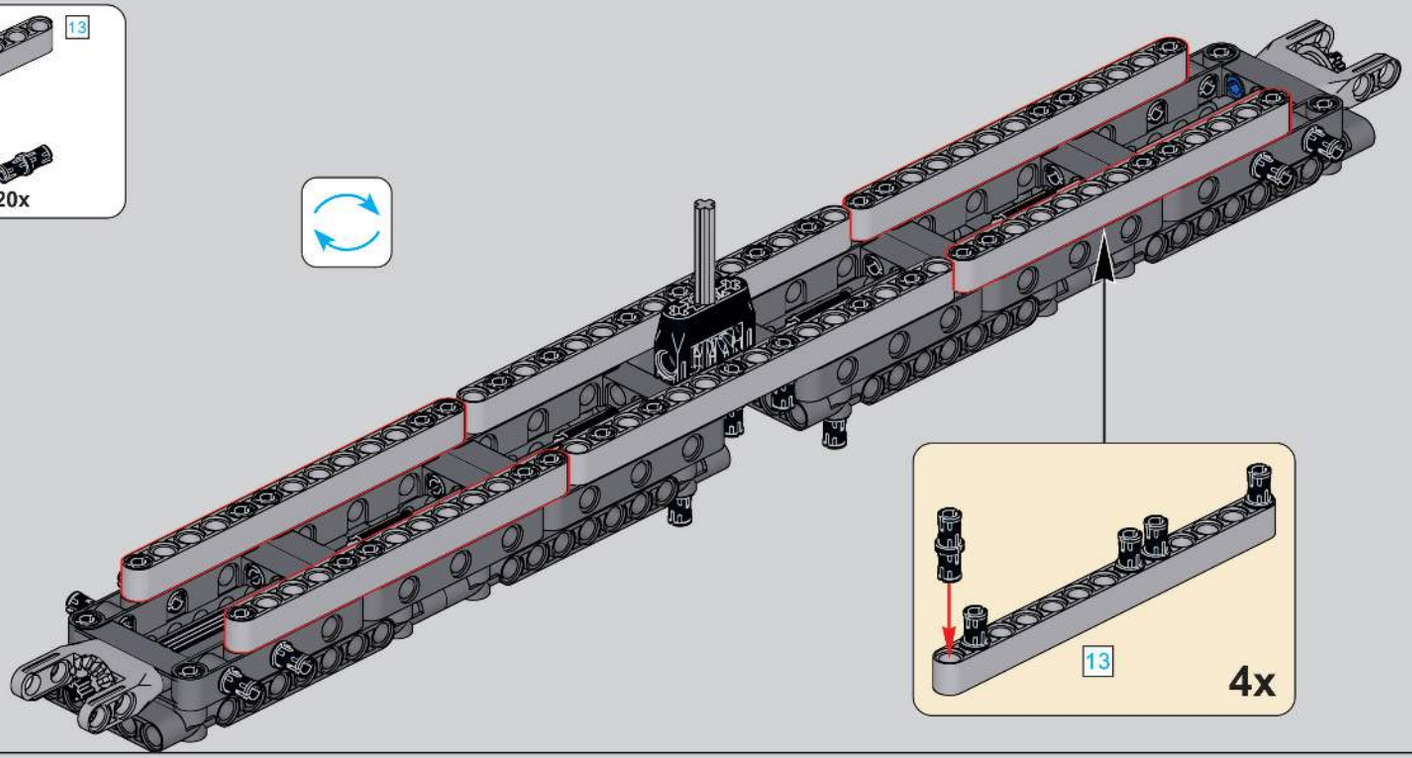

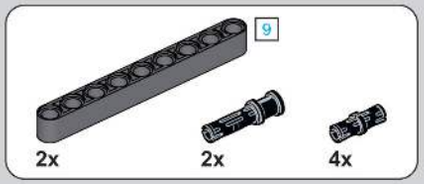

209

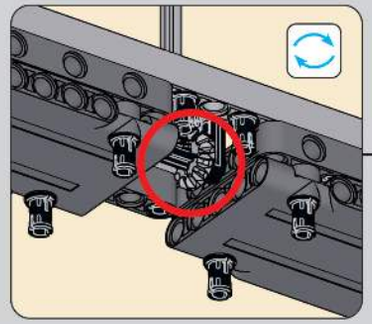

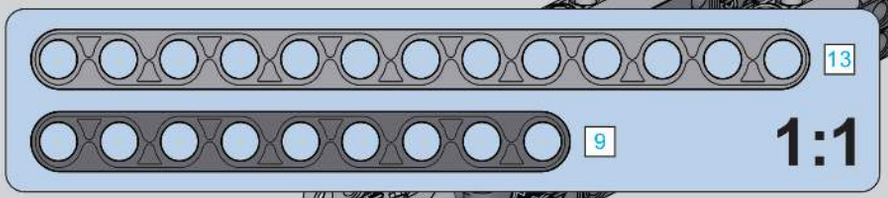

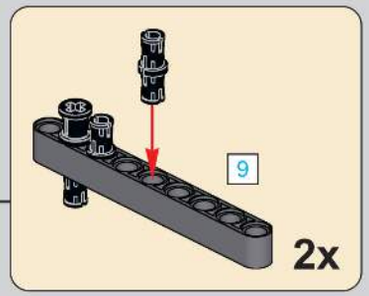

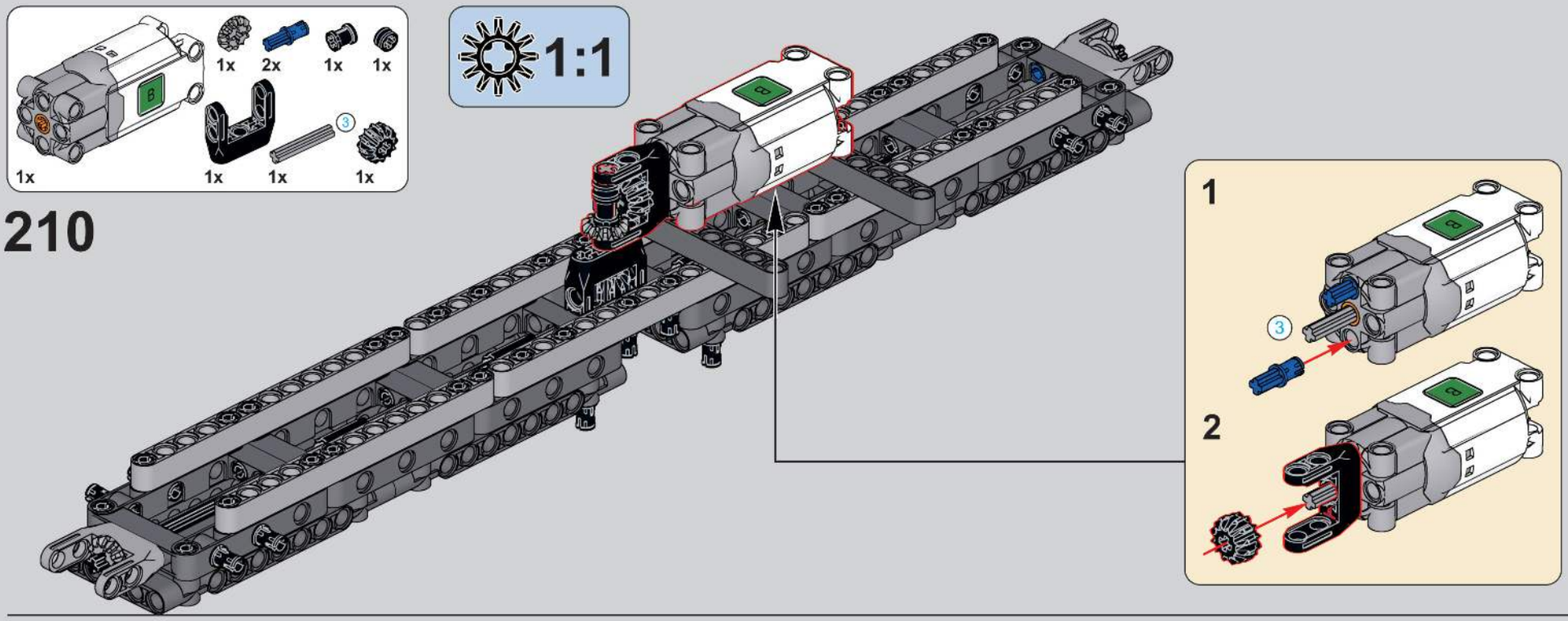
1x
2x
1x
1x
3
1x
1x
1x
1x
1:1
210
1
3
2

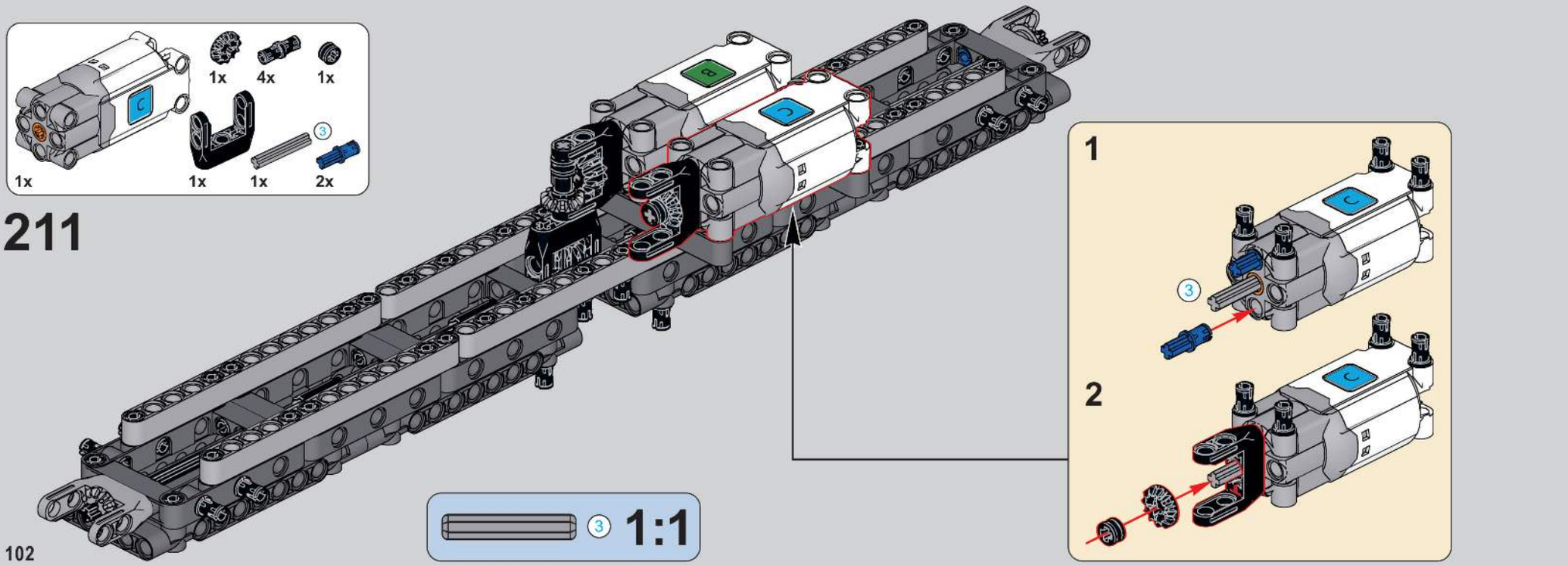
1x
4x
1x
3
1x
1x
1x
2x
211
1
3
2
3
1:1

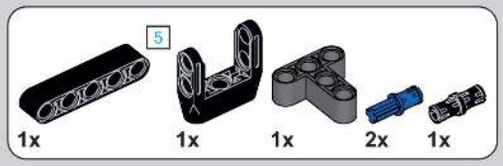

212

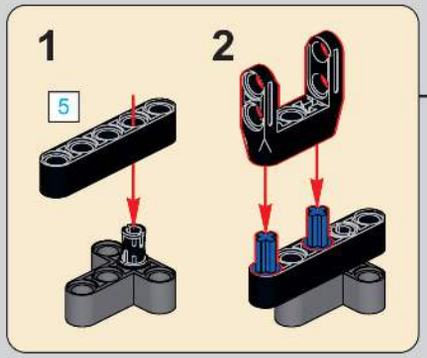

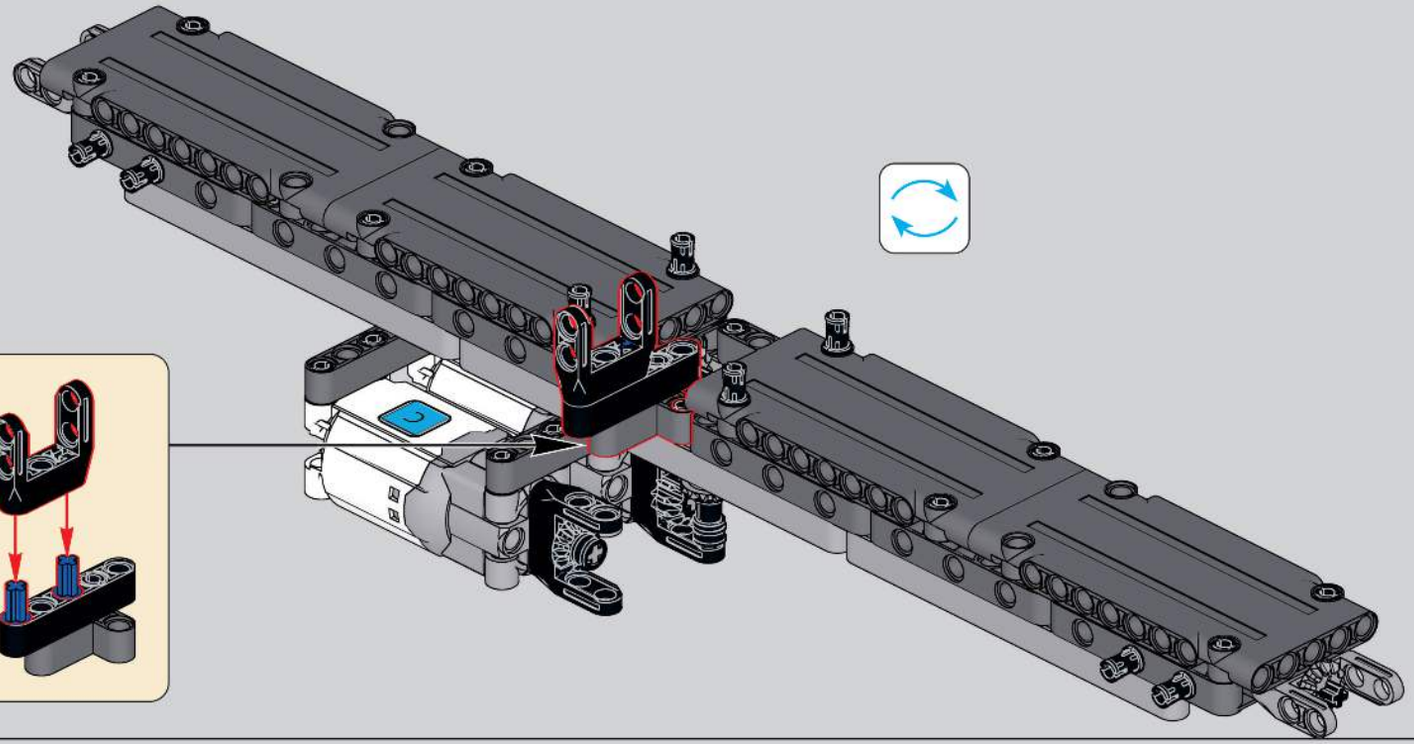

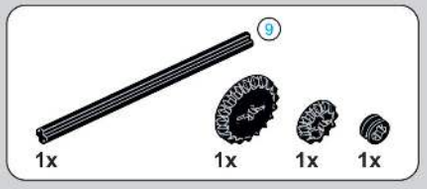

213

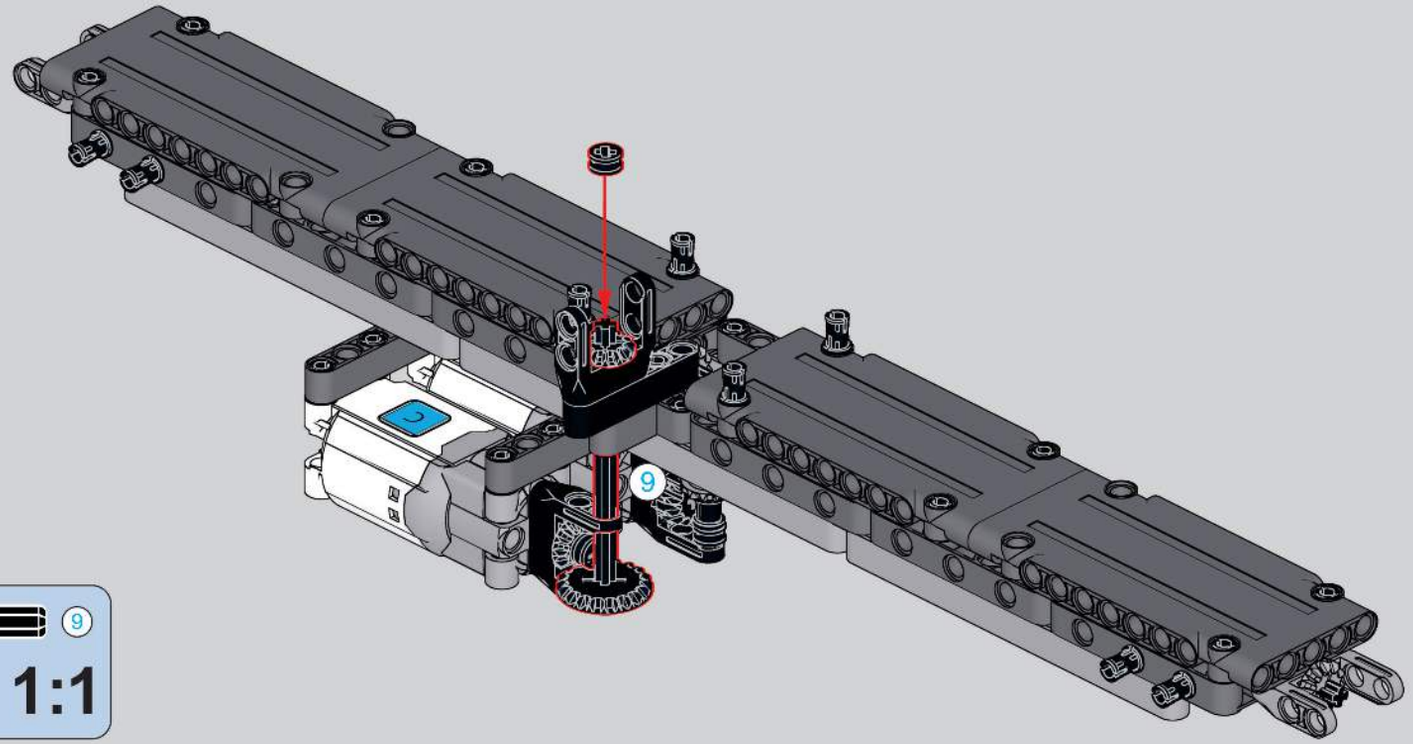

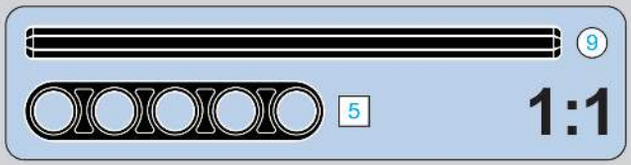

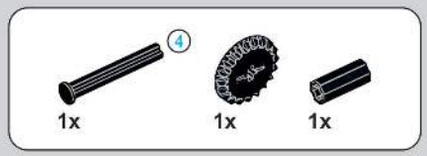

214

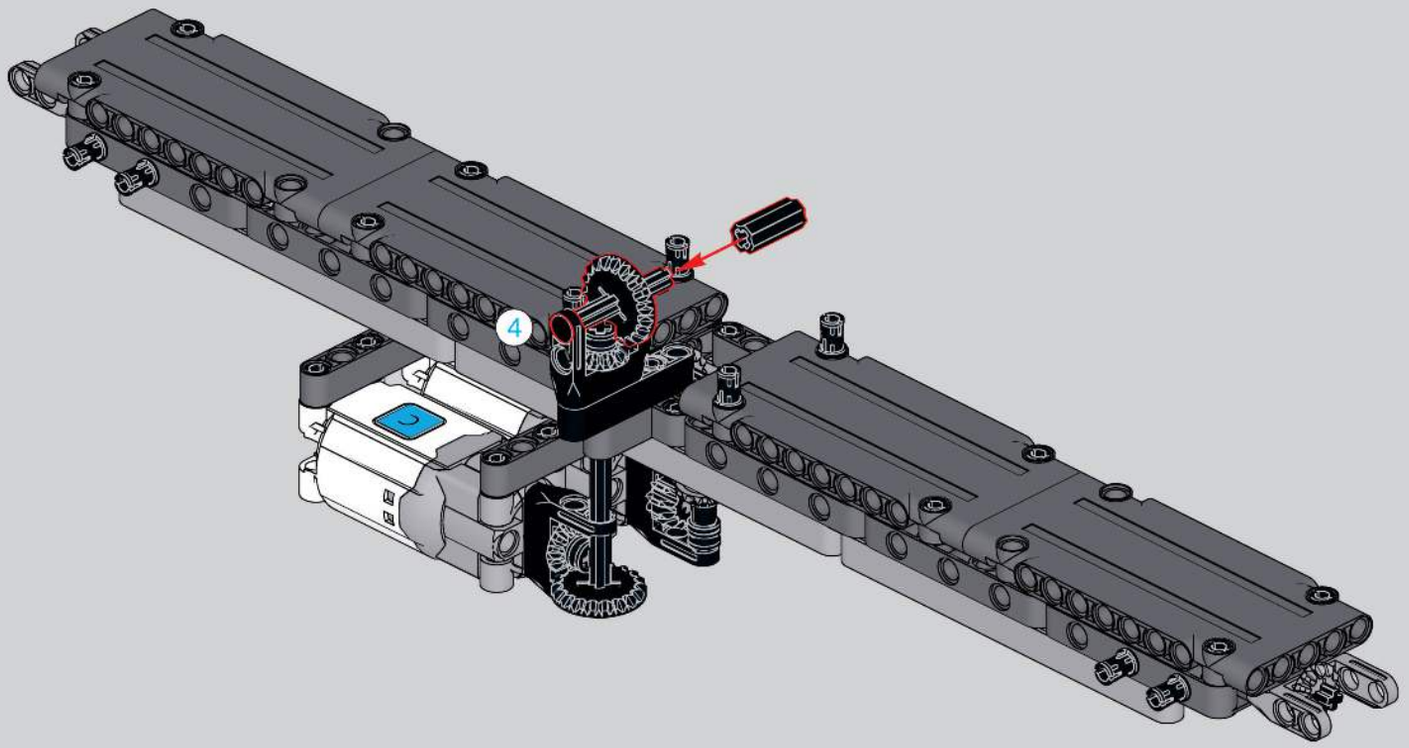

215

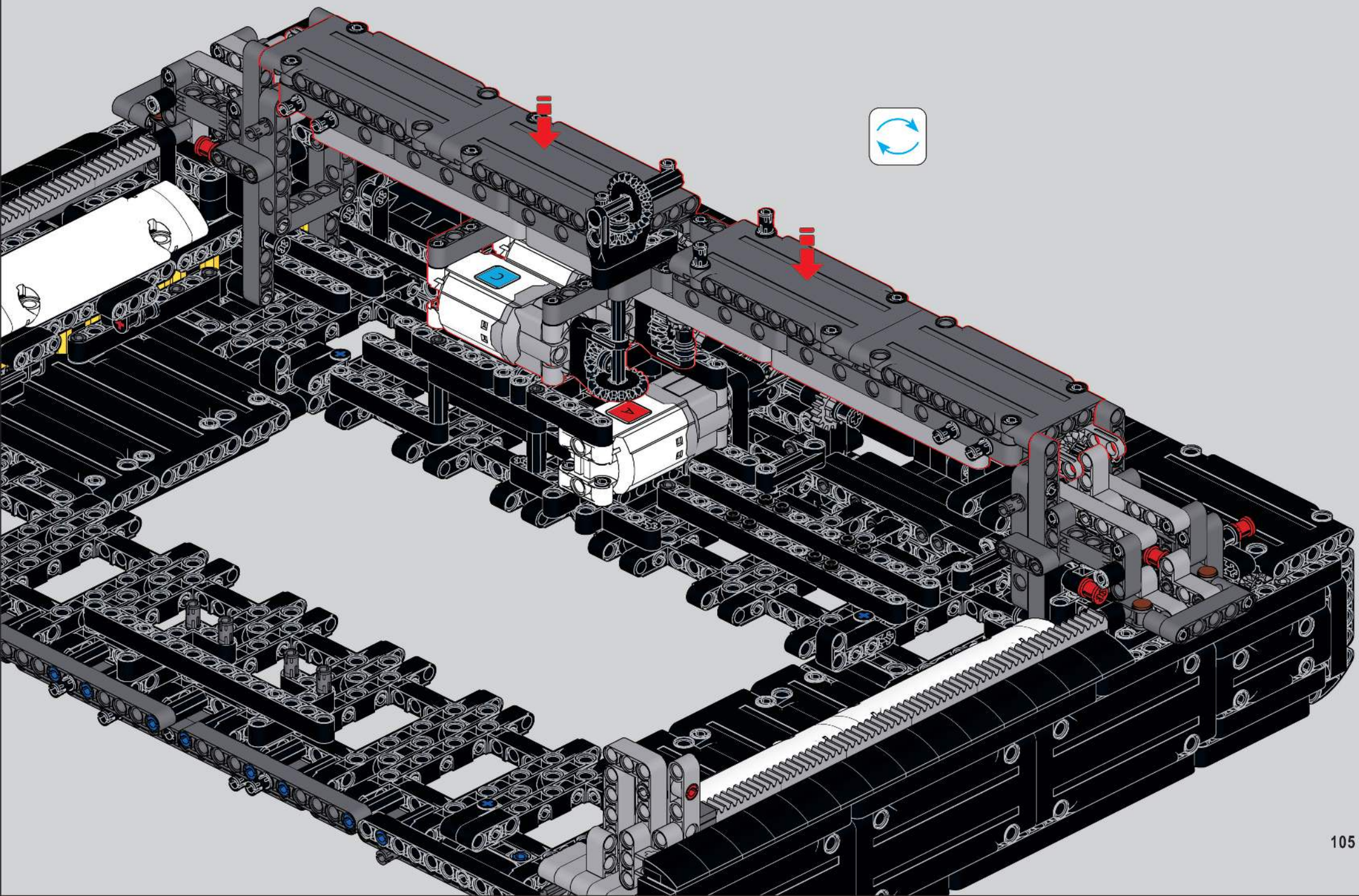

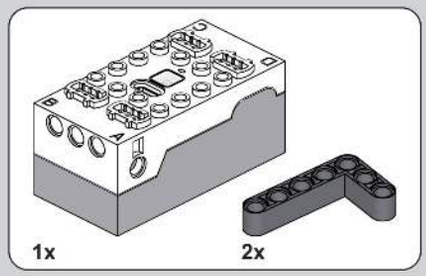

216

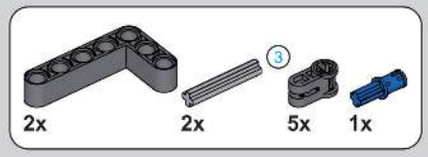

217

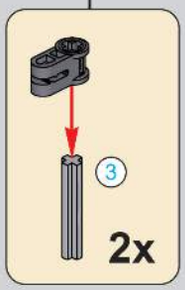

218

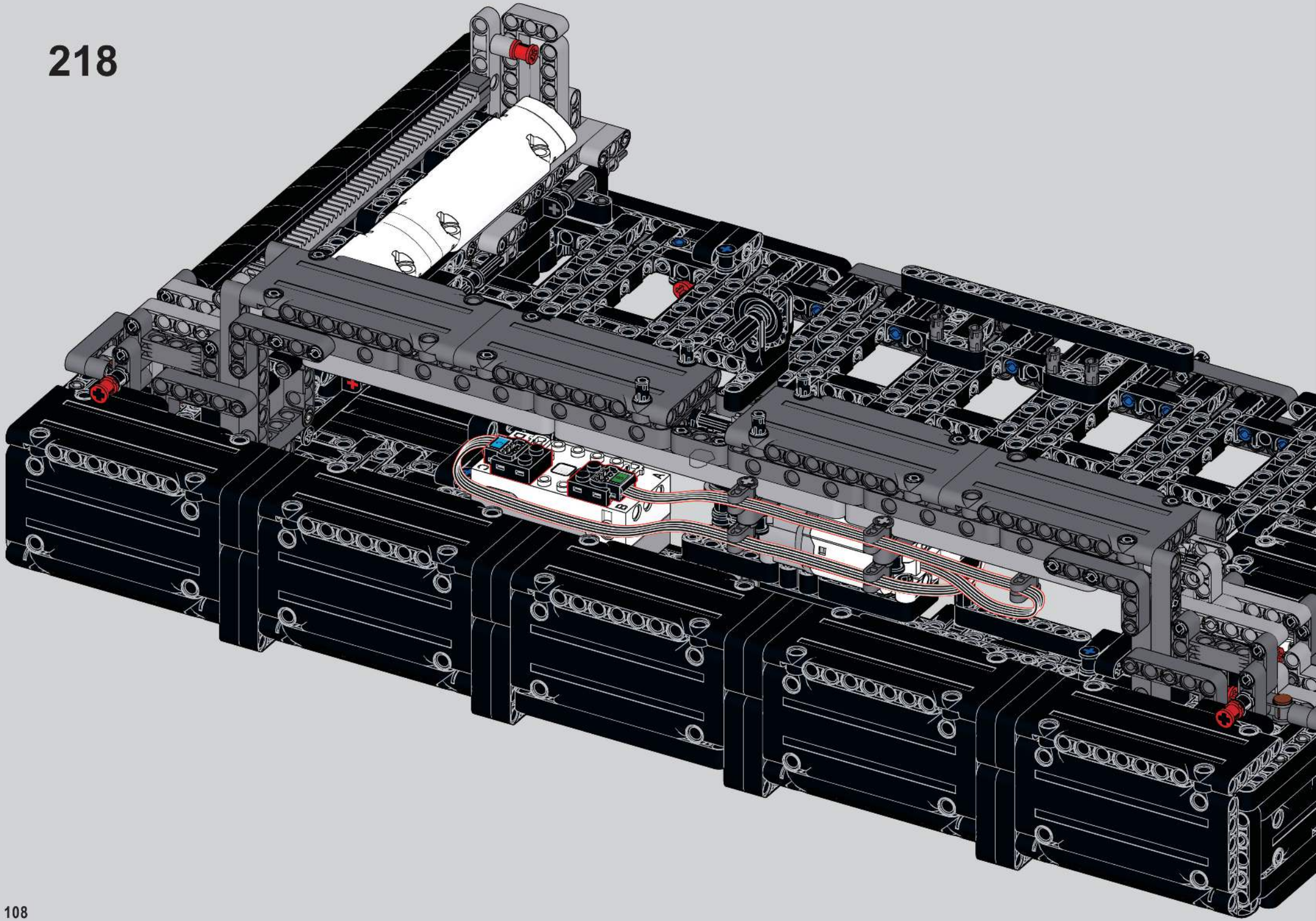

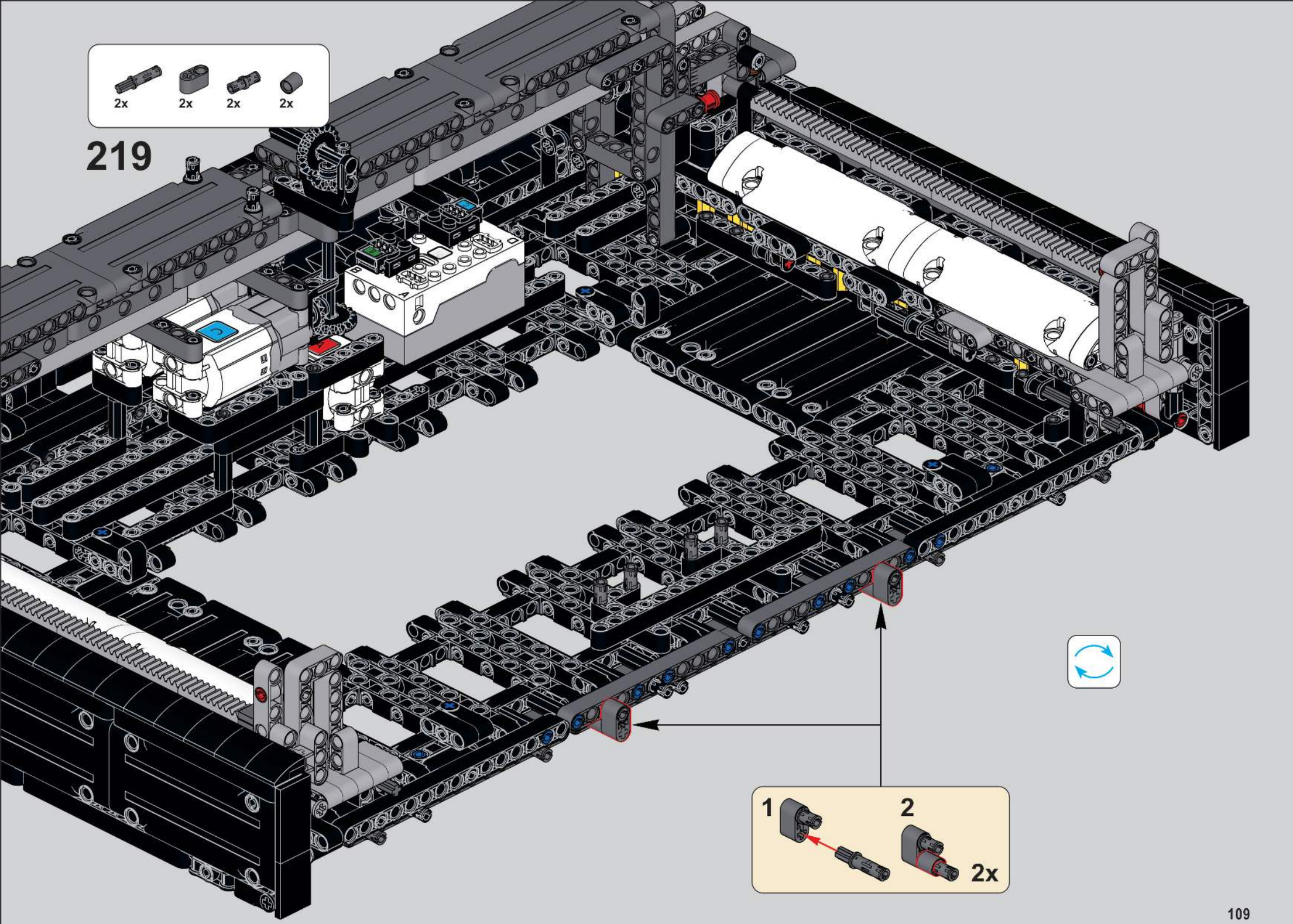
2x
2x
2x
2x
219
1
2
2x

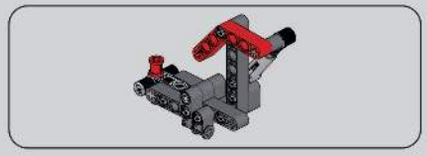

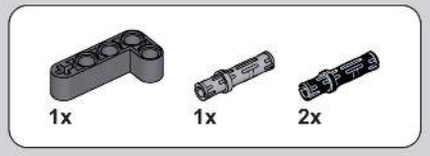

220

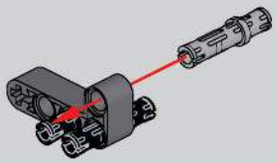

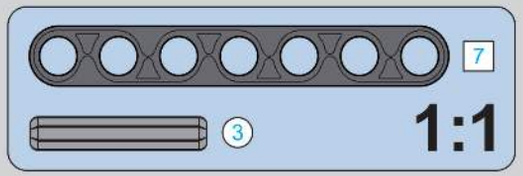

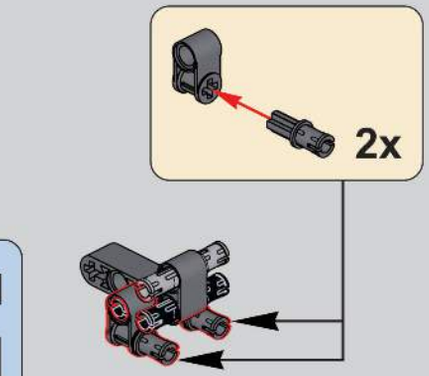

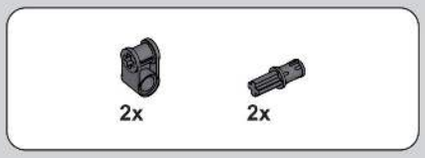

221

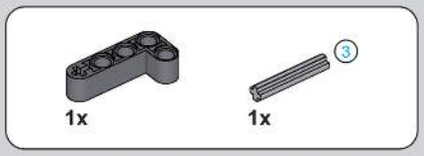

222

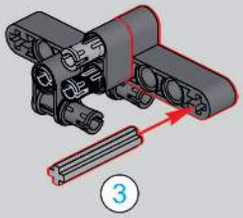

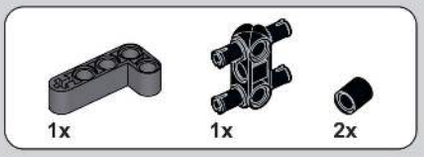

223

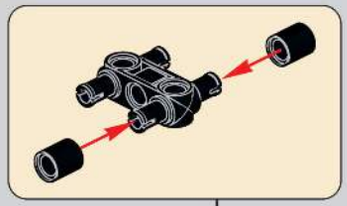

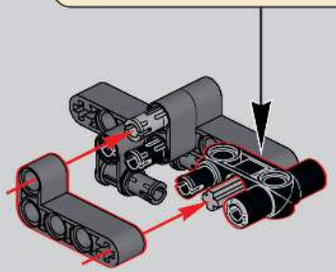

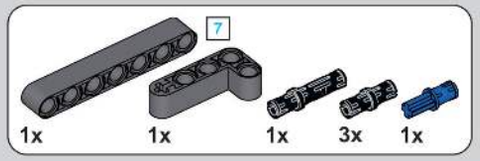

224

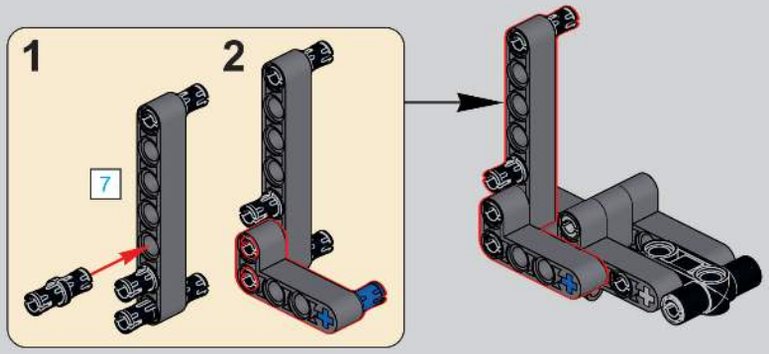

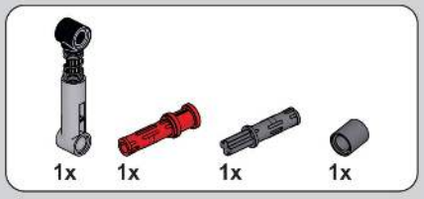

225

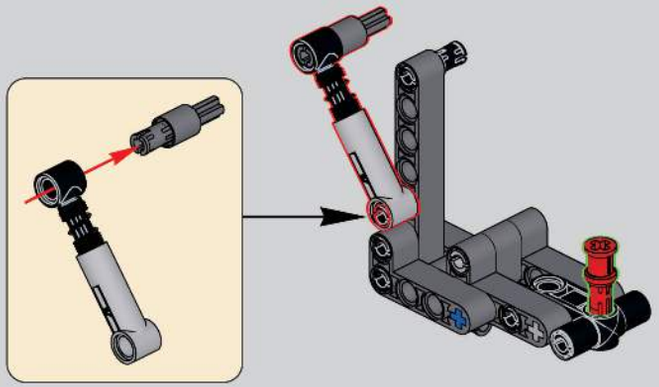

226

3 1:1

227

1x 1x 2x

228

2x 2x

2x

229

1x 1x 3

3

230

1x 1x 2x

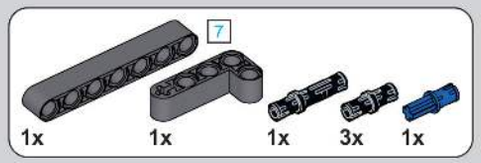

231

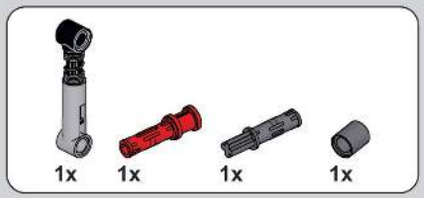

232

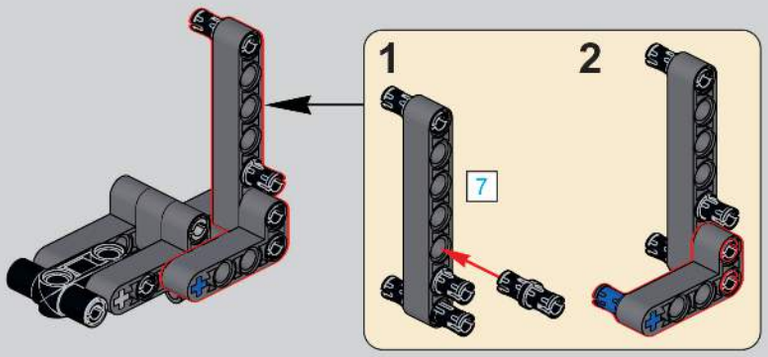

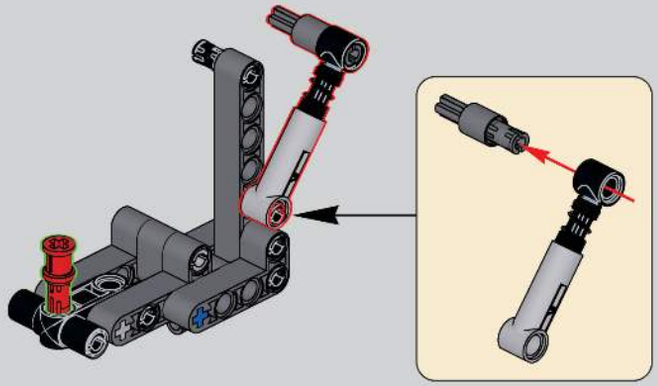

233

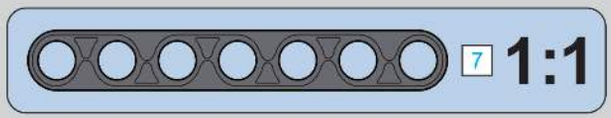

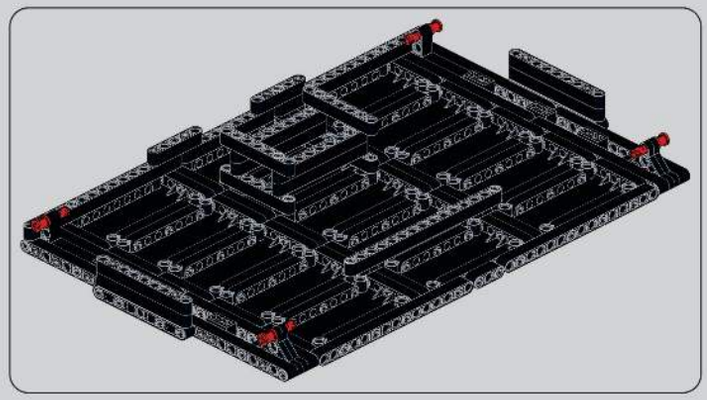

234

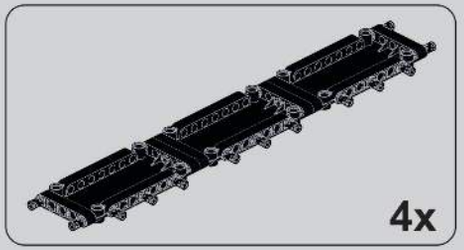

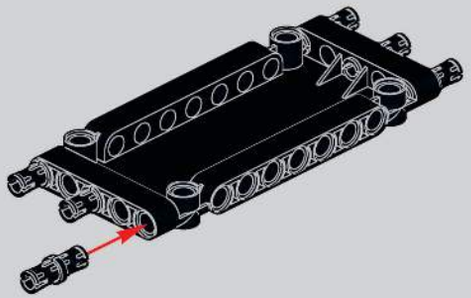

235

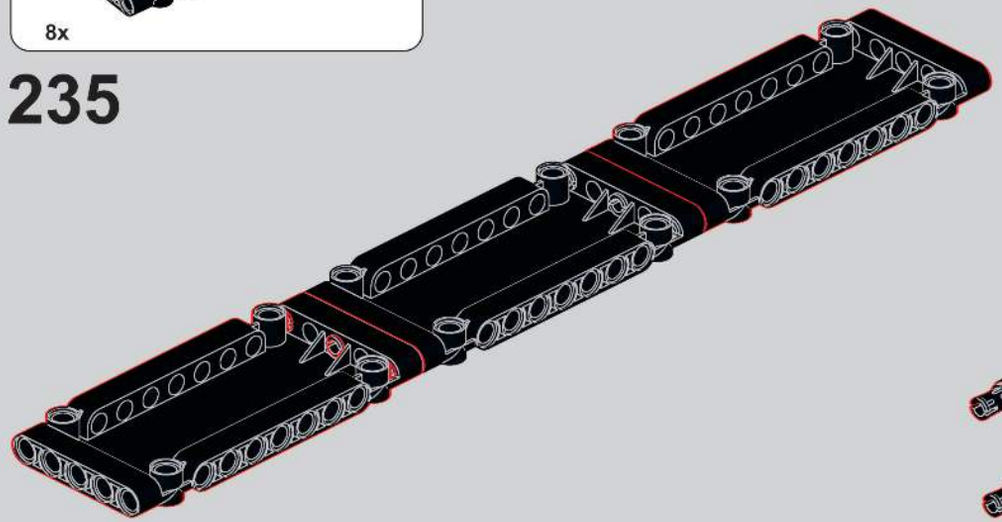

236

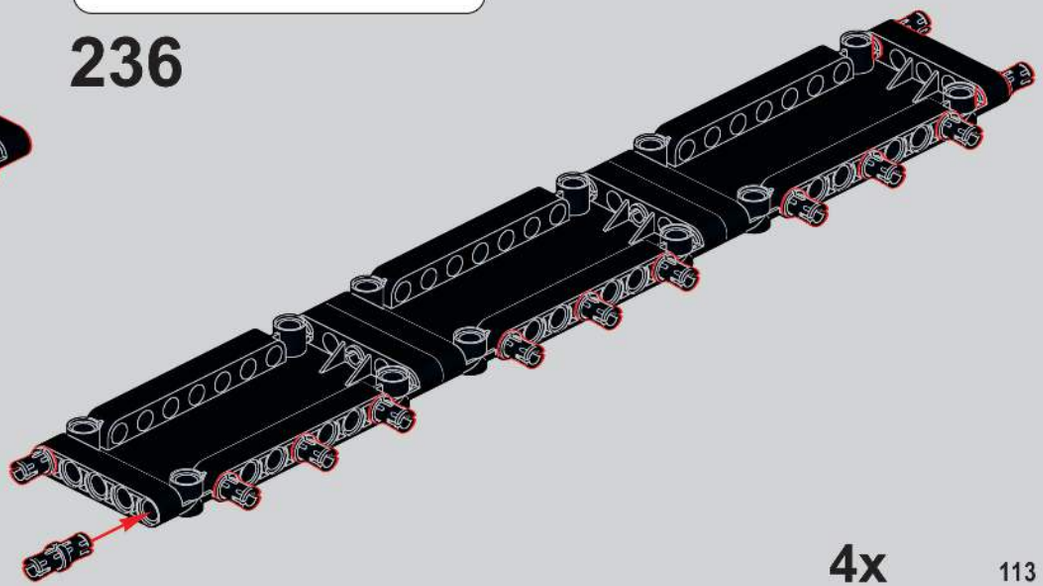

4x

237

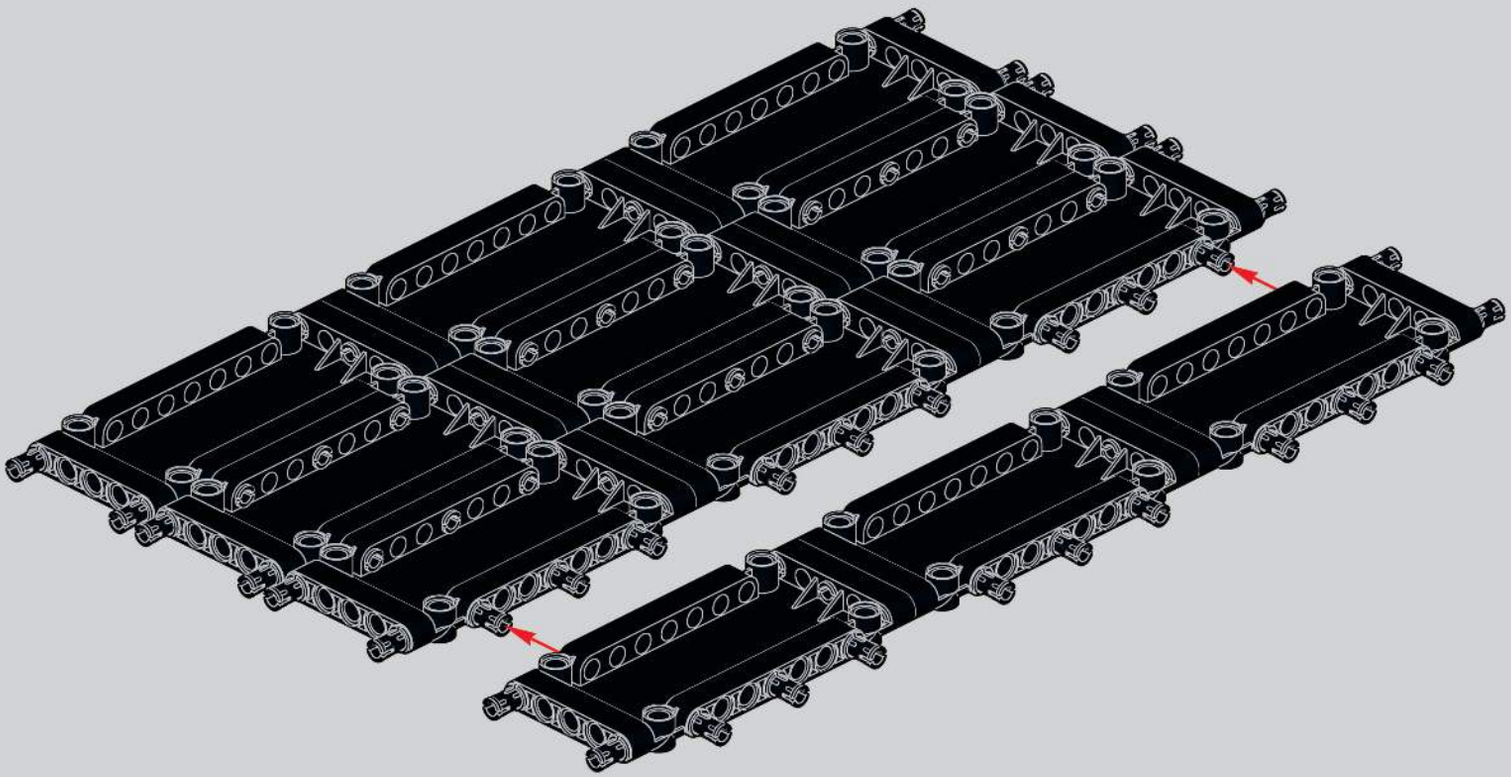

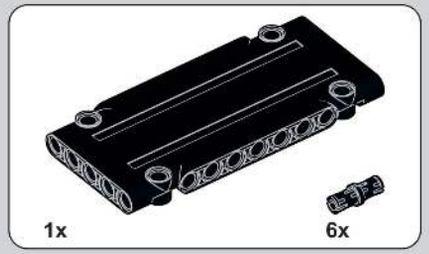

238

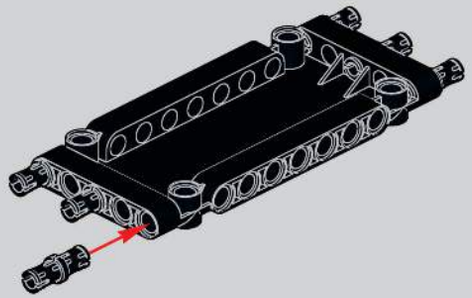

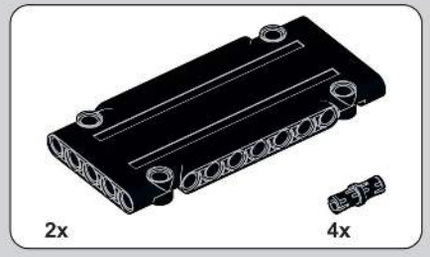

239

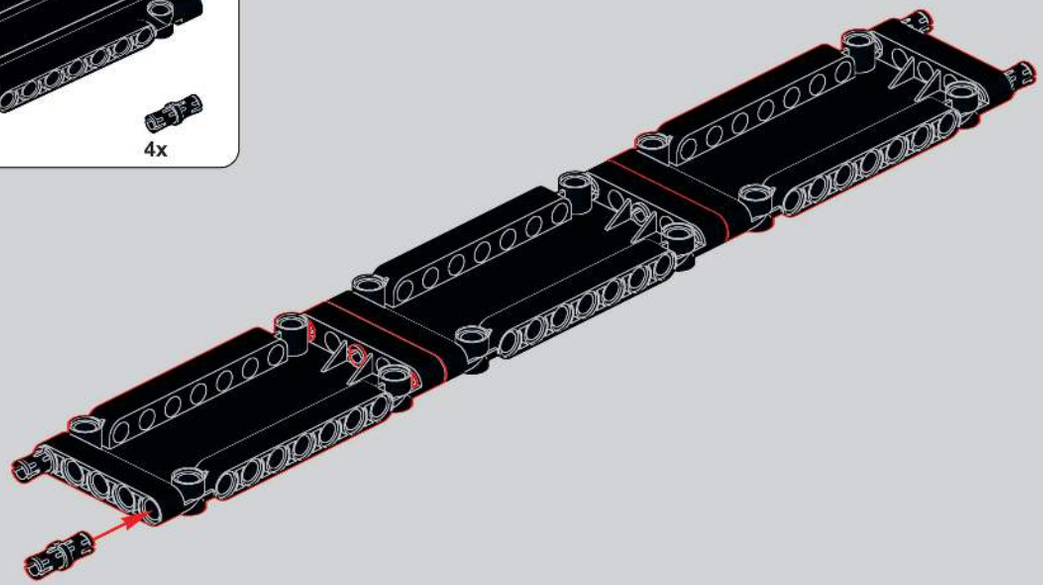

240

241

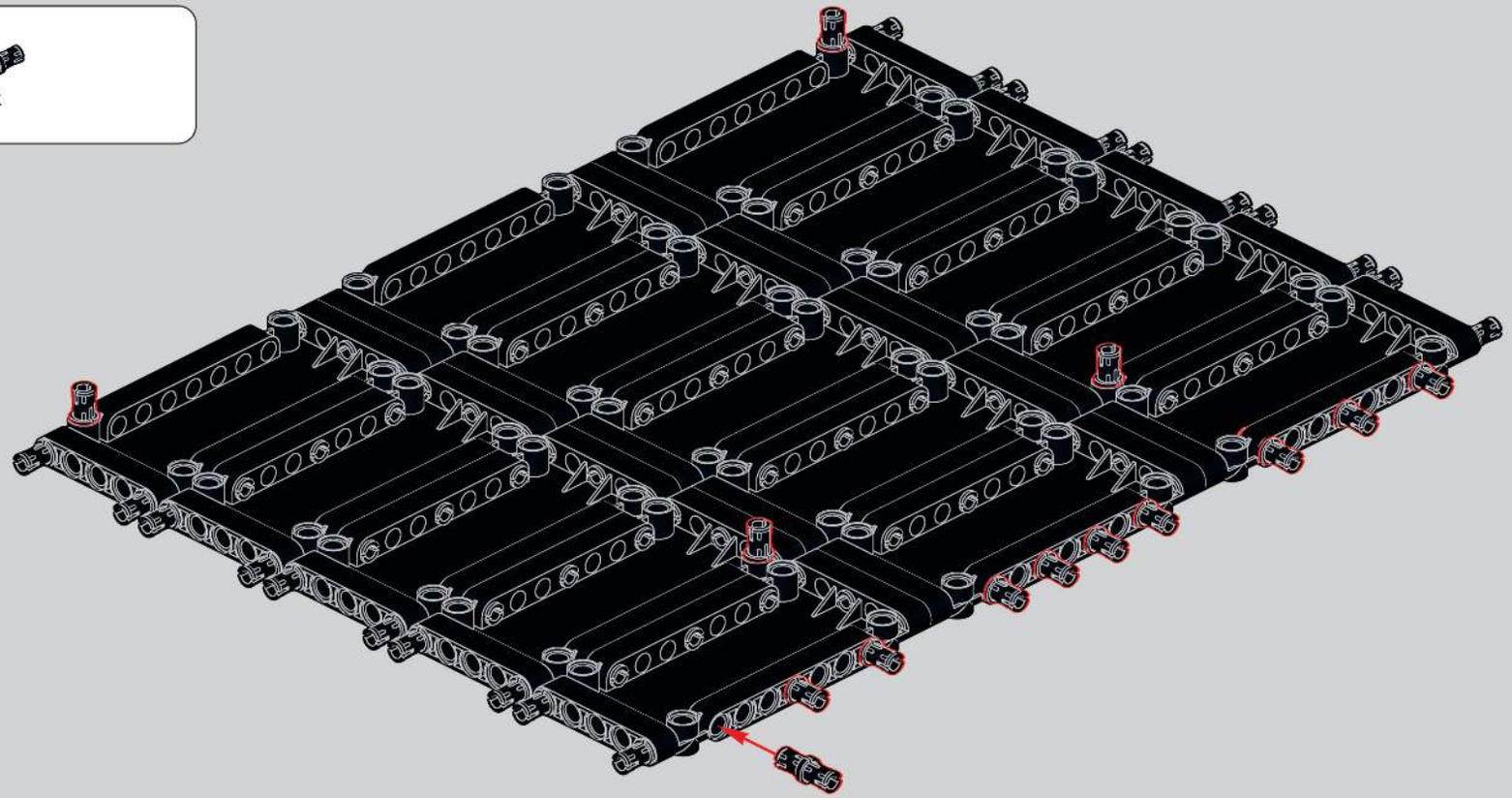

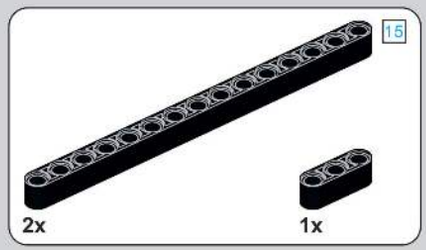

242

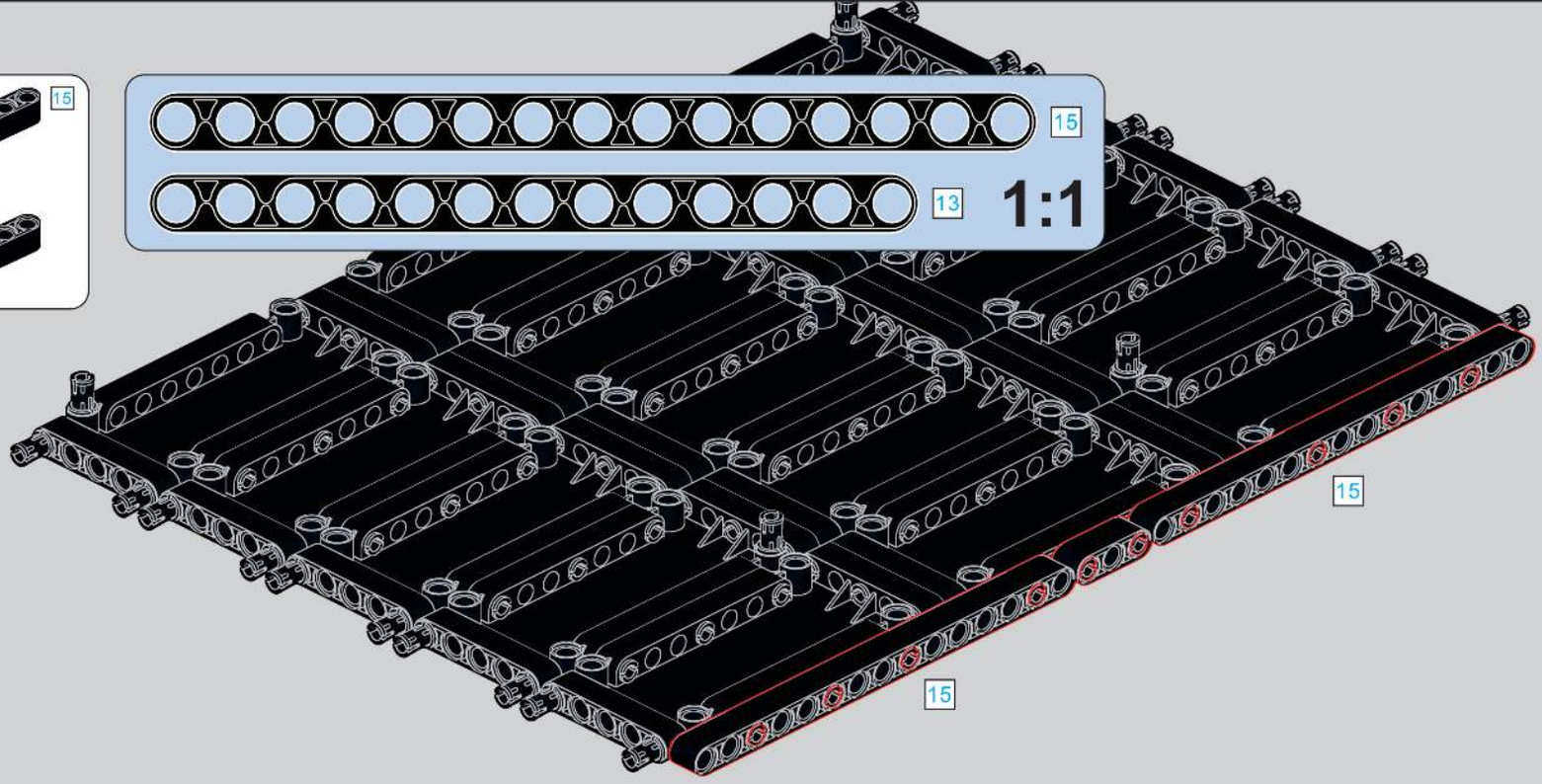

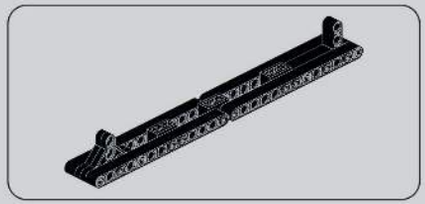

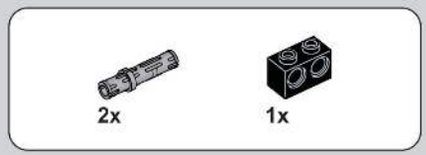

243

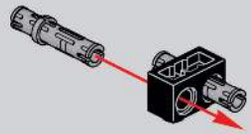

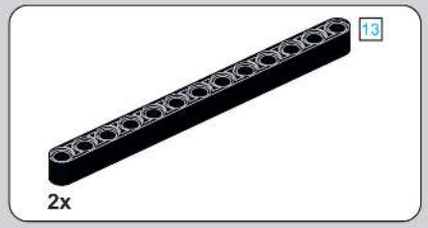

244

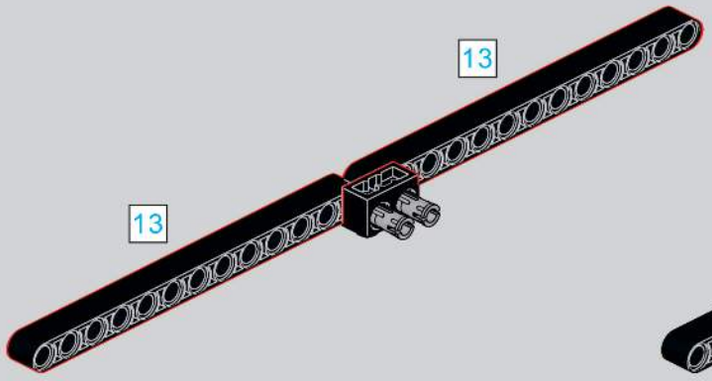

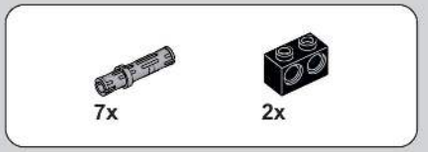

245

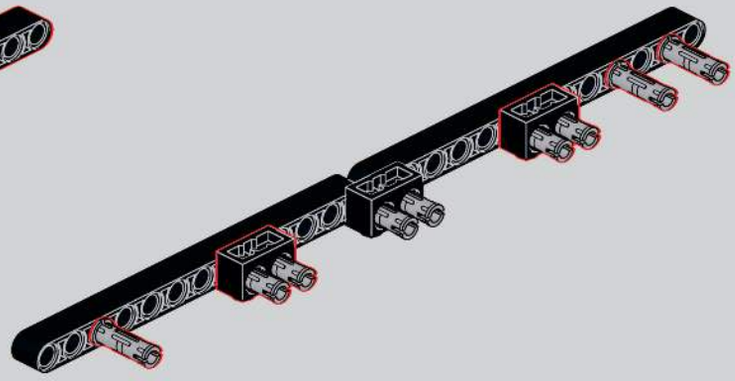

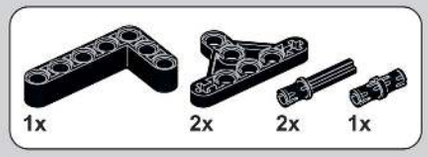

246

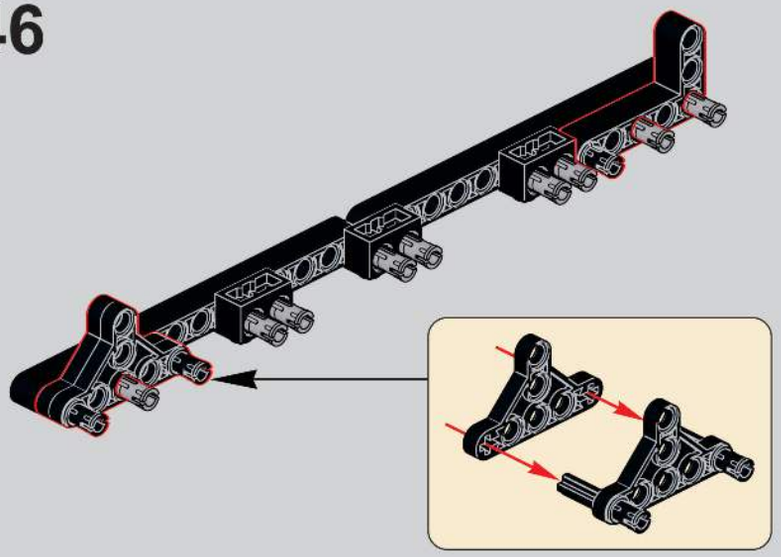

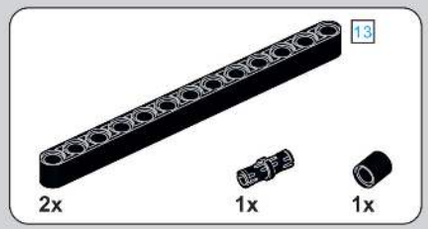

247

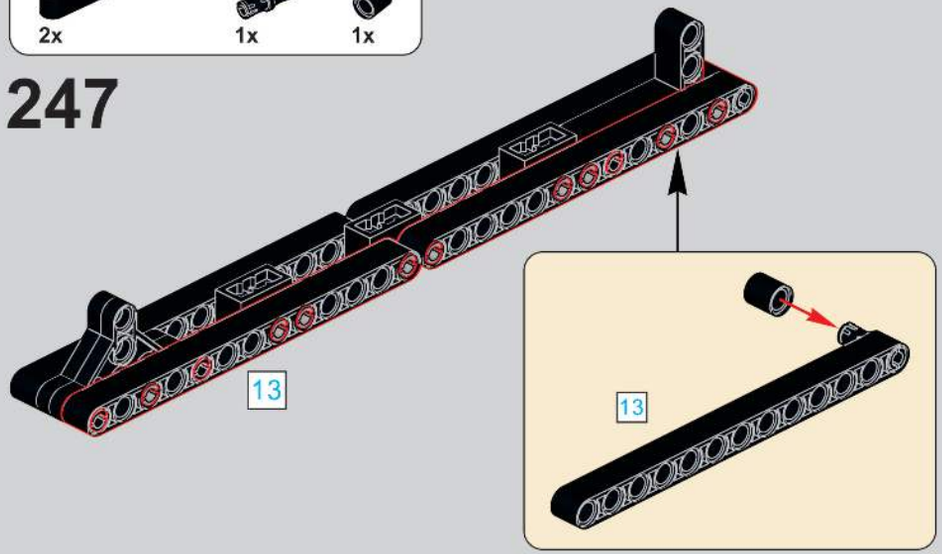

248

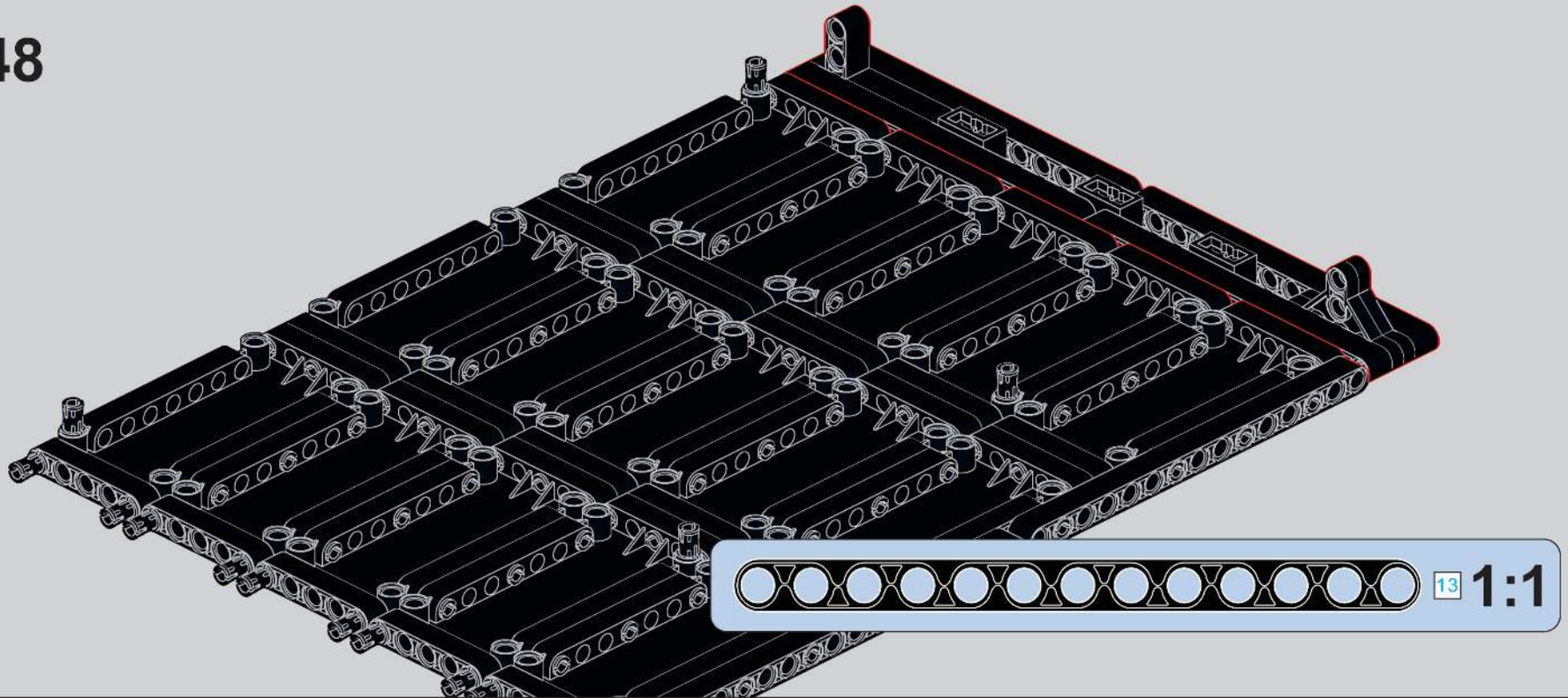

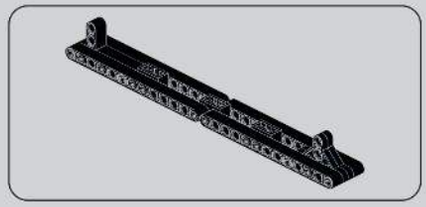

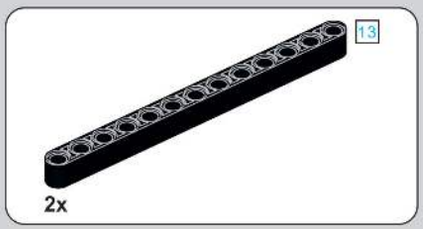

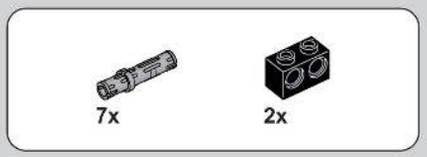

251

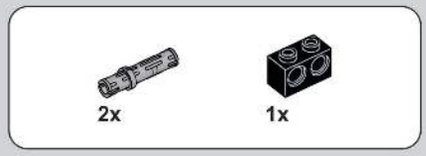

250

249

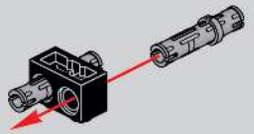

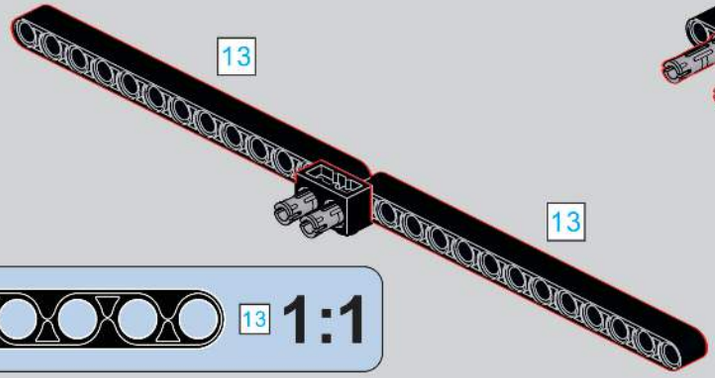

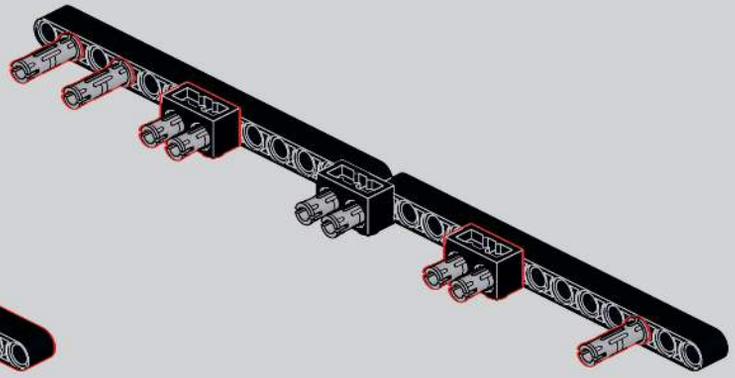

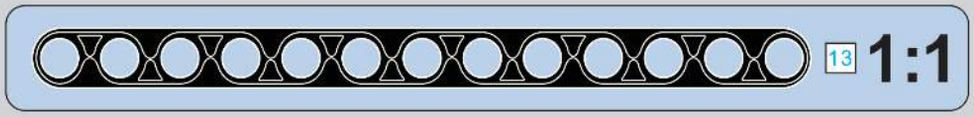

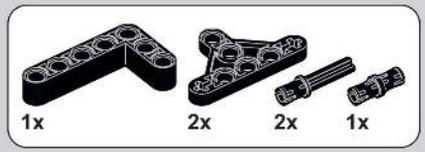

252

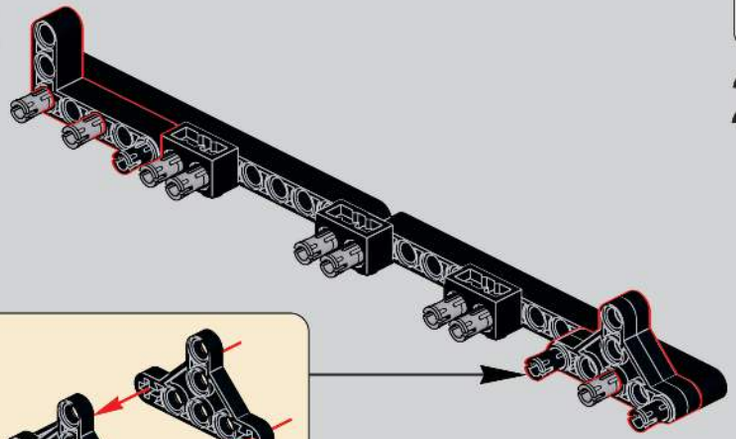

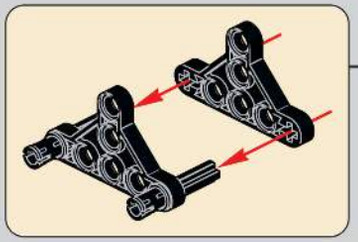

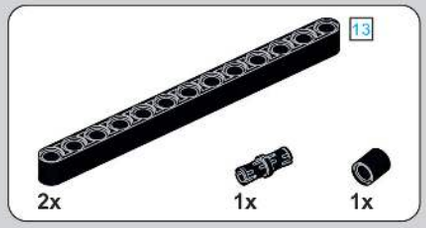

253

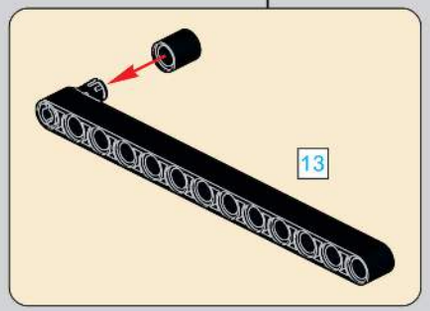

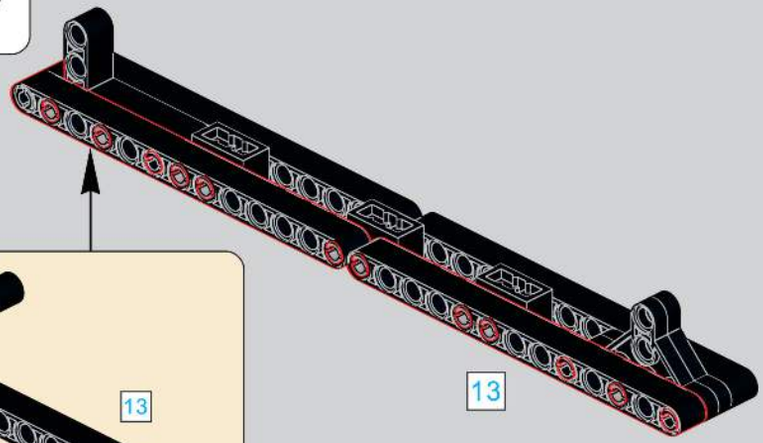

254

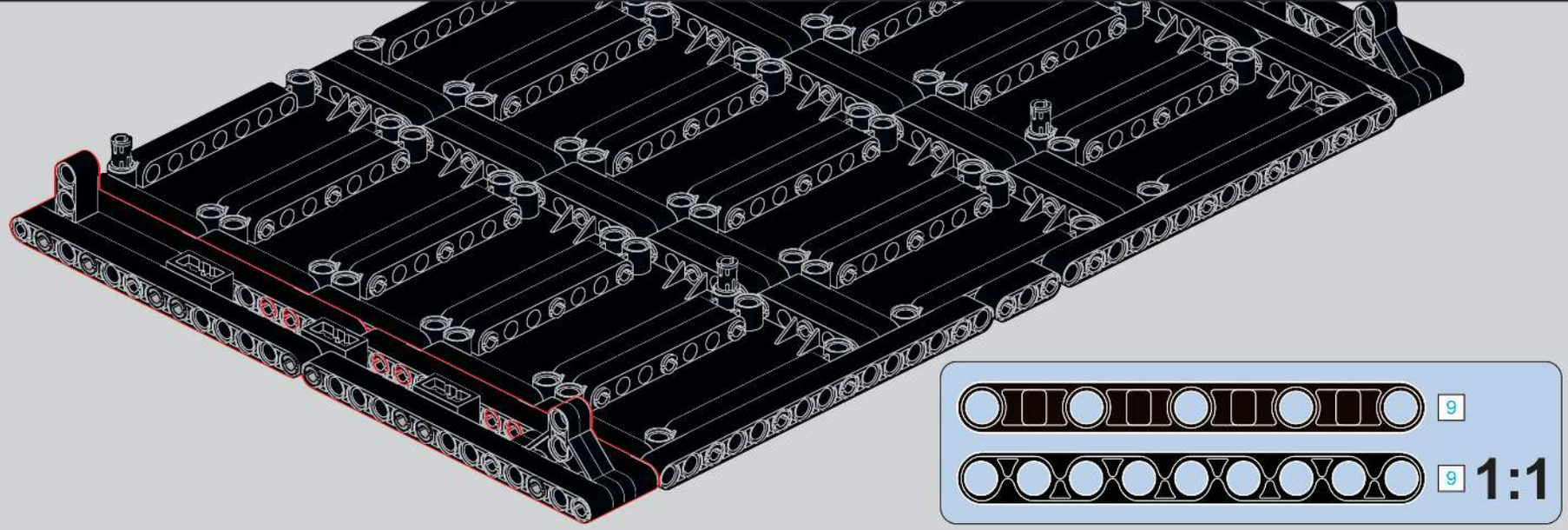

255

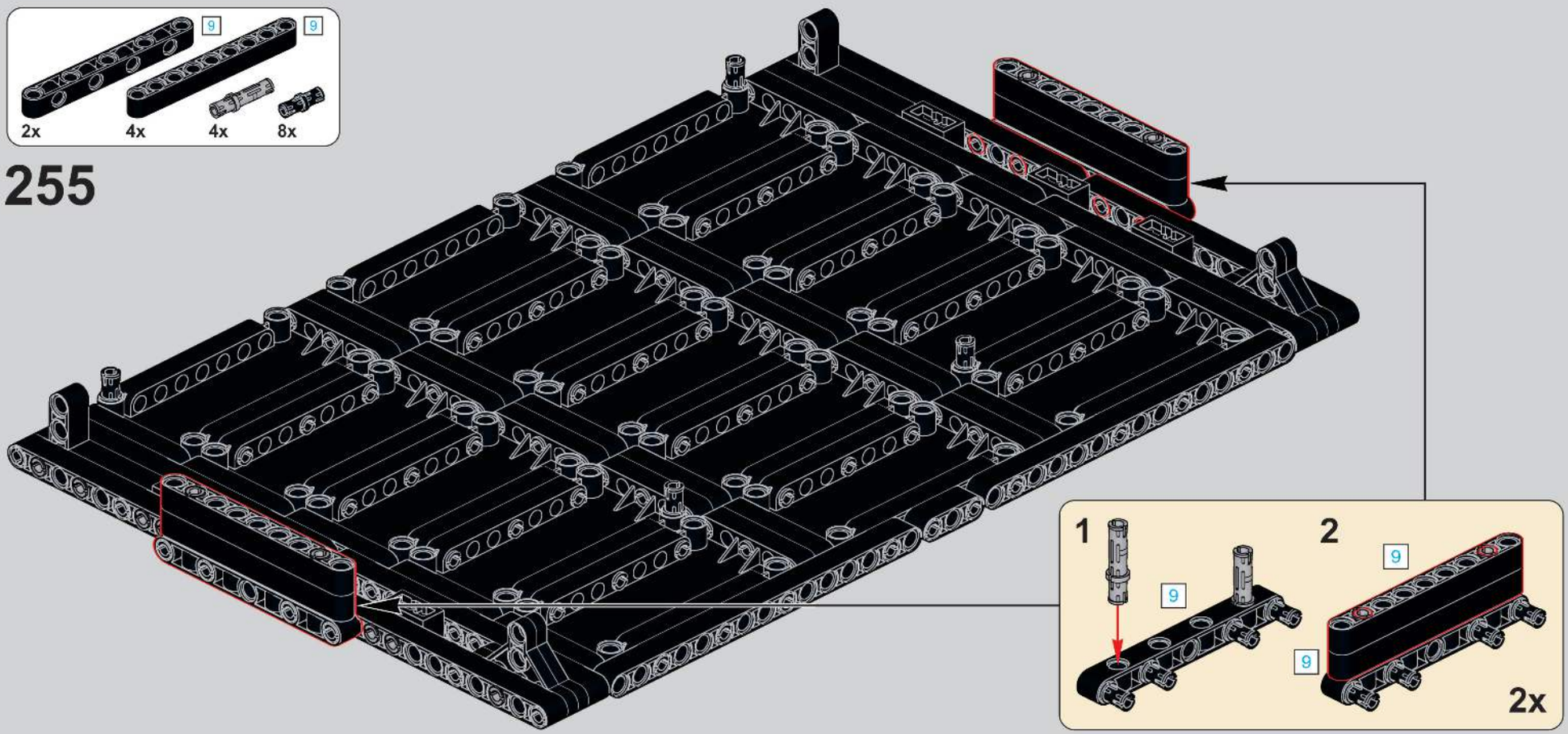

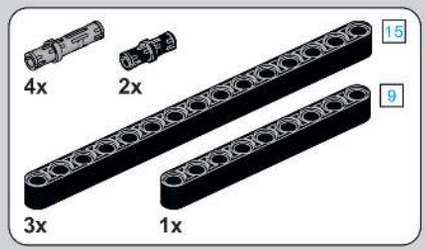

256

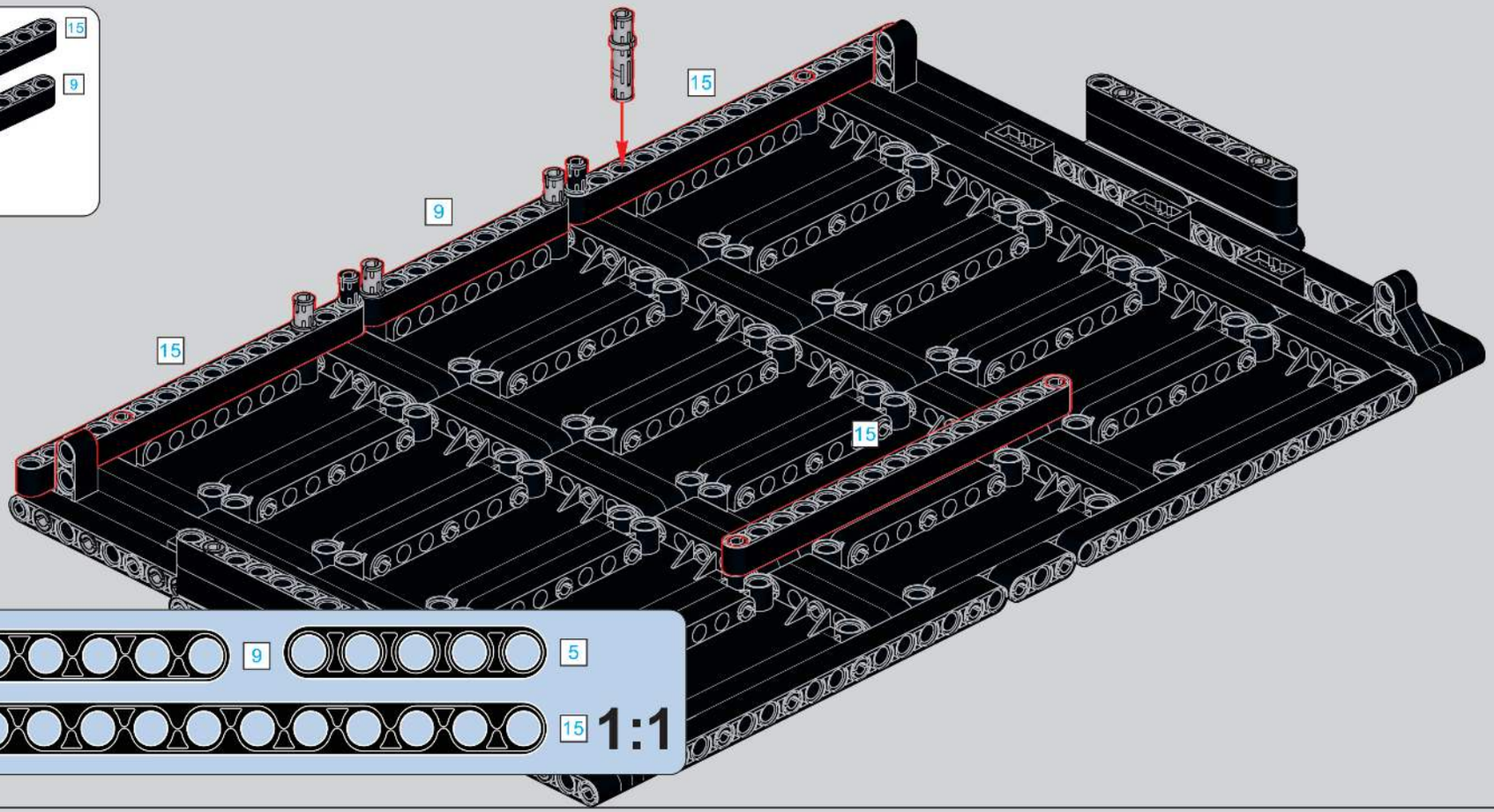

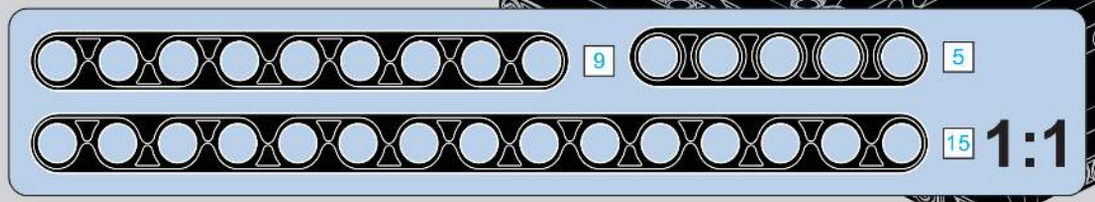

257

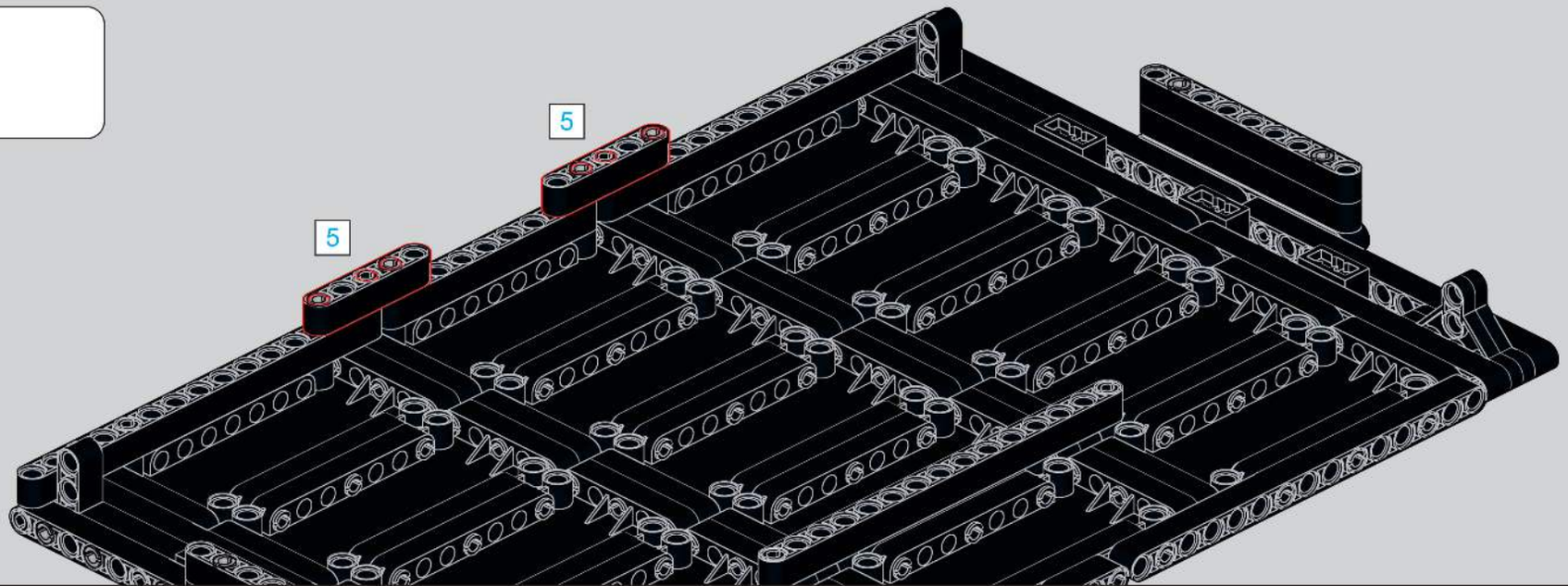

258

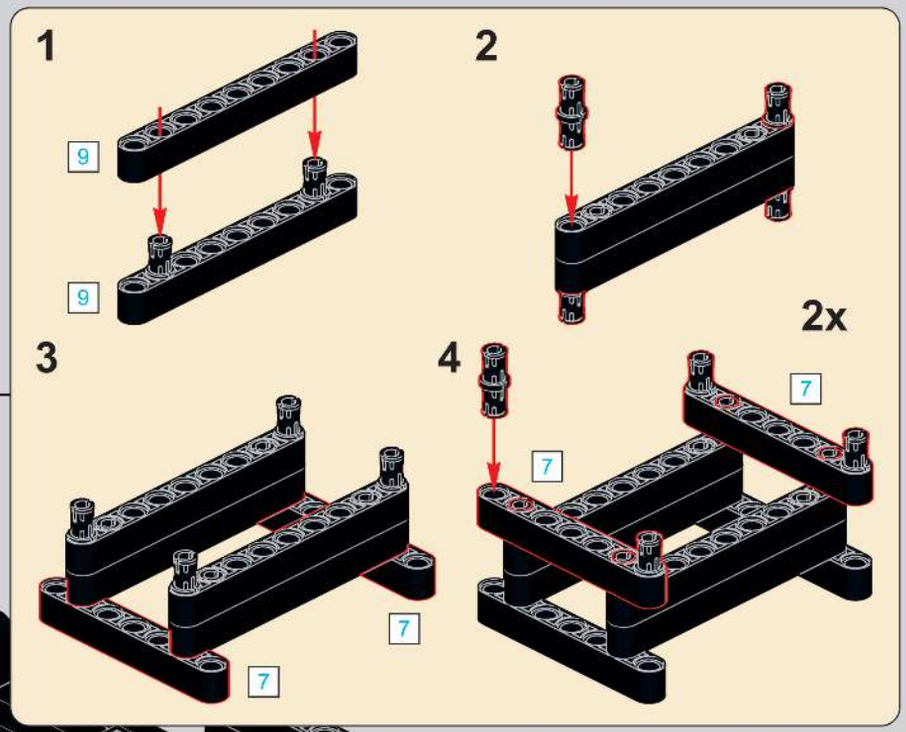

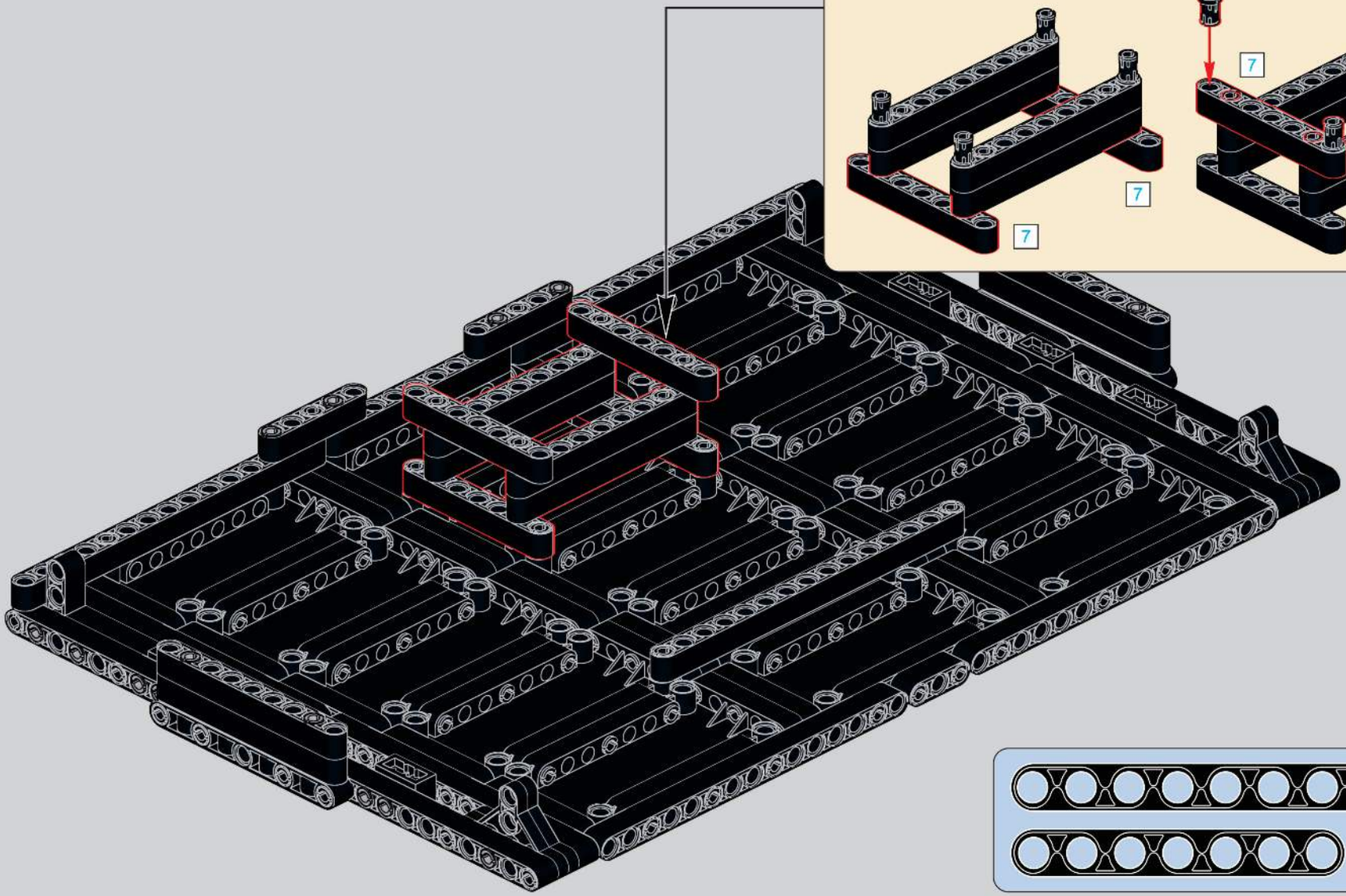

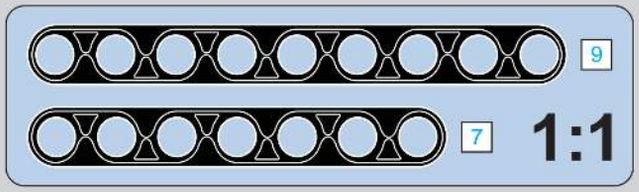

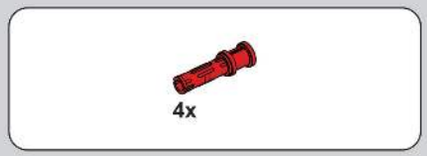

259

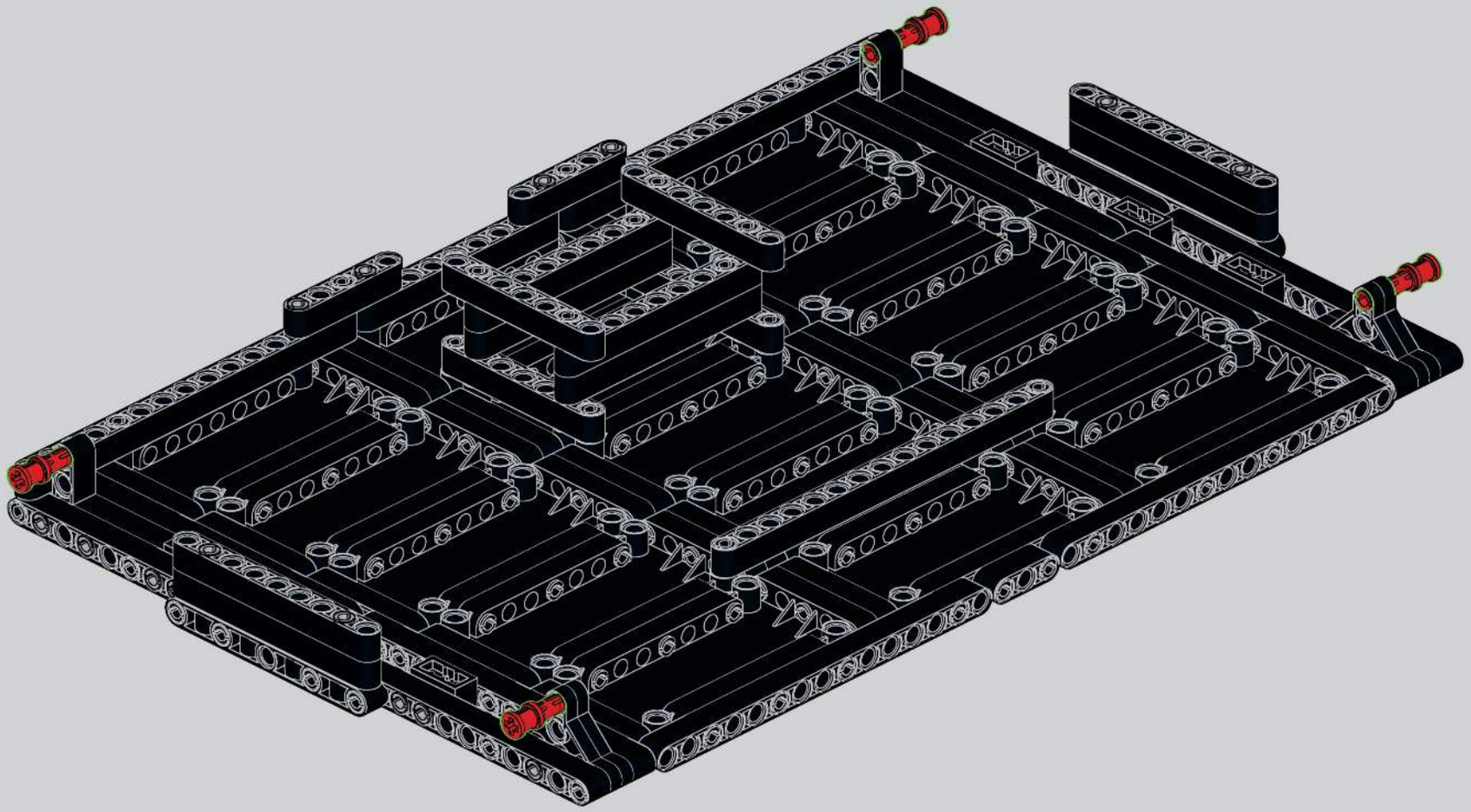

260

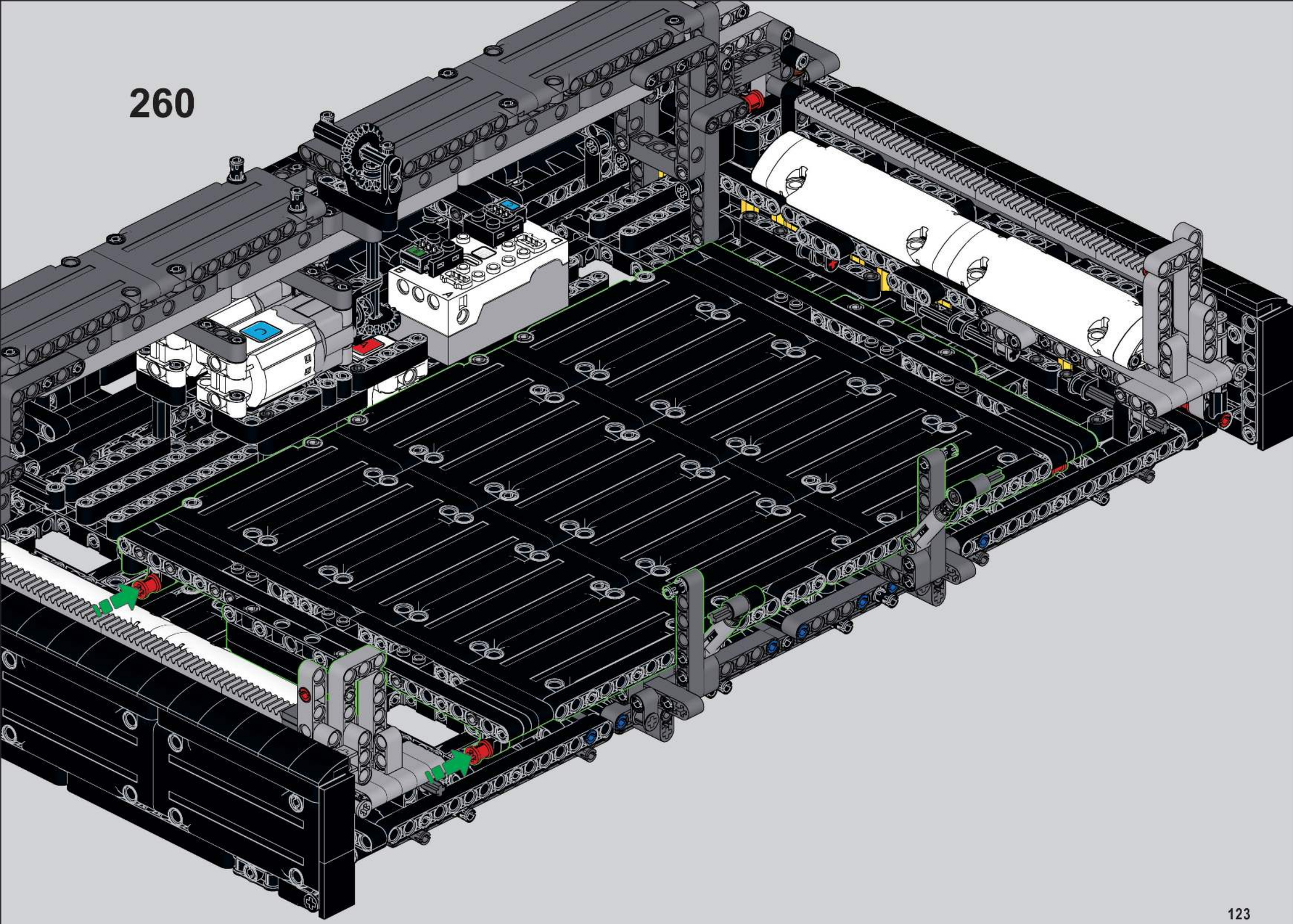

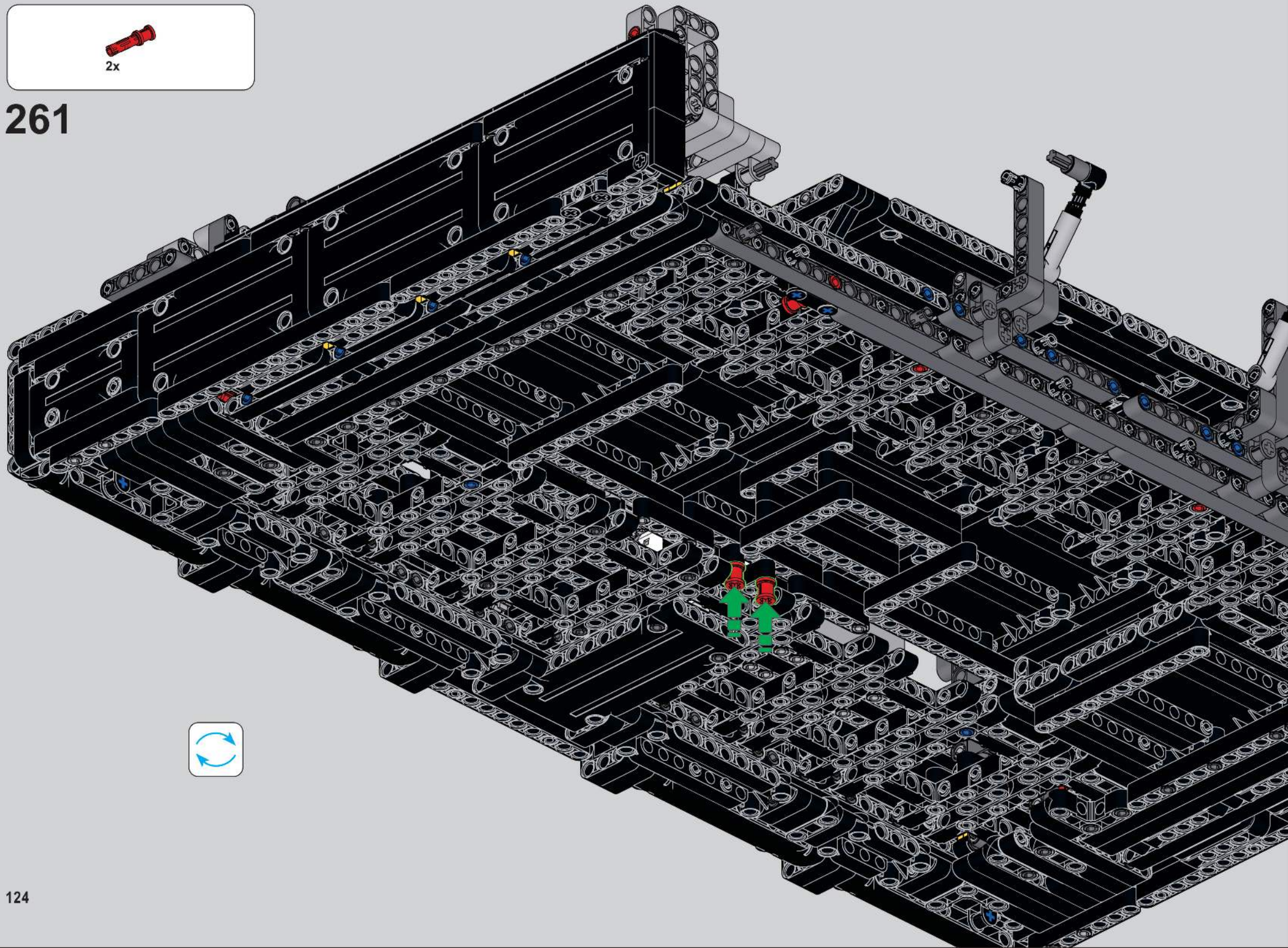

261

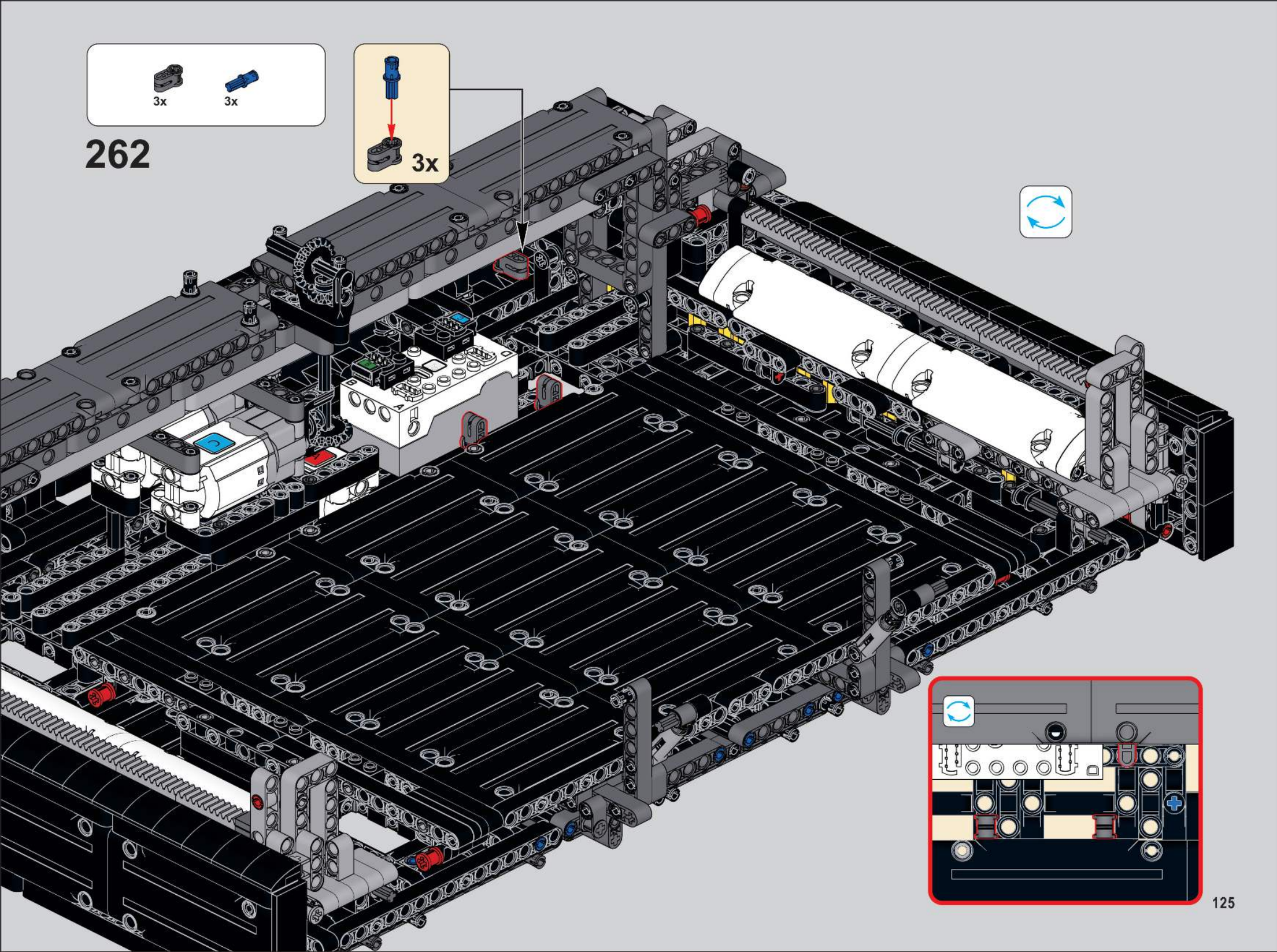
3x
3x
262
3x

263

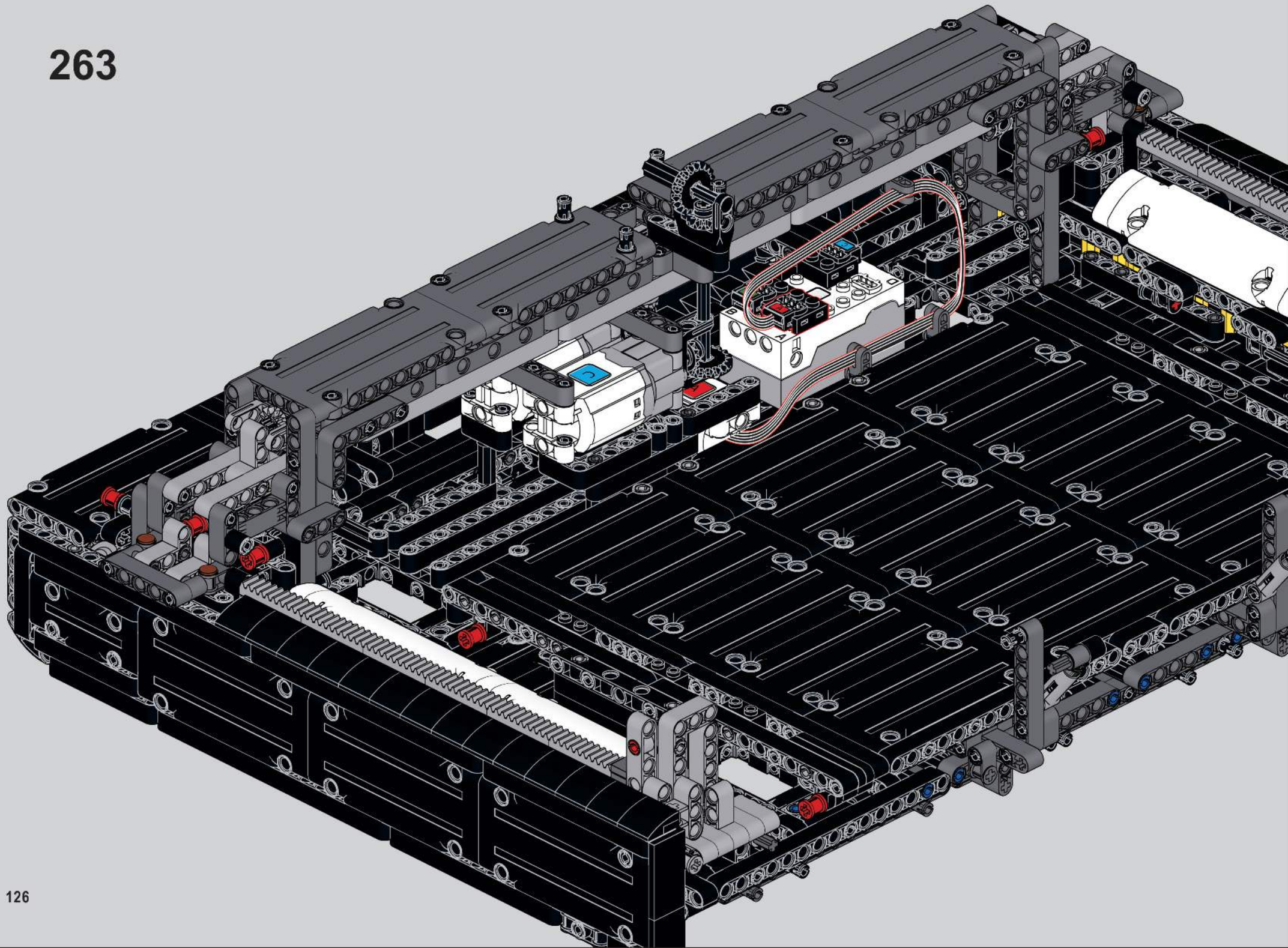

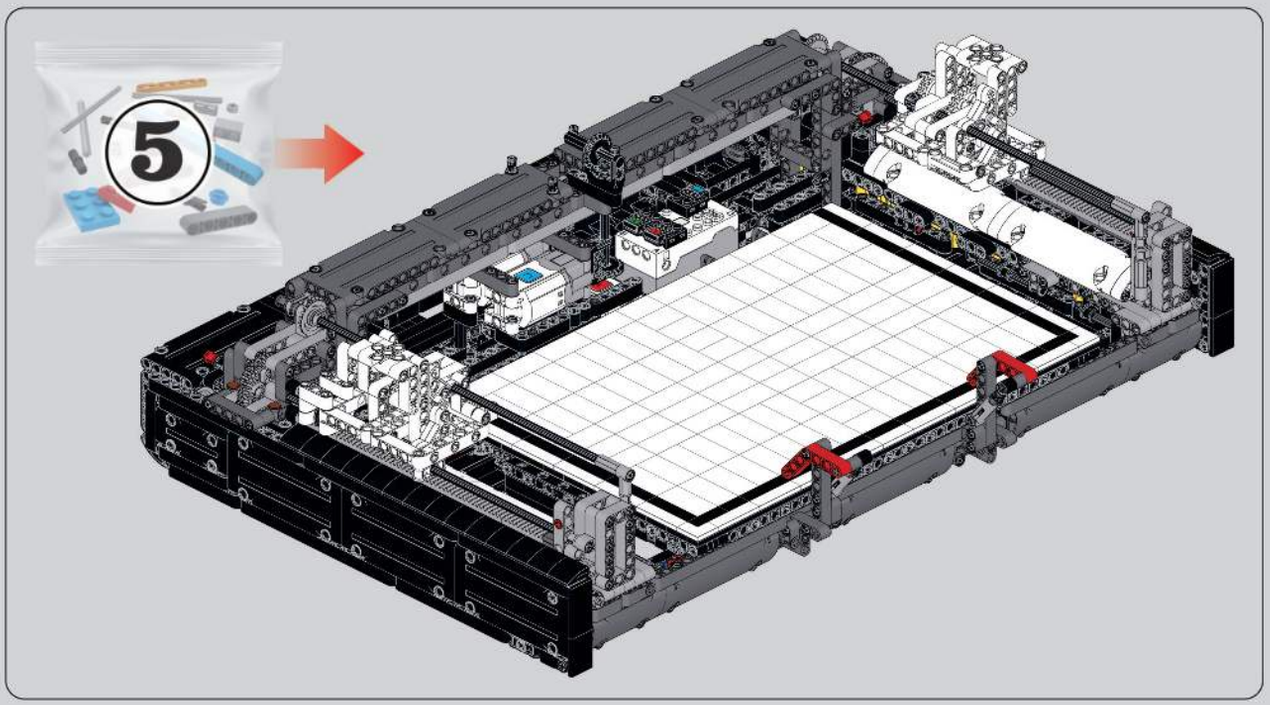

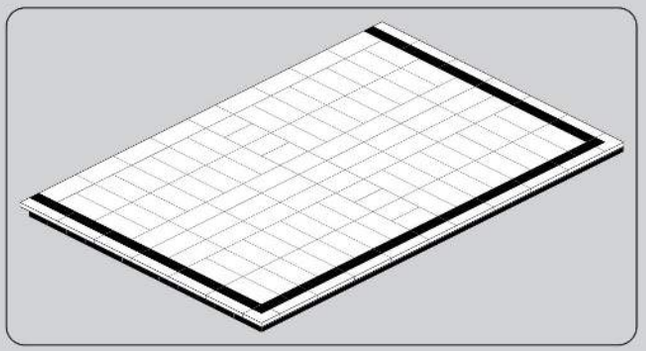

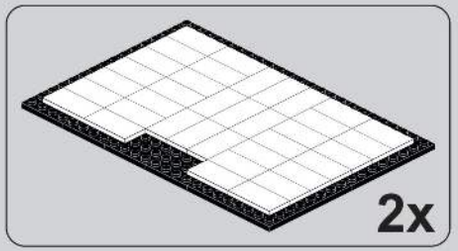

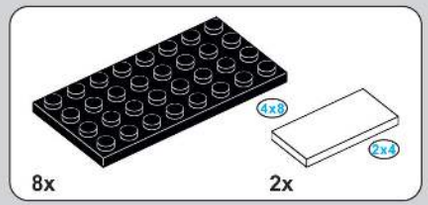

264

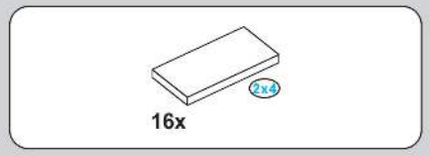

265

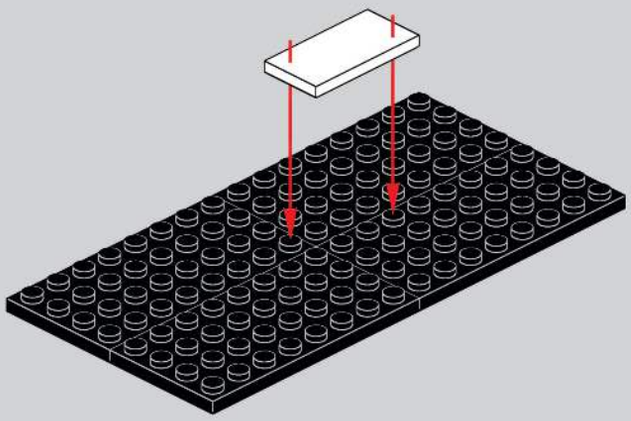

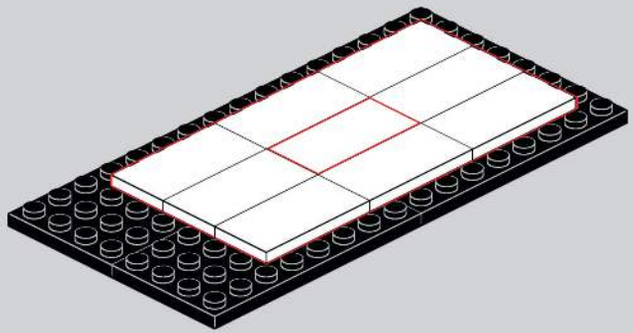

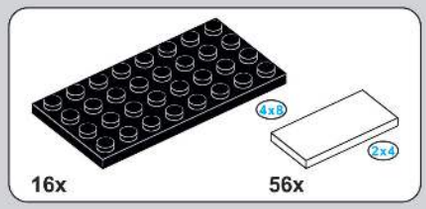

266

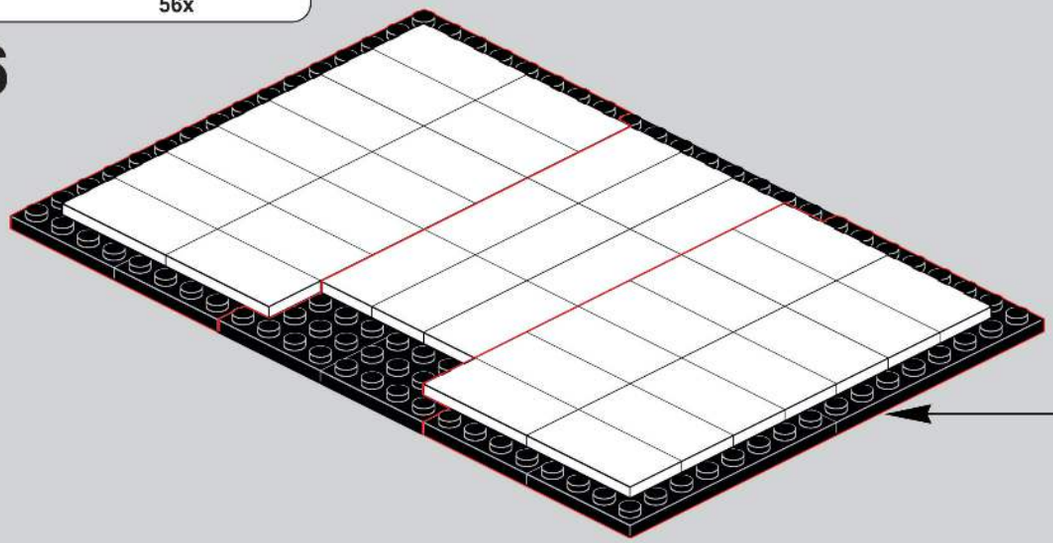

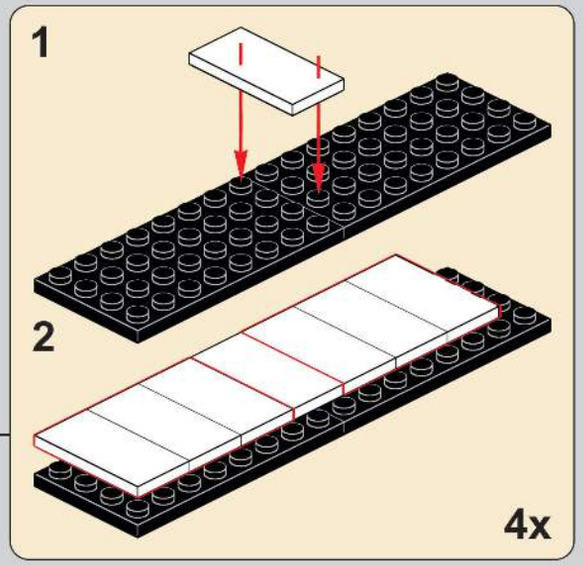

2x

267

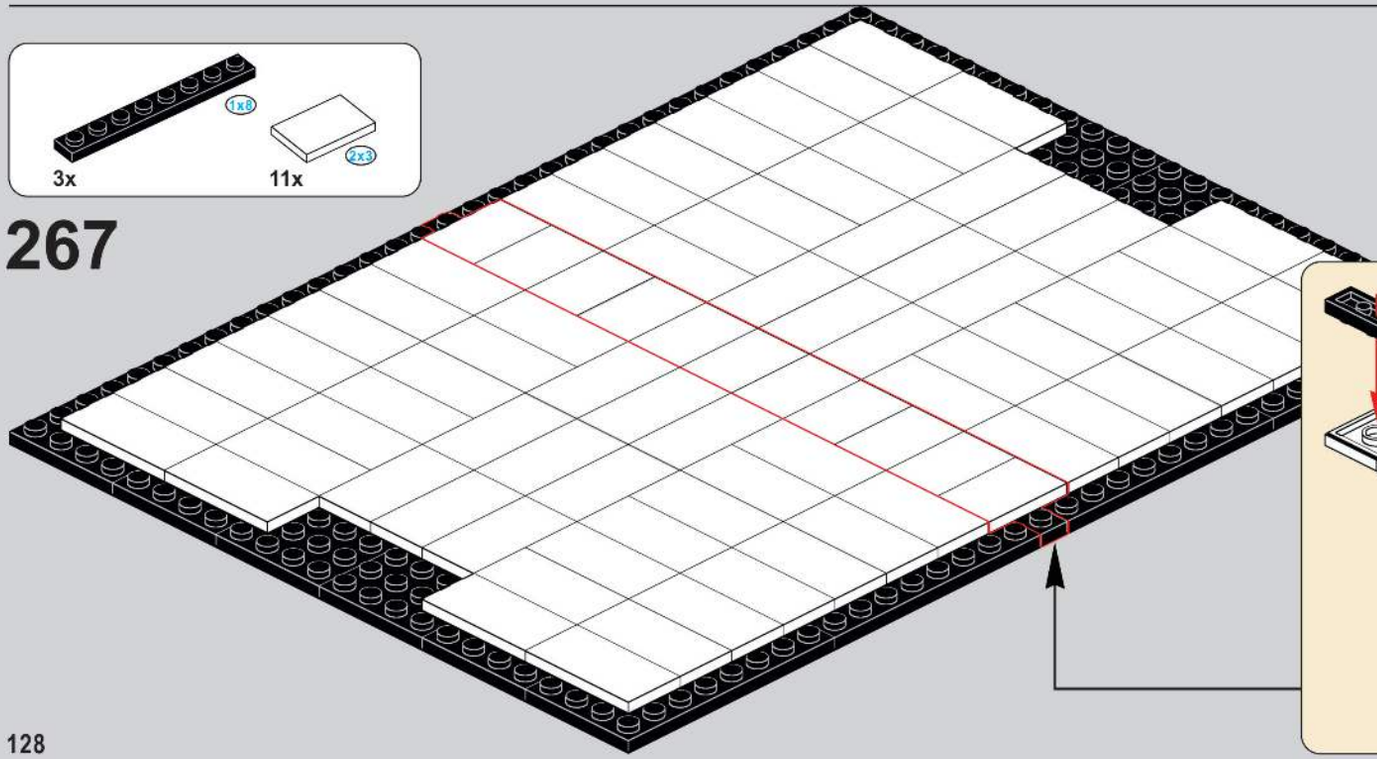

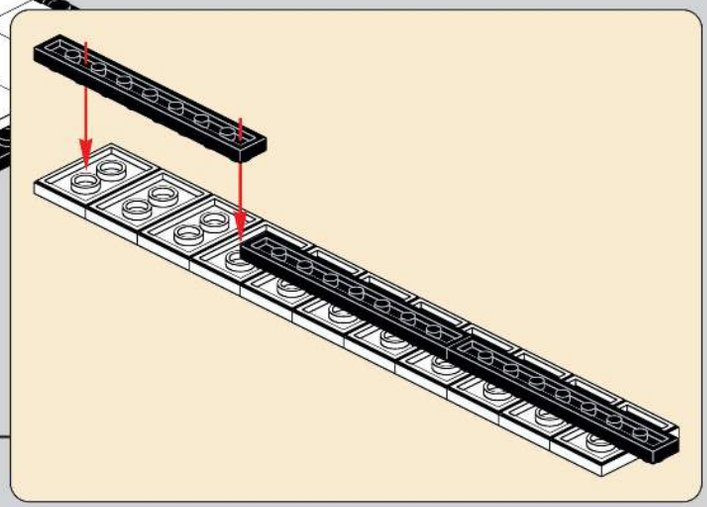

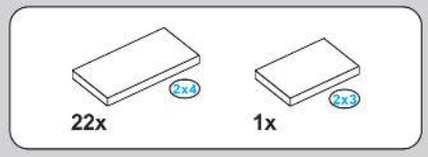

268

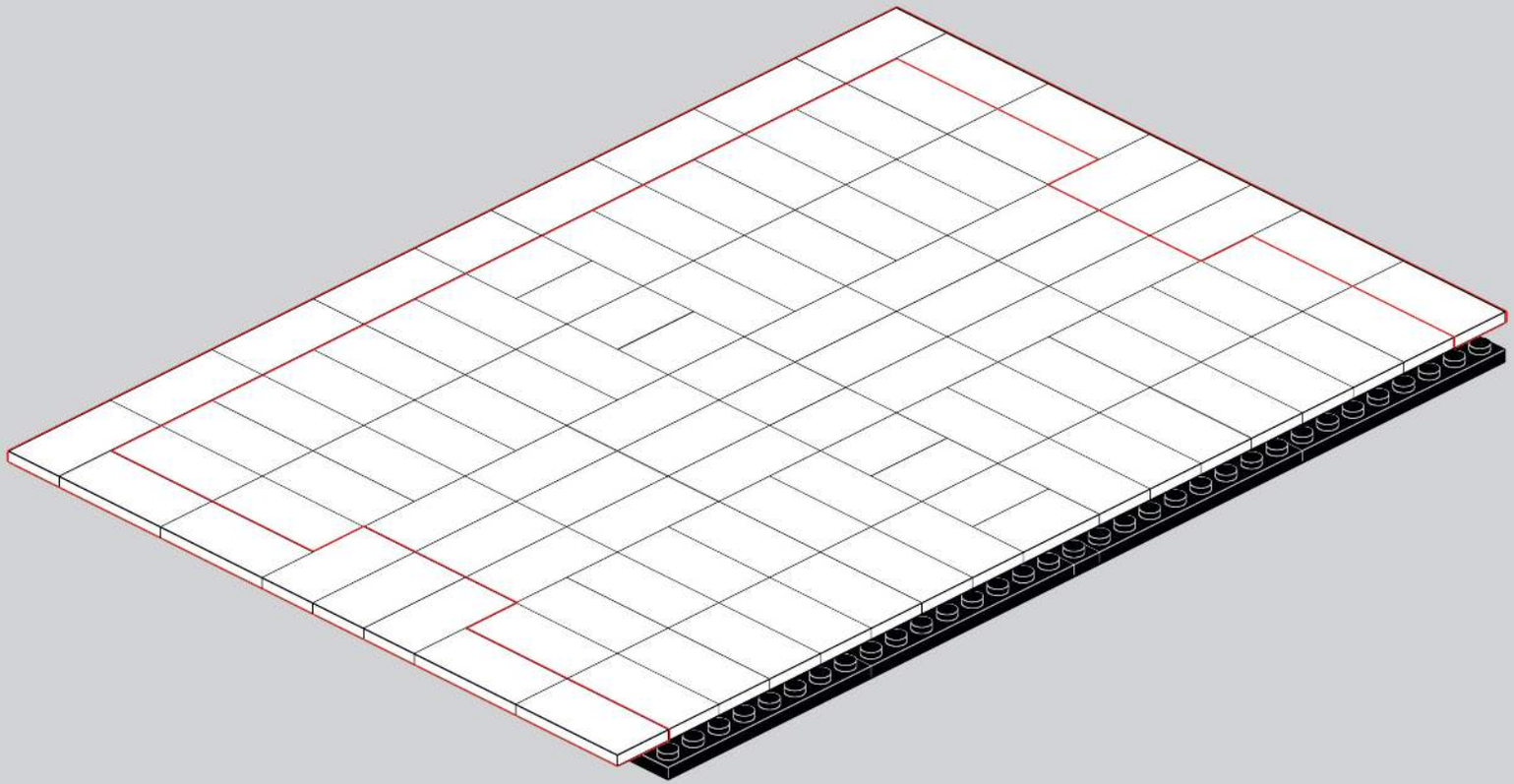

24x

269

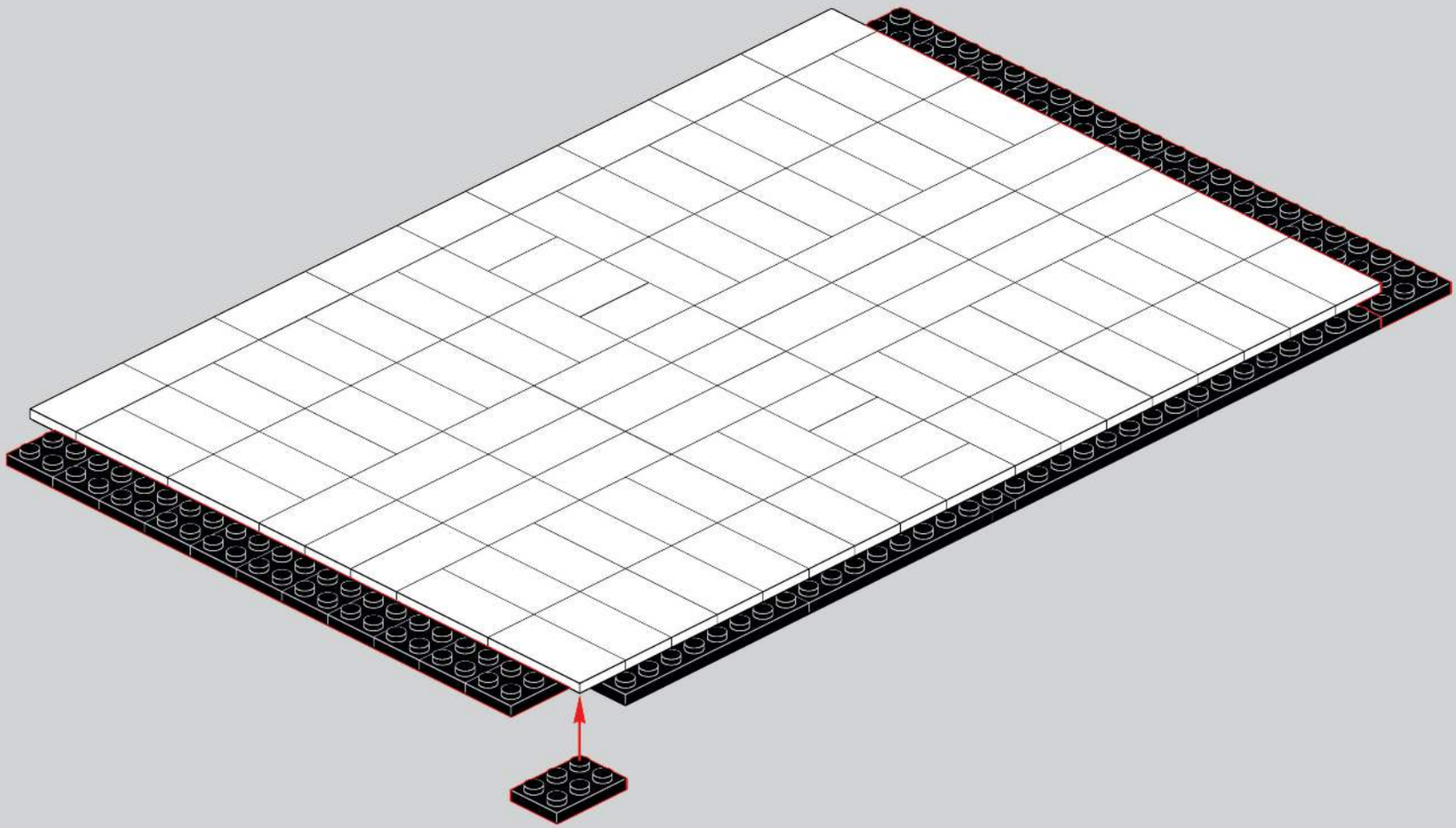

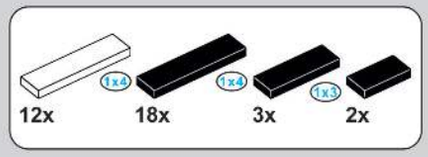

270

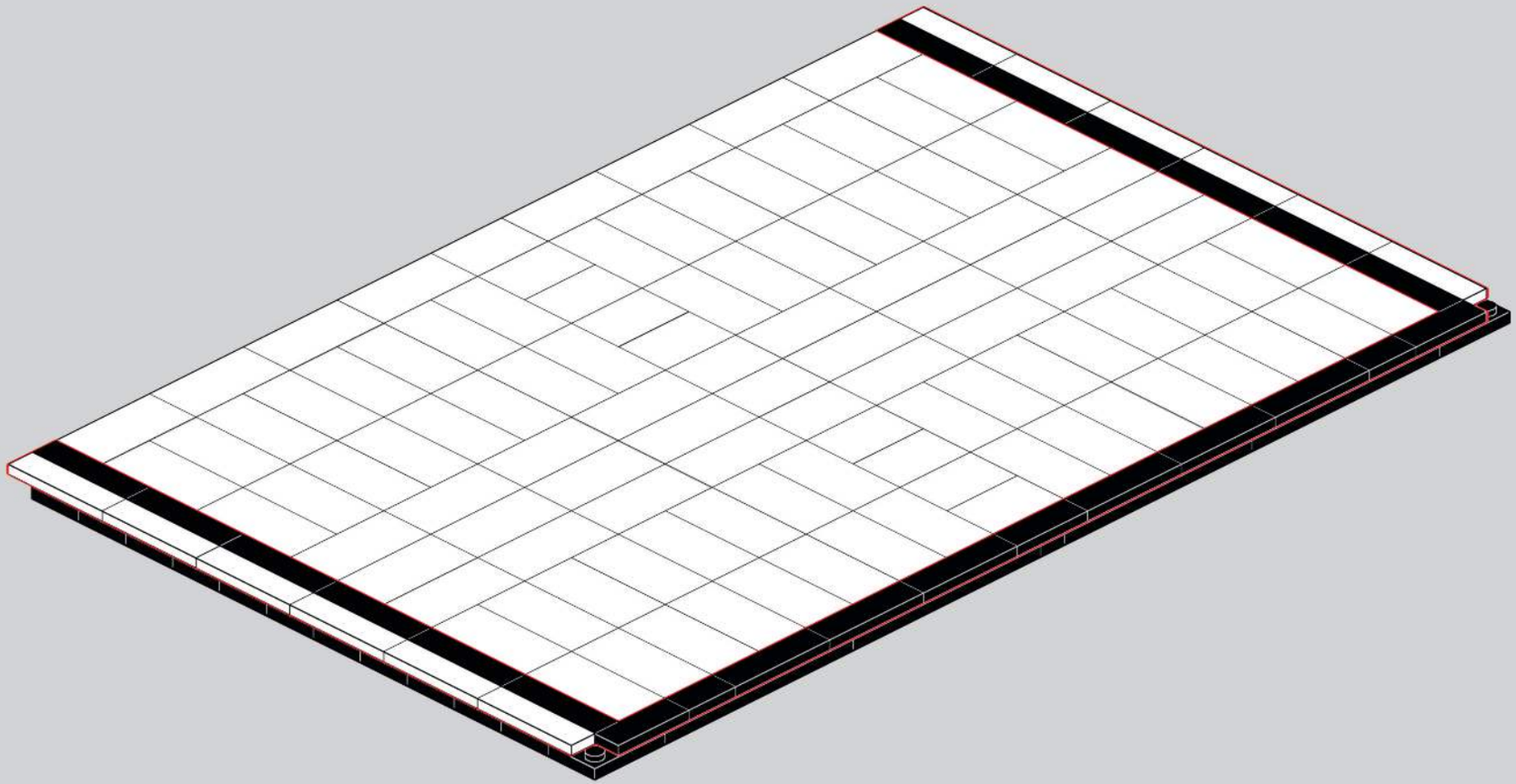

271

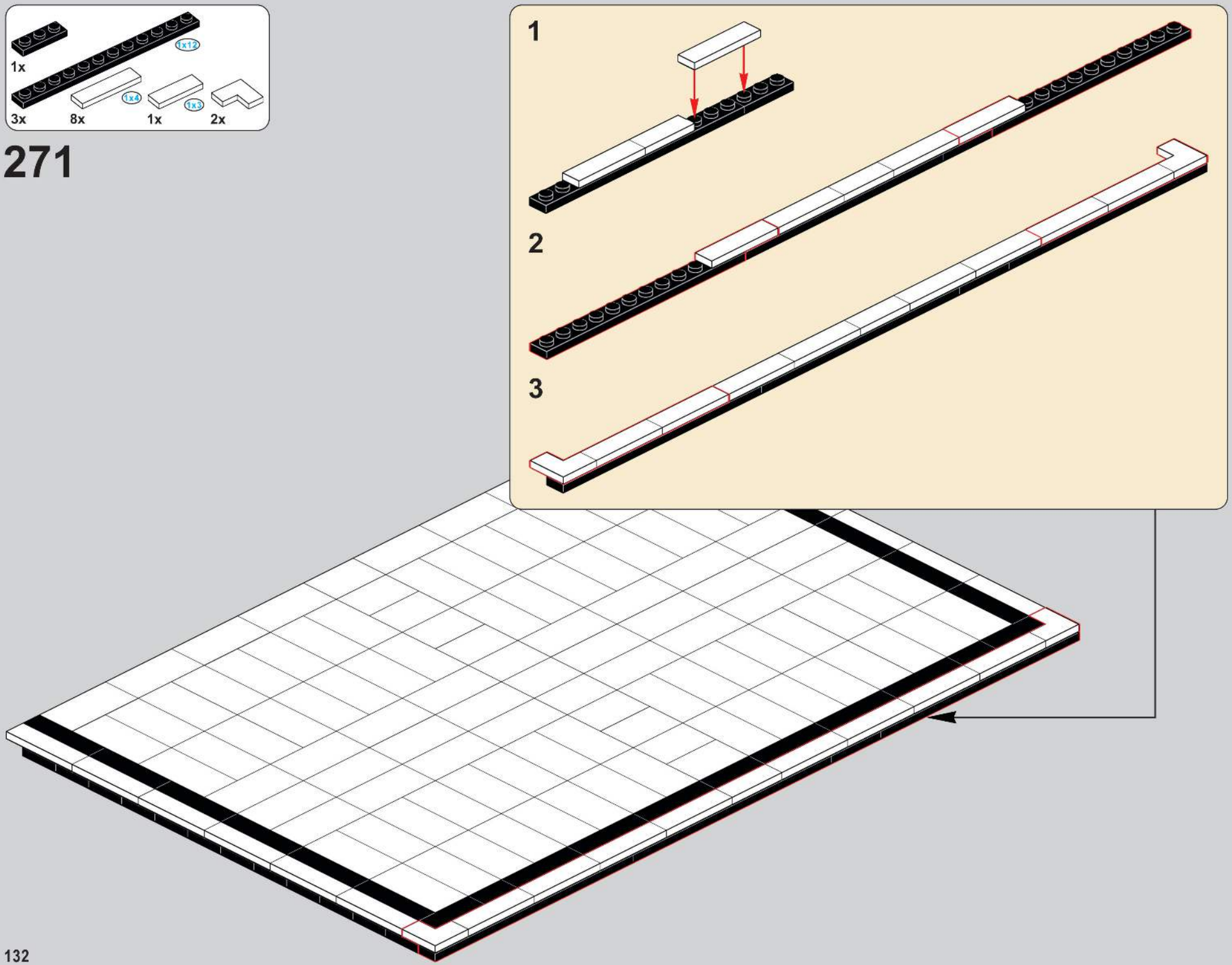

272

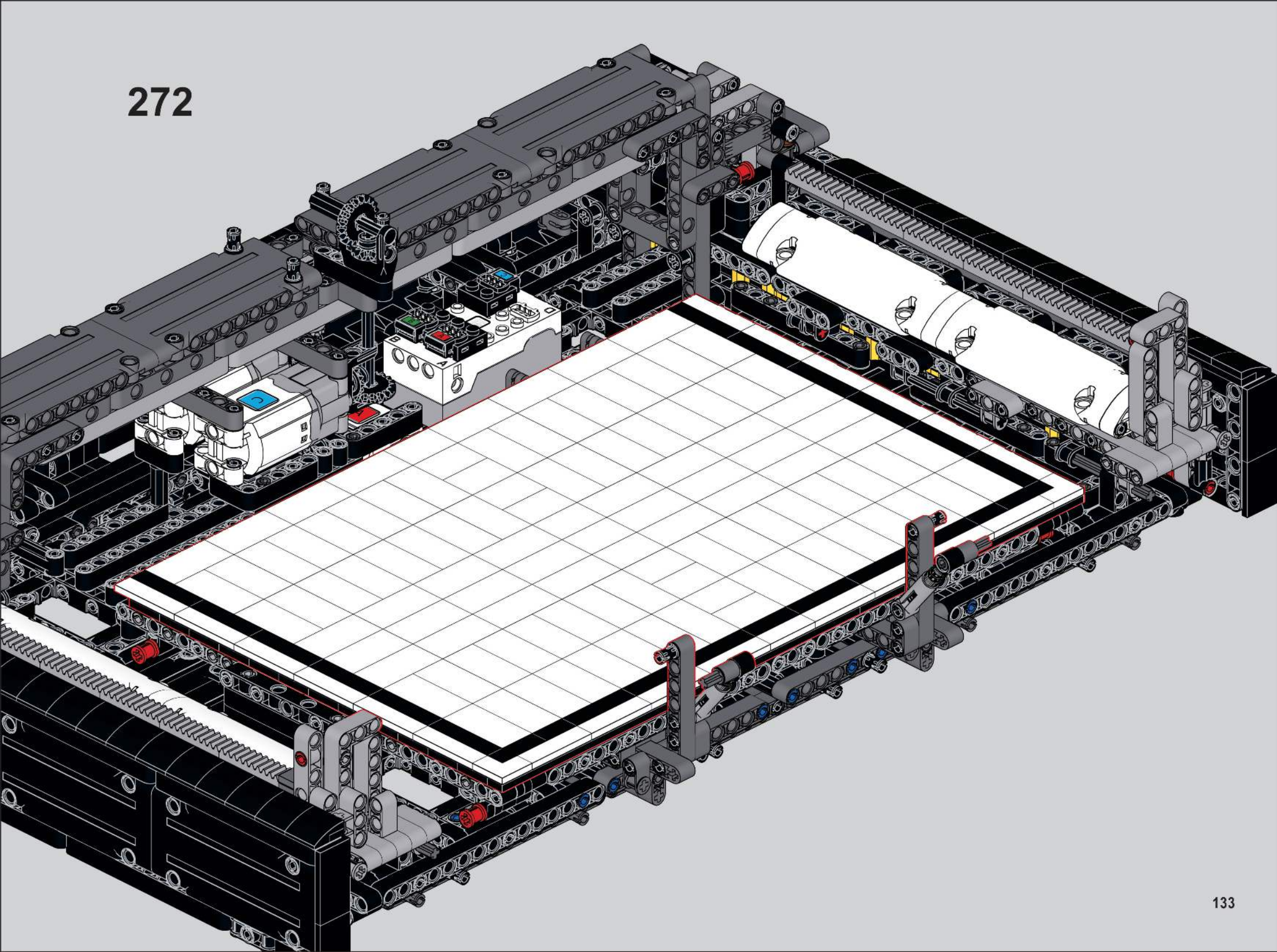

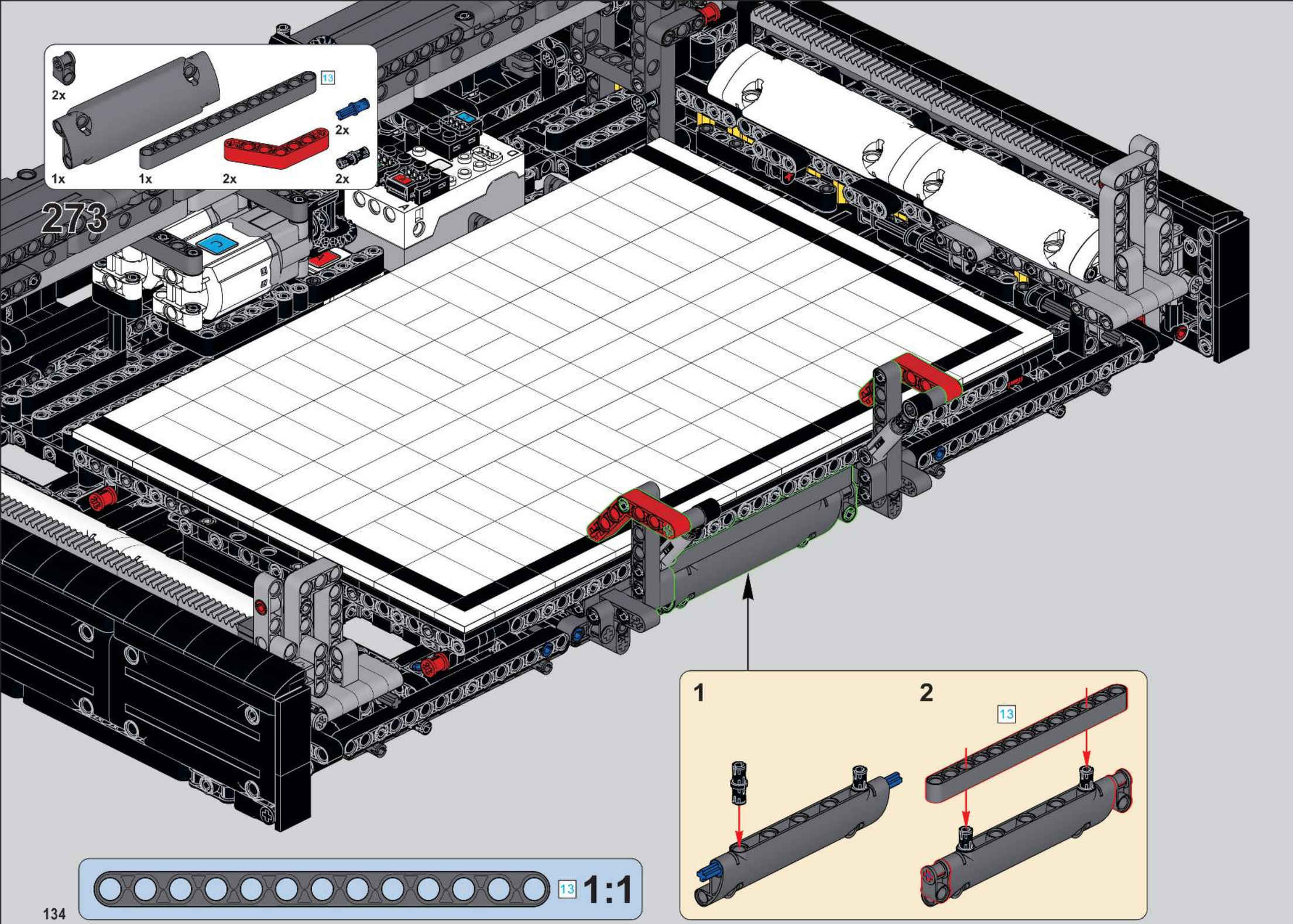
2x
13
2x
1x
1x
2x
2x
273
1
2
13
13
1:1

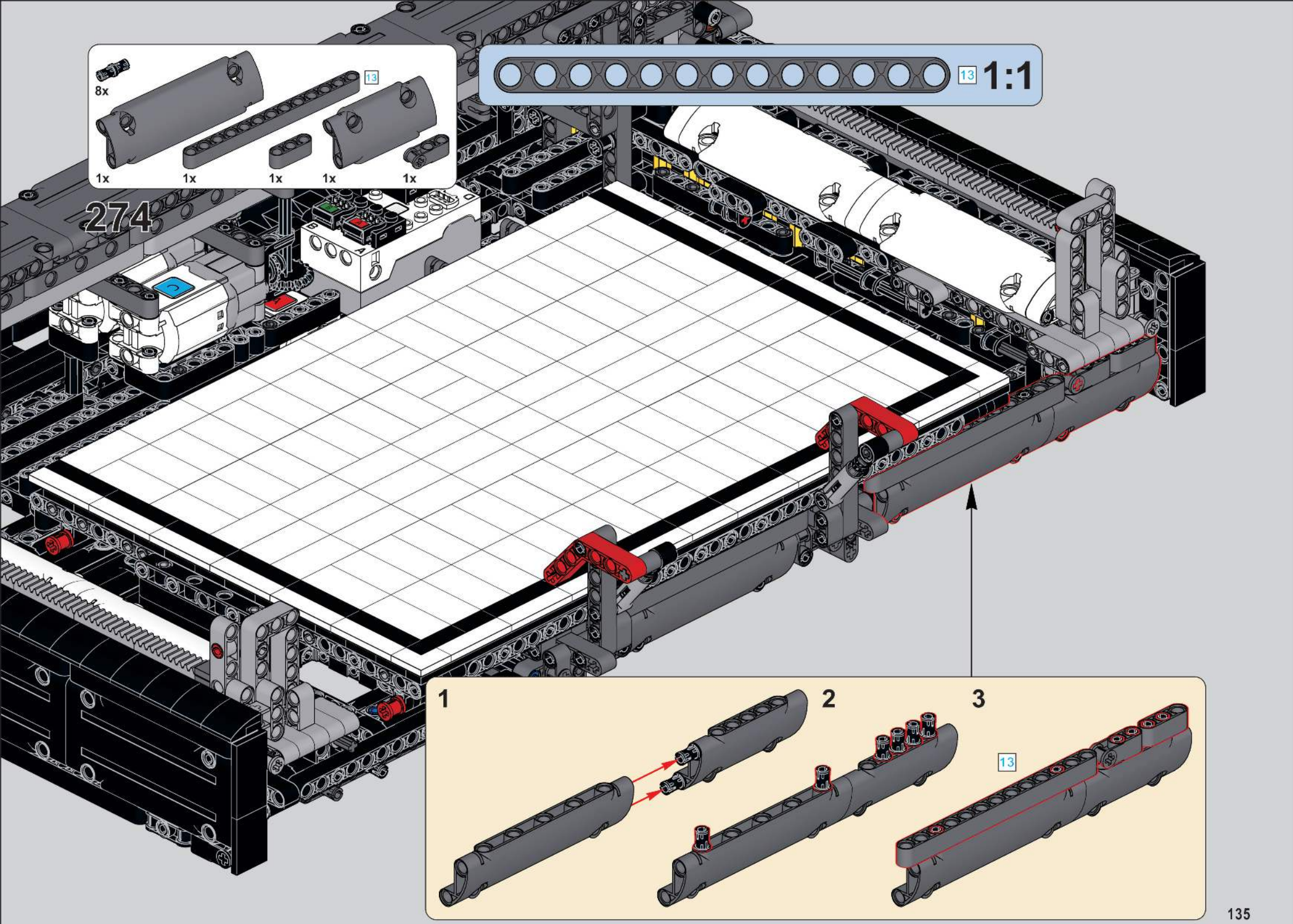
8x
13
1x
1x
1x
1x
1x
274
13
1:1
1
2
3
13

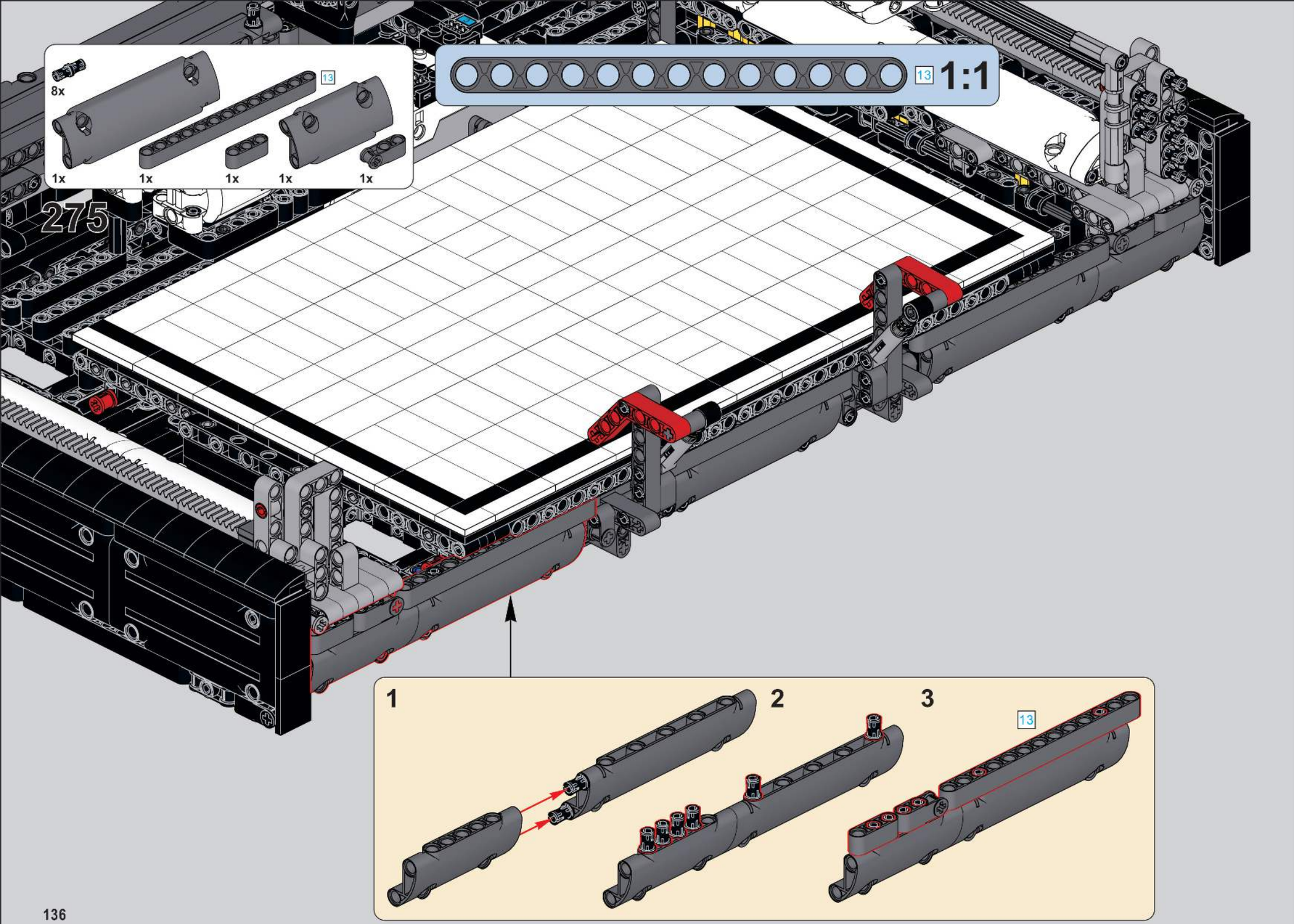
8x
13
1x
1x
1x
1x
1x
13
1:1
275
1
2
3
13

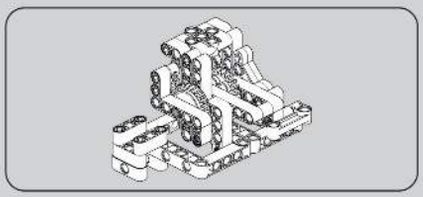

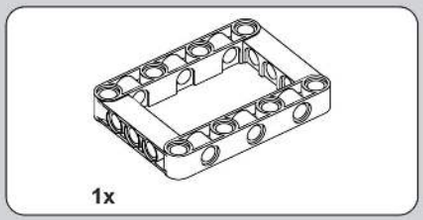

277

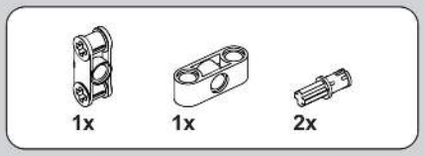

278

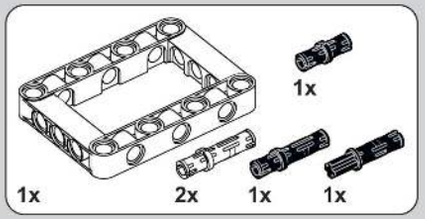

276

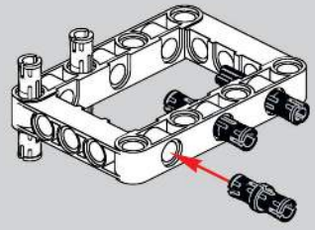

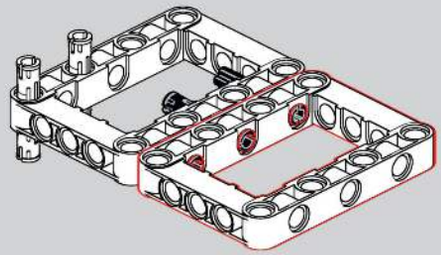

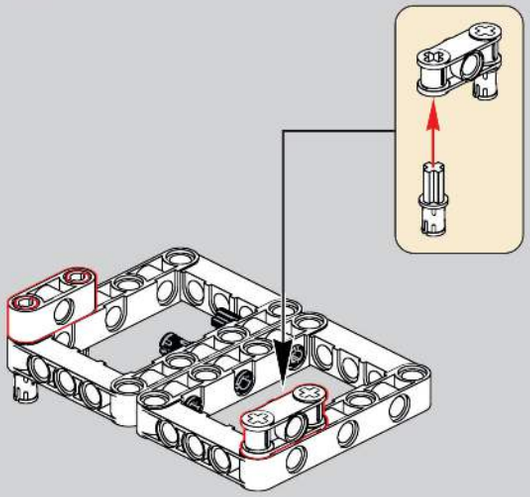

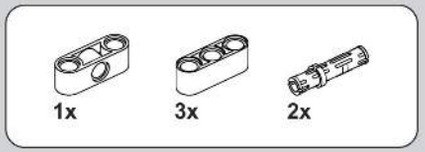

279

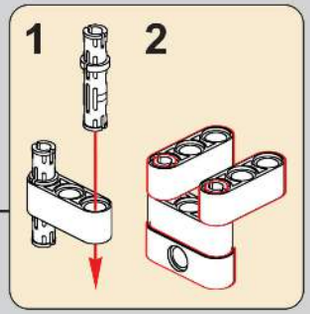

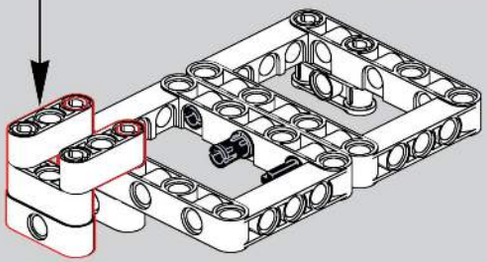

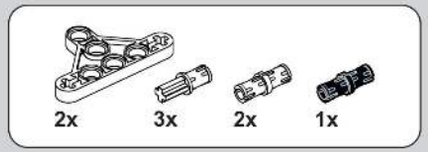

280

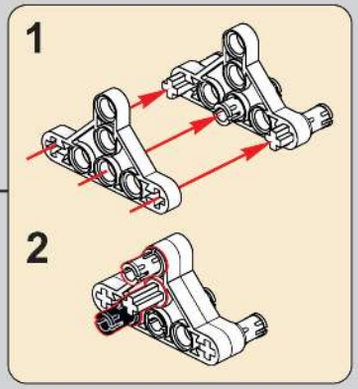

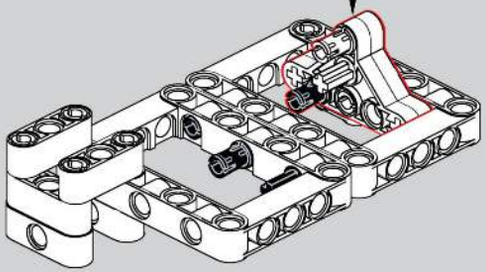

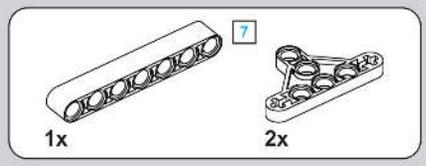

281

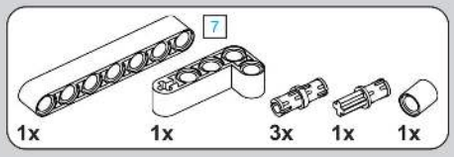

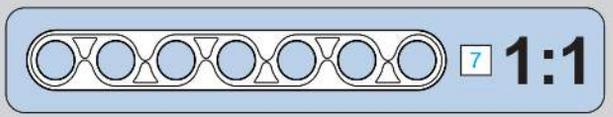

282

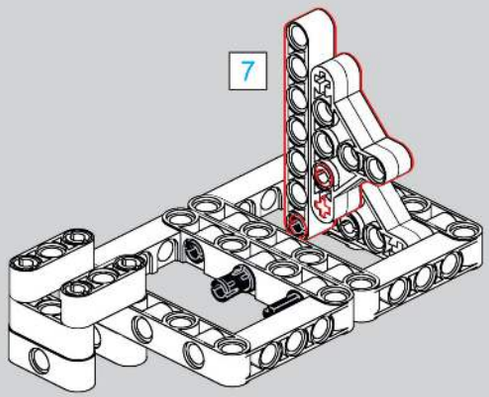

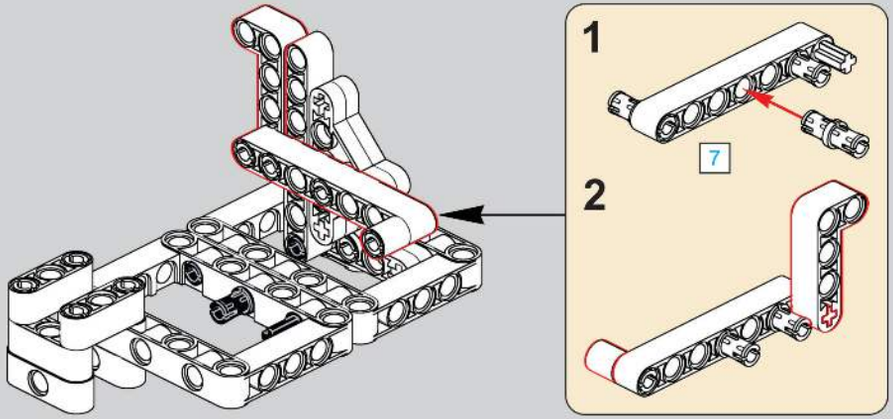

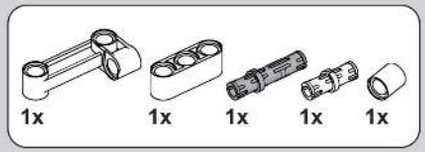

283

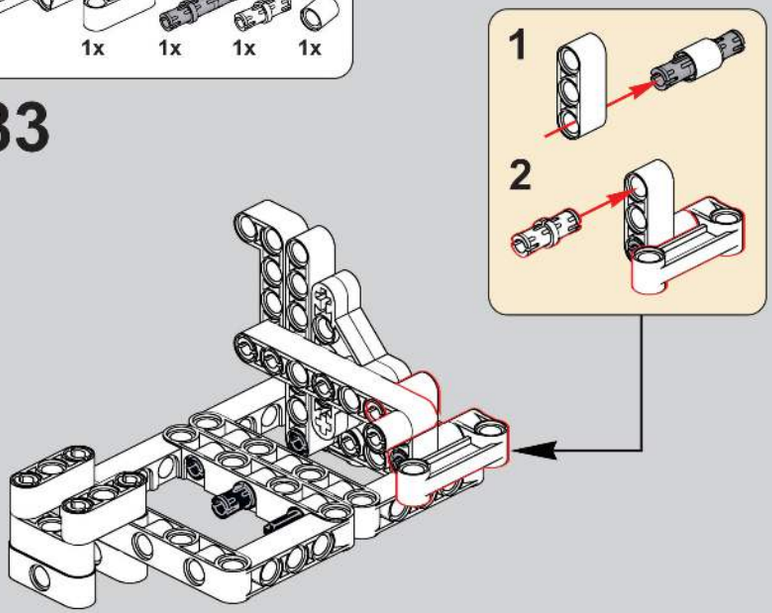

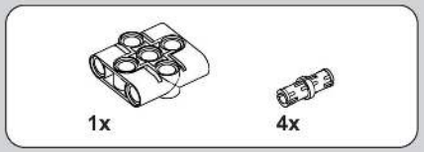

284

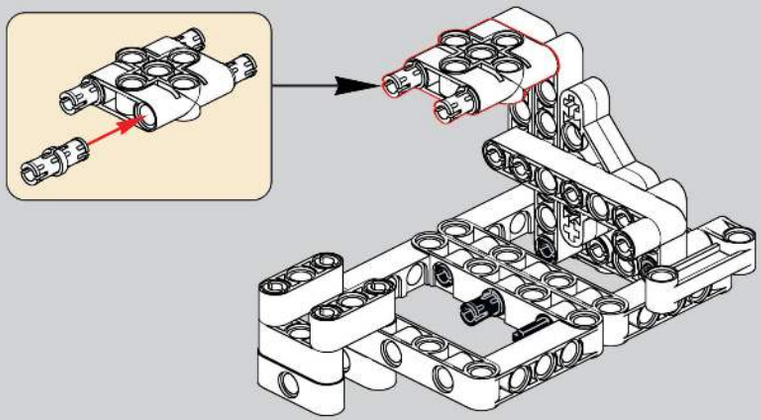

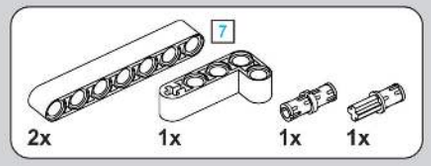

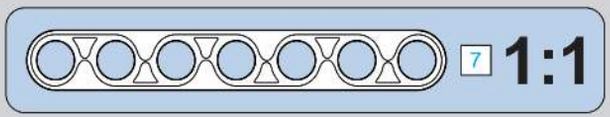

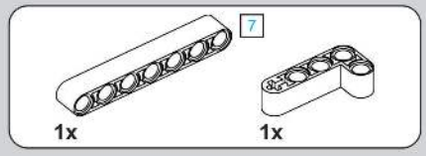

285

286

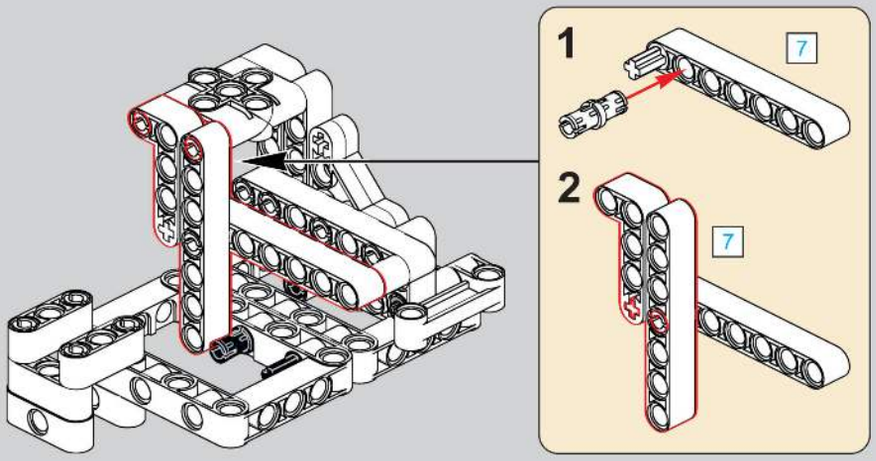

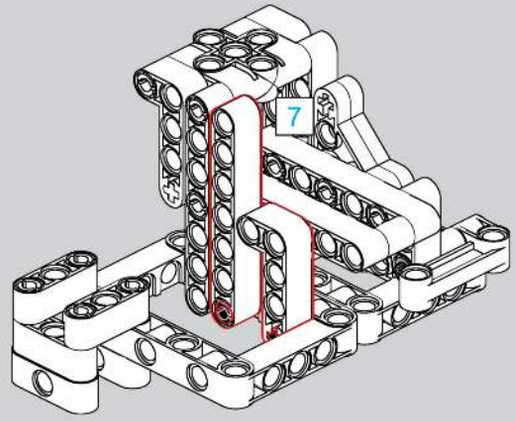

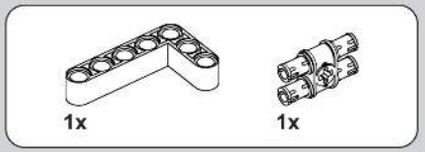

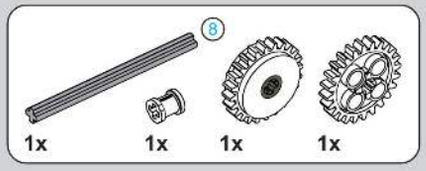

287

288

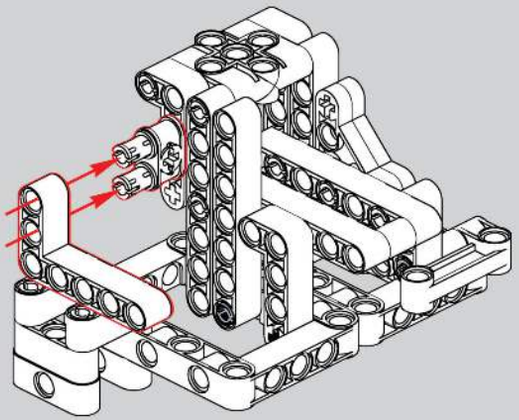

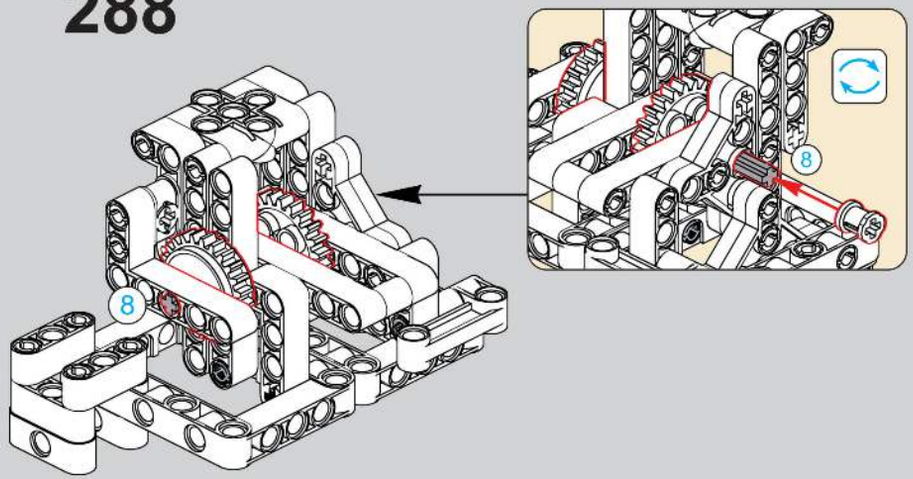

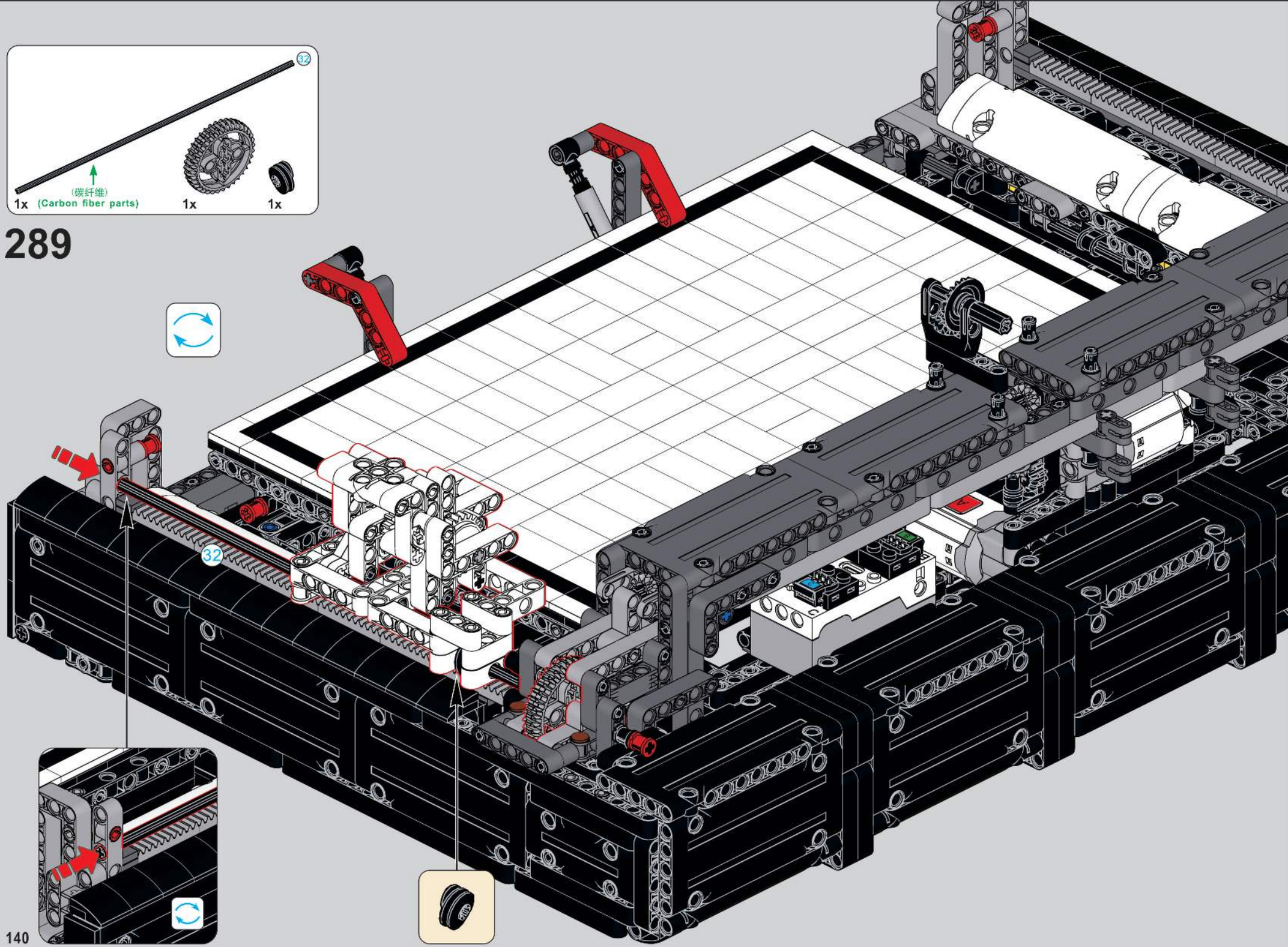
32
1x
(碳纤维)
(Carbon fiber parts)
1x
1x
289
32

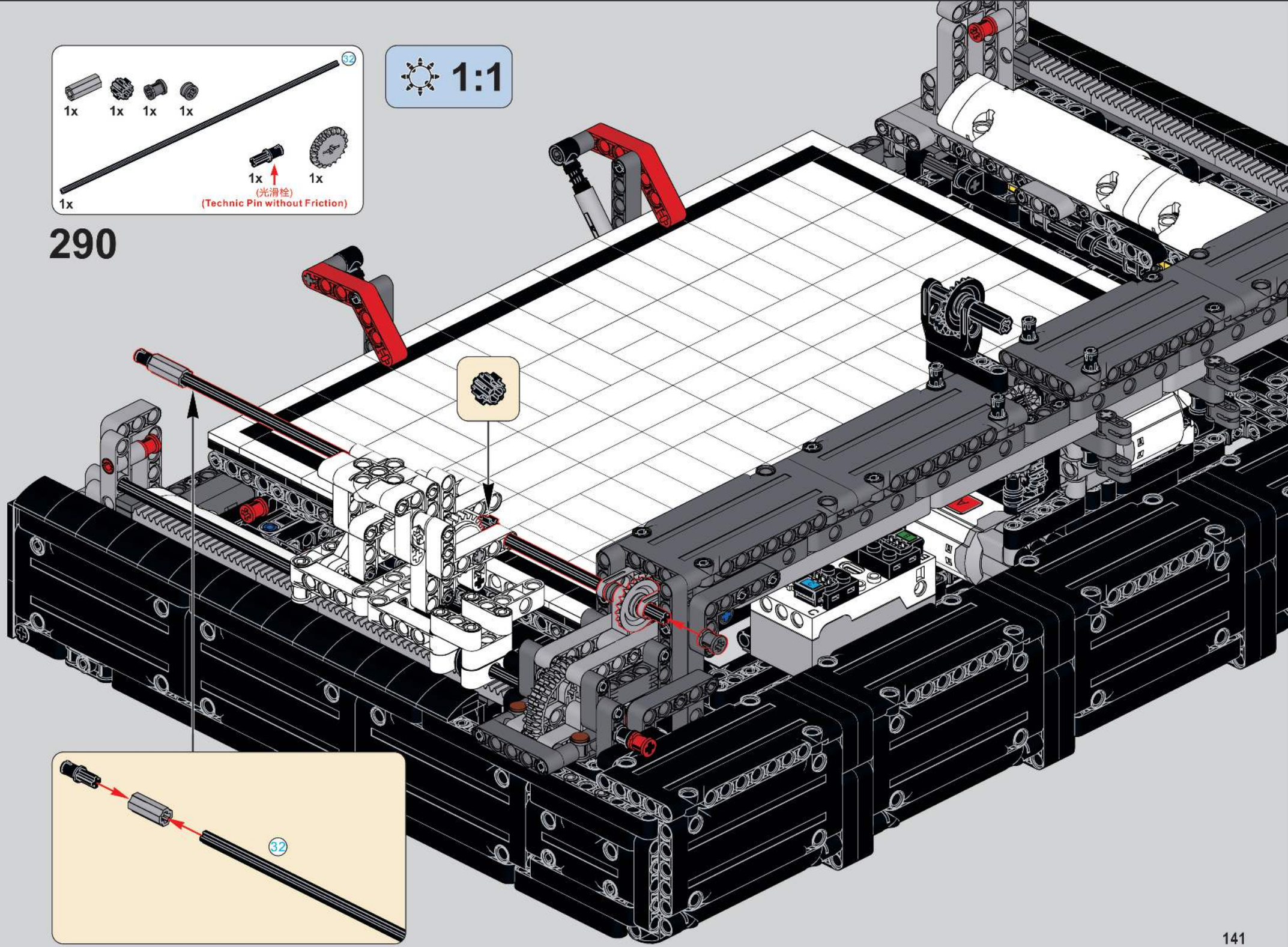
1x
1x
1x
1x
32
1x
1x
(光滑栓)
(Technic Pin without Friction)
1x
1:1
290
32

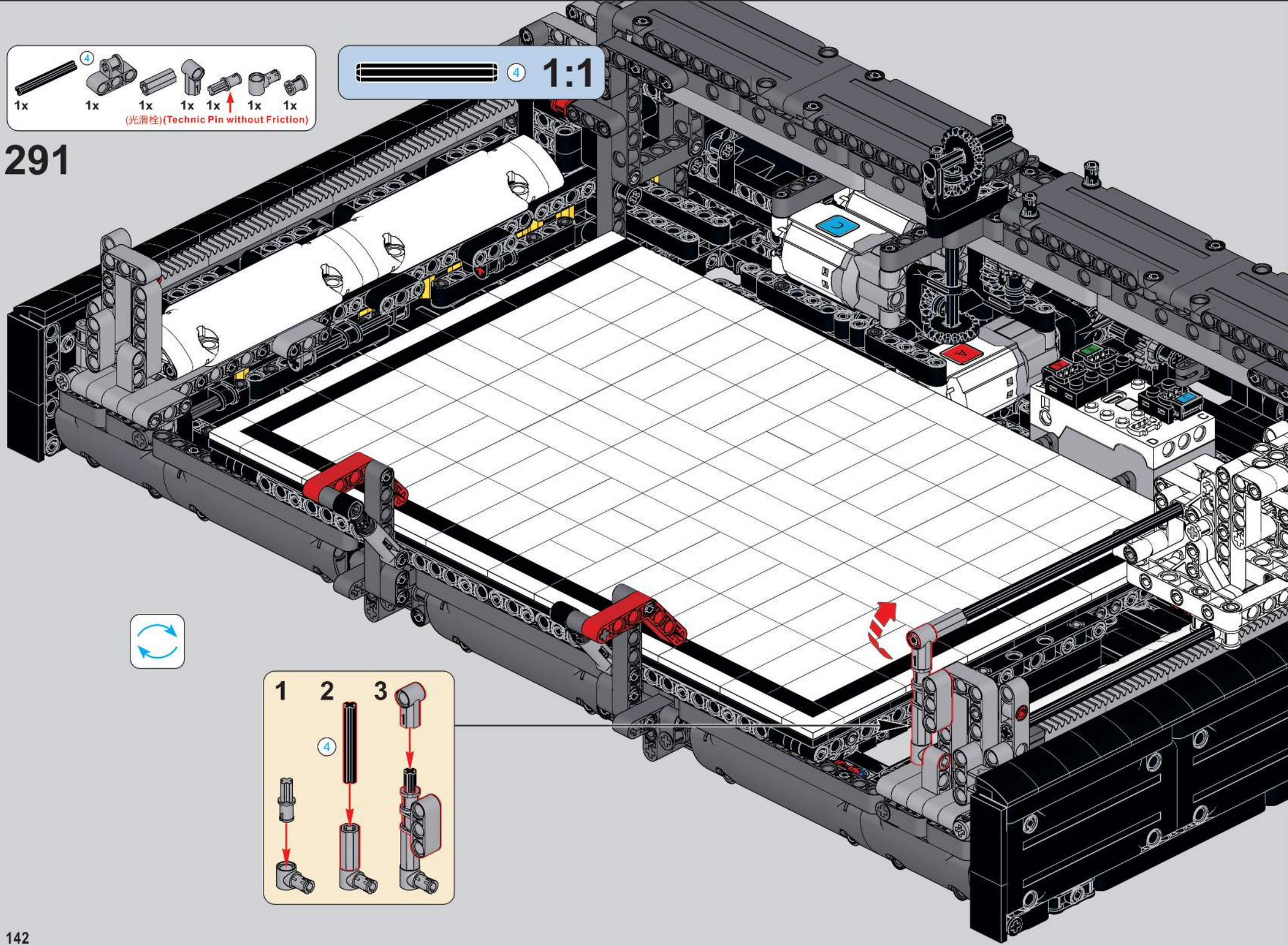
4
1x
1x
1x
1x
1x
1x
1x
(光滑栓)(Technic Pin without Friction)
4
1:1
291
1
2
3
4

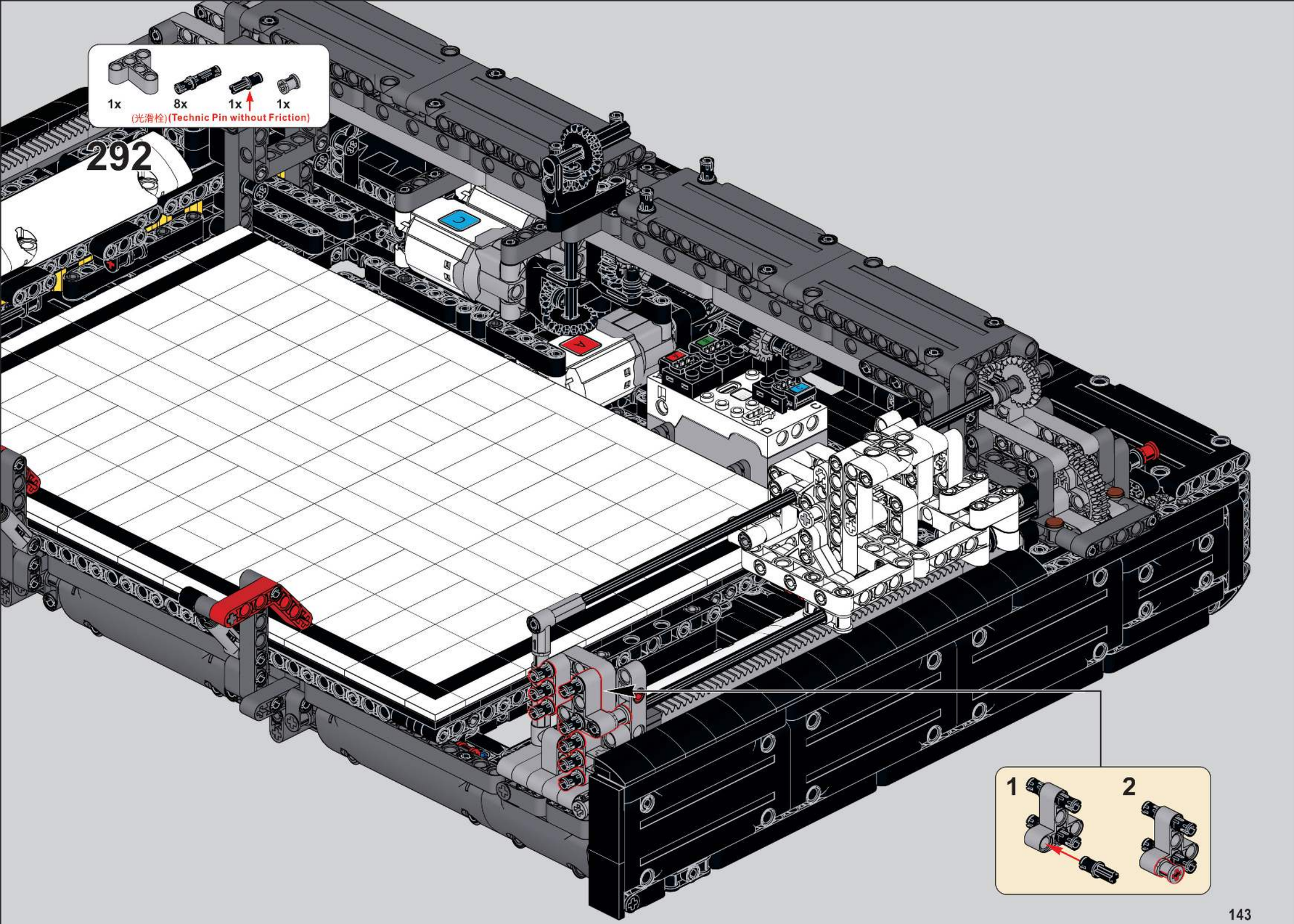
1x
8x
1x
1x
(光滑栓)(Technic Pin without Friction)
292
1
2

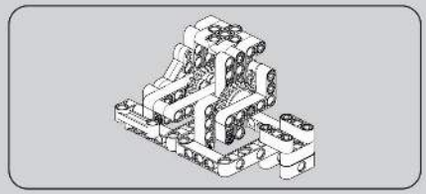

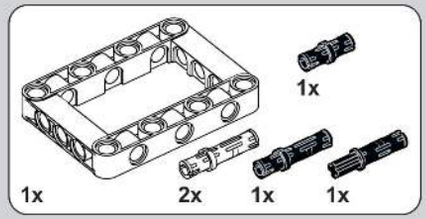

293

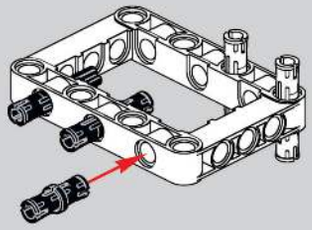

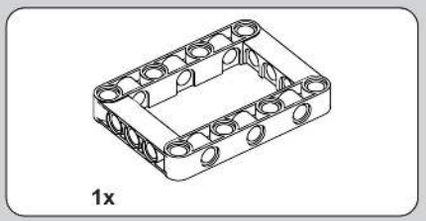

294

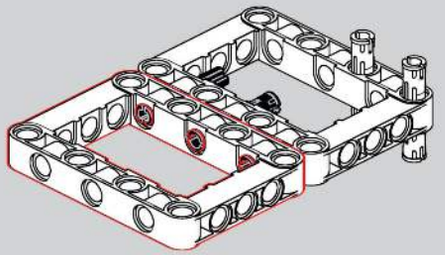

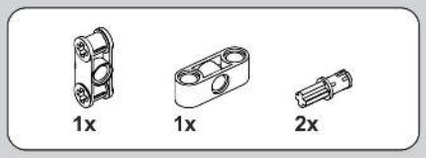

295

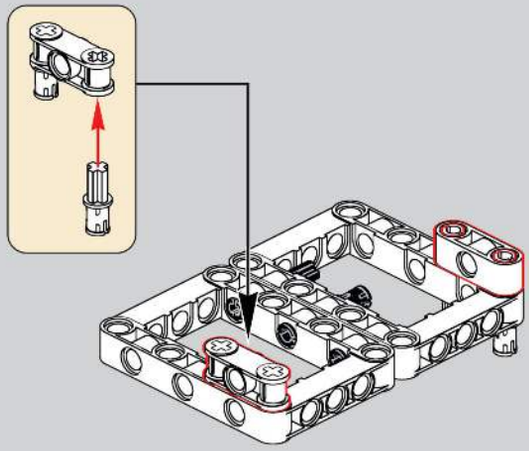

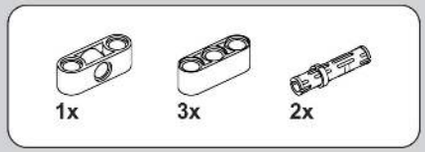

296

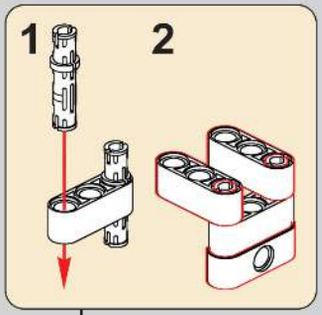

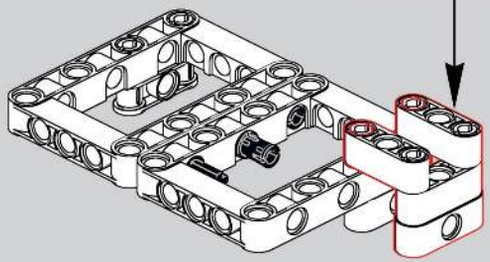

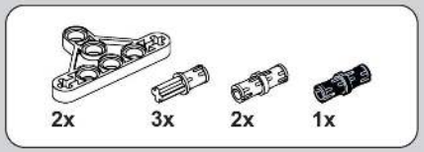

297

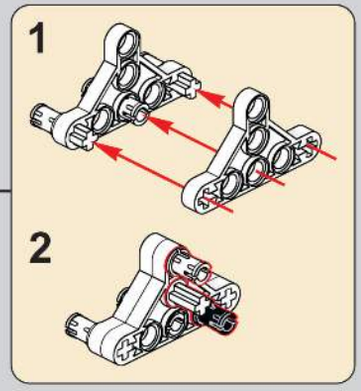

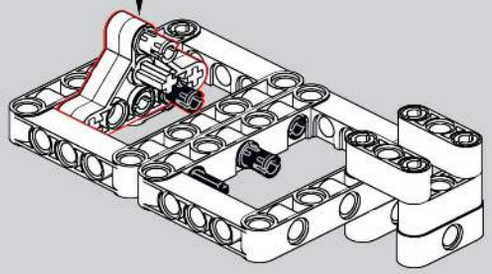

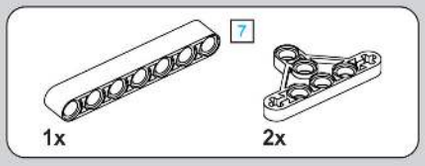

298

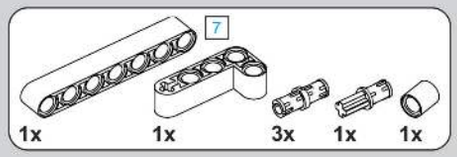

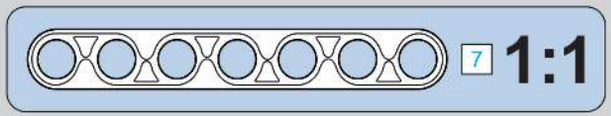

299

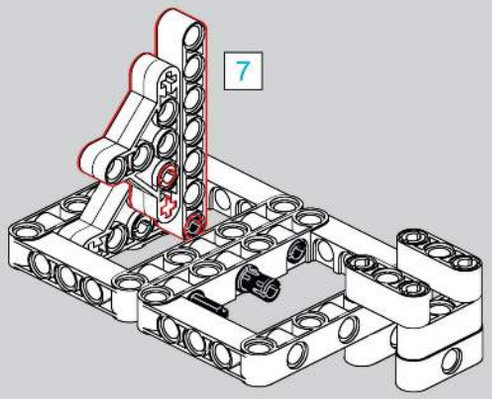

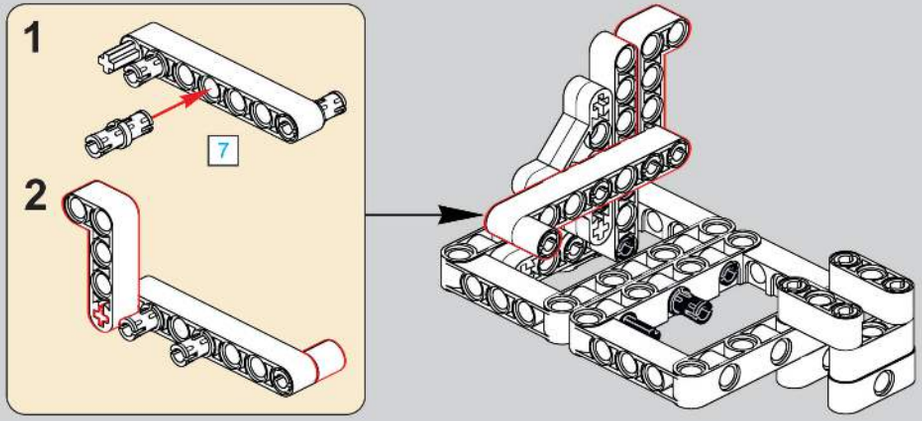

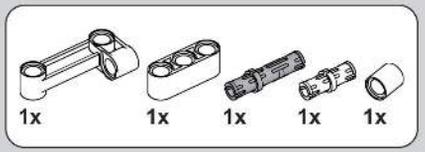

300

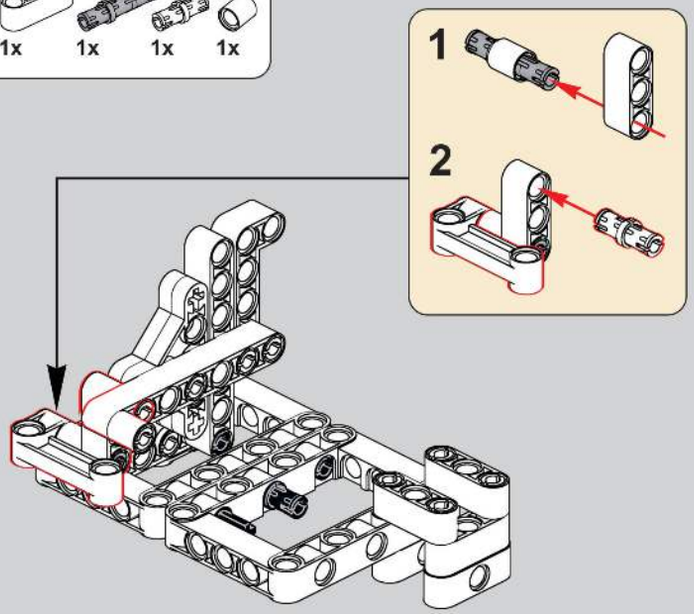

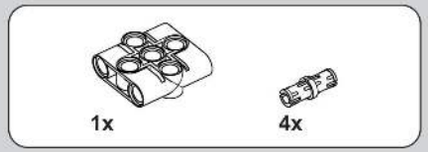

301

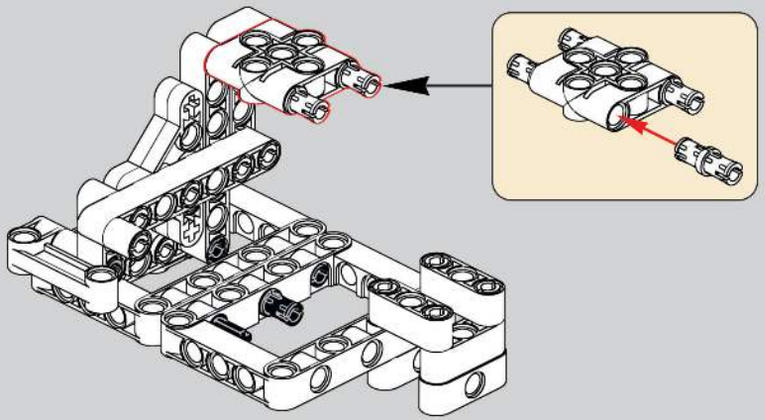

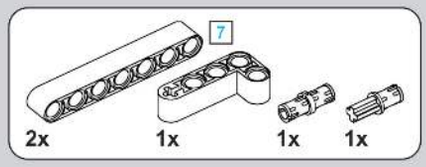

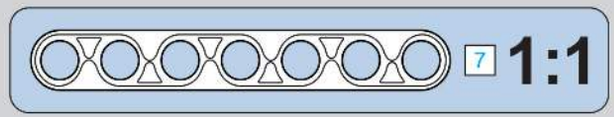

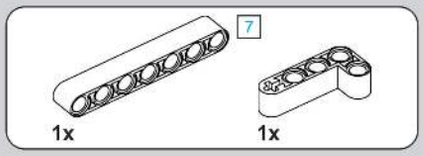

302

303

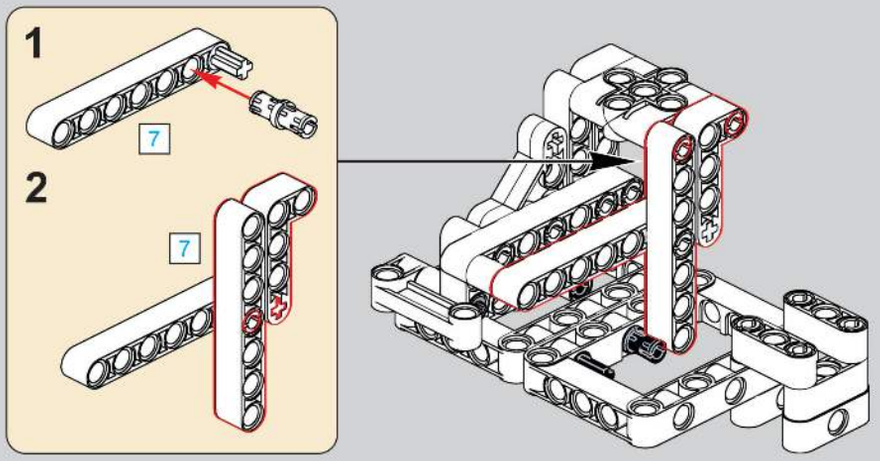

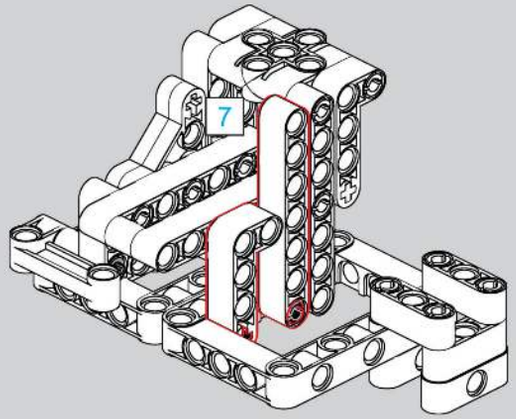

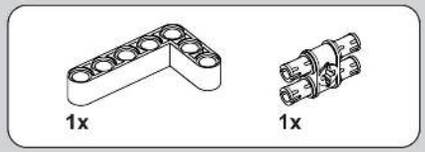

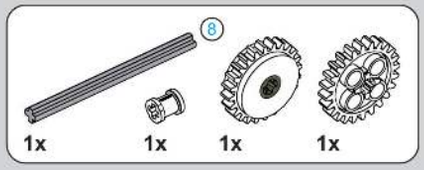

304

305

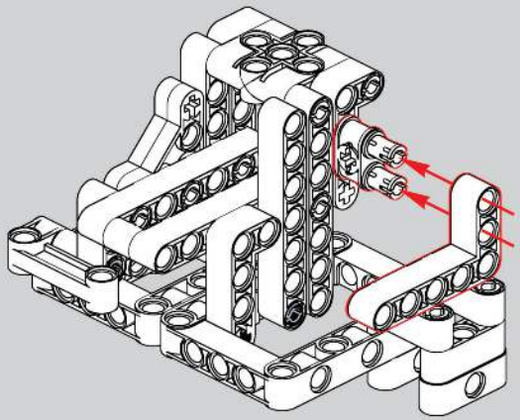

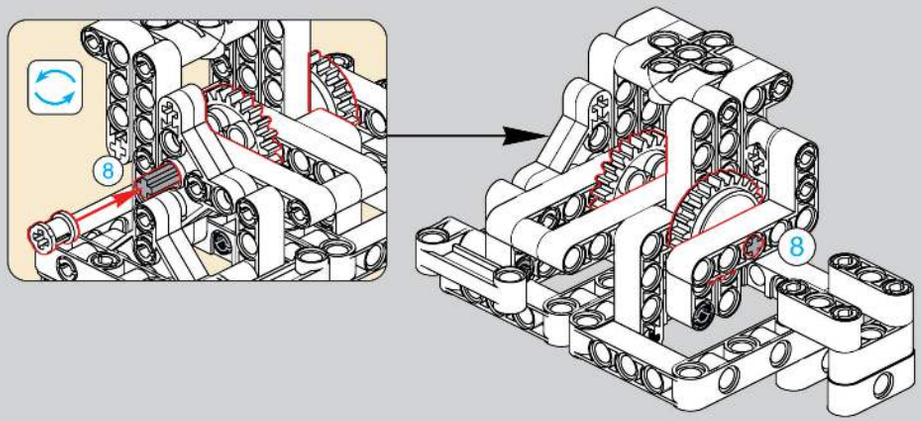

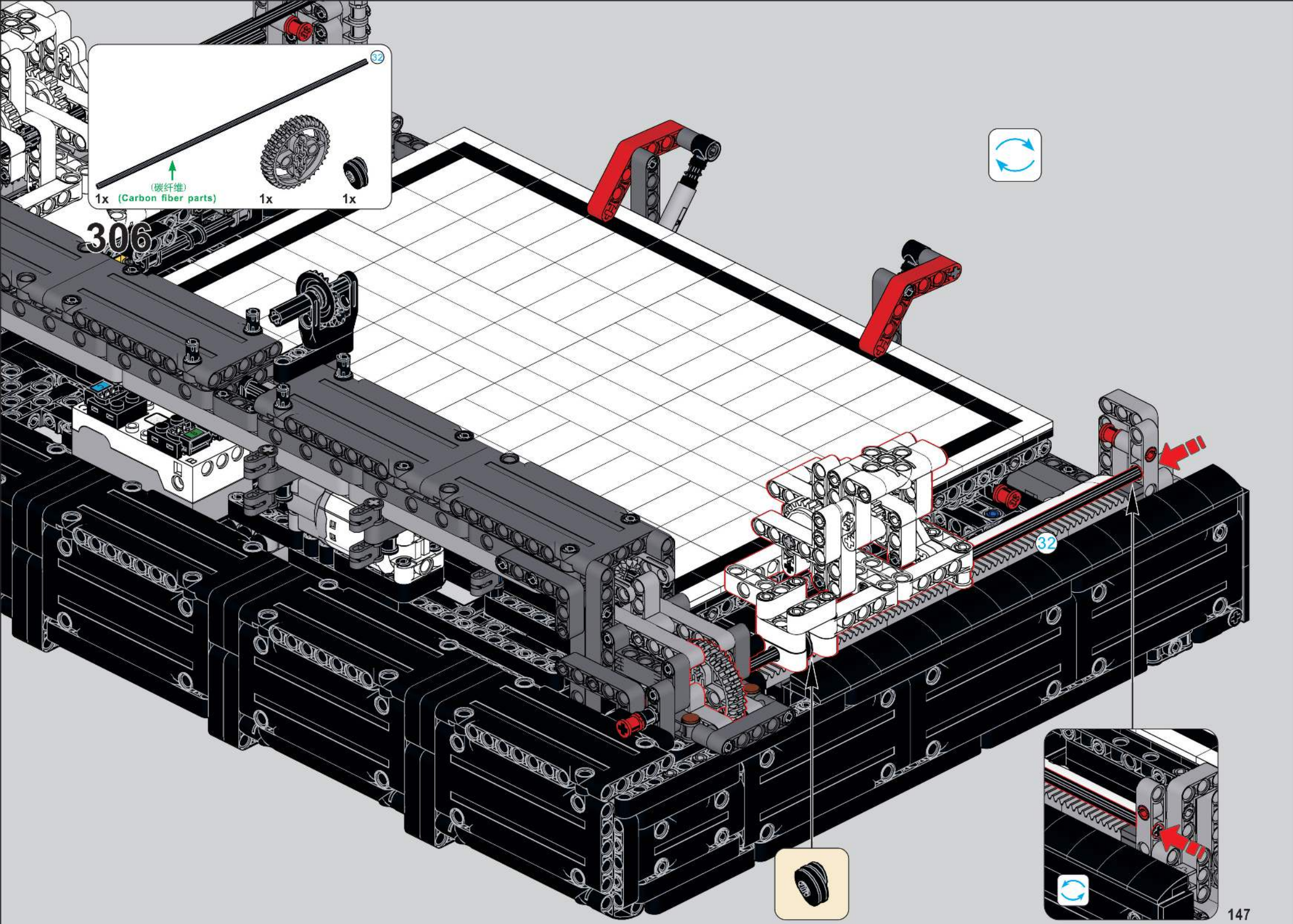
306
32
1x
(碳纤维)
(Carbon fiber parts)
1x
1x
32

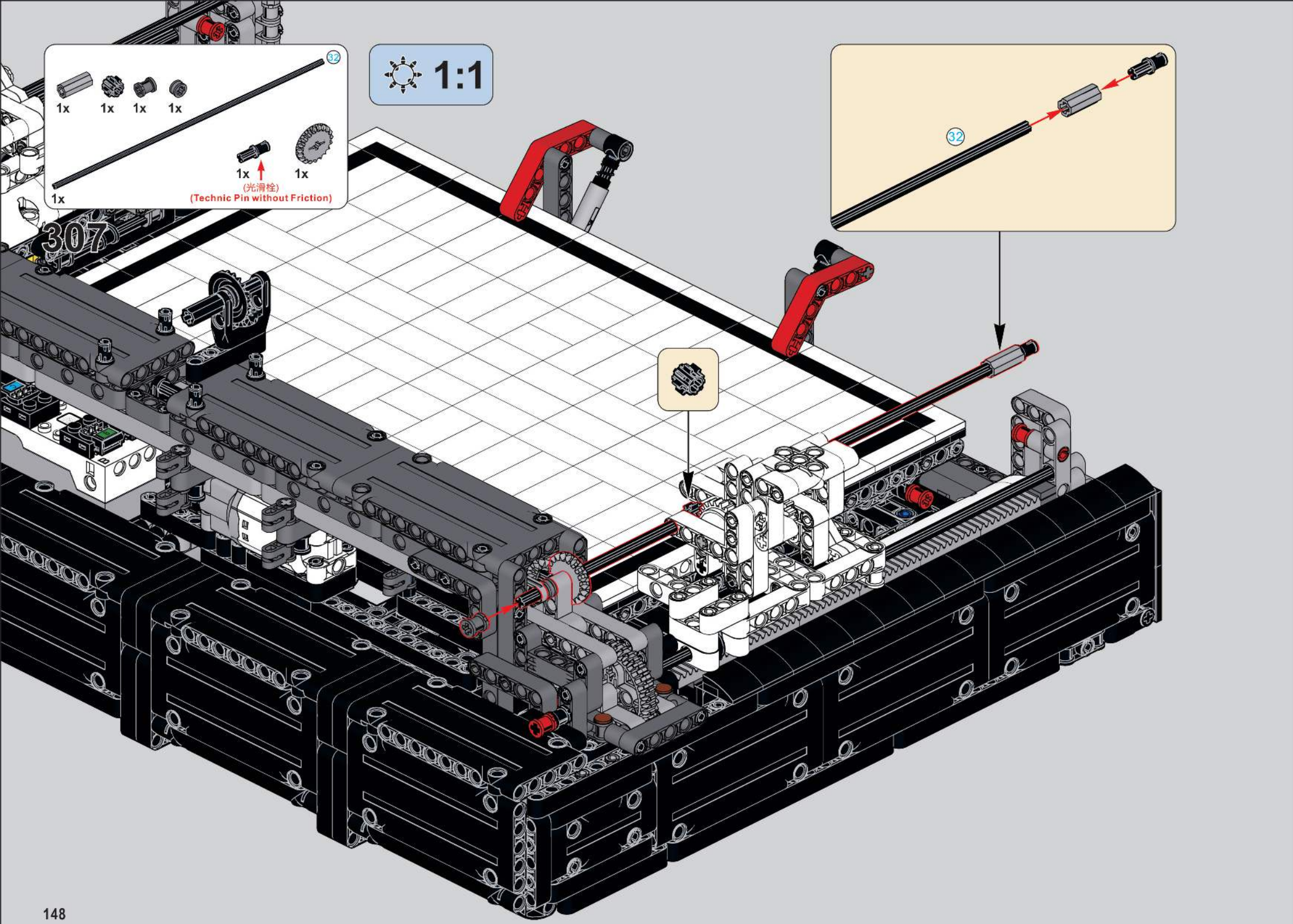
32
1x
1x
1x
1x
1x
1x
1x
(光滑栓)
(Technic Pin without Friction)
1:1
307
32

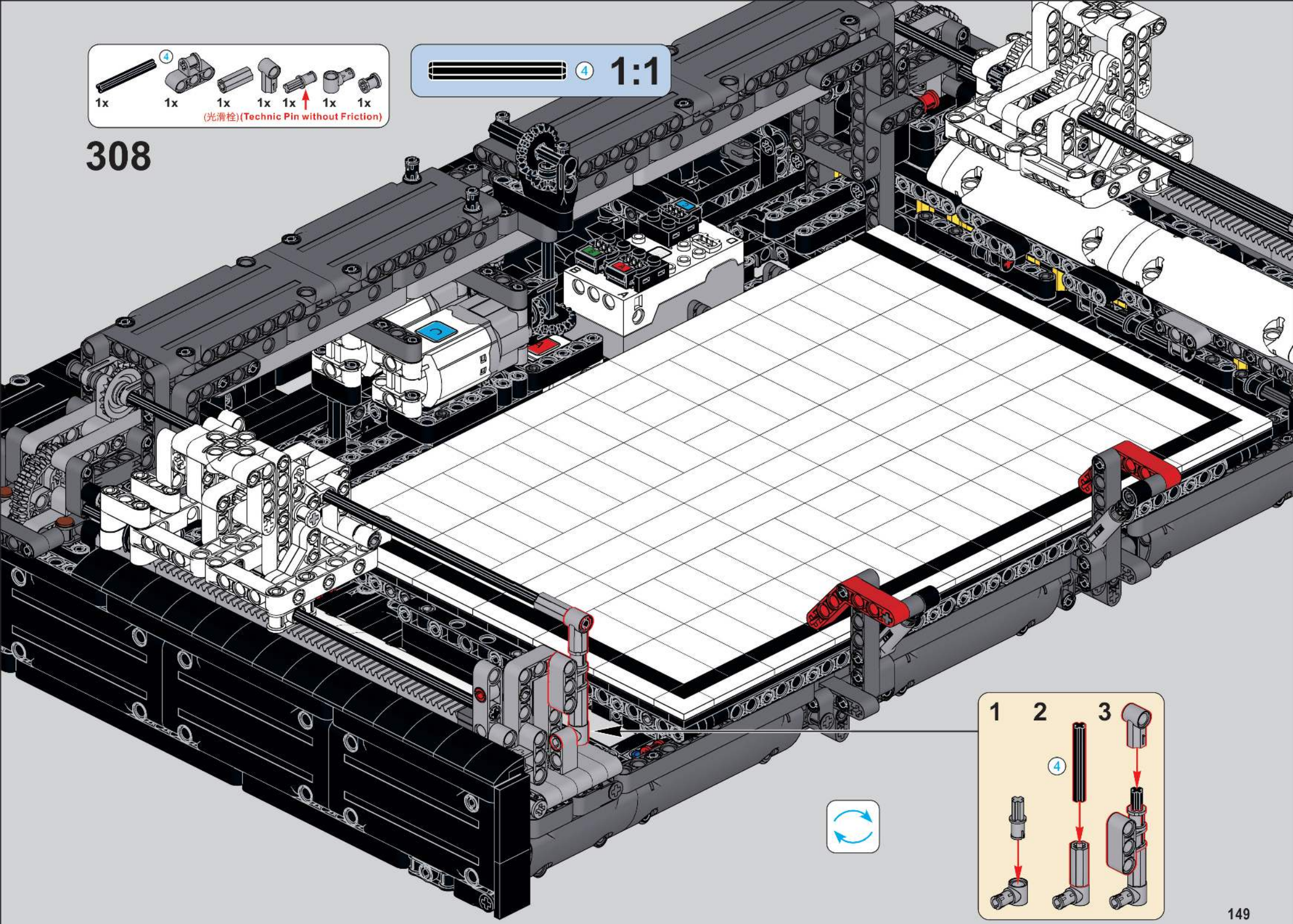
4
1x
1x
1x
1x
1x
1x
1x
(光滑栓)(Technic Pin without Friction)
308
4
1:1
1
2
3
4

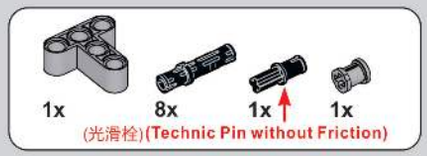

309

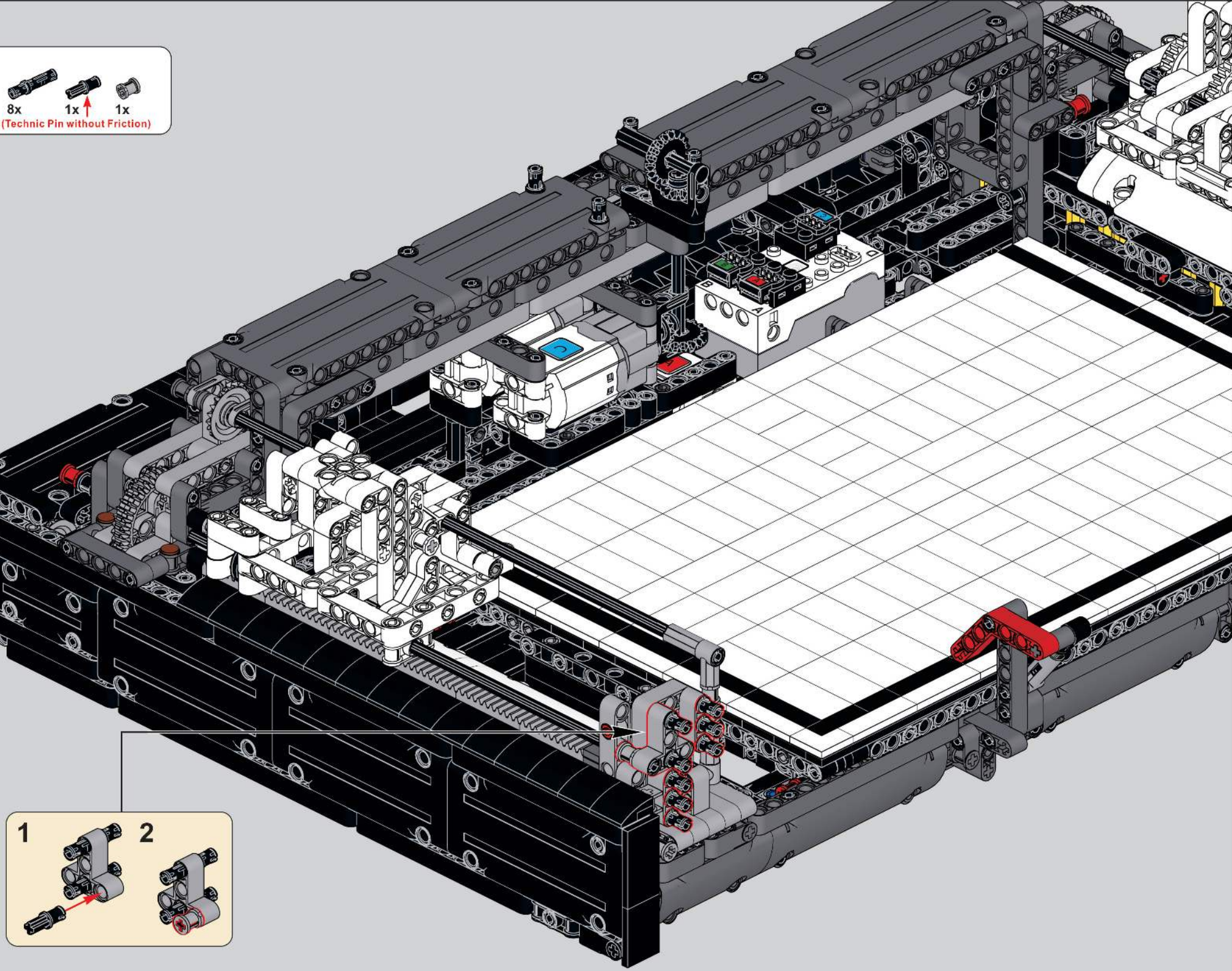

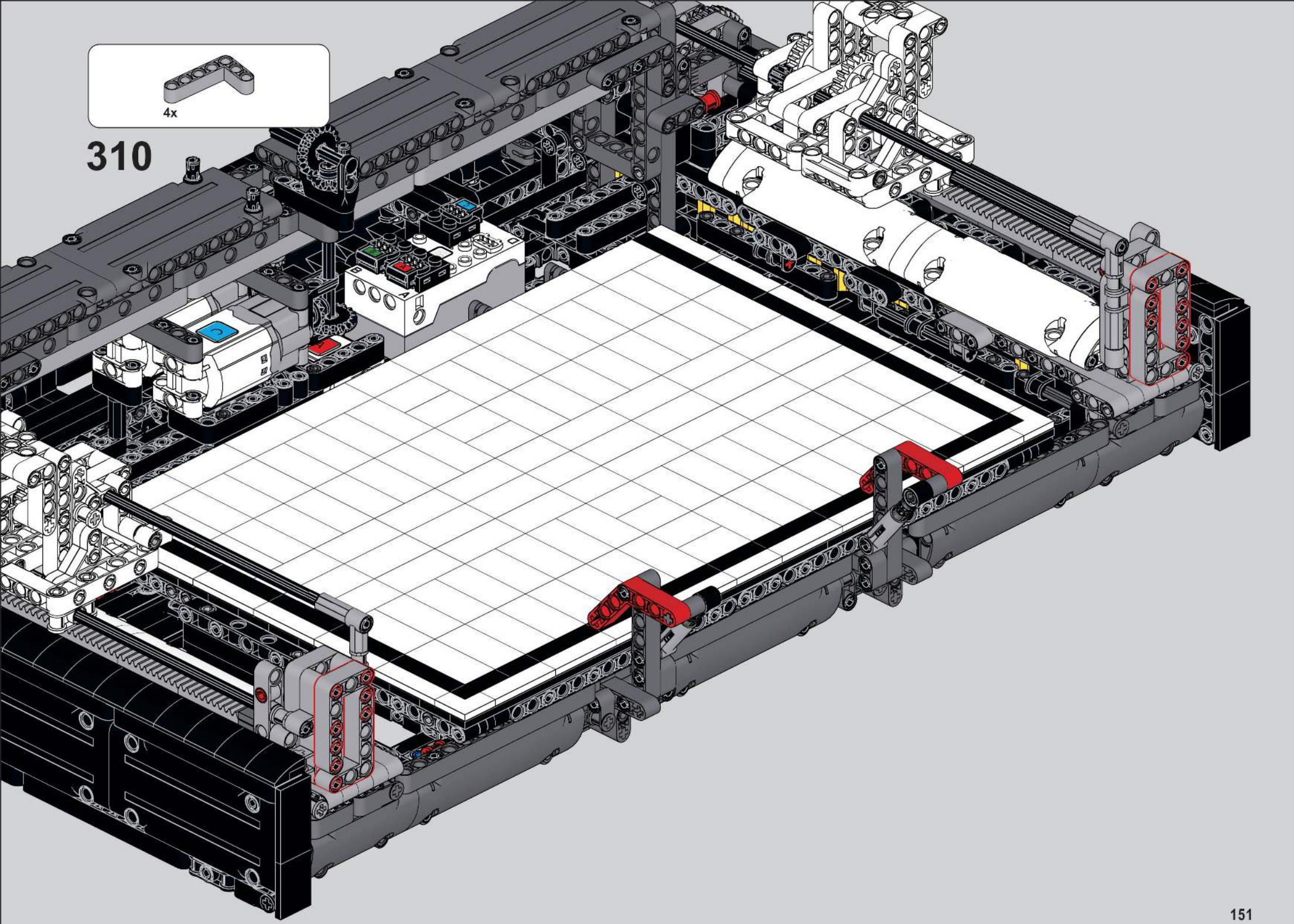
4x
310

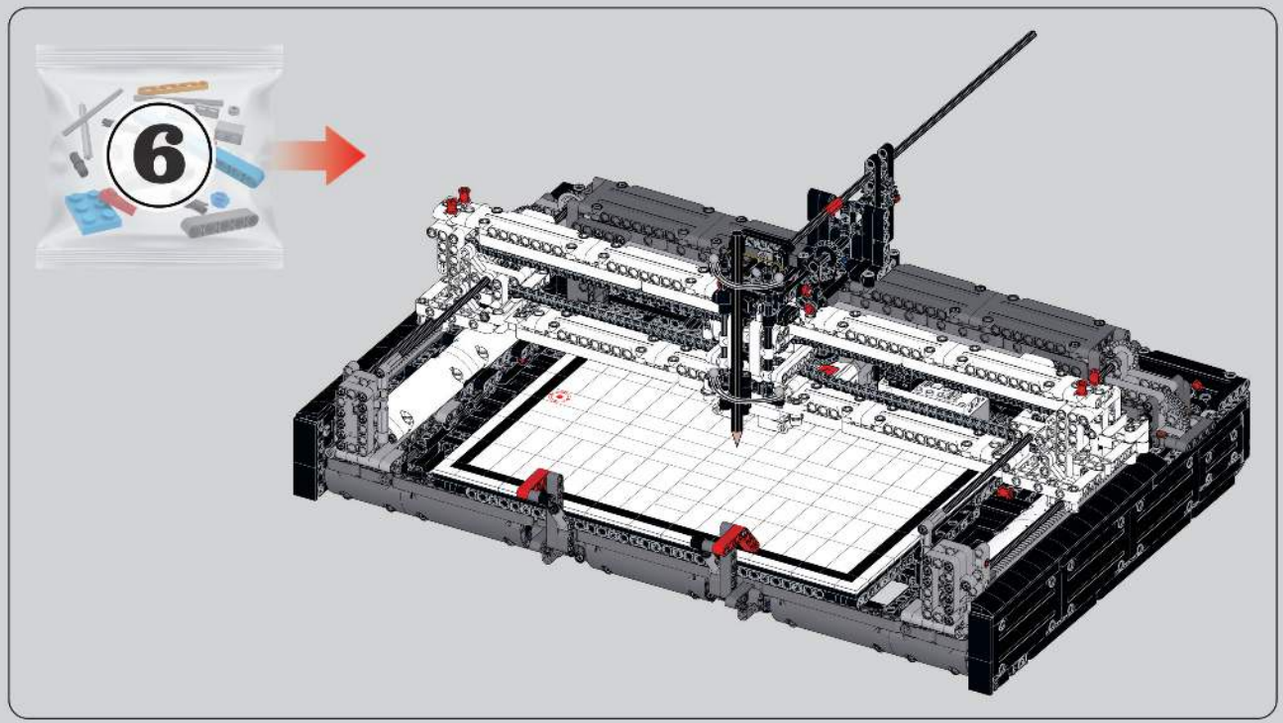

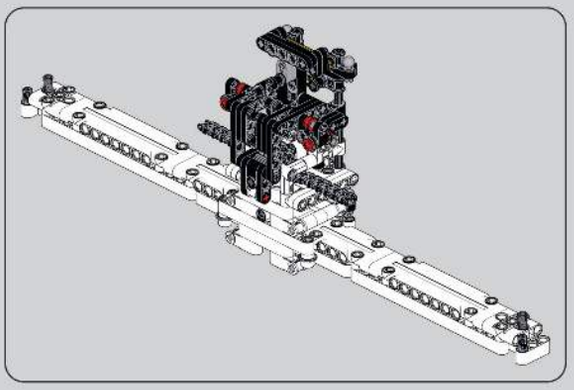

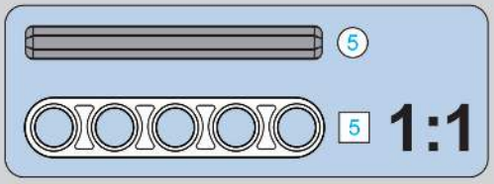

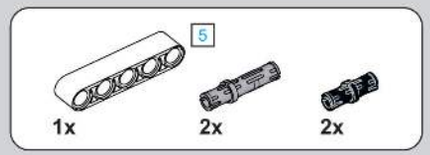

311

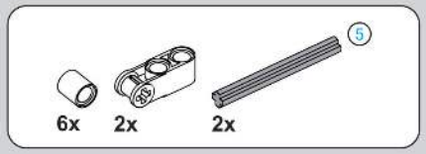

312

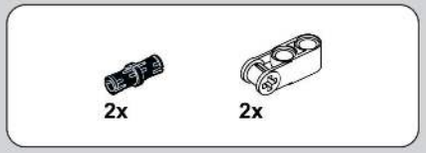

313

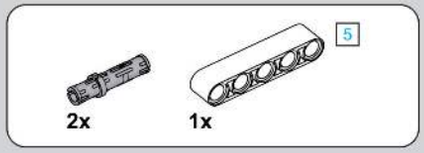

314

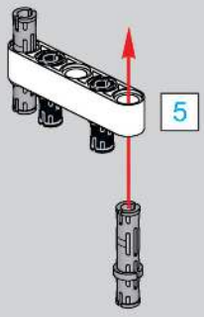

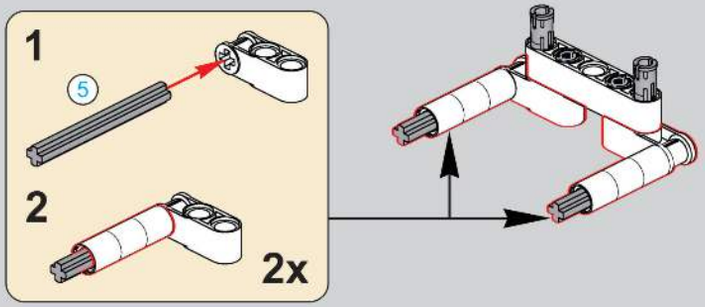

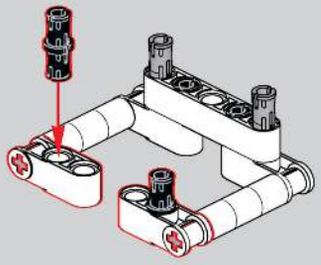

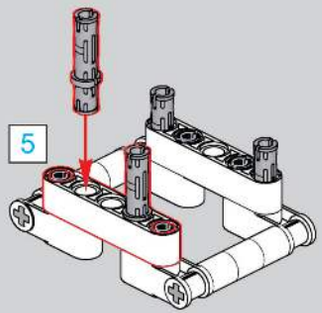

315

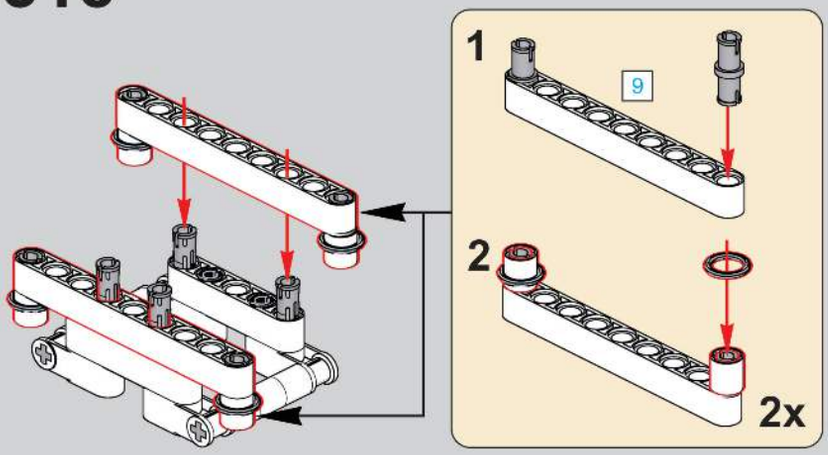

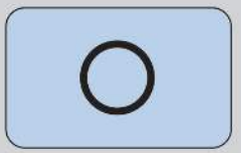

316

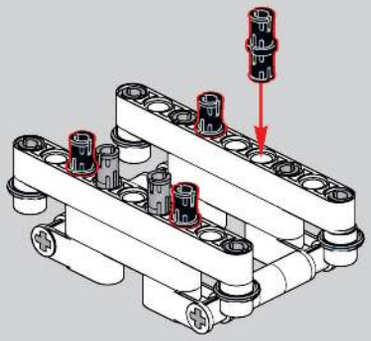

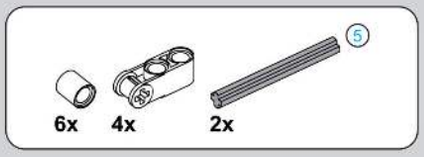

317

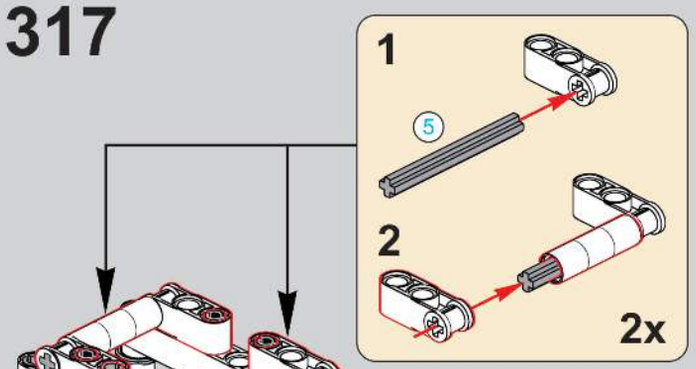

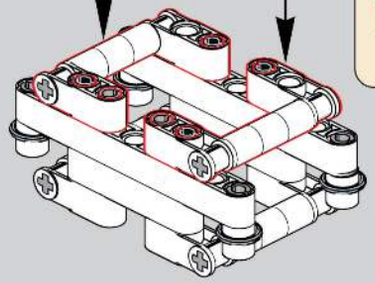

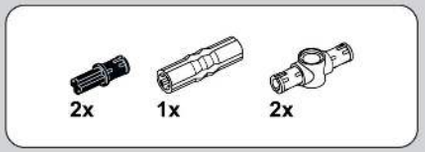

318

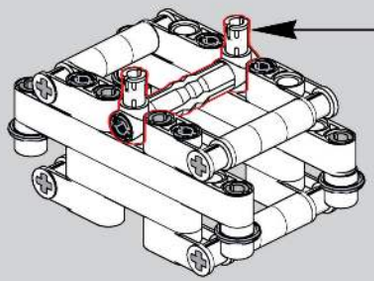

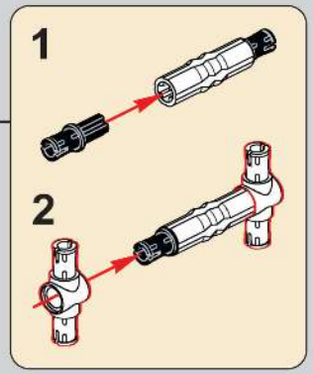

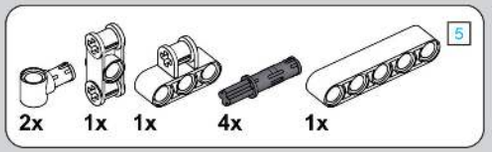

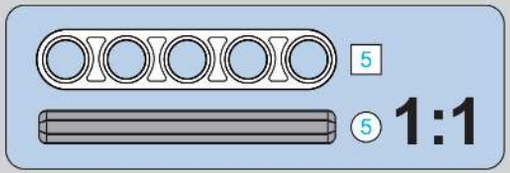

319

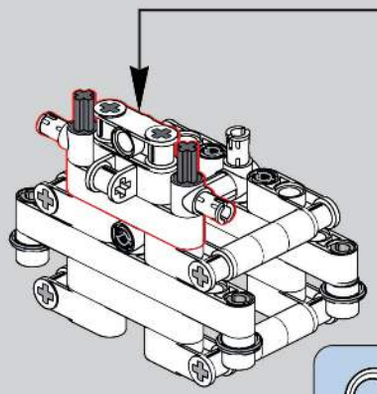

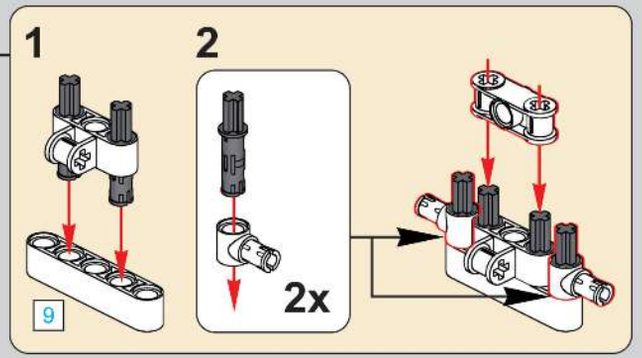

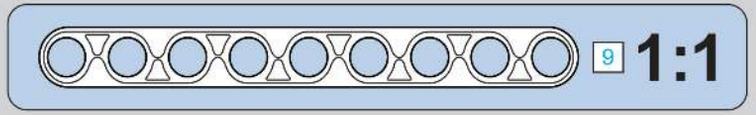

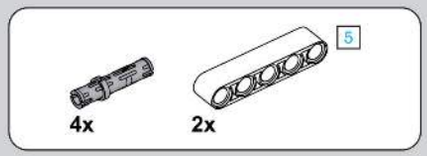

320

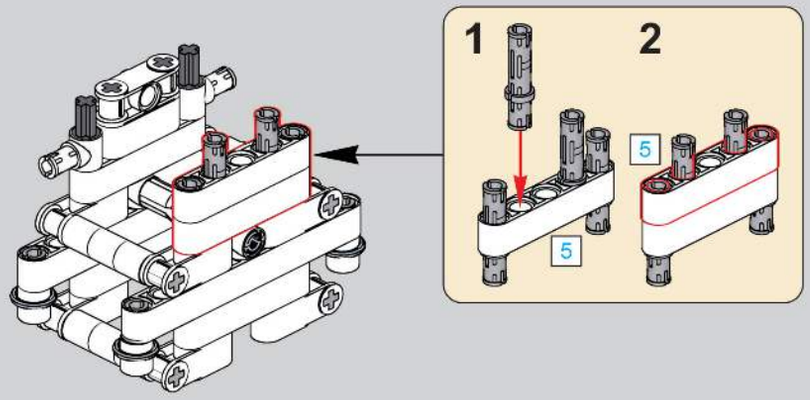

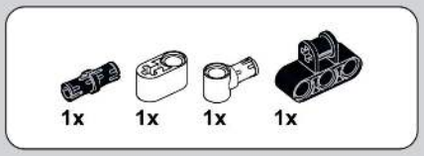

321

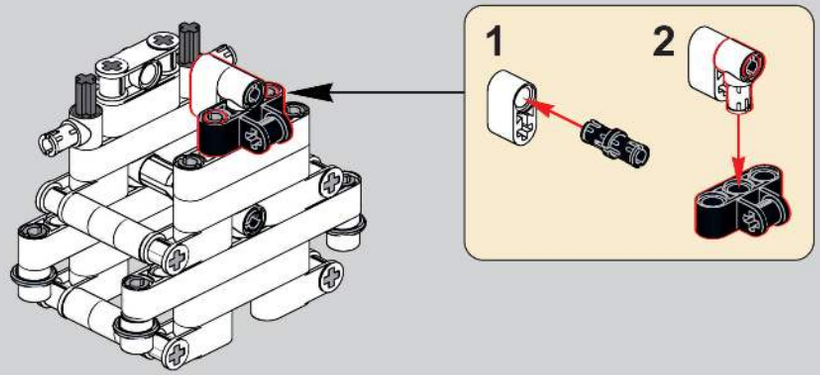

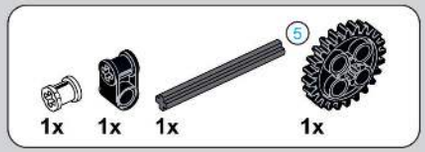

322

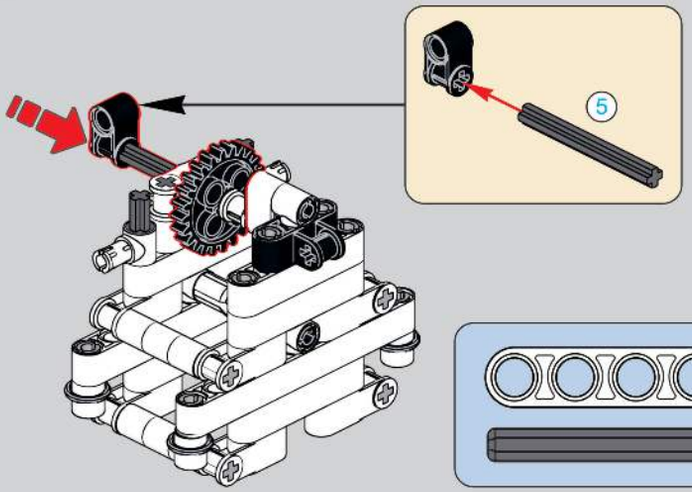

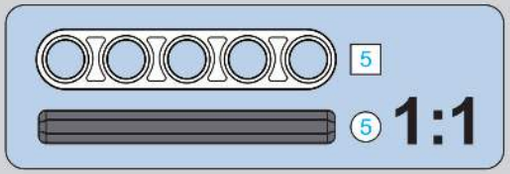

323

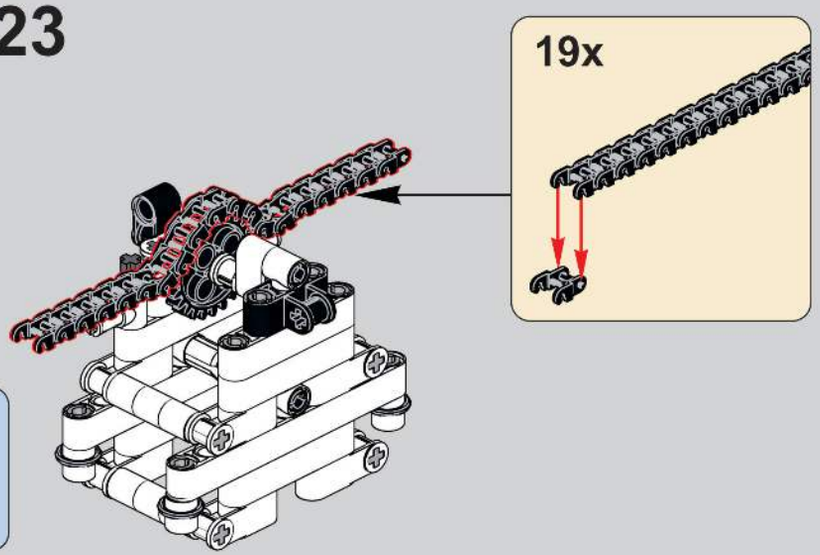

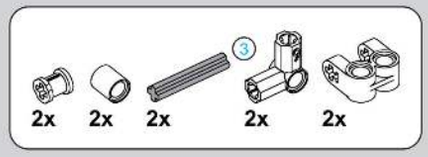

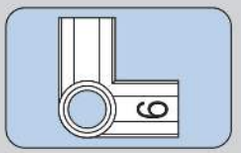

324

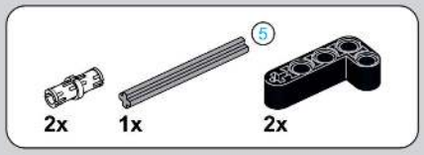

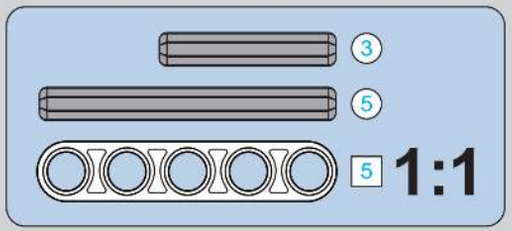

325

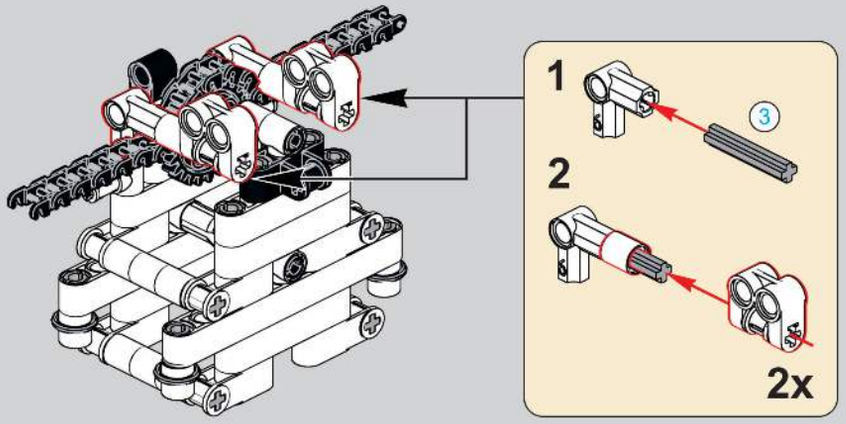

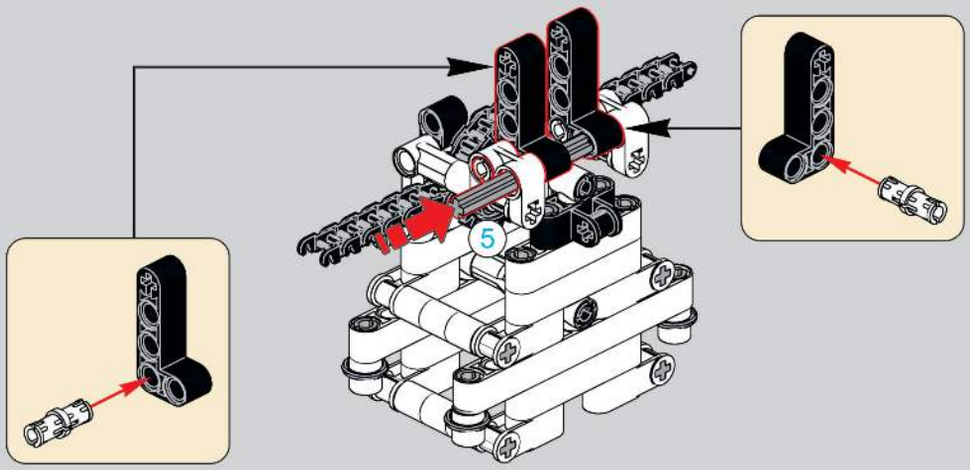

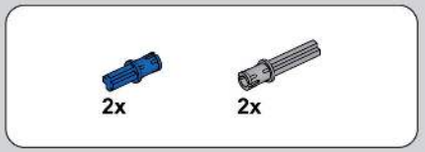

326

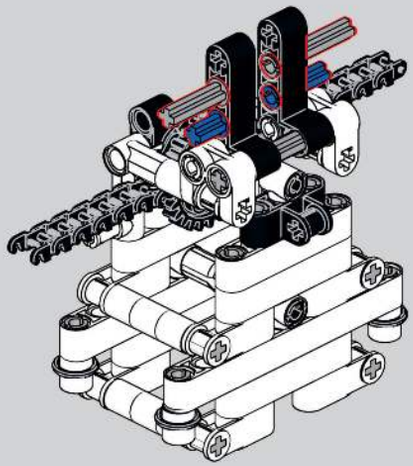

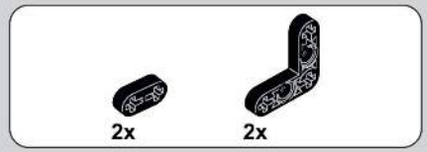

327

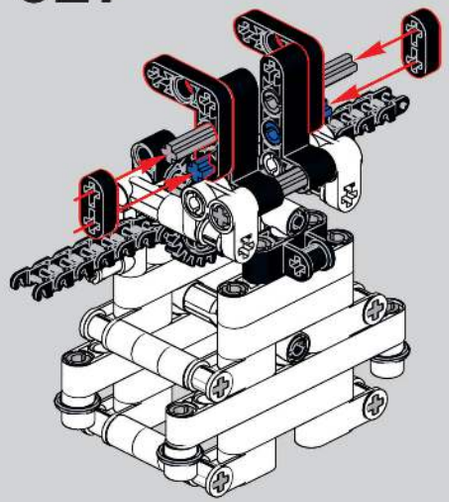

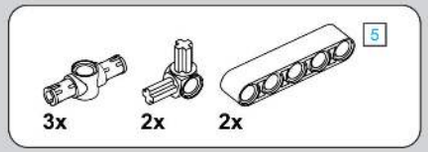

328

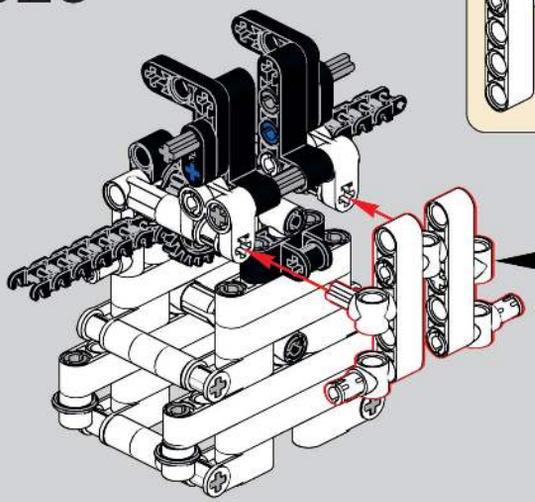

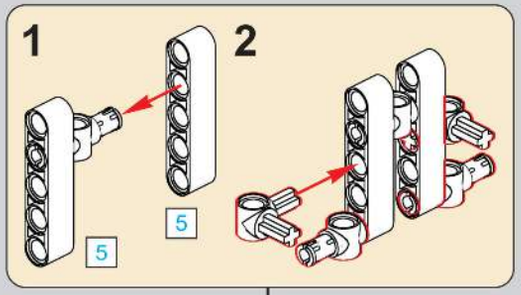

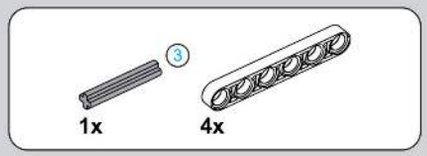

329

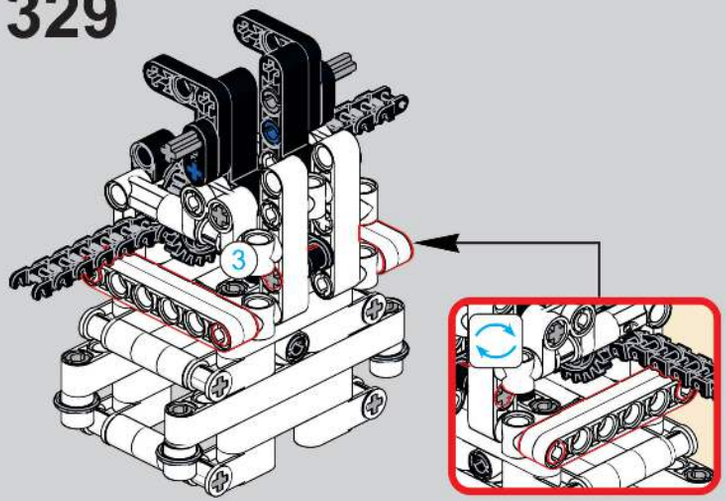

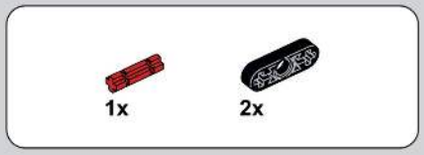

330

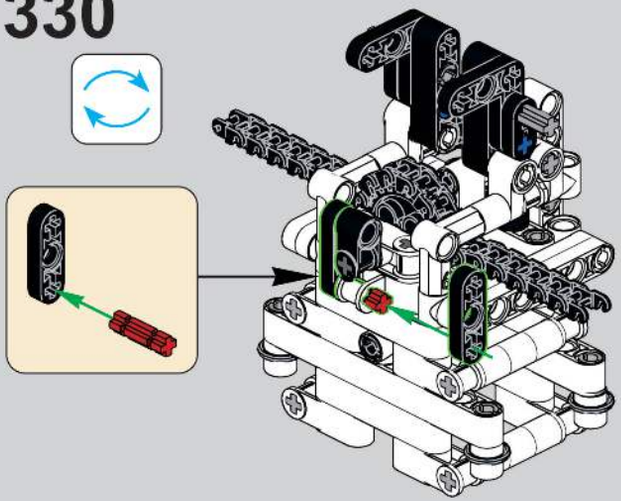

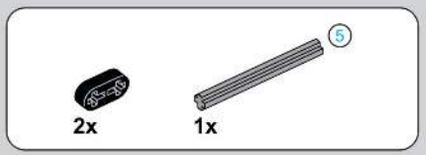

331

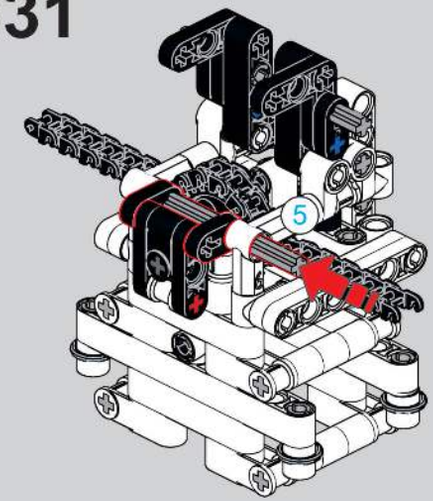

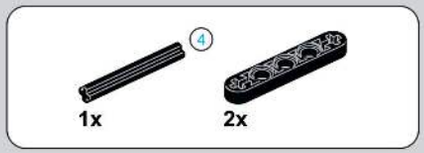

332

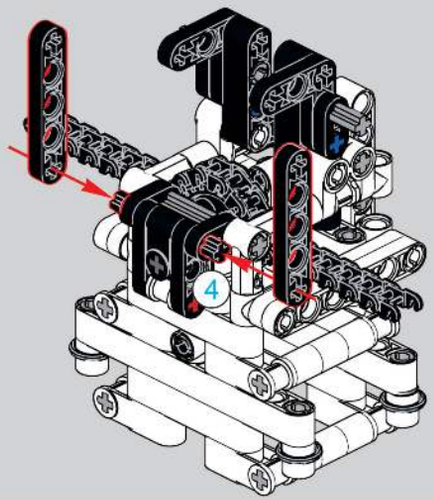

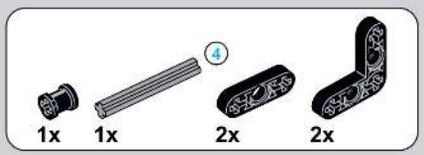

333

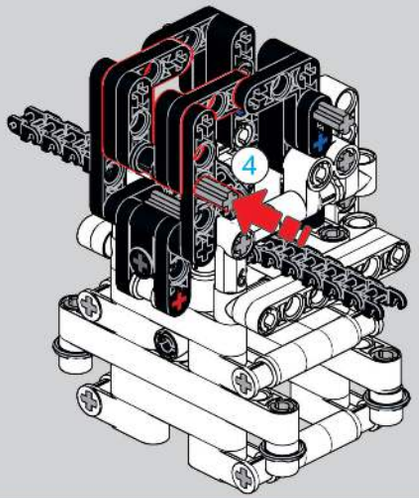

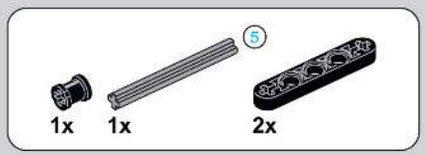

334

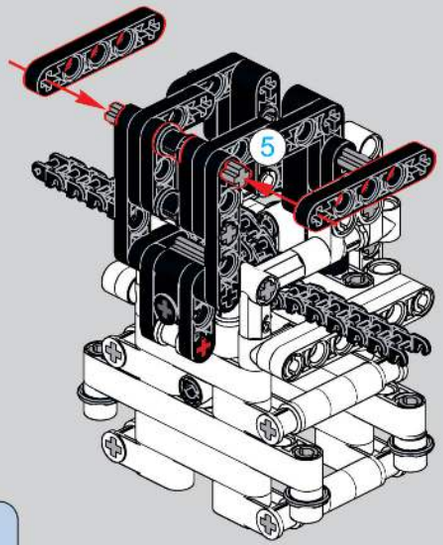

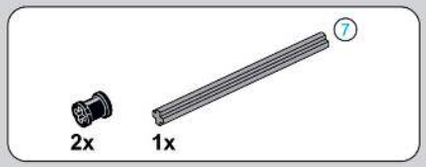

335

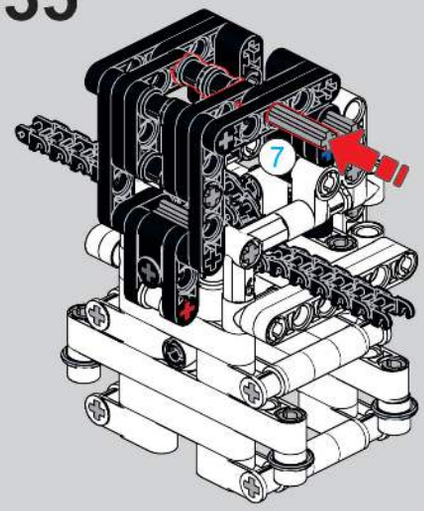

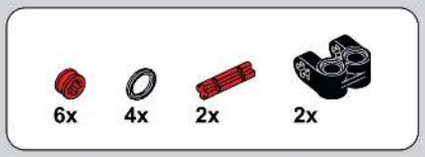

336

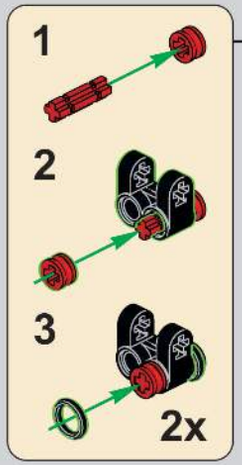

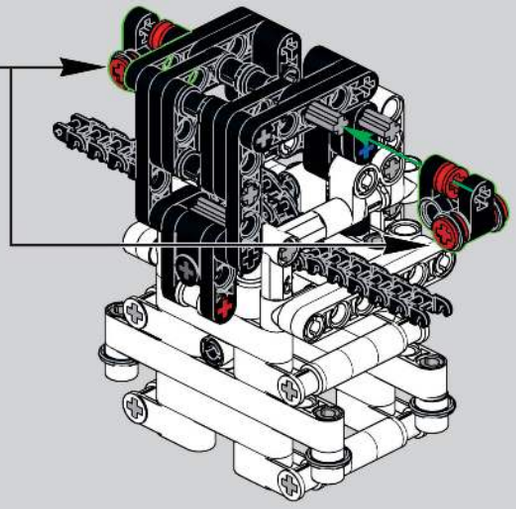

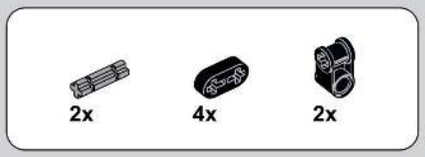

337

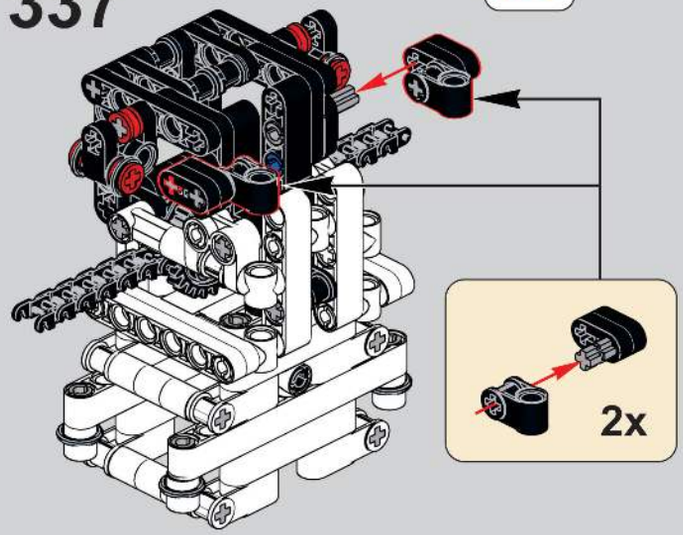

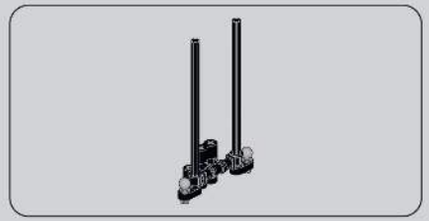

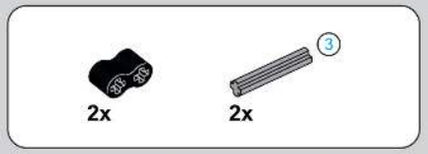

338

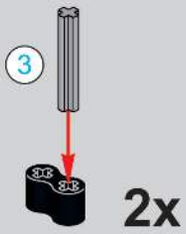

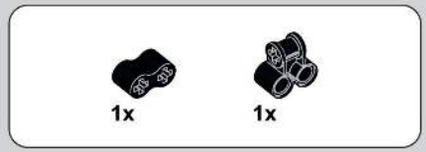

339

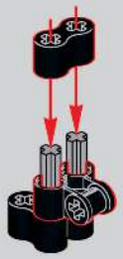

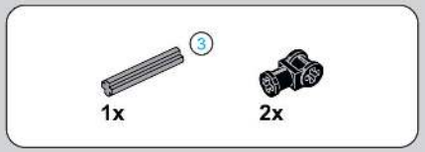

340

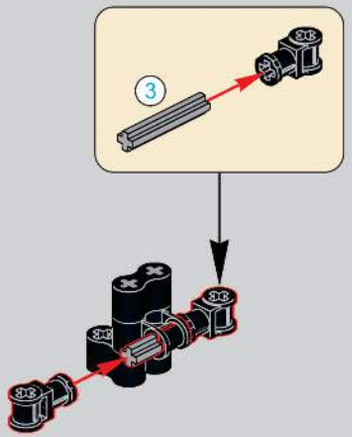

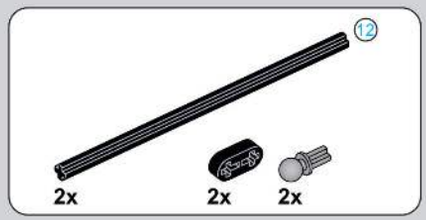

341

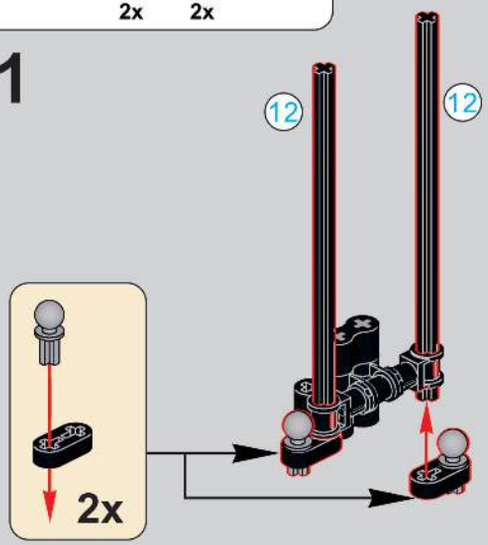

342

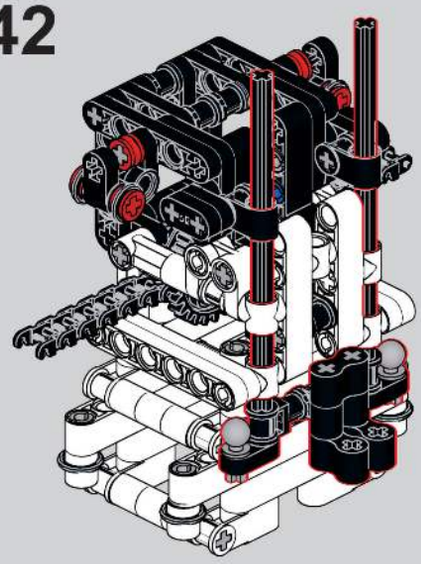

343

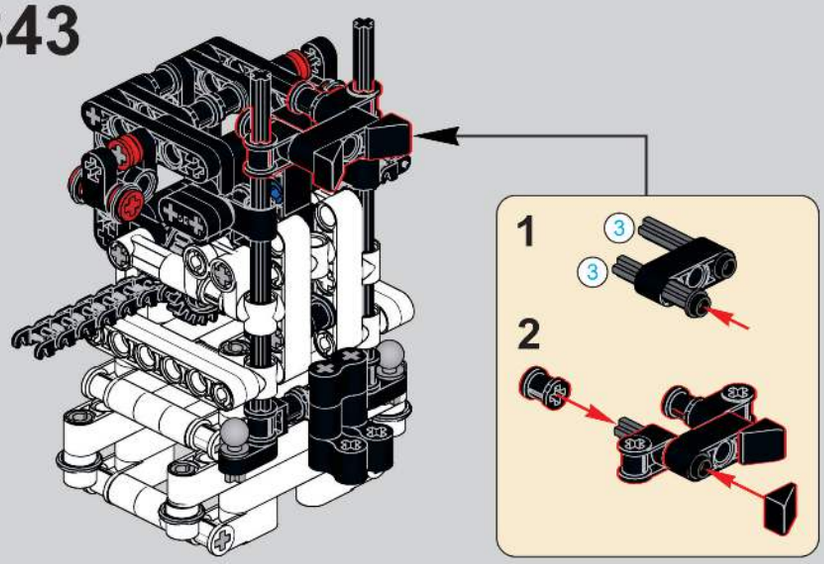

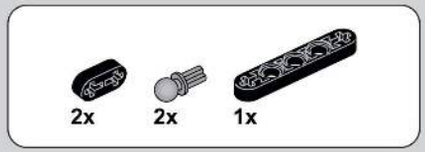

344

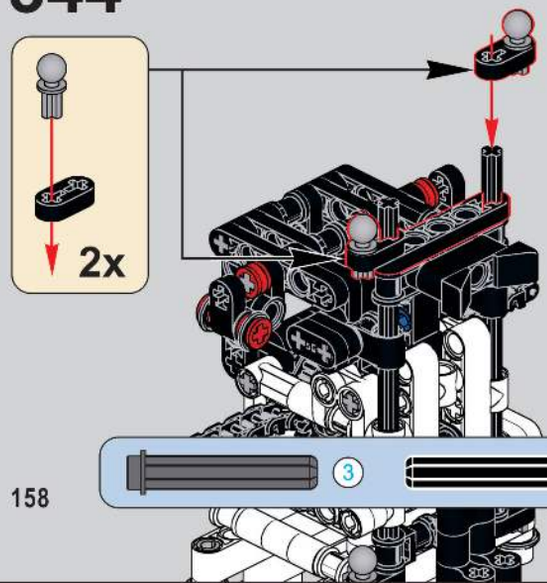

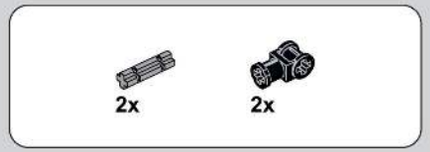

345

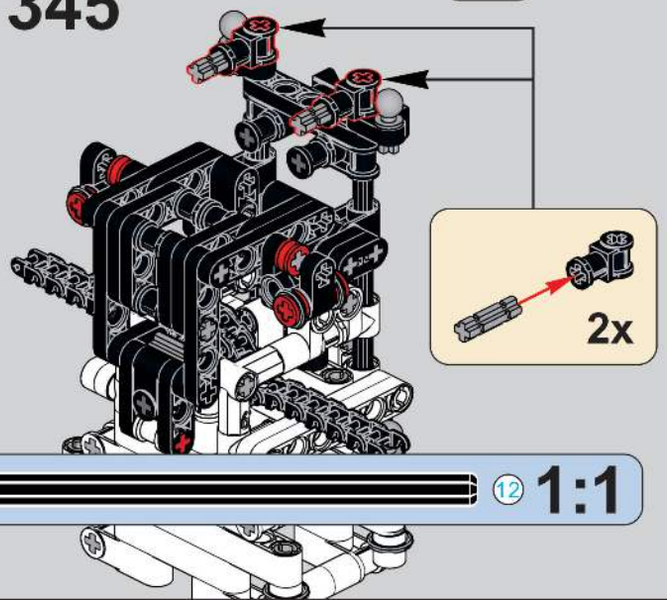

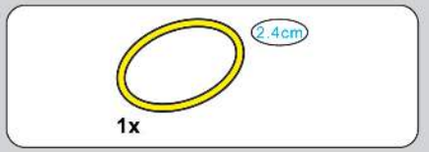

346

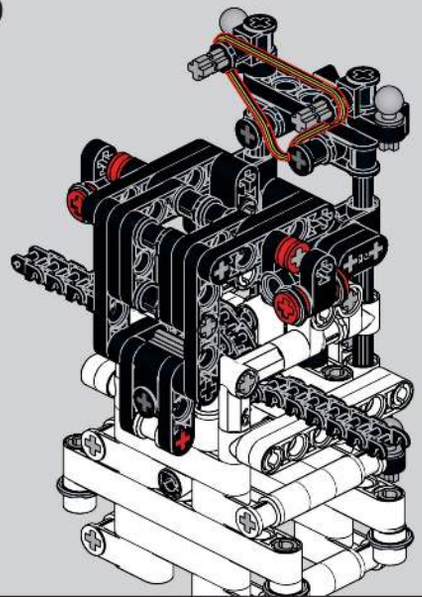

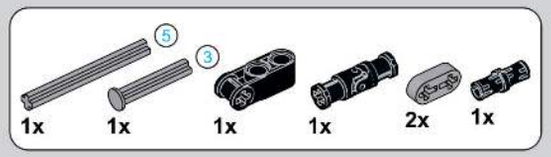

347

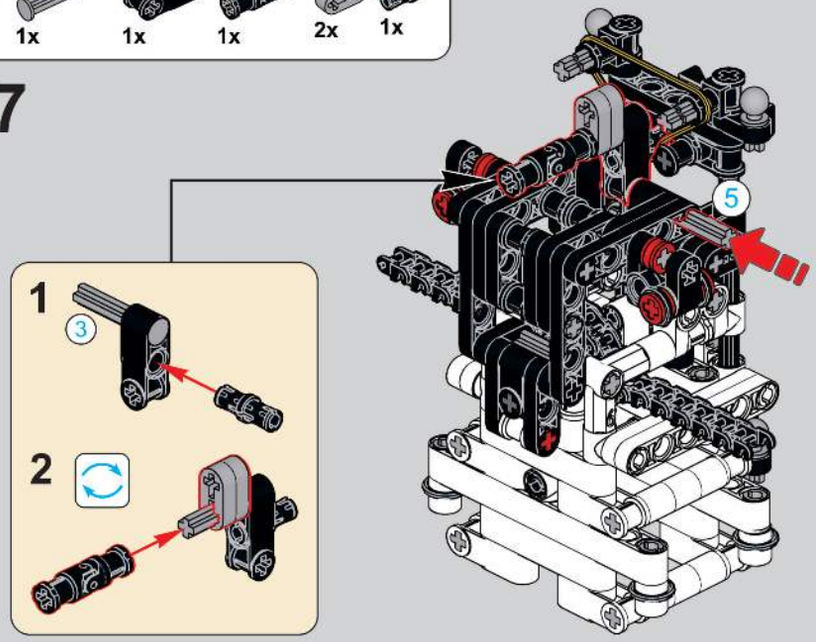

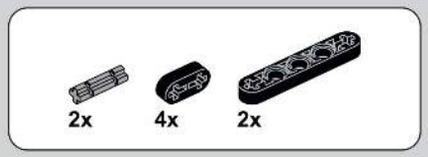

348

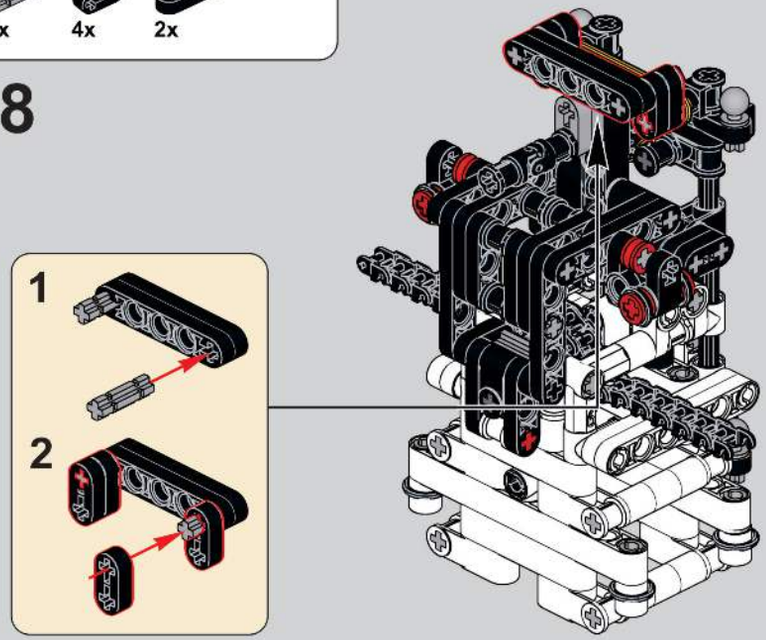

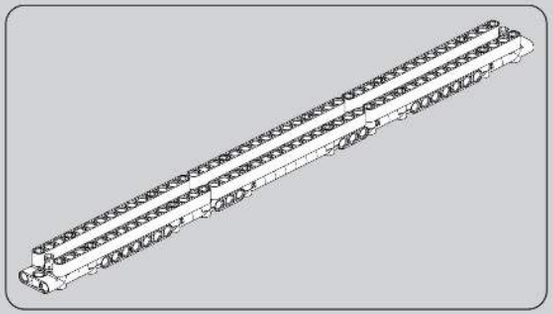

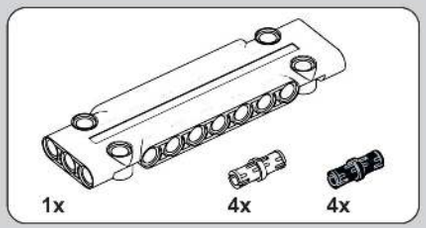

349

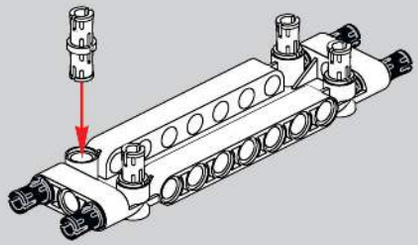

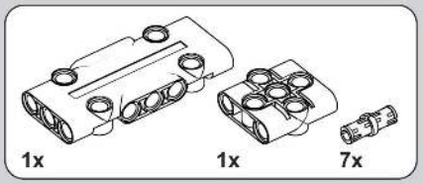

350

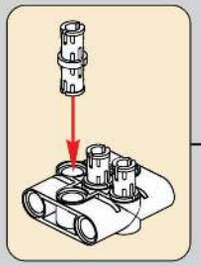

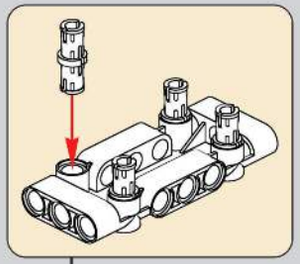

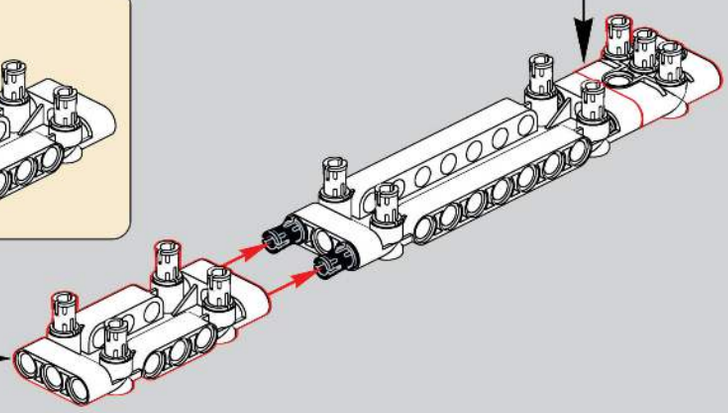

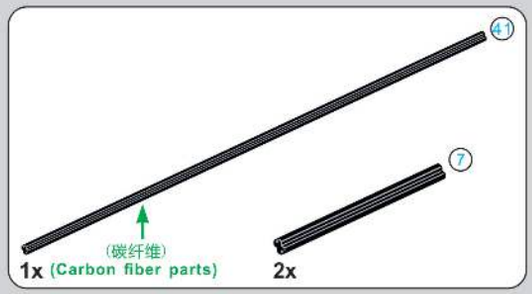
41
7
(碳纤维)
1x (Carbon fiber parts)
2x

351

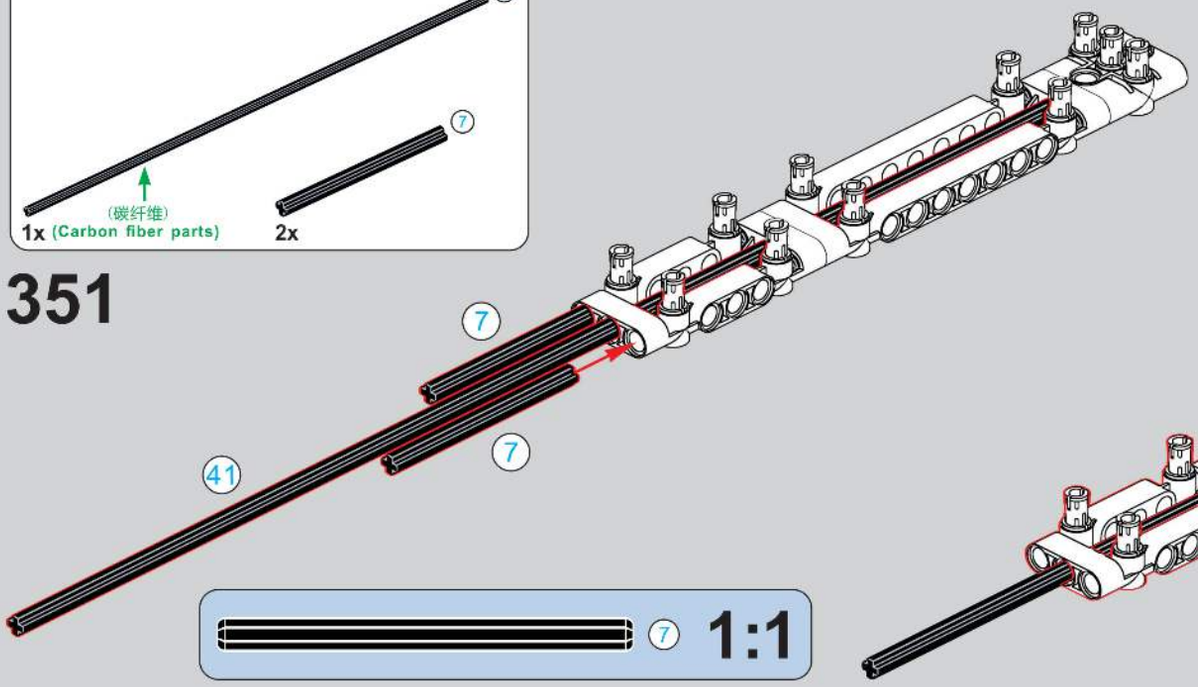
7
7
41
7
1:1

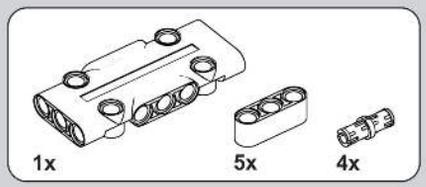
1x
5x
4x

352

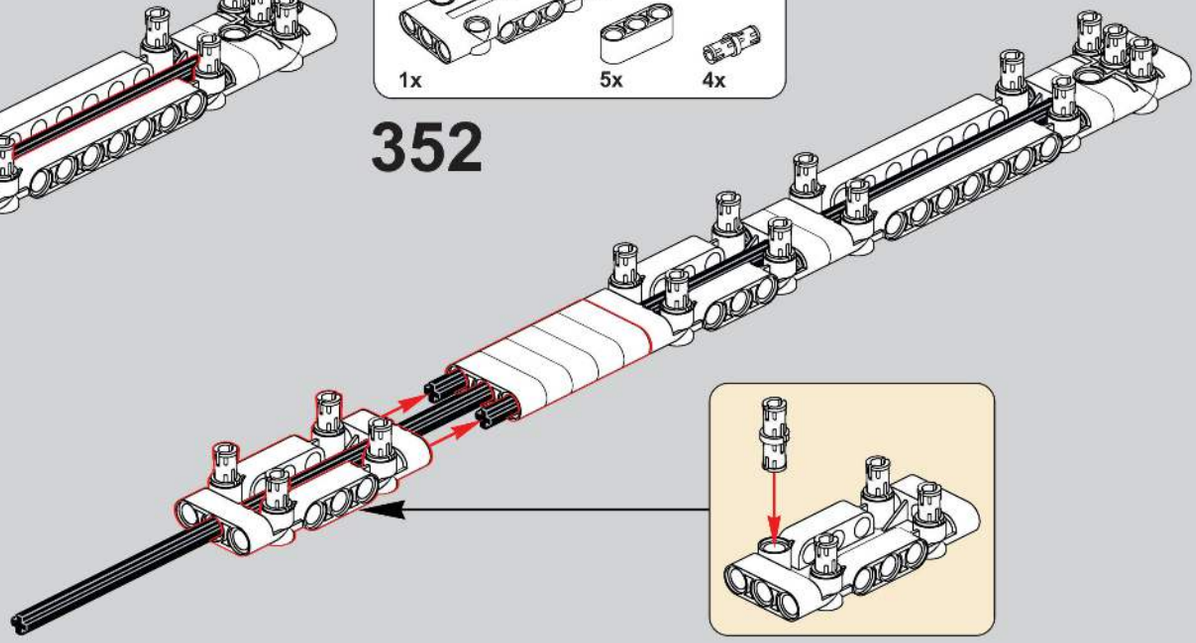

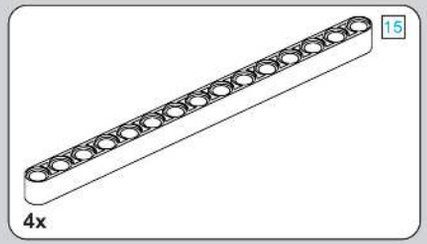
15
4x

353

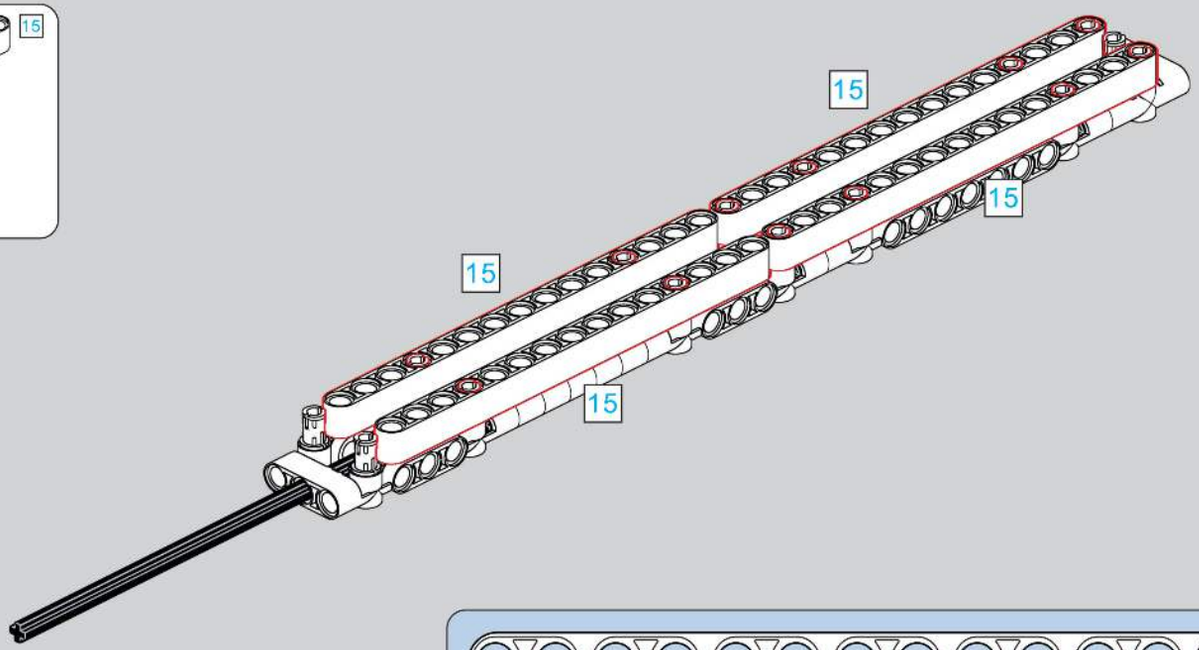
15
15
15
15

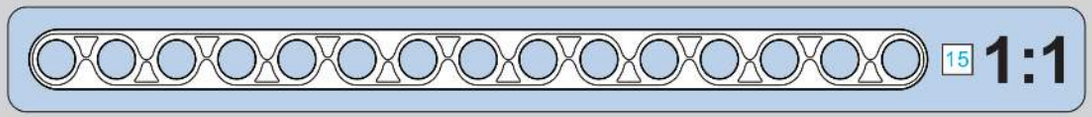
15
1:1

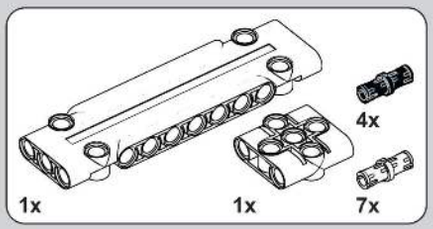

354

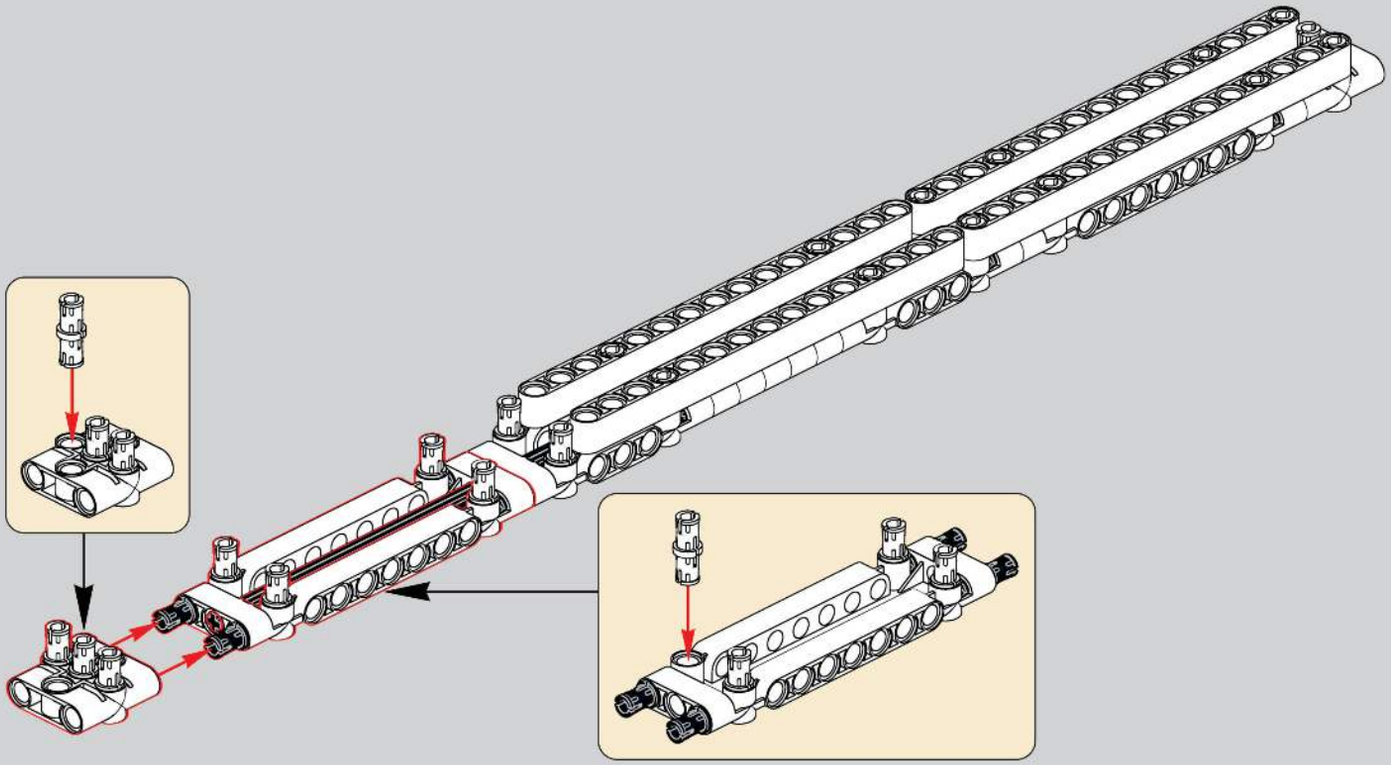

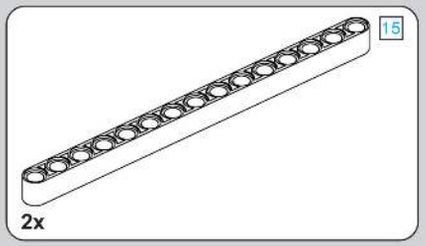

355

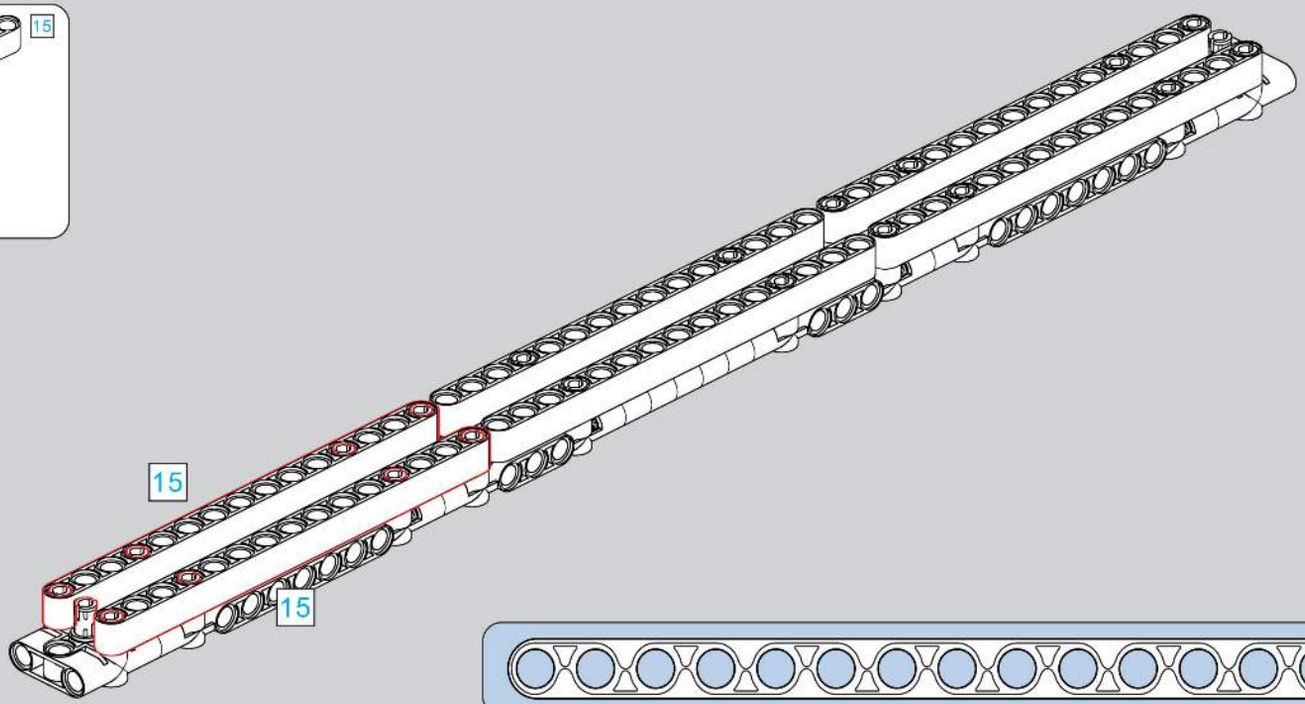

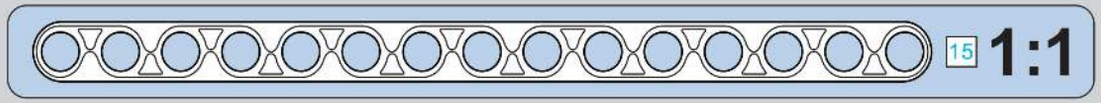

356

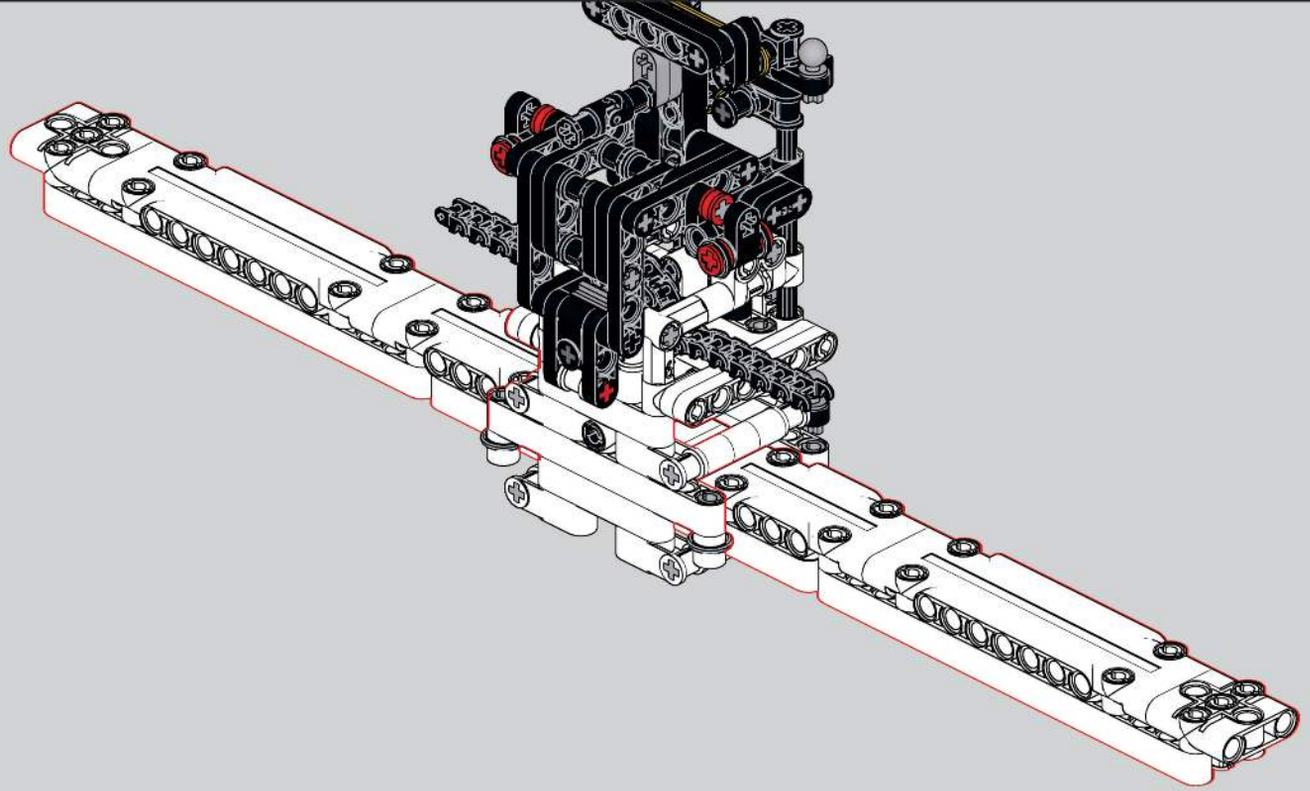

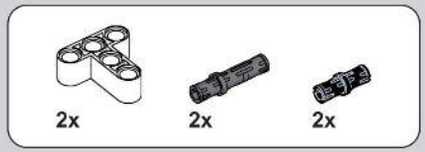

357

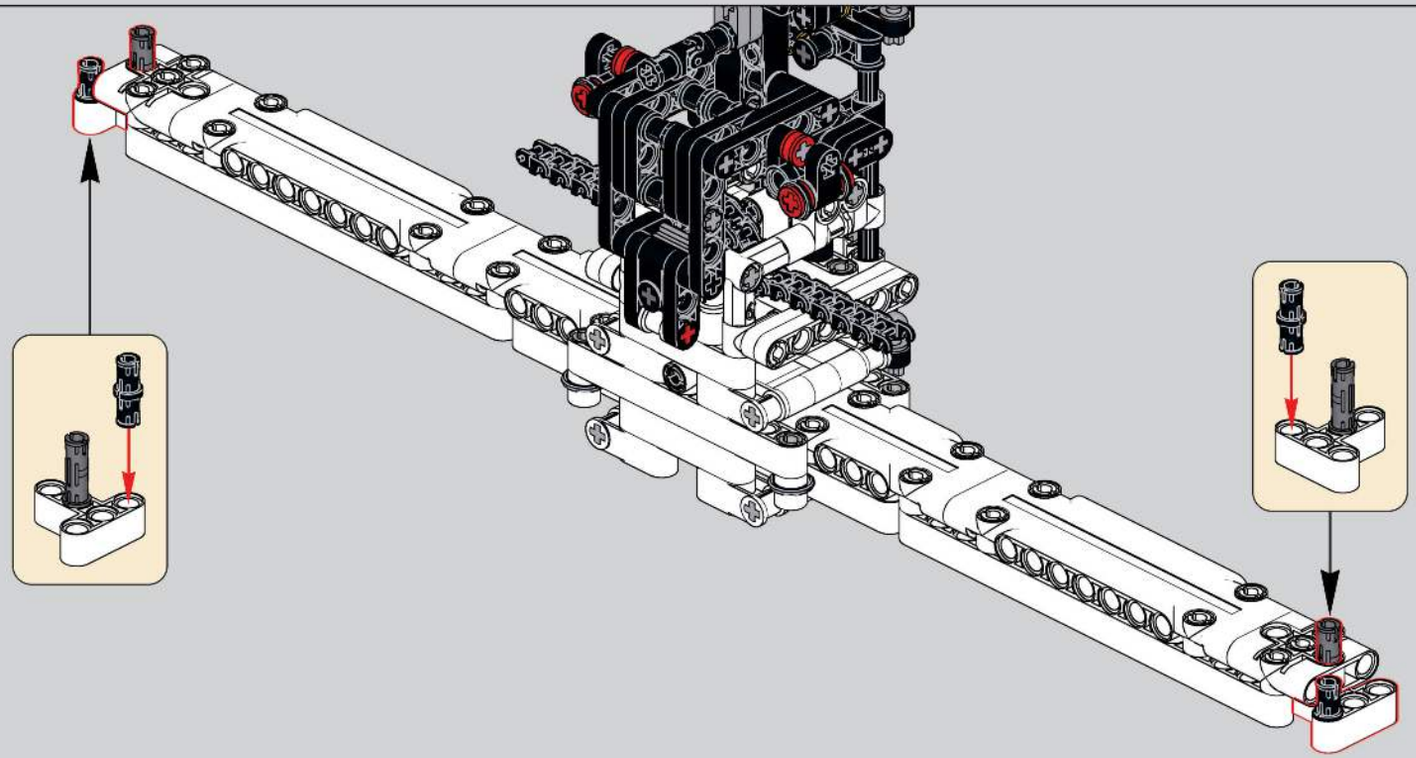

358

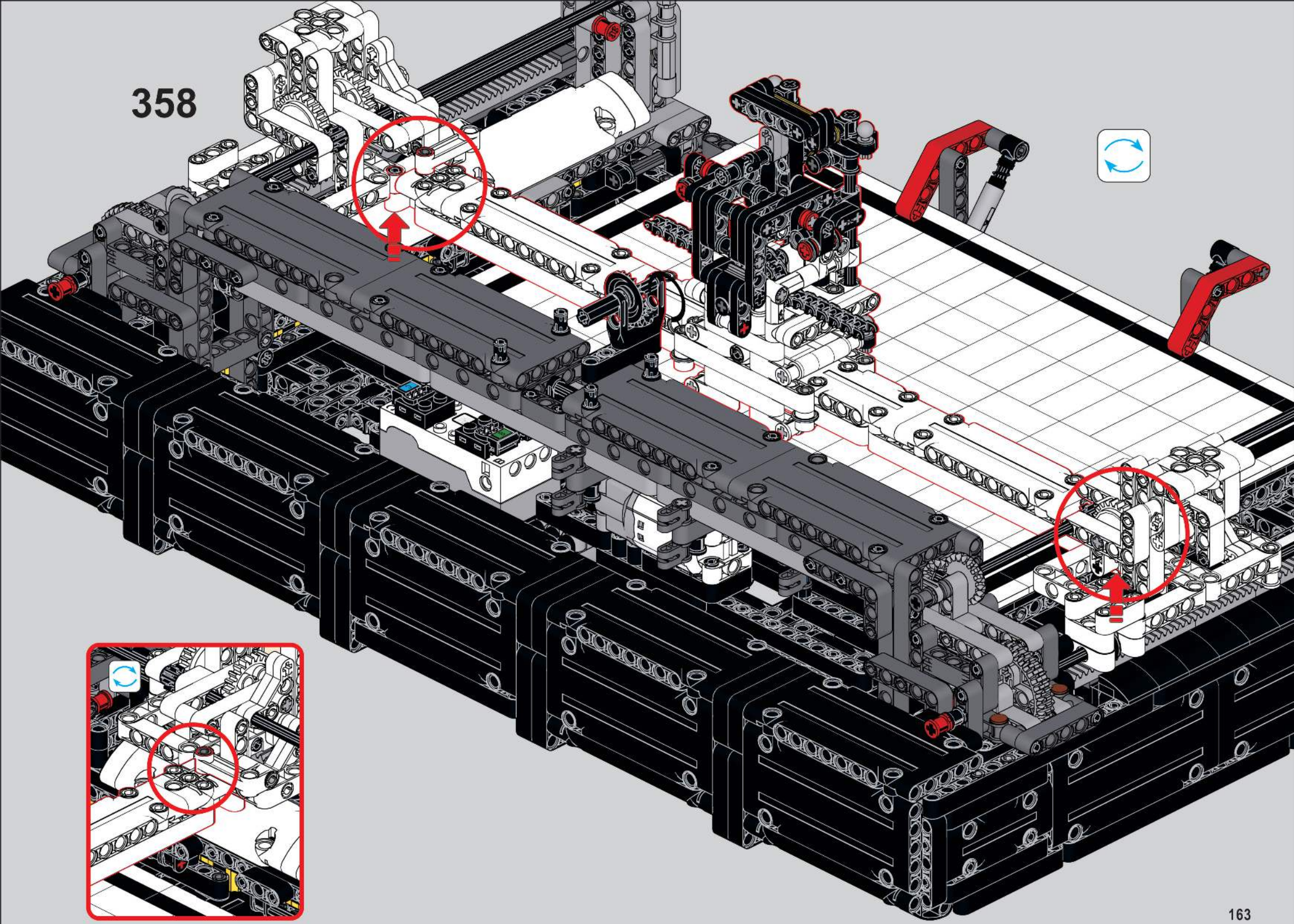

127x

359

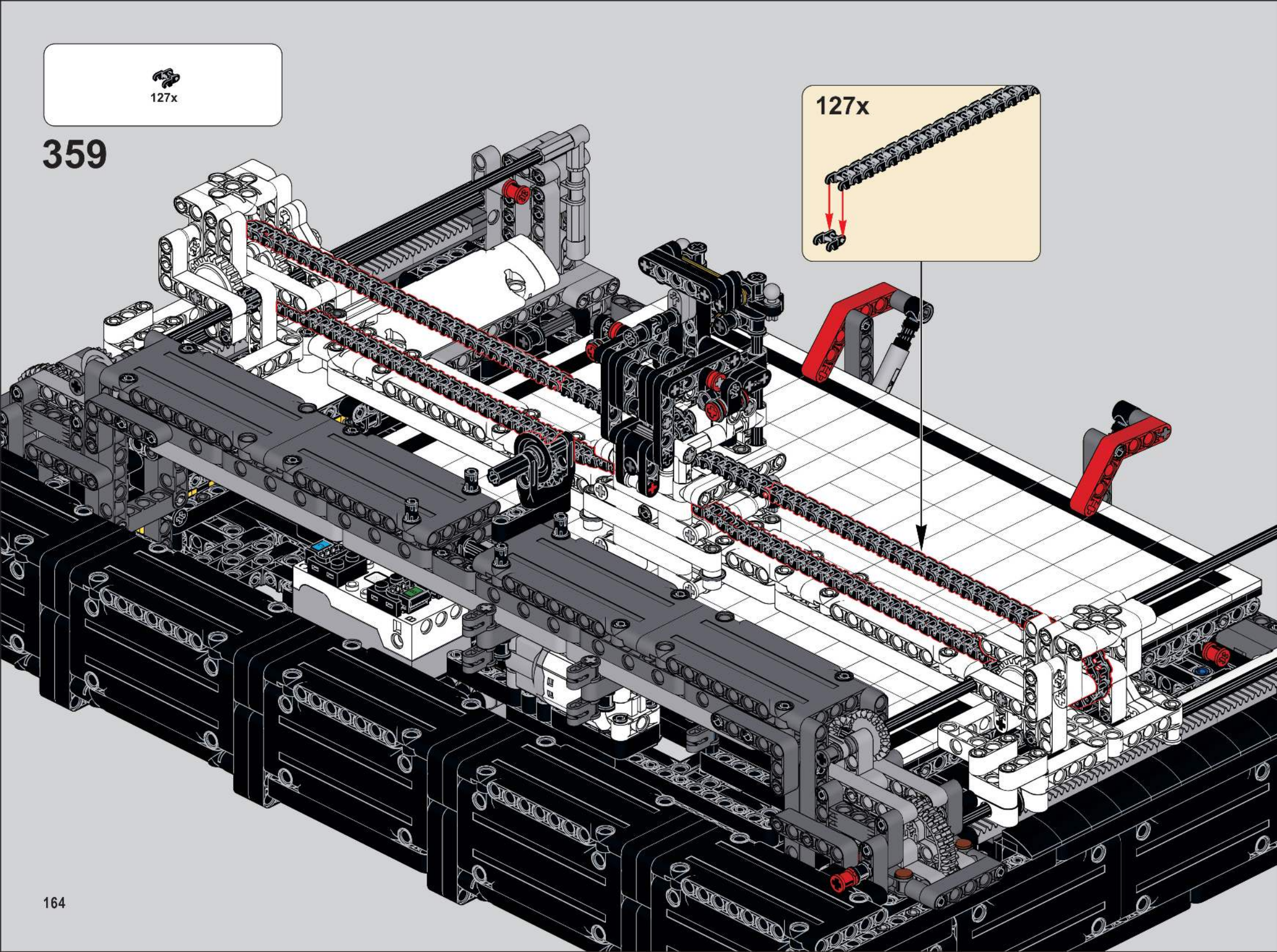

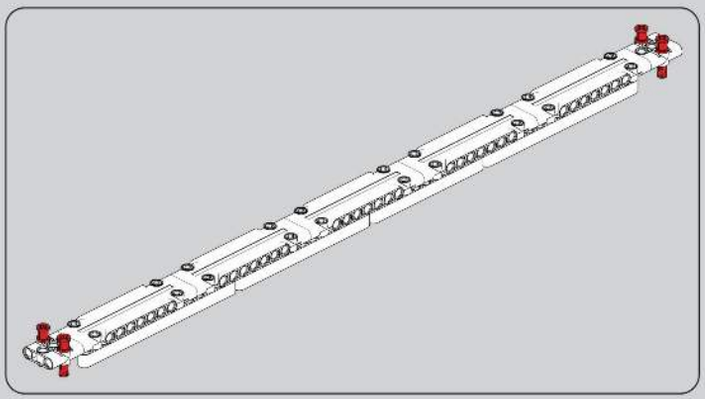

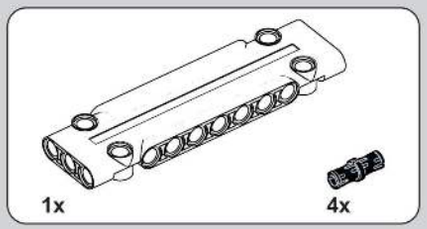

360

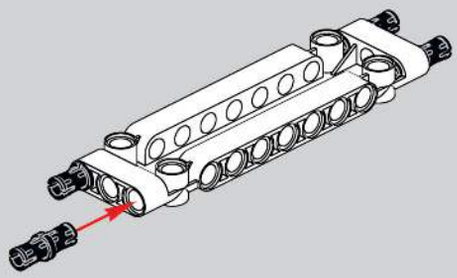

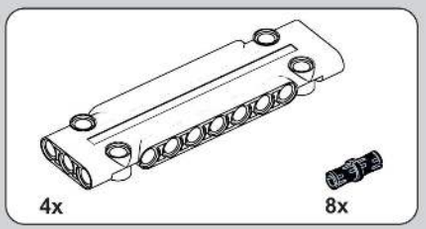

361

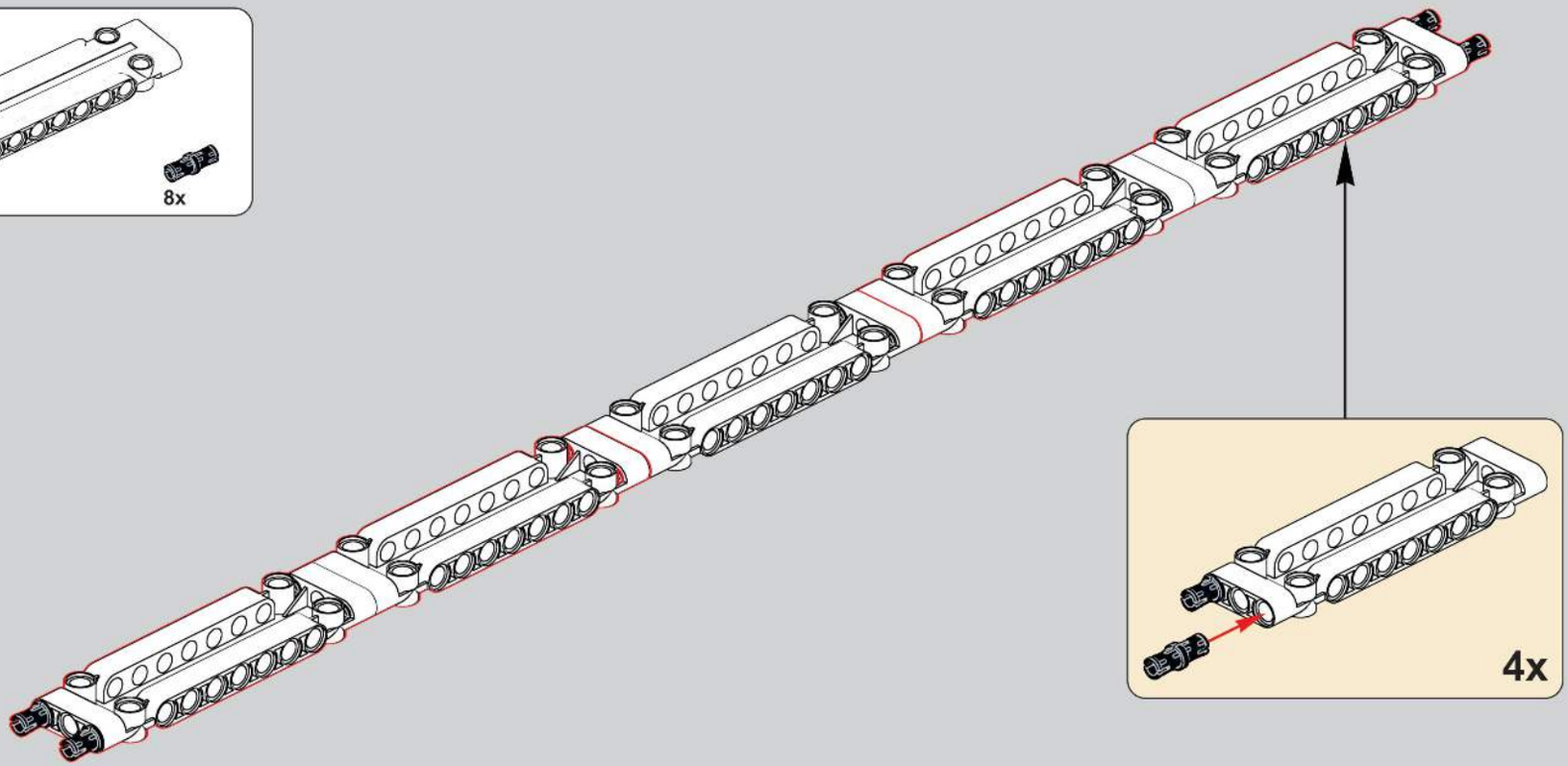

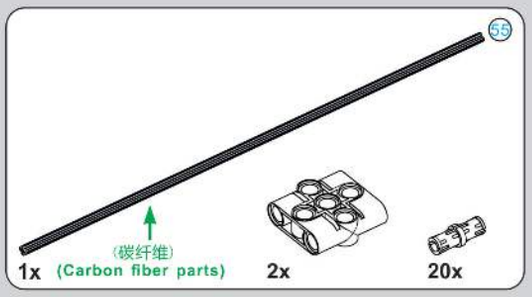

362

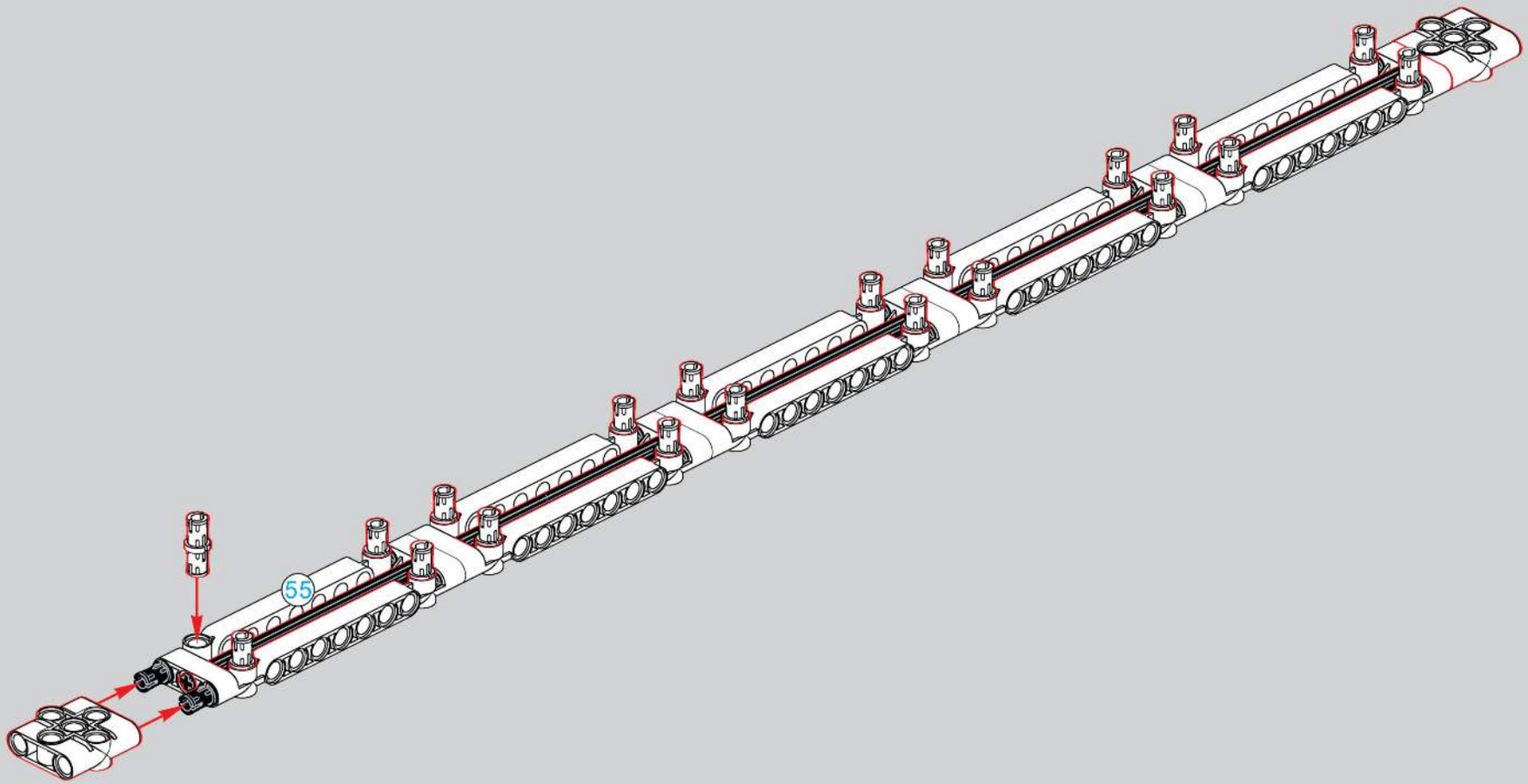

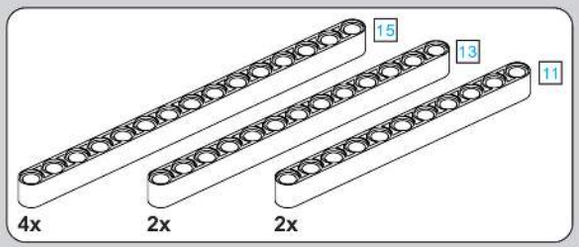

363

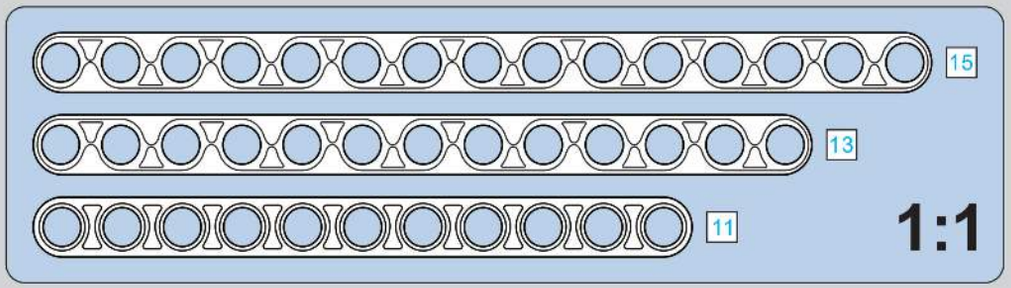

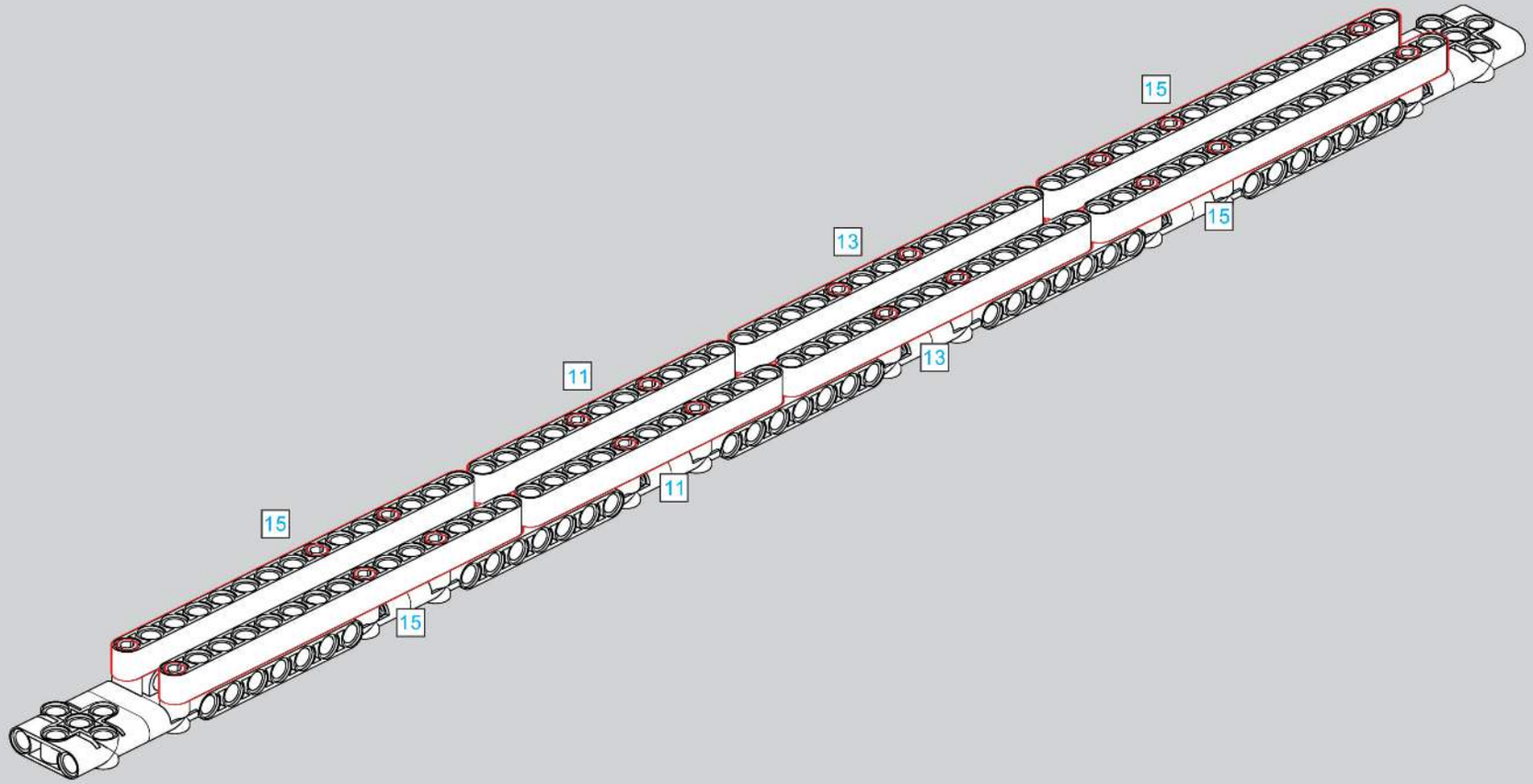

364

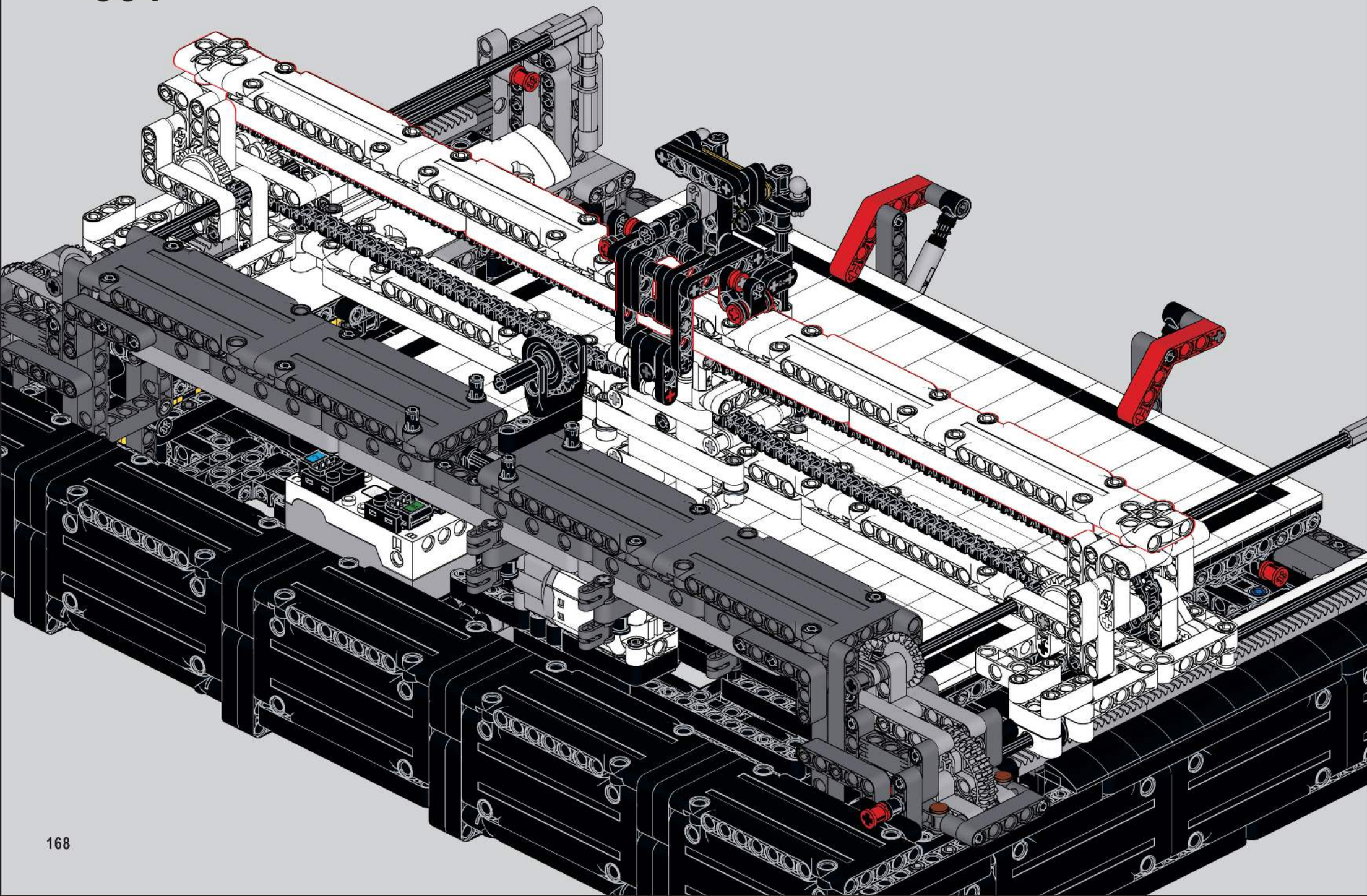

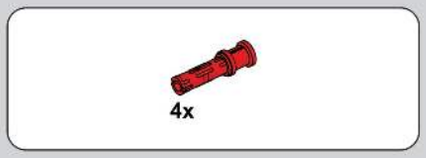

365

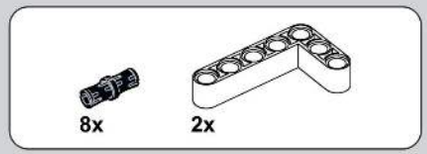

366

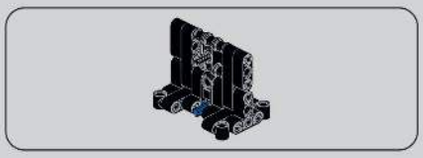

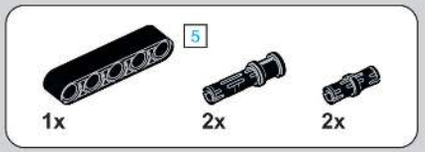

367

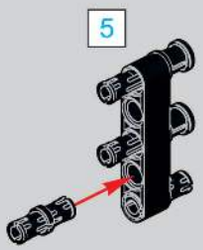

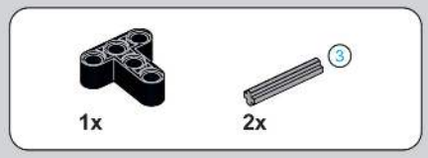

368

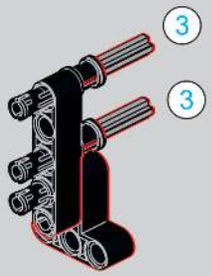

369

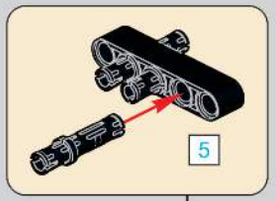

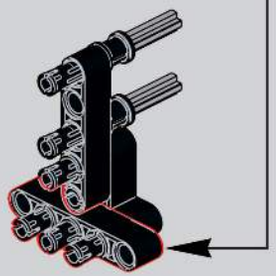

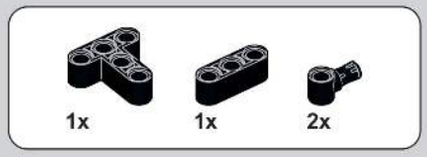

370

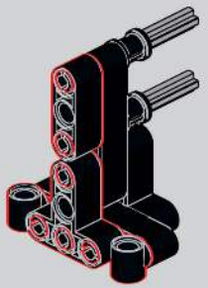

371

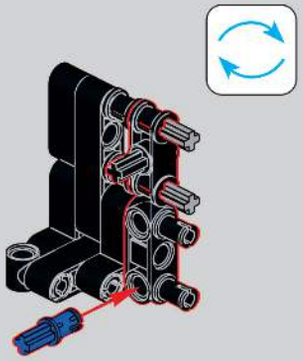

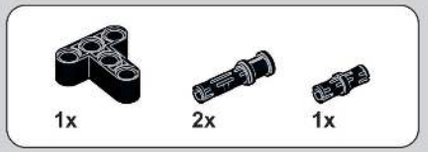

372

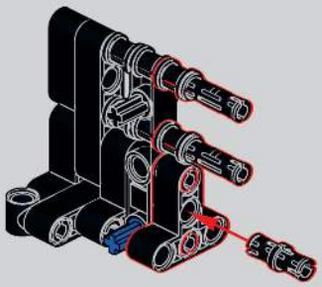

373

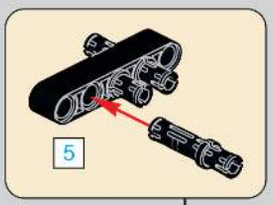

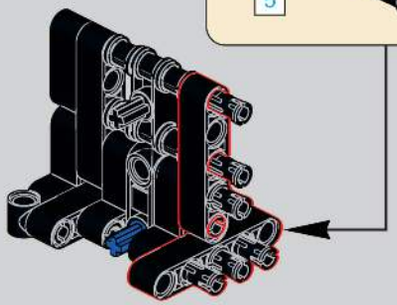

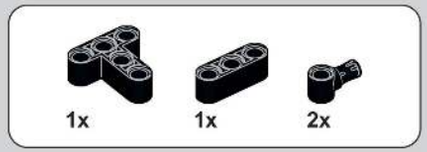

374

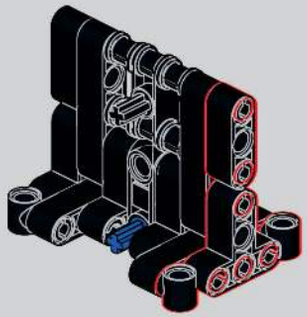

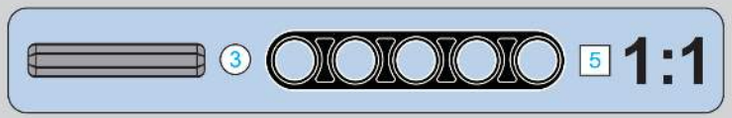

375

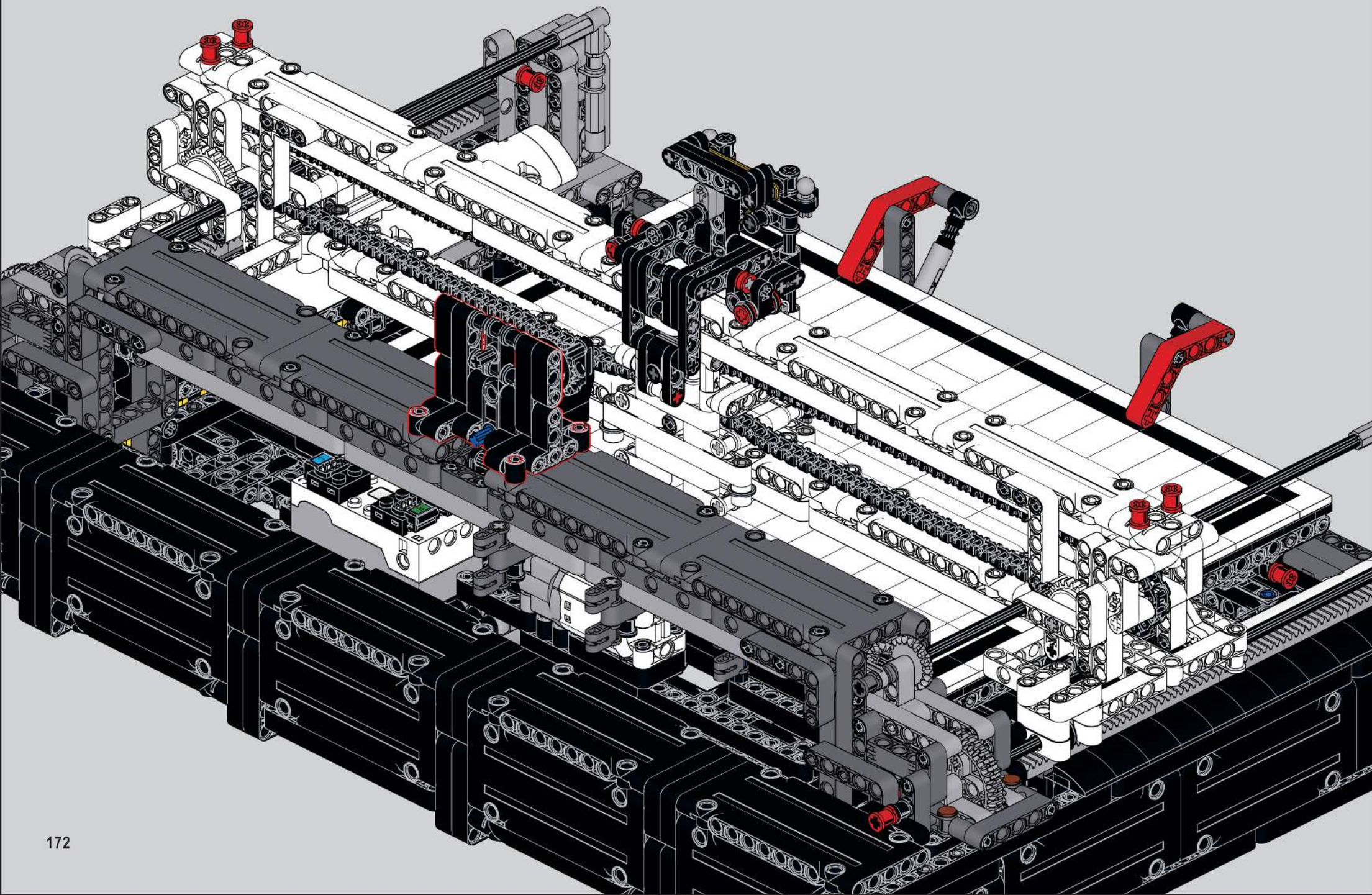

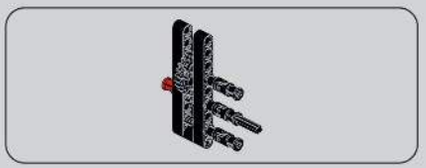

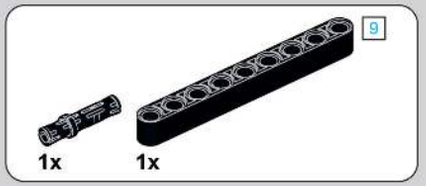

376

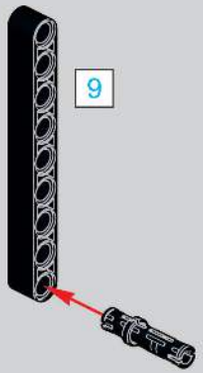

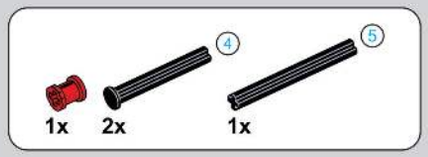

377

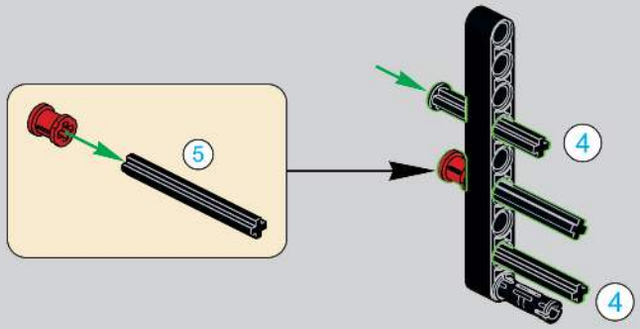

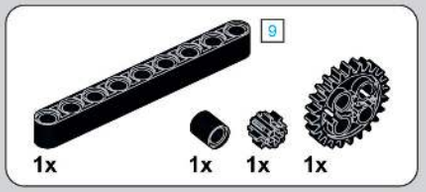

378

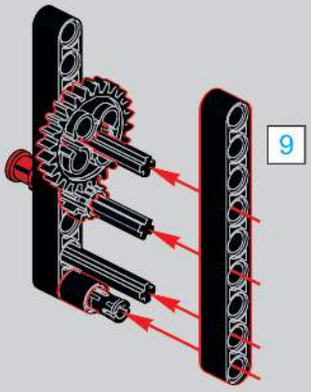

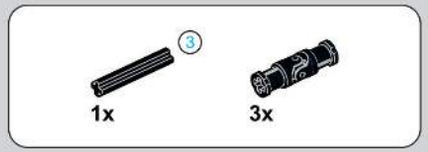

379

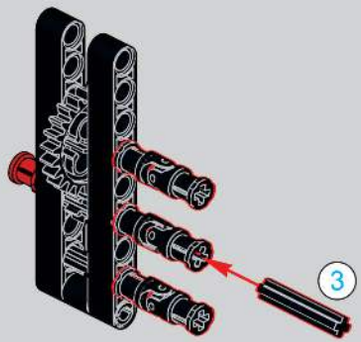

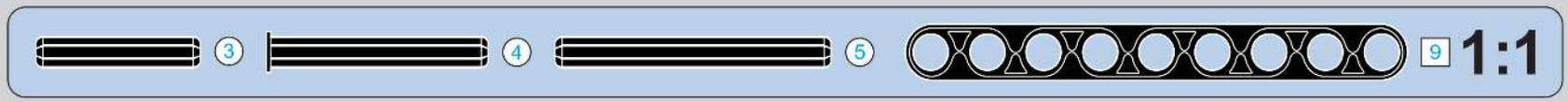

380

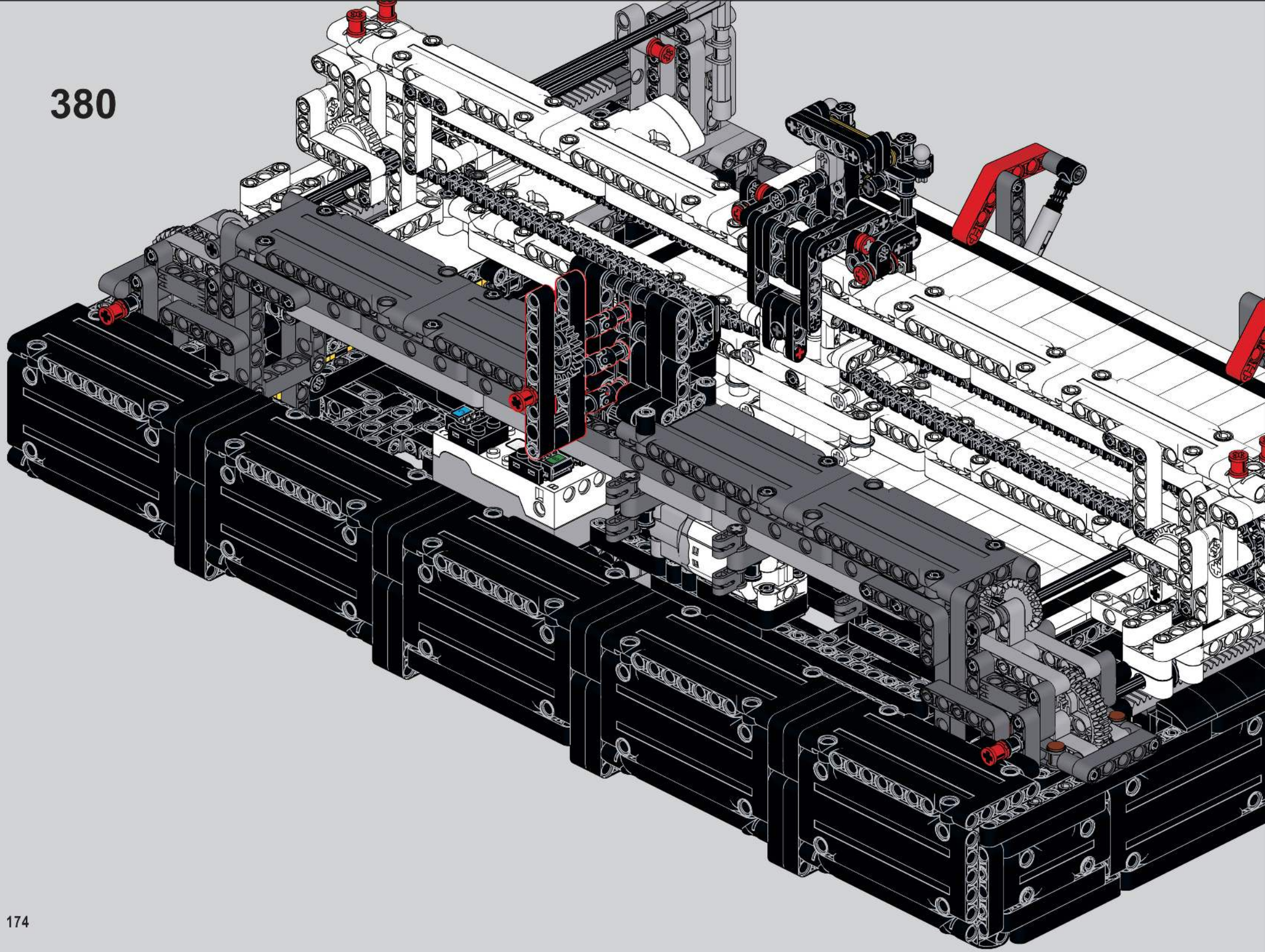

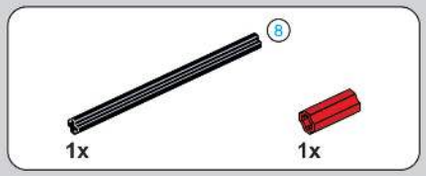

381

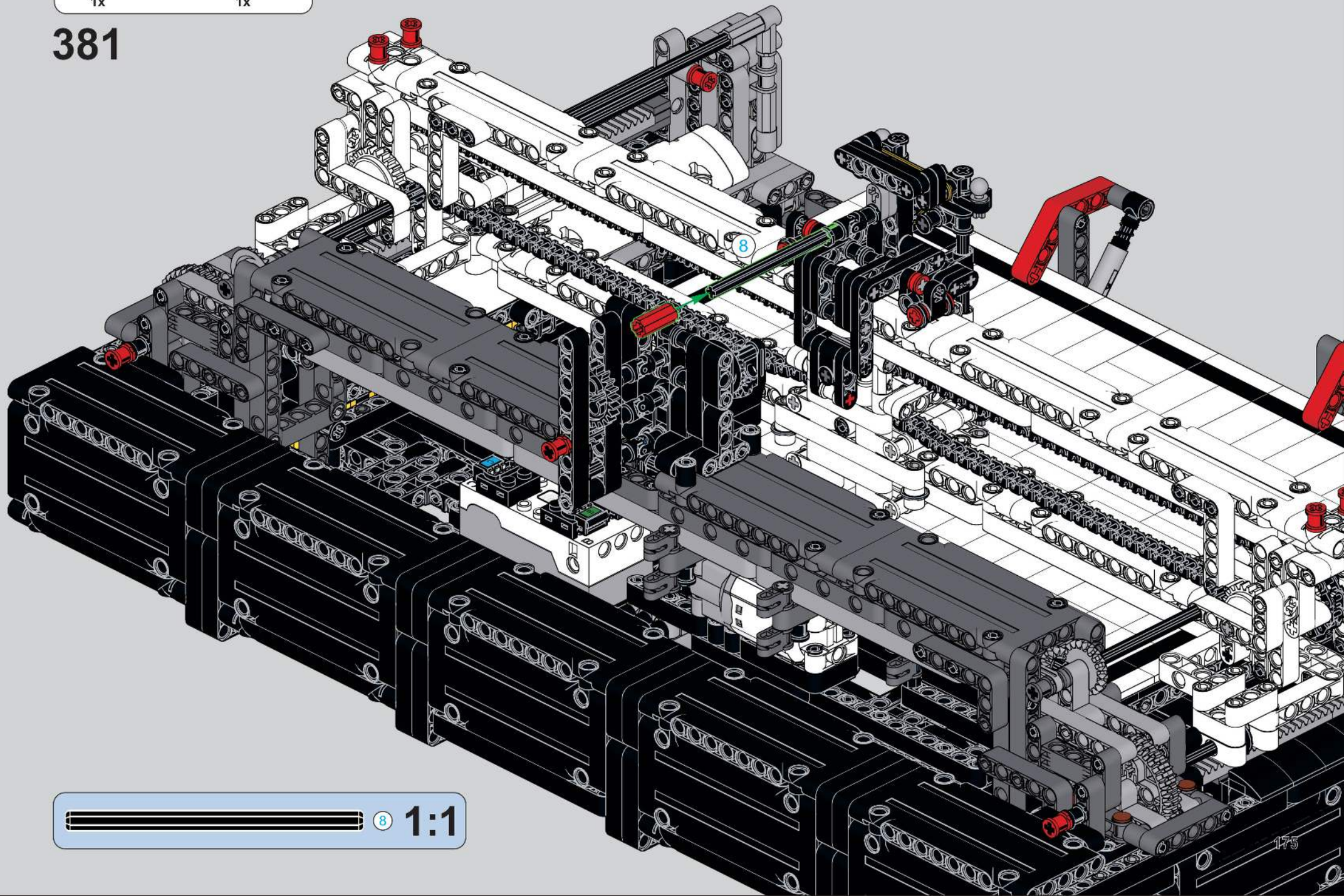

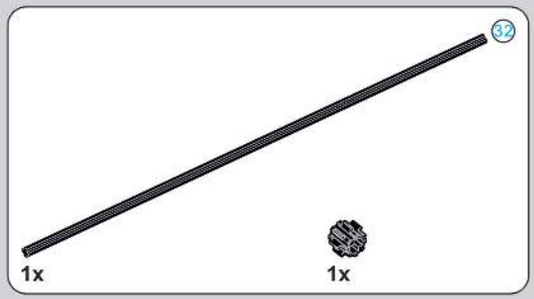

1:1

382

383

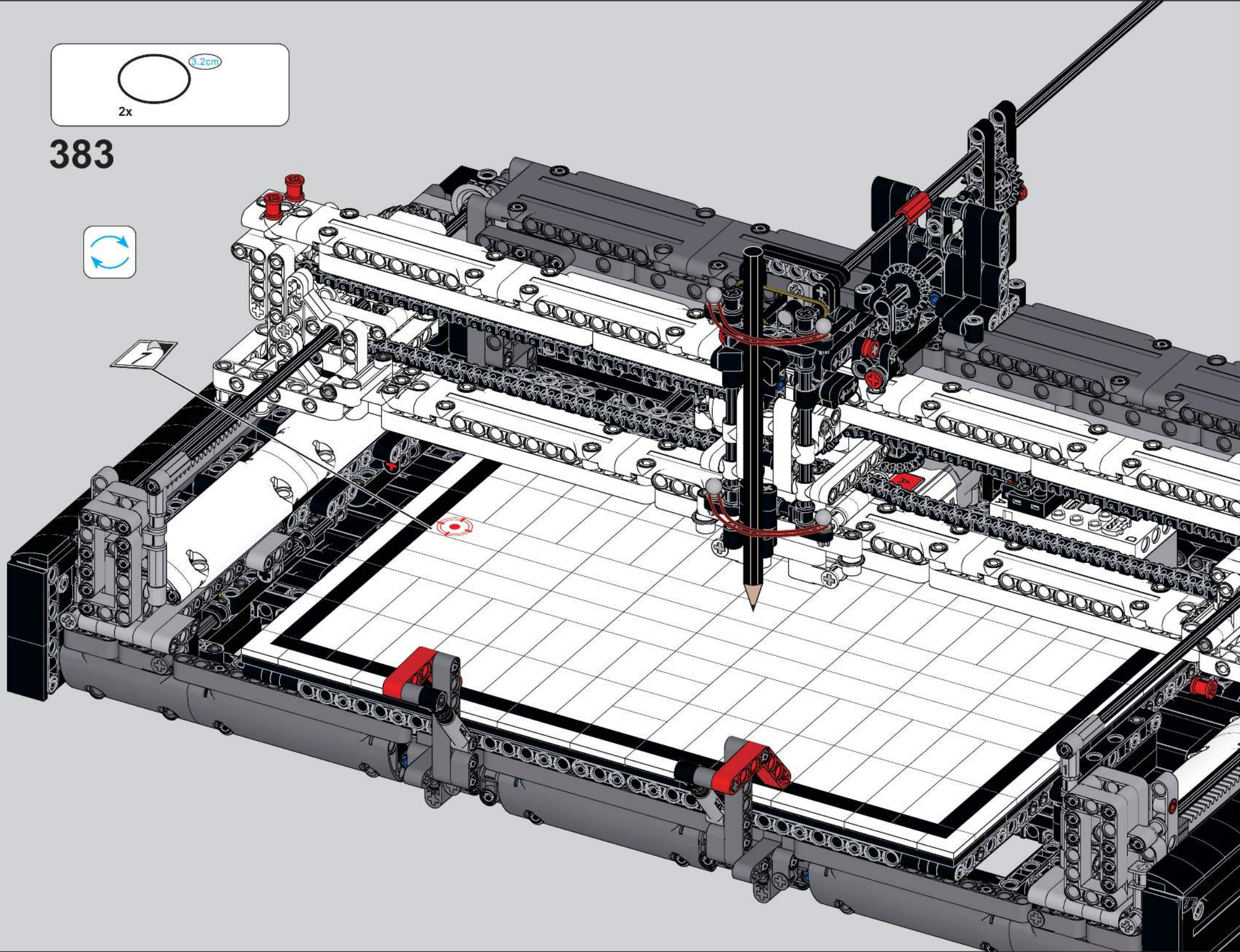

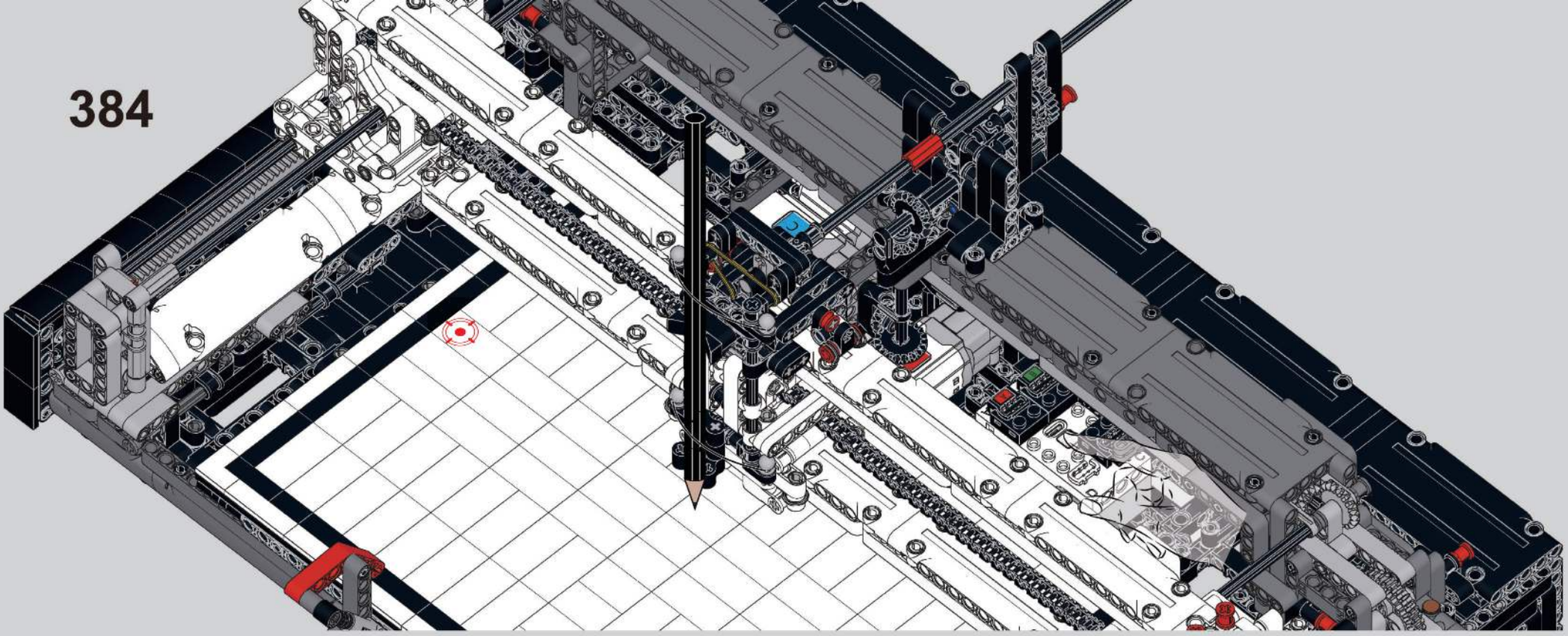

打开模块电源，打开手机蓝牙

Turn on the module power and the phone Bluetooth

警示:

1、操作时注意不要超出各个轴的最大移动范围，要留有1厘米左右的间隙。移动到极限位置时，应立即向相反方向移动。
如果移动到极限位置该方向被卡住，可以手机操作向相反方向移动的同时手动辅助转动齿轮转动。

2、当产品运行时出现降速或停止运动，请检查电机温度，当电机温度过高时，需要自然冷却一段时间后再进行操作。

Warning:

1. Be careful not to exceed the maximum movement range of each axis during operation, and leave a gap of about 1 cm. Move in the opposite direction immediately when approaching the limit position. When moving to the limit position and got stuck in one direction, you can manually assist the rotation of the gear while operating on the mobile phone to move in the opposite direction.

2. When the movement slows down or stops during operation, please check the motor temperature. When the motor temperature is too high, it needs to be cooled down naturally for a period of time before operating.

385

进入APP，点击手动选择设备

Enter the APP and click to select the device manually

386

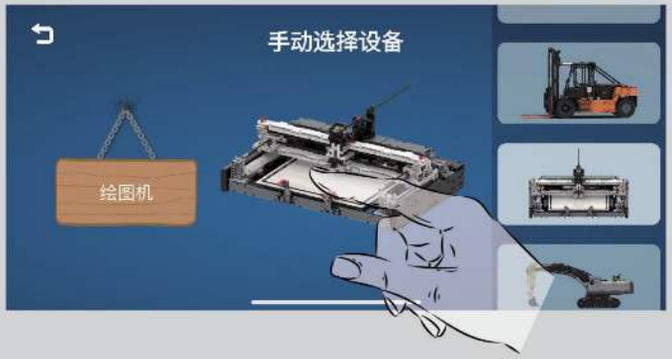

选择绘图机

choice Drawing machine

387

点击画画模式

Click to draw mode

388

打开模块电源，连接蓝牙

Turn on the module power and connect to Bluetooth

389

点击左上角按钮进入设置

Click the button in the upper left corner to enter the settings

390

点击坐标校准

Click on coordinate calibration

391

移动操作杆，将横轴和纵轴移到起点

Move the joystick to move the horizontal and vertical axes to the starting point.

392

移动操作杆，使笔离开纸面

Move the joystick to move the pen away from the paper surface

393

已完成校准，请放入A4纸后夹好

Calibration completed, please place A4 paper and clip it in place

394

进入图画库，可选择预设图案

Select the default pattern

395

调节适用大小、位置

Adjust applicable size and position

396

点击开始，绘图机开始自动绘图

Click Start, the plotter will start automatic drawing

397

绿光为绘图机运行位置，运行中可点击此按钮取消绘图

The green light represents the operating position of the plotter. During operation, you can click this button to cancel the drawing

398

点击此处可清除画板上的内容，进行自由绘画
Click here to clear the contents on the drawing board

399

400

点击进入写字模式

Click to enter the writing mode

401

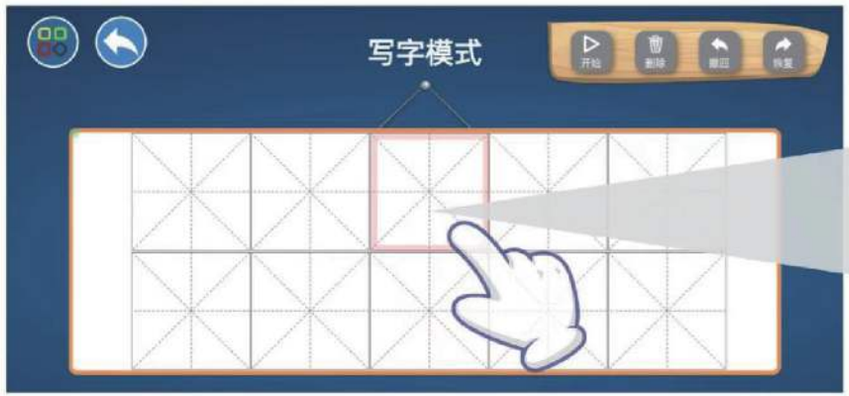

单击任意一个田字格弹出编辑框

402

点击进入手动模式

Click to enter the manual mode

403

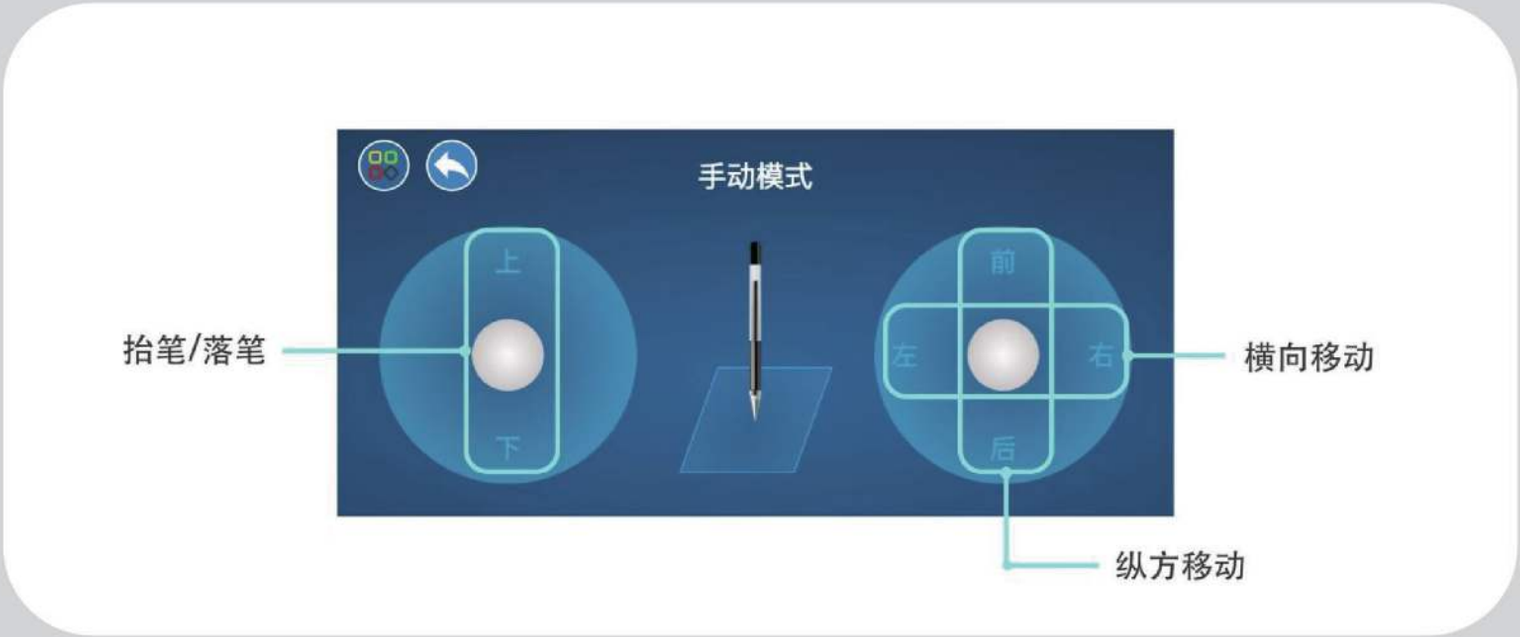

MOULD KING®
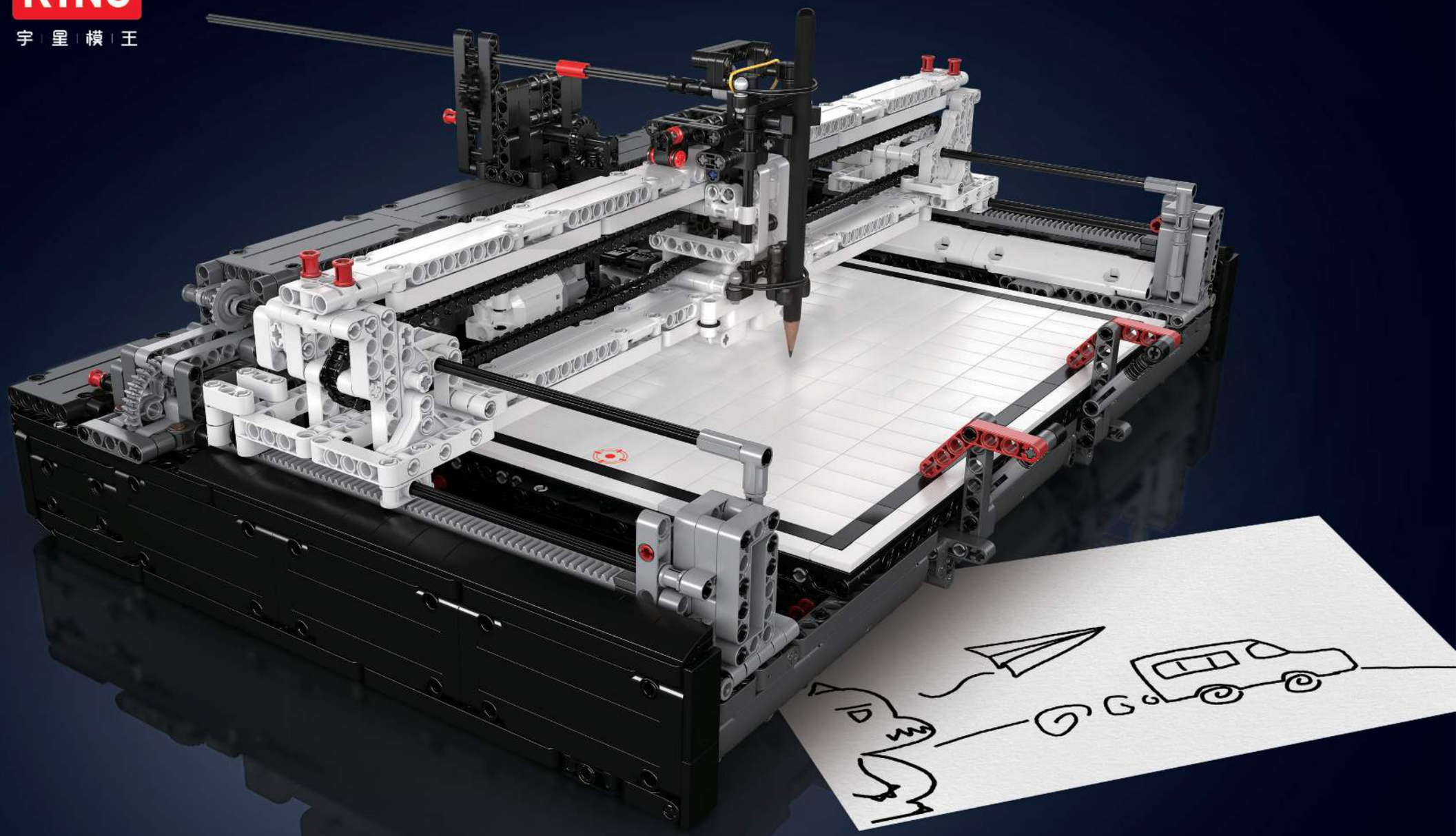
宇 星 模 王