MOULD KING®

宇星模王

宇星工程系列

MODELS

FH16气动牵引车

NO.FH16 PNEUMATIC TRACTOR

19015

4608+ Pcs/Pza

Qr code APP (APP二维码)

Need the apple version 9.0 and above,the android version 5.0 and above.

* This APP supports most of the mainstream Android models on the market, but due to the large number of Android models, different models of systems and hardware reasons, there may be some models do not support, specificaccording to the actual test!

广东宇星科技
Mould King

产品资讯
Product Information

积木补件
Brick Replacement Service

售后服务
After-sales Service

Customer Service
客 户 服 务
www.yx-mk.com

酷砖家
BriXpert

"酷砖家"是宇星模王设立的特殊标识，代表着产品的独特性和原创性。每一款带有"酷砖家"标志的积木套装，都由宇星的原创团队或者与宇星有密切合作的全球顶尖设计师亲自设计或授权。这个标识是我们对消费者的承诺，确保他们可以享受到独一无二且高品质的积木拼搭体验。

“Bri X pert”is a special mark established by MOULD KING, representing the uniqueness and originality of the product. Every building set with the "Bri X pert" logo is personally designed or authorized by MOULD KING's innovative team or world-class designers who work closely with MOULD KING. This logo is our commitment to consumers, ensuring that they can enjoy a unique and high-quality building experience.

OPEN

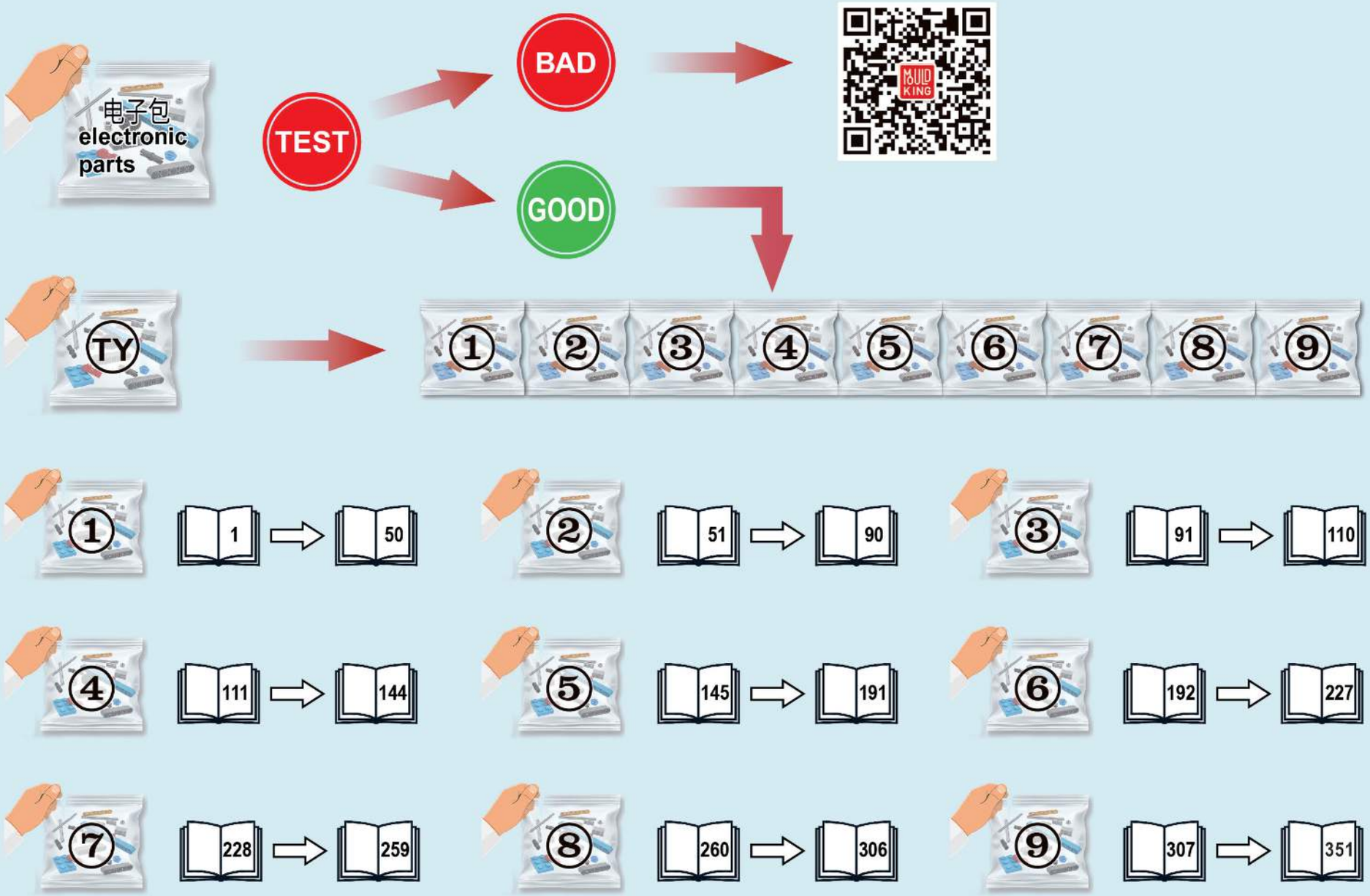
电子包
electronic
parts
TEST
BAD
GOOD
TY
1
2
3
4
5
6
7
8
9
1 50
51 90
91 110
111 144
145 191
192 227
228 259
260 306
307 351

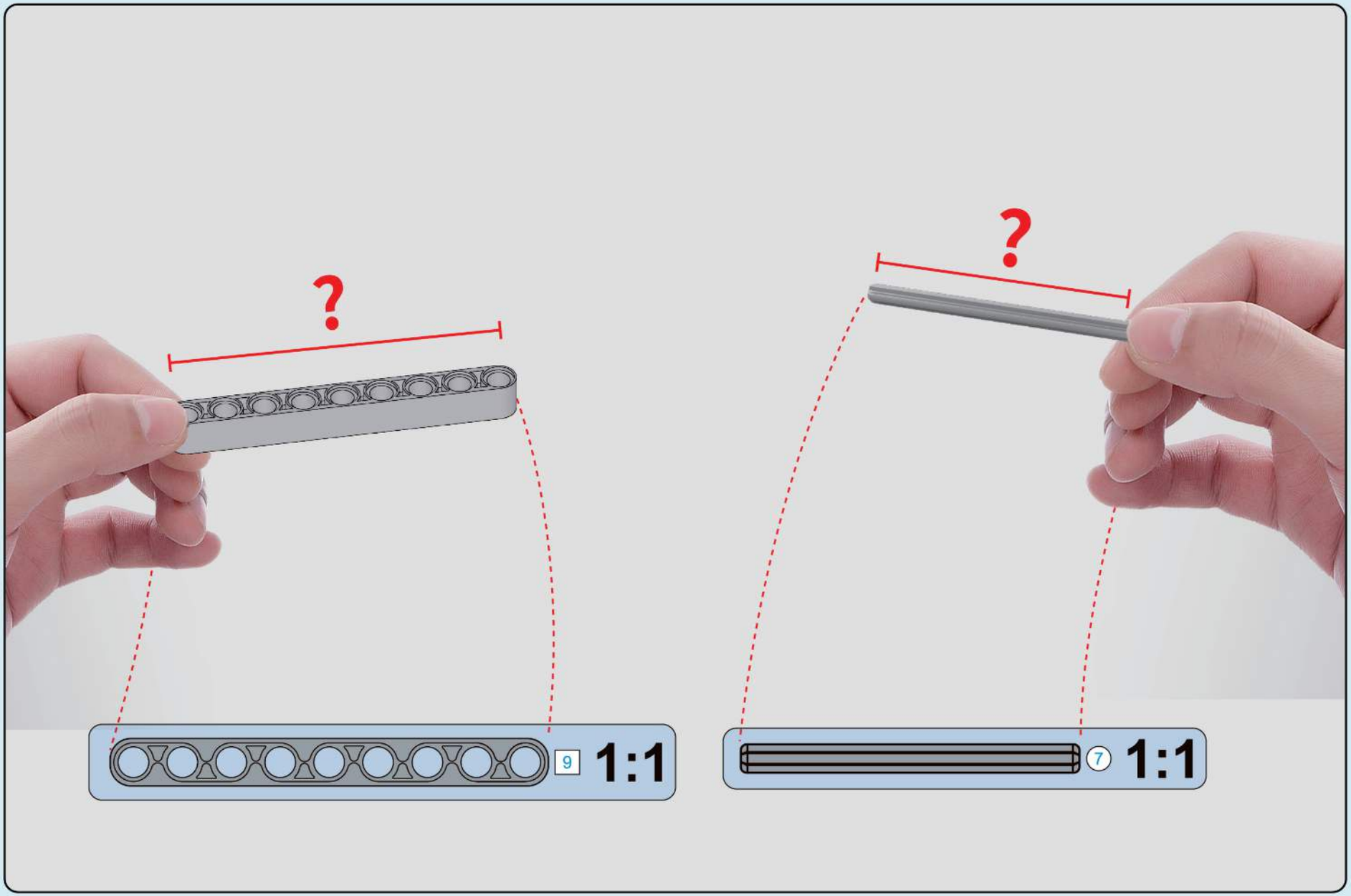
?
9
1:1
?
7
1:1

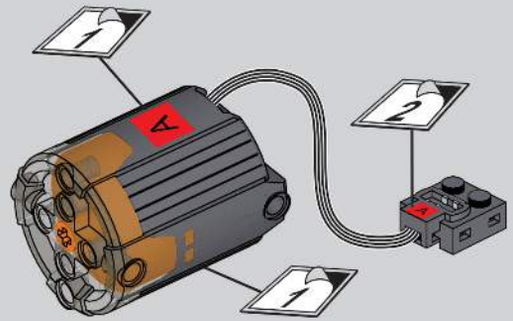
1
A
2
A
1

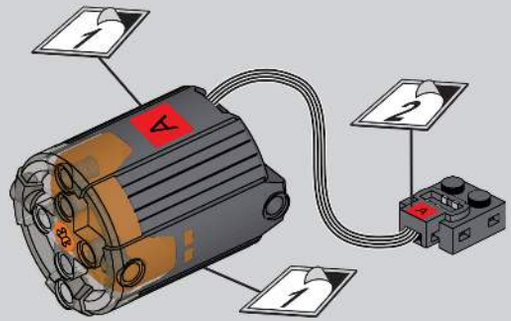
1
A
2
A
1

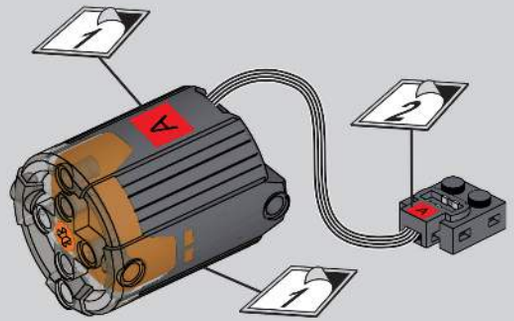
1
A
2
A
1

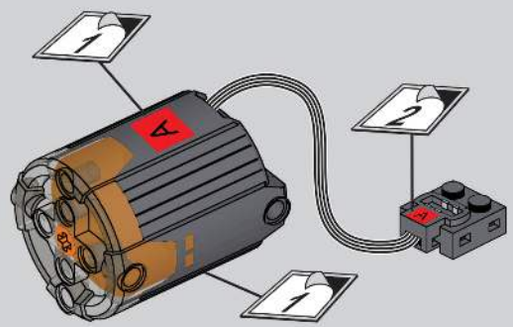
1
A
2
A
1

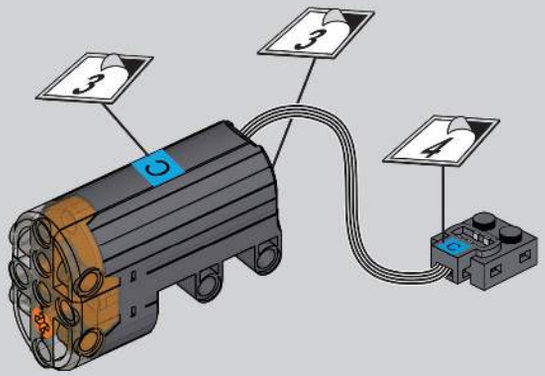
3
C
3
4
C

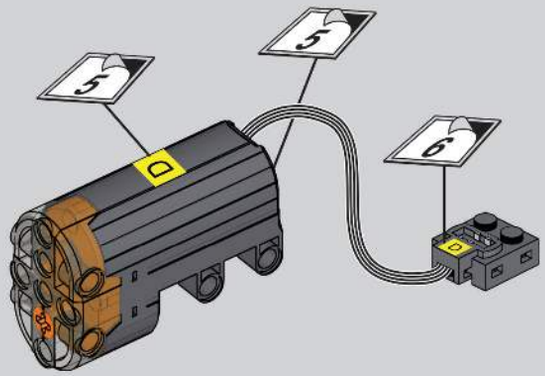
5
D
5
6
D

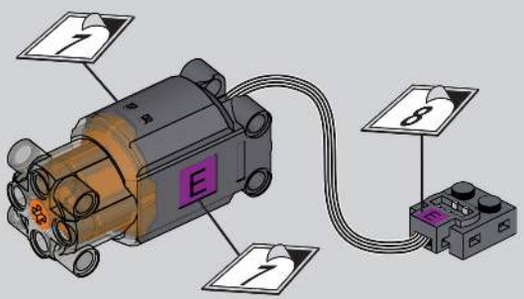
7
E
8
E
7

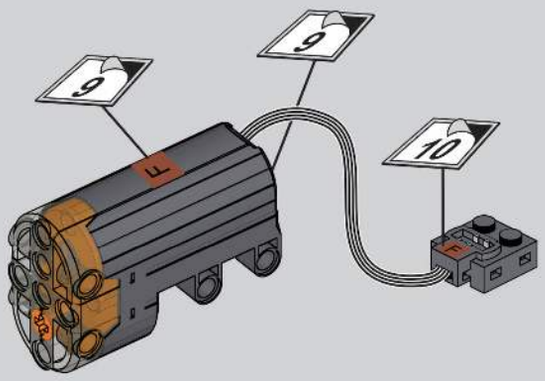
9
F
9
10
F

拼装前需测试所有电子件功能是否正常

Test all electronic components for functionality before assembly.

请扫描此二维码，获取并仔细查看6.0模块的操作说明书。

Please scan this QR code to obtain and carefully review the operation manual for the 6.0 module.

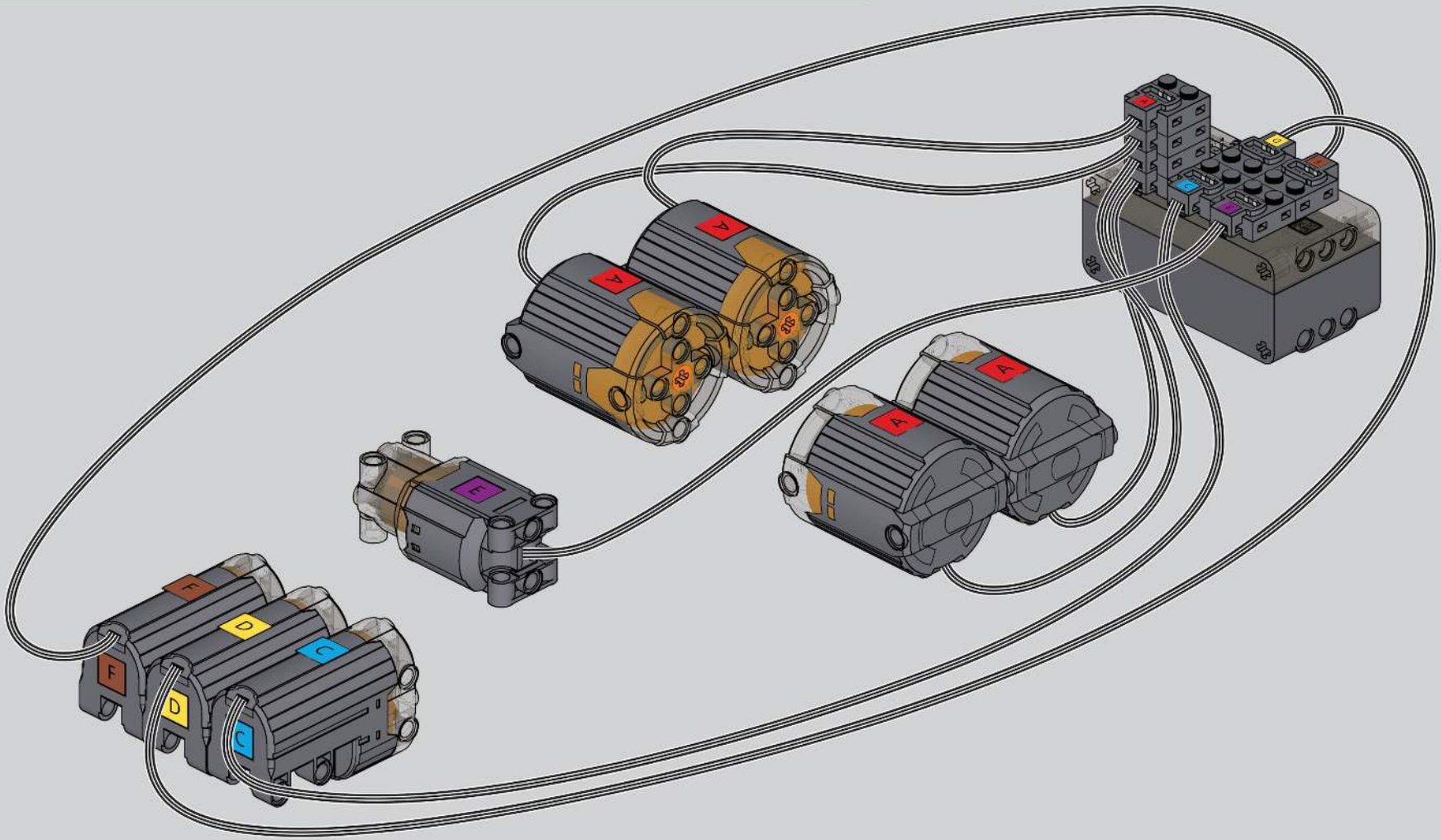

0

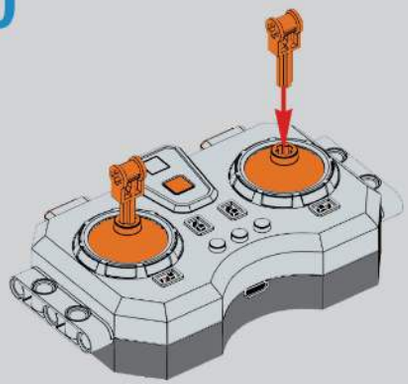

1

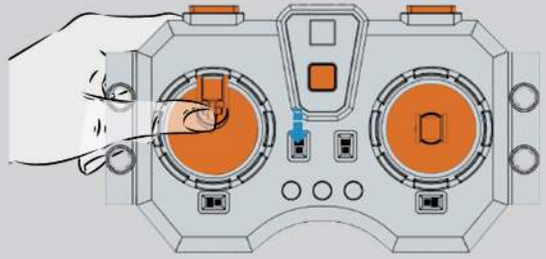

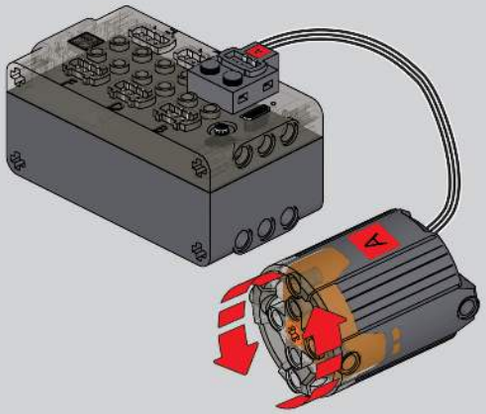

2

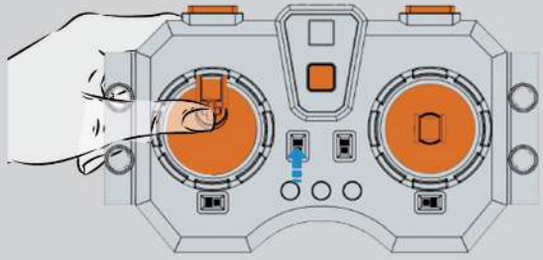

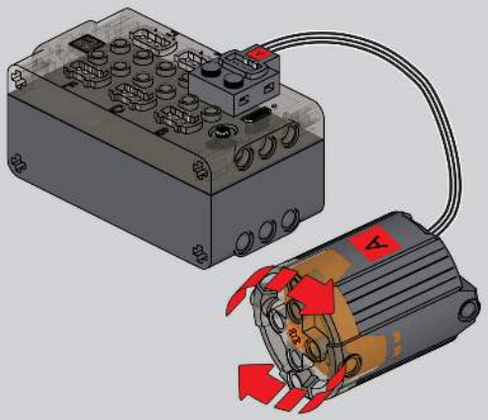

3

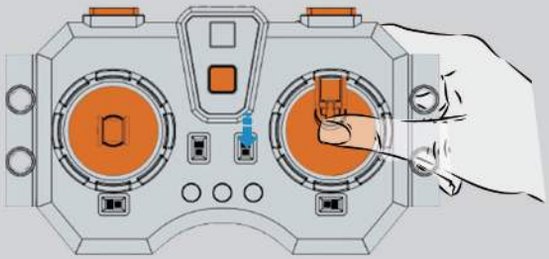

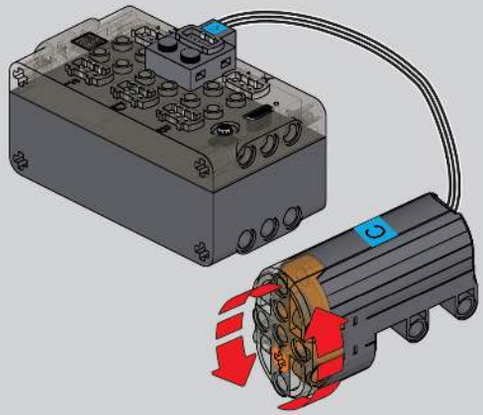

4

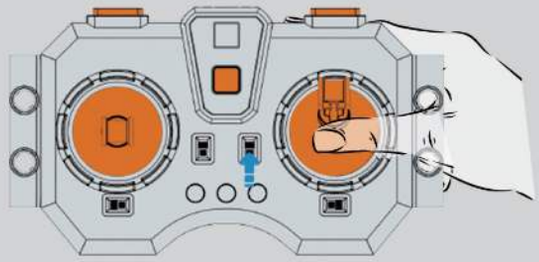

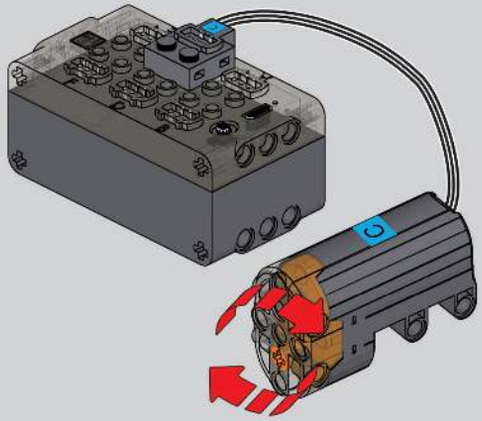

5

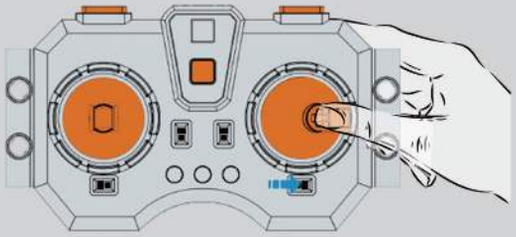

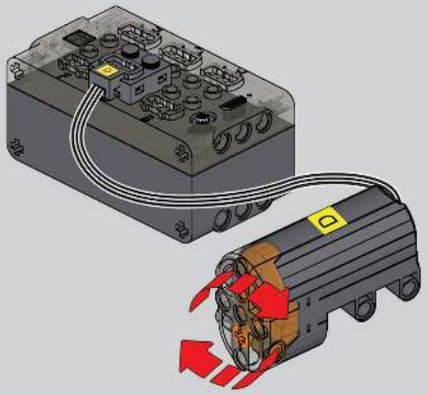

6

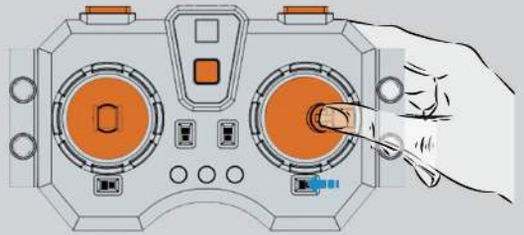

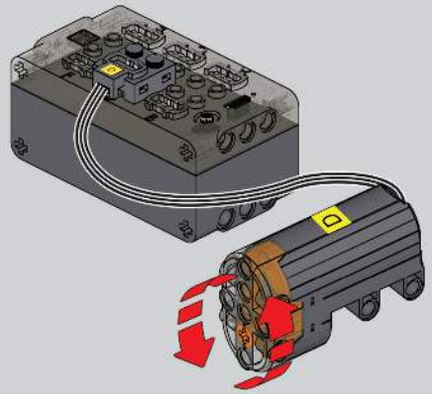

7

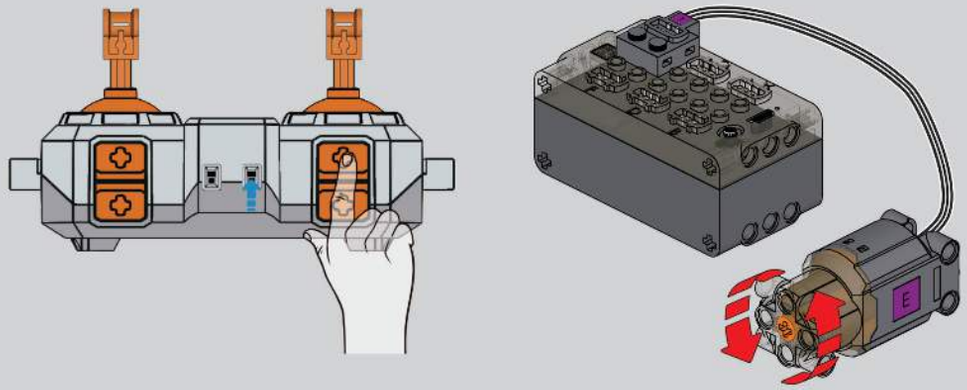

8

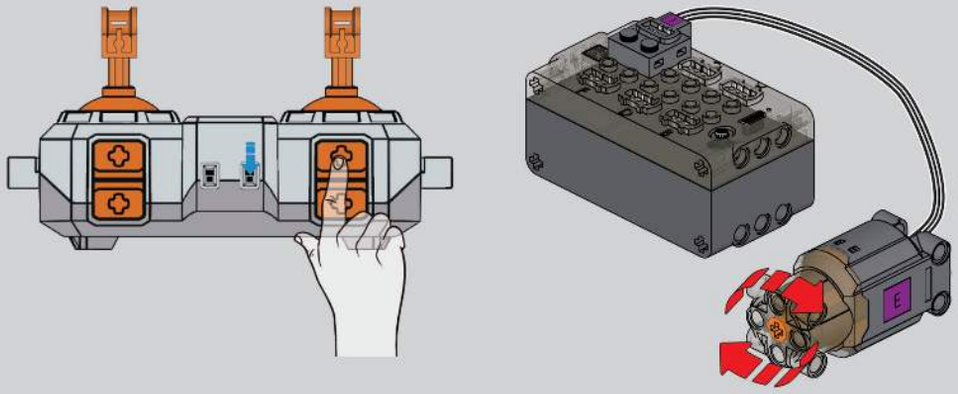

9

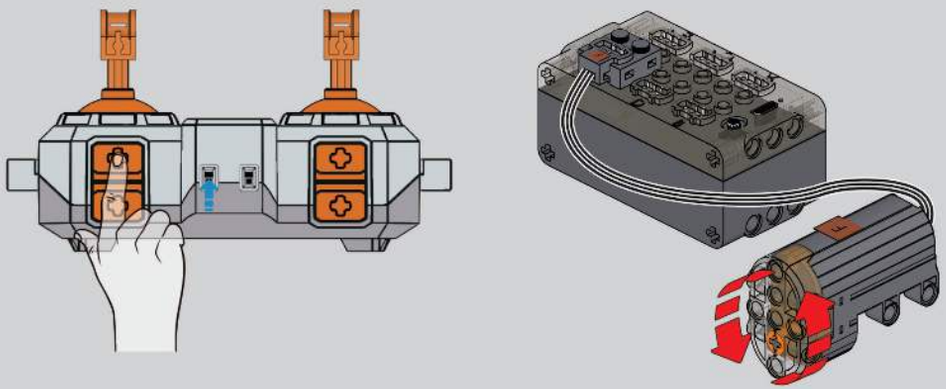

10

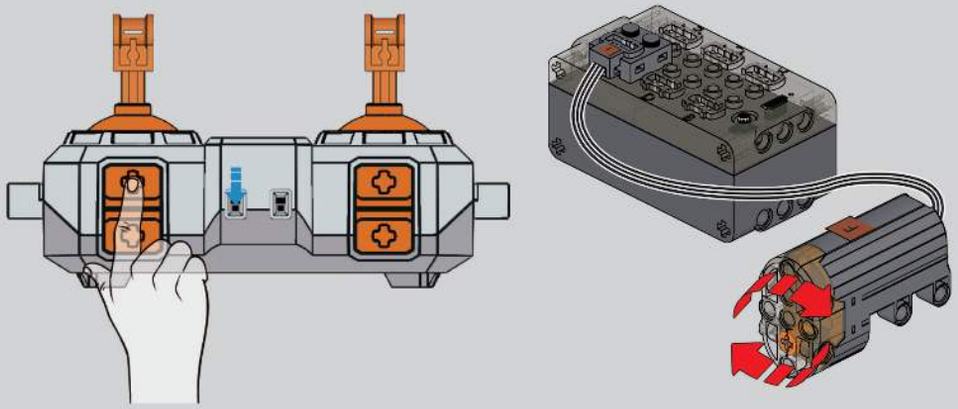

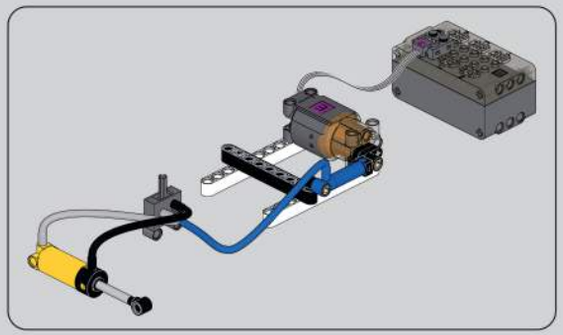

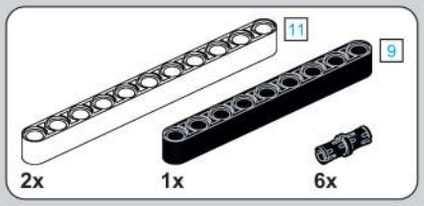
11
9
2x
1x
6x

0-1

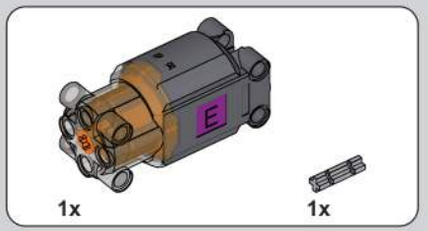
1x
1x

0-2

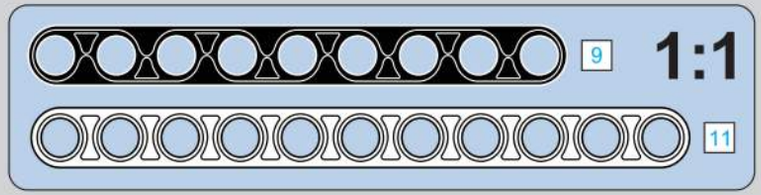
9
11
1:1

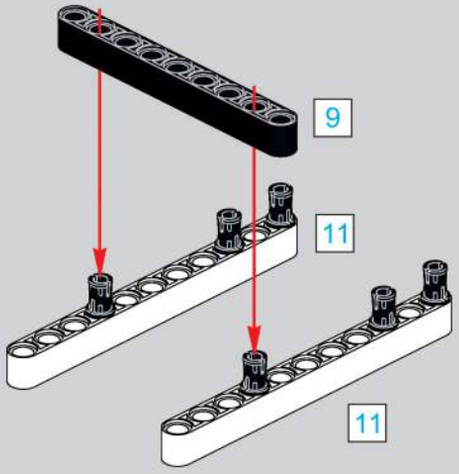
9
11
11

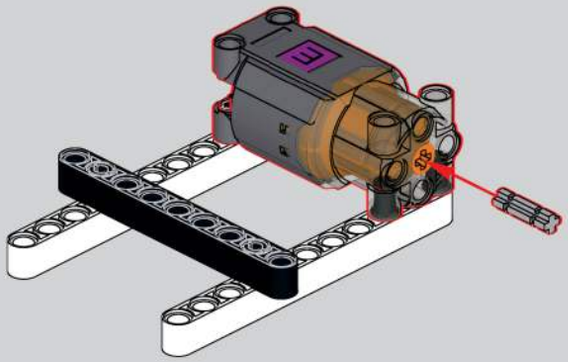

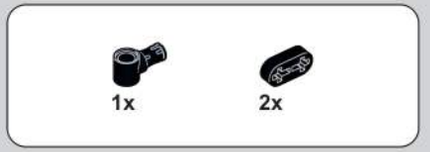
1x
2x

0-3

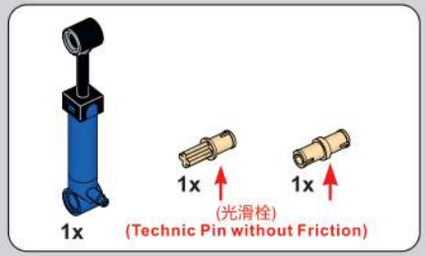
1x
1x
1x
(光滑栓)
(Technic Pin without Friction)

0-4

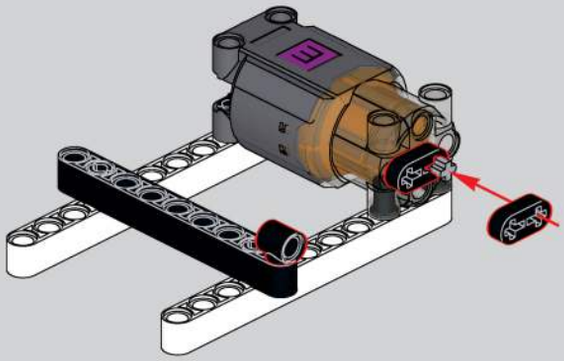

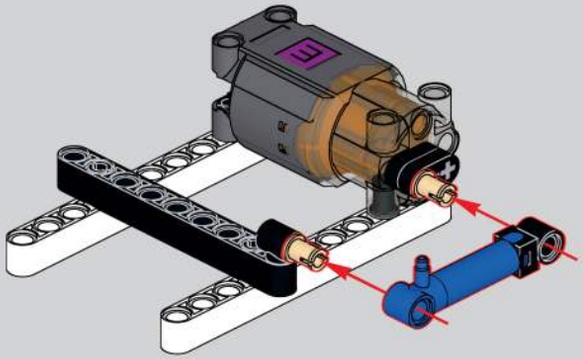

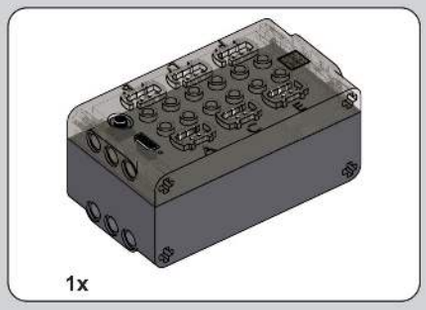

0-5

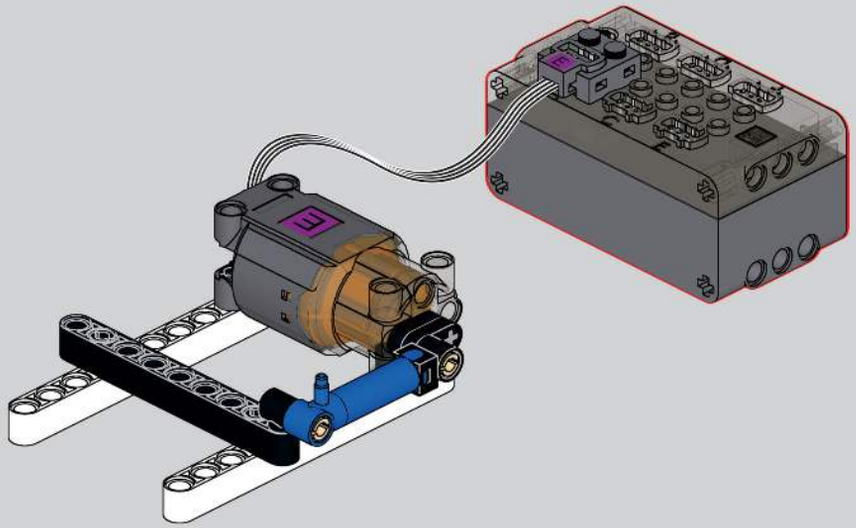

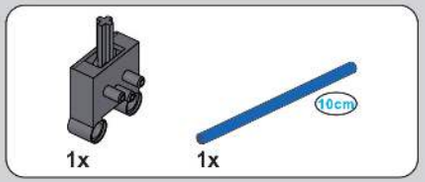

0-6

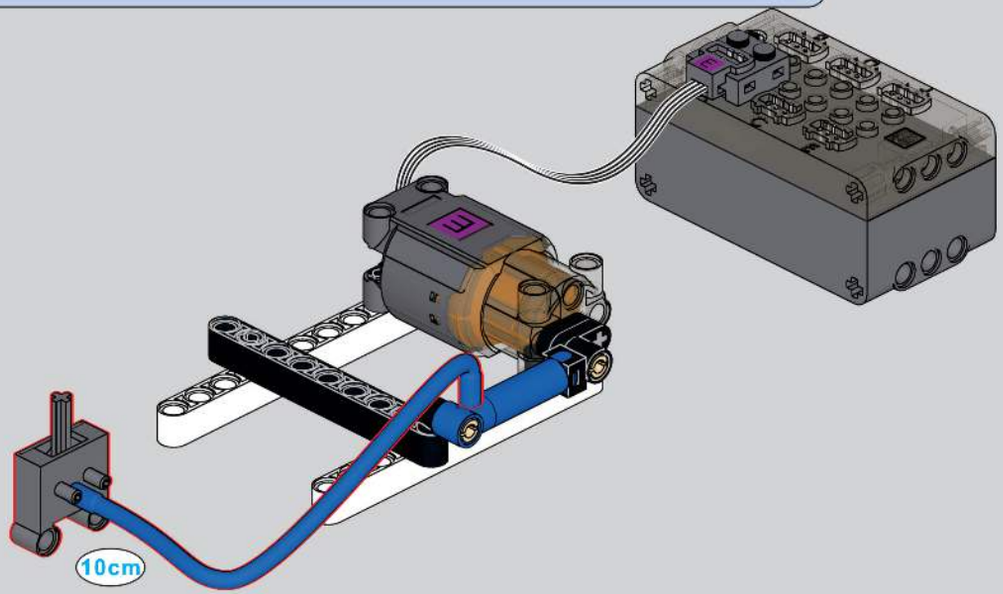

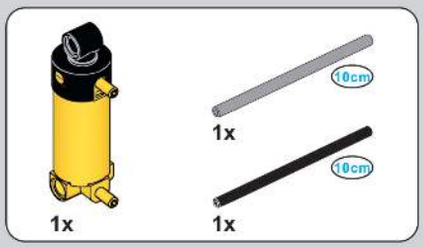

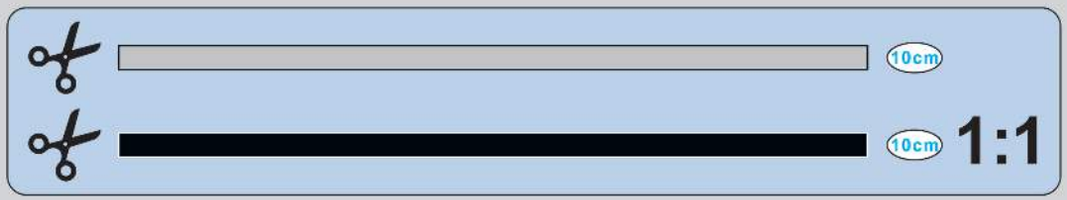

0-7

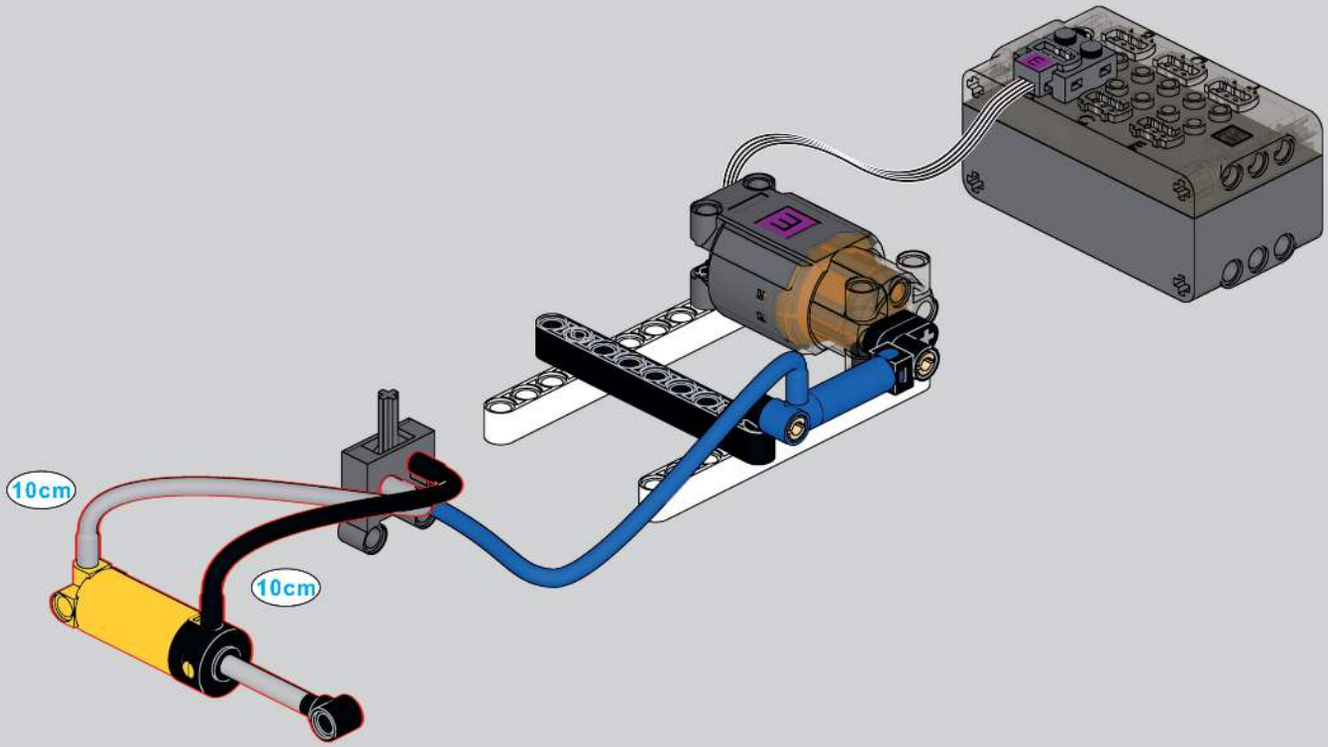

拼装前必须检测确认气泵，气挺杆，控制开关正常工作。测试完请将零件拆开，拼装需要用到。
Before assembly, the air pump, air lifter, and control switch must be checked and confirmed to work normally. Please disassemble the parts after testing.

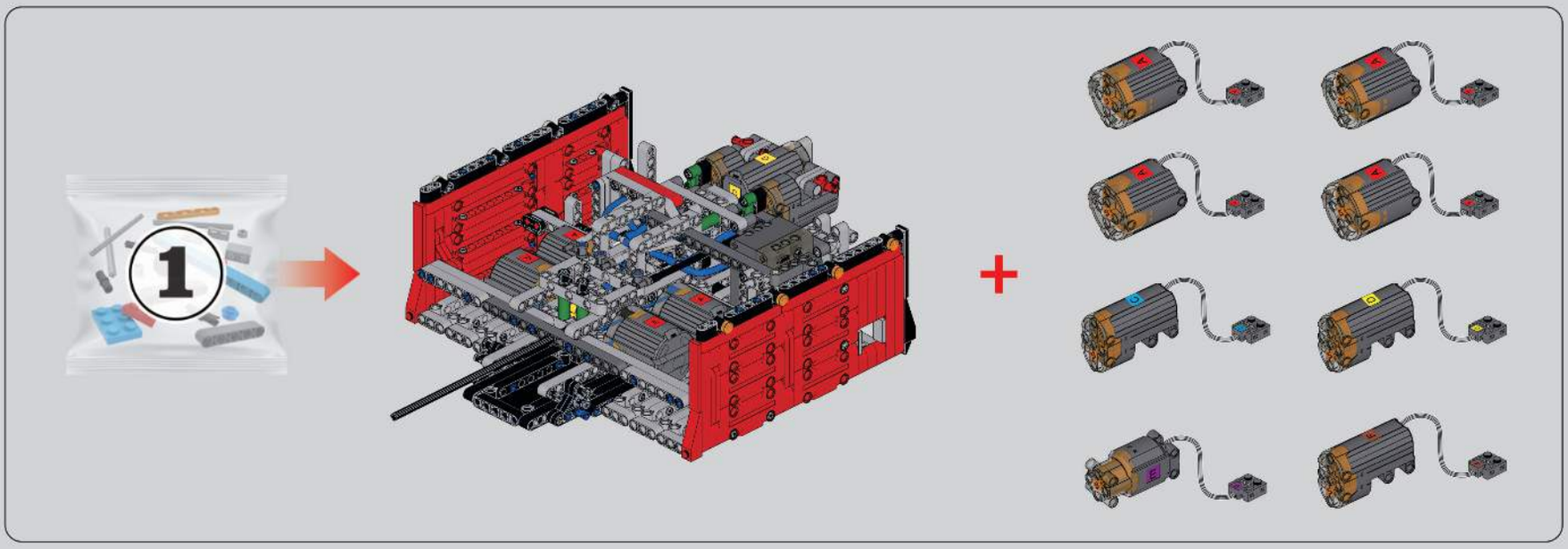

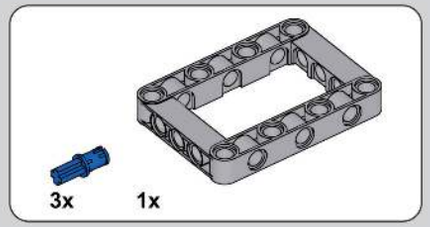

1

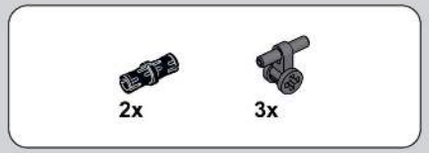

2

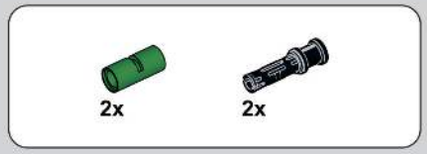

3

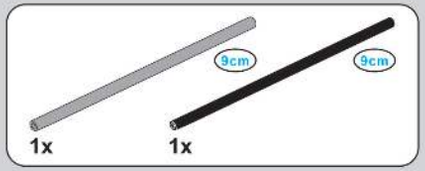

4

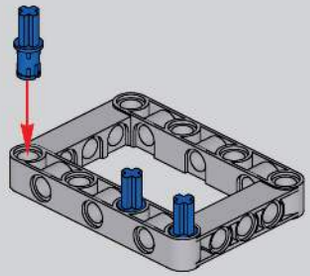

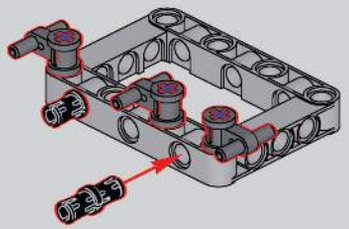

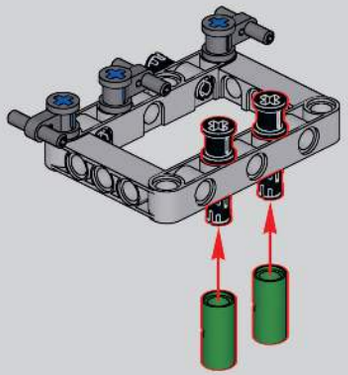

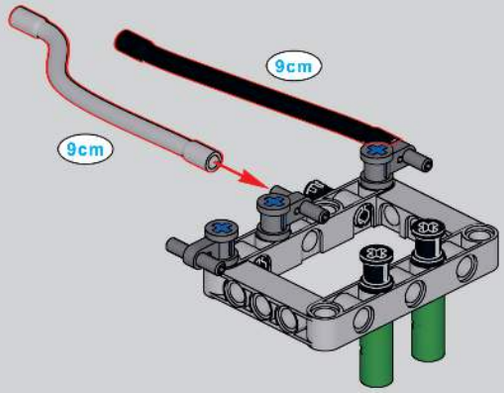

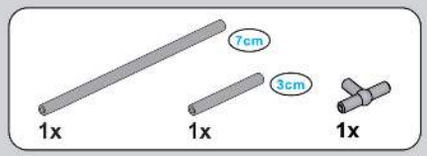

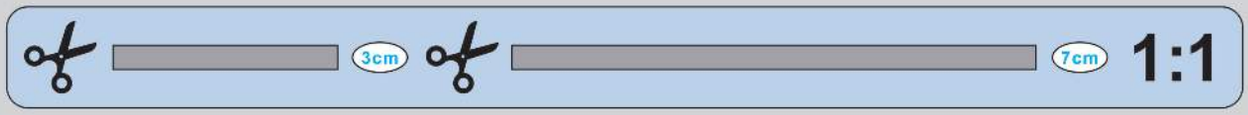

5

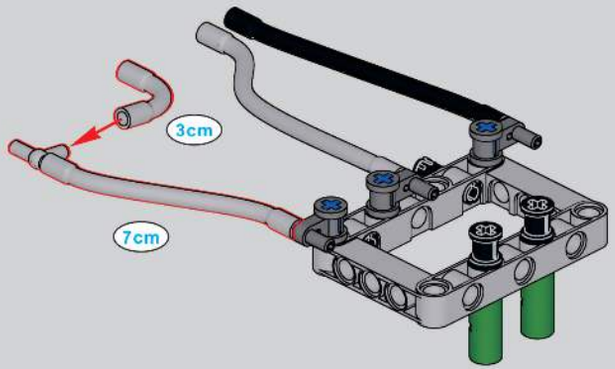

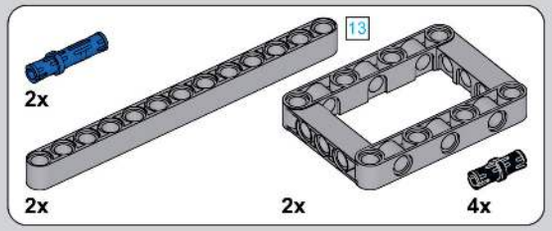

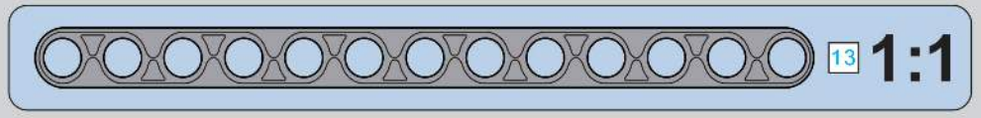

6

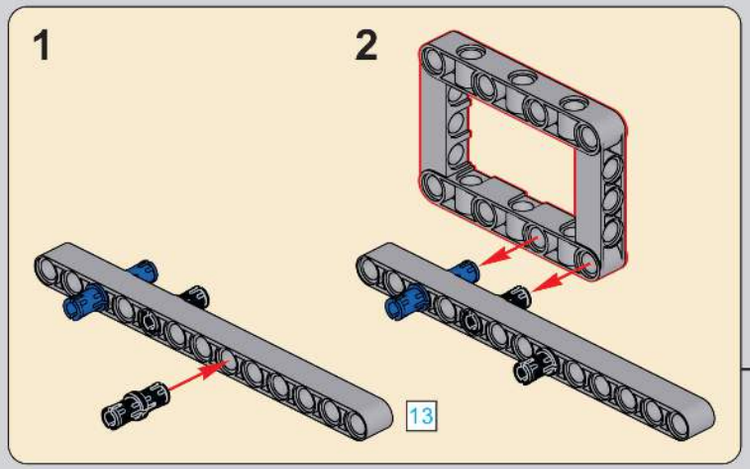

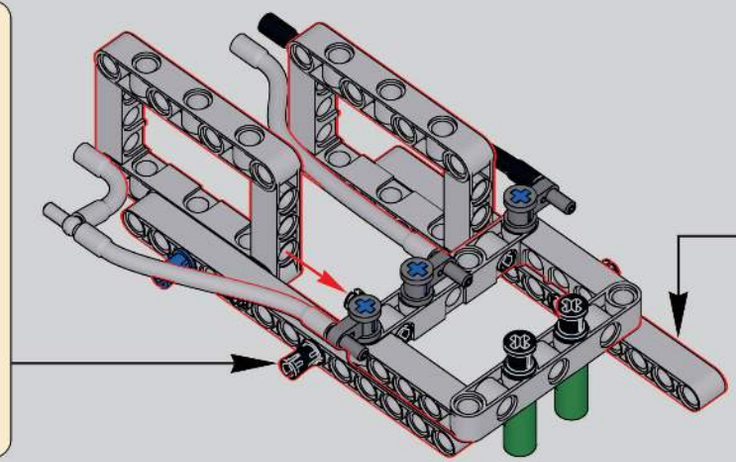

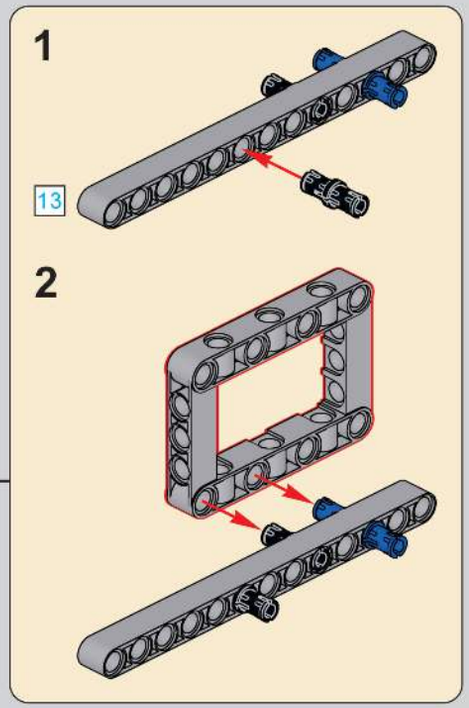

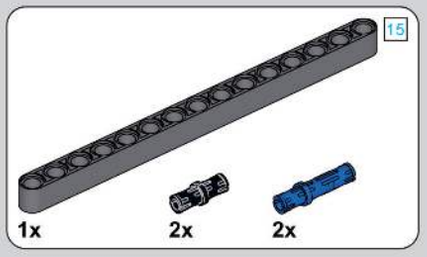

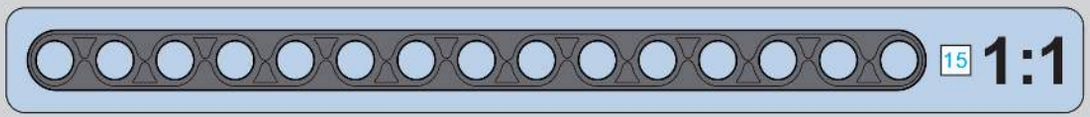

7

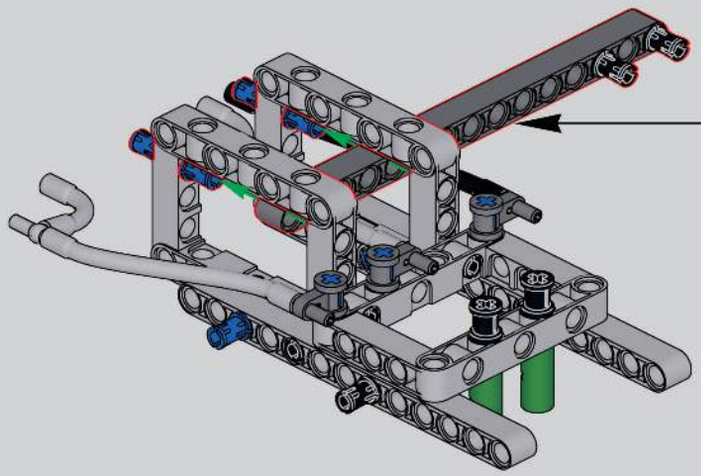

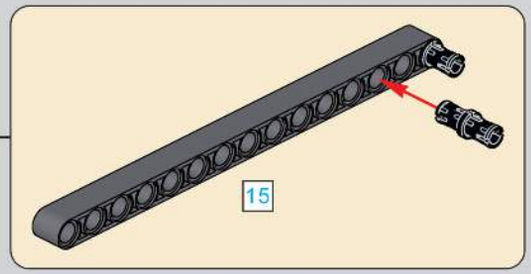

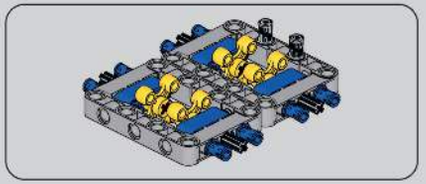

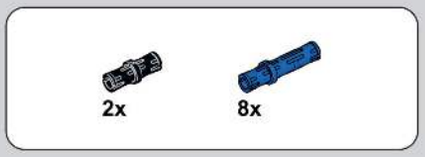

9

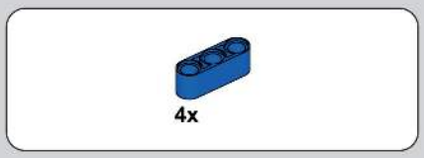

10

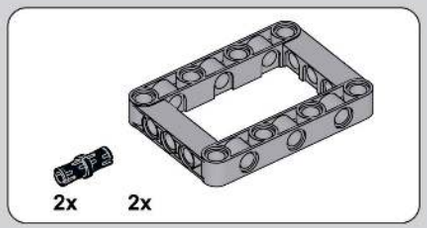

8

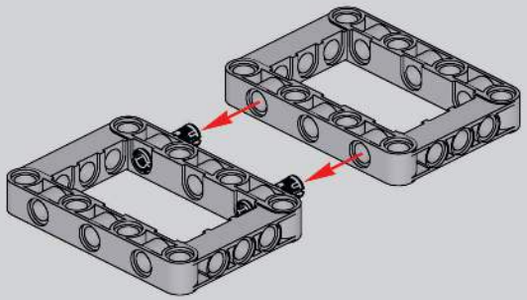

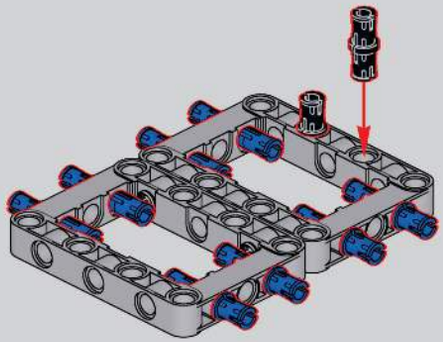

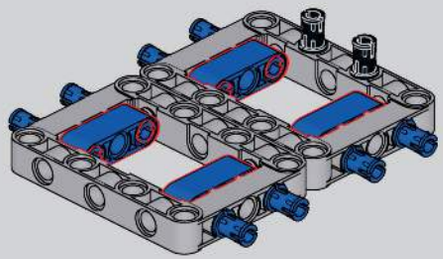

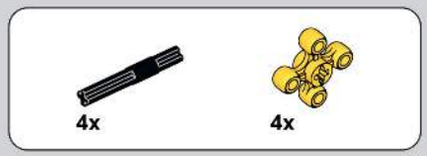

11

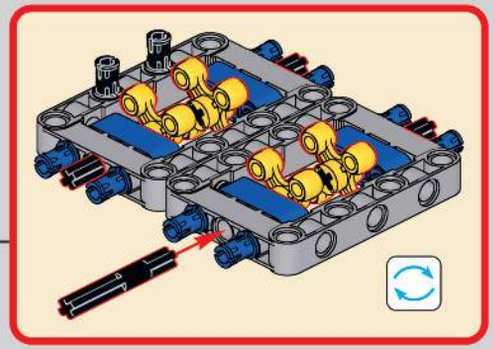

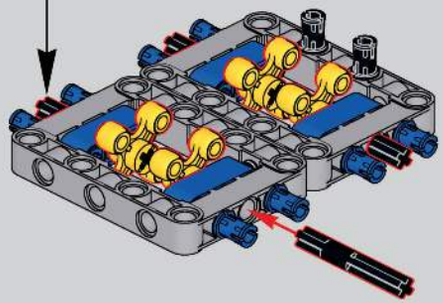

12

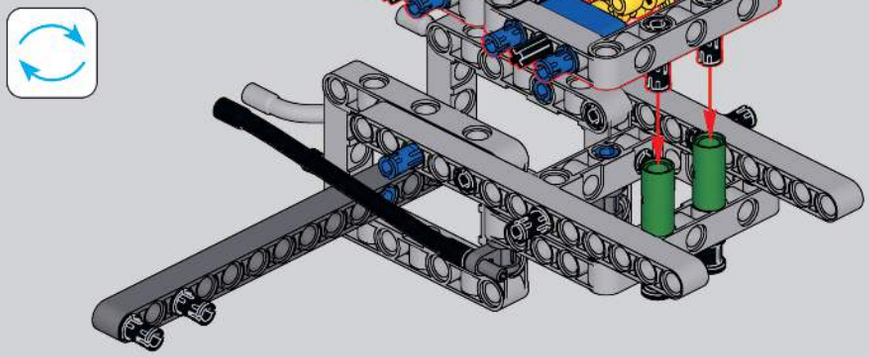

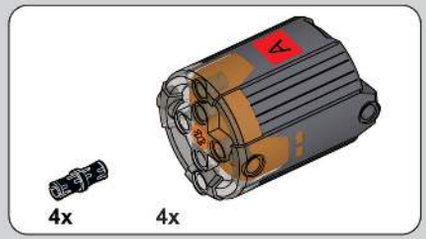

13

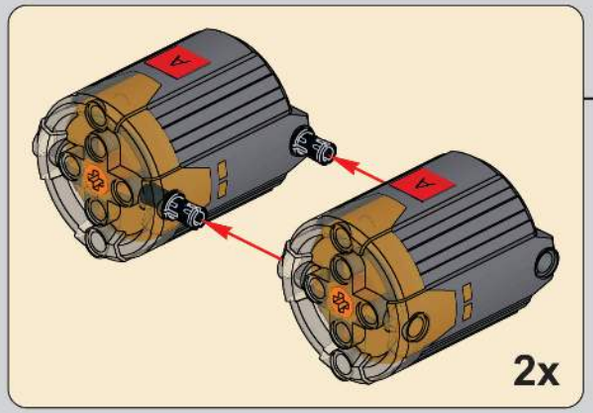

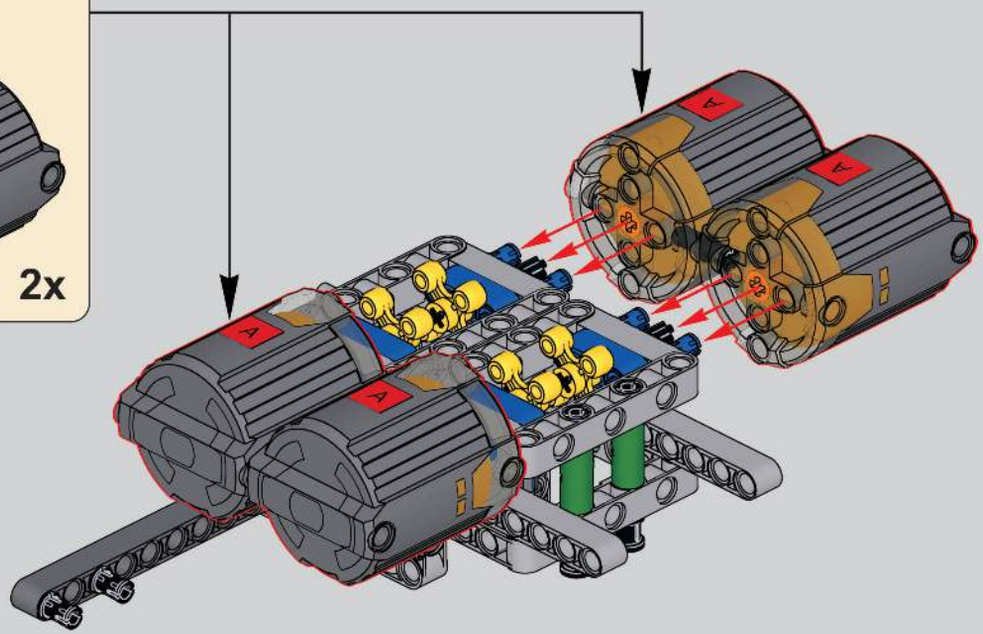

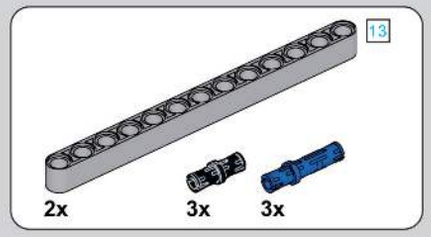

14

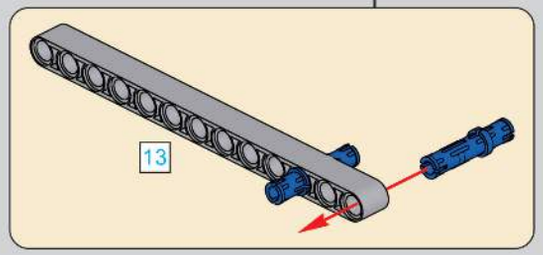

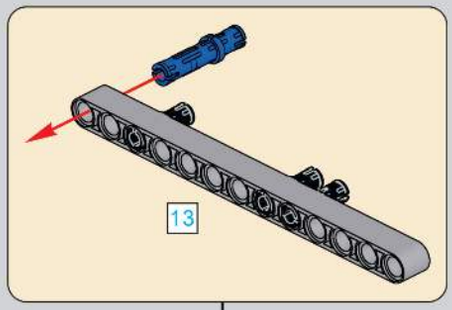

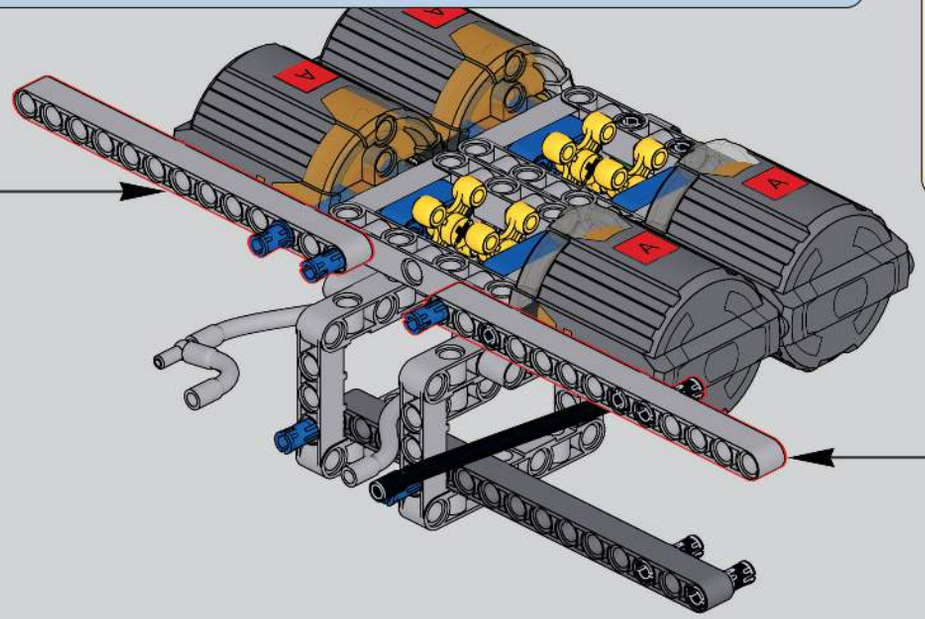

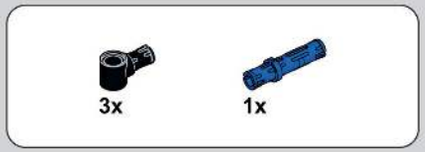

15

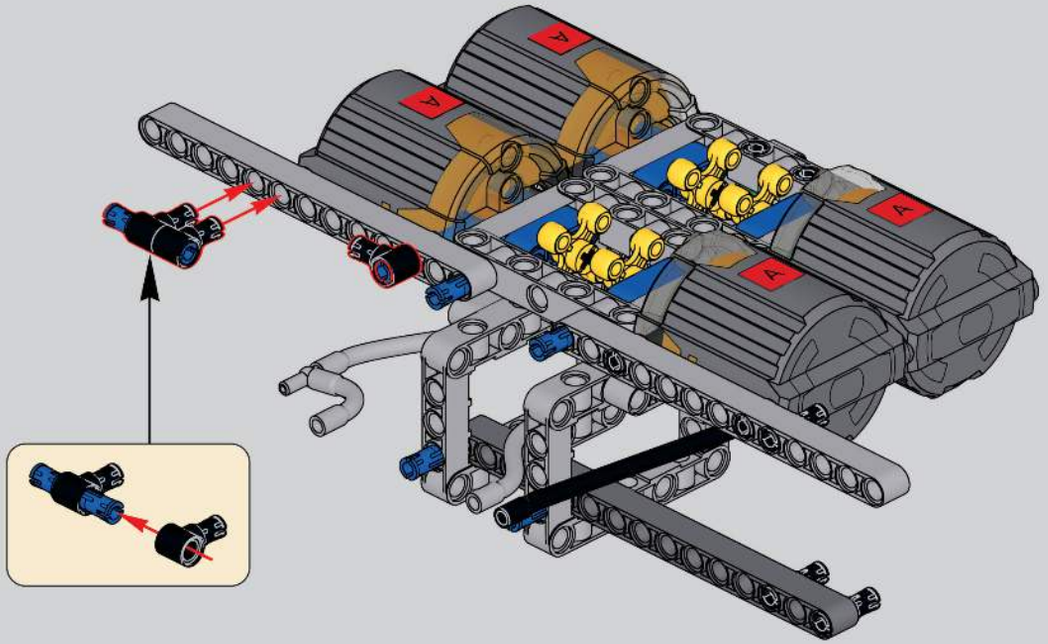

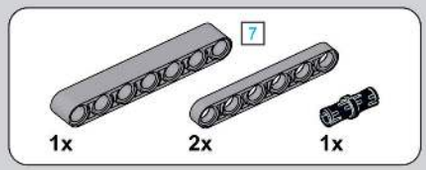

16

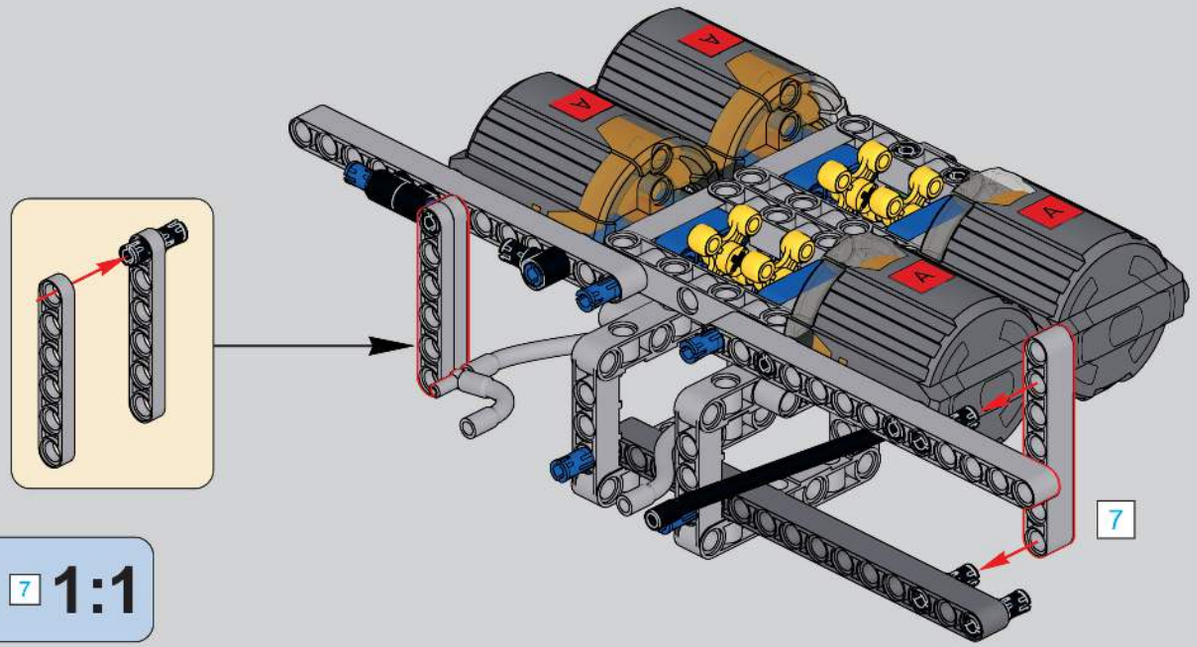

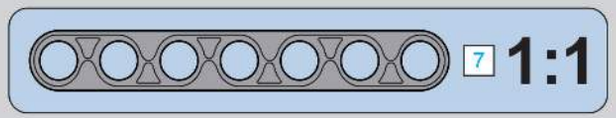

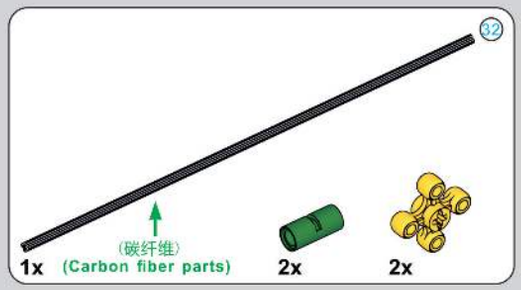

17

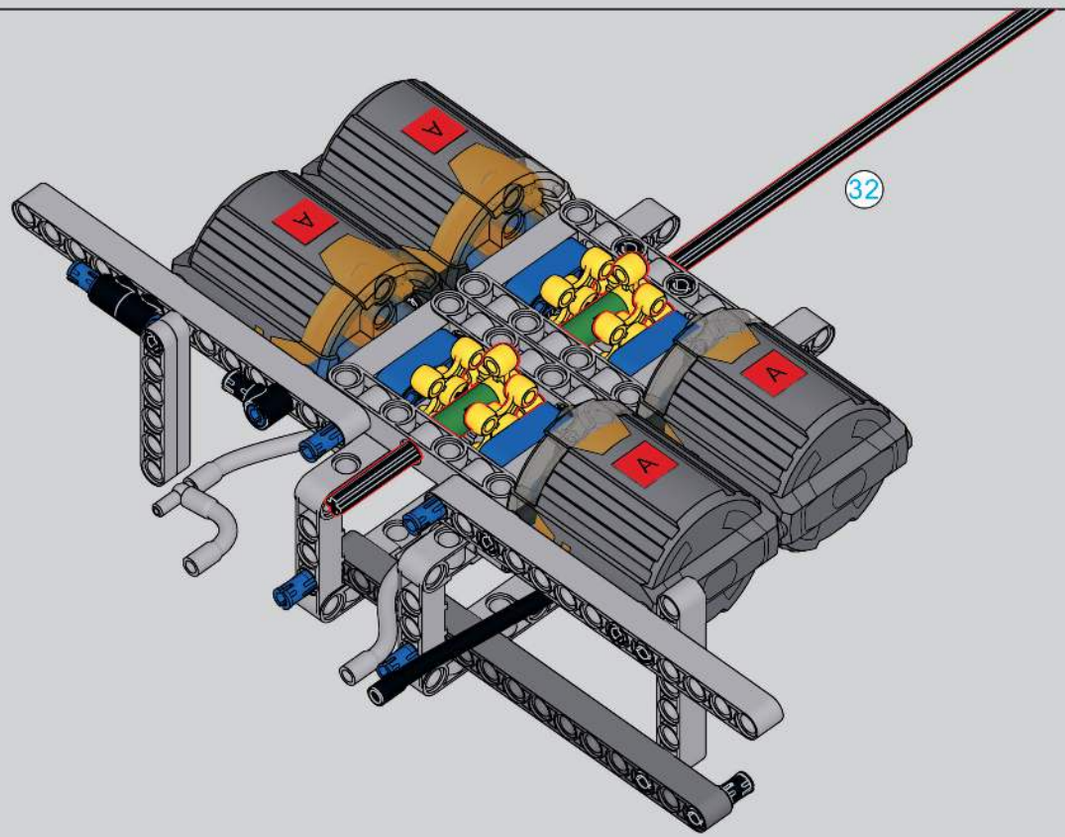

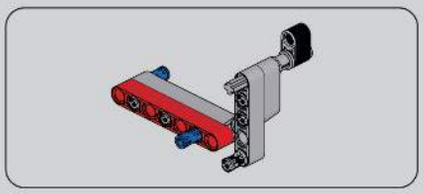

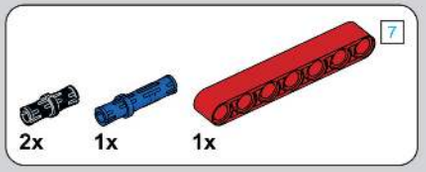

18

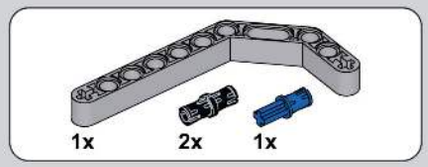

19

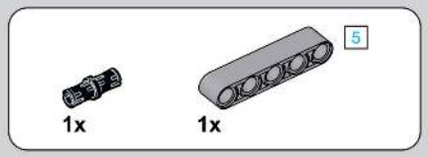

20

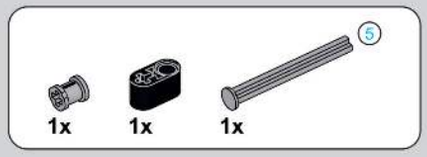

21

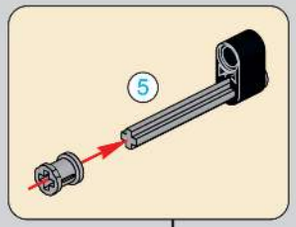

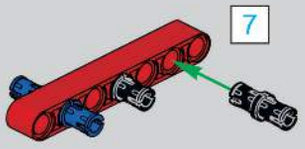

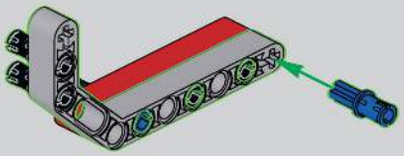

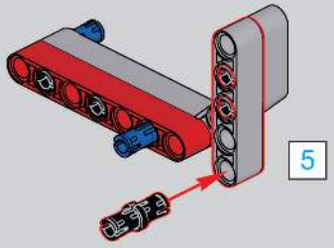

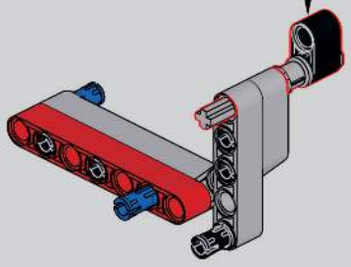

22

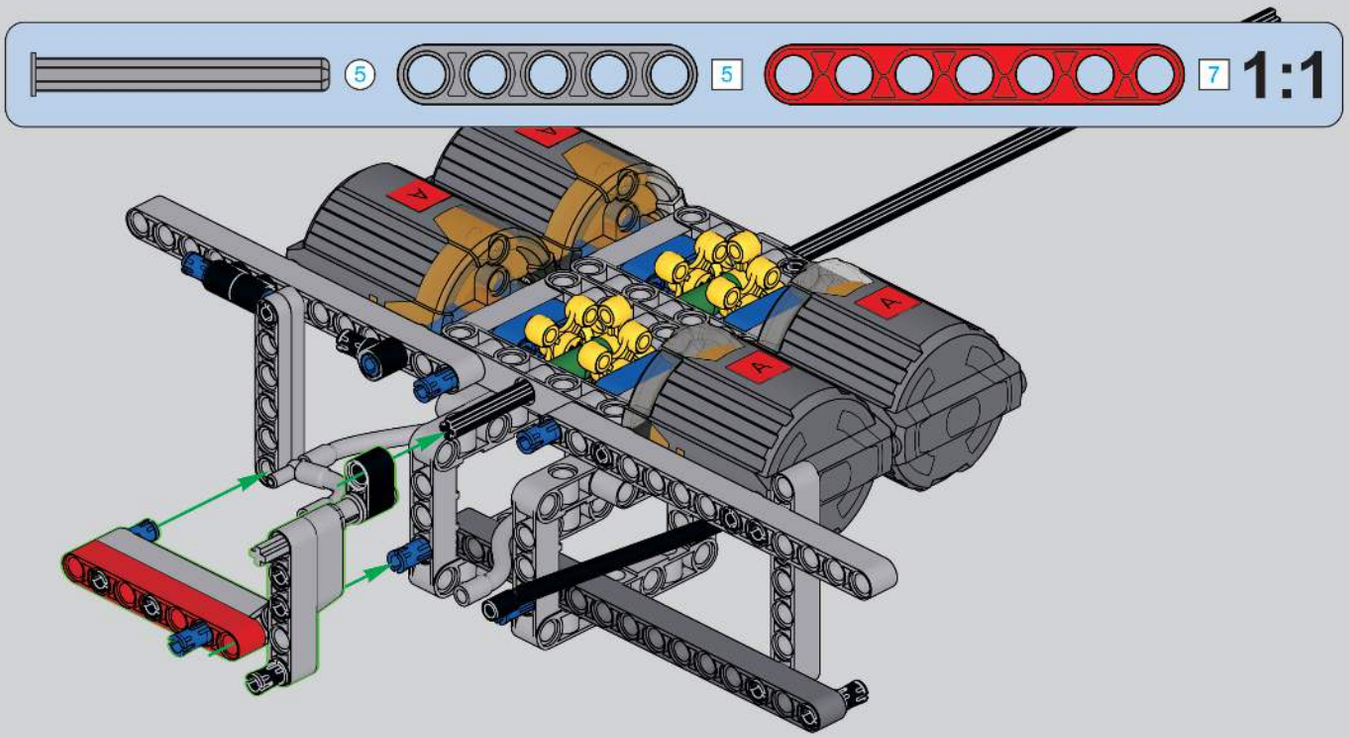

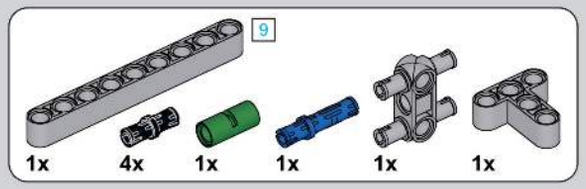

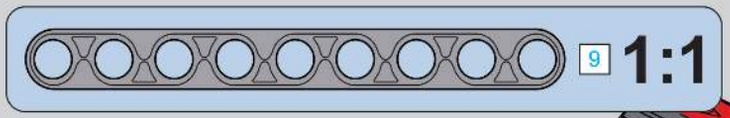

23

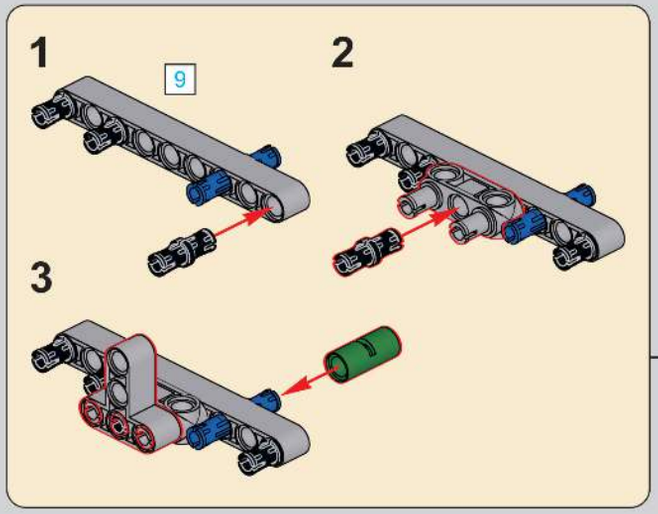

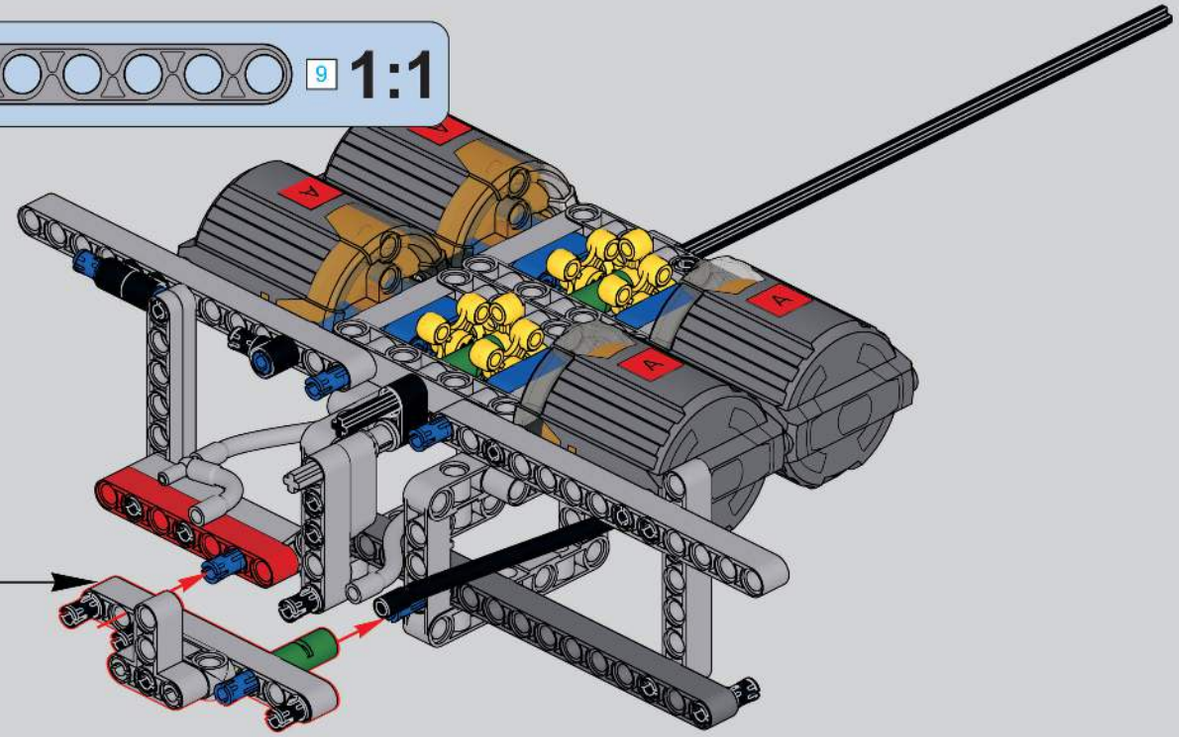

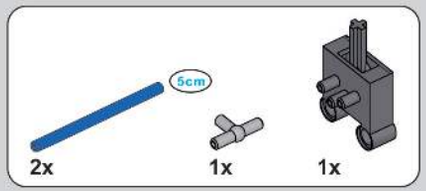

24

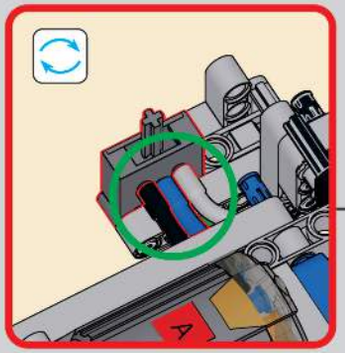

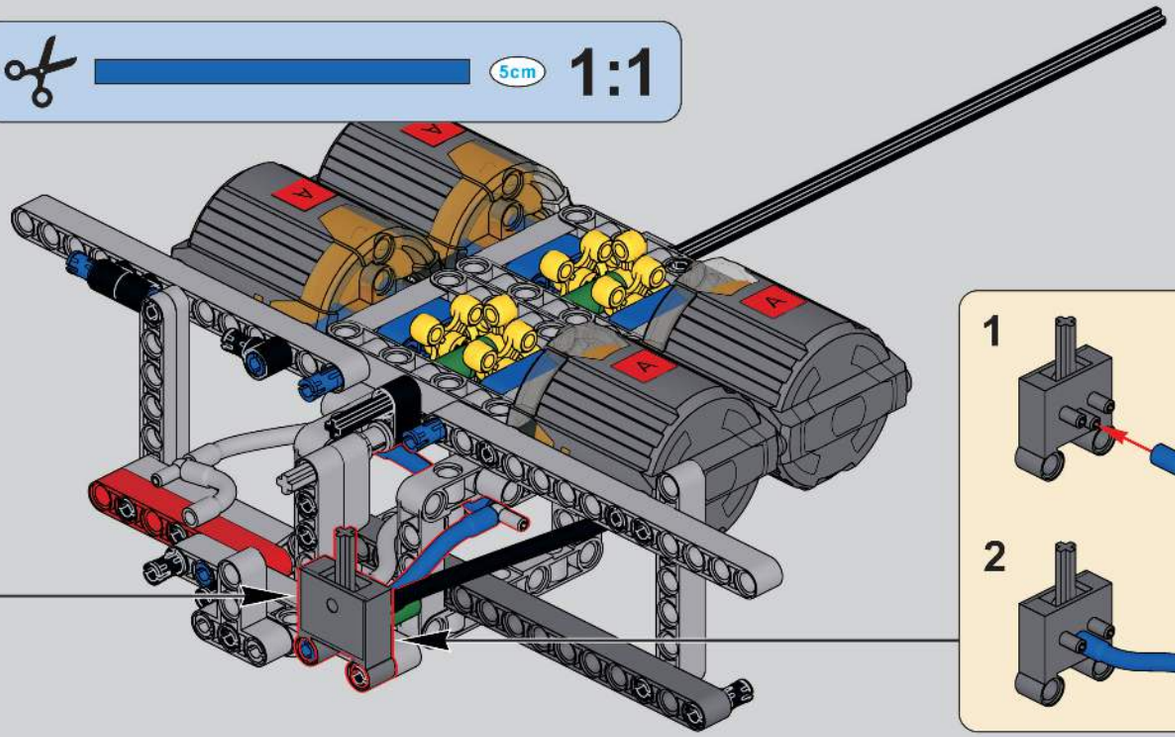

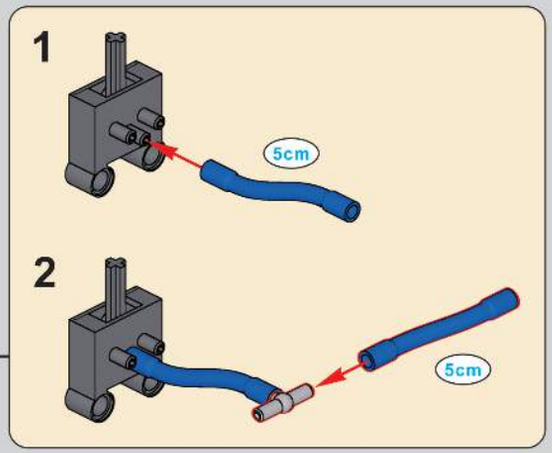

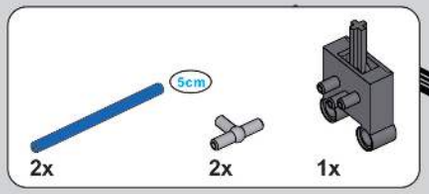

25

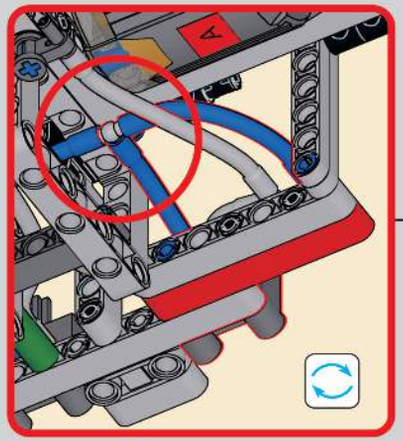

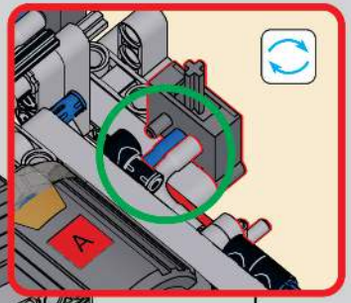

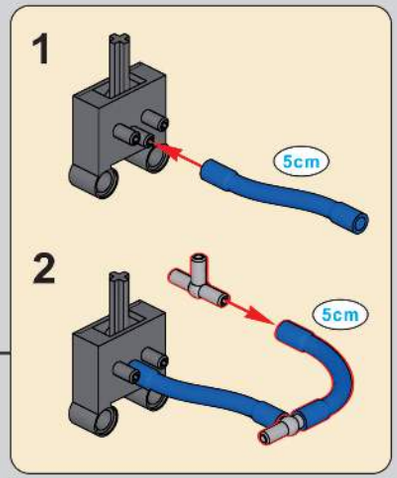

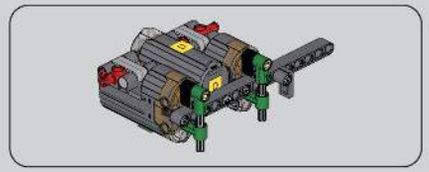

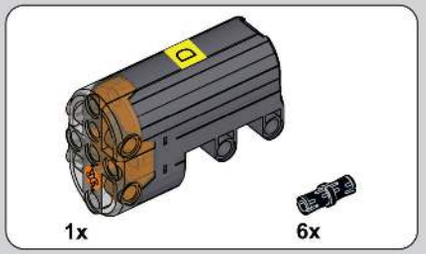

26

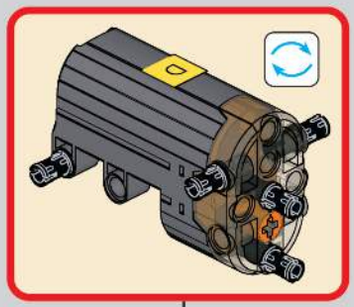

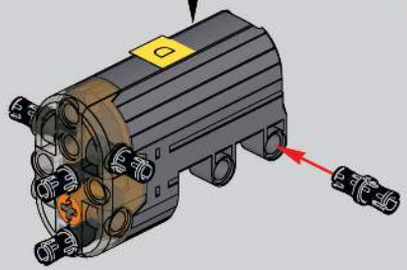

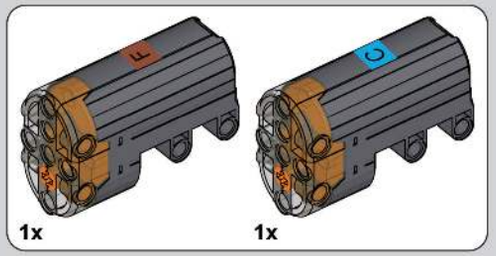

27

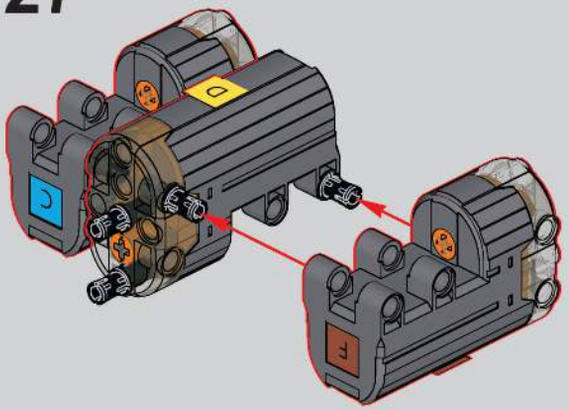

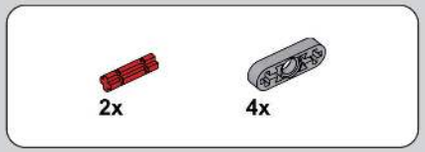

28

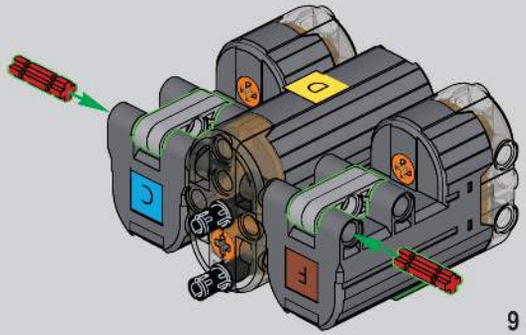

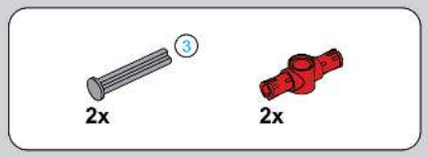
3
2x
2x

29

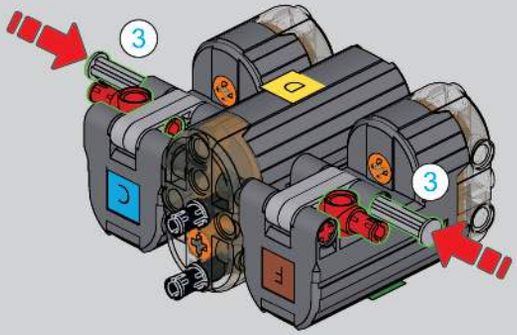
3
D
C
F
3

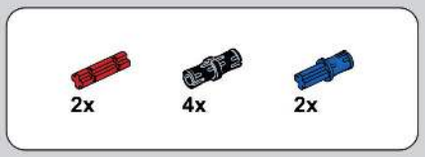
2x
4x
2x

30

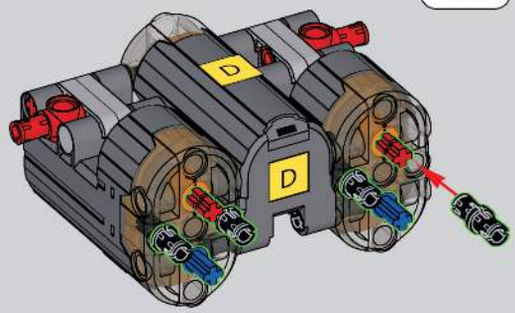
D
D

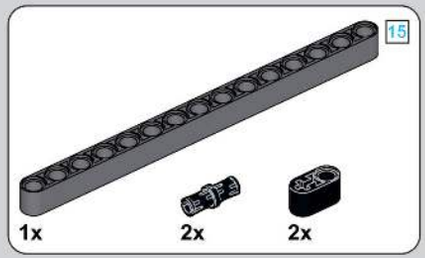
15
1x
2x
2x

31

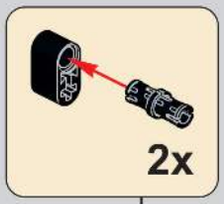
2x

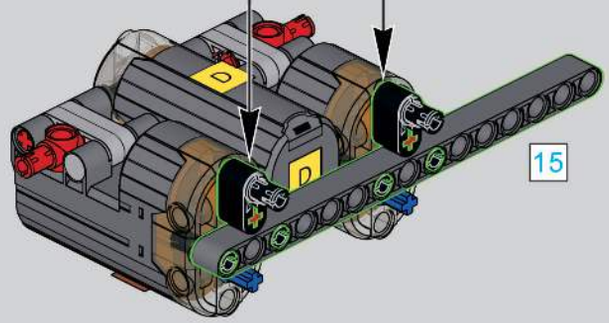
D
D
15

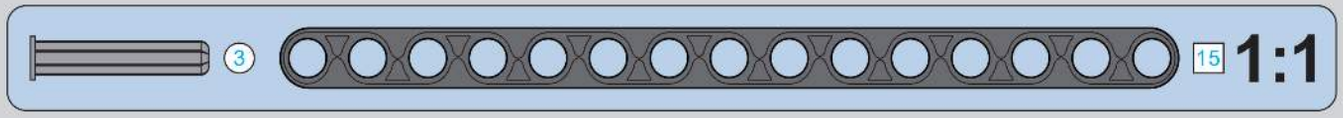
3
15
1:1

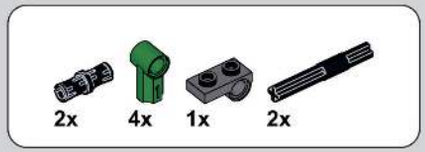
2x
4x
1x
2x

32

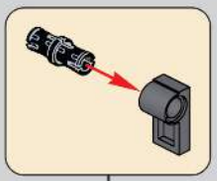

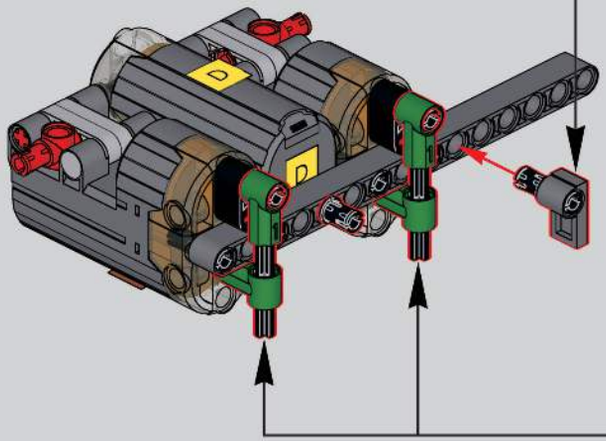
D
D

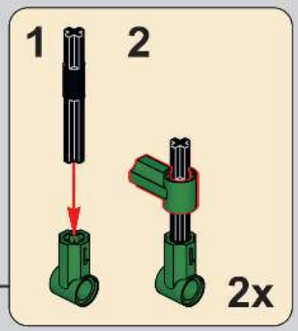
1
2
2x

33

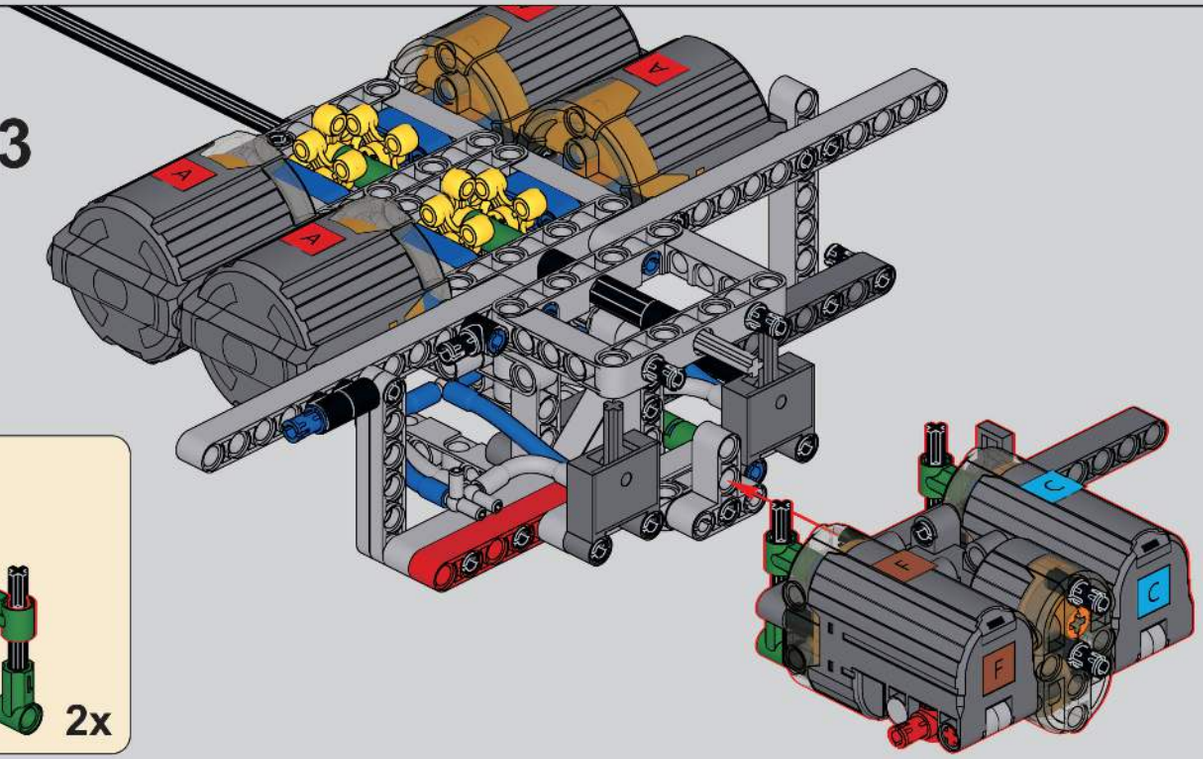
A
A
A
C
F
C

34

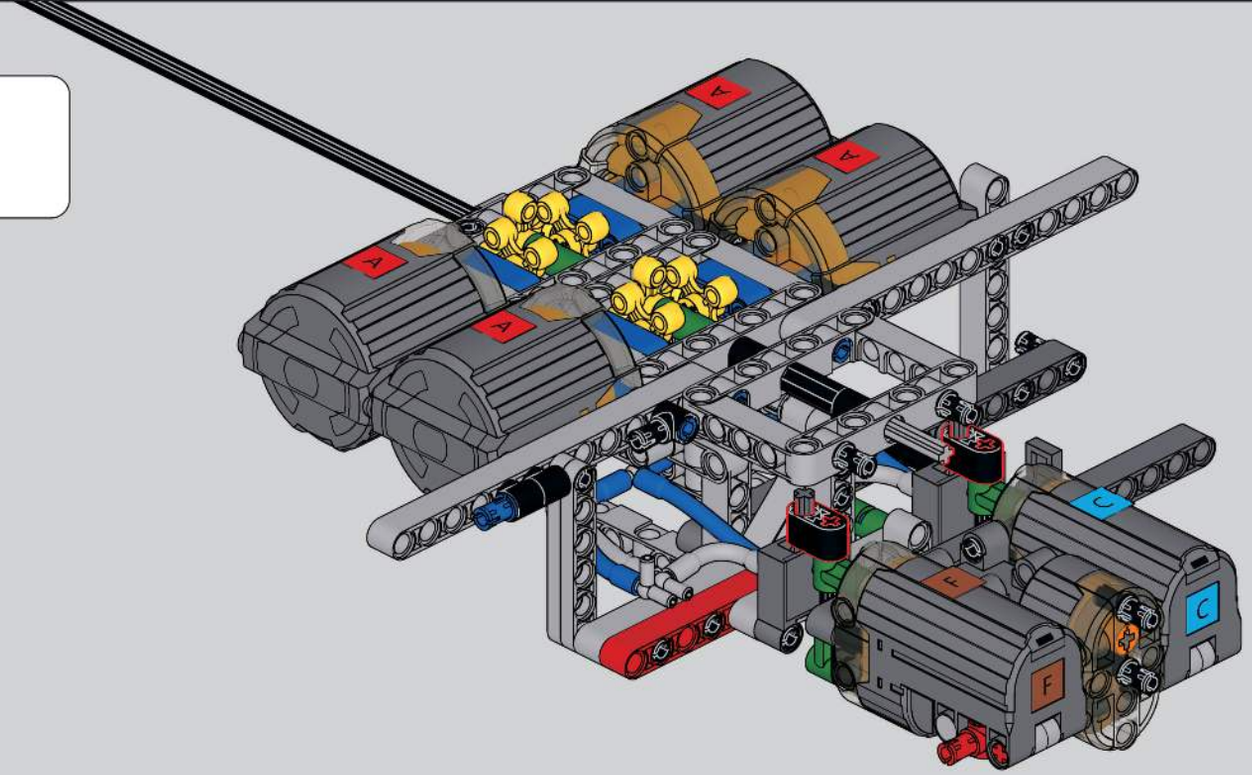

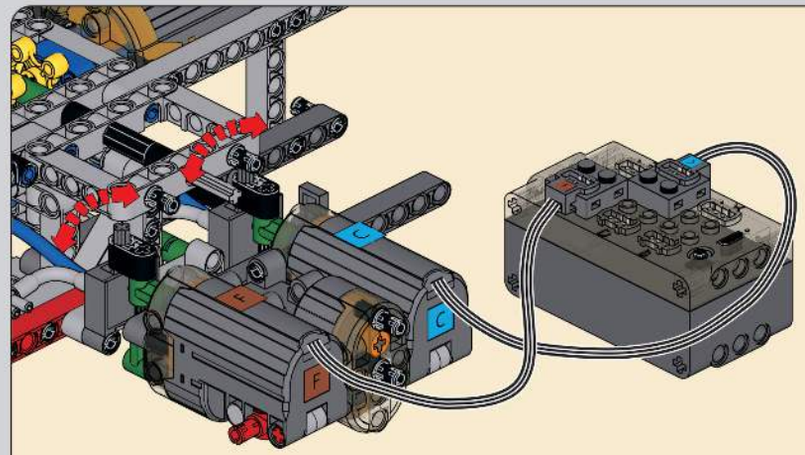

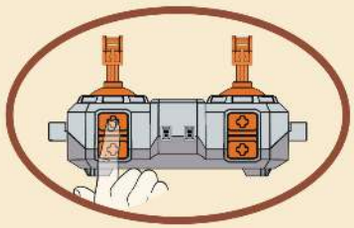

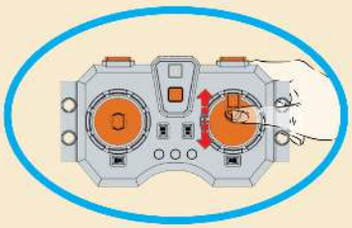

将电机线插入模块，打开模块并打开遥控器连接，将右摇杆↑↓移动（C通道），测试后挂气阀是否能正常打开关闭；再按动遥控器右前端上下按键（F键），测试车桥气阀是否能正常打开关闭，如果不正常请检查前面拼装是否正确，测试完毕需将模块和遥控器关闭并放回

Insert the motor wire into the module, open the module and connect the remote control, move the right joystick up and down (Channel C) to test if the rear suspension valve can open and close normally. Then press the up and down F buttons on the right front of the remote control (F key) to test if the vehicle bridge valve can open and close normally. If not normal, please check if the previous assembly is correct. After testing, turn off the module and remote control and put them back.

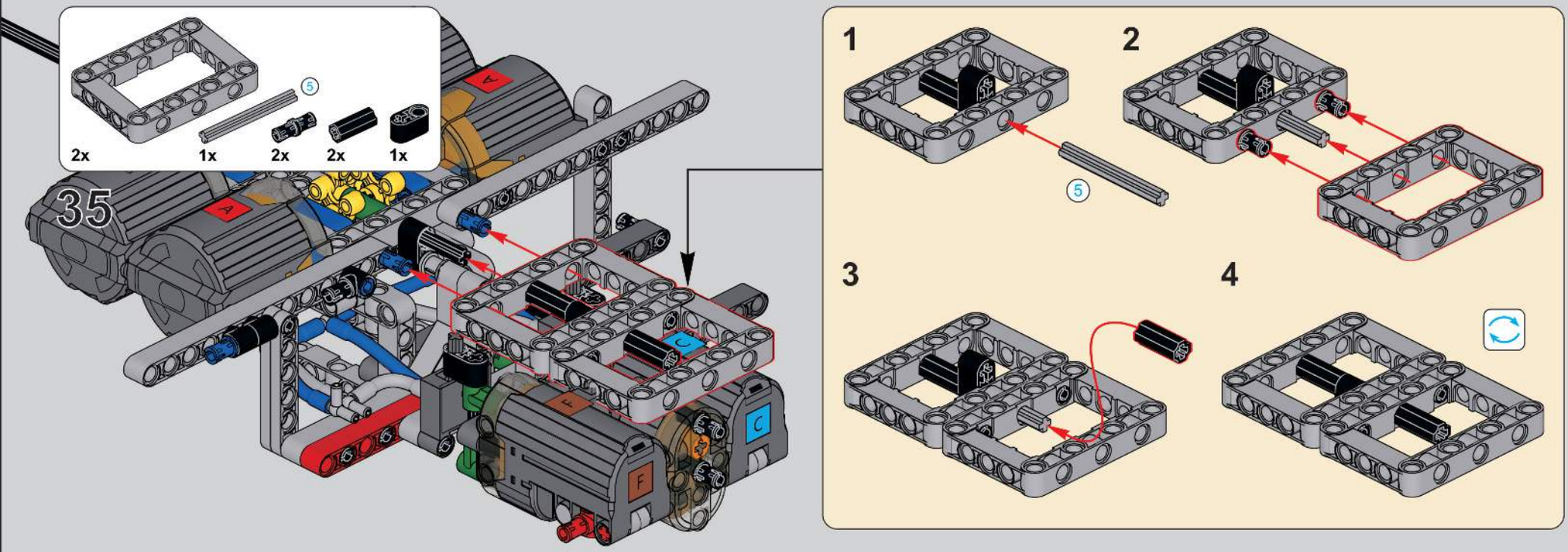
5
2x
1x
2x
2x
1x
35
1
2
3
4
5

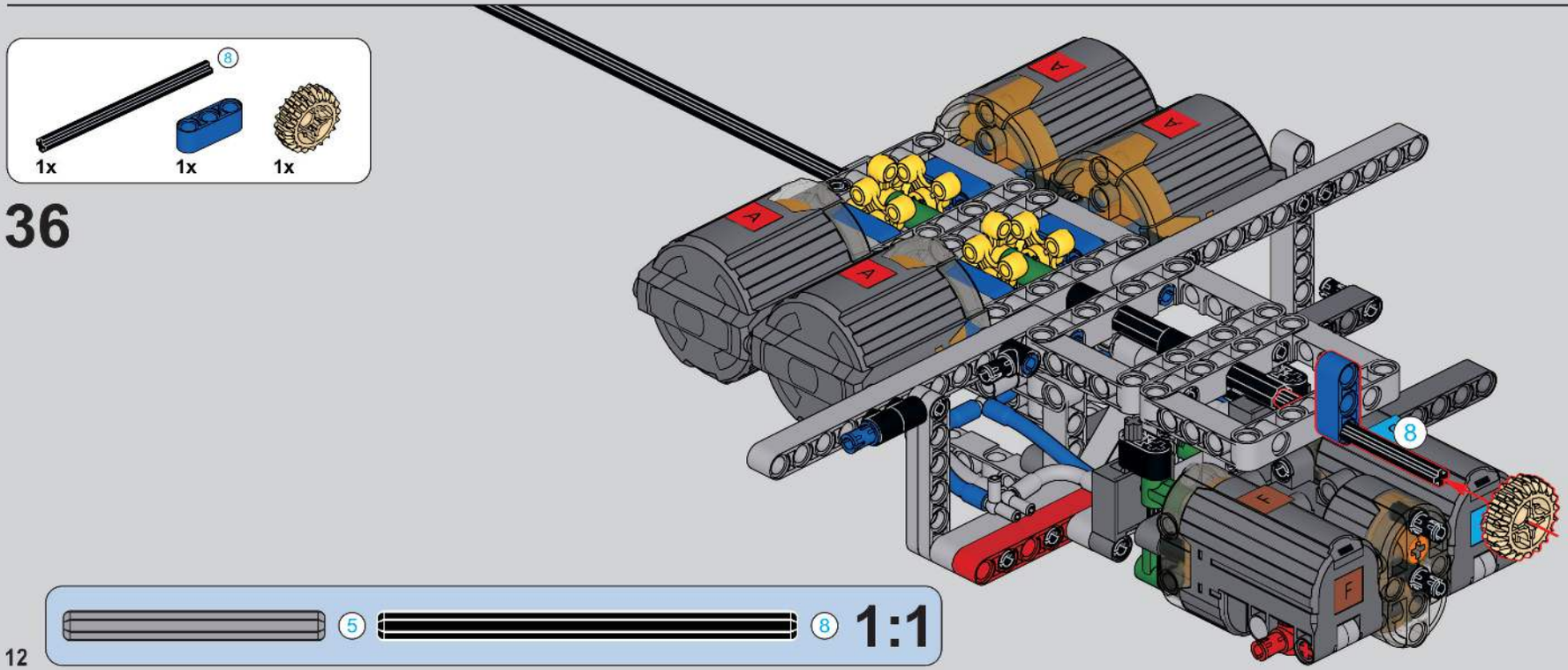
8
1x
1x
1x
36
8
5
8
1:1

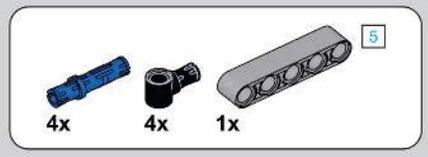

37

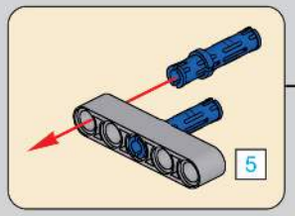

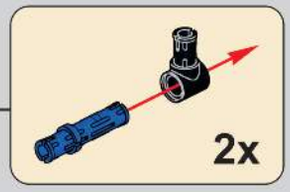

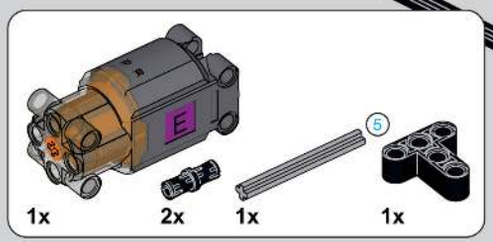

38

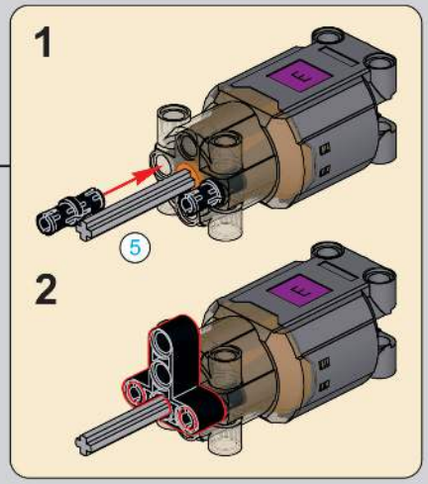

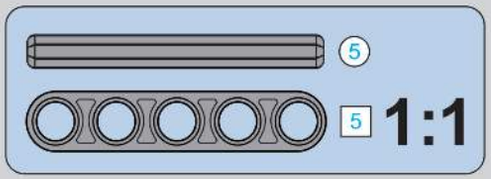

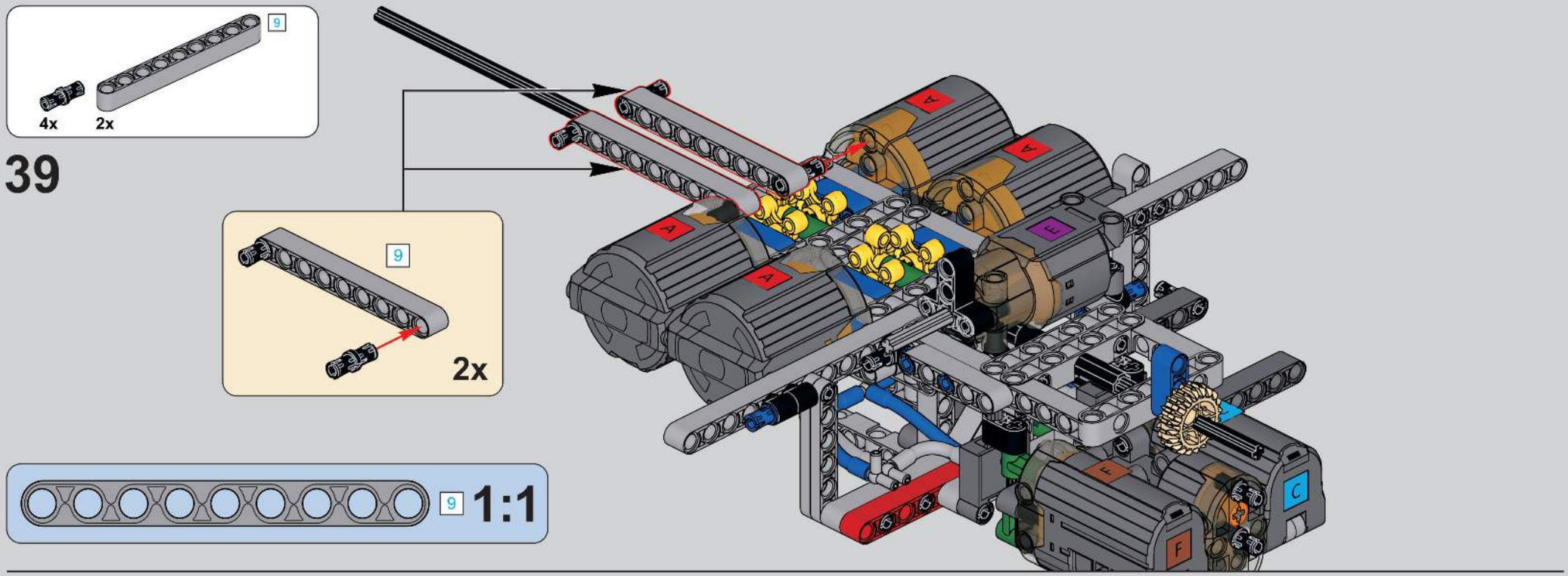
9
4x
2x
39
9
2x
9
1:1

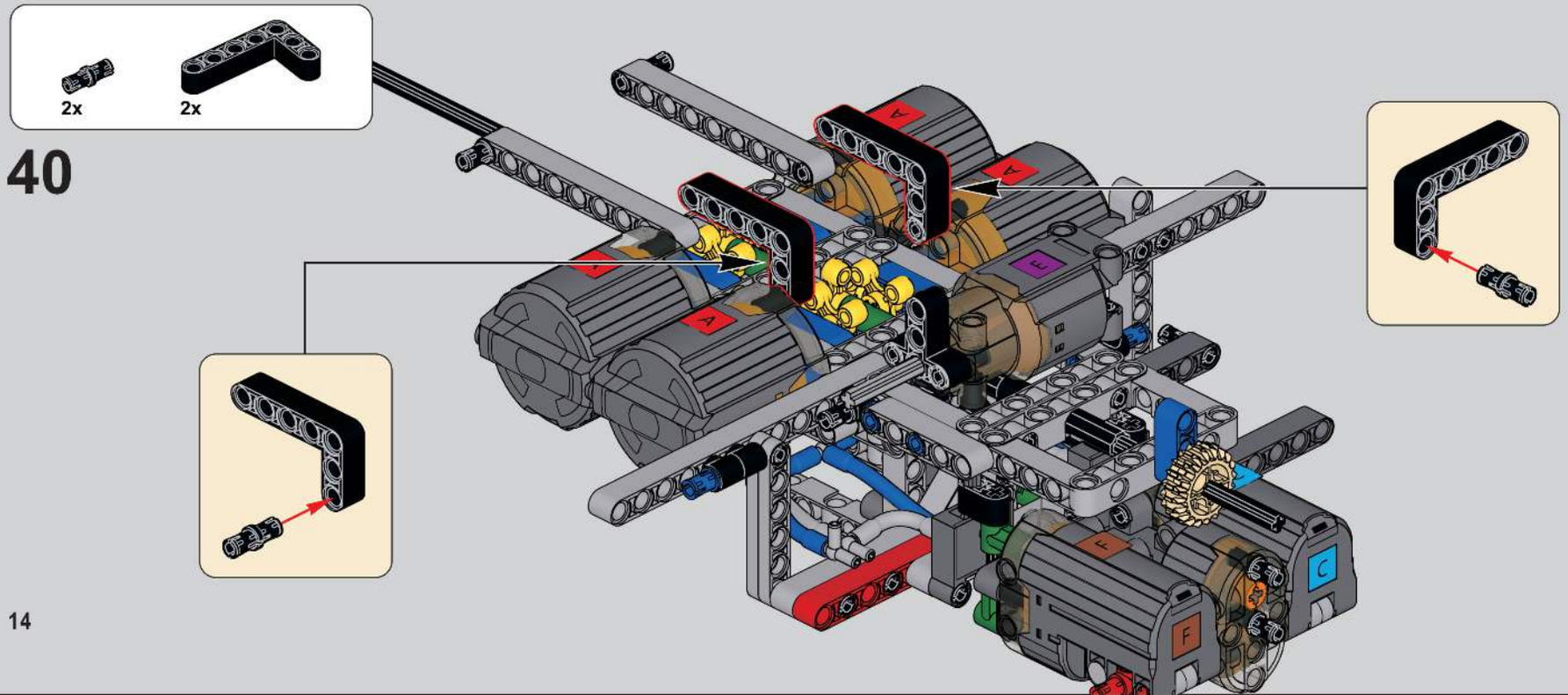
2x
2x
40

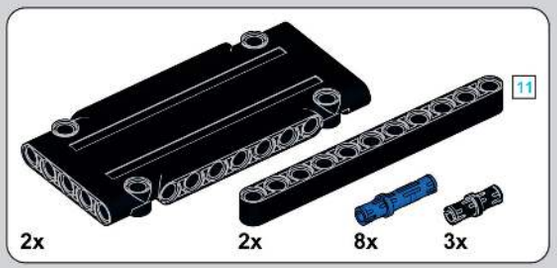

41

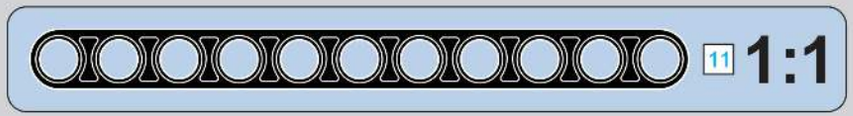

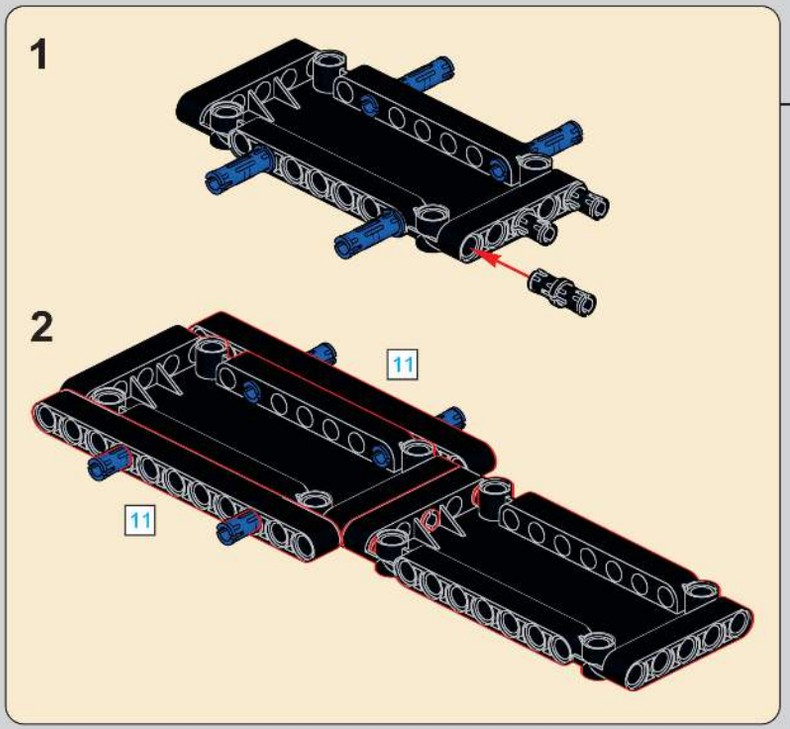

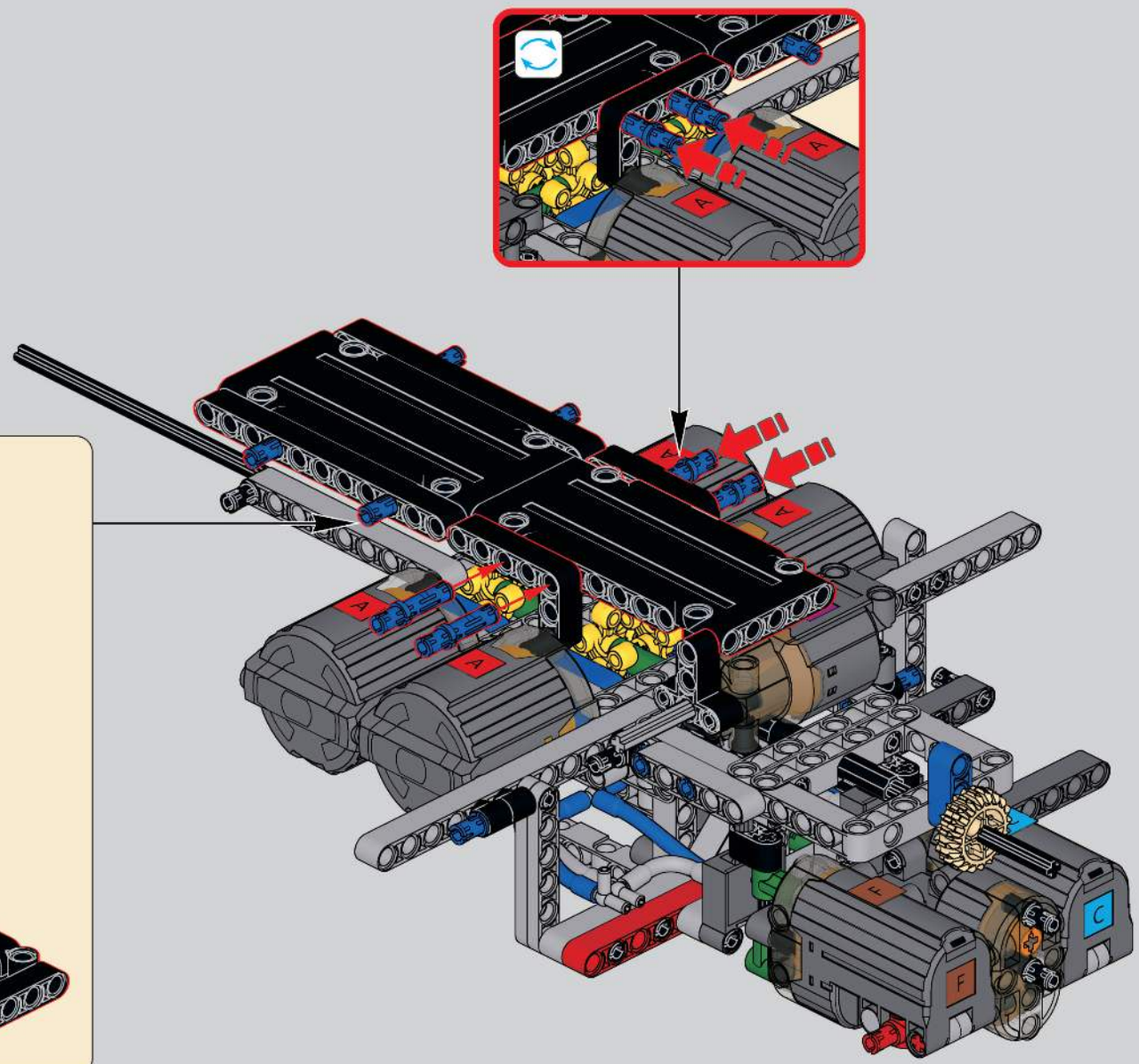

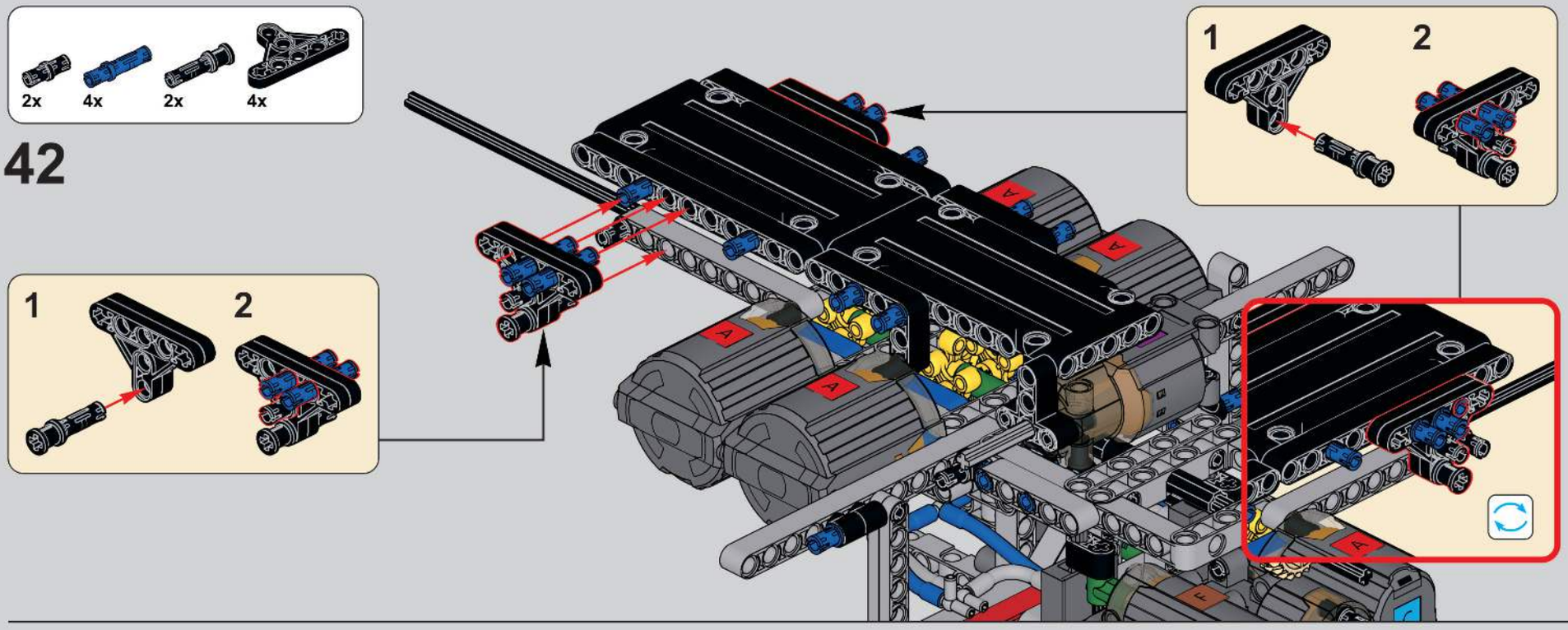
2x
4x
2x
4x
42
1
2
1
2

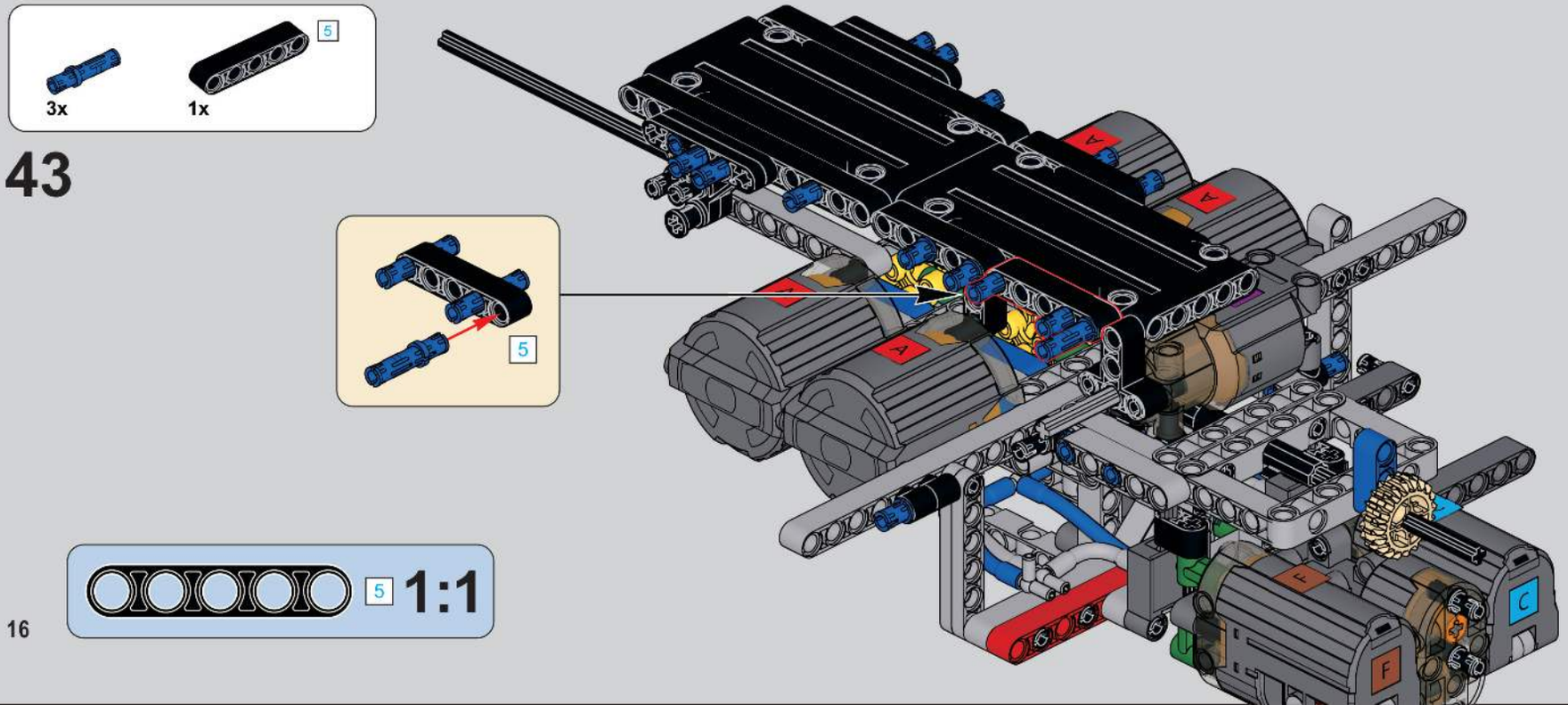
5
3x
1x
43
5
5
1:1

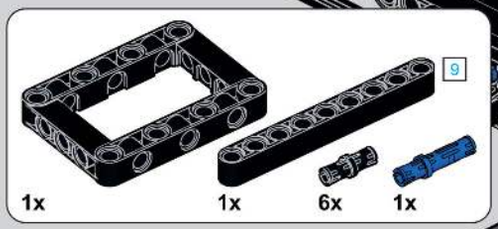

44

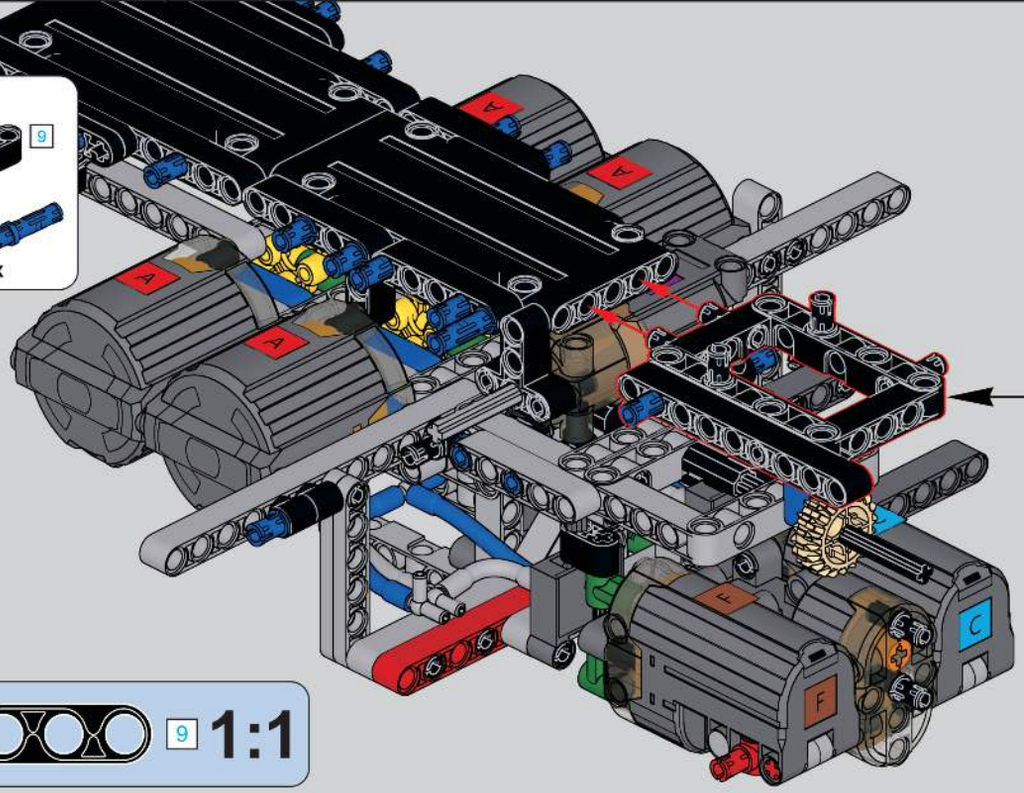

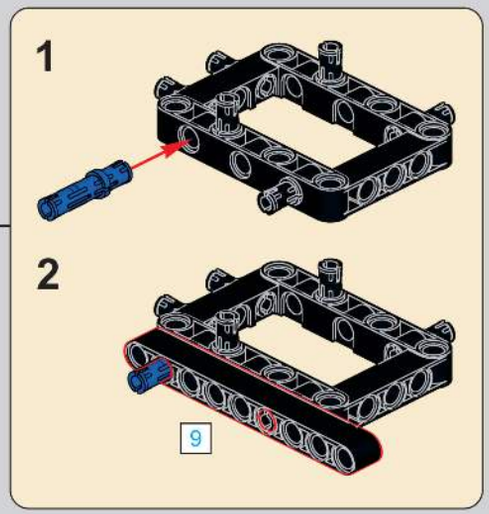

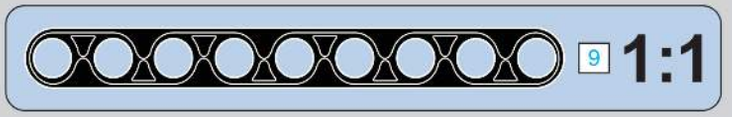

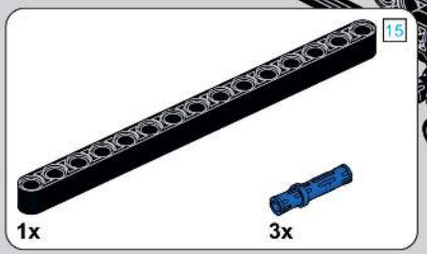

45

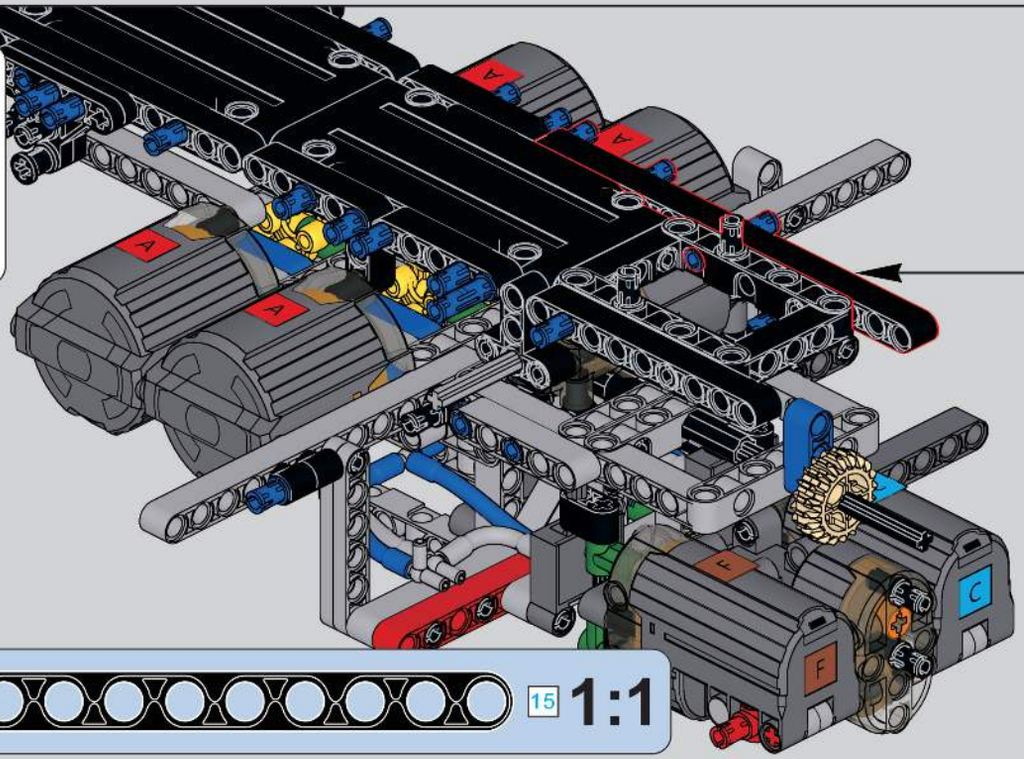

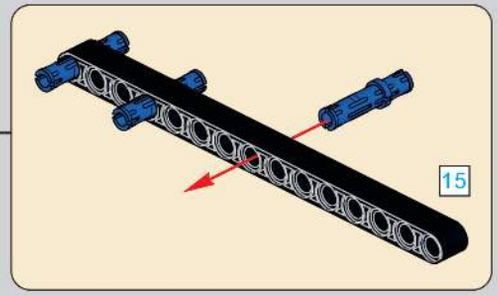

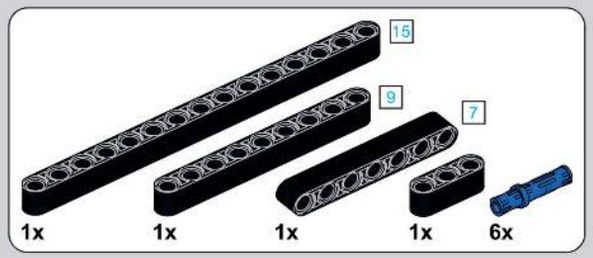

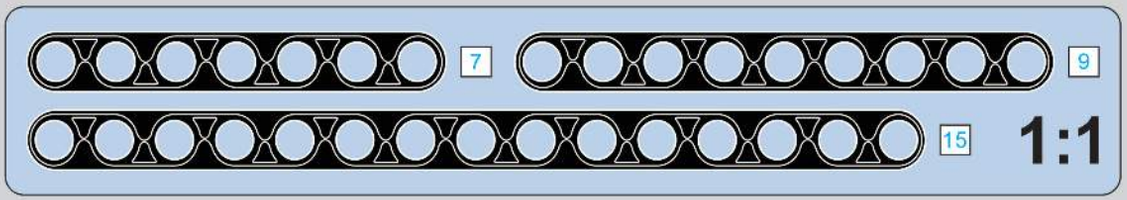

46

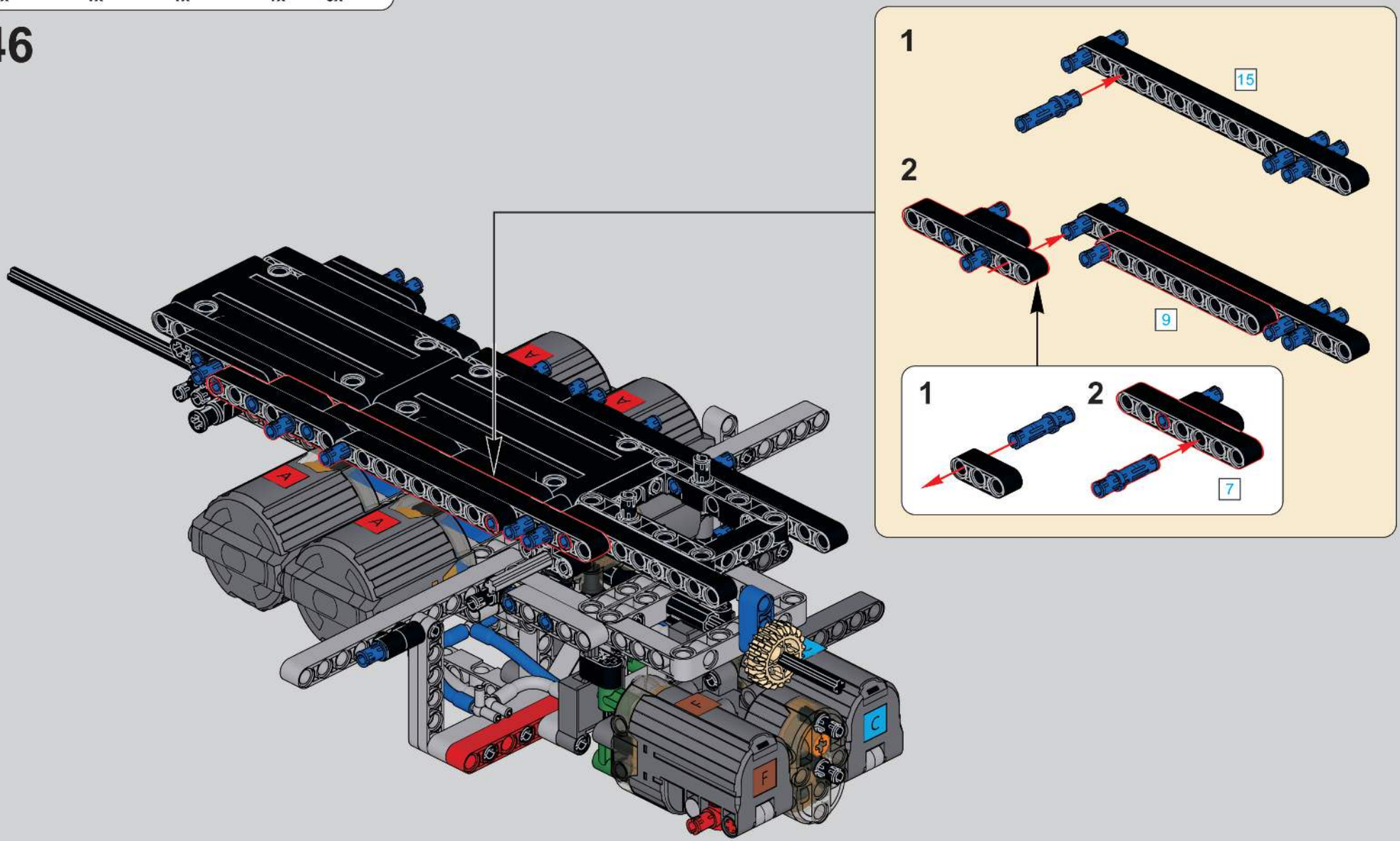

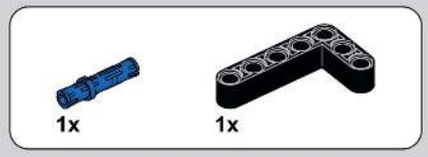

47

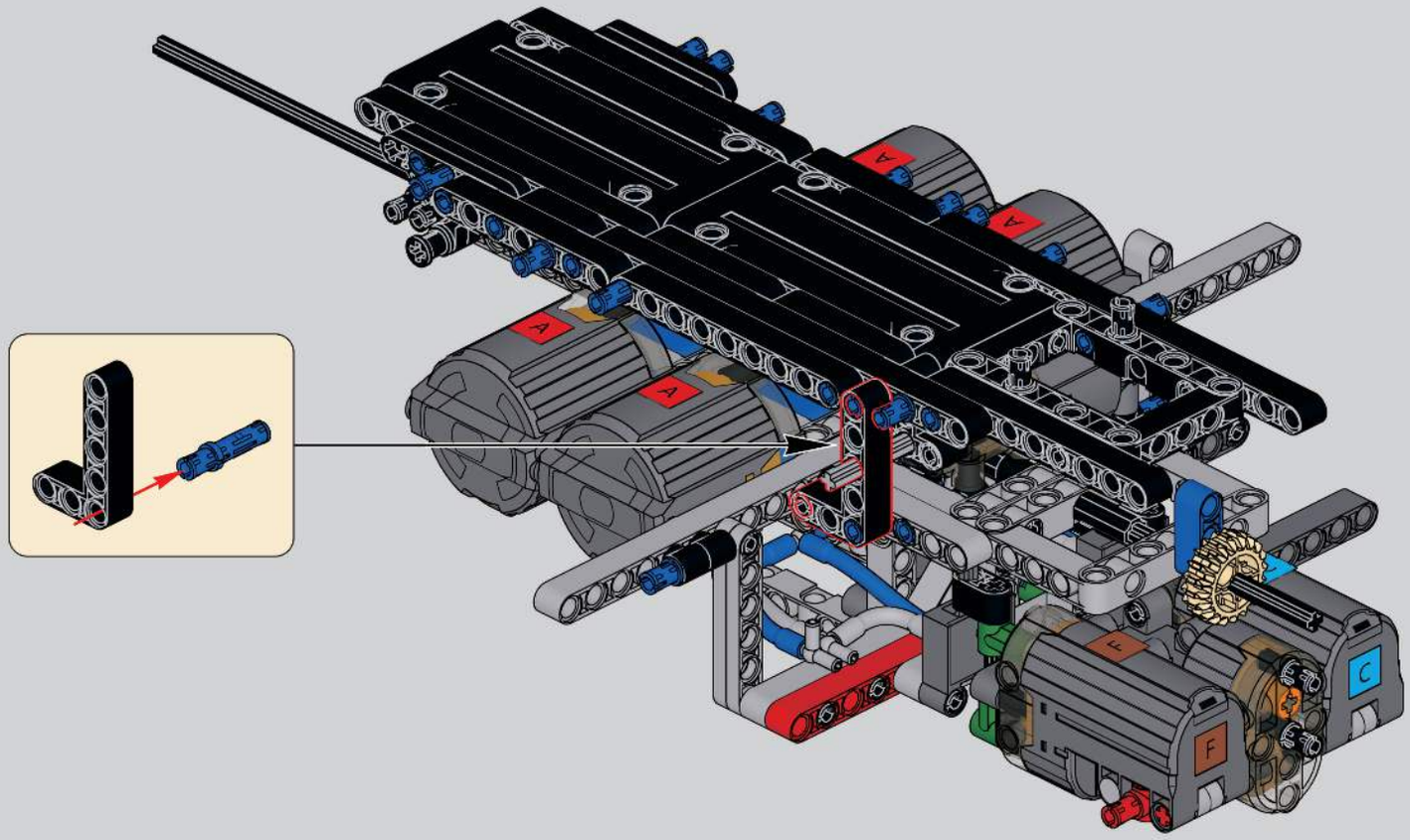

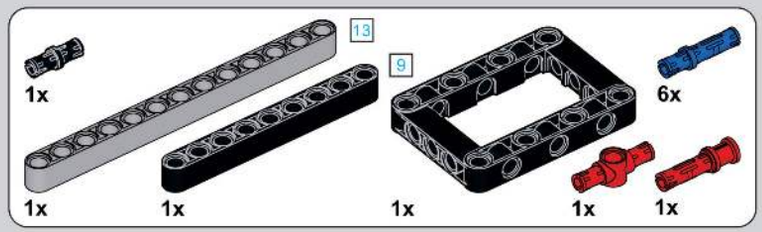

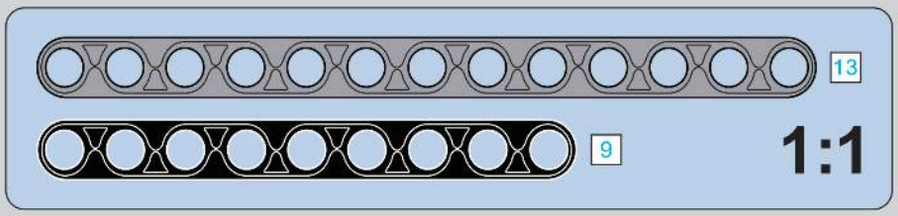

48

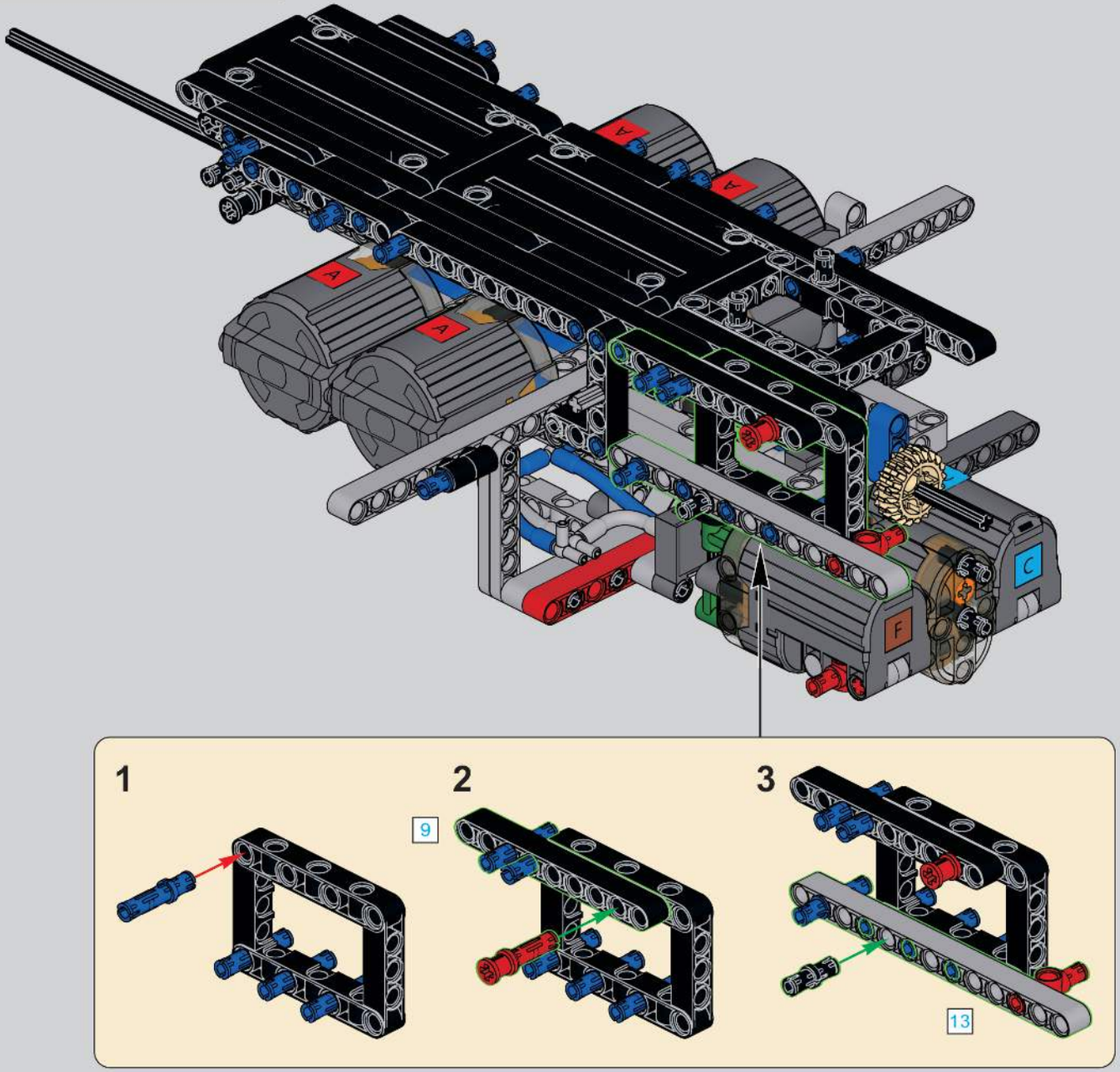

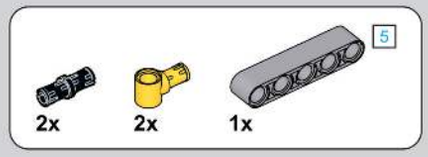

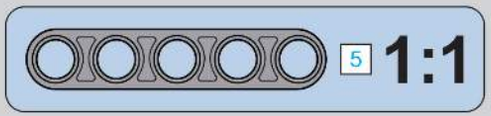

49

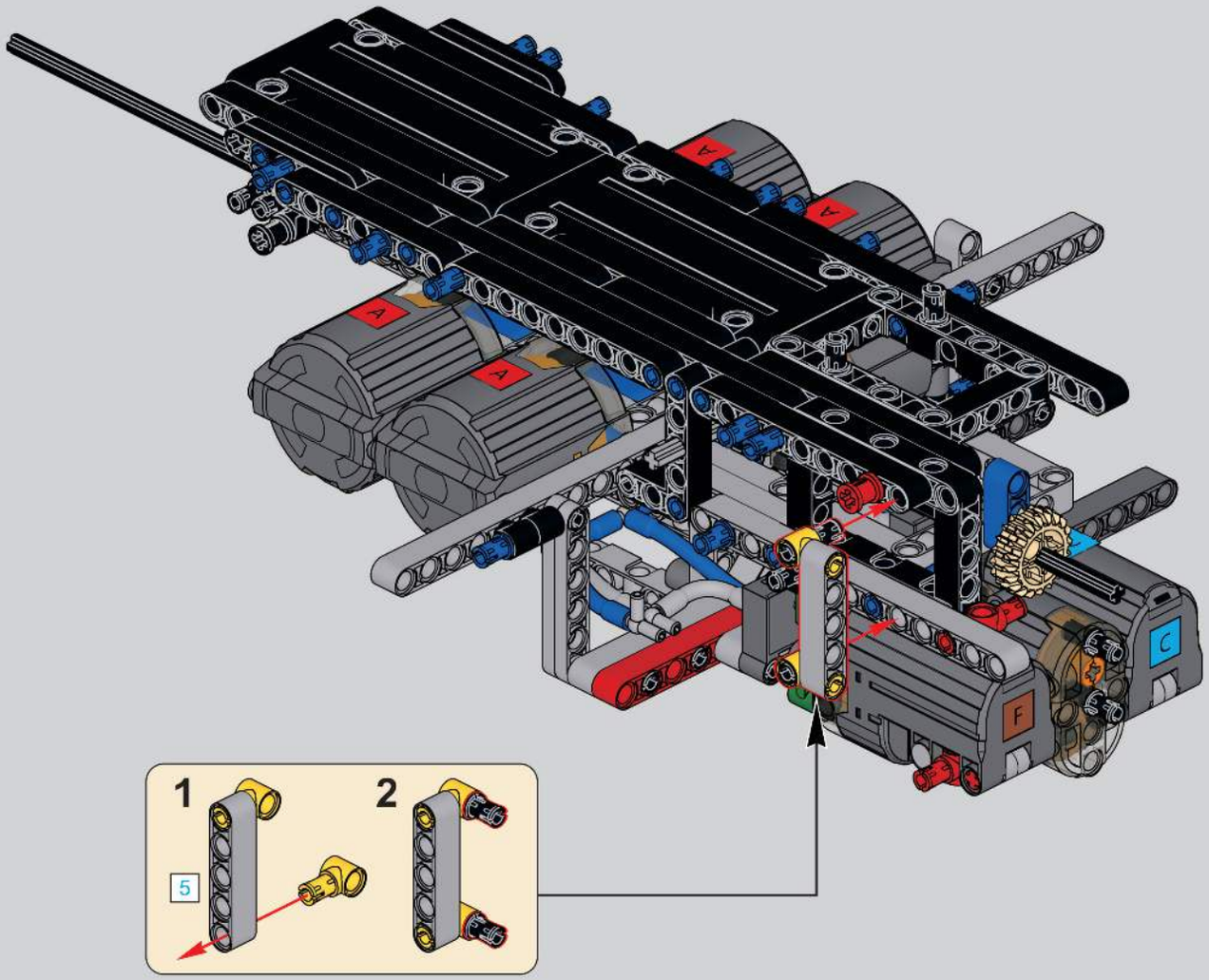

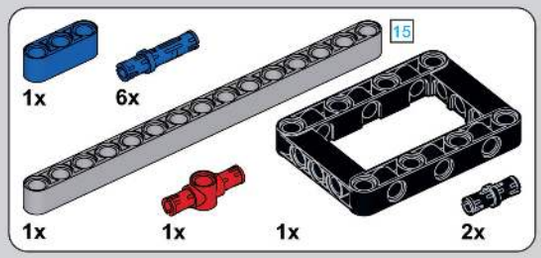

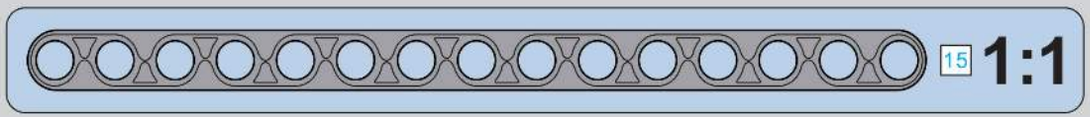

50

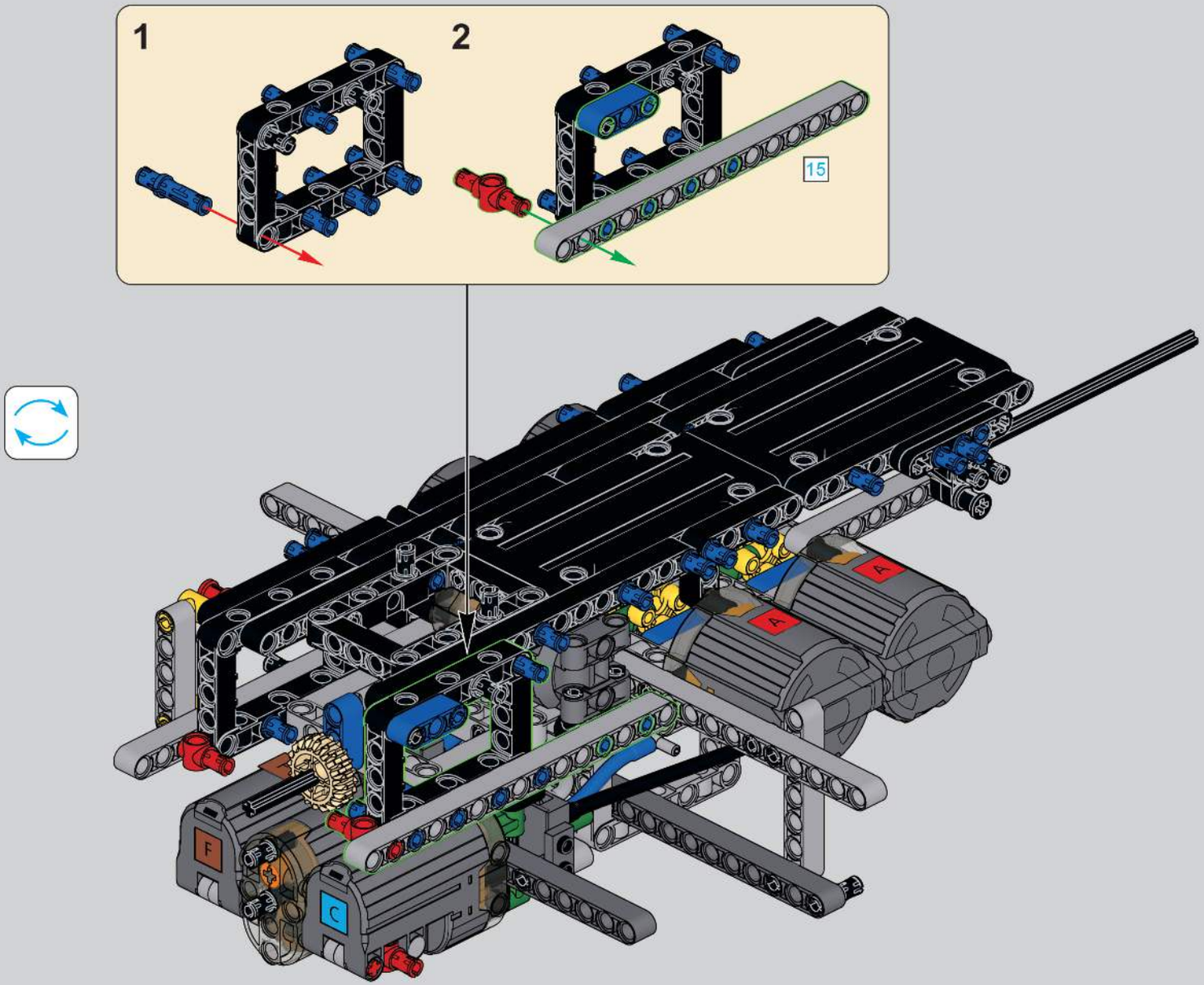

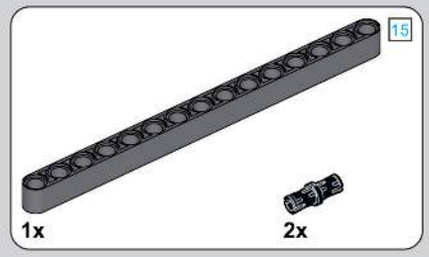

51

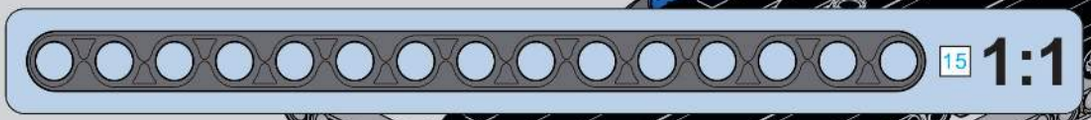

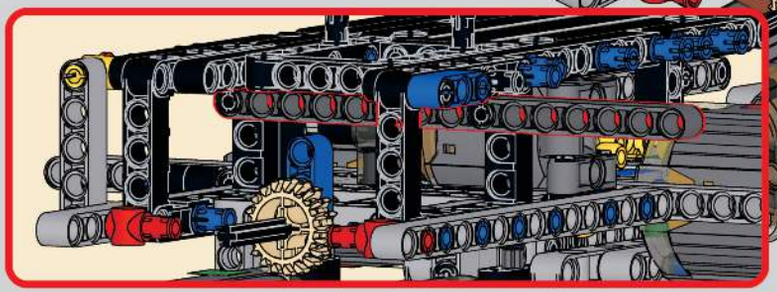

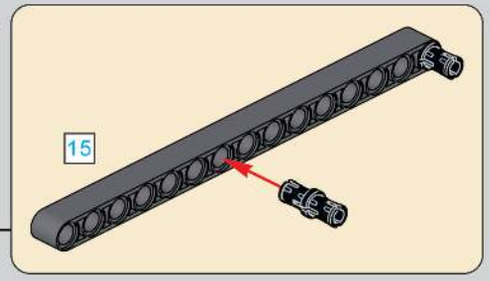

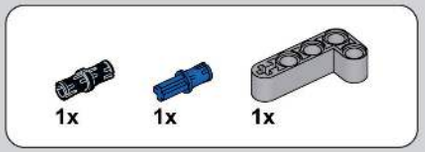

52

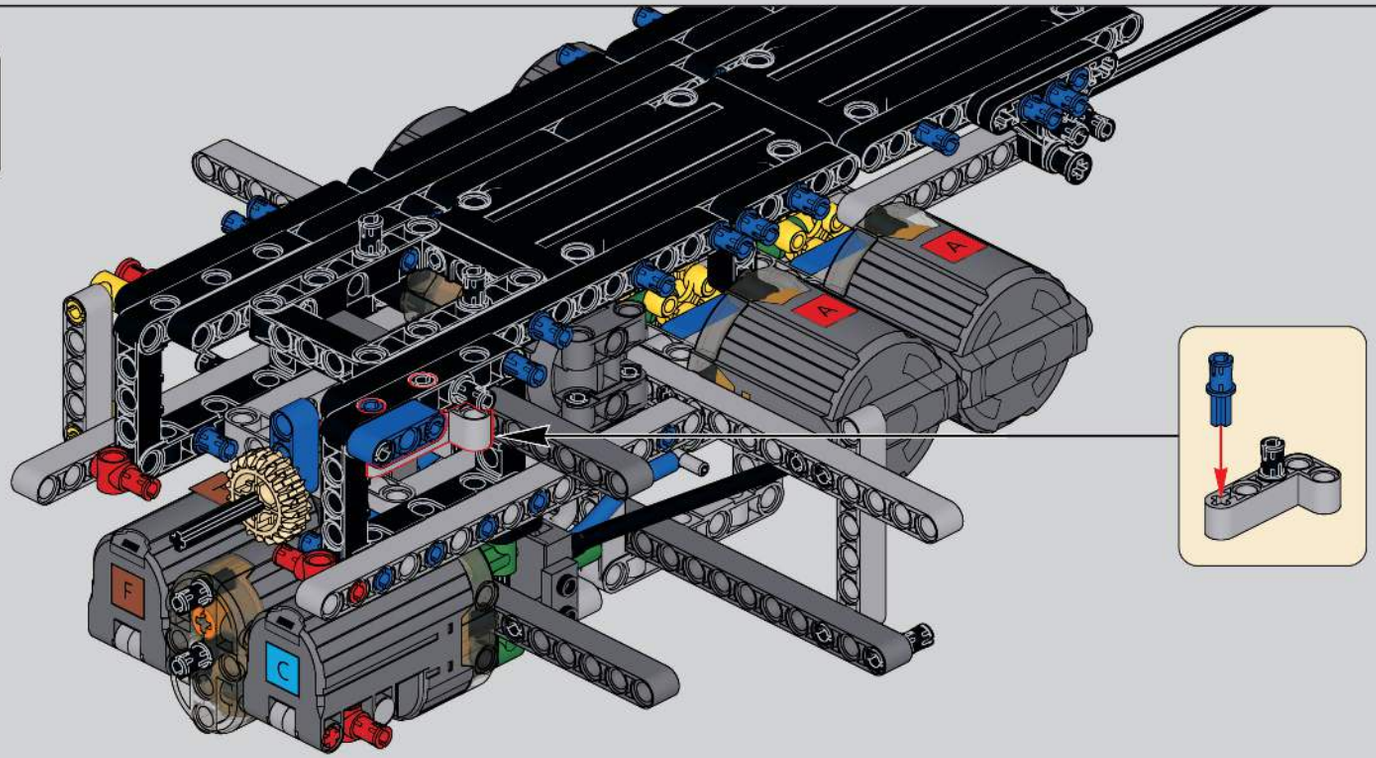

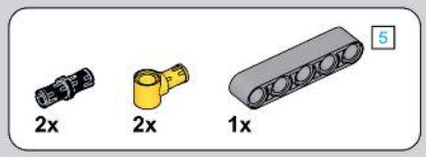

53

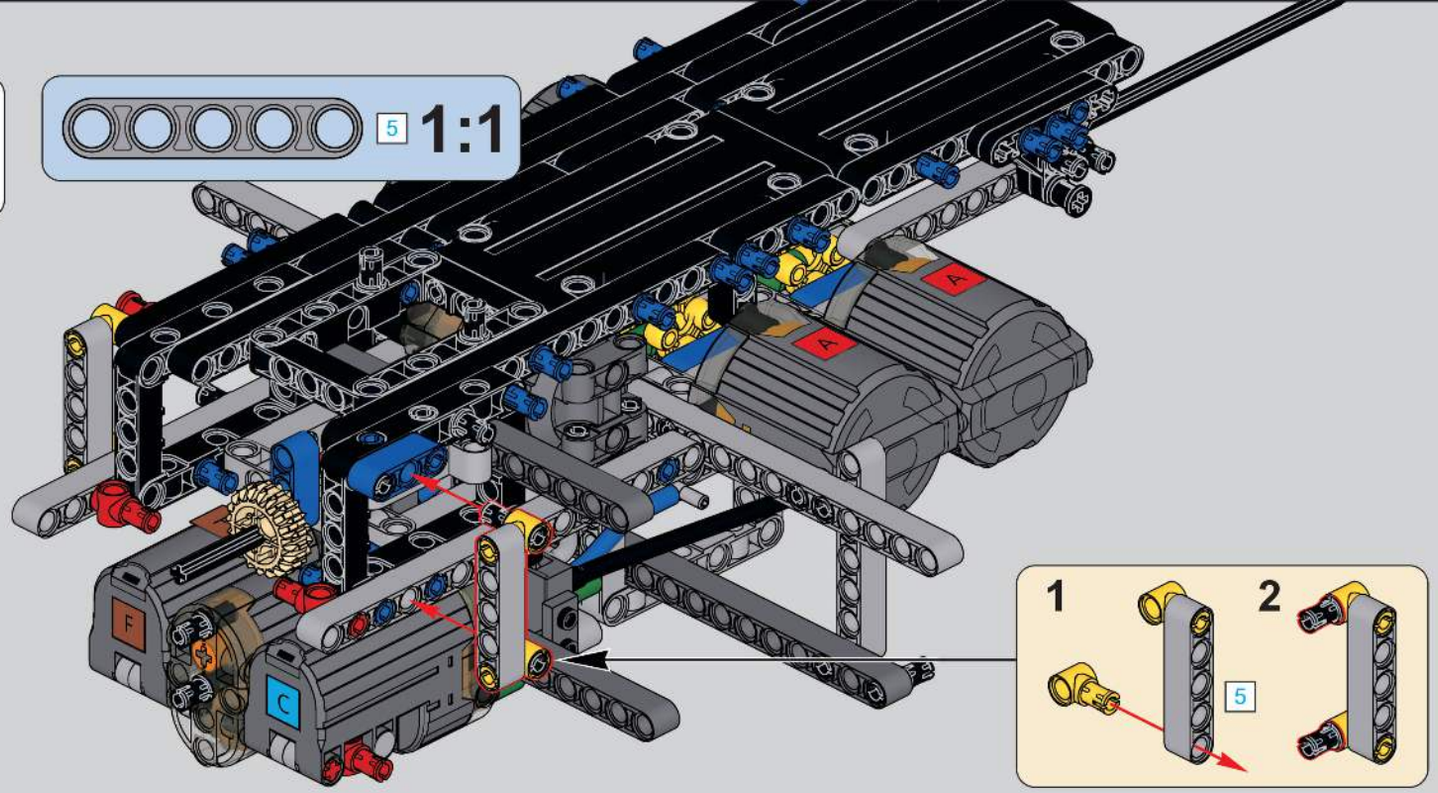

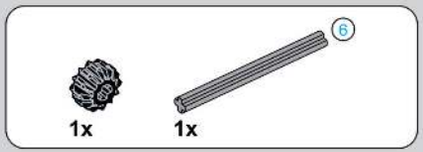

54

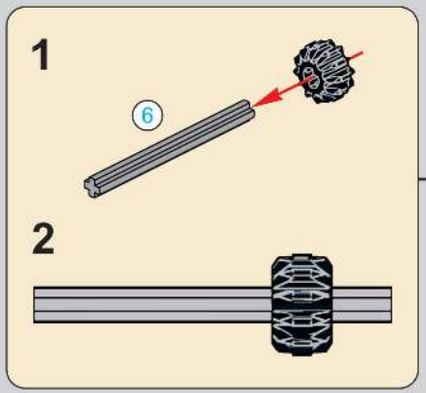

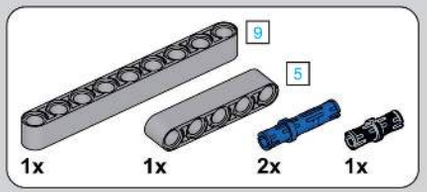

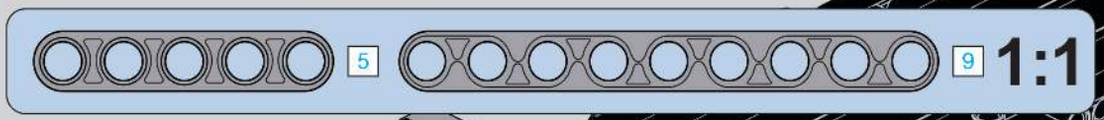

55

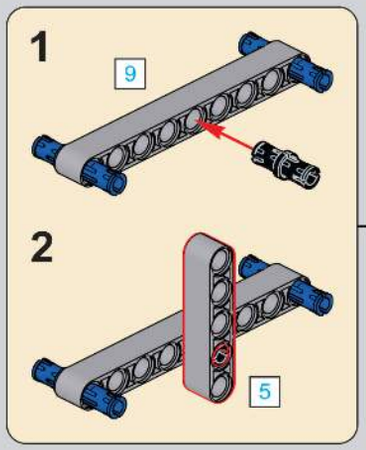

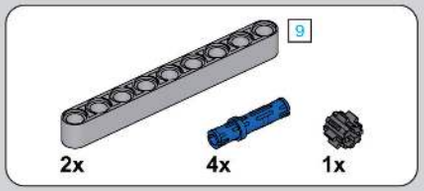

56

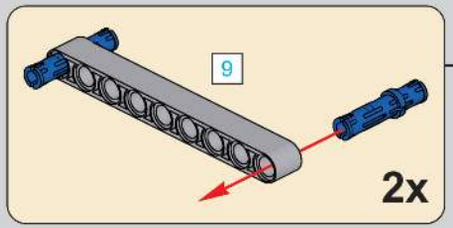

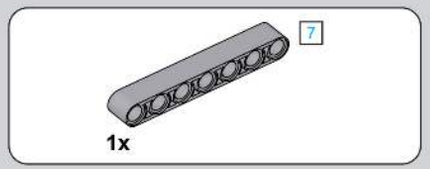

57

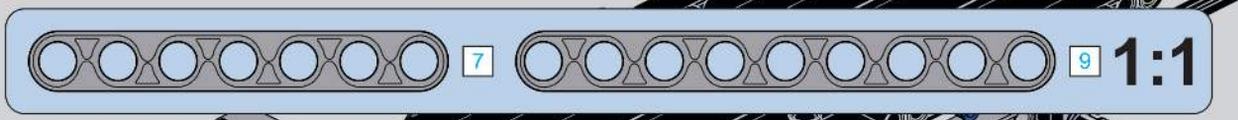

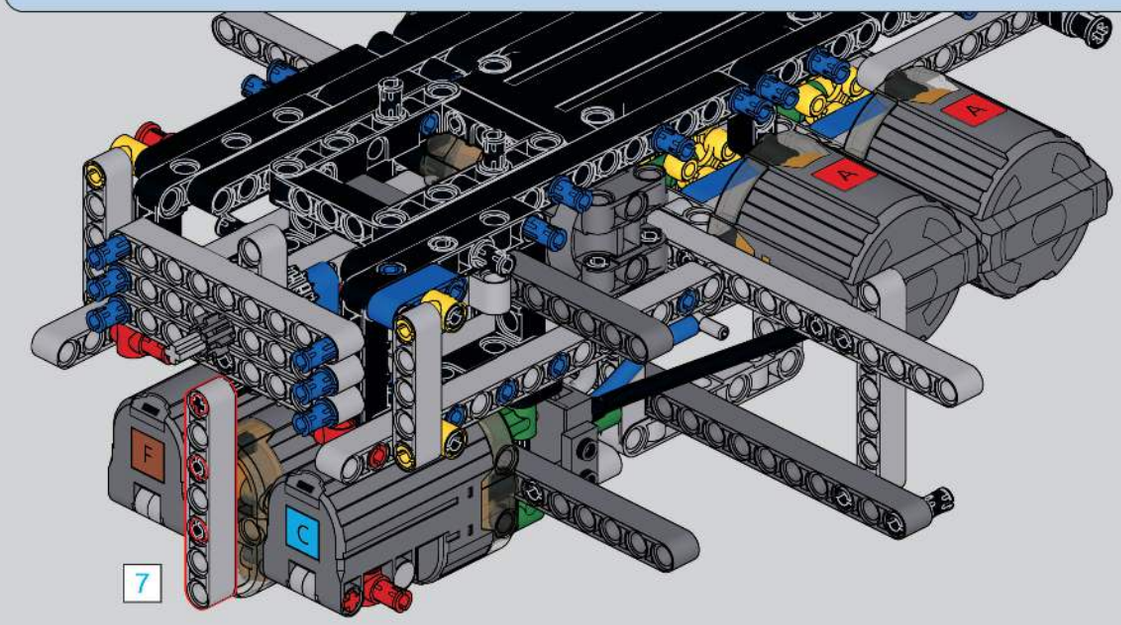

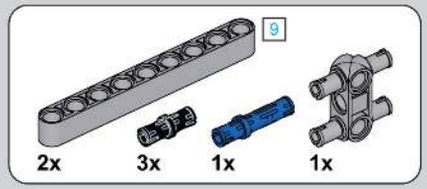

58

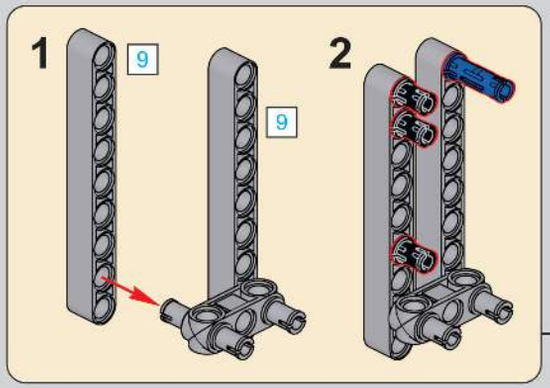

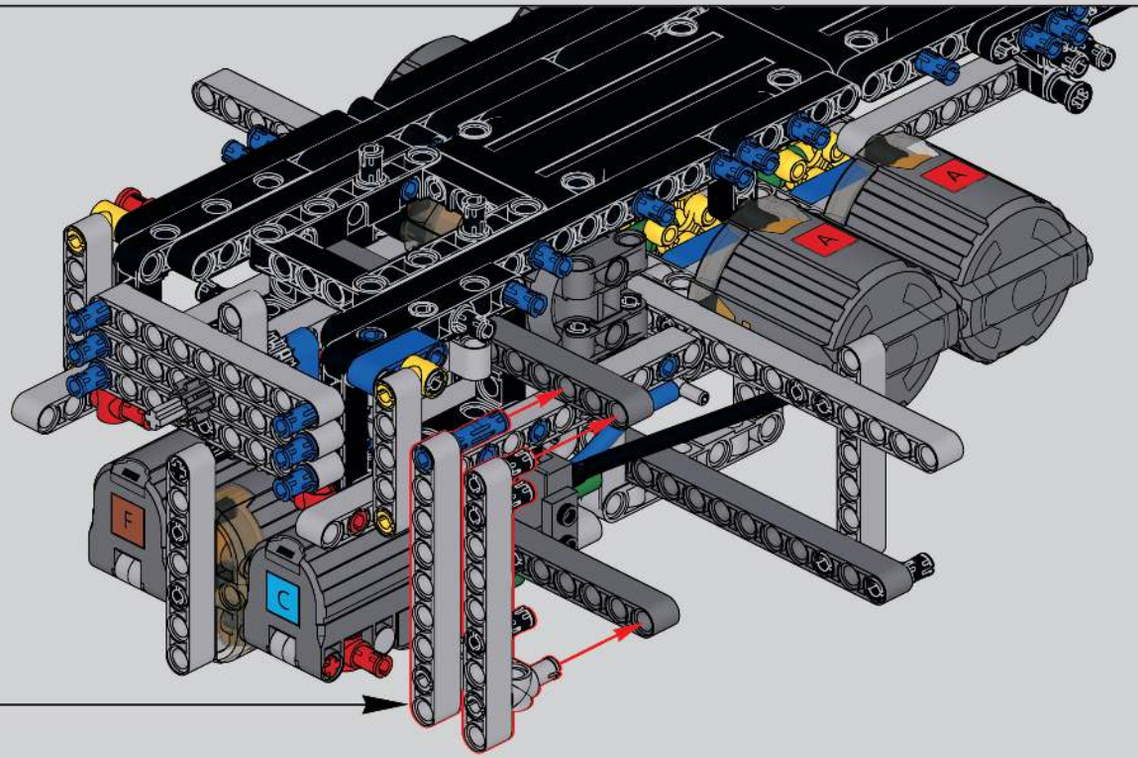

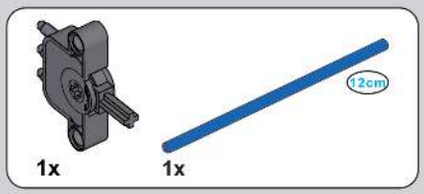

59

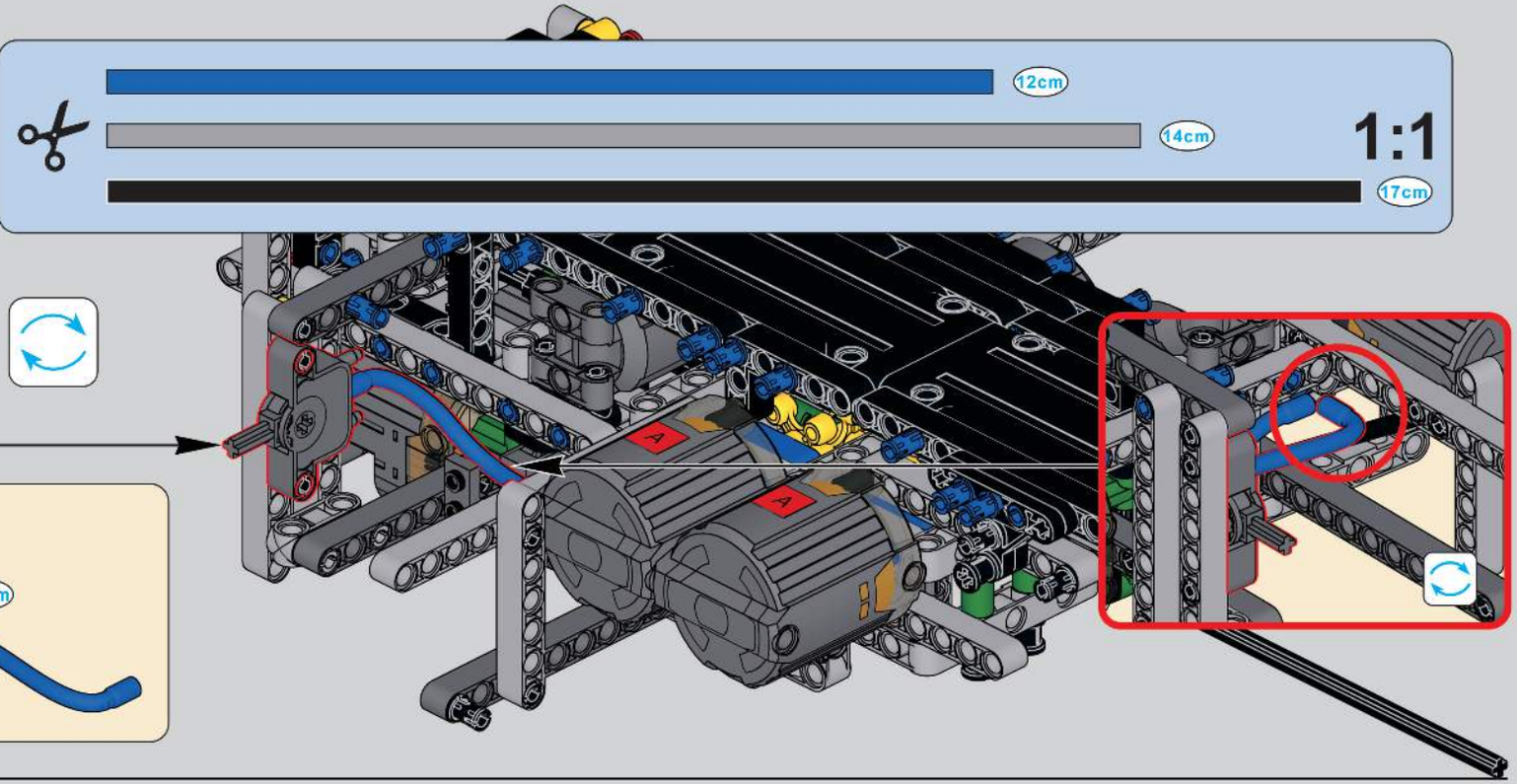

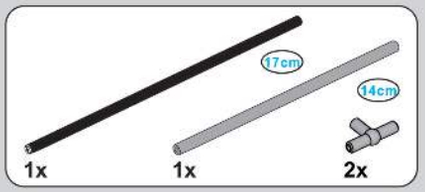

60

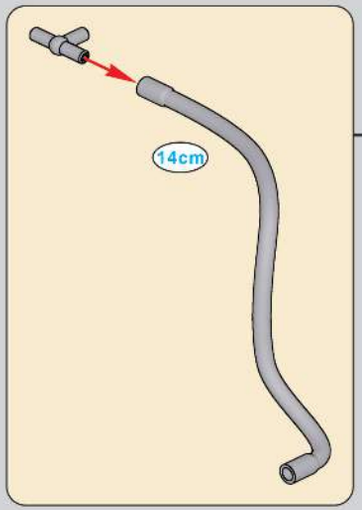

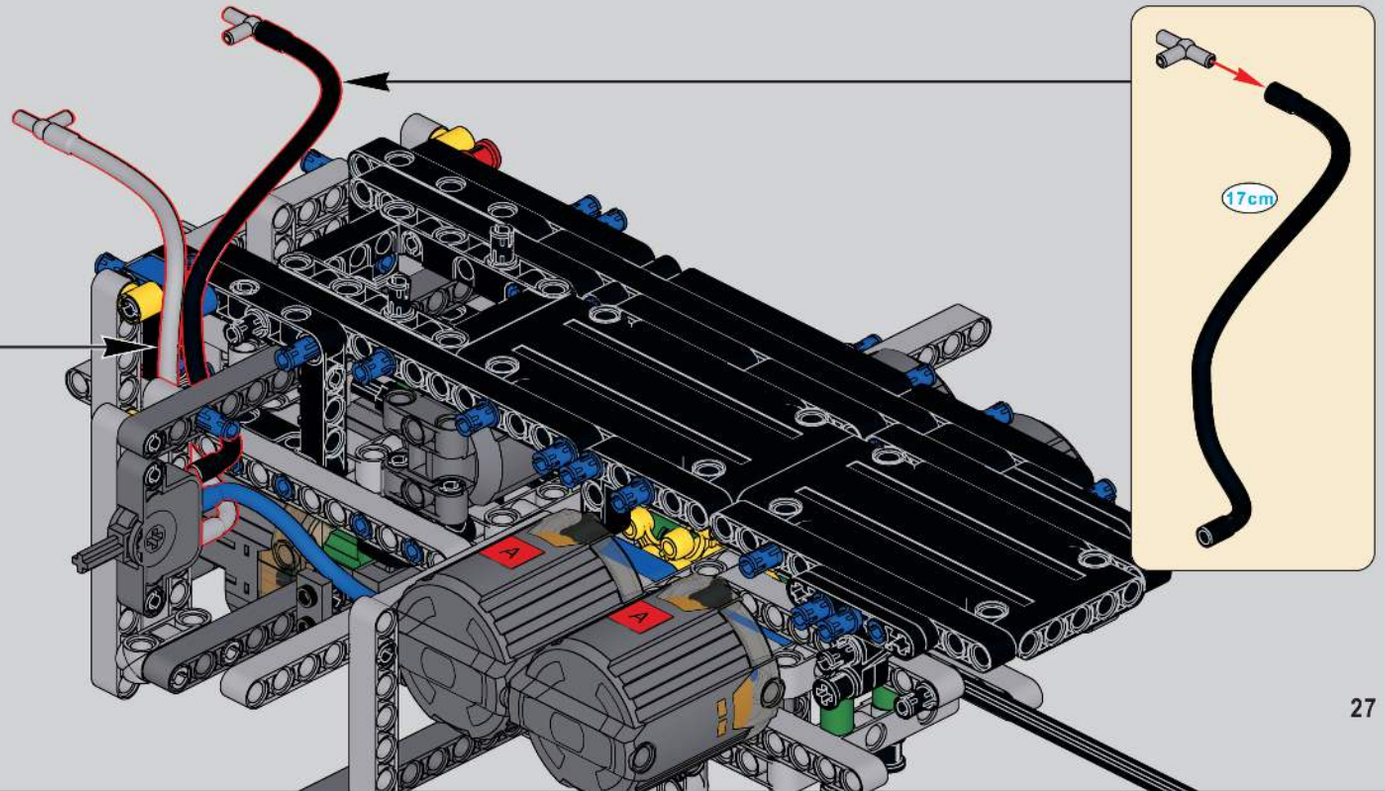

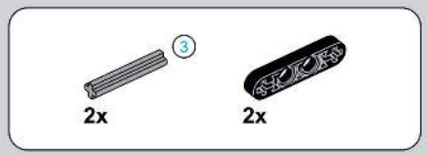

61

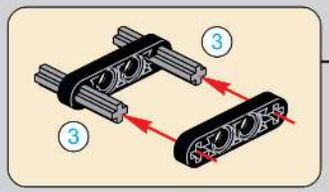

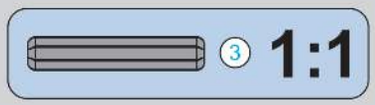

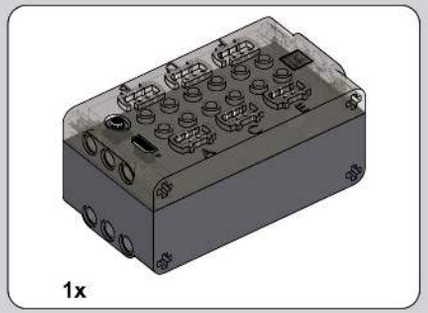

62

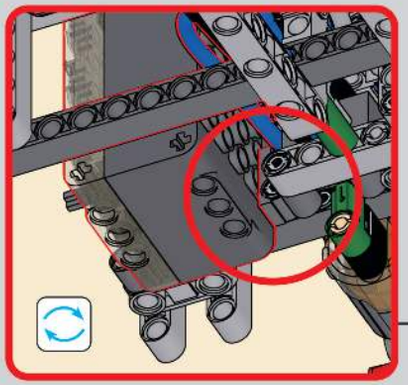

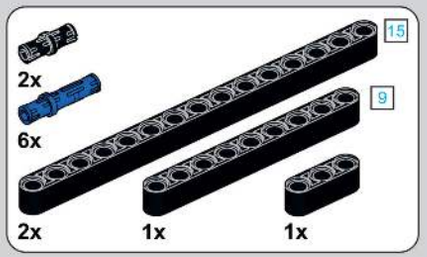

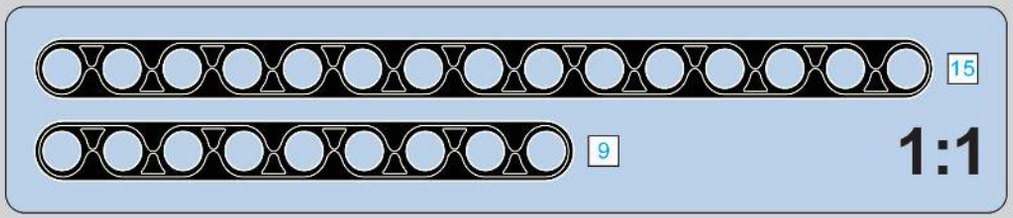

63

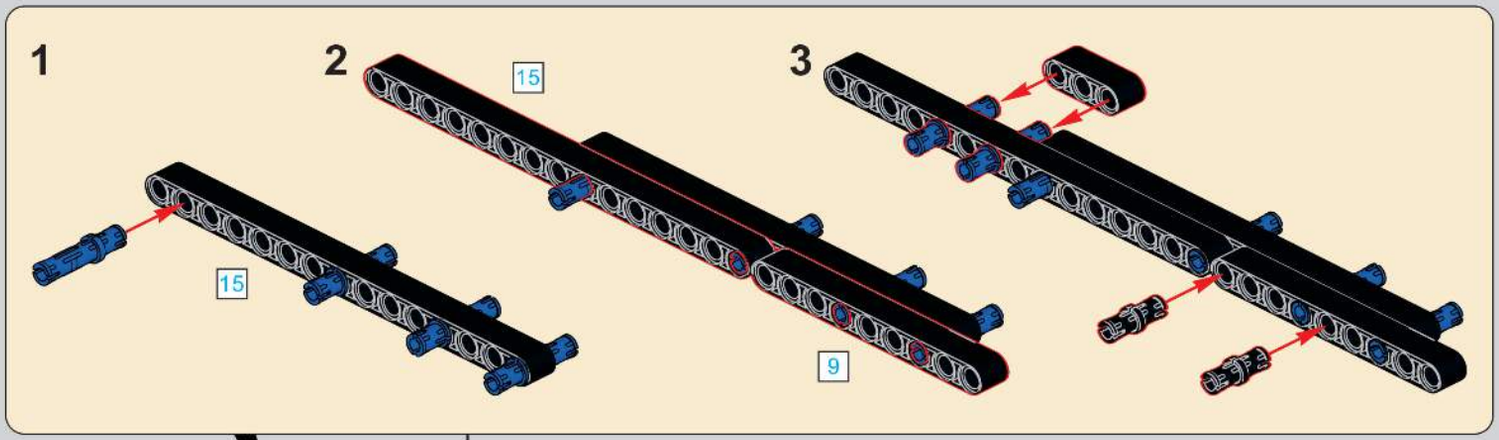

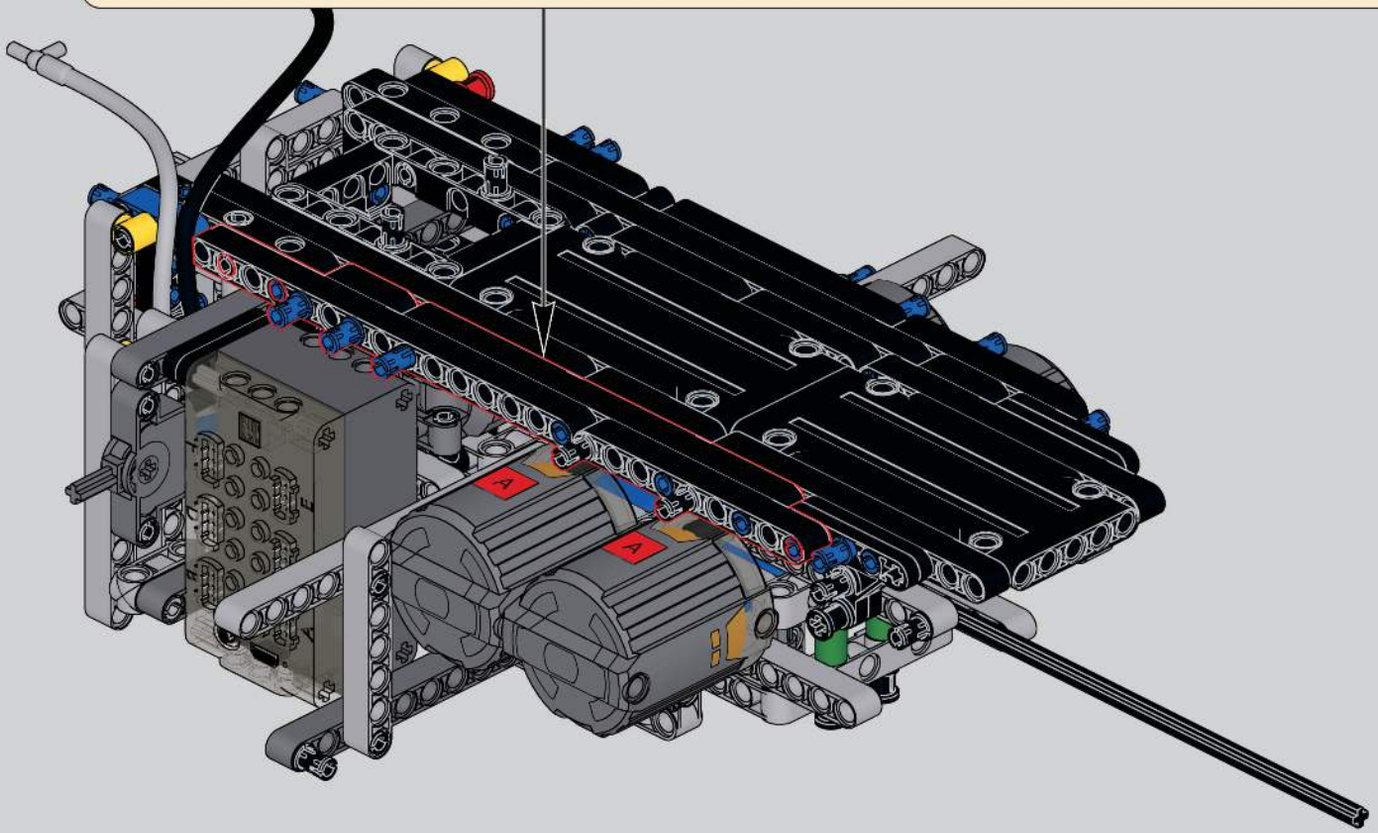

64

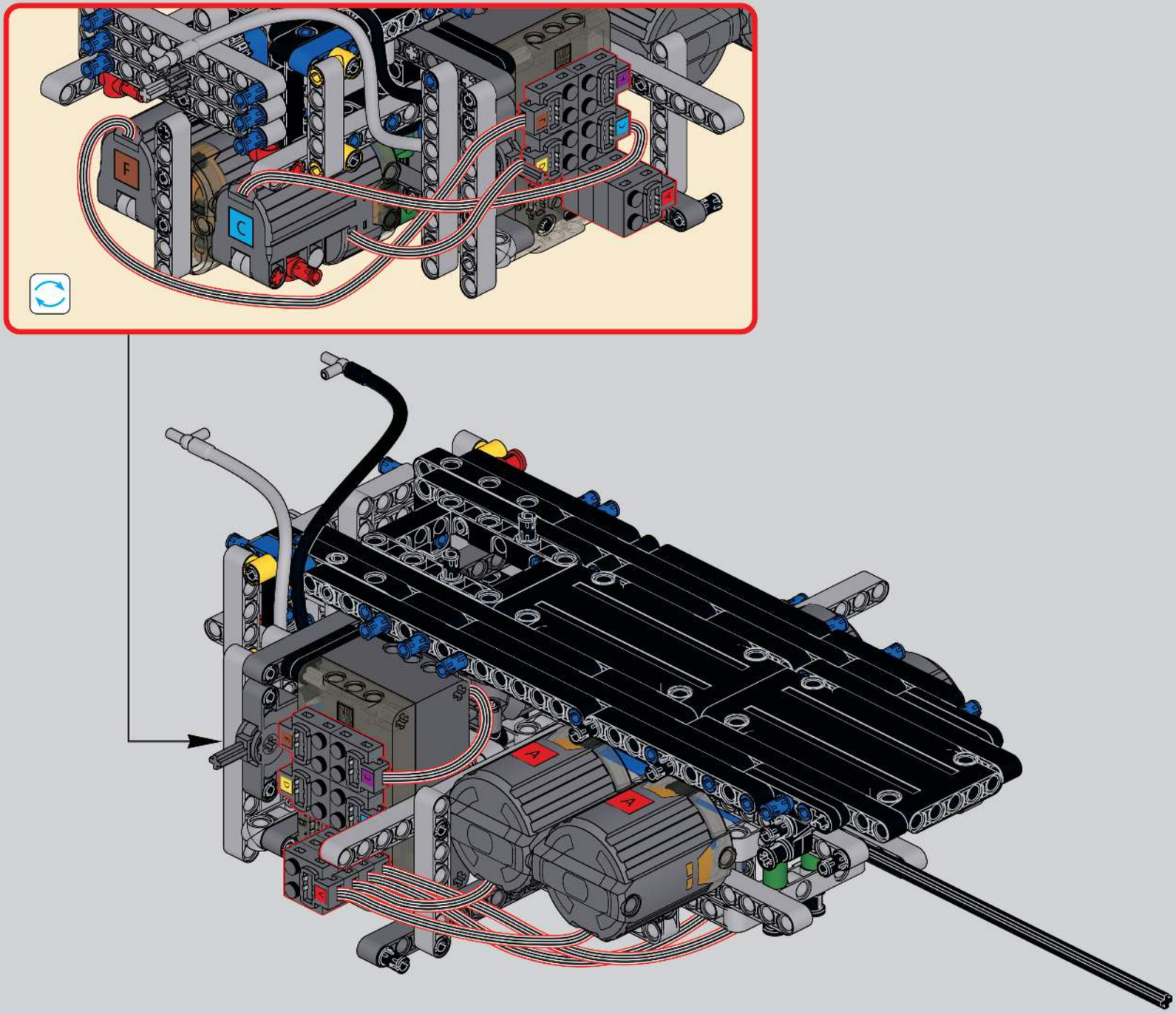

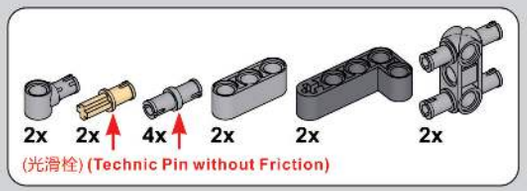

65

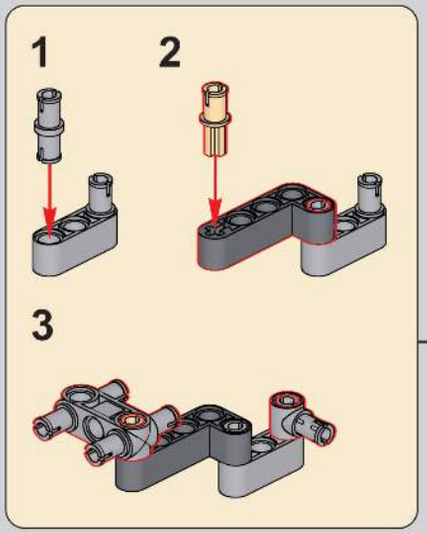

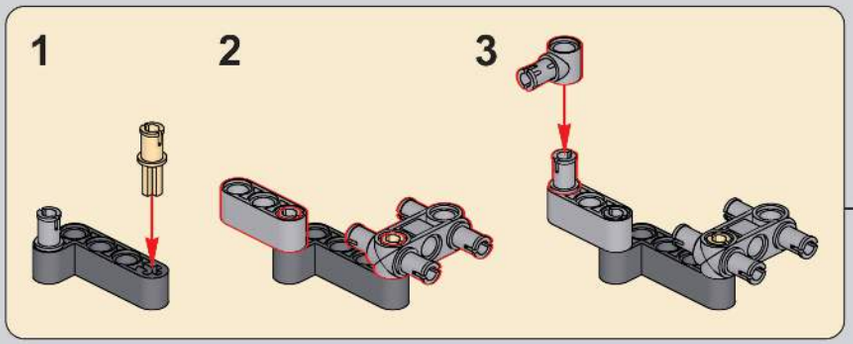

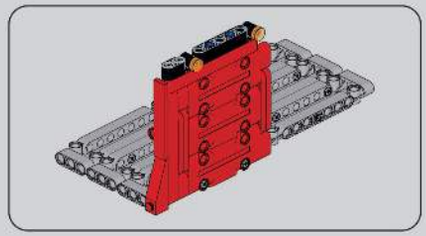

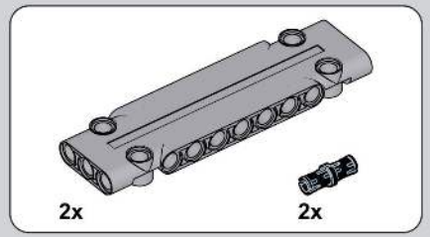

66

67

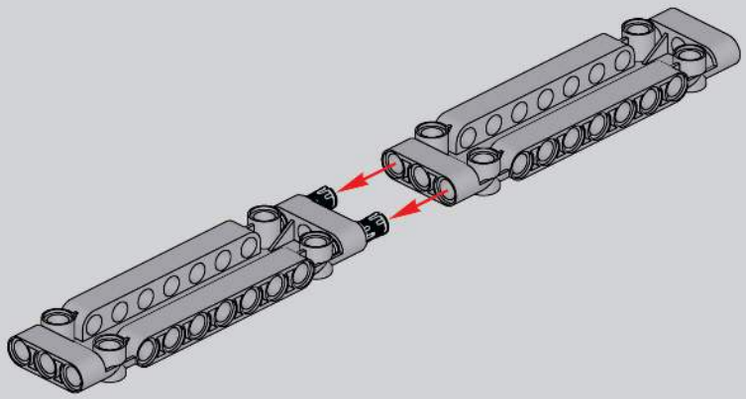

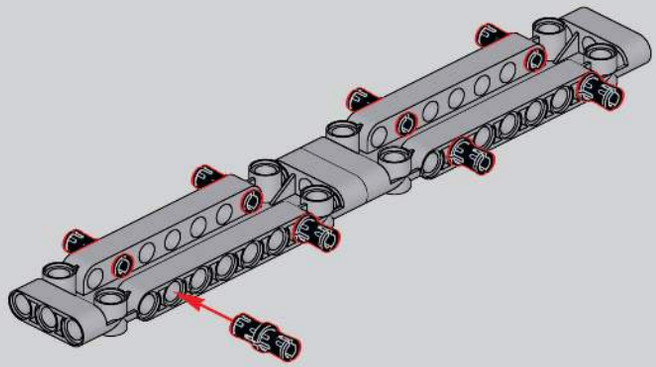

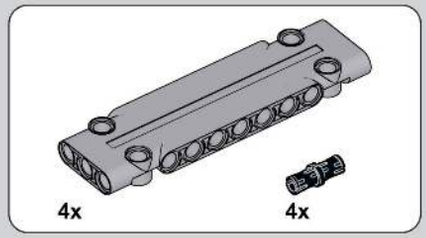

68

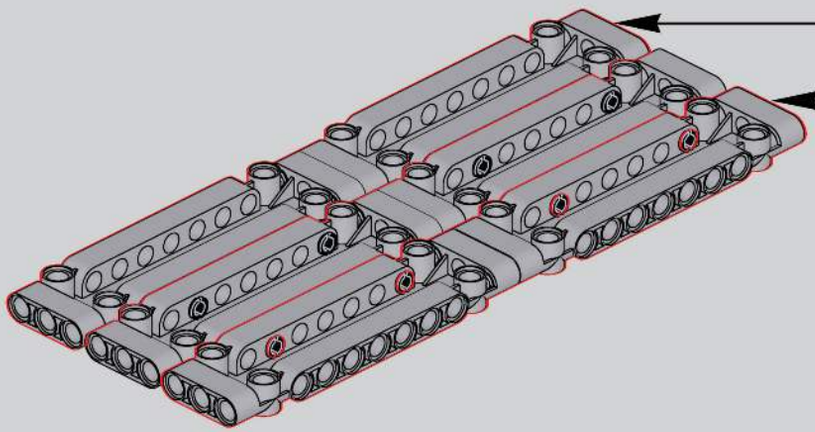

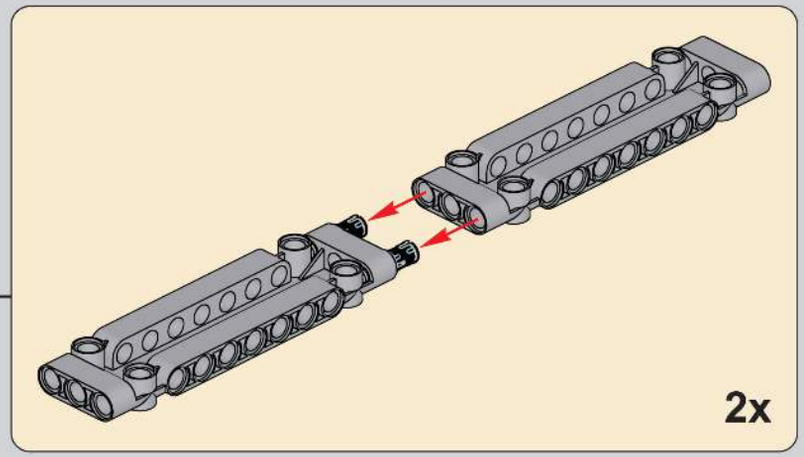

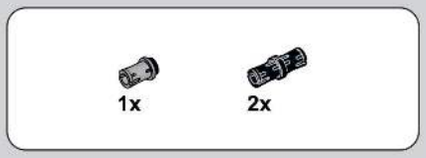

69

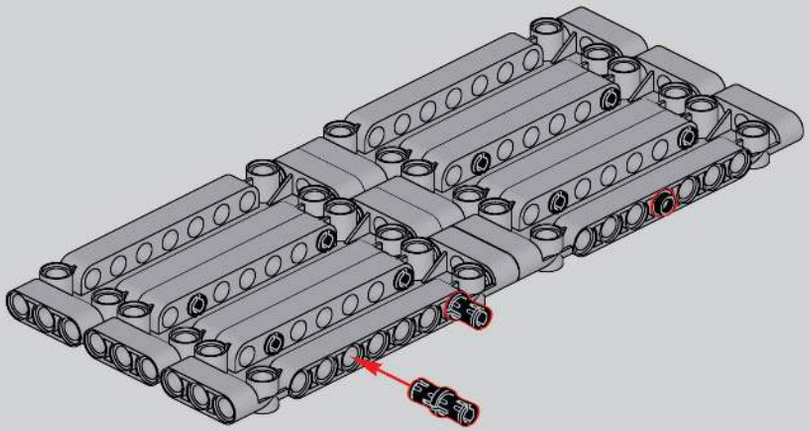

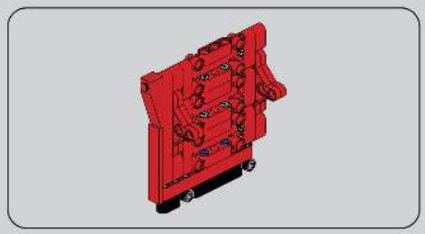

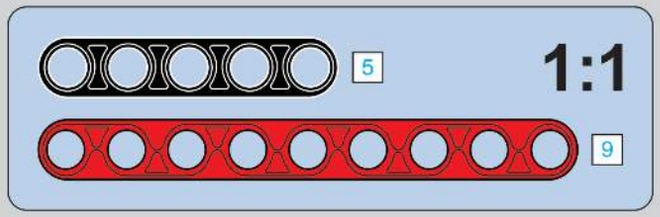

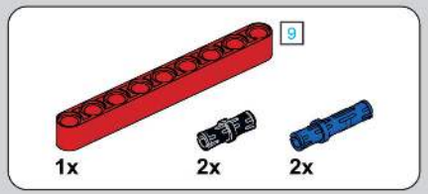

70

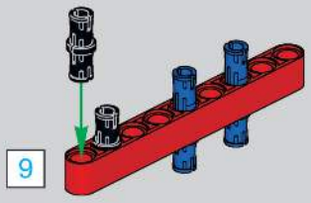

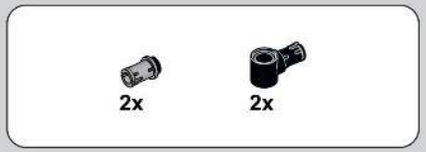

71

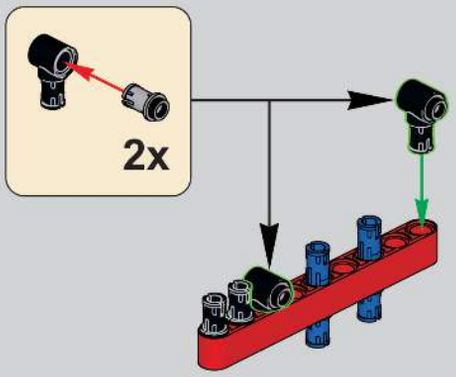

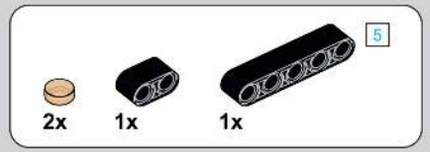

72

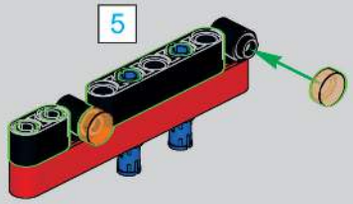

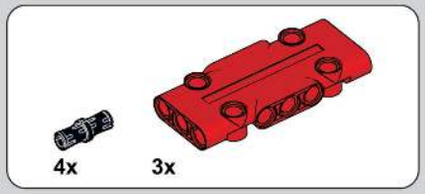

73

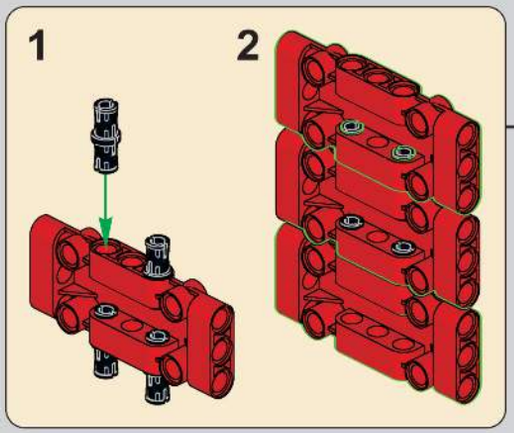

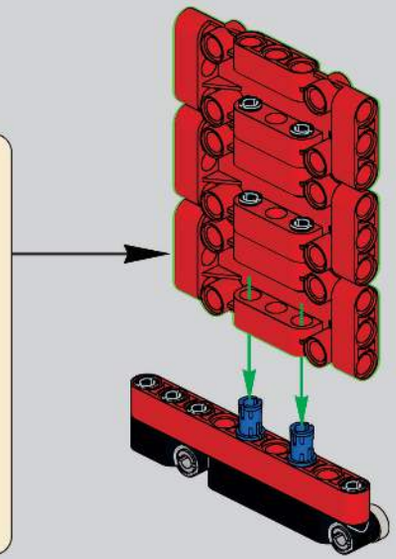

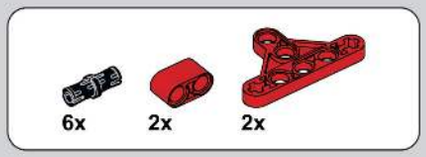

74

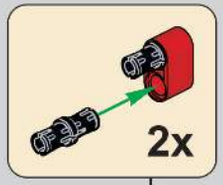

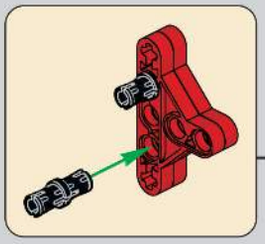

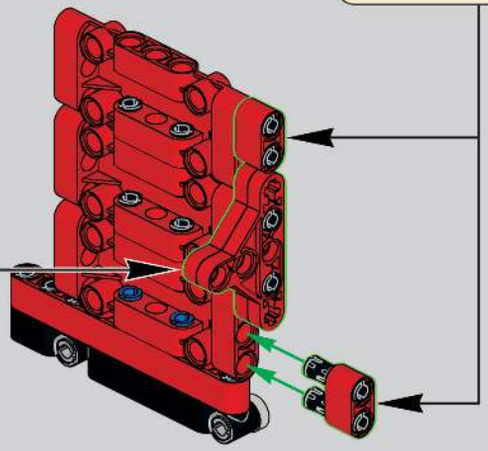

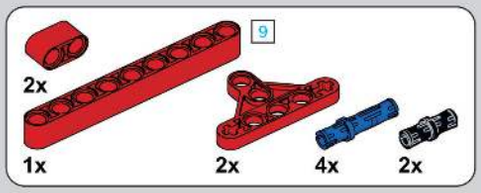

75

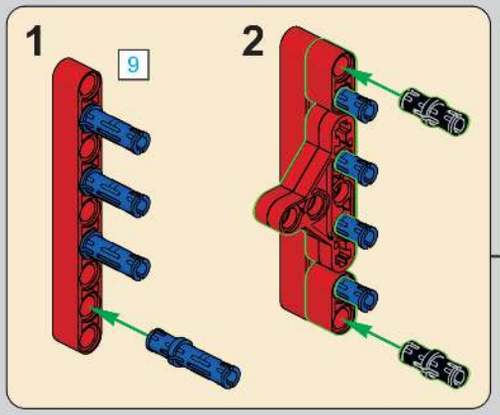

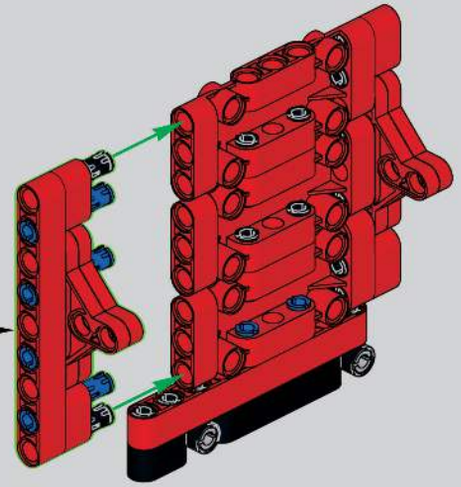

76

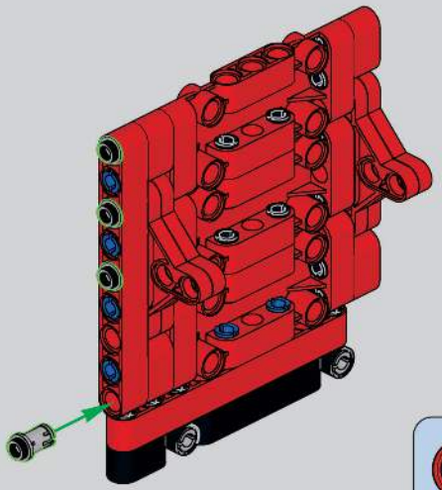

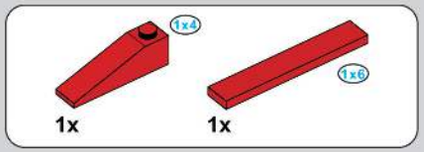

77

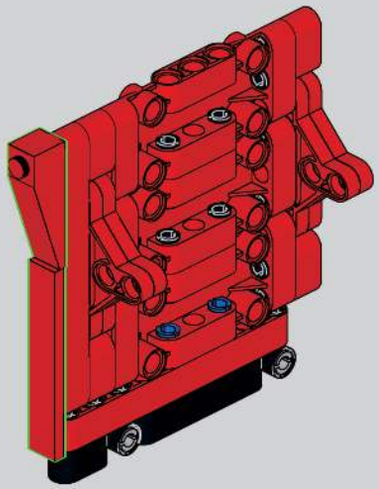

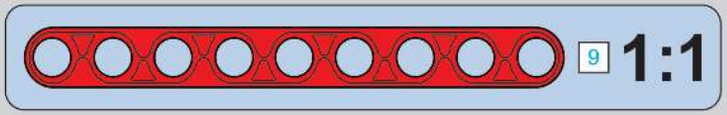

78

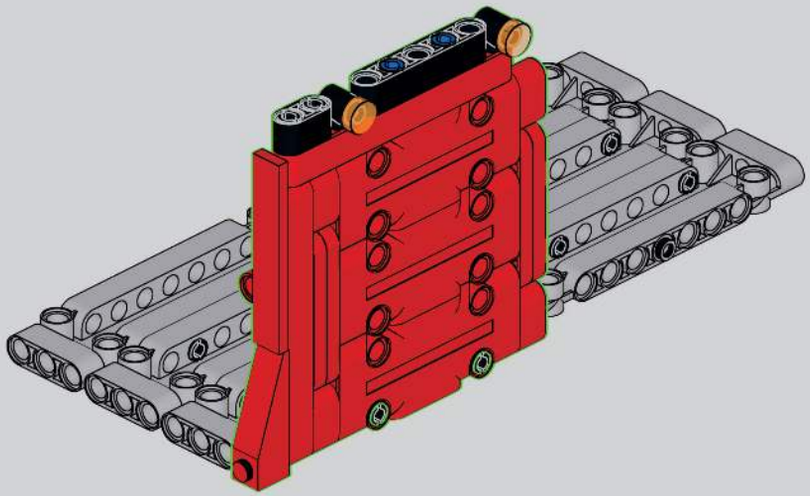

79

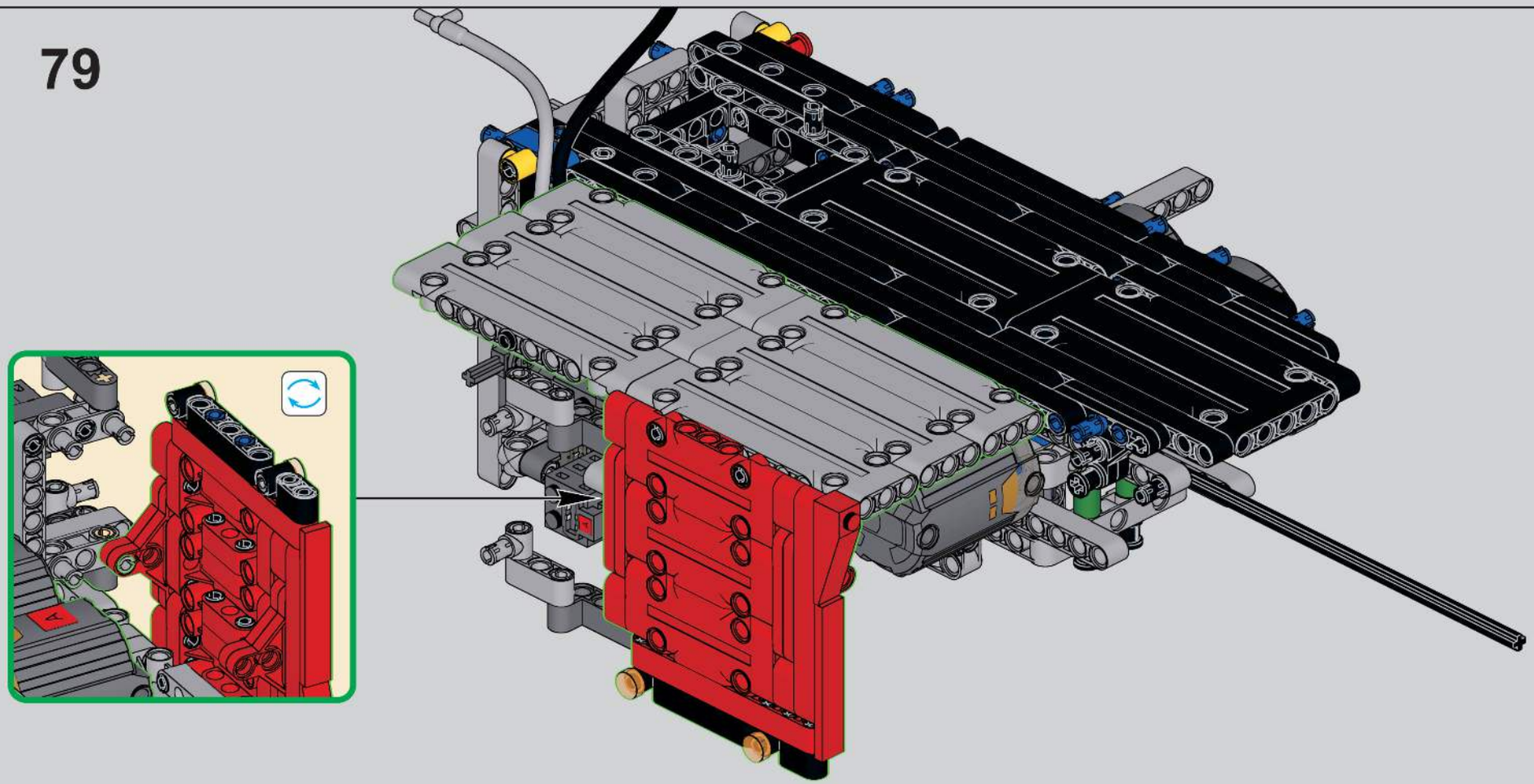

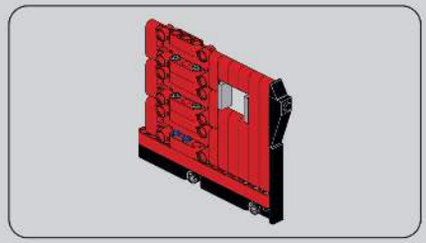

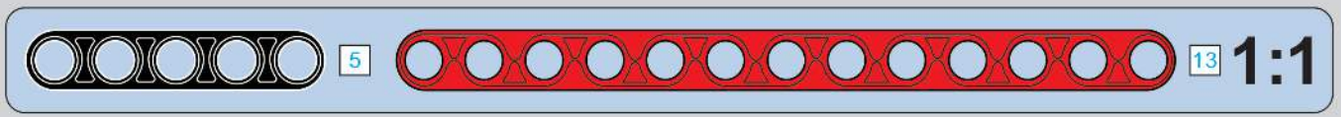

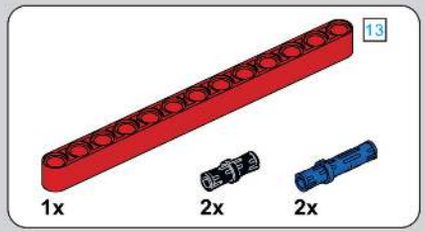

80

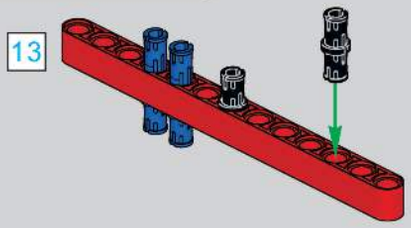

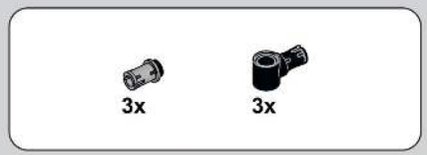

81

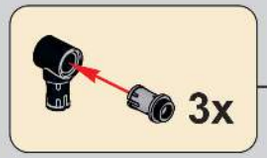

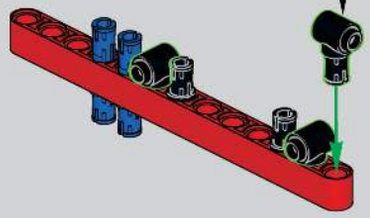

82

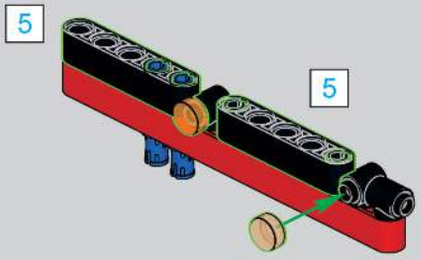

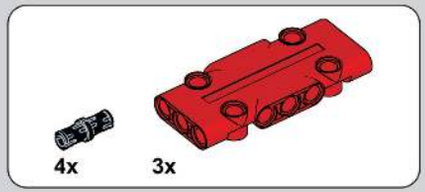

83

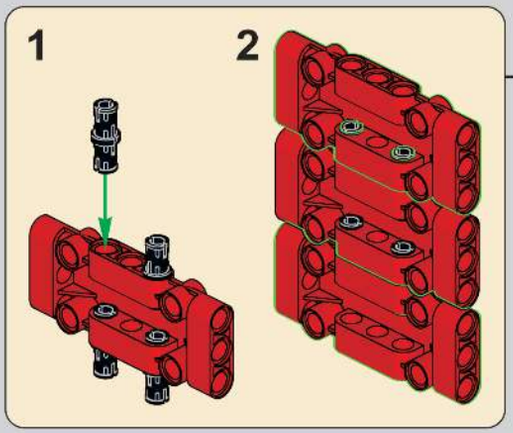

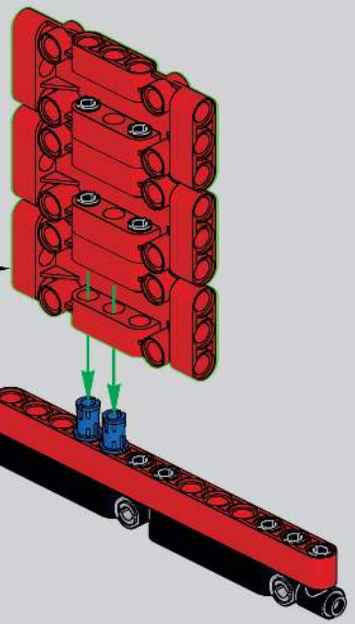

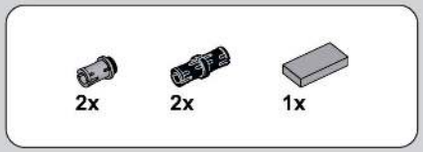

84

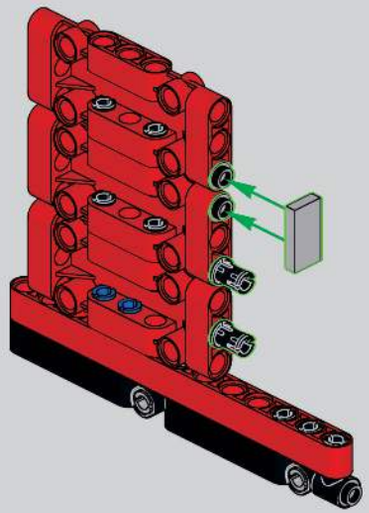

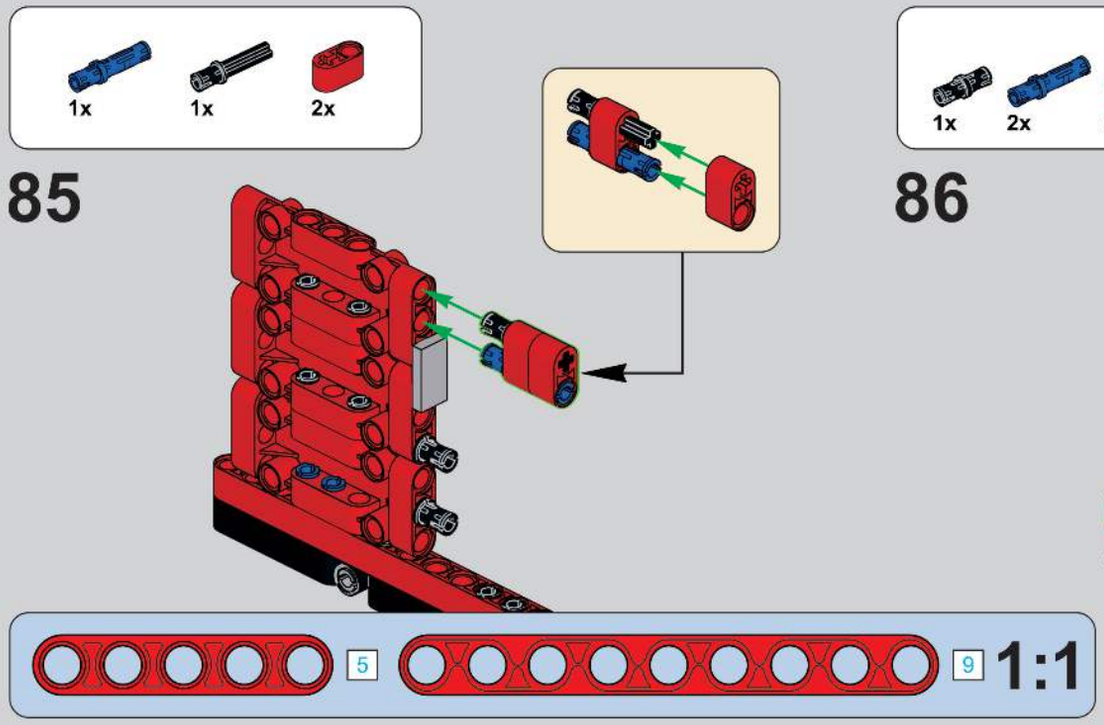
1x
1x
2x
85
5
9
1:1

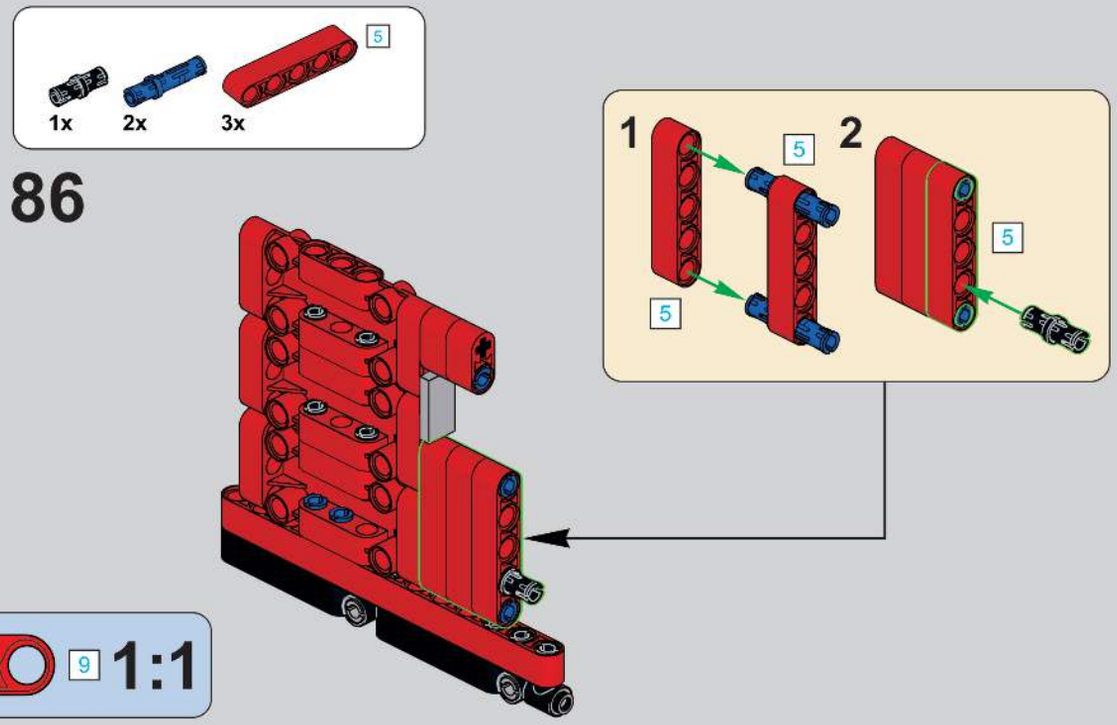
1x
2x
3x
5
86
1
2
5
5
5

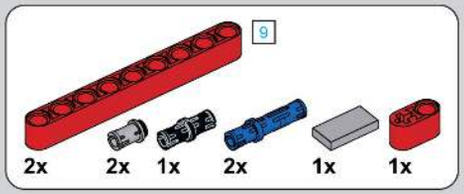
9
2x
2x
1x
2x
1x
1x

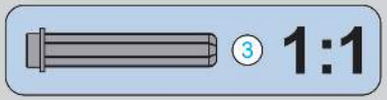
3
1:1

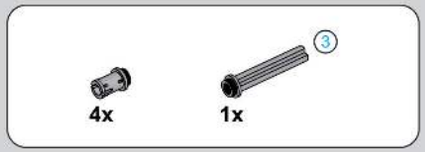
3
4x
1x

87

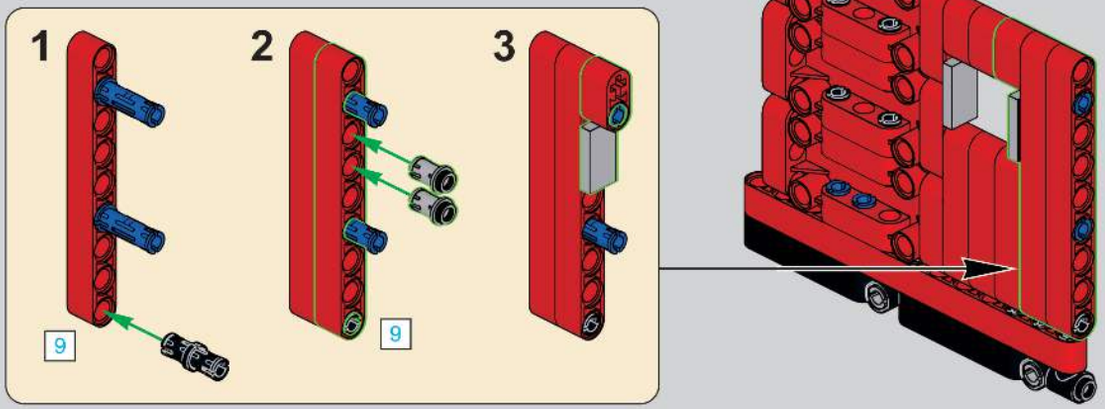
1
2
3
9
9

88

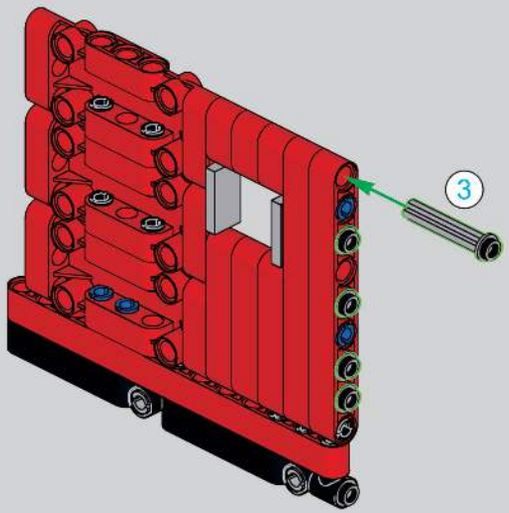
3

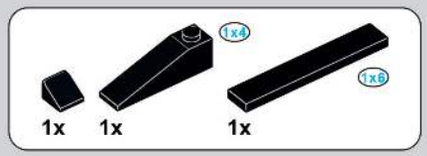

89

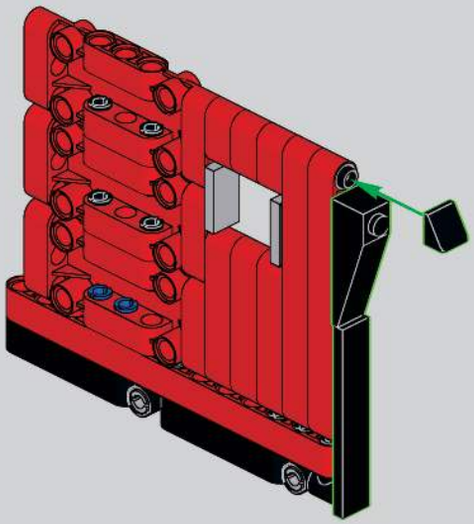

90

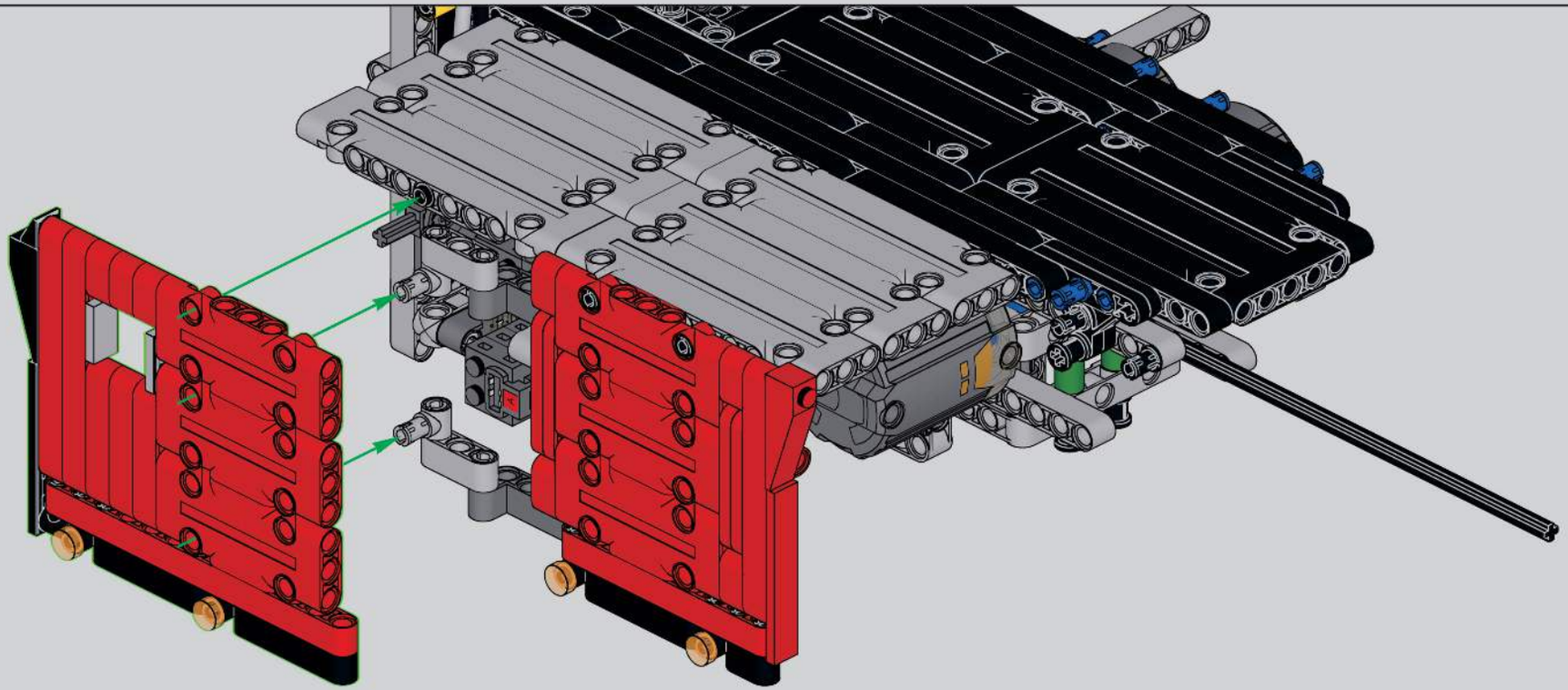

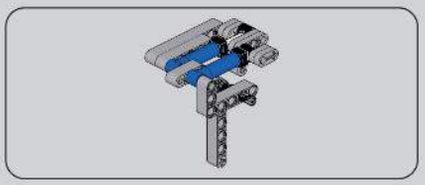

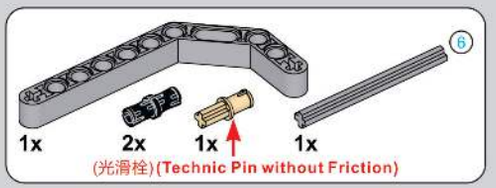

91

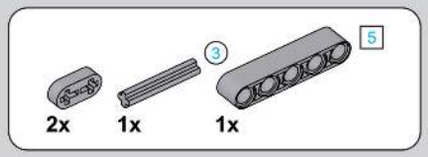

92

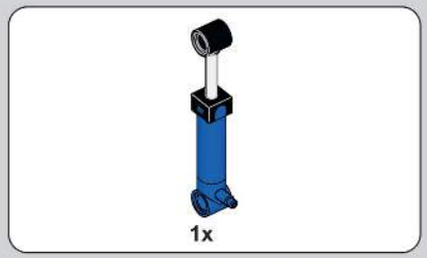

93

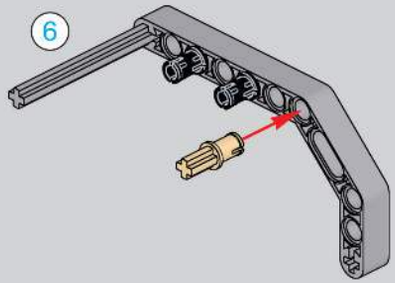

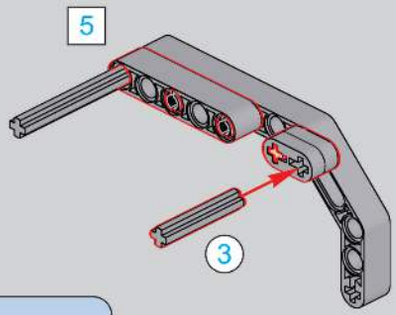

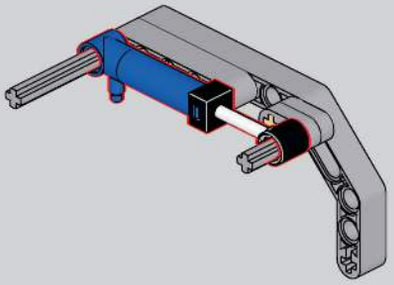

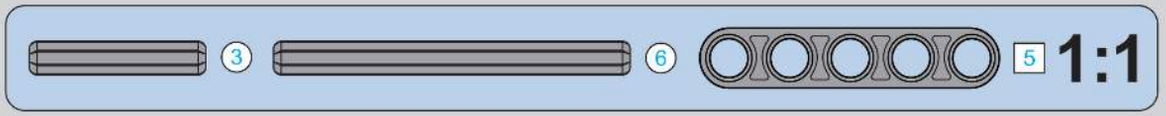

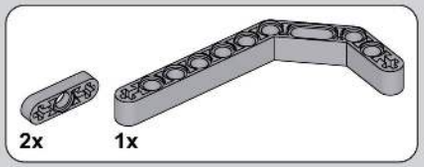

94

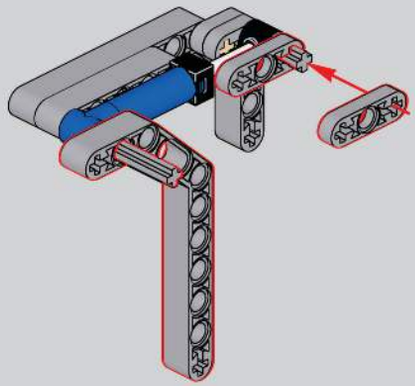

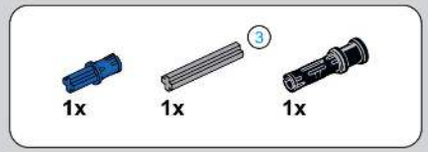

95

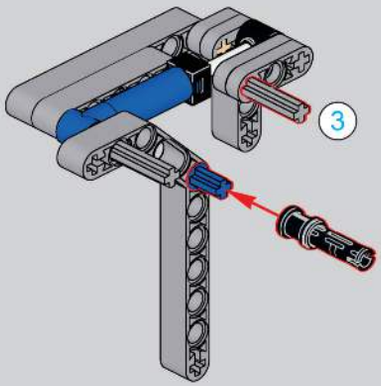

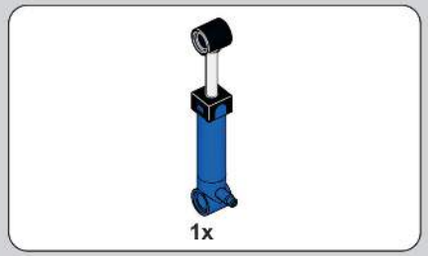

96

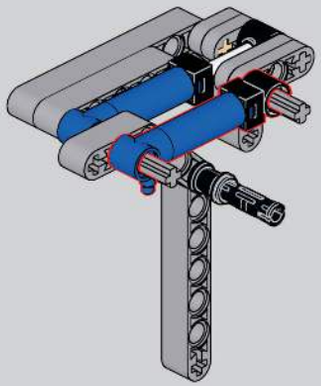

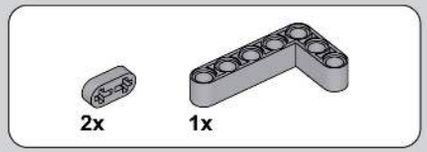

97

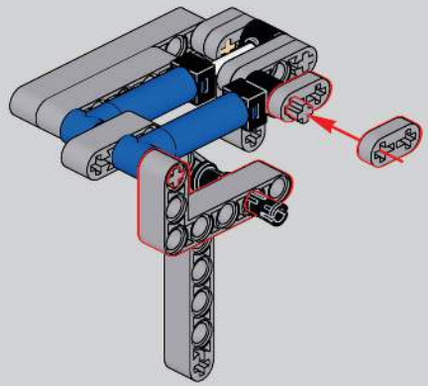

98

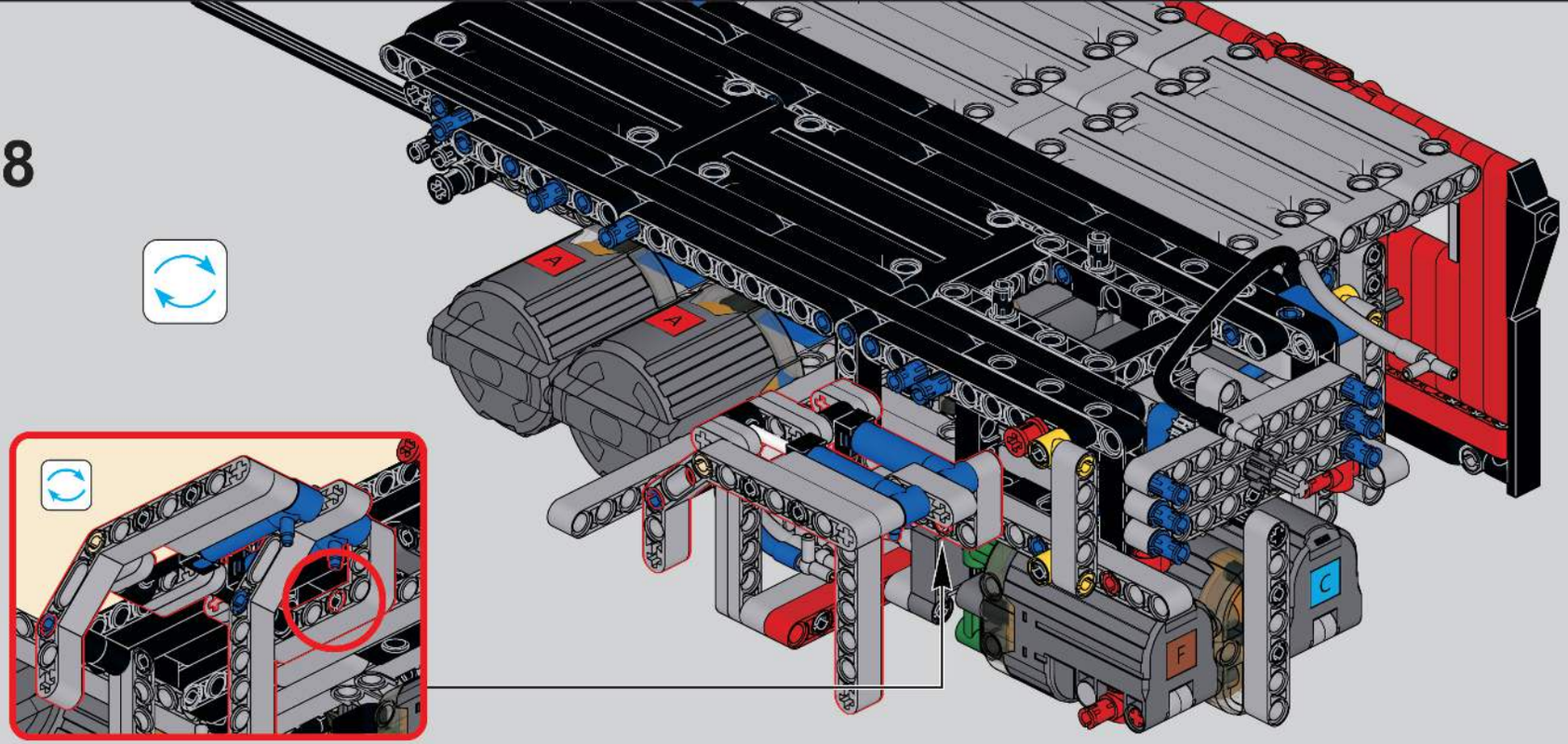

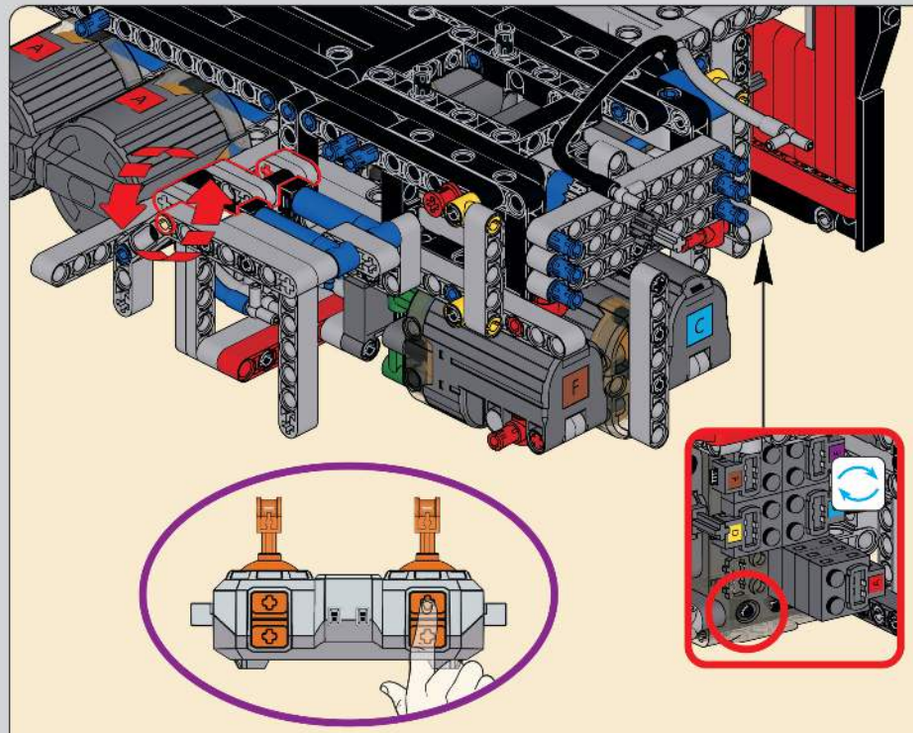

在此处打开模块并打开遥控器连接，长按遥控器左前端按键（E键），测试打气杆是否能正常转动，如果不正常请仔细排查原因，测试完毕需将模块和遥控器关闭。

Open the module here and connect the remote control, long press the E button on the left front of the remote control (E key) to test if the air pump rod can rotate normally. If not normal, please carefully investigate the cause. After testing, turn off the module and remote control.

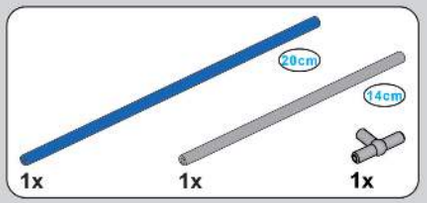

99

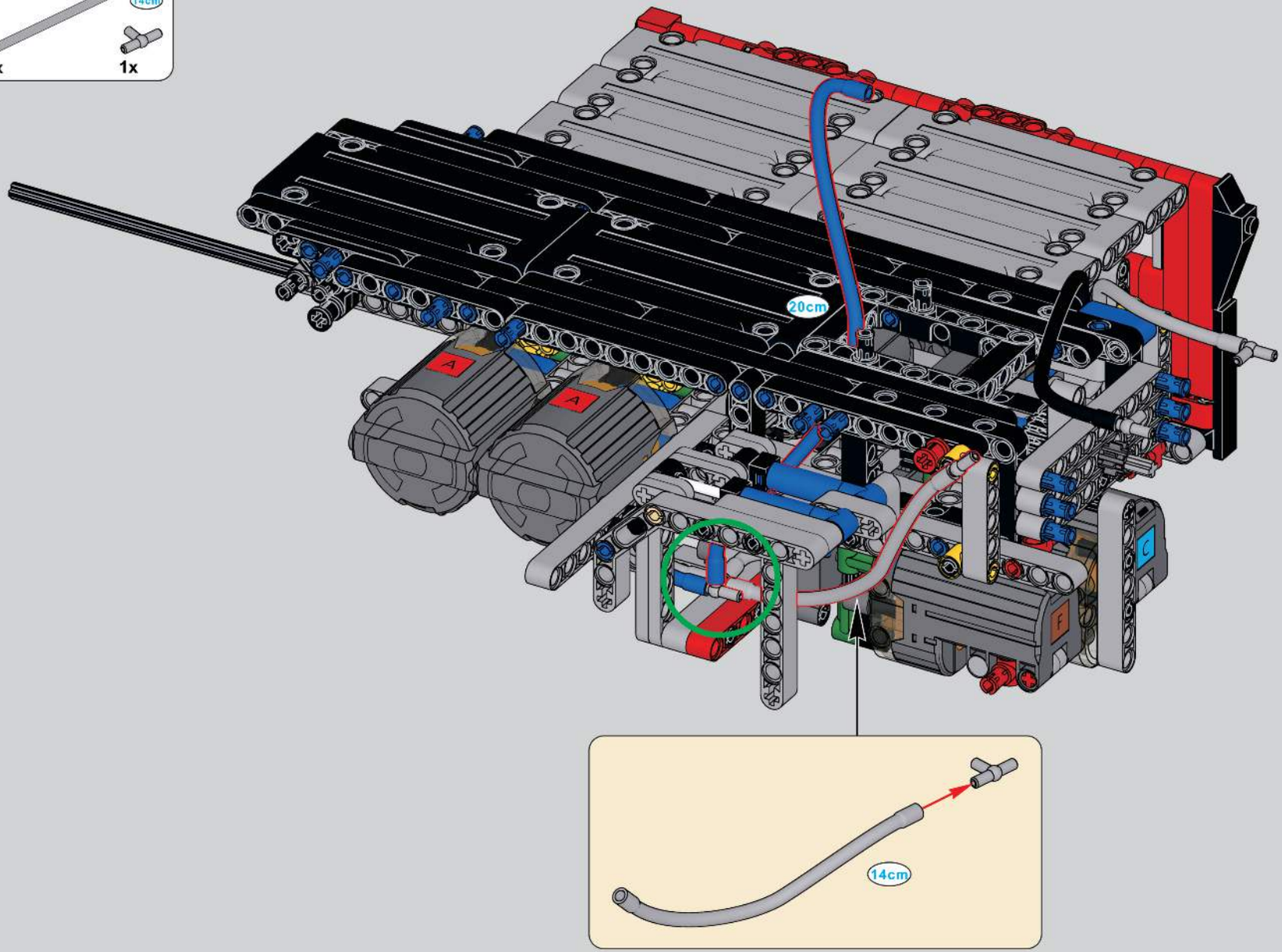

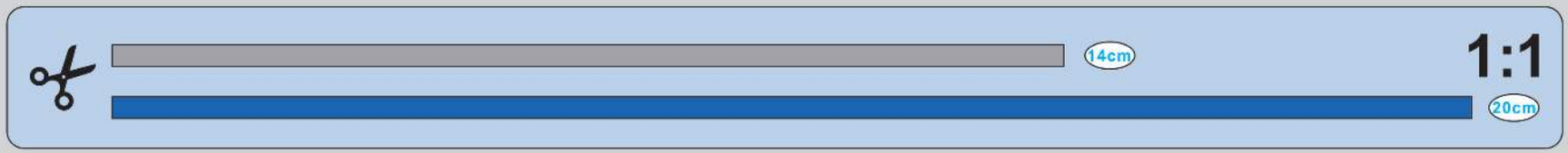

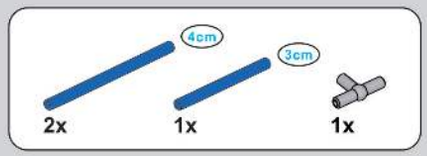

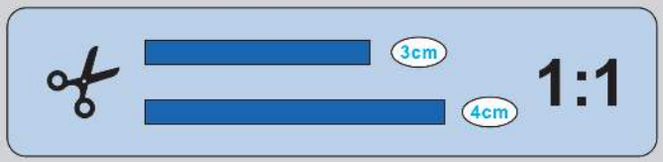

100

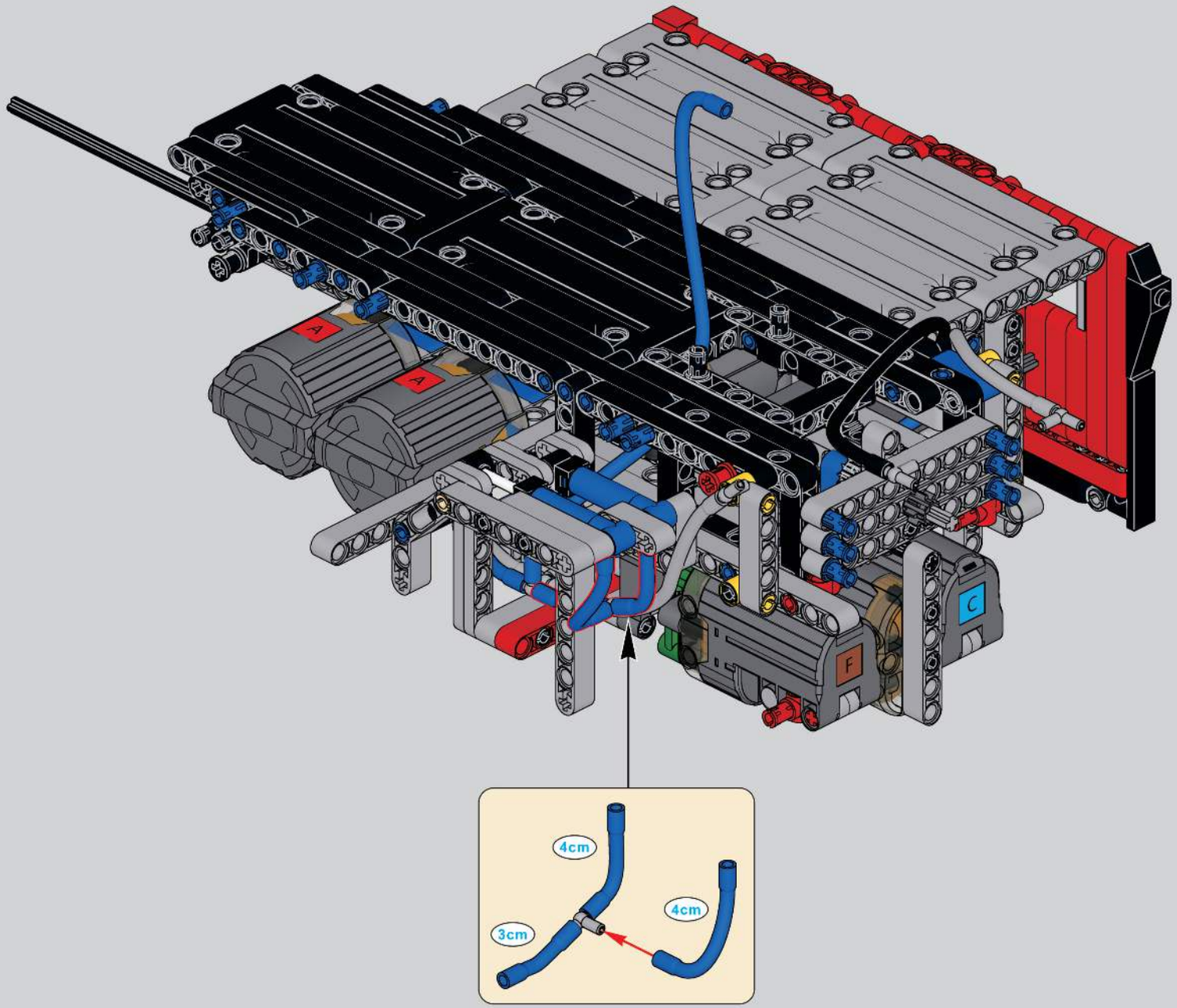

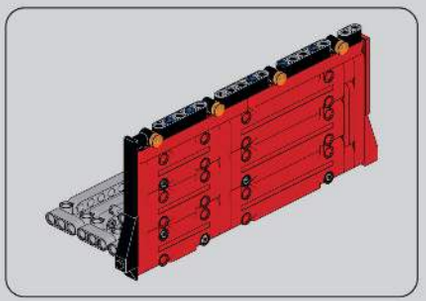

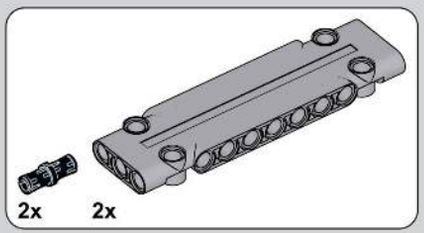

101

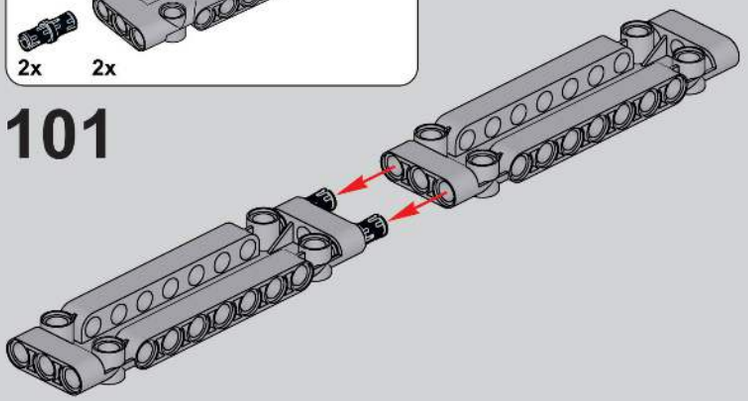

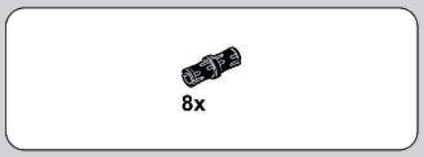

102

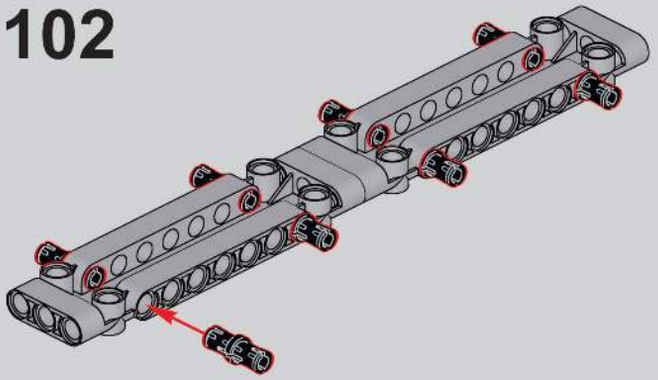

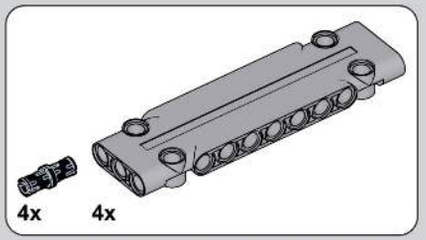

103

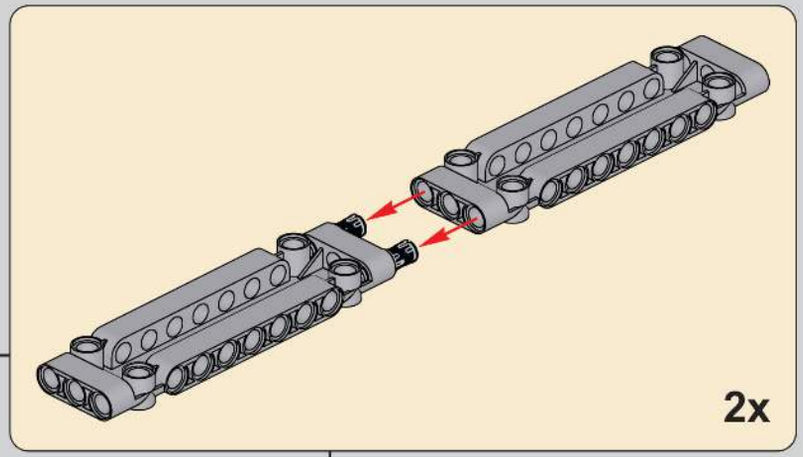

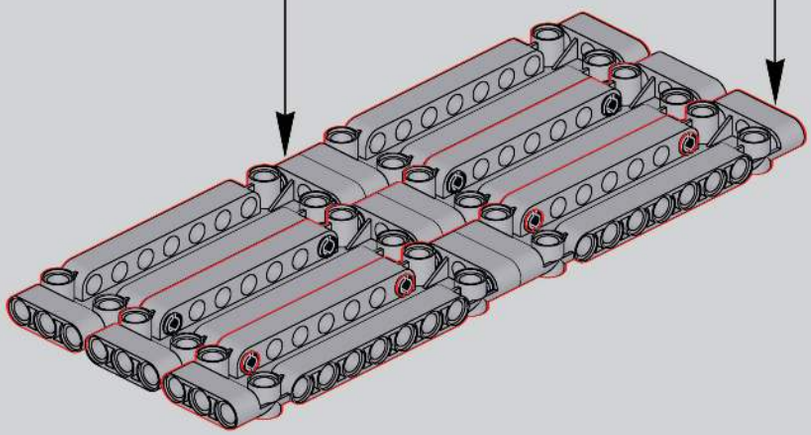

104

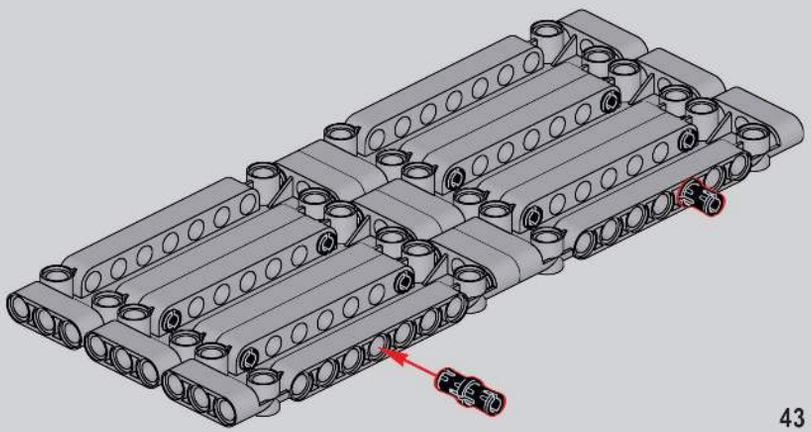

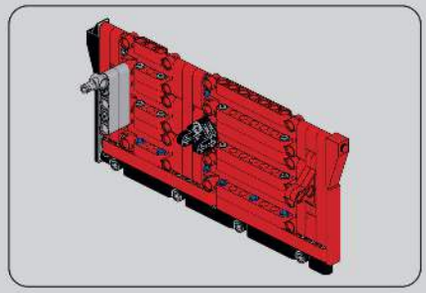

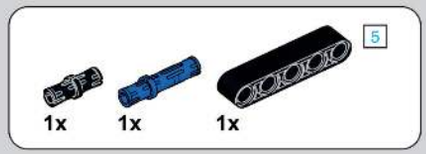

105

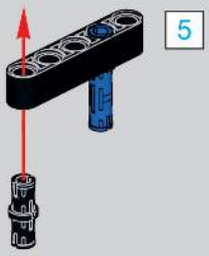

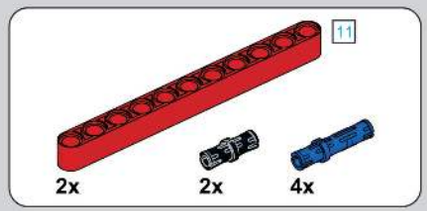

106

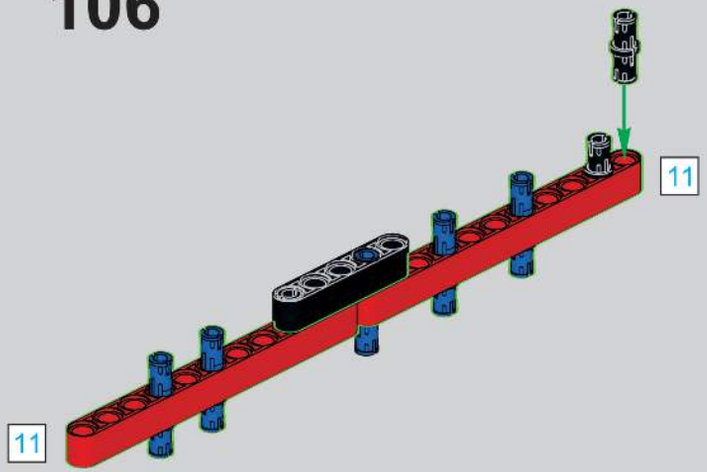

107

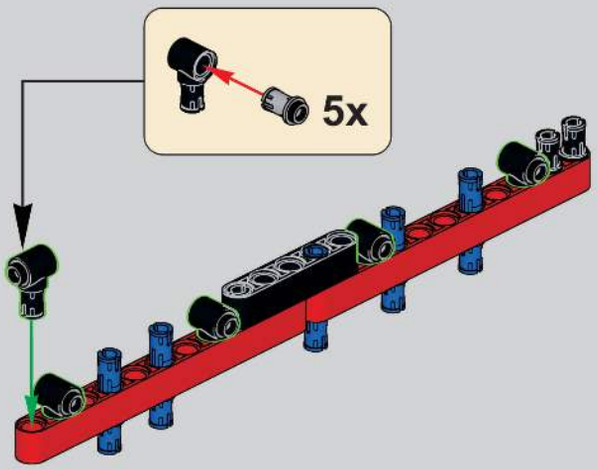

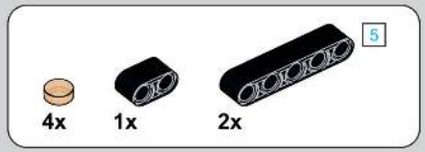

108

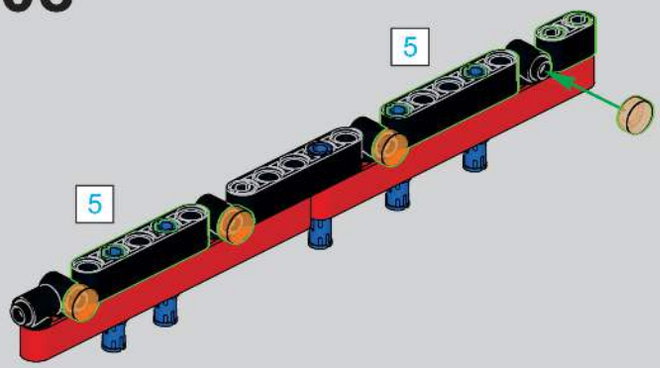

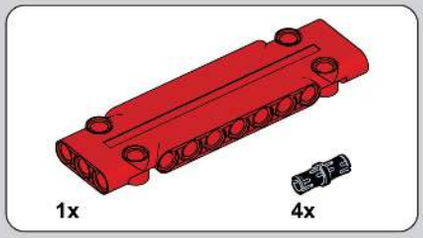

109

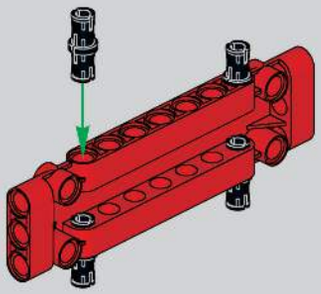

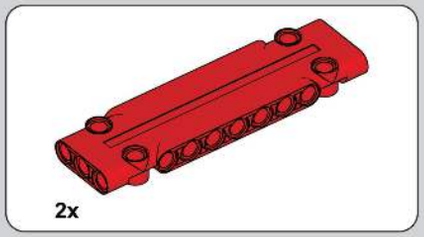

110

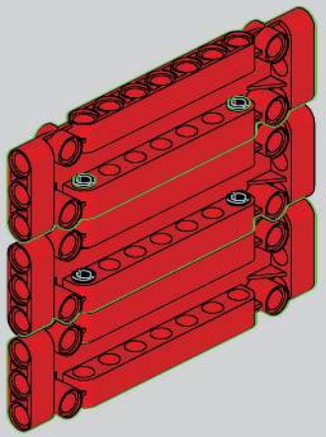

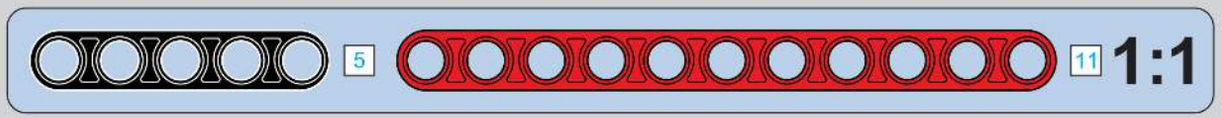

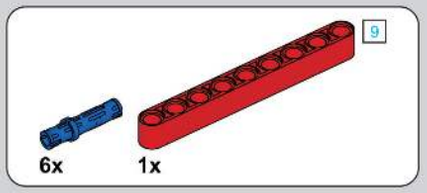

111

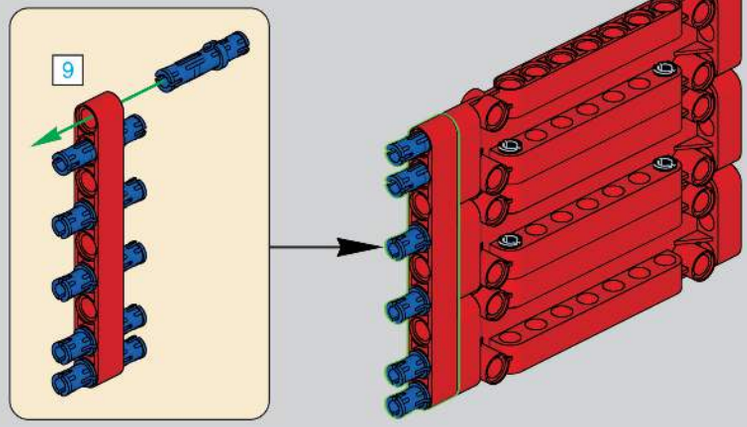

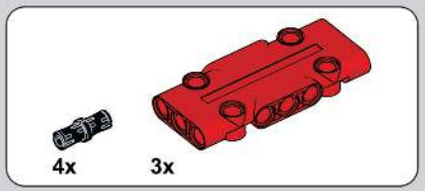

112

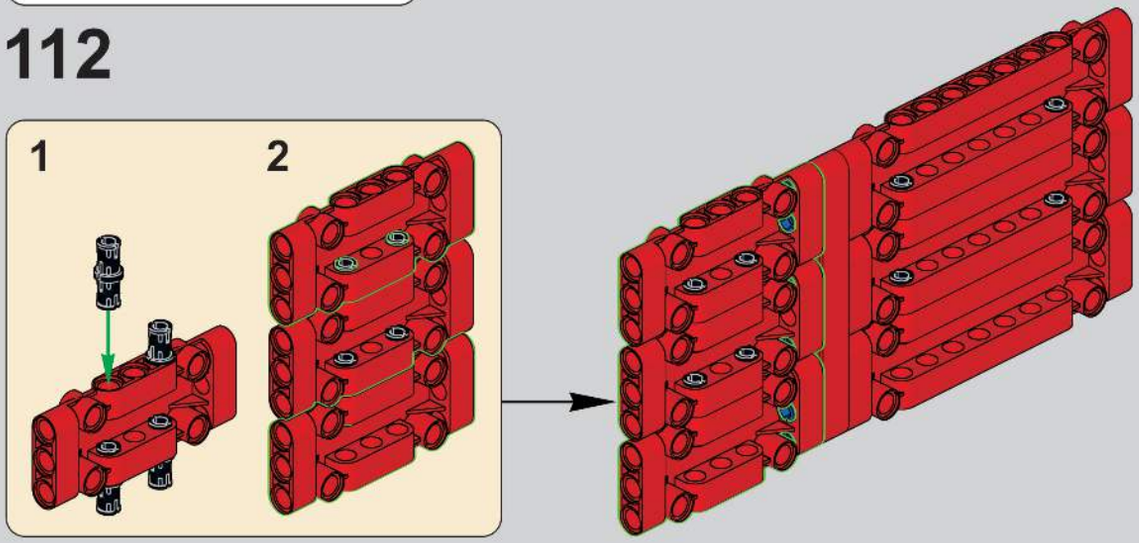

113

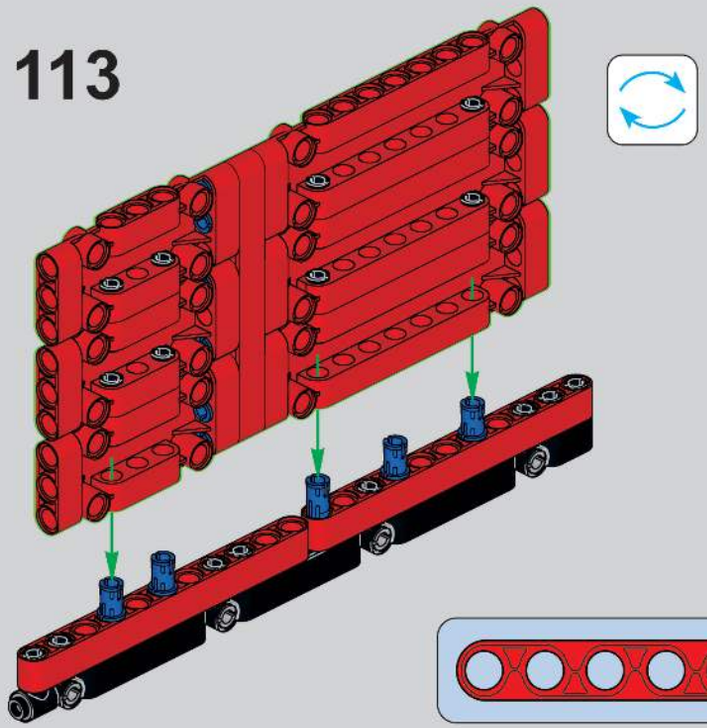

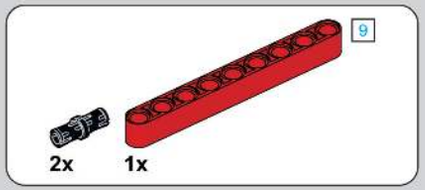

114

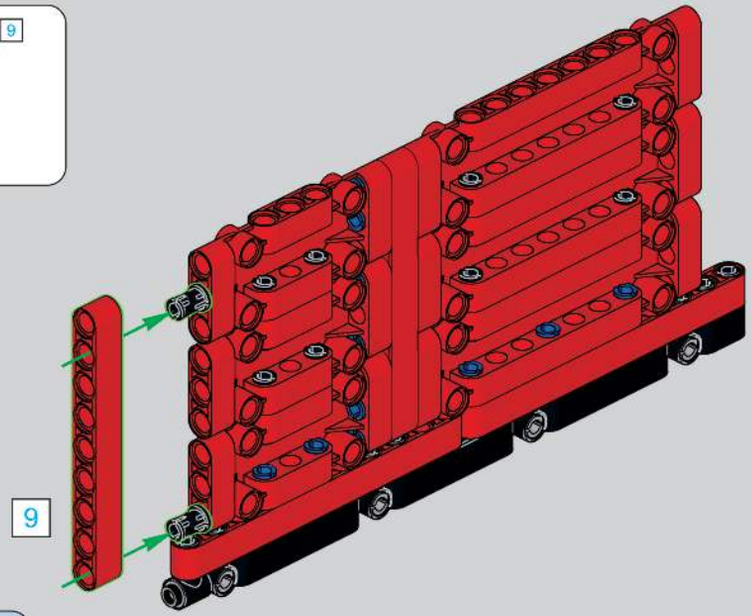

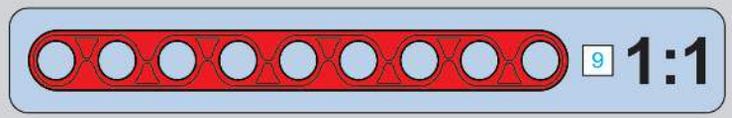

115

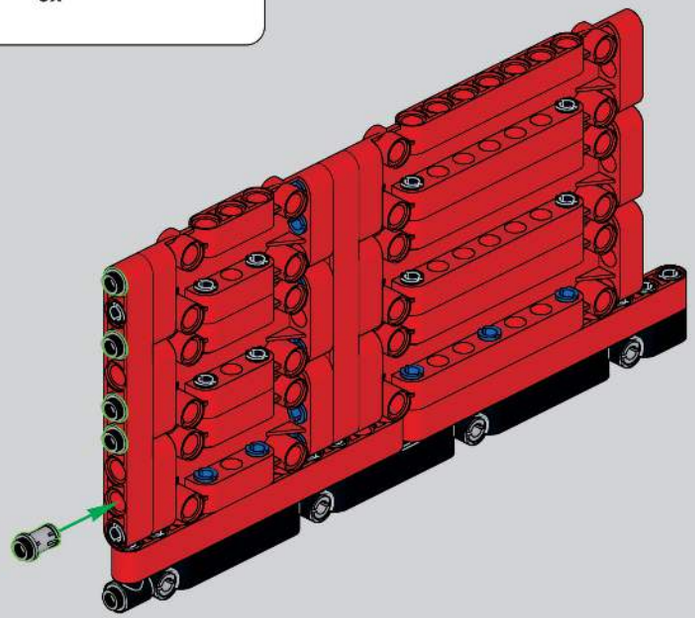

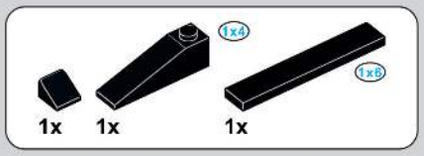

116

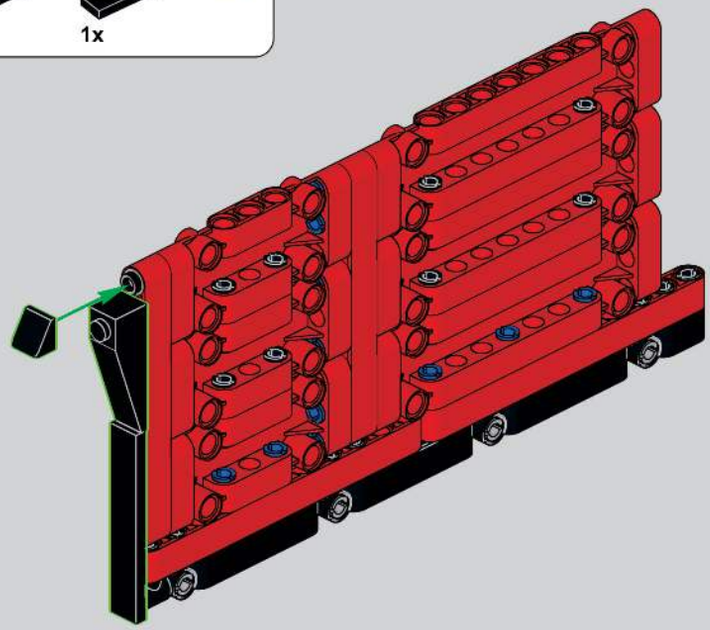

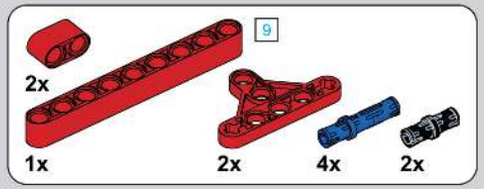

117

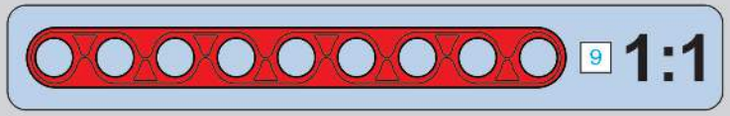

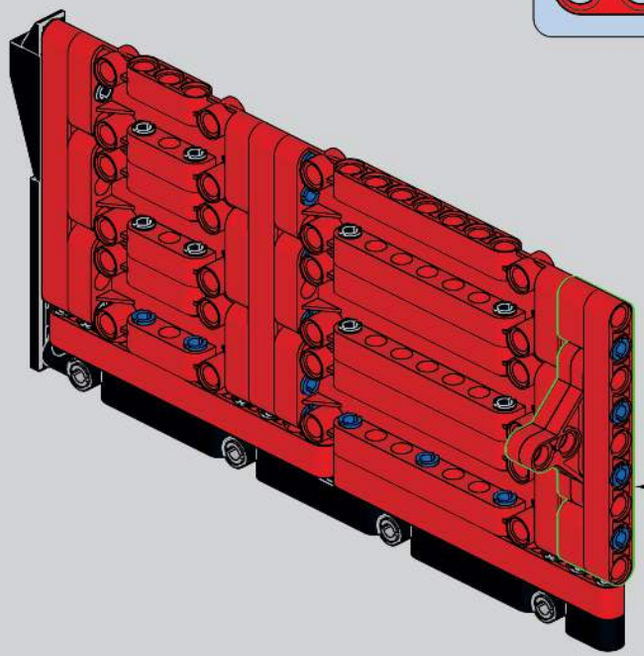

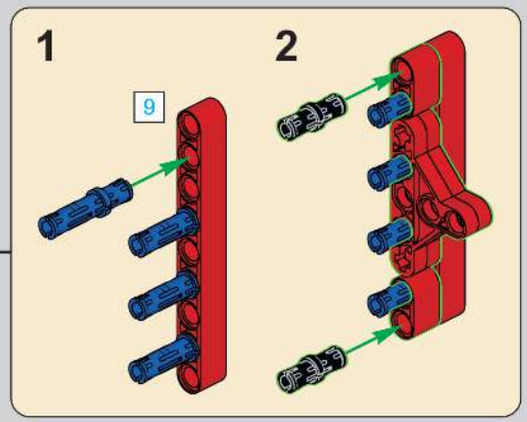

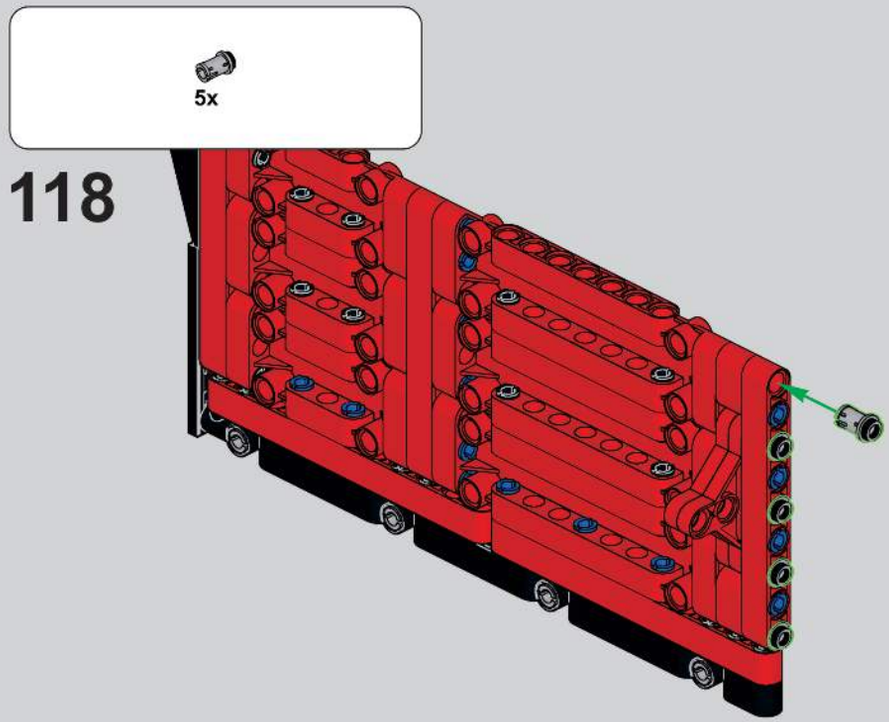
5x
118

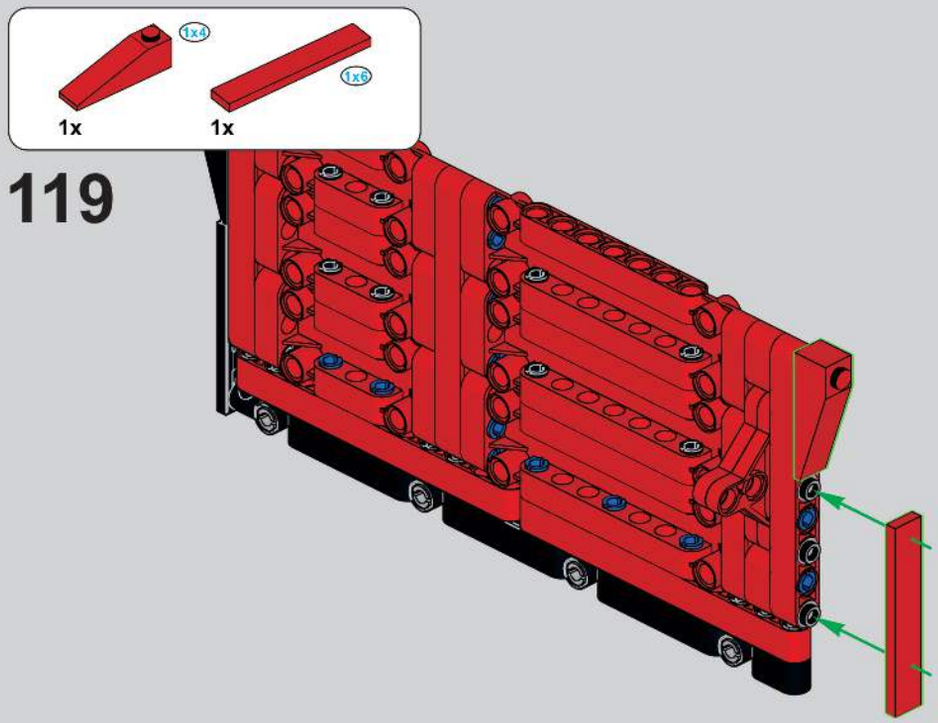
1x4
1x6
1x
1x
119

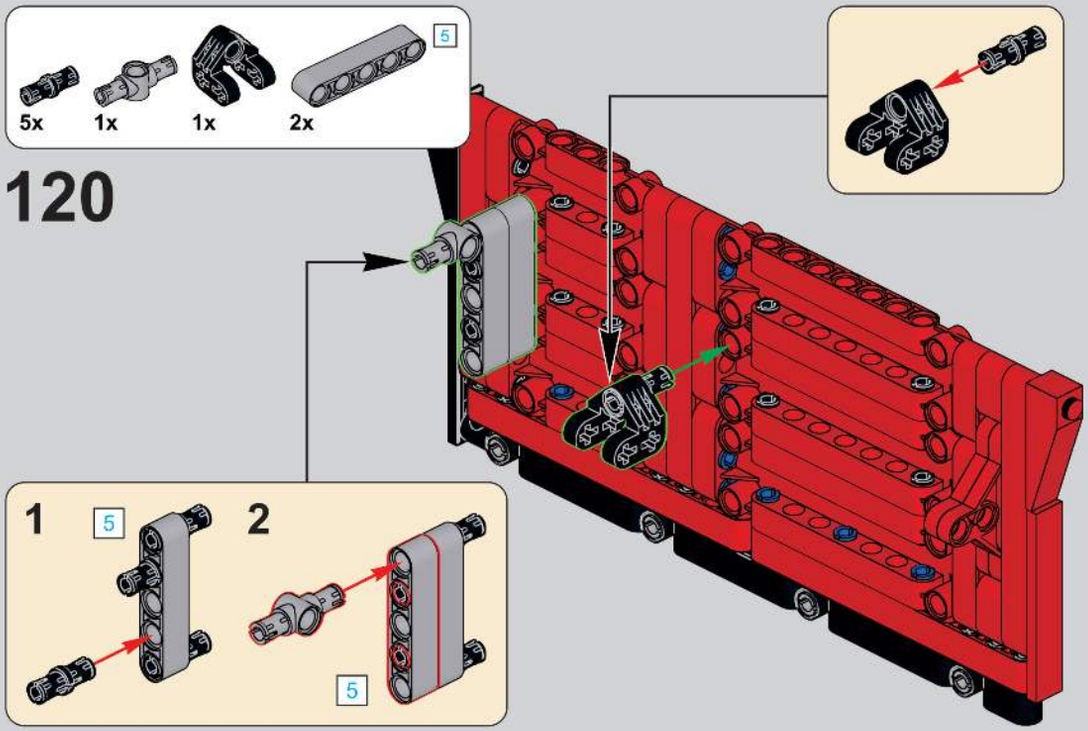
5
5x
1x
1x
2x
120
1
5
2
5

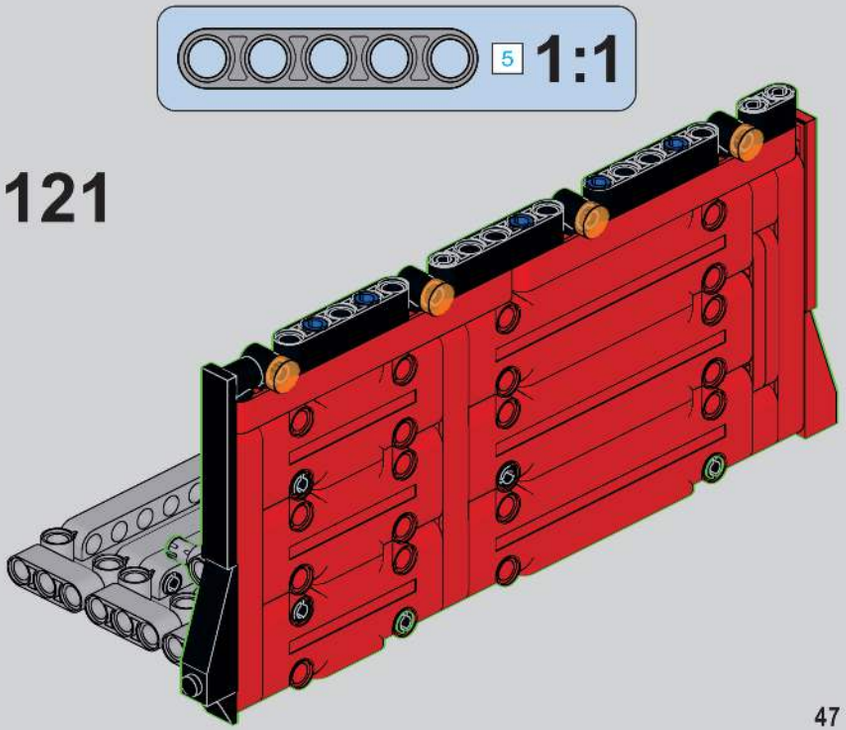
5
1:1
121

122

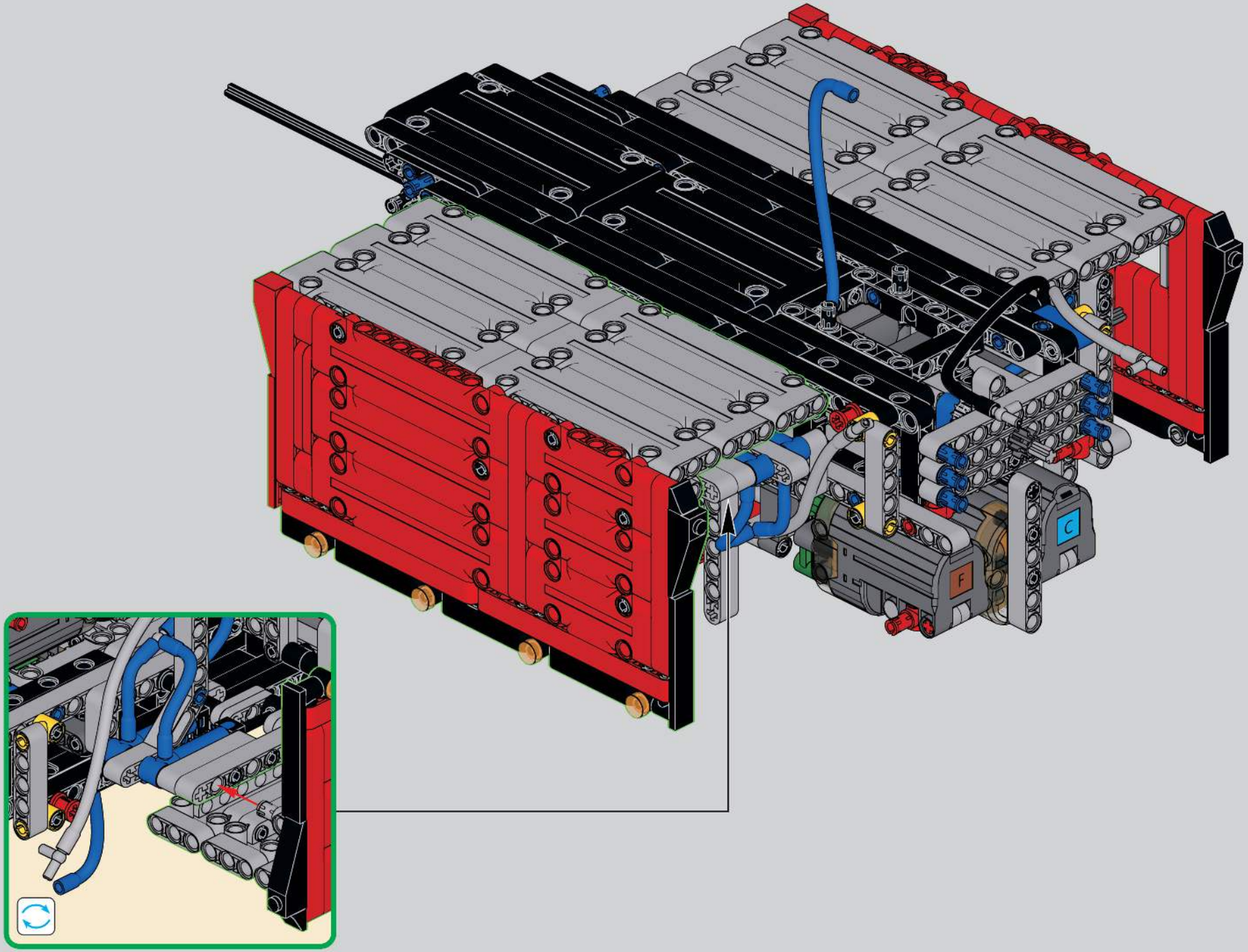

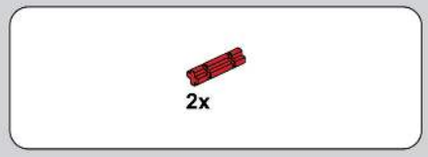

123

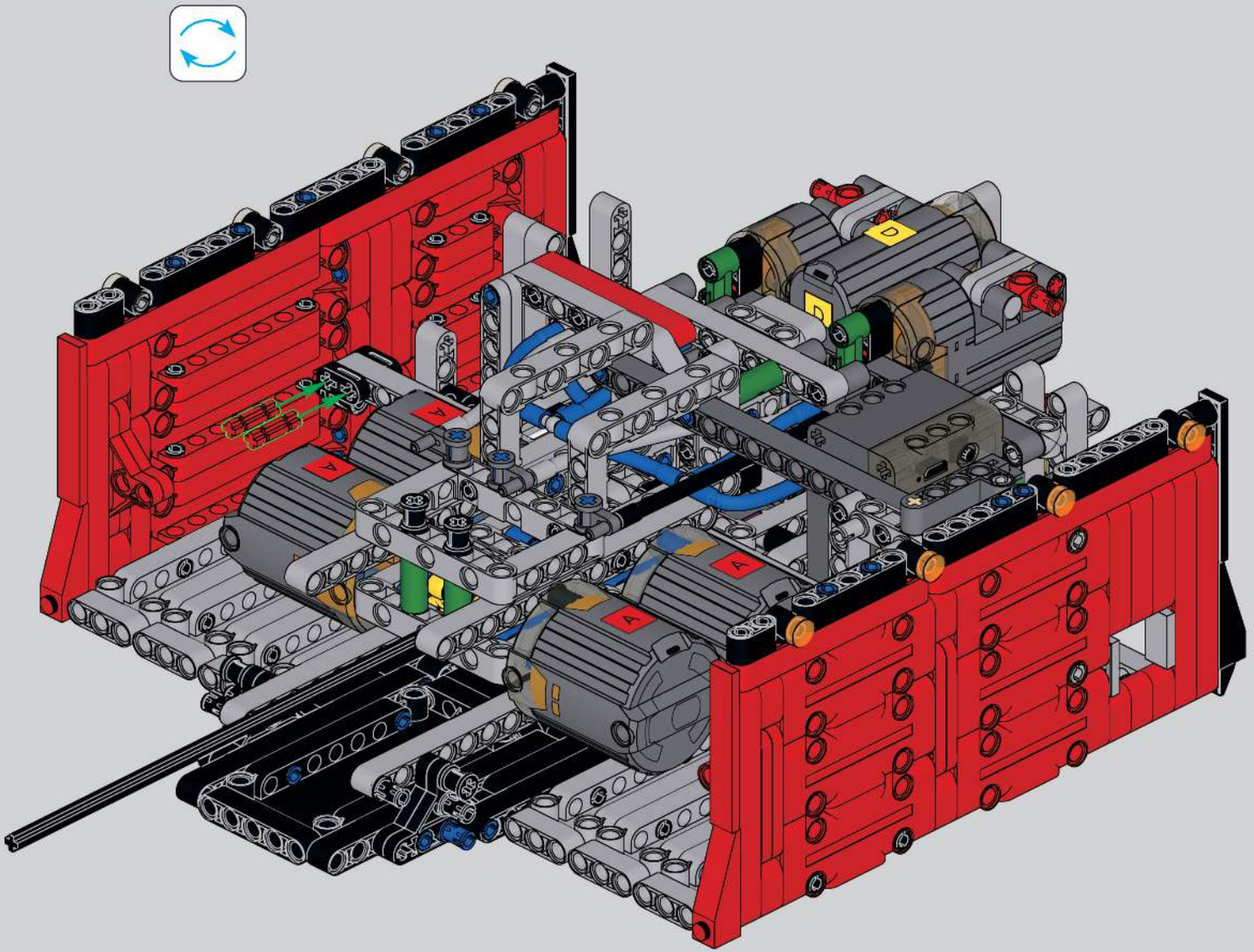

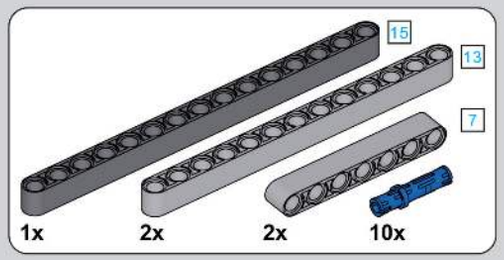

124

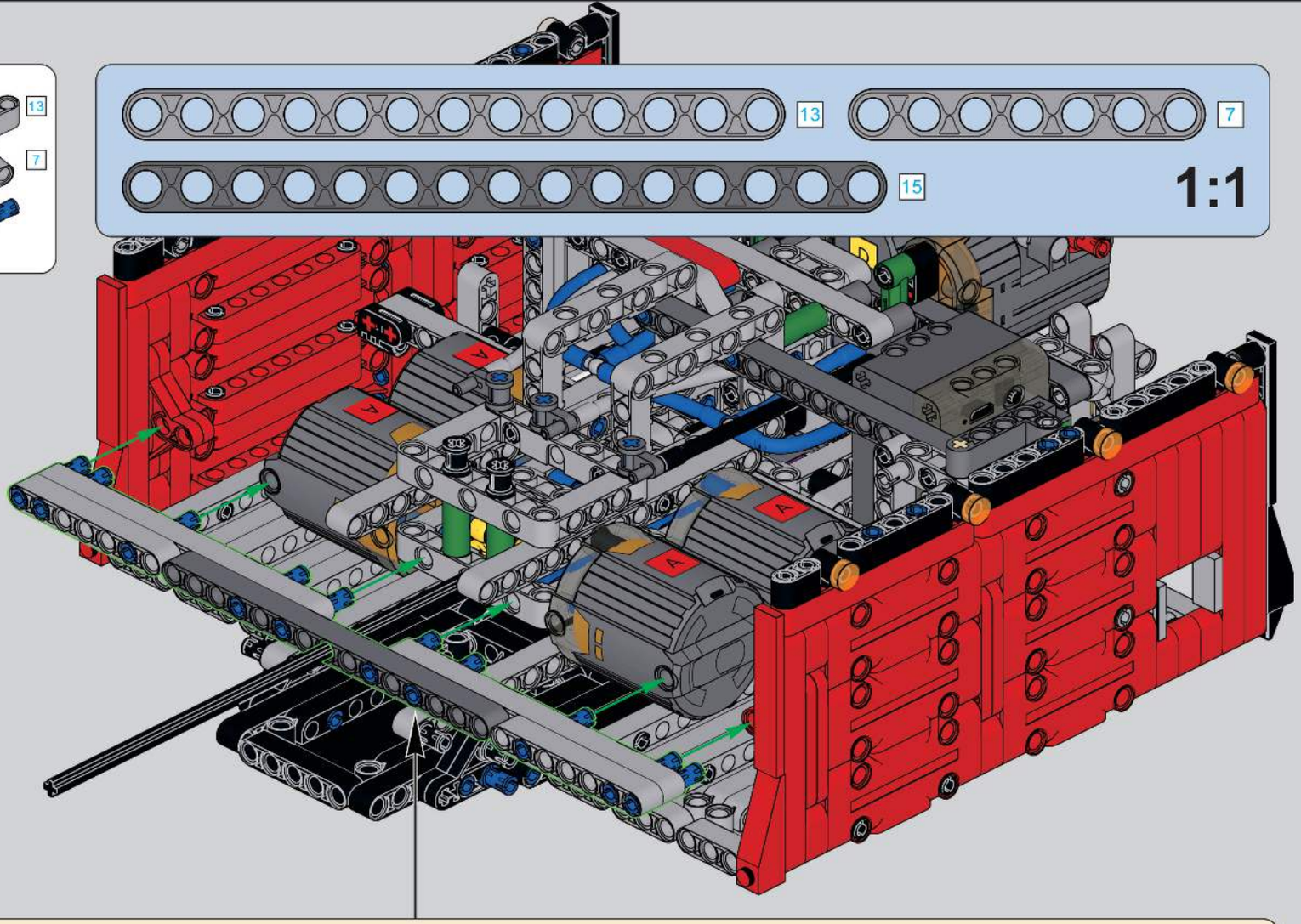

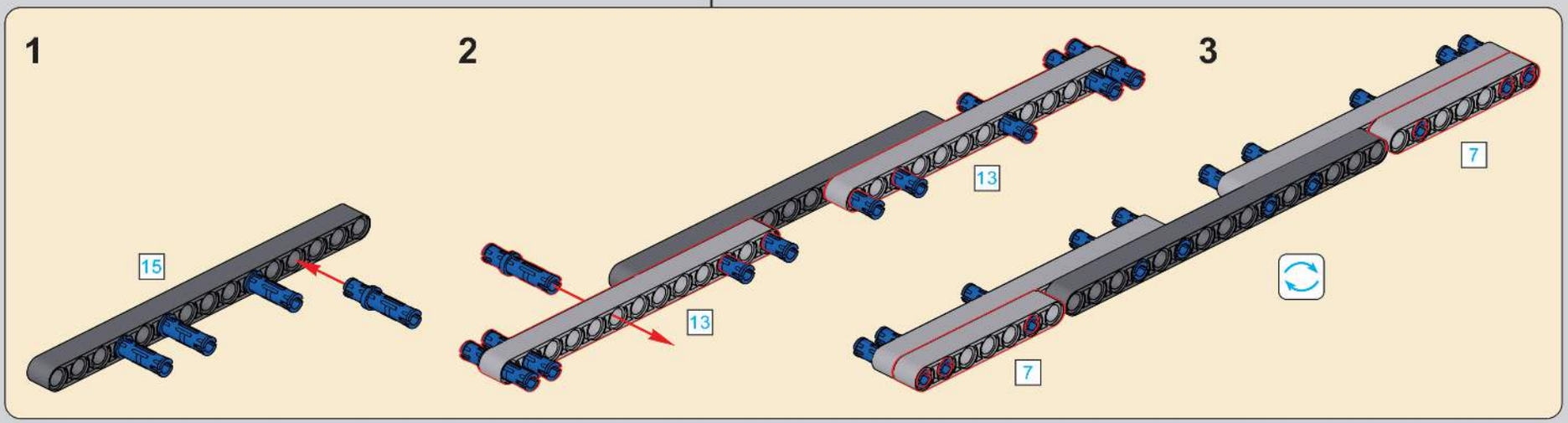

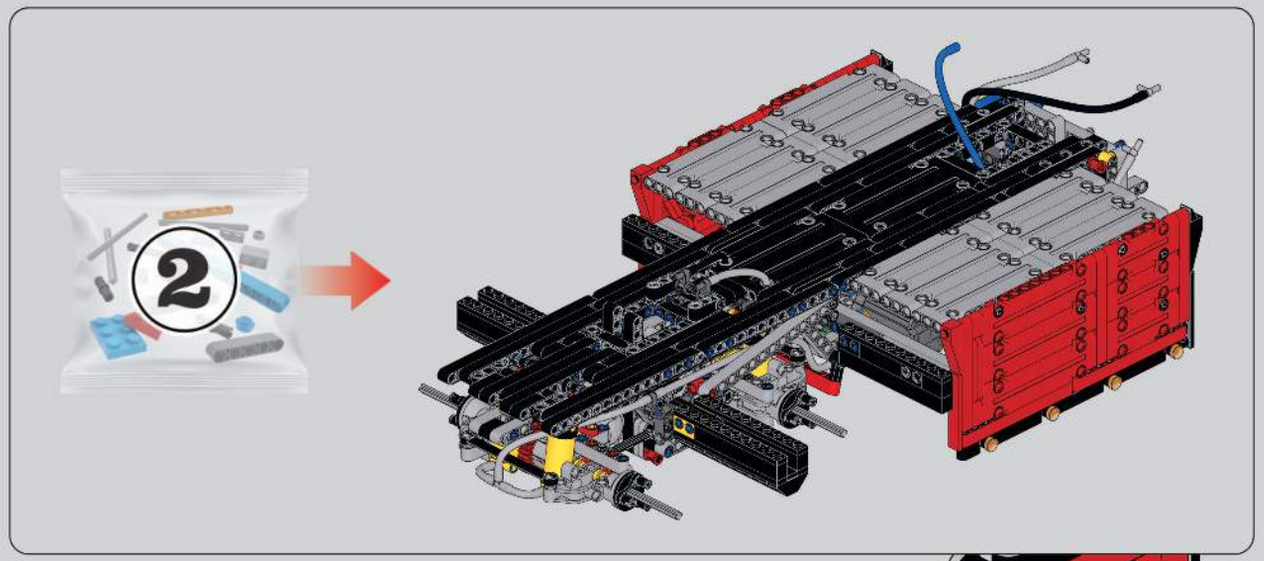

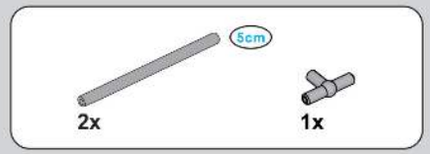

125

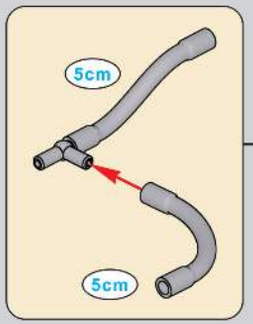

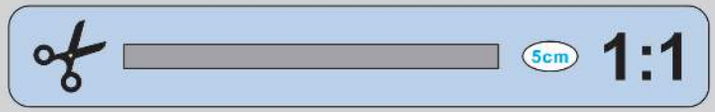

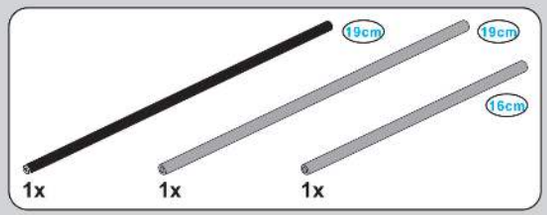

126

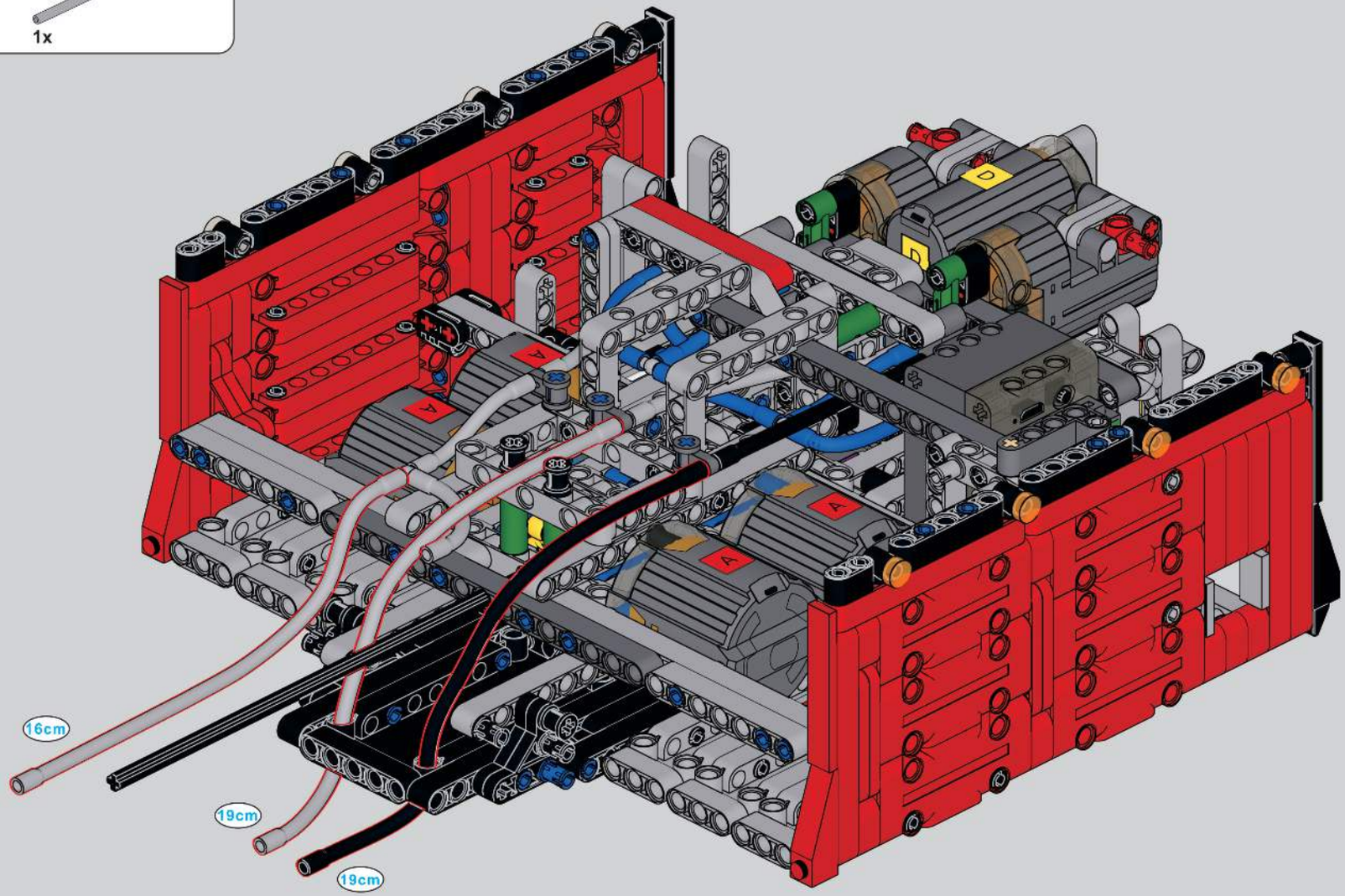

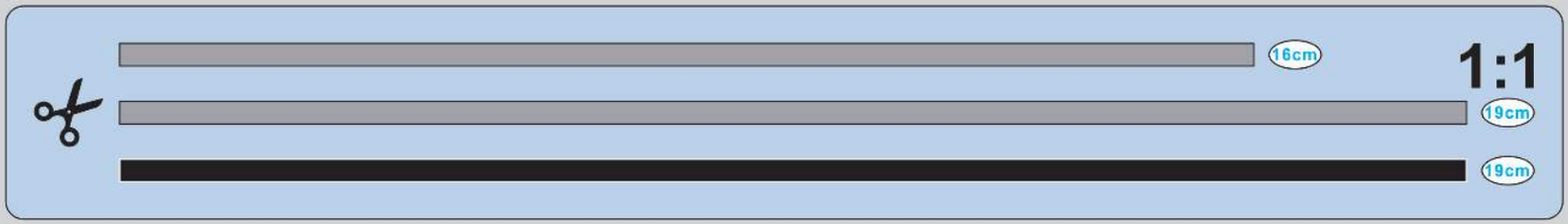

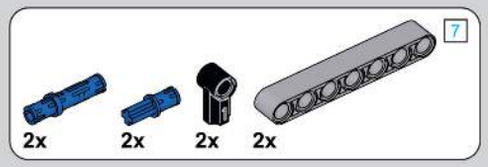

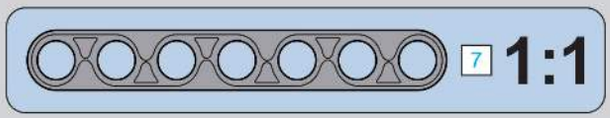

127

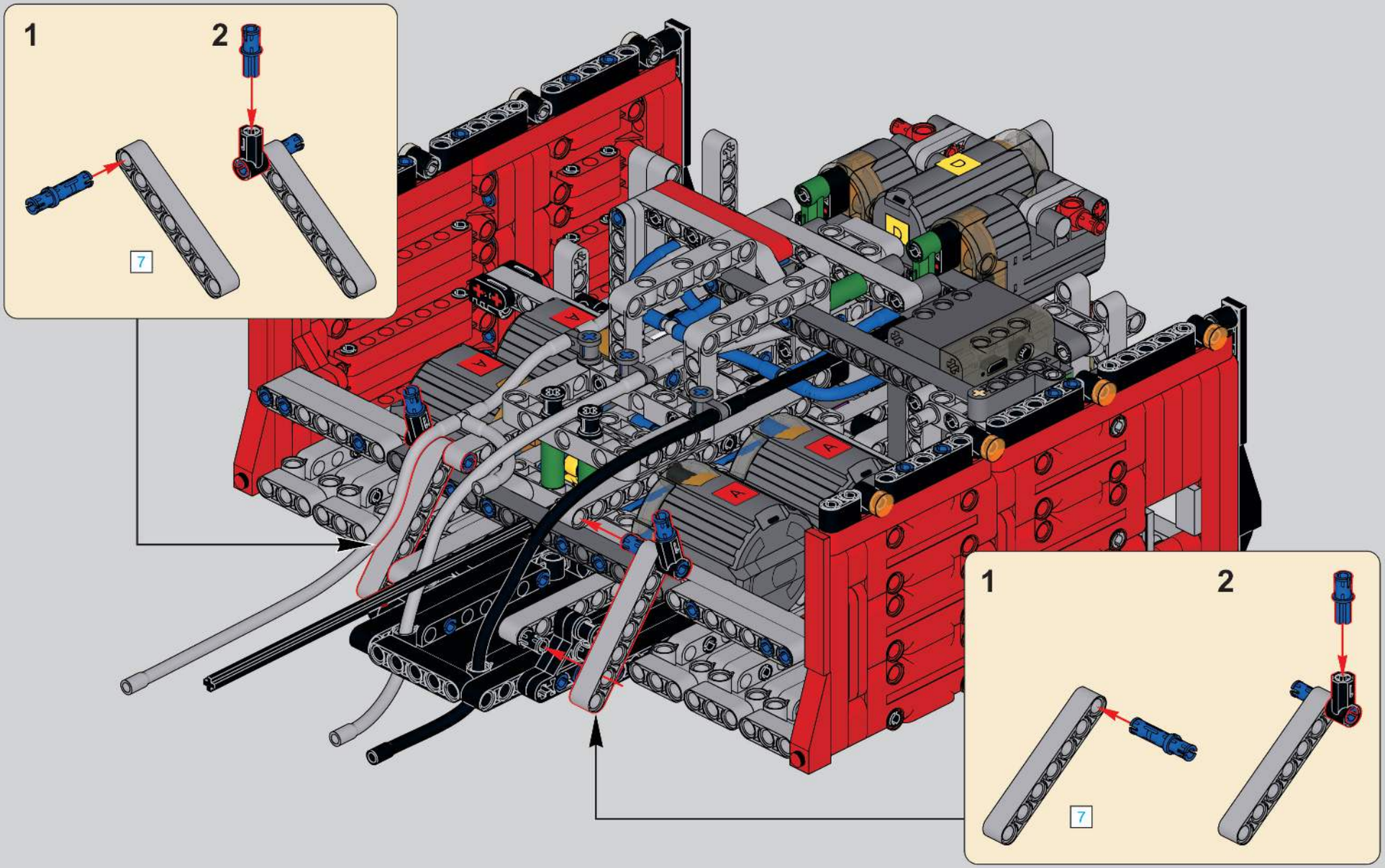

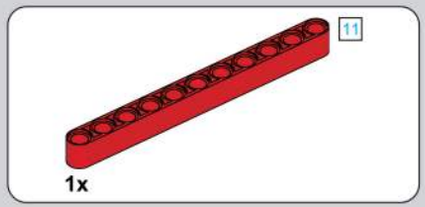

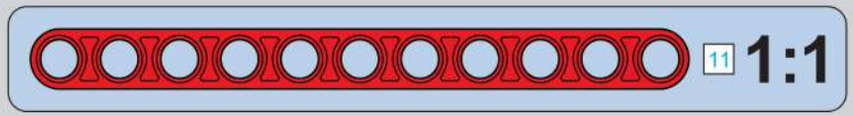

128

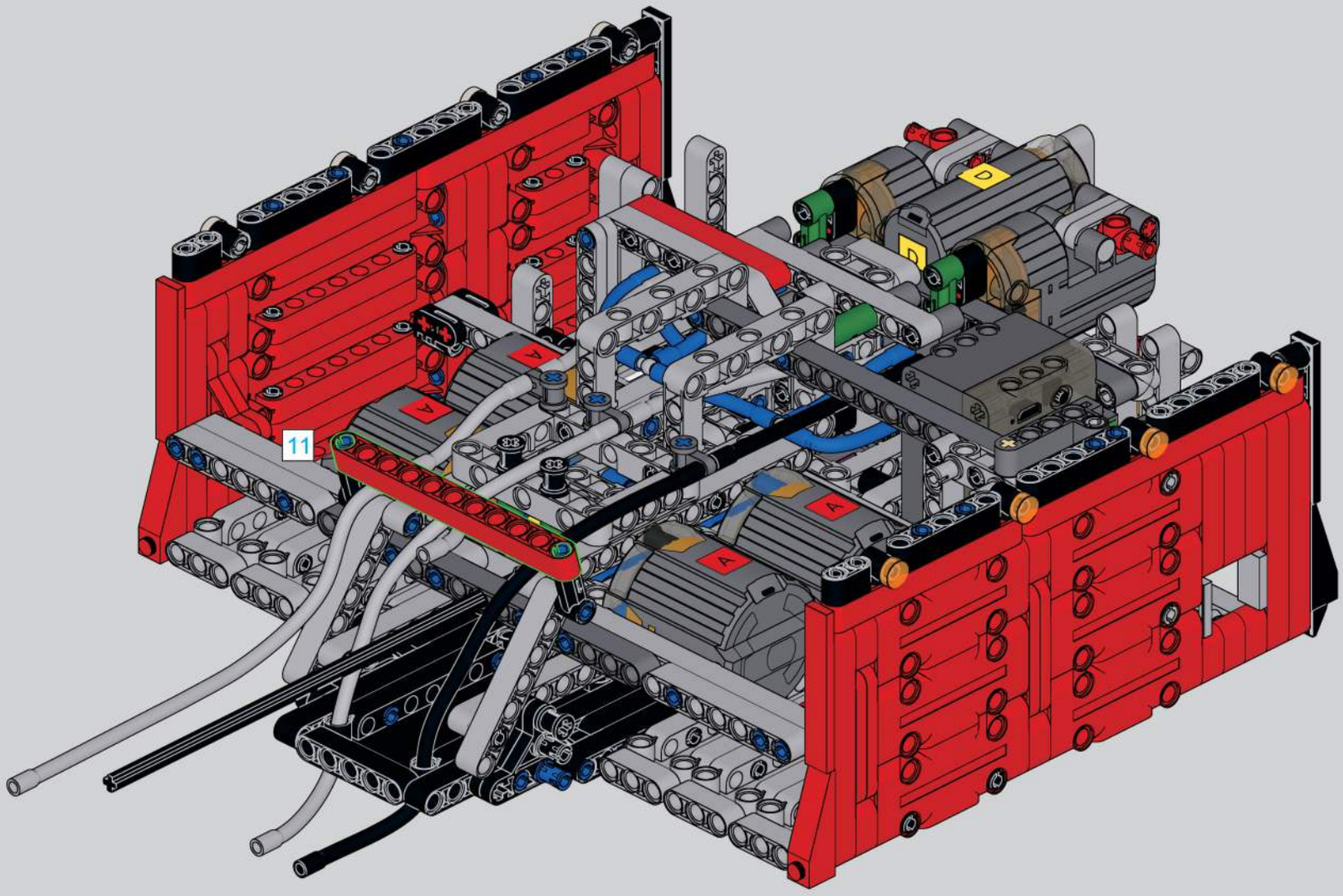

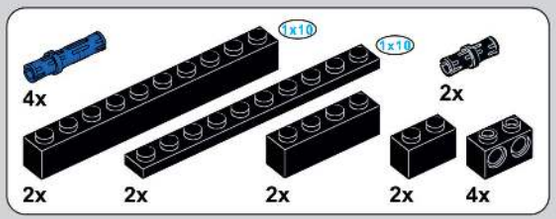

129

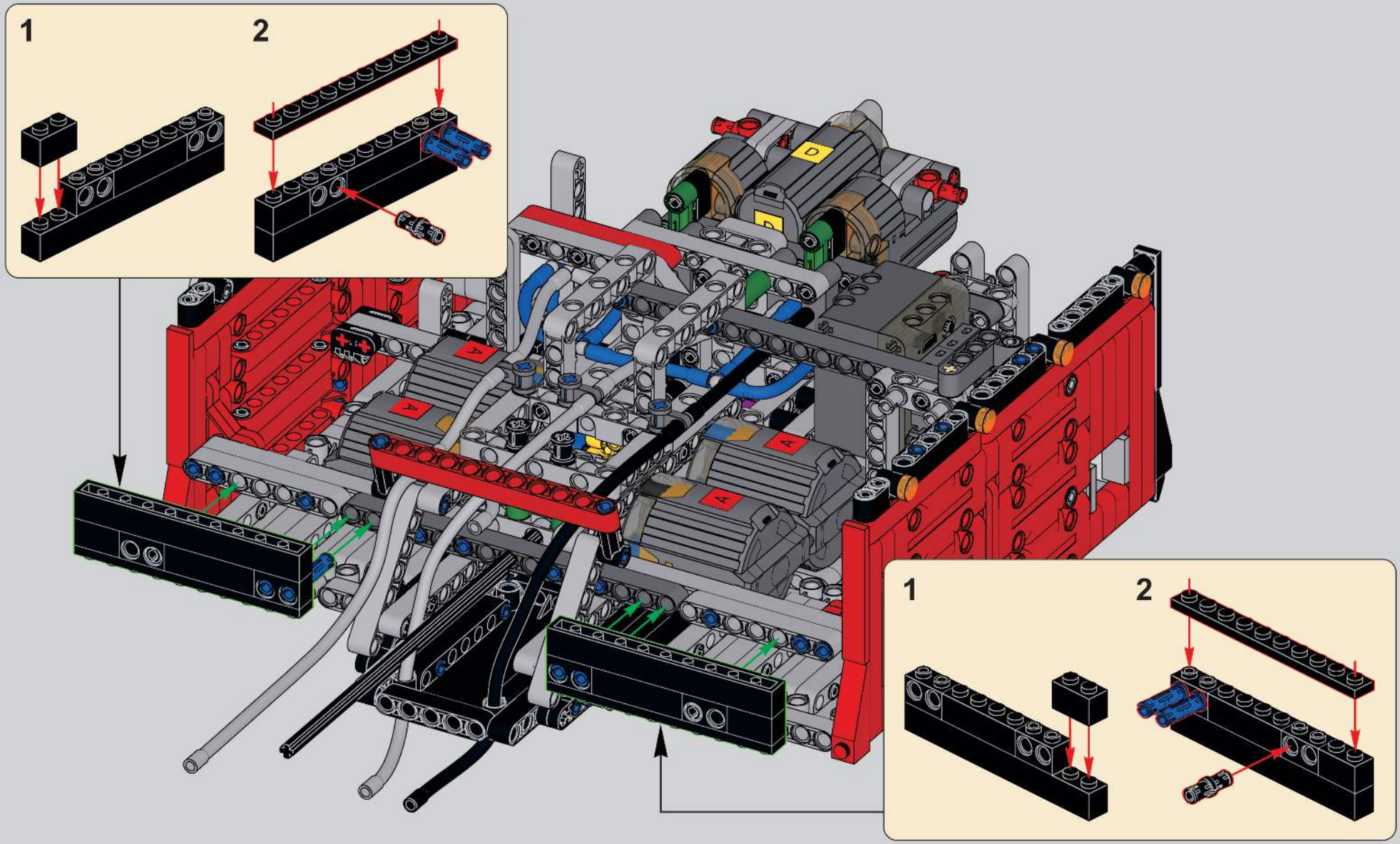

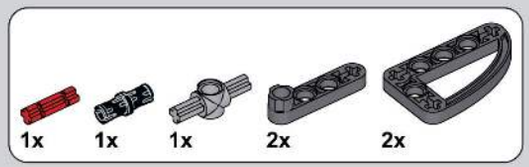

130

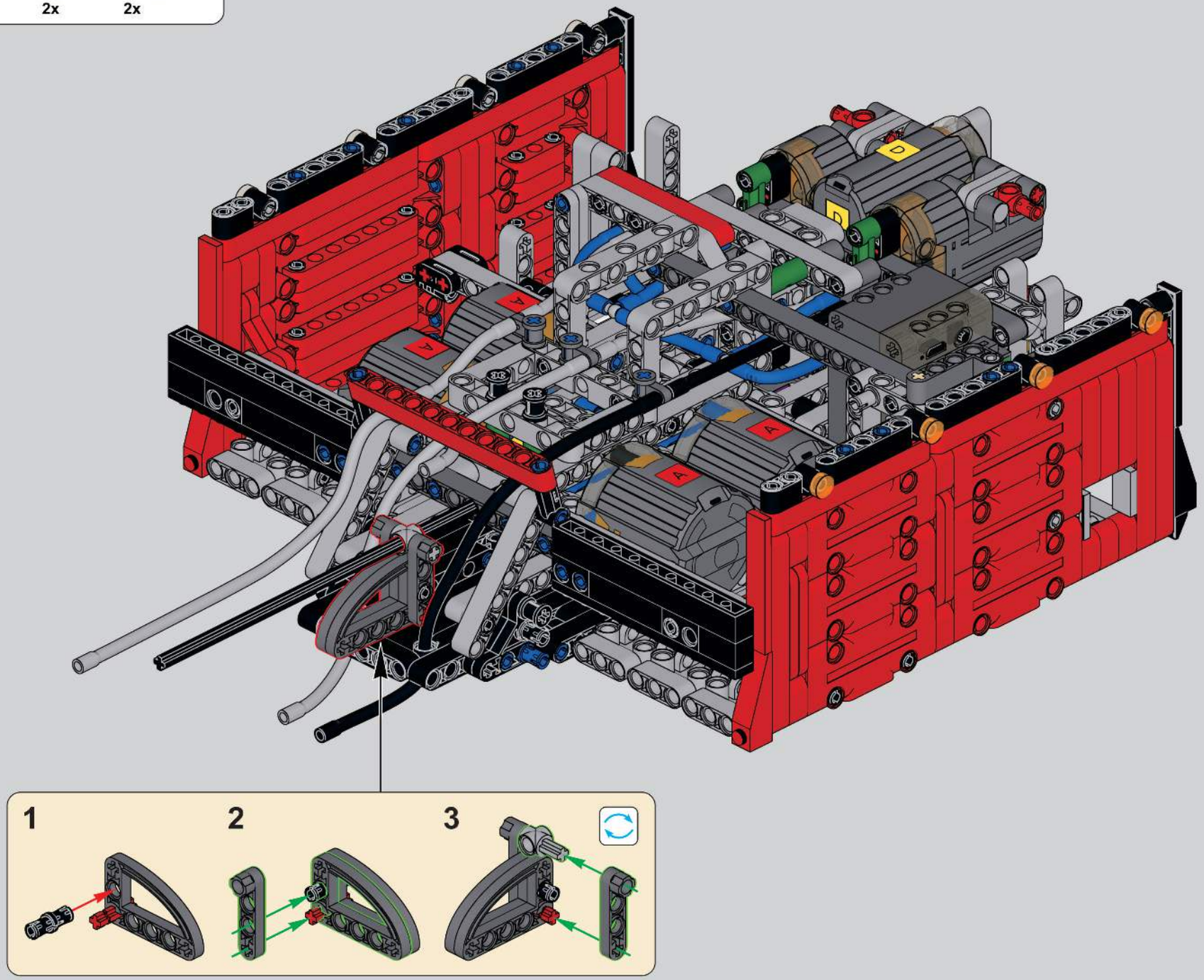

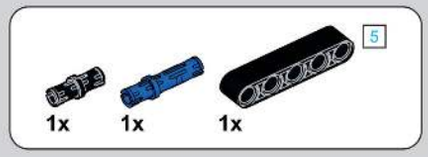

131

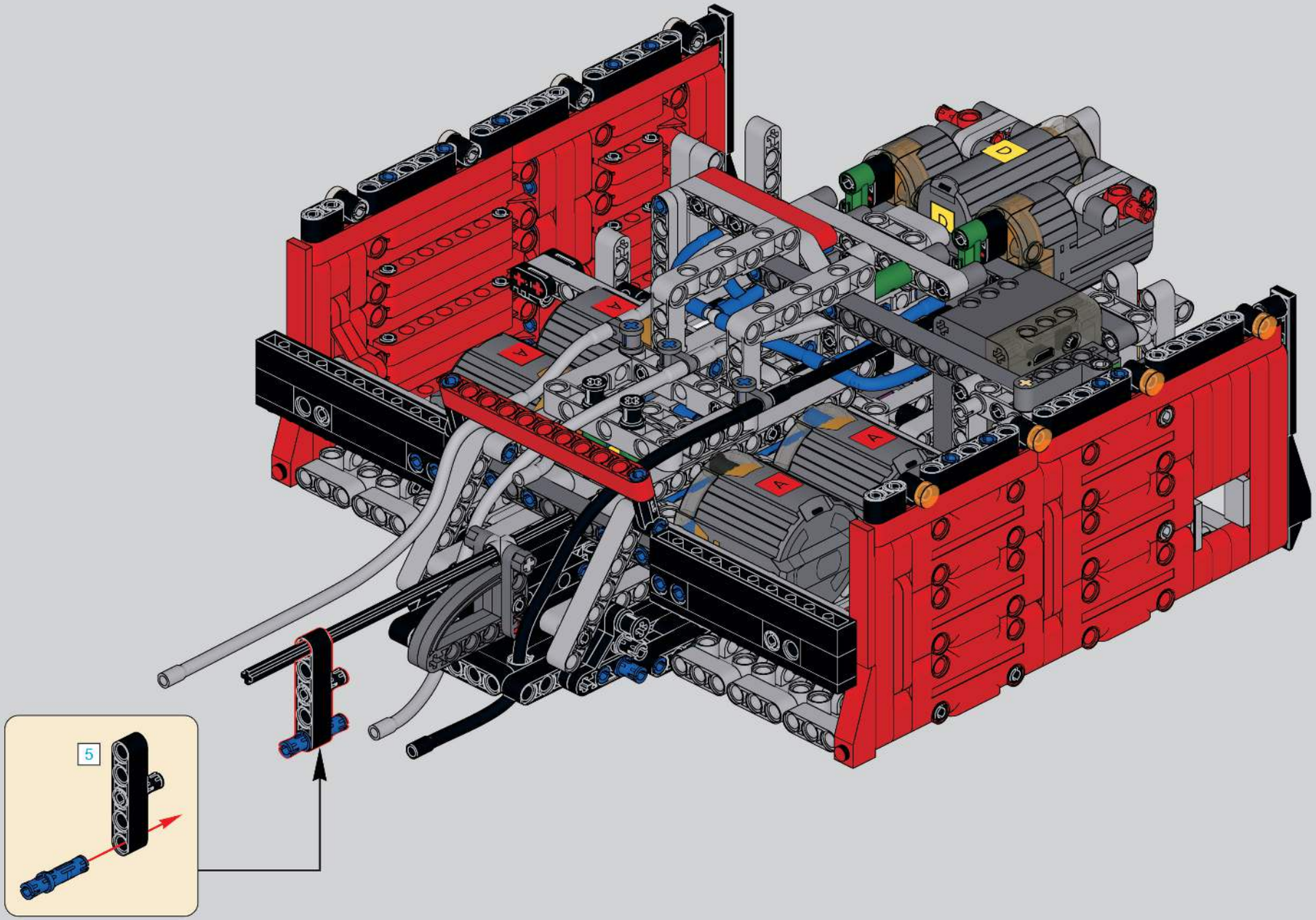

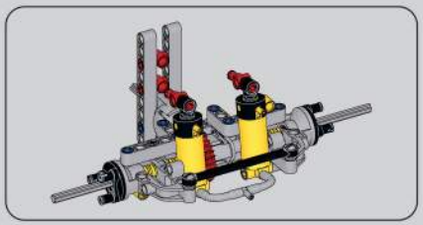

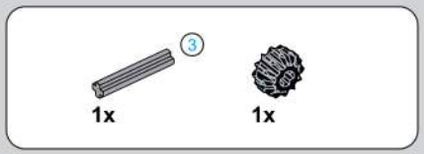

132

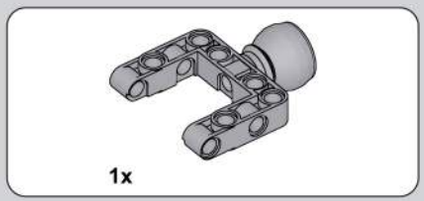

133

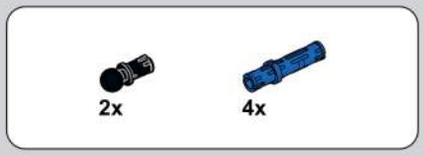

134

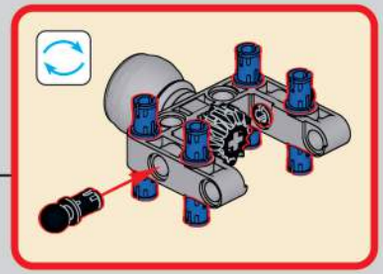

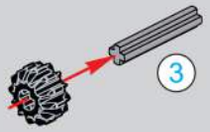

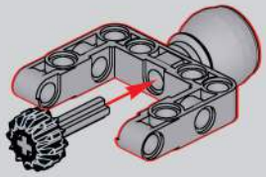

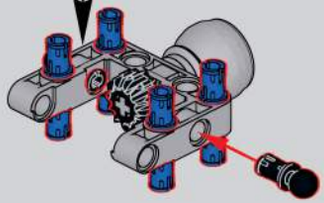

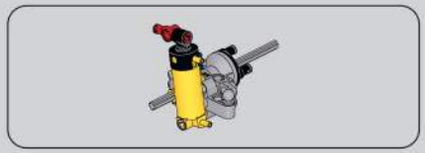

136

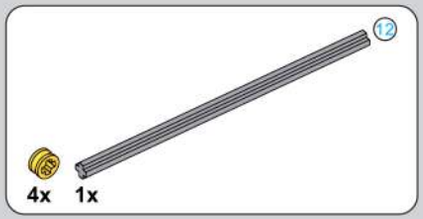

137

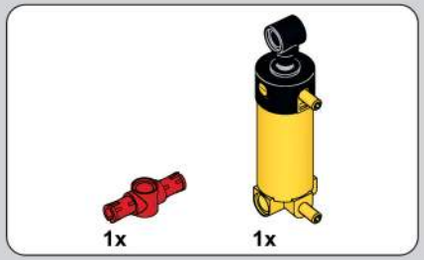

138

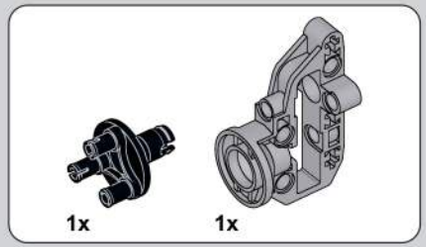

135

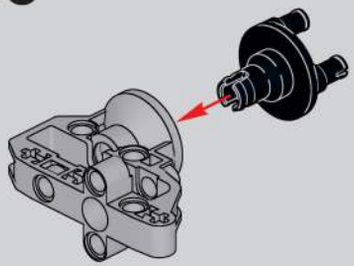

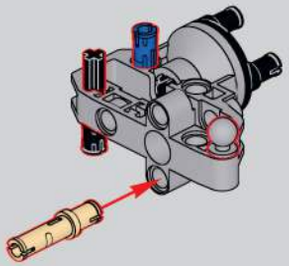

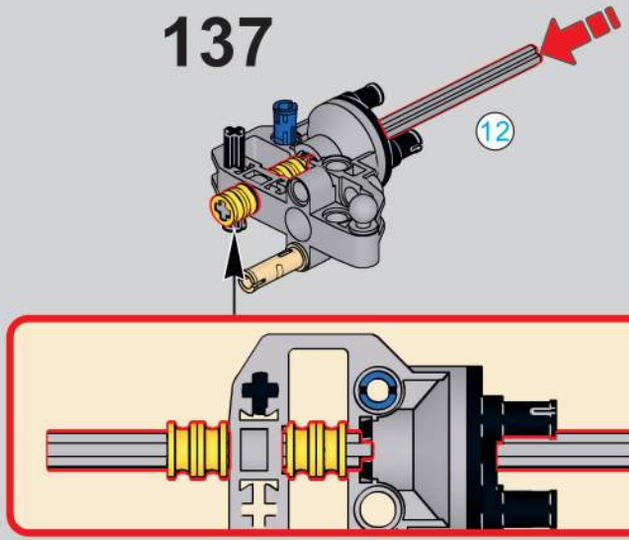

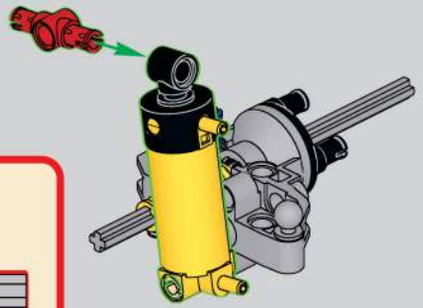

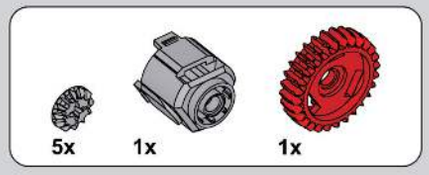

139

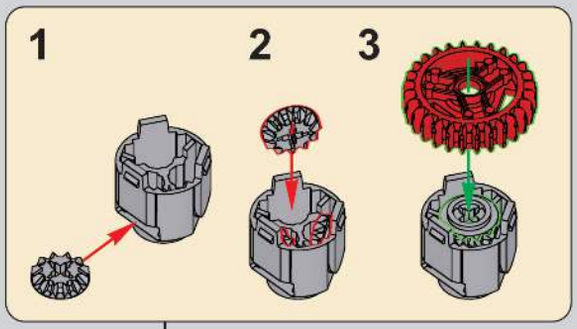

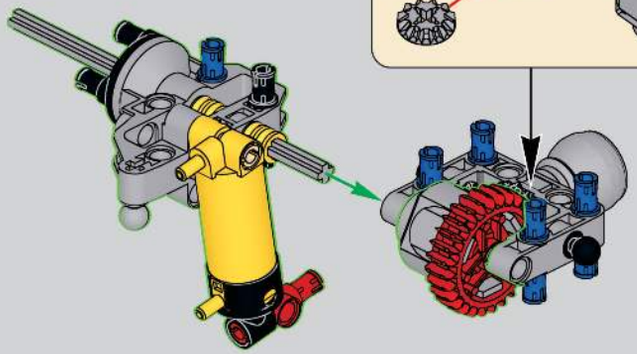

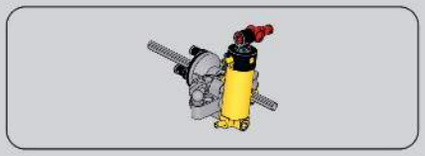

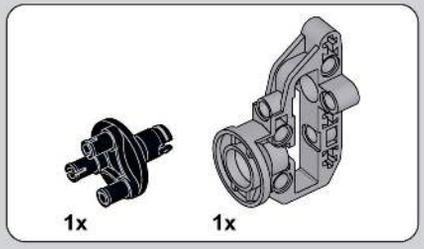

140

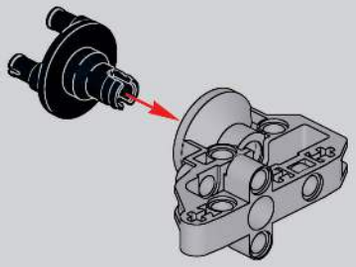

141

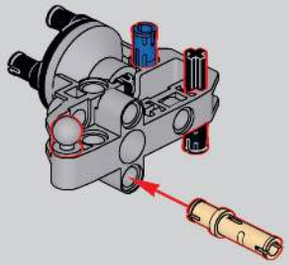

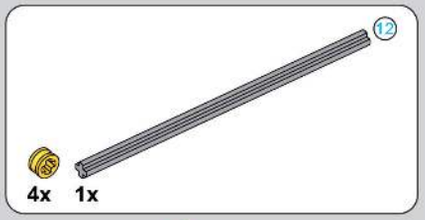

142

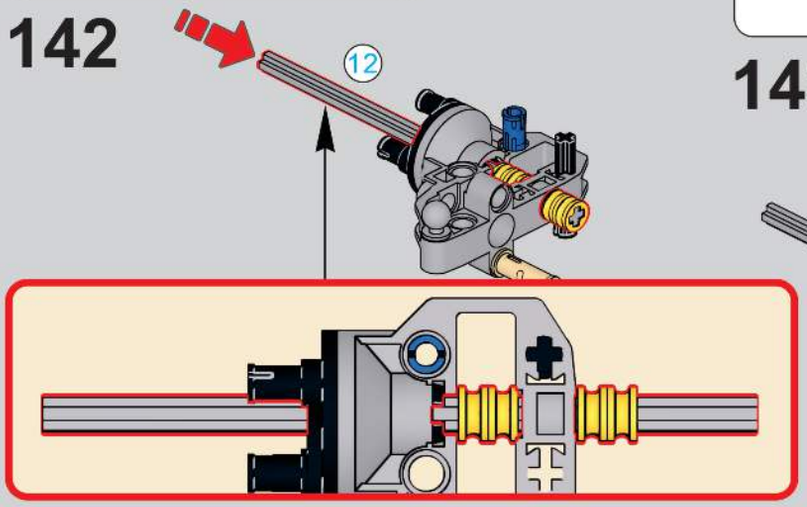

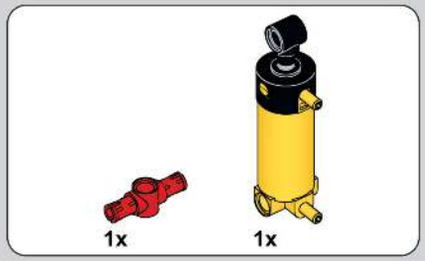

143

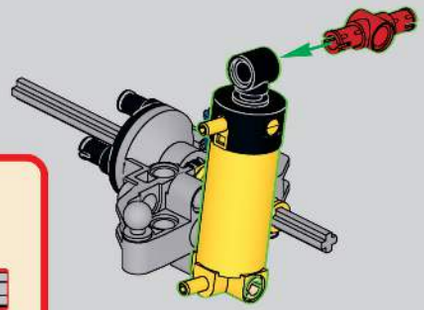

144

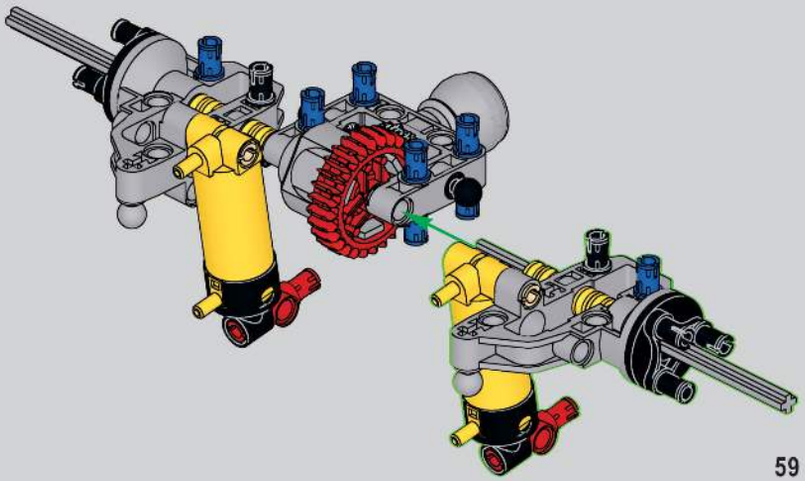

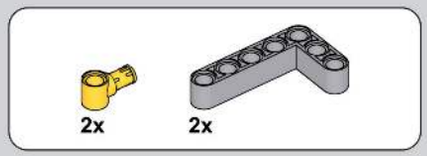

145

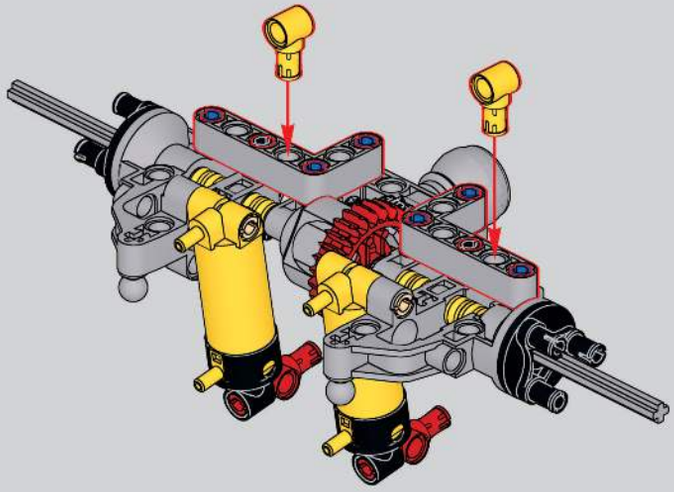

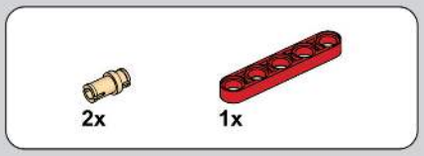

146

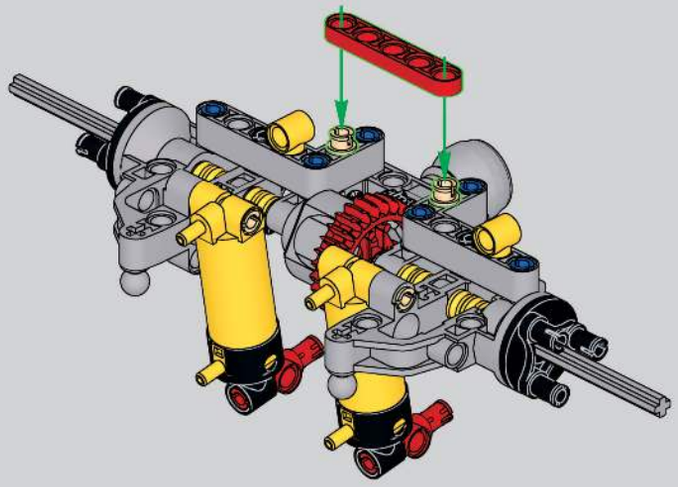

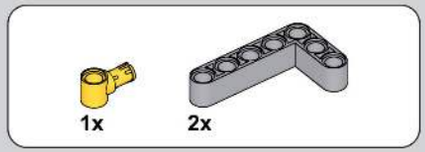

147

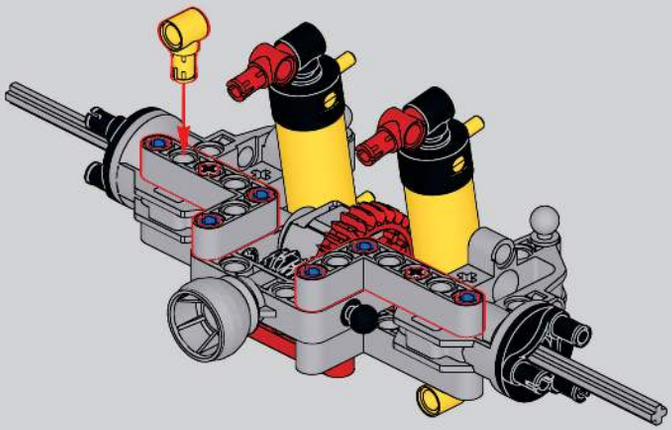

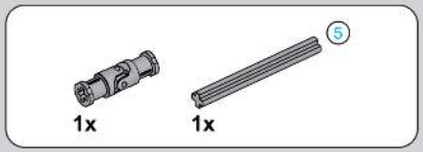

148

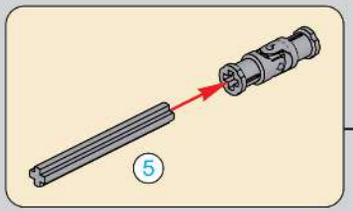

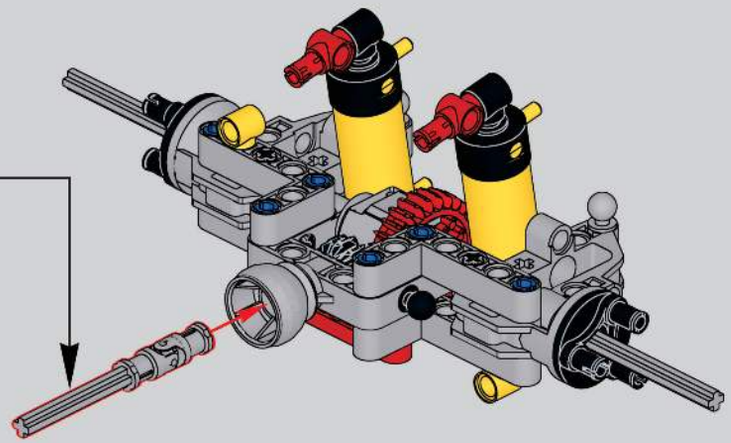

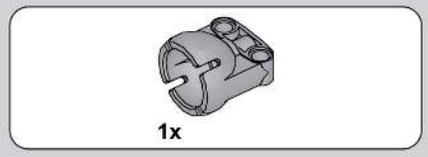

149

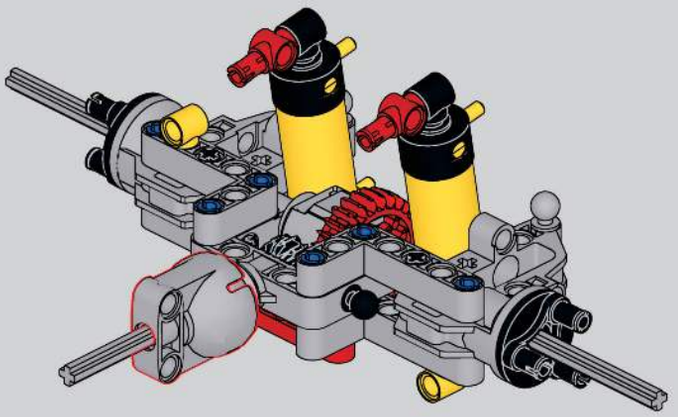

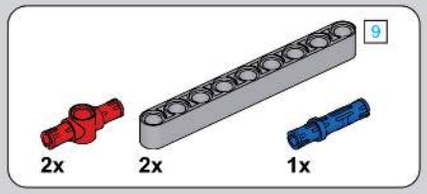

150

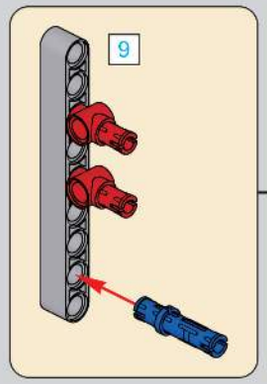

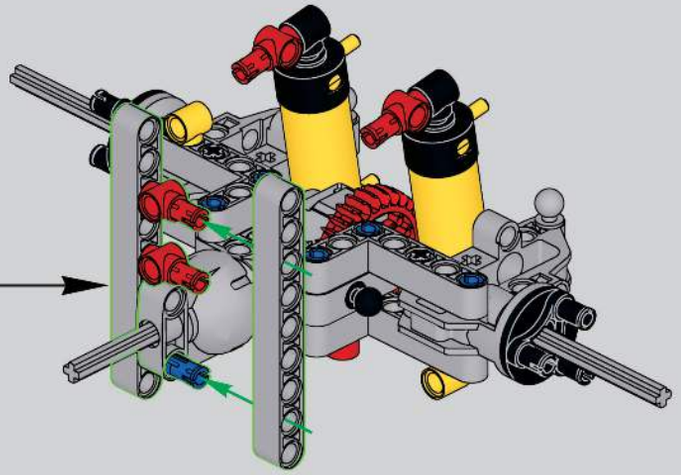

151

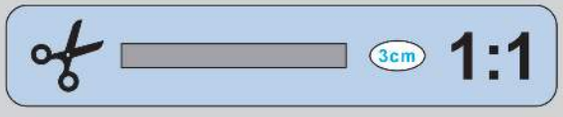

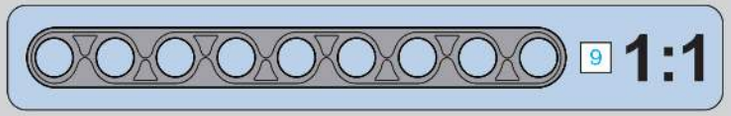

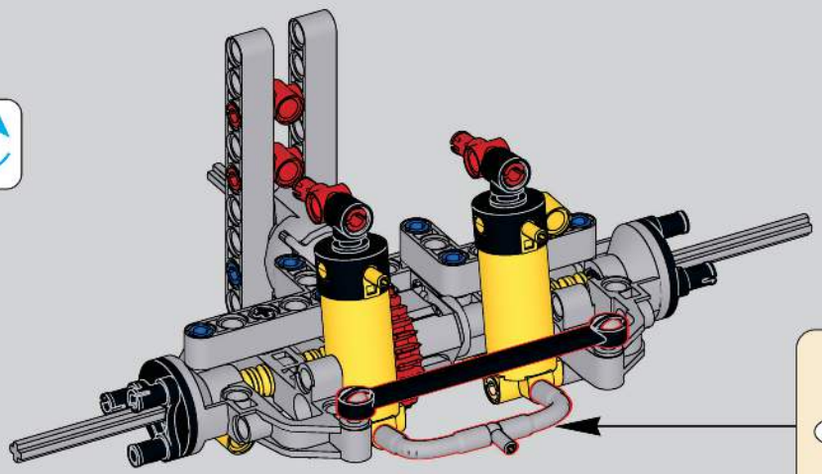

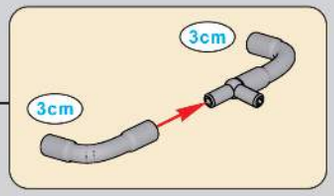

152

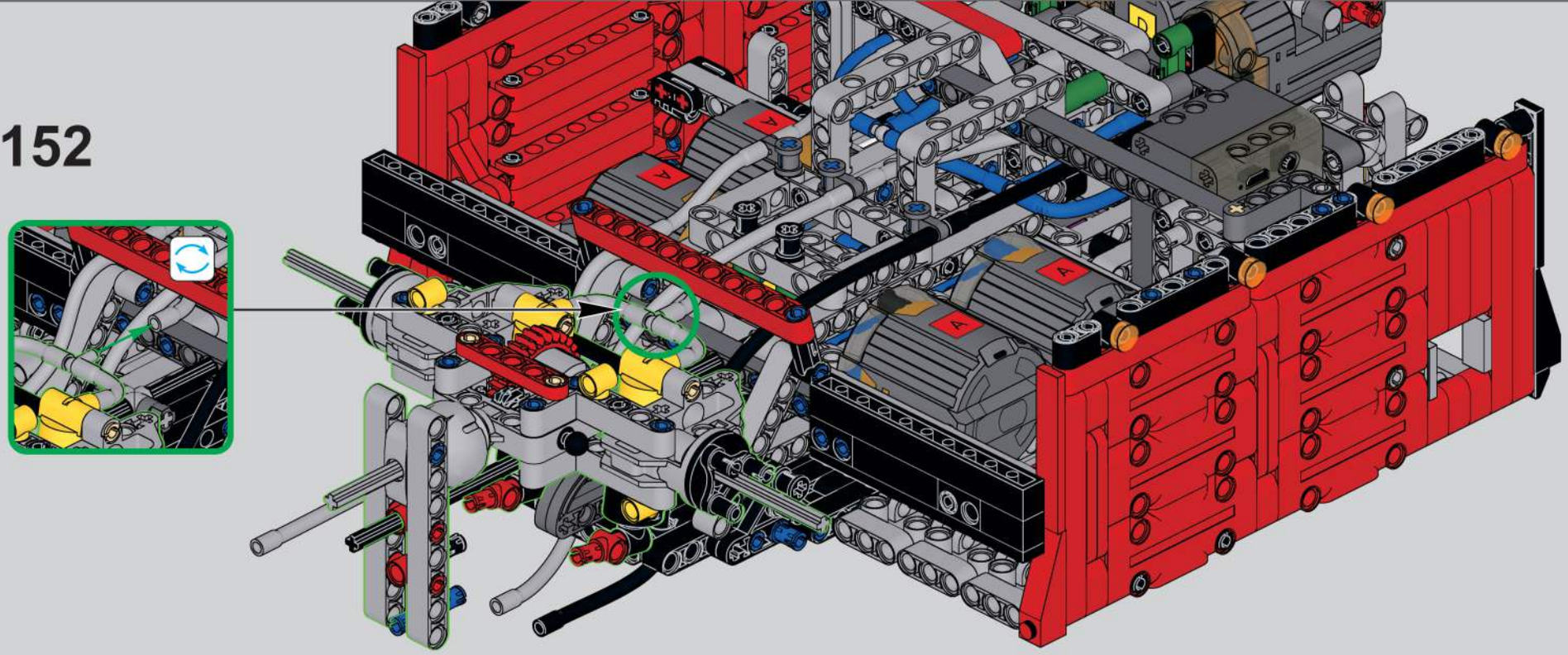

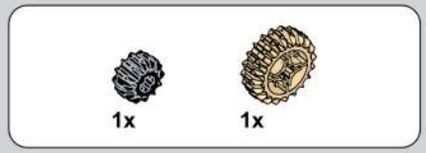

153

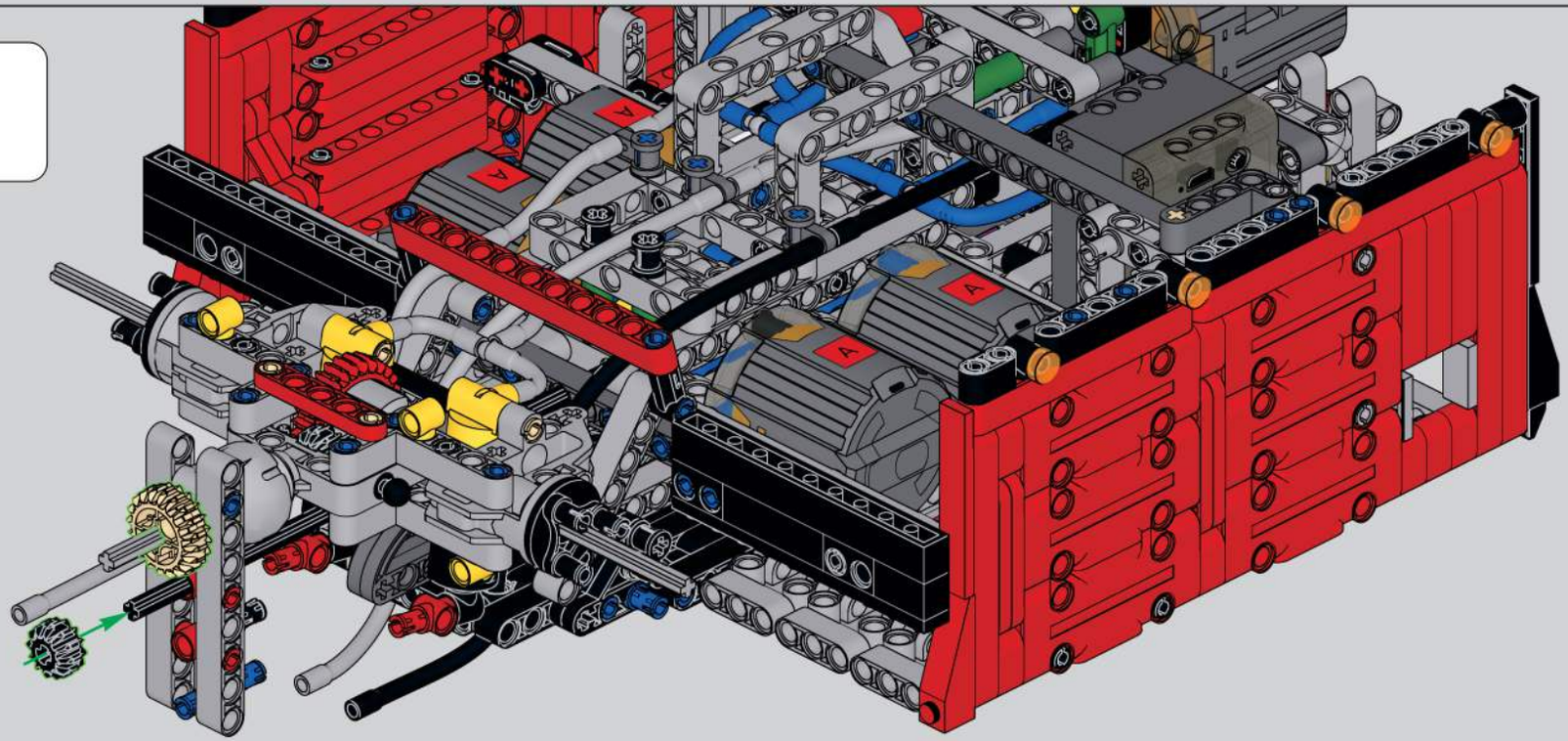

1:1

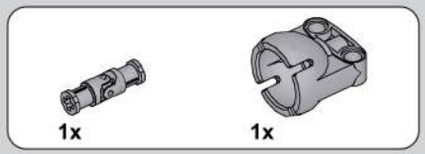

154

155

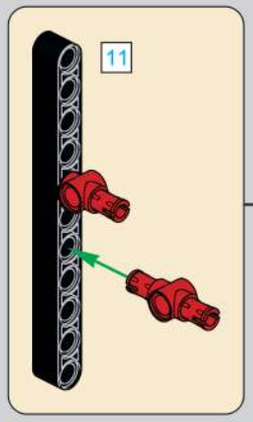

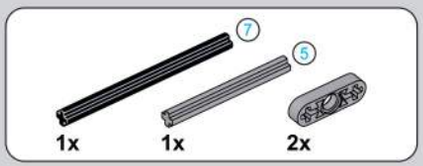

156

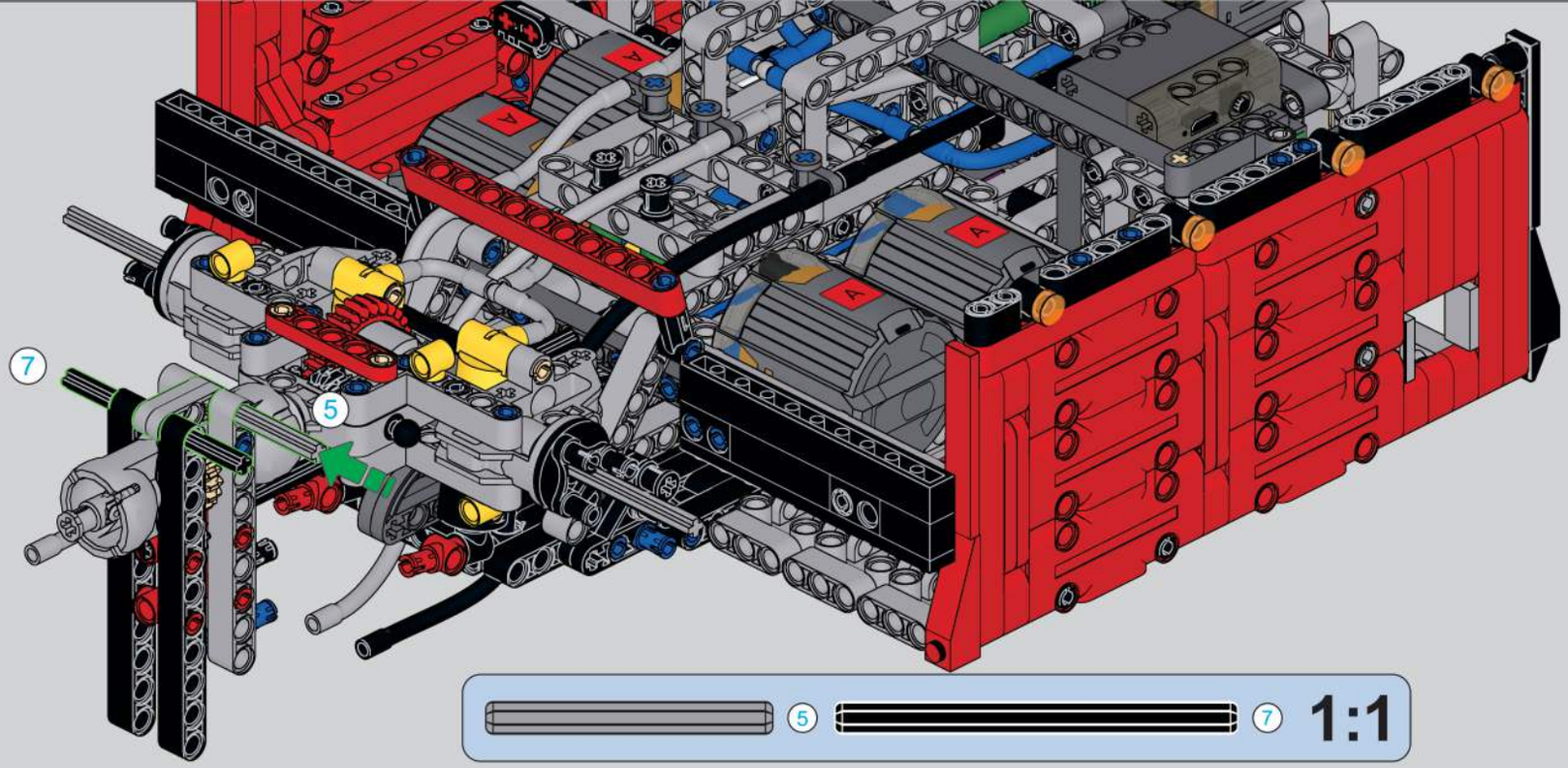

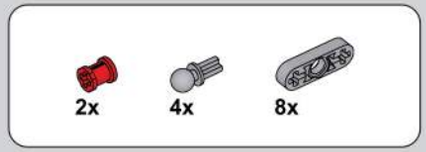

157

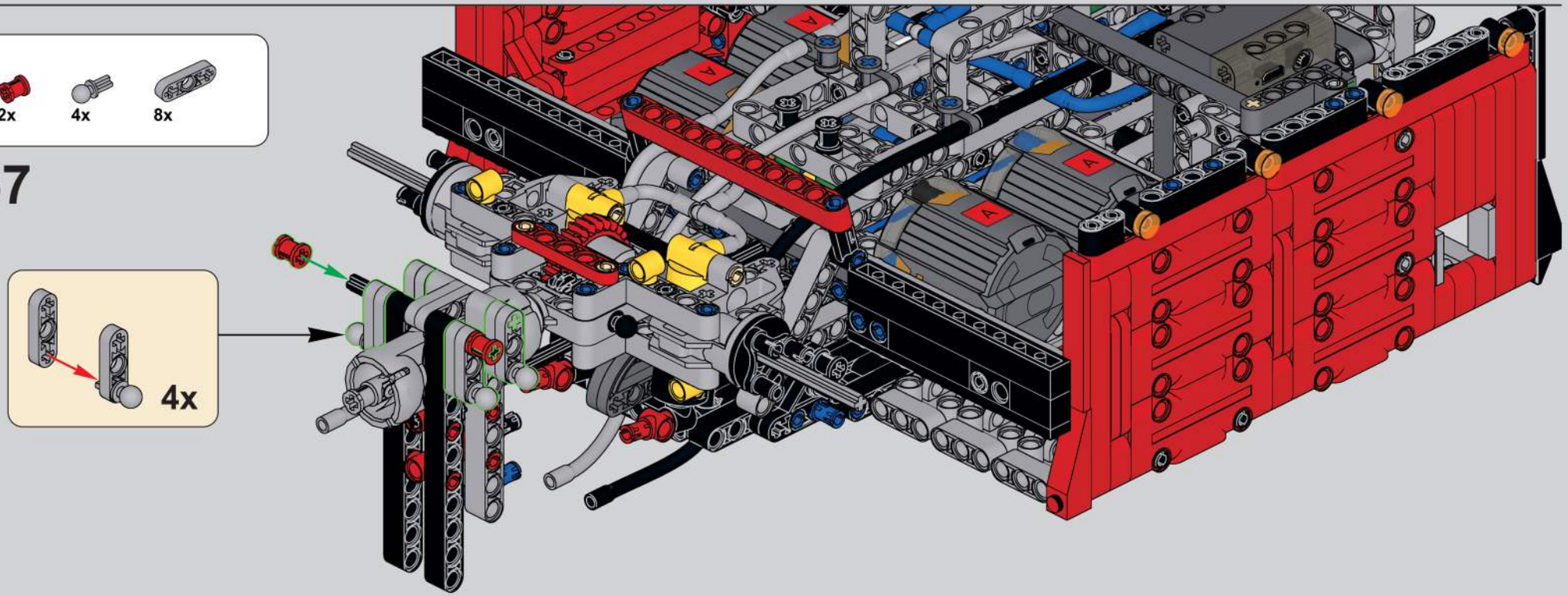

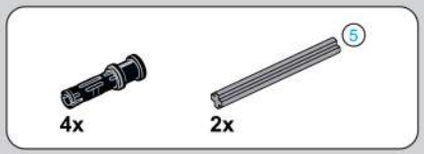

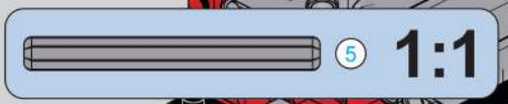

158

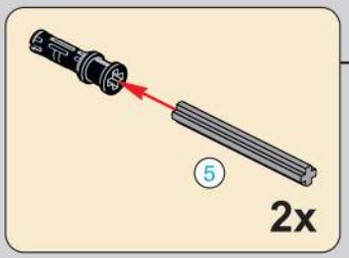

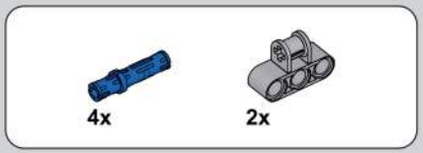

159

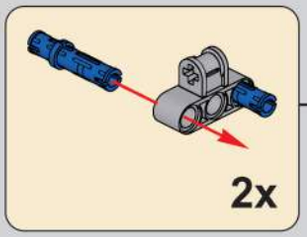

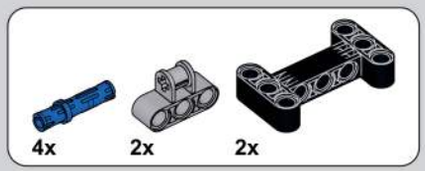

160

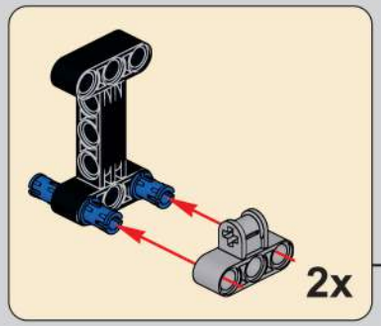

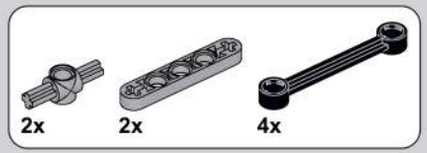

161

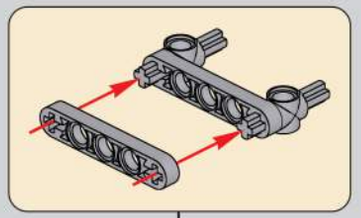

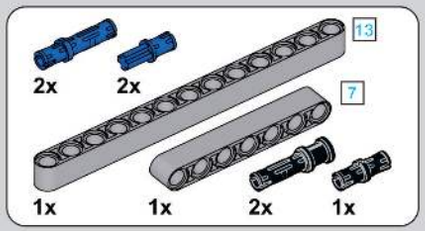

162

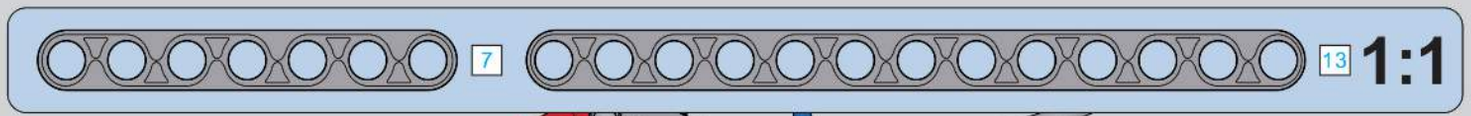

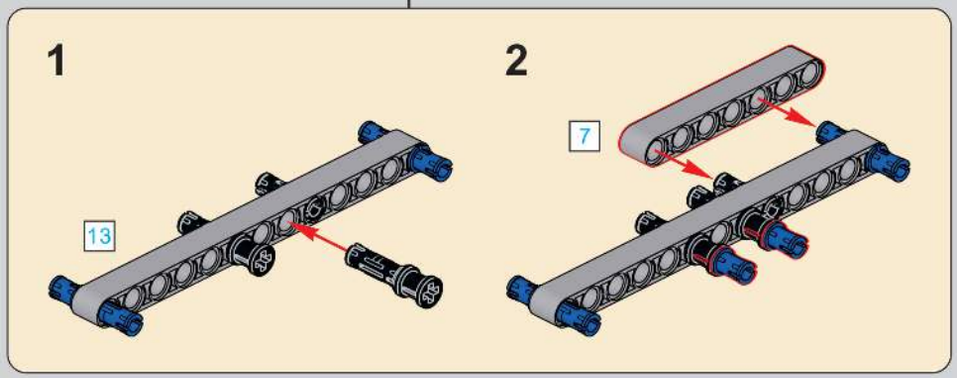

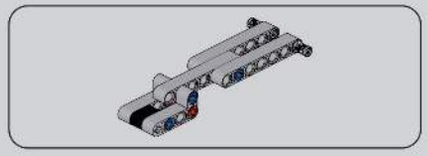

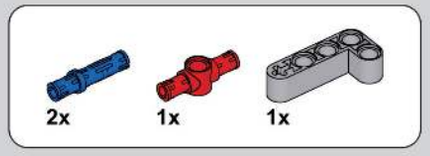

163

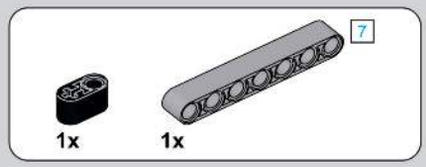

164

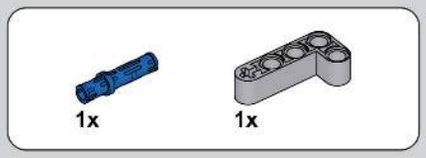

165

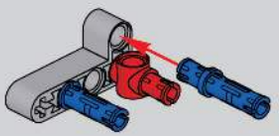

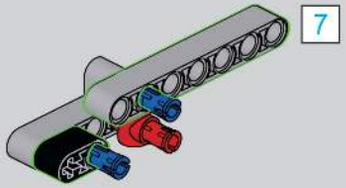

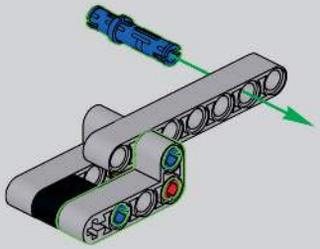

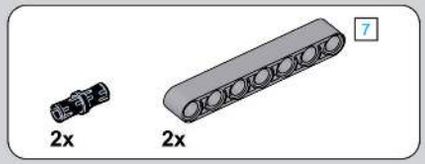

166

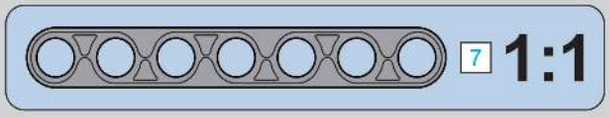

167

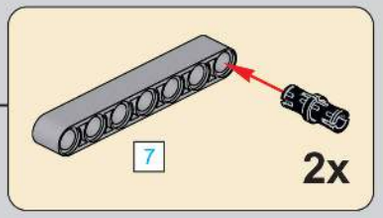

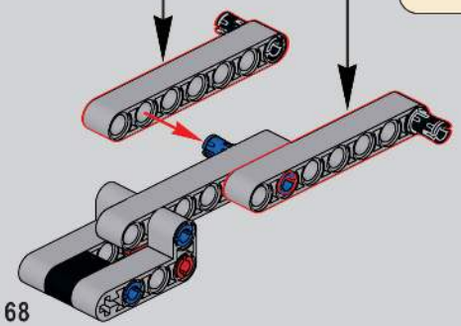

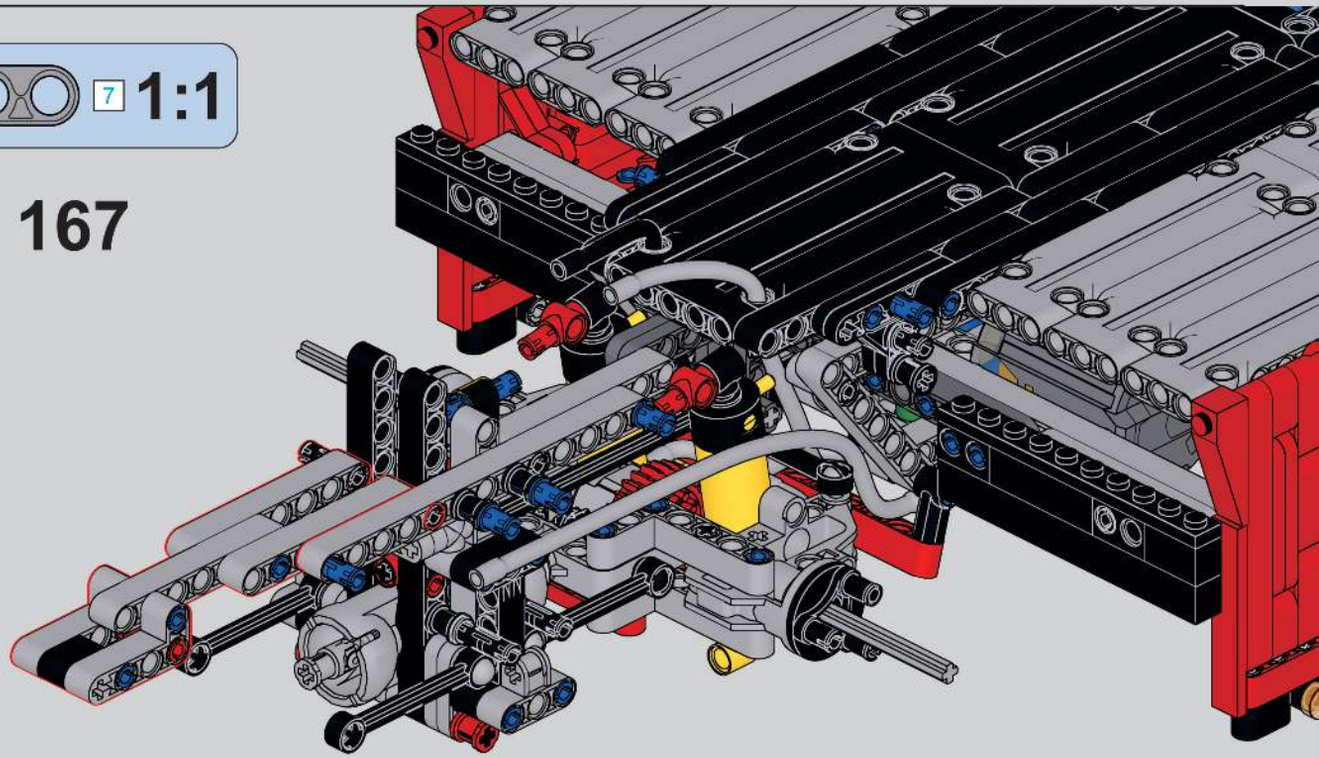

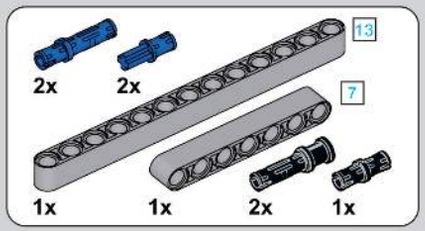

168

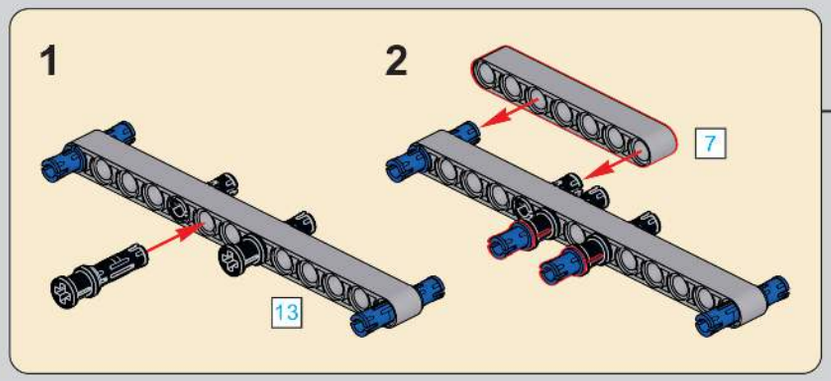

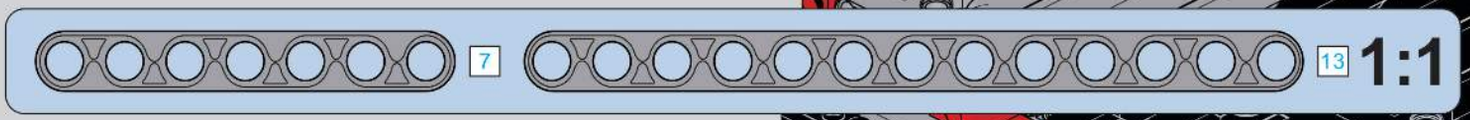

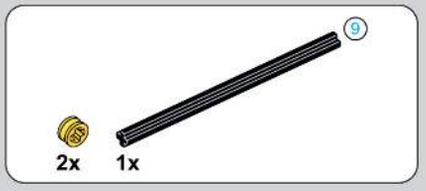

169

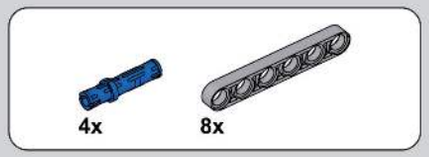

170

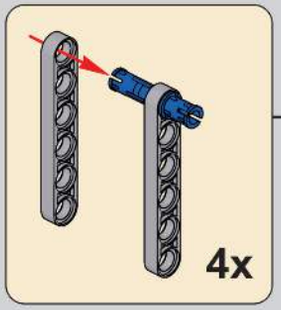

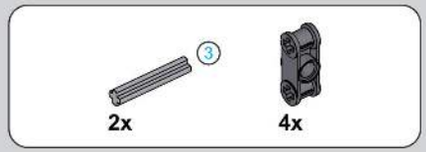

171

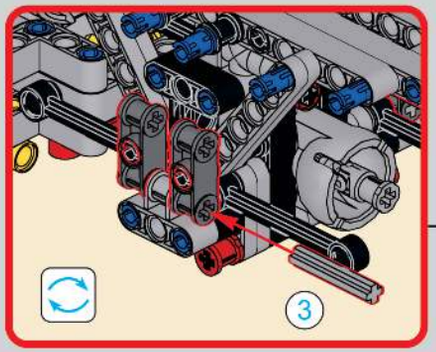

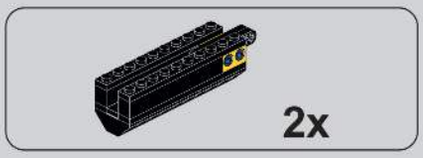

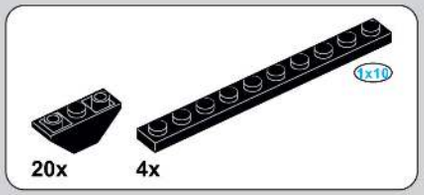

172

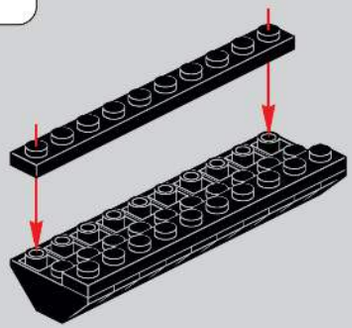

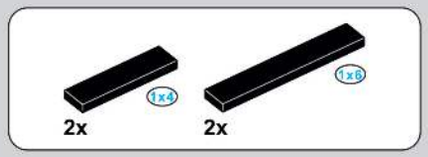

173

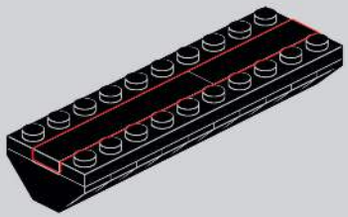

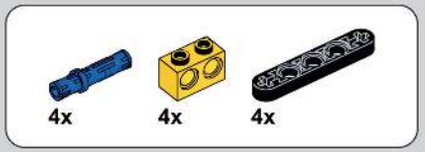

174

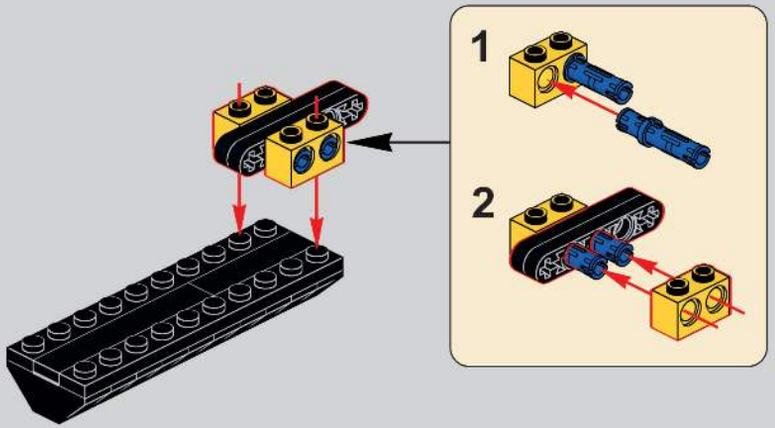

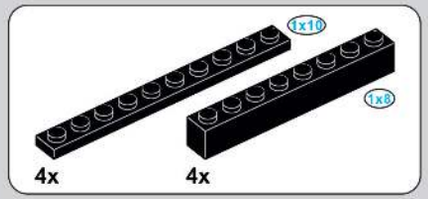

175

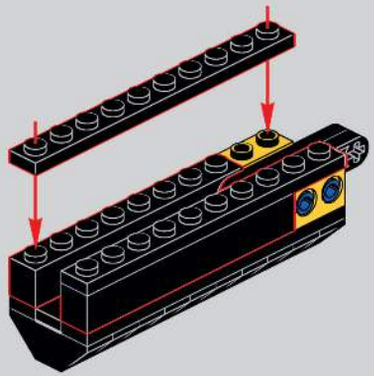

2x

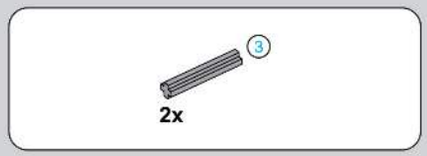

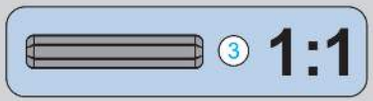

176

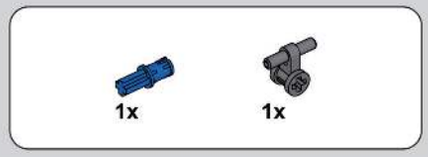

177

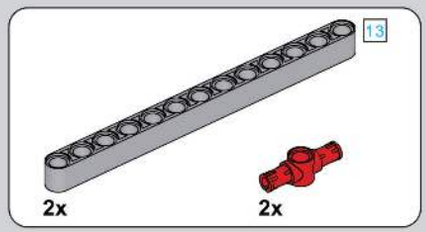

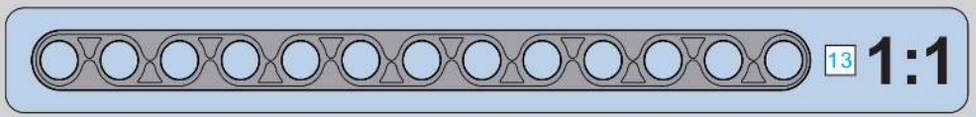

178

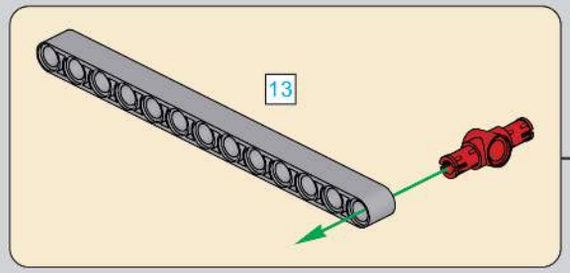

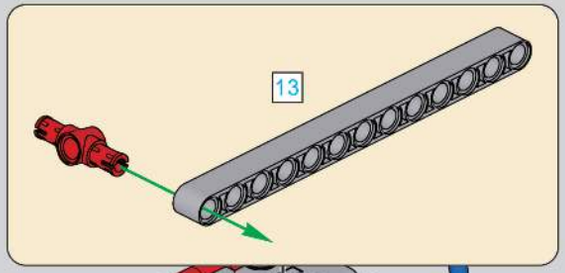

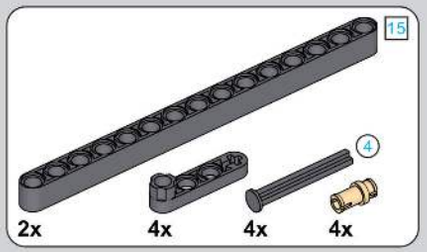

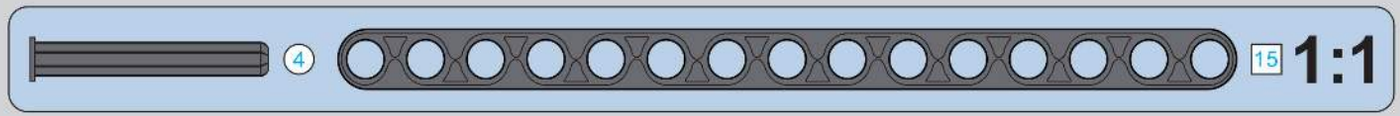

179

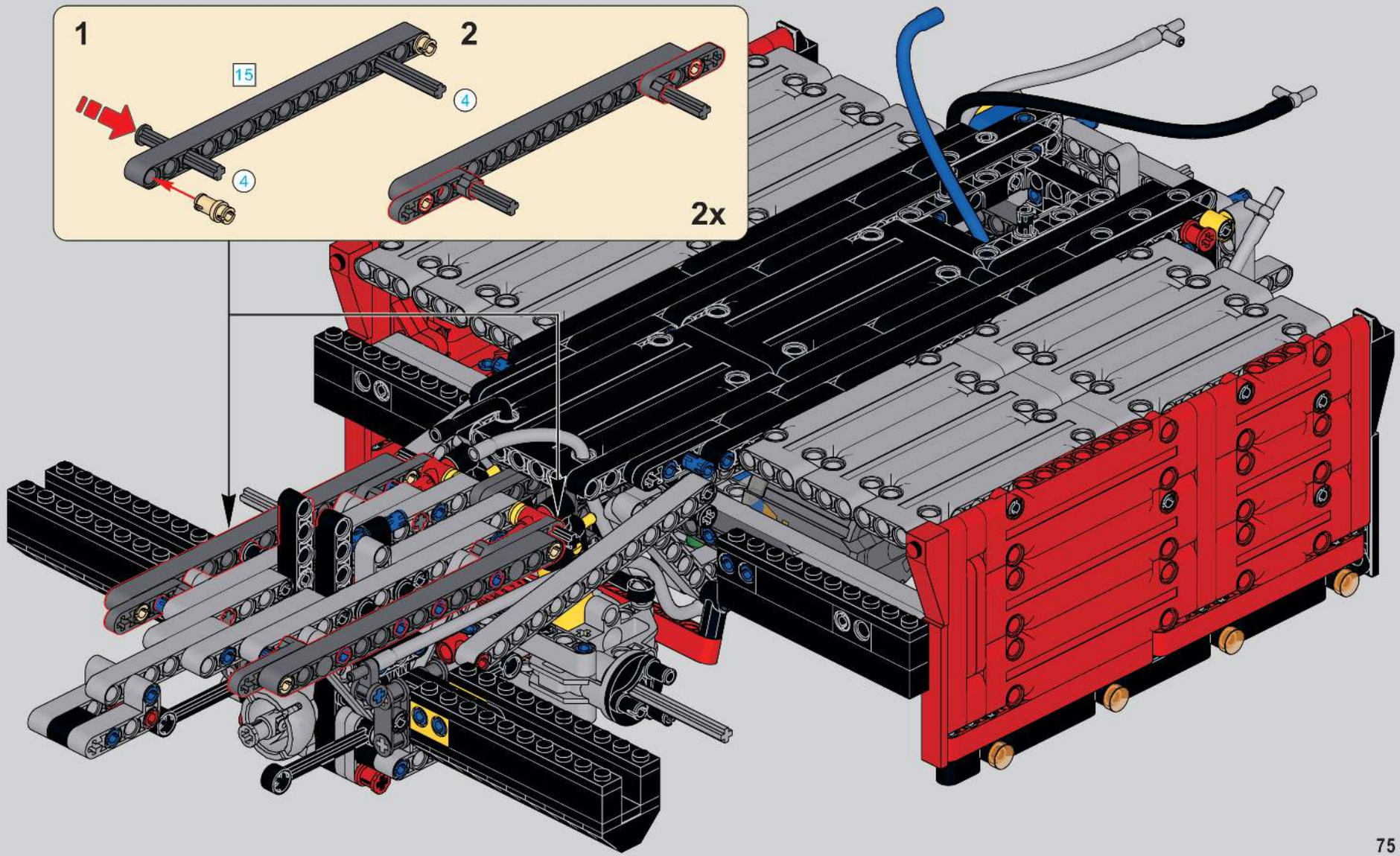

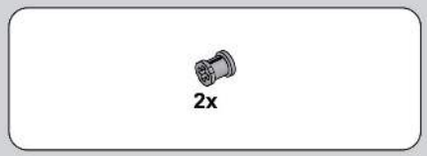

180

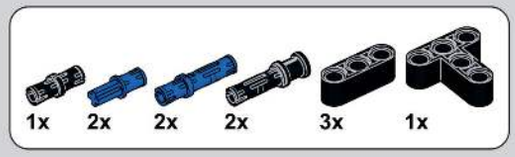

181

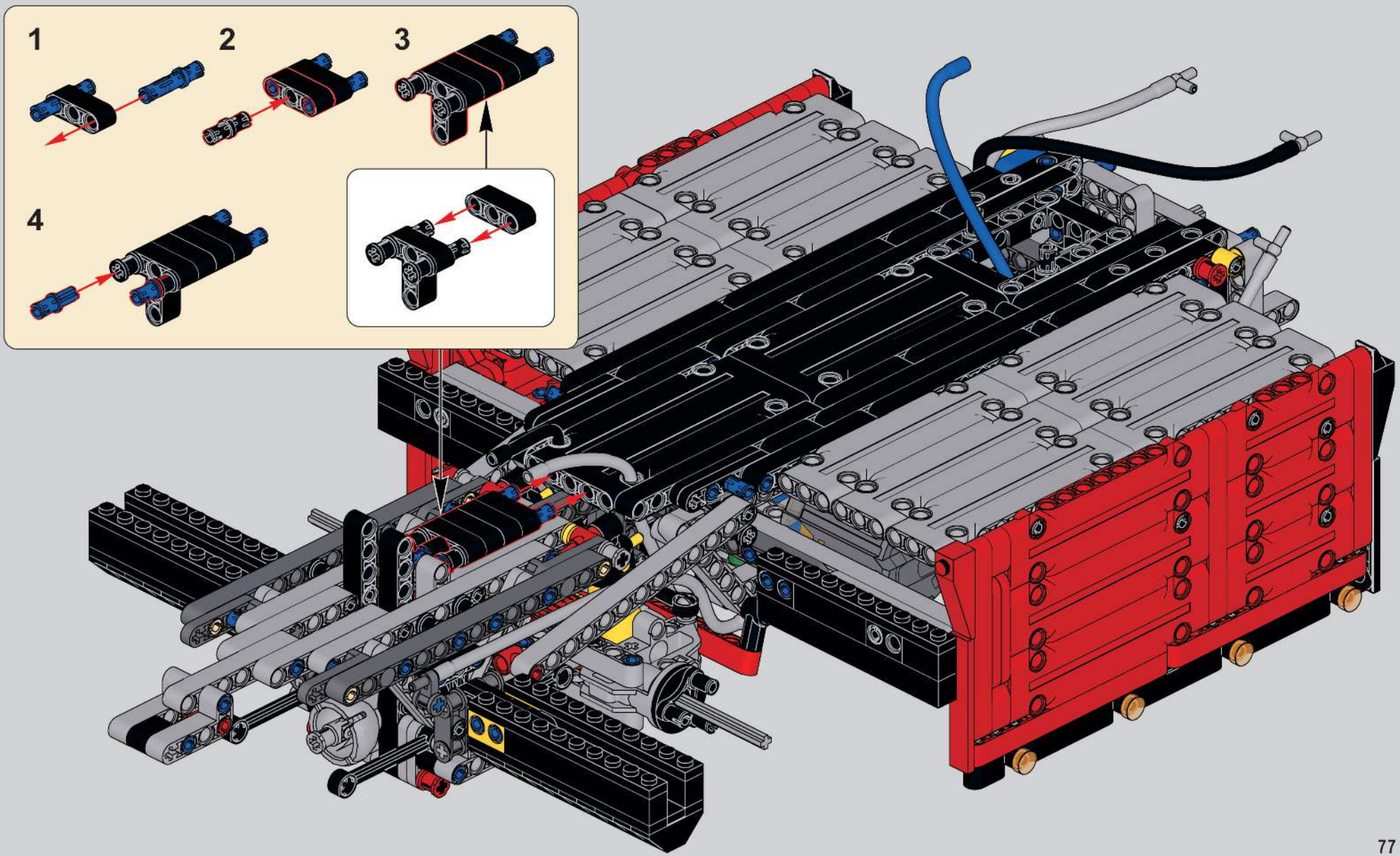

182

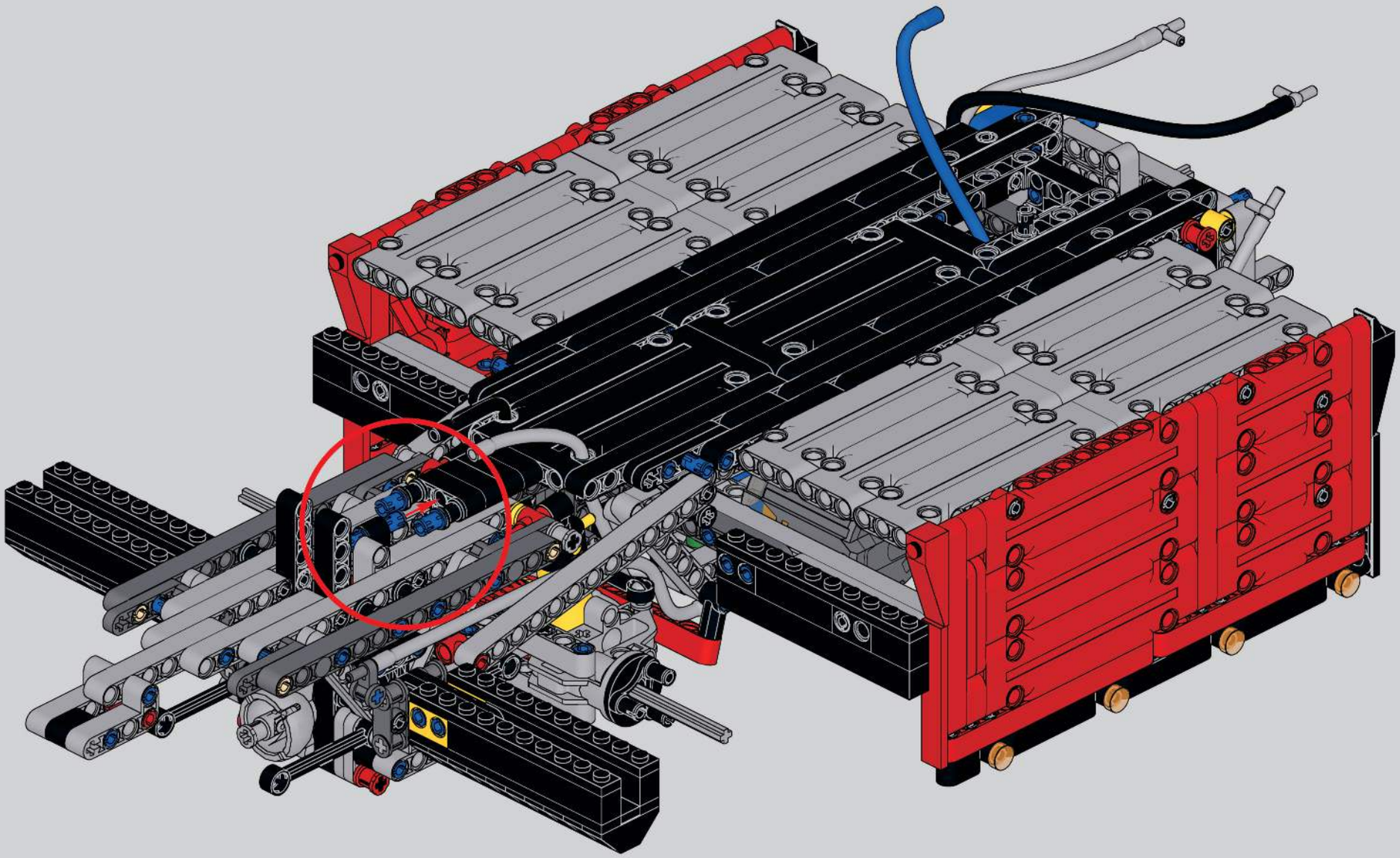

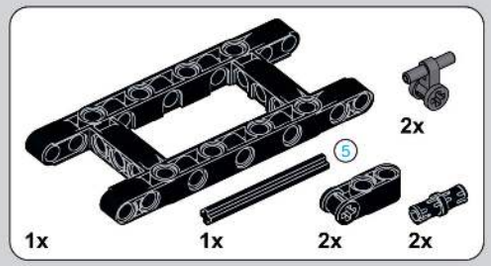

183

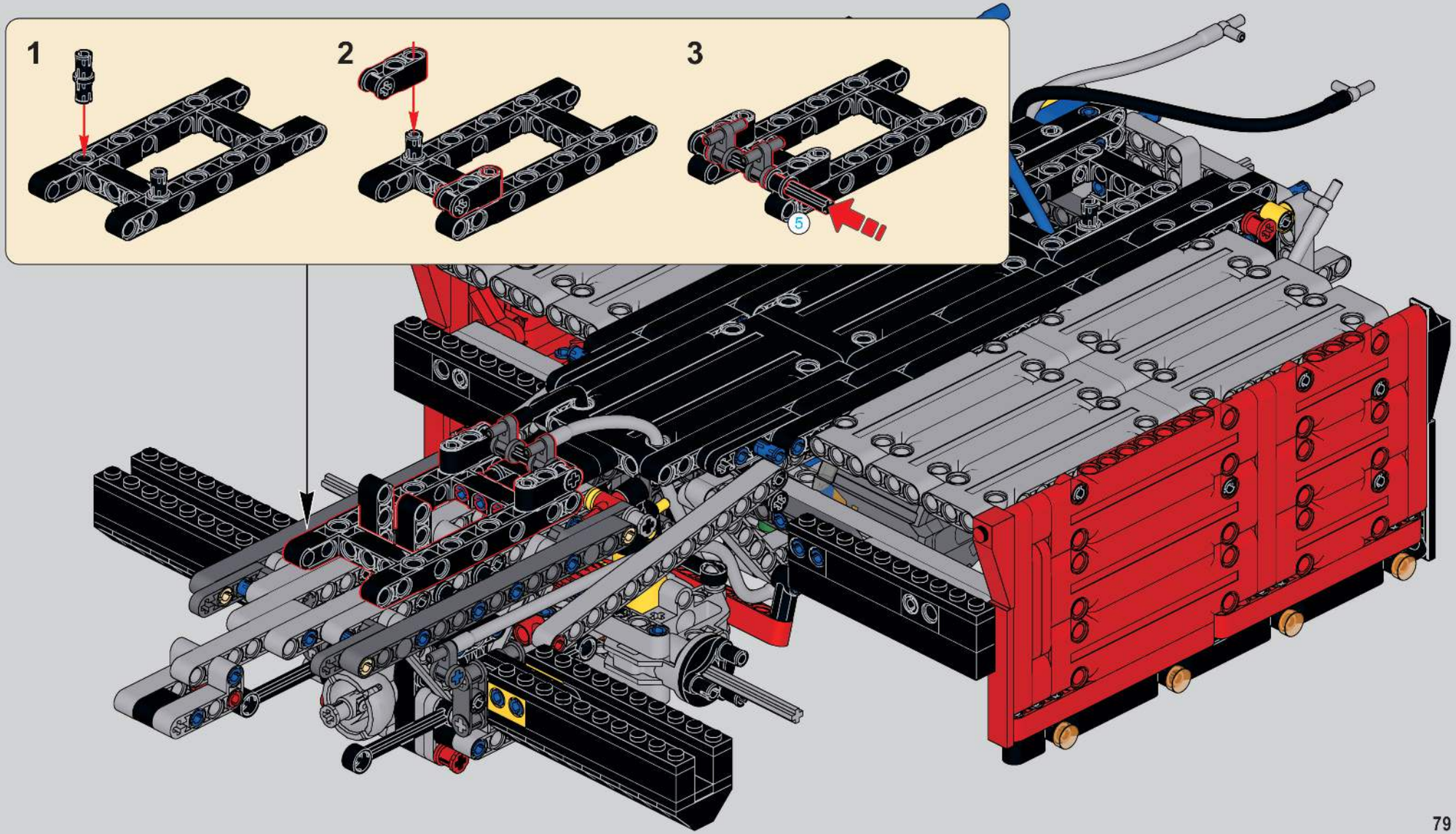

4x

184

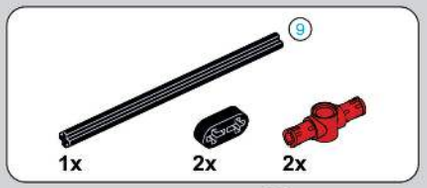

185

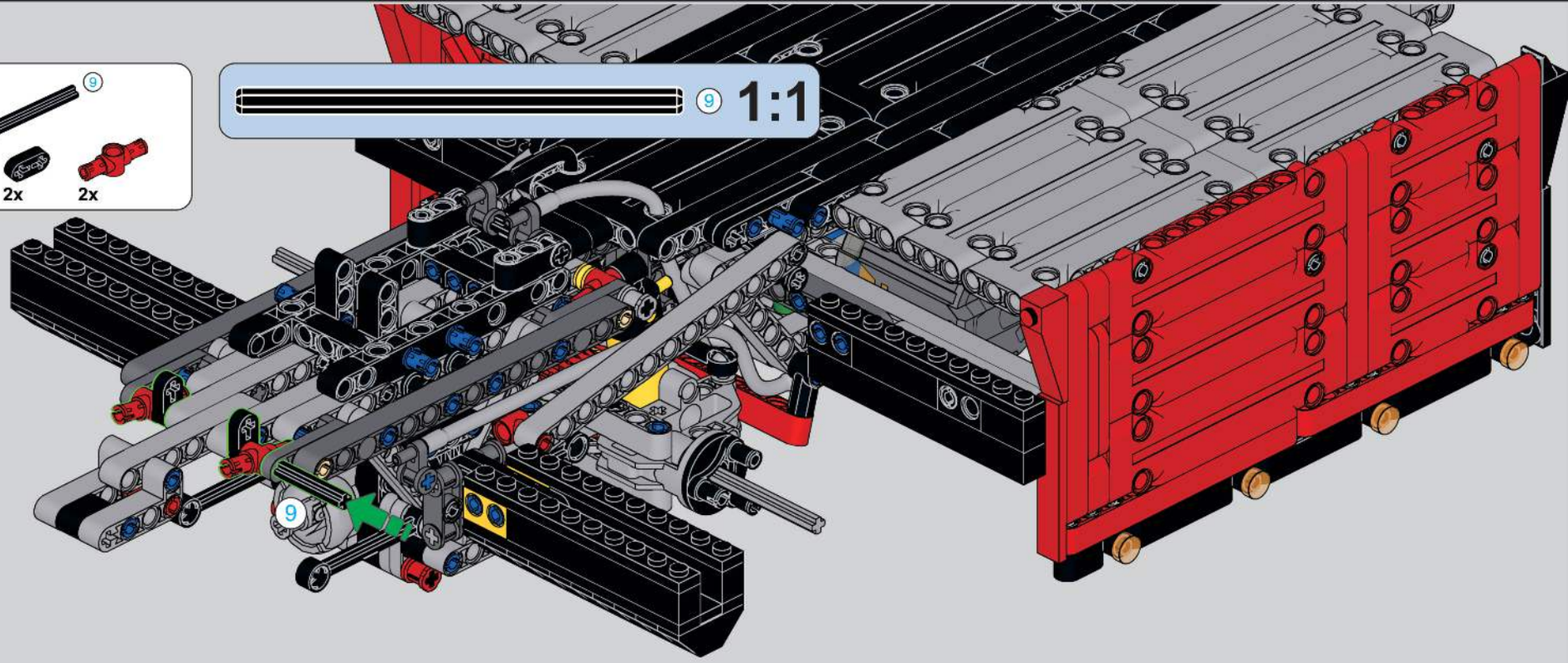

186

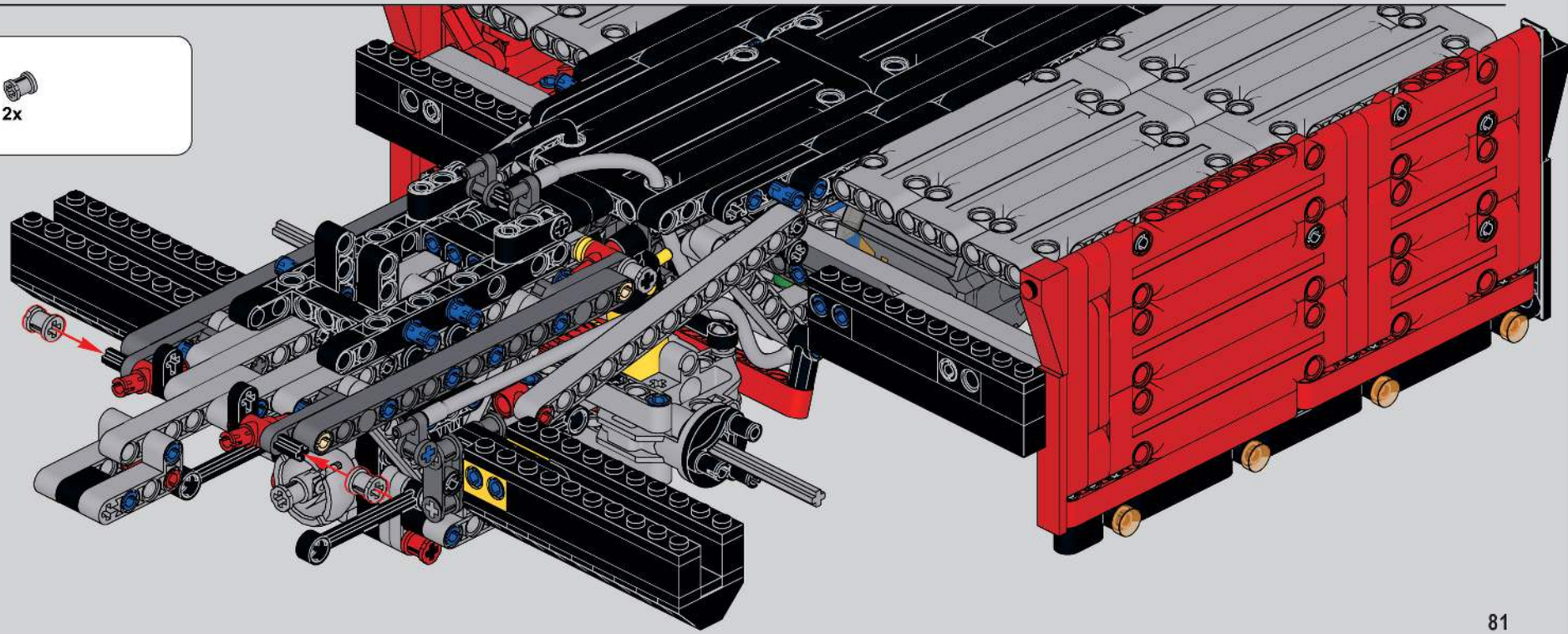

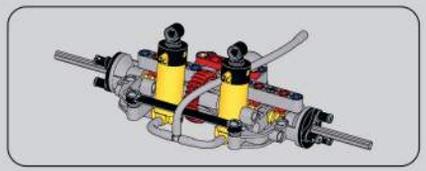

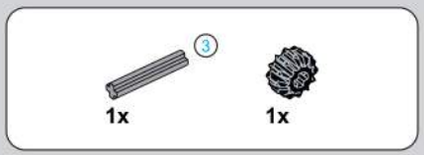

187

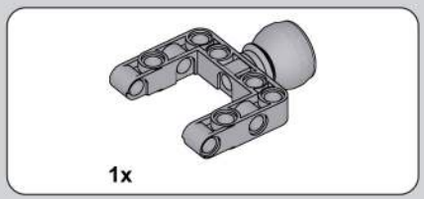

188

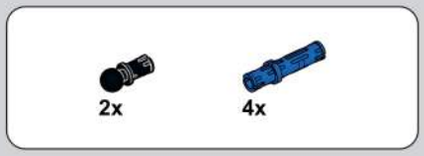

189

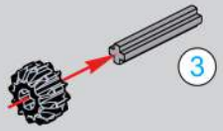

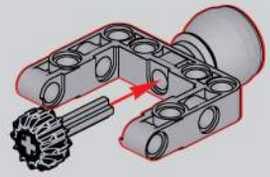

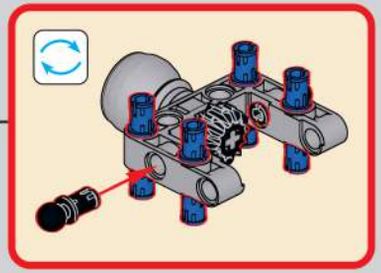

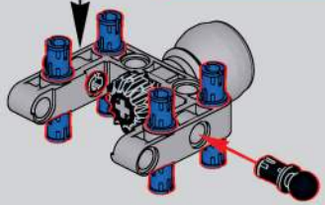

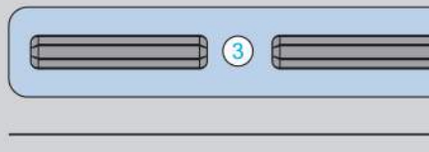

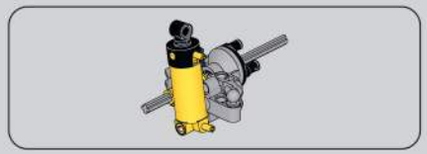

191

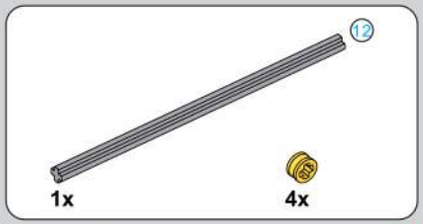

192

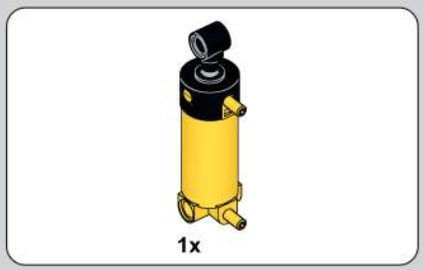

193

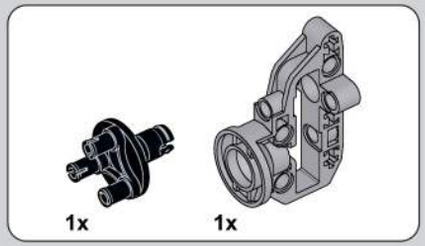

190

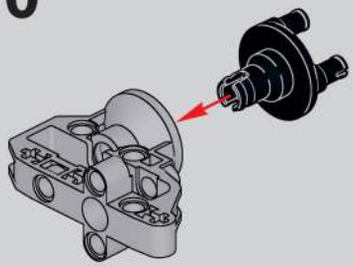

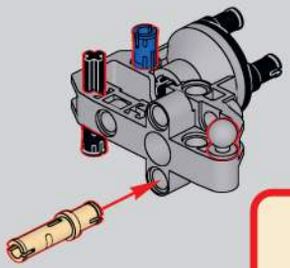

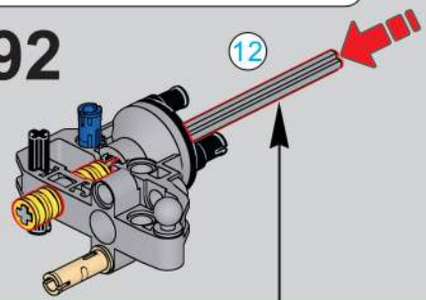

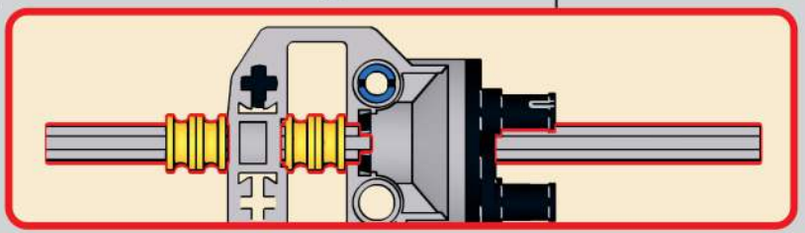

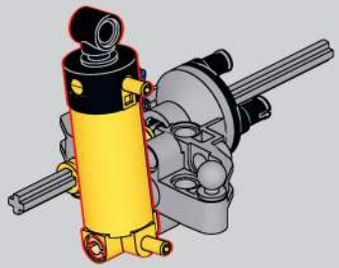

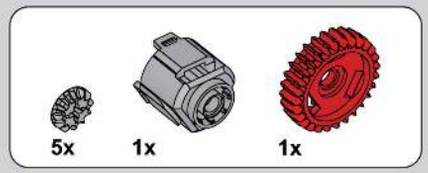

194

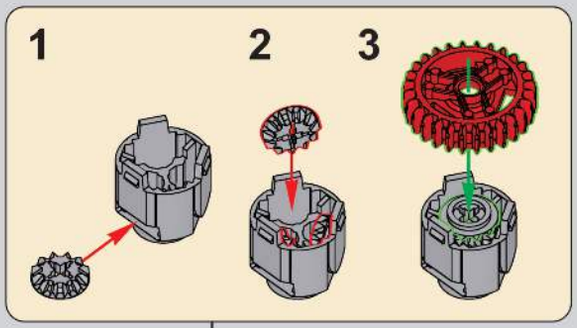

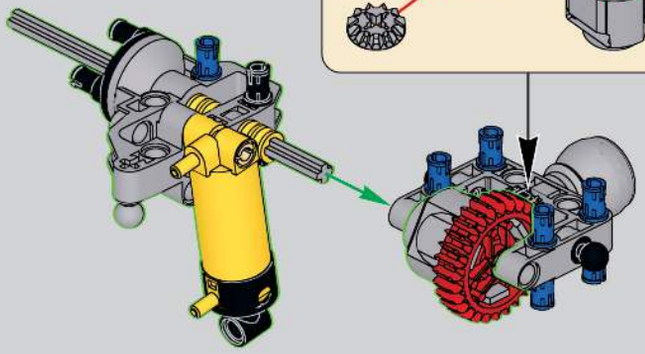

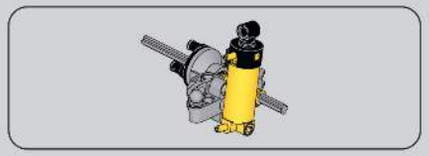

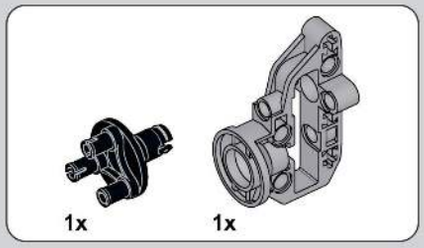

195

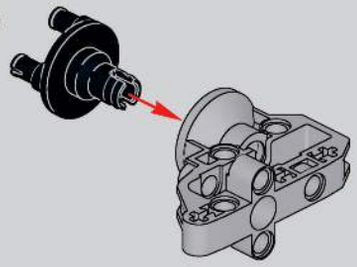

196

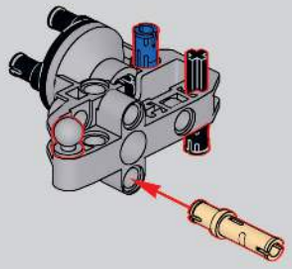

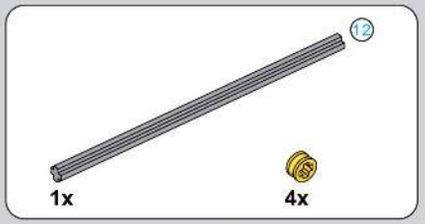

197

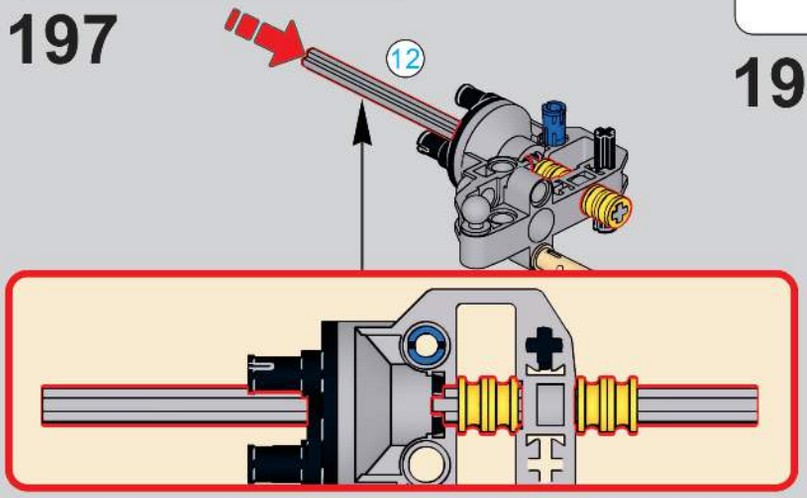

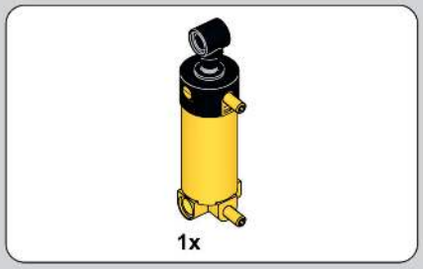

198

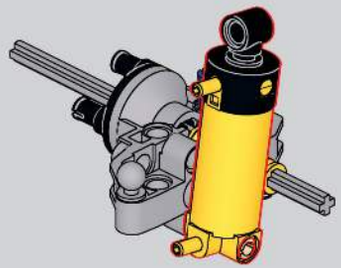

199

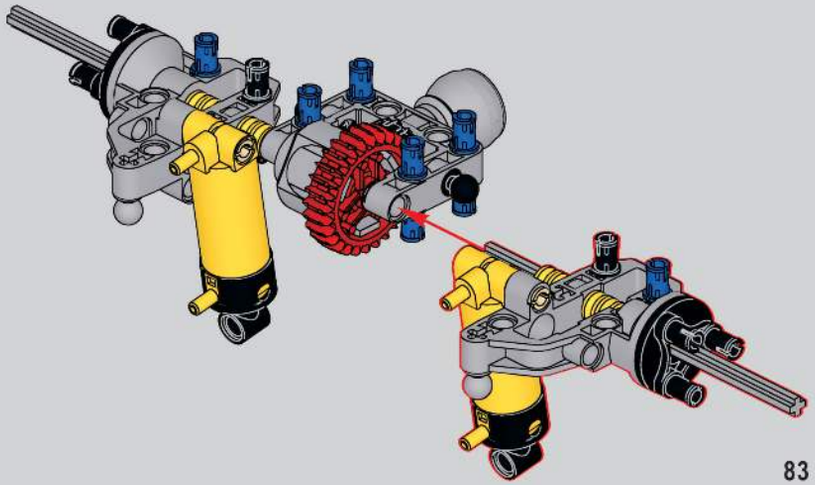

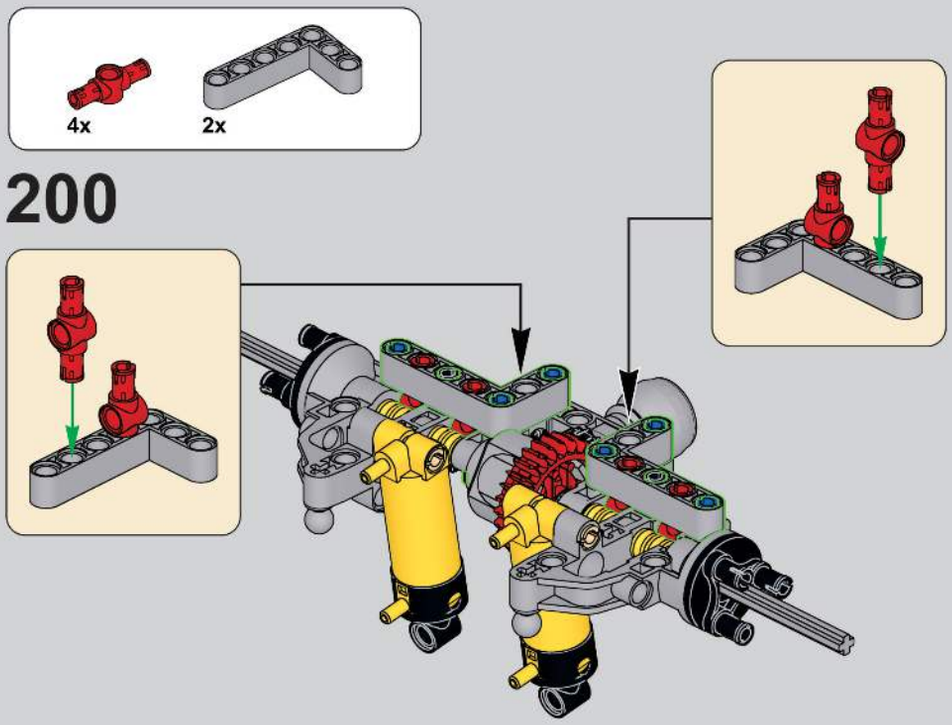

200

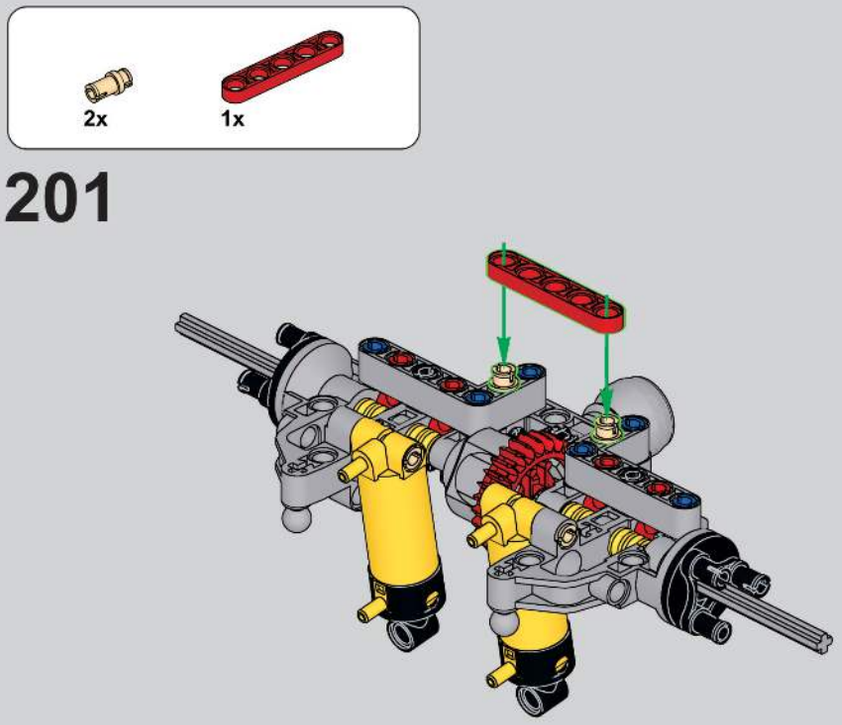

201

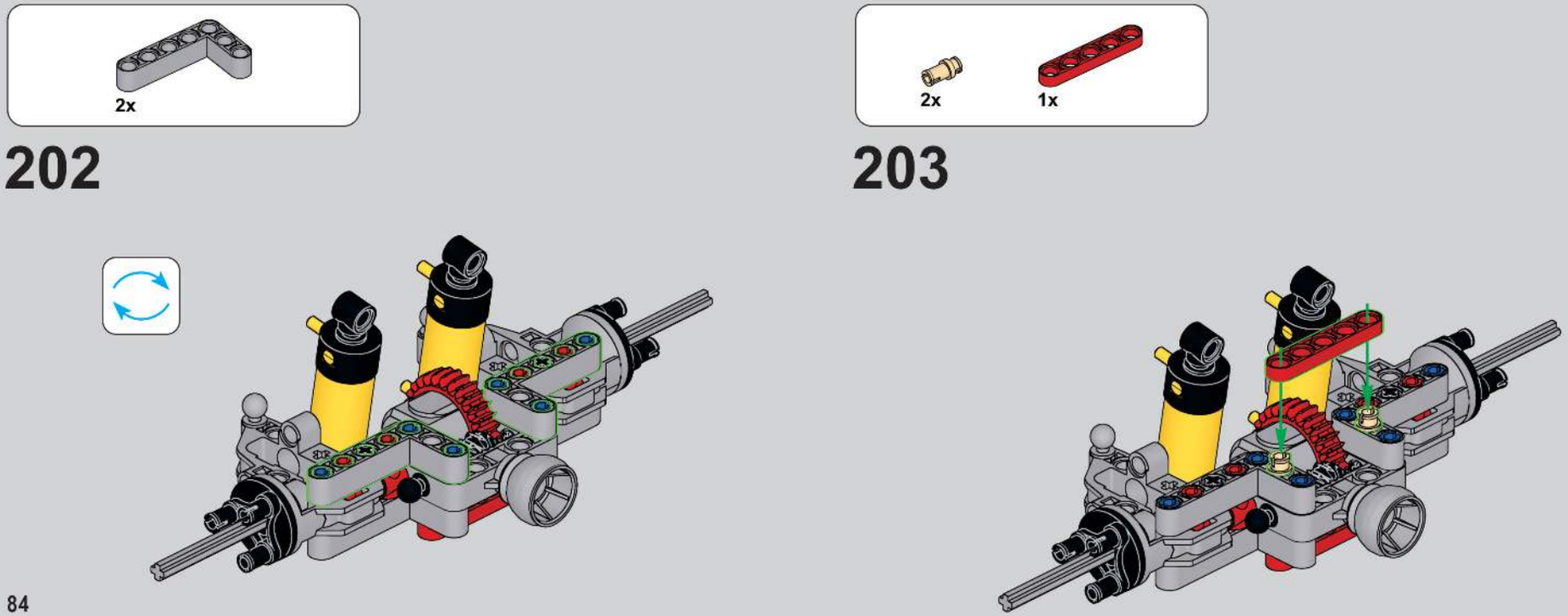

202

203

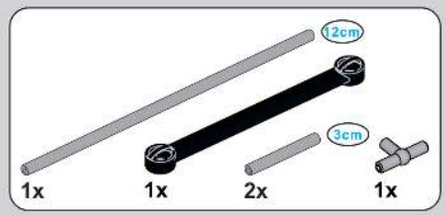

204

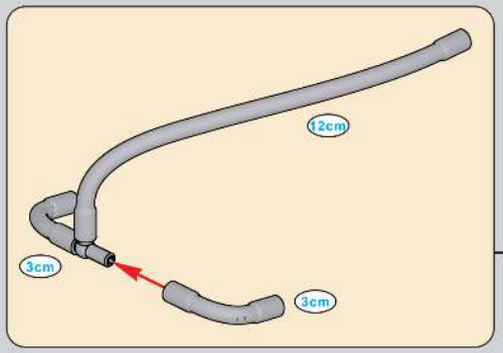

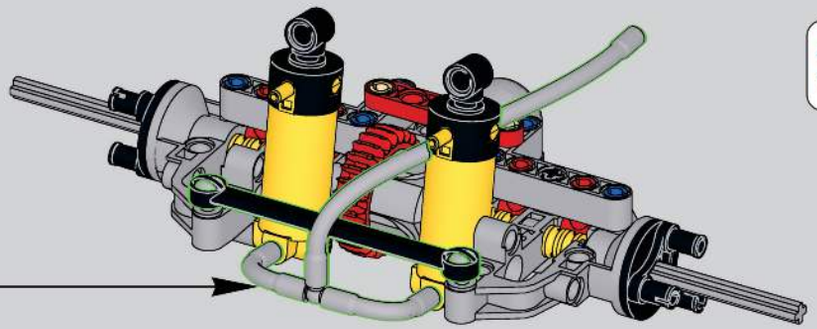

205

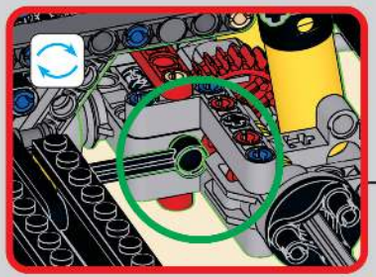

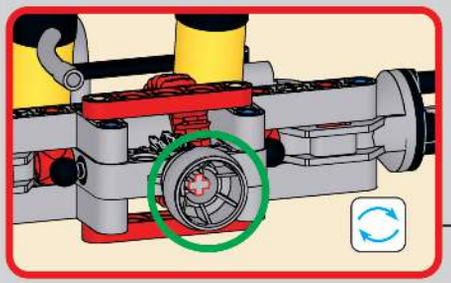

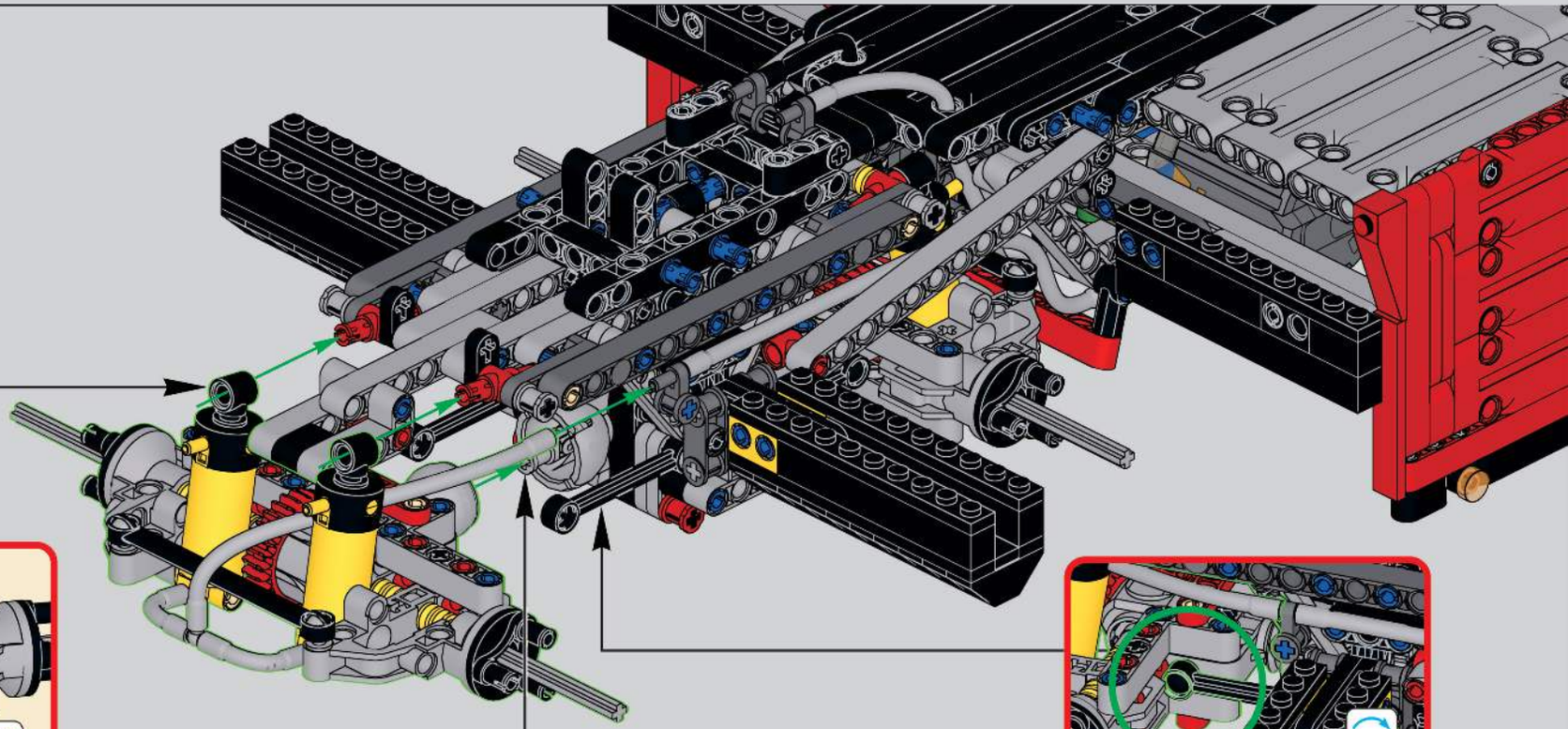

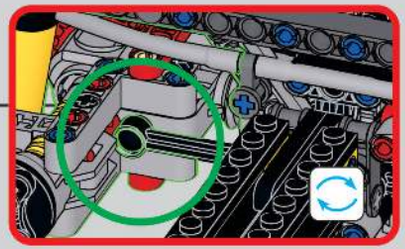

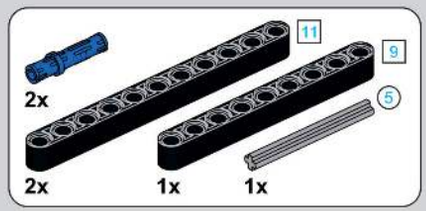

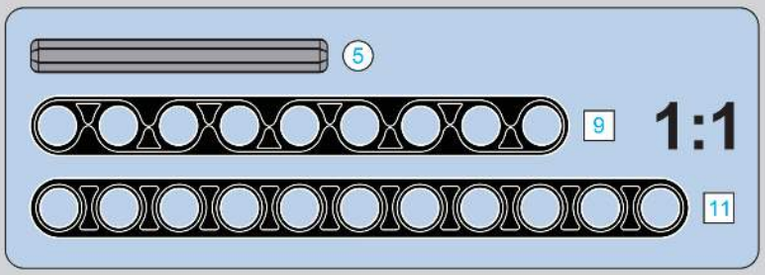

206

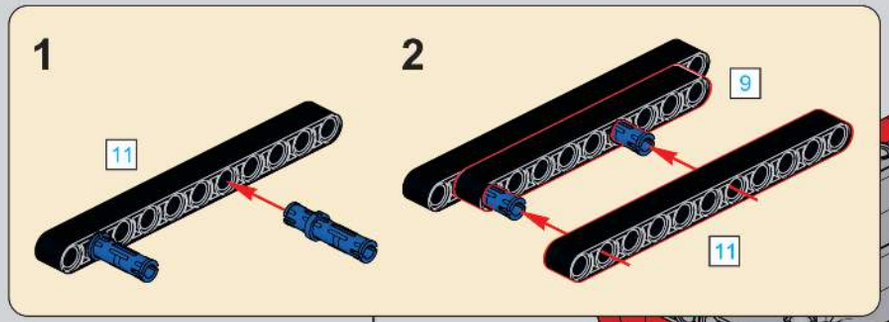

207

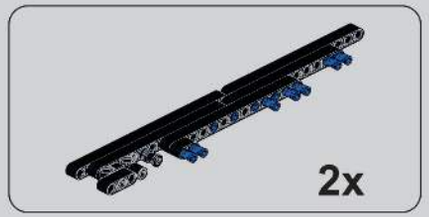

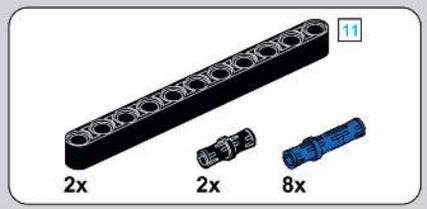

208

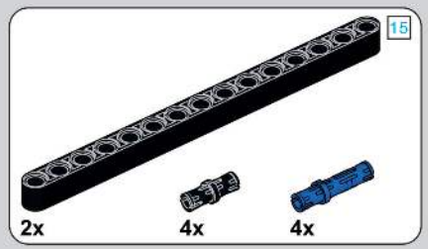

209

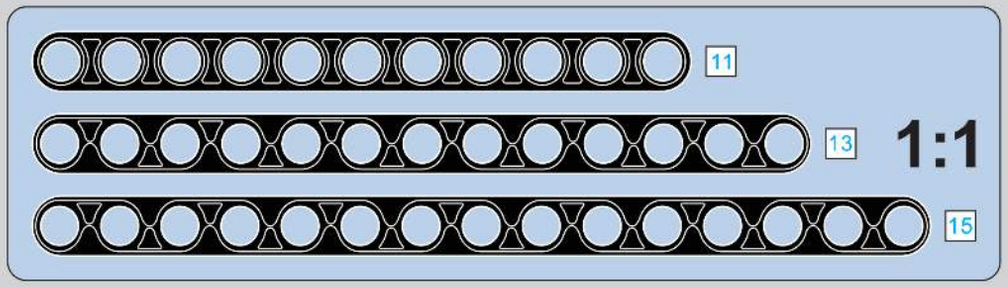

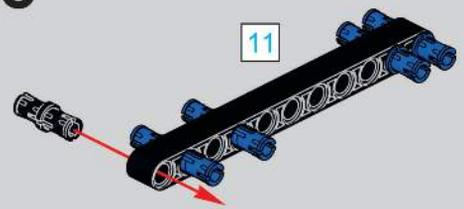

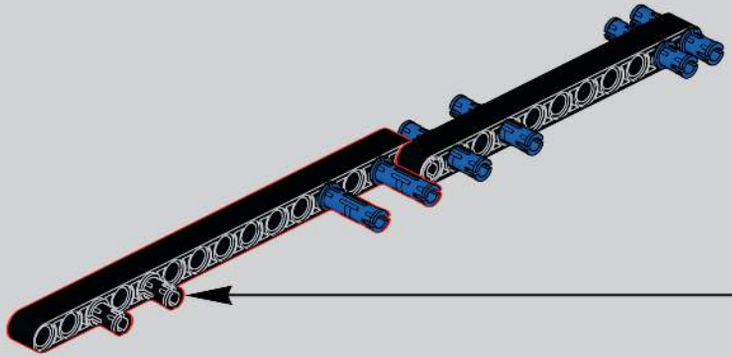

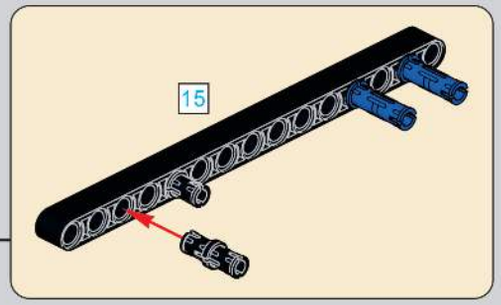

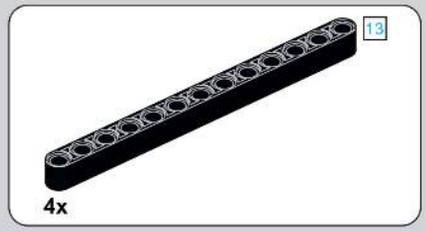

210

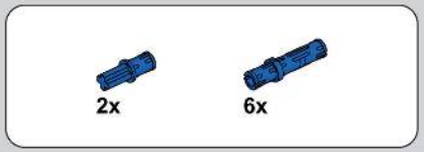

211

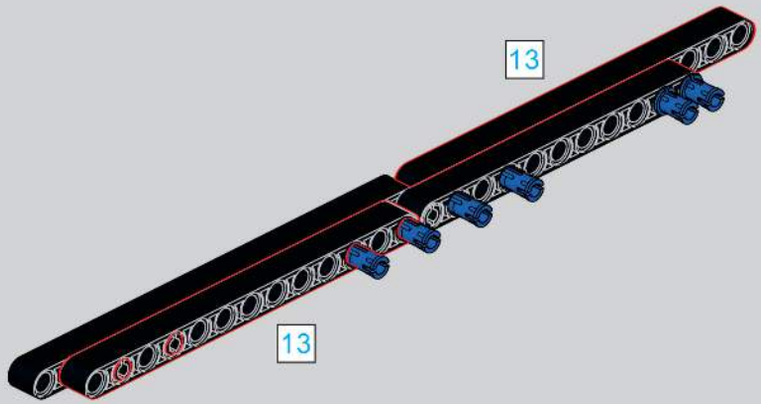

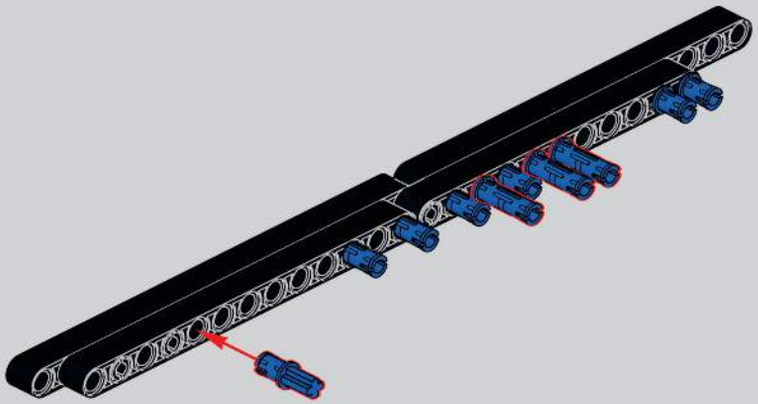

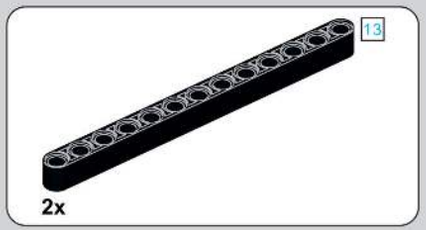

212

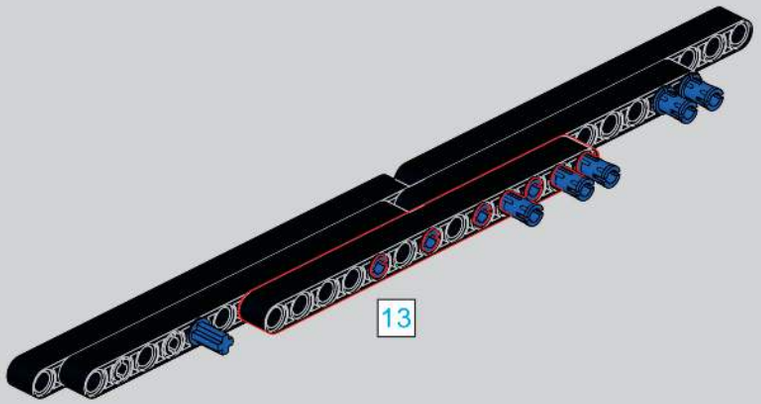

213

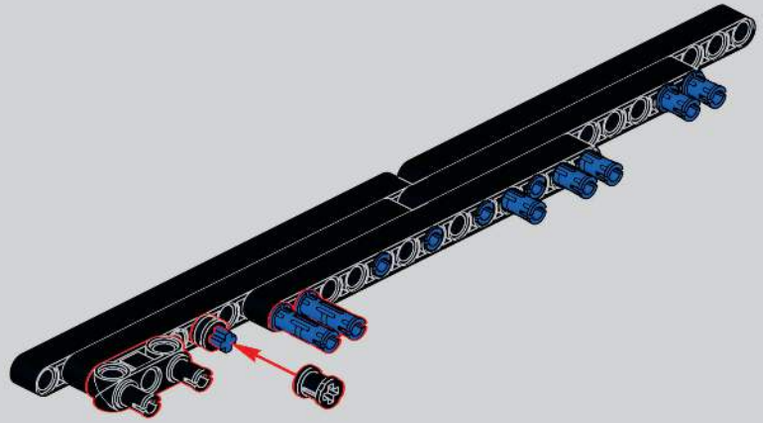

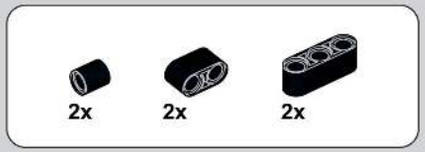

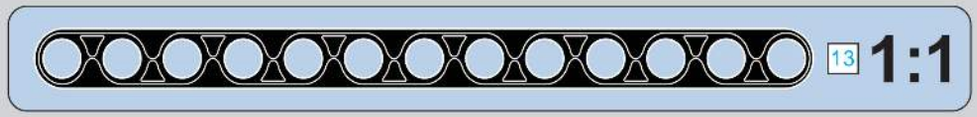

214

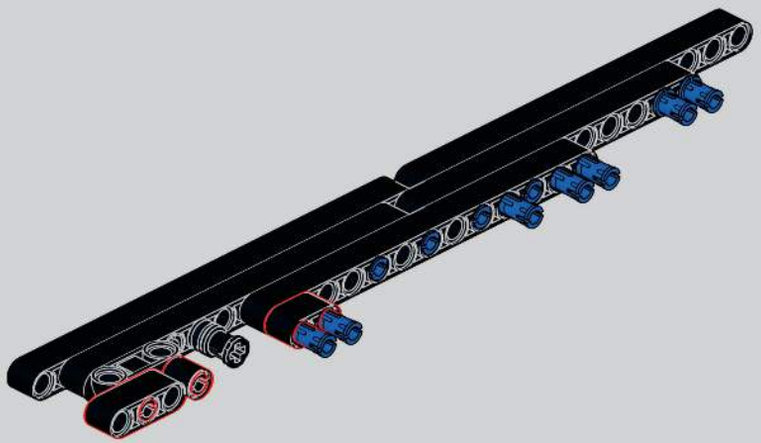

2x

215

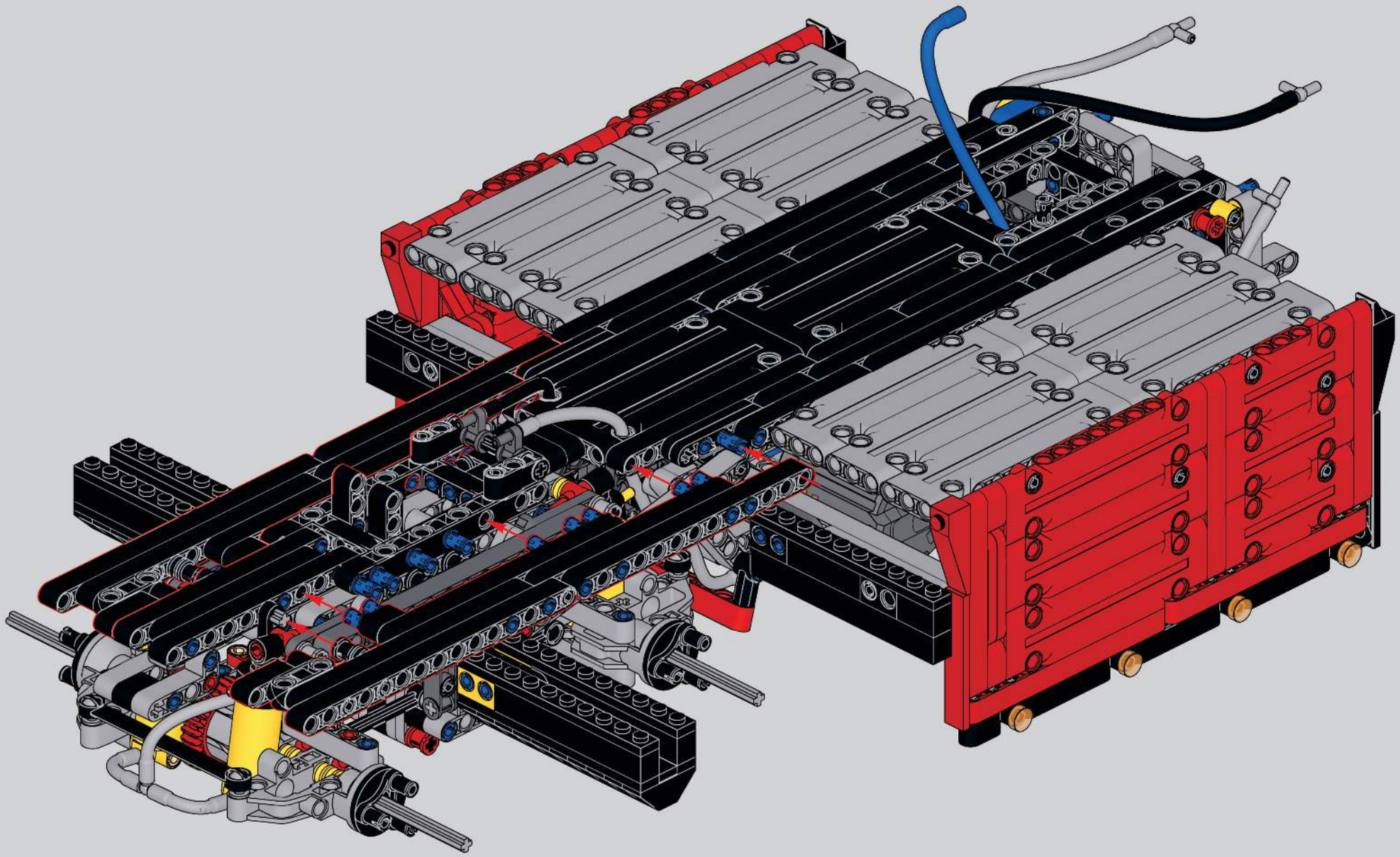

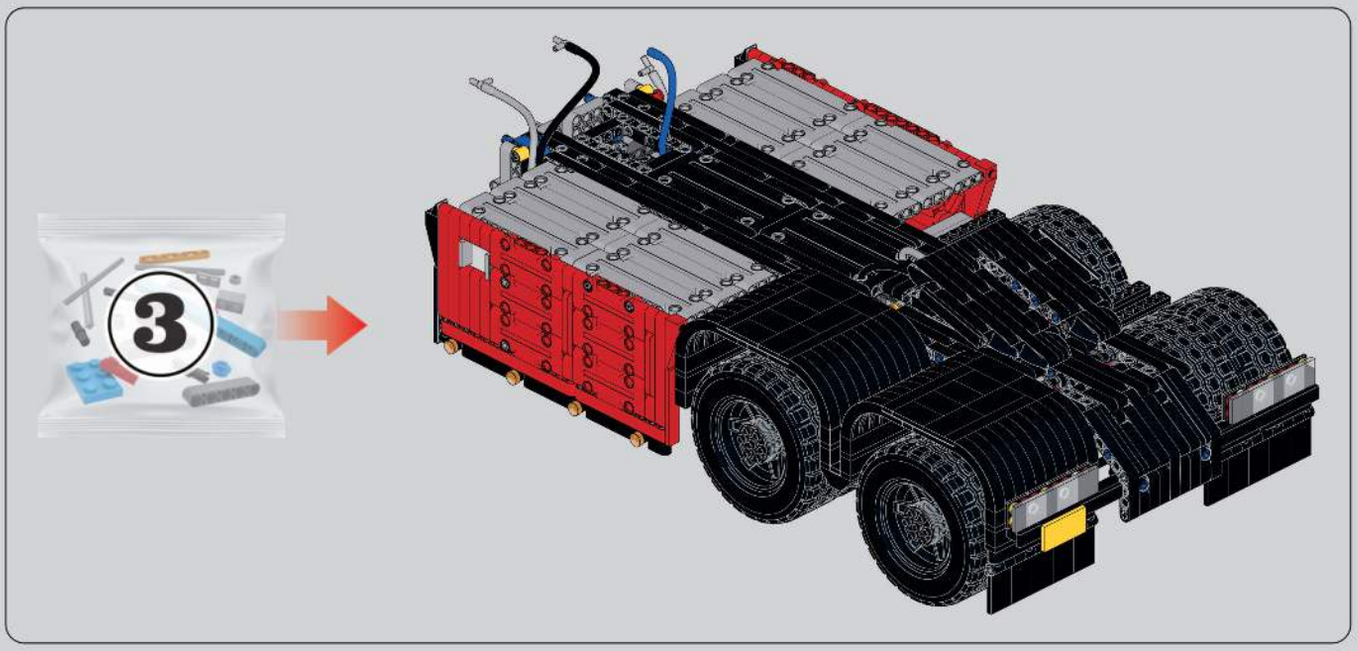

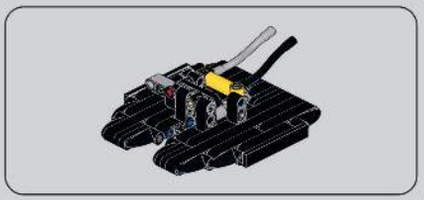

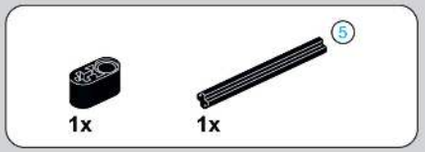

216

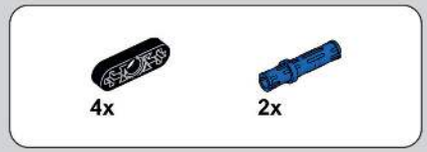

217

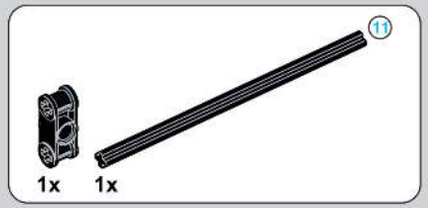

218

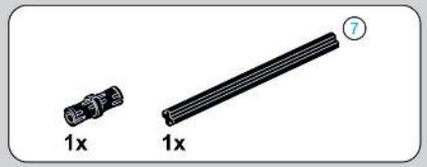

219

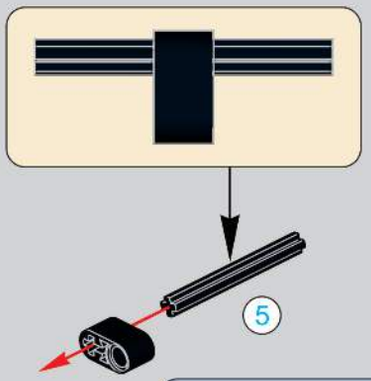

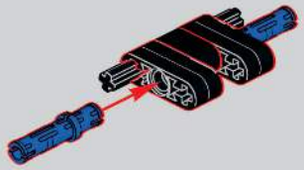

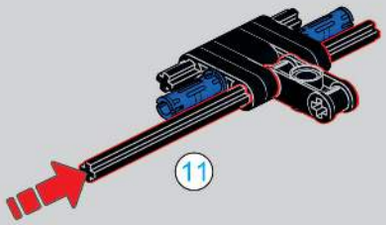

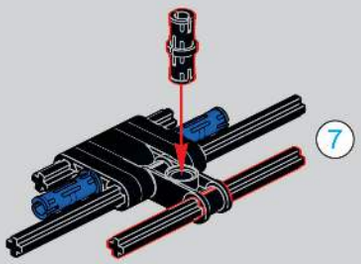

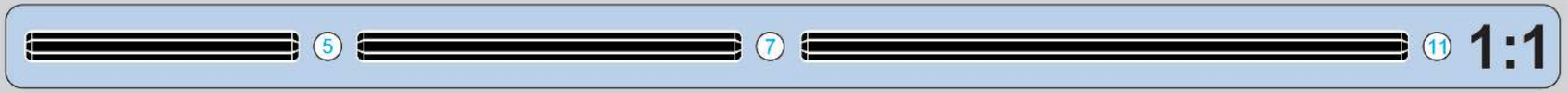

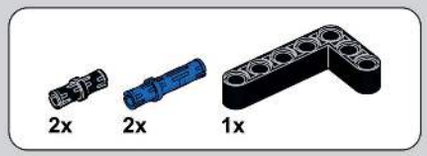

220

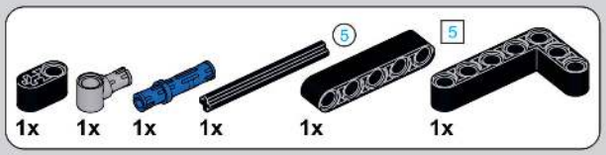

221

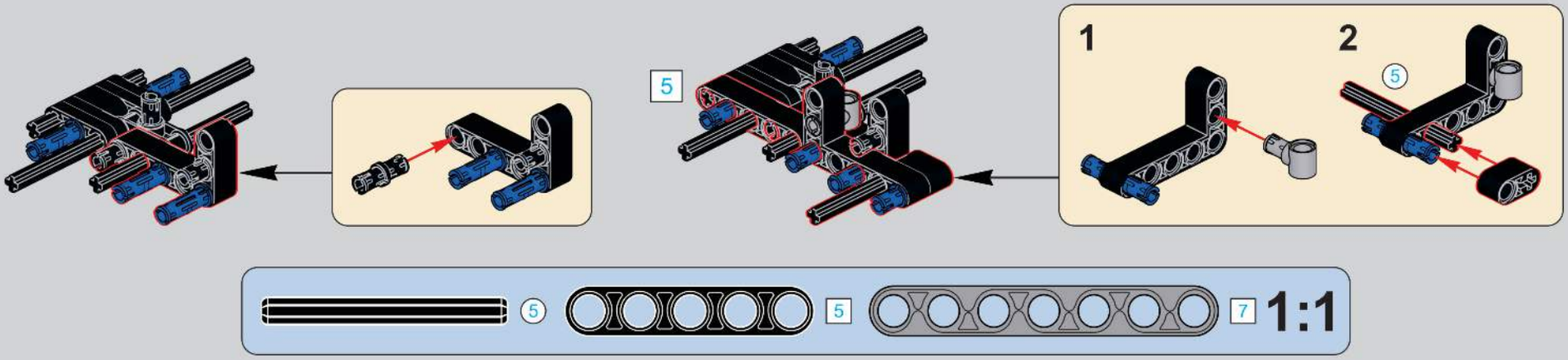

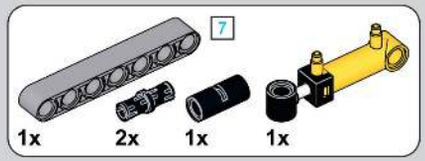

222

223

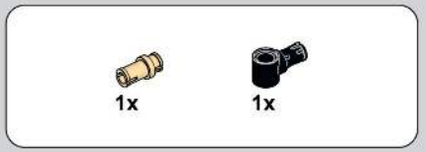

224

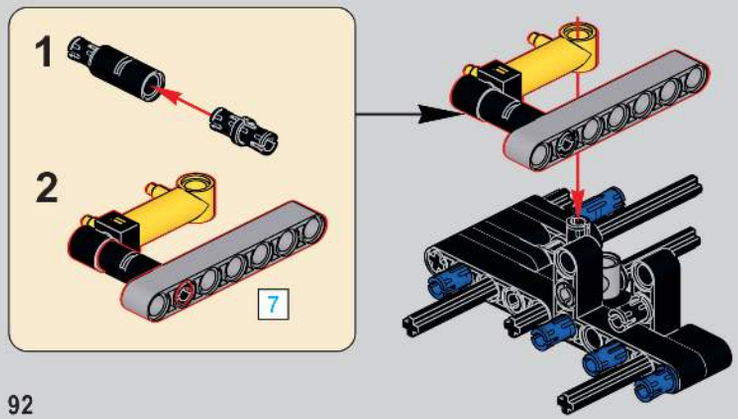

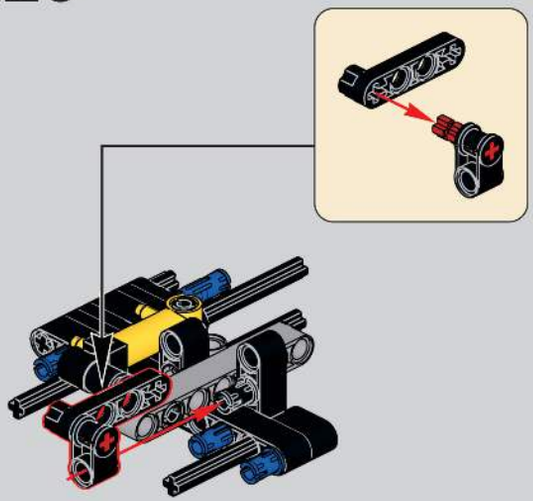

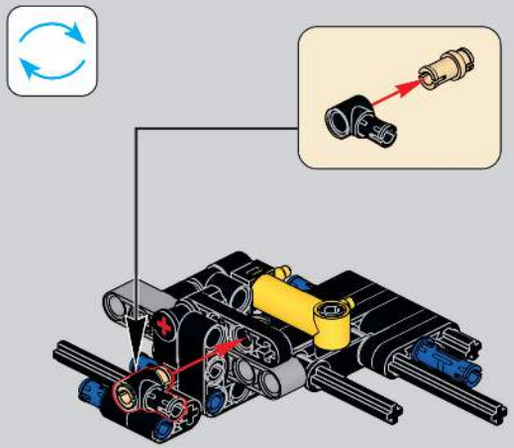

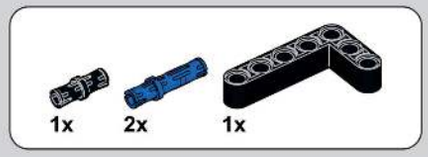

225

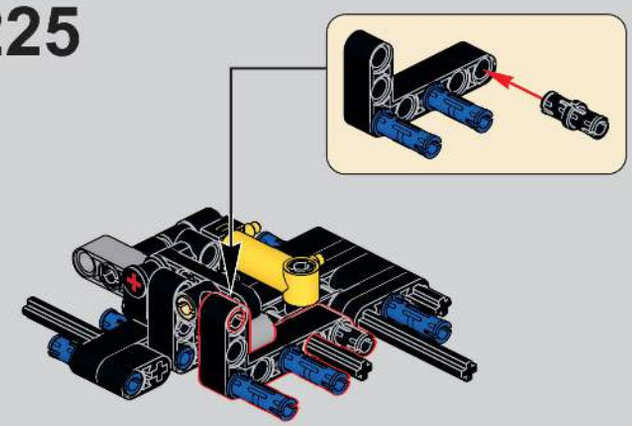

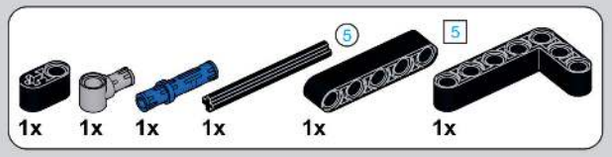

226

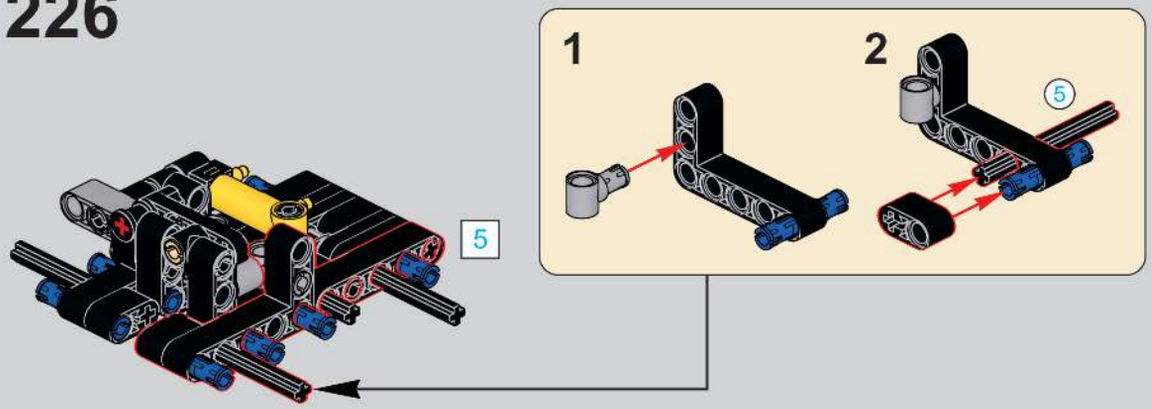

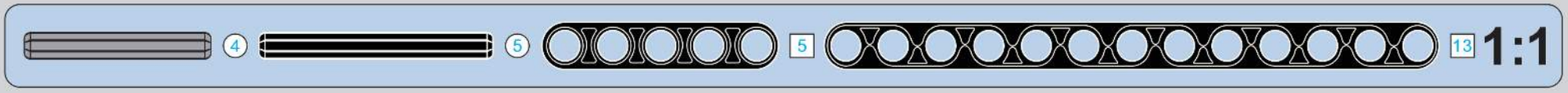

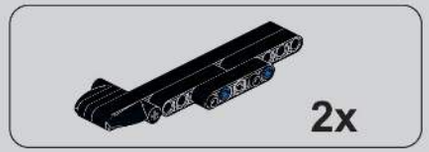

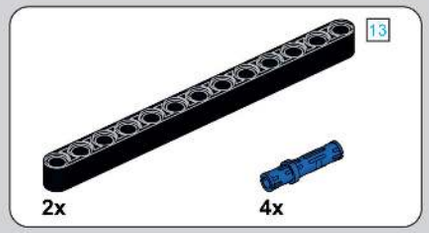

227

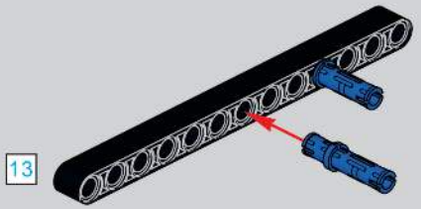

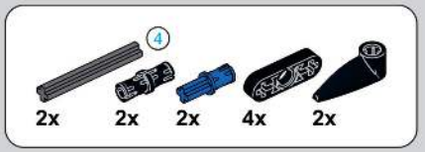

228

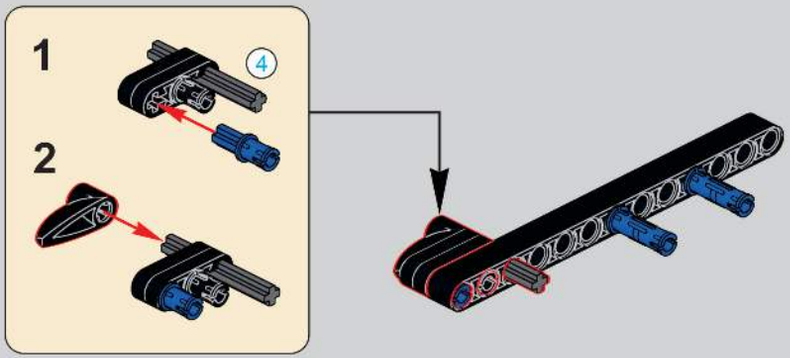

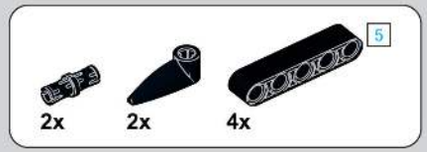

229

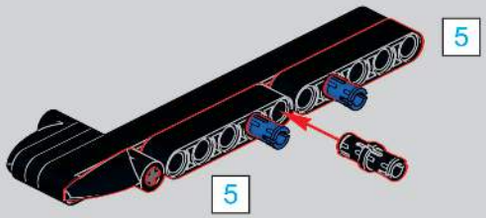

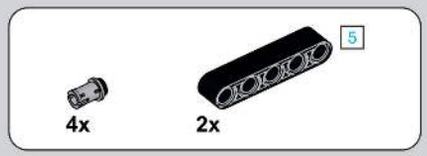

230

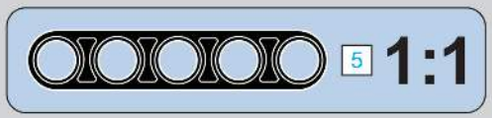

231

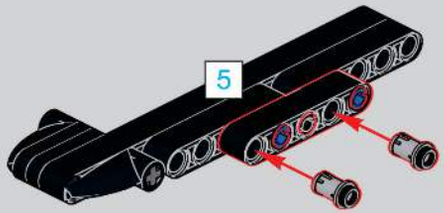

2x

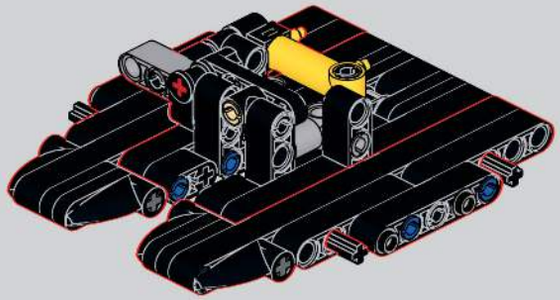

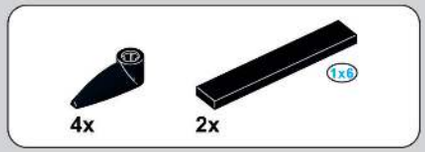

232

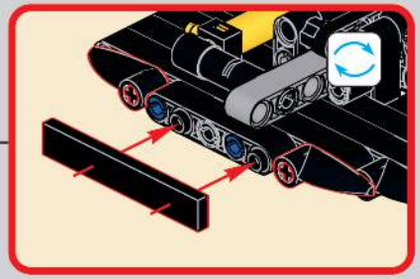

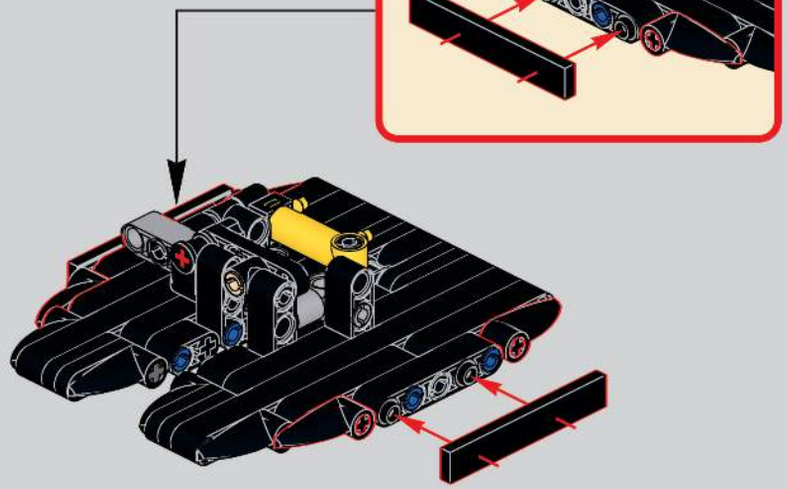

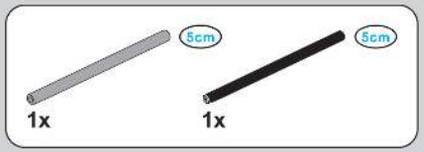

233

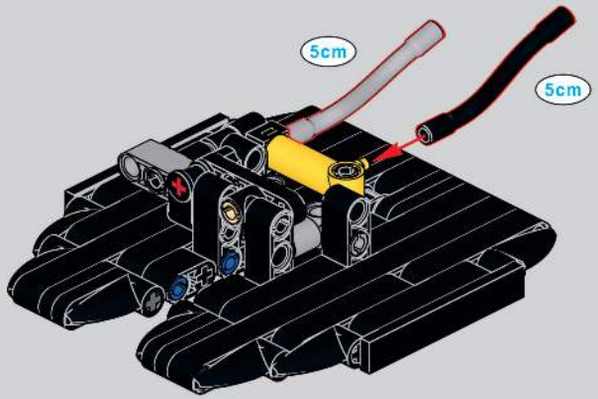

234

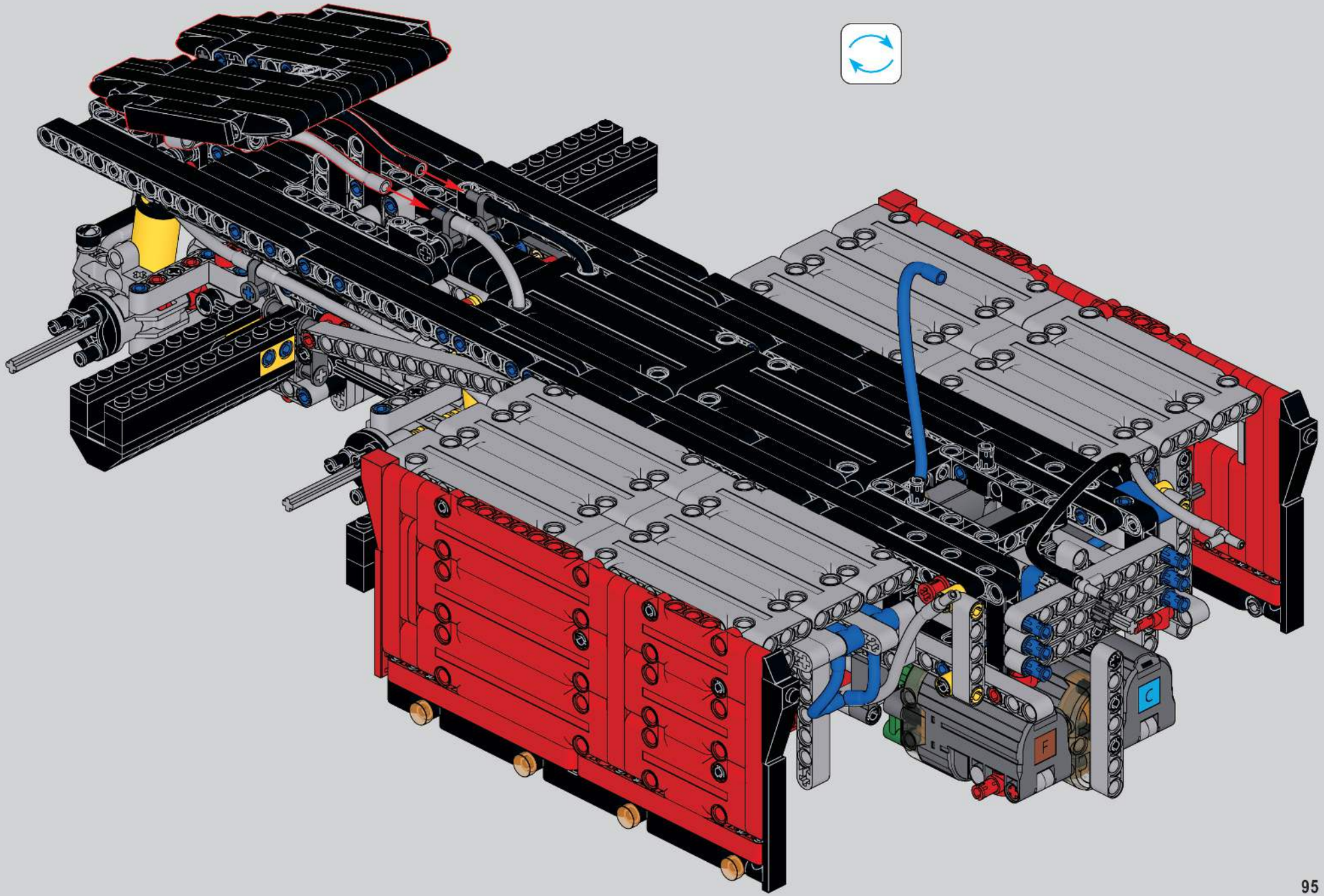

2x

235

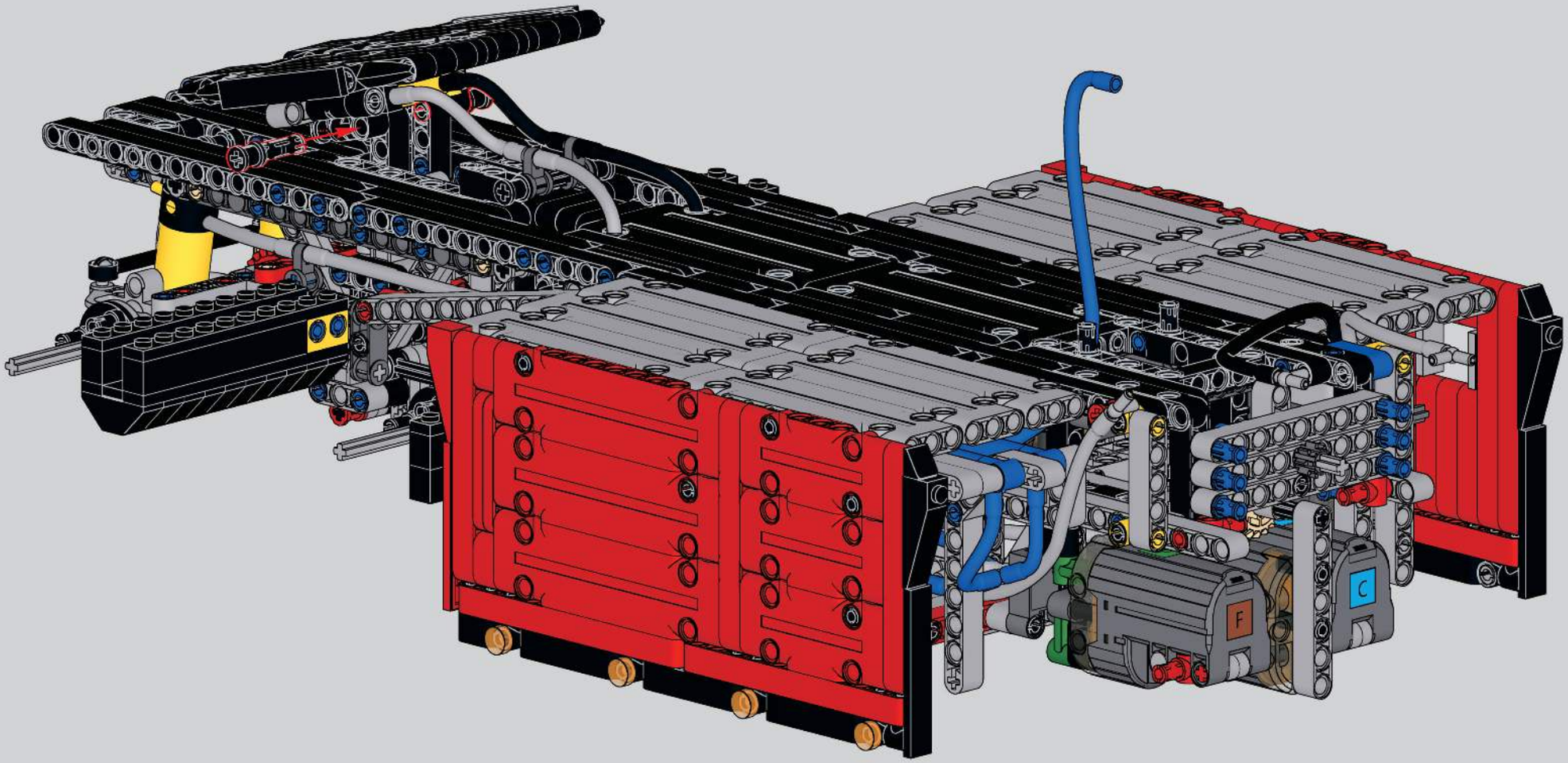

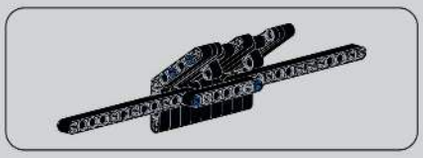

236

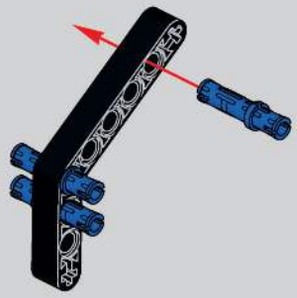

237

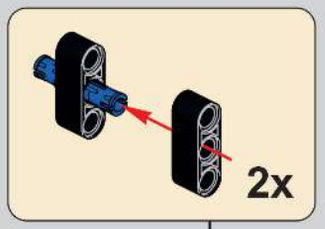

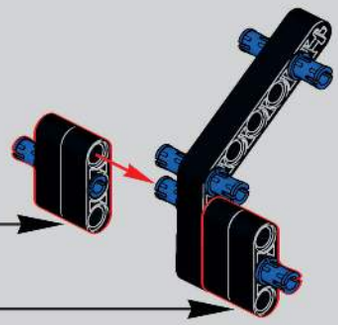

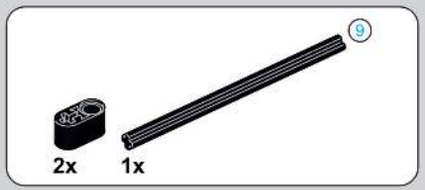

238

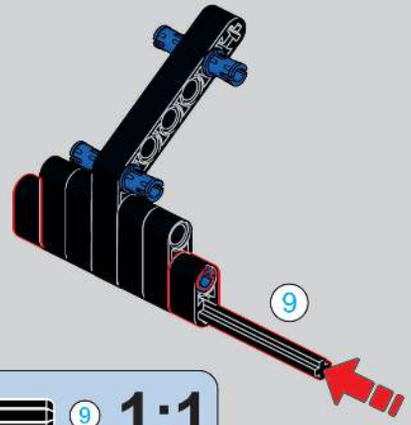

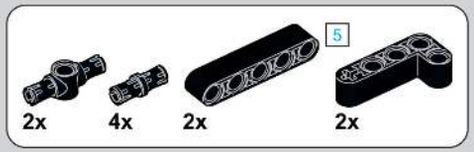

239

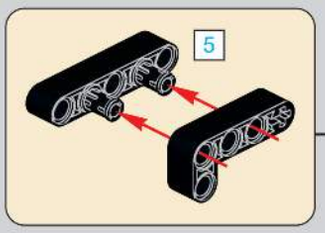

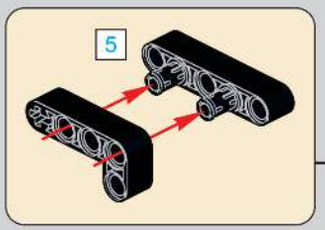

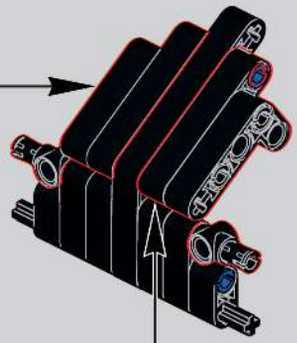

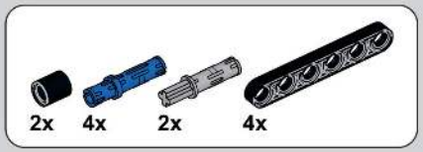

240

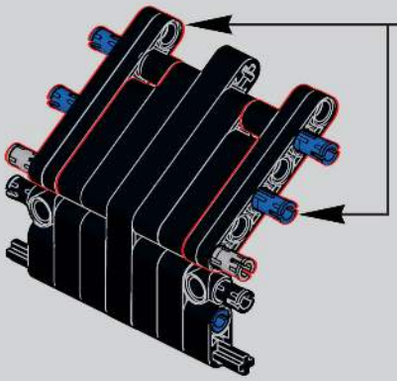

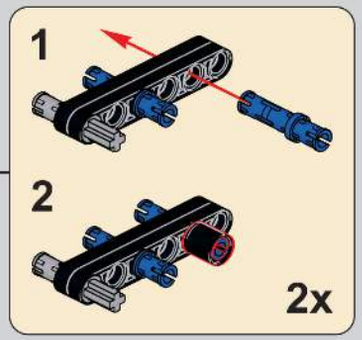

241

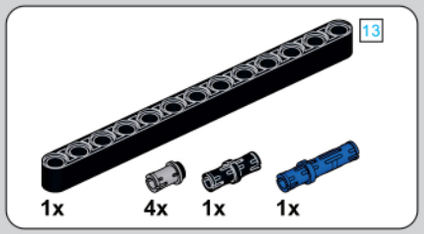

242

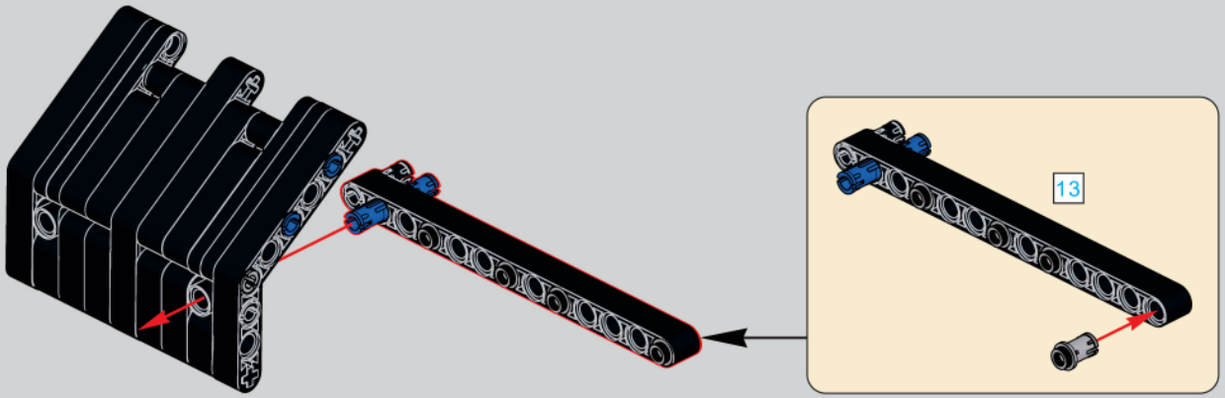

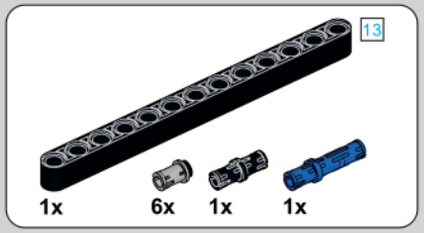

243

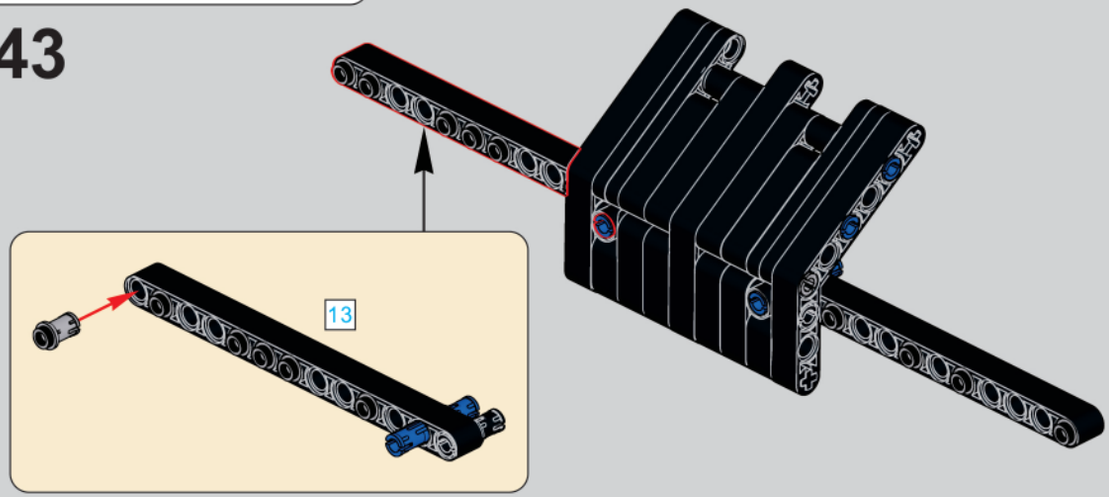

244

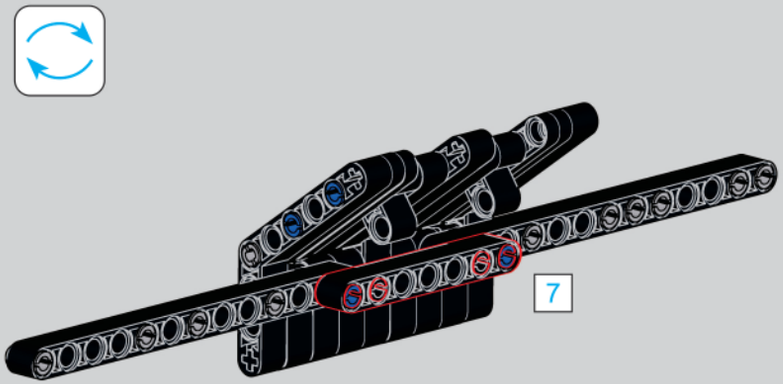

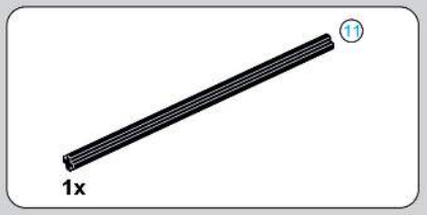

245

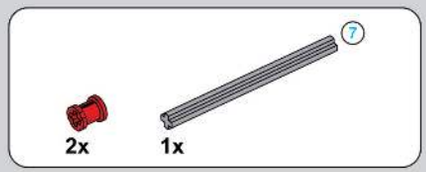

246

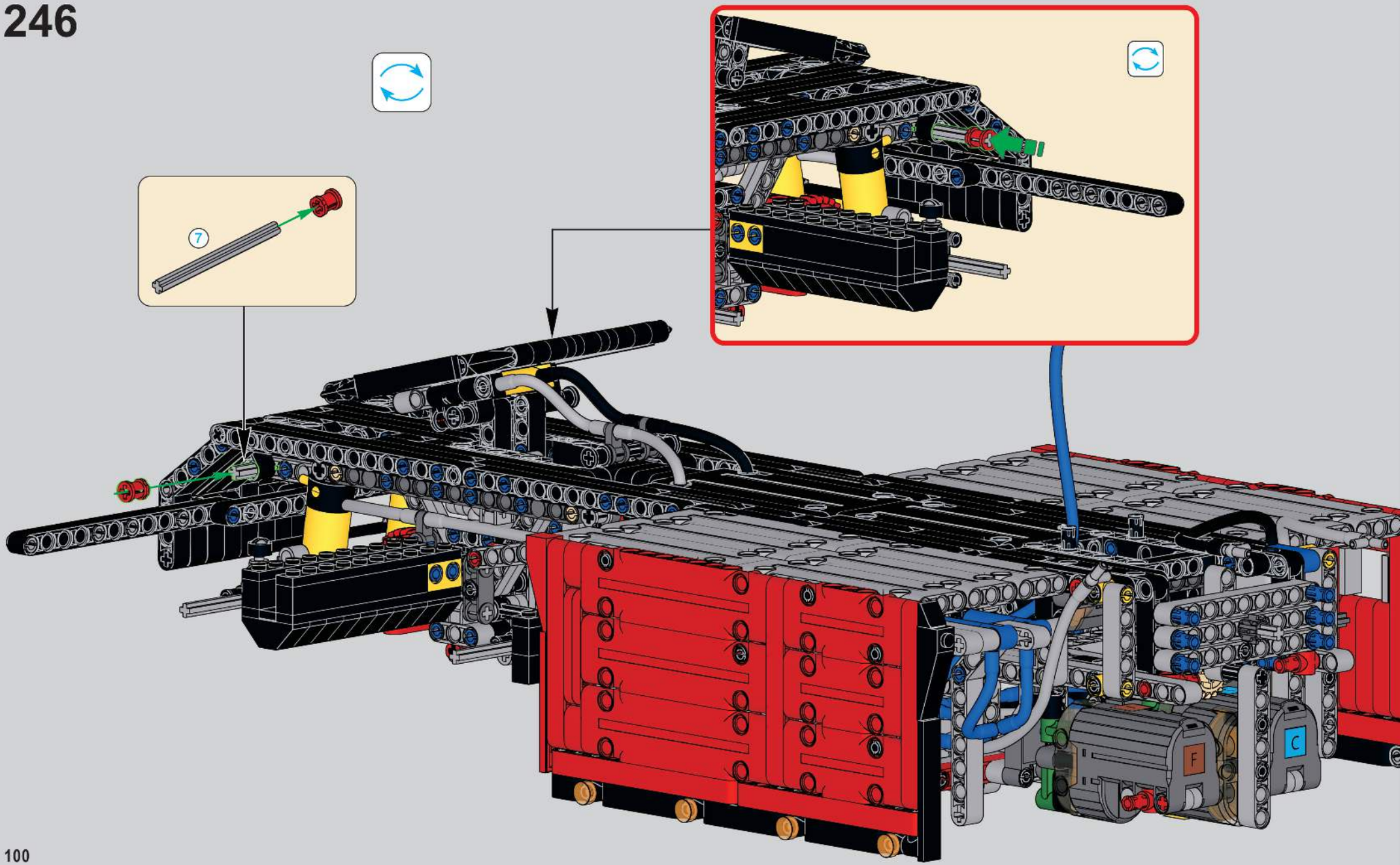

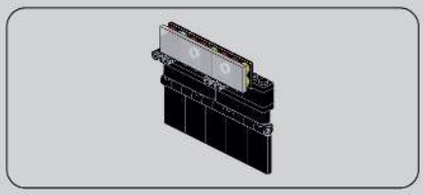

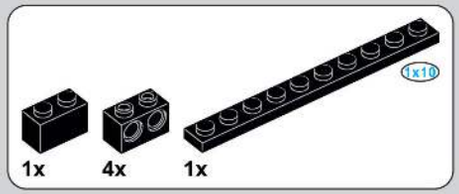

247

248

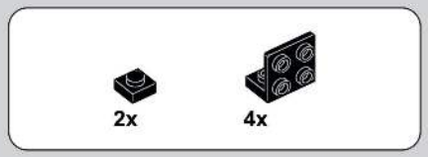

249

250

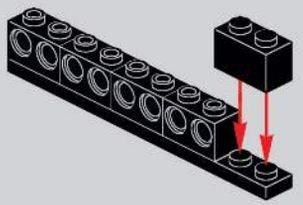

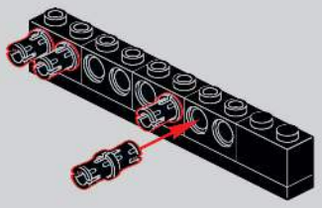

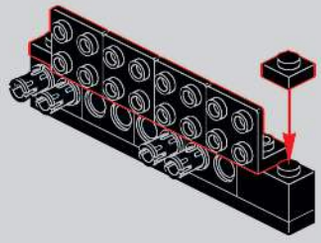

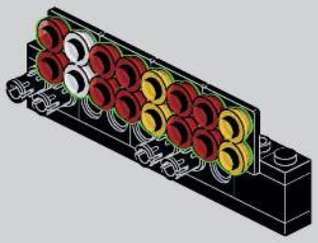

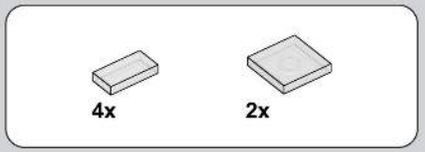

251

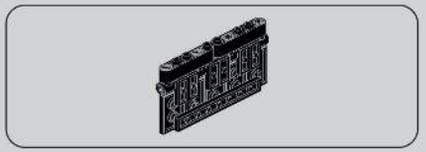

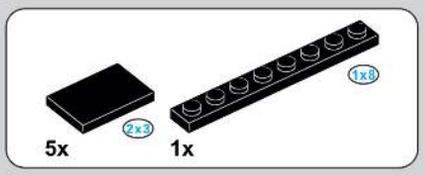

252

253

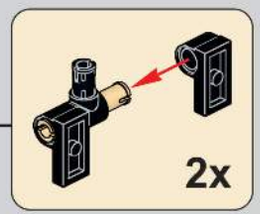

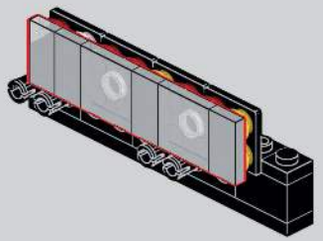

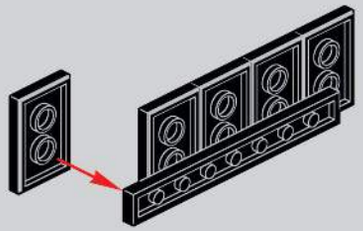

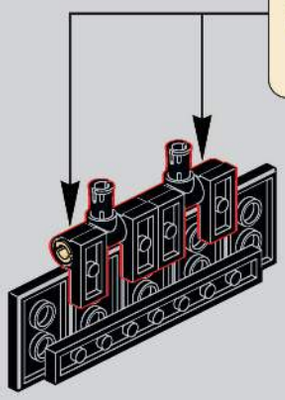

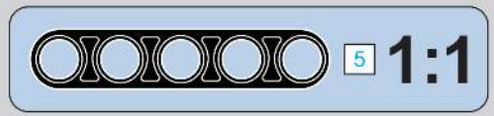

254

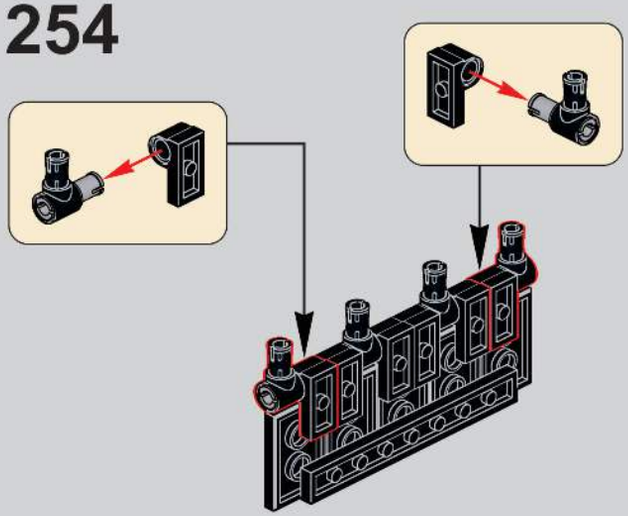

255

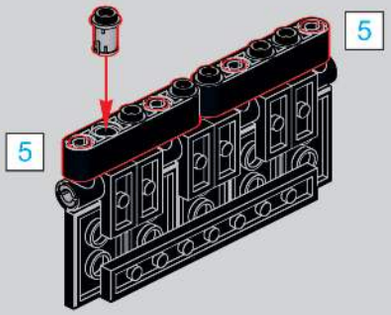

256

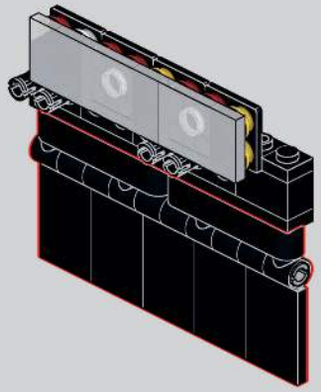

257

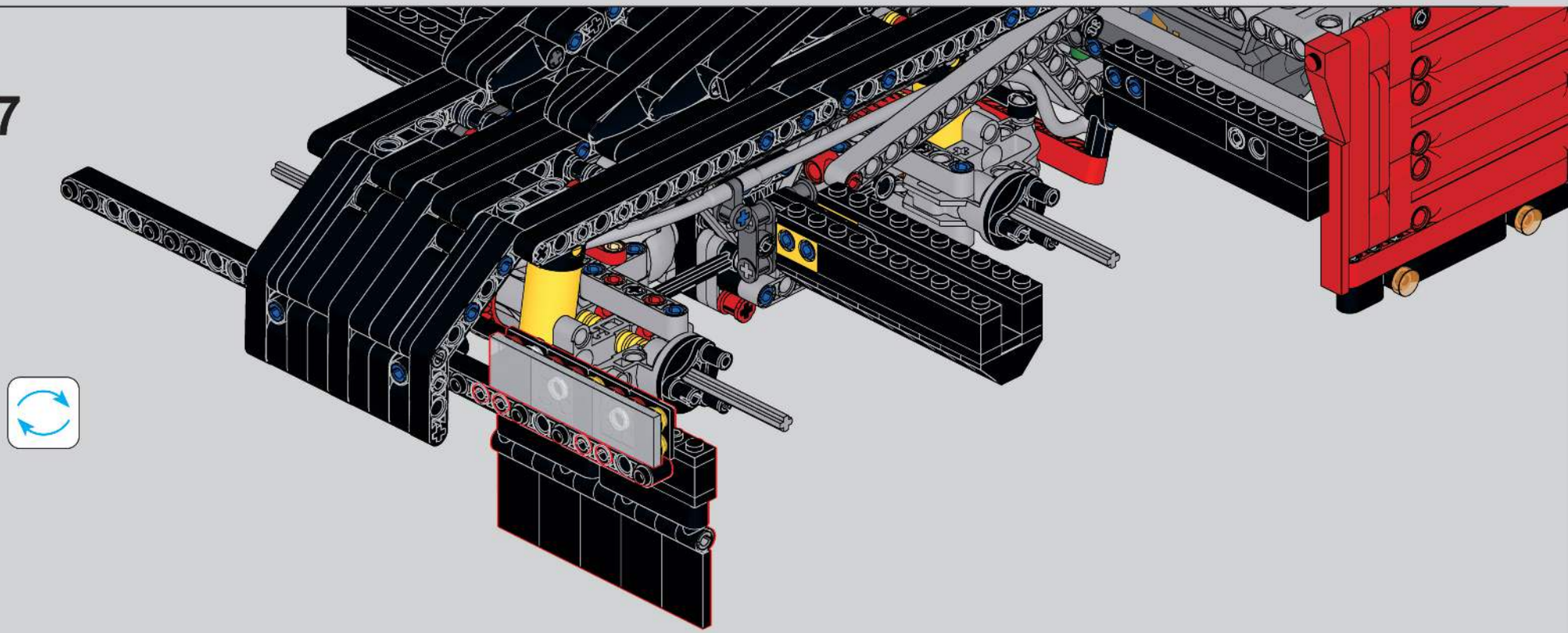

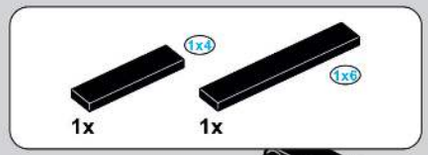

258

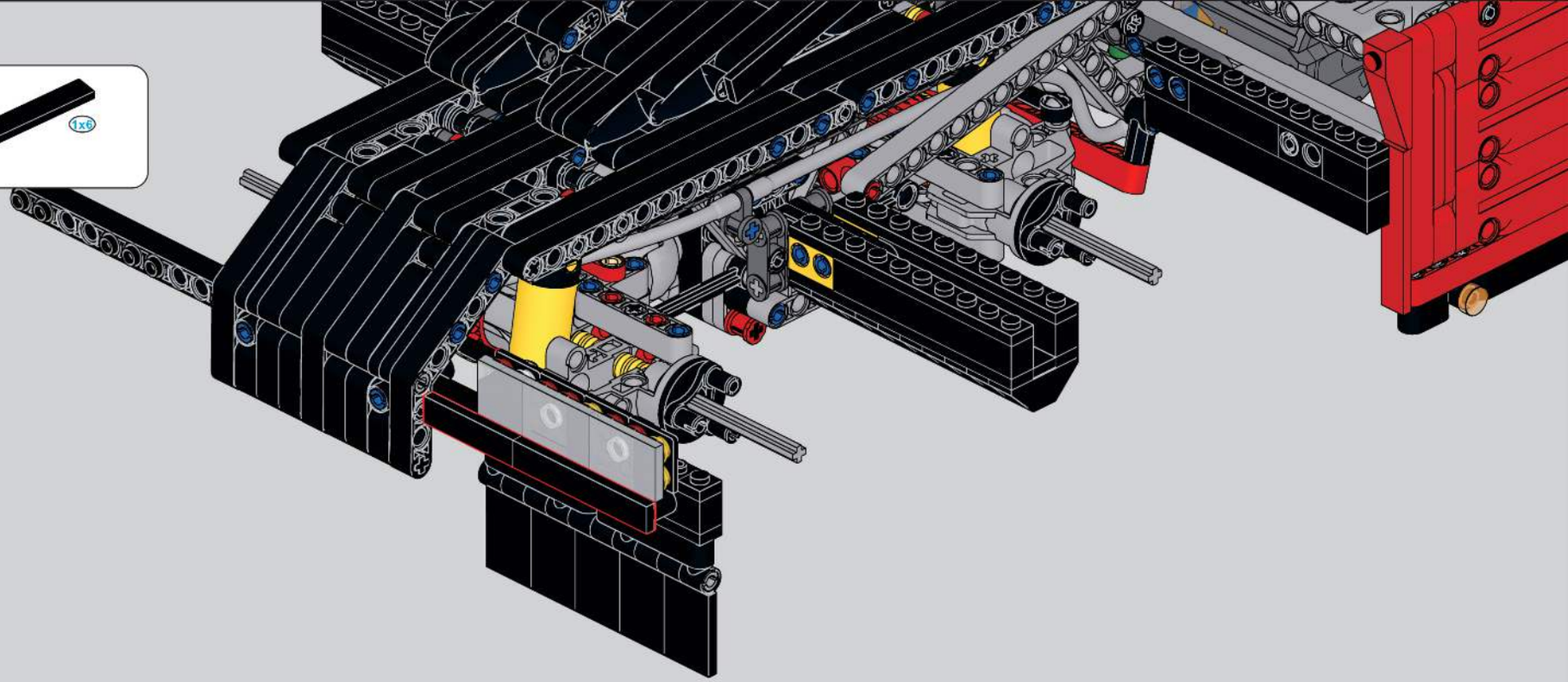

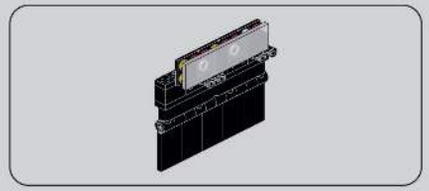

260

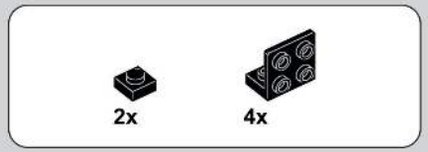

261

262

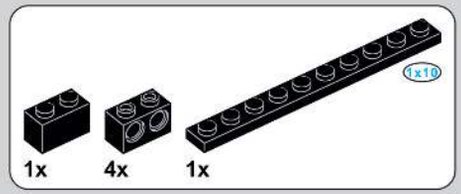

259

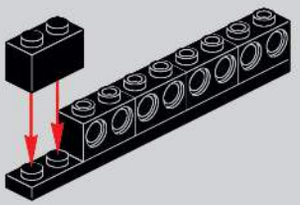

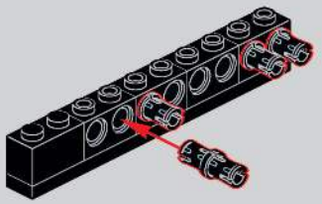

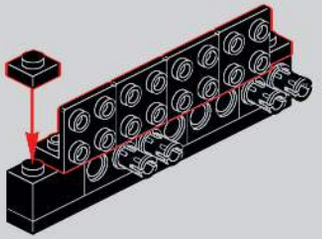

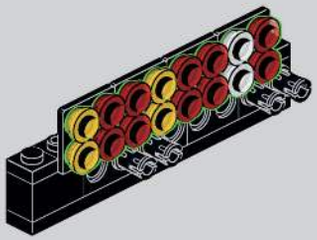

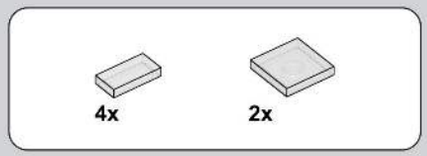

263

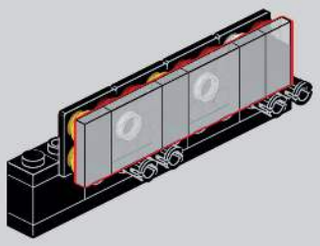

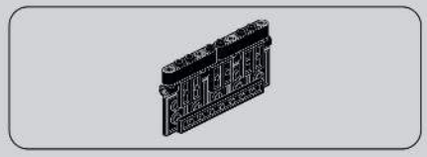

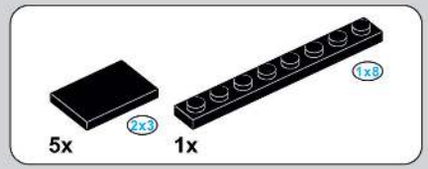

264

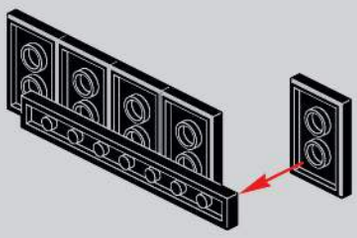

265

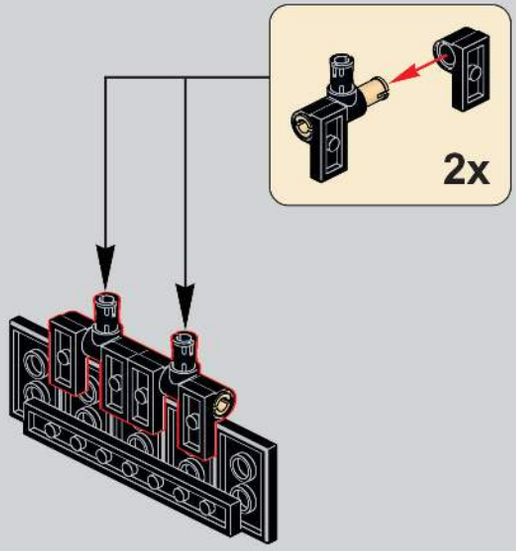

266

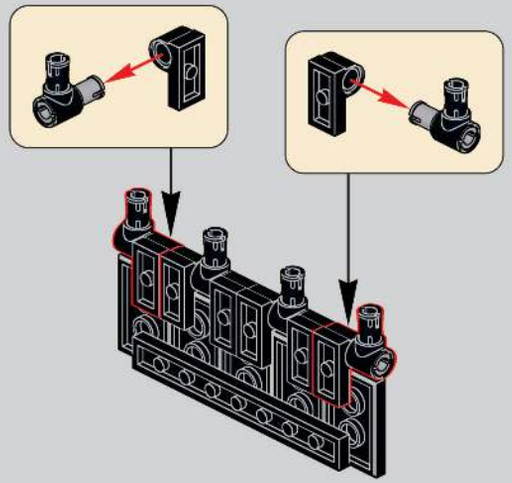

267

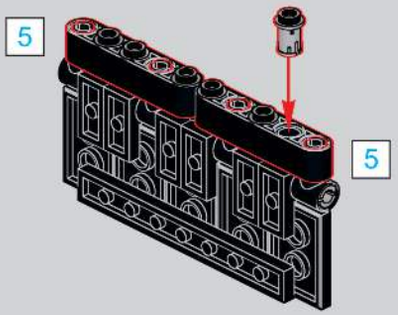

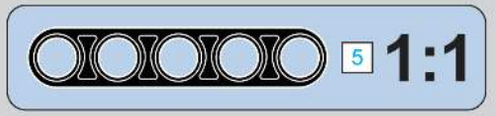

268

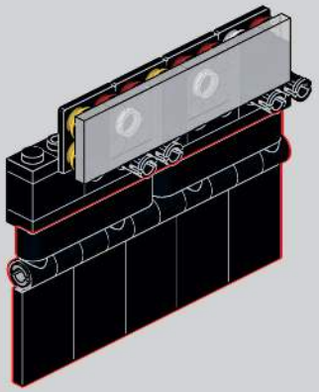

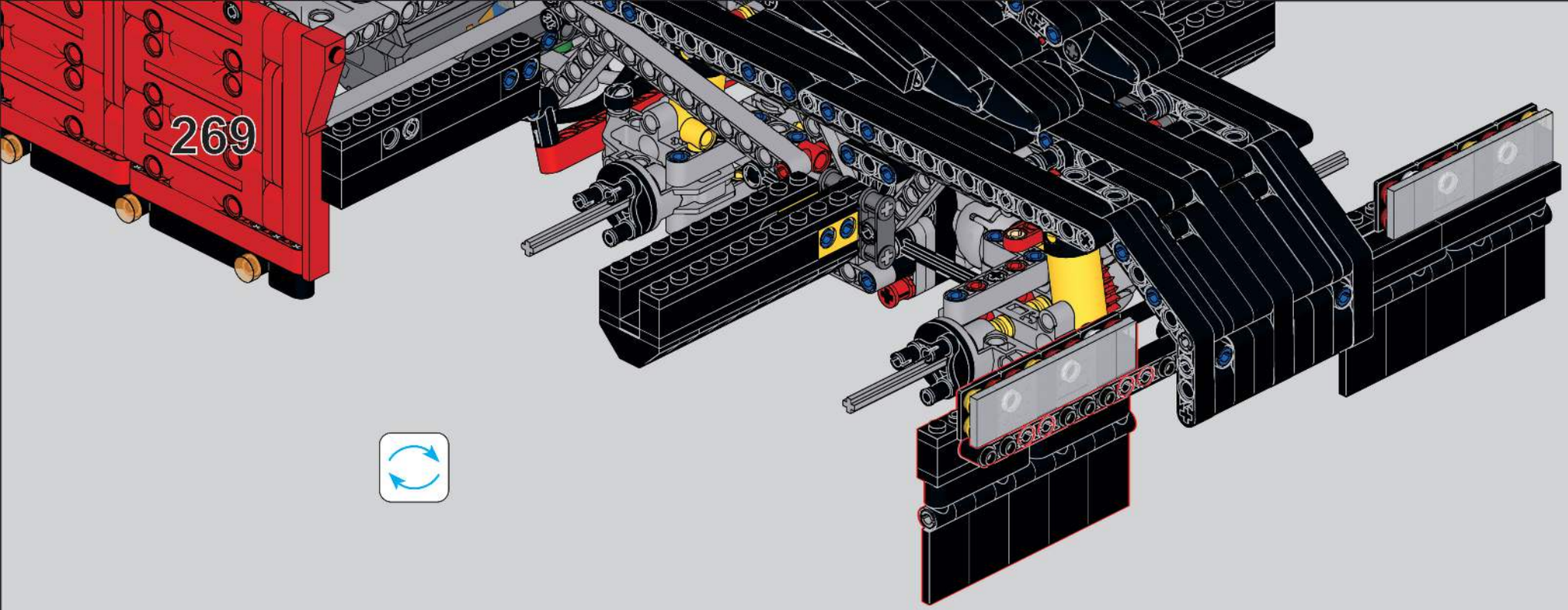
269

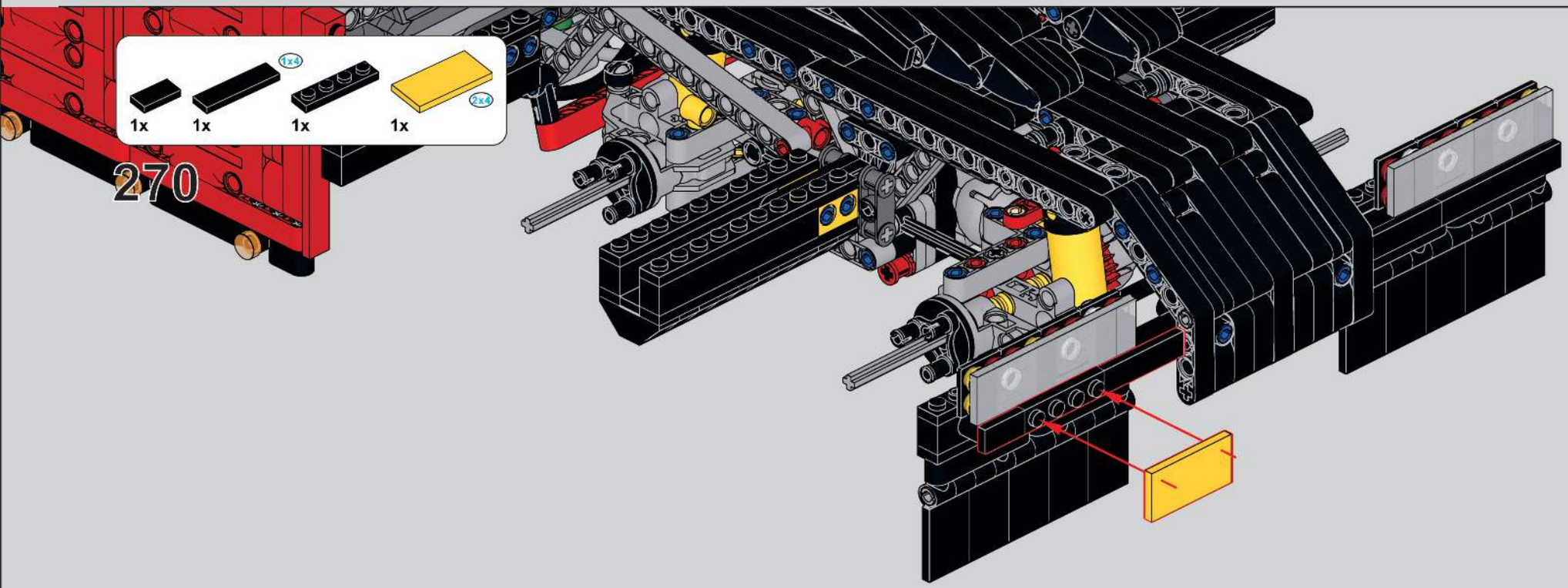
270
1x
1x
1x
1x
1x4
2x4

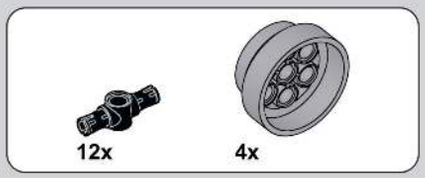

271

272

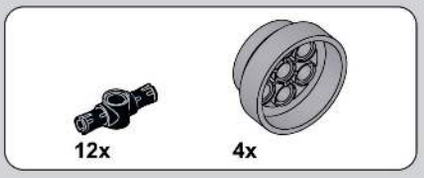

273

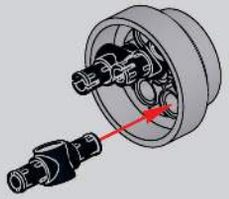

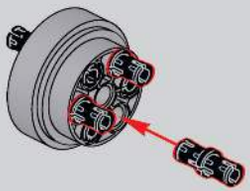

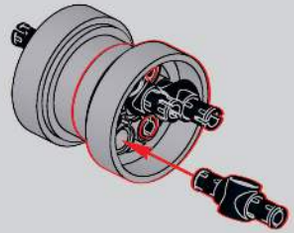

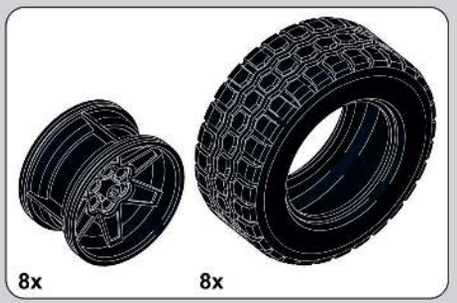

274

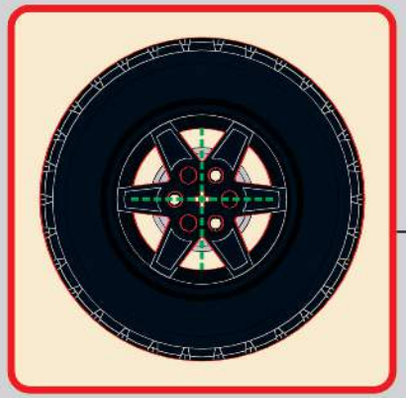

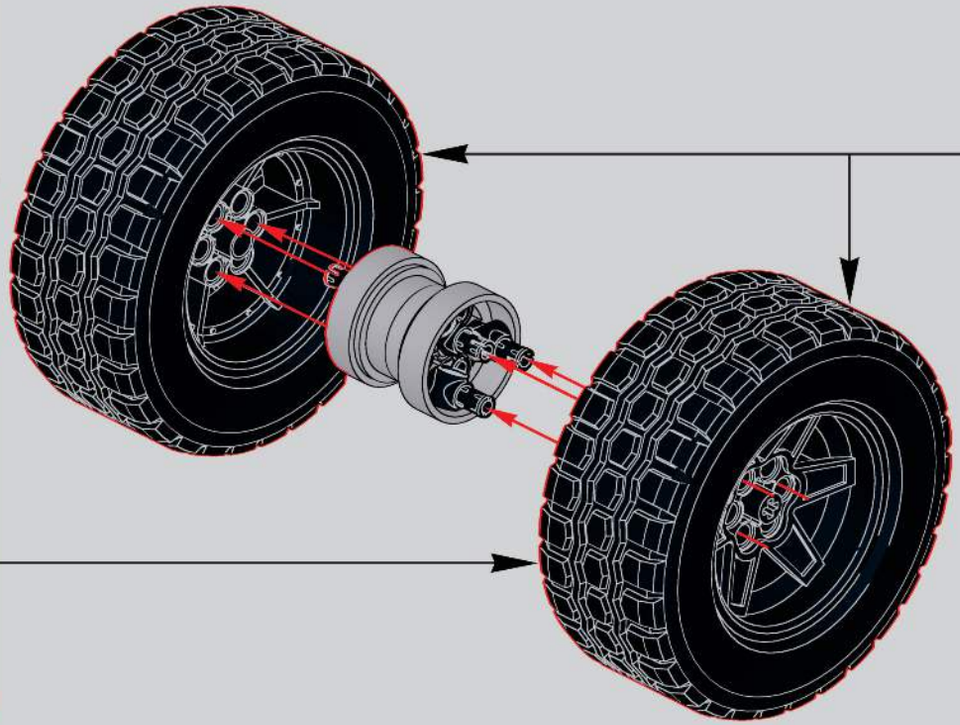

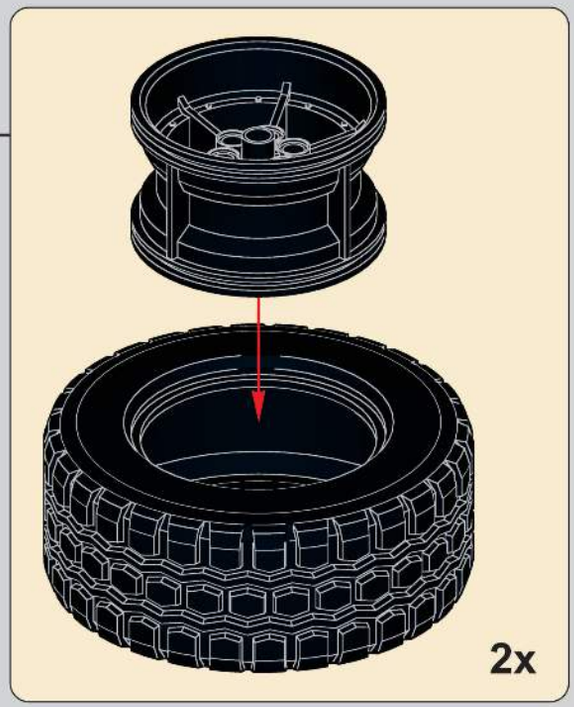

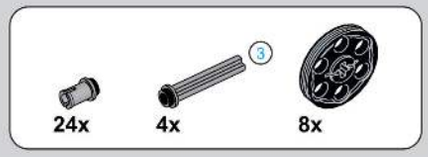

275

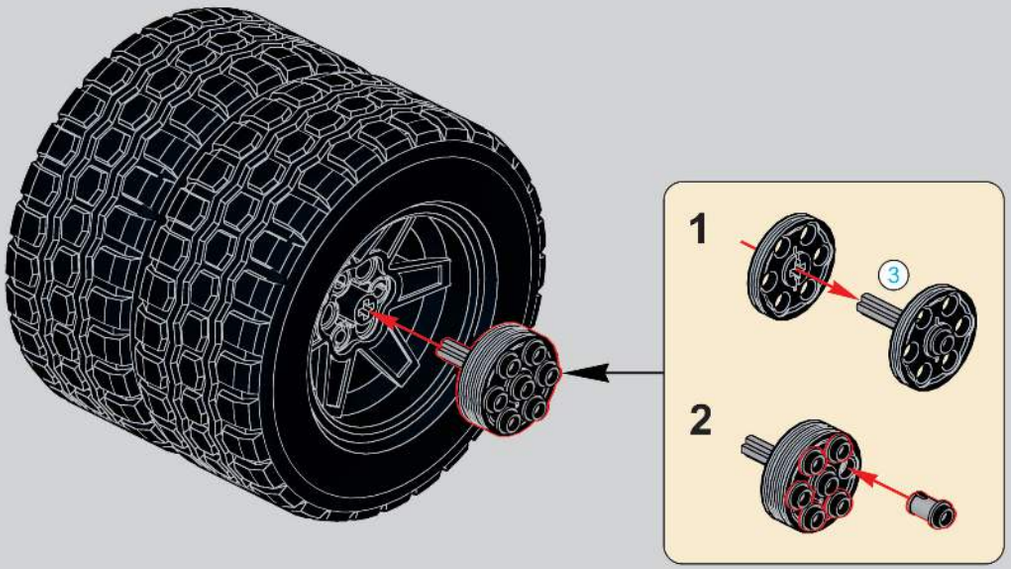

4x

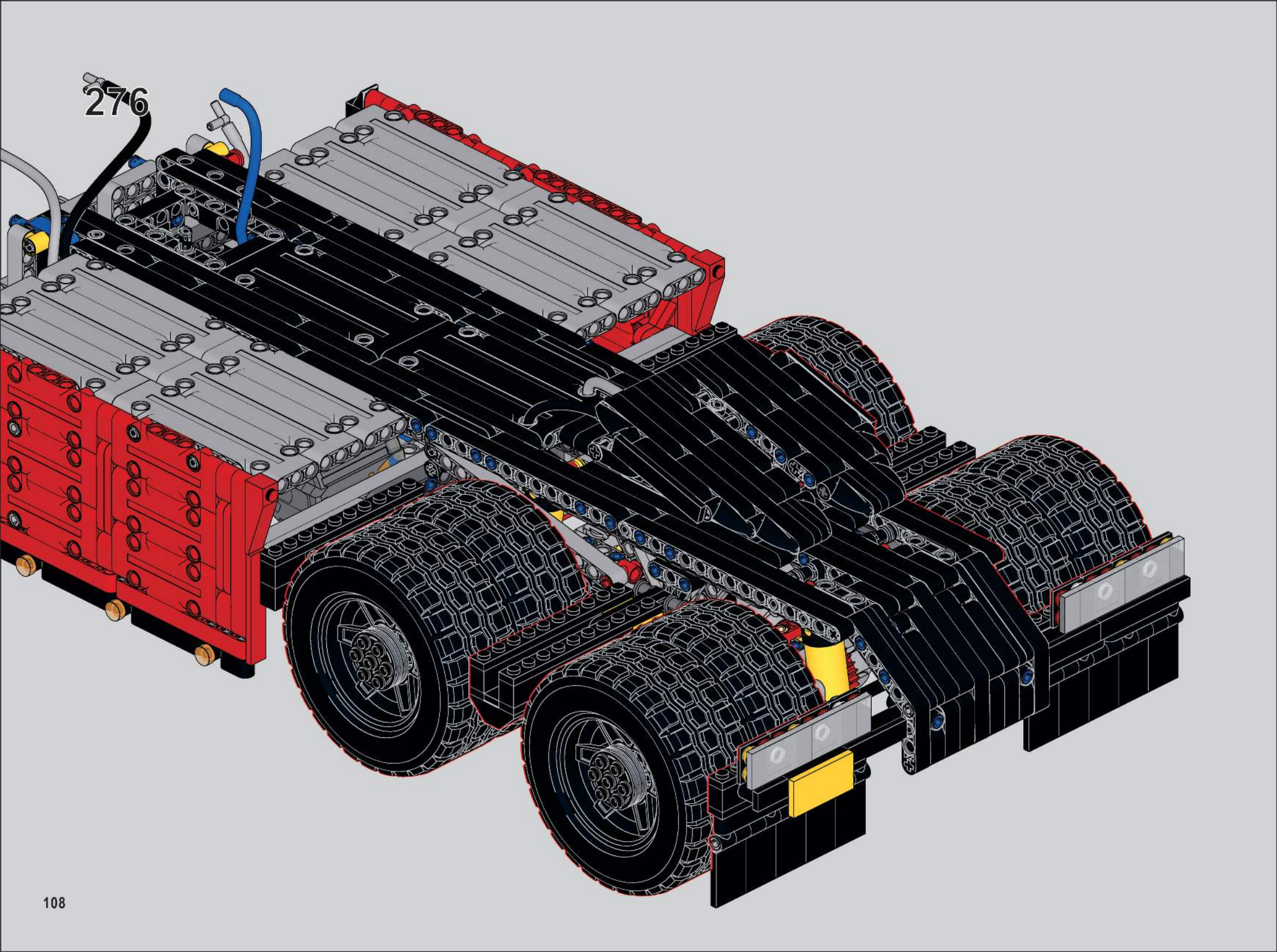
276

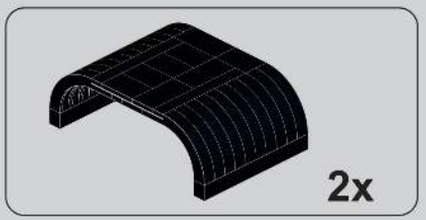

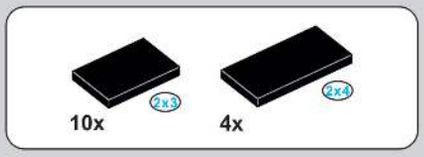

278

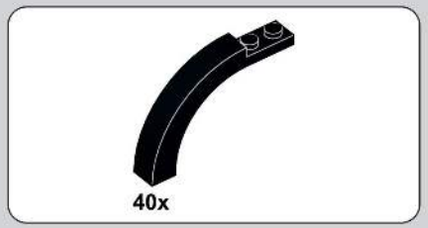

279

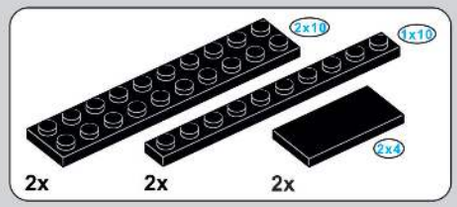

277

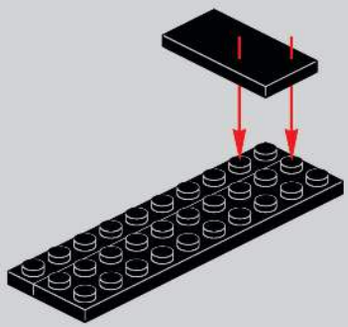

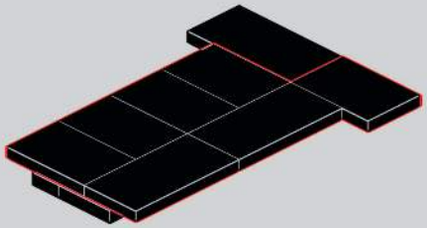

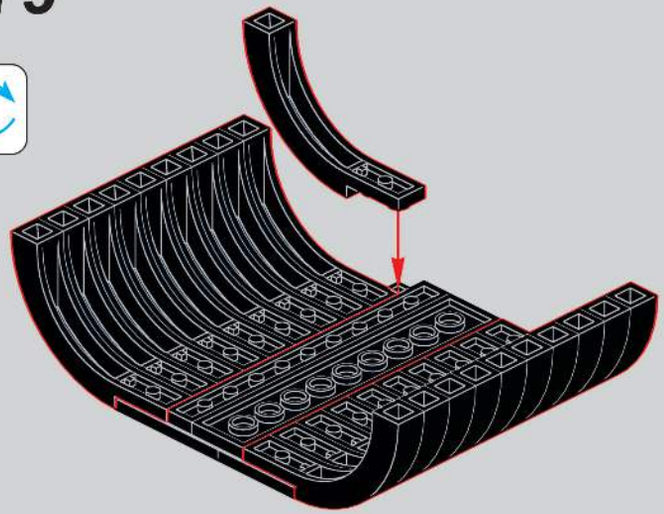

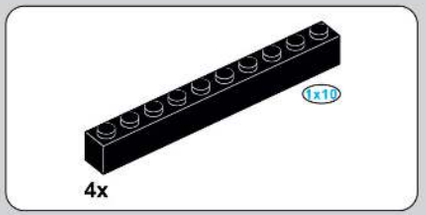

280

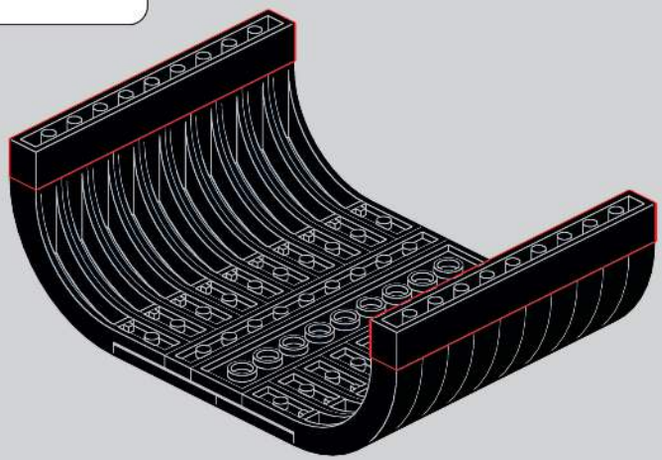

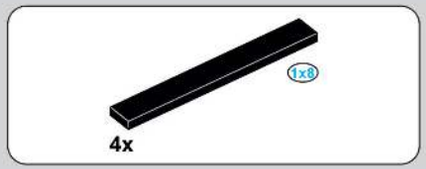

281

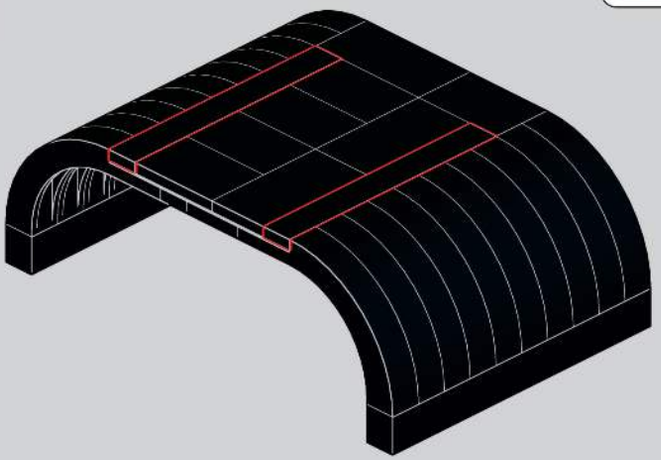

2x

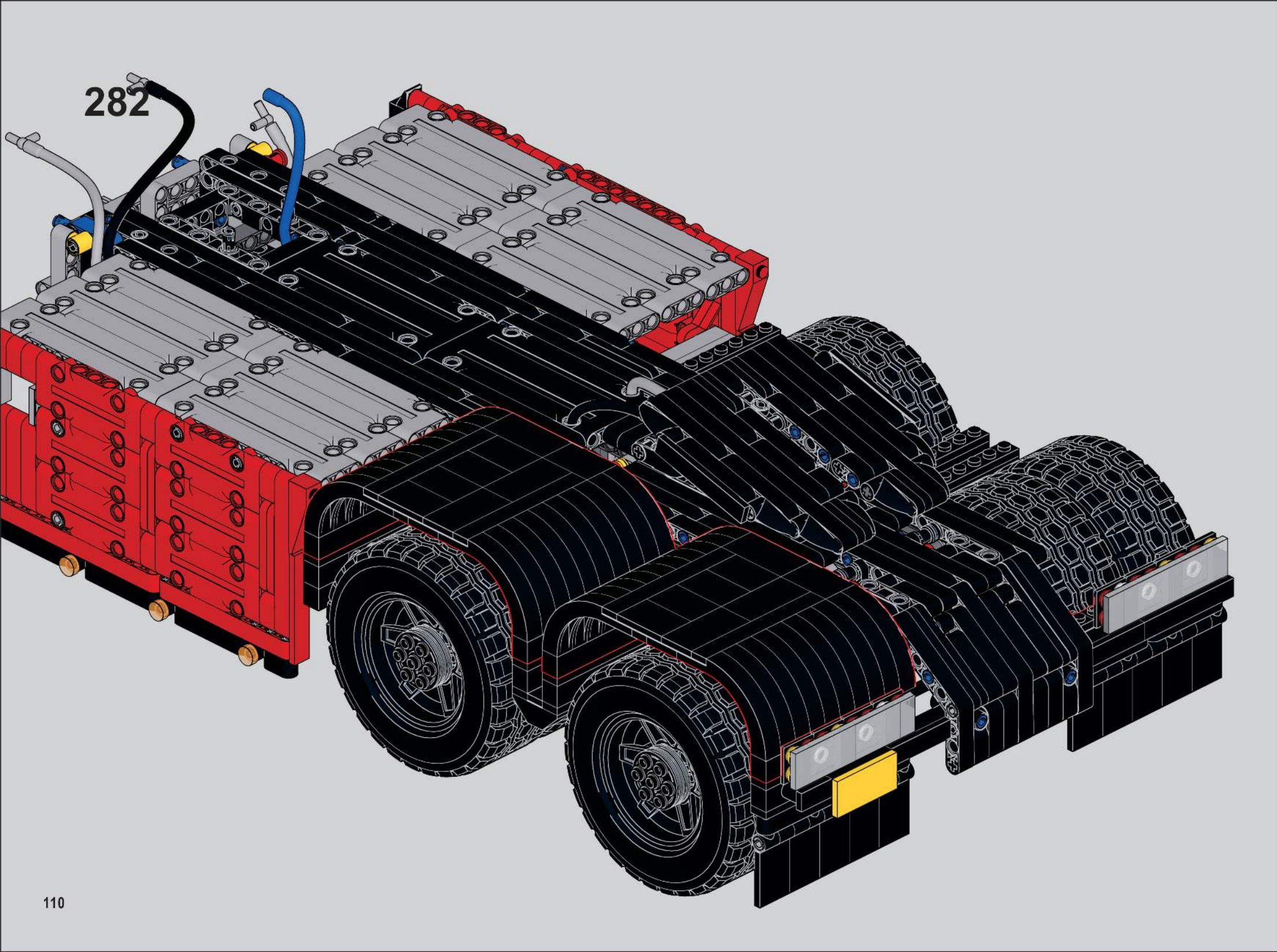
282

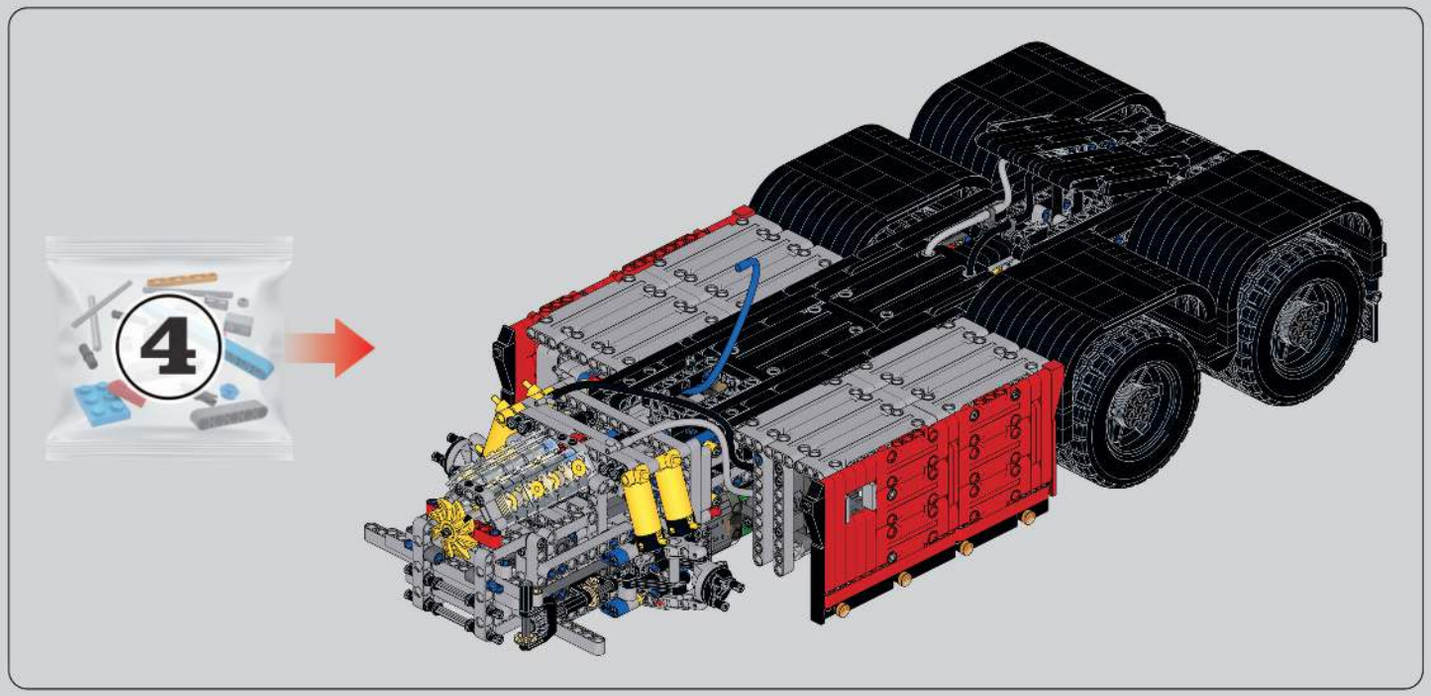

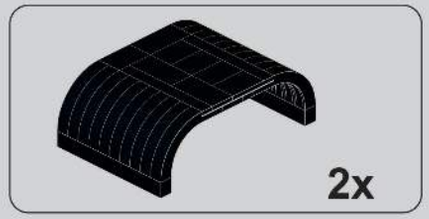

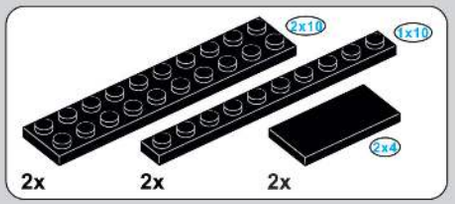

283

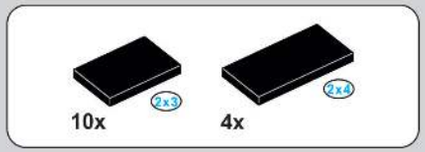

284

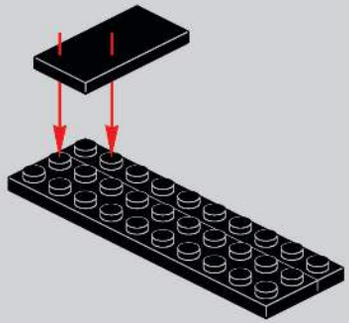

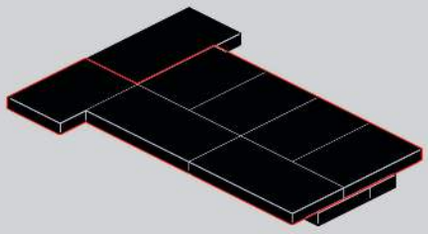

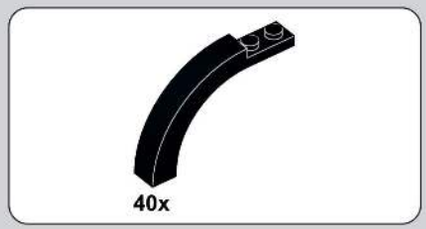

285

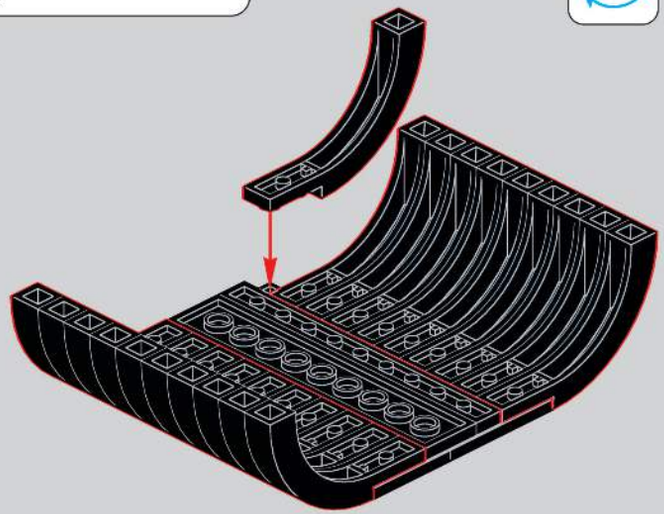

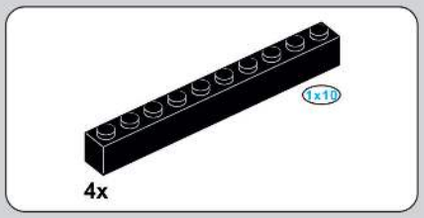

286

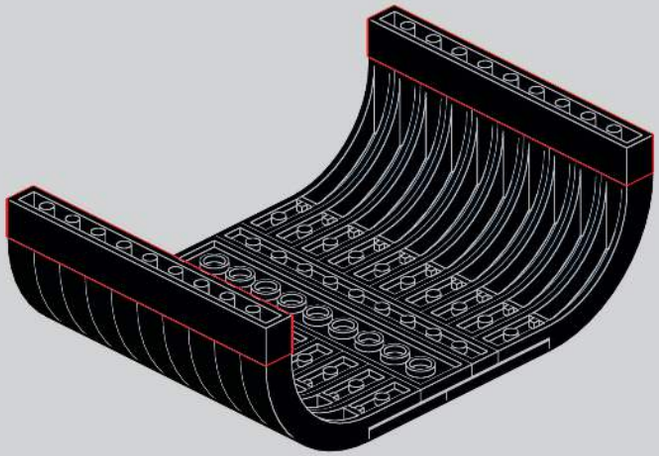

287

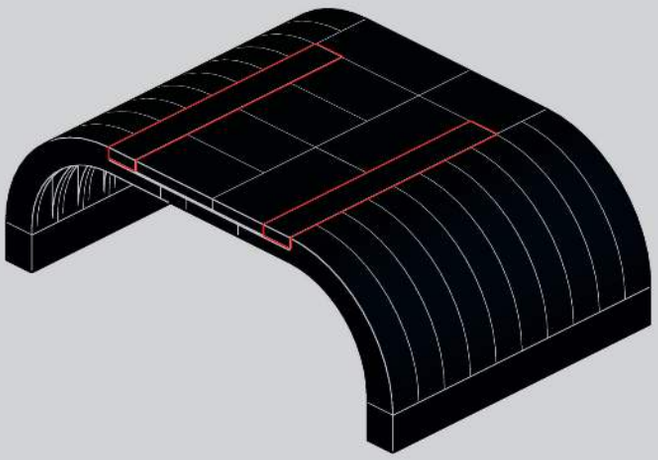

2x

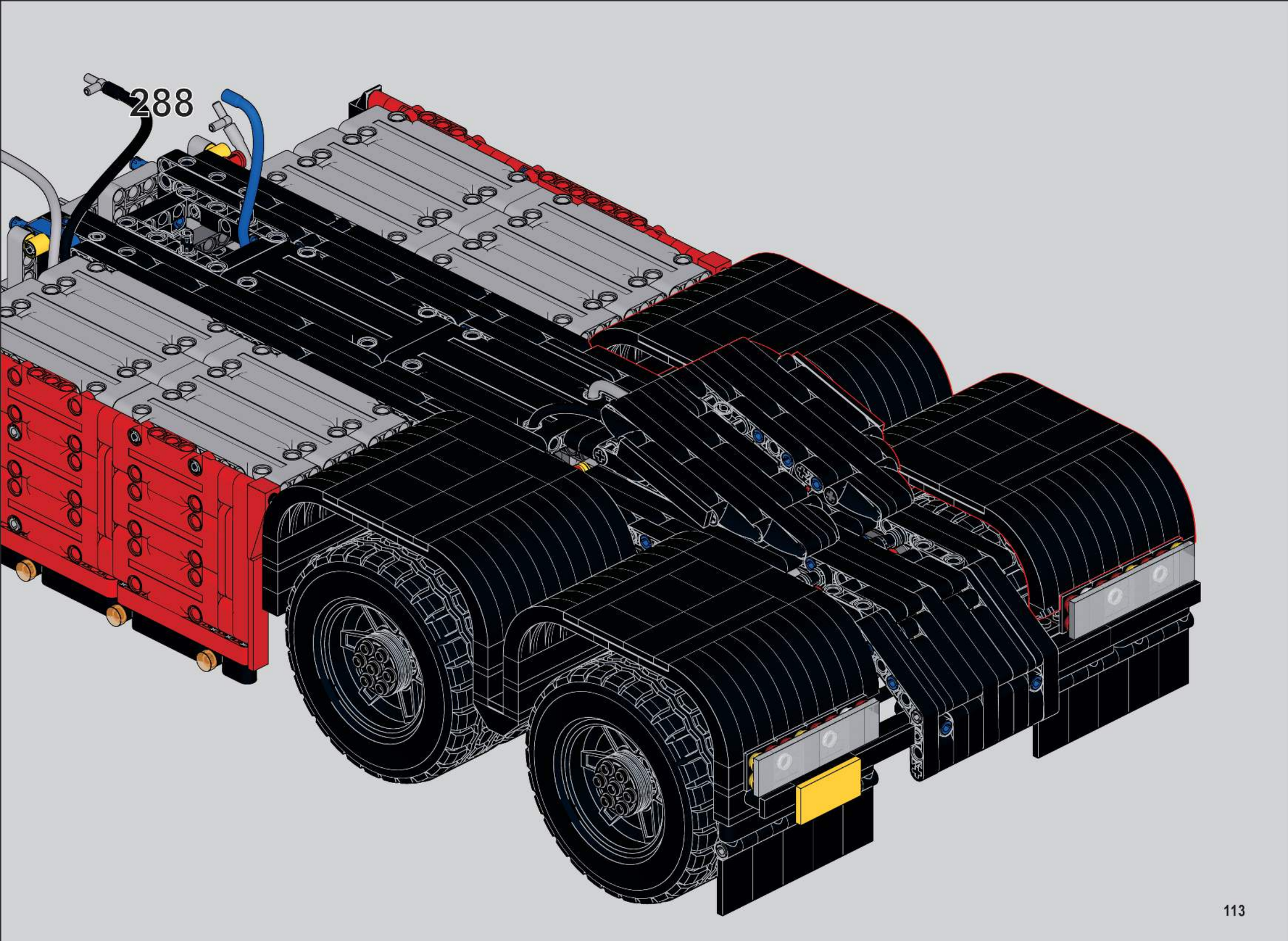
288

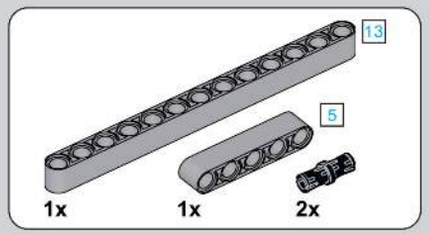

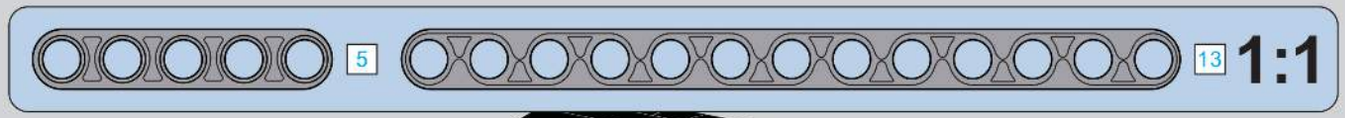

289

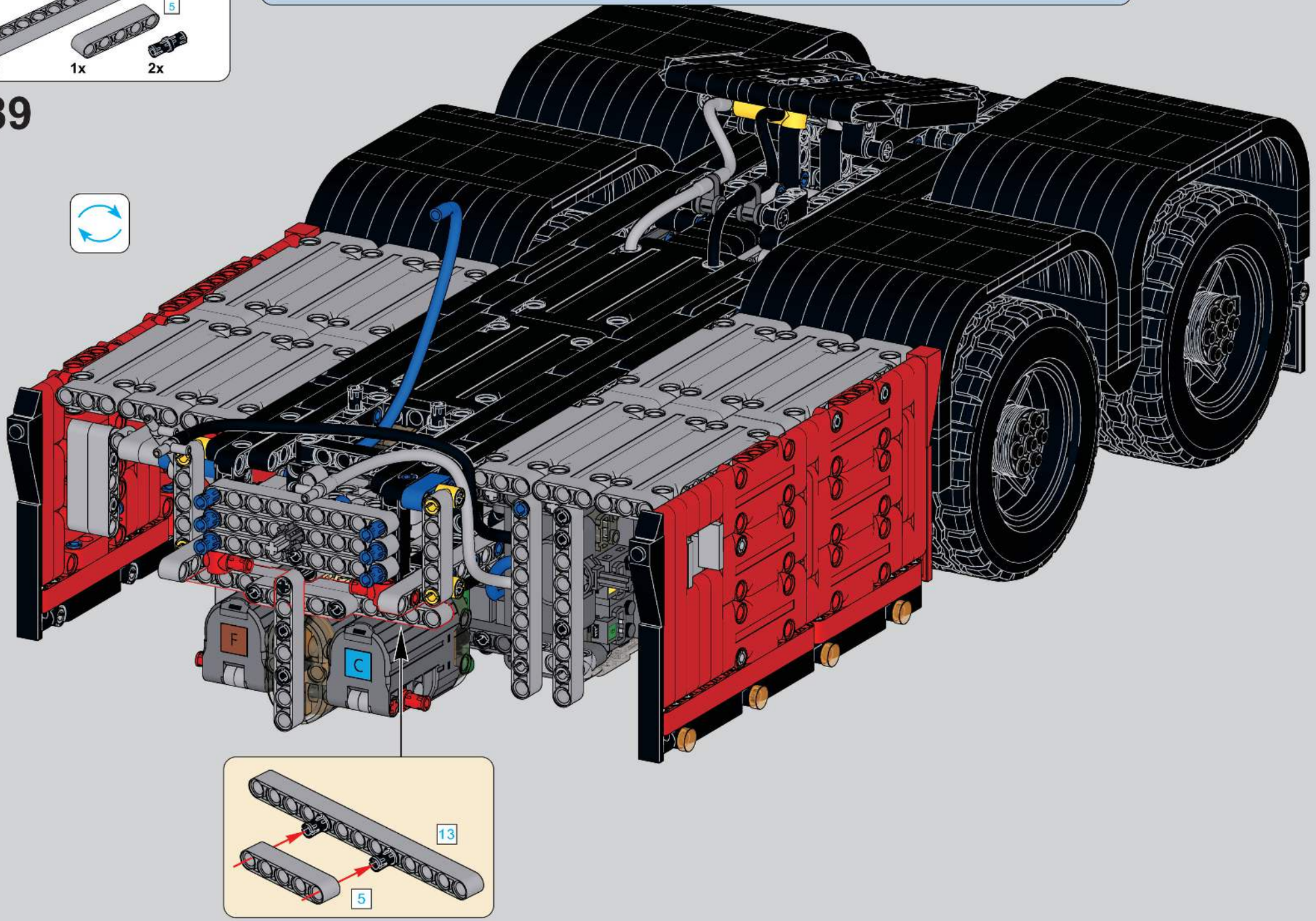

290

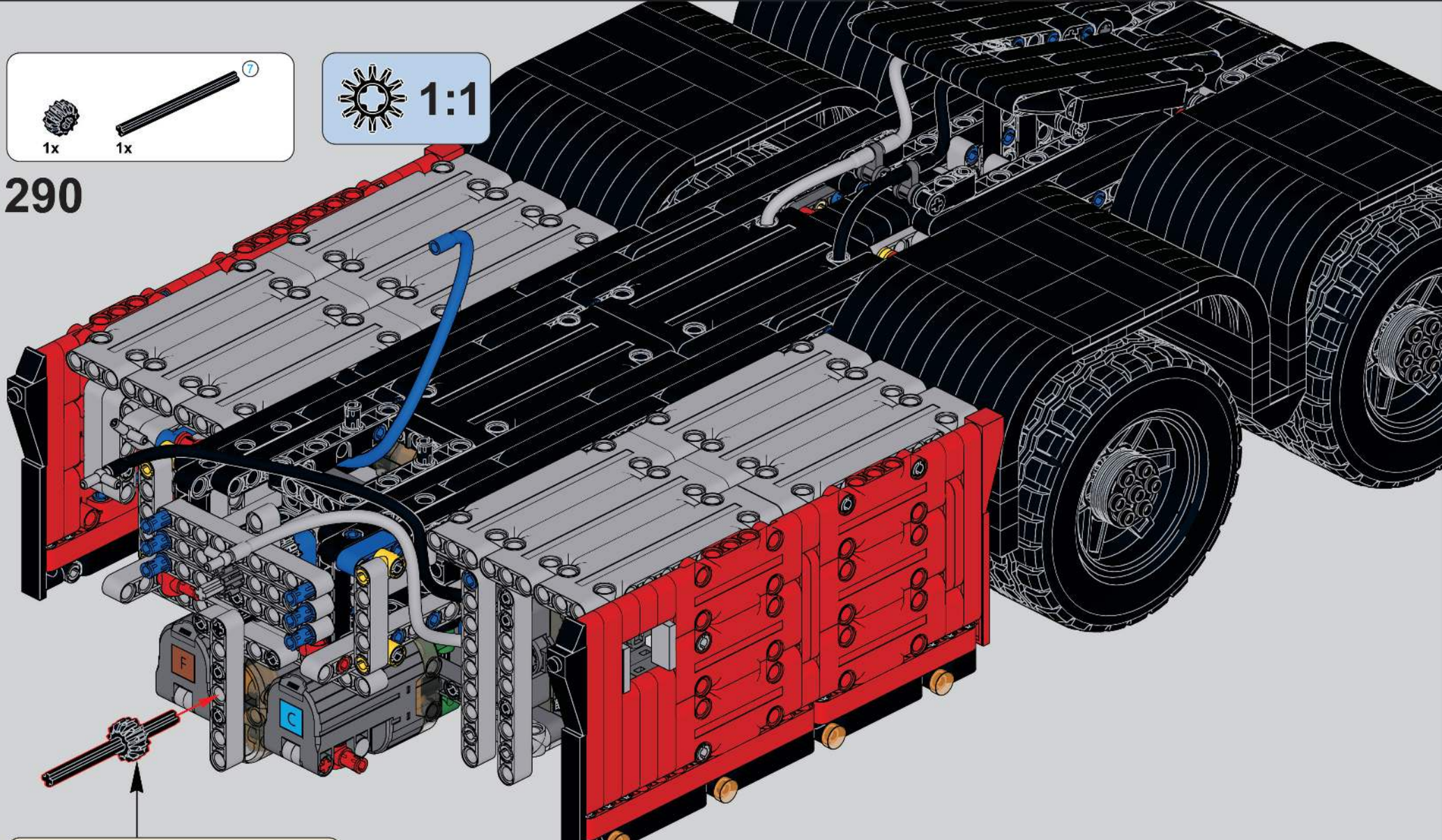

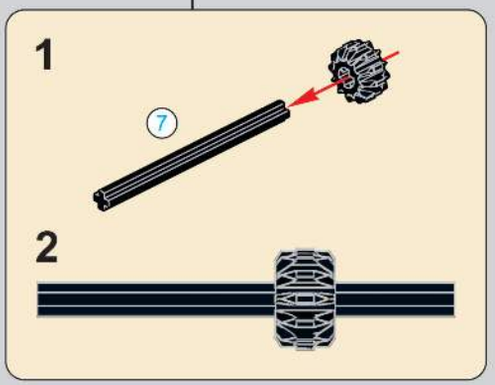

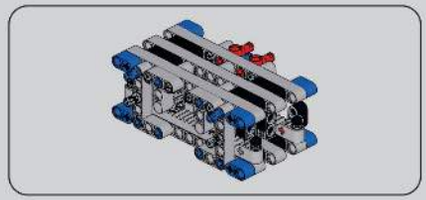

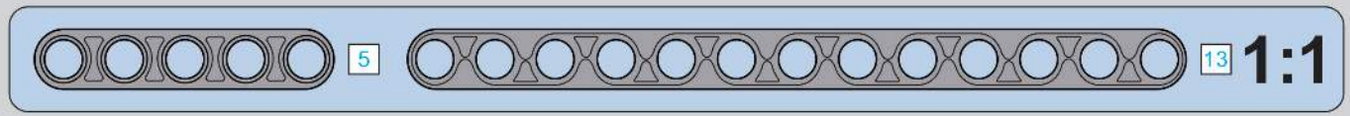

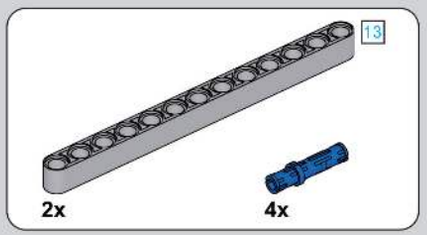

291

292

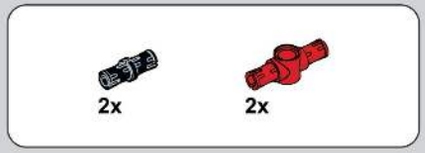

293

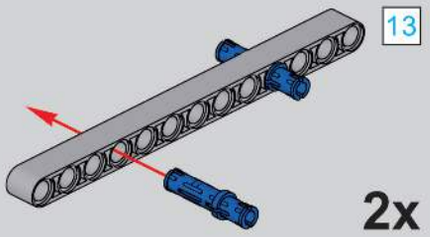

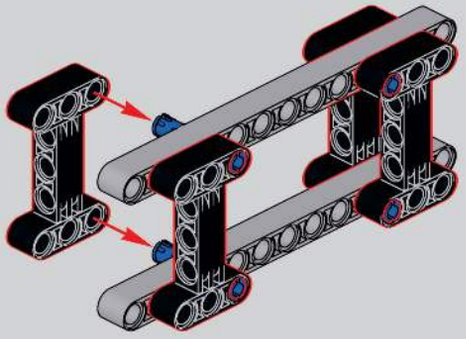

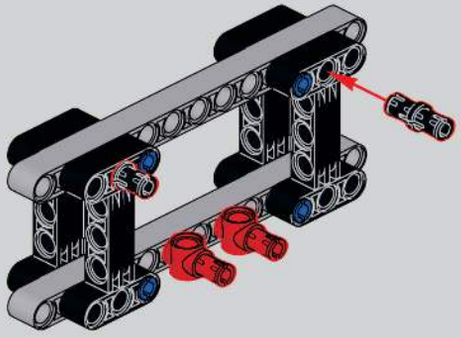

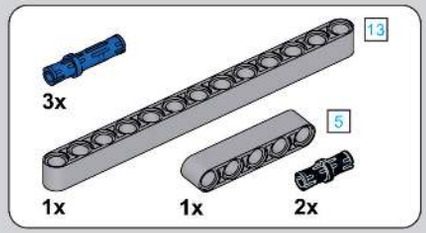

294

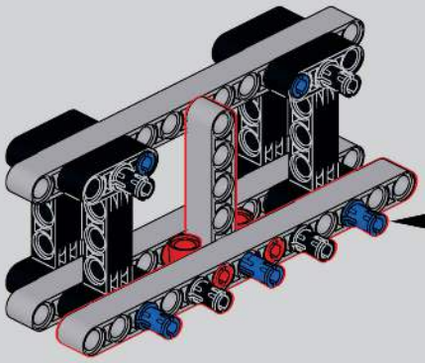

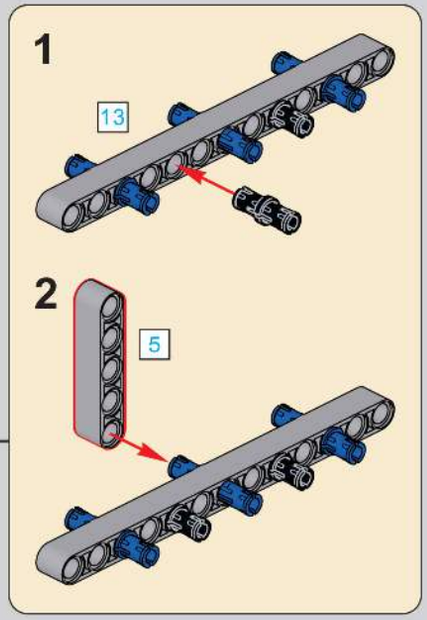

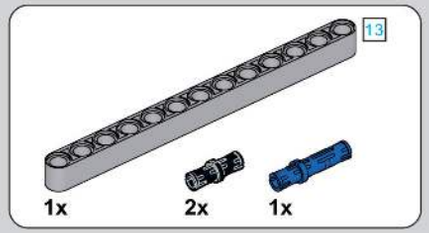

295

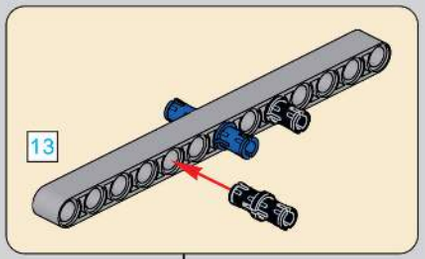

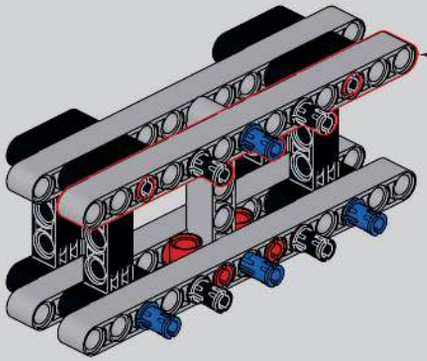

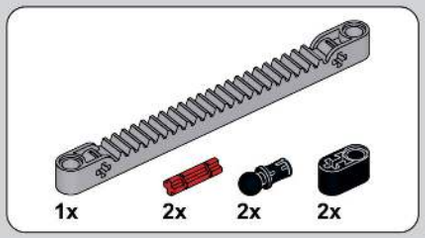

296

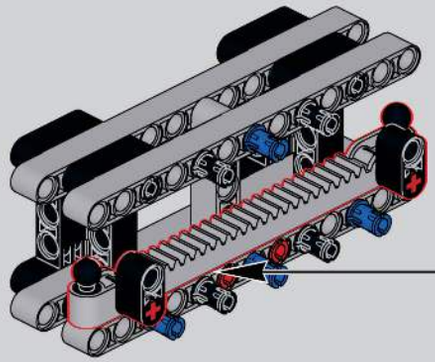

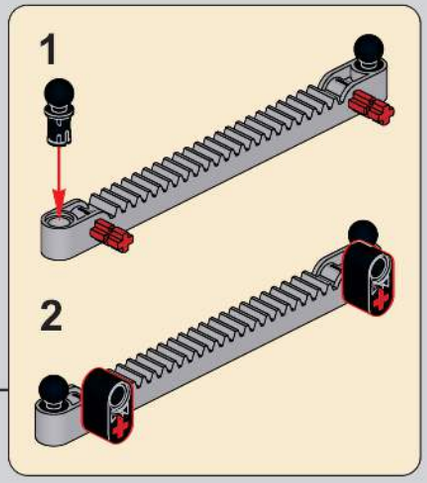

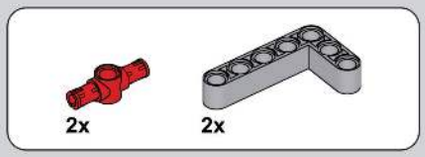

297

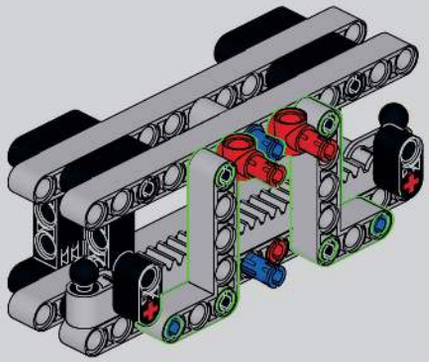

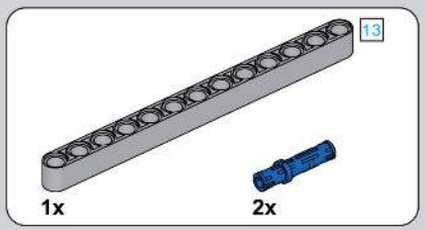

298

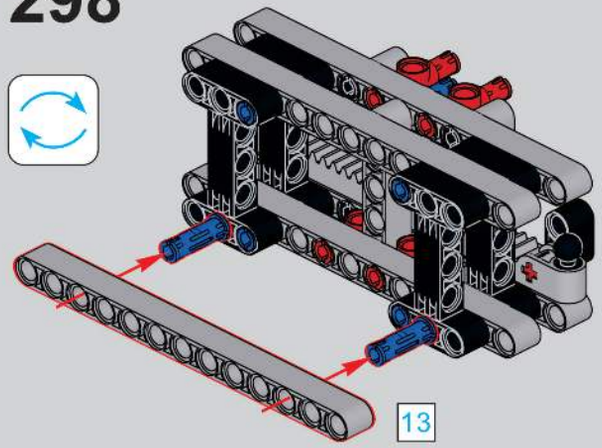

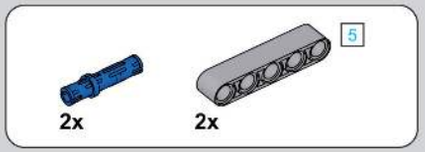

299

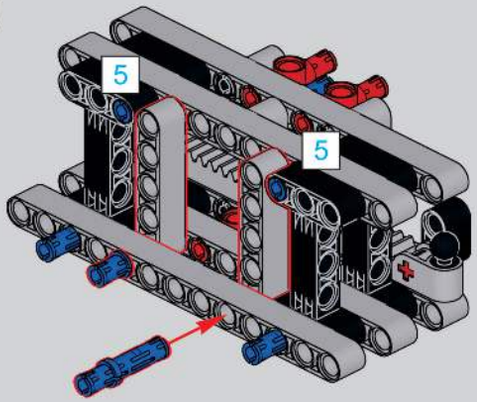

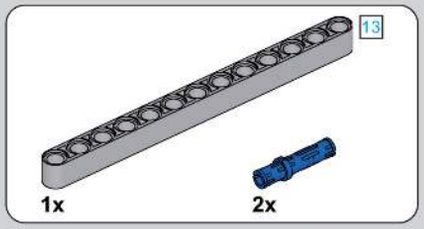

300

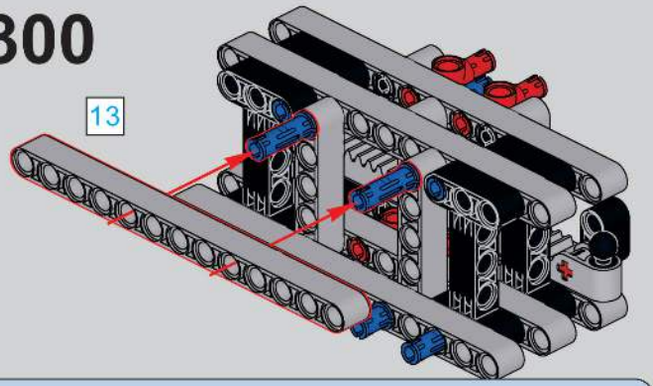

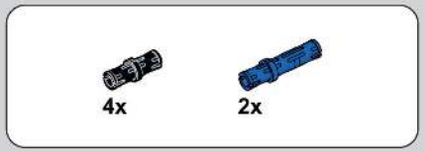

301

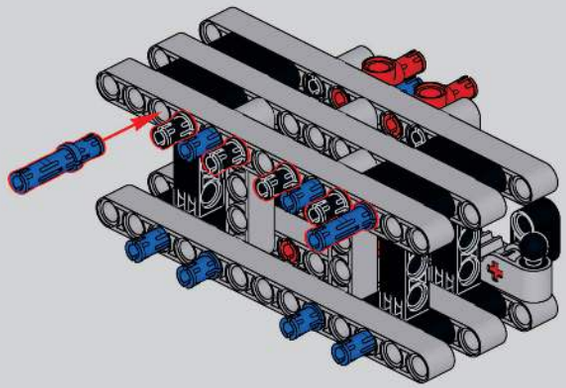

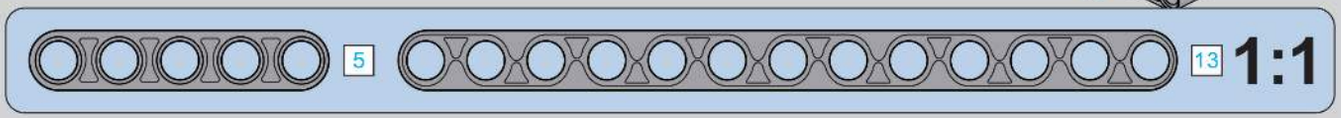

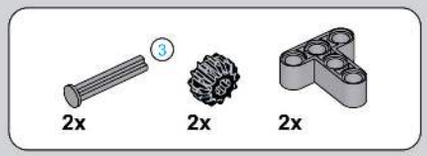

302

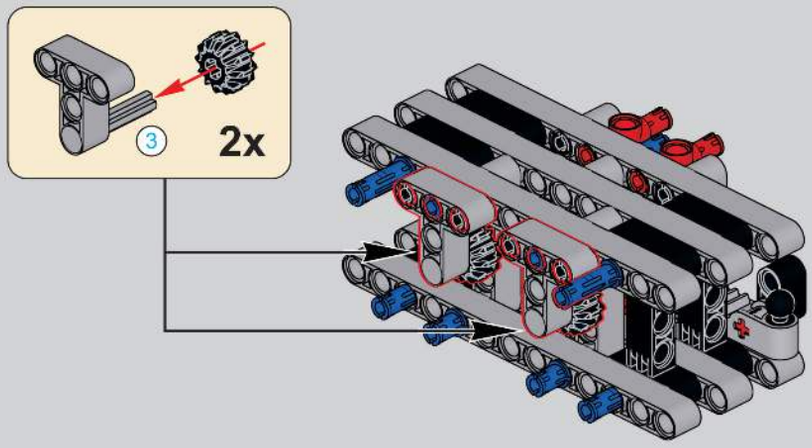

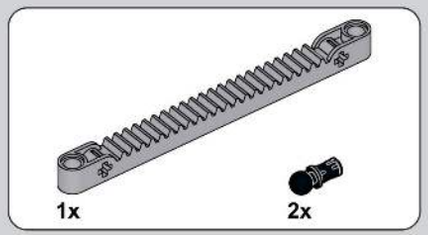

303

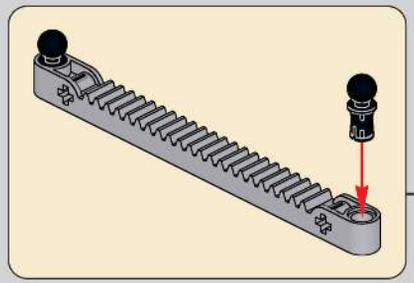

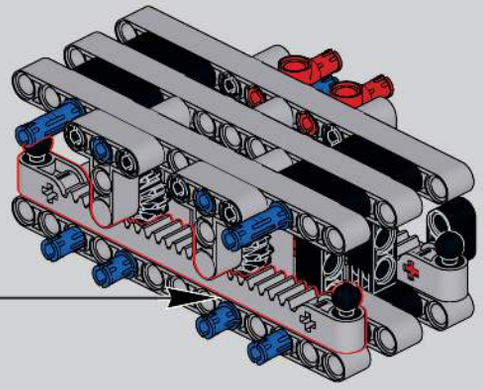

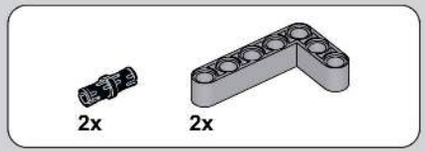

304

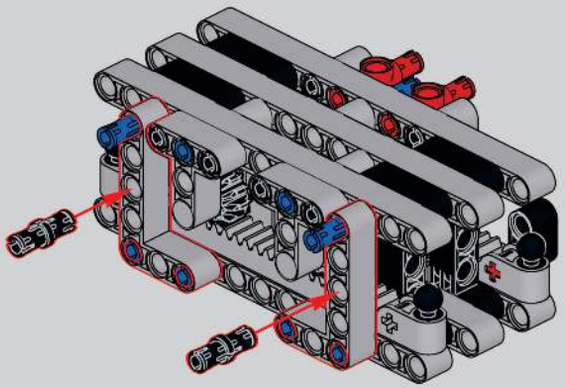

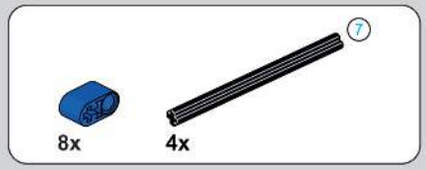

305

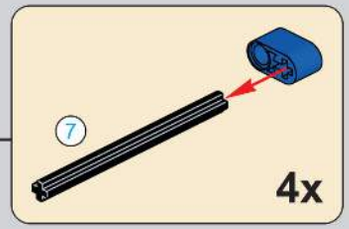

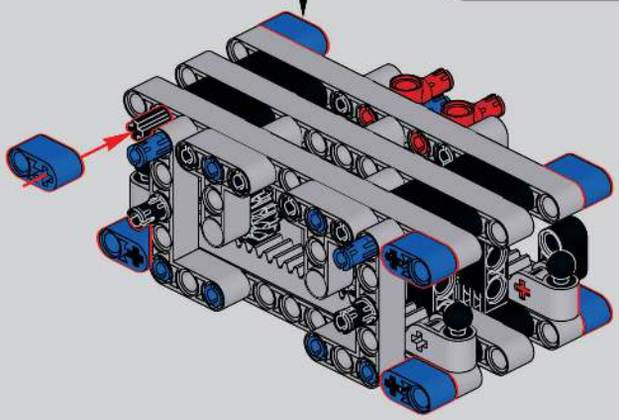

306

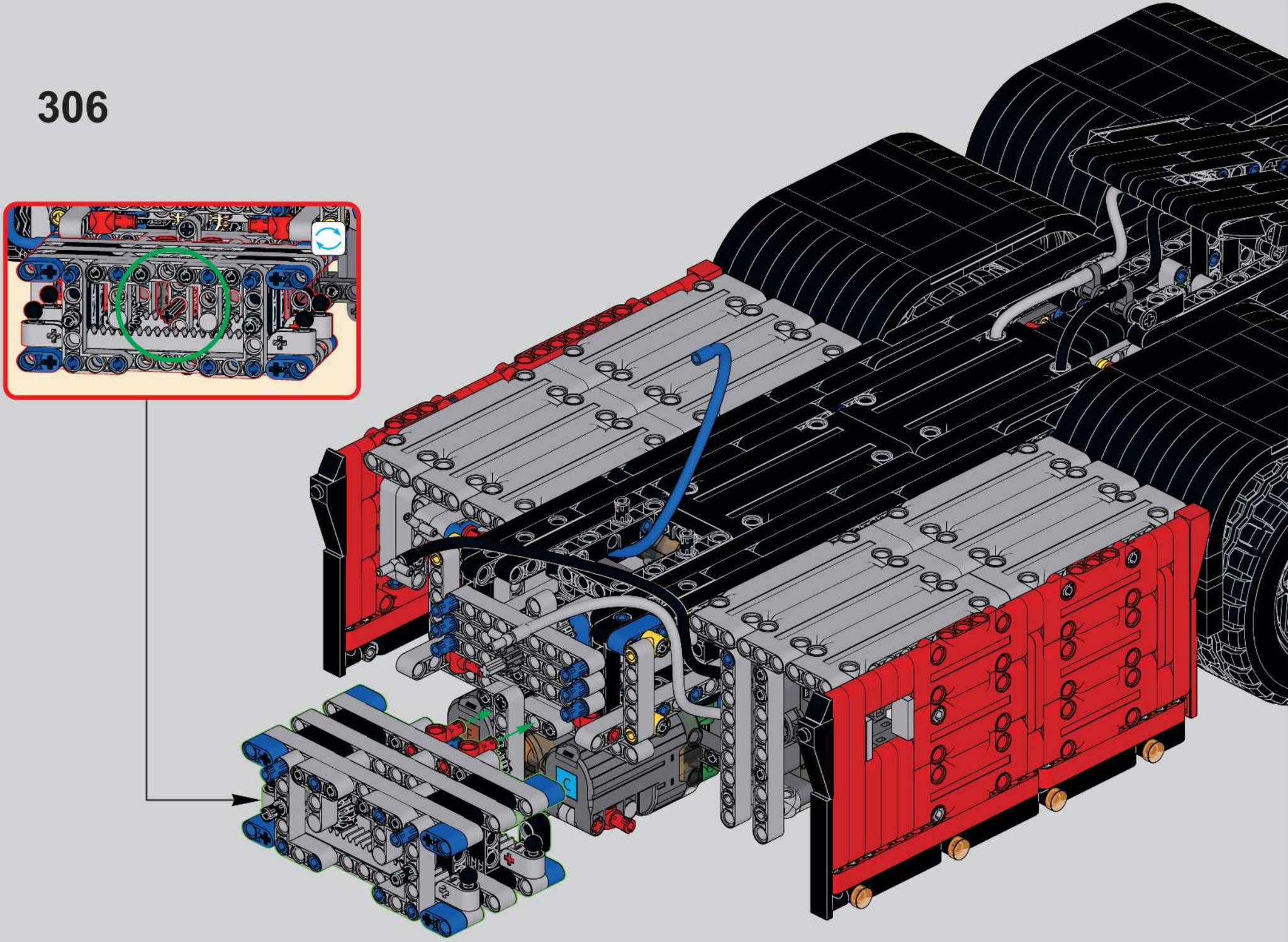

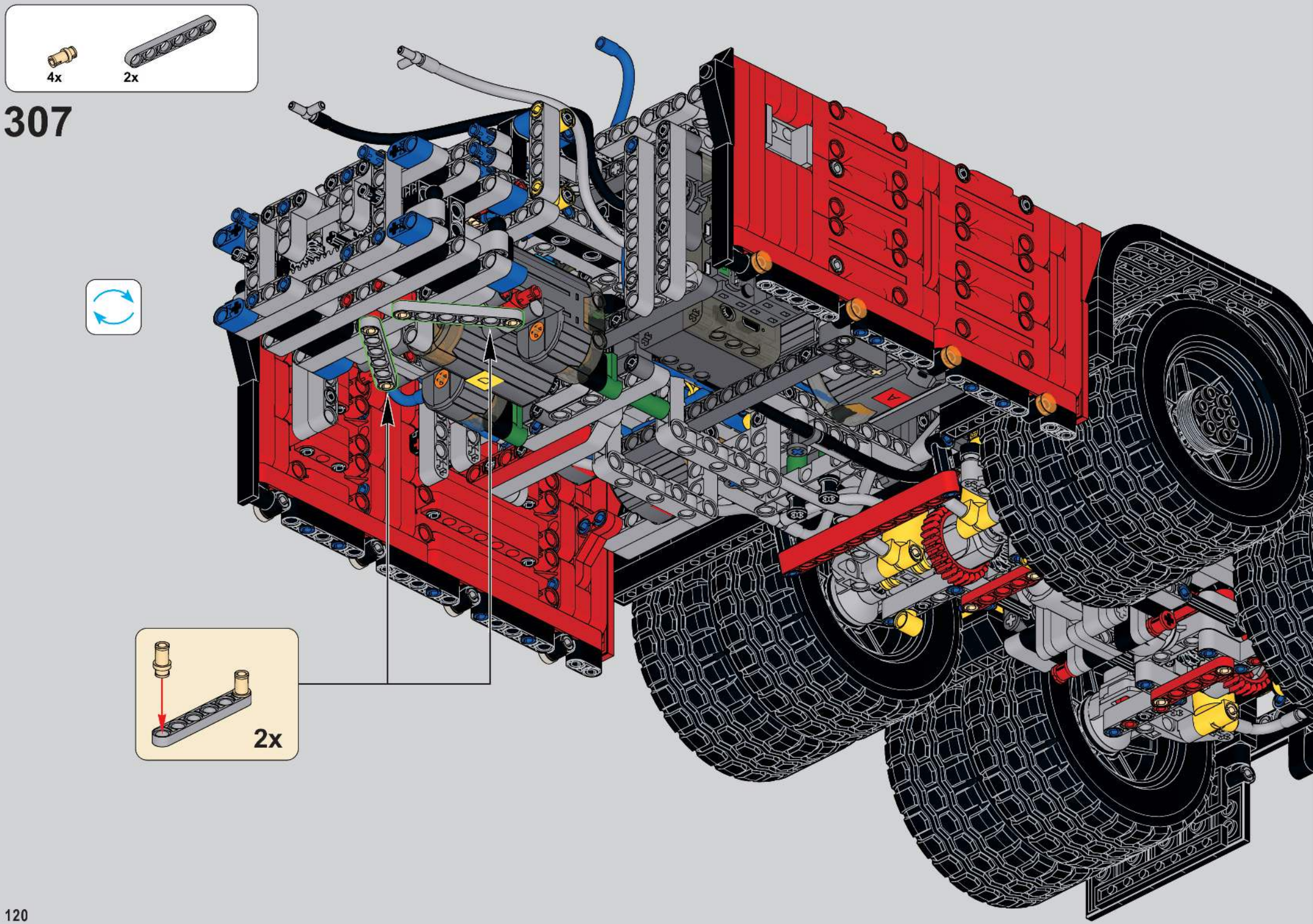
4x
2x
307
2x

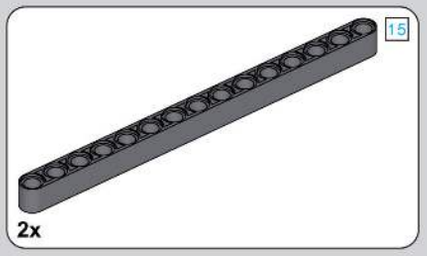

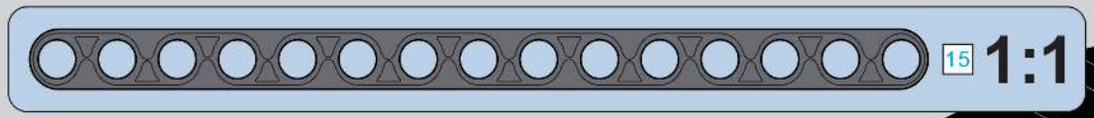

308

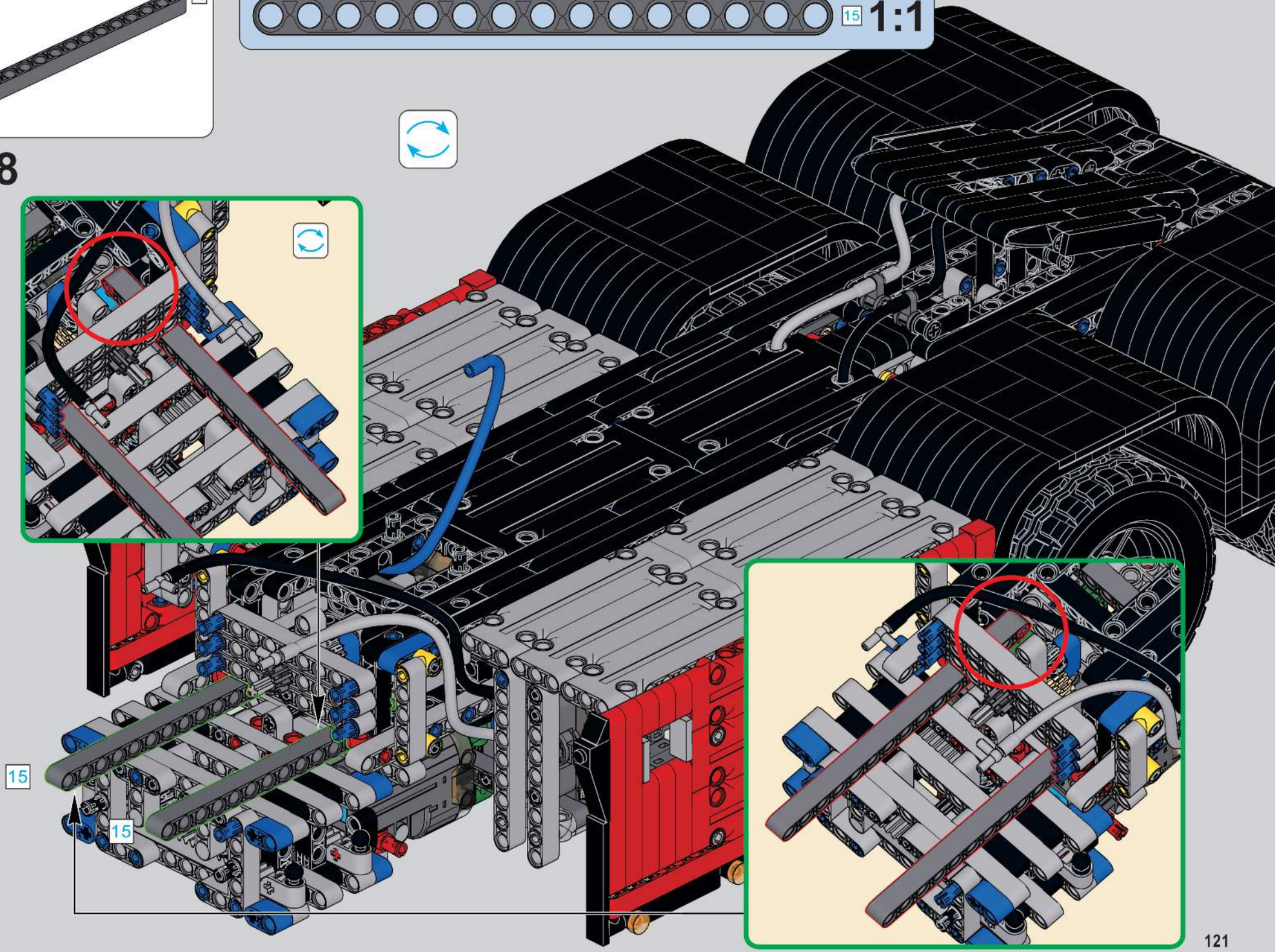

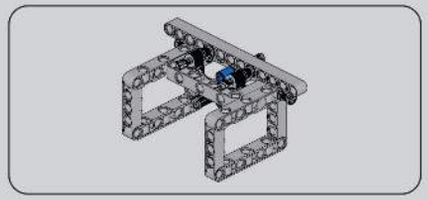

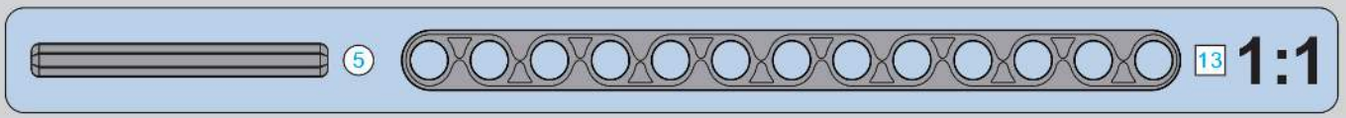

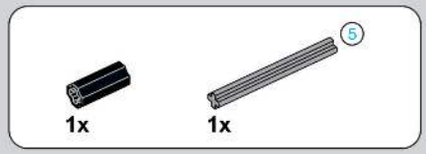

309

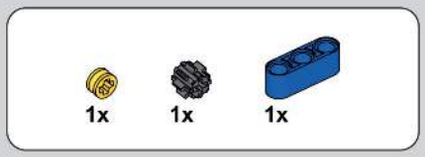

310

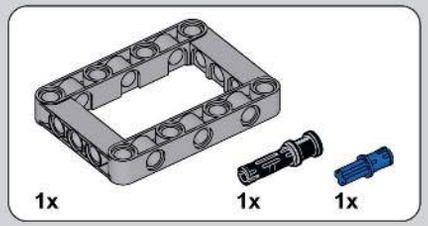

311

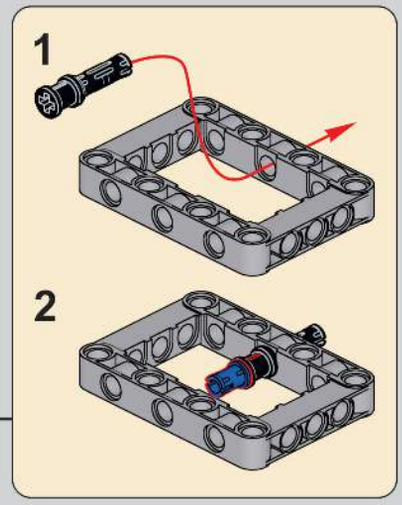

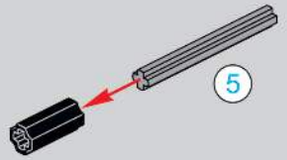

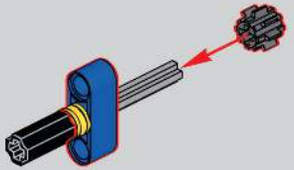

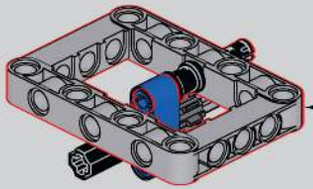

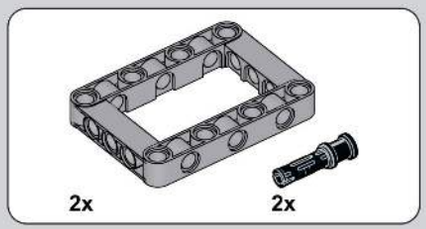

312

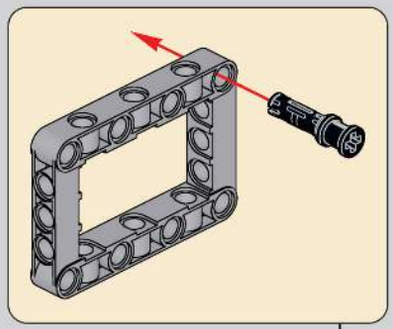

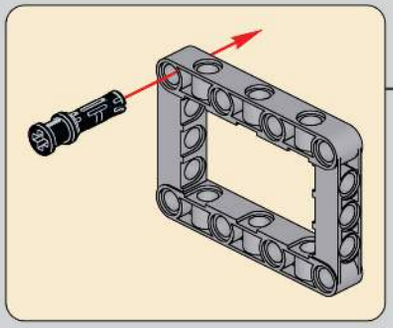

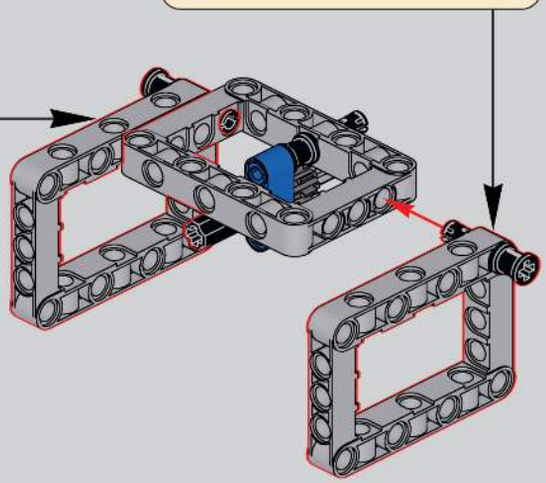

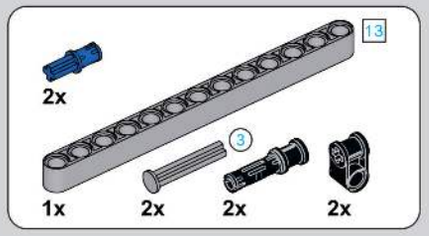

313

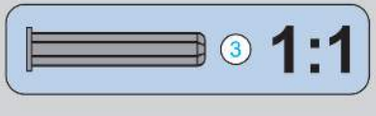

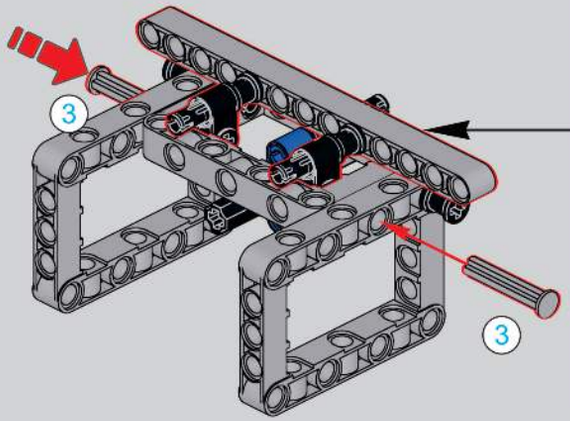

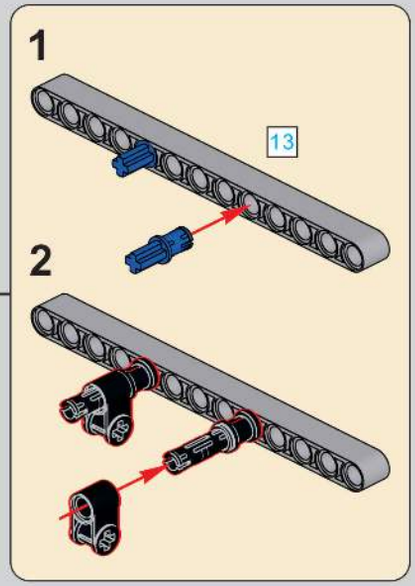

314

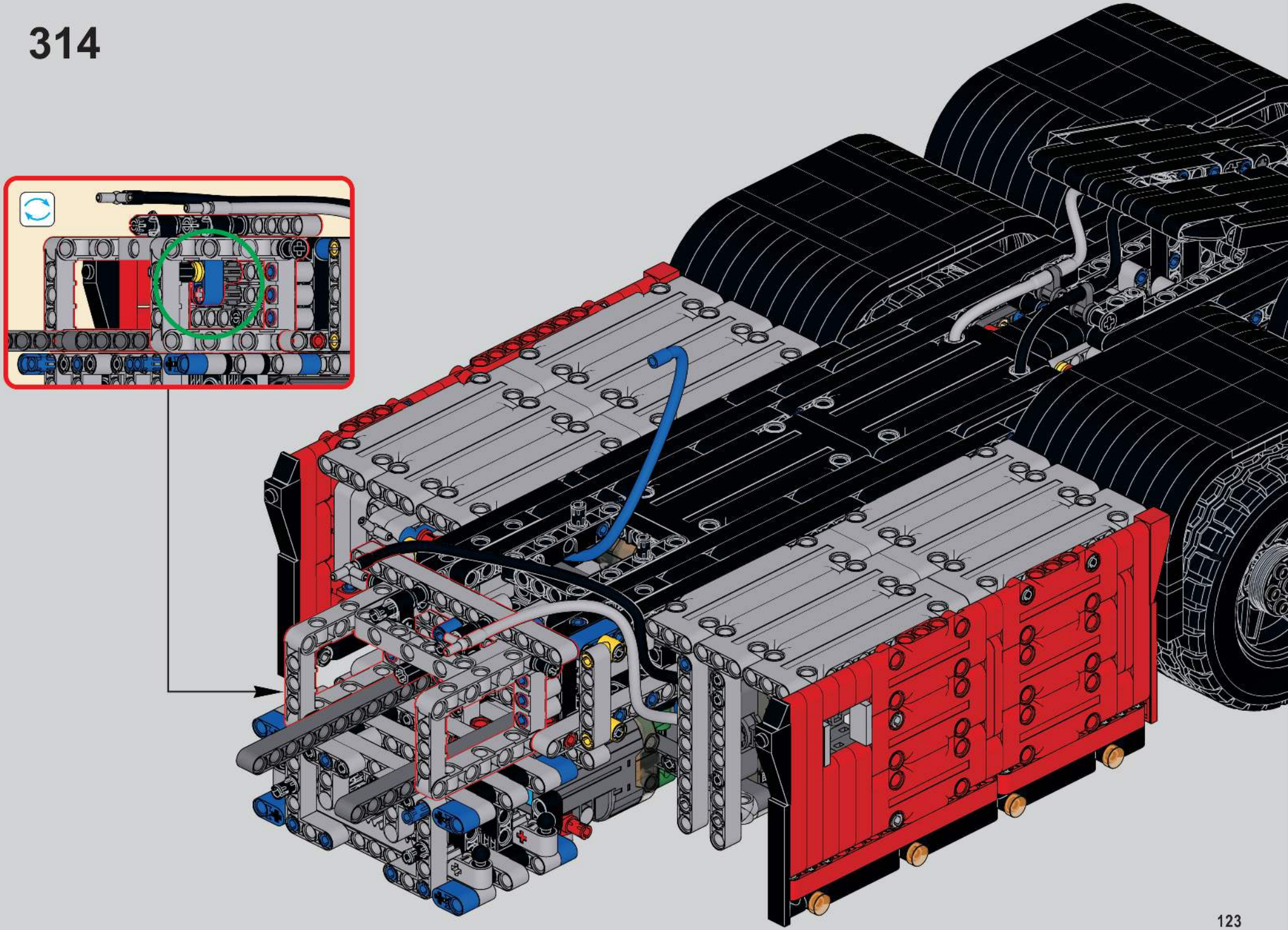

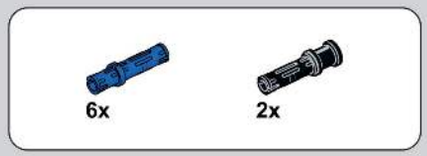

315

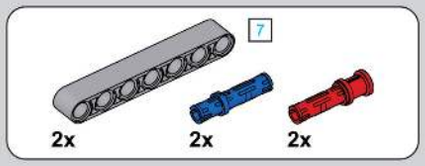

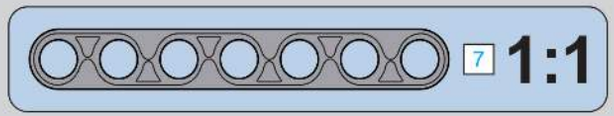

316

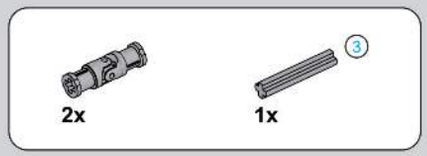

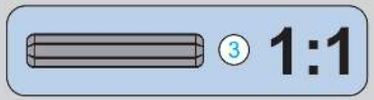

317

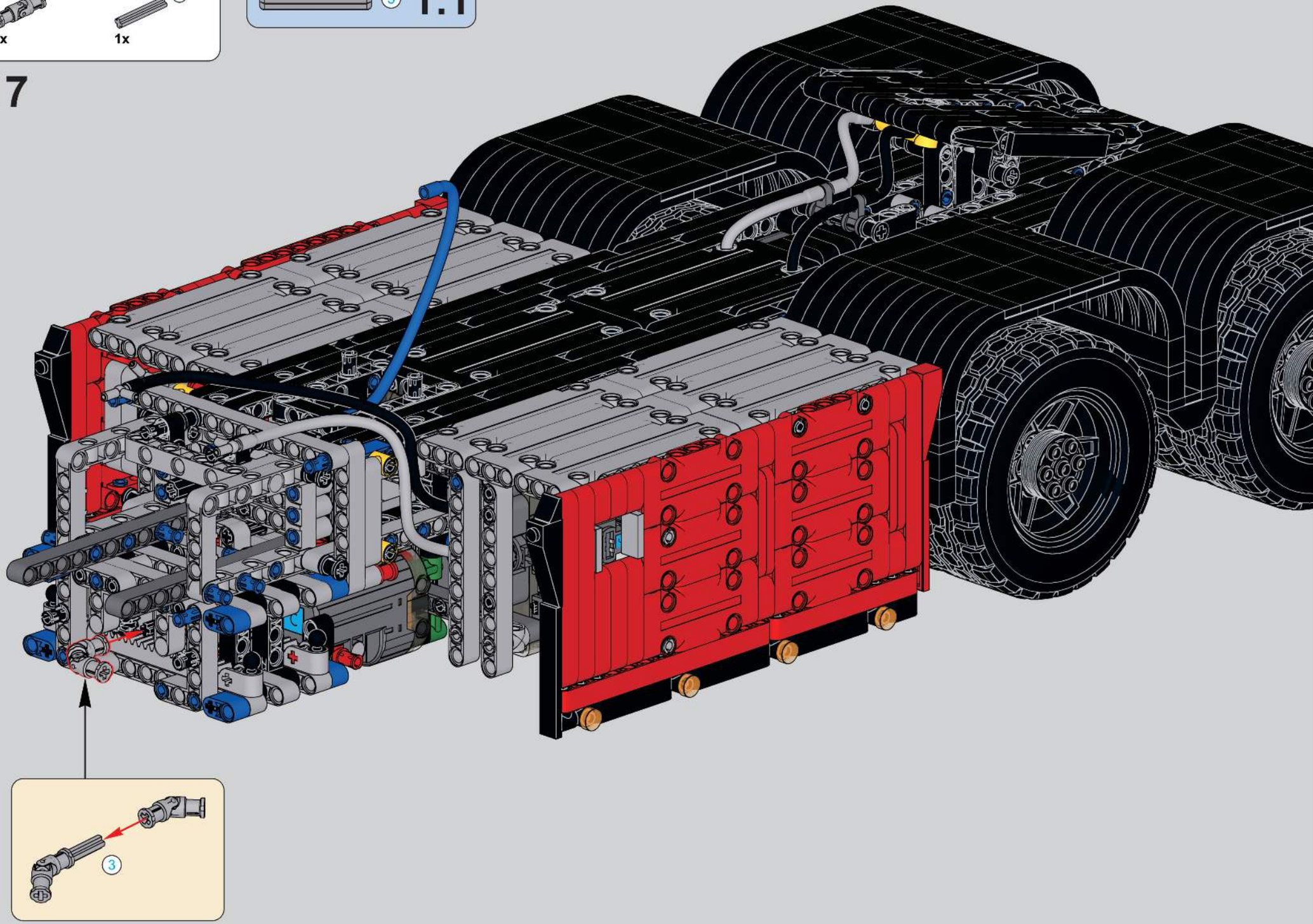

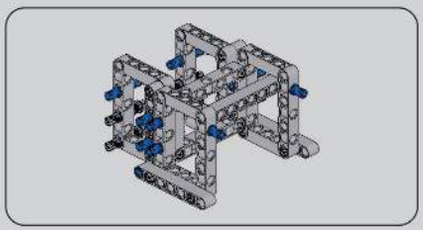

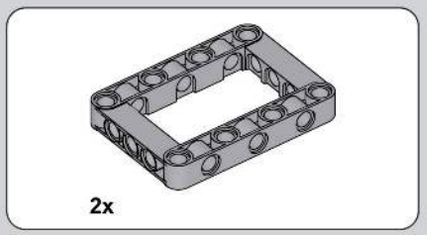

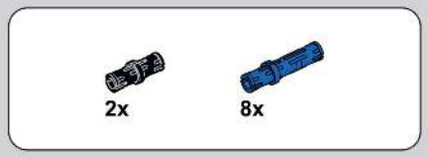

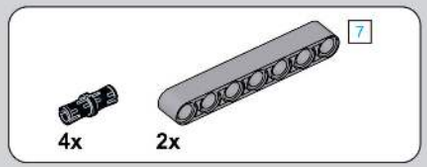

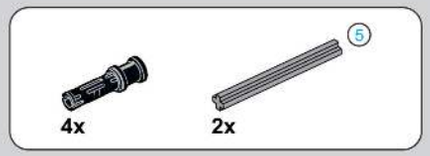

318

319

320

321

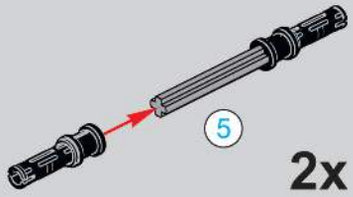

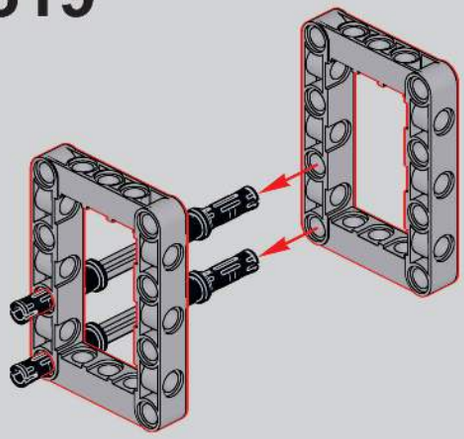

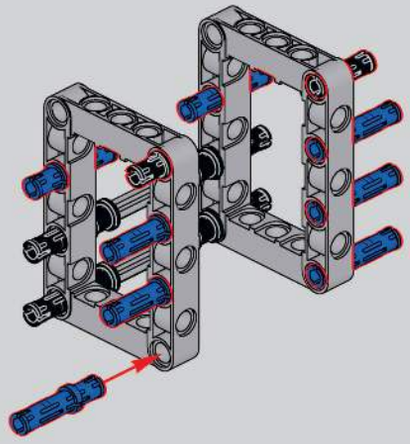

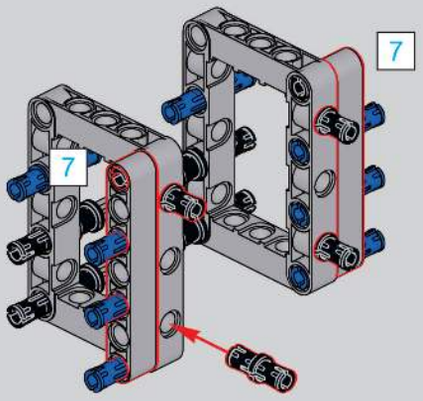

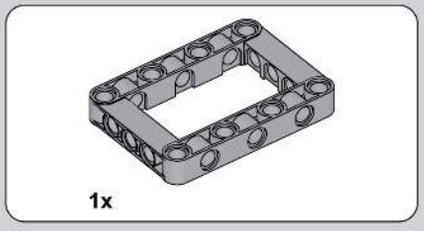

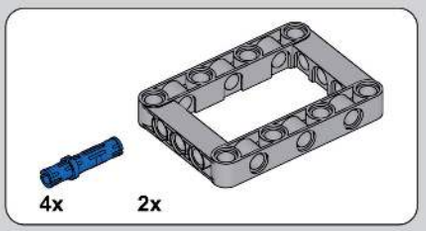

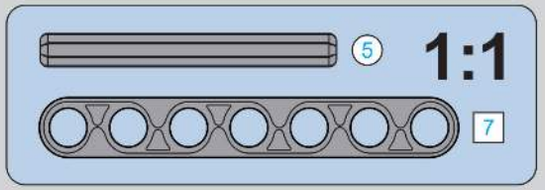

322

323

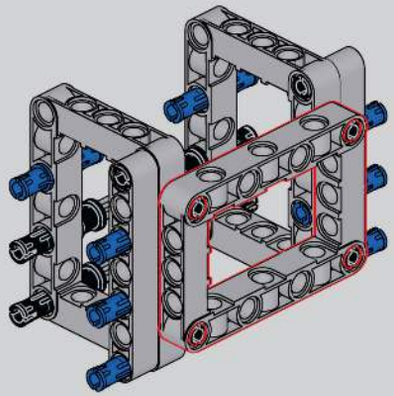

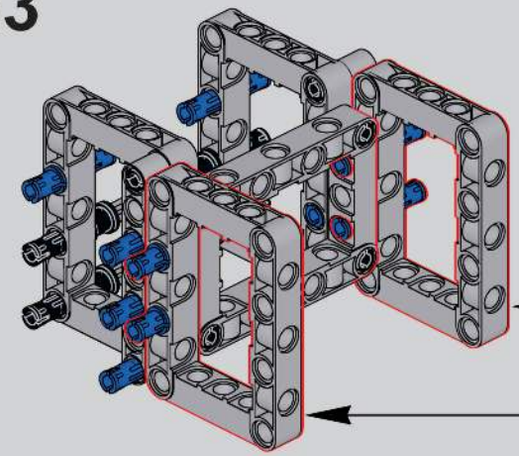

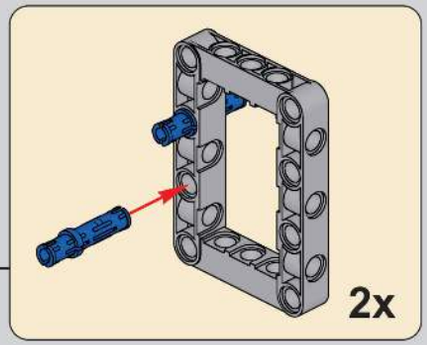

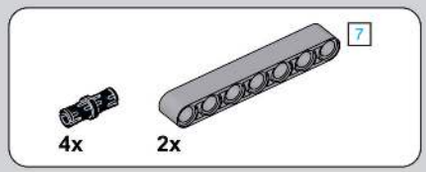

324

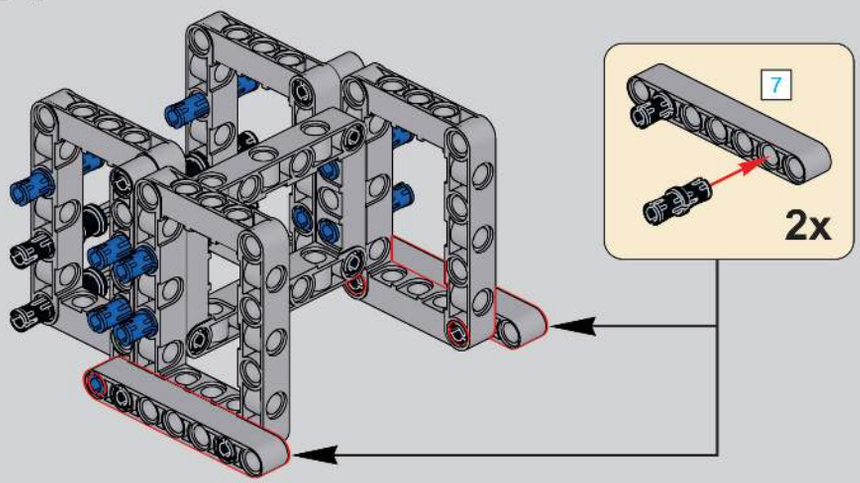

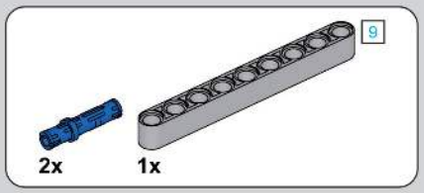

325

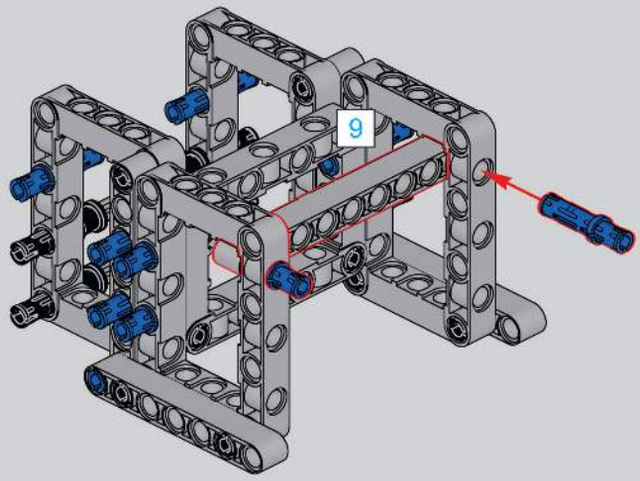

326

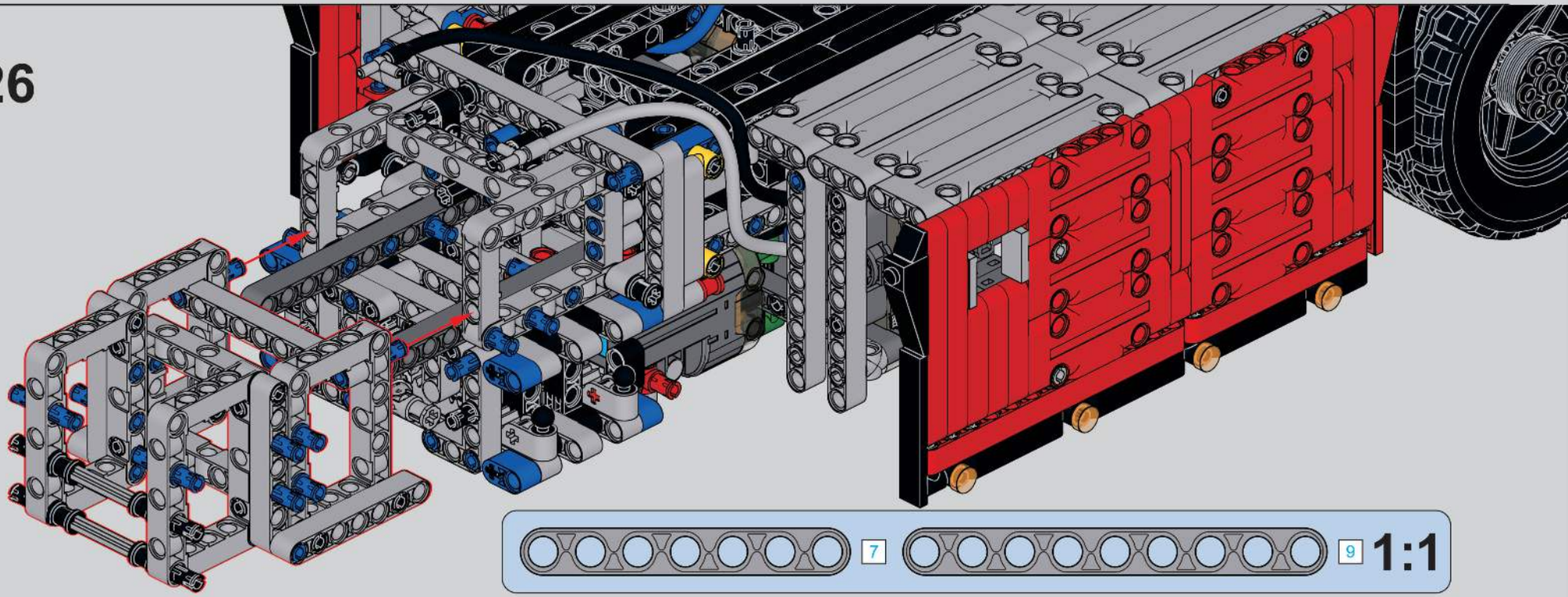

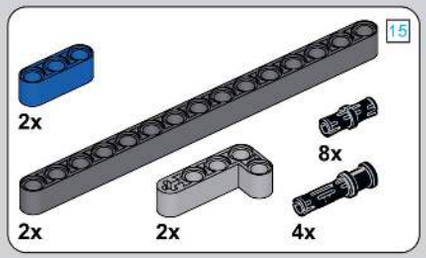

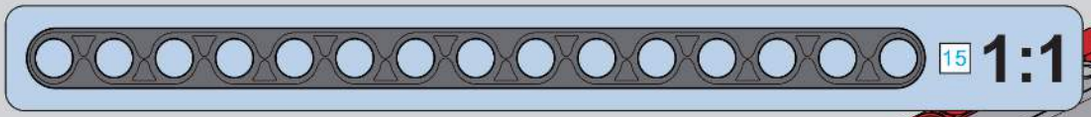

327

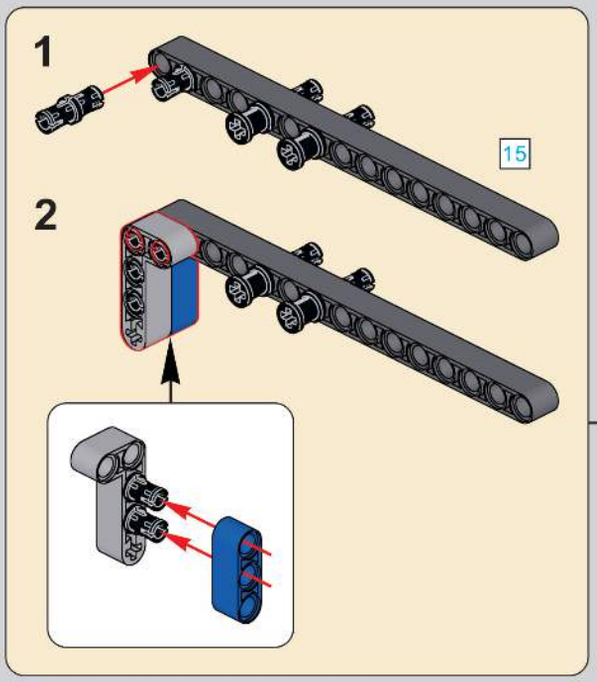

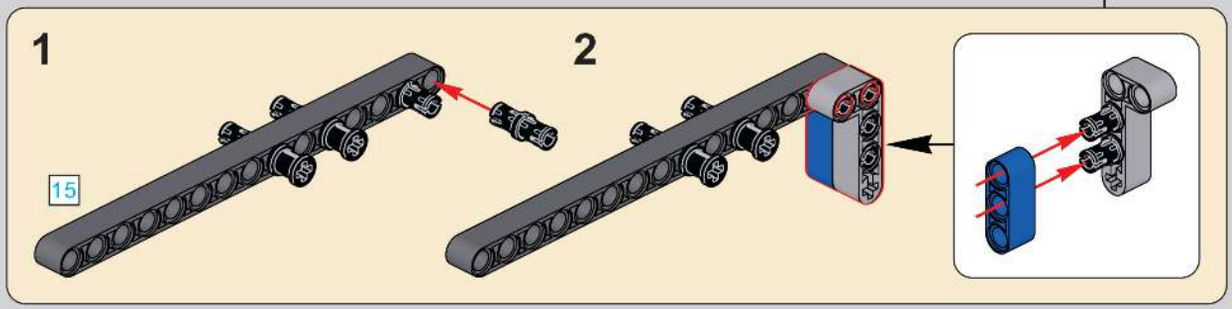

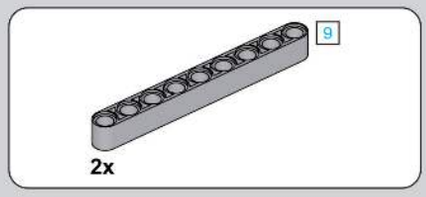

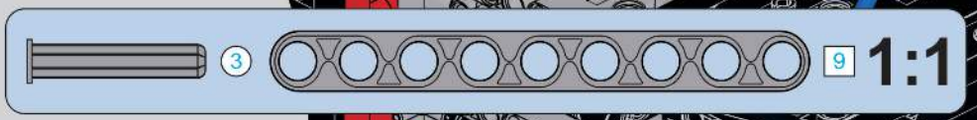

328

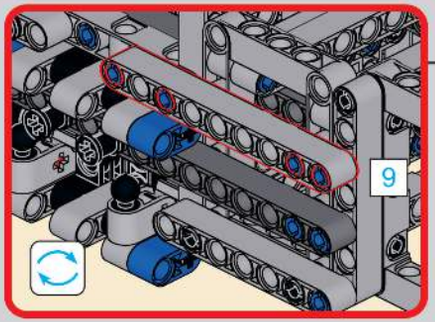

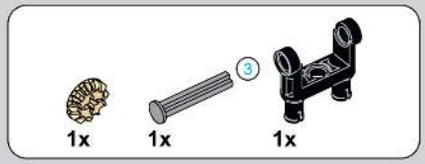

329

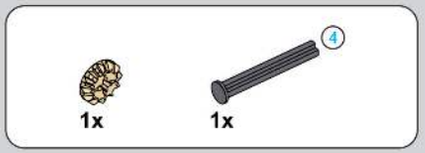

330

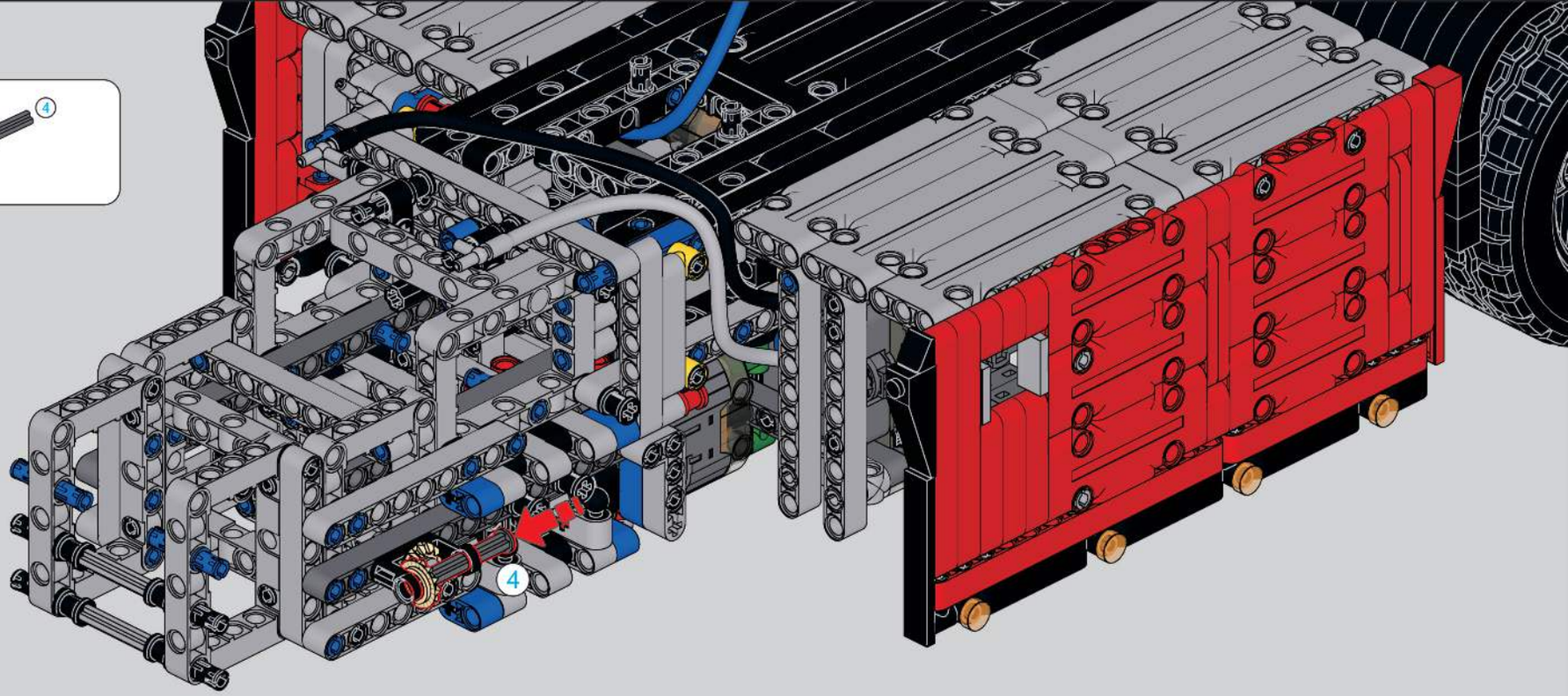

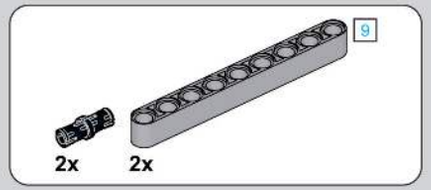

331

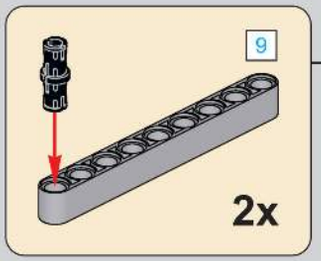

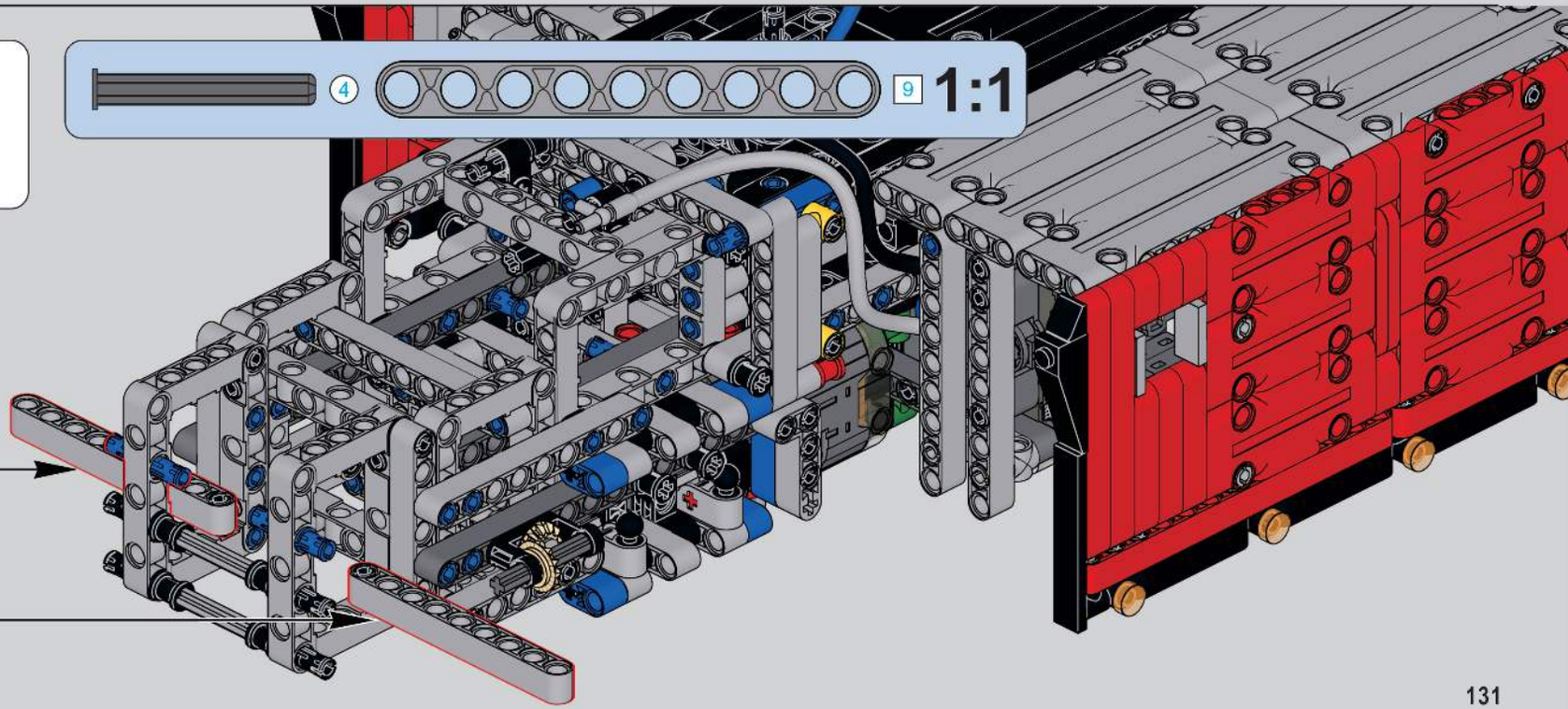

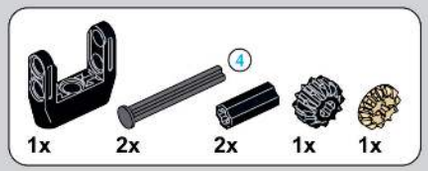

332

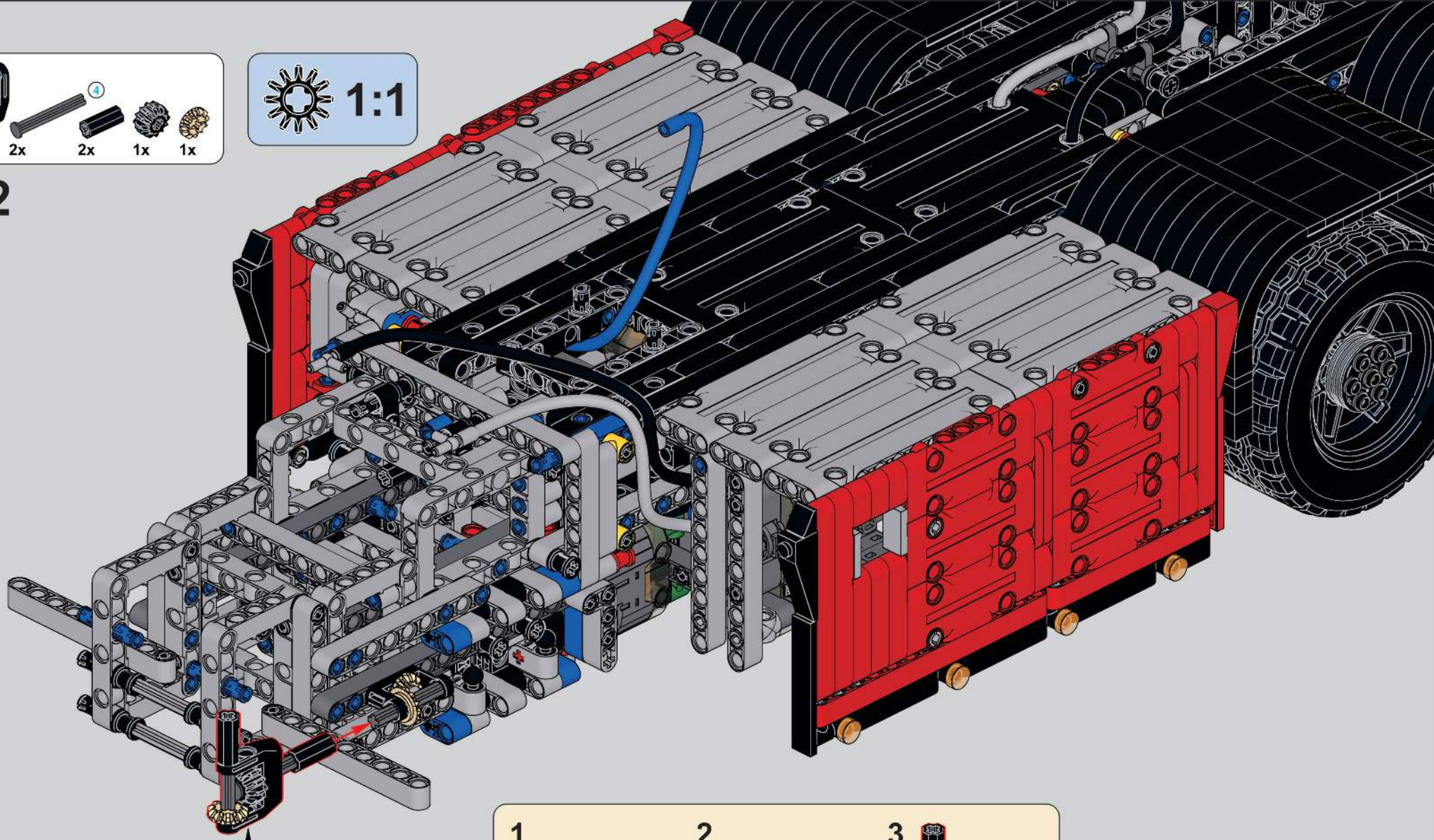

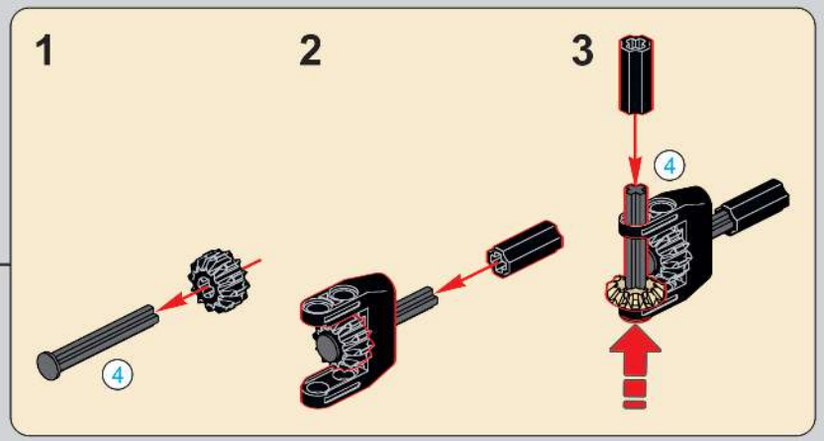

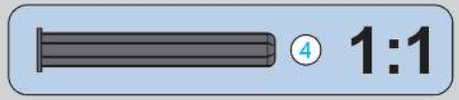

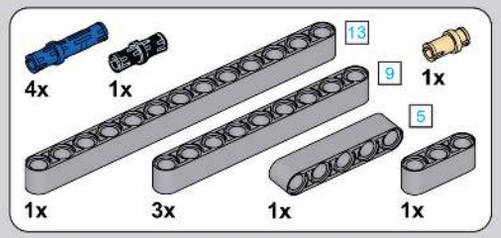

333

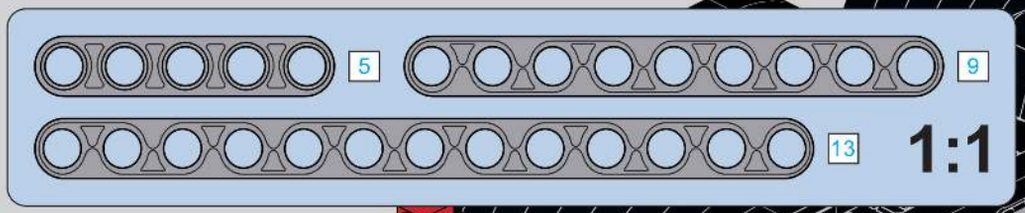

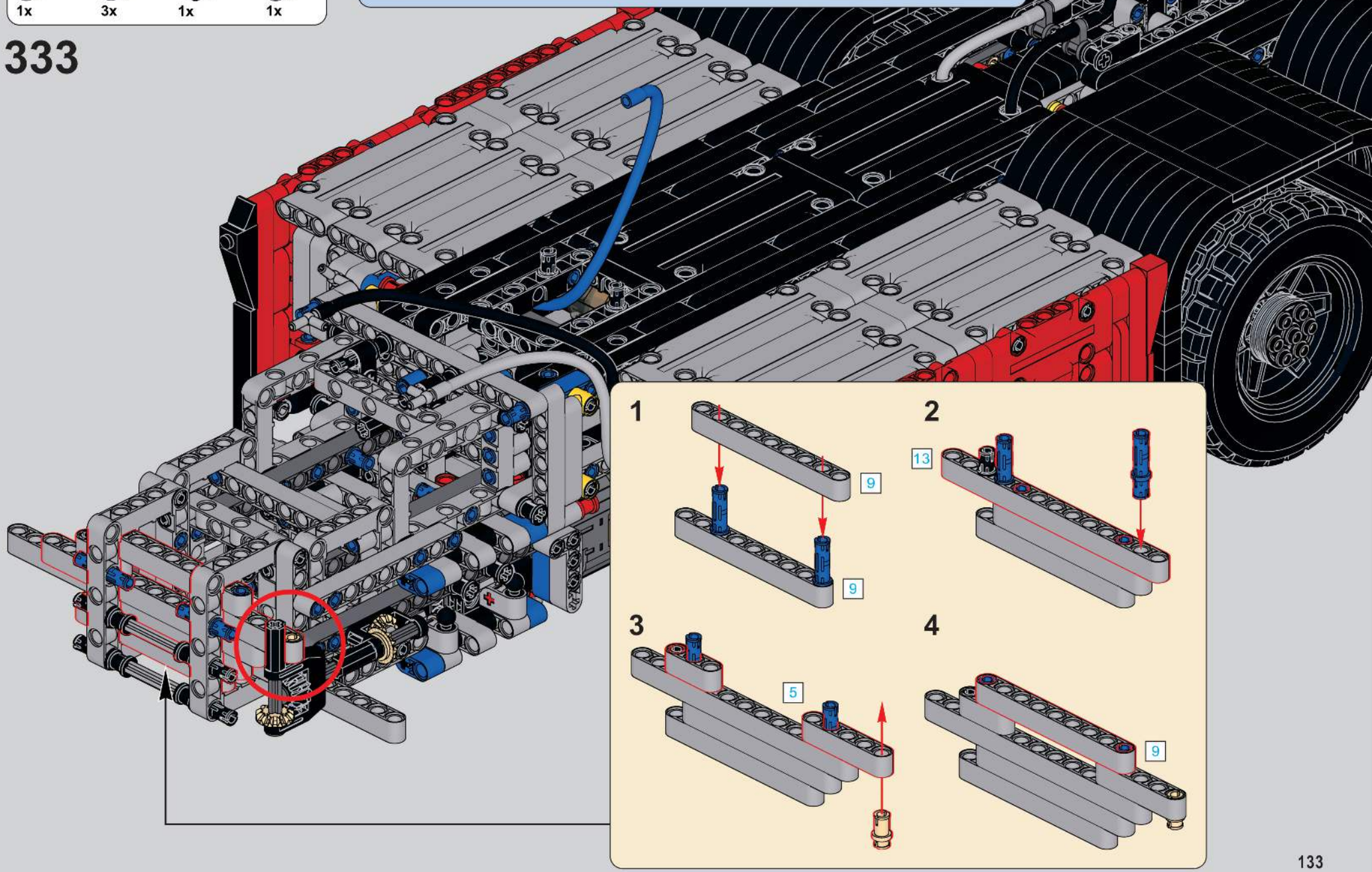

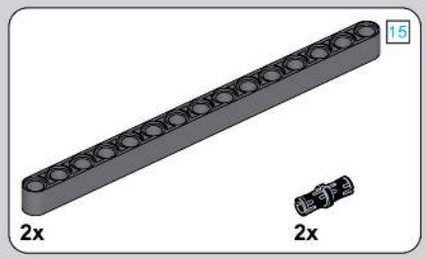

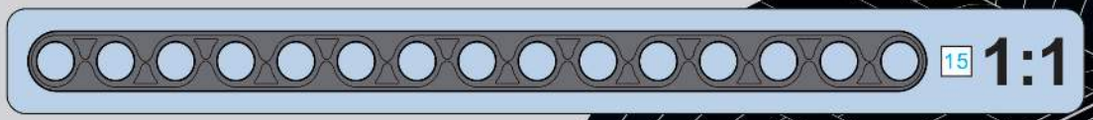

334

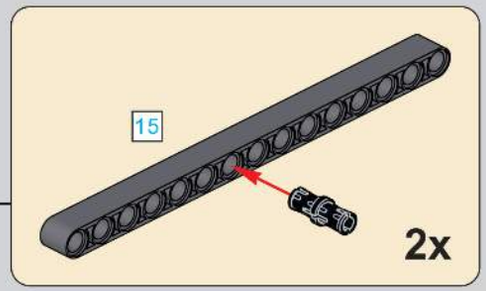

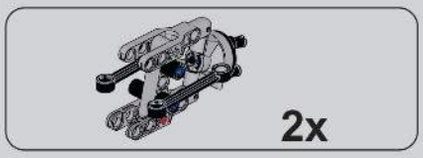

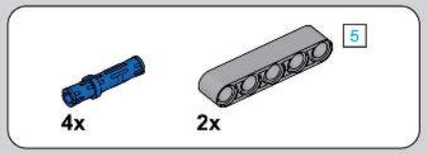

335

336

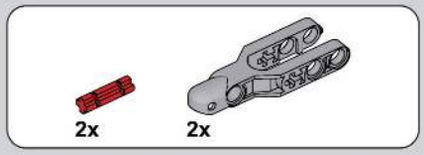

337

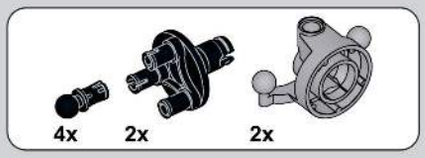

338

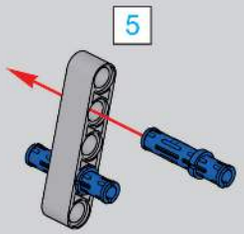

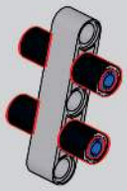

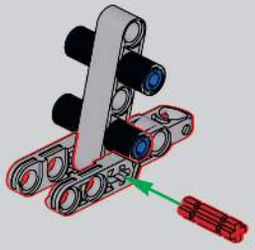

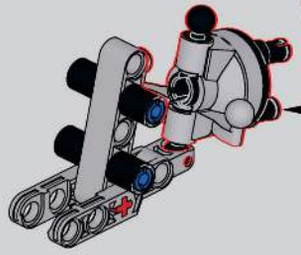

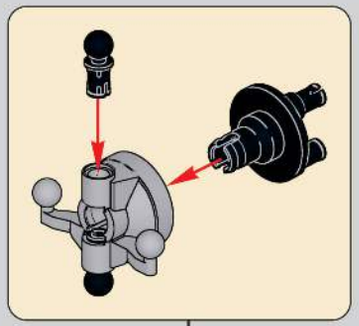

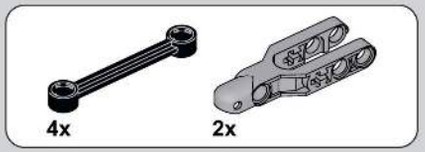

339

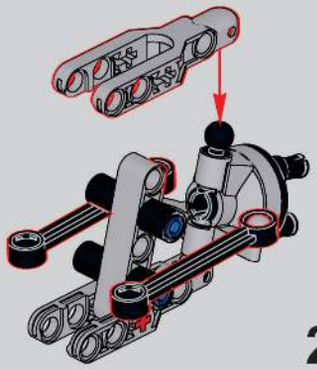

2x

340

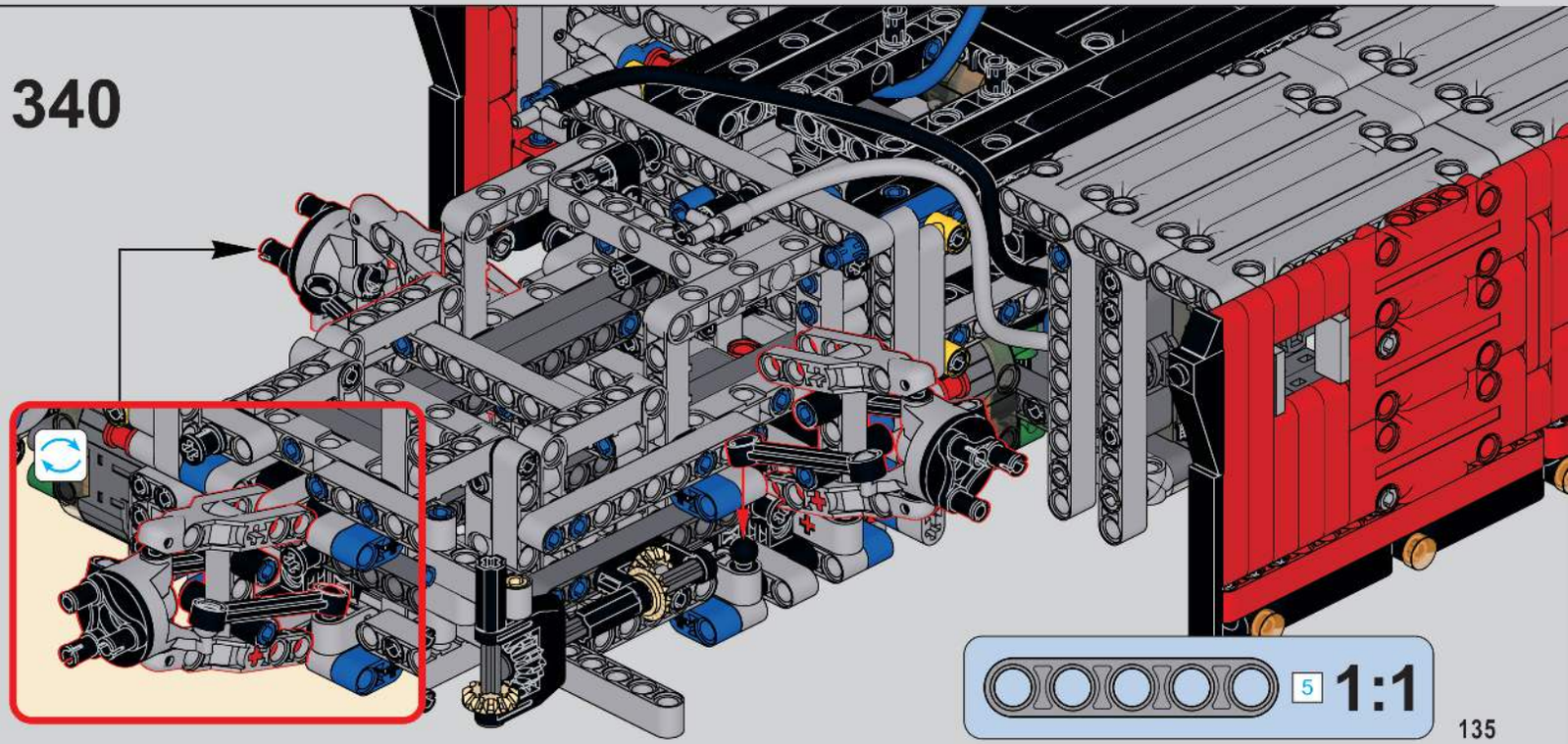

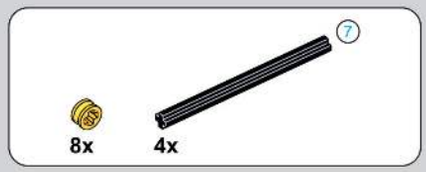

341

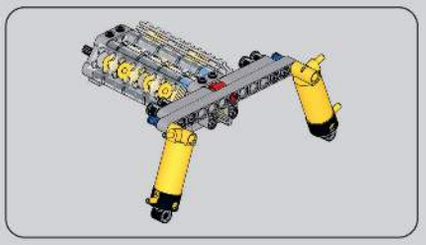

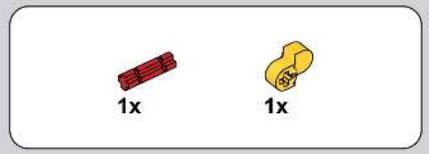

343

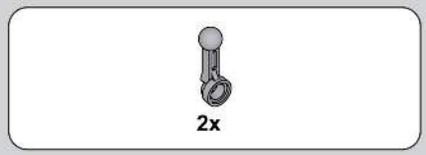

344

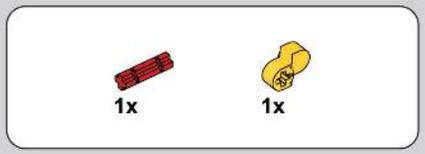

345

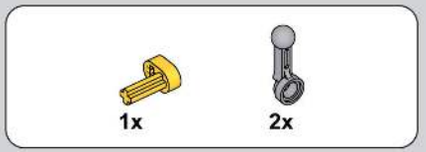

342

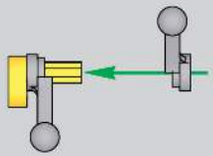

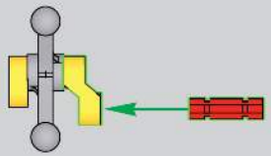

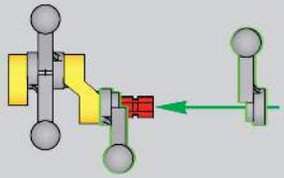

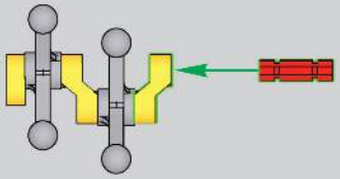

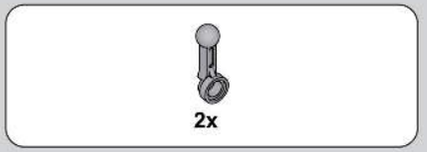

346

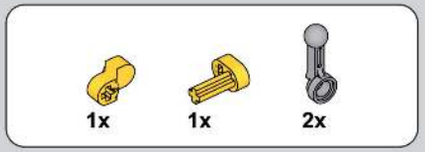

347

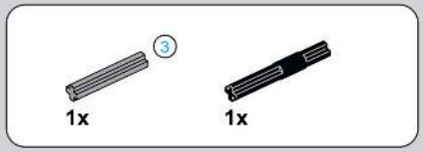

348

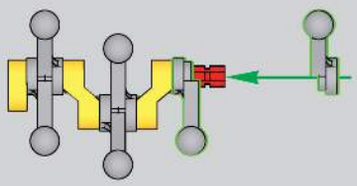

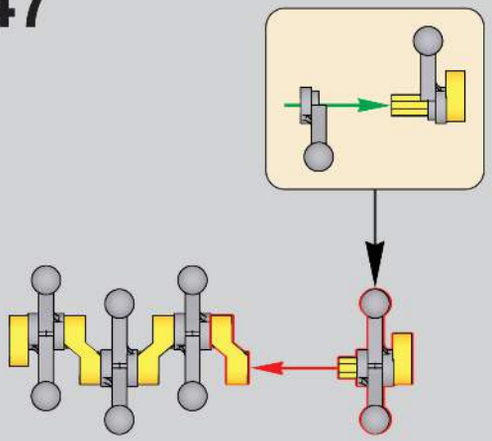

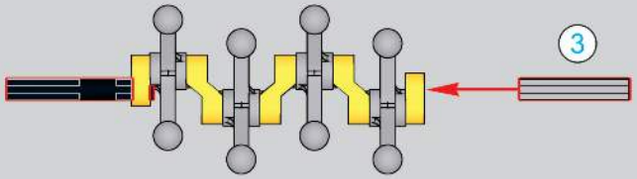

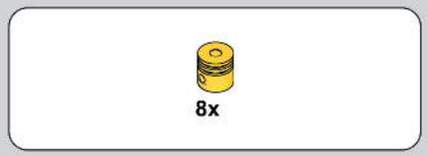

349

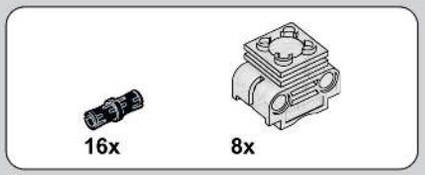

350

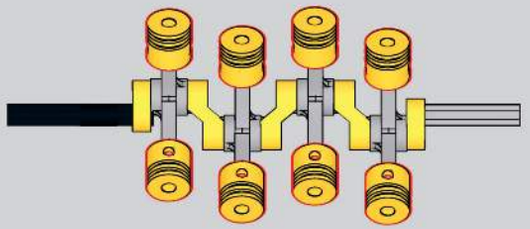

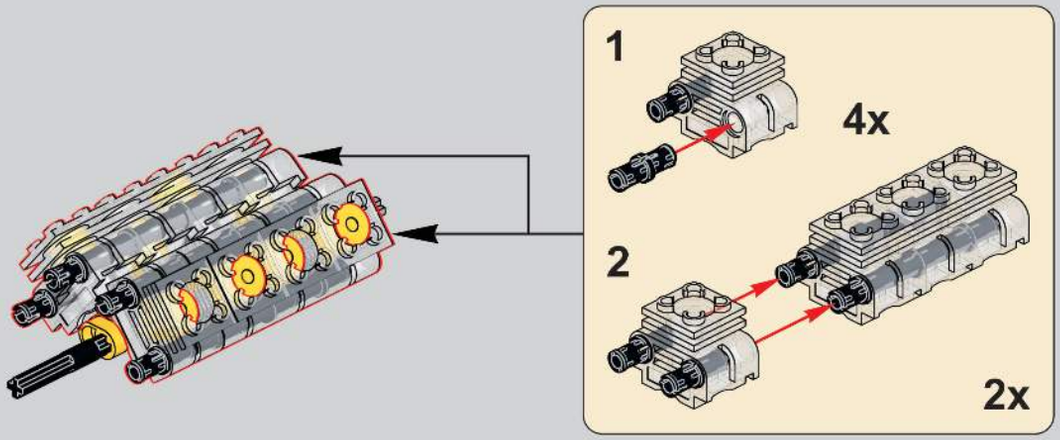

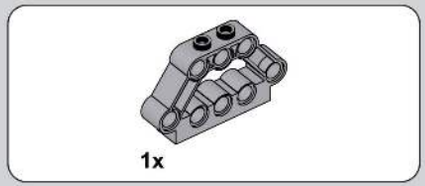

351

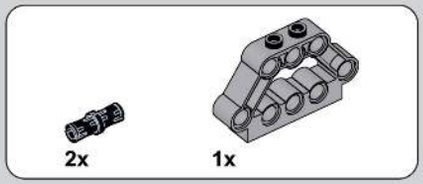

352

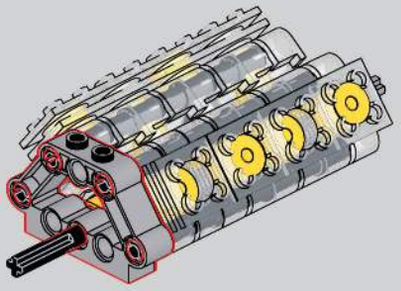

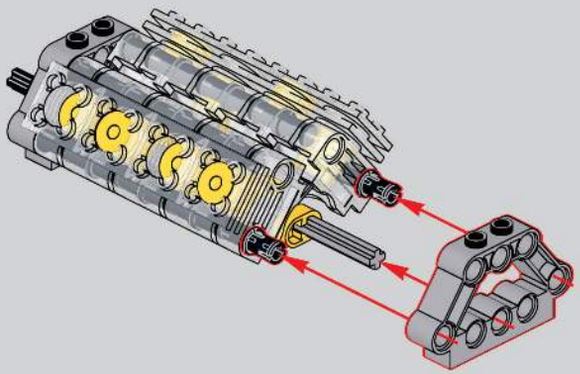

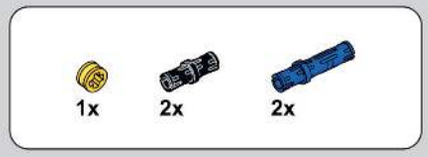

353

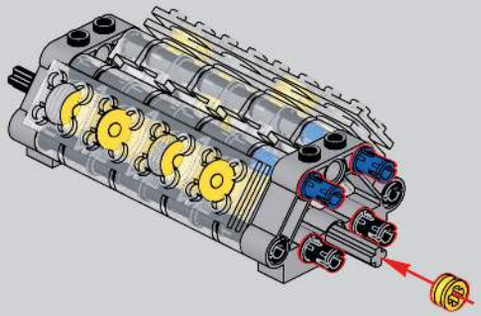

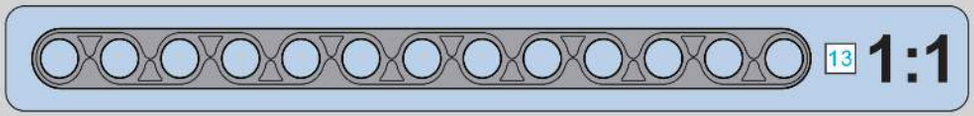

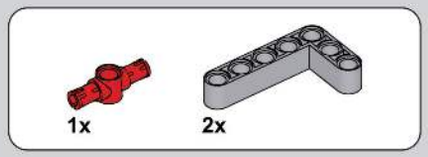

354

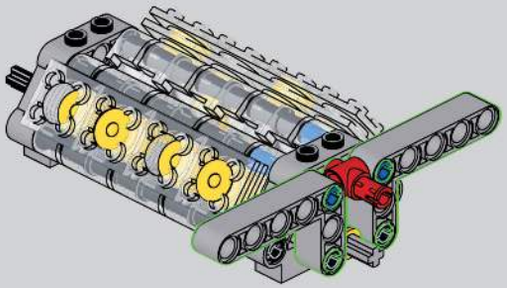

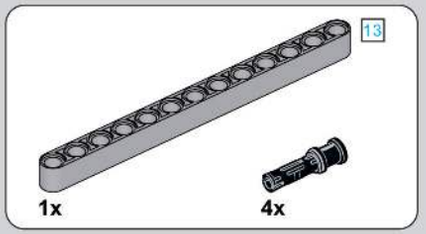

355

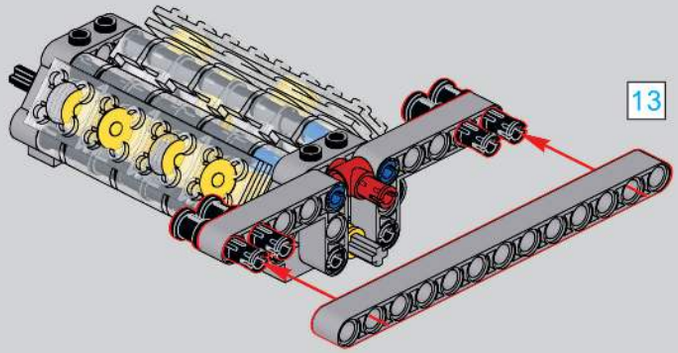

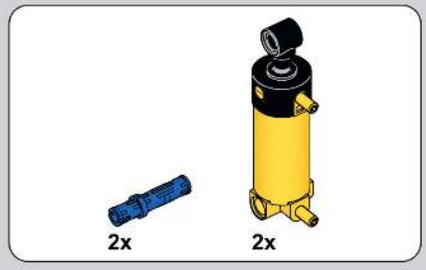

356

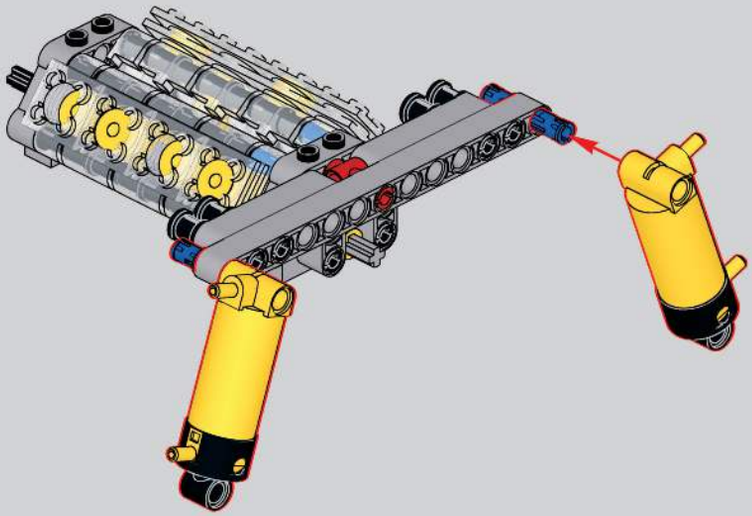

357

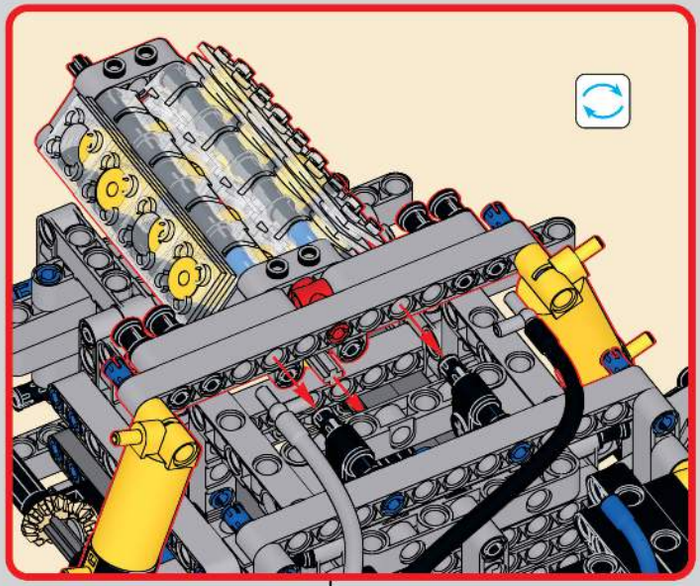

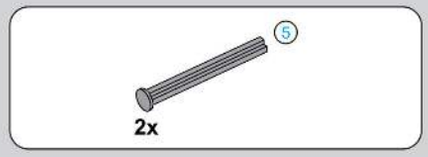

358

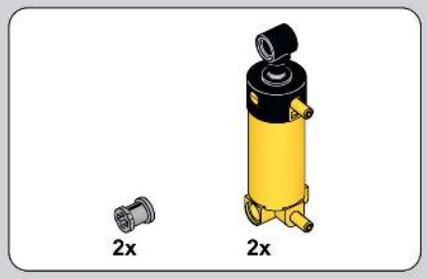

359

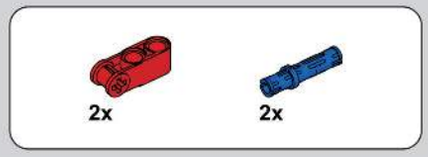

360

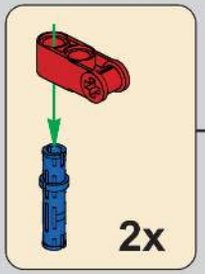

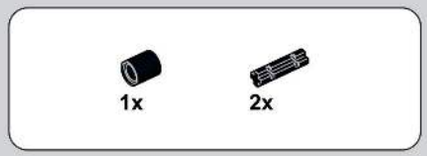

361

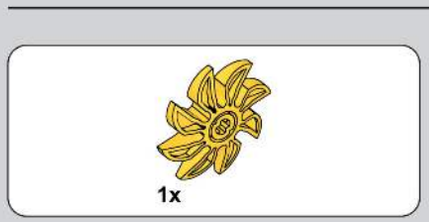

362

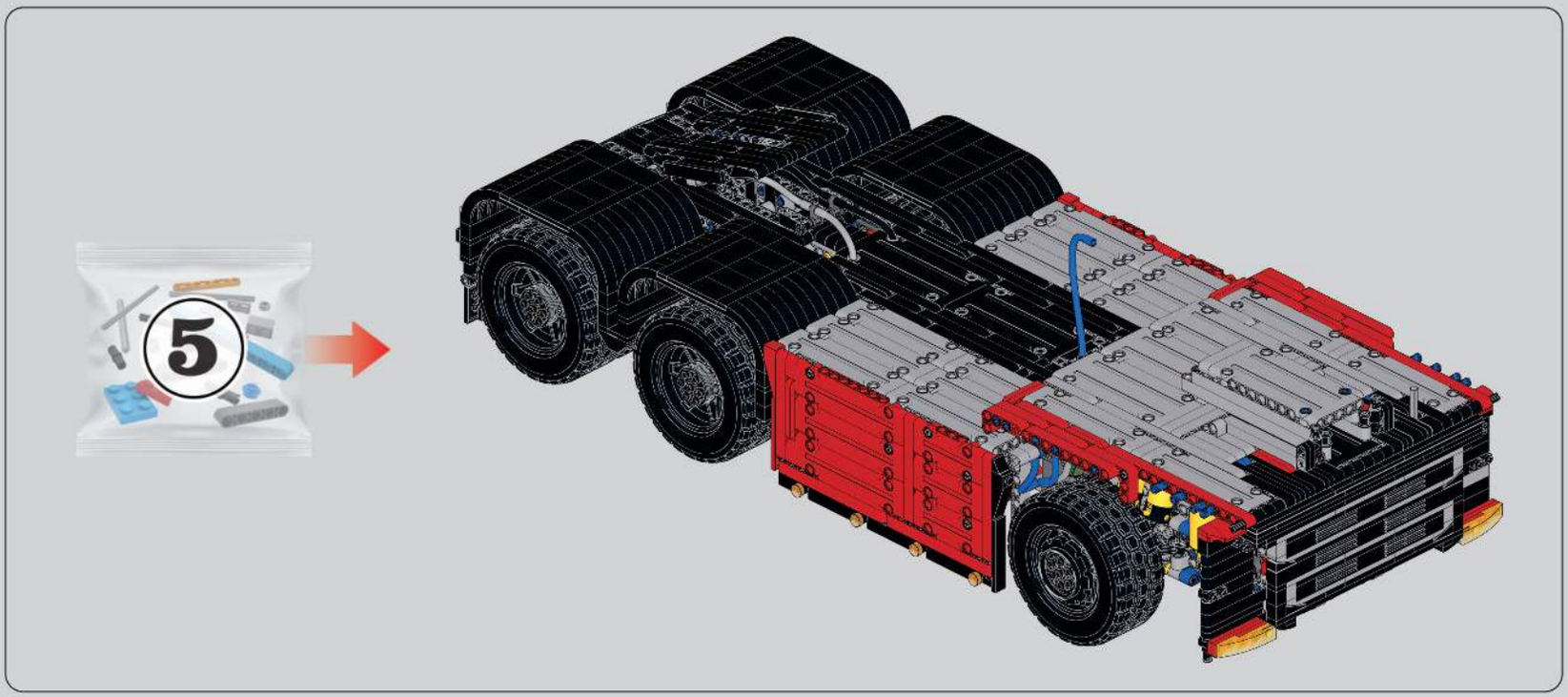

363

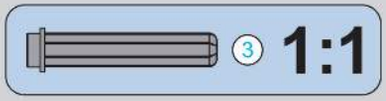

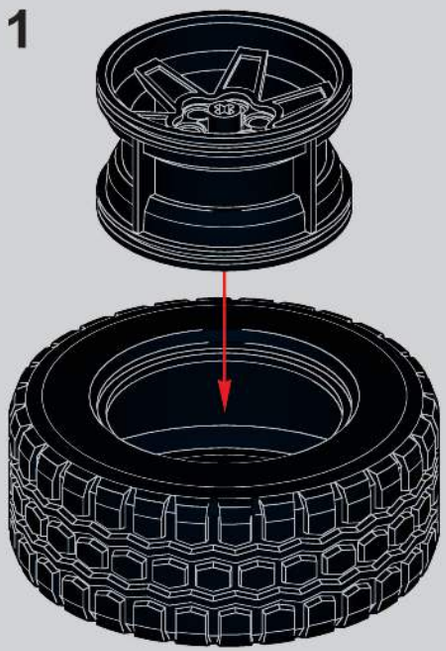

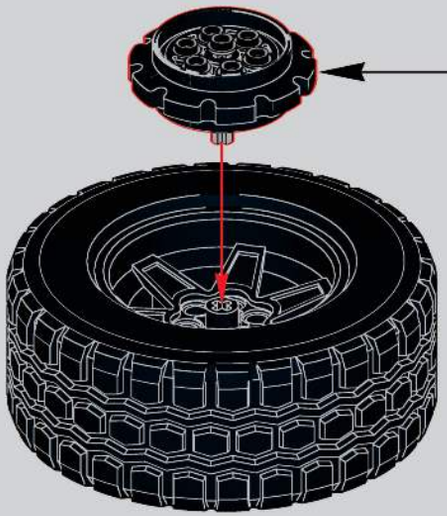

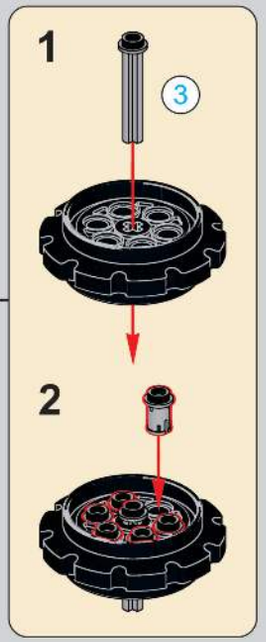

2x

364

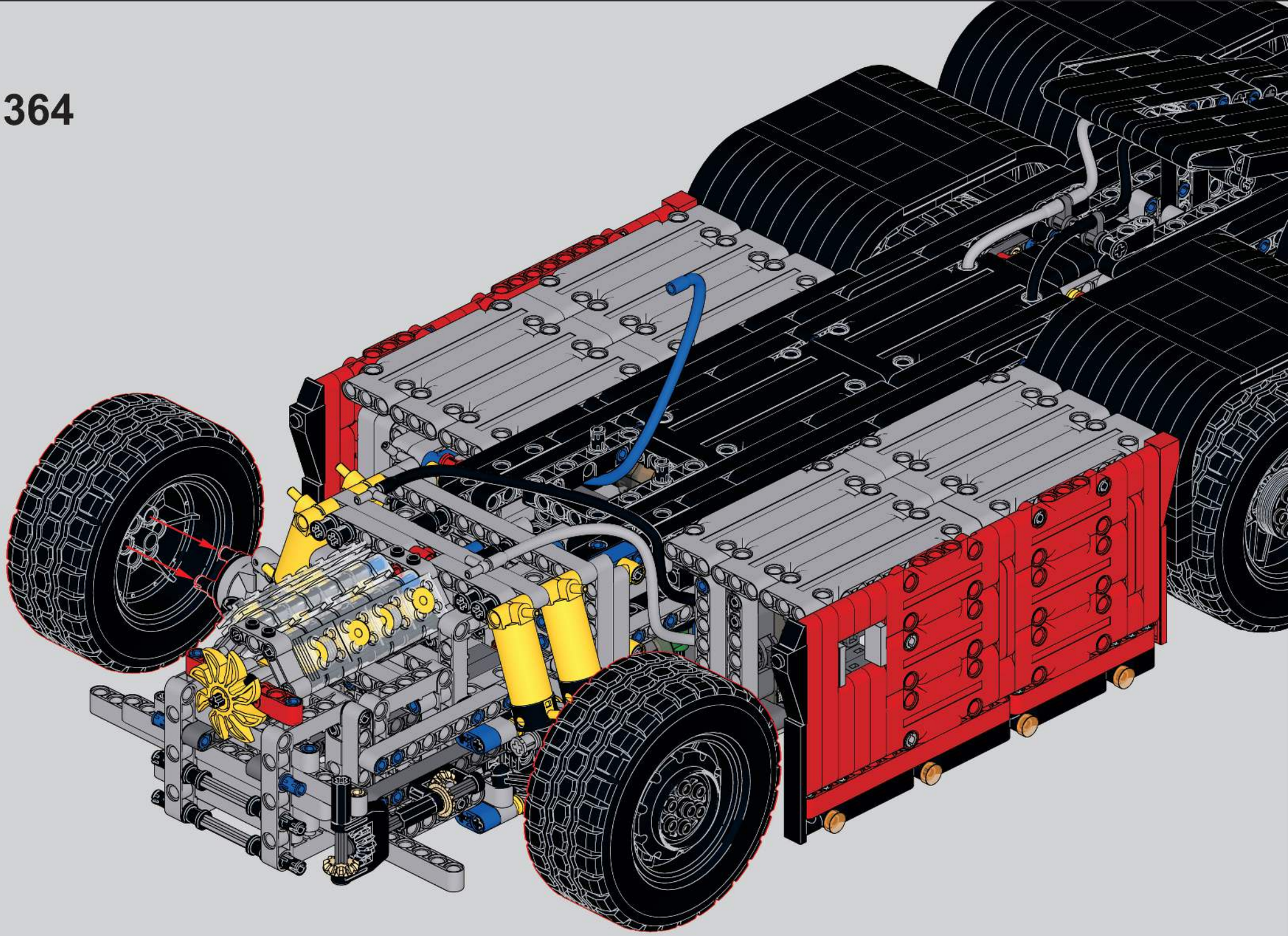

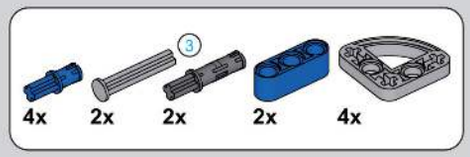

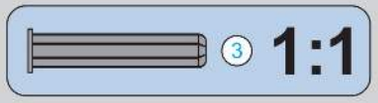

365

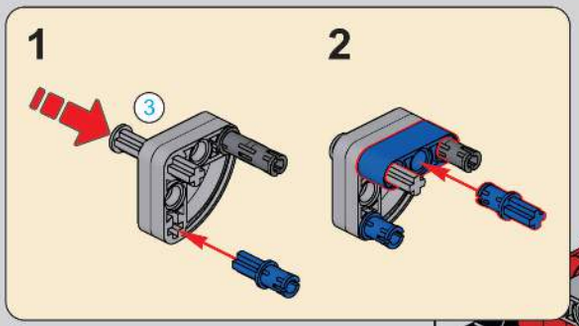

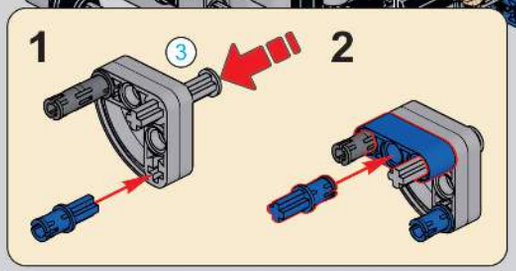

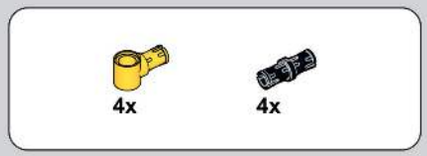

366

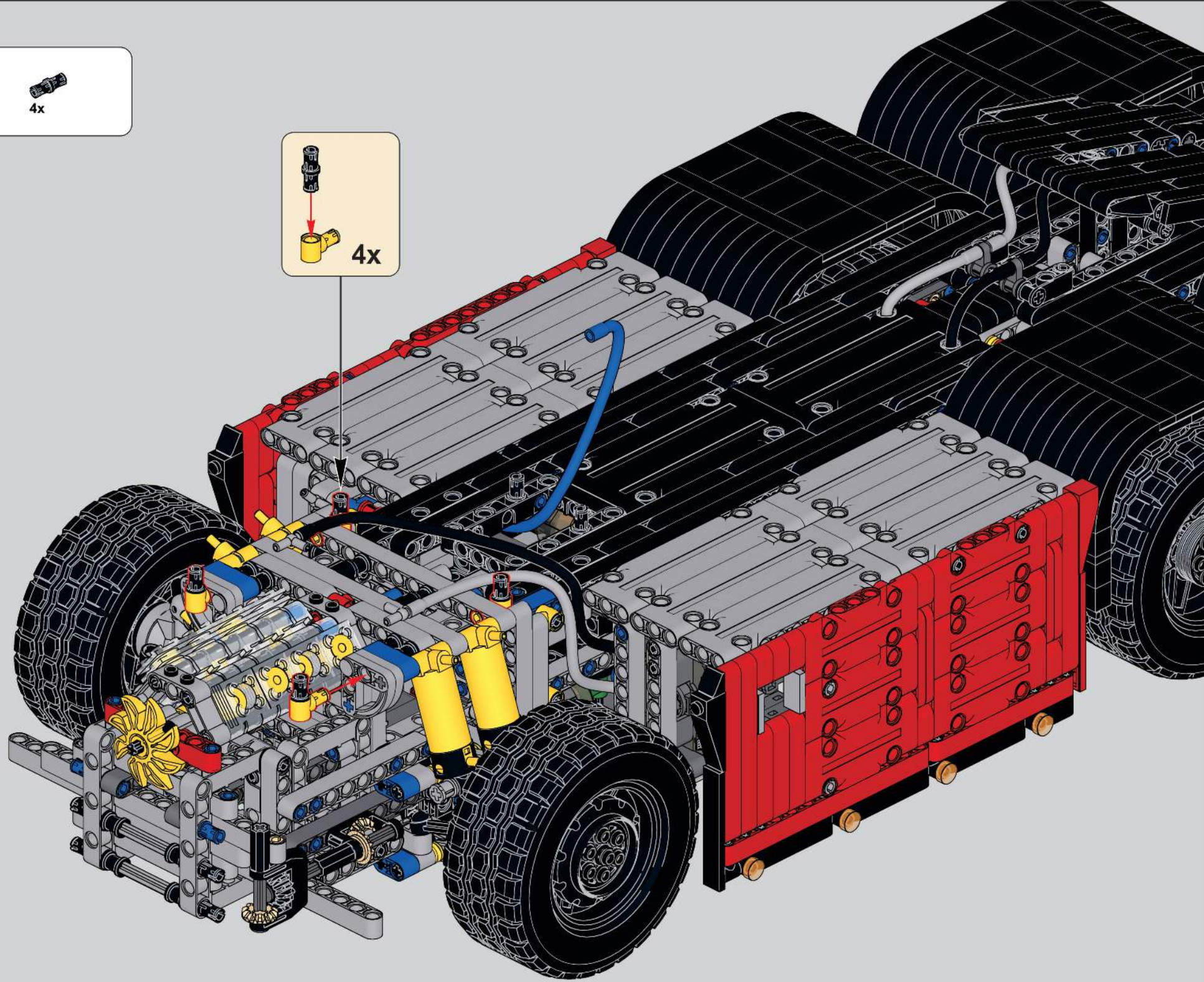

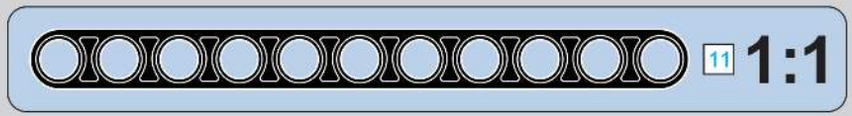

367

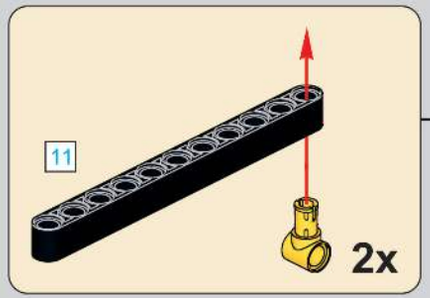

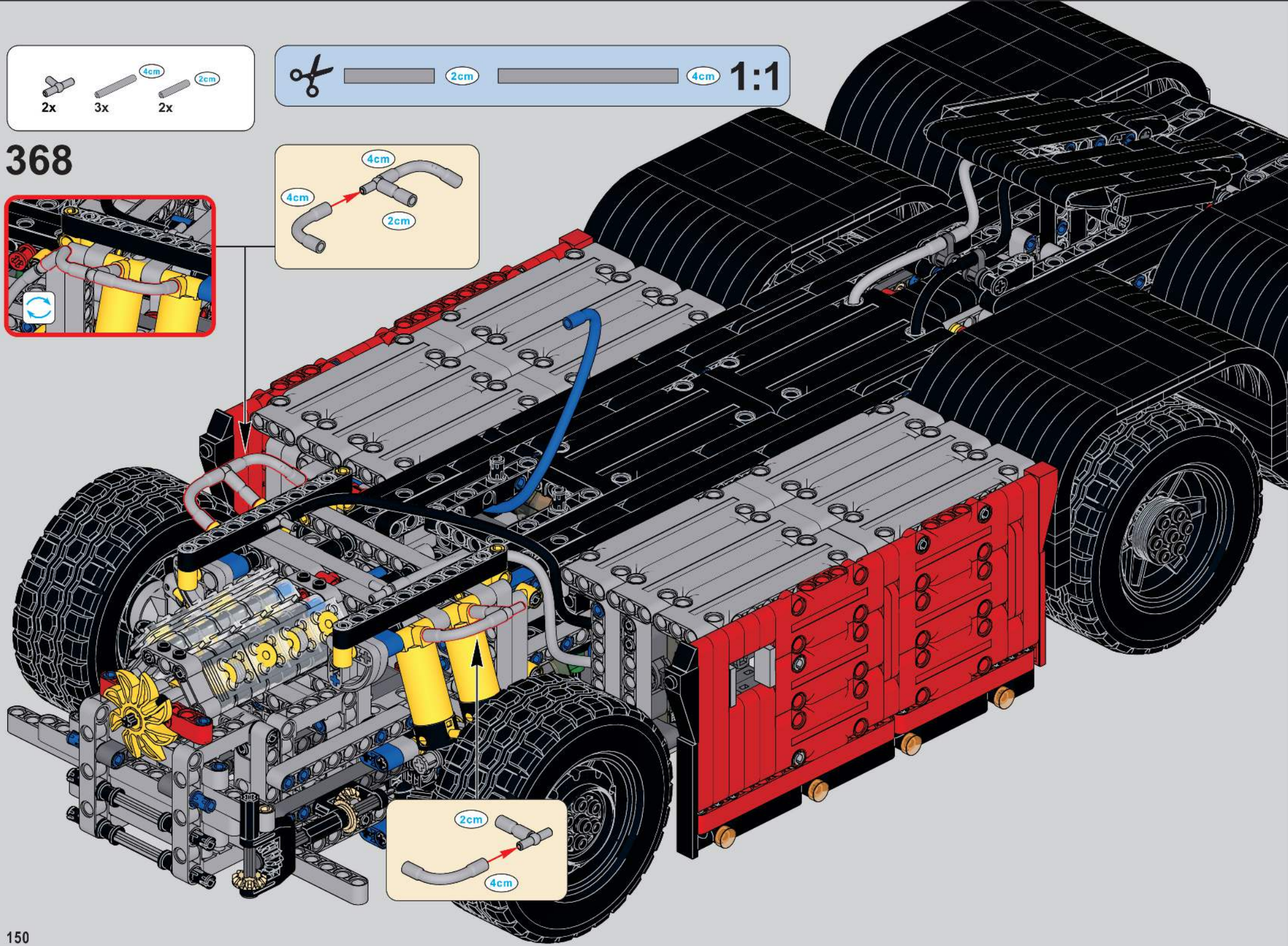
2x
4cm
3x
2cm
2x
2cm
4cm
1:1
368
4cm
4cm
2cm
2cm
4cm

369

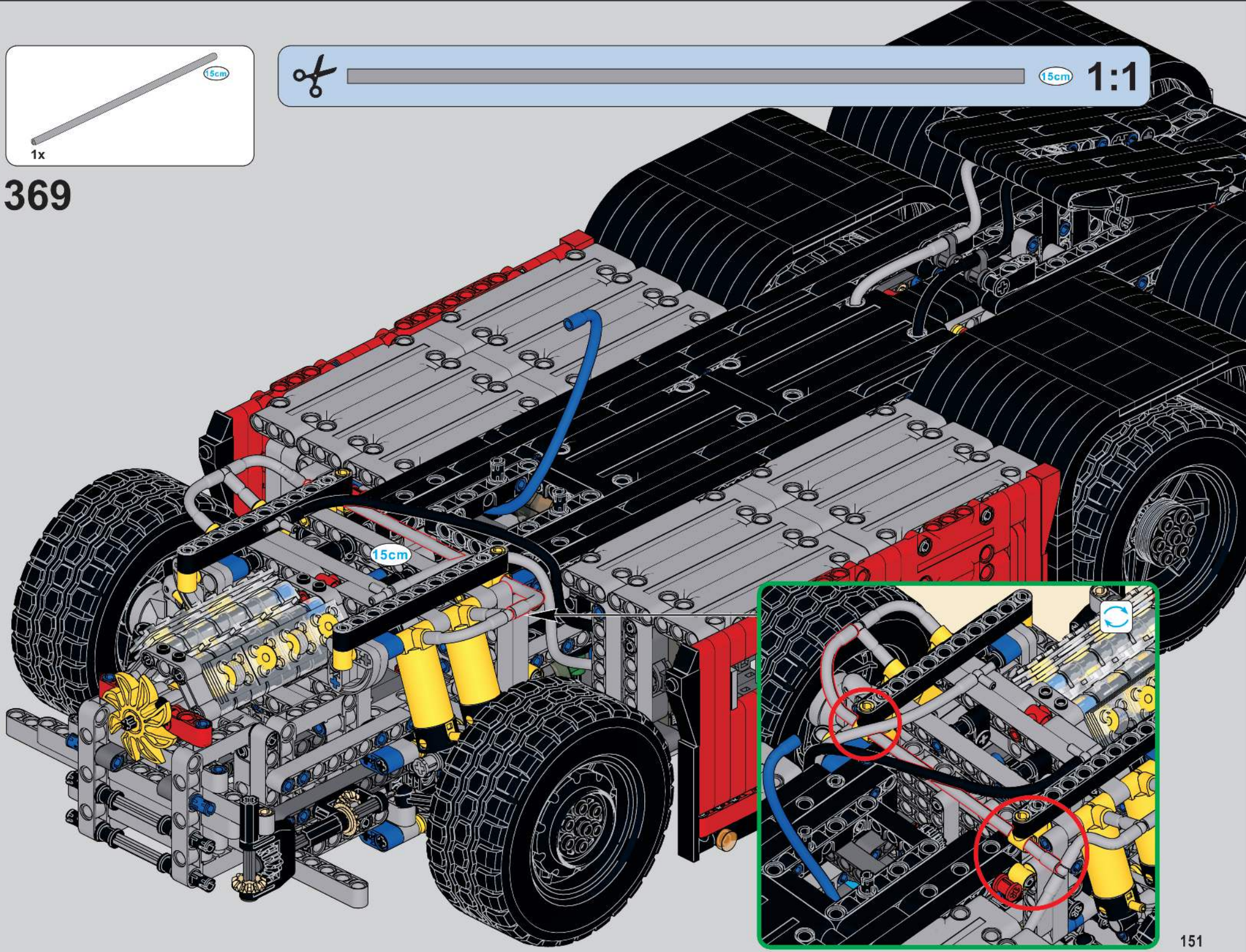

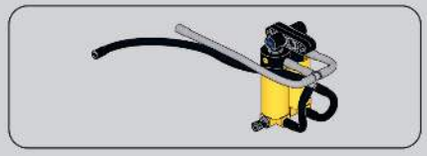

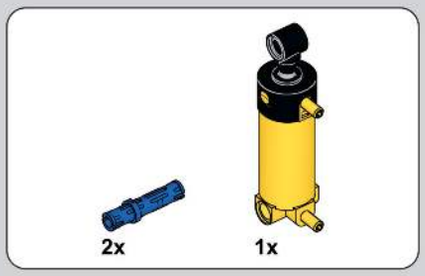

370

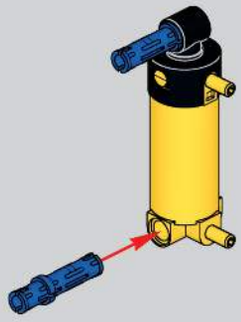

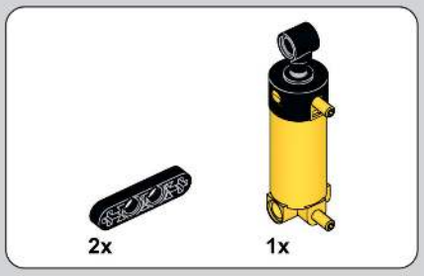

371

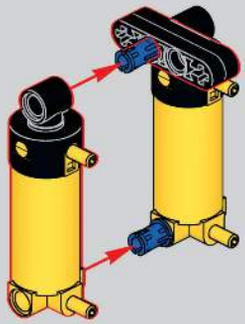

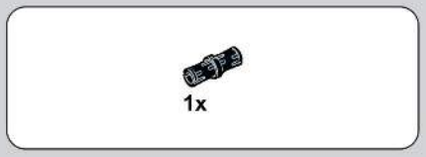

372

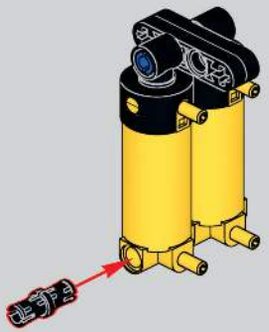

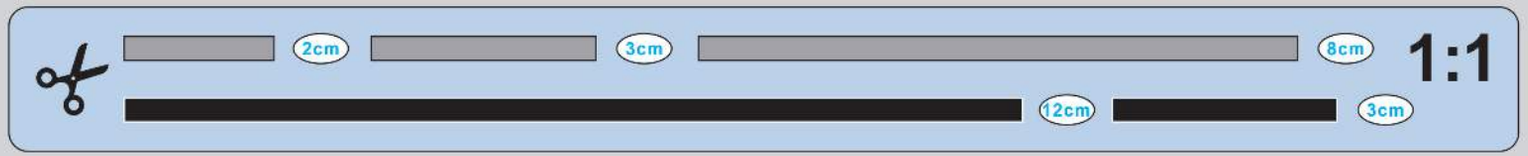

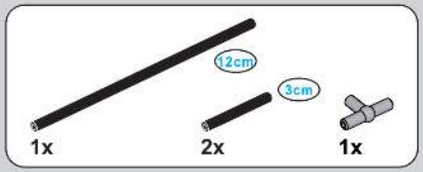

373

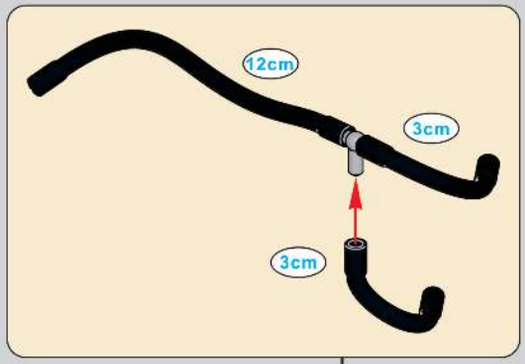

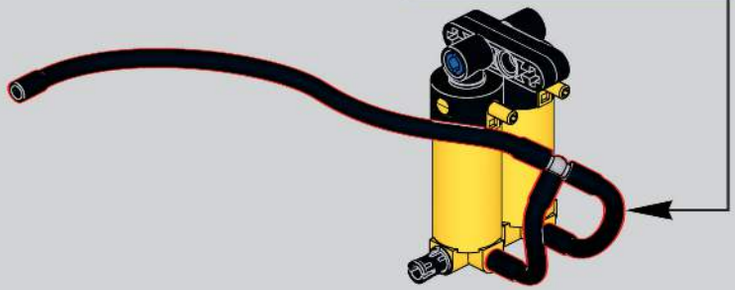

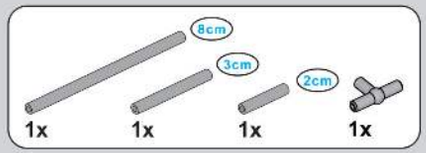

374

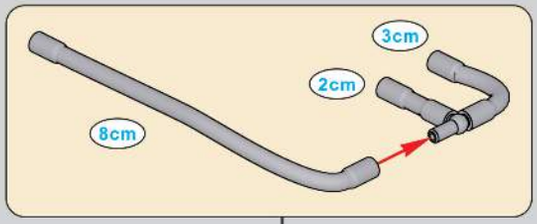

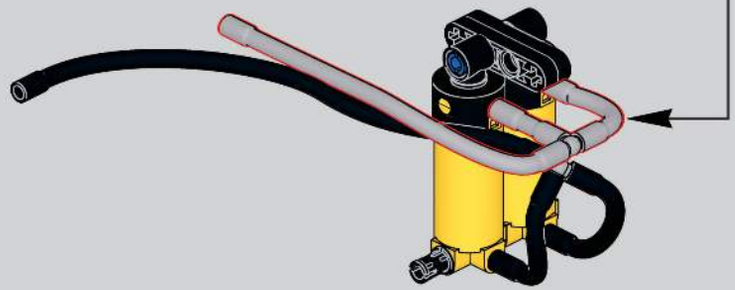

375

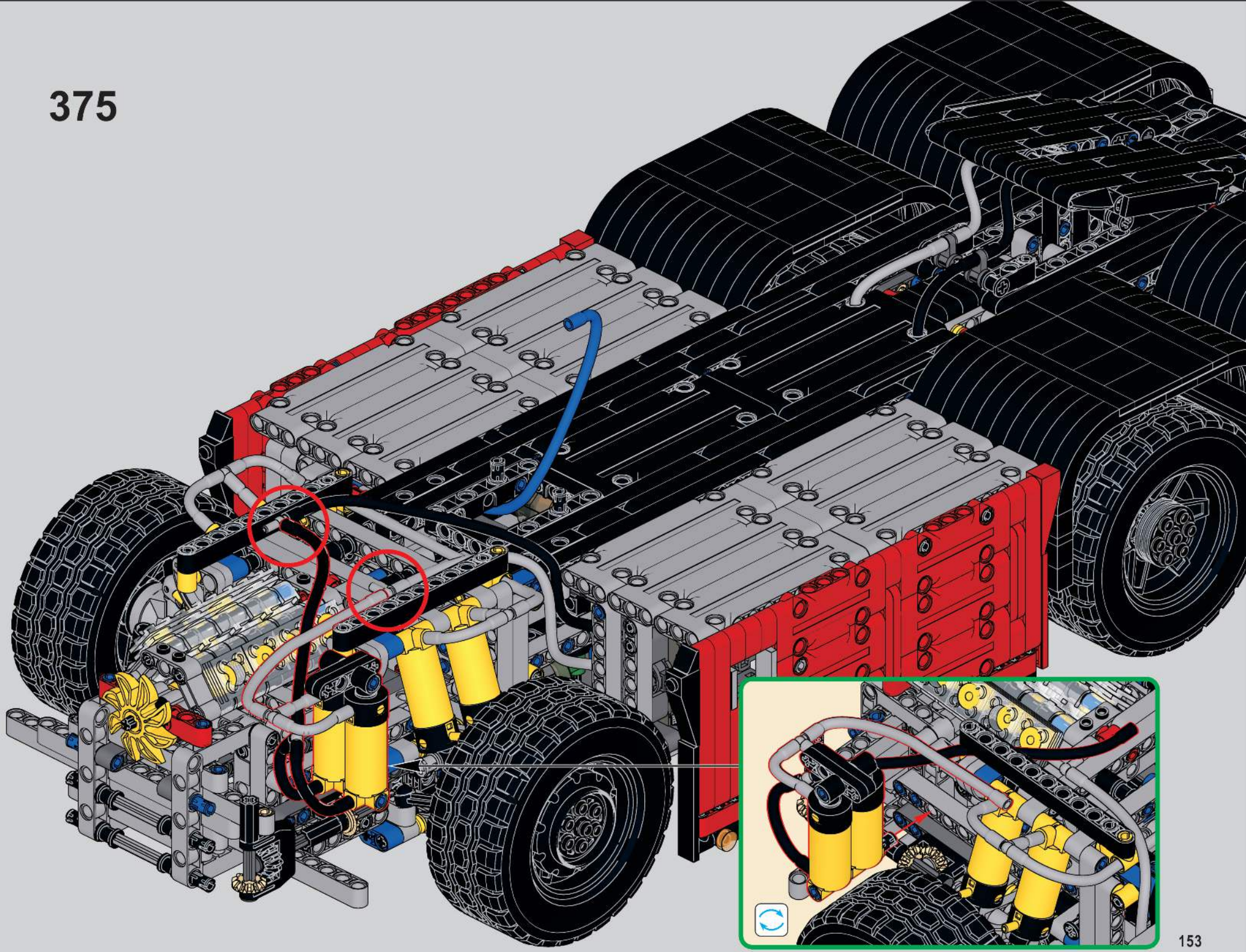

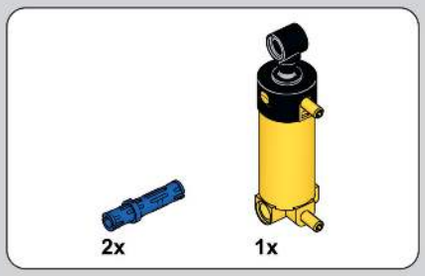

376

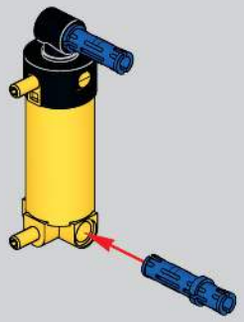

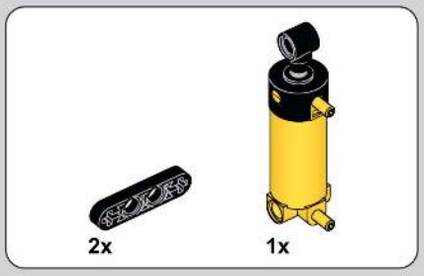

377

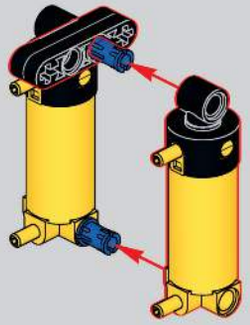

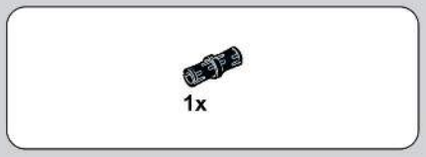

378

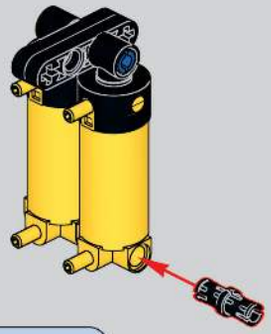

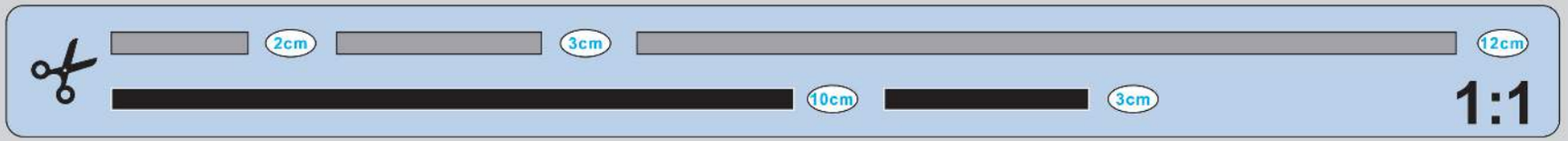

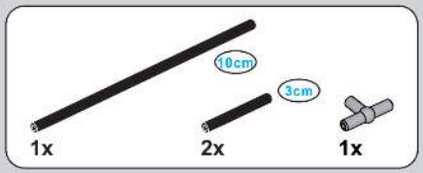

379

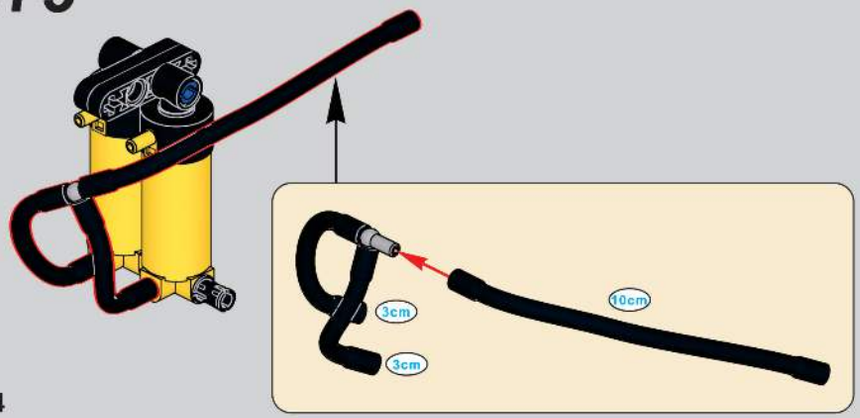

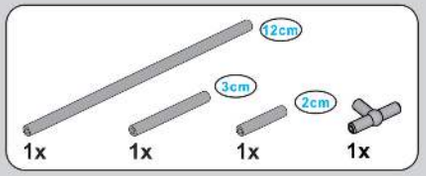

380

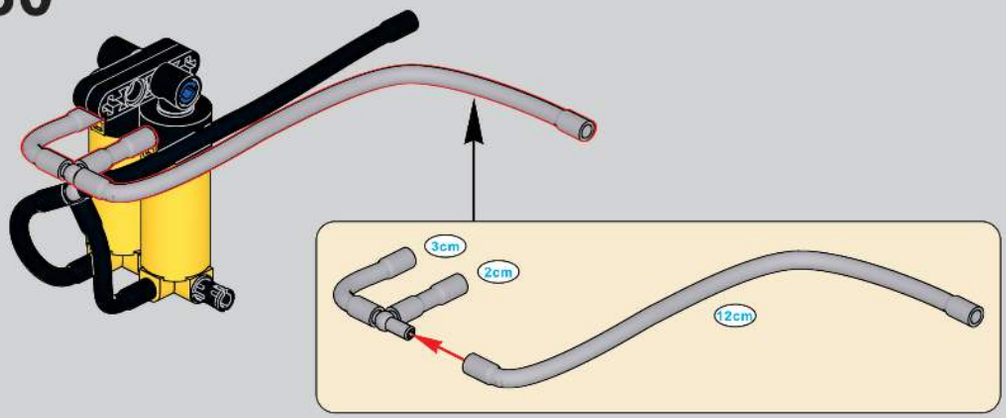

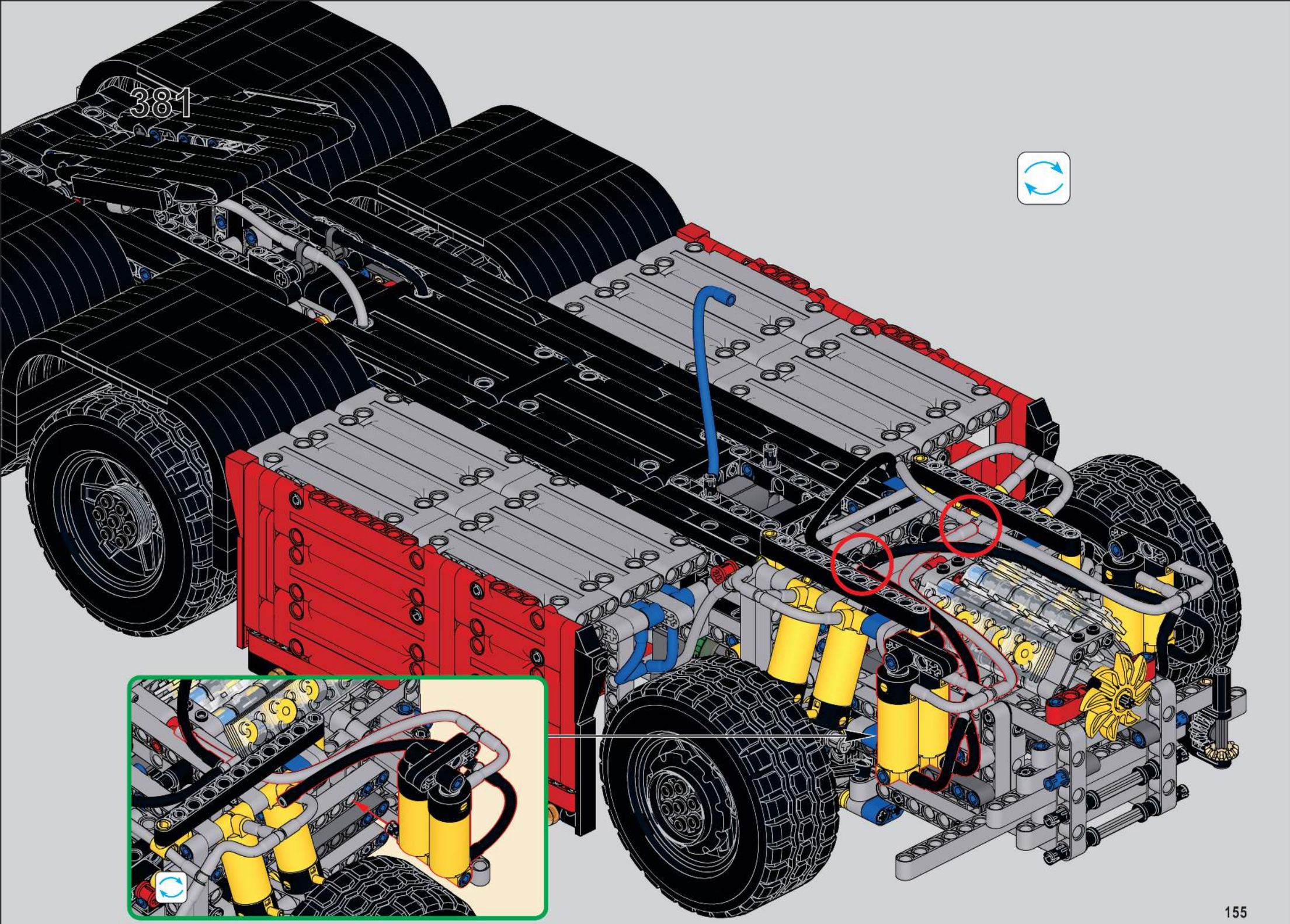
381

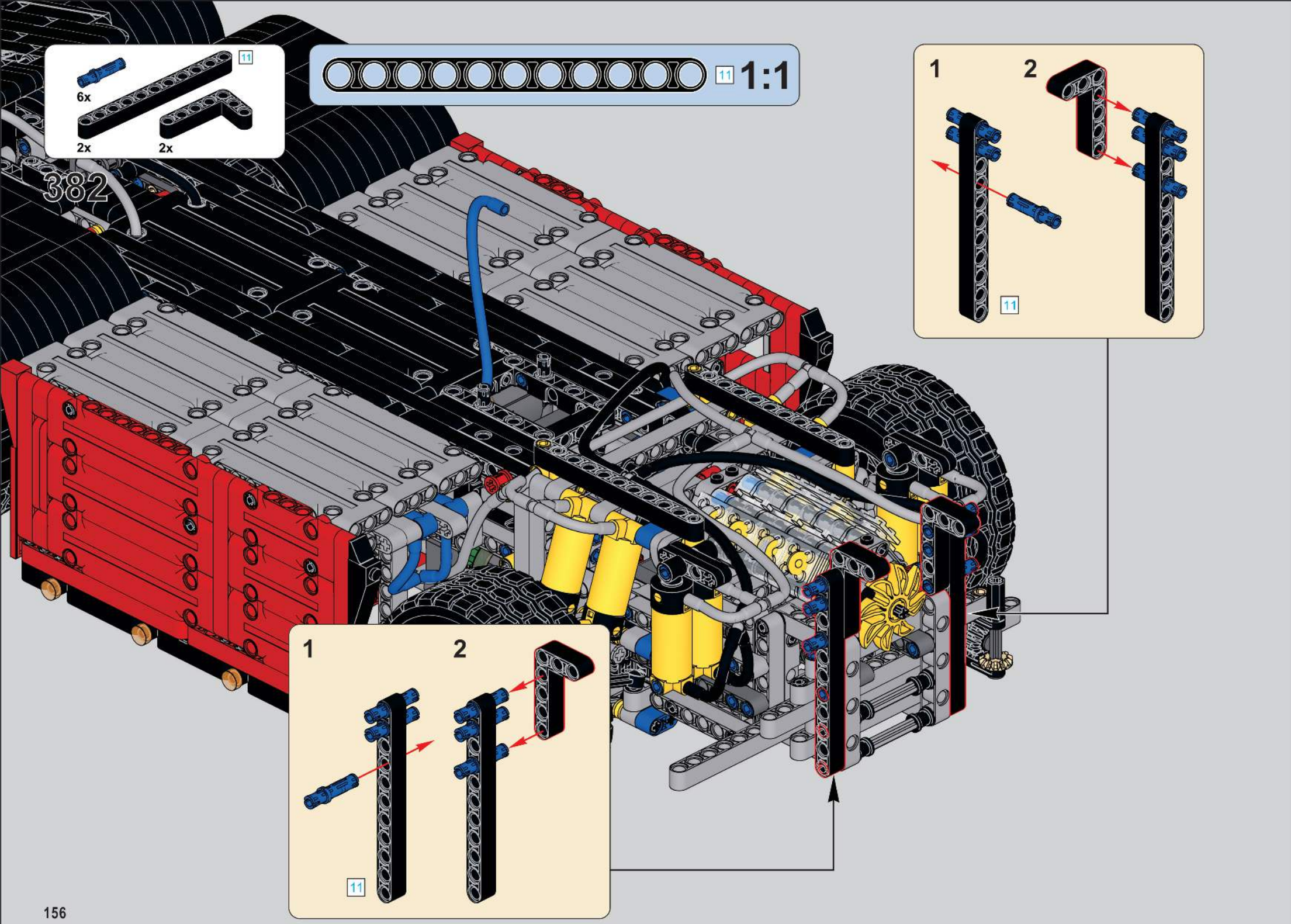
11
6x
2x
2x
382
11 1:1
1
2
11
1
2
11

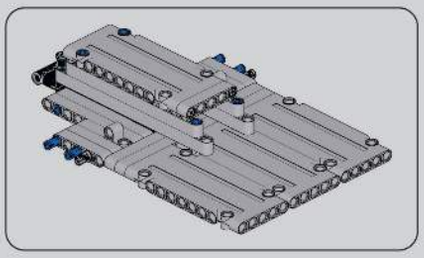

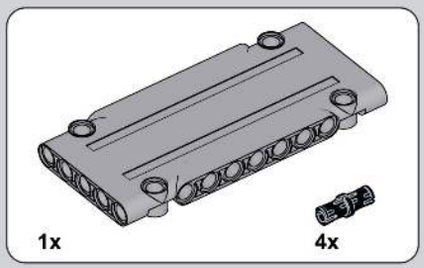

383

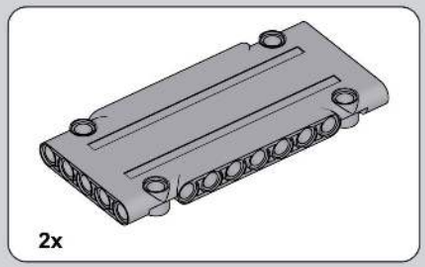

384

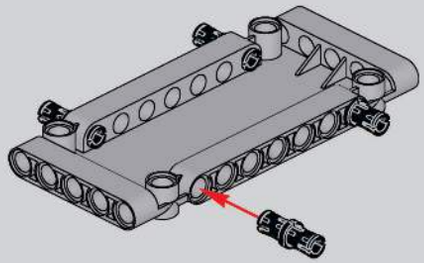

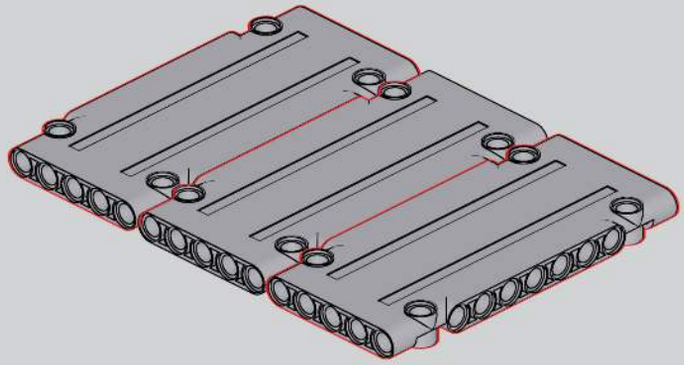

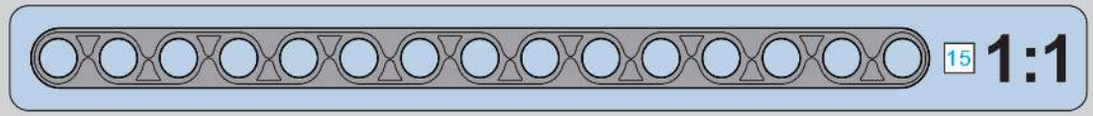

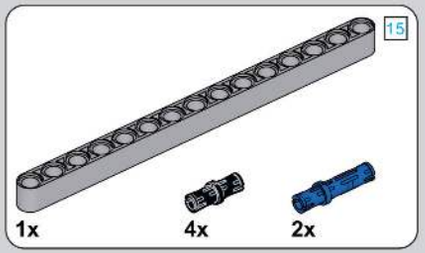

385

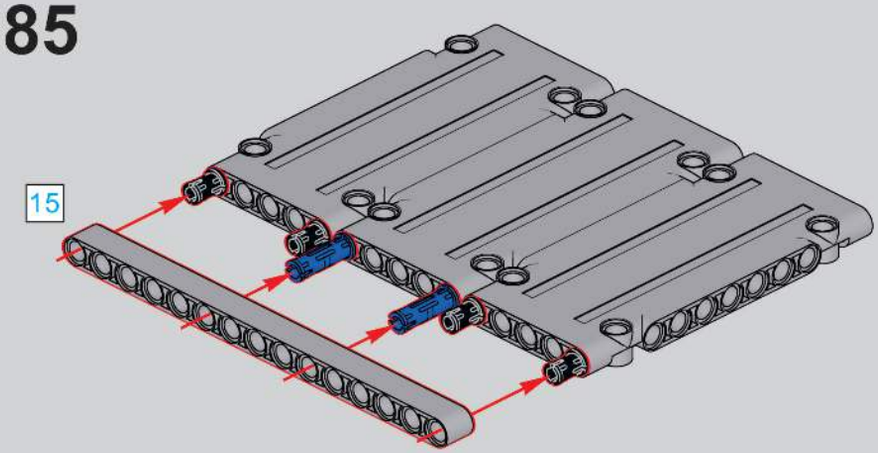

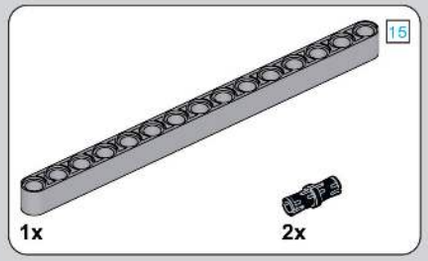

386

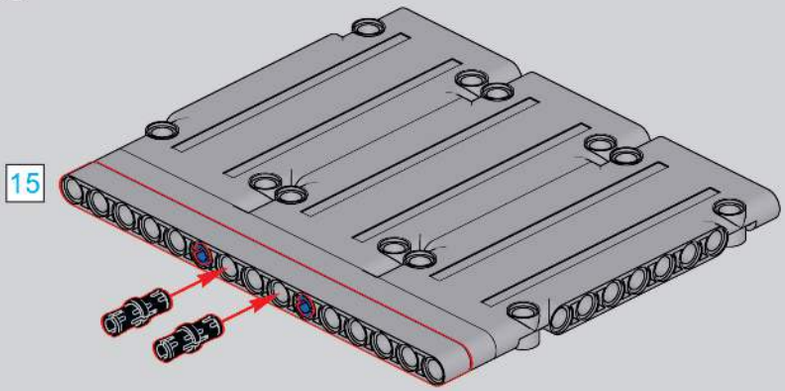

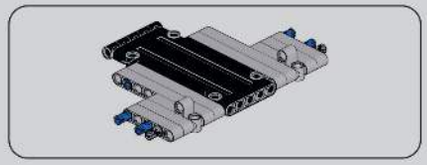

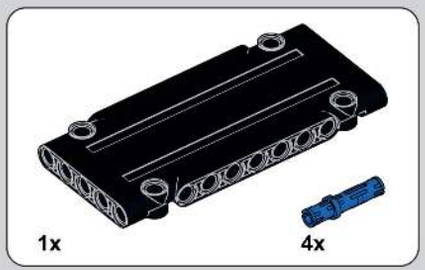

387

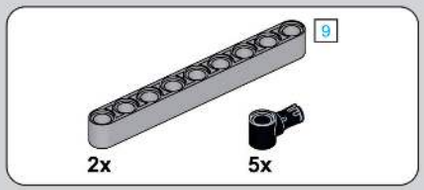

388

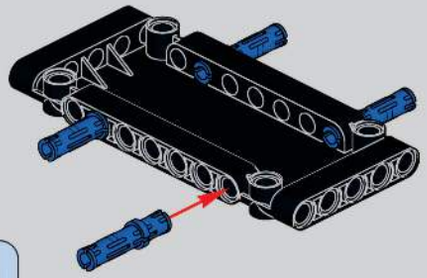

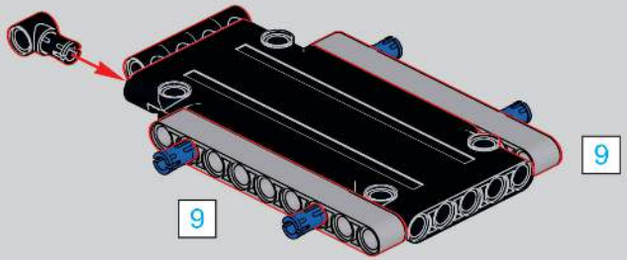

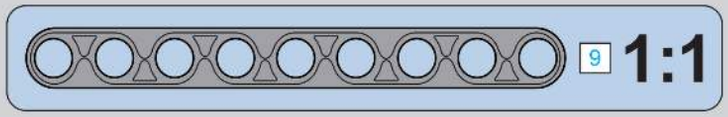

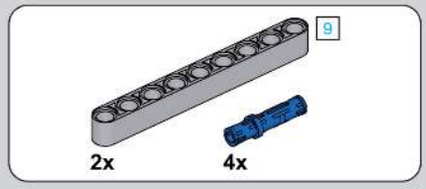

389

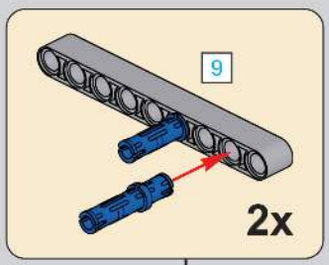

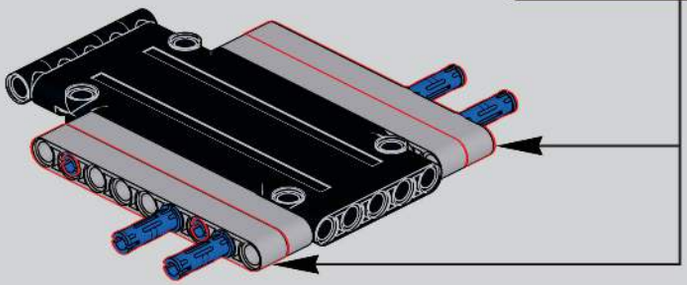

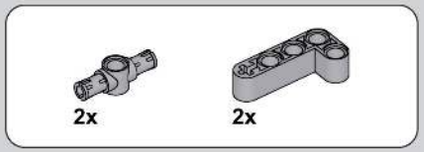

390

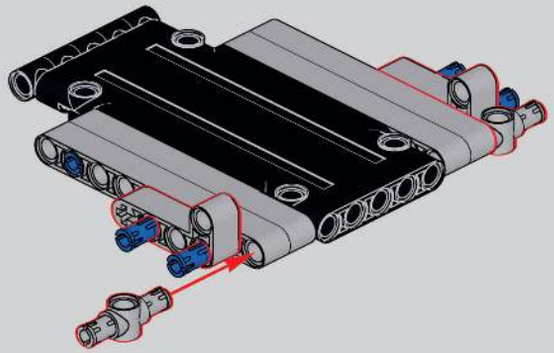

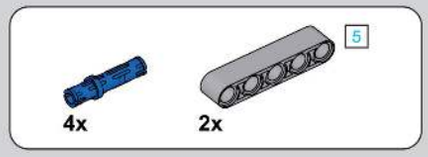

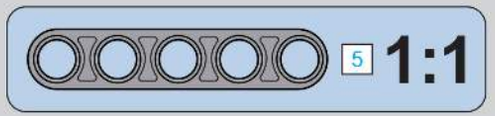

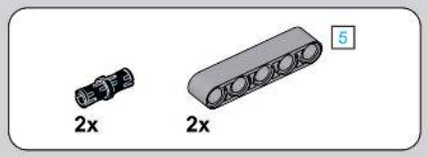

391

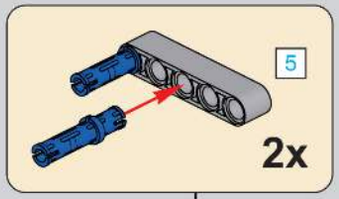

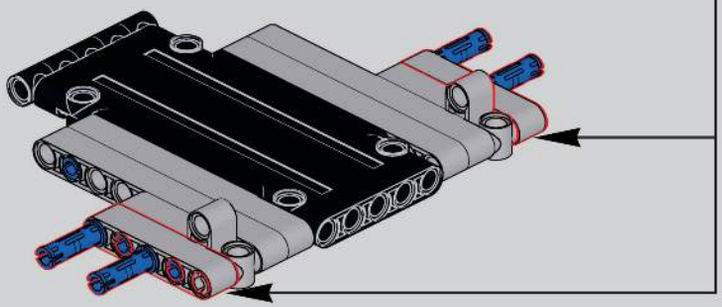

392

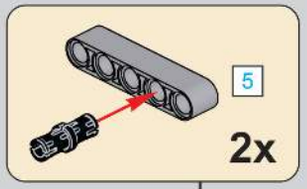

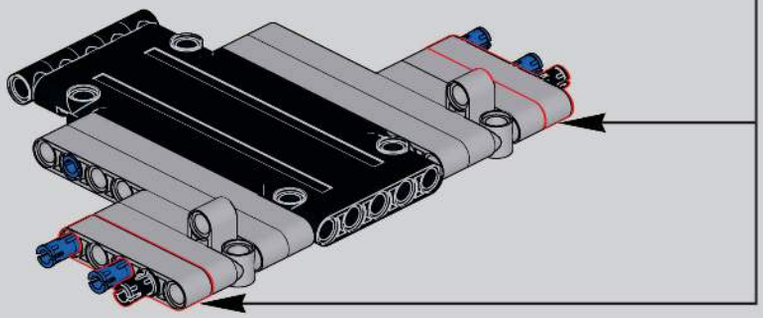

393

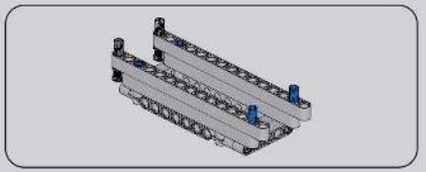

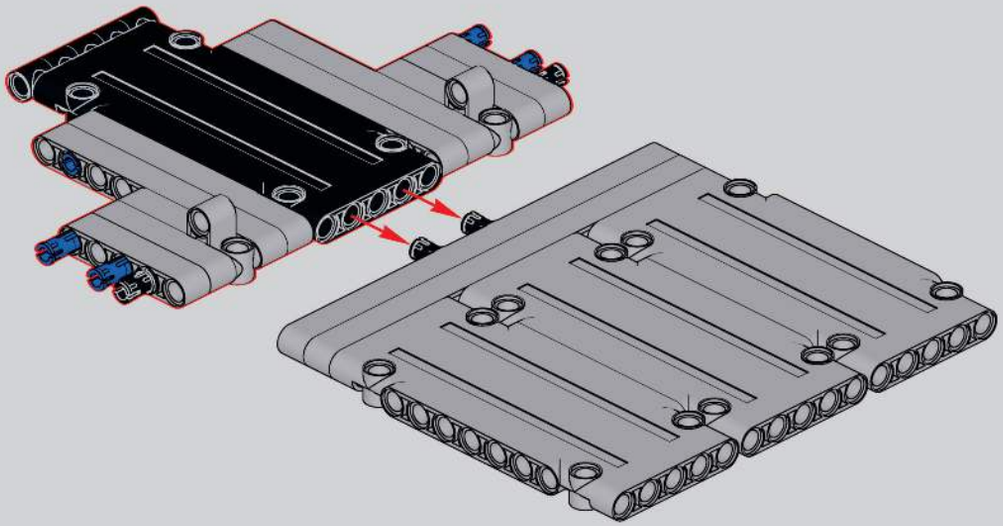

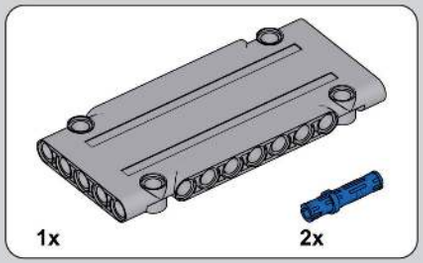

394

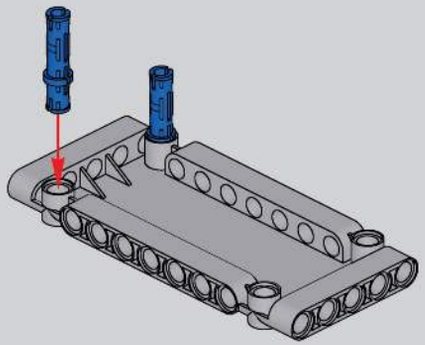

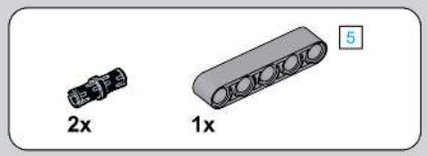

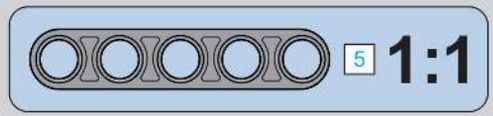

395

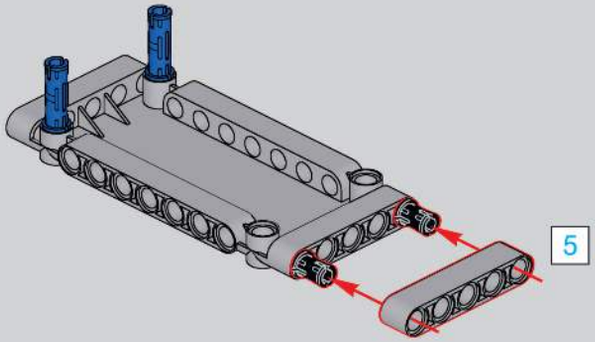

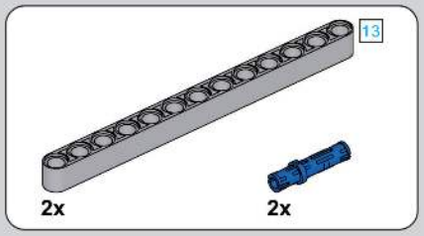

396

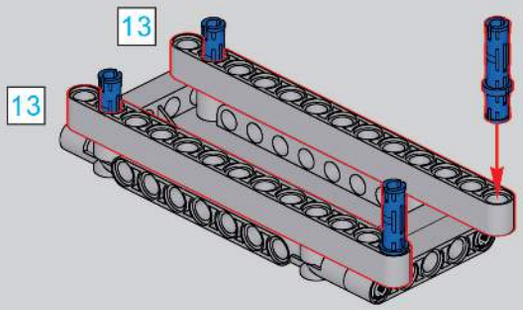

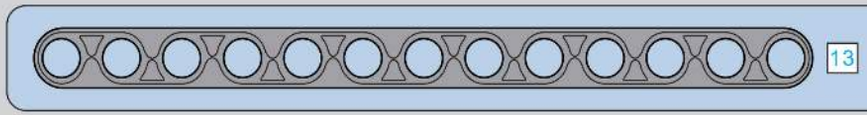

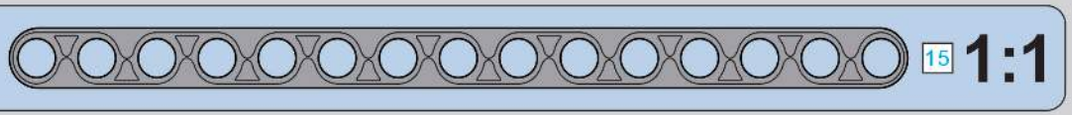

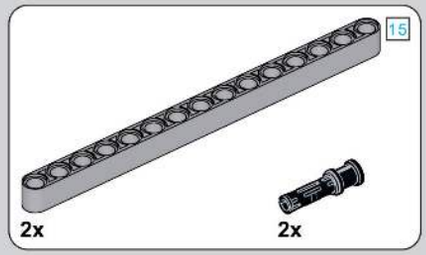

397

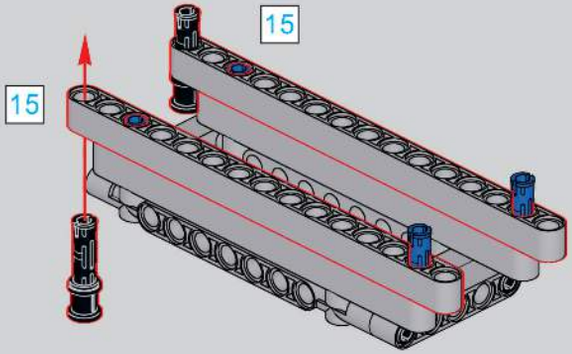

398

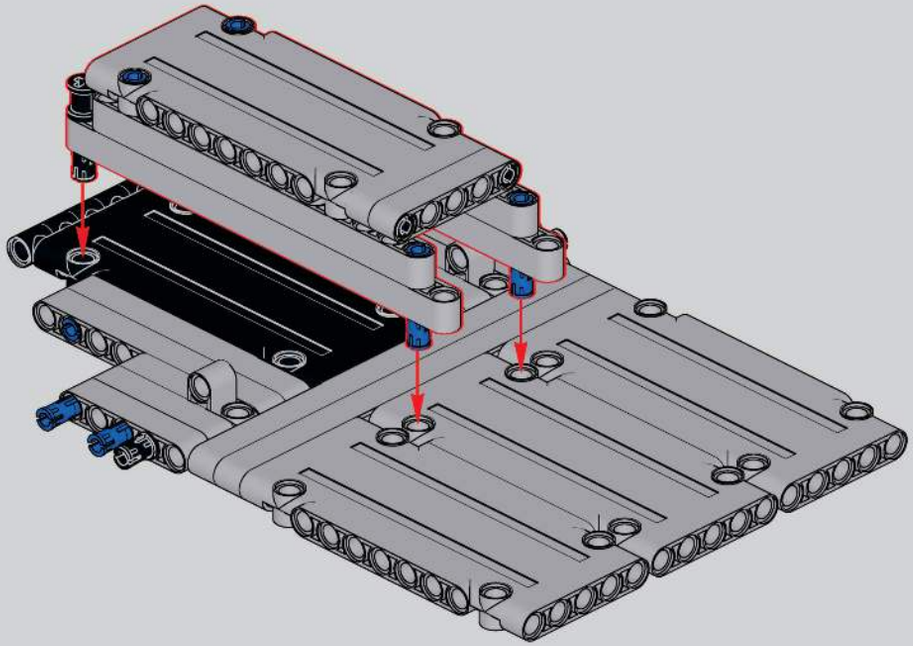

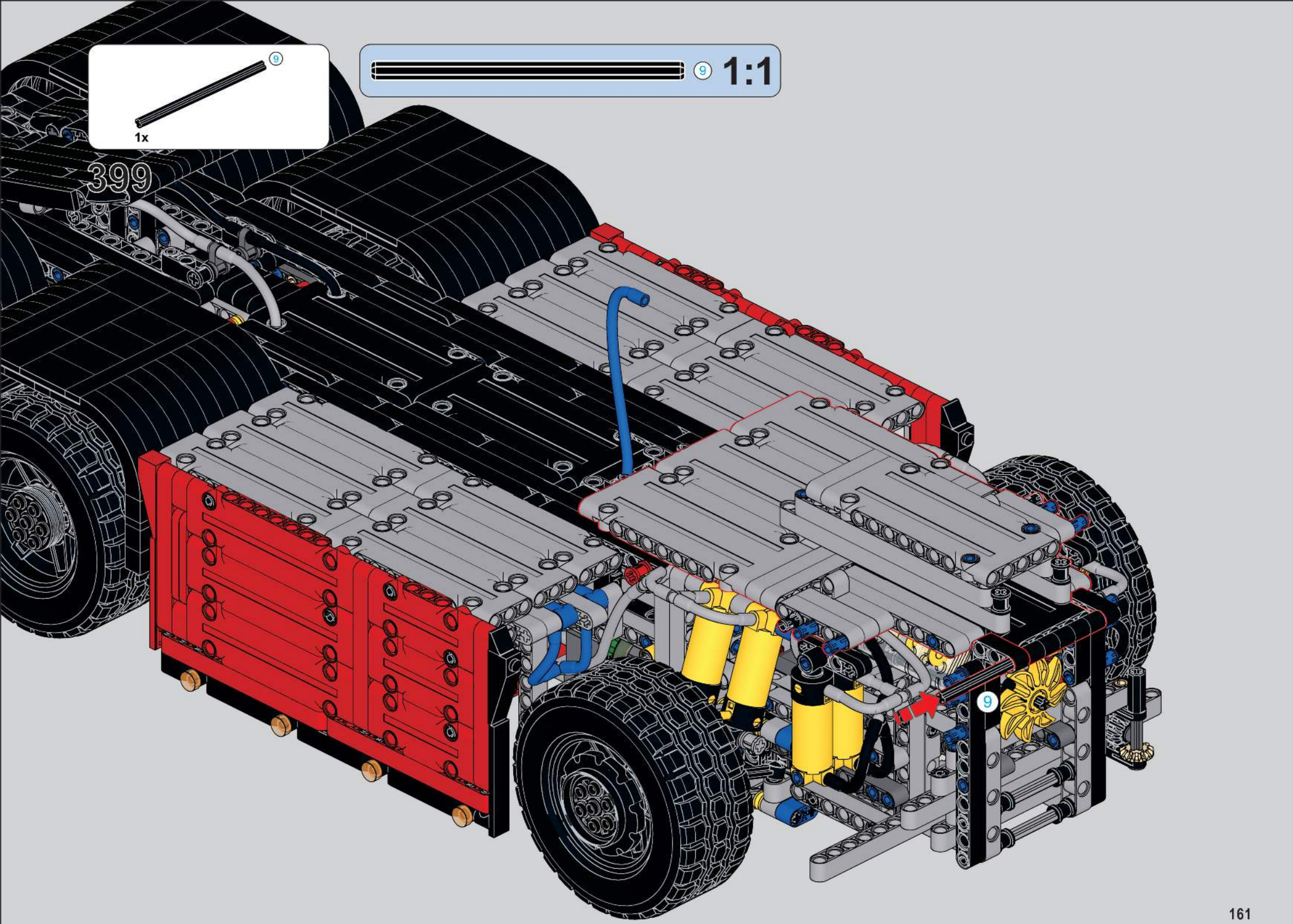
9
1x
399
9
1:1
9

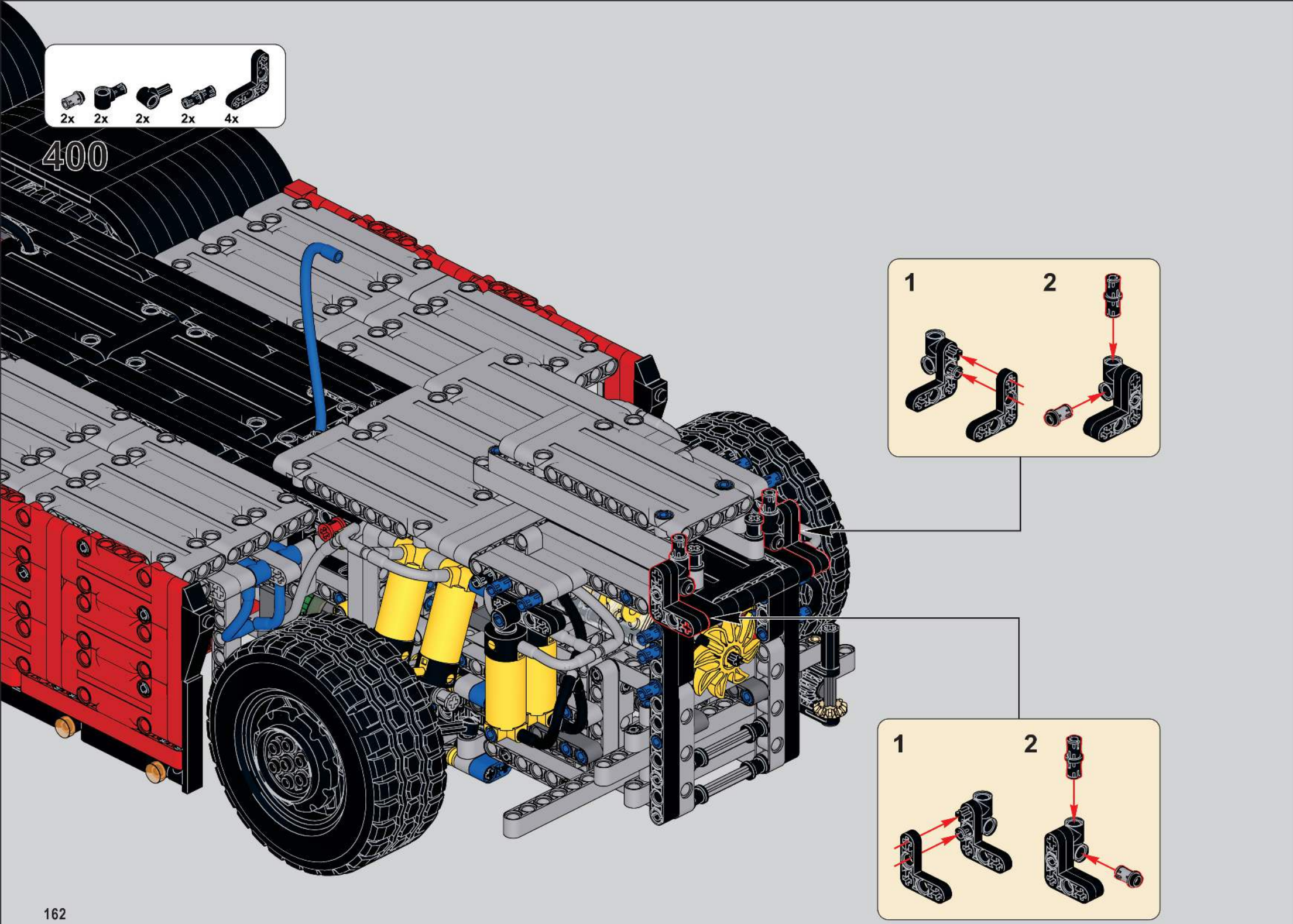
2x
2x
2x
2x
4x
400
1
2
1
2

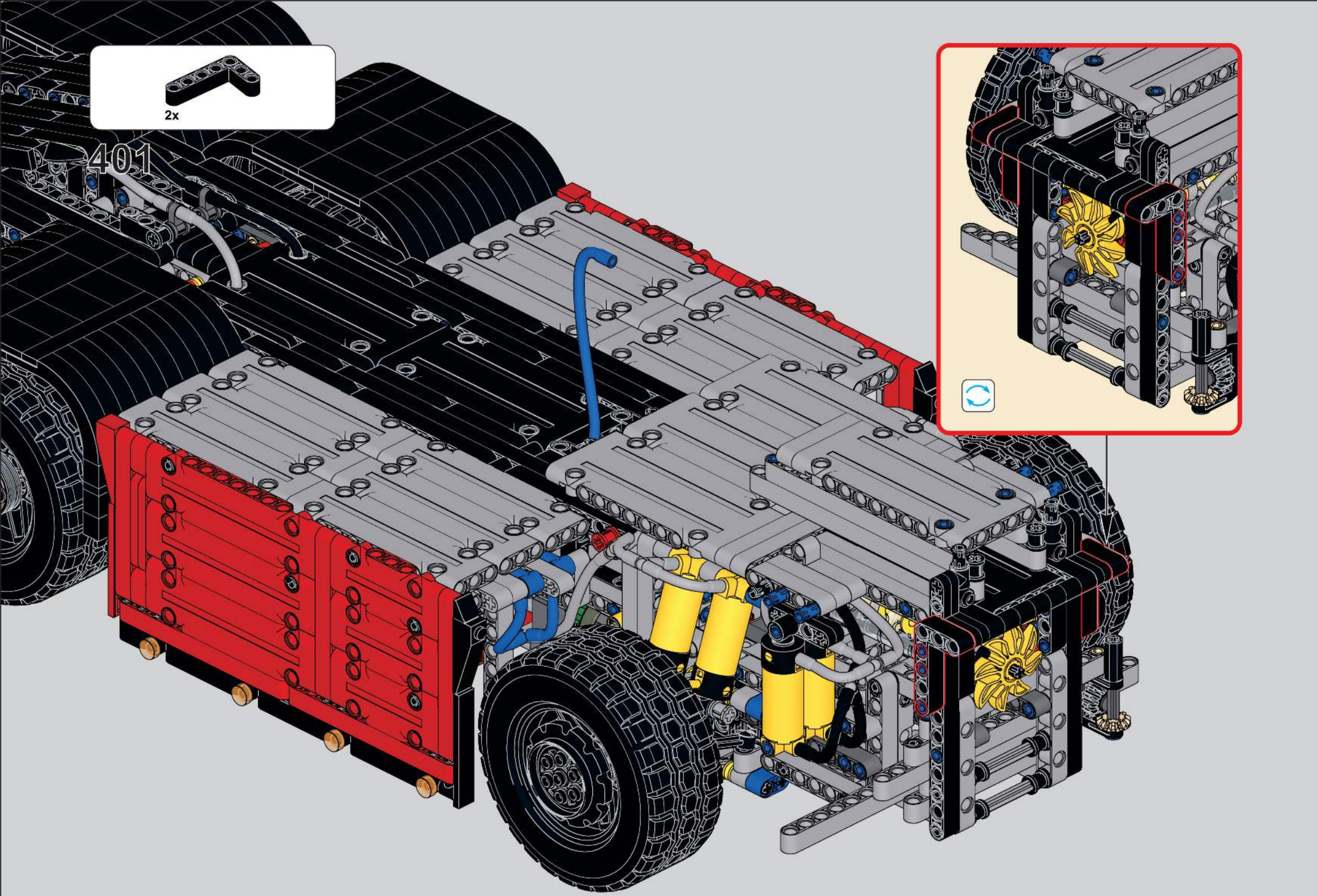
2x
401

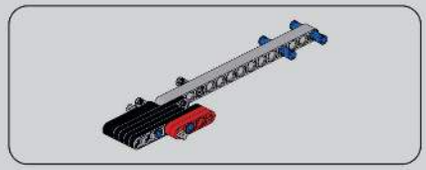

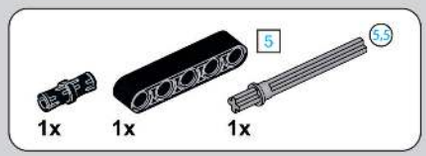

402

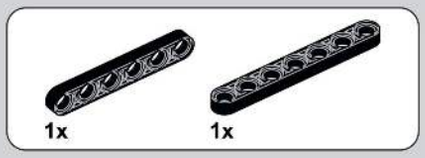

403

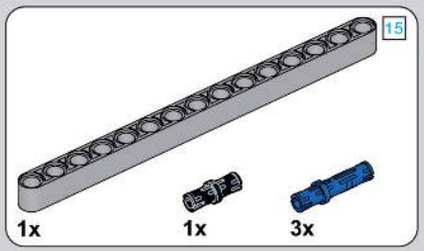

404

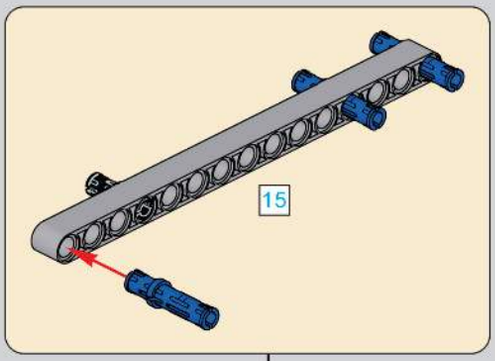

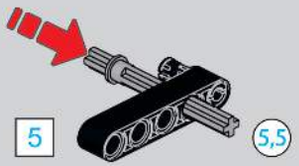

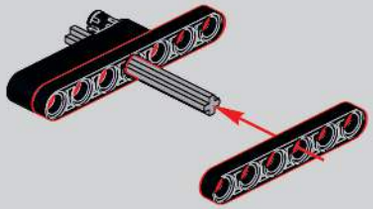

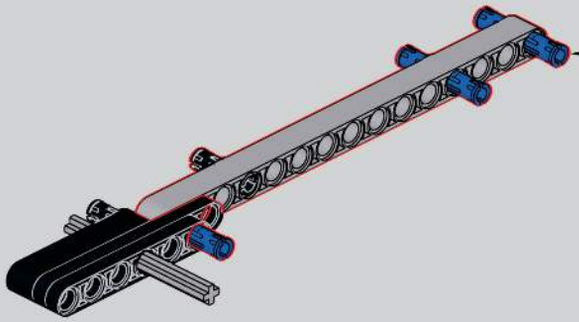

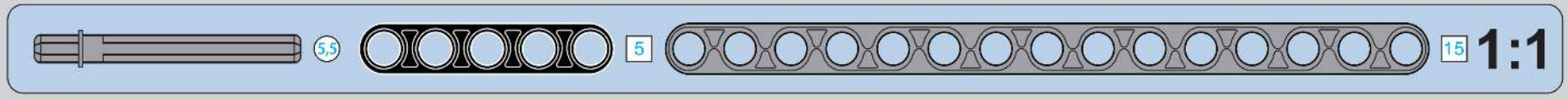

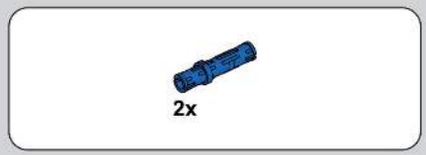

405

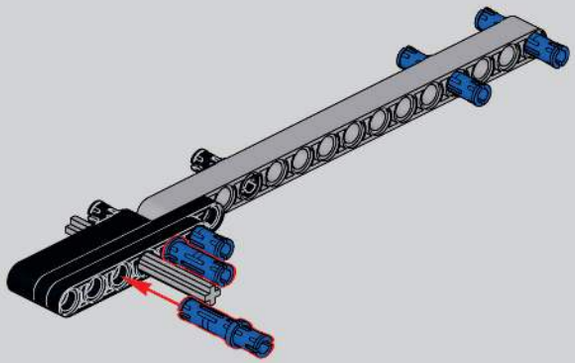

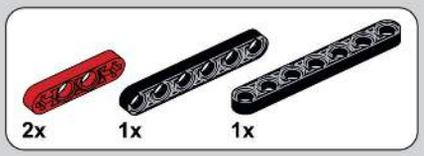

406

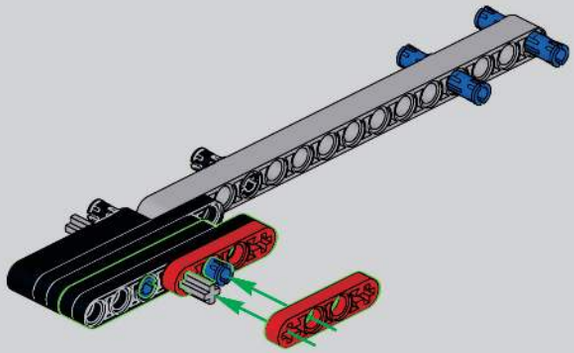

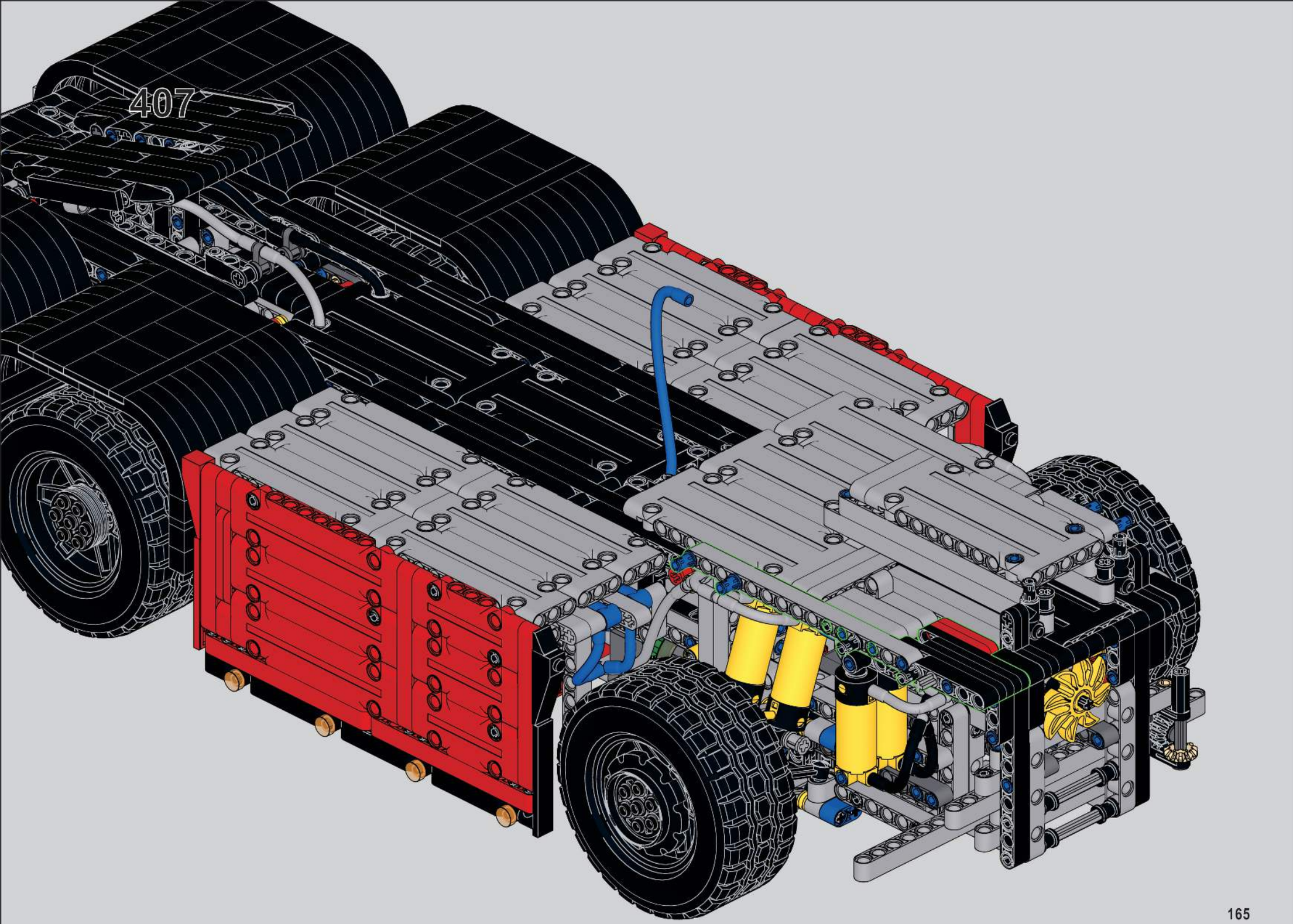
407

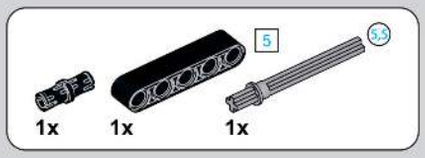

408

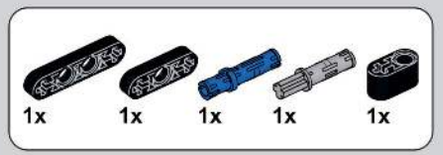

409

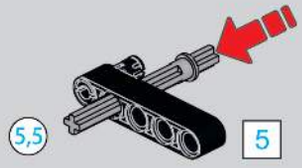

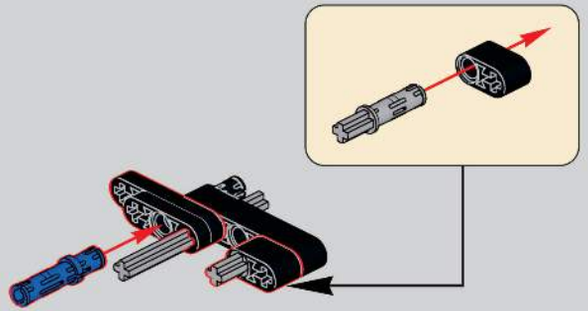

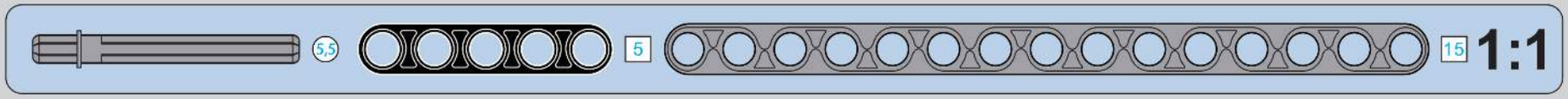

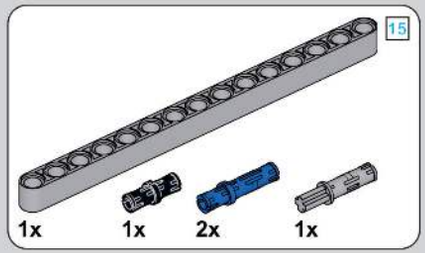

410

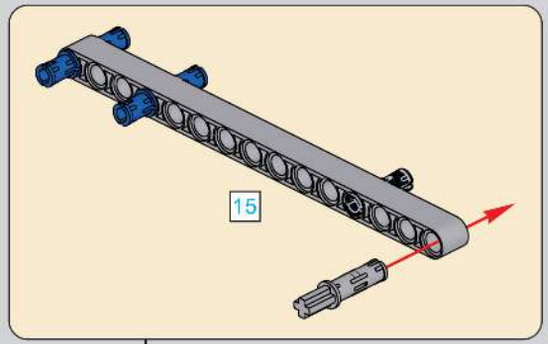

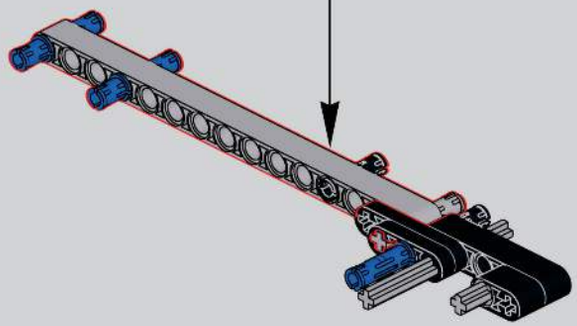

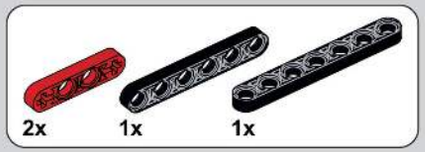

411

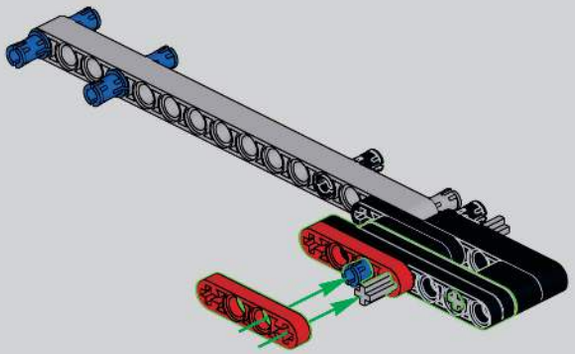

412

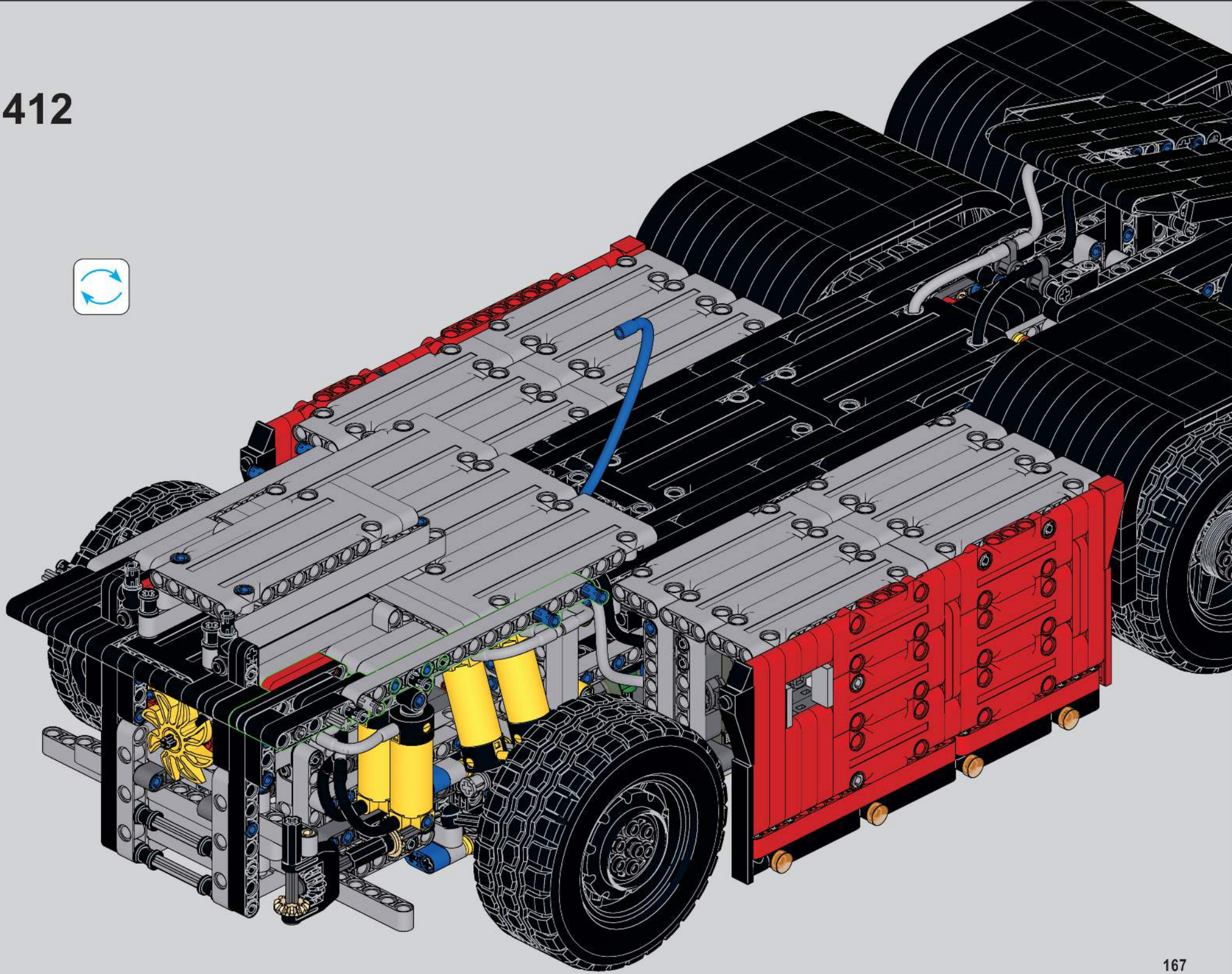

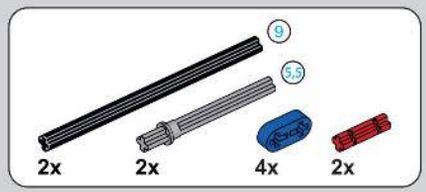

413

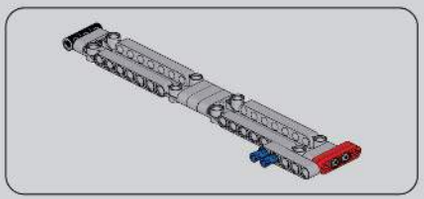

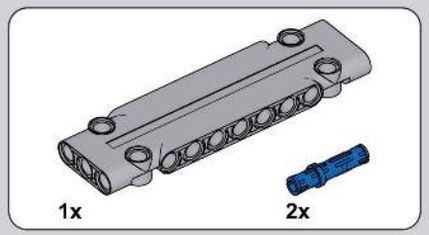

414

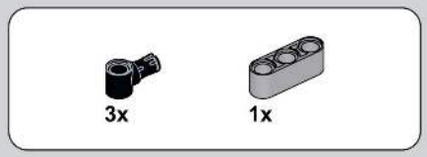

415

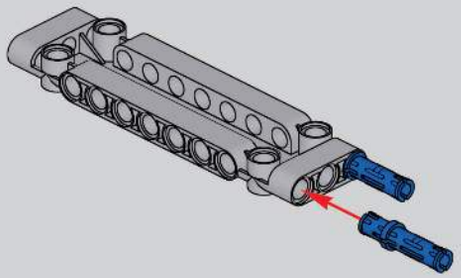

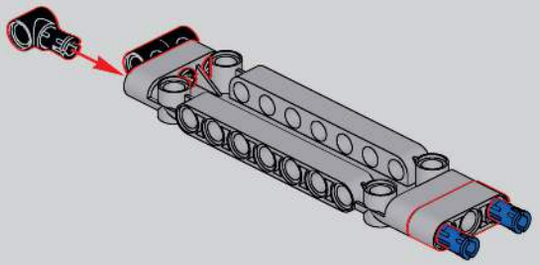

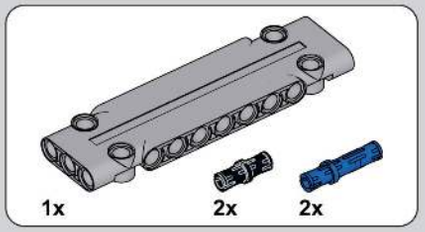

416

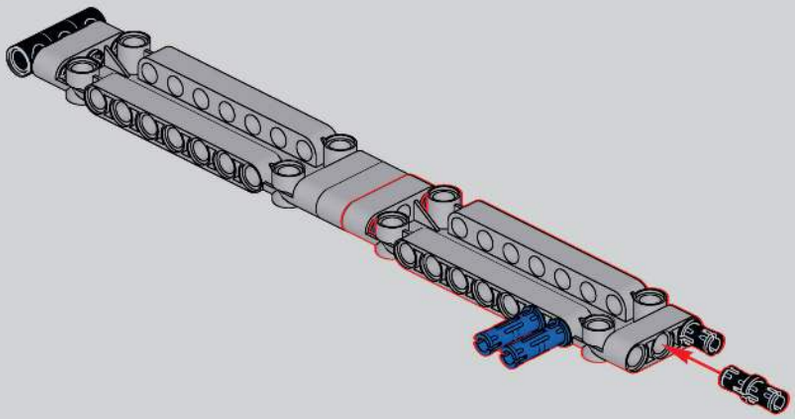

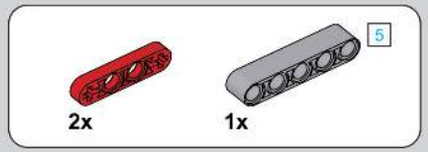

417

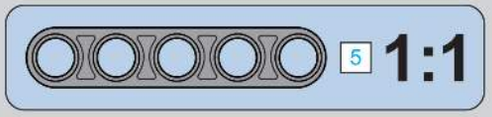

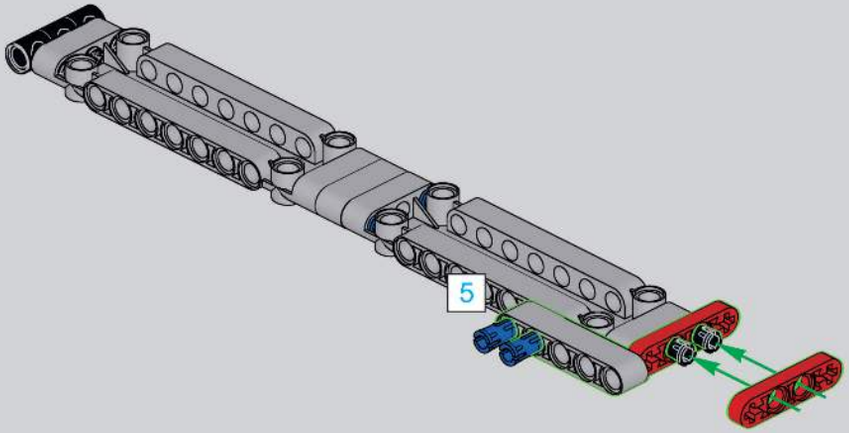

418

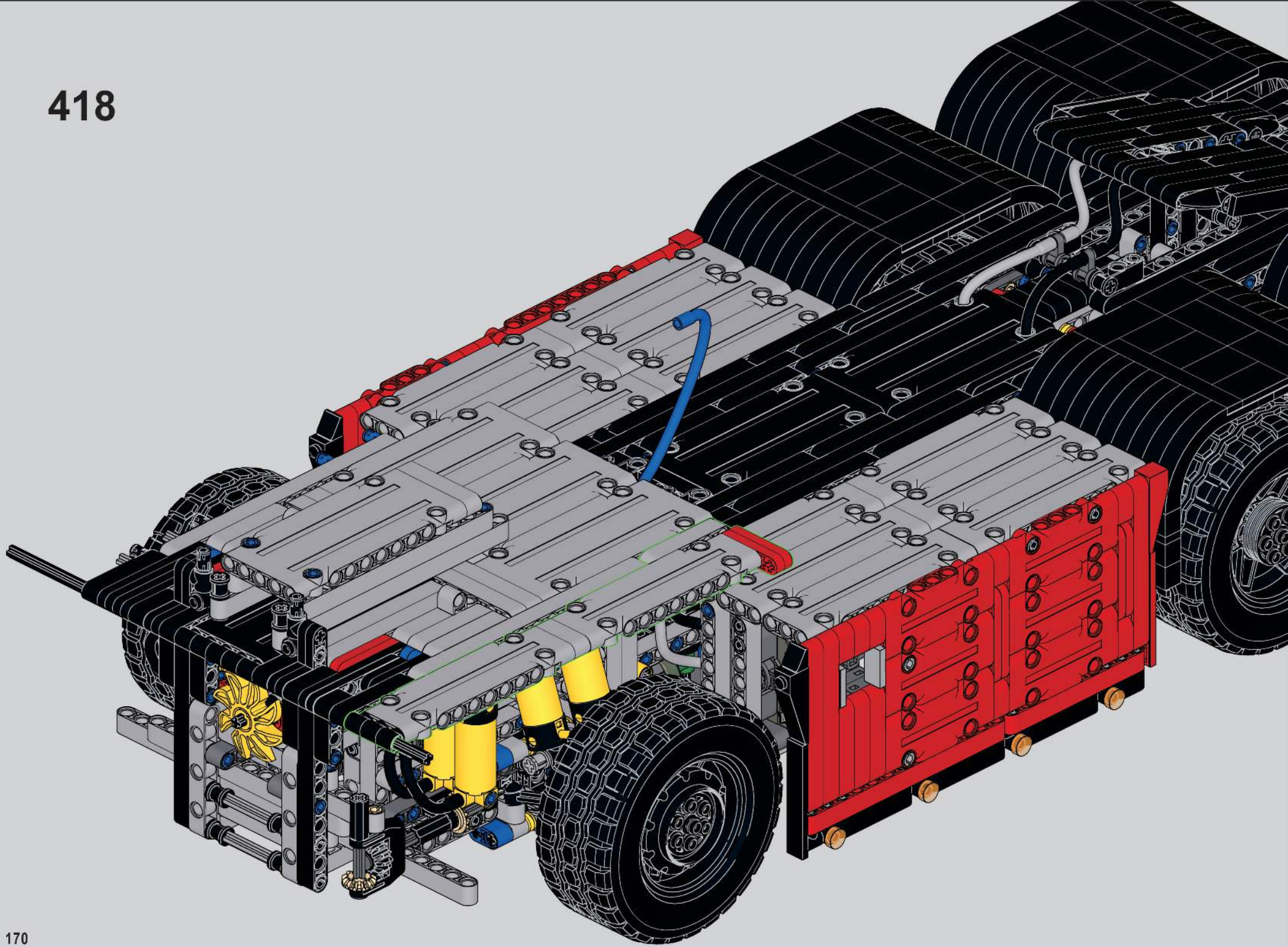

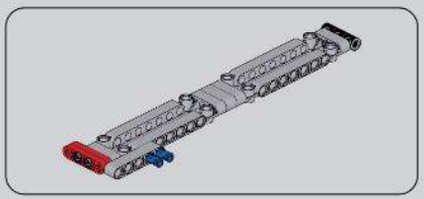

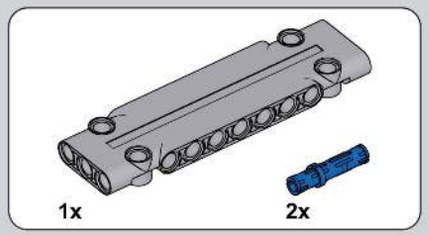

419

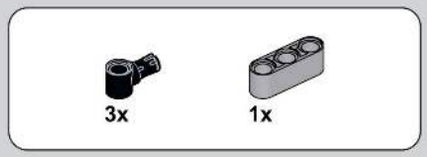

420

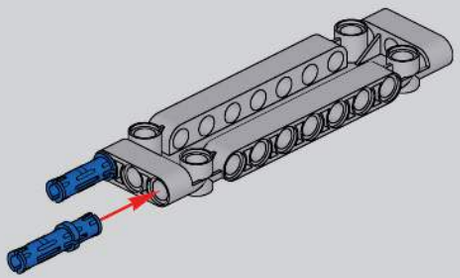

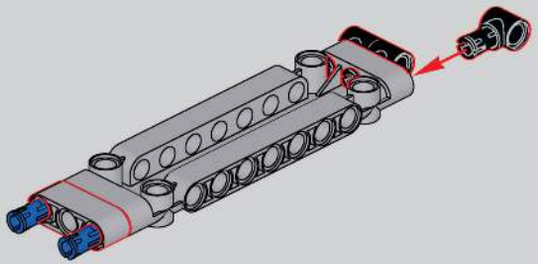

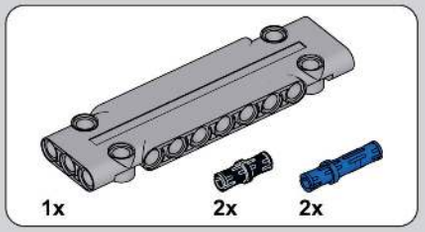

421

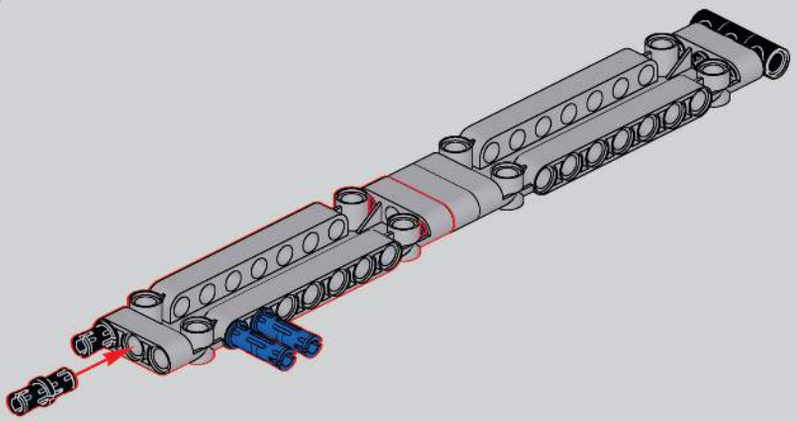

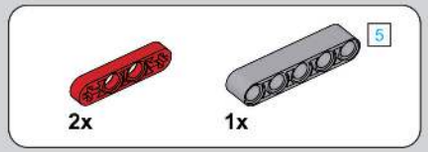

422

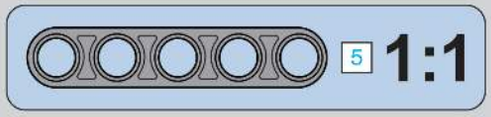

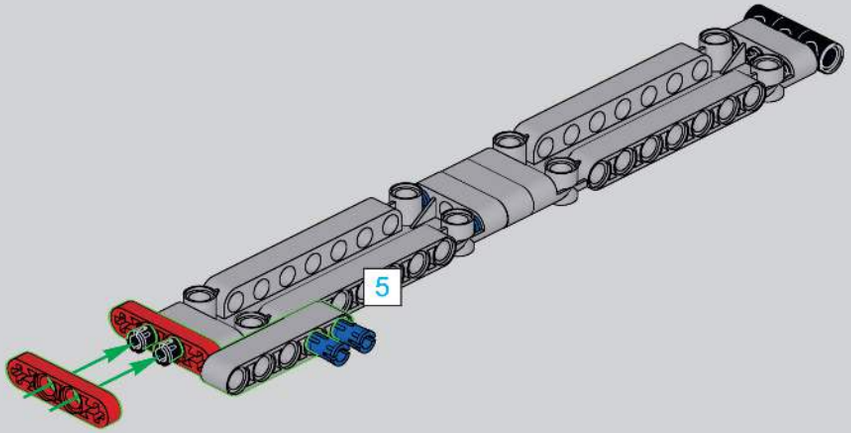

423

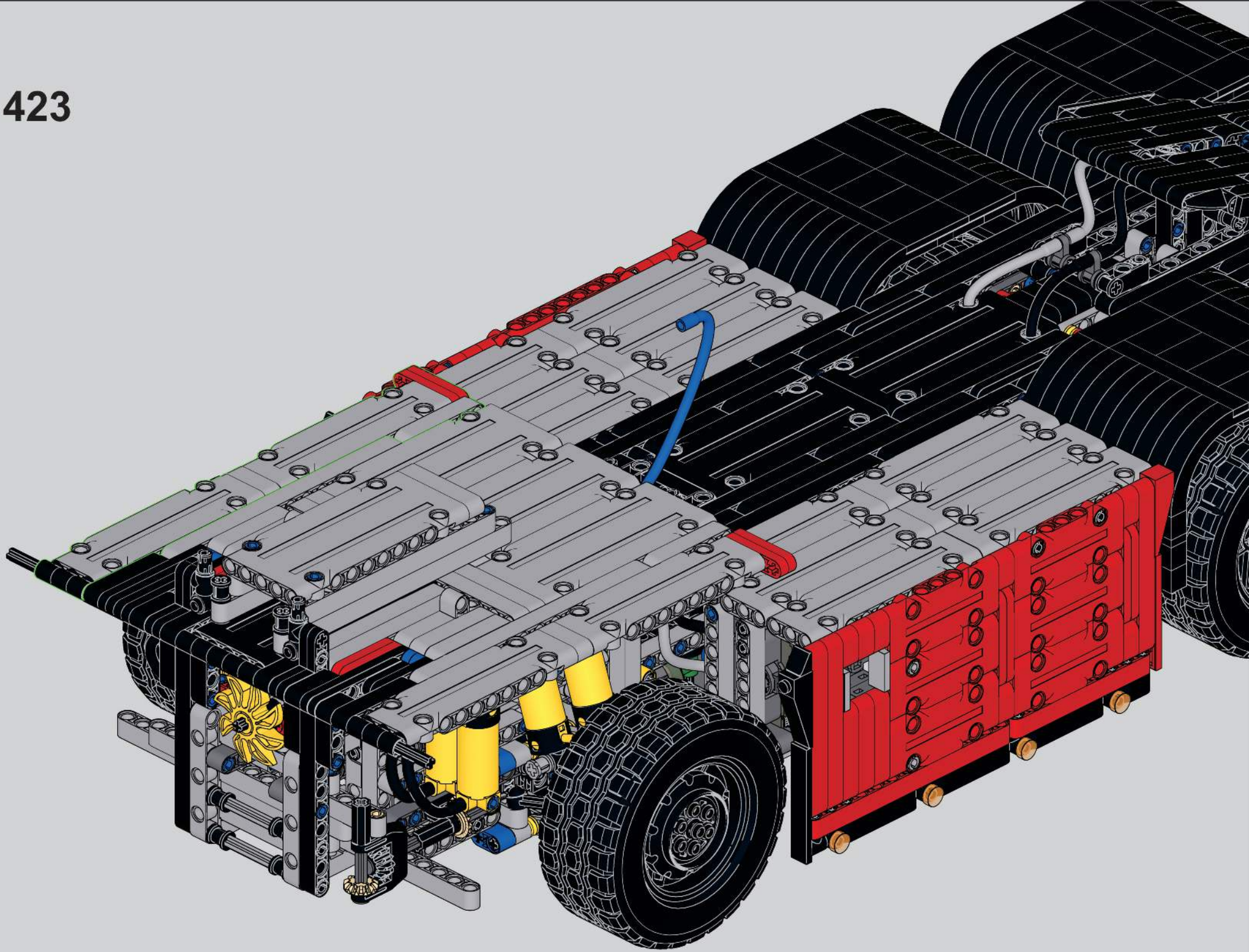

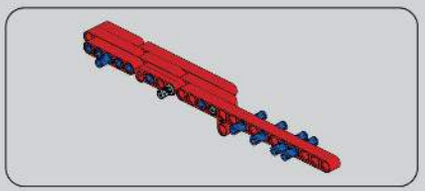

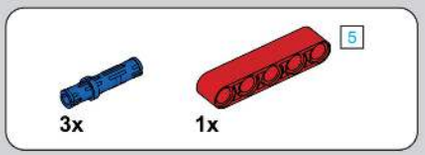

424

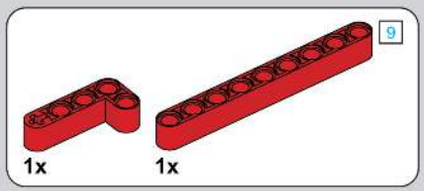

425

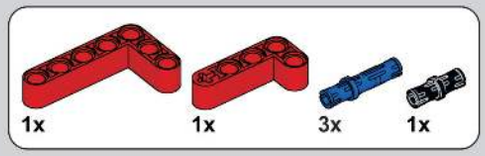

426

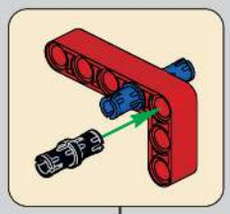

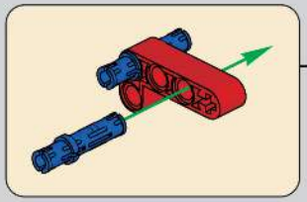

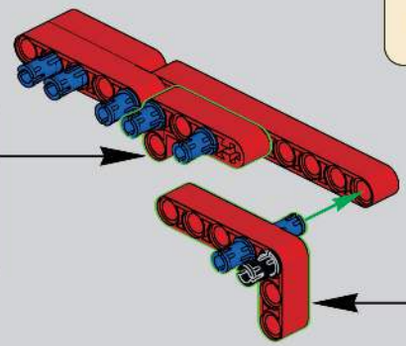

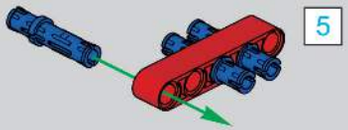

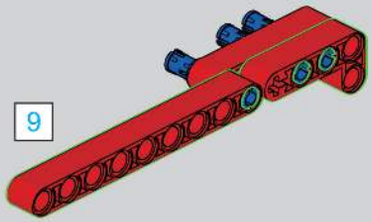

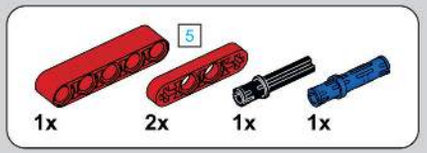

427

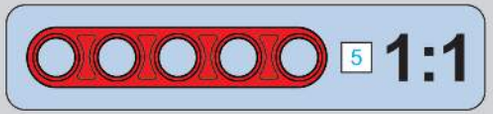

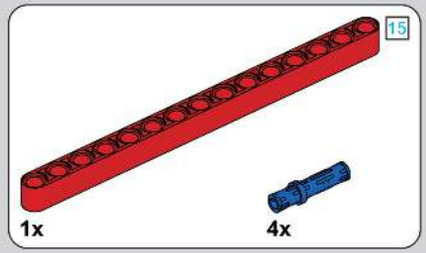

428

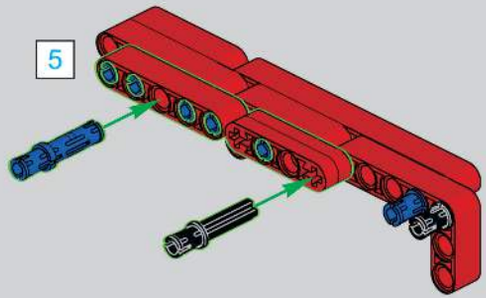

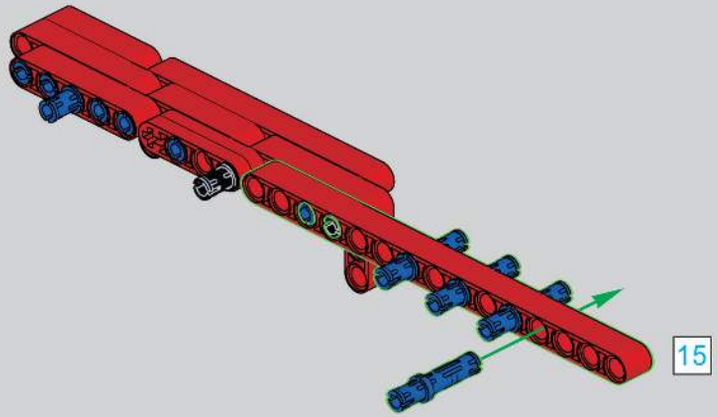

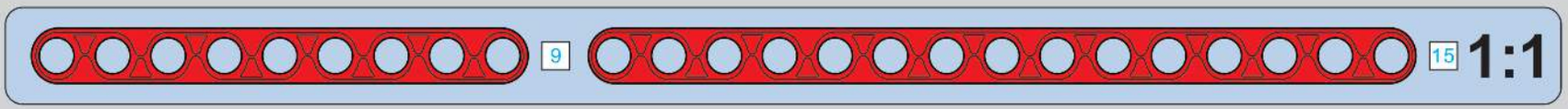

429

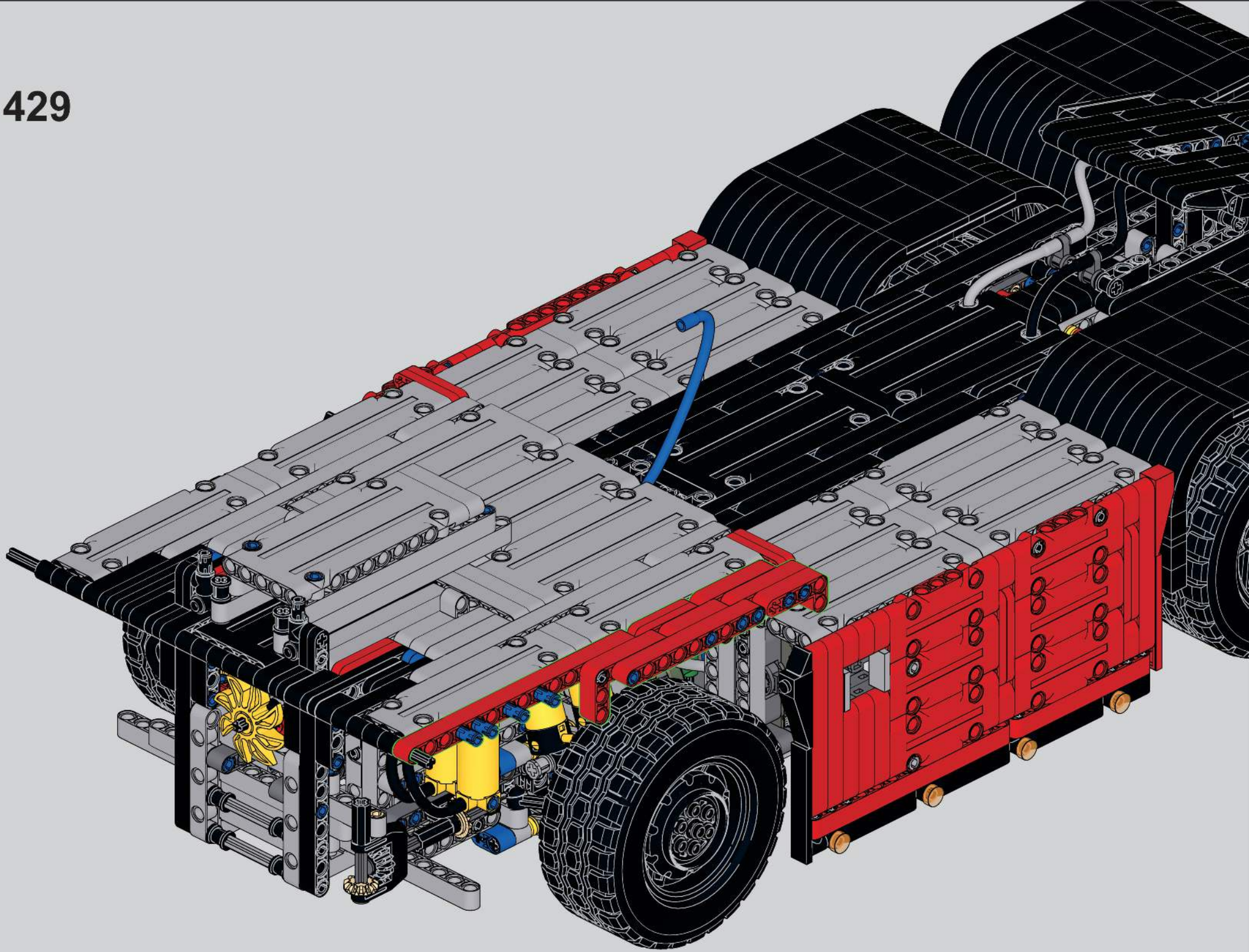

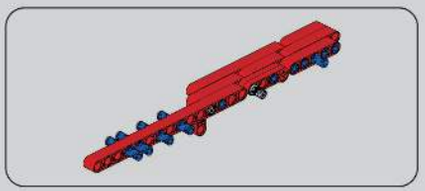

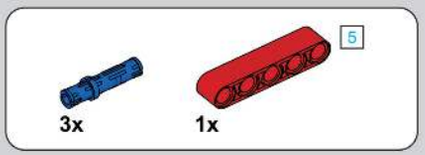

430

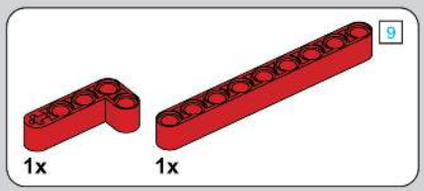

431

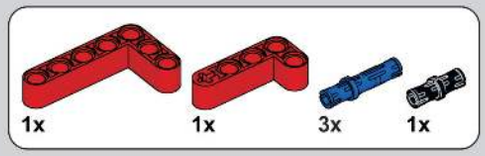

432

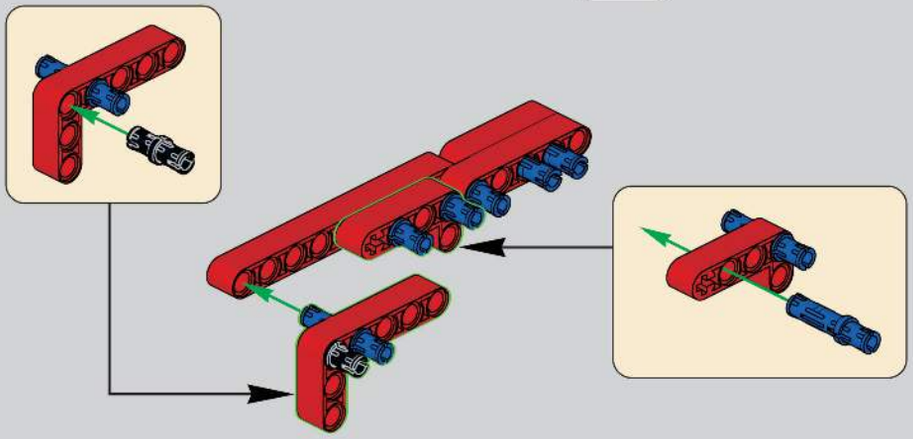

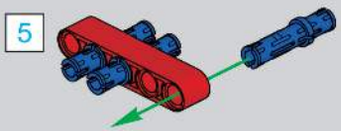

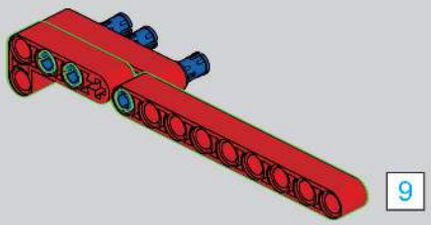

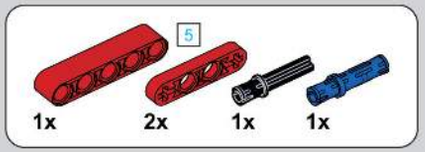

433

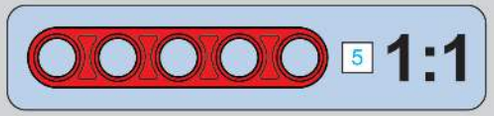

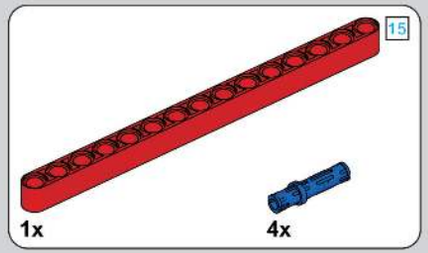

434

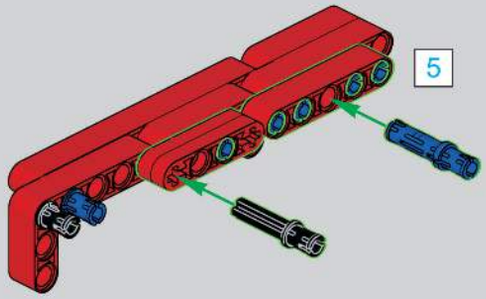

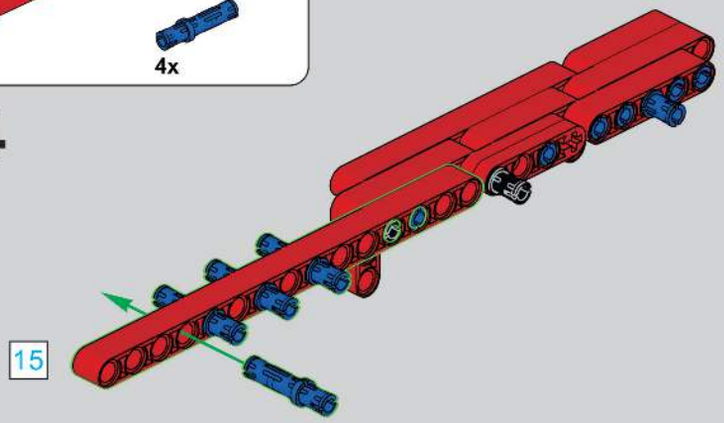

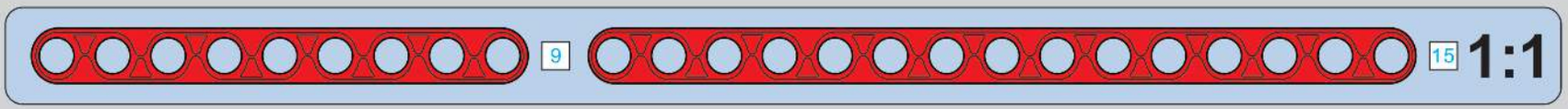

435

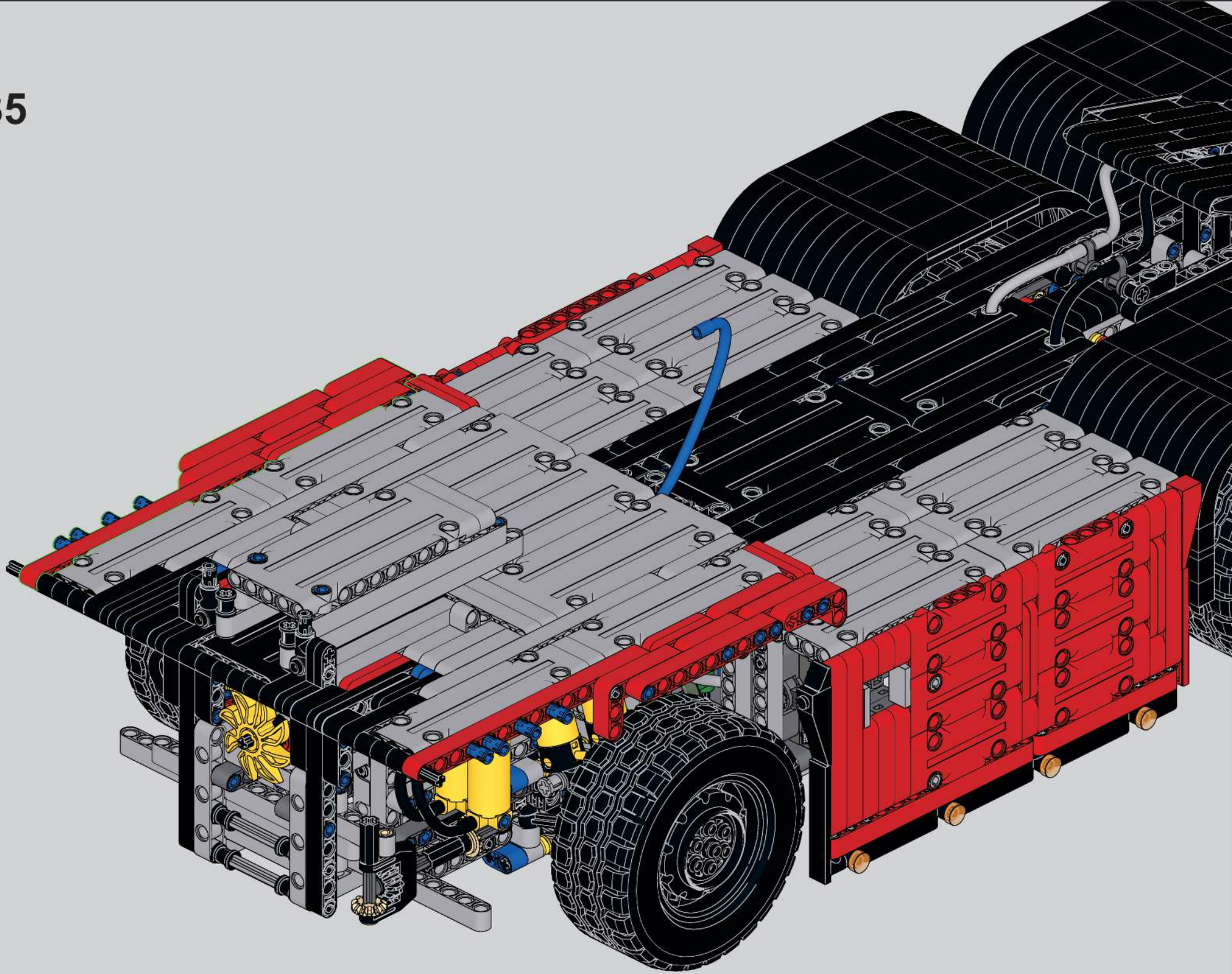

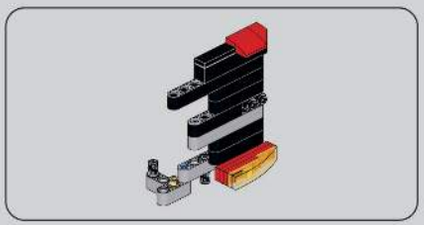

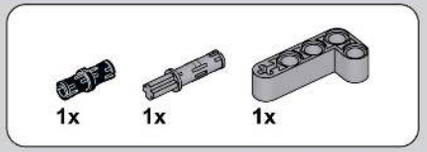

436

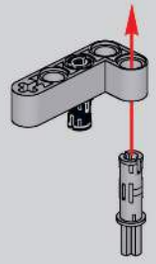

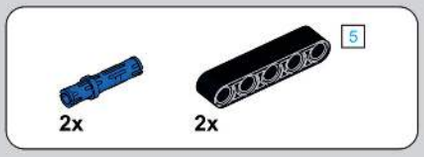

437

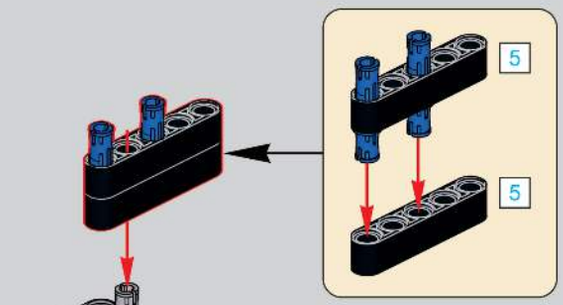

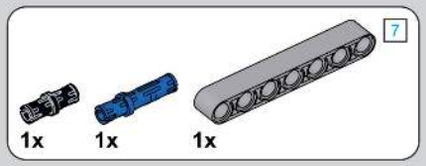

438

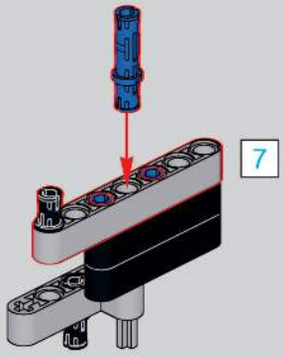

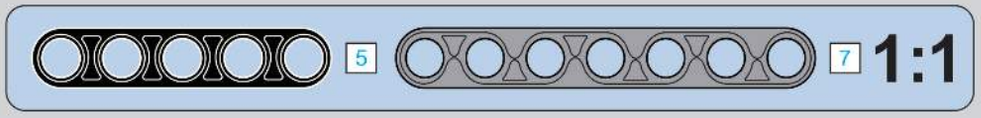

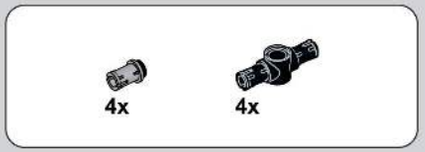

439

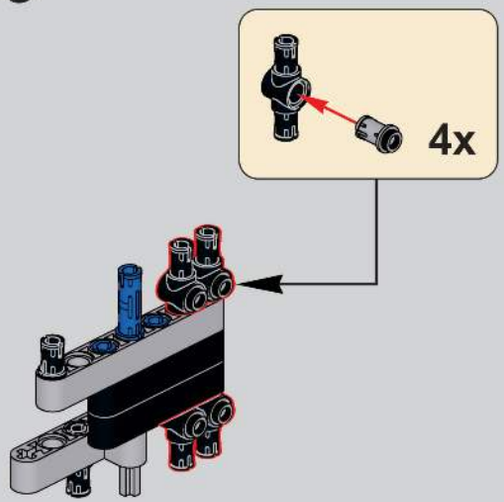

440

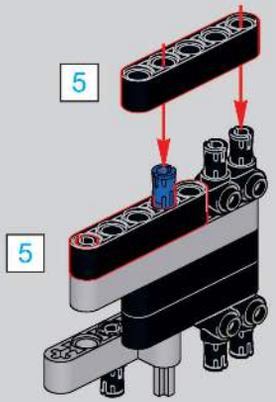

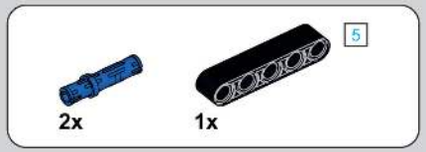

441

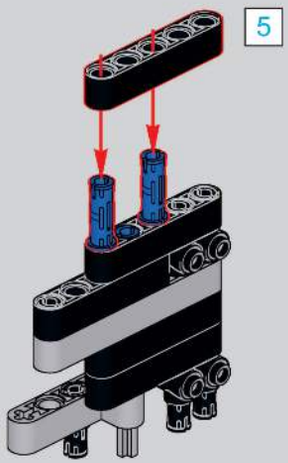

442

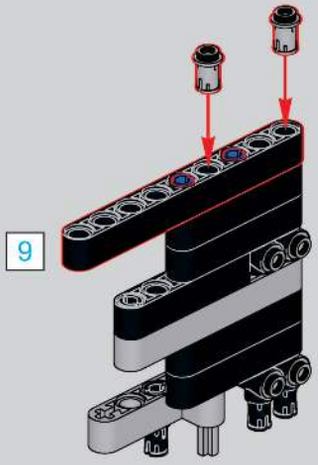

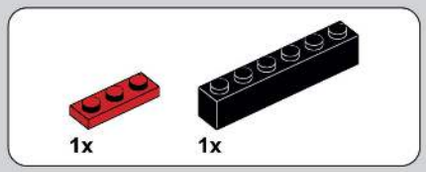

443

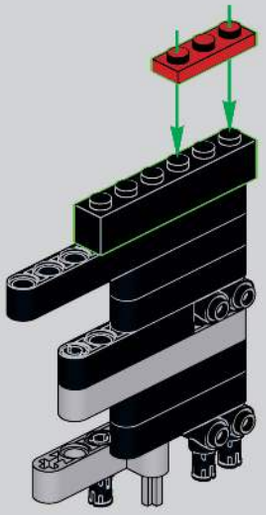

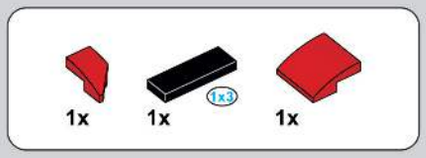

444

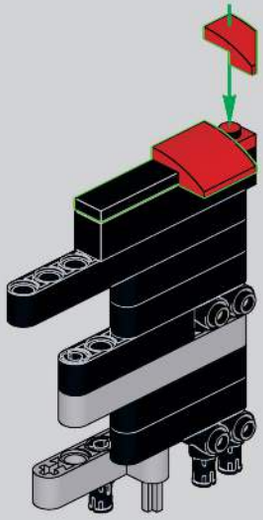

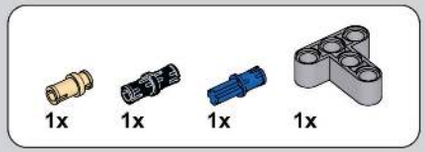

445

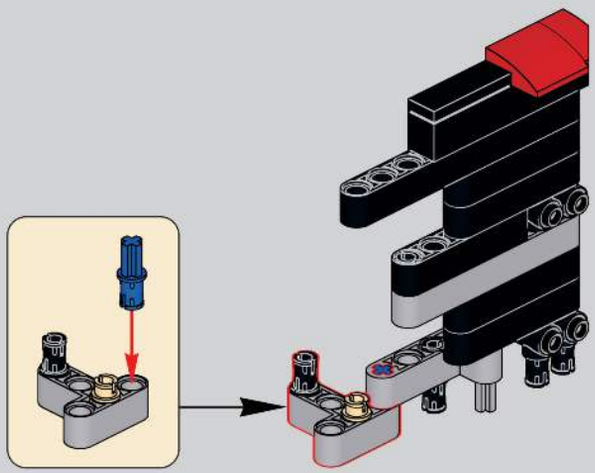

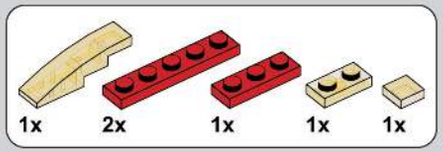

446

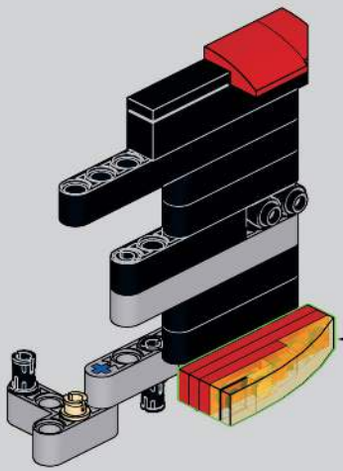

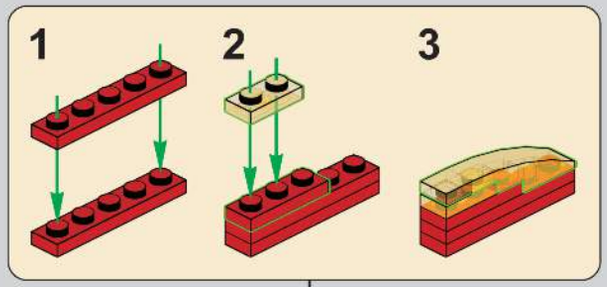

447

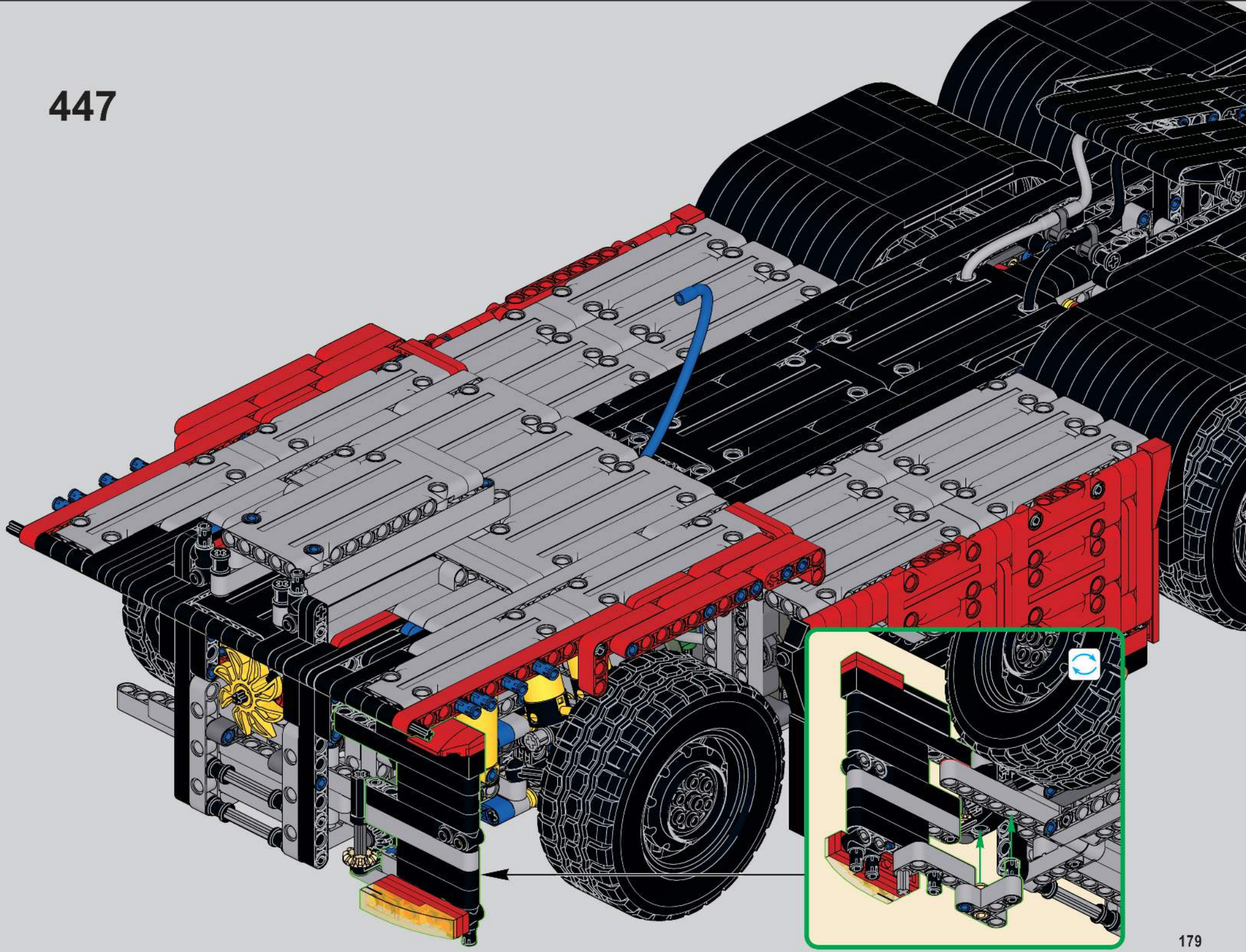

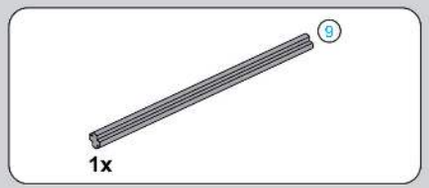

448

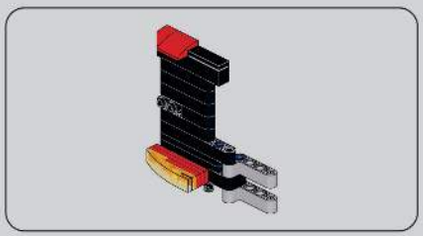

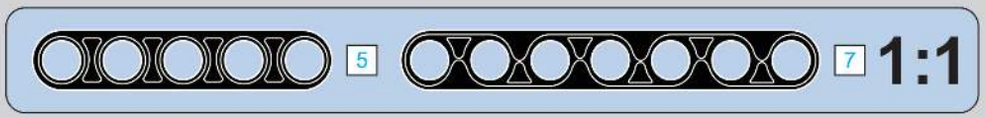

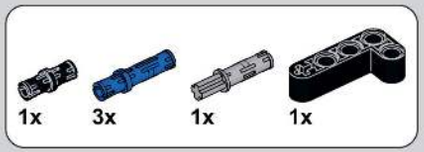

449

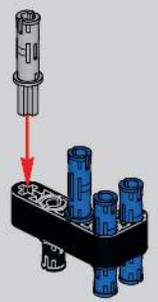

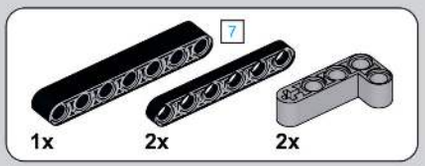

450

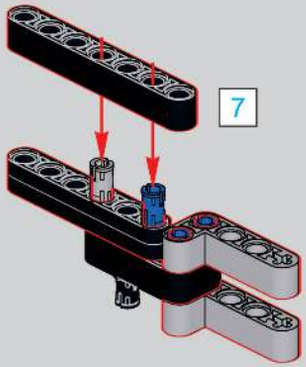

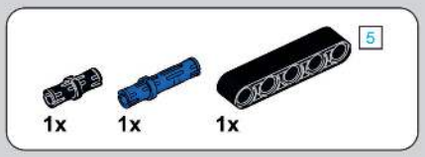

451

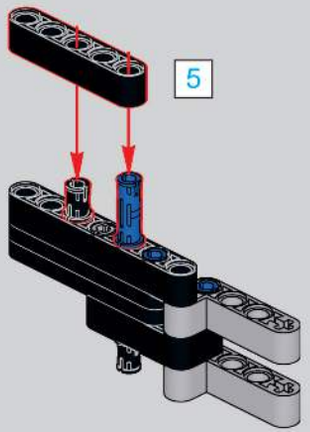

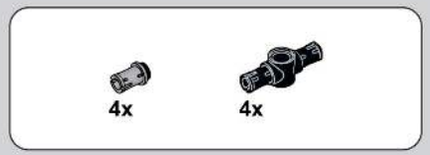

452

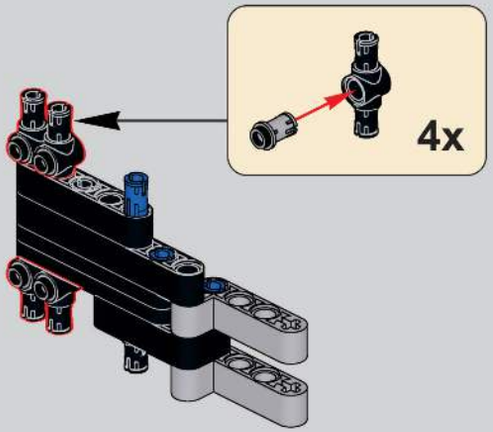

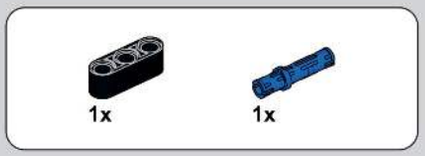

453

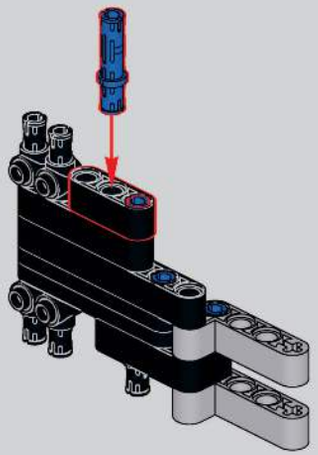

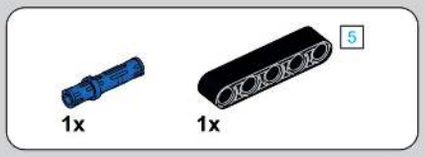

454

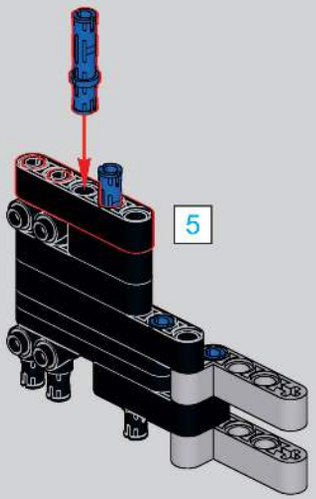

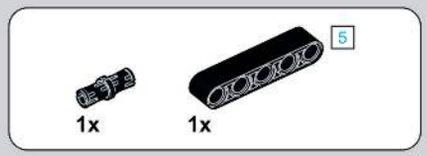

455

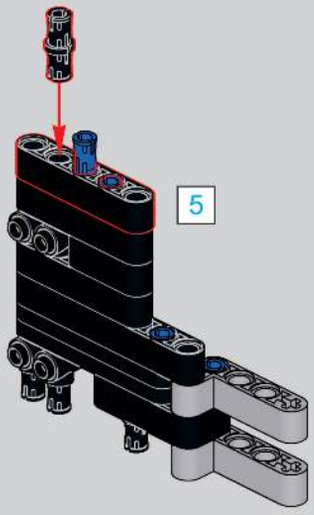

456

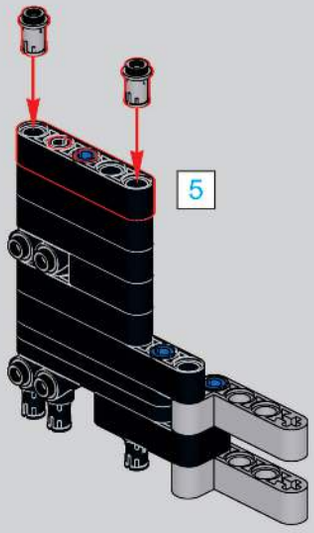

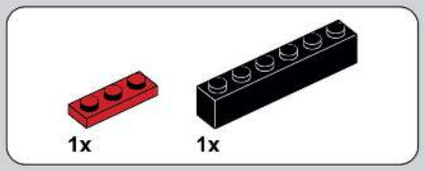

457

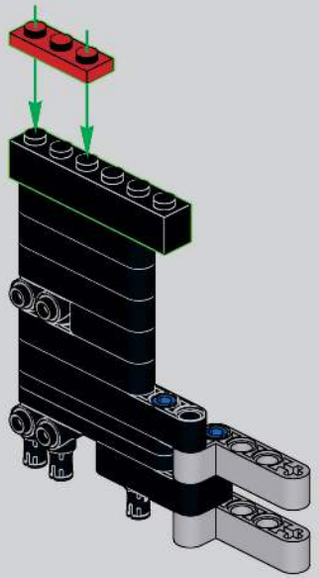

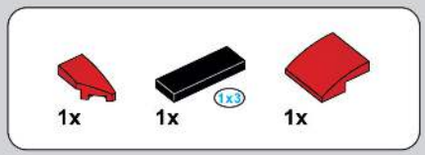

458

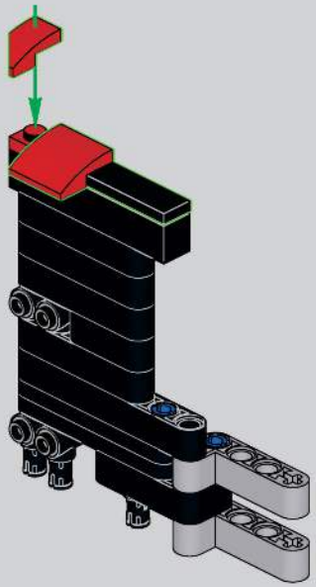

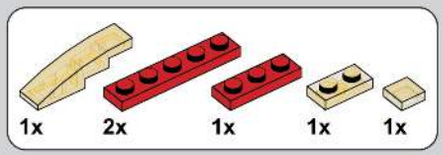

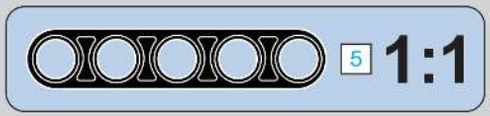

459

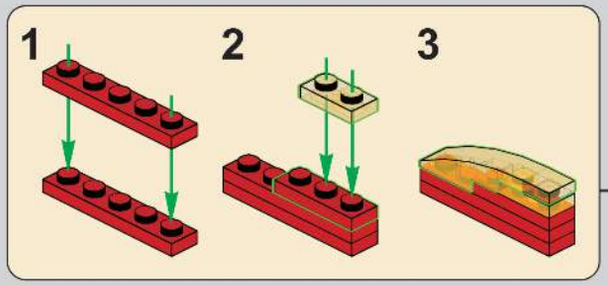

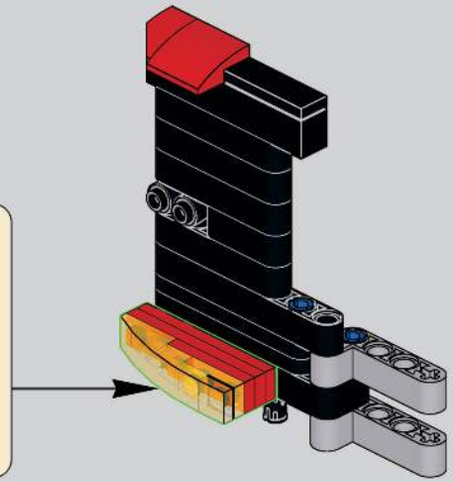

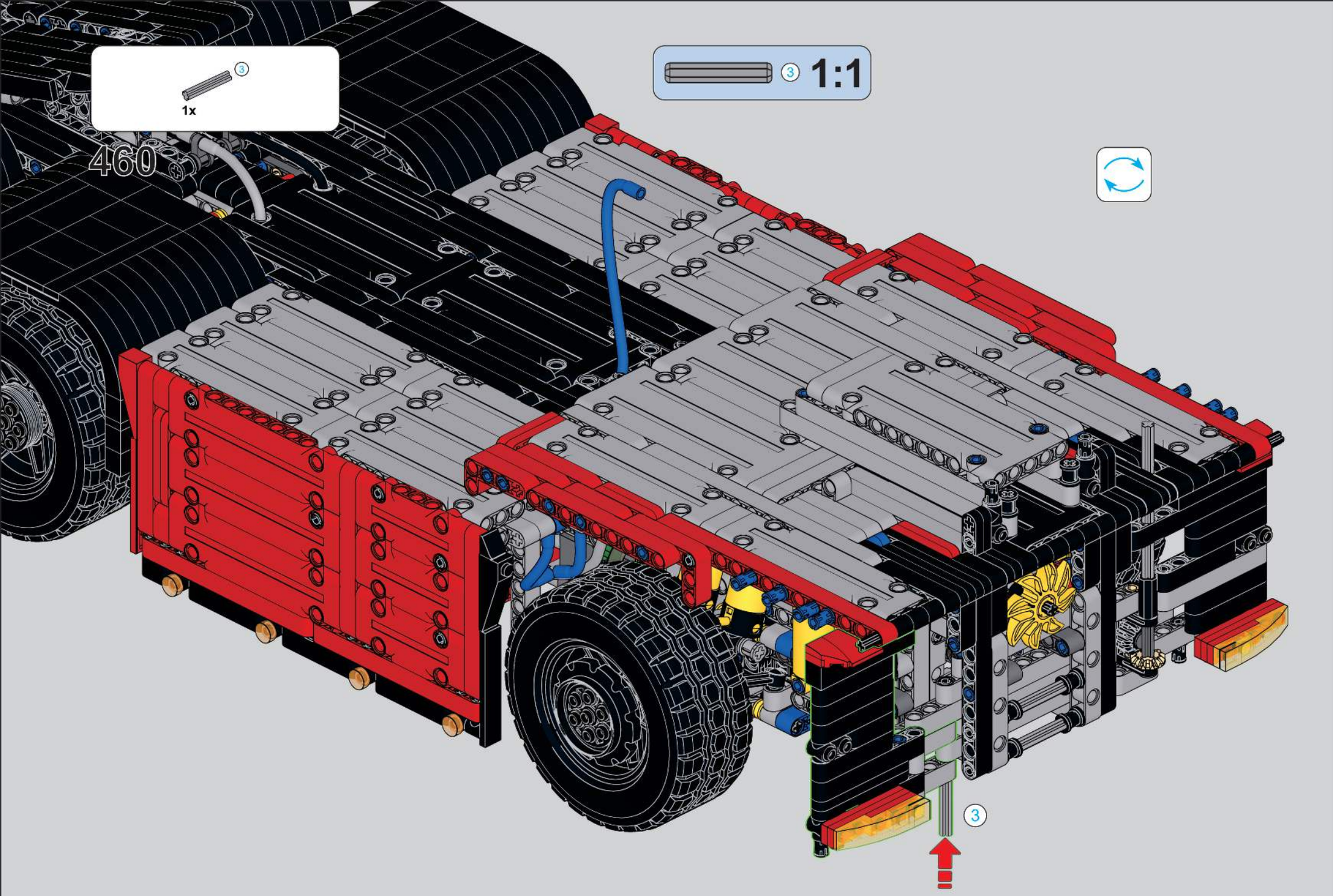
3
1x
460
3
1:1
3

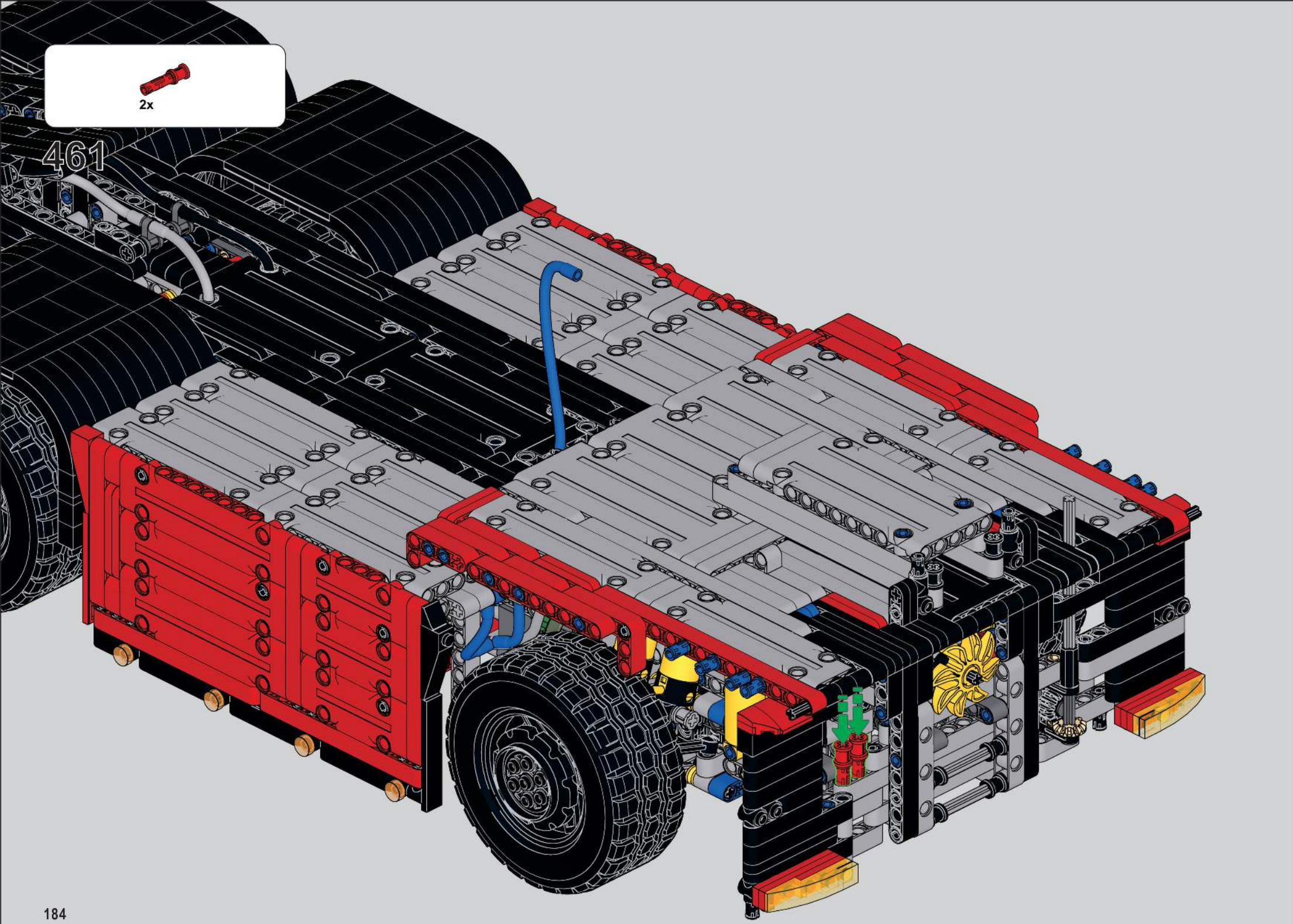
2x
461

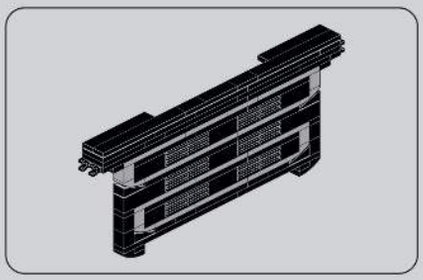

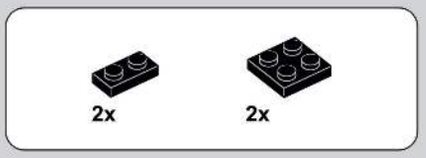

463

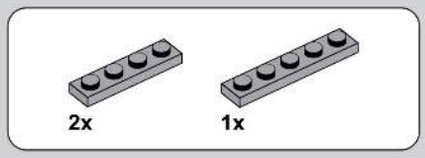

464

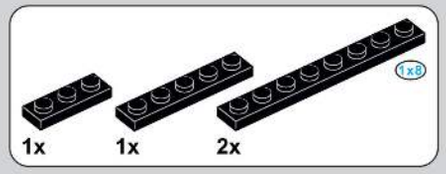

462

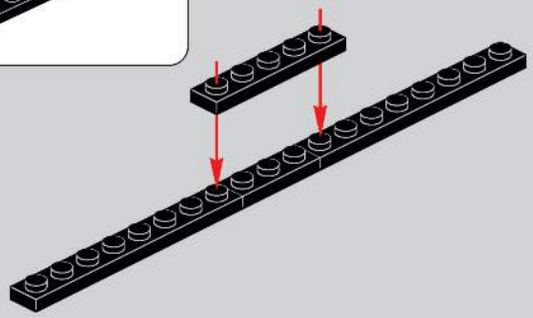

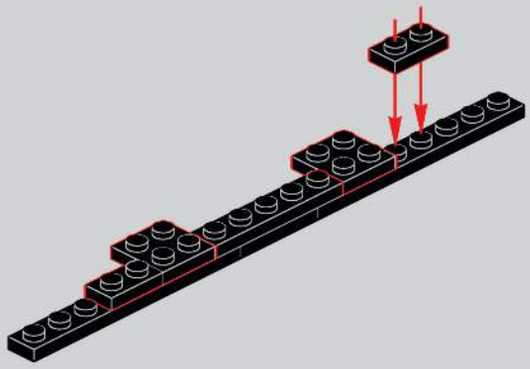

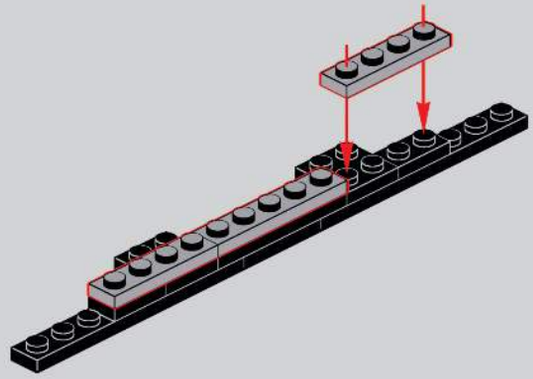

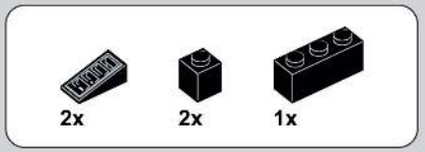

465

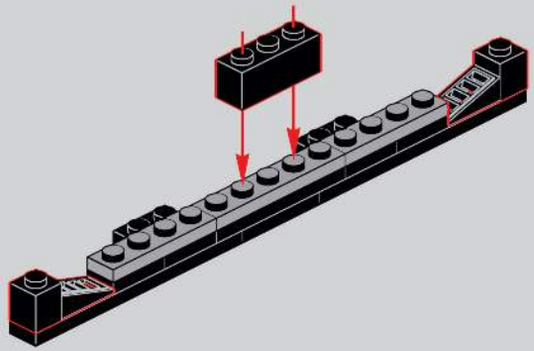

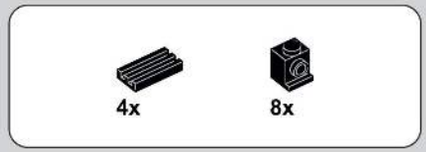

466

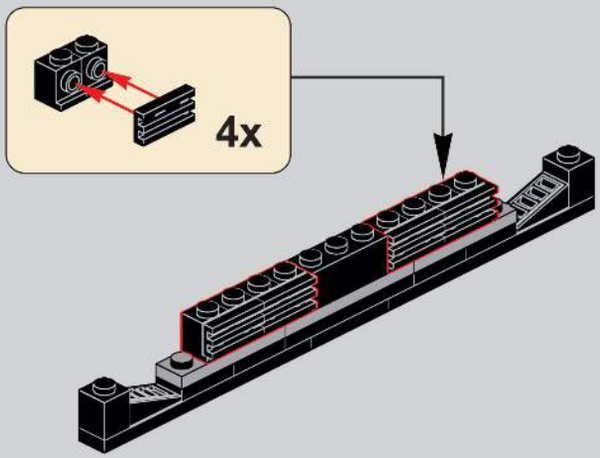

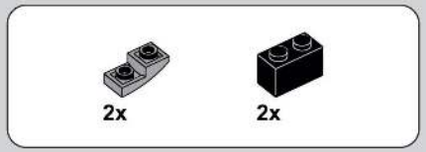

467

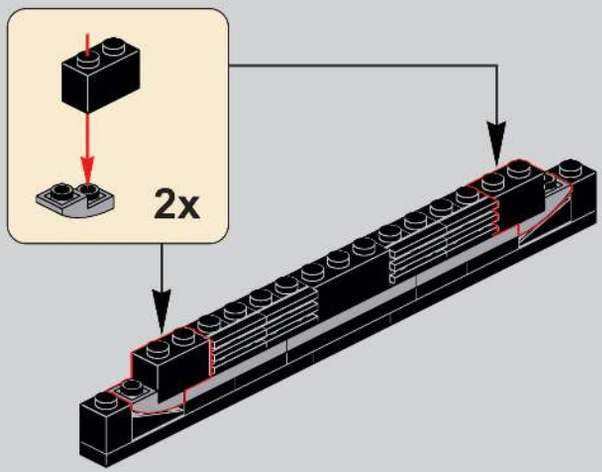

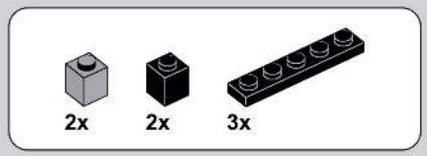

468

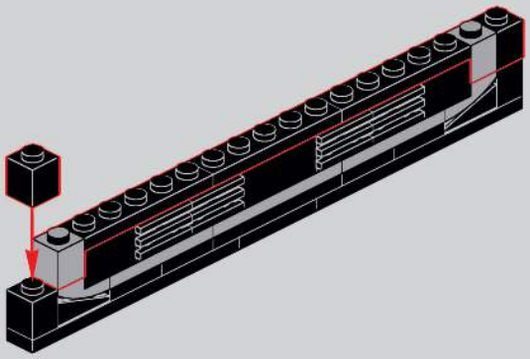

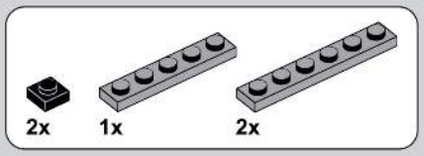

469

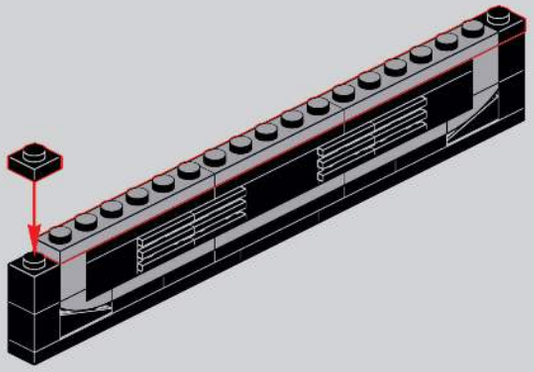

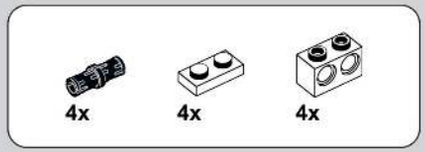

470

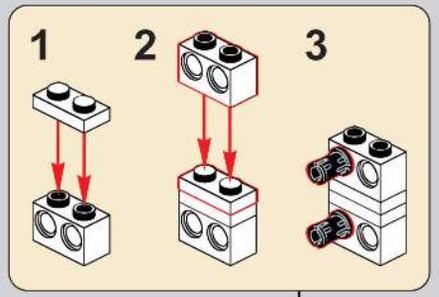

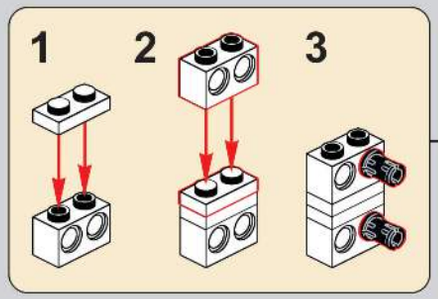

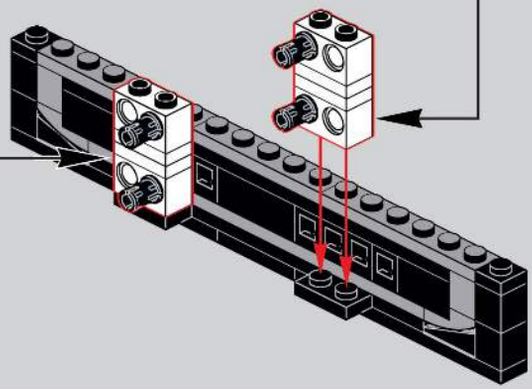

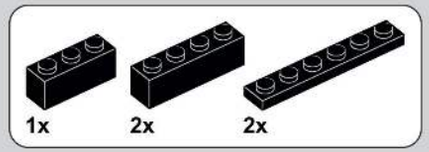

471

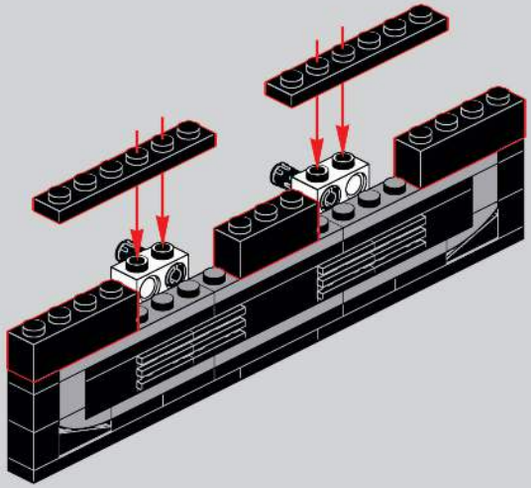

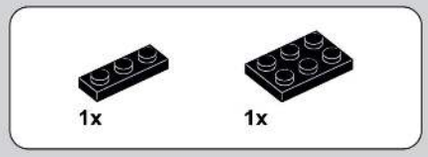

472

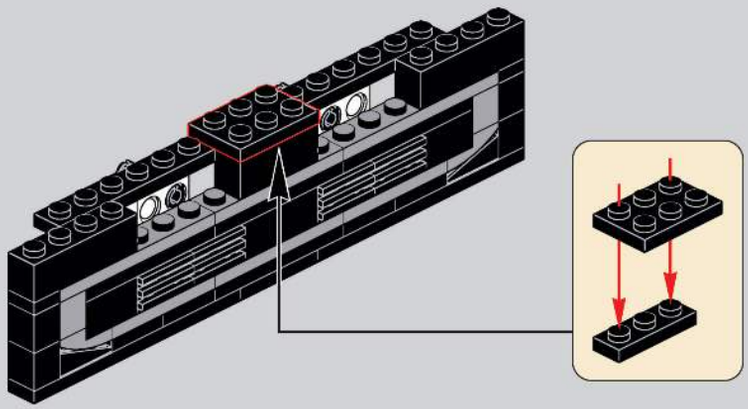

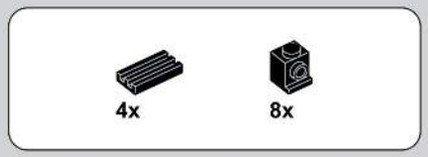

473

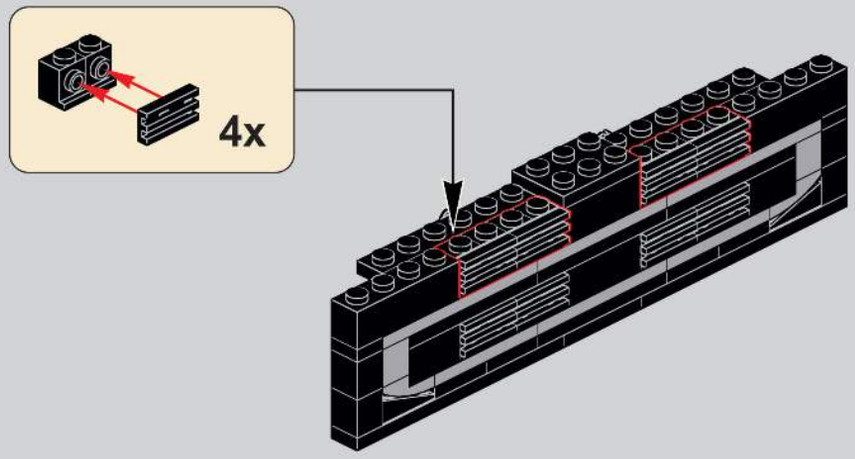

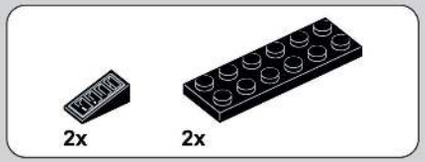

474

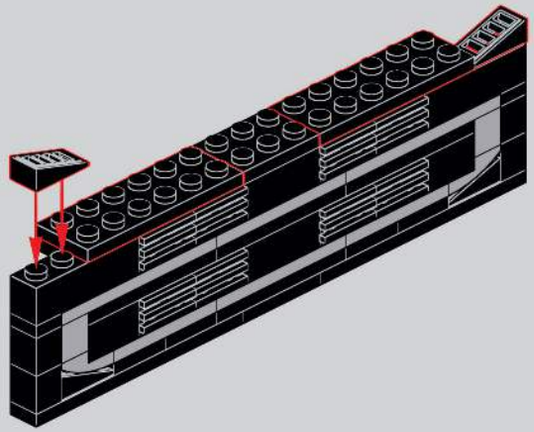

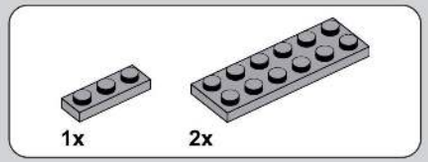

475

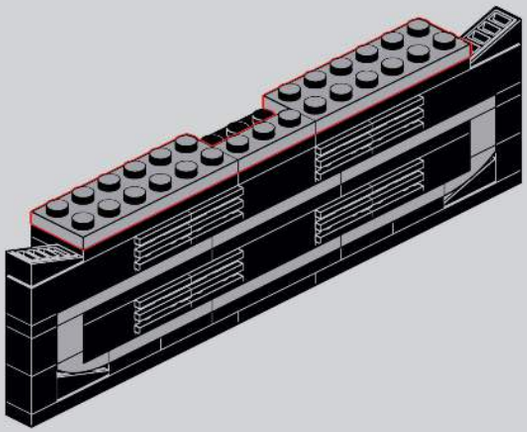

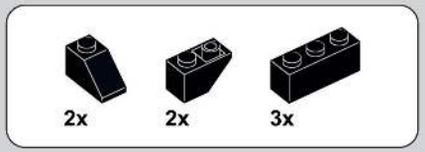

476

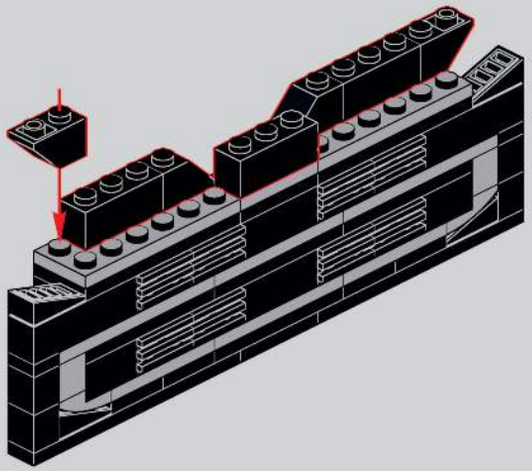

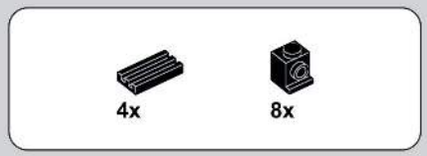

477

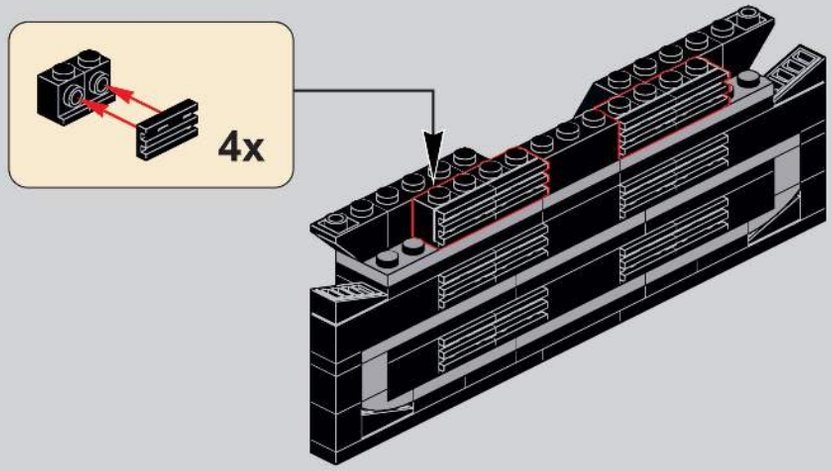

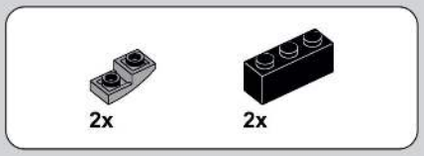

478

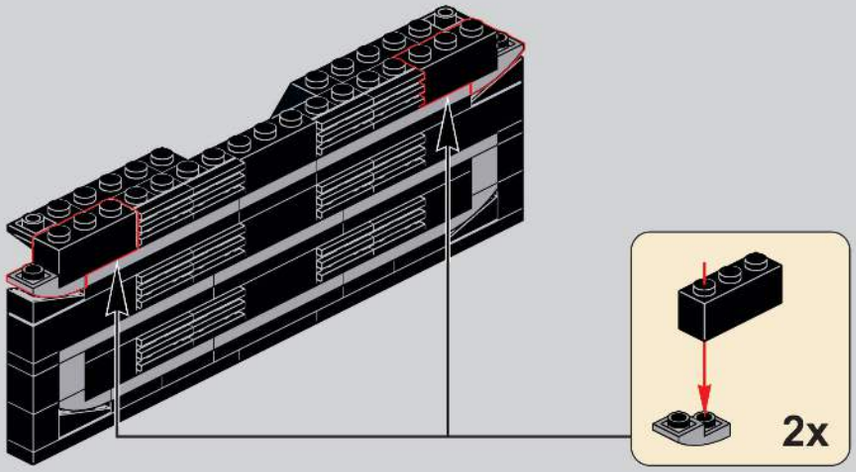

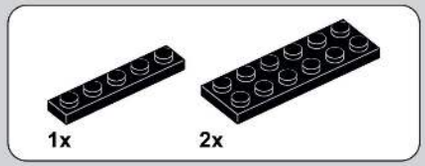

479

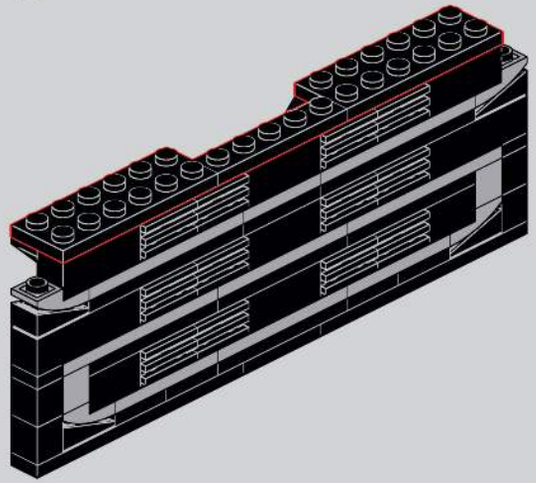

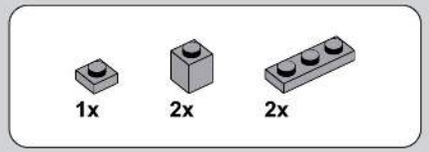

480

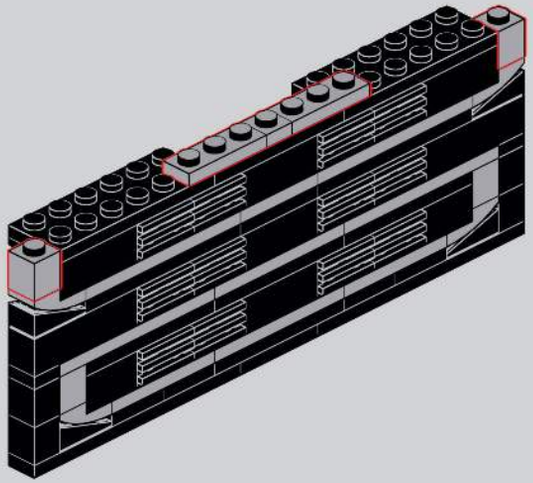

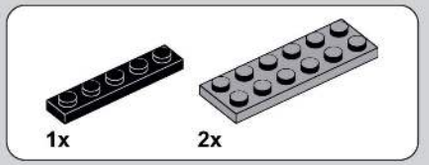

481

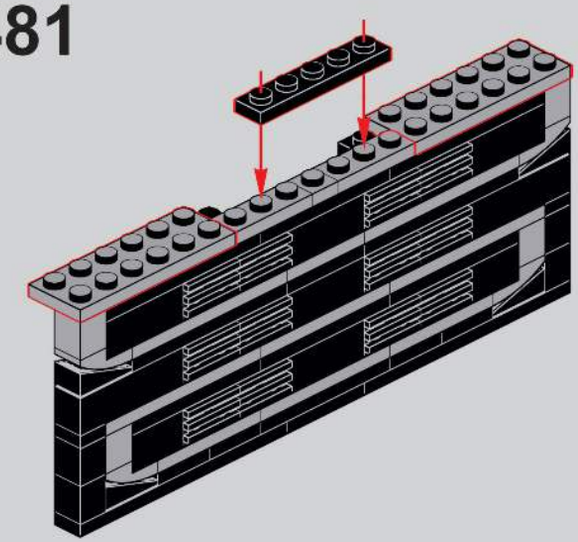

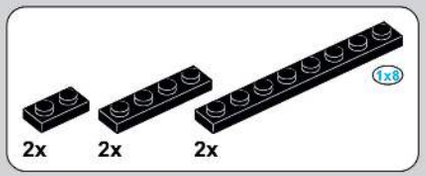

482

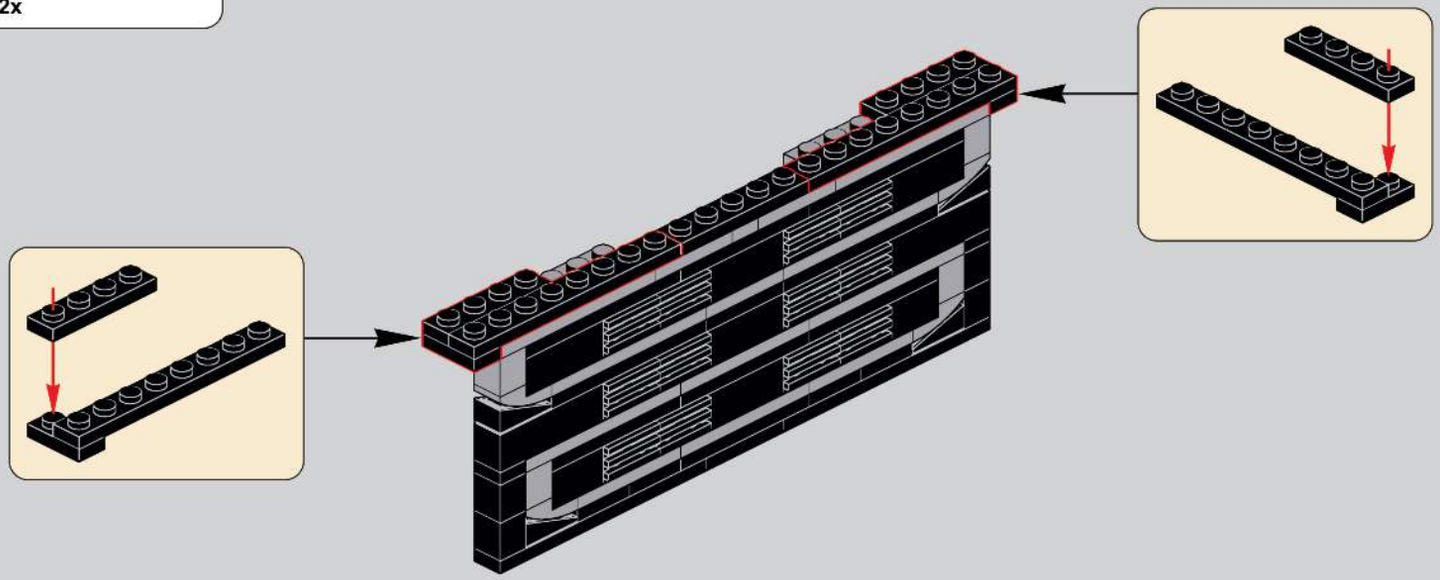

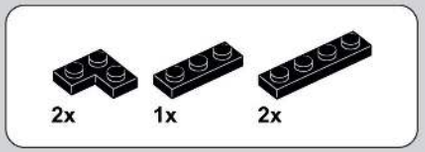

483

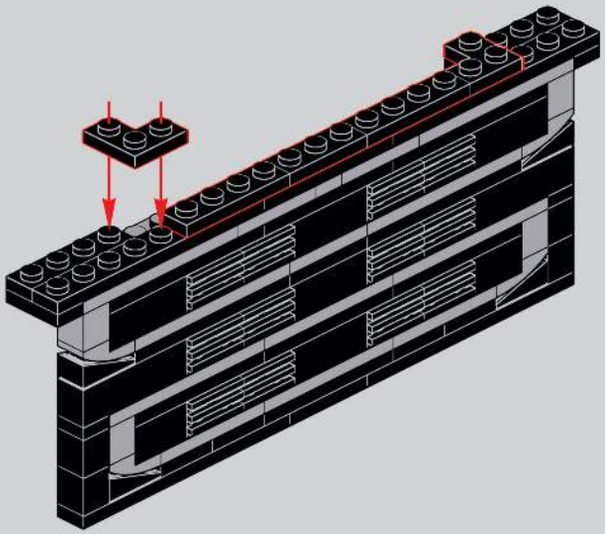

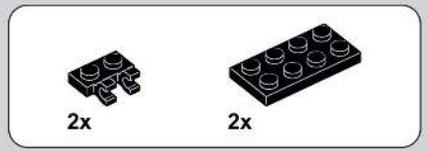

484

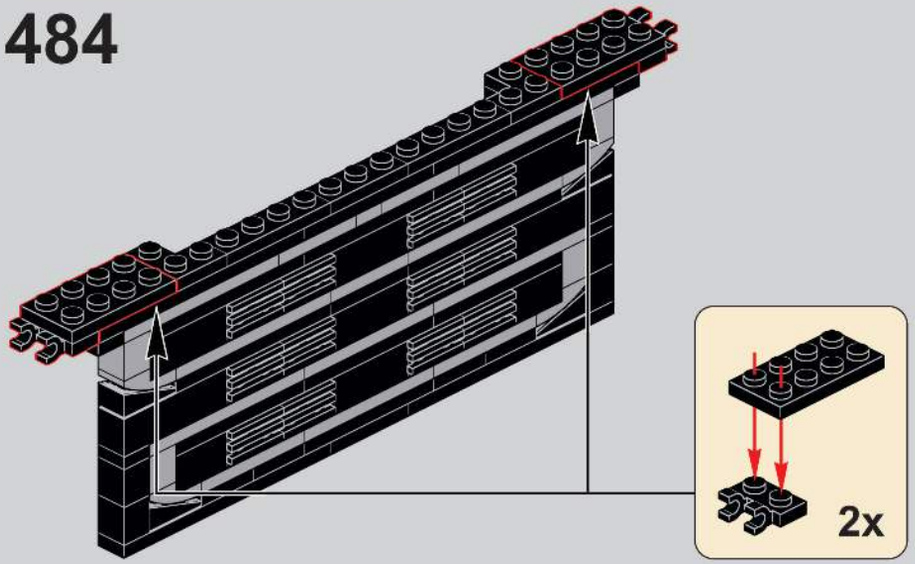

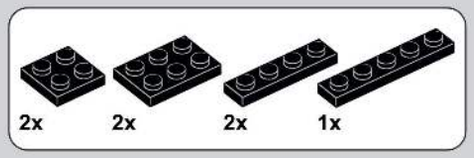

485

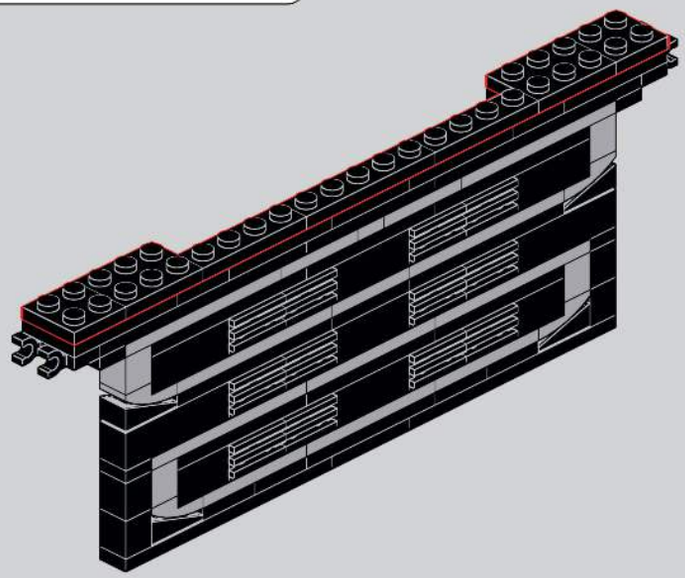

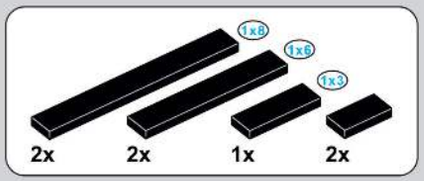

486

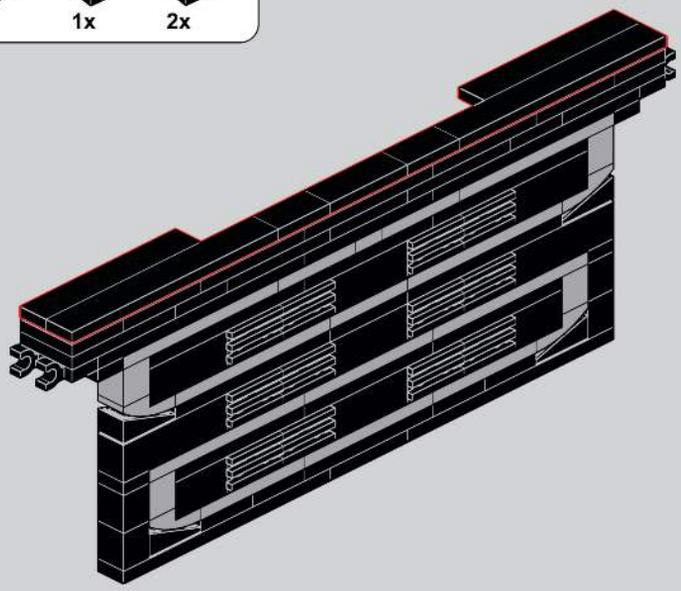

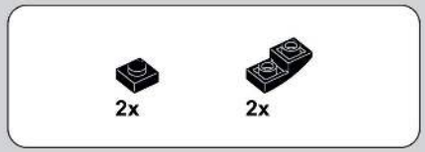

487

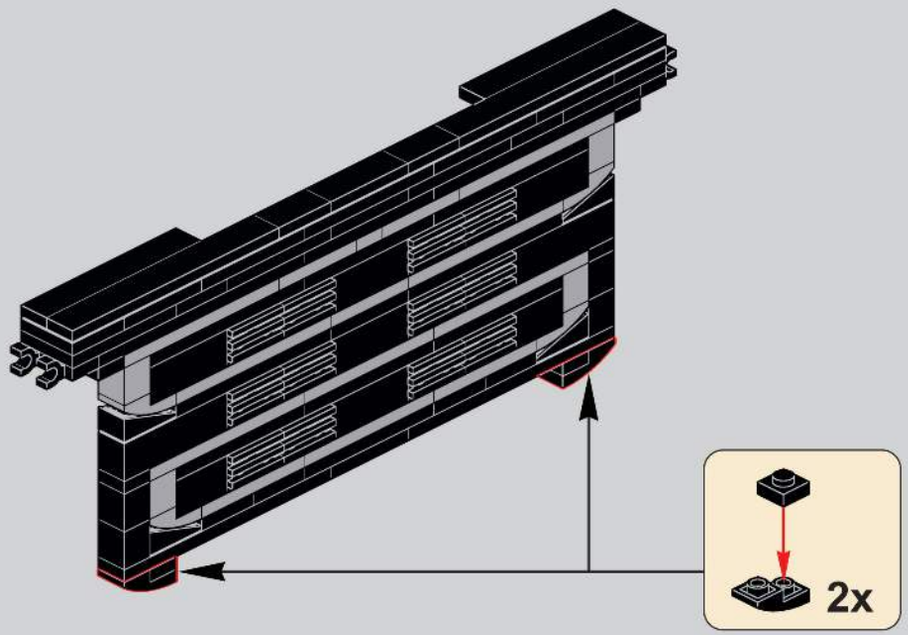

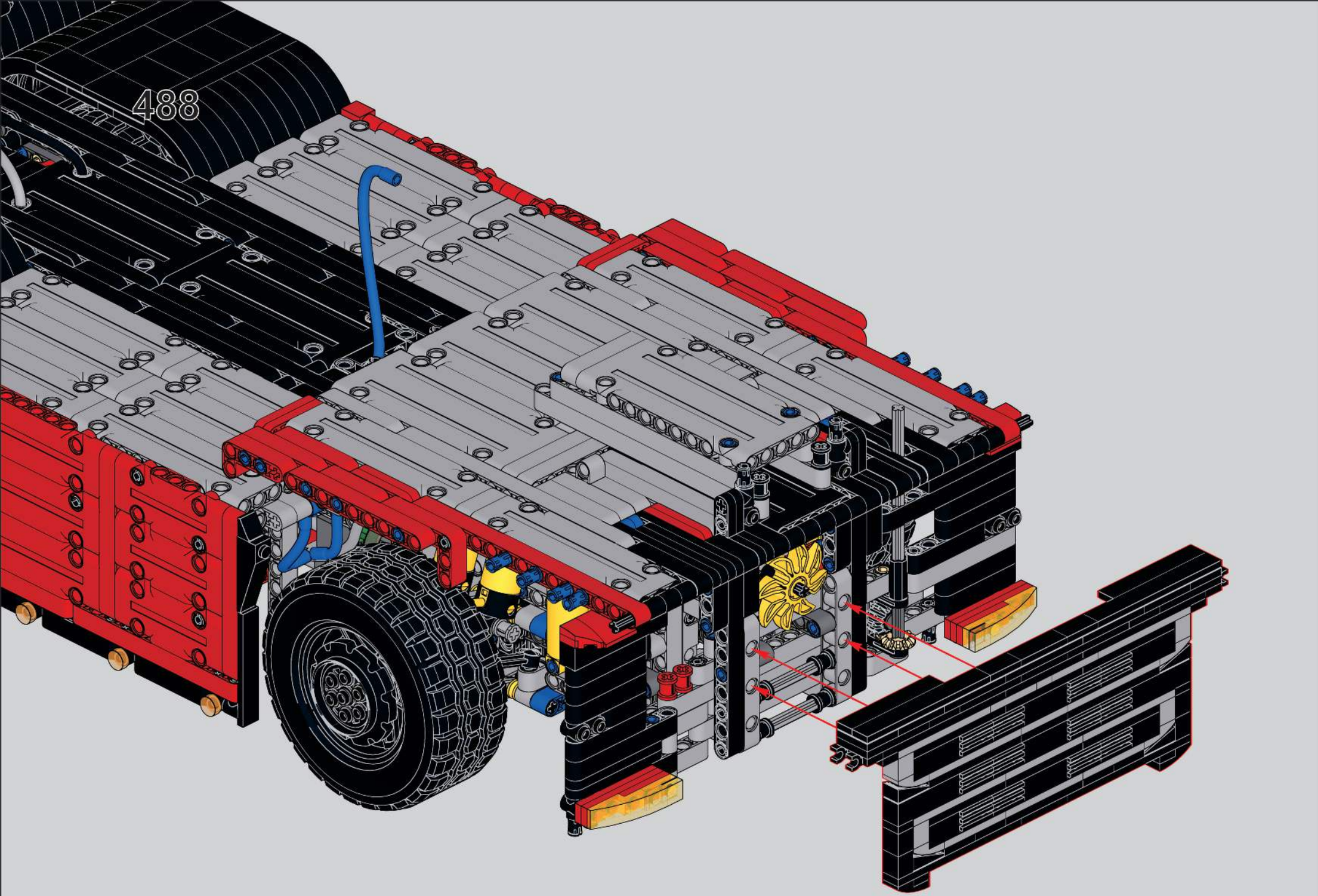
488

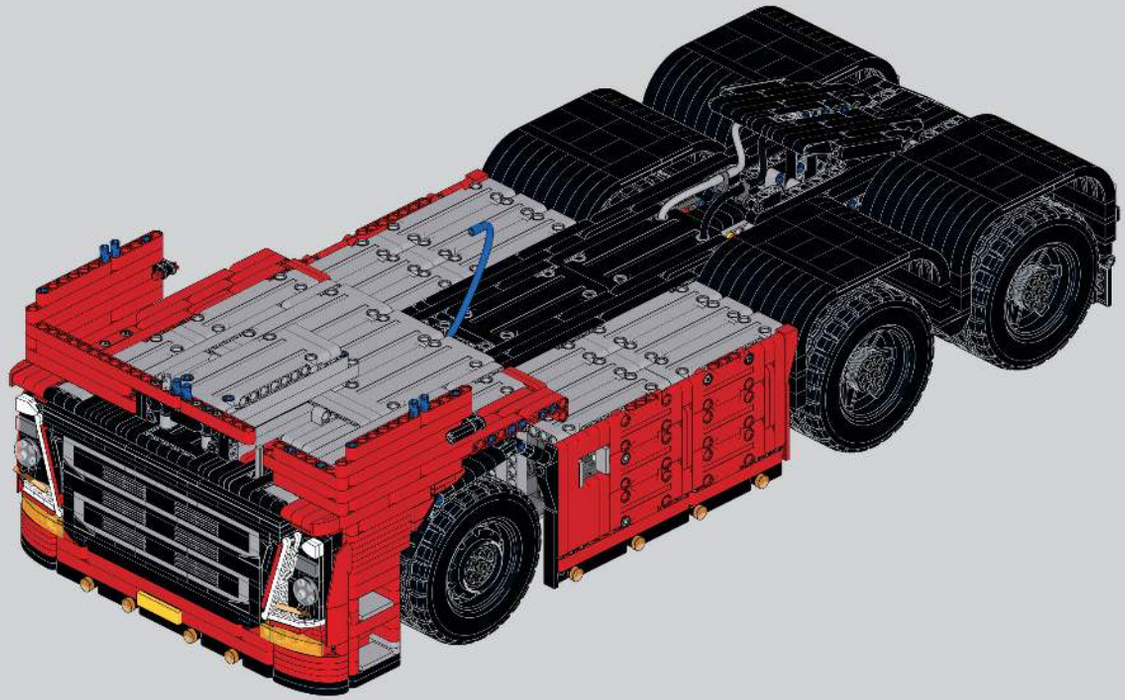

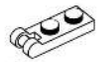

490

491

492

489

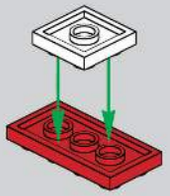

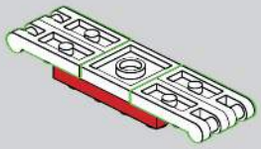

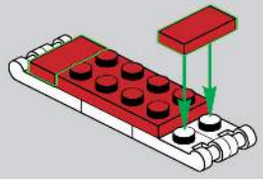

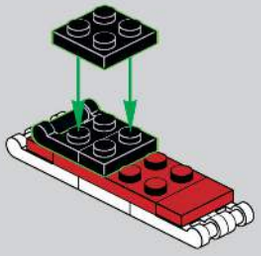

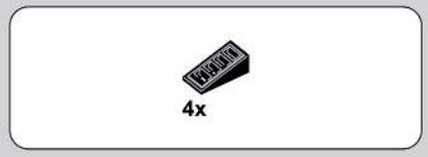

493

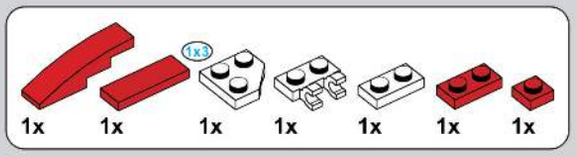

494

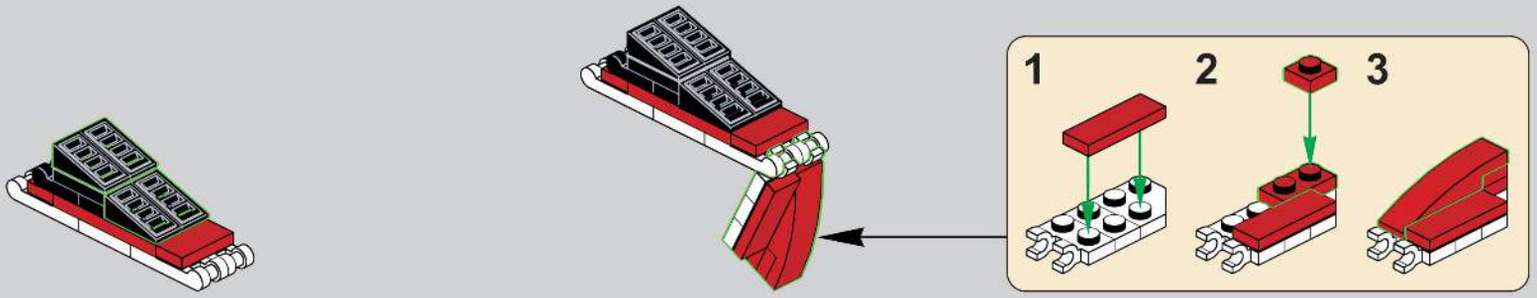

495

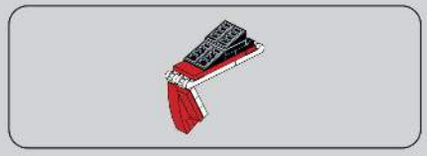

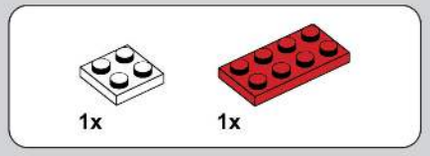

496

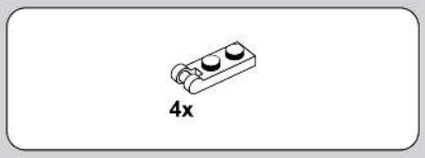

497

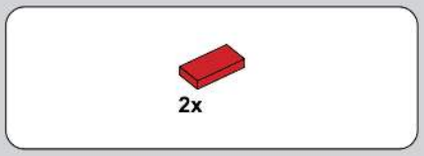

498

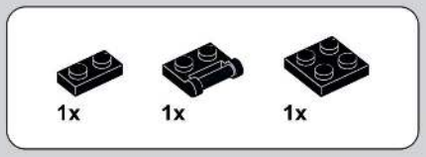

499

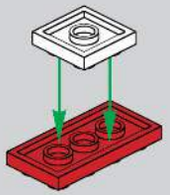

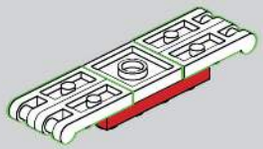

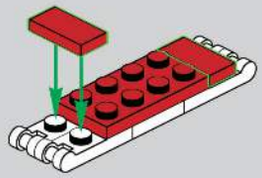

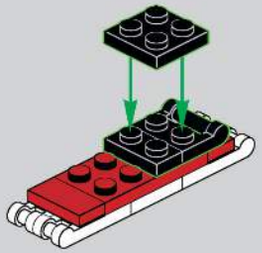

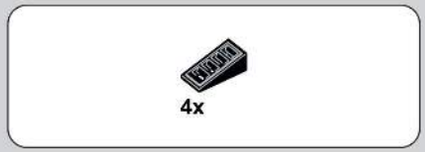

500

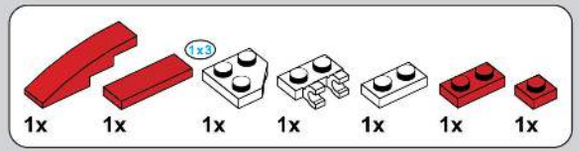

501

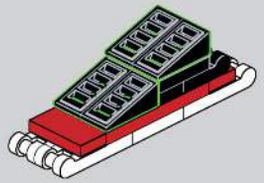

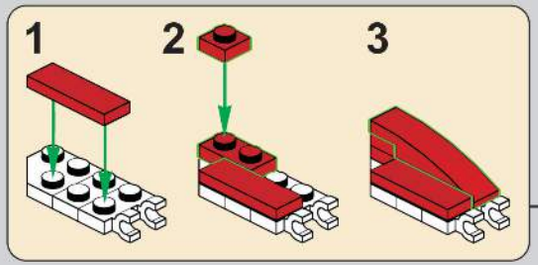

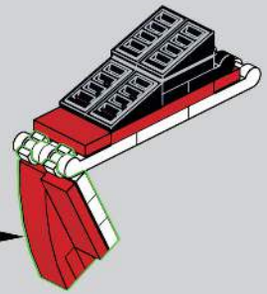

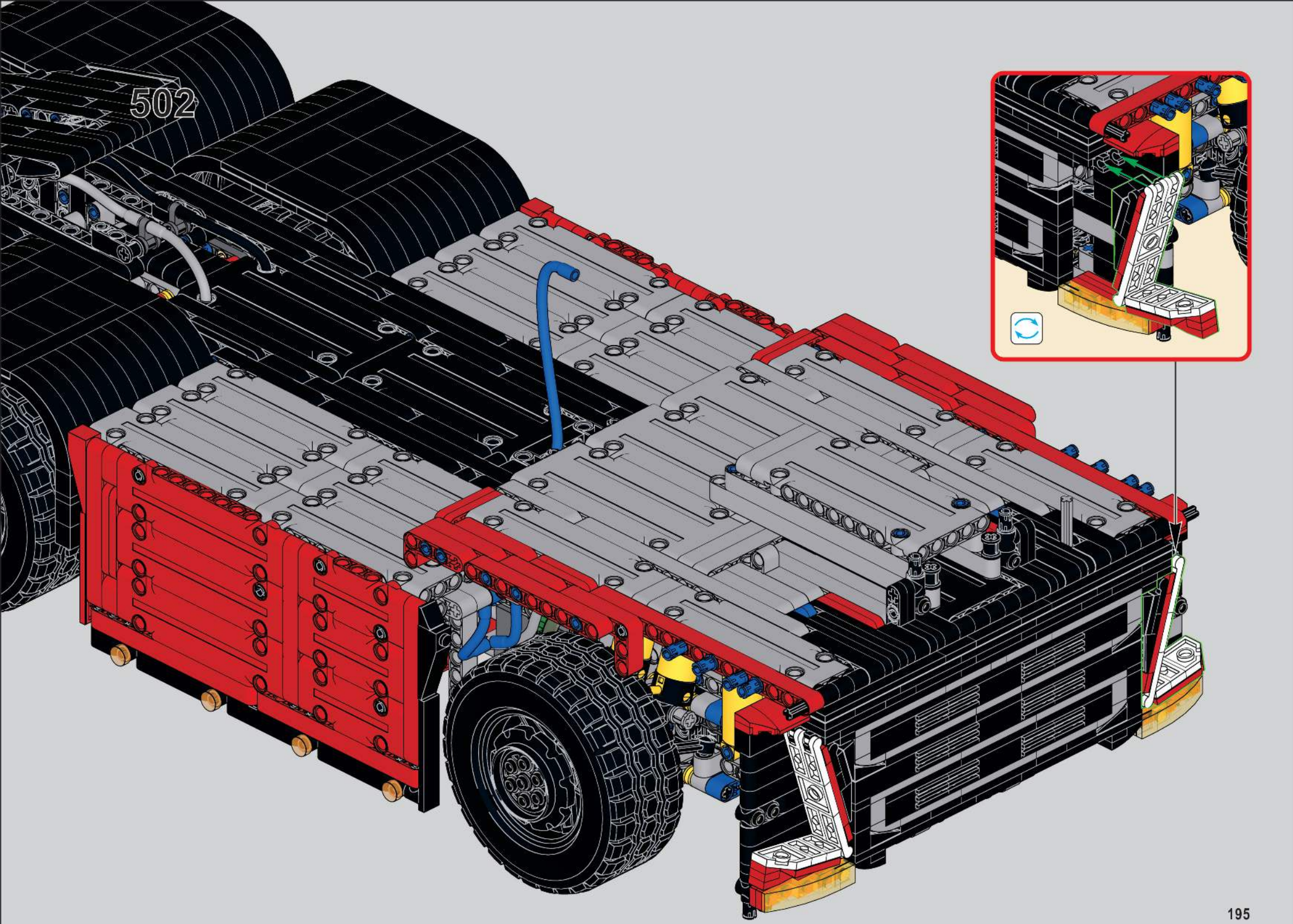
502

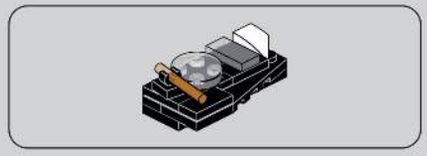

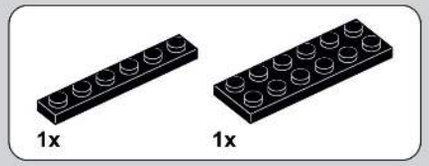

503

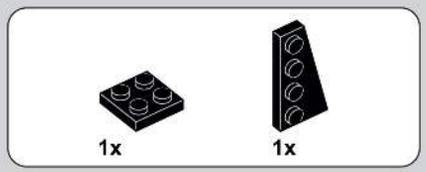

504

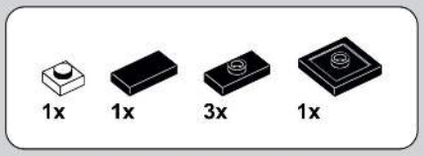

505

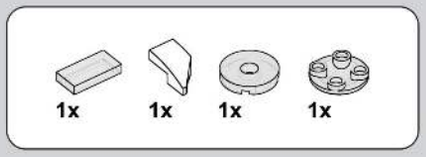

506

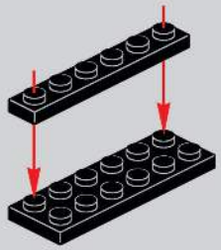

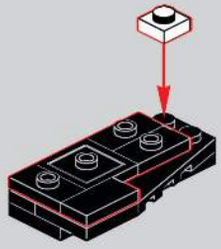

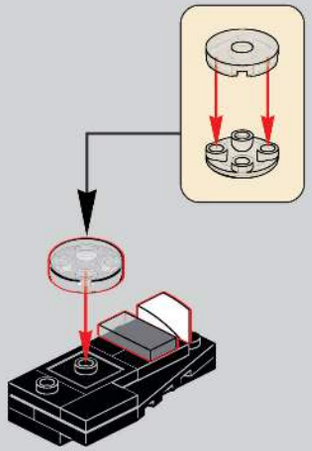

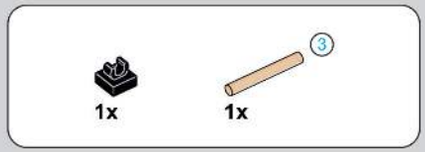

507

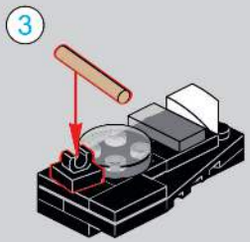

508

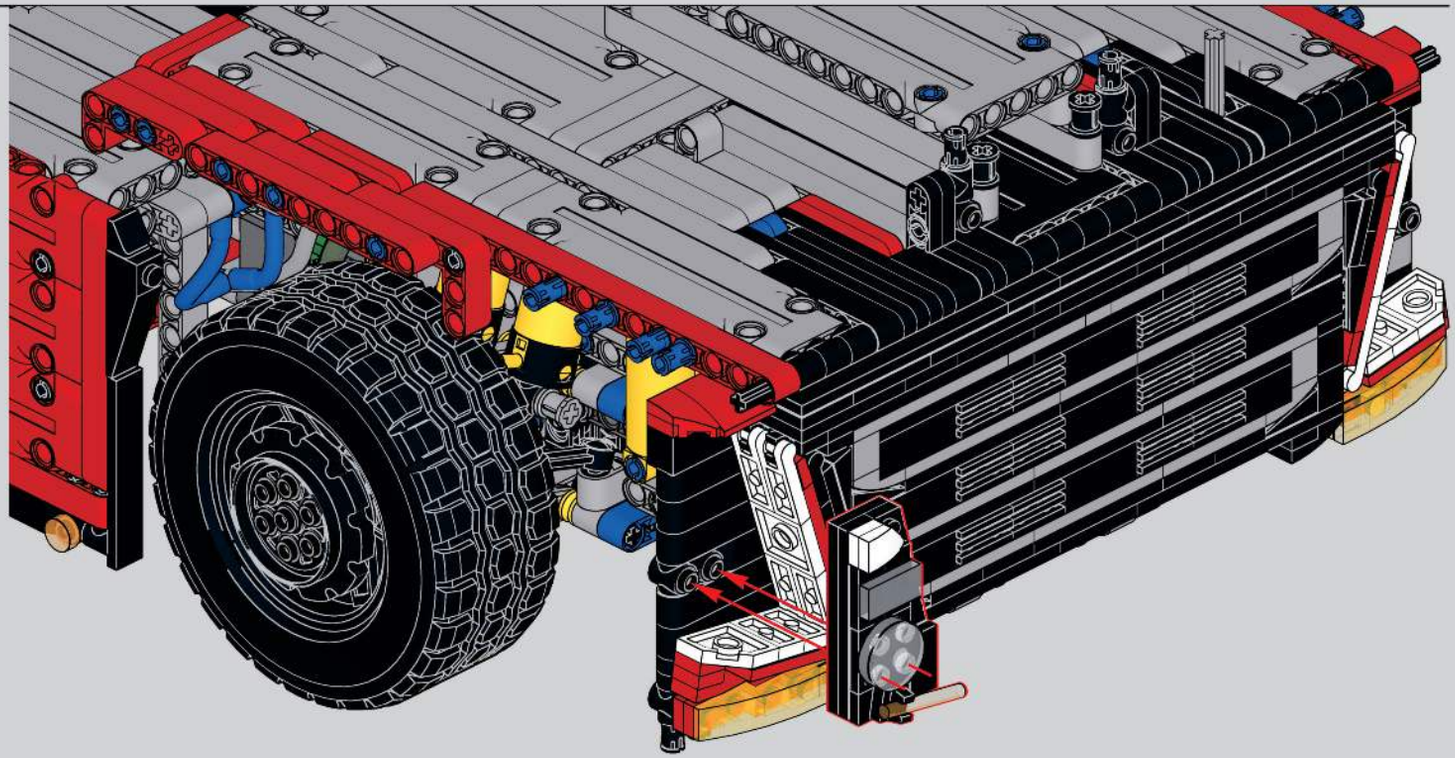

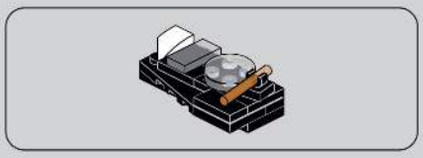

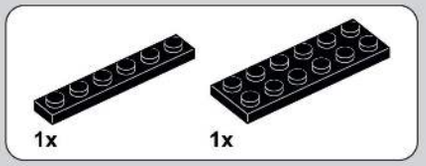

509

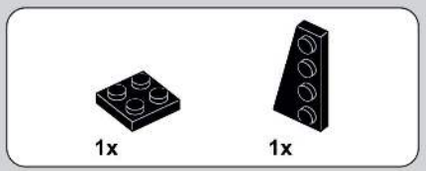

510

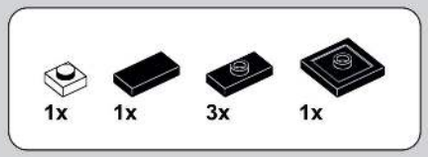

511

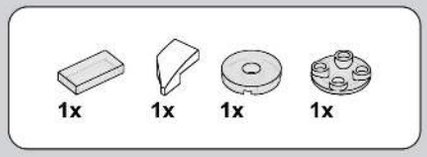

512

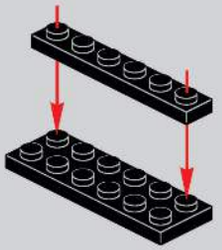

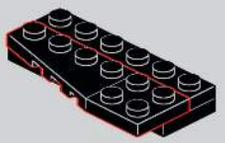

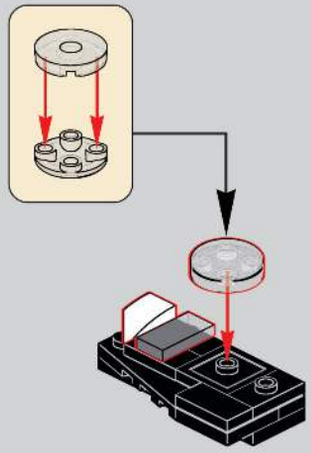

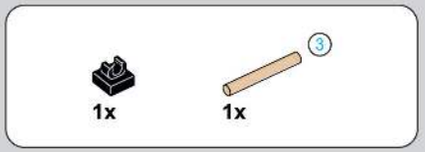

513

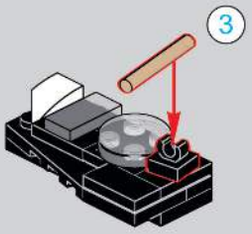

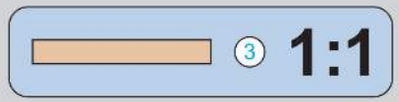

514

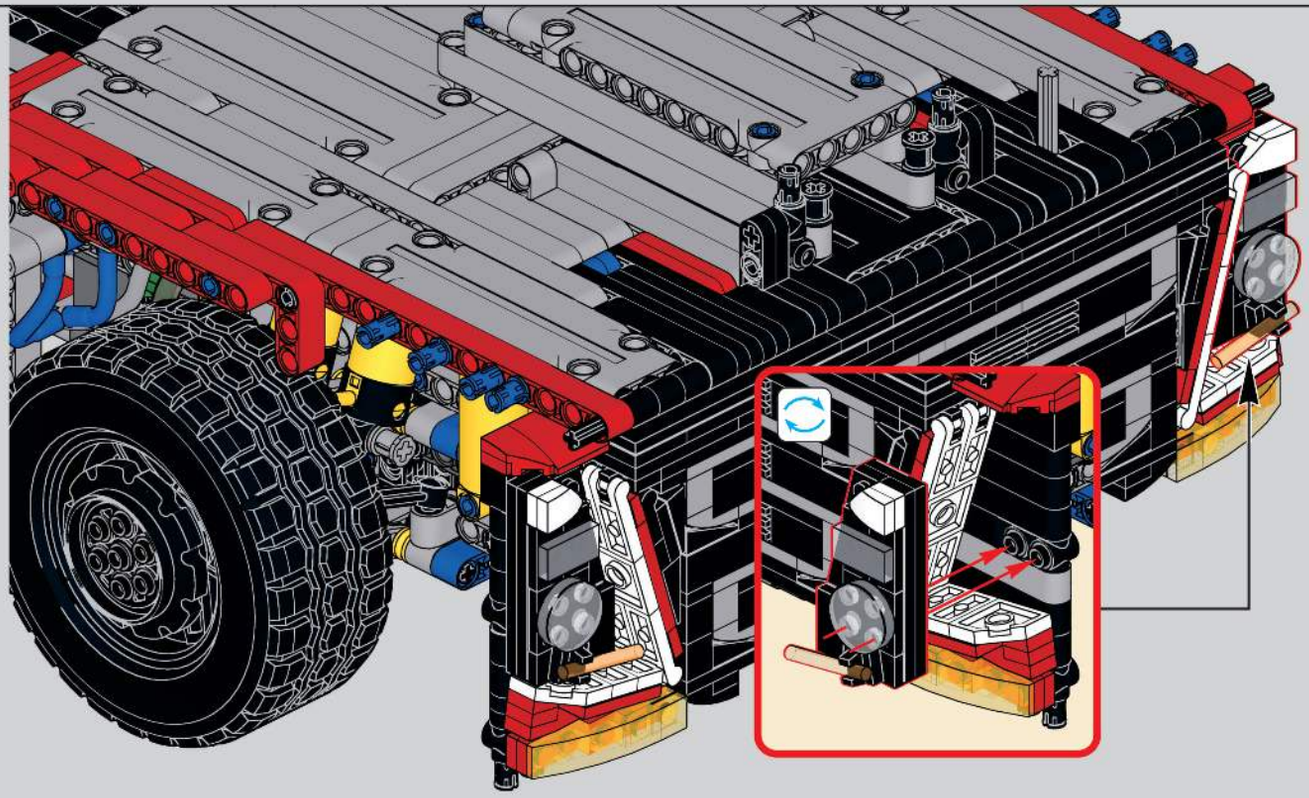

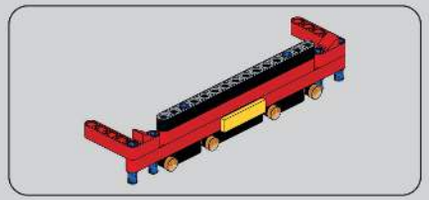

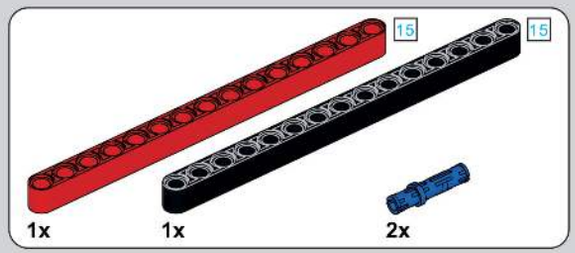

515

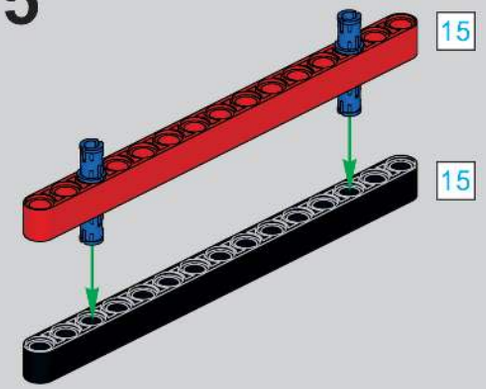

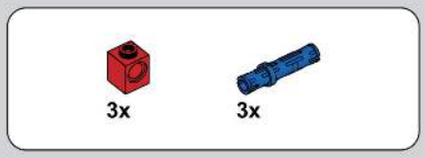

516

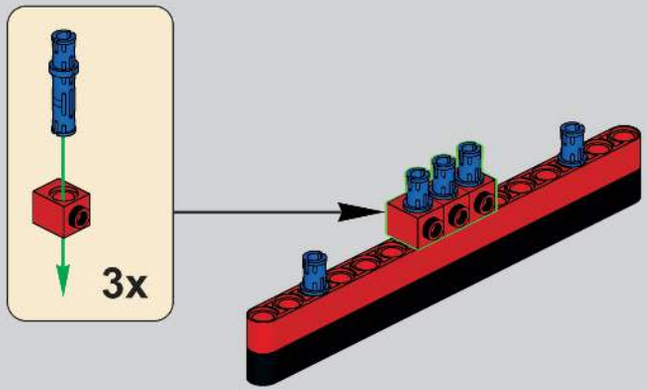

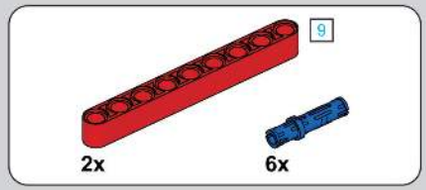

517

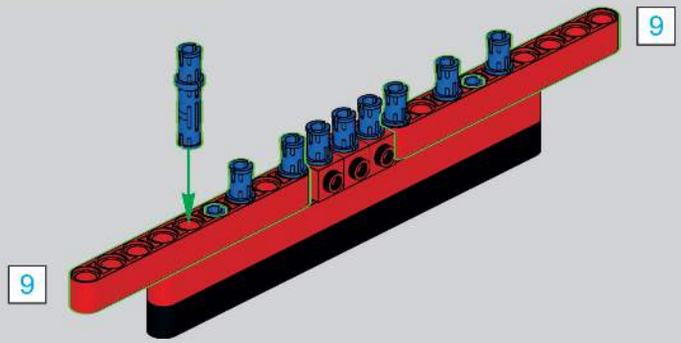

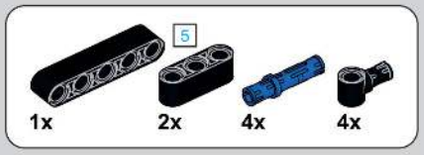

518

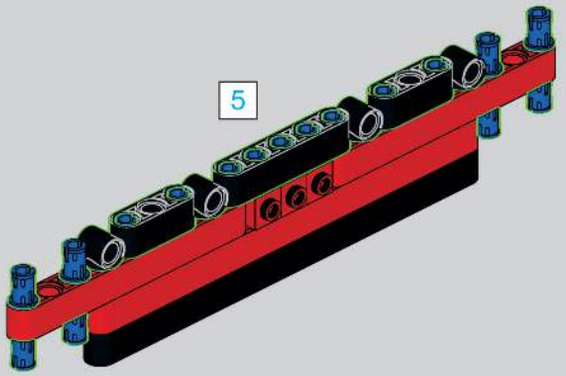

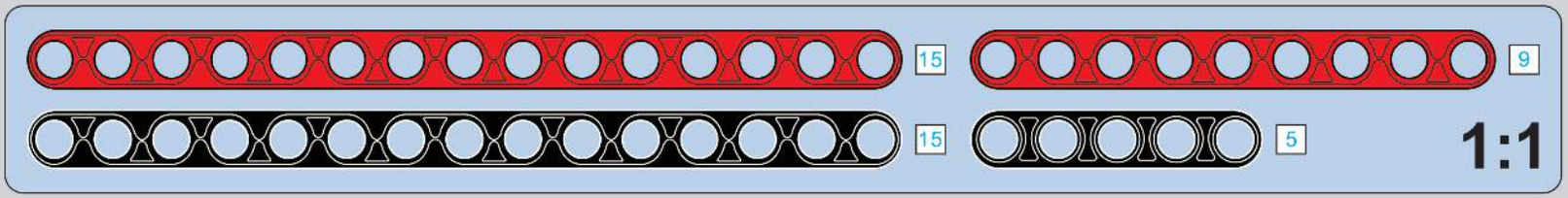

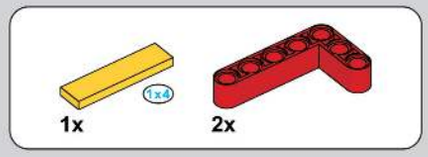

519

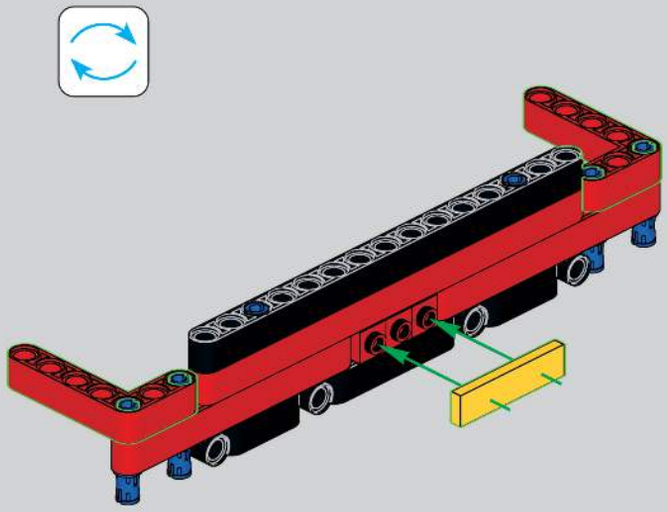

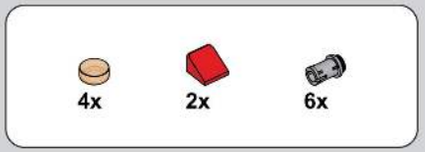

520

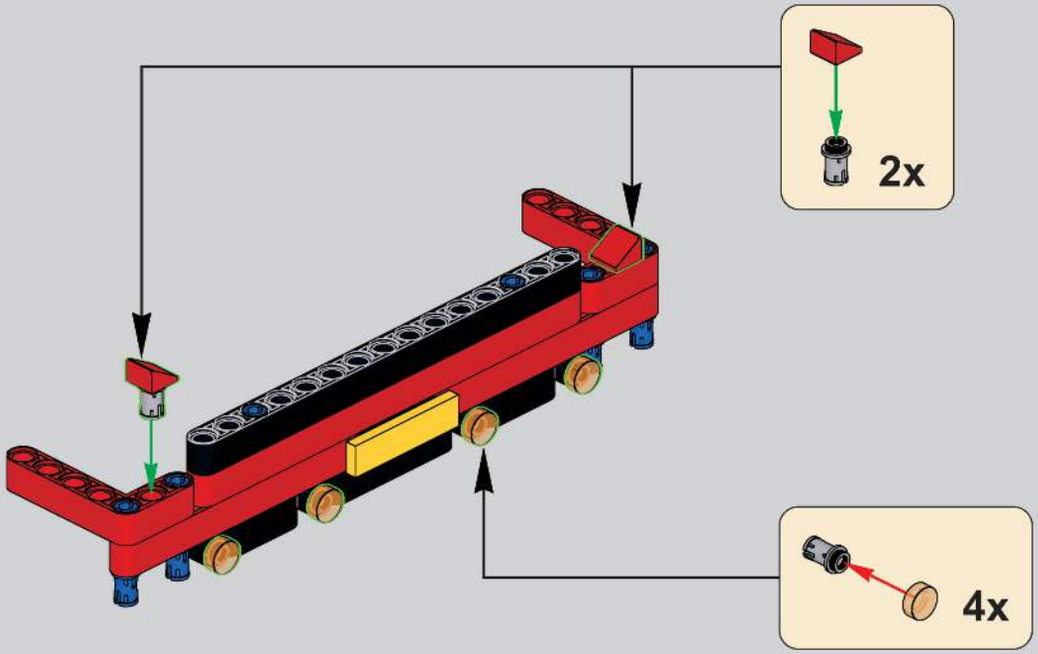

521

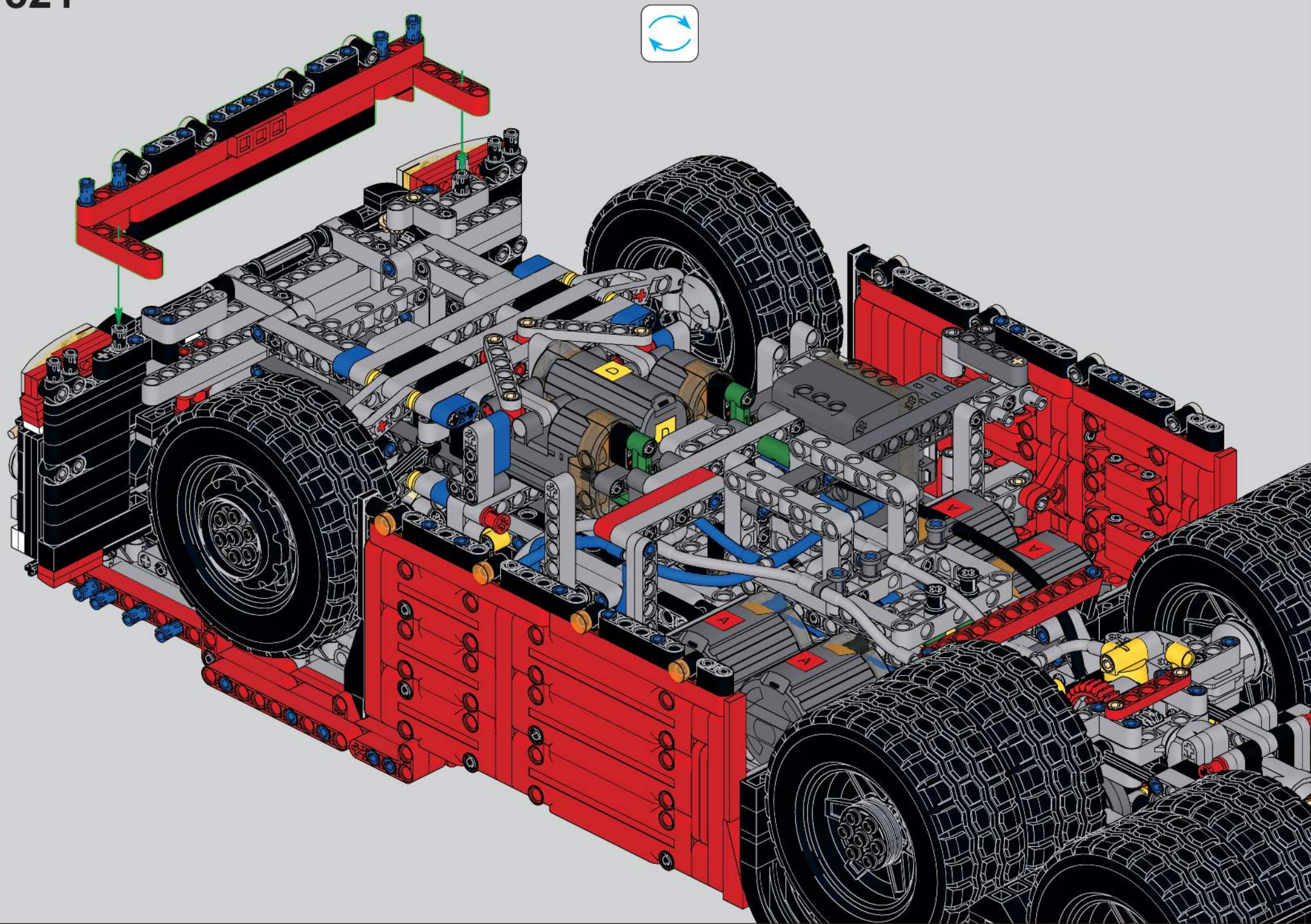

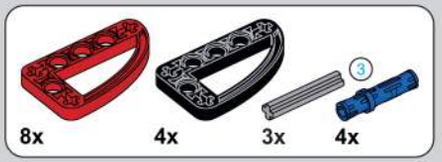

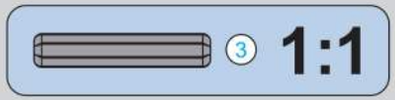

522

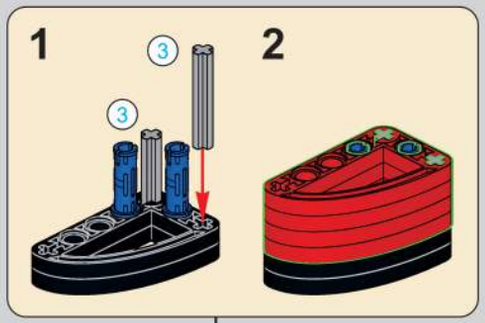

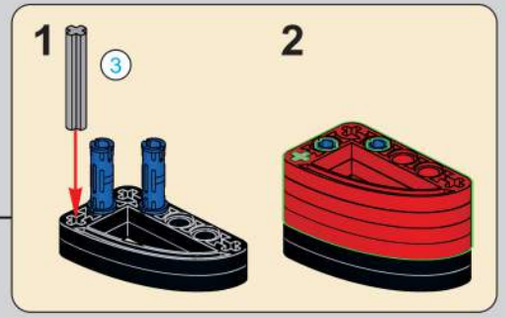

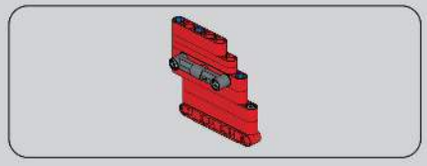

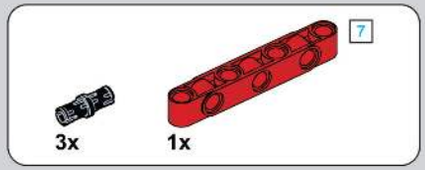

523

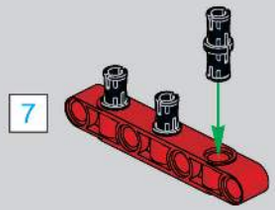

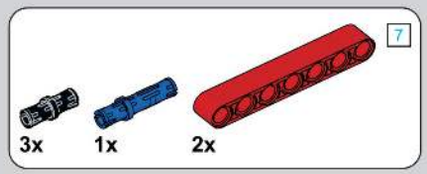

524

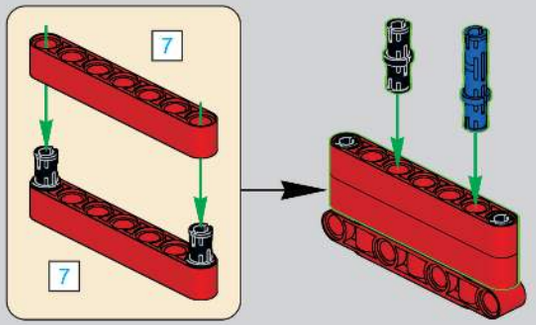

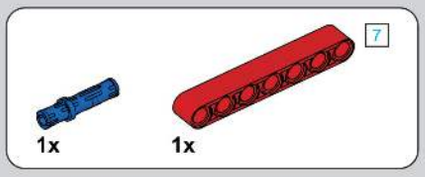

525

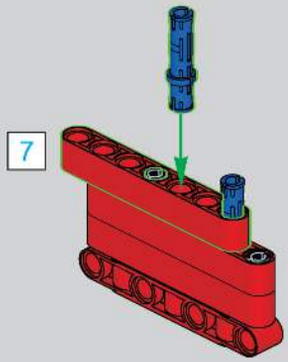

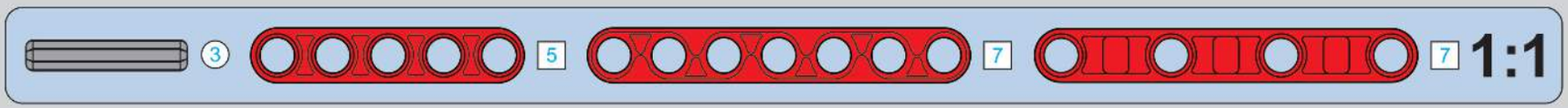

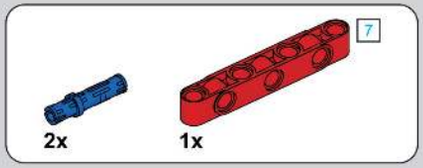

526

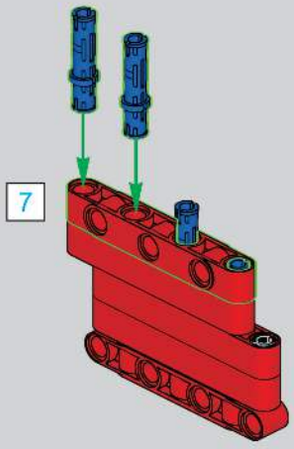

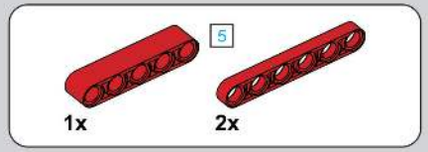

527

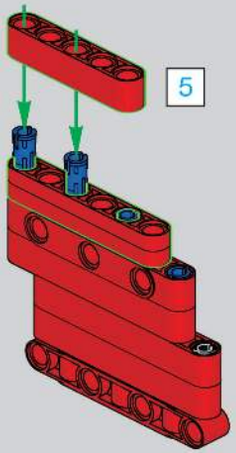

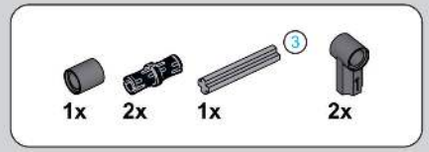

528

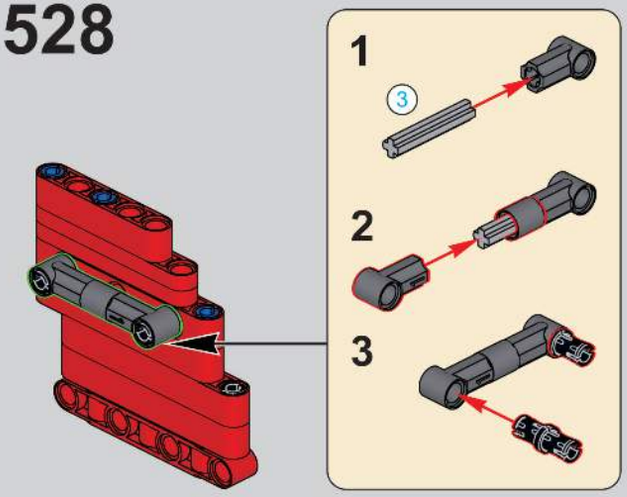

529

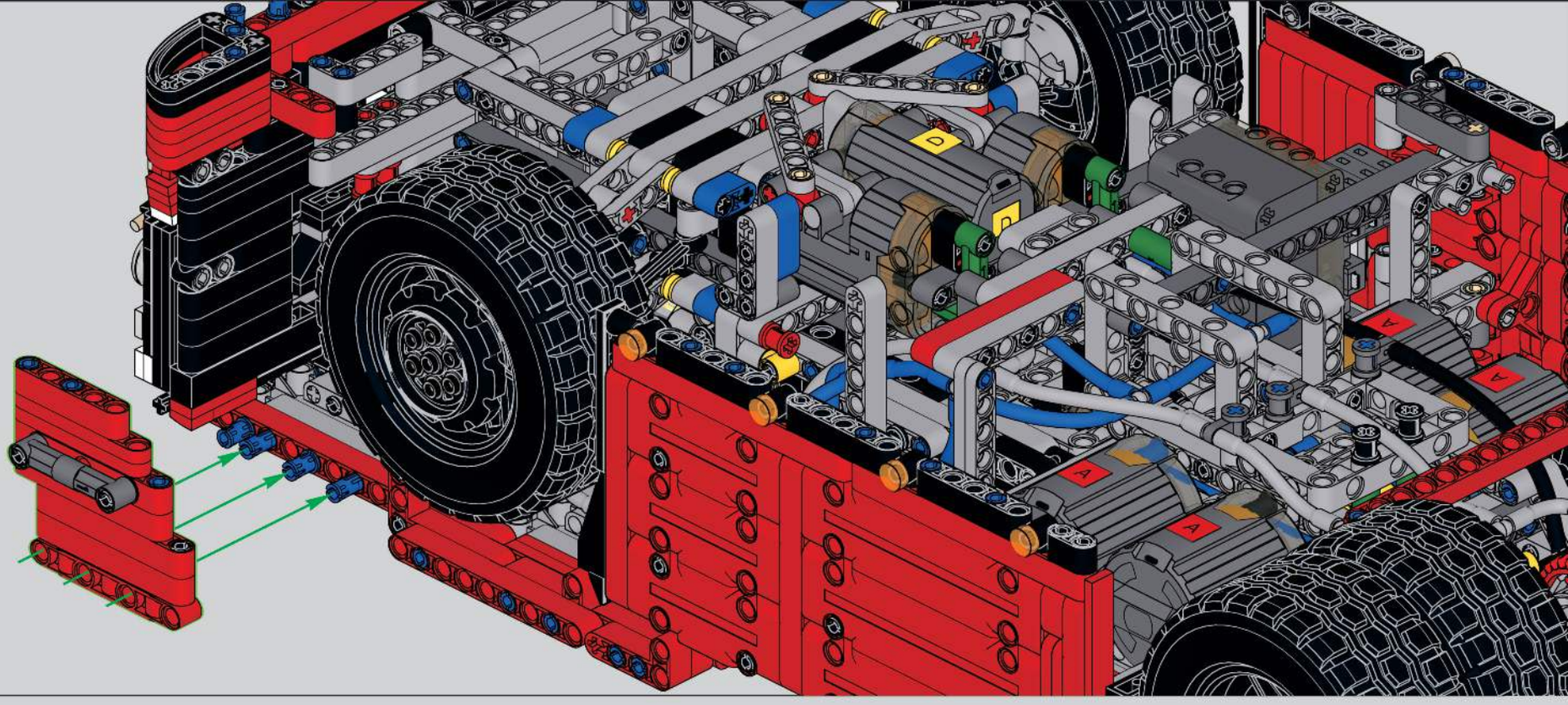

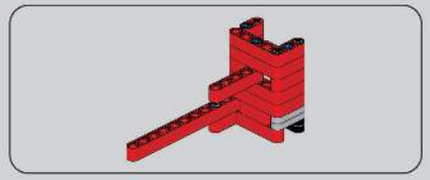

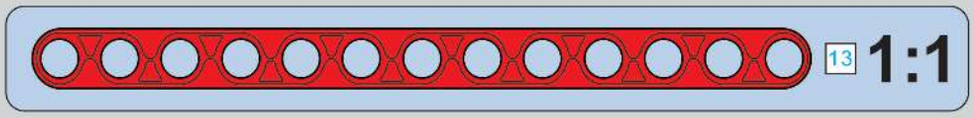

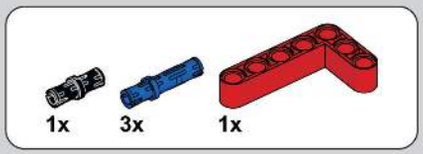

530

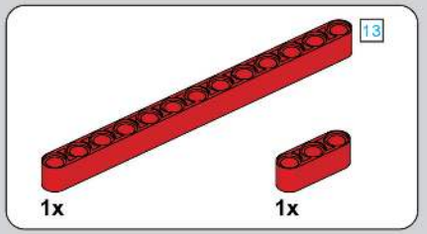

531

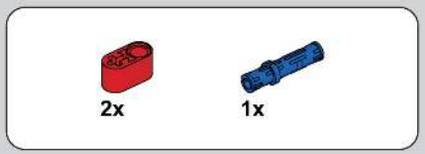

532

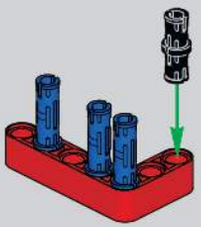

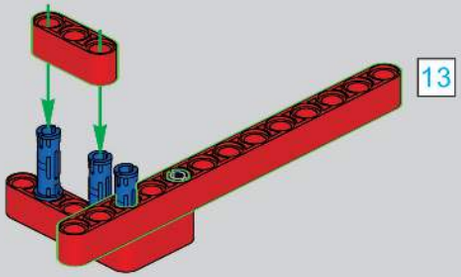

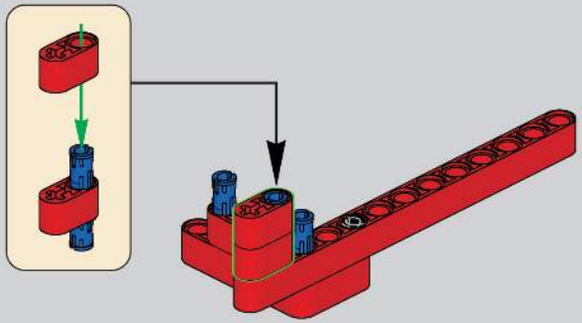

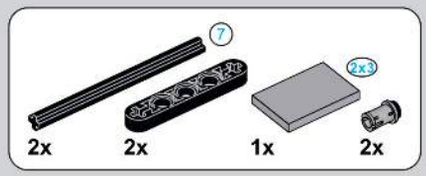

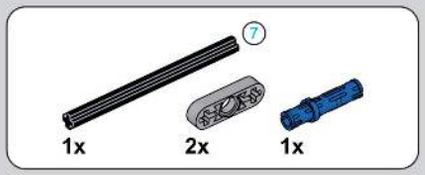

533

534

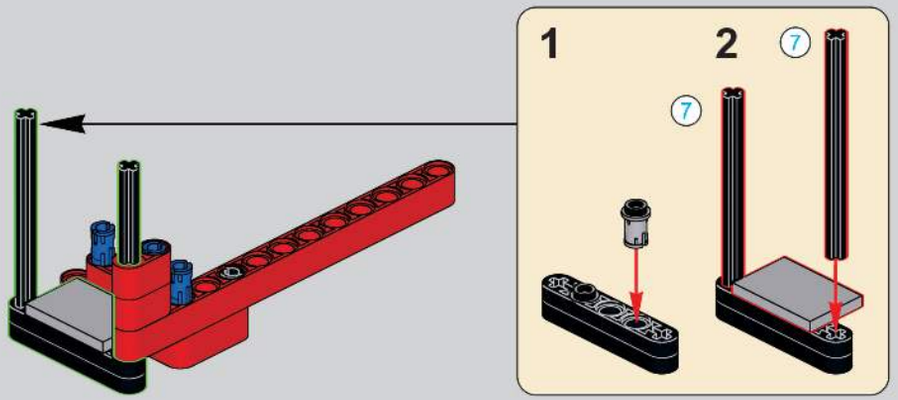

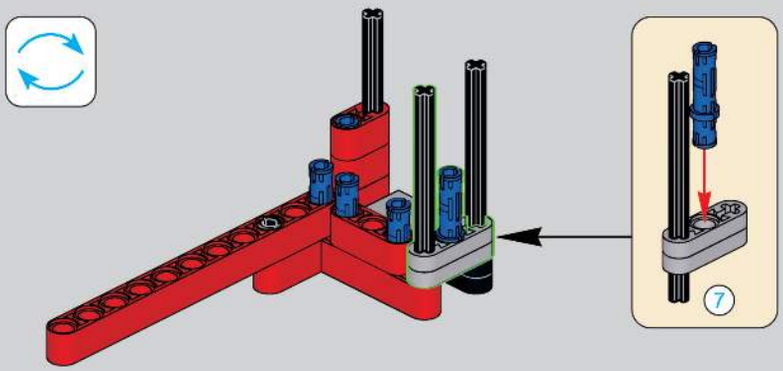

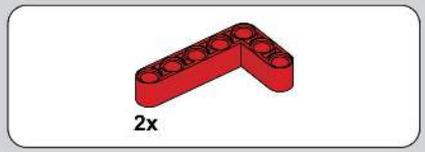

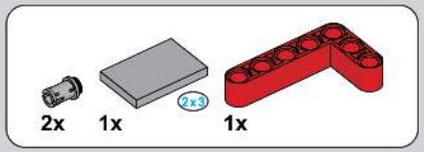

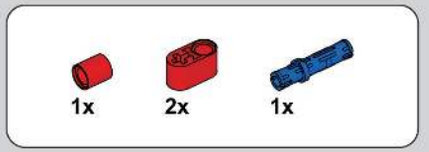

535

536

537

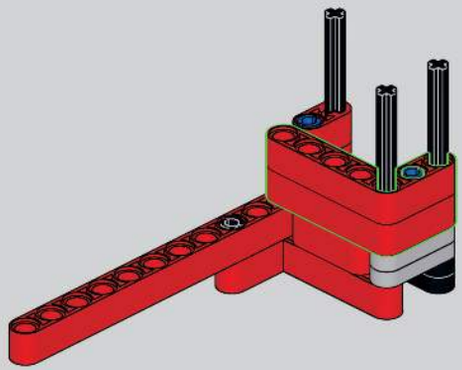

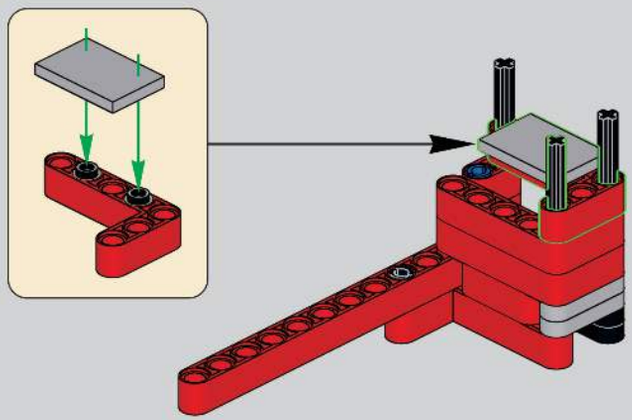

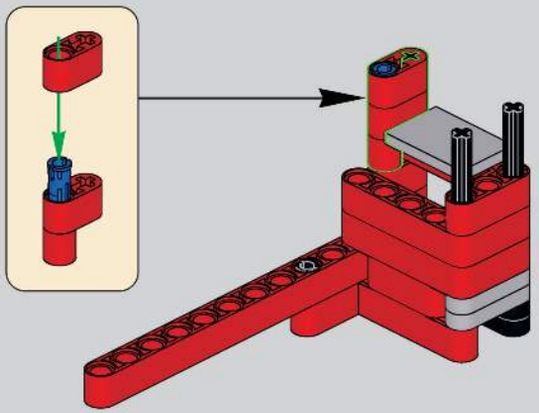

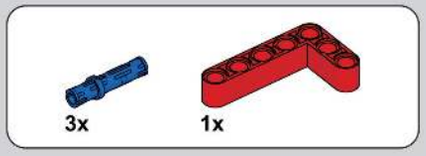

538

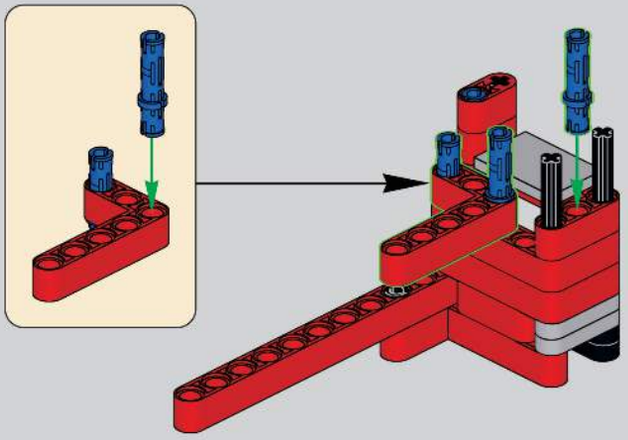

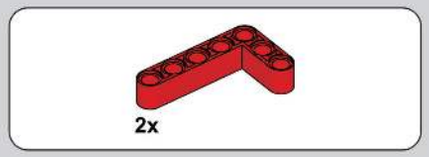

539

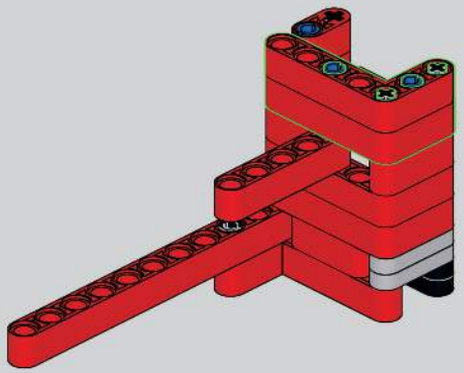

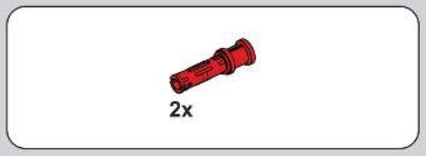

540

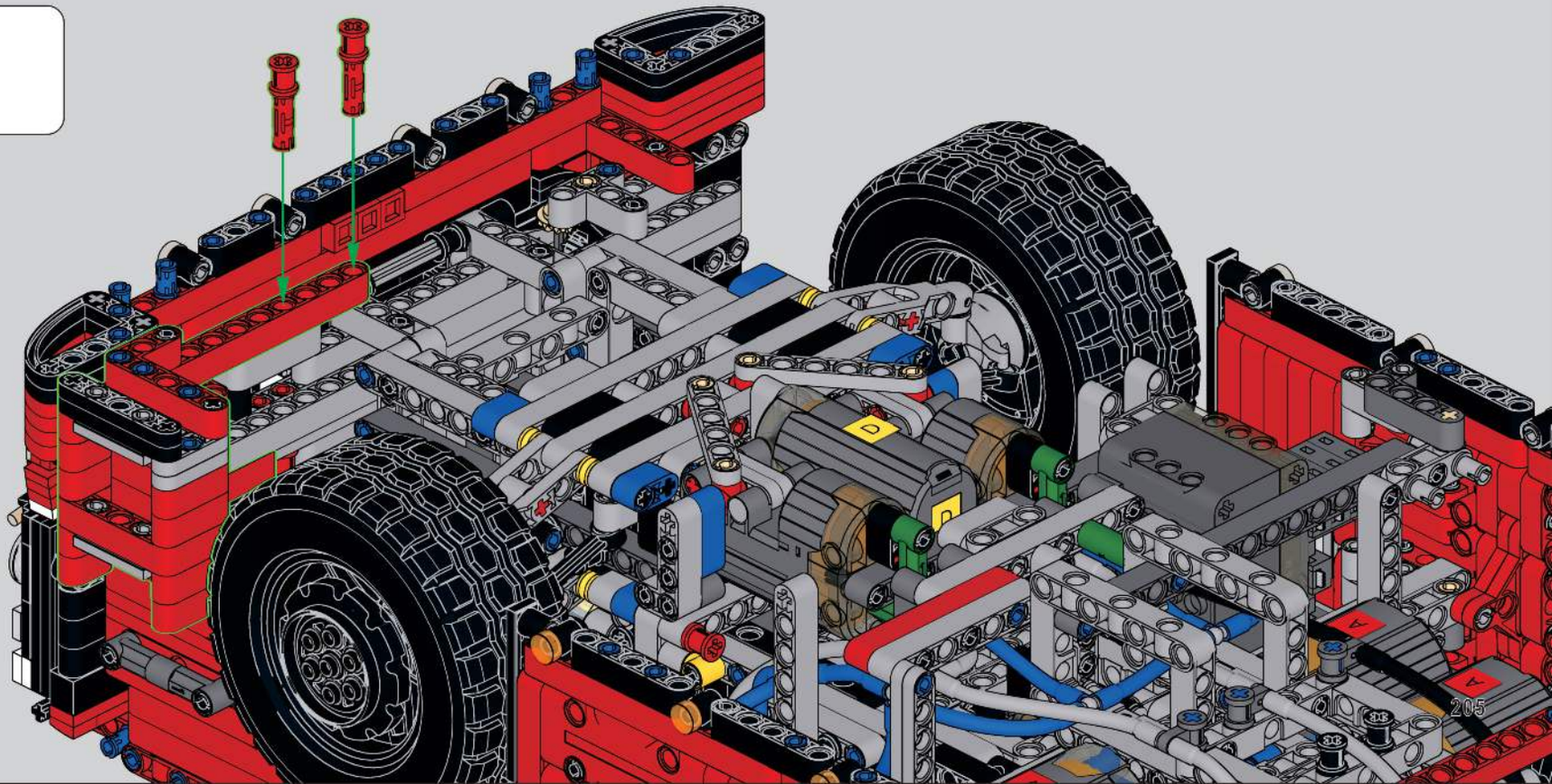

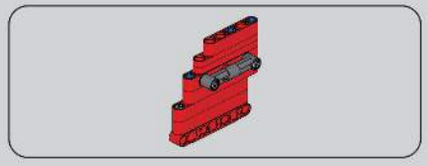

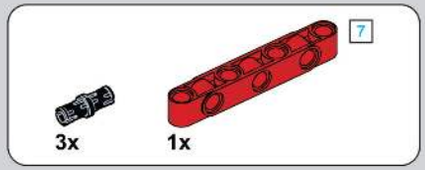

541

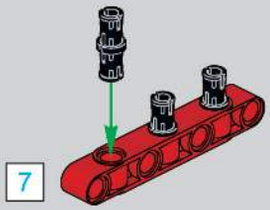

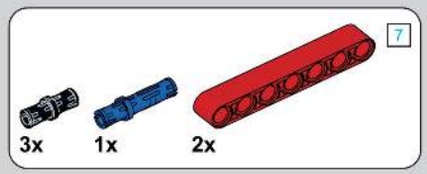

542

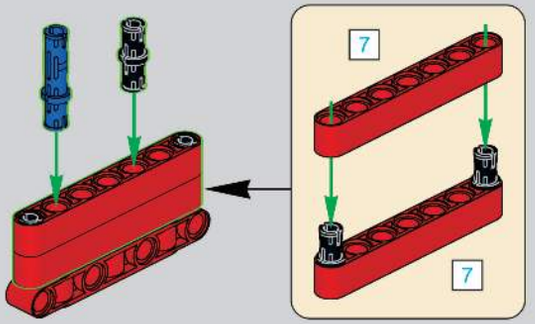

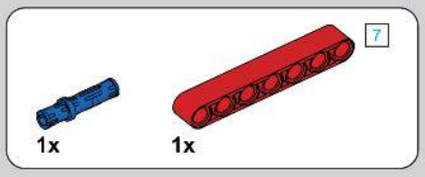

543

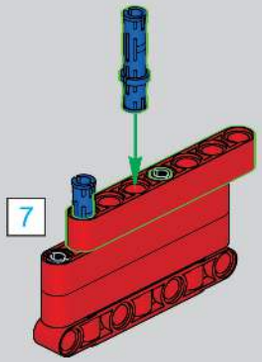

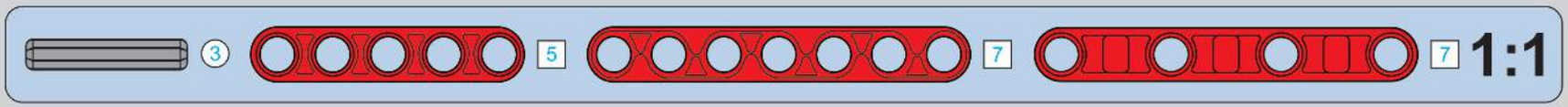

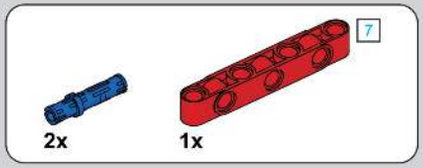

544

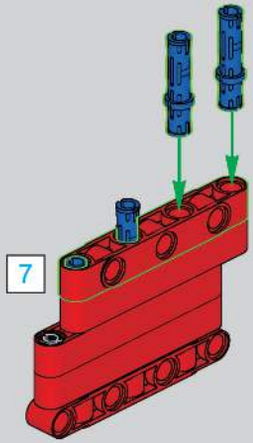

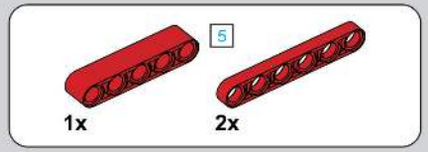

545

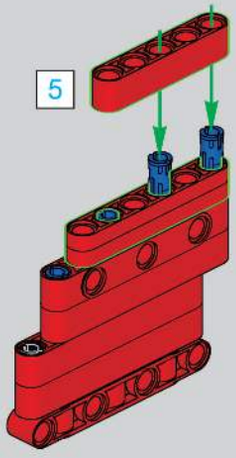

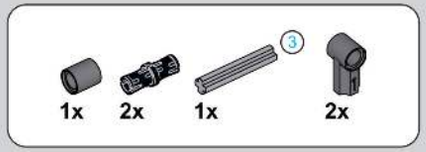

546

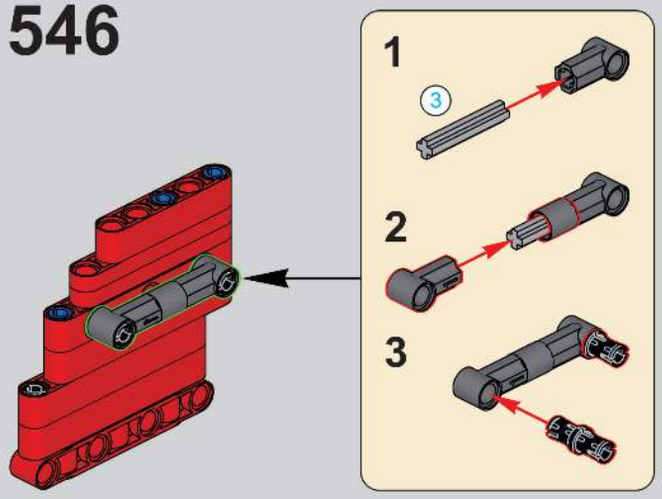

547

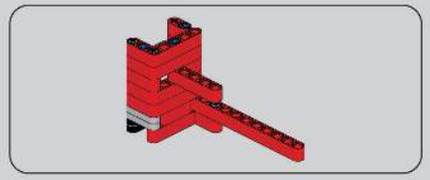

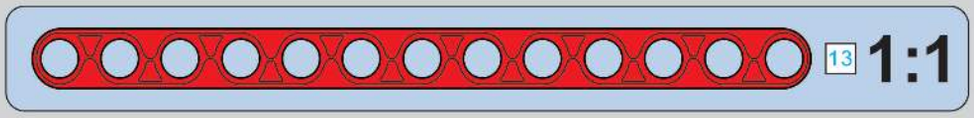

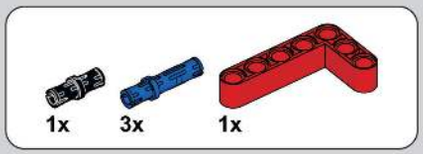

548

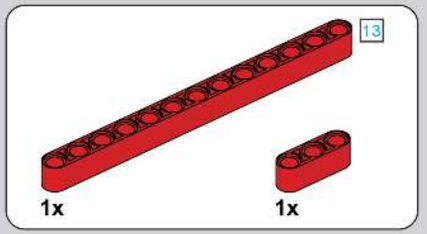

549

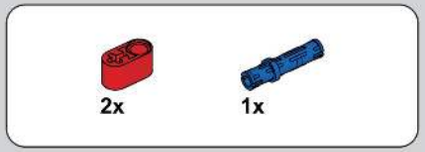

550

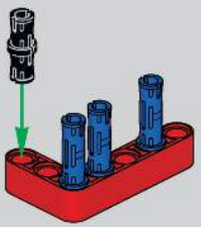

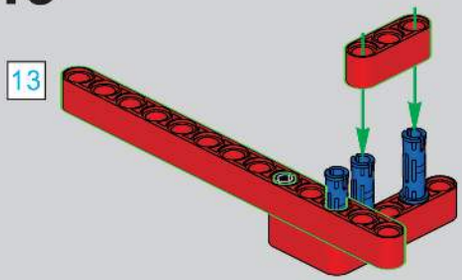

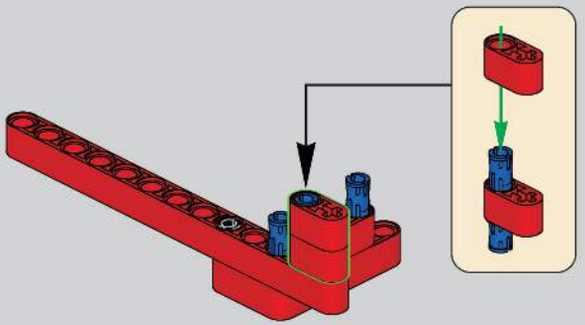

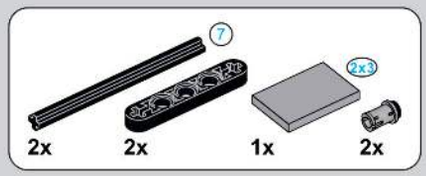

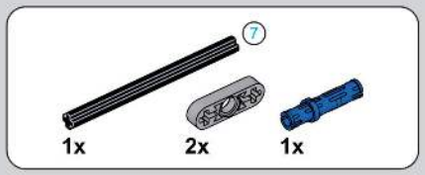

551

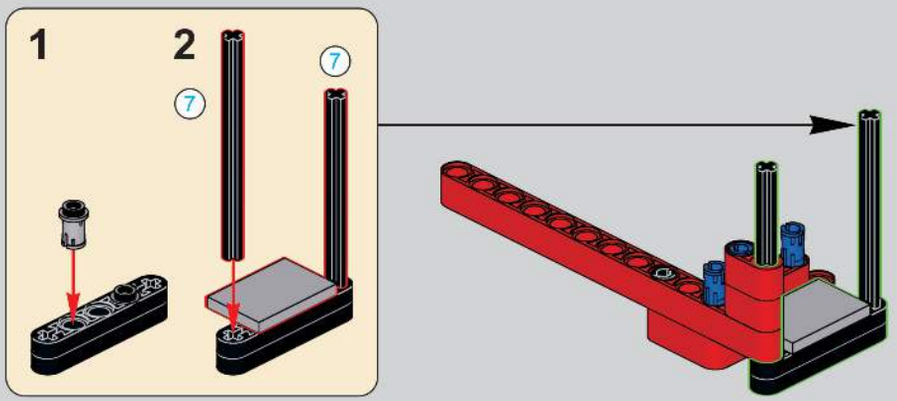

552

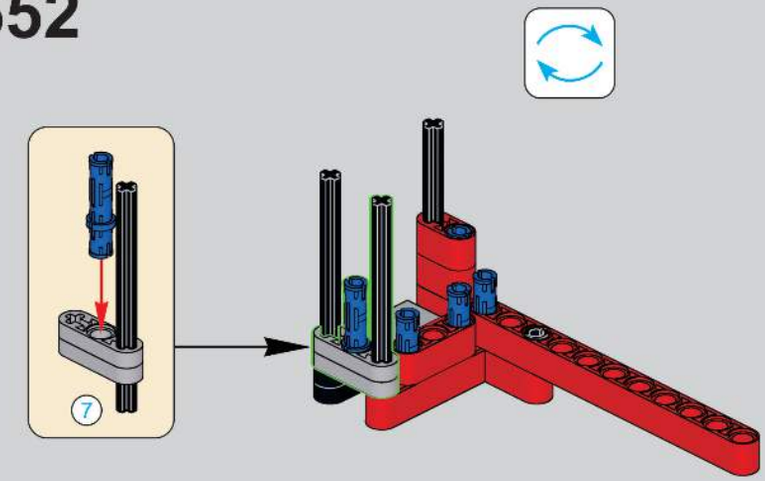

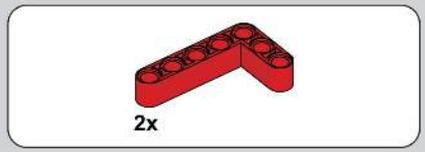

553

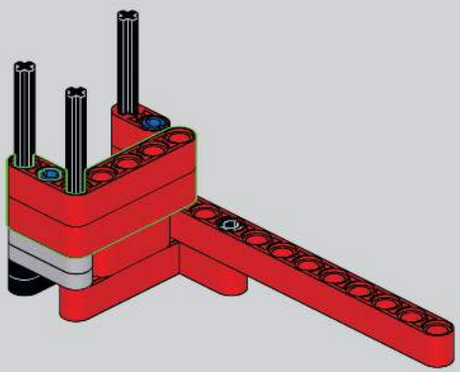

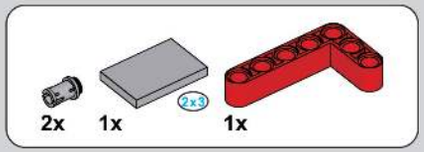

554

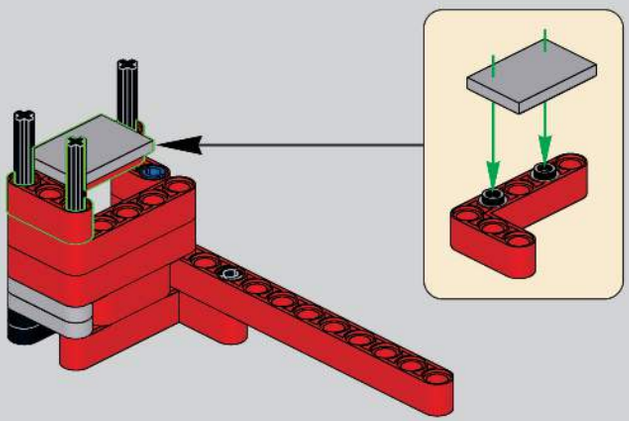

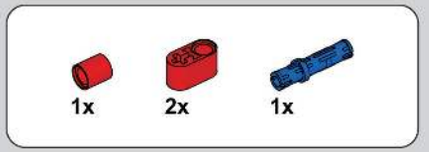

555

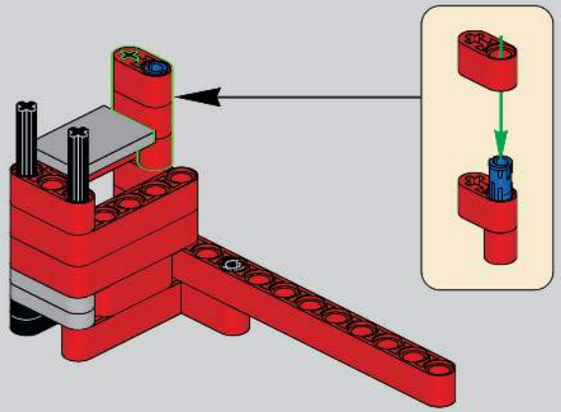

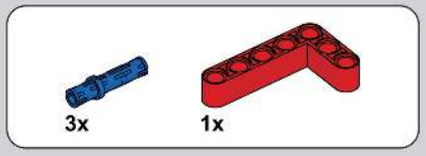

556

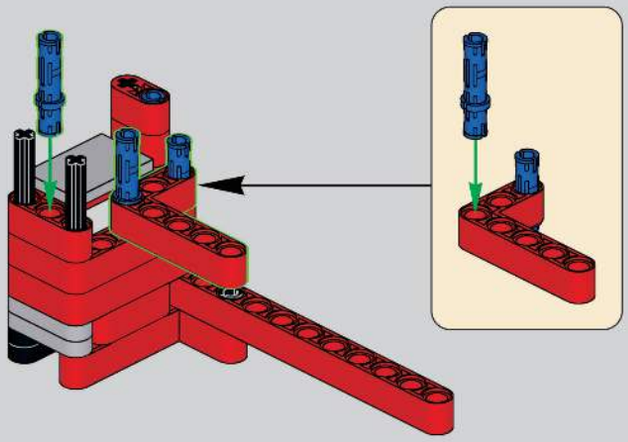

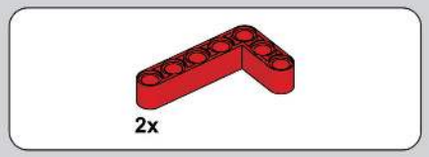

557

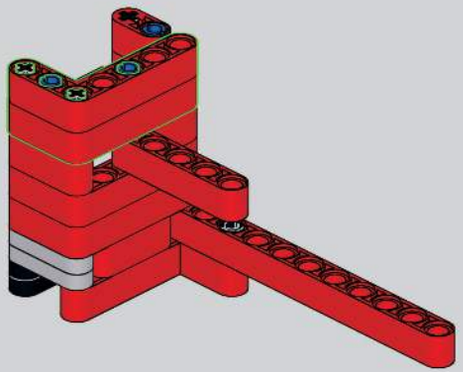

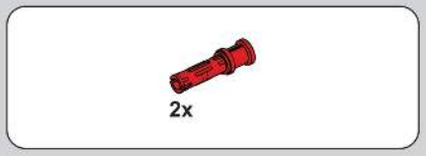

558

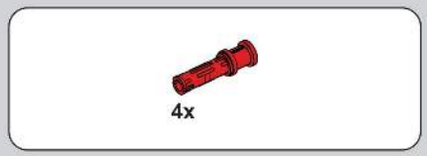

559

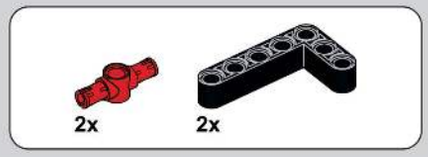

560

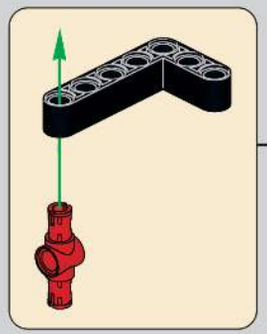

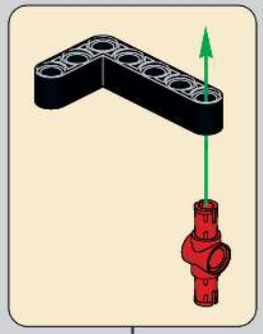

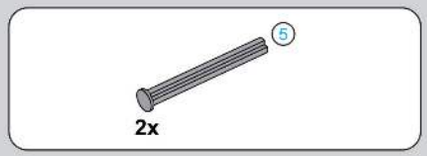

561

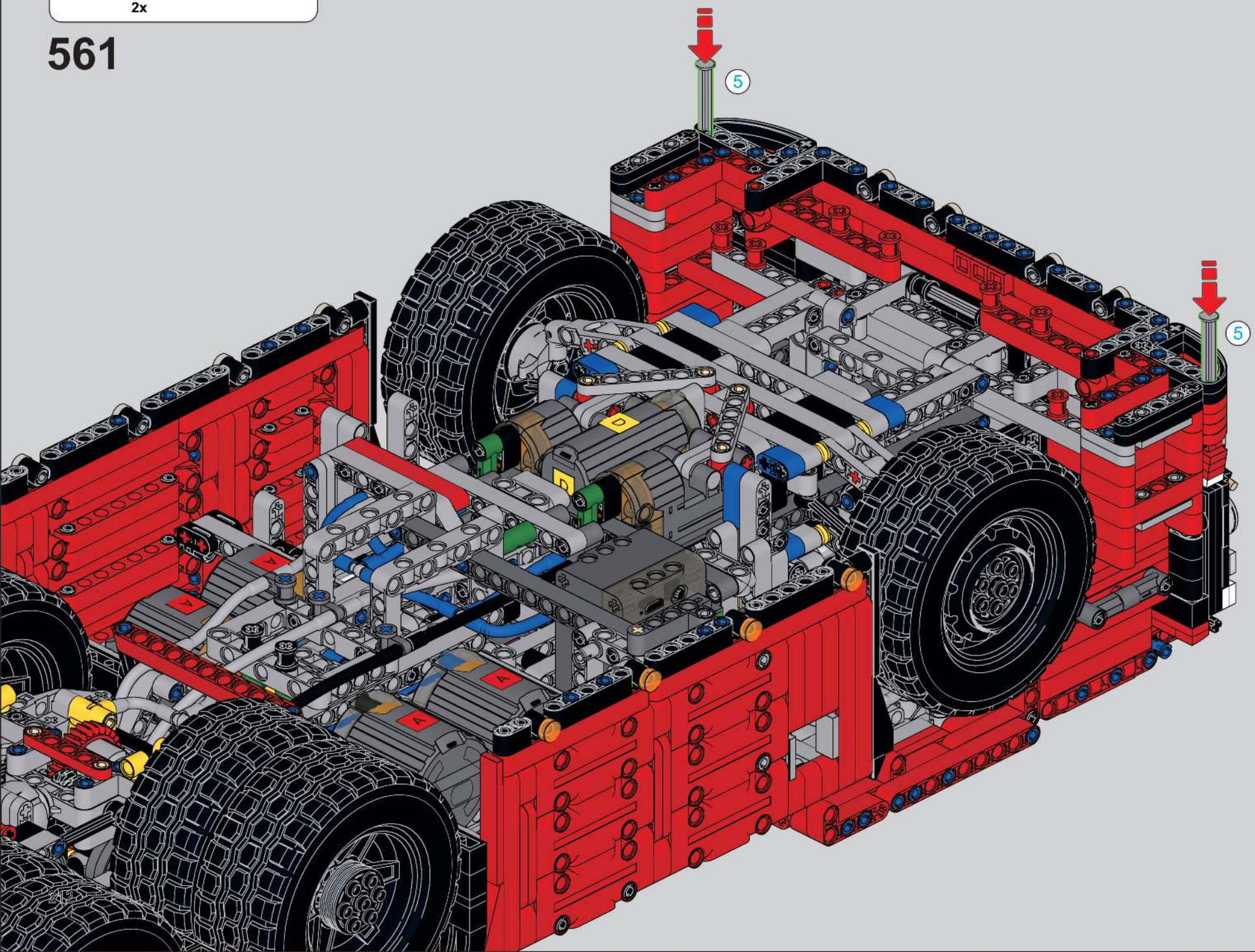

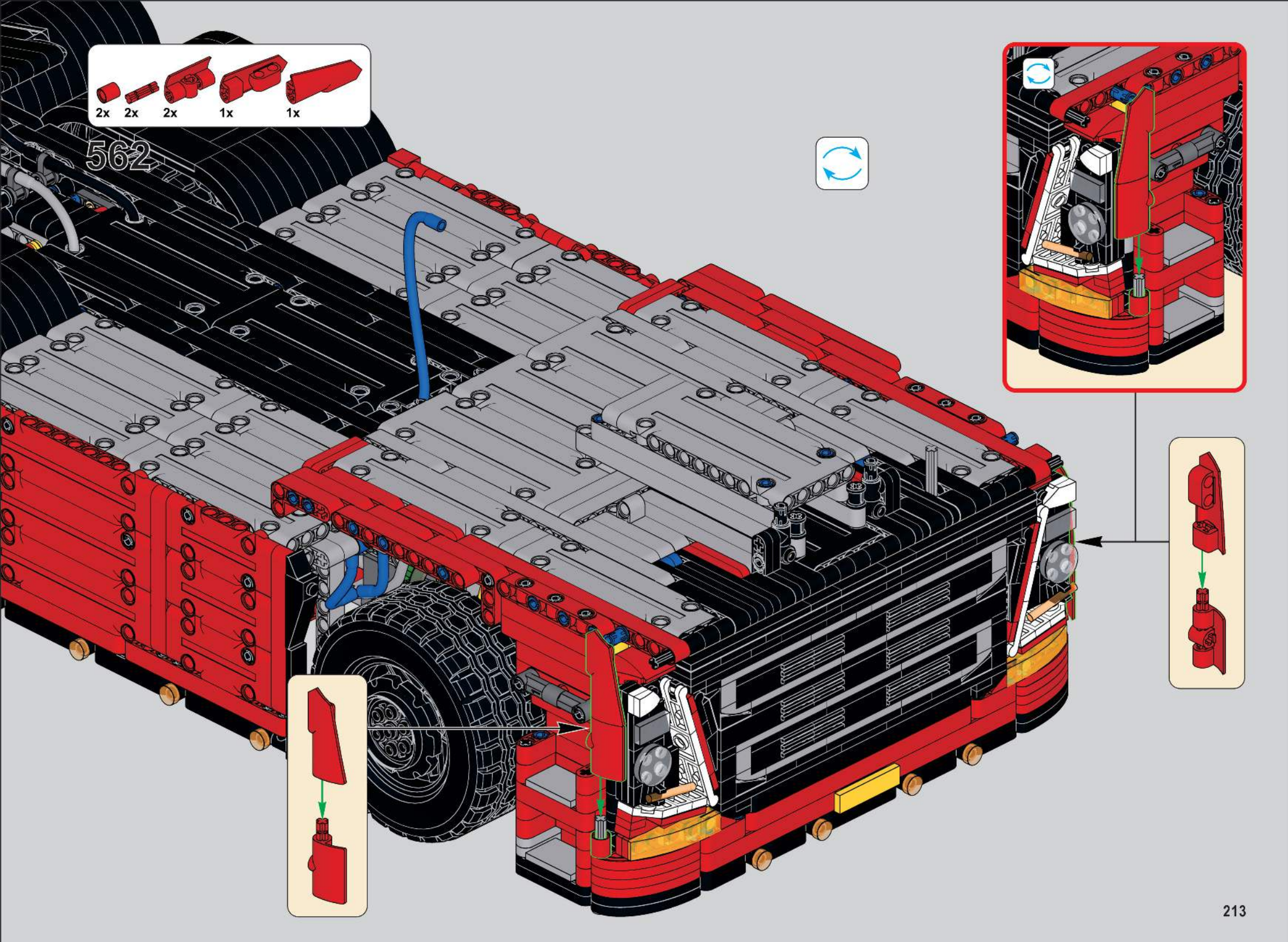
2x
2x
2x
1x
1x
562

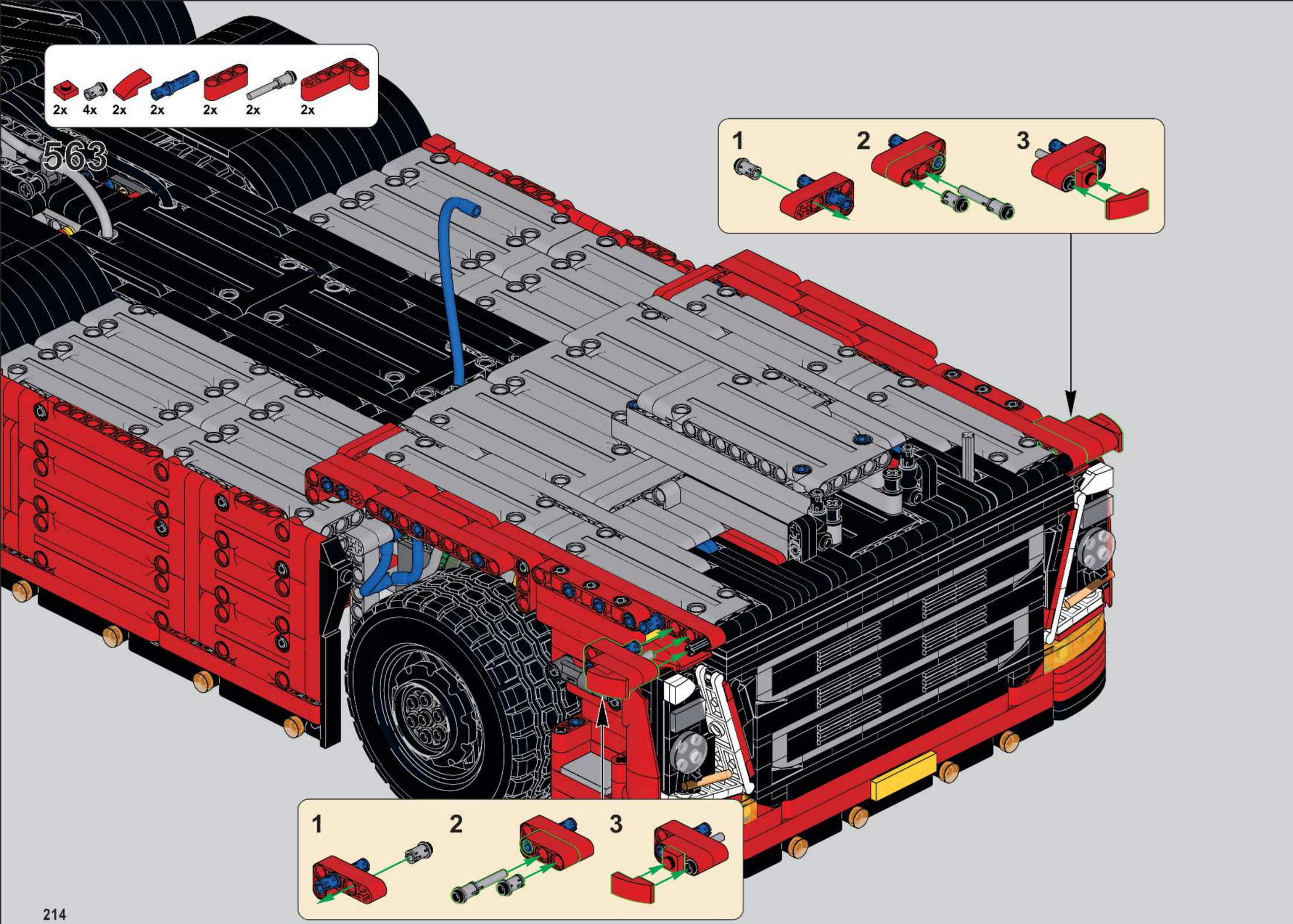
2x 4x 2x 2x 2x 2x 2x
563
1
2
3
1
2
3

564

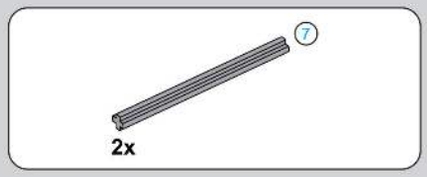

565

566

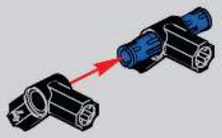

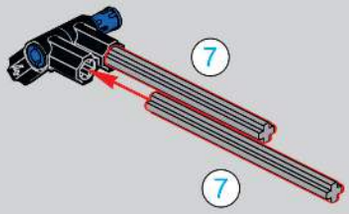

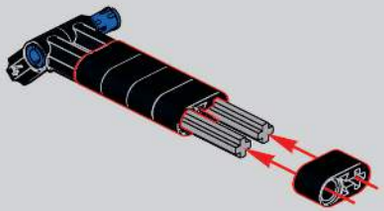

567

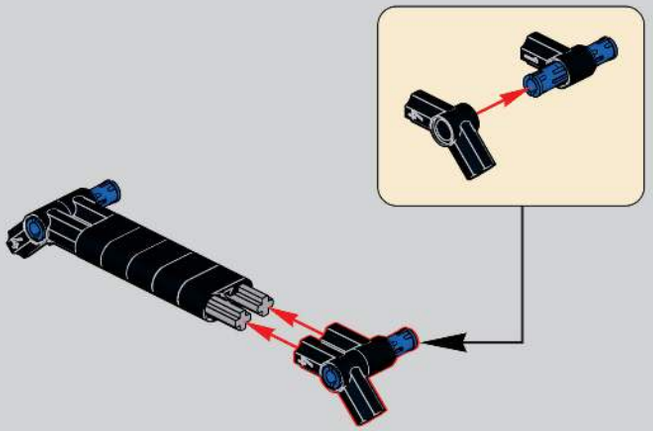

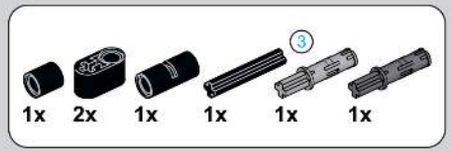

568

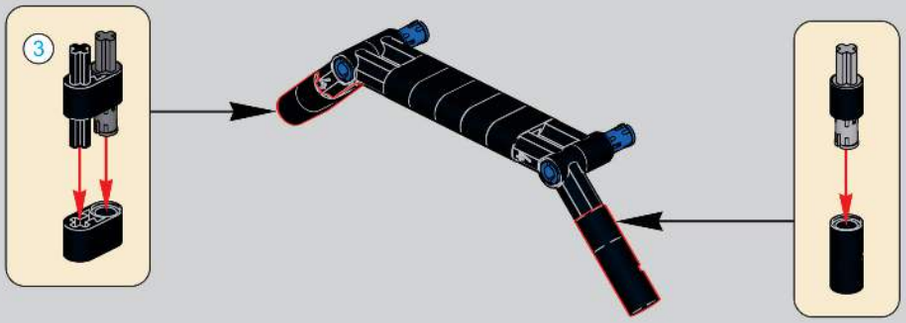

569

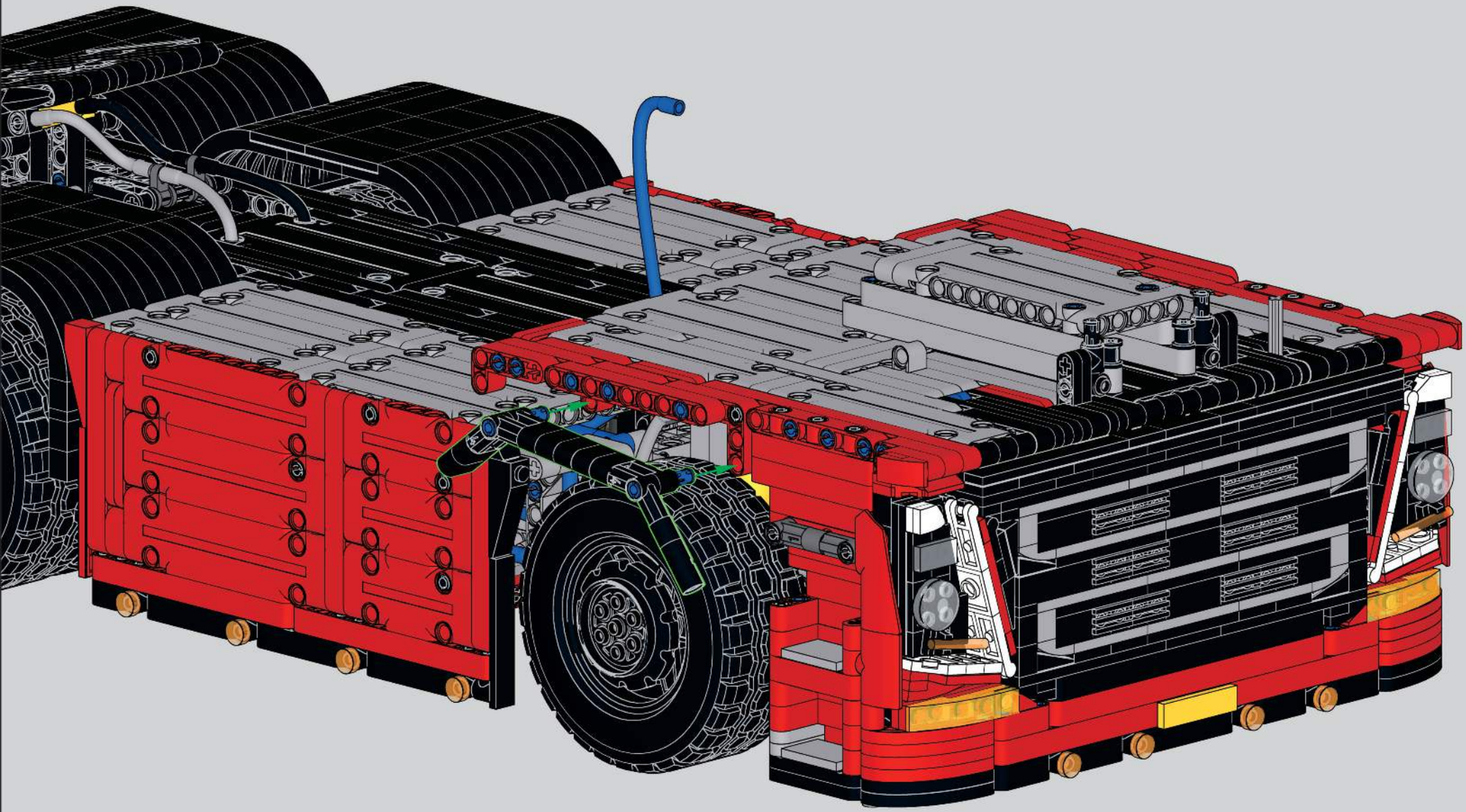

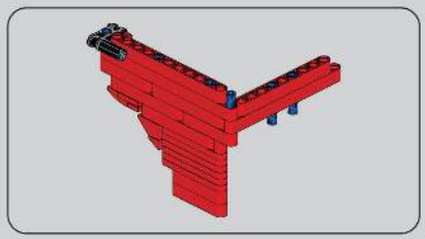

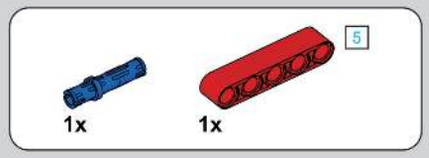

571

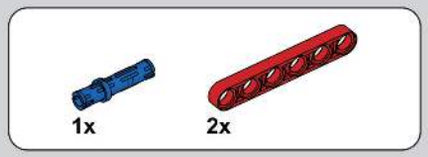

572

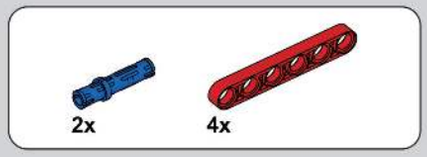

573

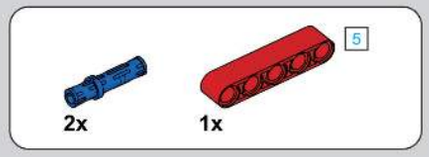

570

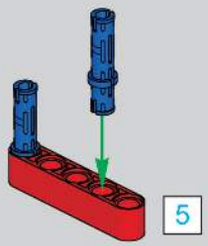

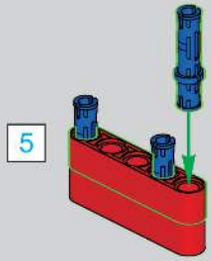

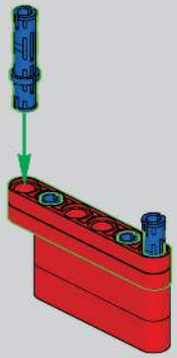

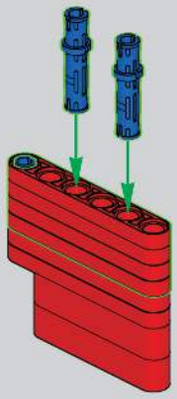

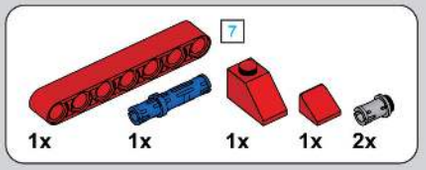

574

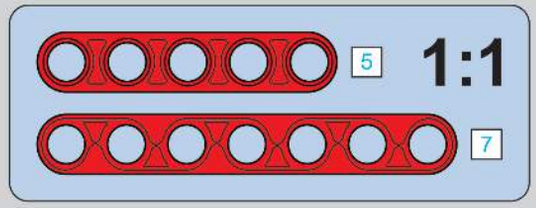

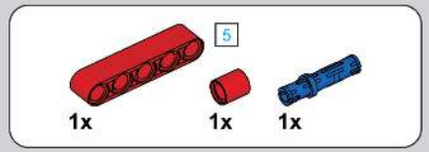

575

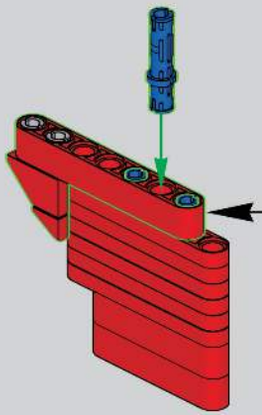

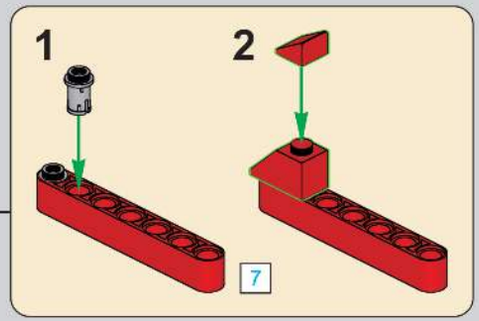

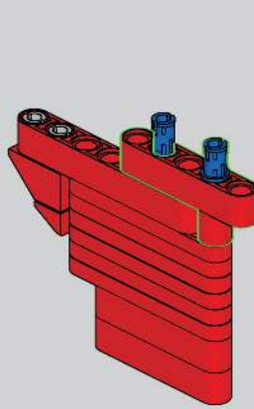

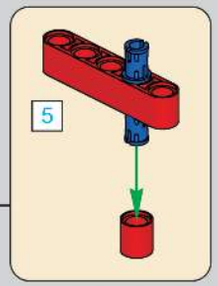

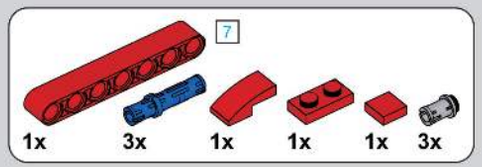

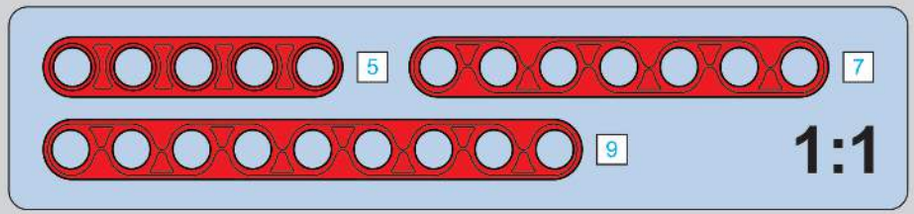

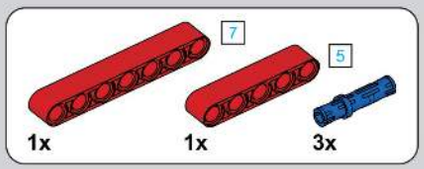

576

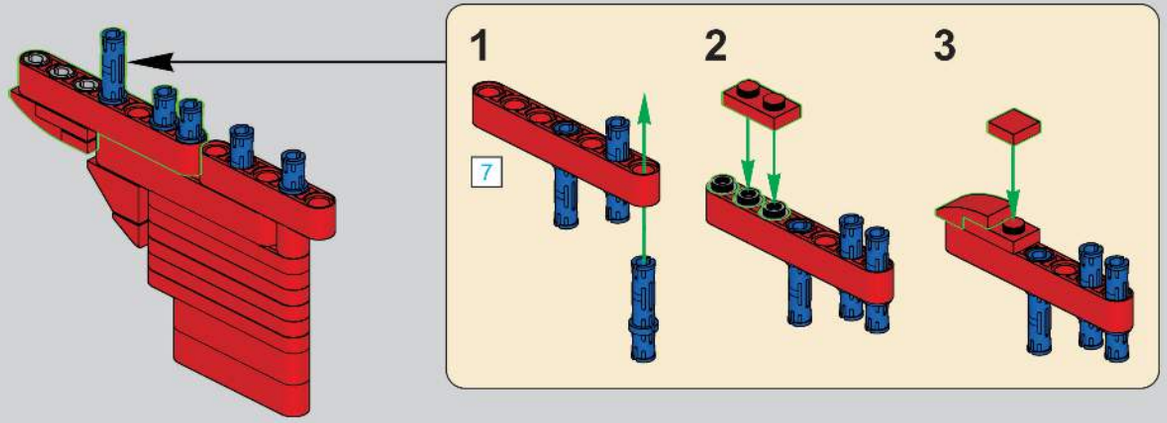

577

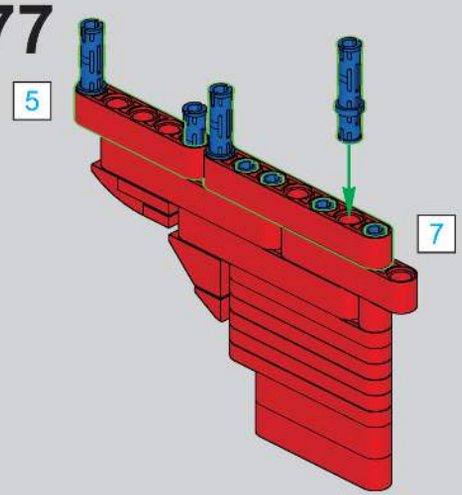

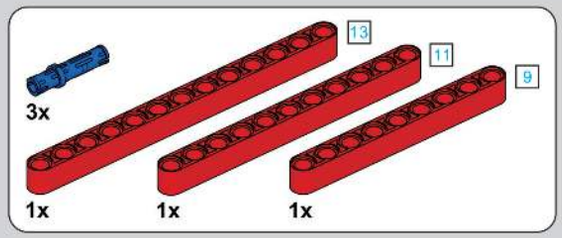

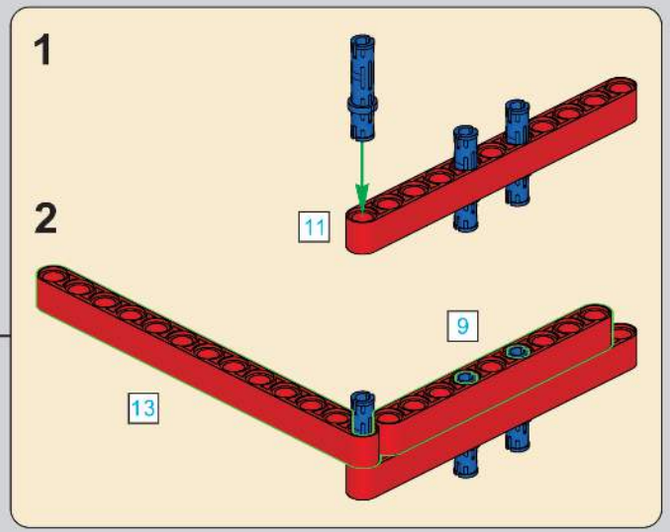

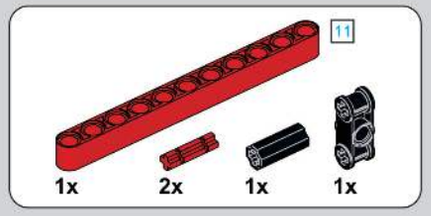

578

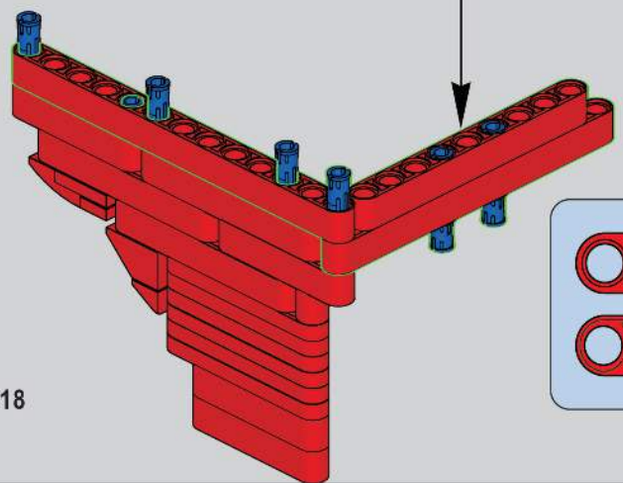

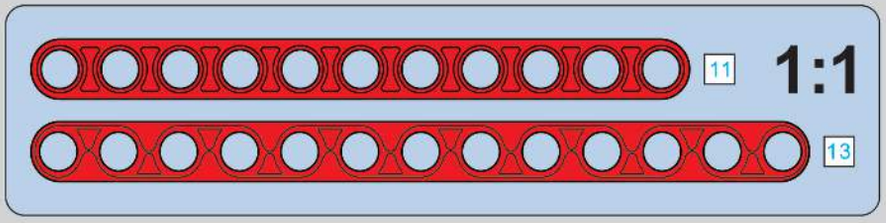

579

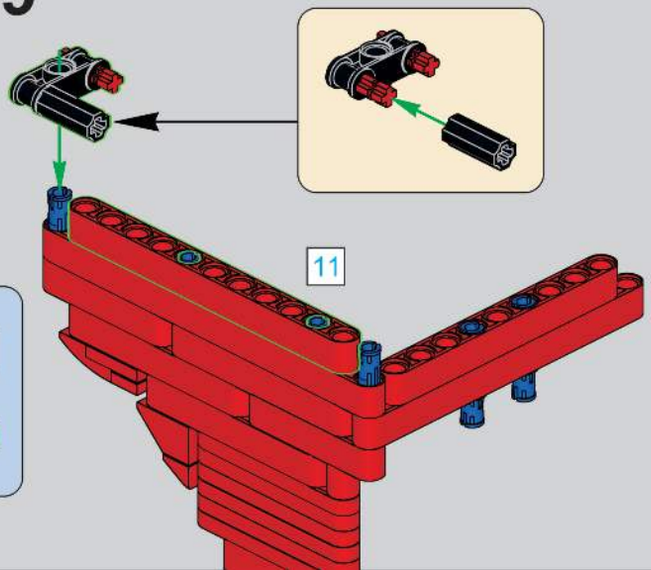

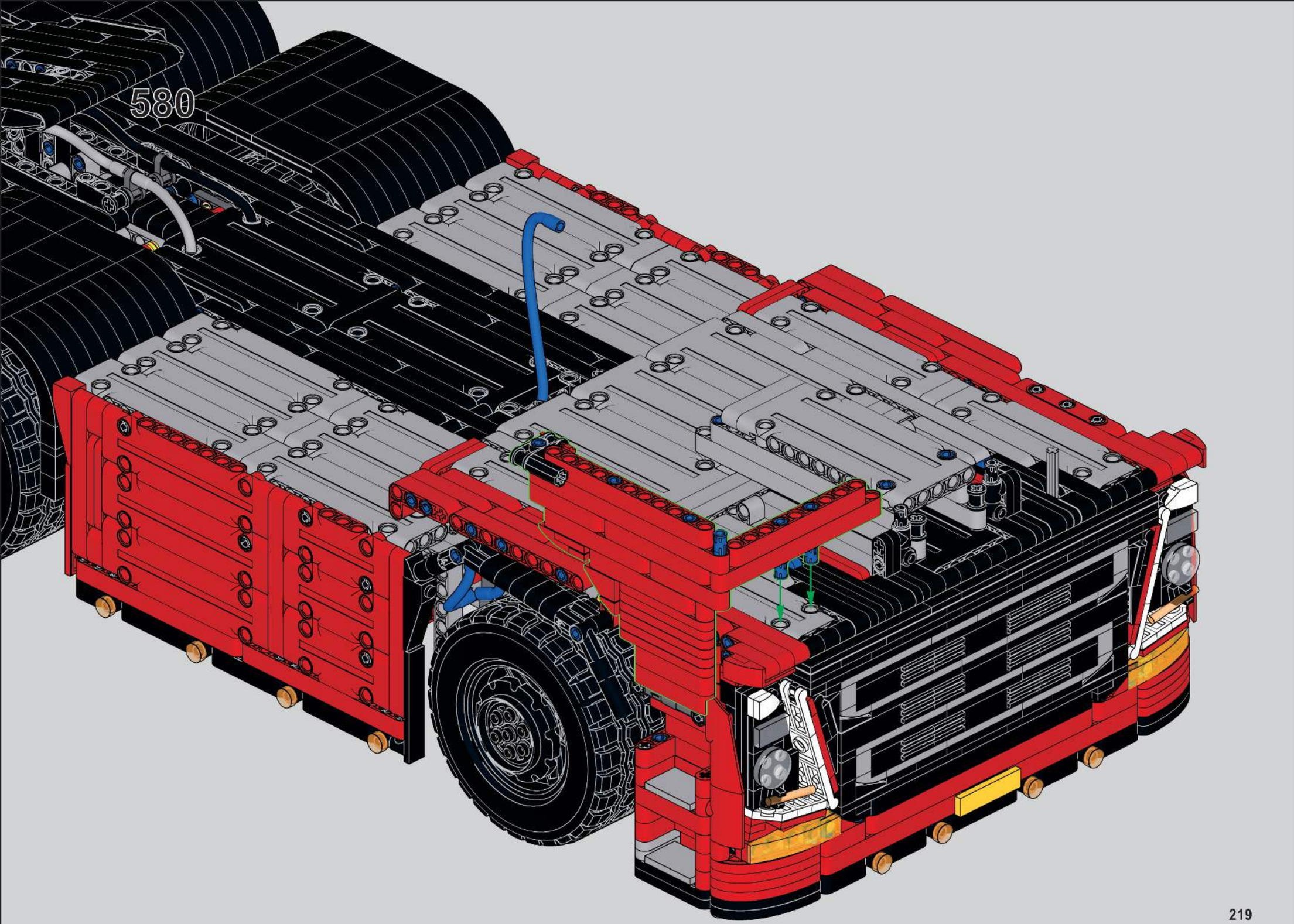
580

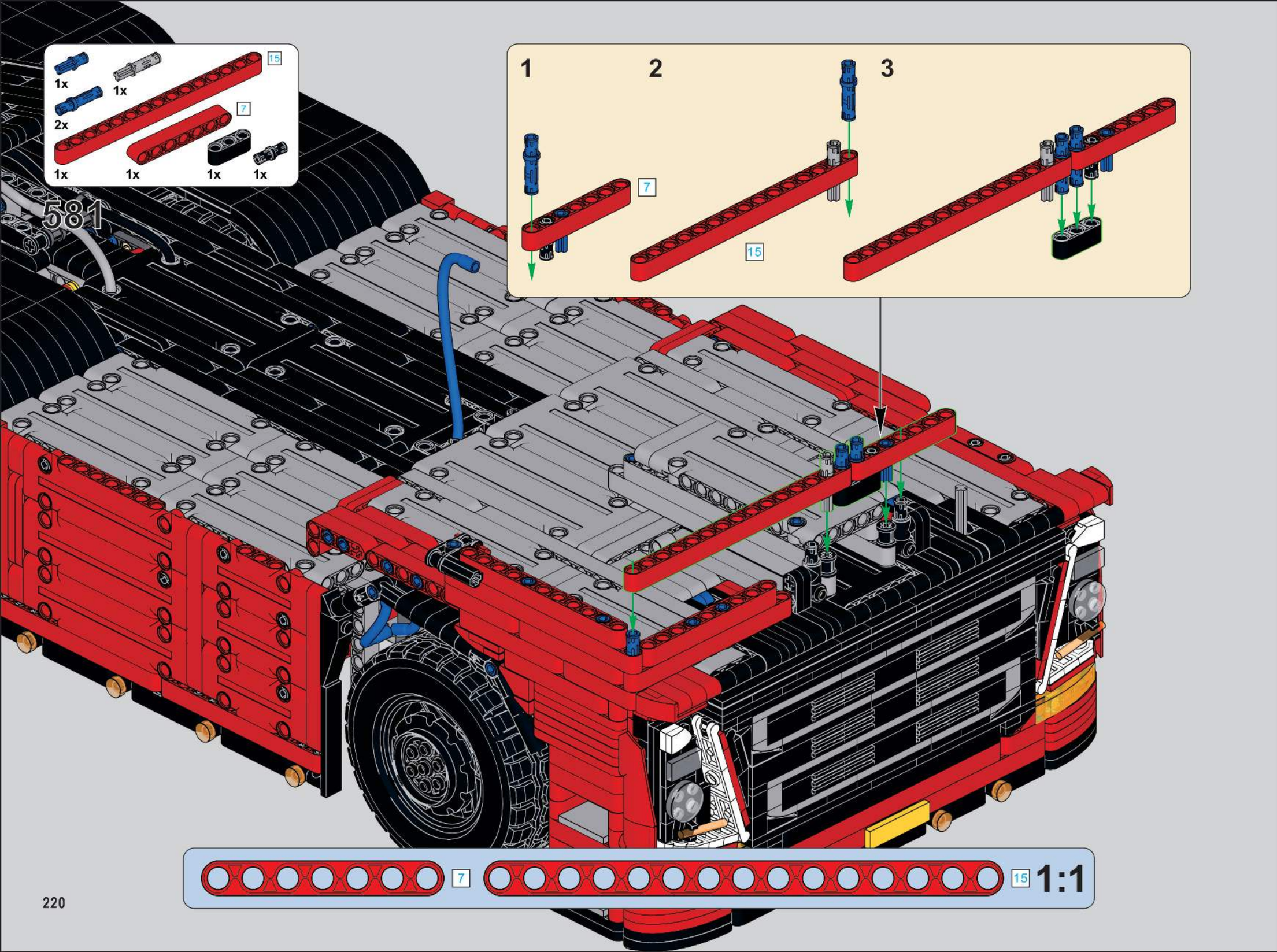
581
1x
1x
2x
15
7
1x
1x
1x
1x
1
2
3
7
15
7
15
1:1

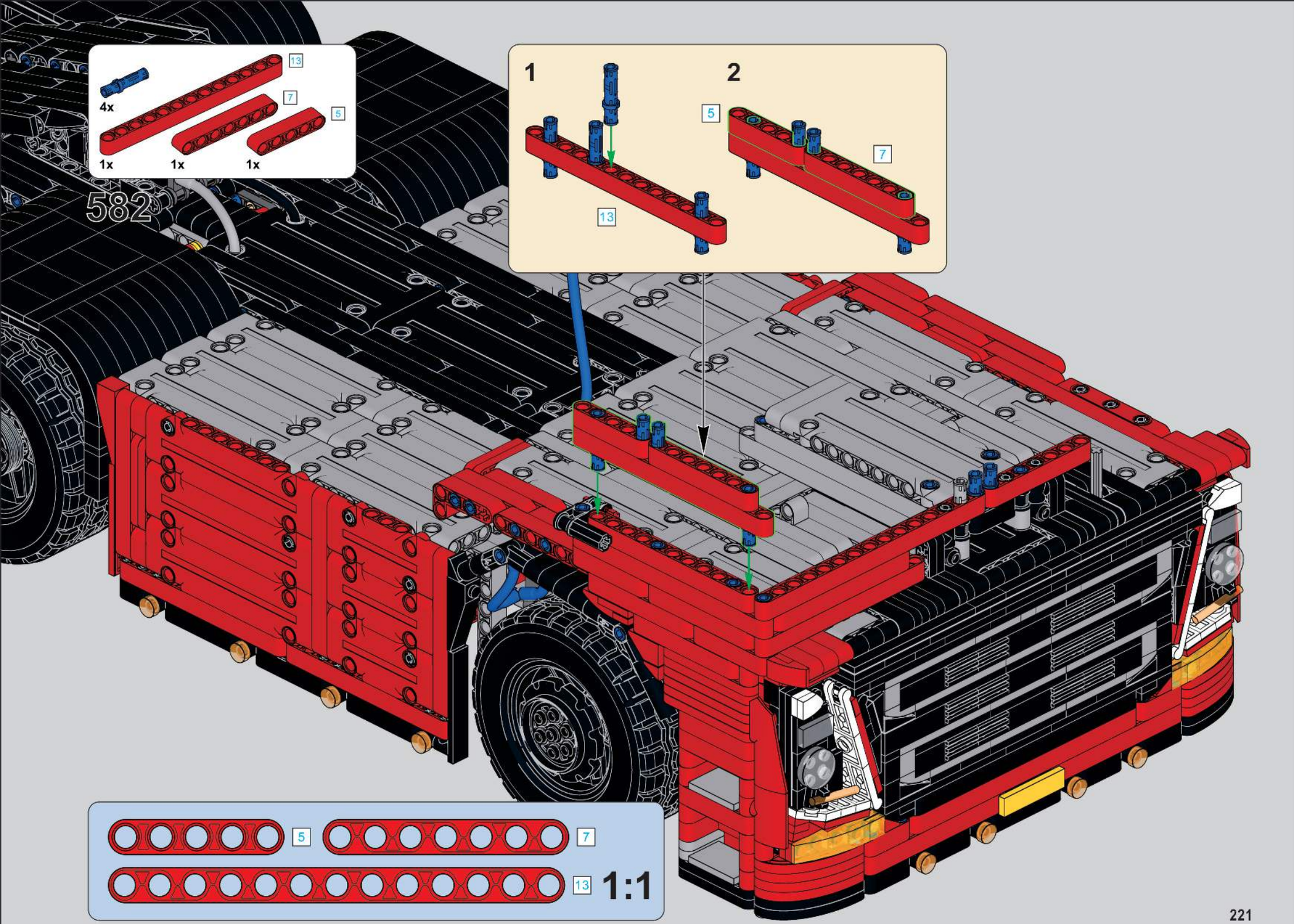
582
4x
13
7
5
1x
1x
1x
1
2
5
7
13
5
7
13
1:1

583

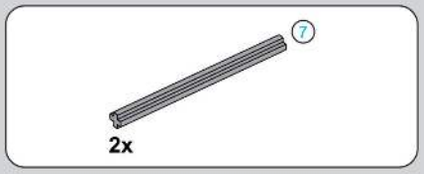

584

585

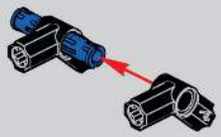

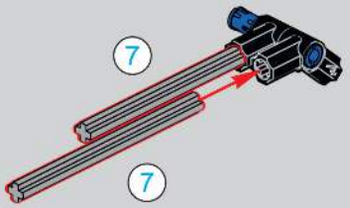

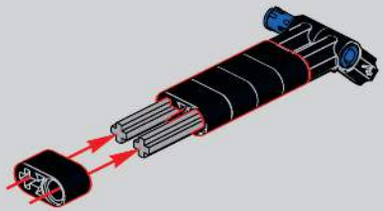

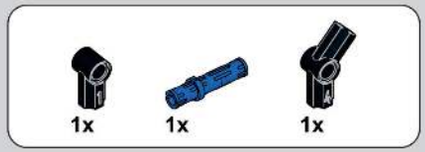

586

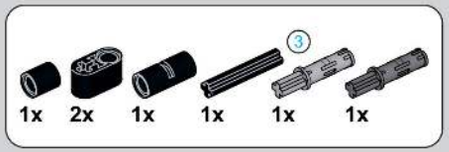

587

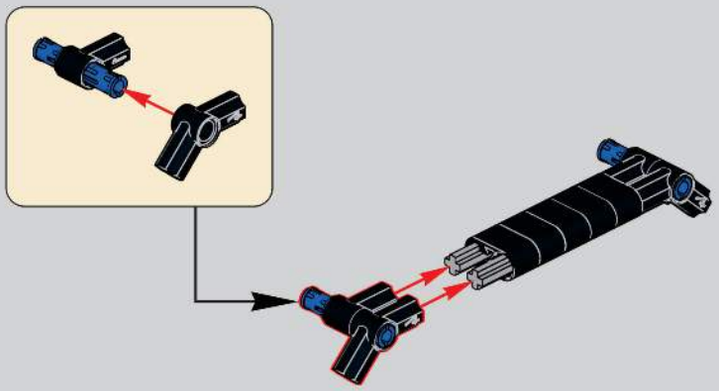

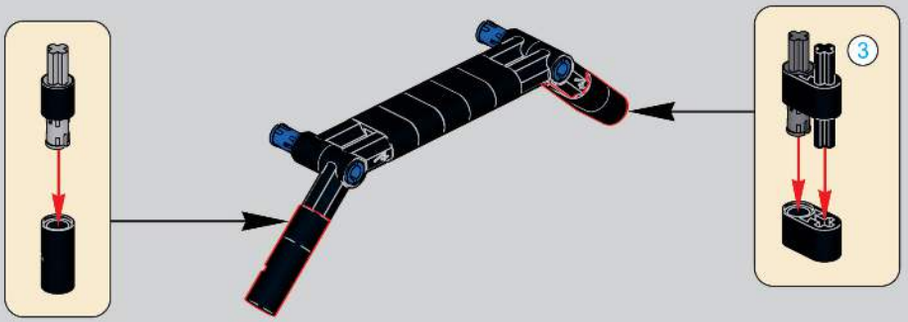

588

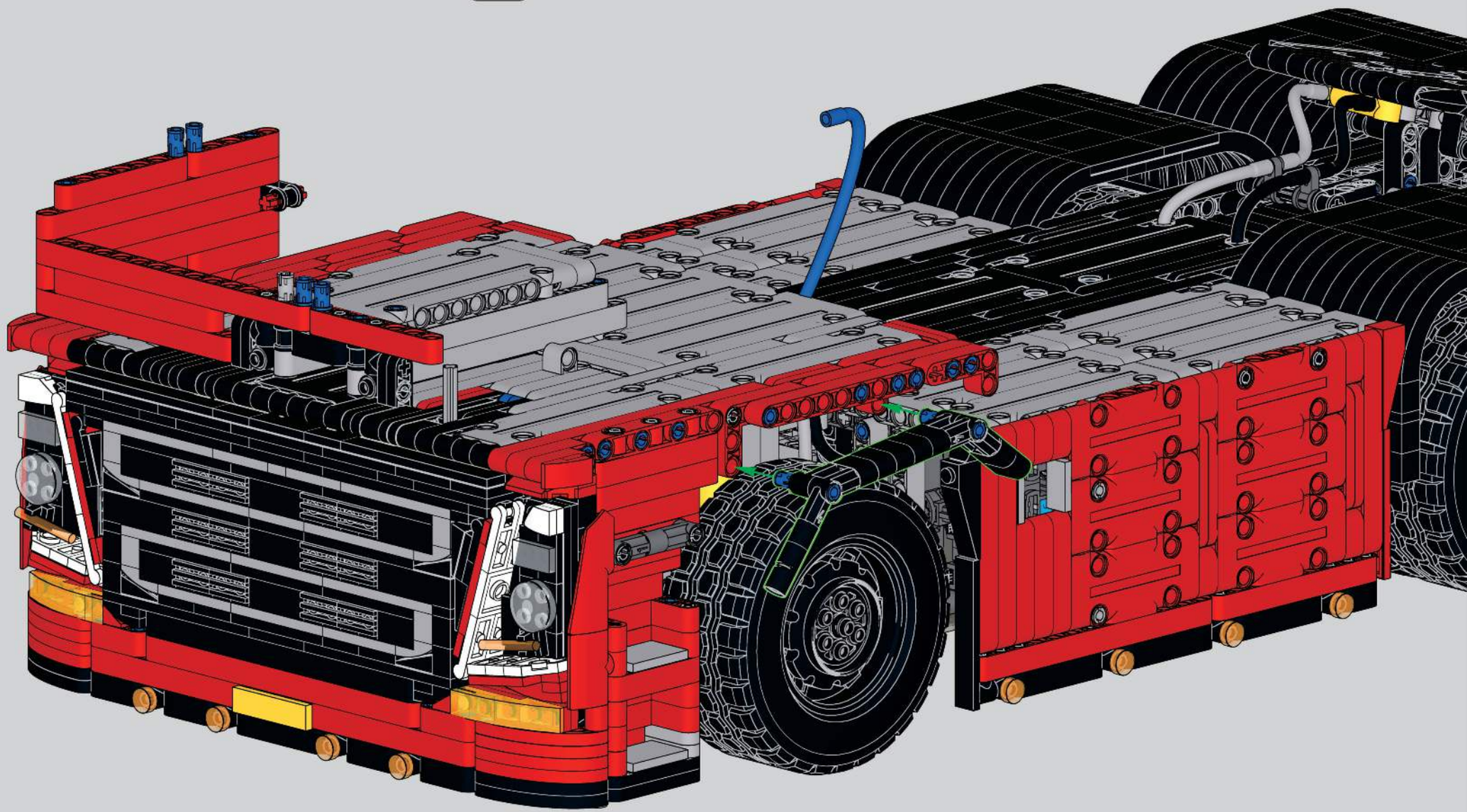

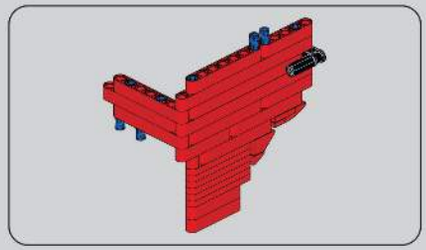

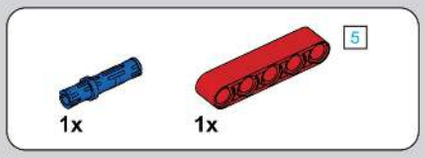

590

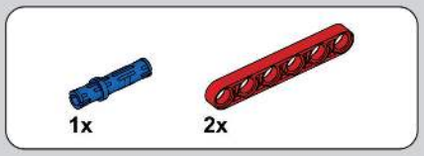

591

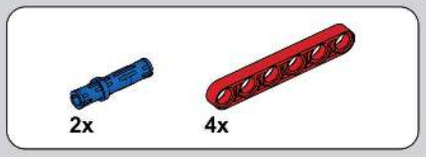

592

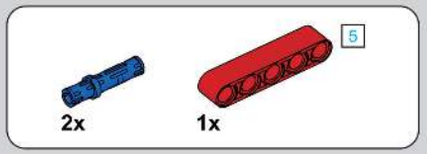

589

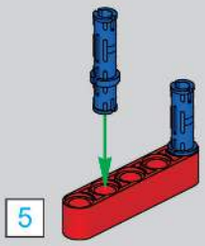

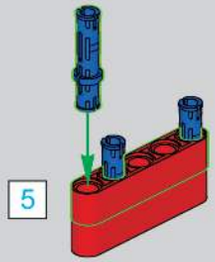

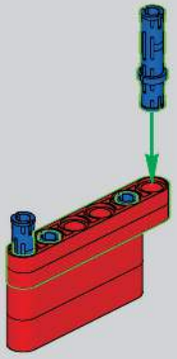

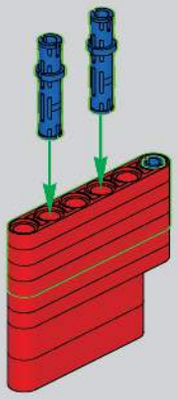

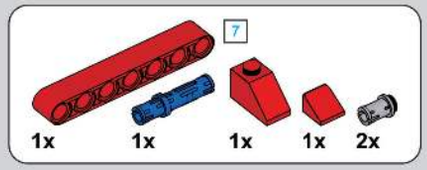

593

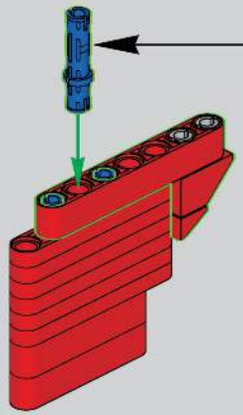

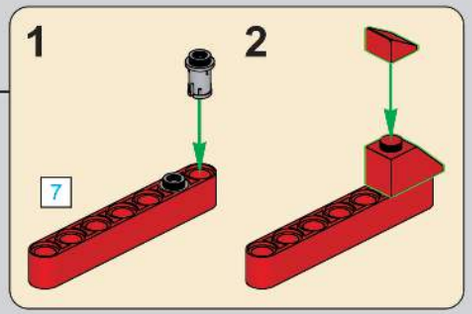

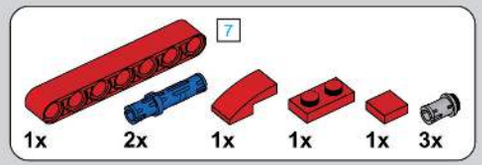

594

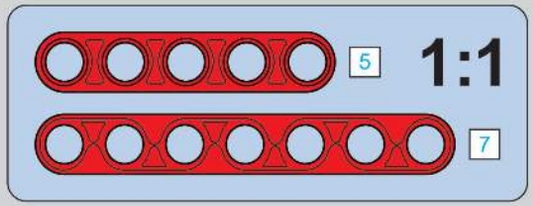

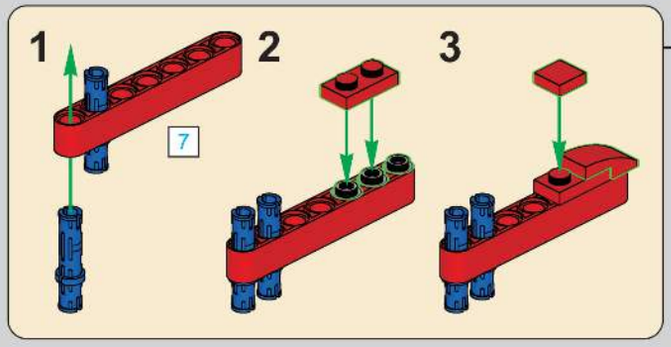

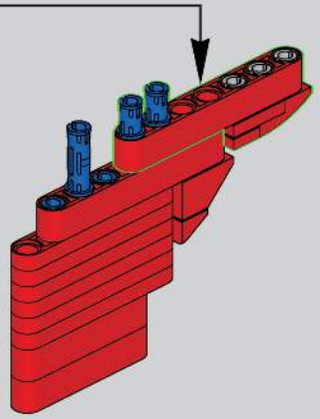

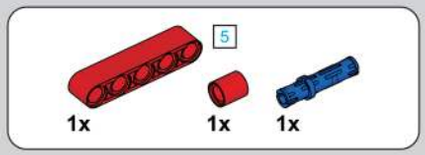

595

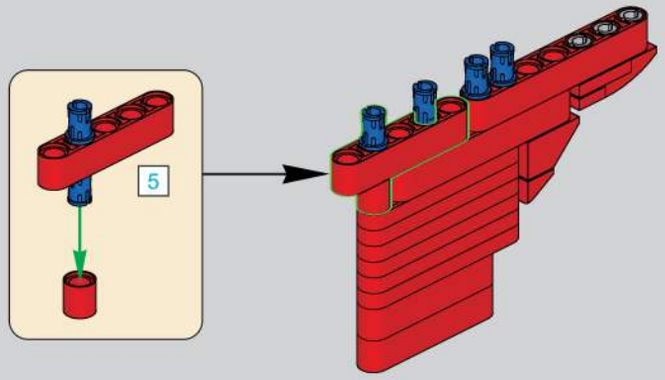

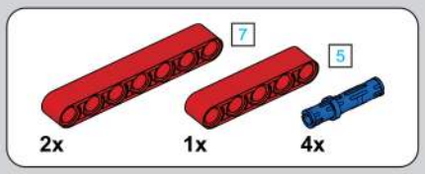

596

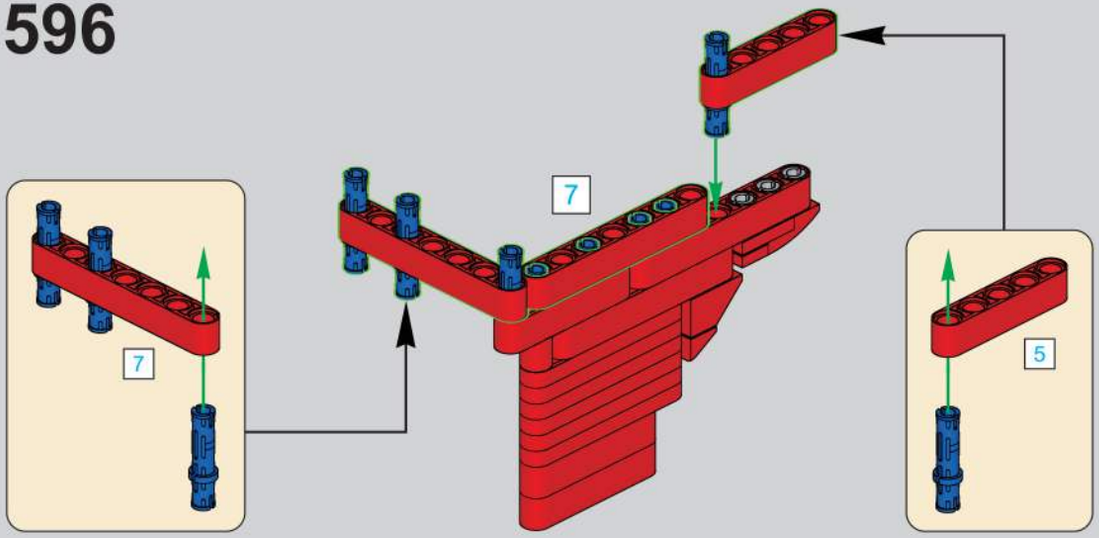

597

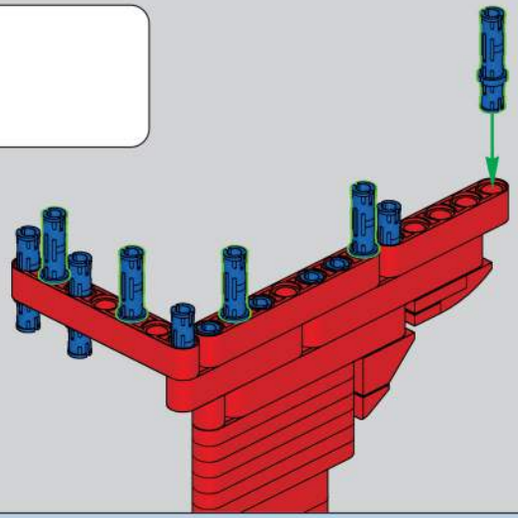

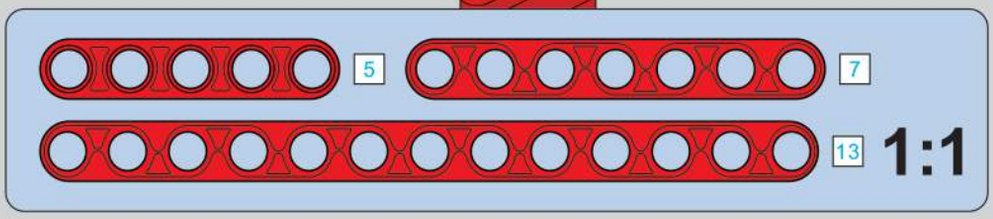

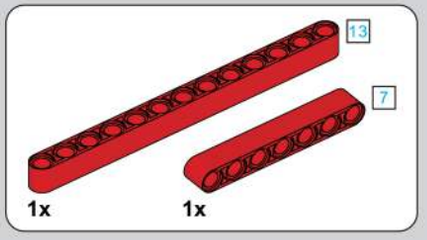

598

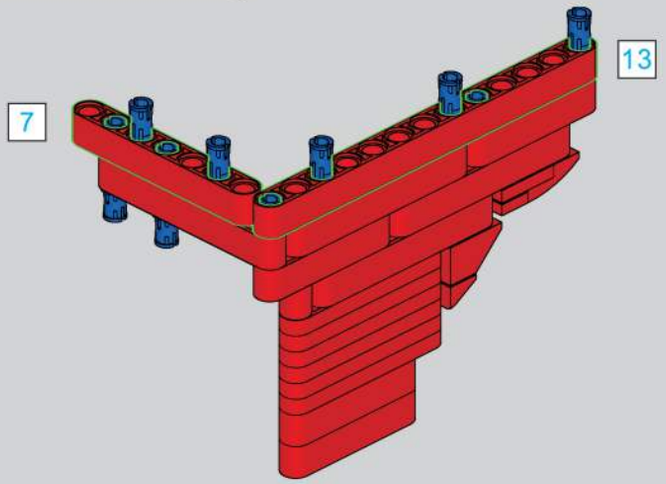

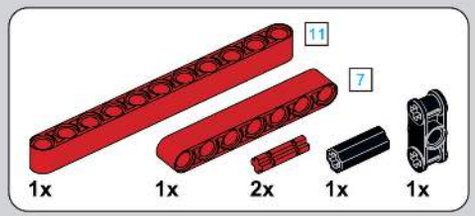

599

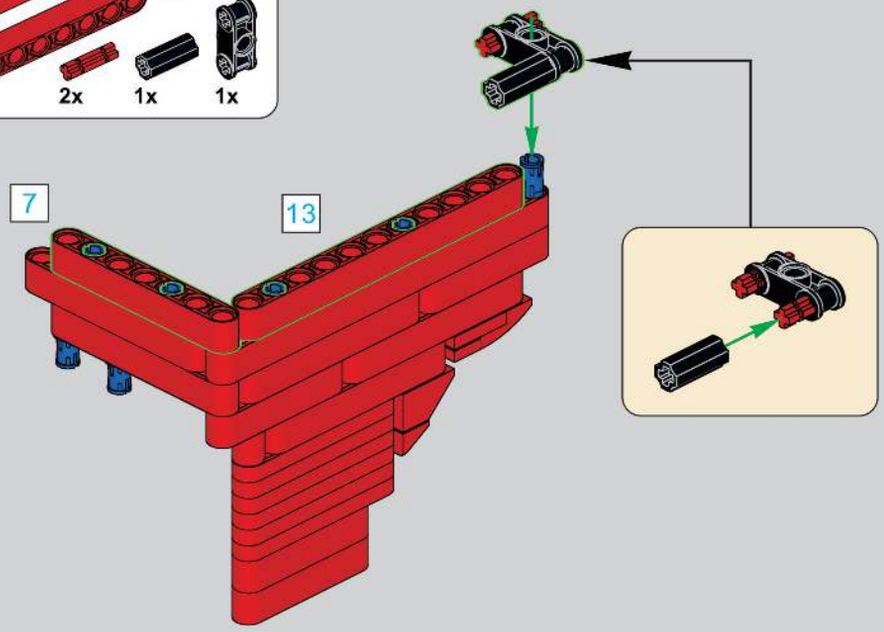

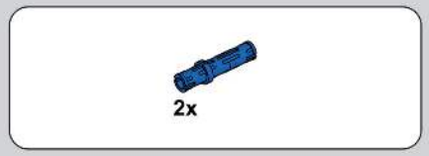

600

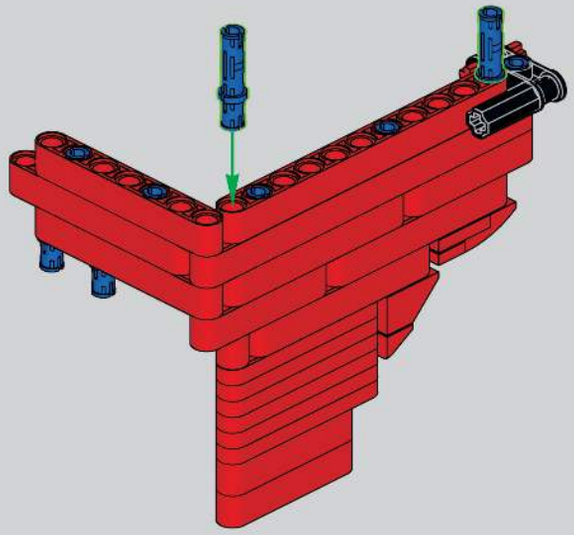

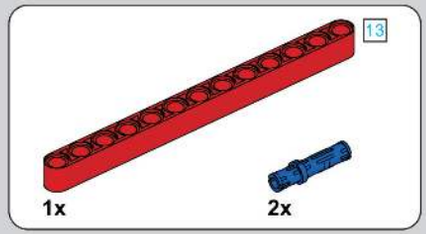

601

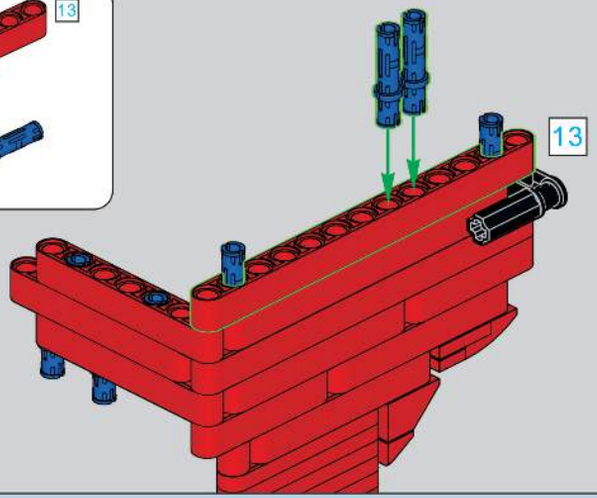

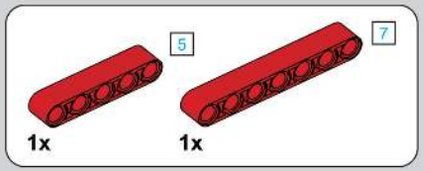

602

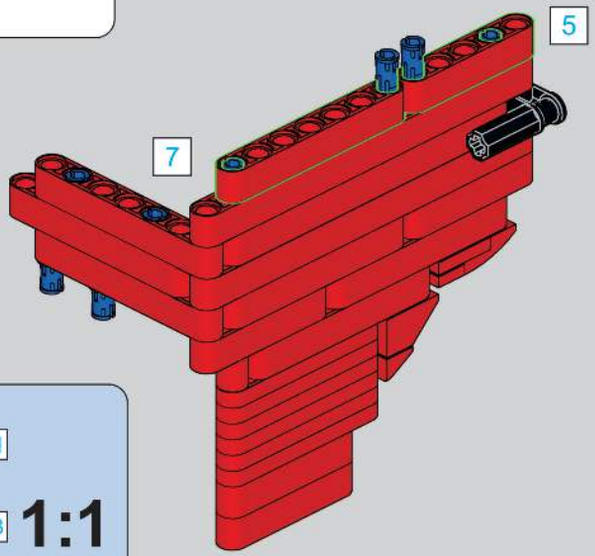

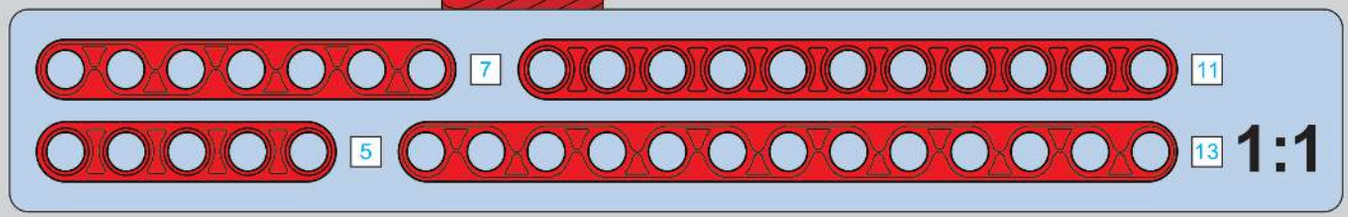

603

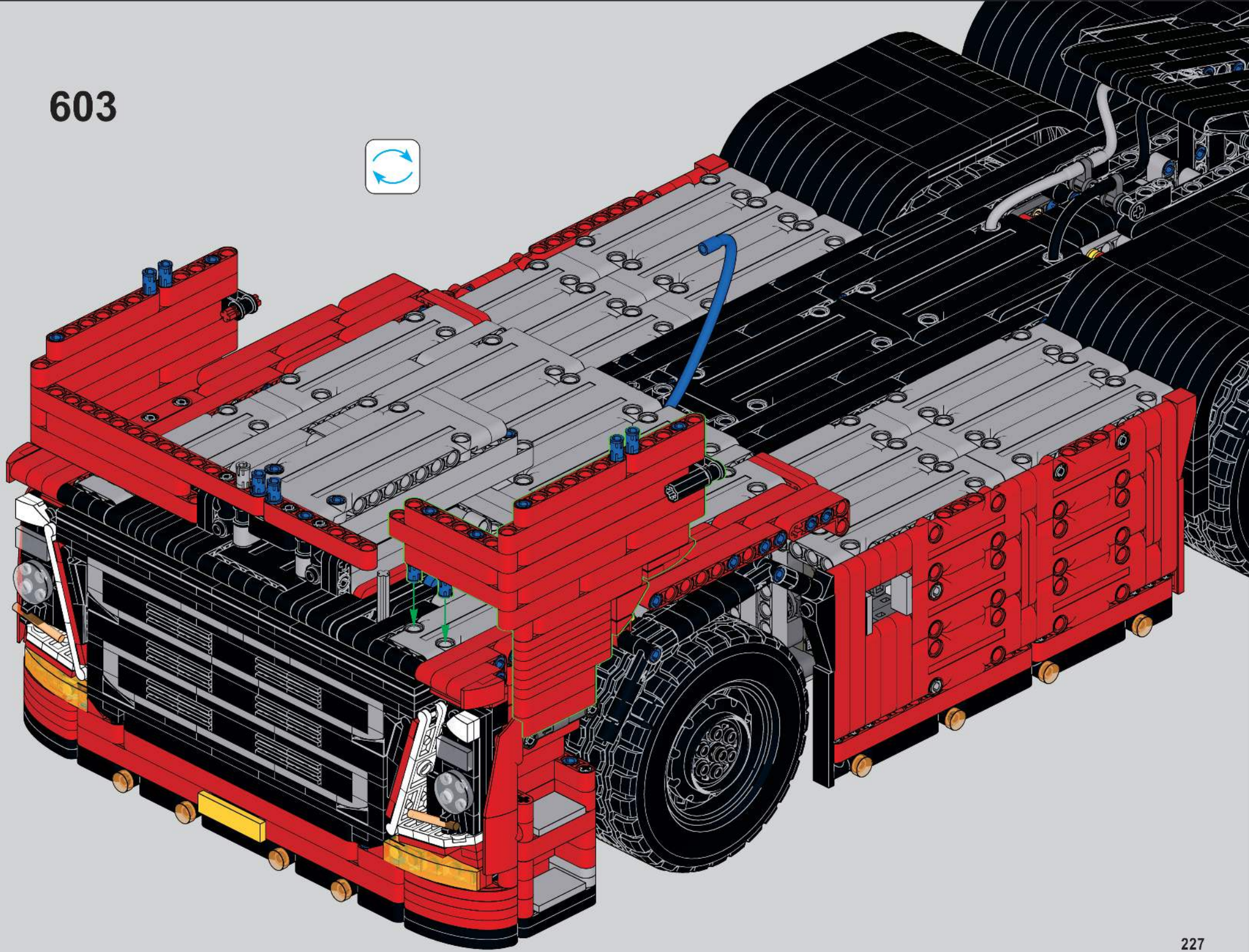

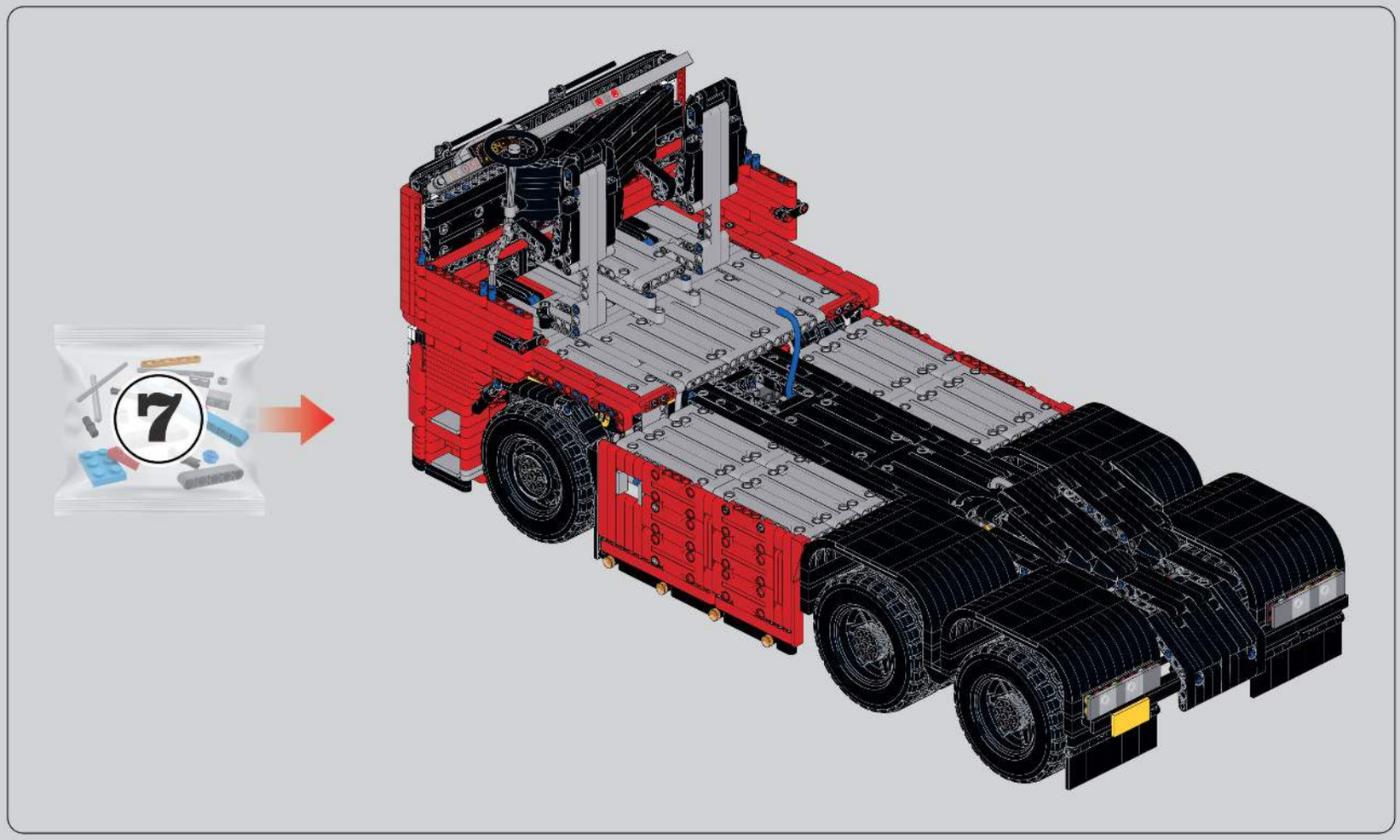
7

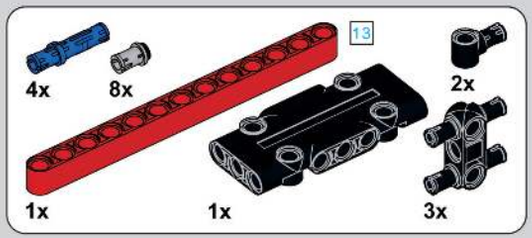

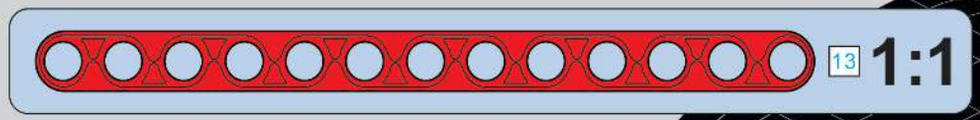

604

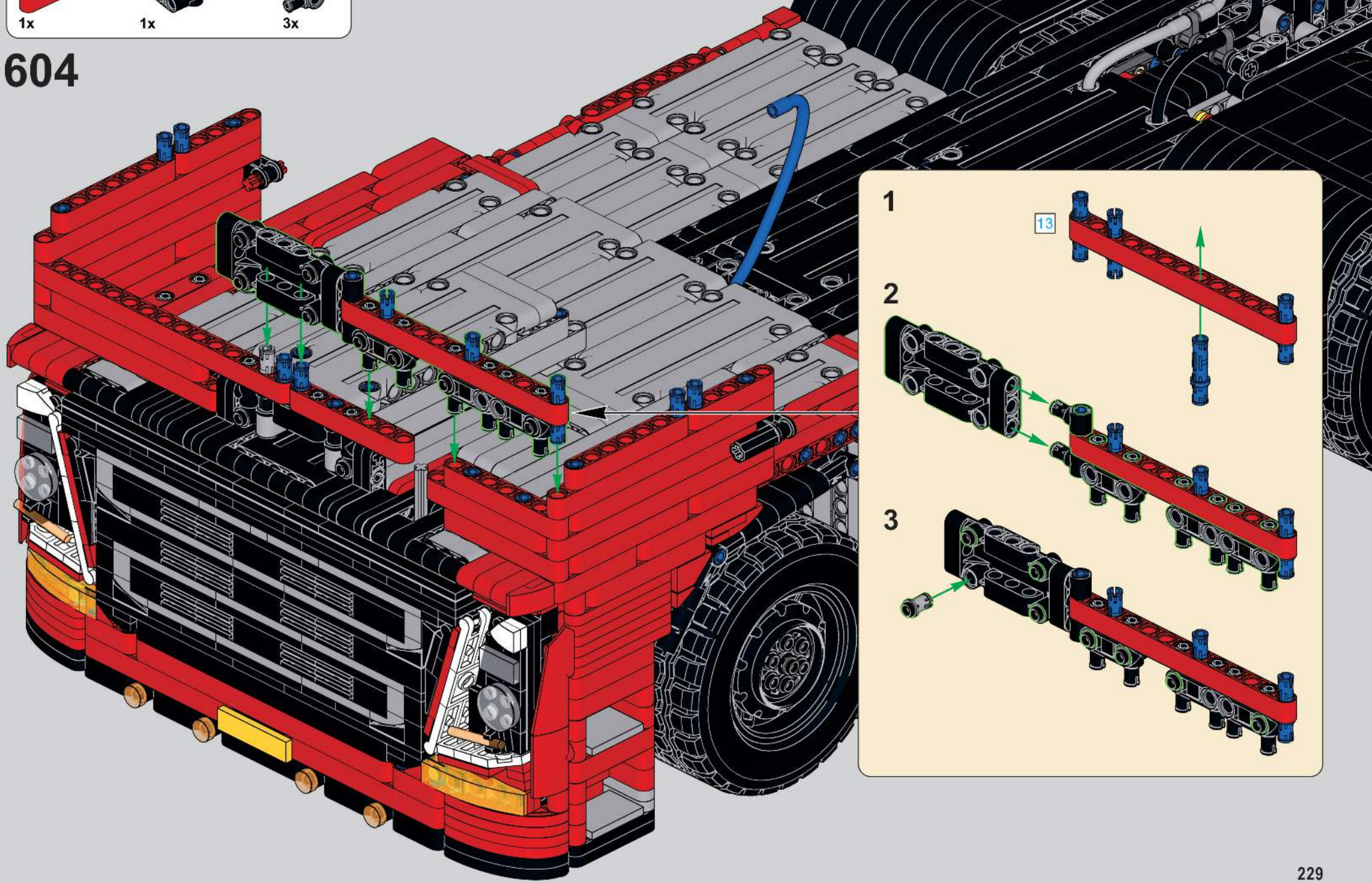

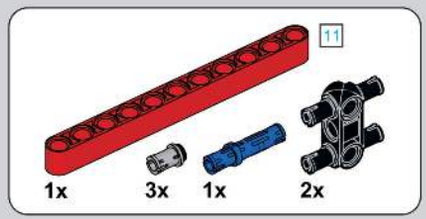

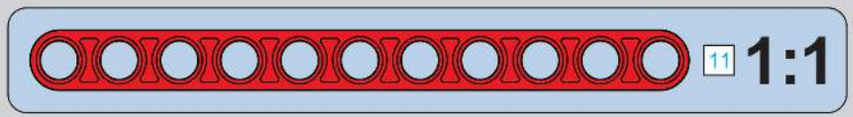

605

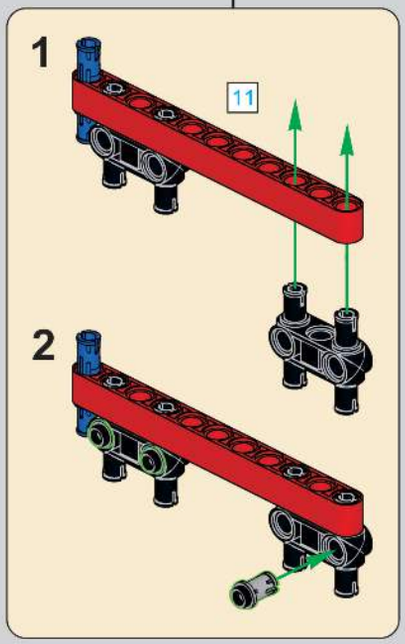

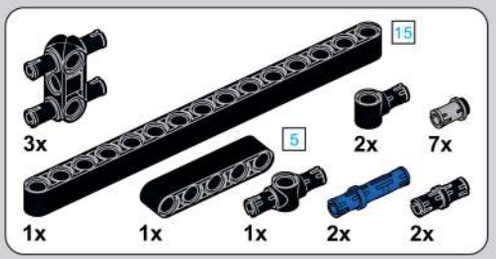

606

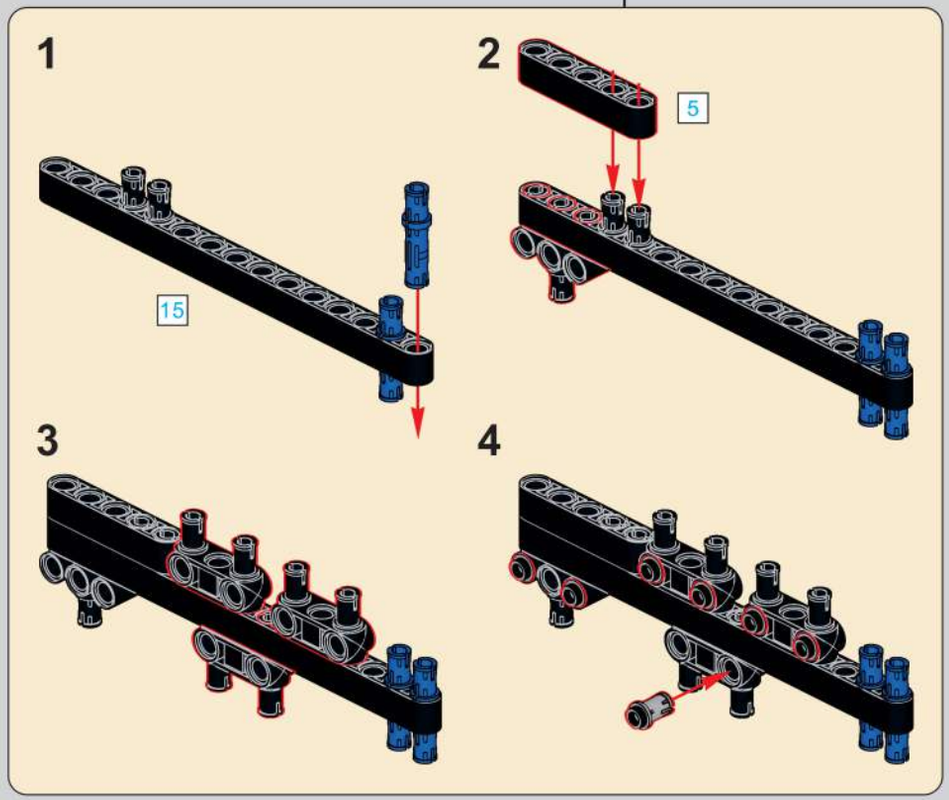

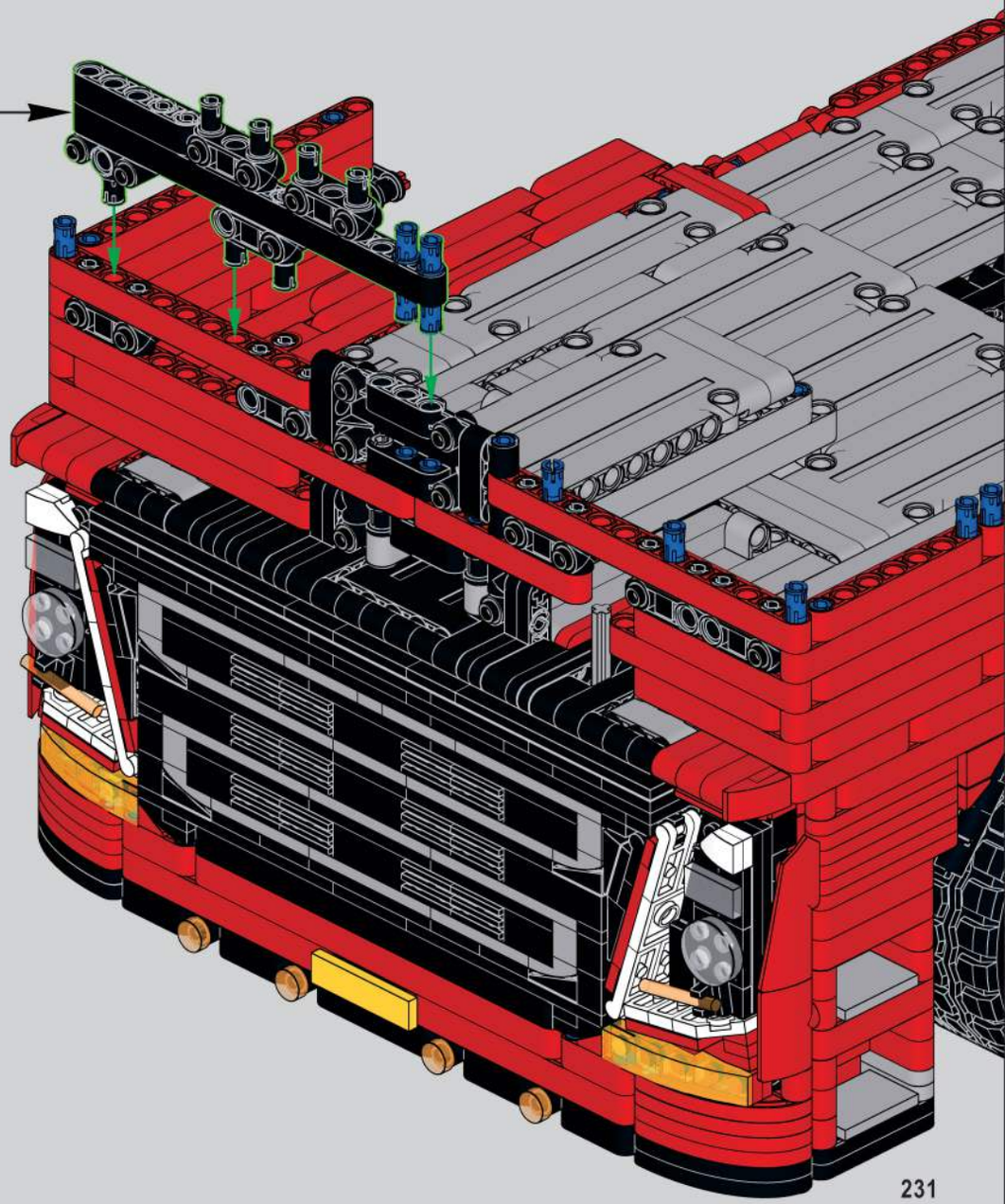

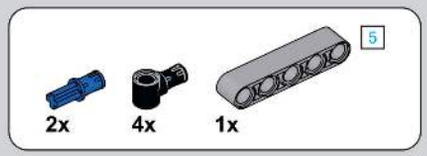

607

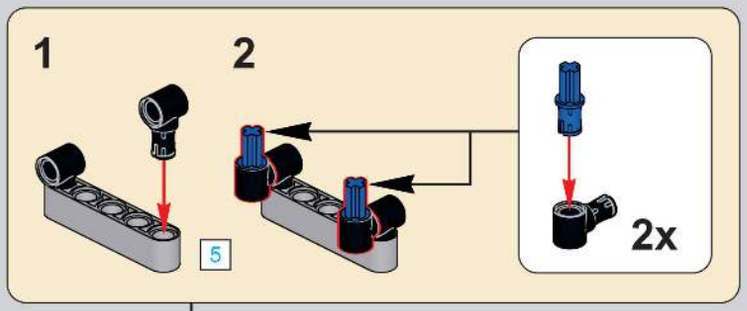

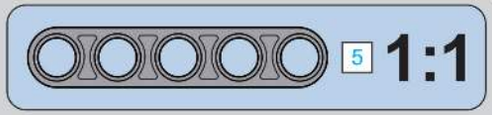

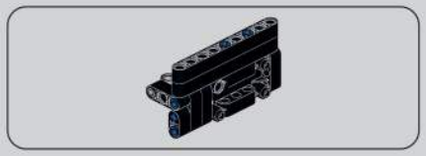

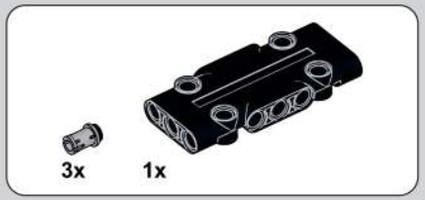

608

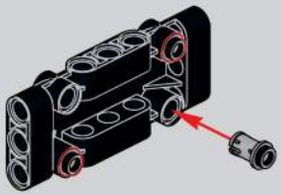

609

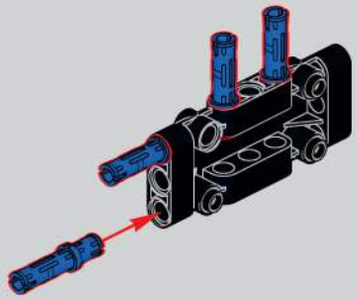

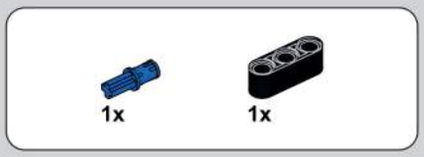

610

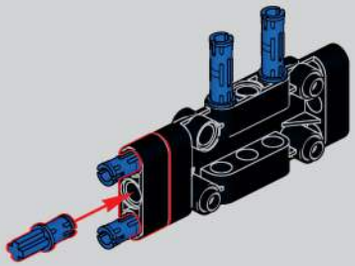

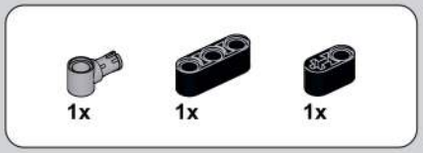

611

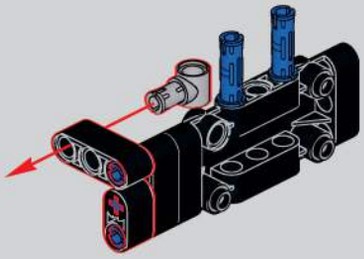

612

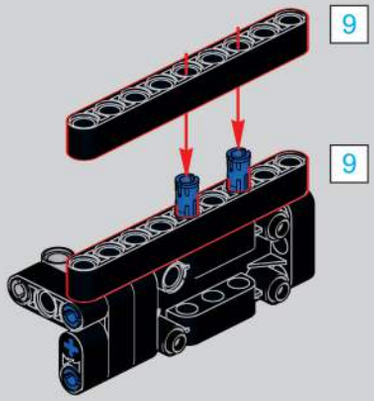

613

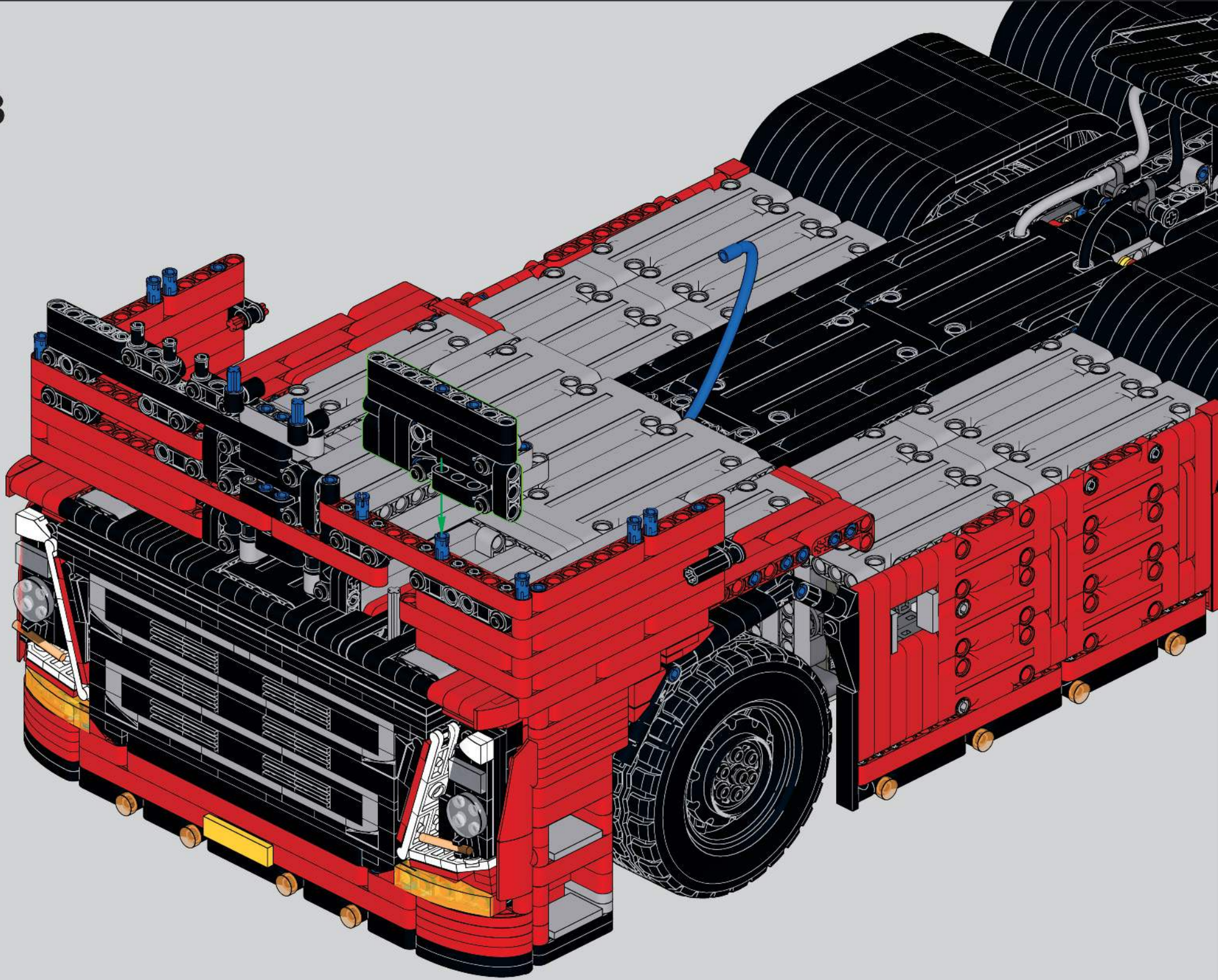

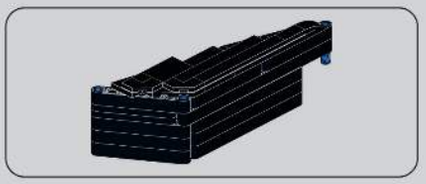

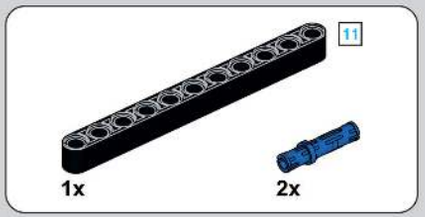

614

615

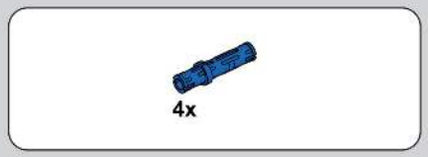

616

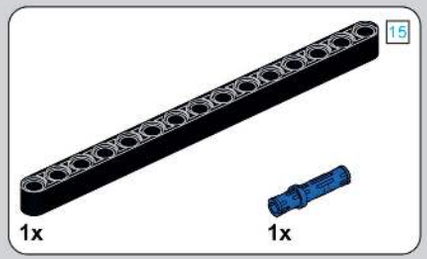

617

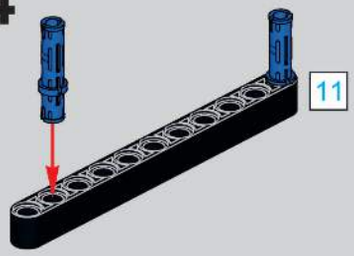

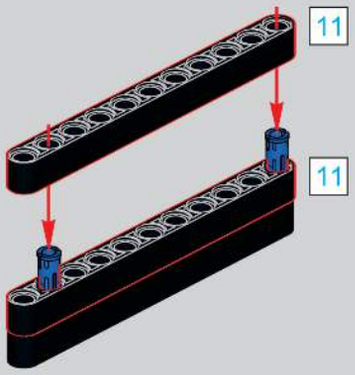

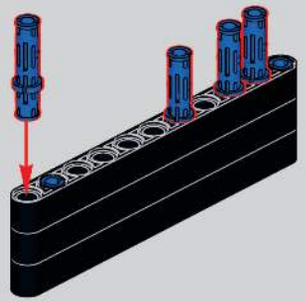

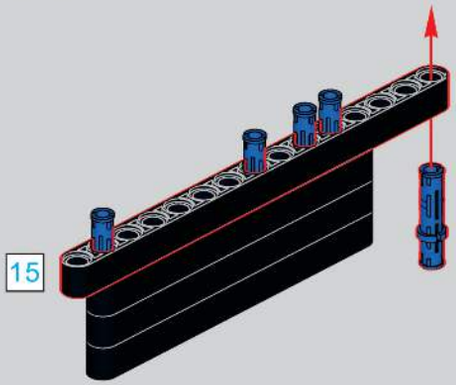

618

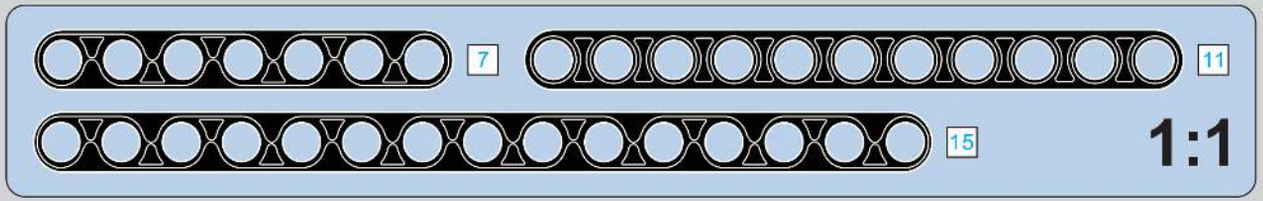

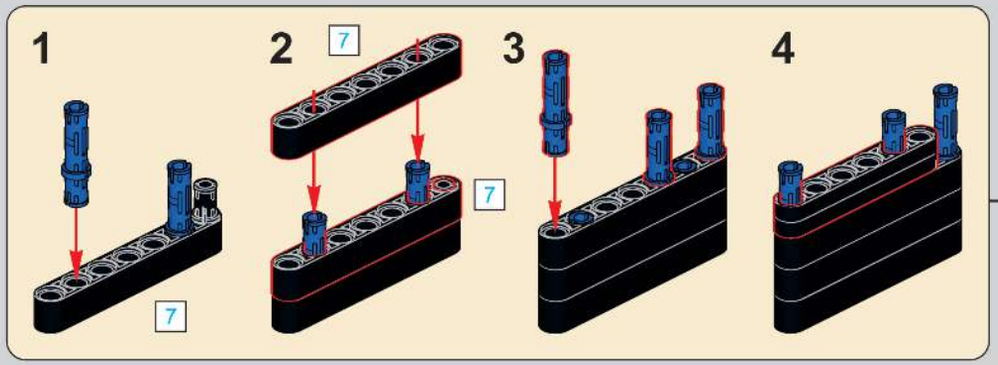

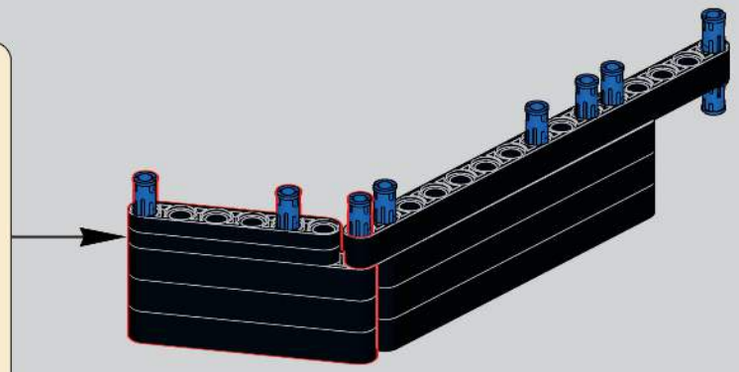

619

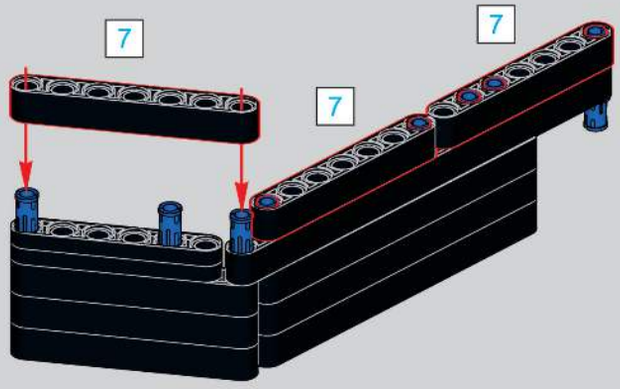

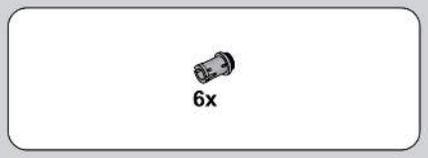

620

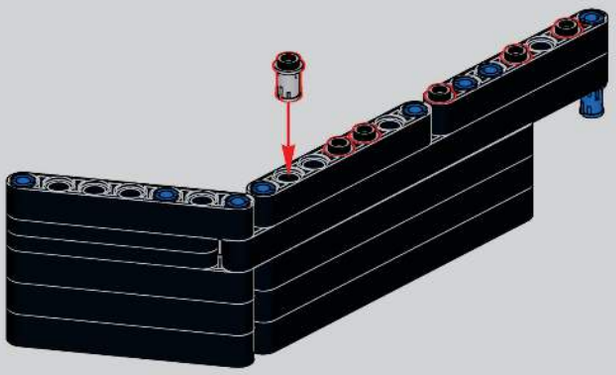

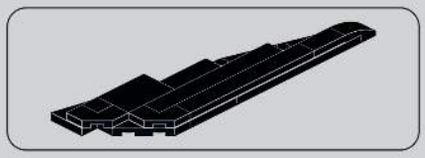

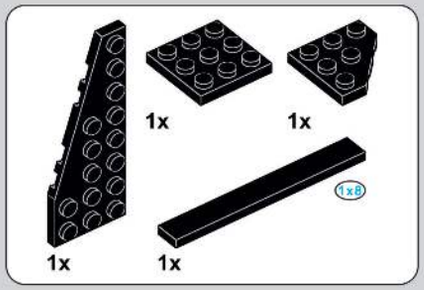

621

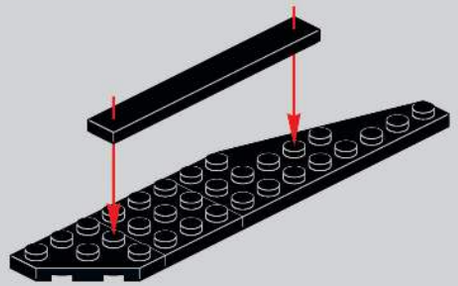

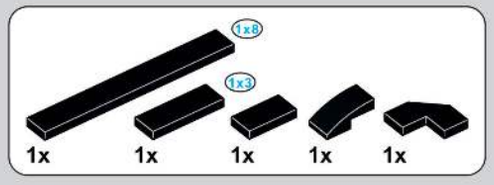

622

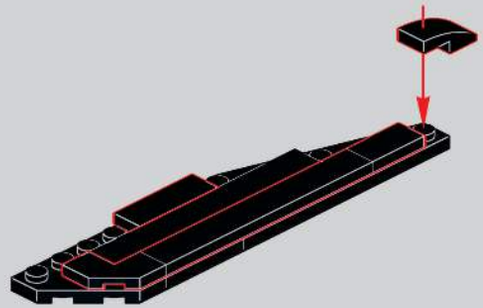

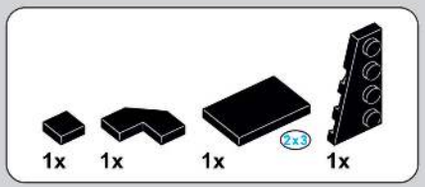

623

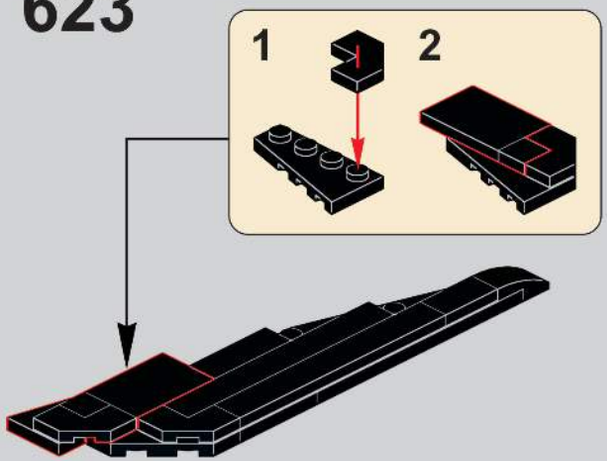

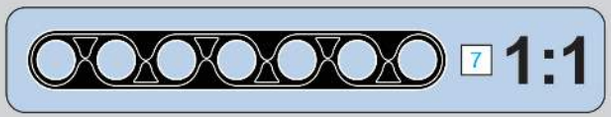

624

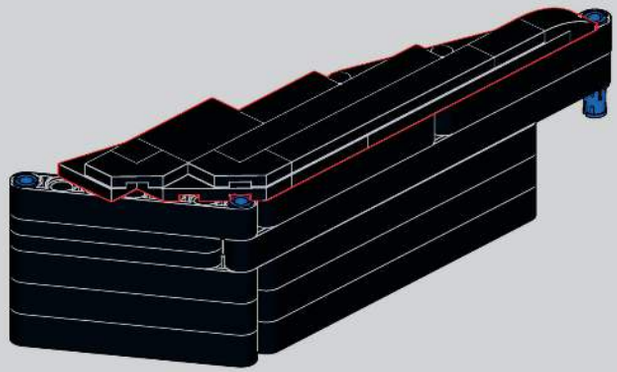

625

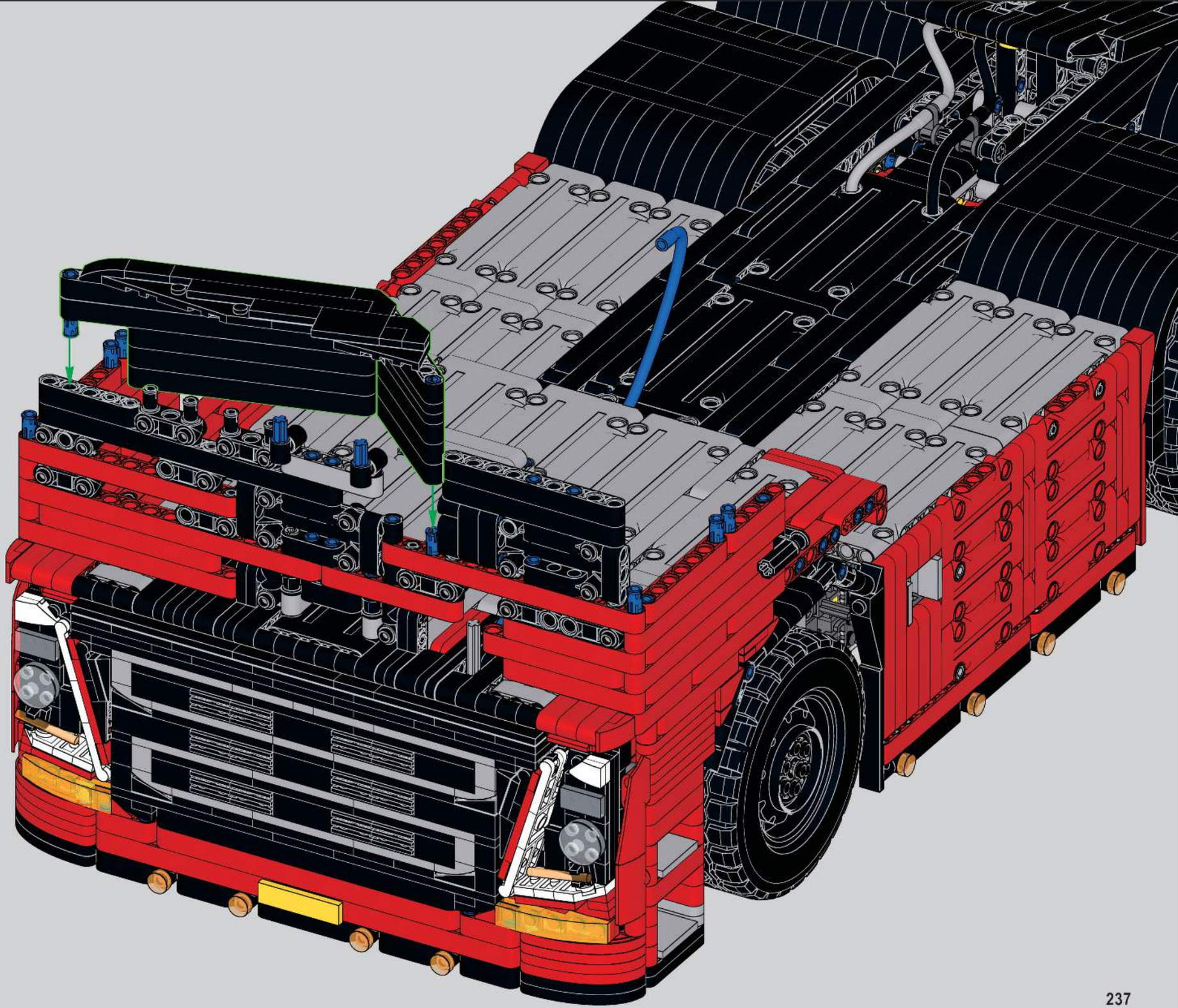

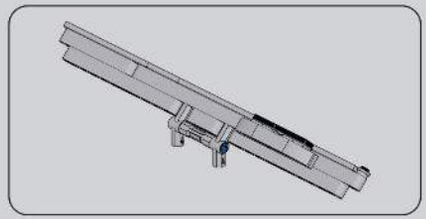

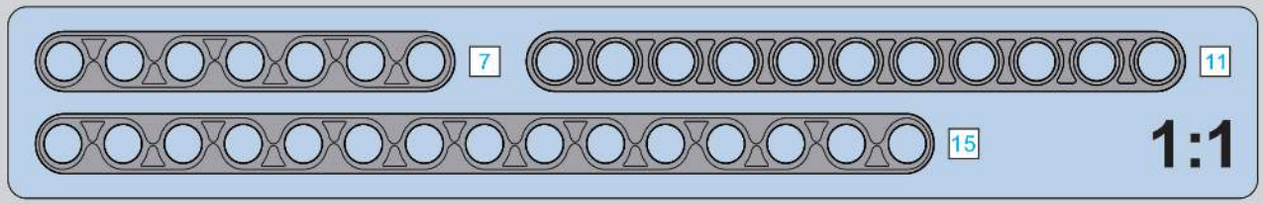

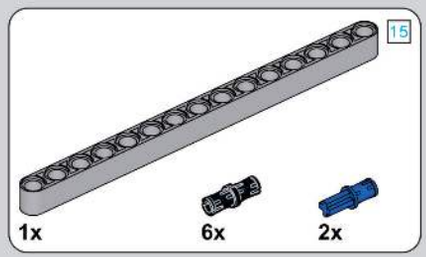

626

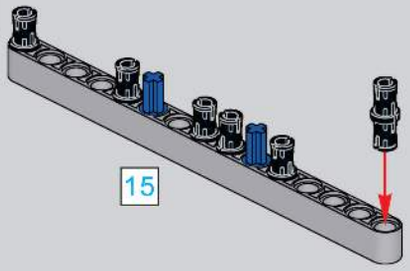

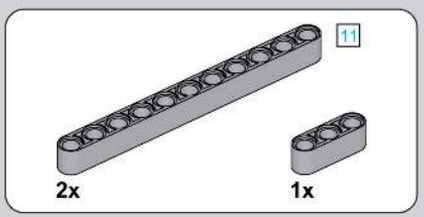

627

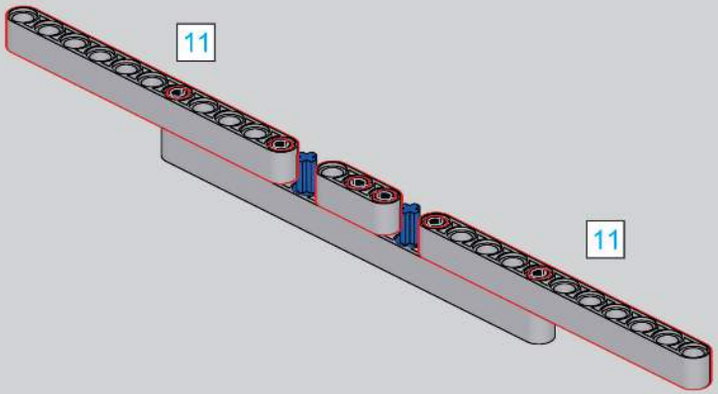

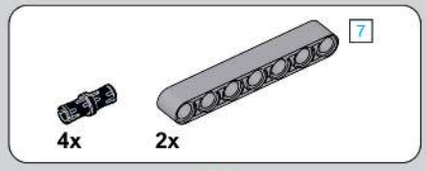

628

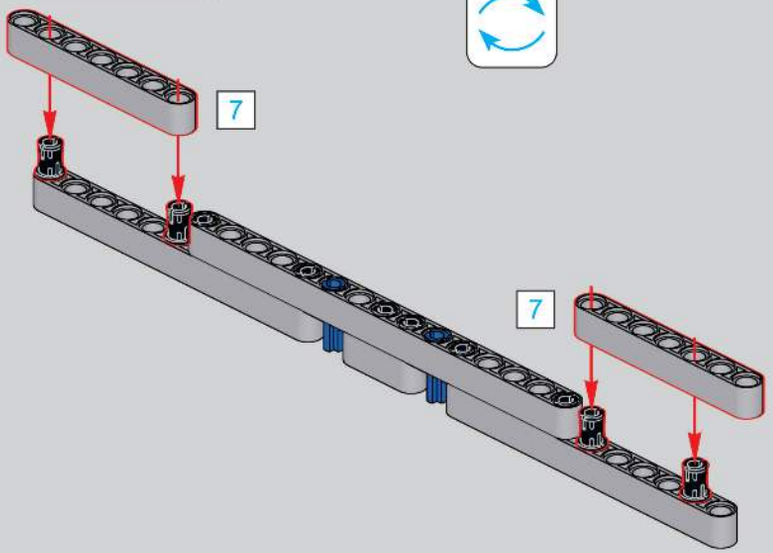

629

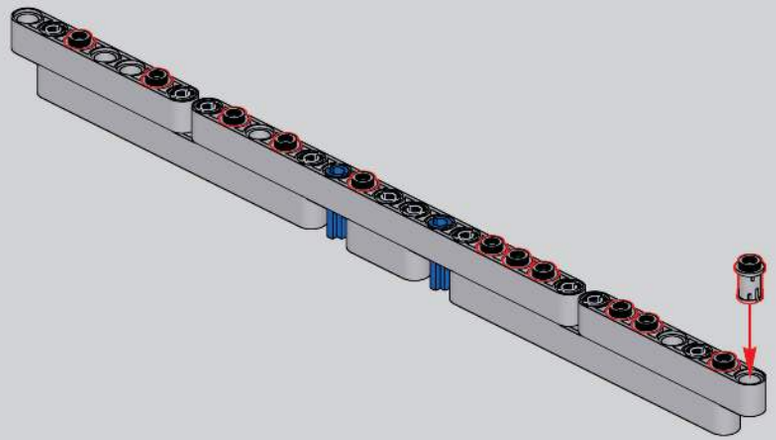

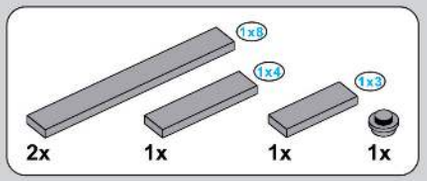

630

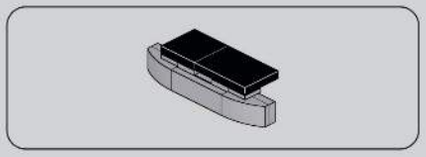

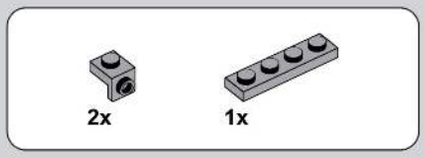

631

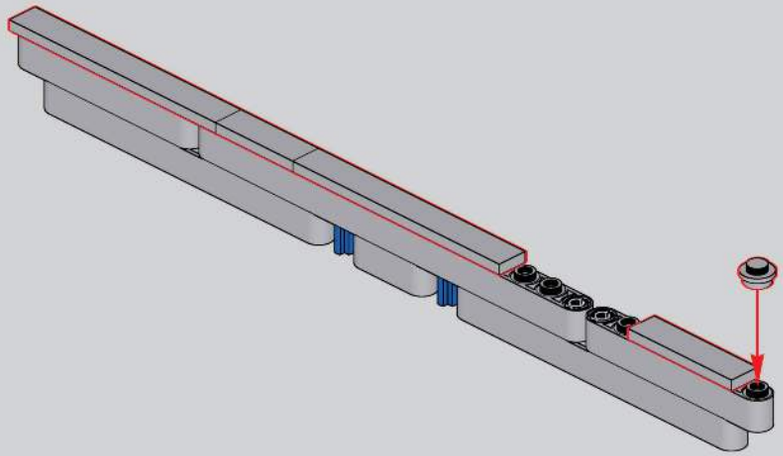

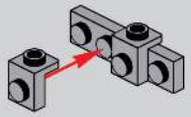

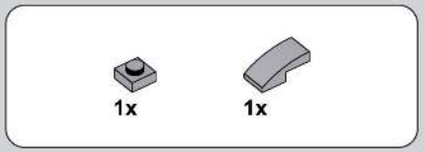

632

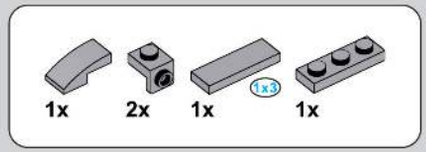

633

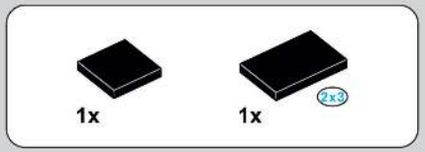

634

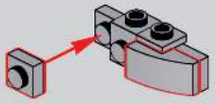

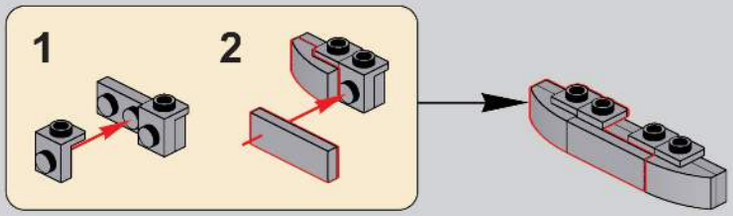

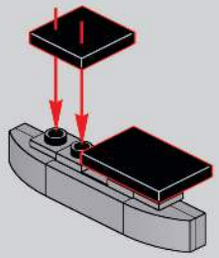

635

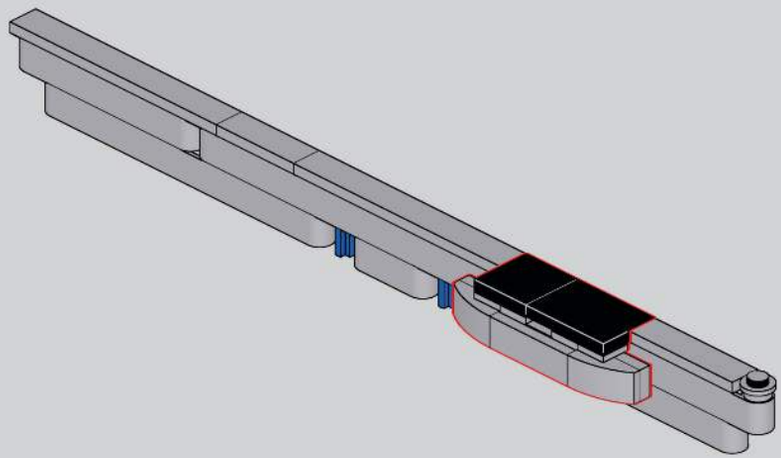

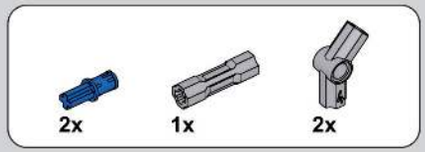

636

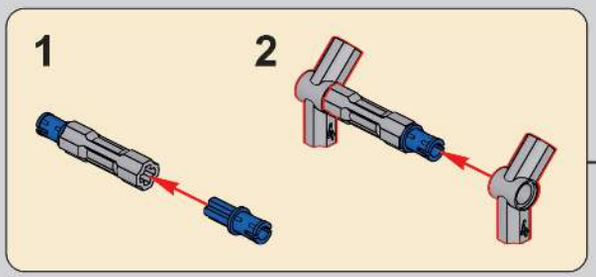

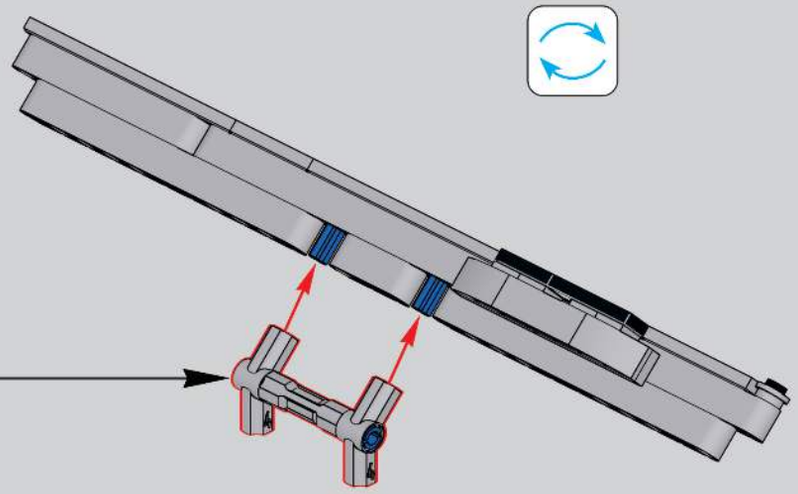

637

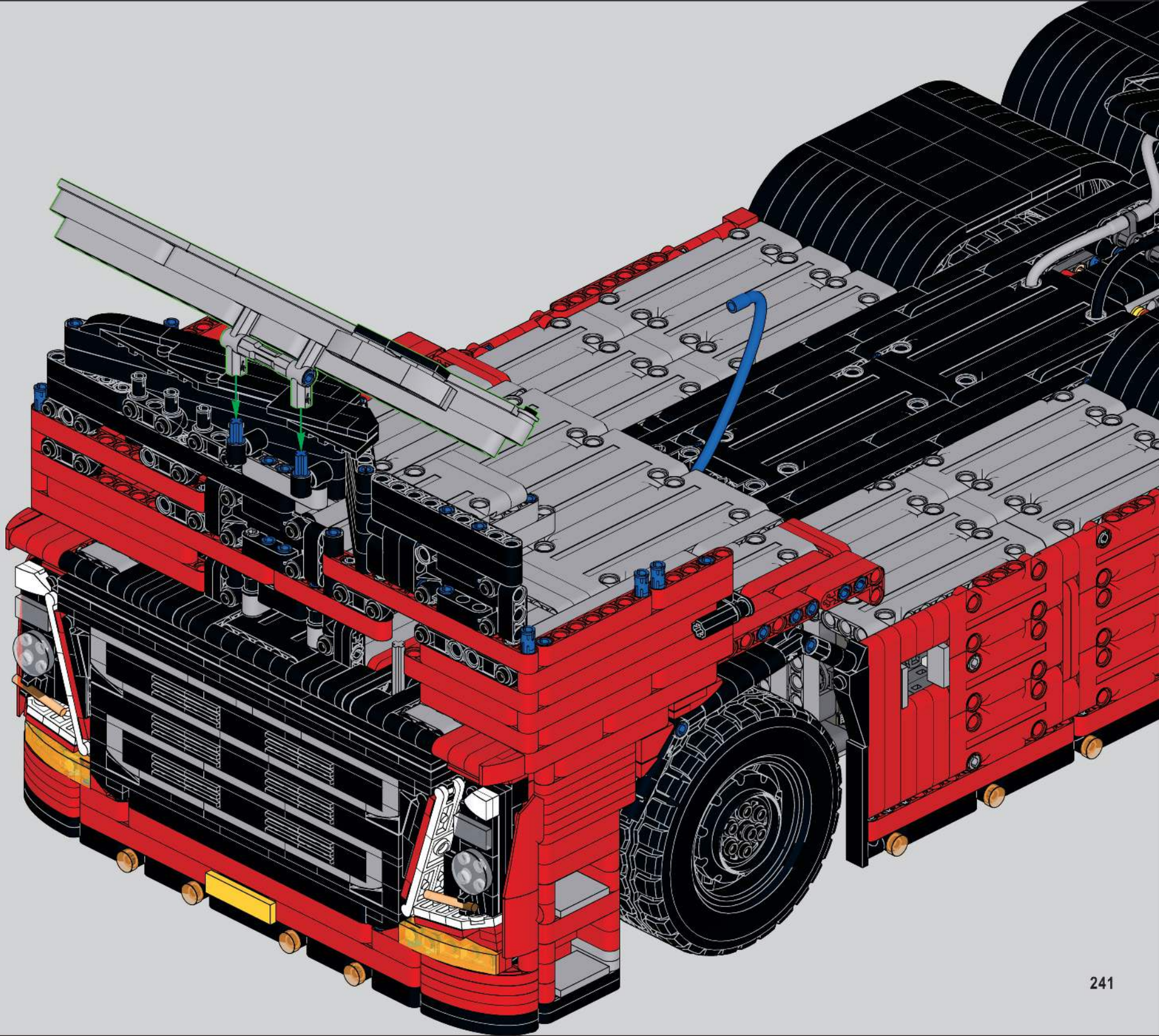

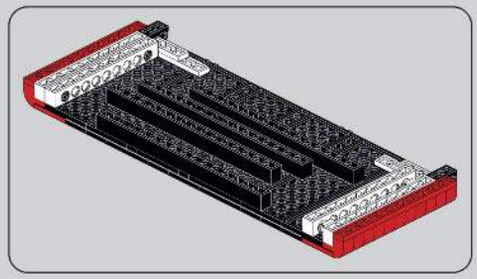

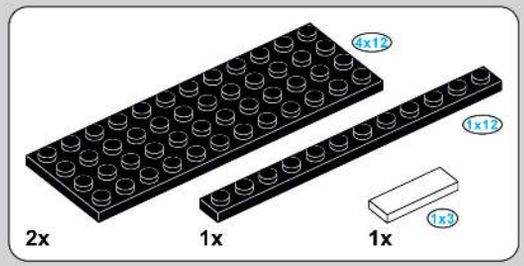

638

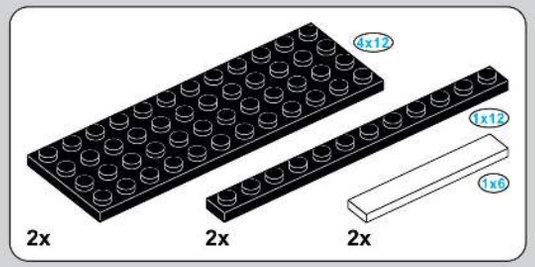

639

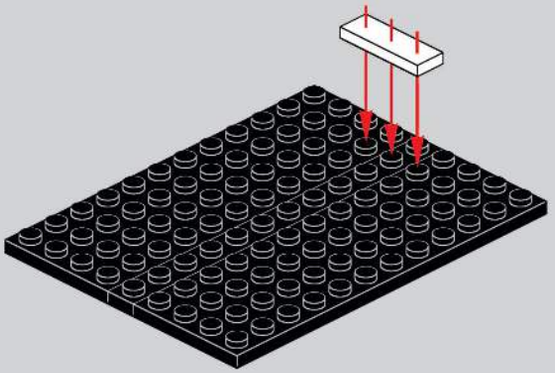

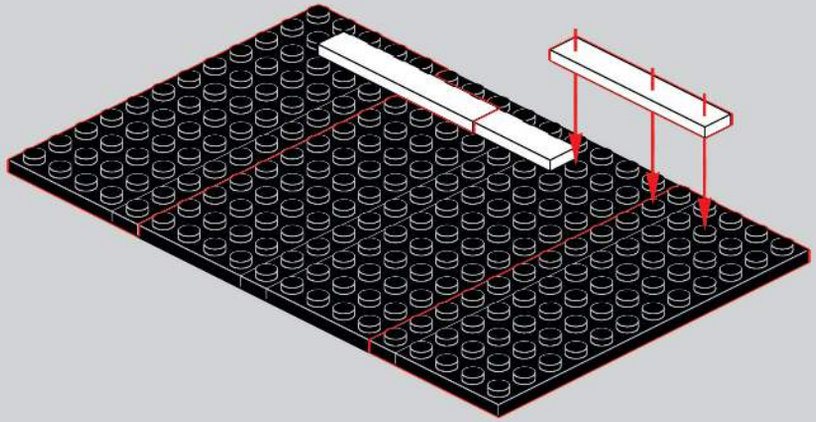

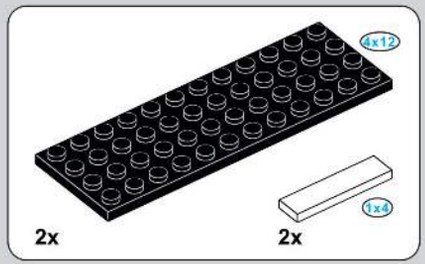

640

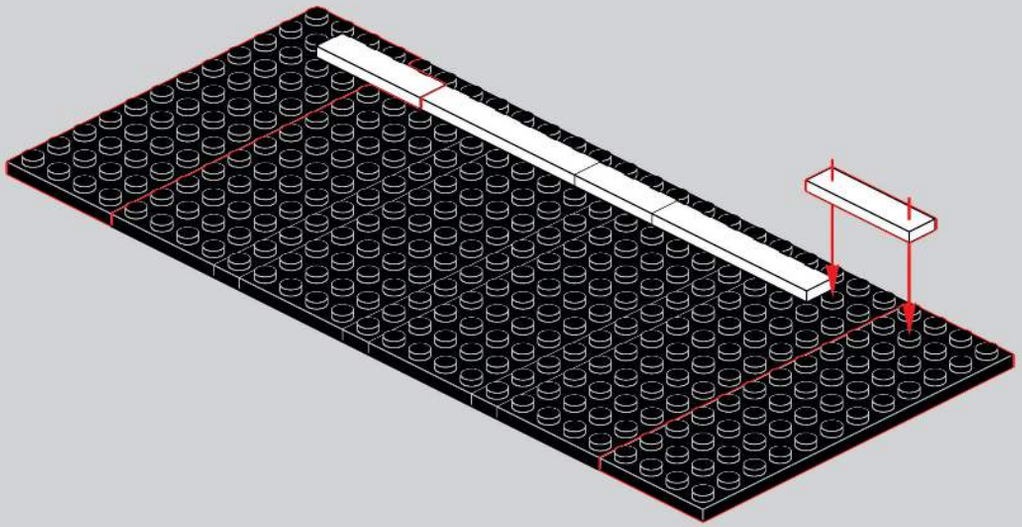

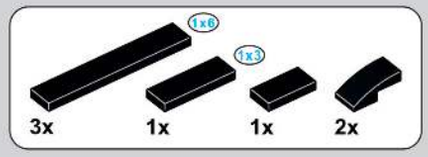

641

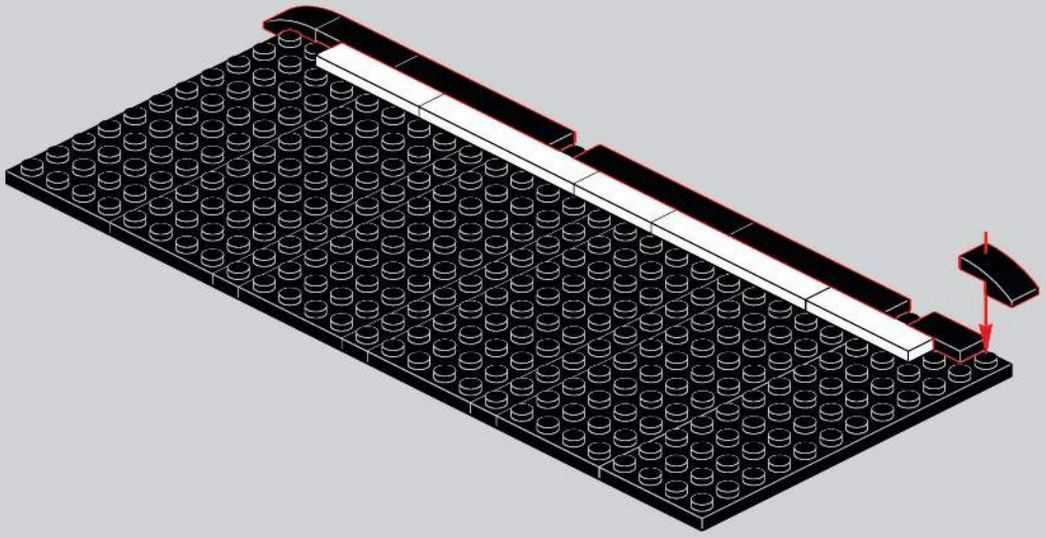

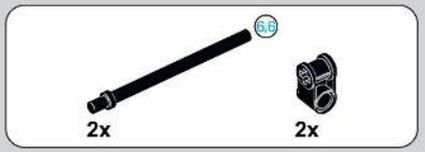

642

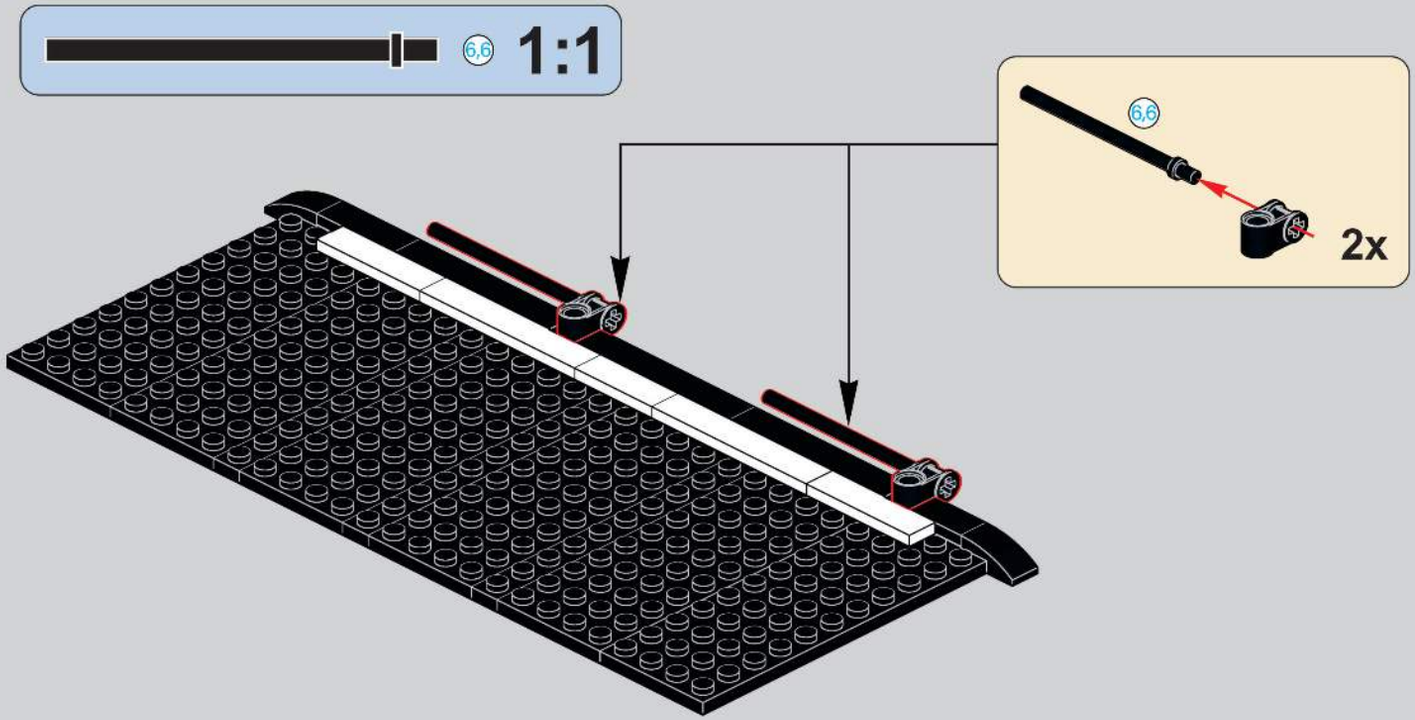

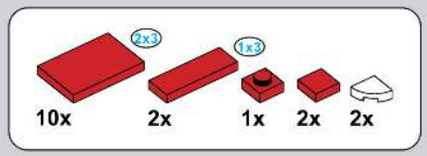

643

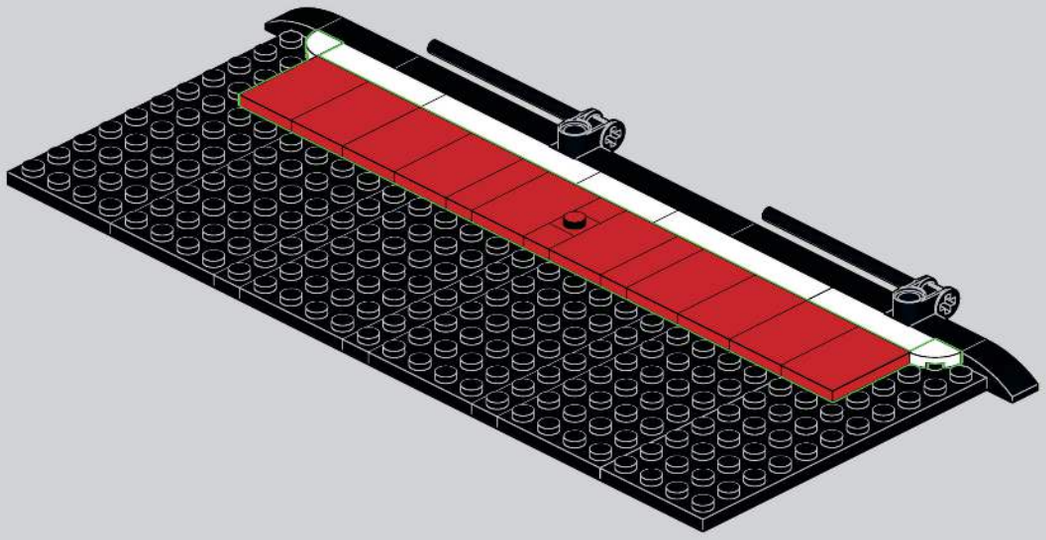

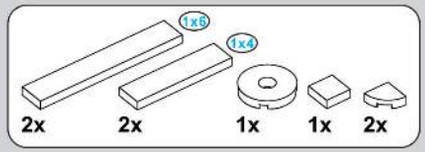

644

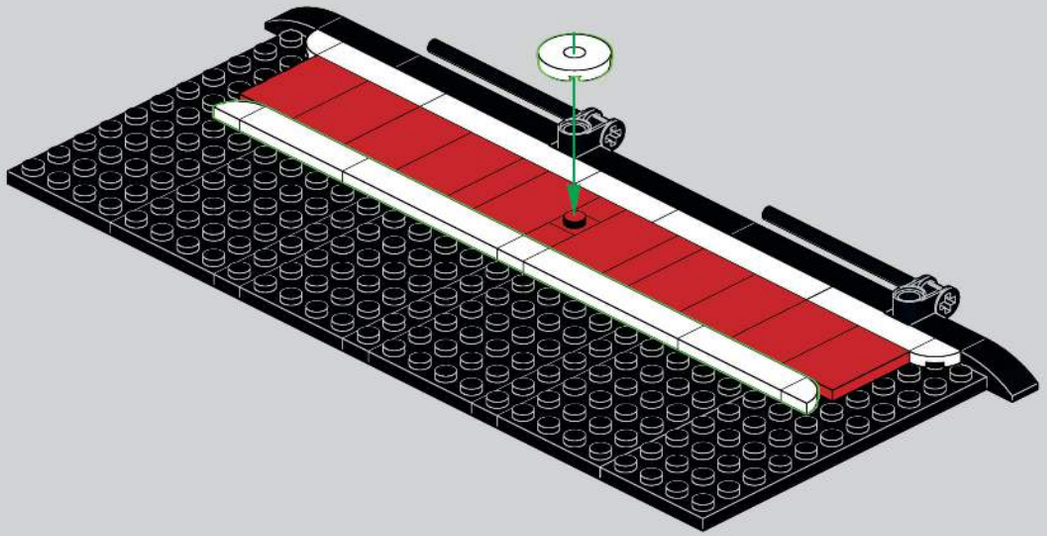

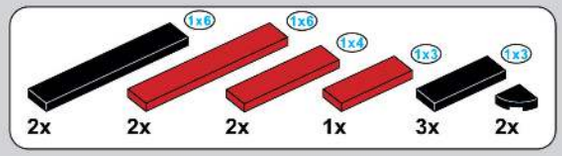

645

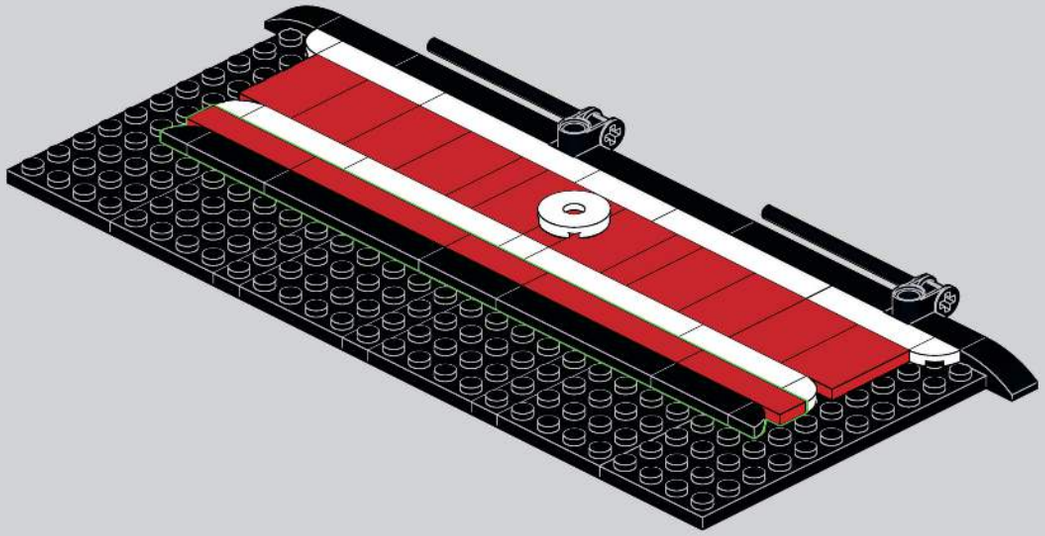

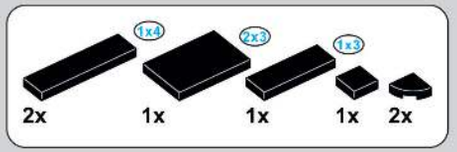

646

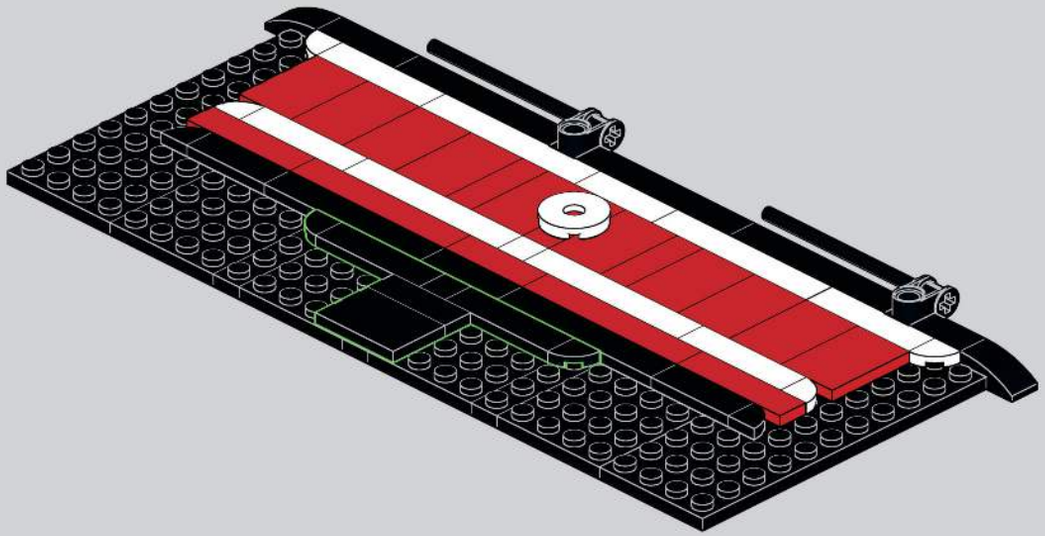

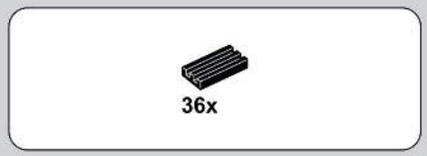

647

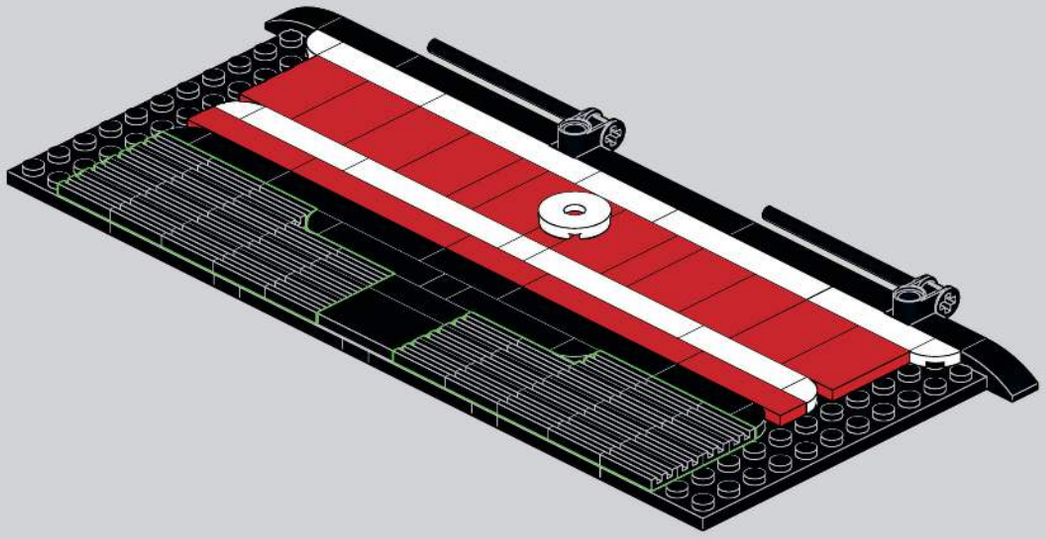

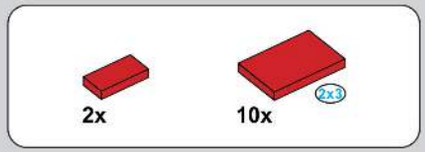

648

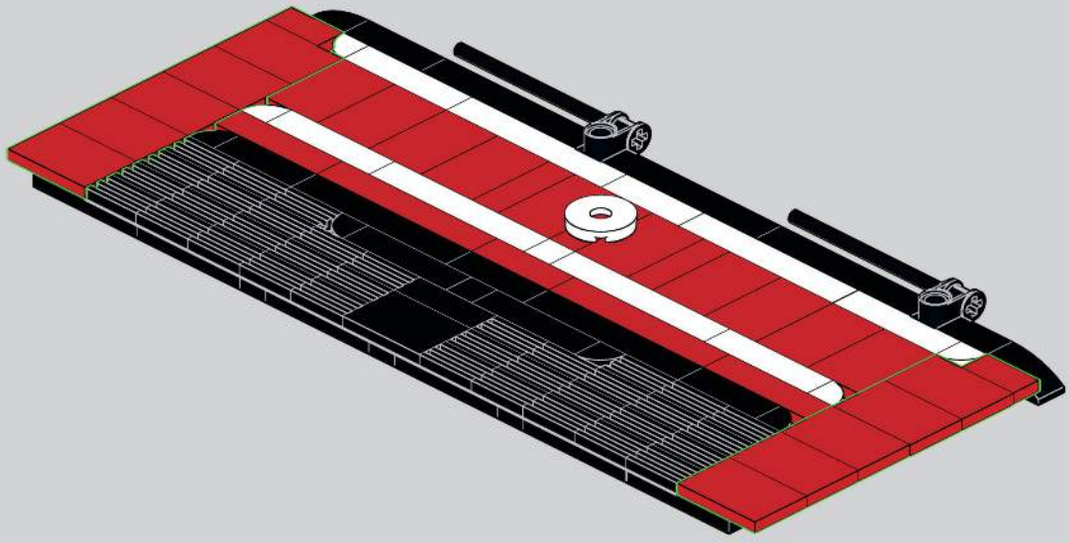

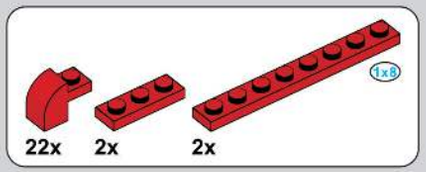

649

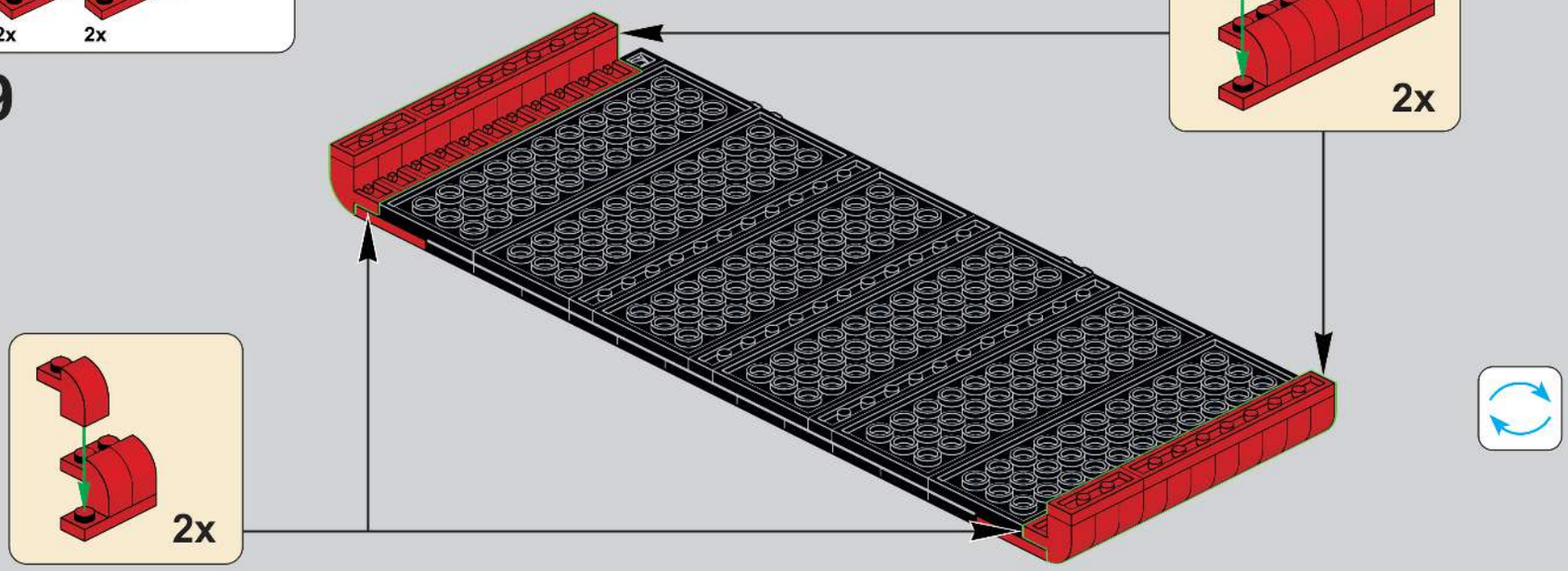

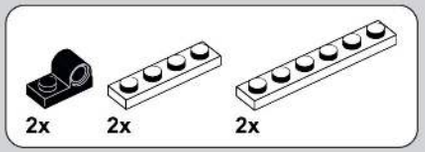

650

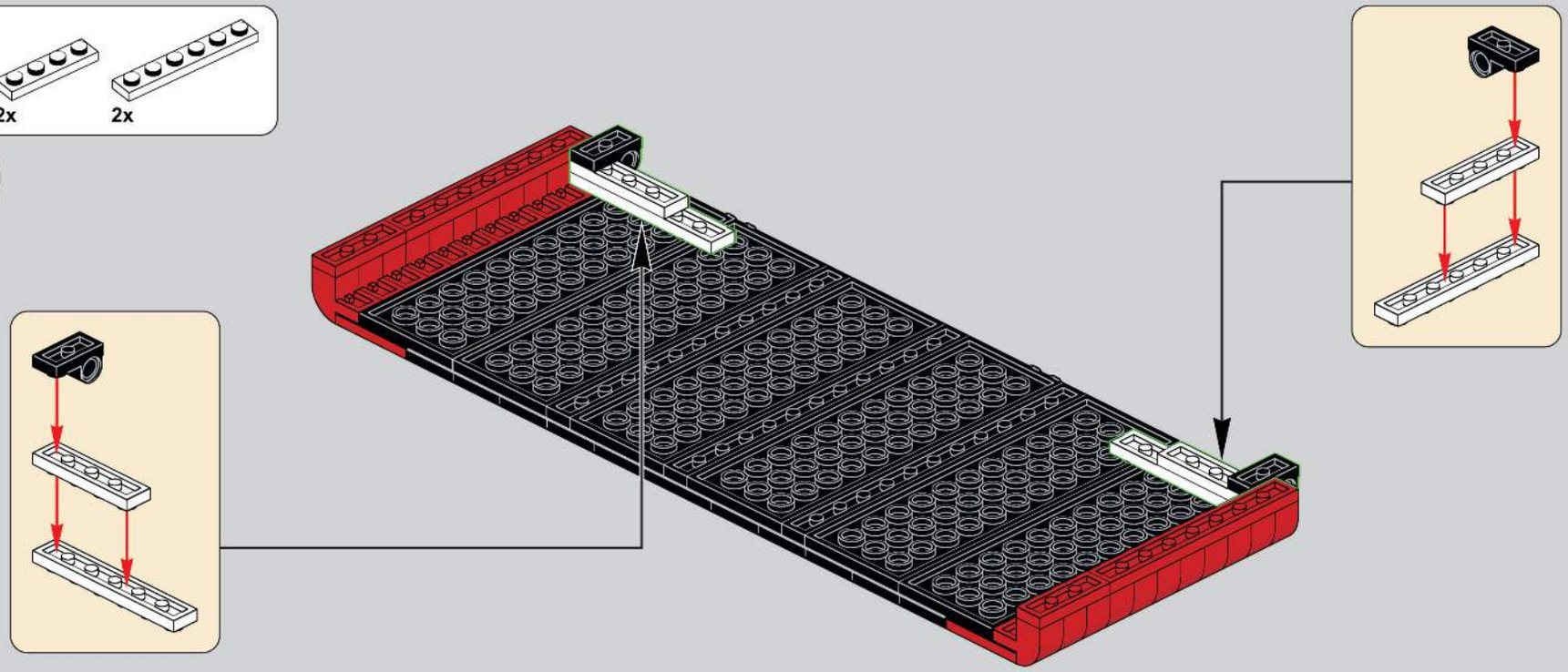

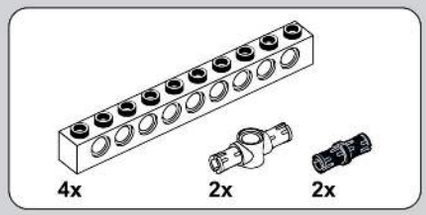

651

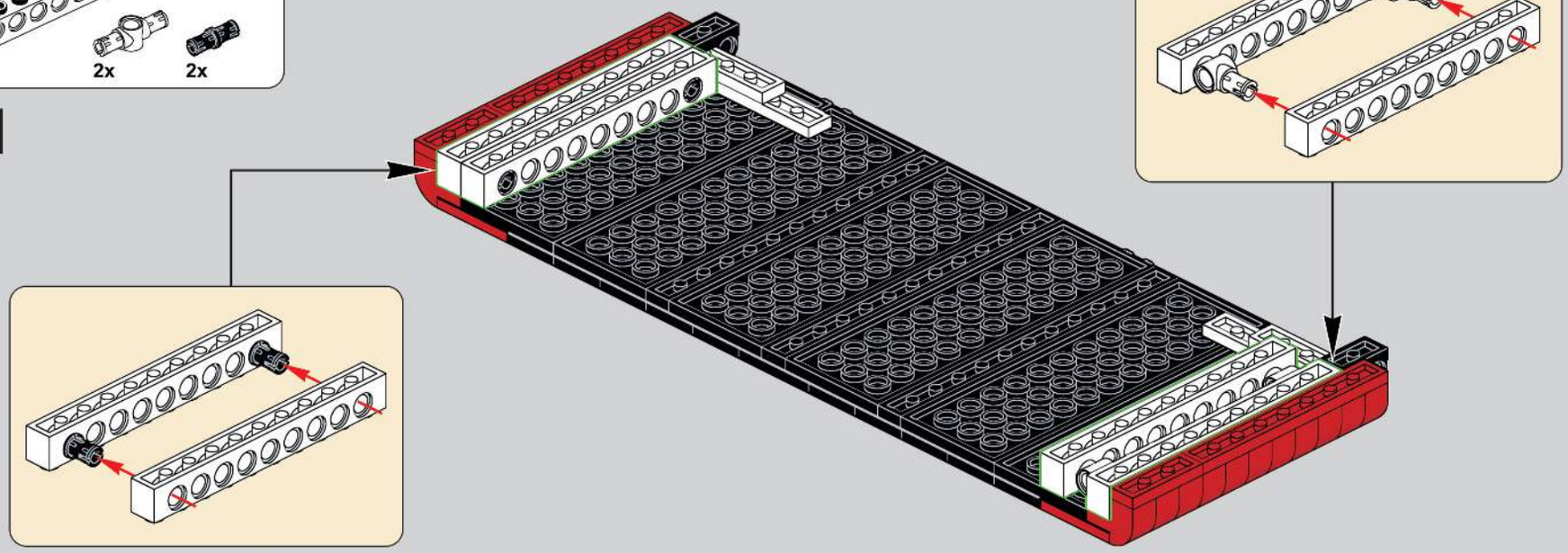

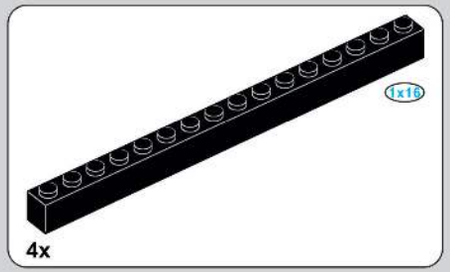

652

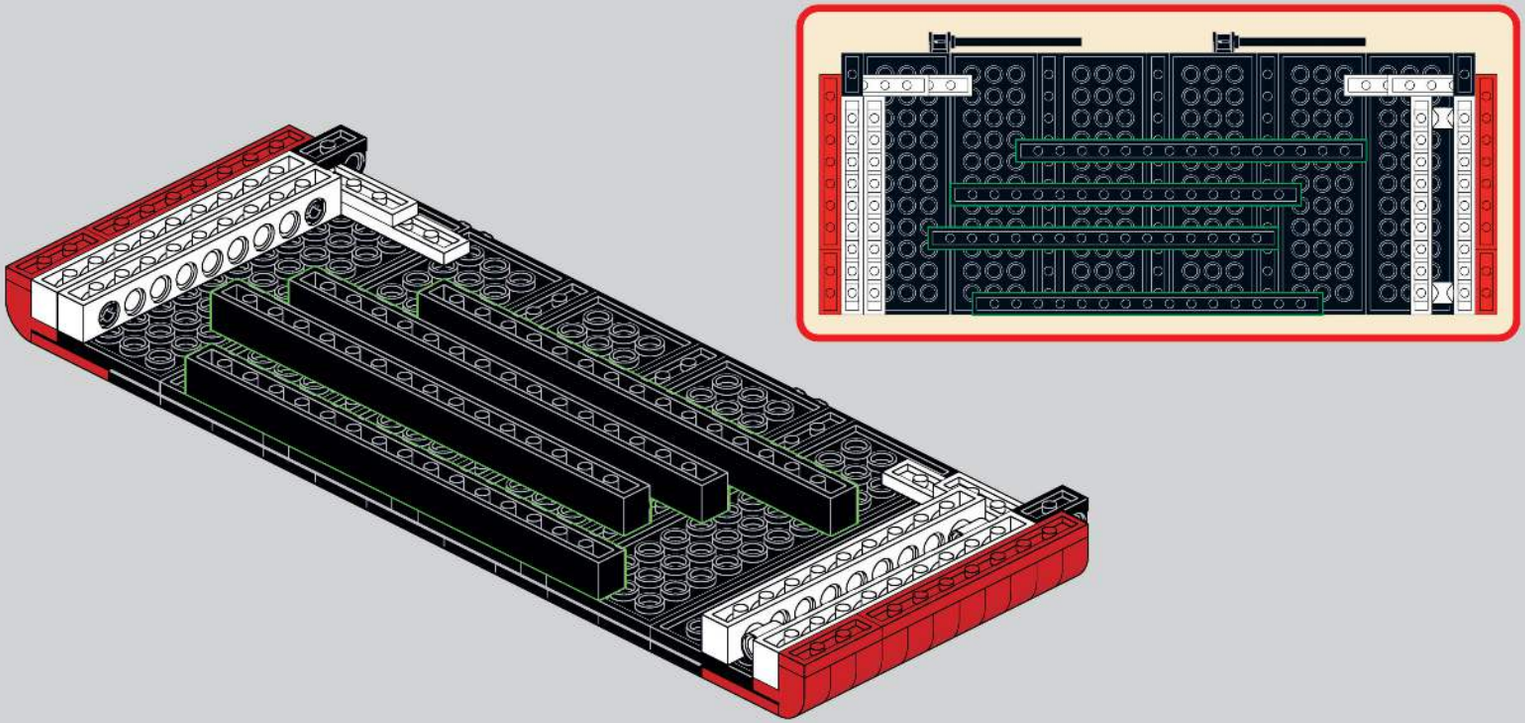

653

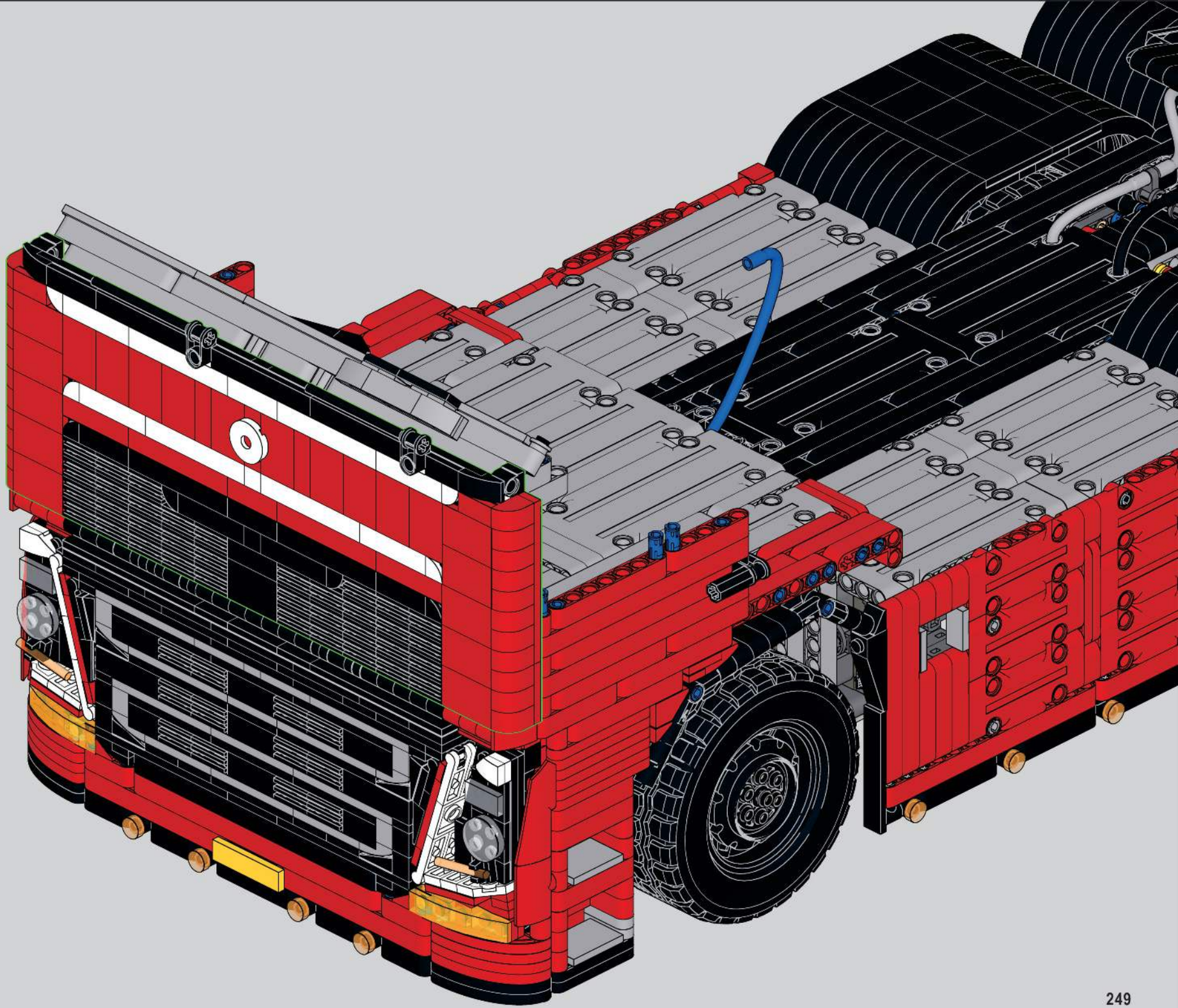

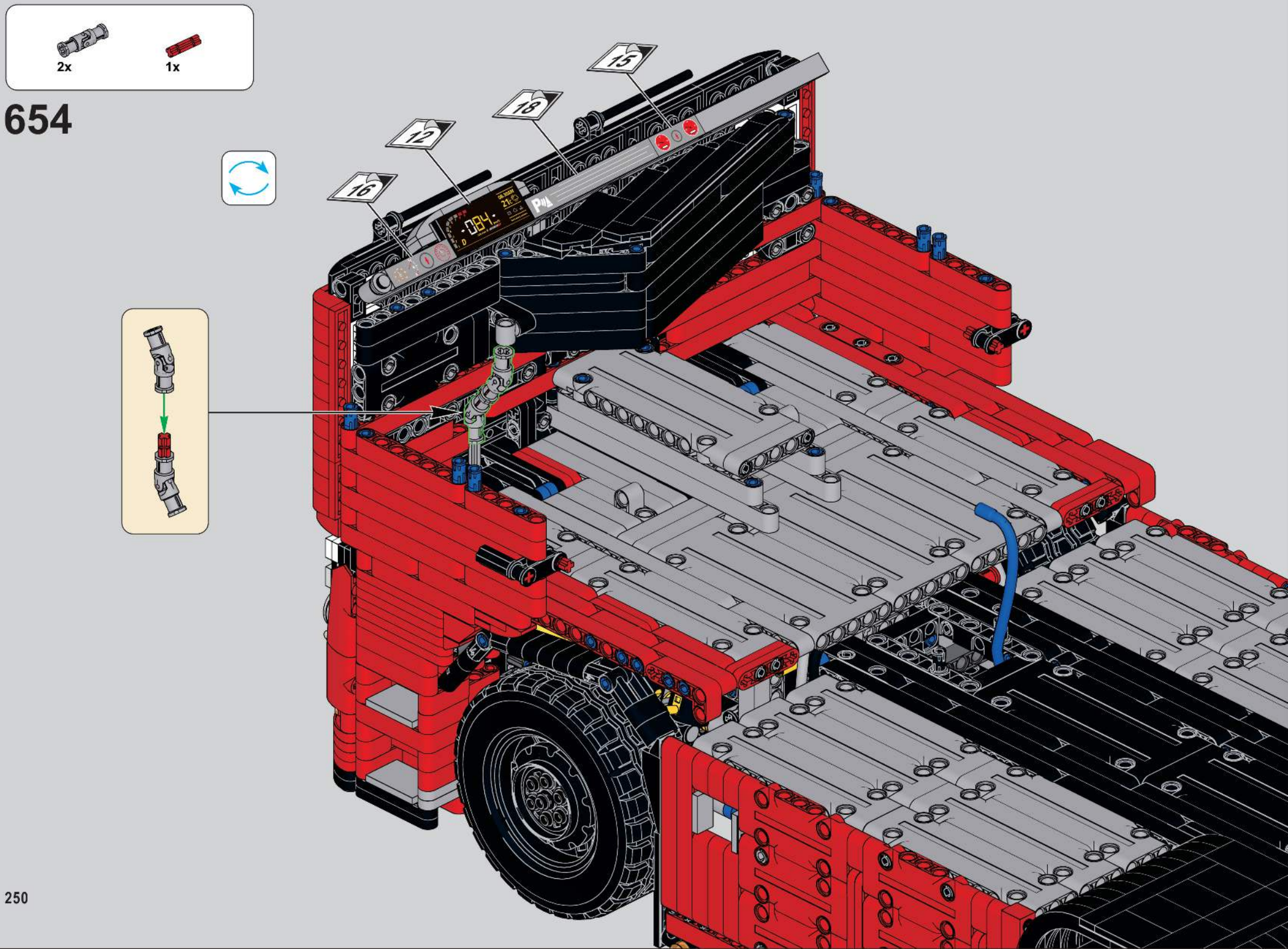
2x
1x
654
16
12
18
15

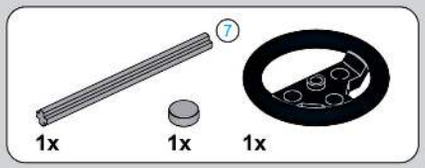

655

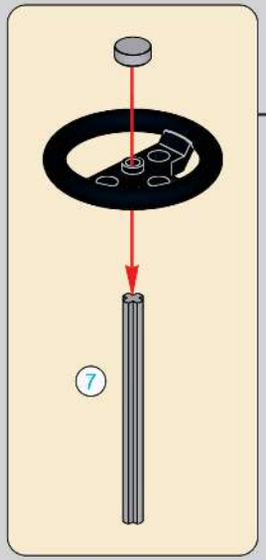

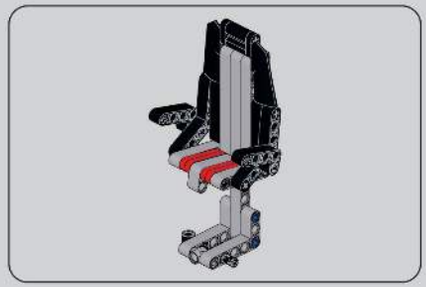

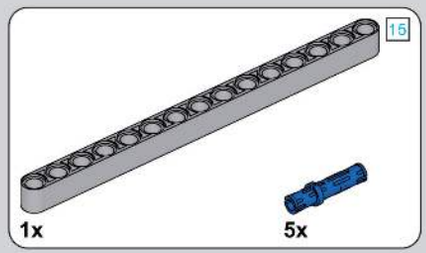

656

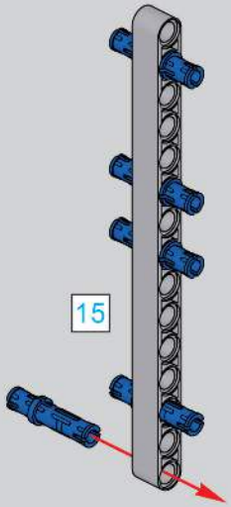

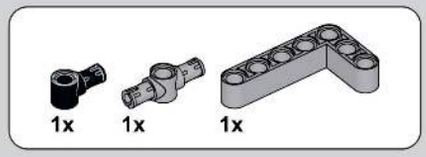

657

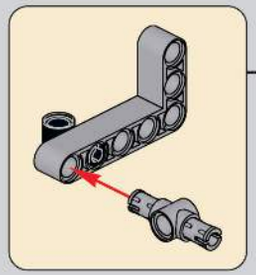

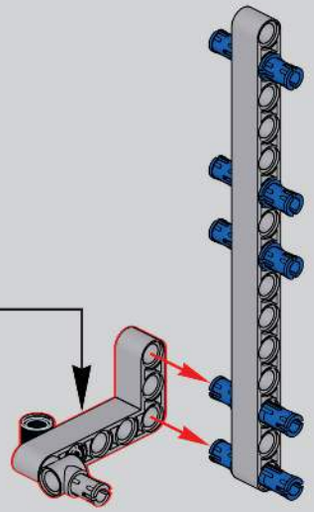

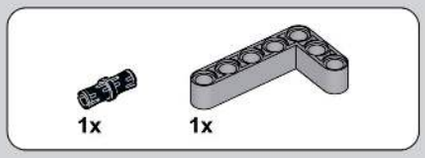

658

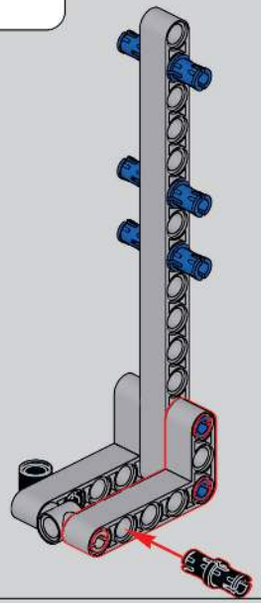

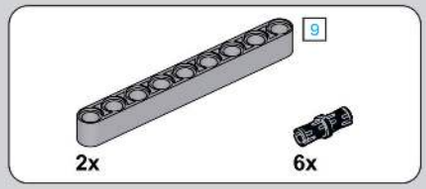

659

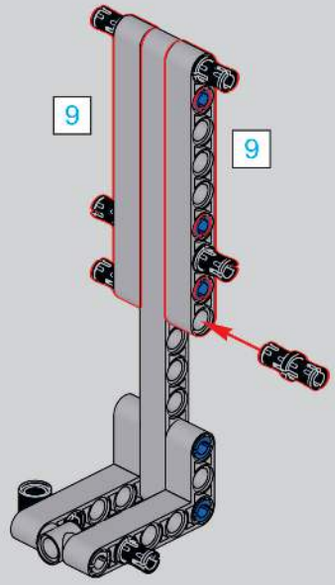

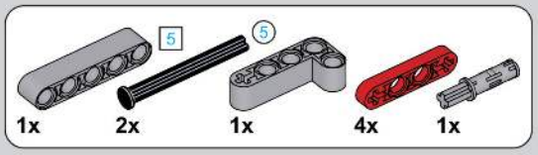

660

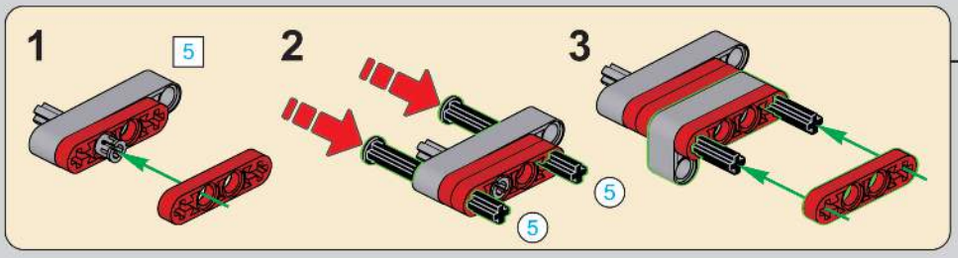

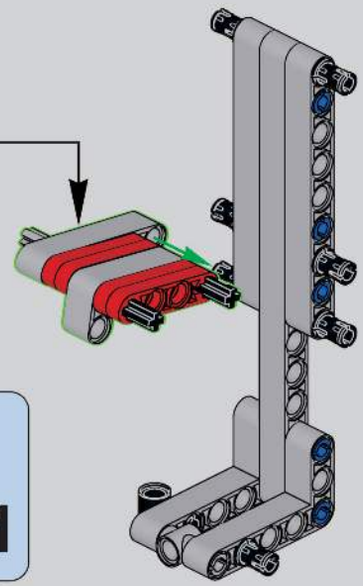

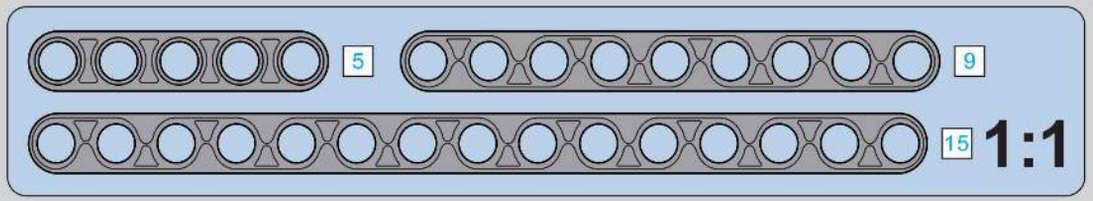

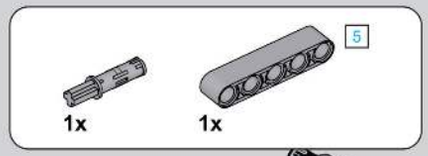

661

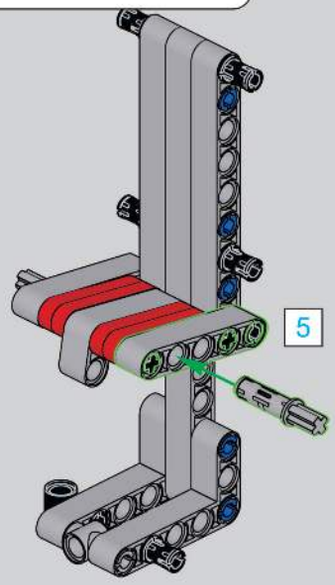

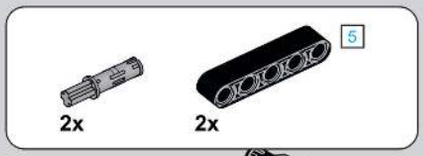

662

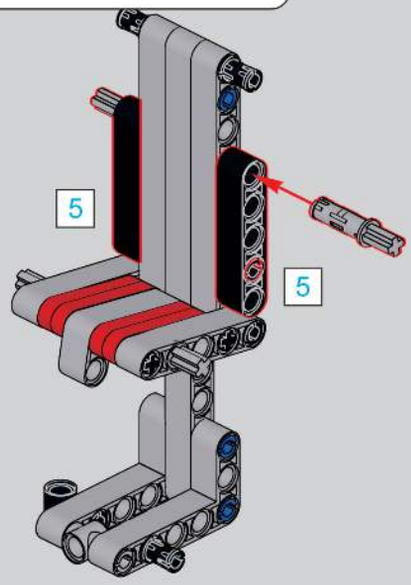

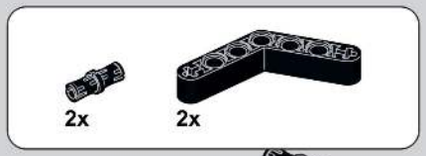

663

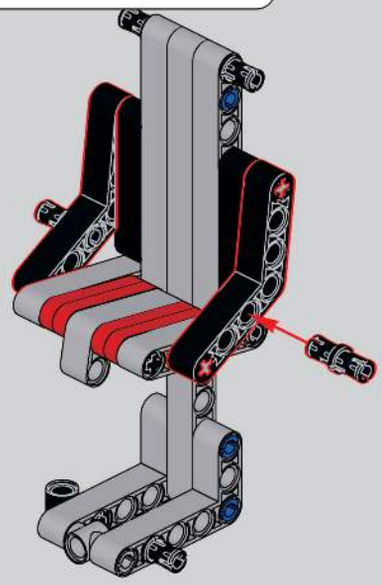

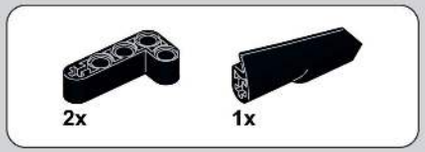

664

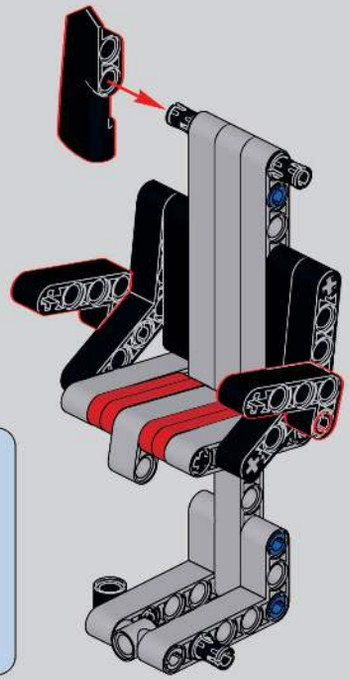

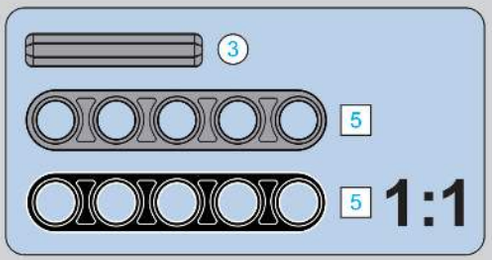

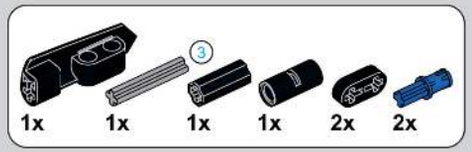

665

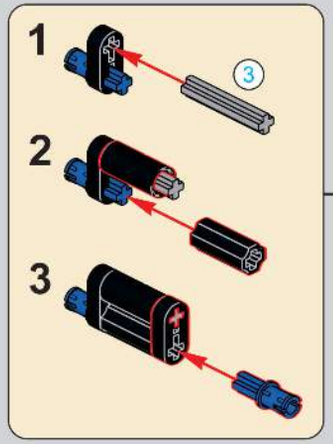

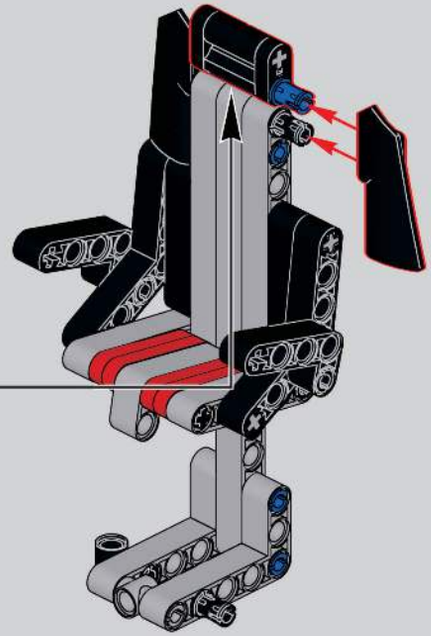

666

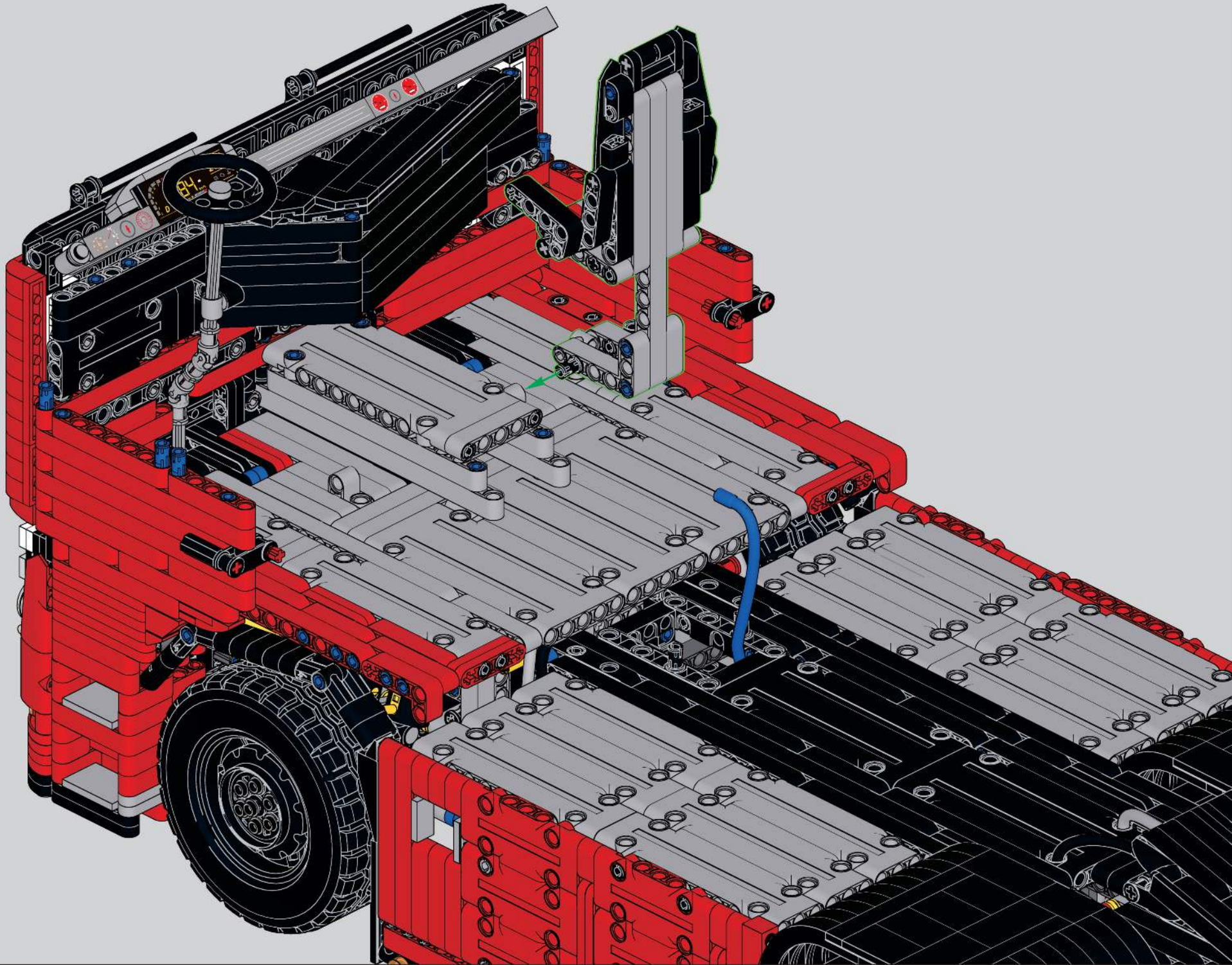

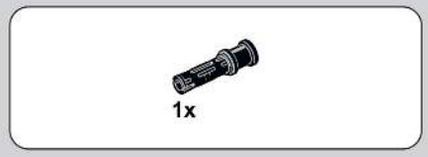

667

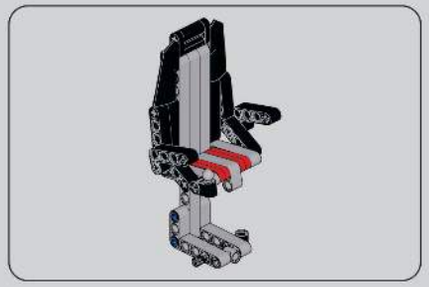

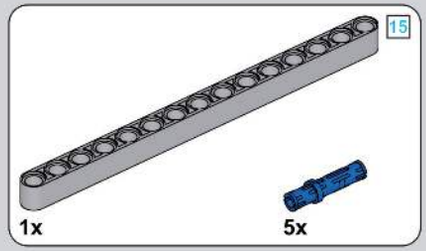

668

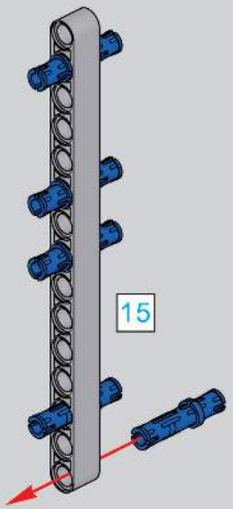

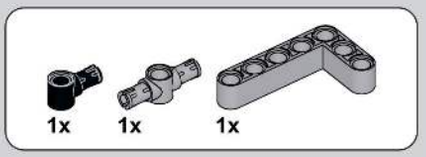

669

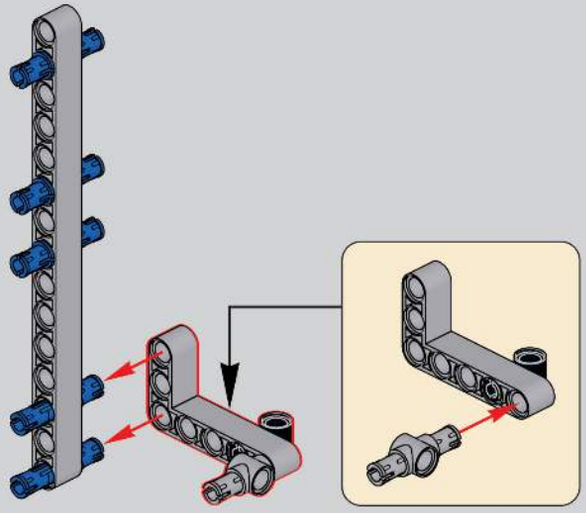

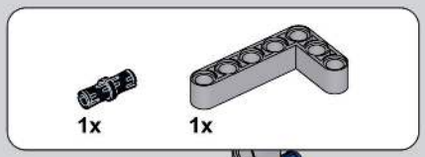

670

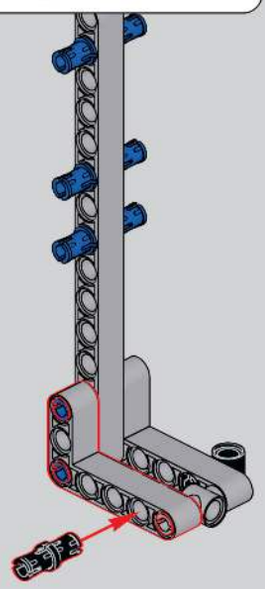

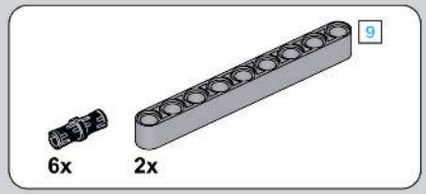

671

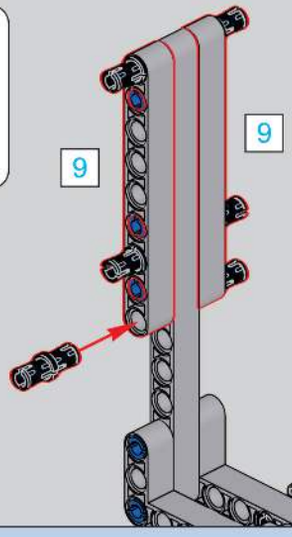

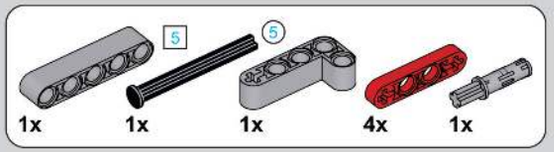

672

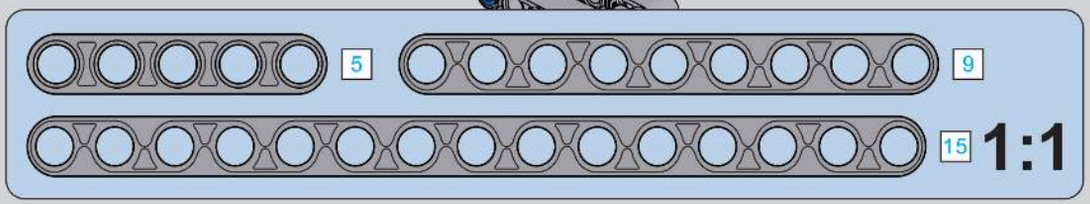

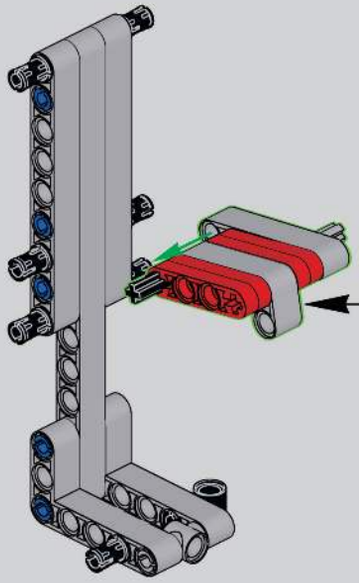

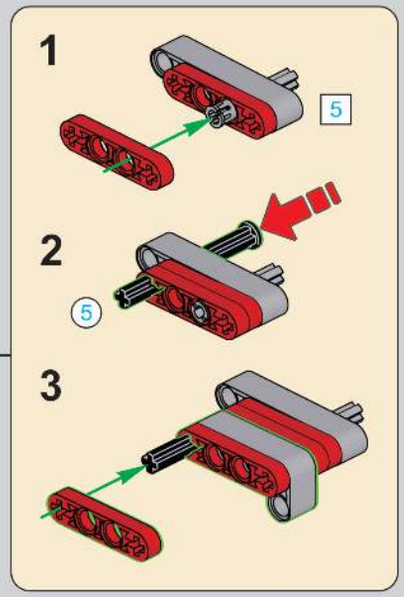

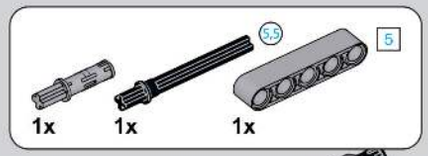

673

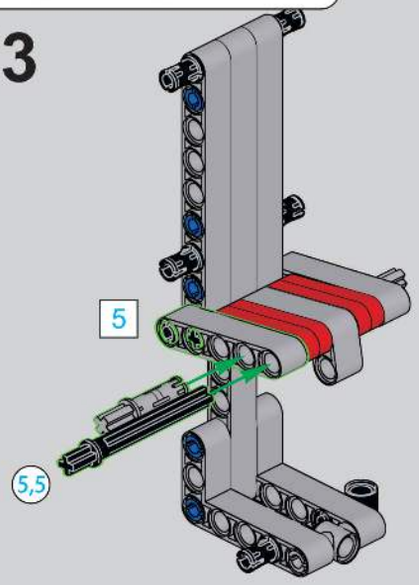

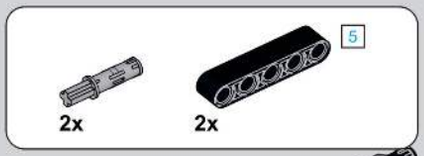

674

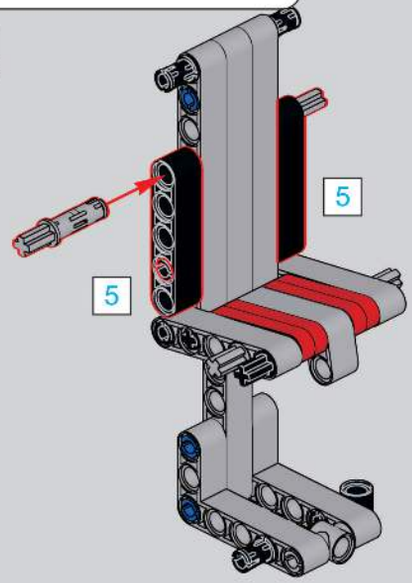

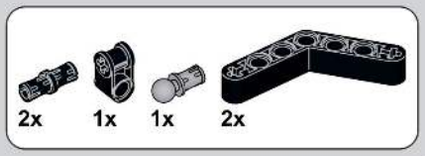

675

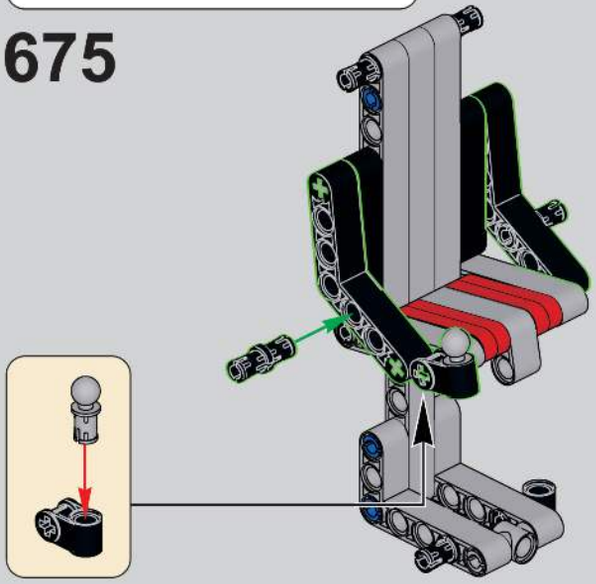

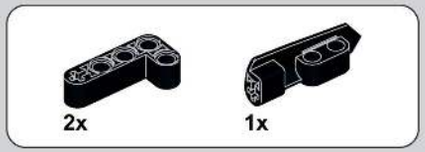

676

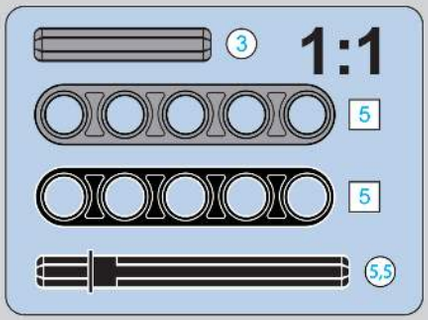

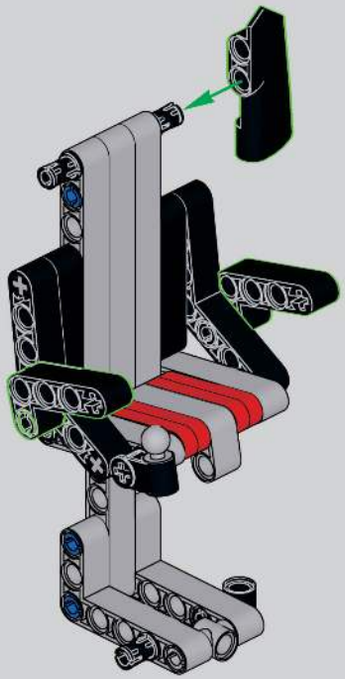

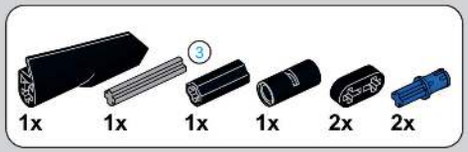

677

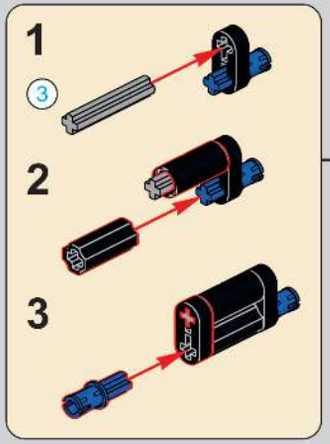

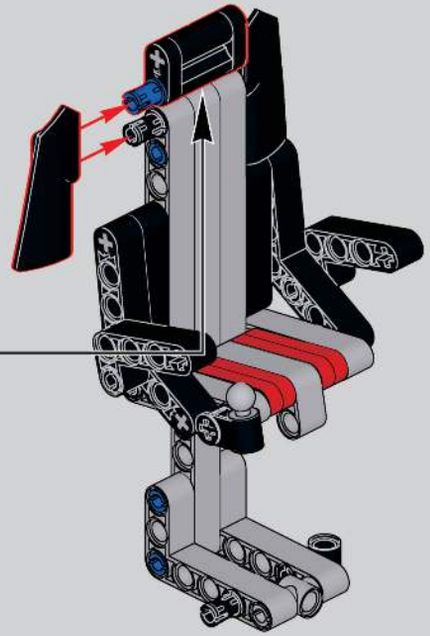

678

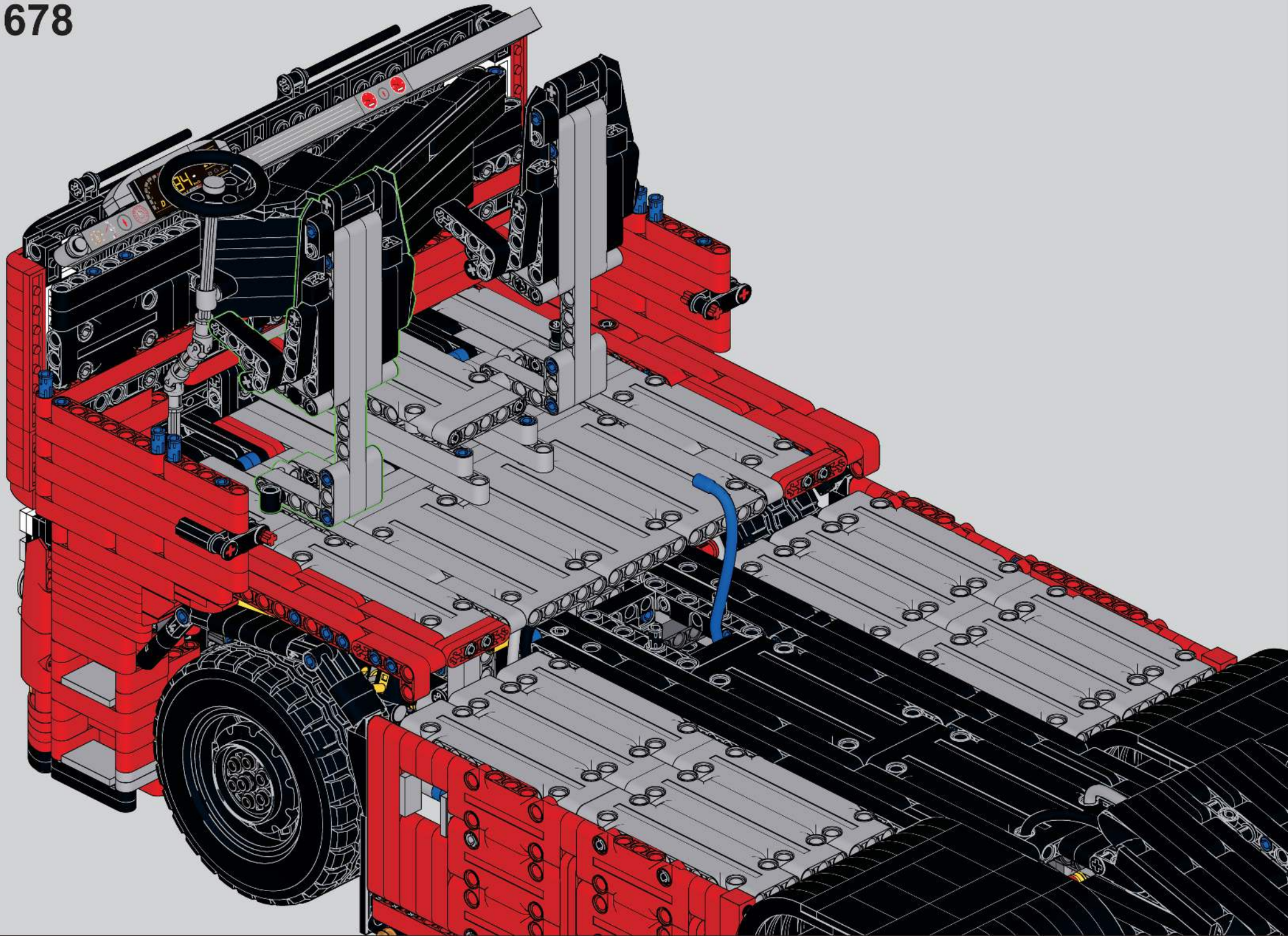

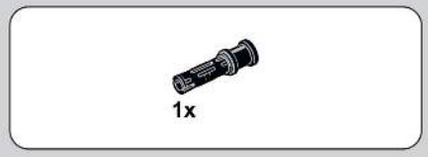

679

8

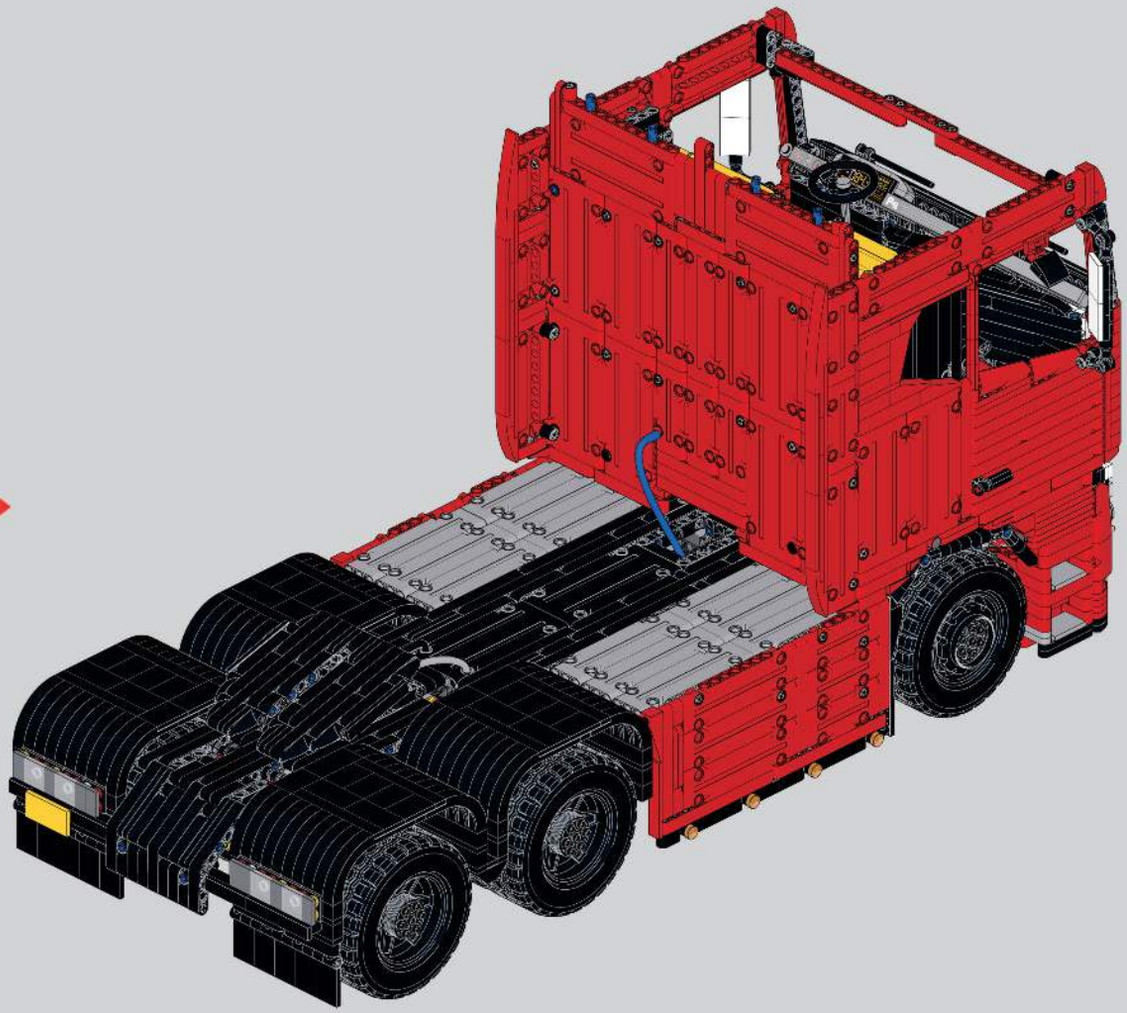

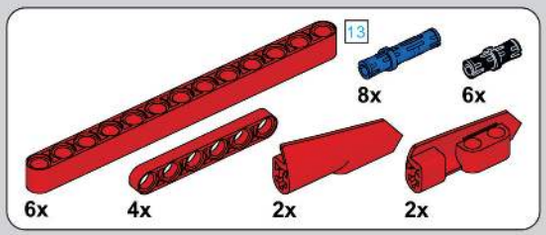

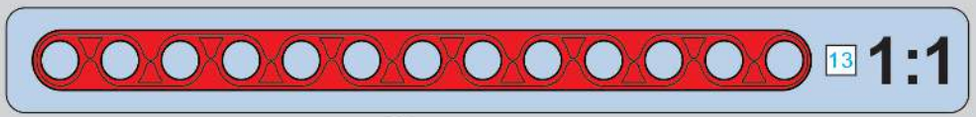

680

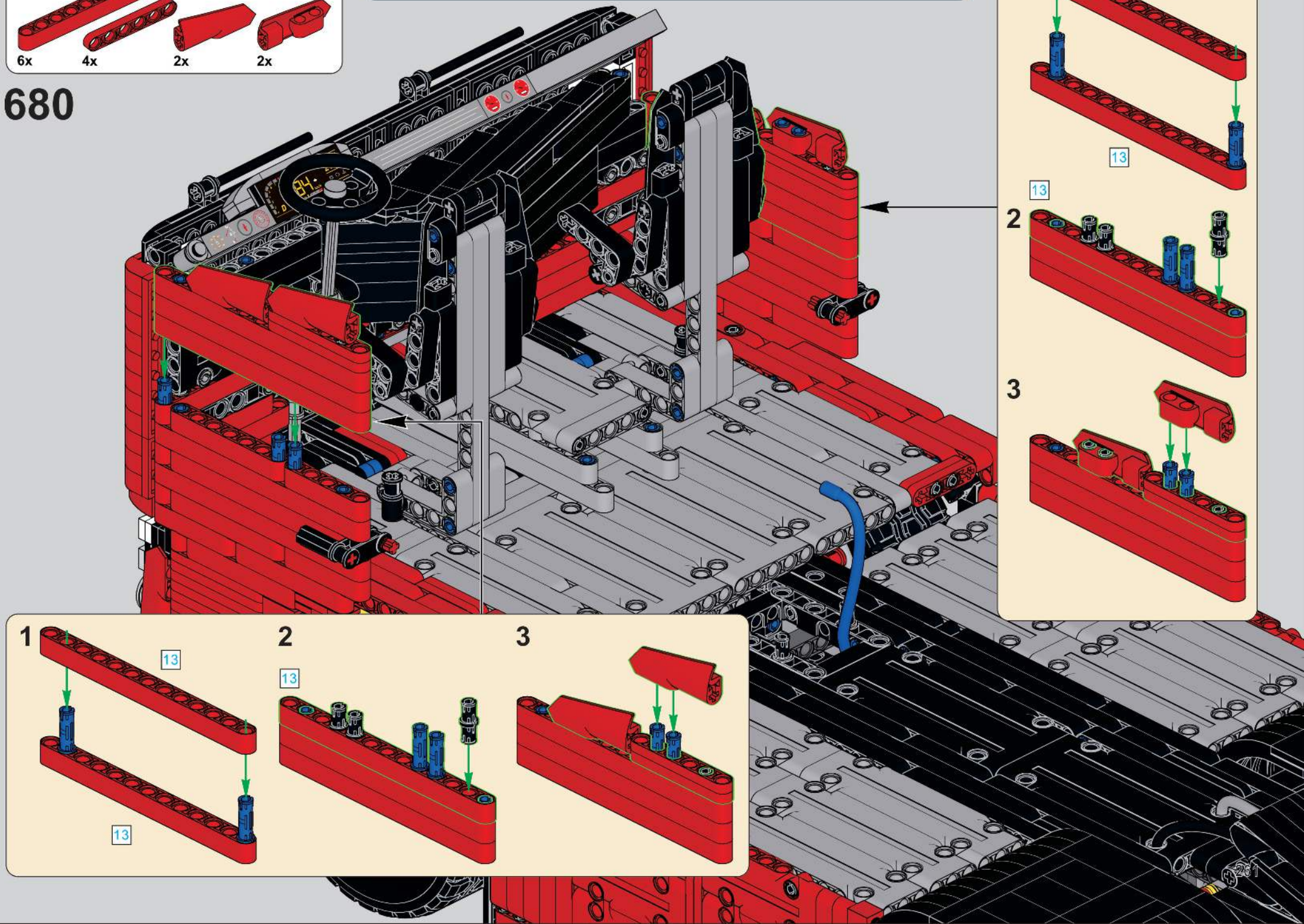

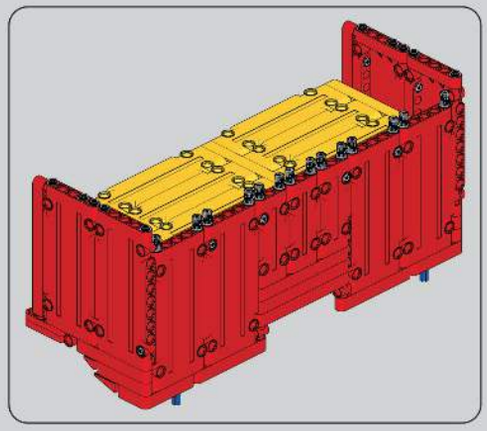

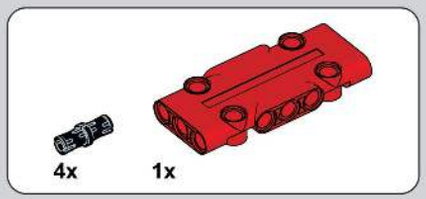

681

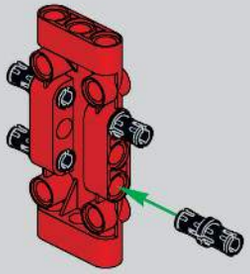

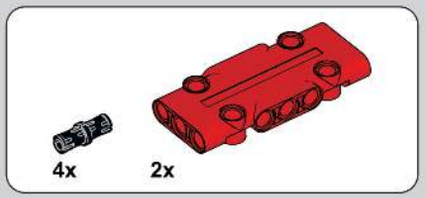

682

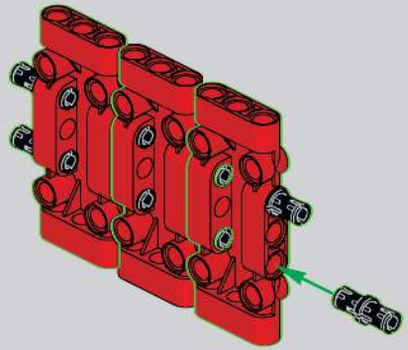

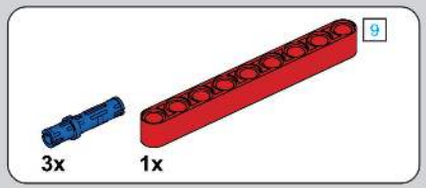

683

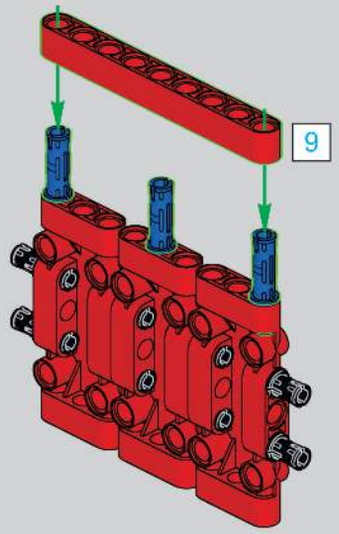

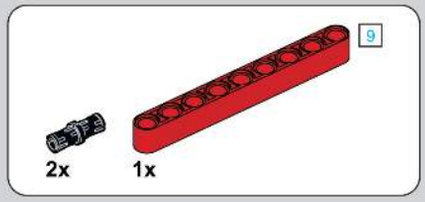

684

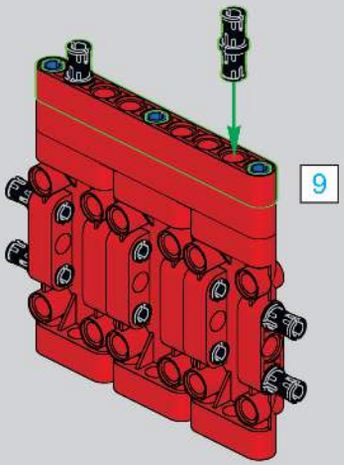

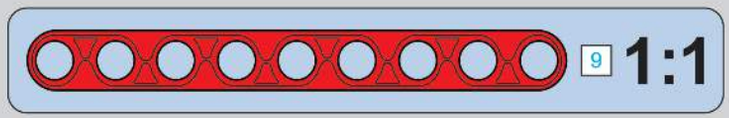

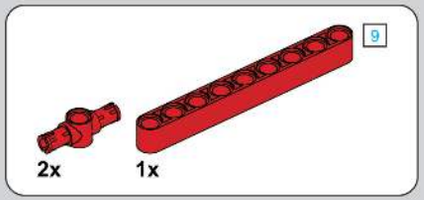

685

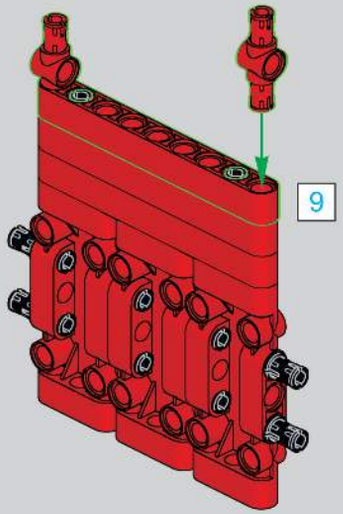

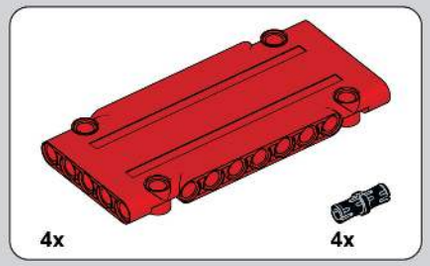

686

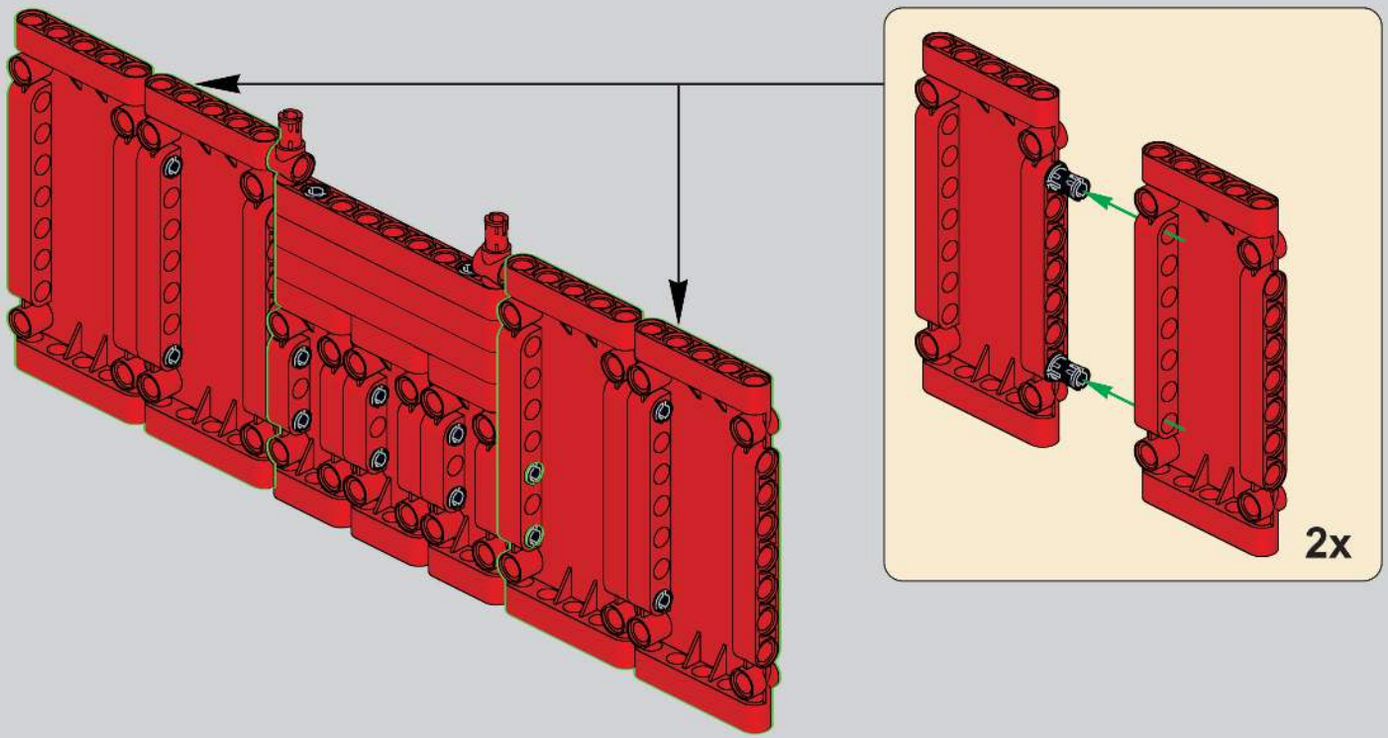

687

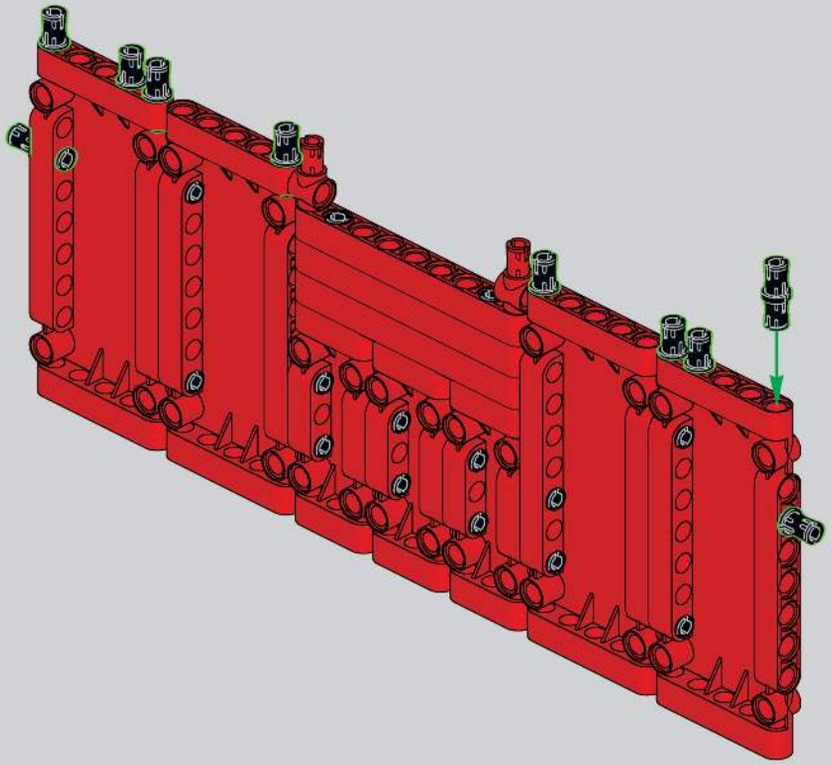

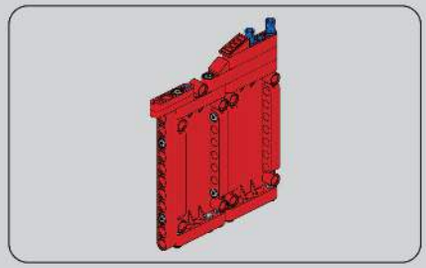

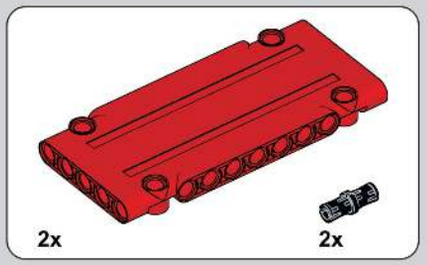

688

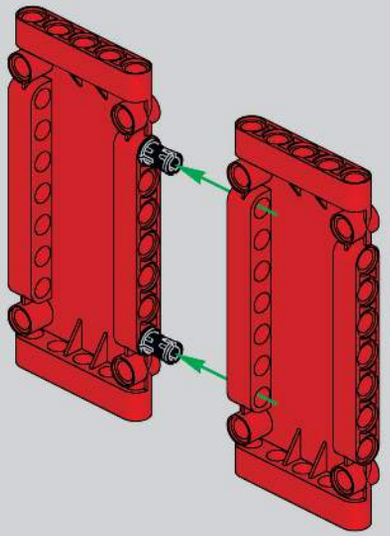

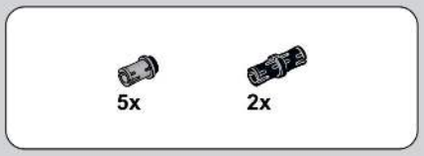

689

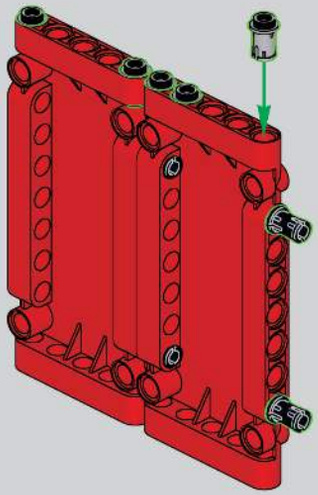

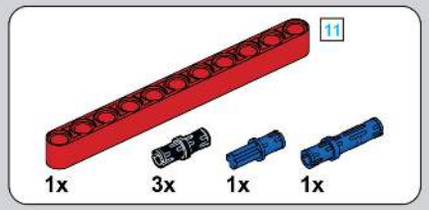

690

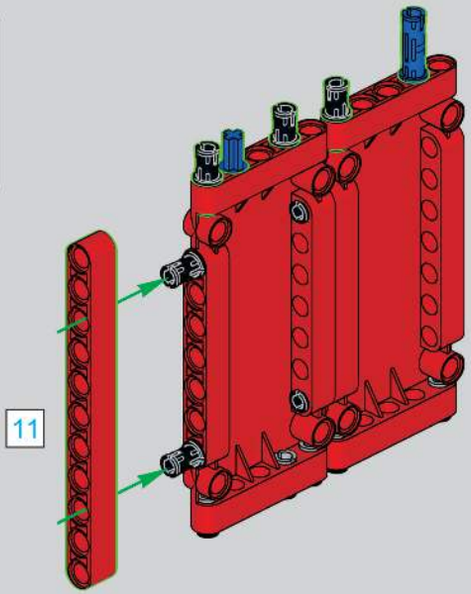

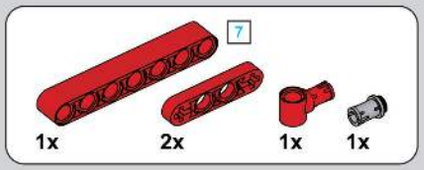

691

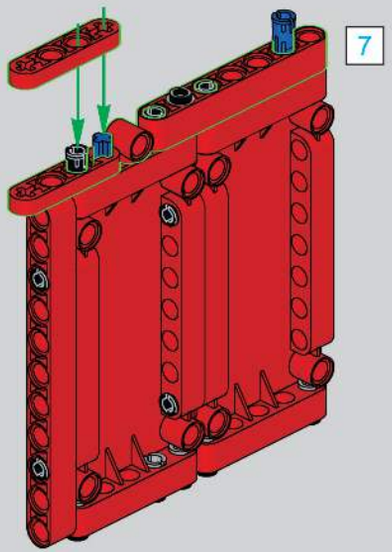

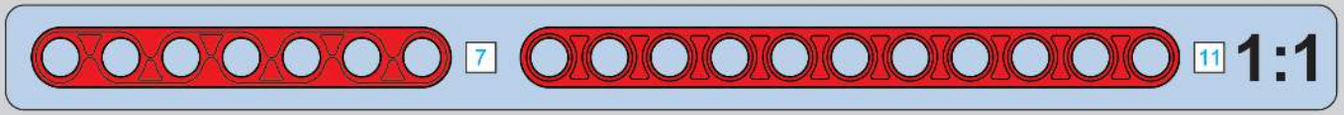

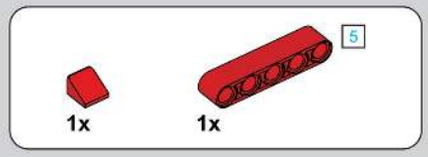

692

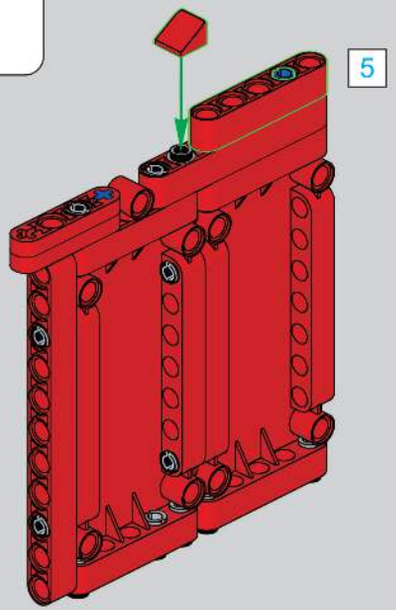

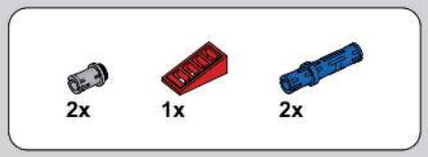

693

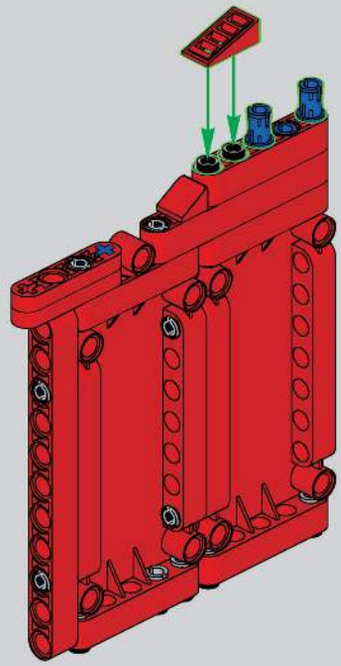

694

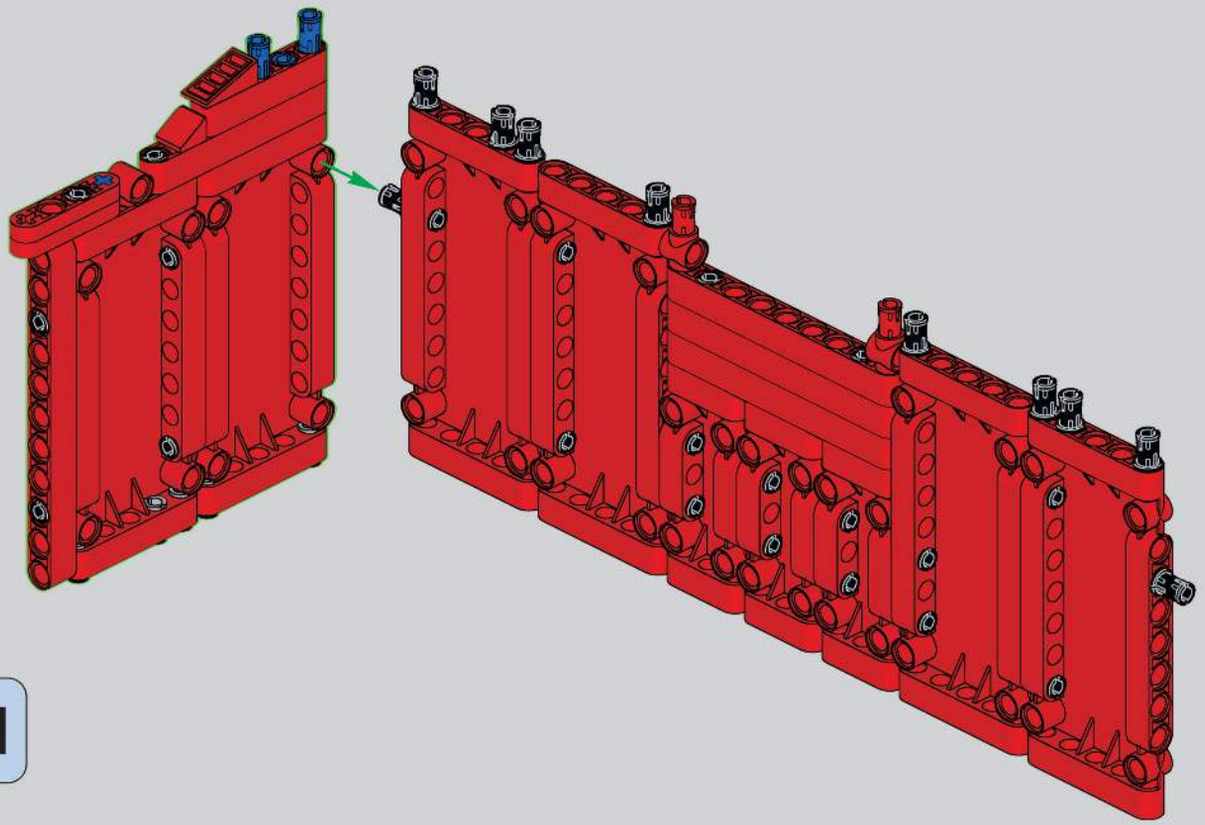

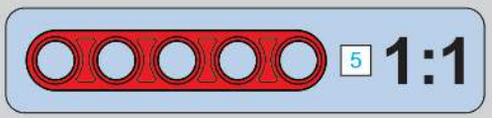

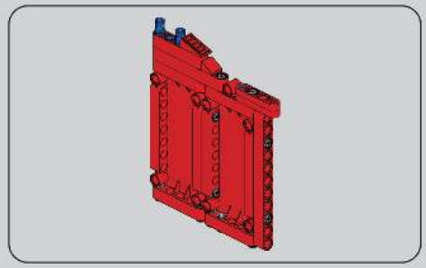

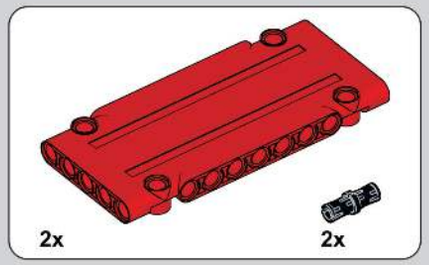

695

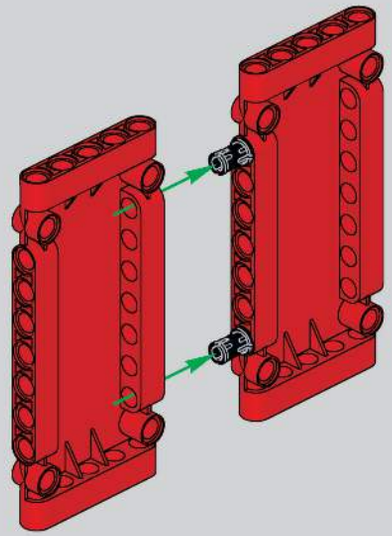

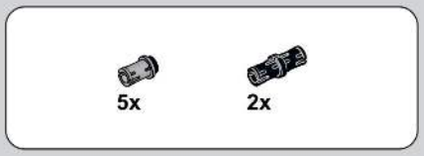

696

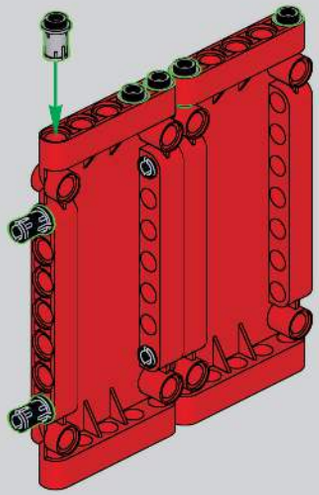

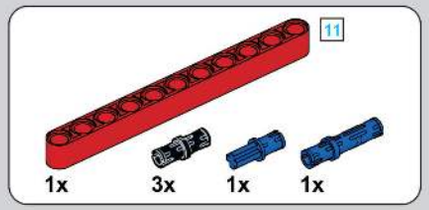

697

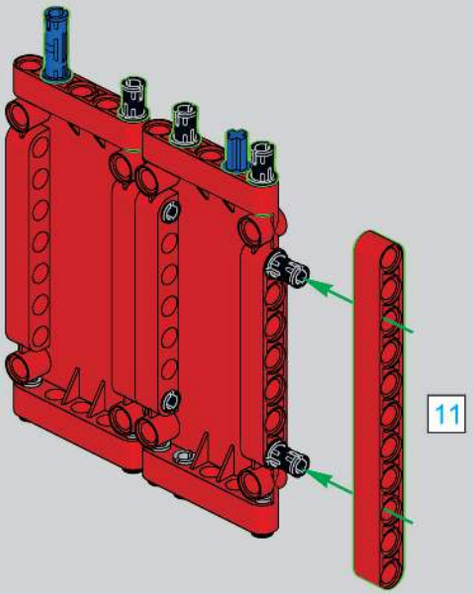

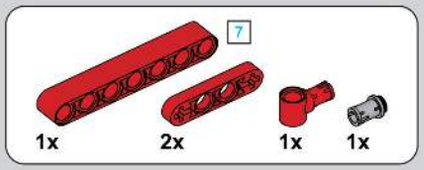

698

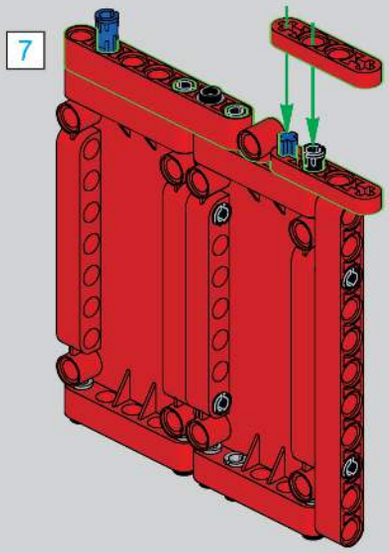

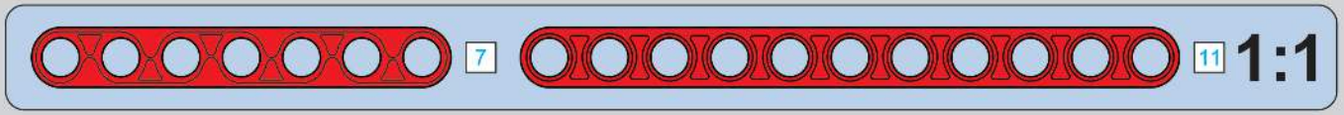

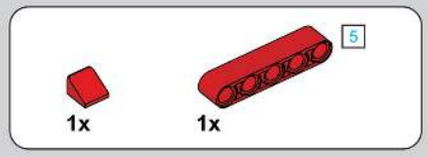

699

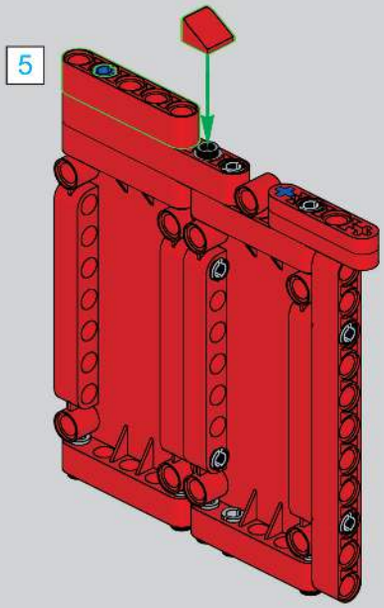

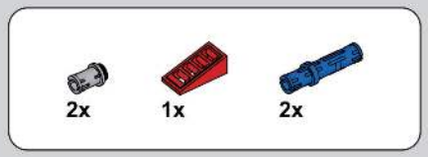

700

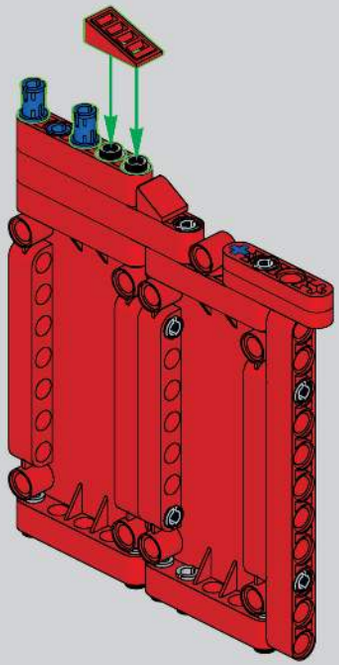

701

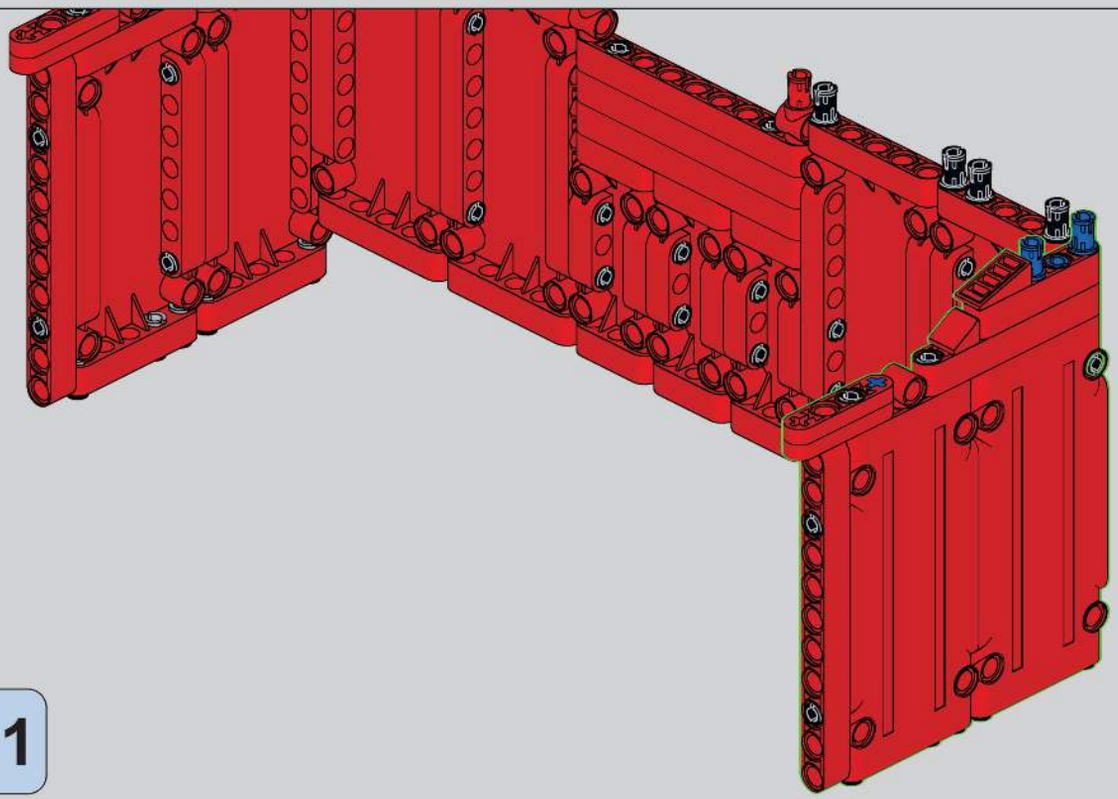

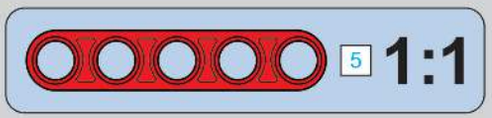

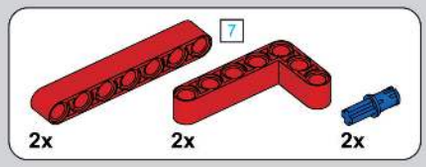

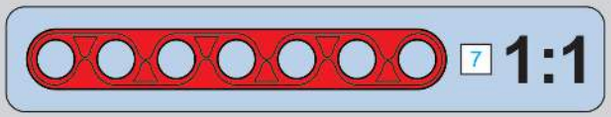

702

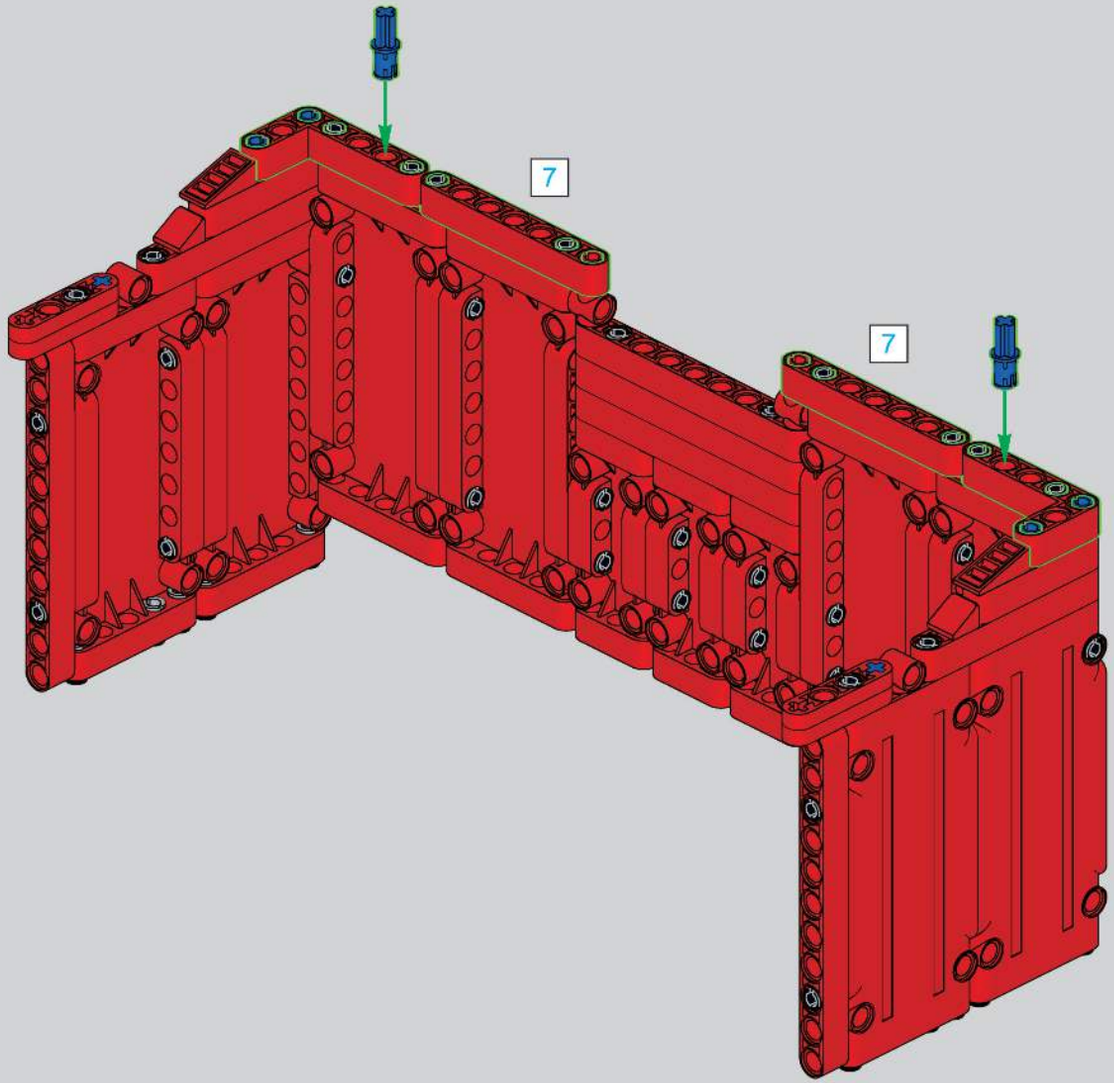

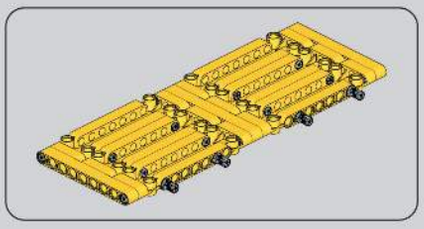

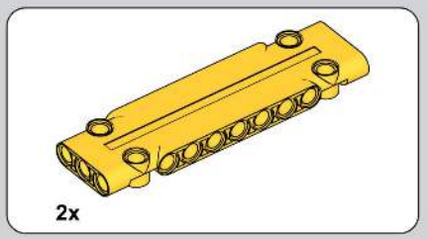

704

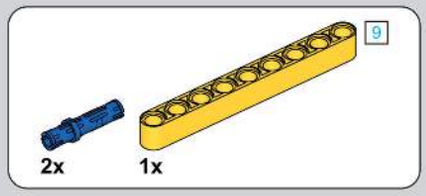

705

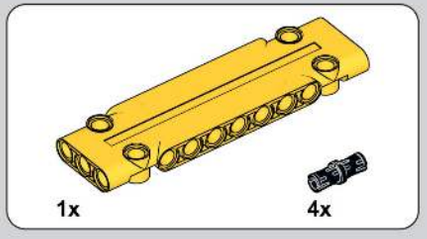

703

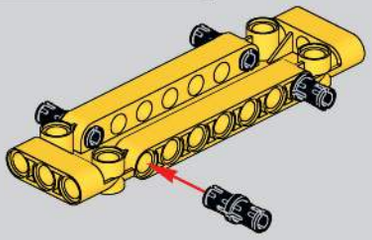

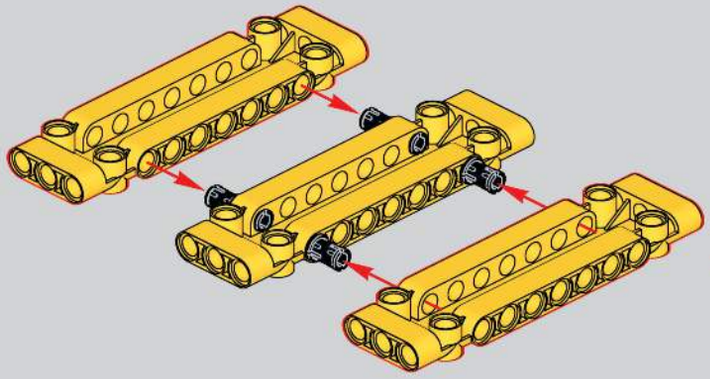

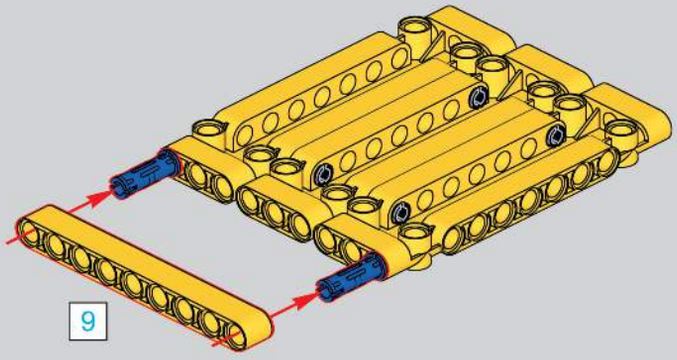

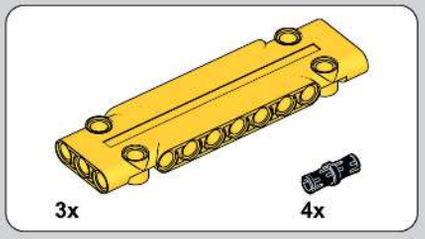

706

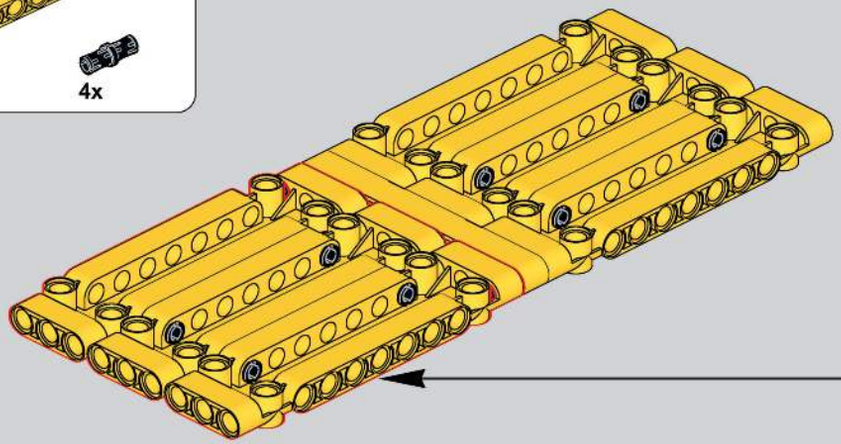

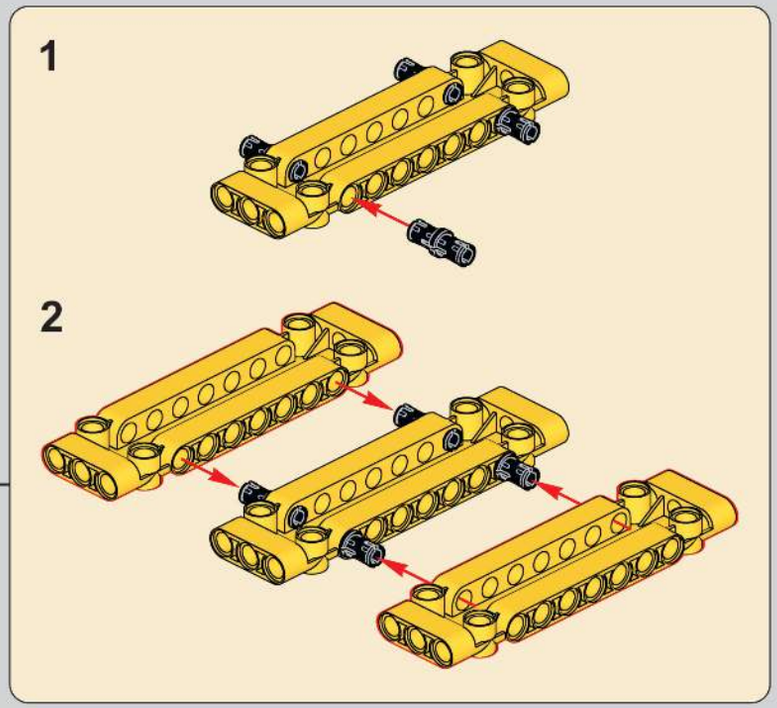

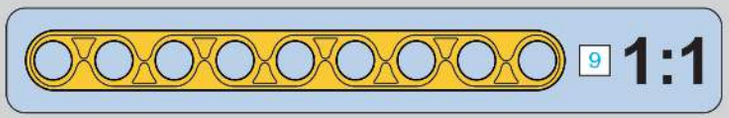

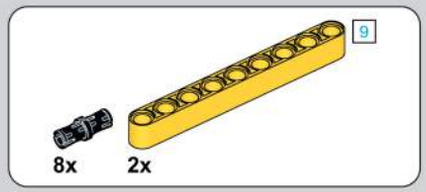

707

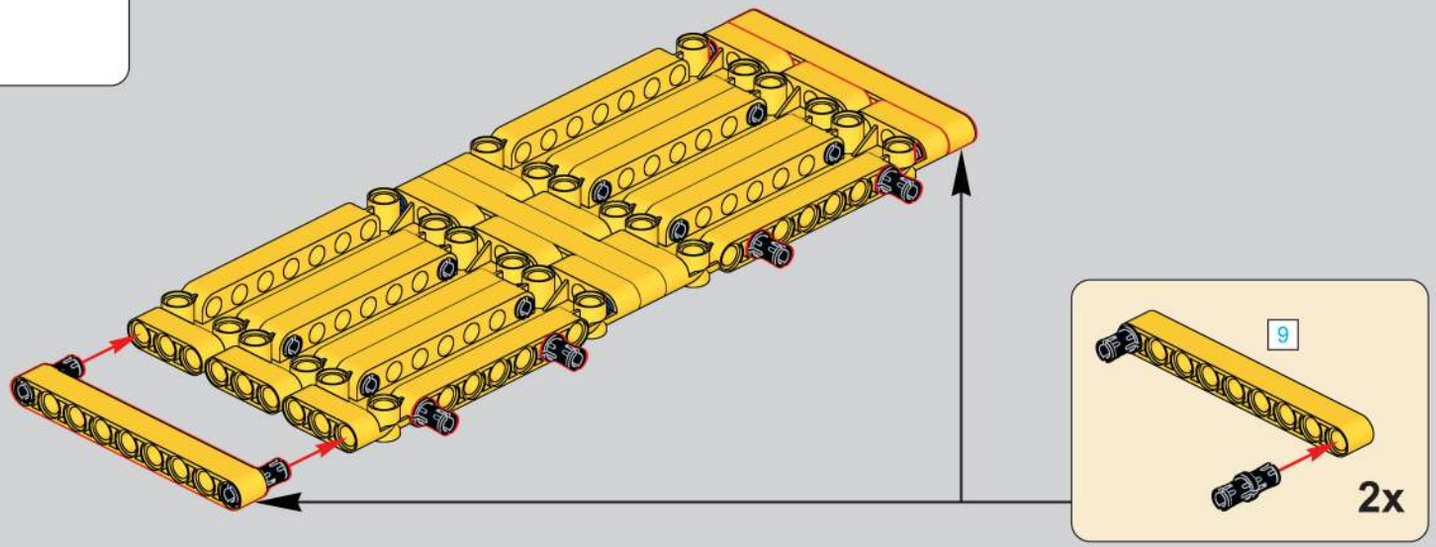

708

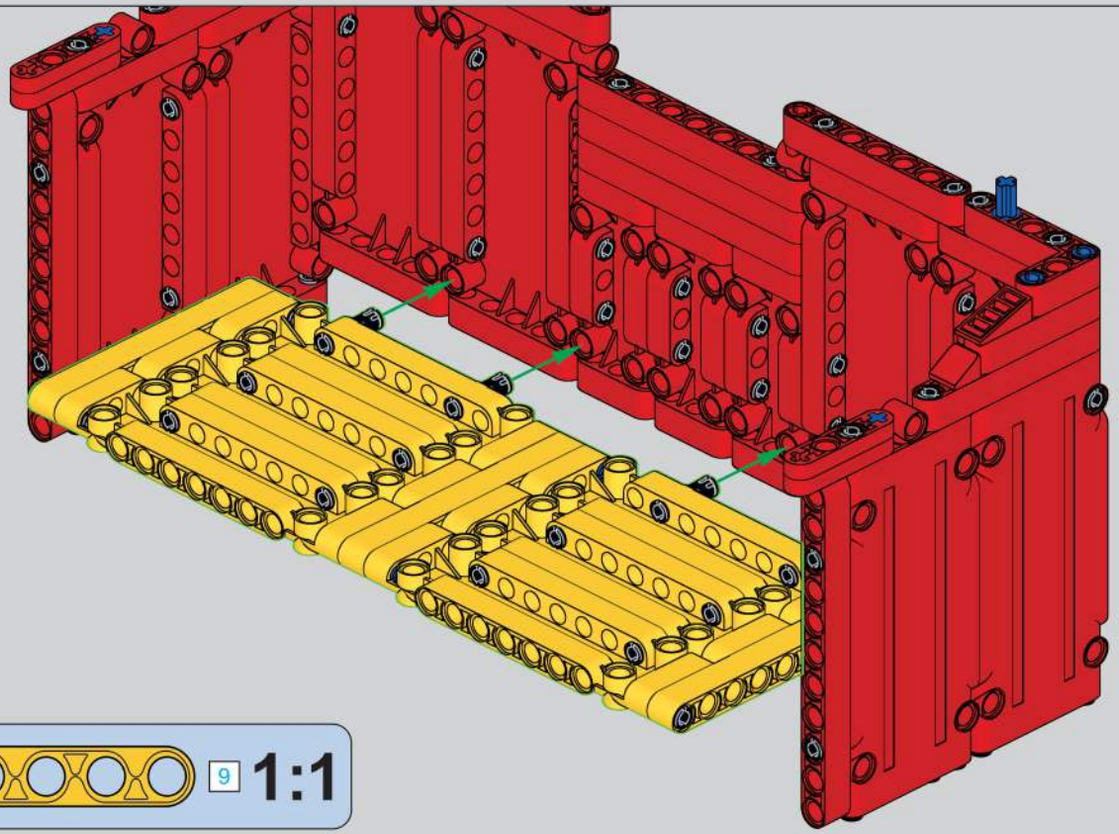

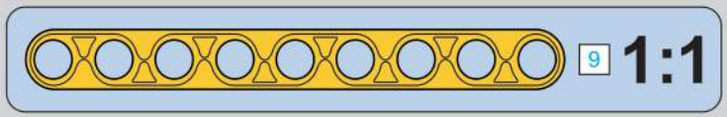

14x

709

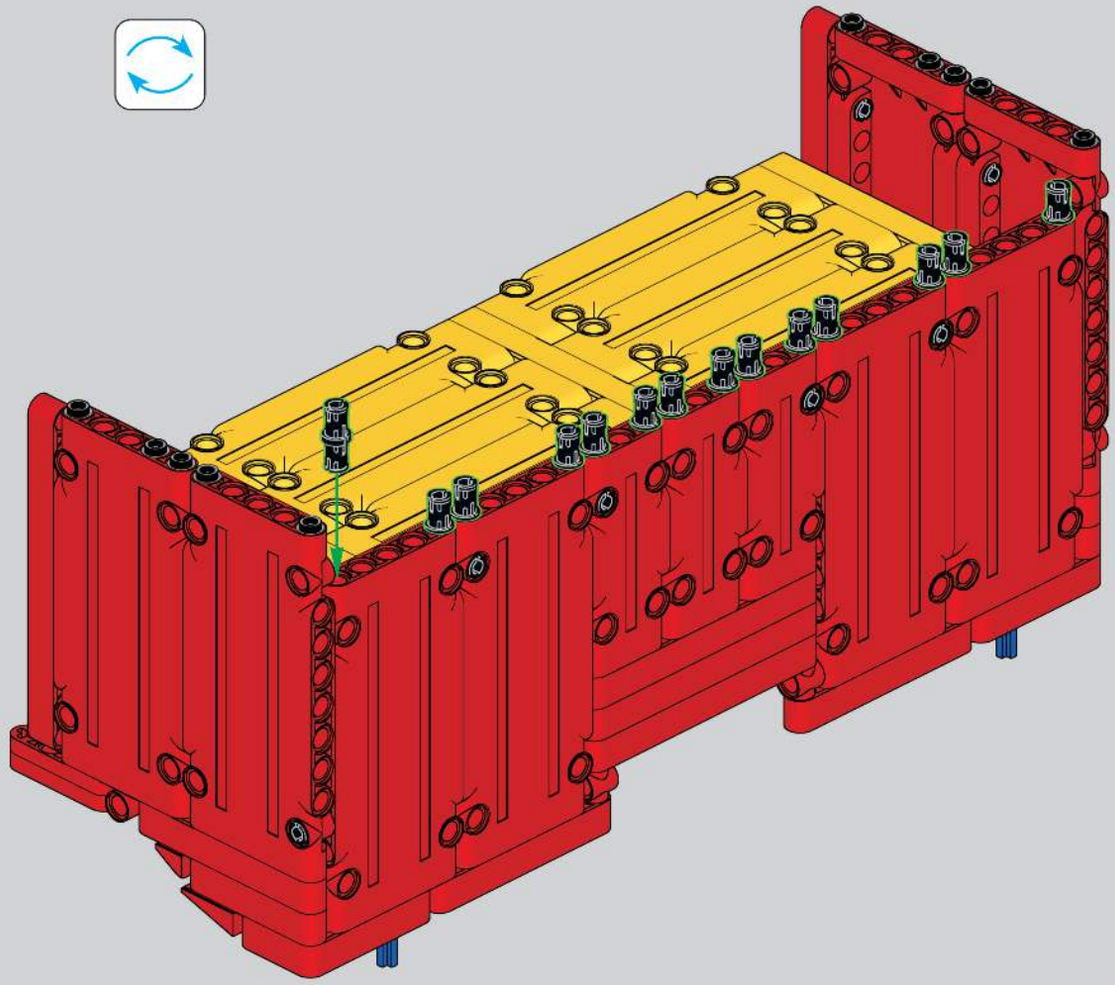

710

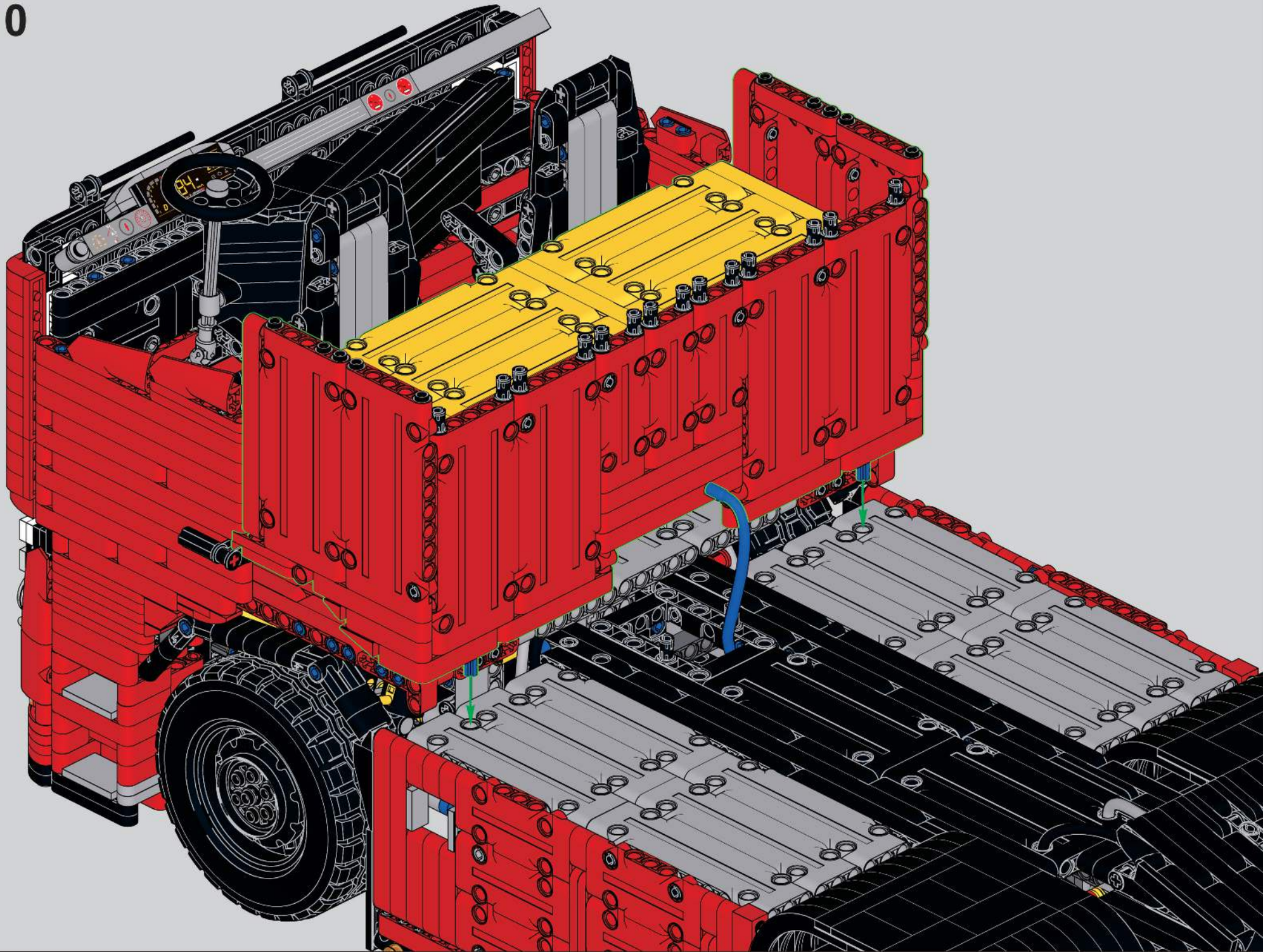

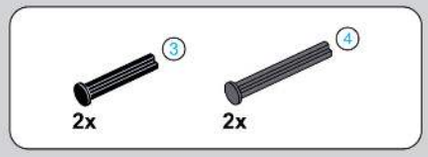

711

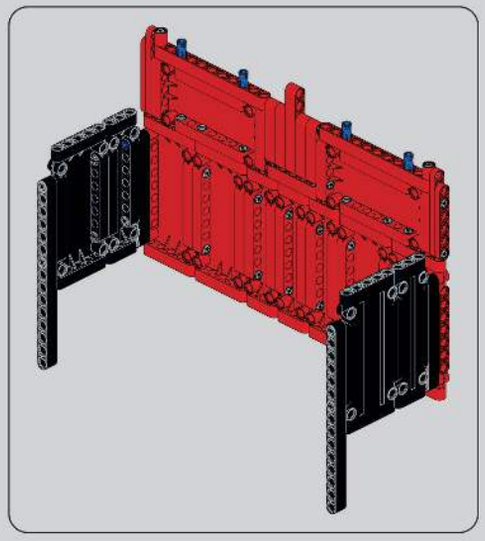

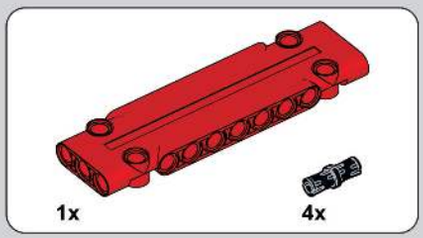

712

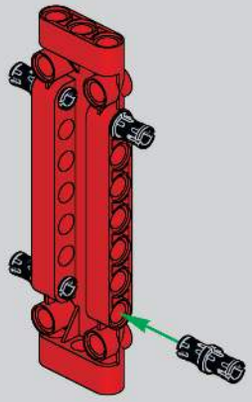

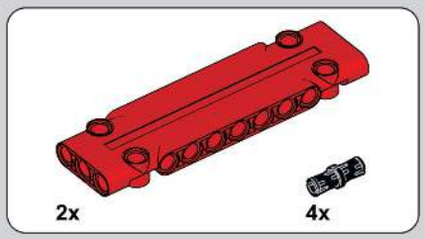

713

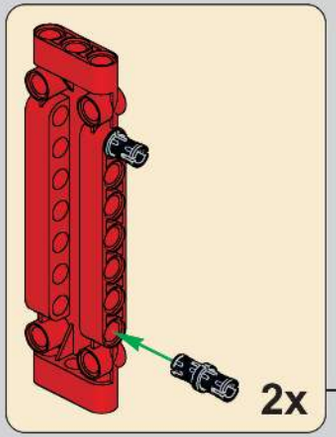

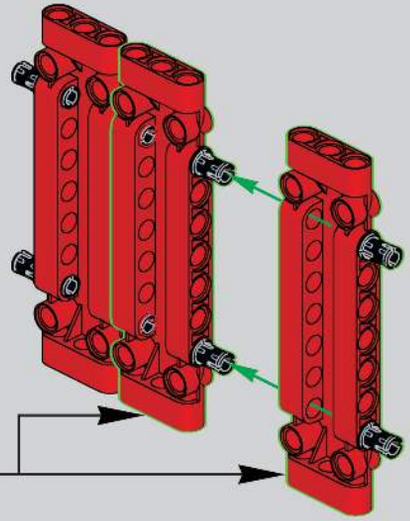

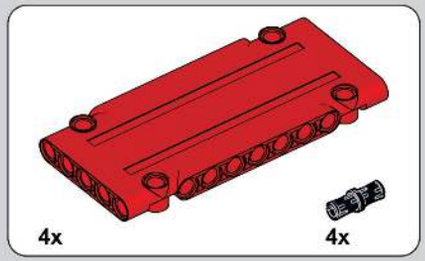

714

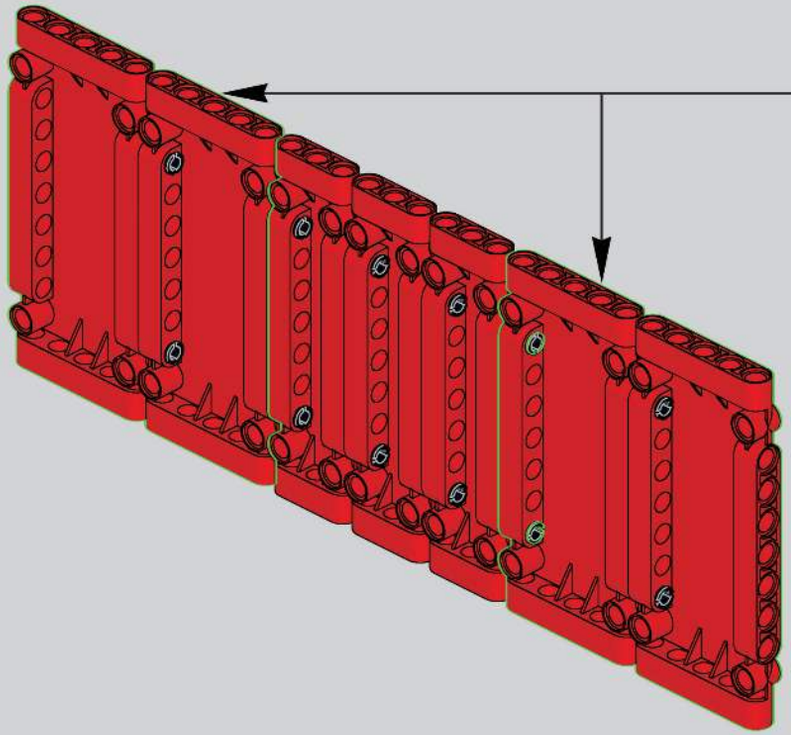

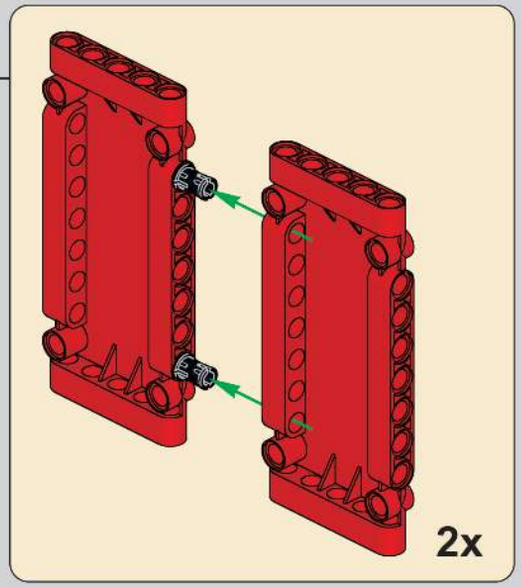

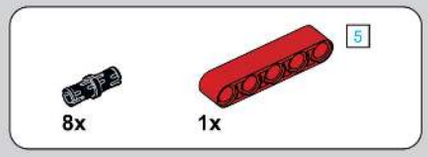

715

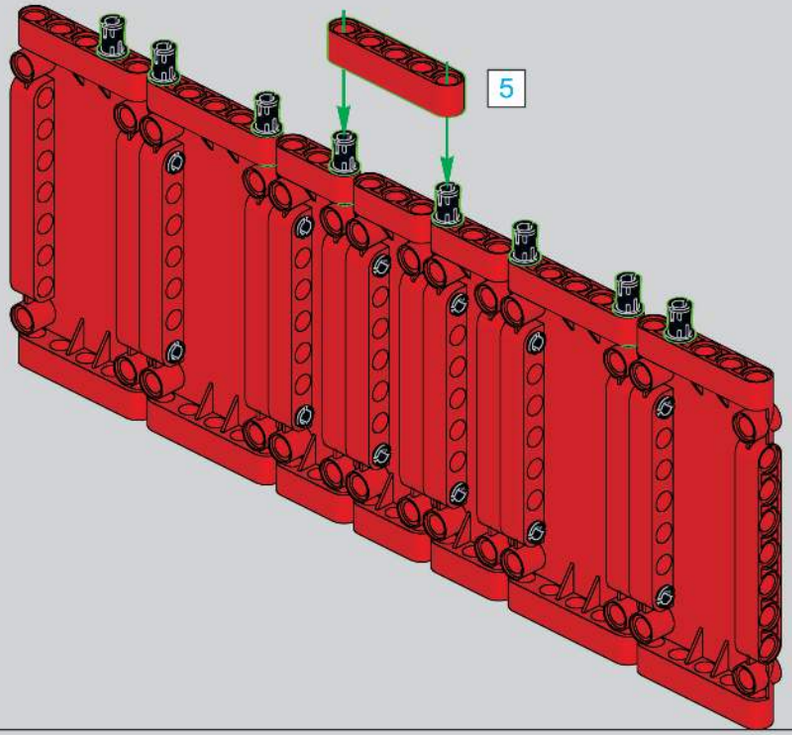

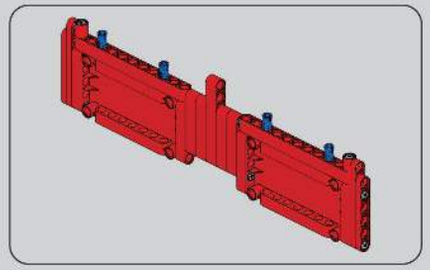

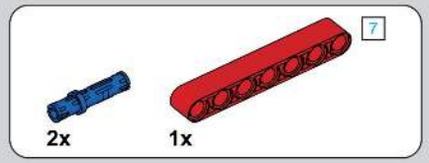

716

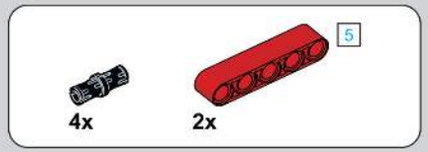

717

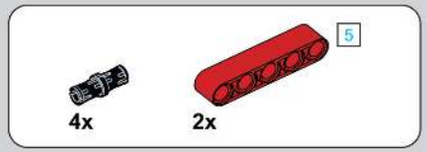

718

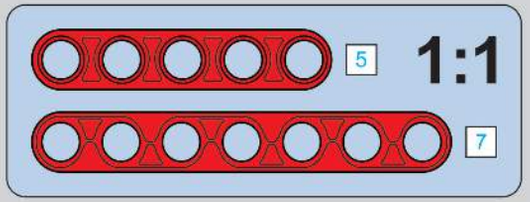

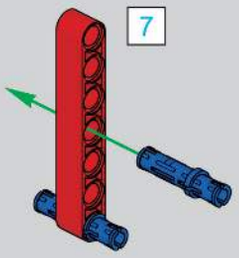

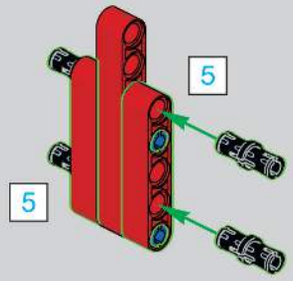

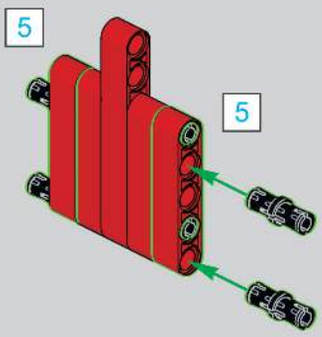

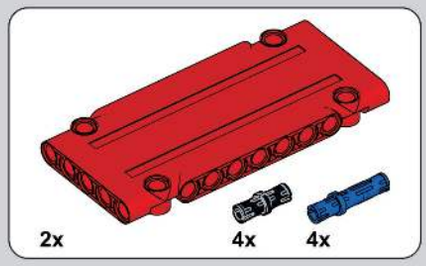

719

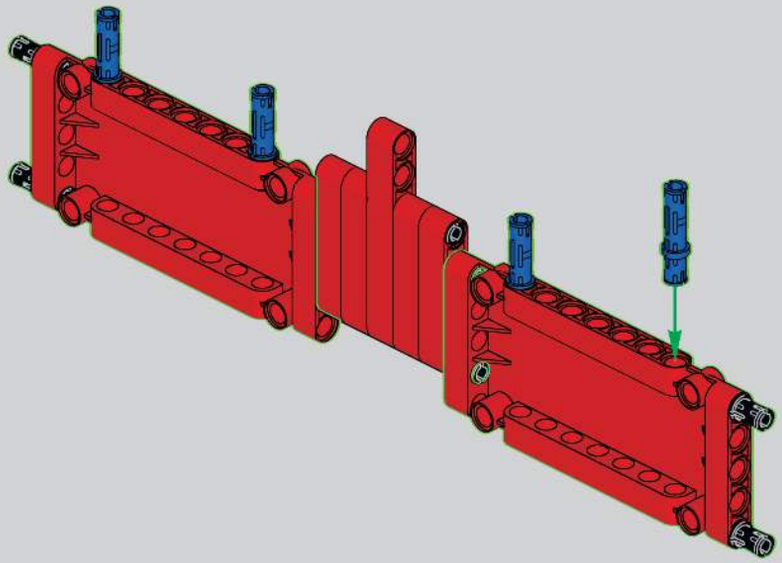

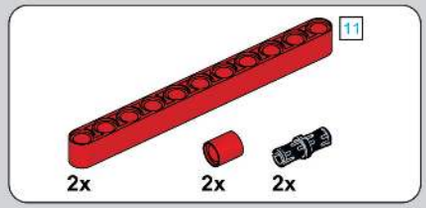

720

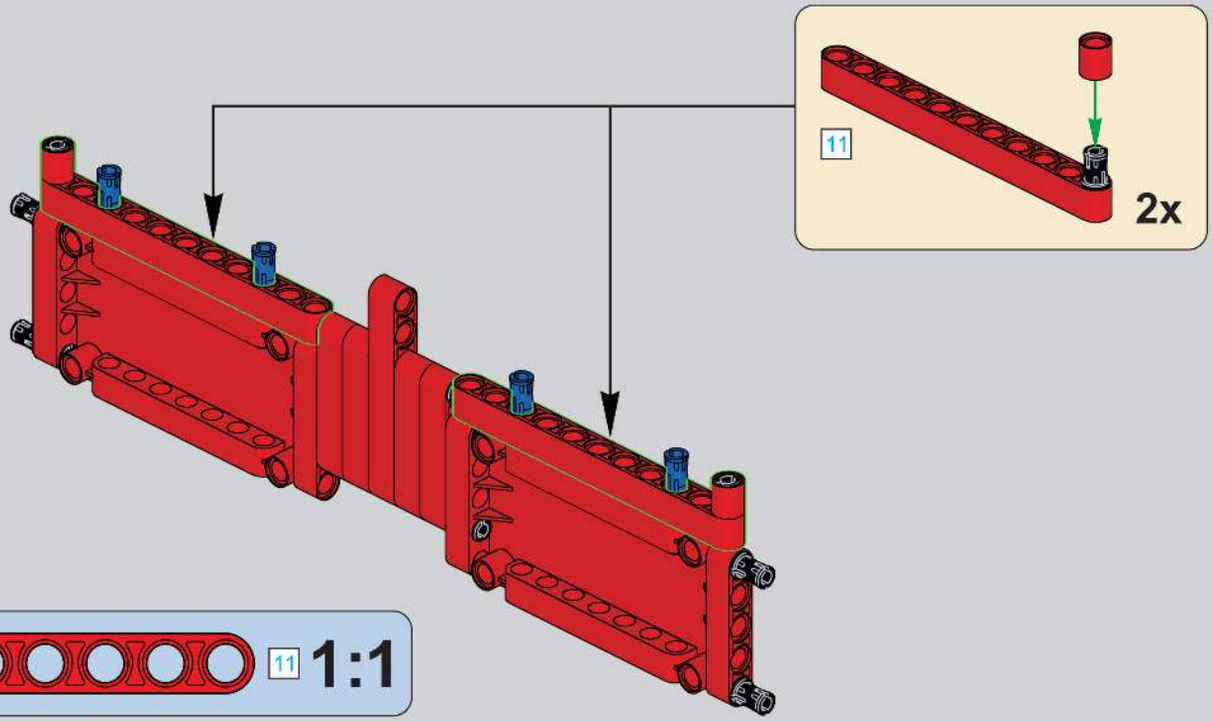

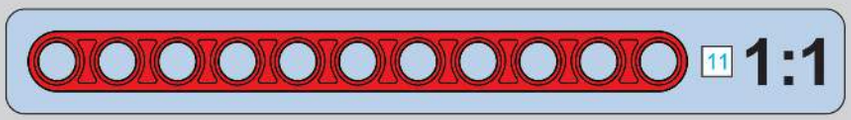

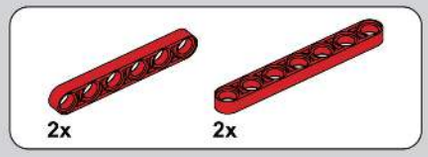

721

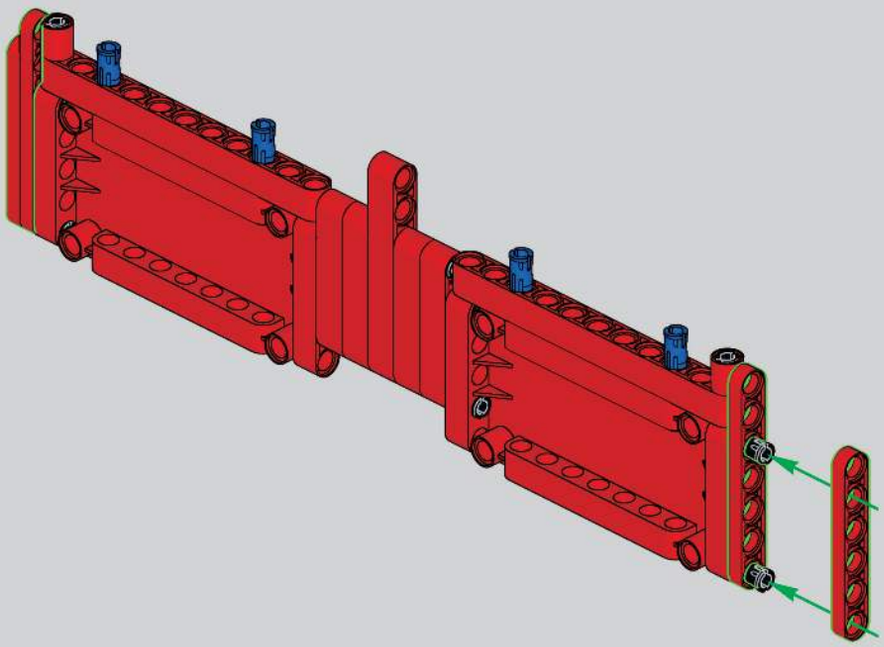

722

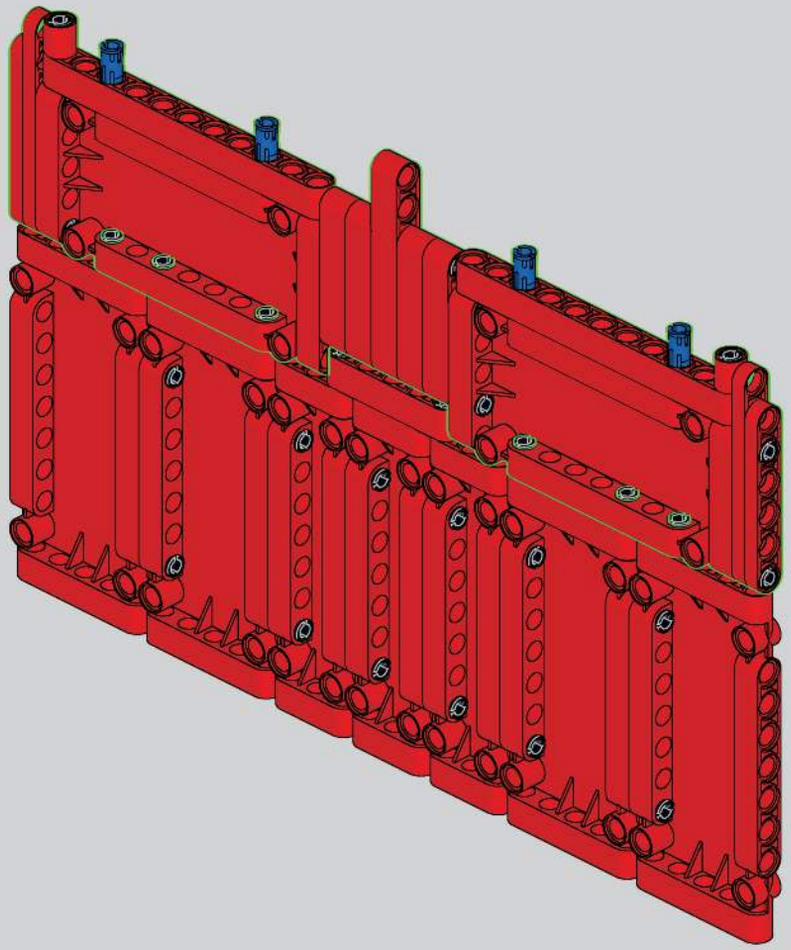

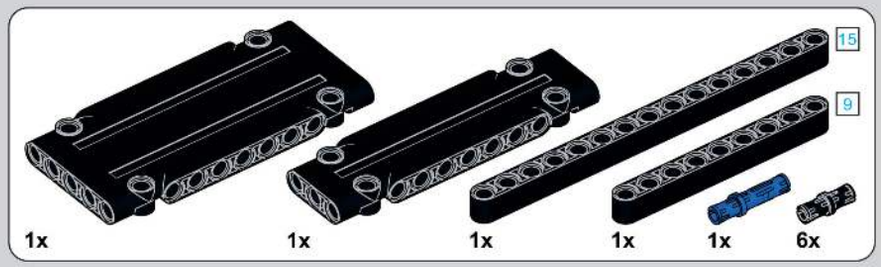

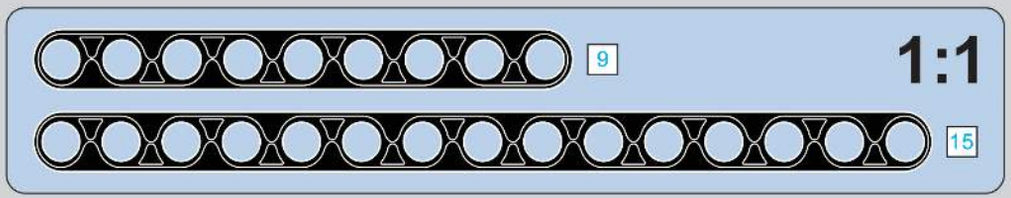

723

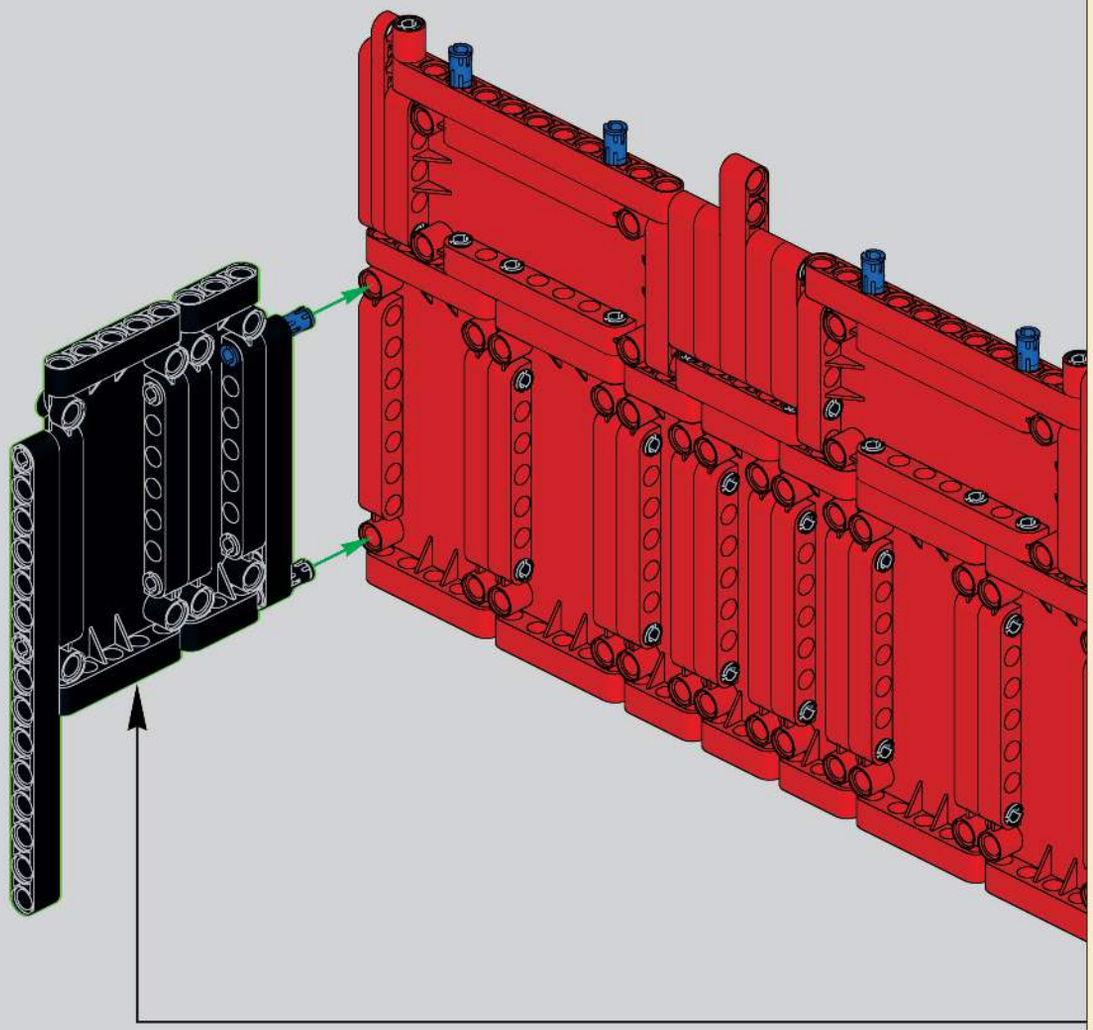

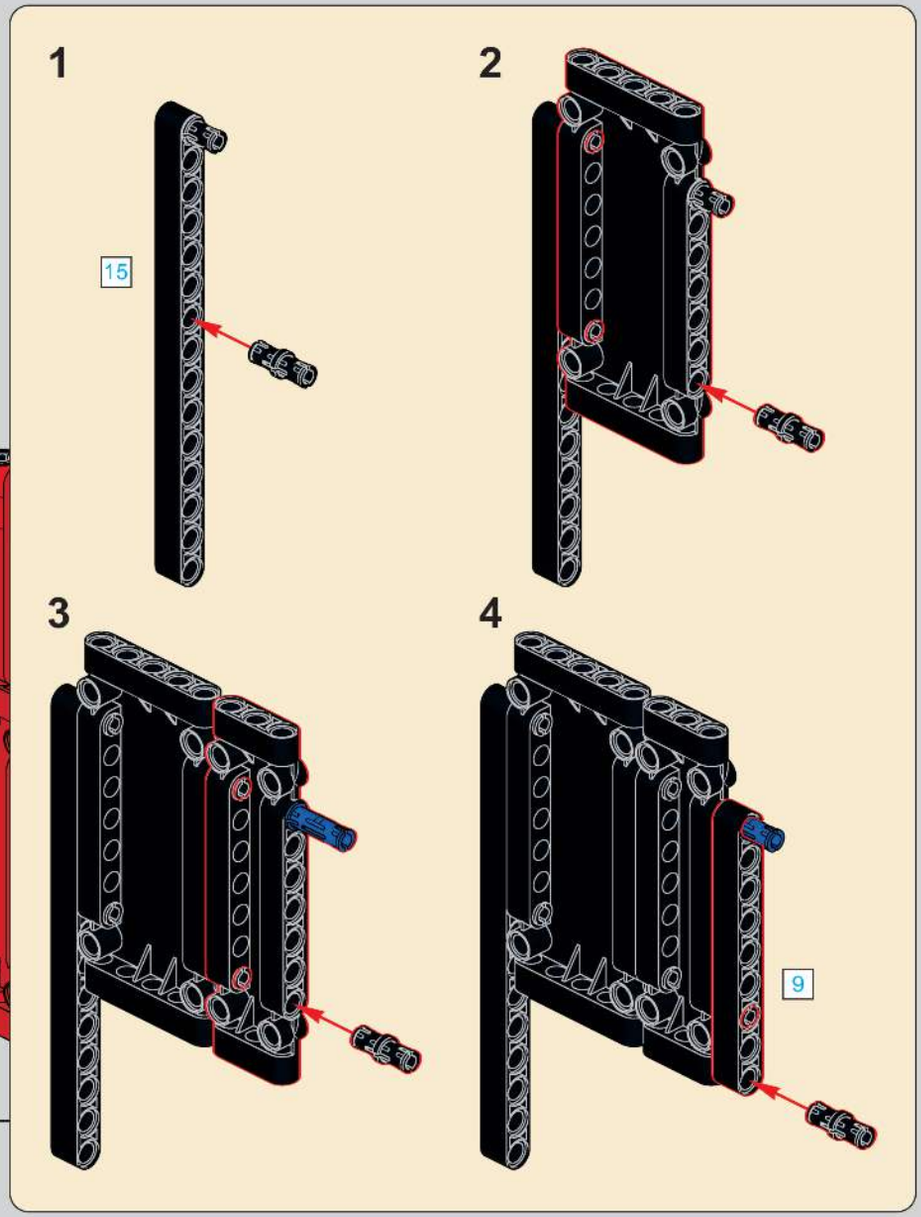

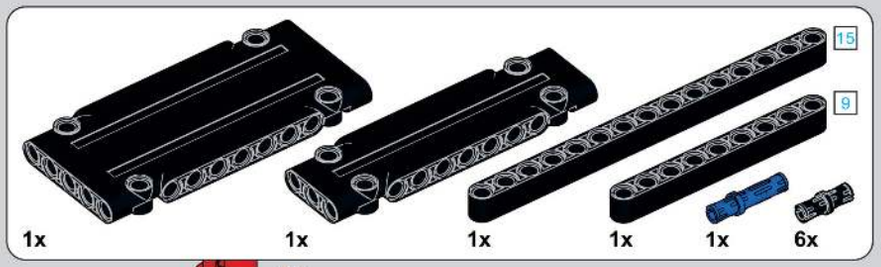

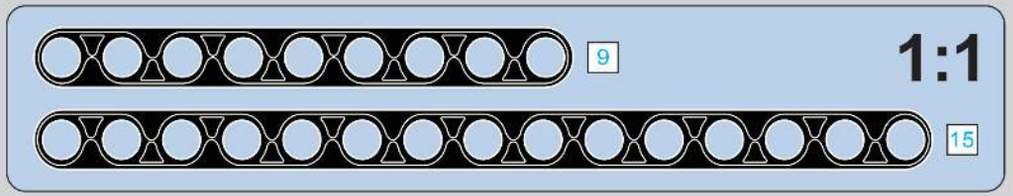

724

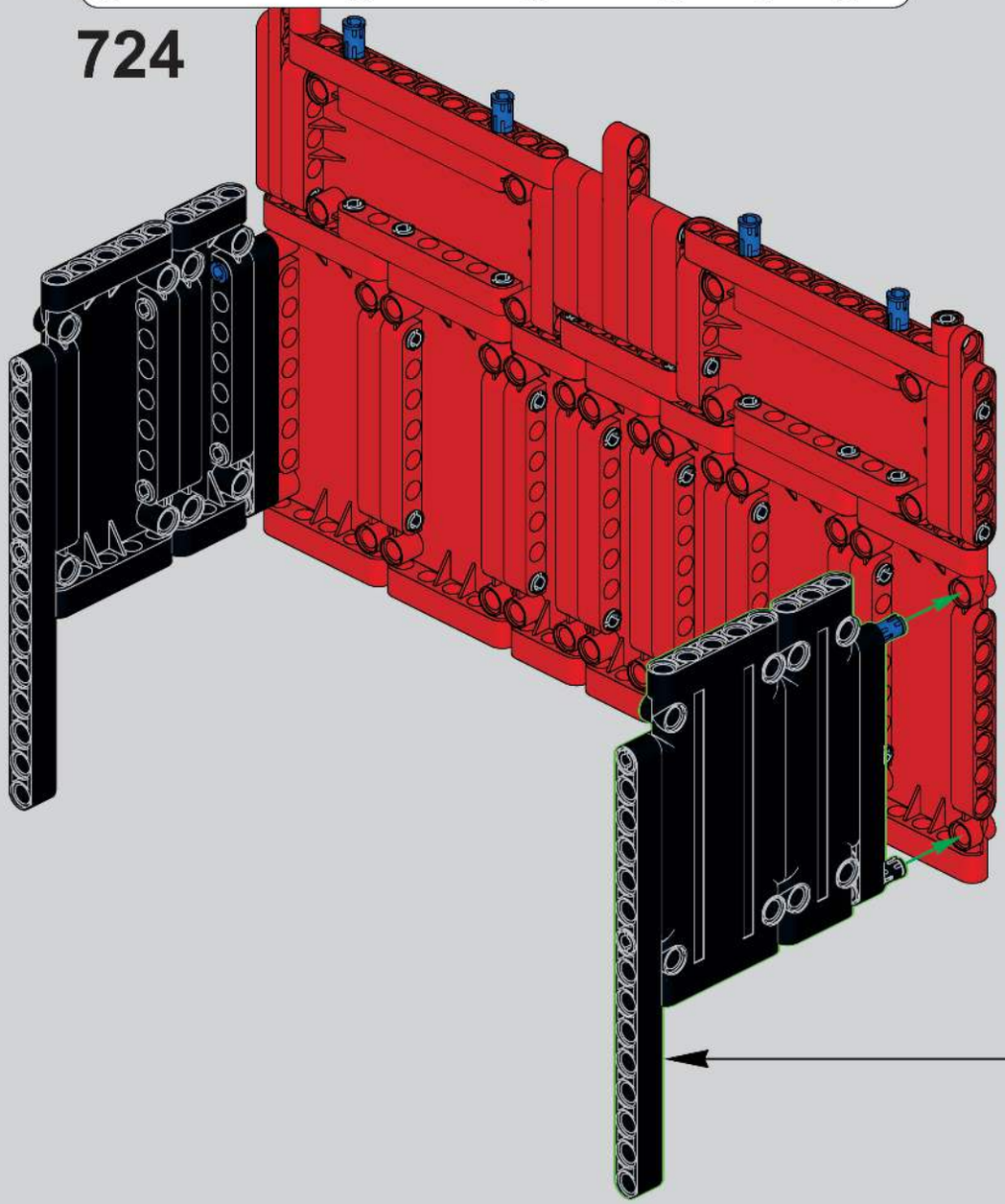

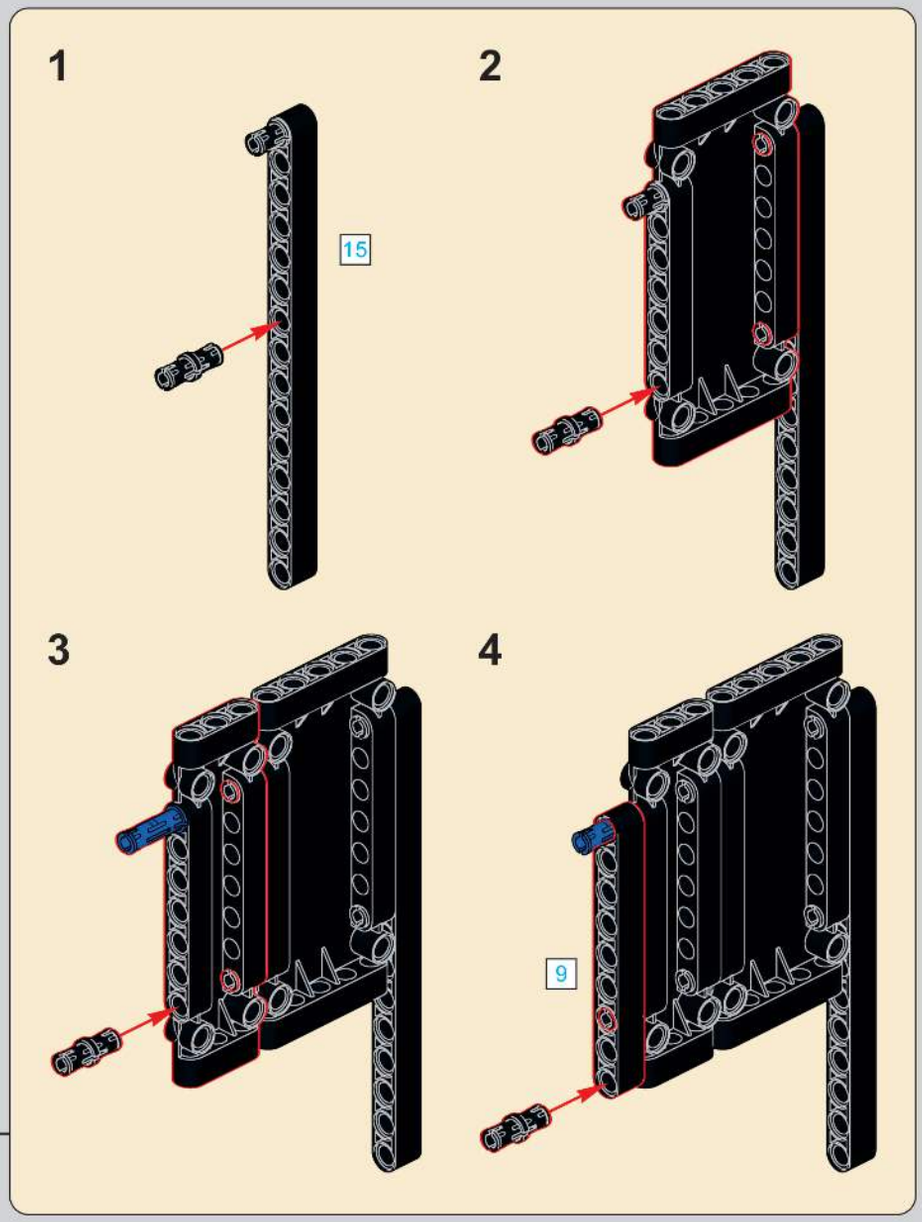

725

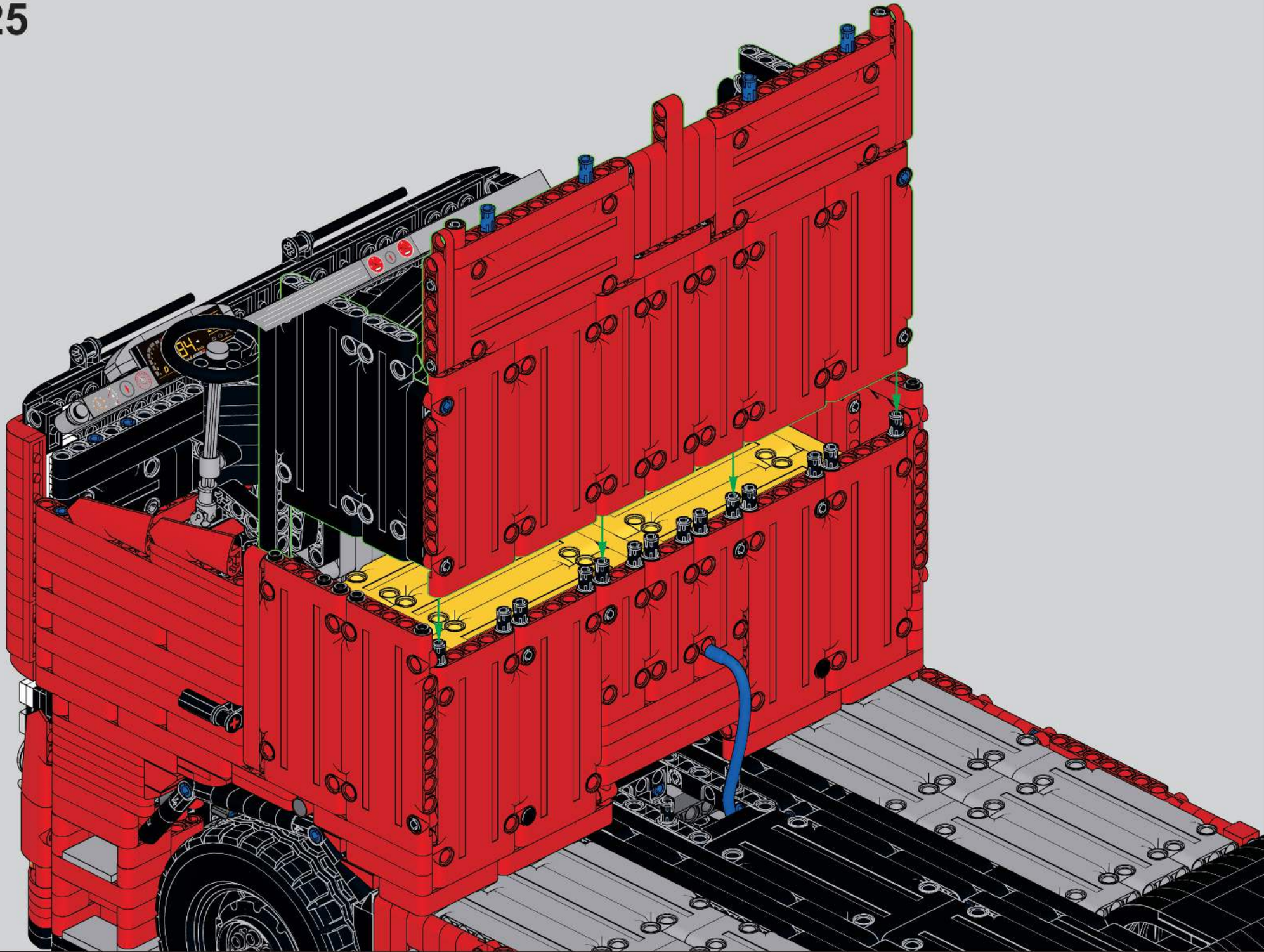

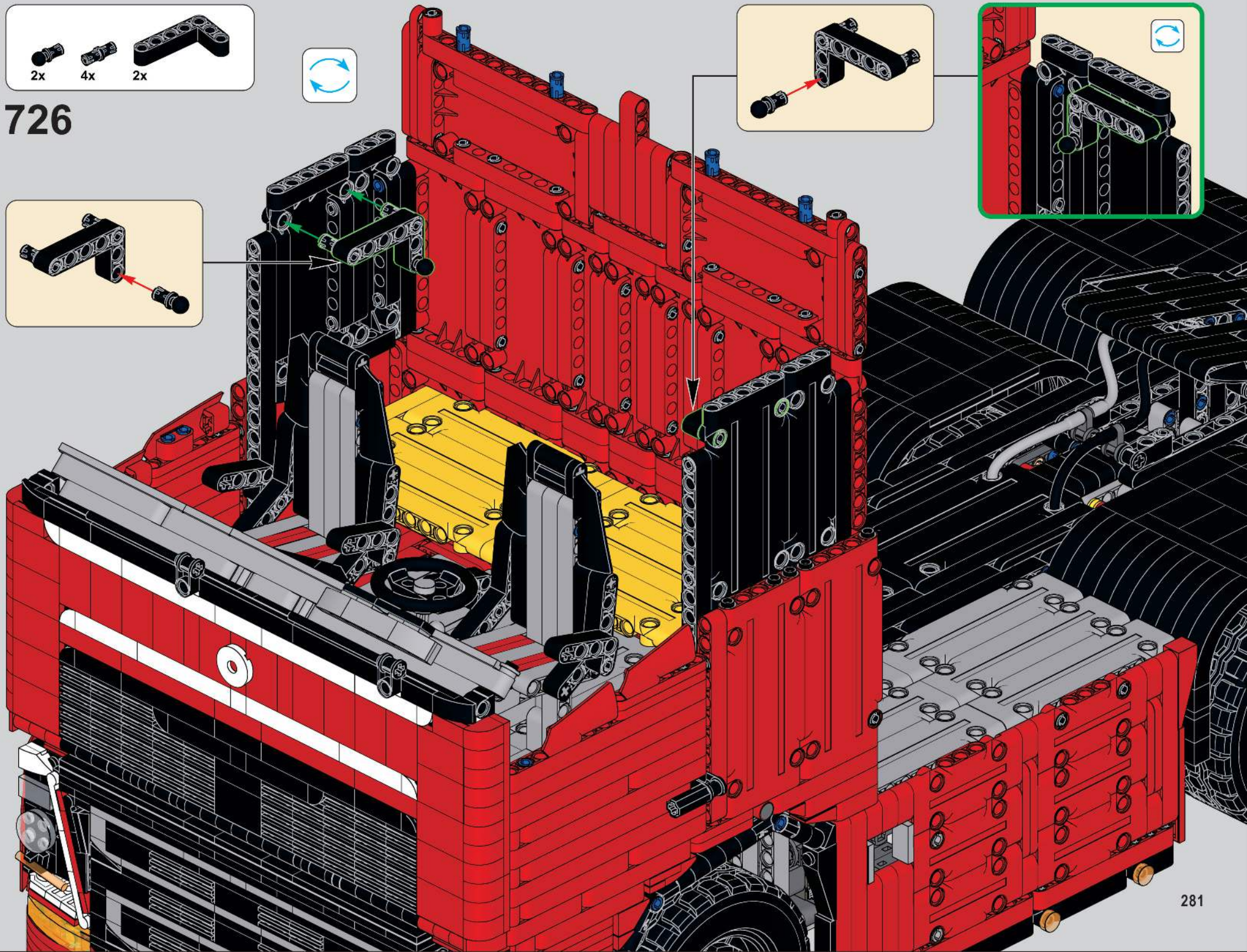
2x
4x
2x
726

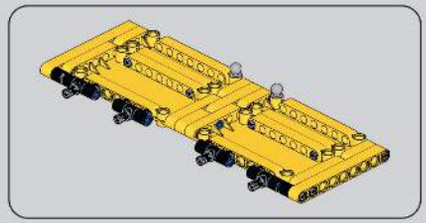

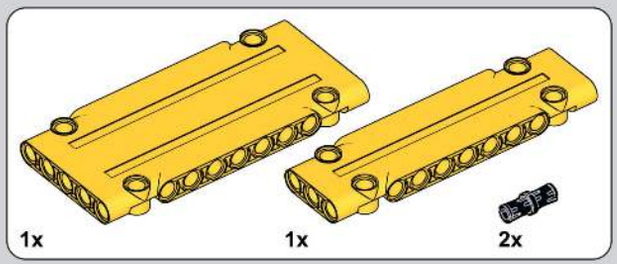

727

728

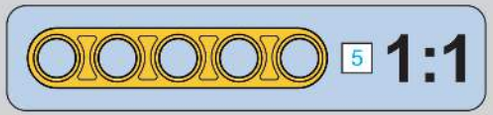

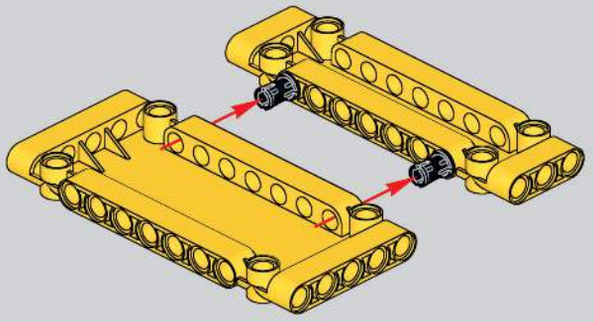

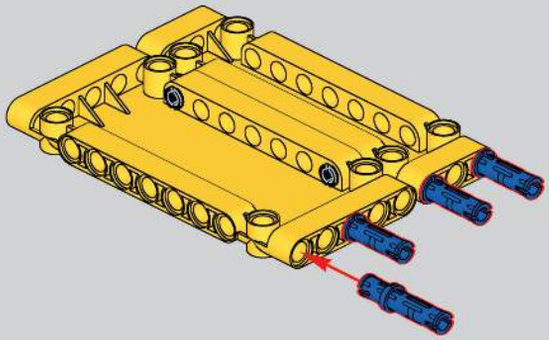

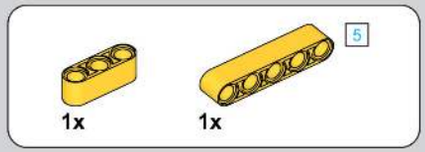

729

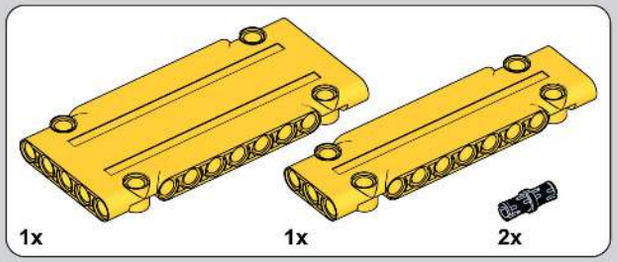

730

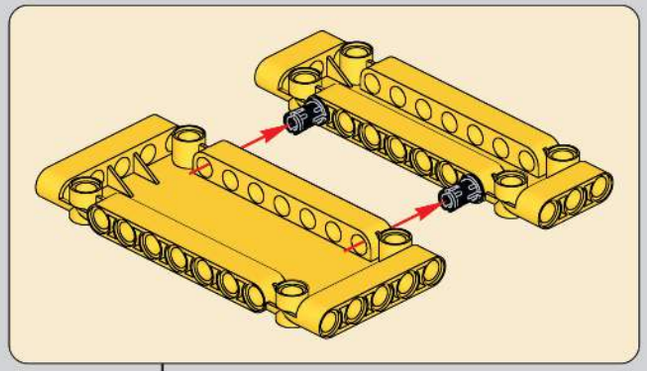

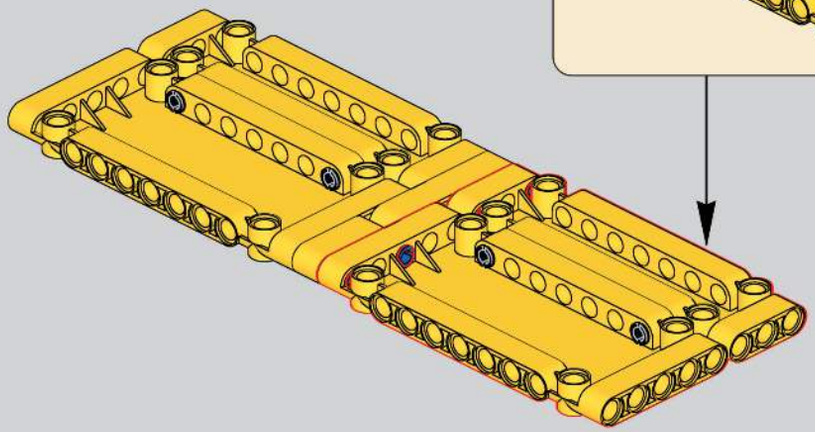

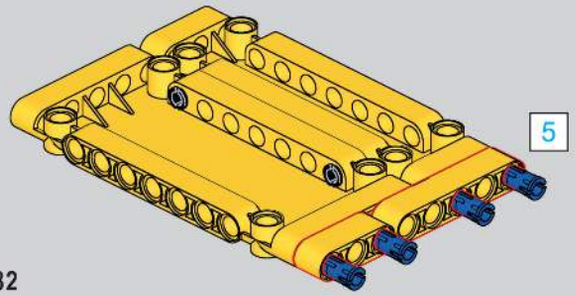

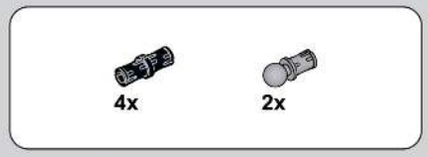

731

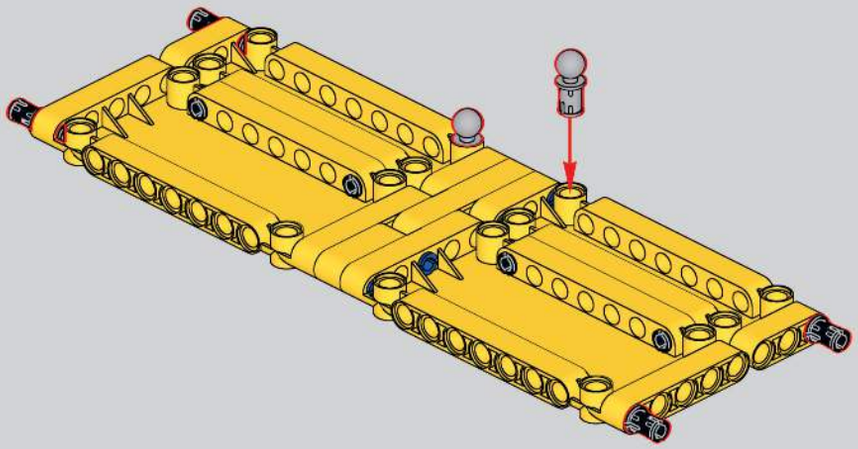

732

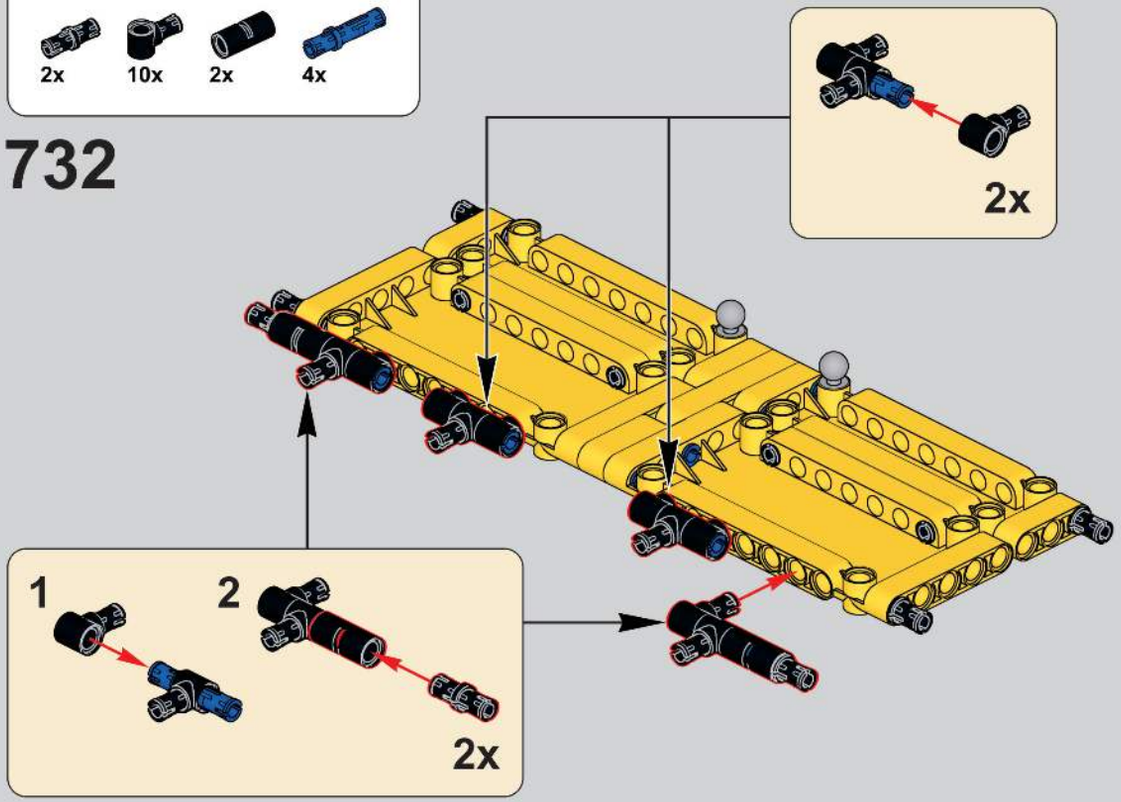

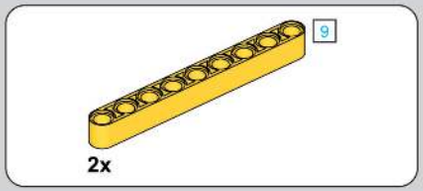

733

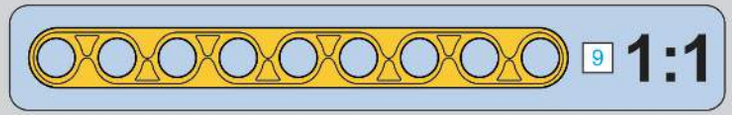

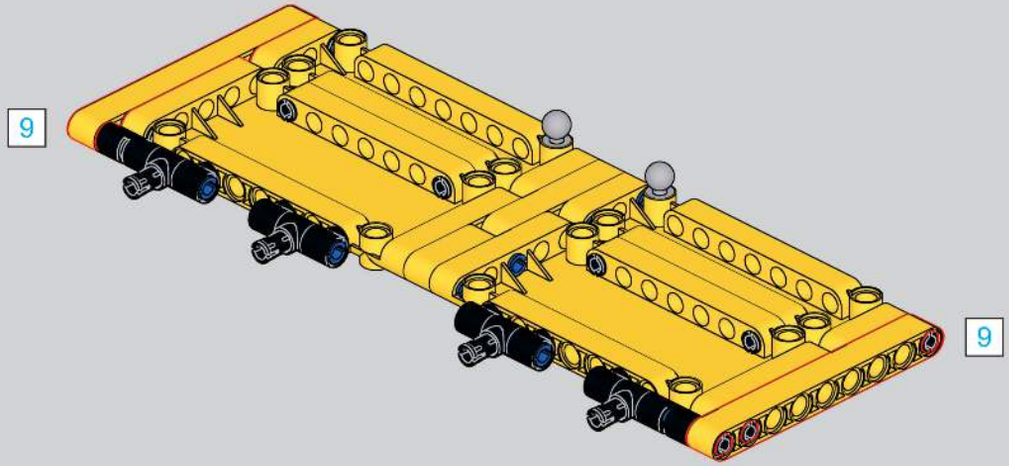

734

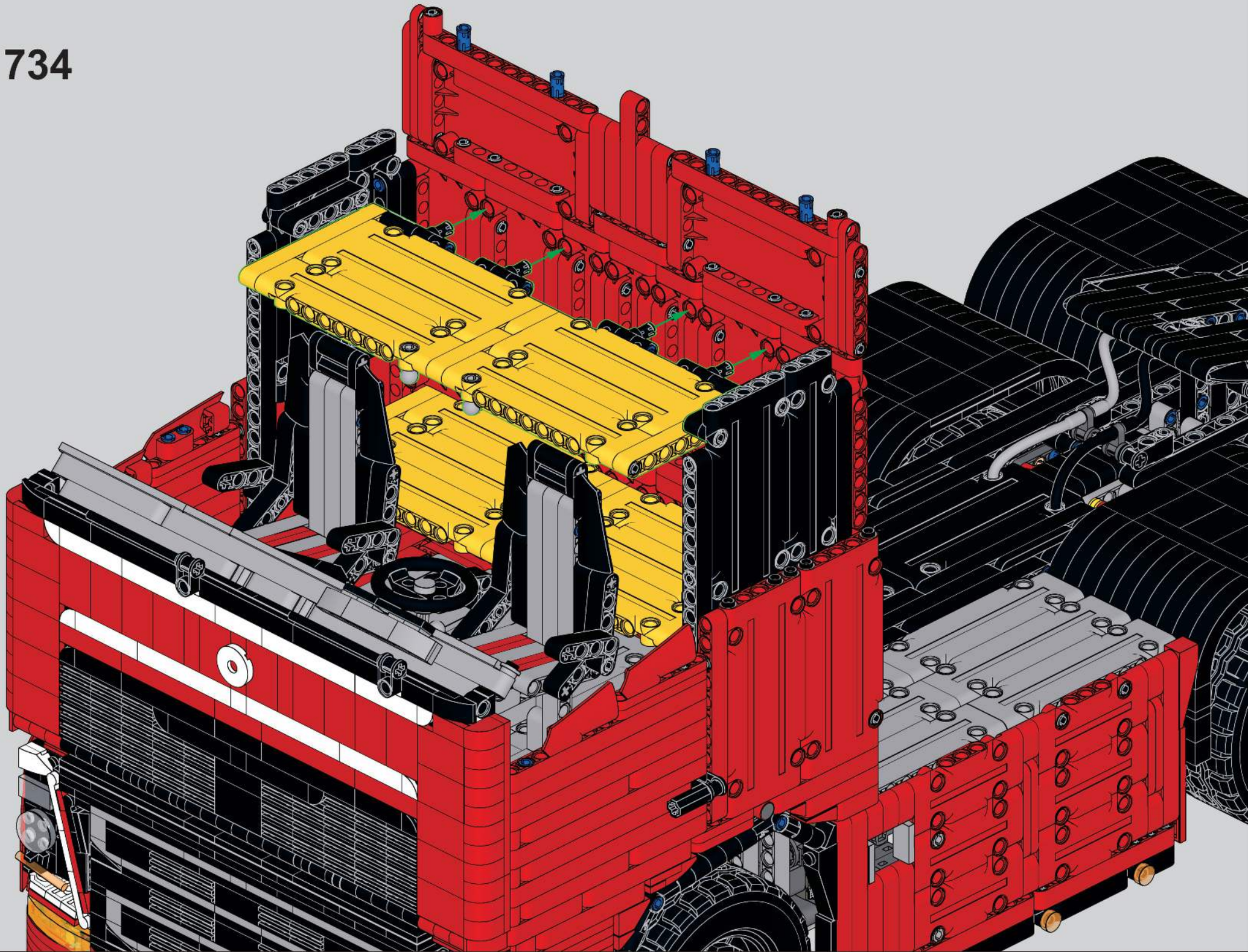

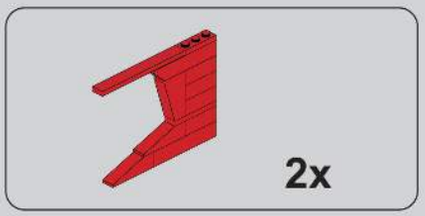

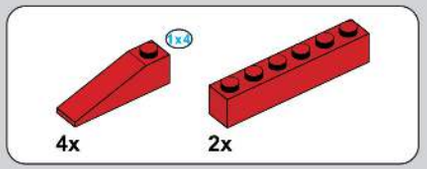

735

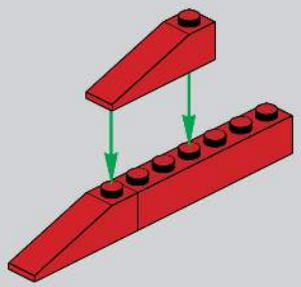

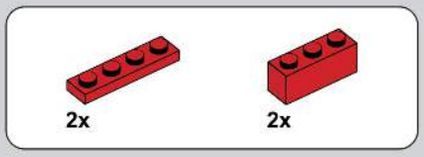

736

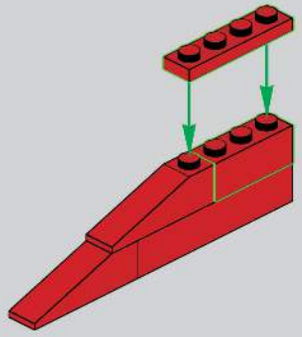

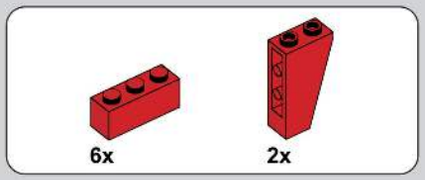

737

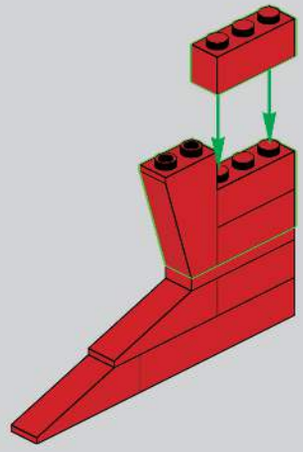

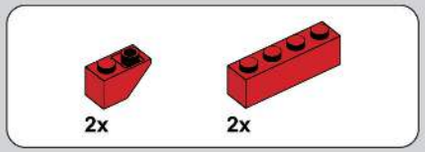

738

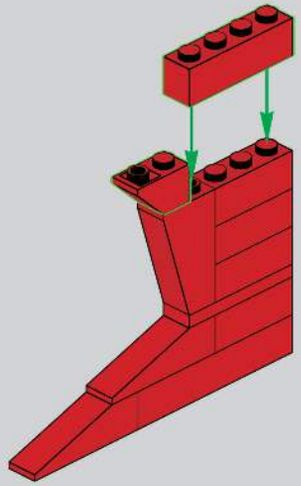

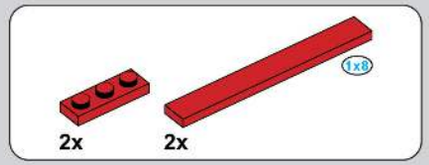

739

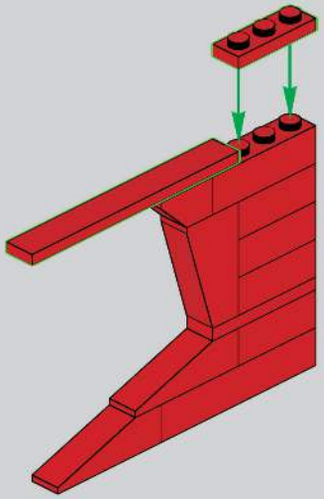

2x

740

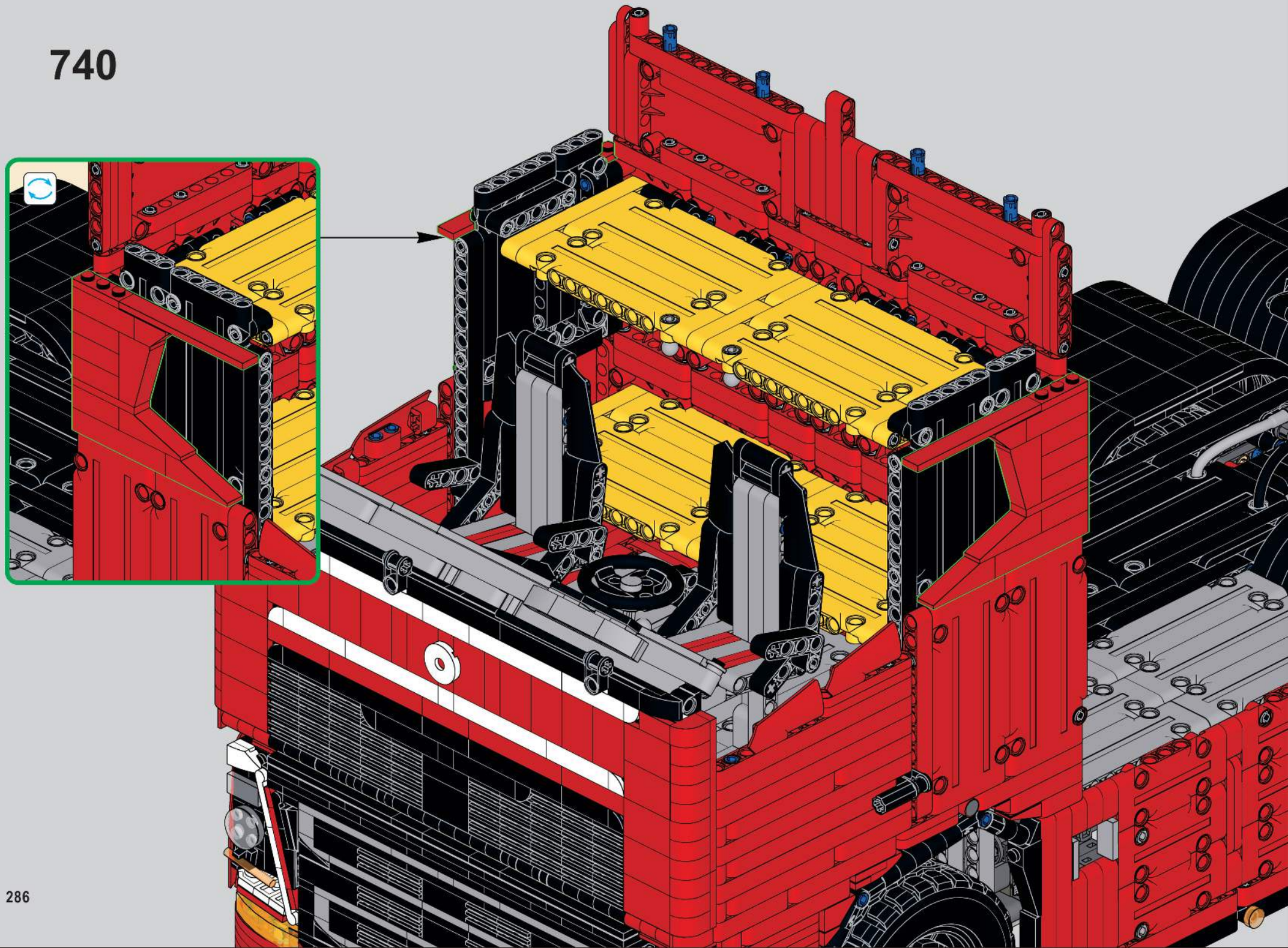

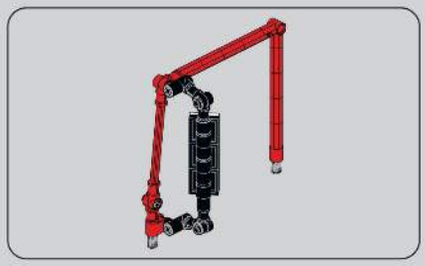

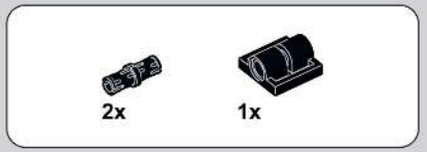

741

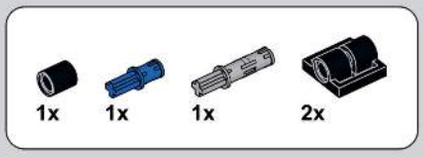

742

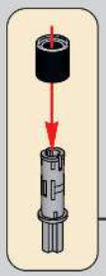

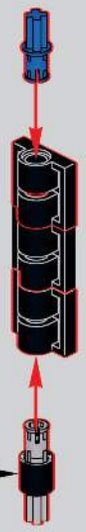

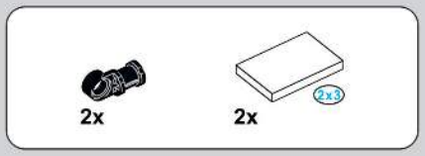

743

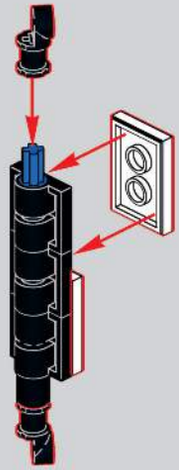

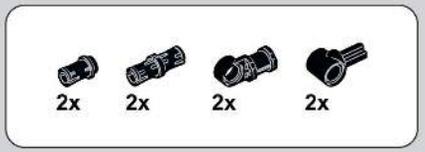

744

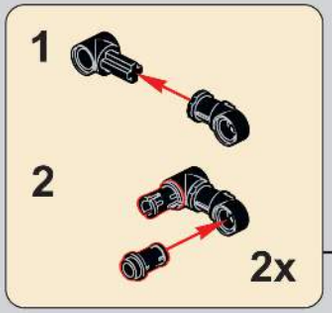

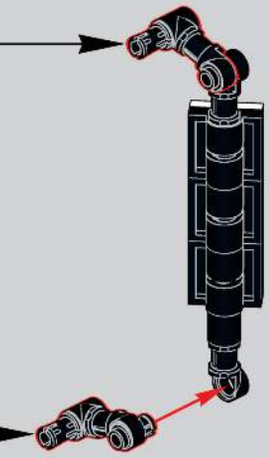

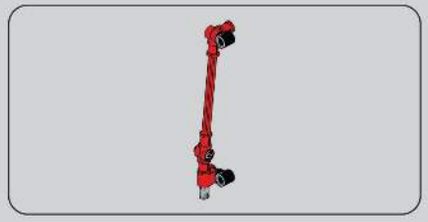

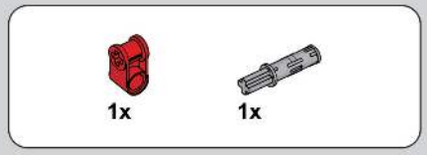

745

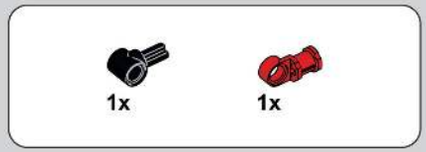

746

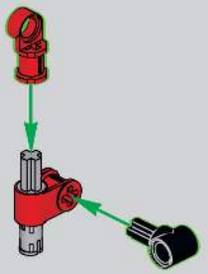

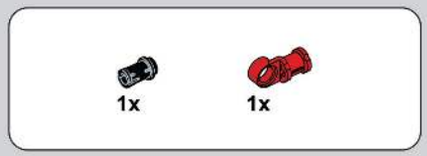

747

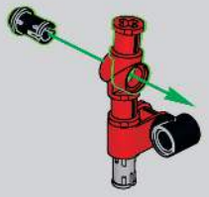

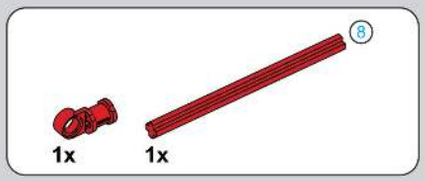

748

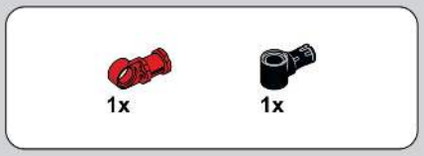

749

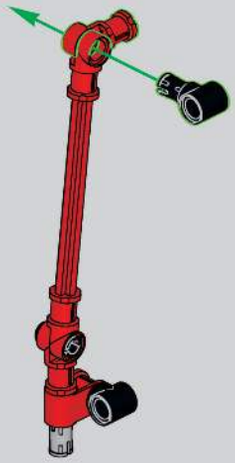

750

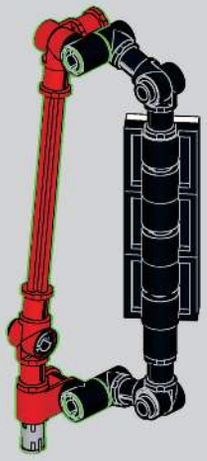

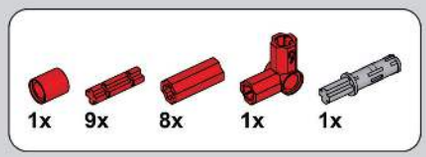

751

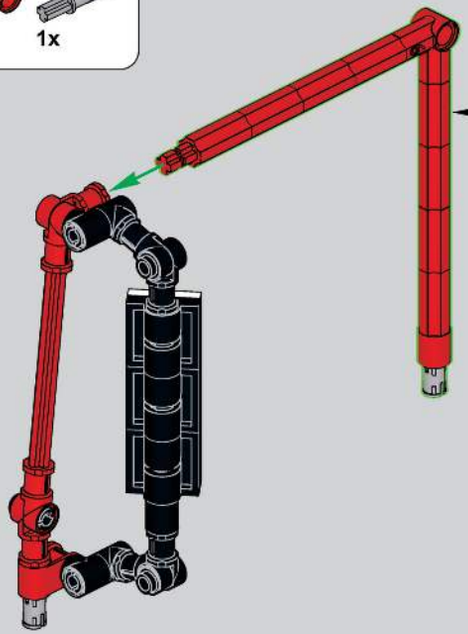

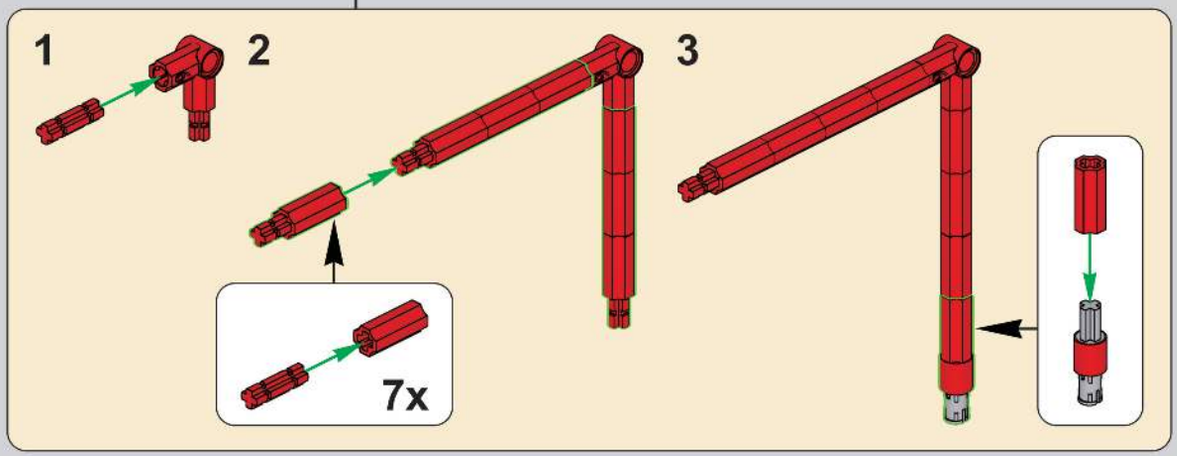

752

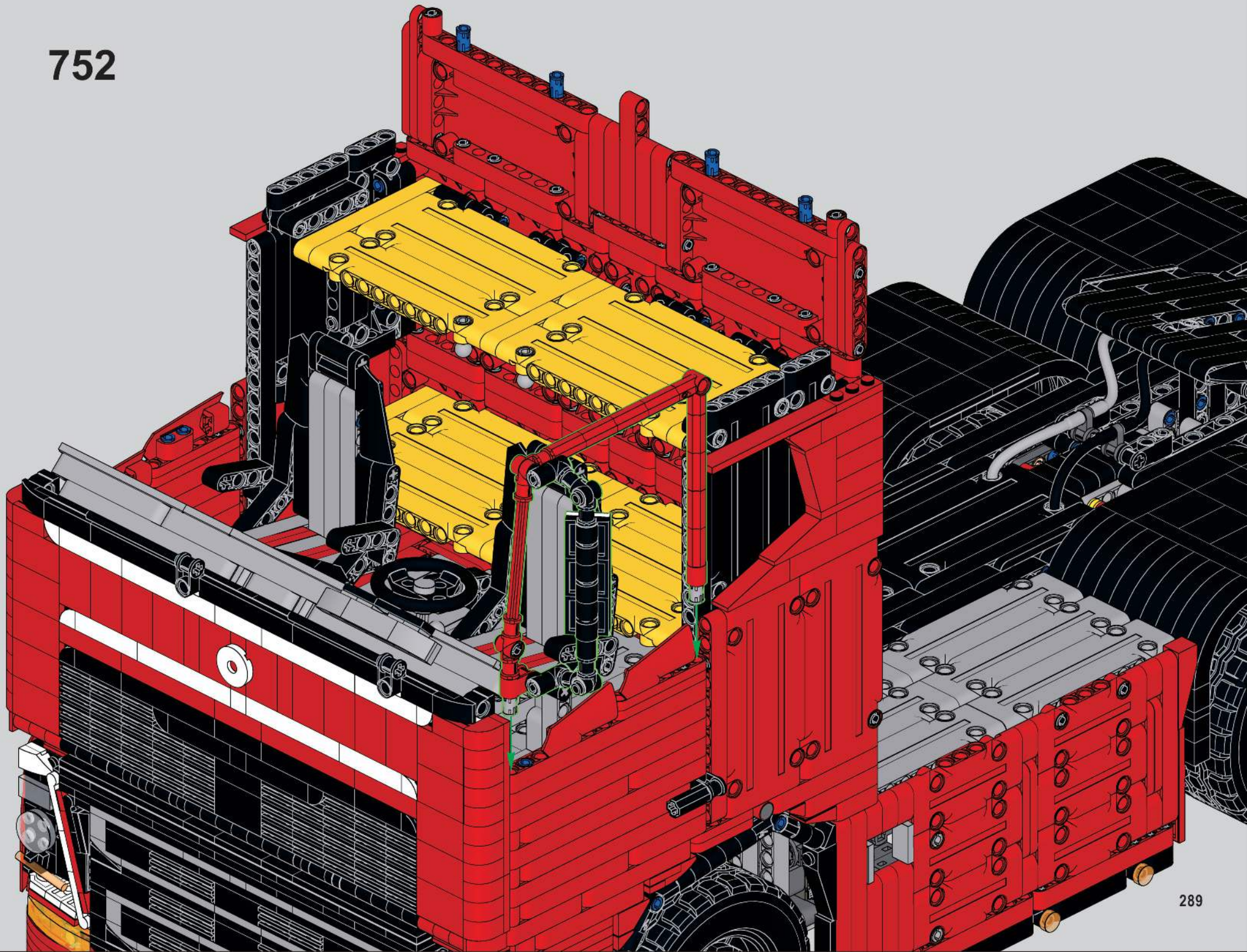

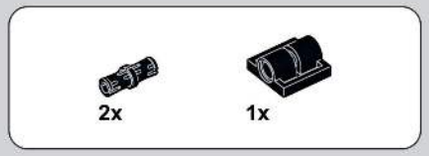

753

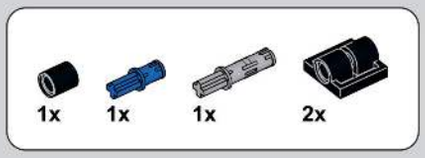

754

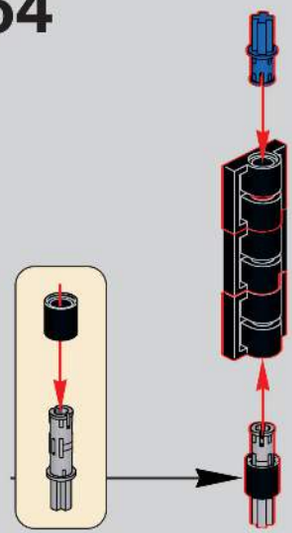

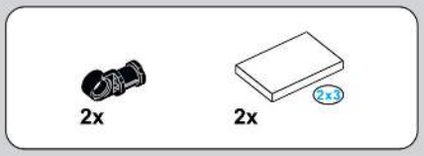

755

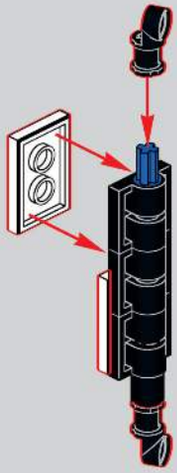

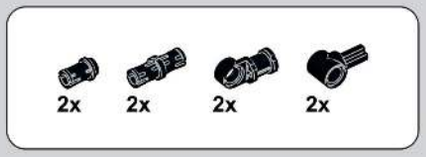

756

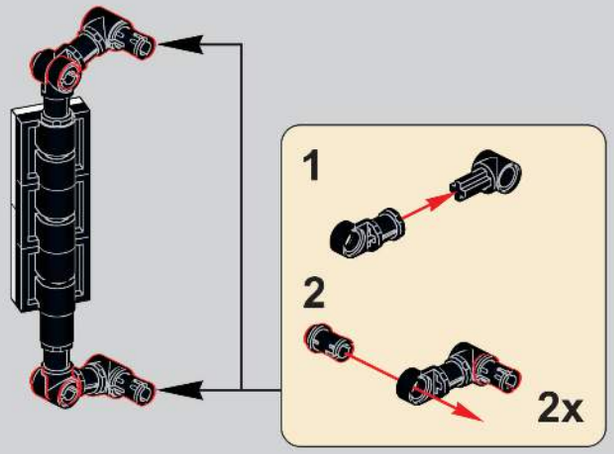

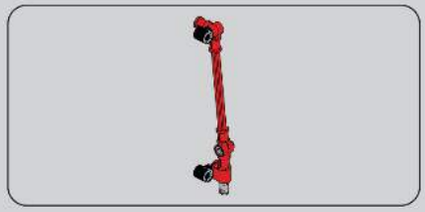

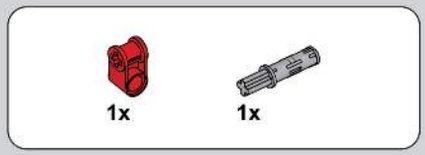

757

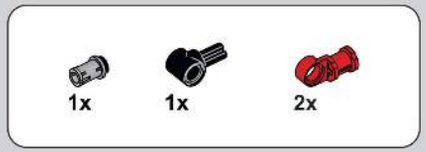

758

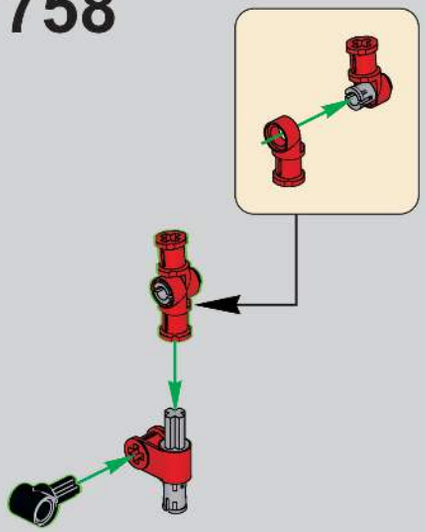

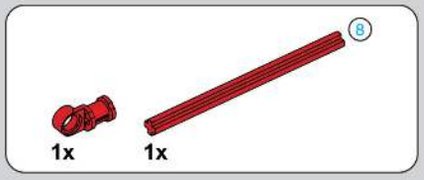

759

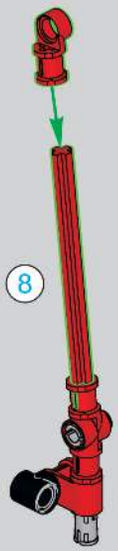

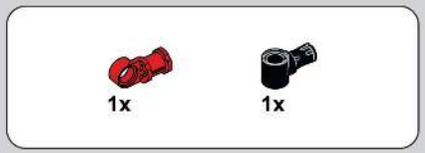

760

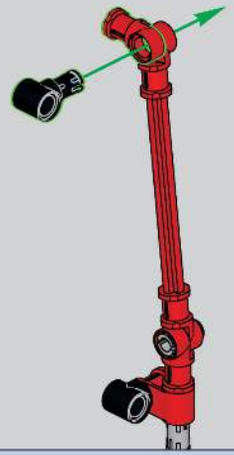

761

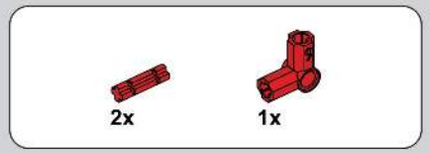

762

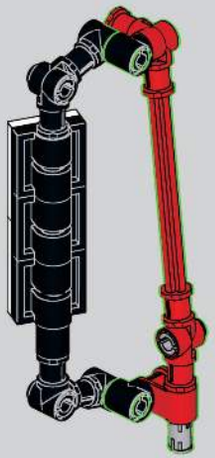

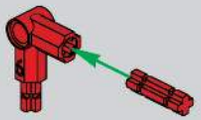

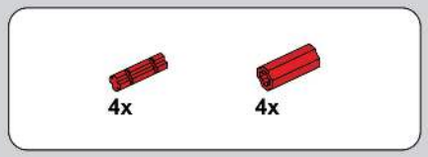

763

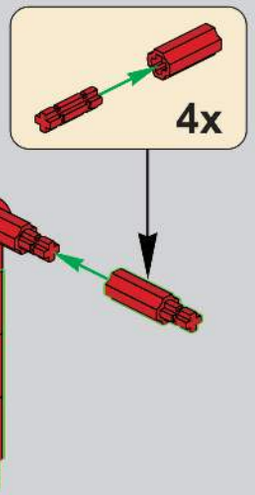

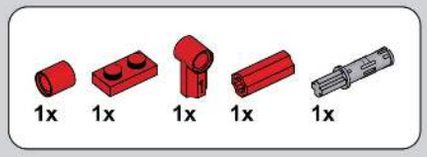

764

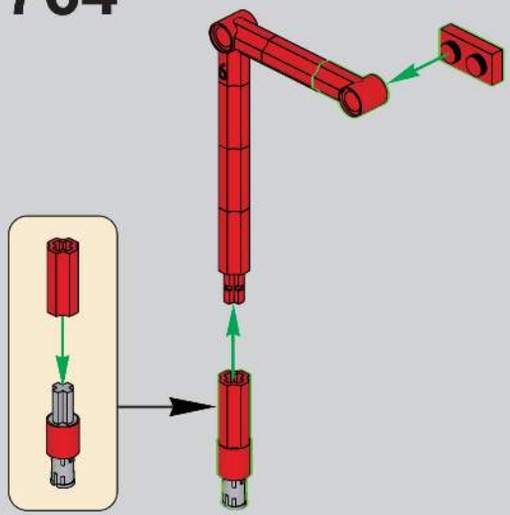

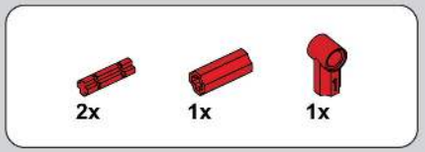

765

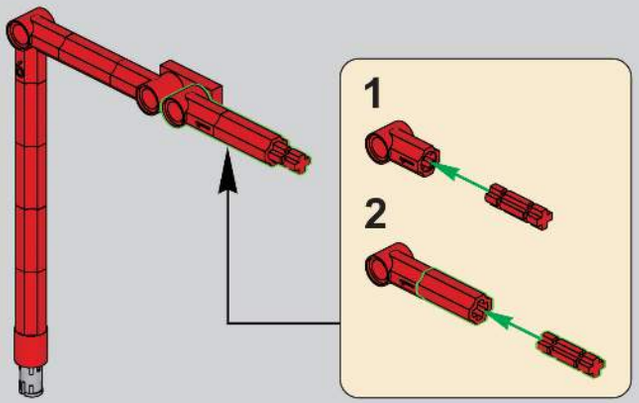

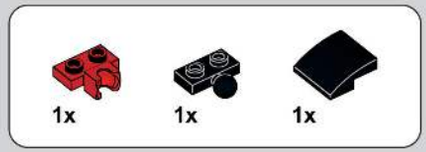

766

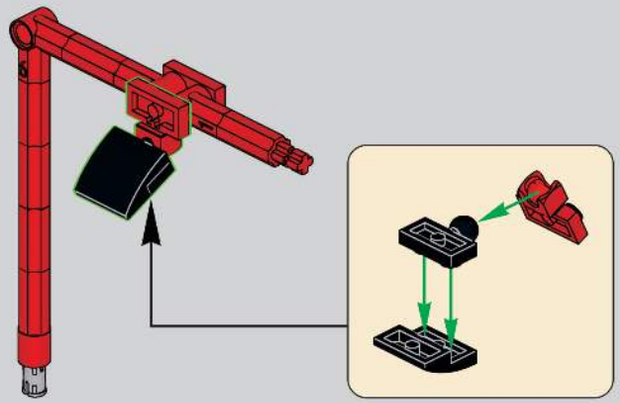

767

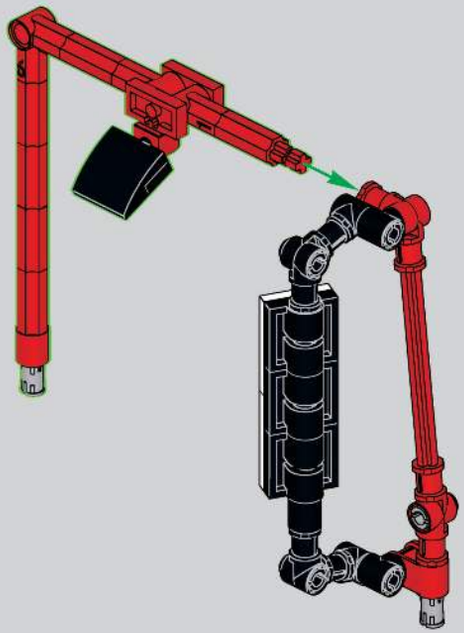

768

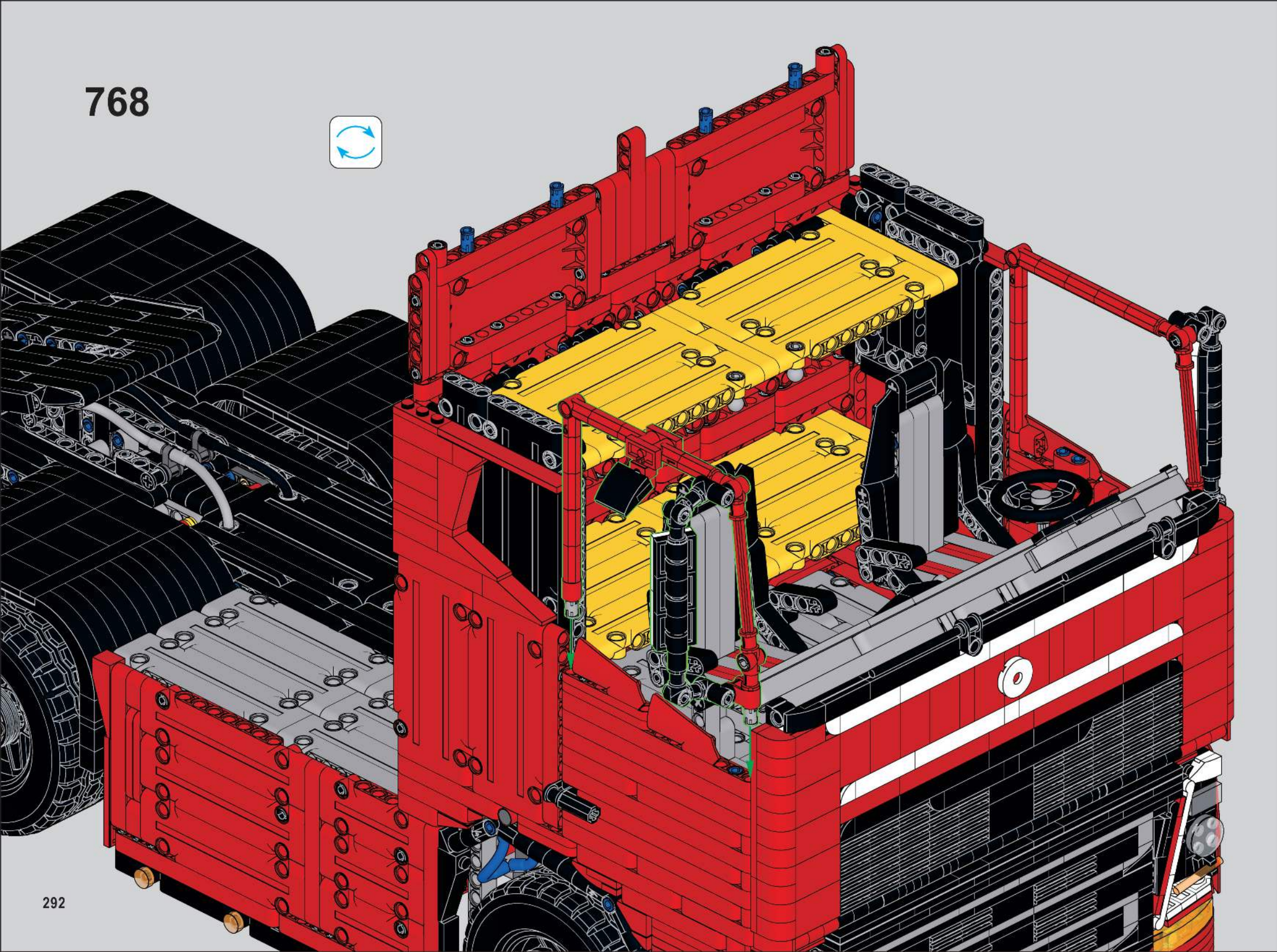

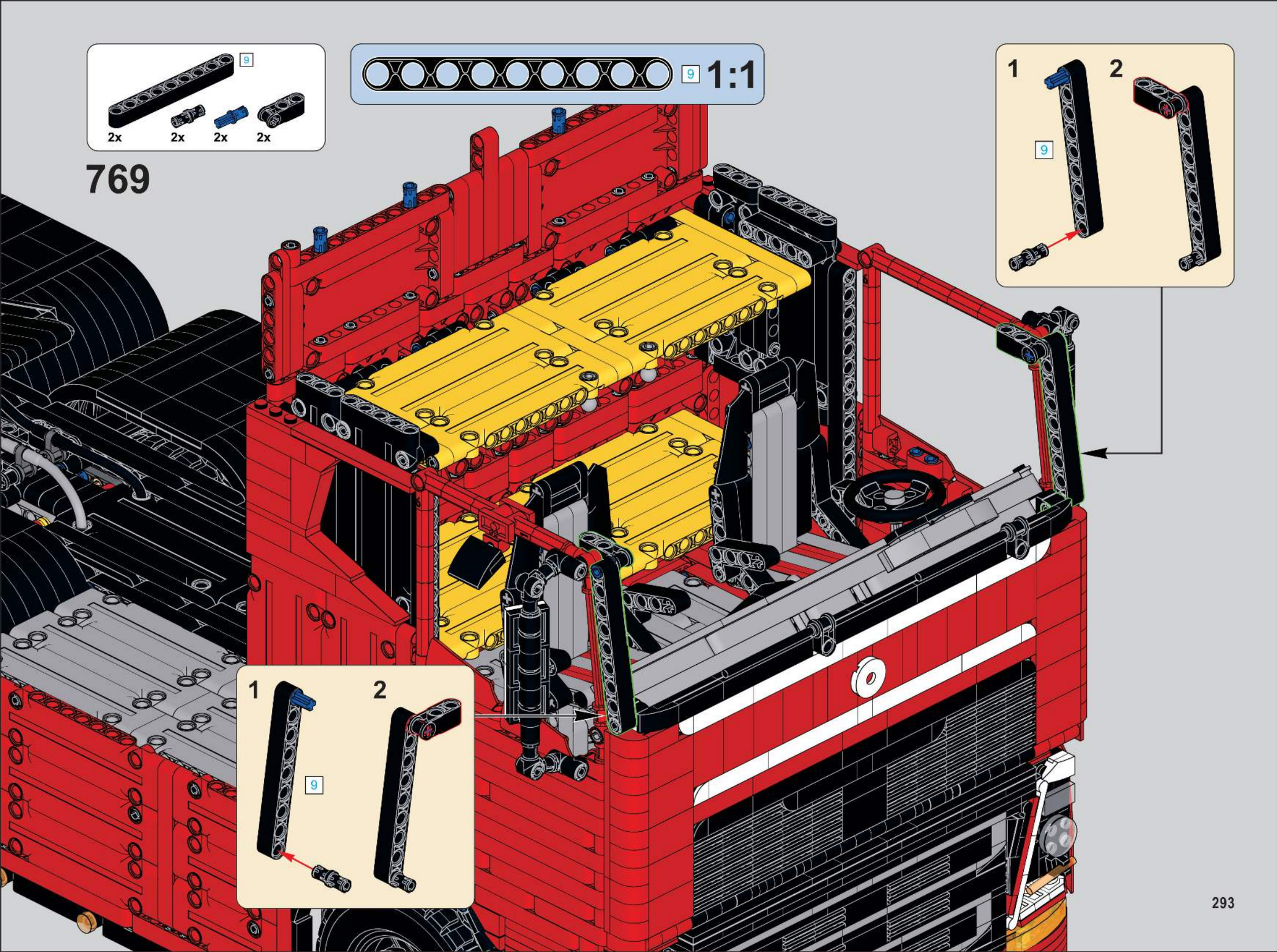
9
2x
2x
2x
2x
769
9
1:1
1
2
9
1
2
9

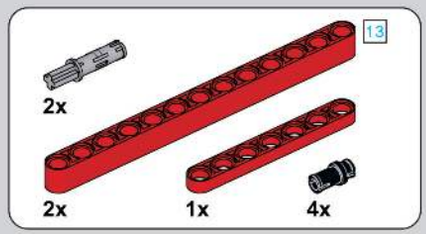

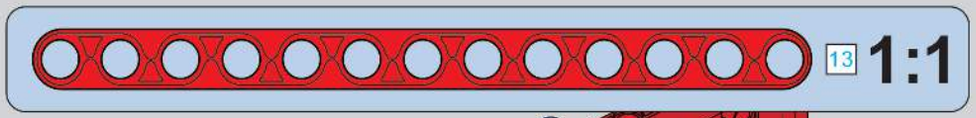

770

1

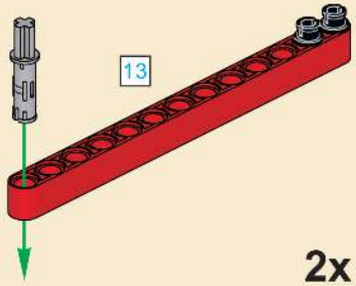

2

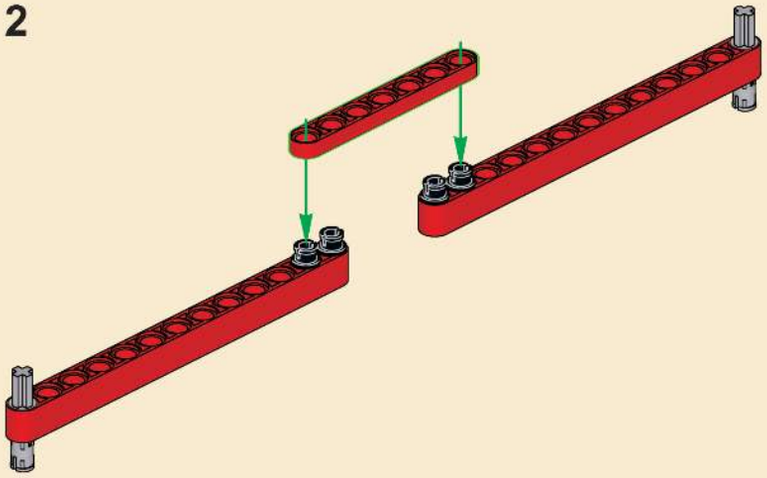

2x

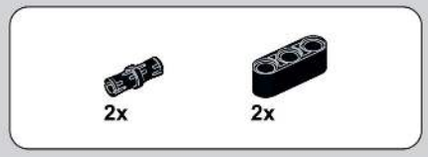

771

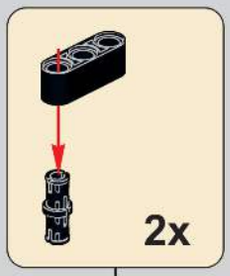

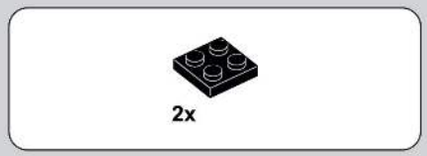

772

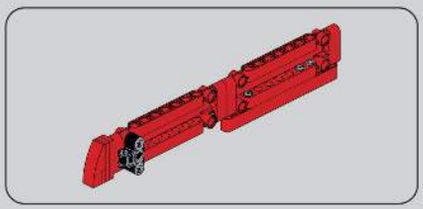

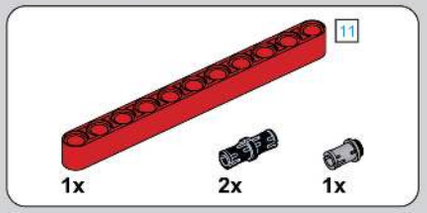

773

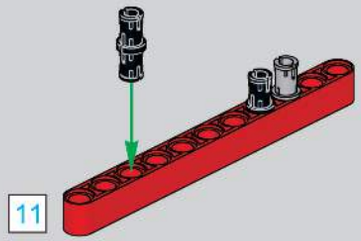

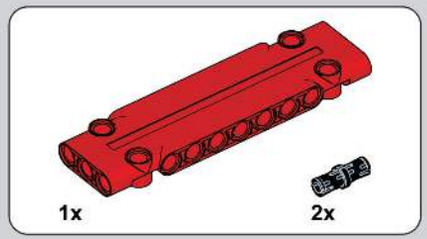

774

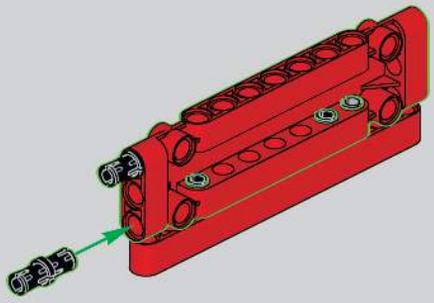

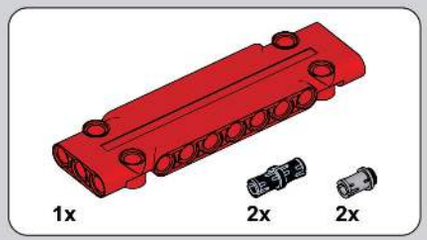

775

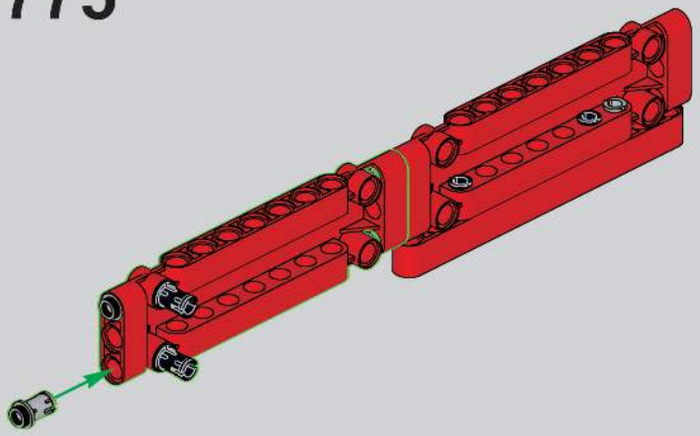

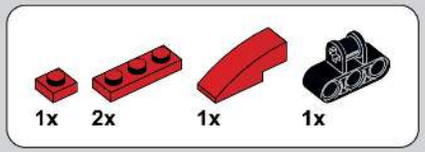

776

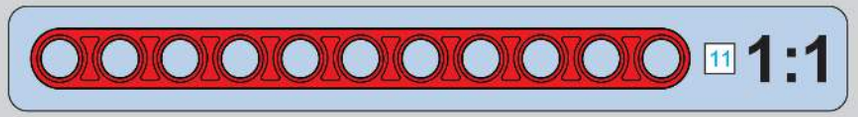

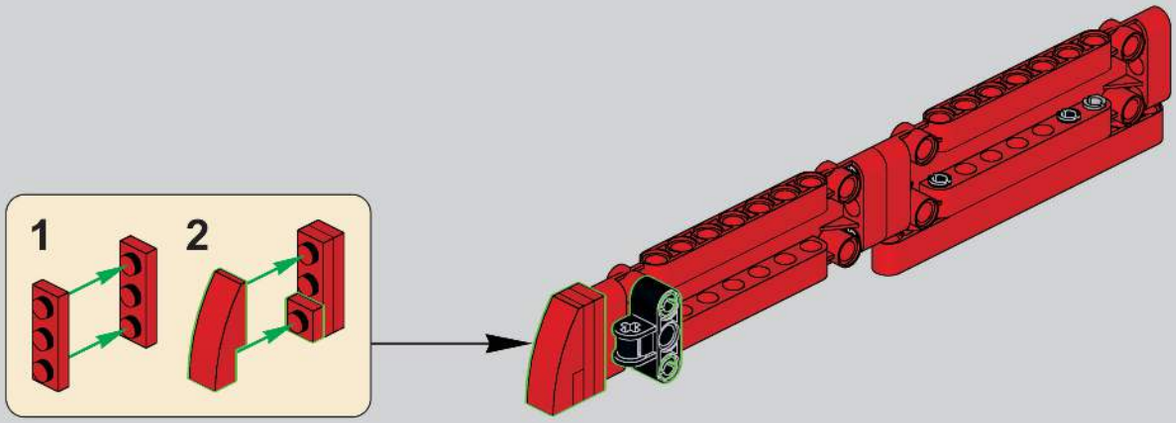

777

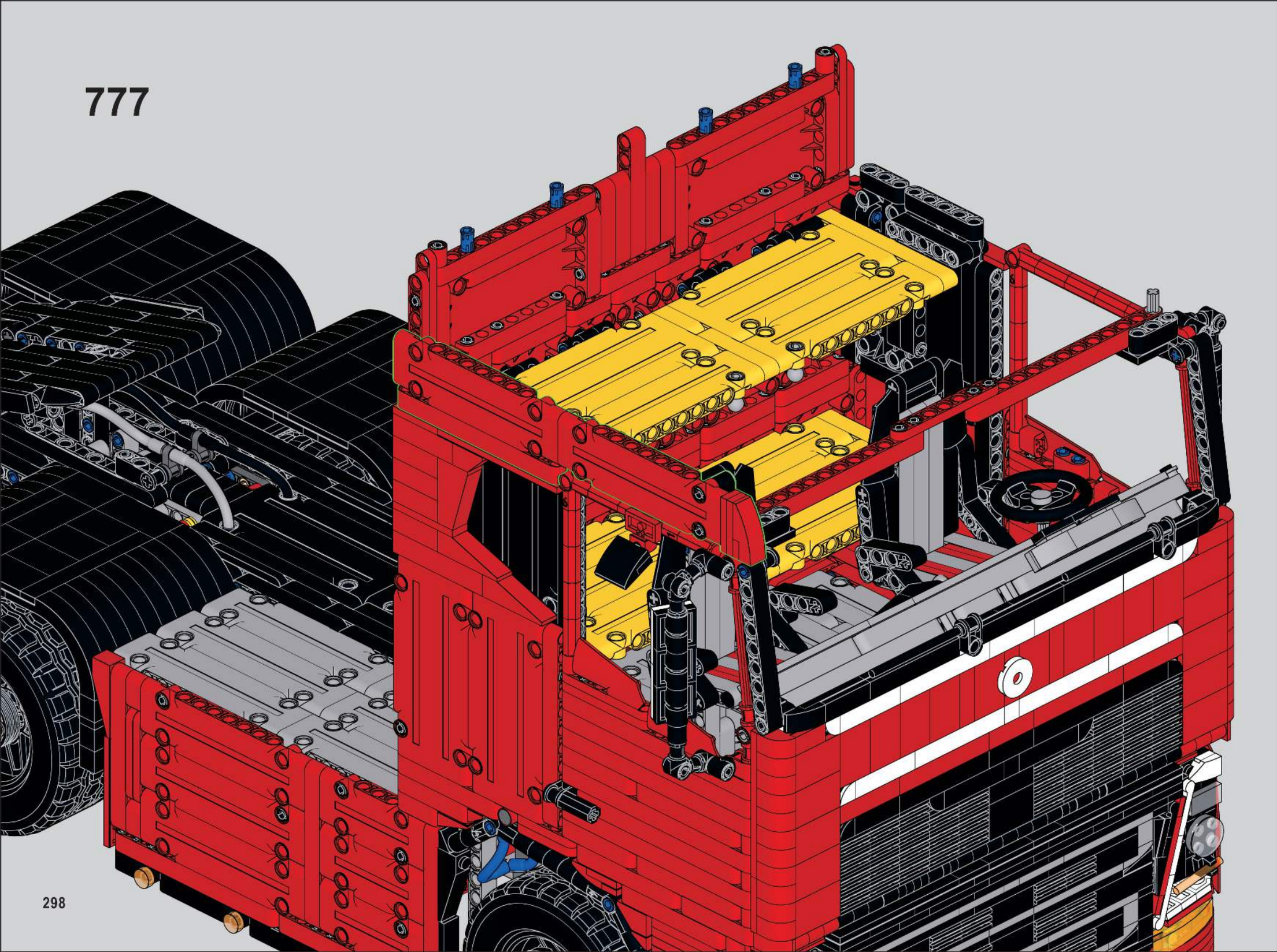

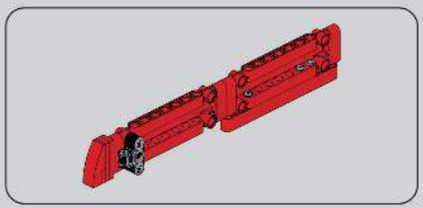

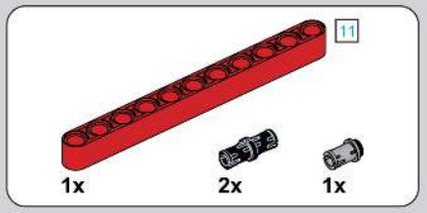

778

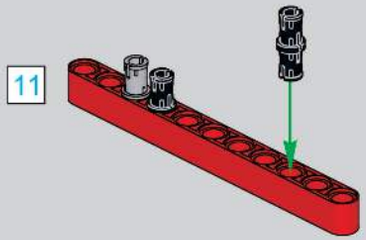

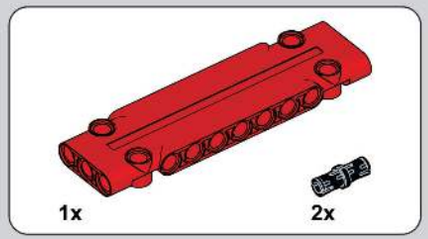

779

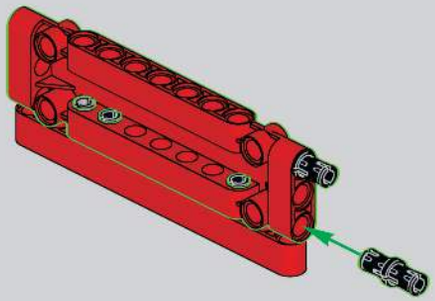

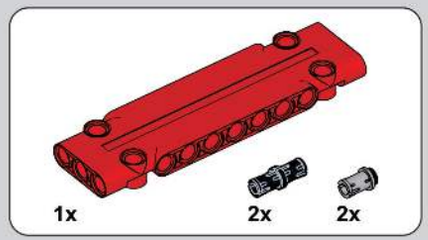

780

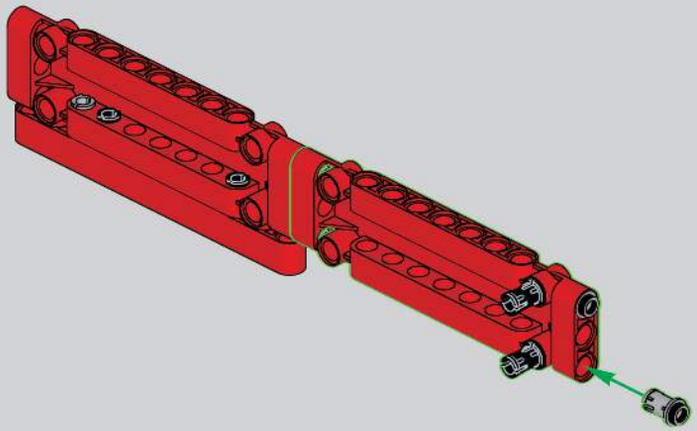

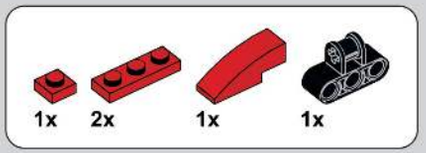

781

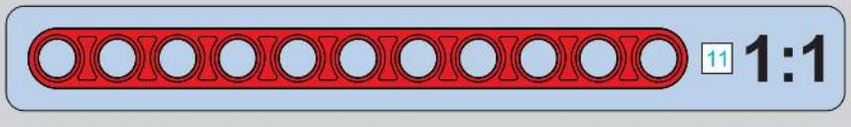

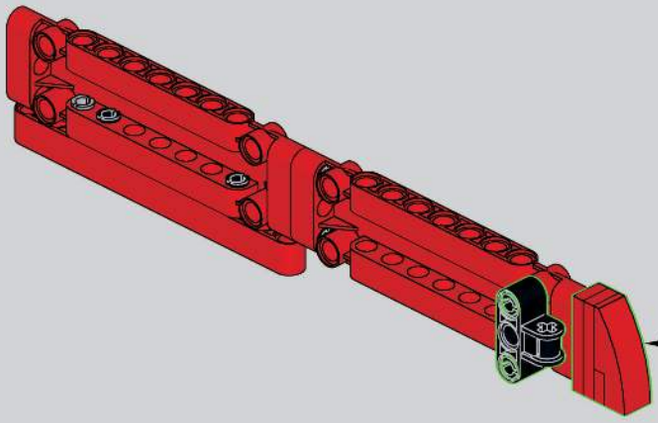

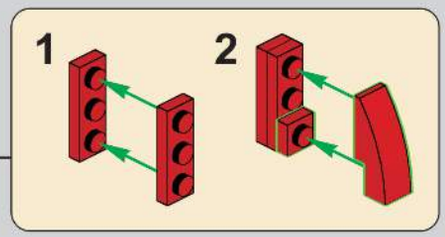

782

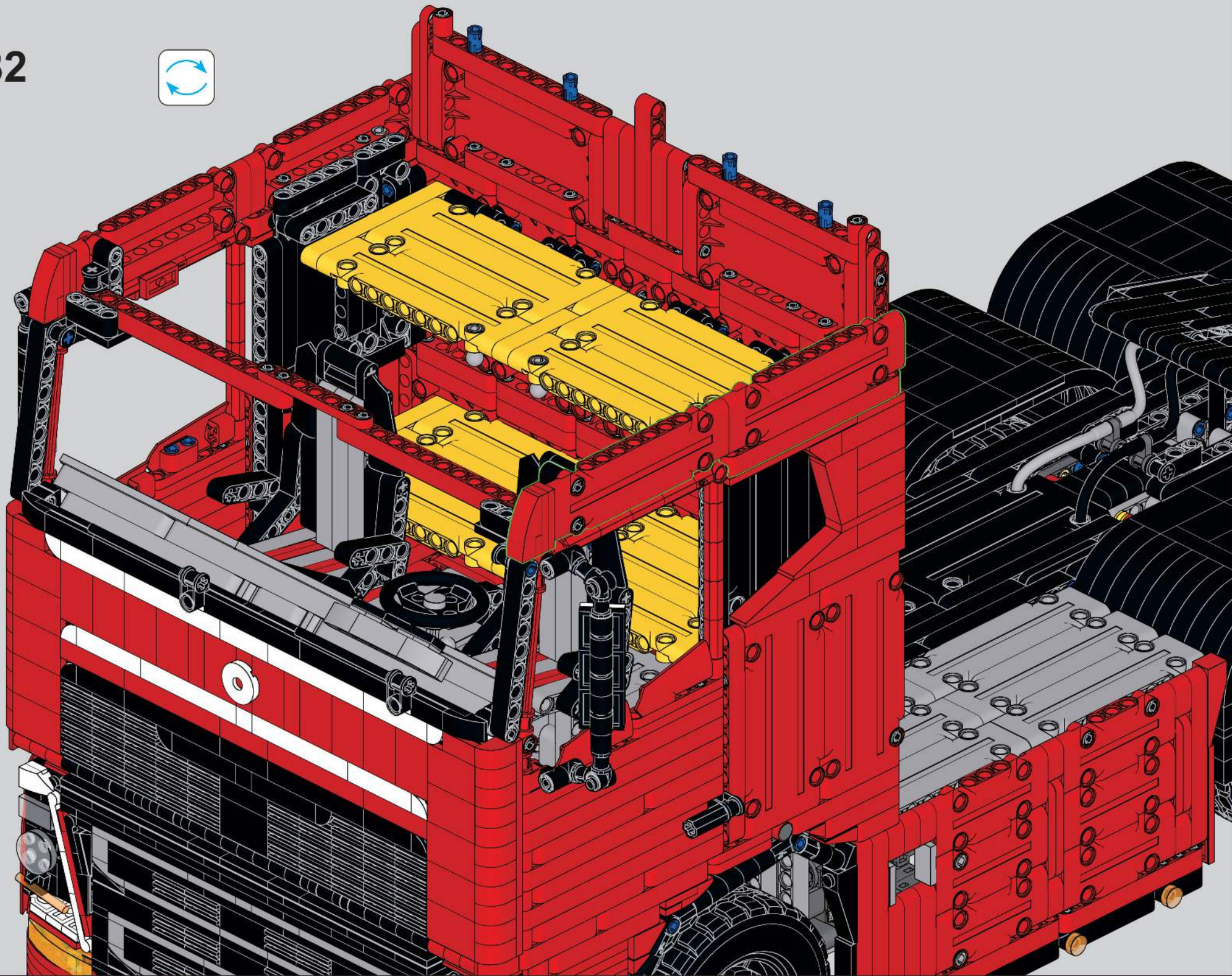

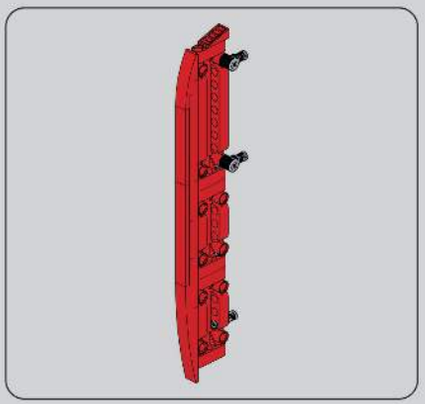

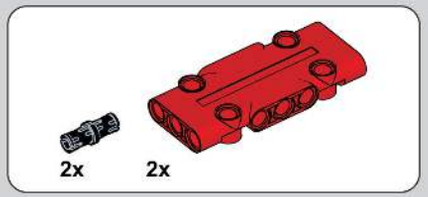

783

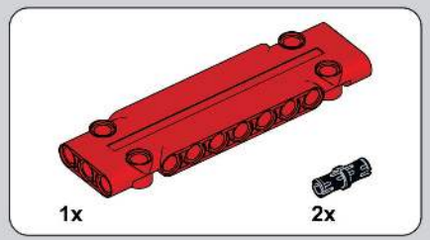

784

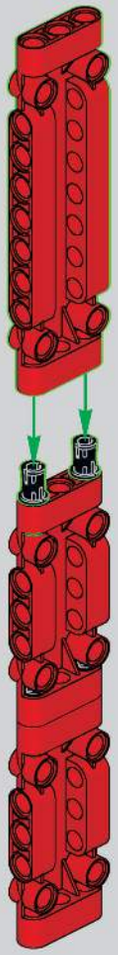

785

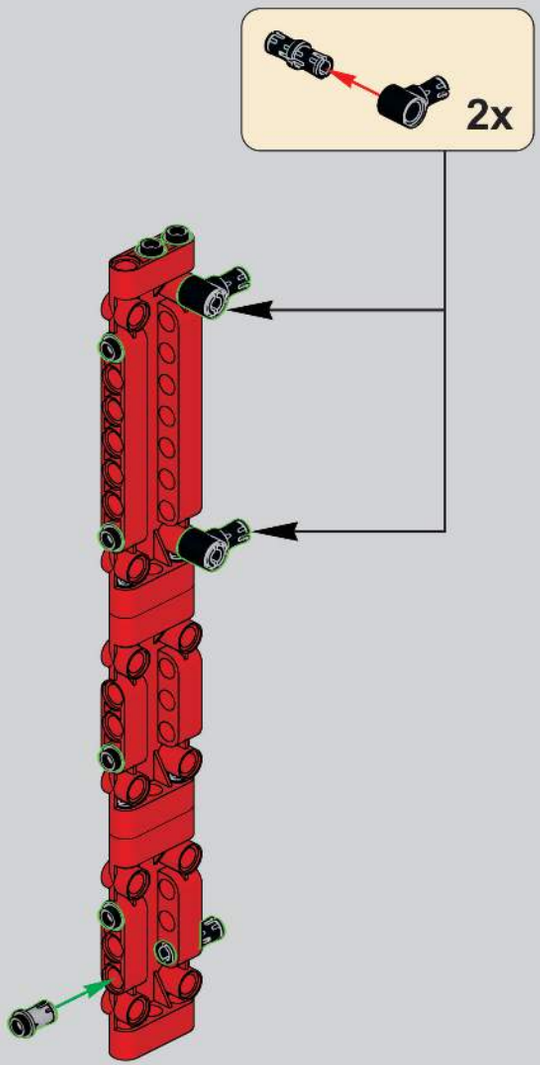

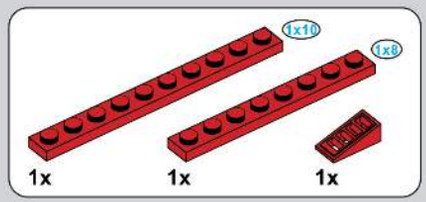

786

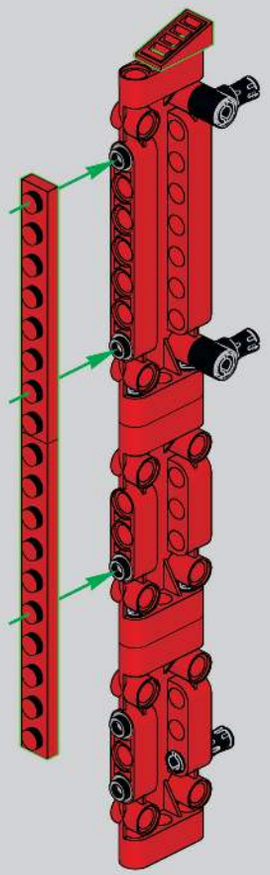

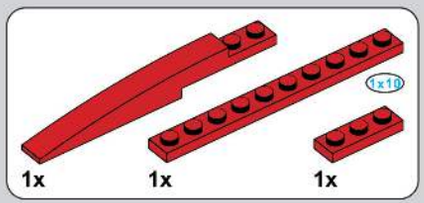

787

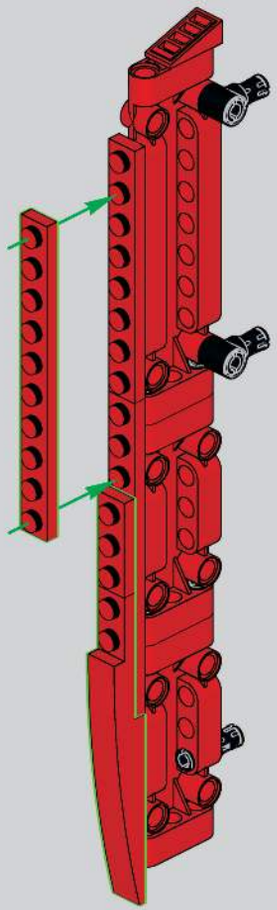

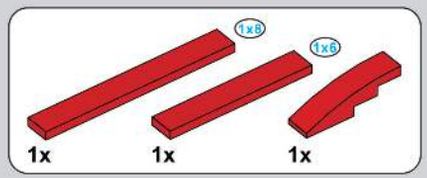

788

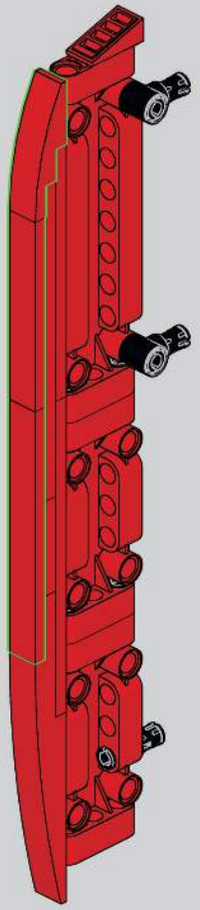

789

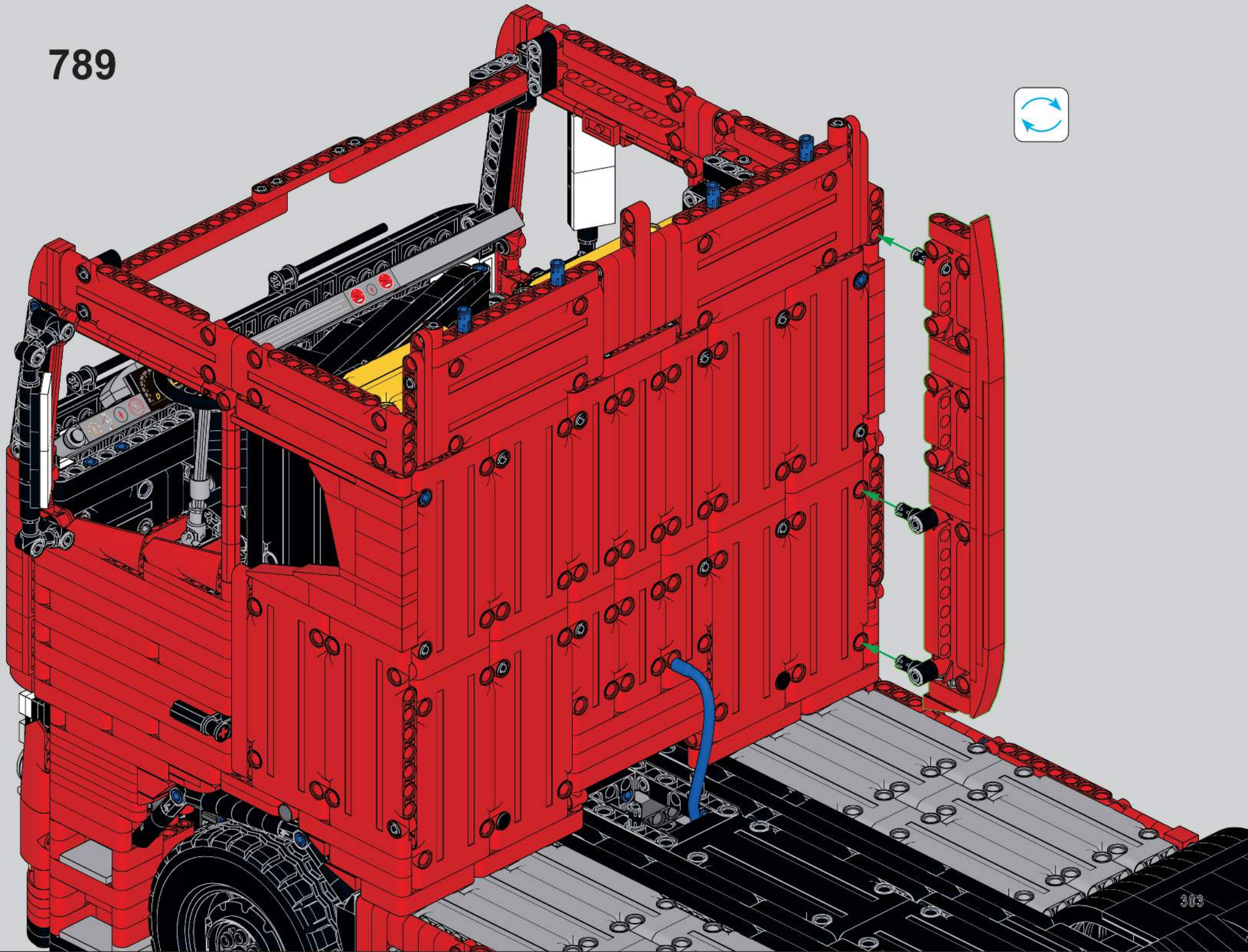

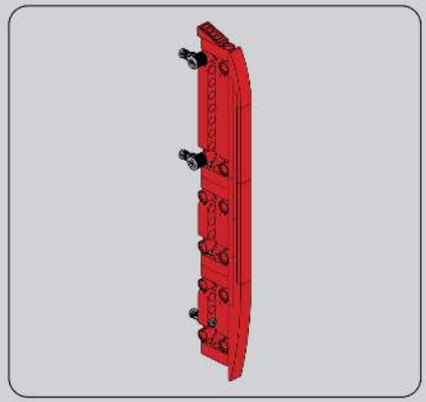

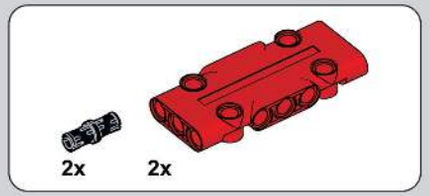

790

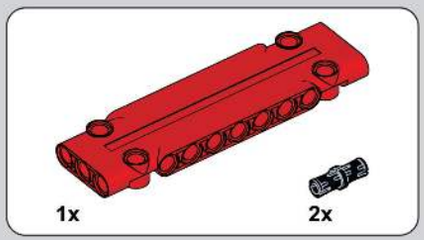

791

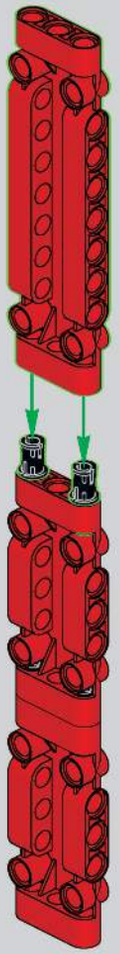

792

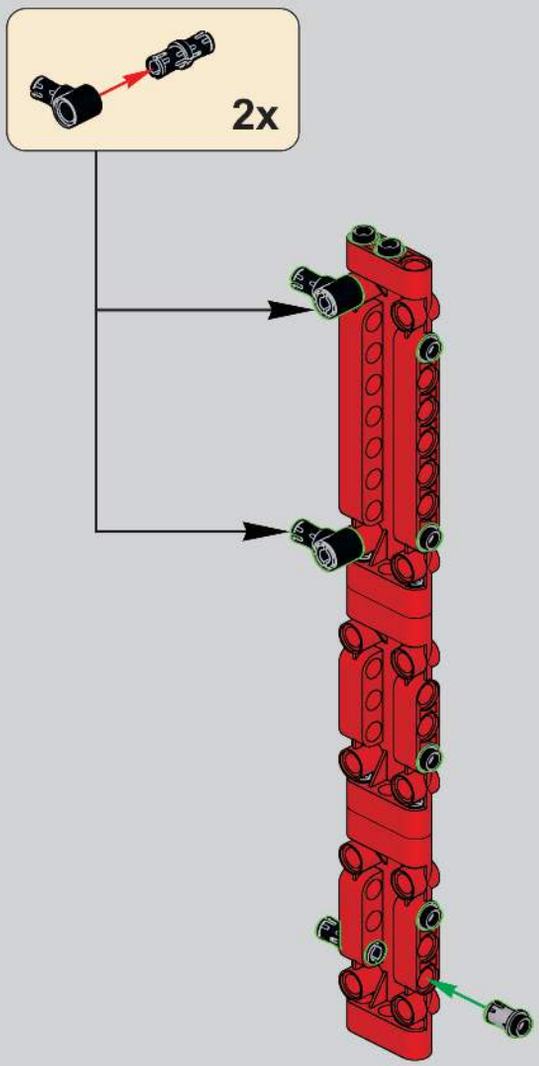

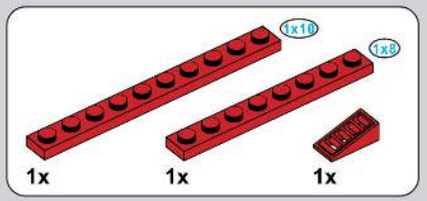

793

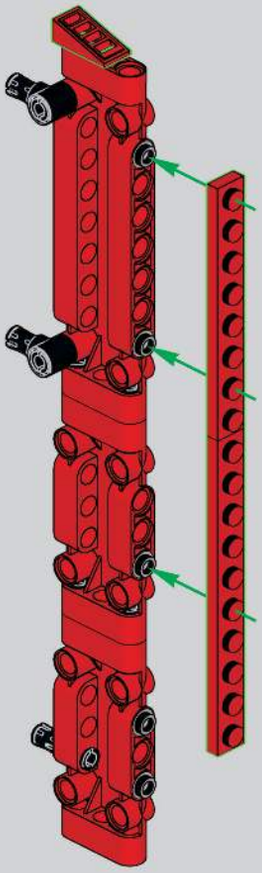

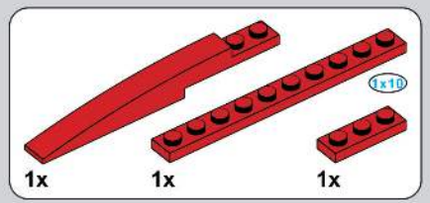

794

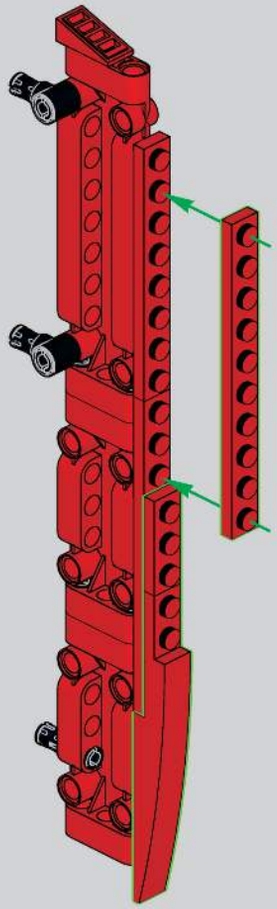

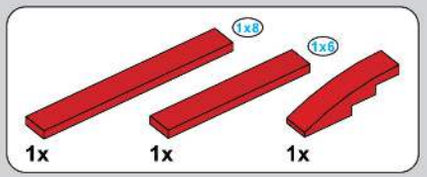

795

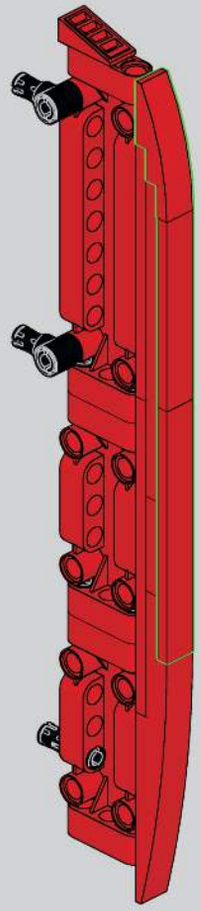

796

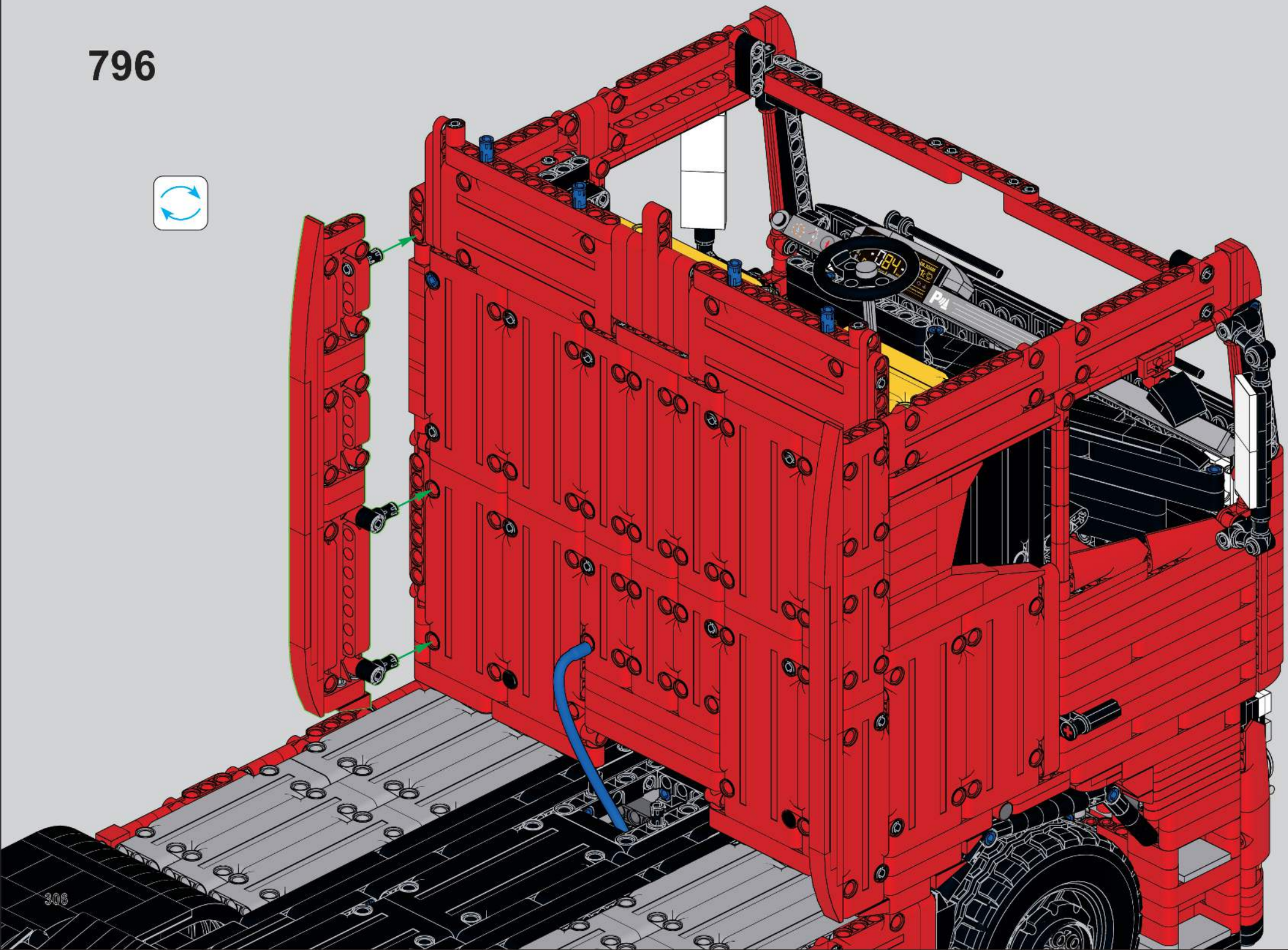

9

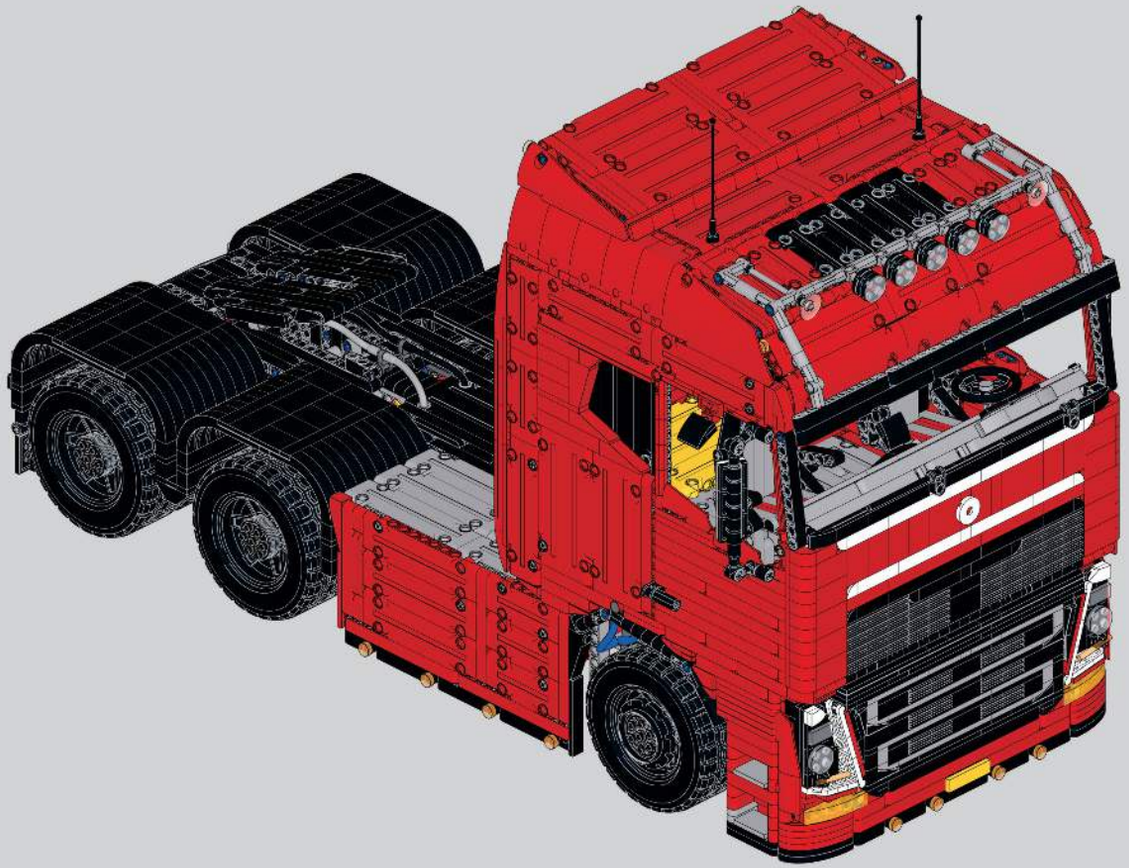

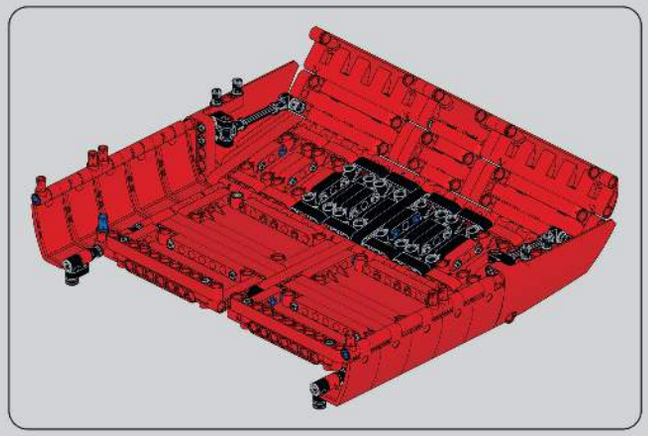

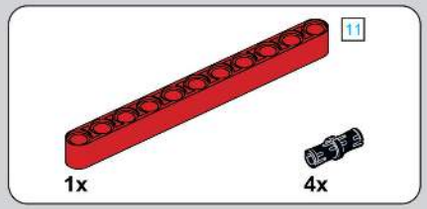

797

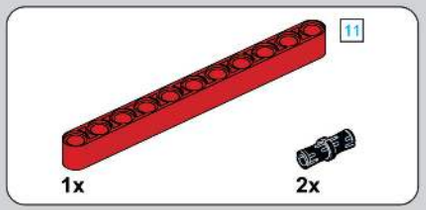

798

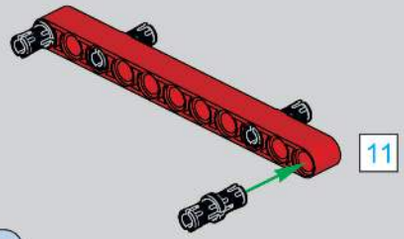

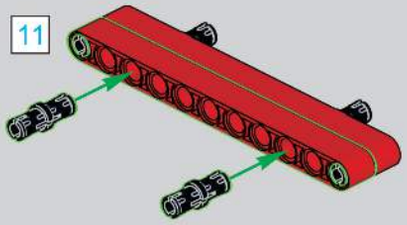

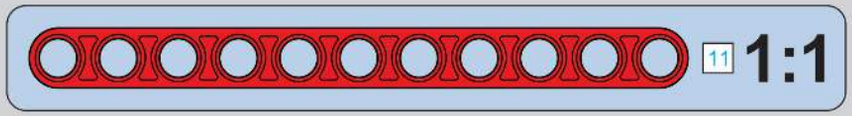

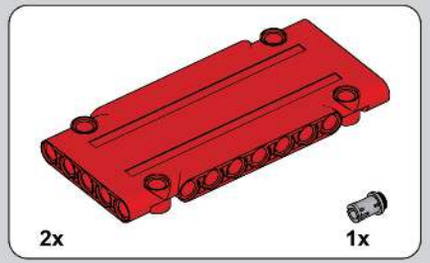

799

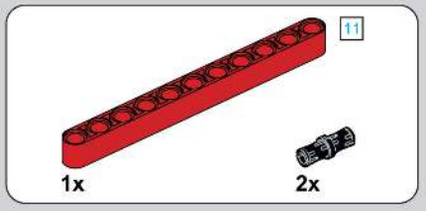

800

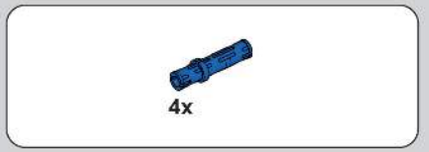

801

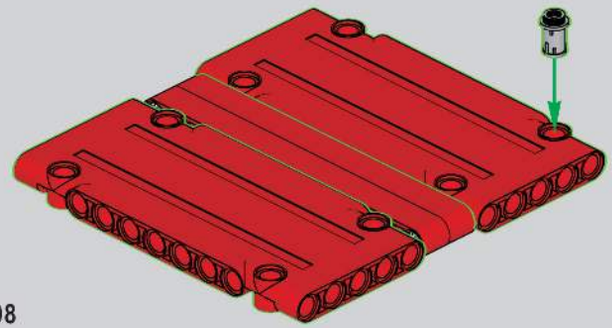

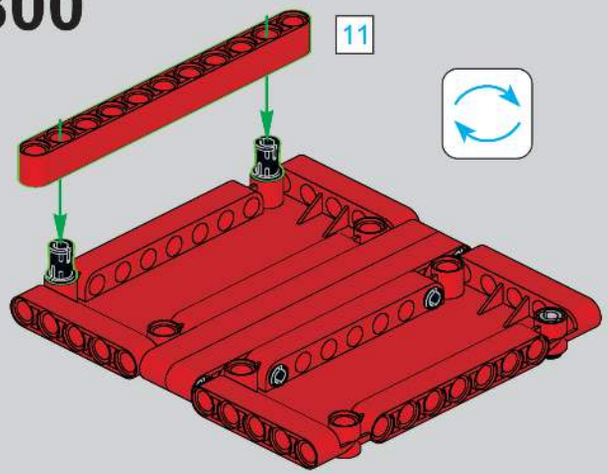

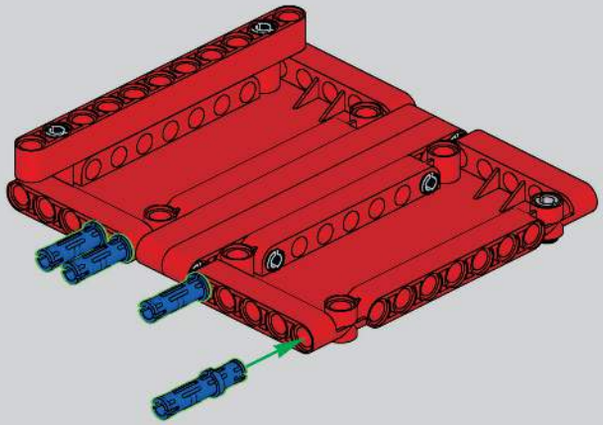

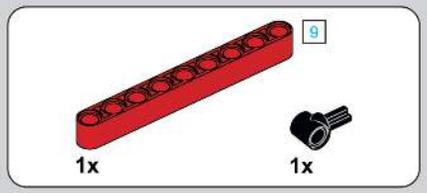

802

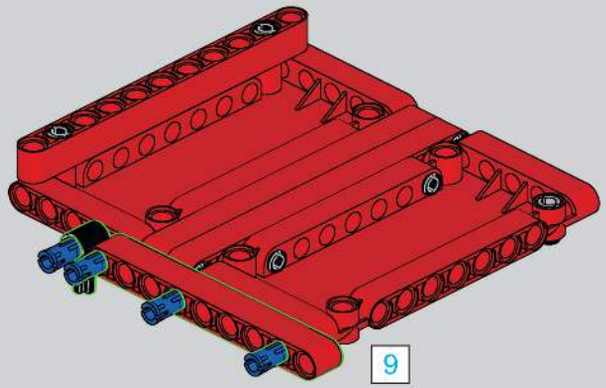

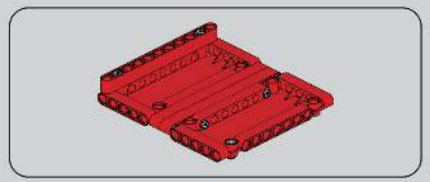

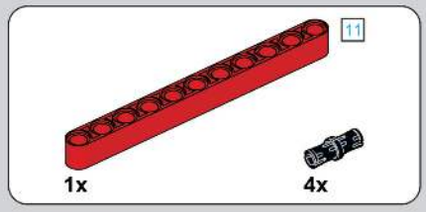

803

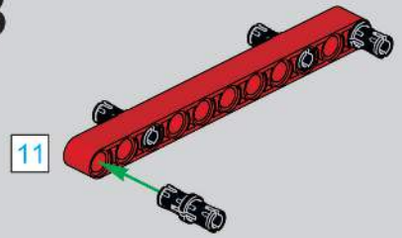

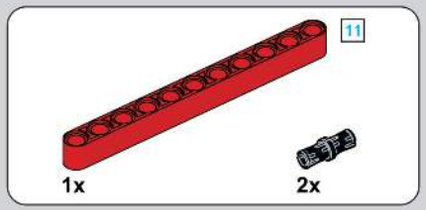

804

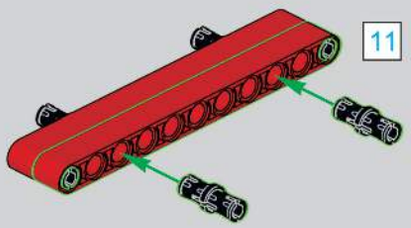

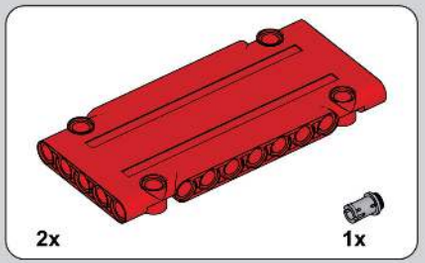

805

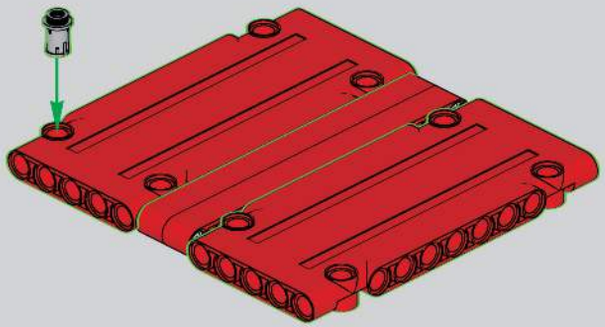

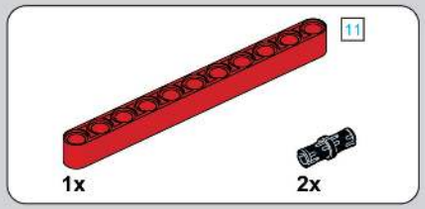

806

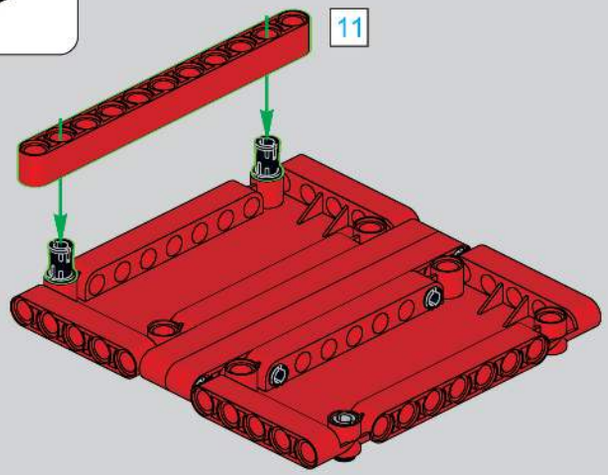

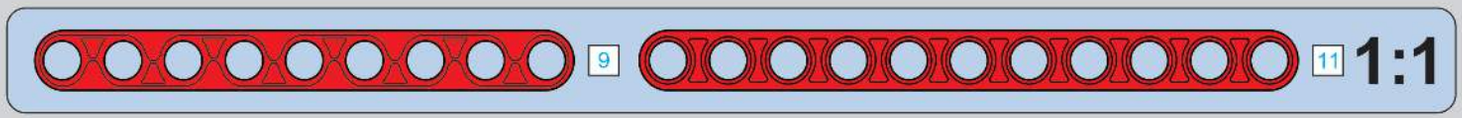

807

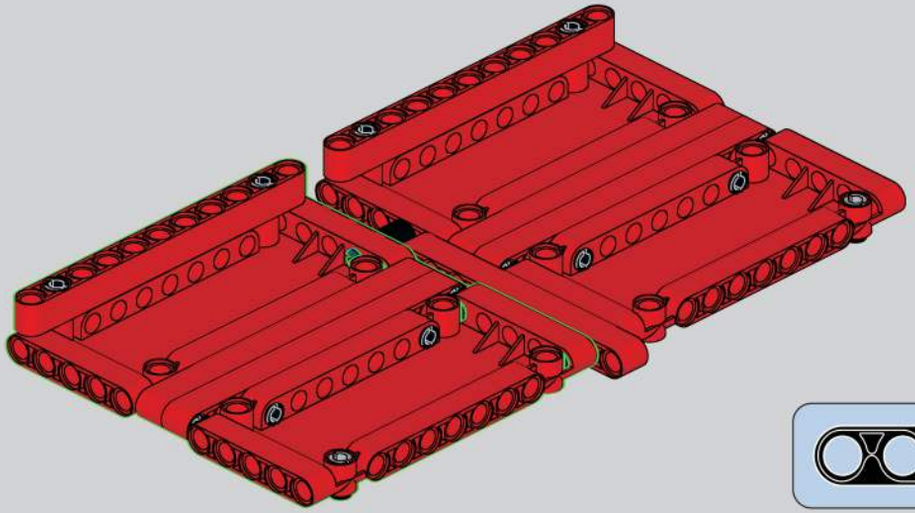

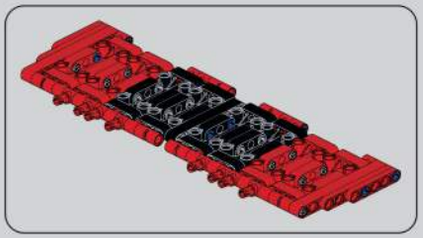

808

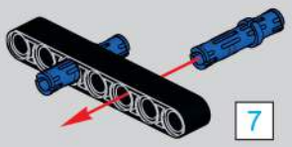

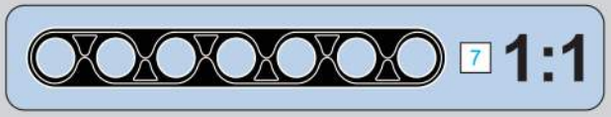

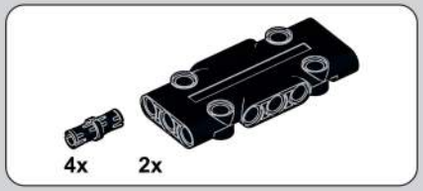

809

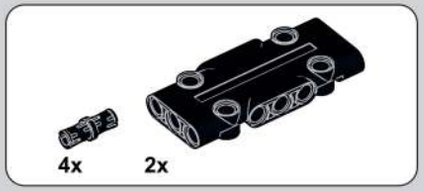

810

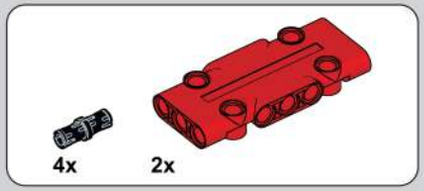

811

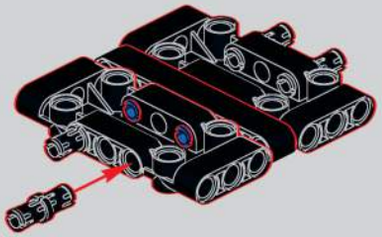

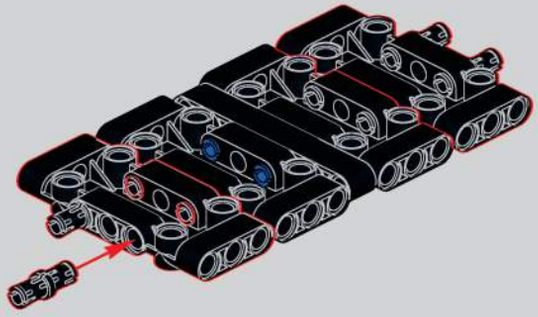

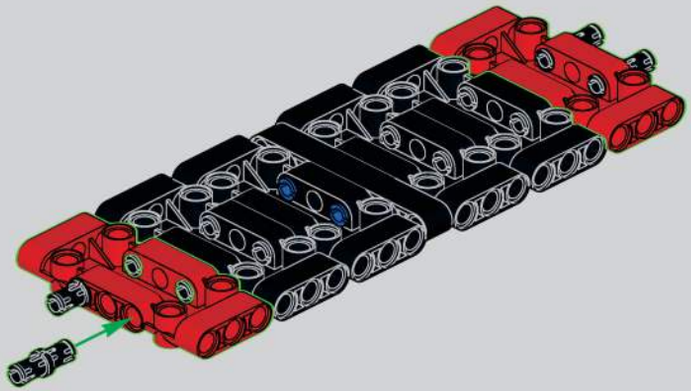

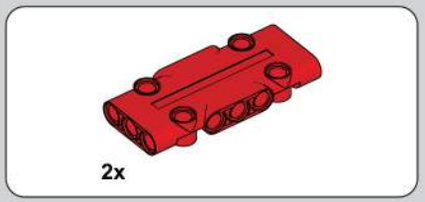

812

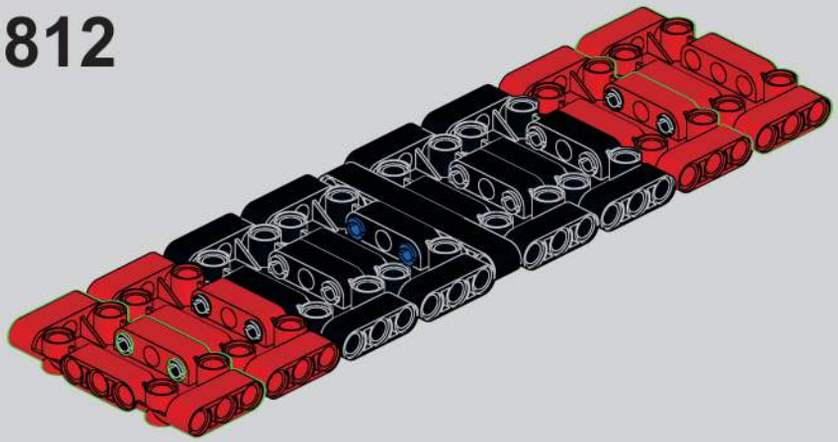

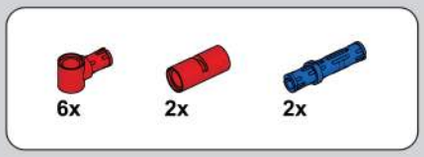

813

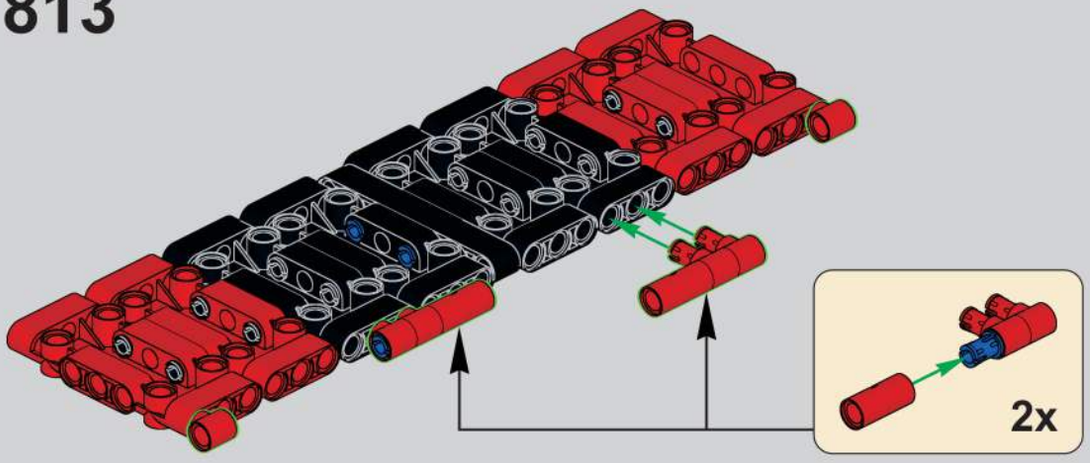

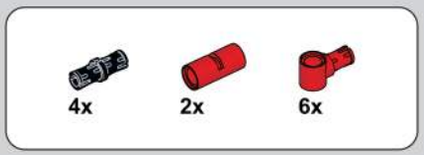

814

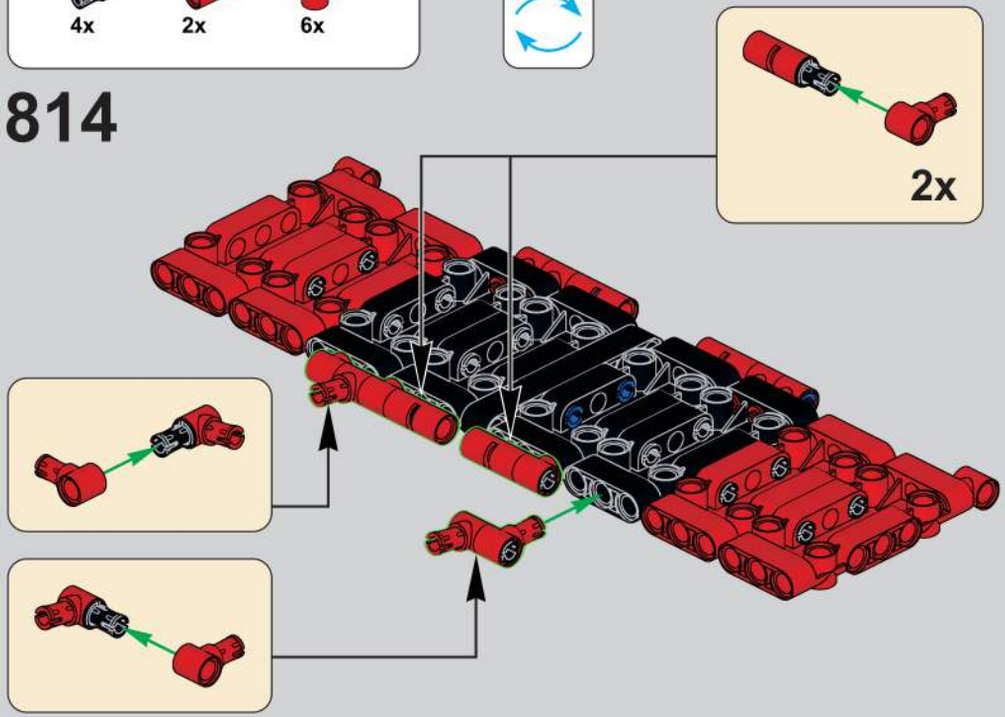

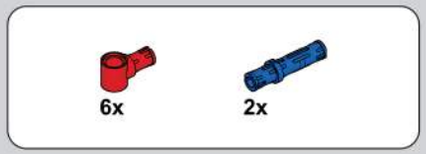

815

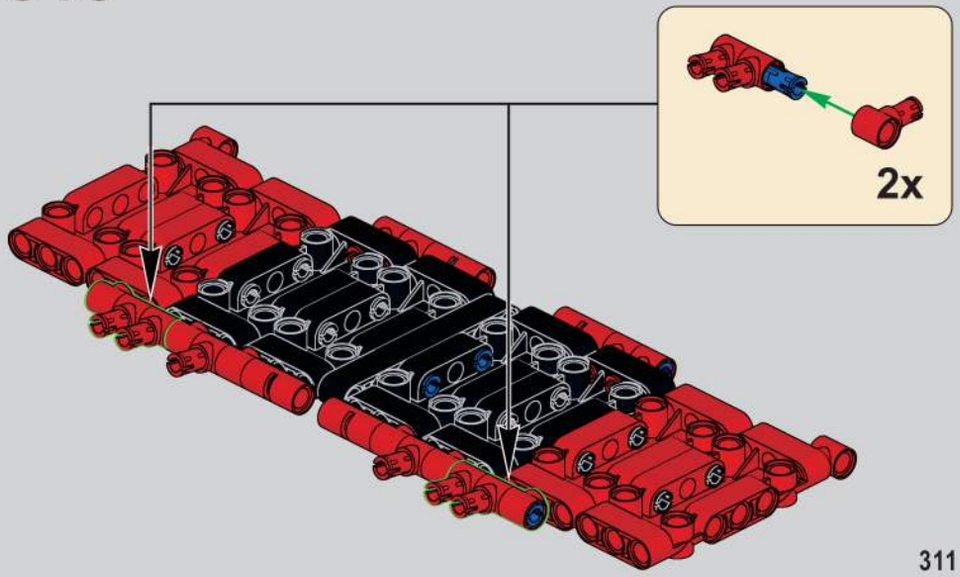

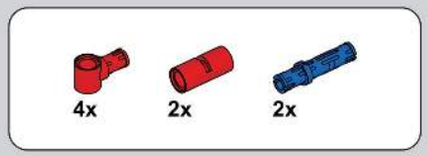

816

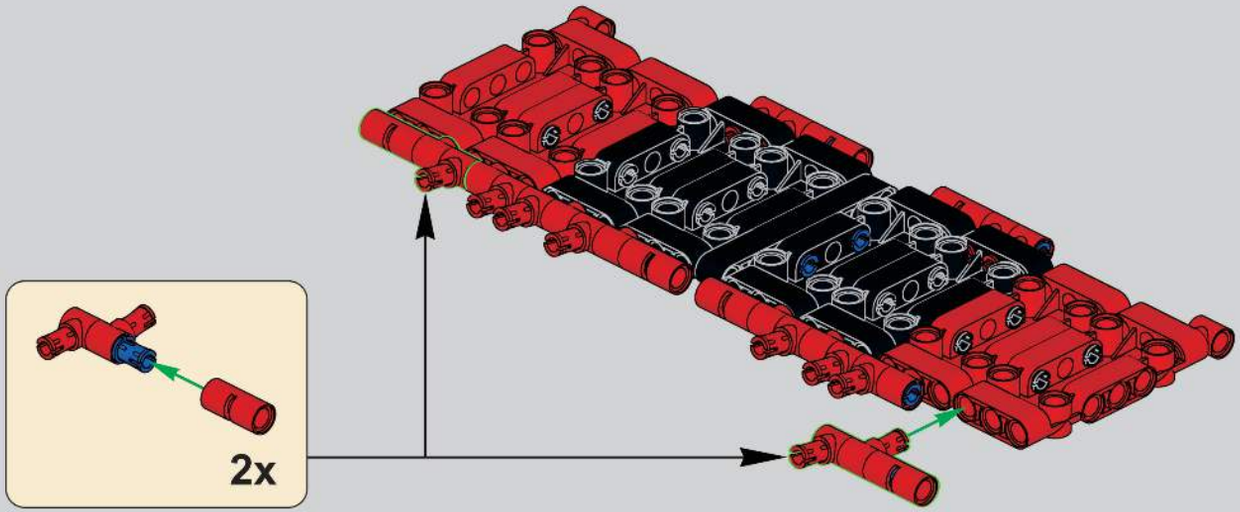

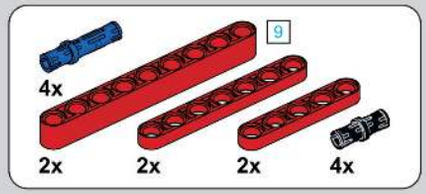

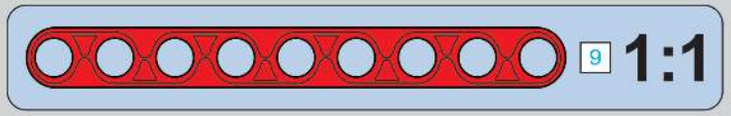

817

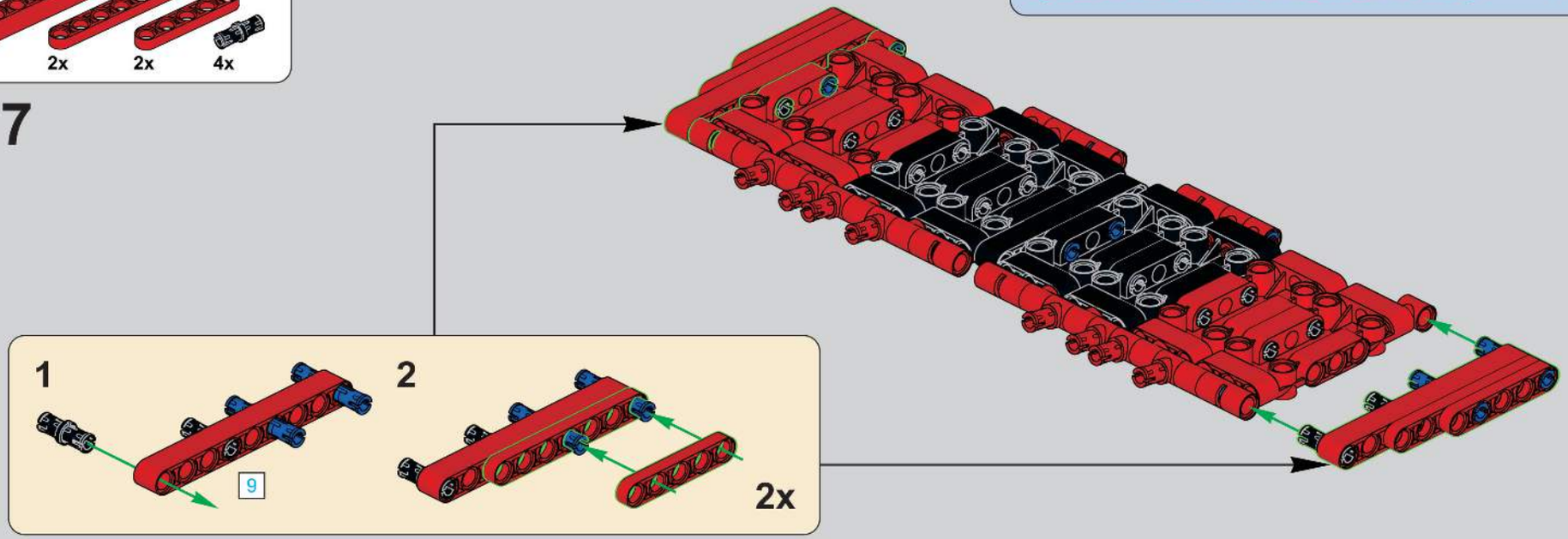

818

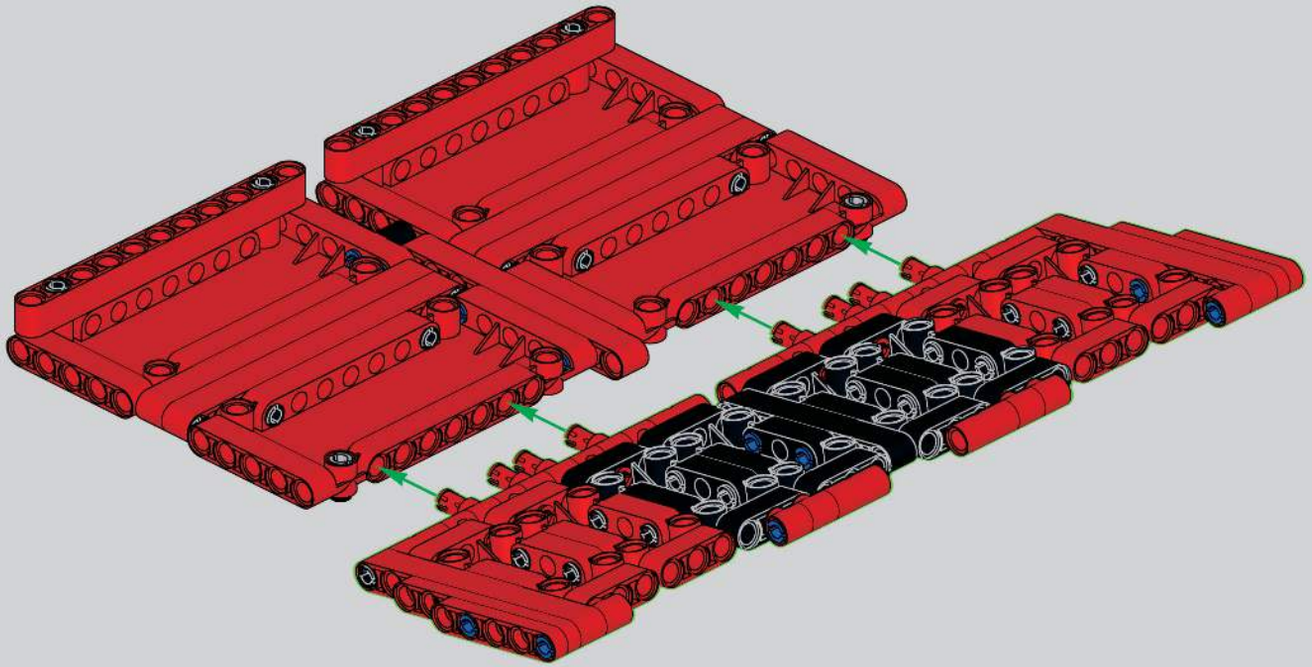

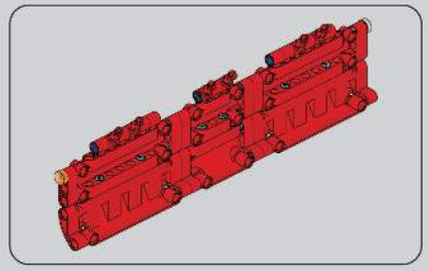

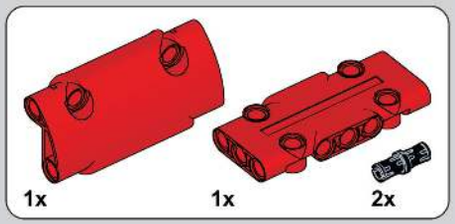

819

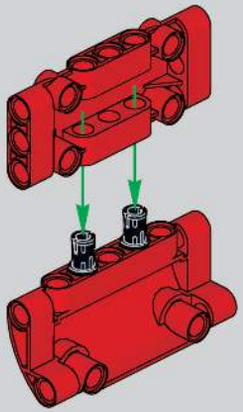

820

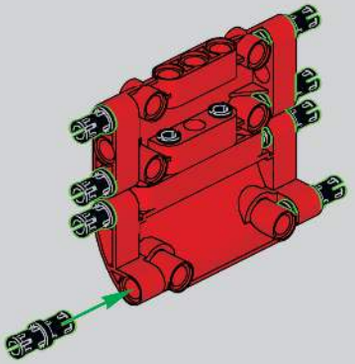

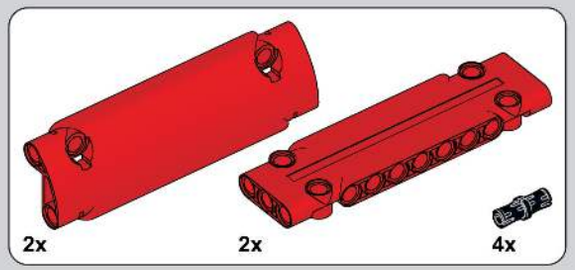

821

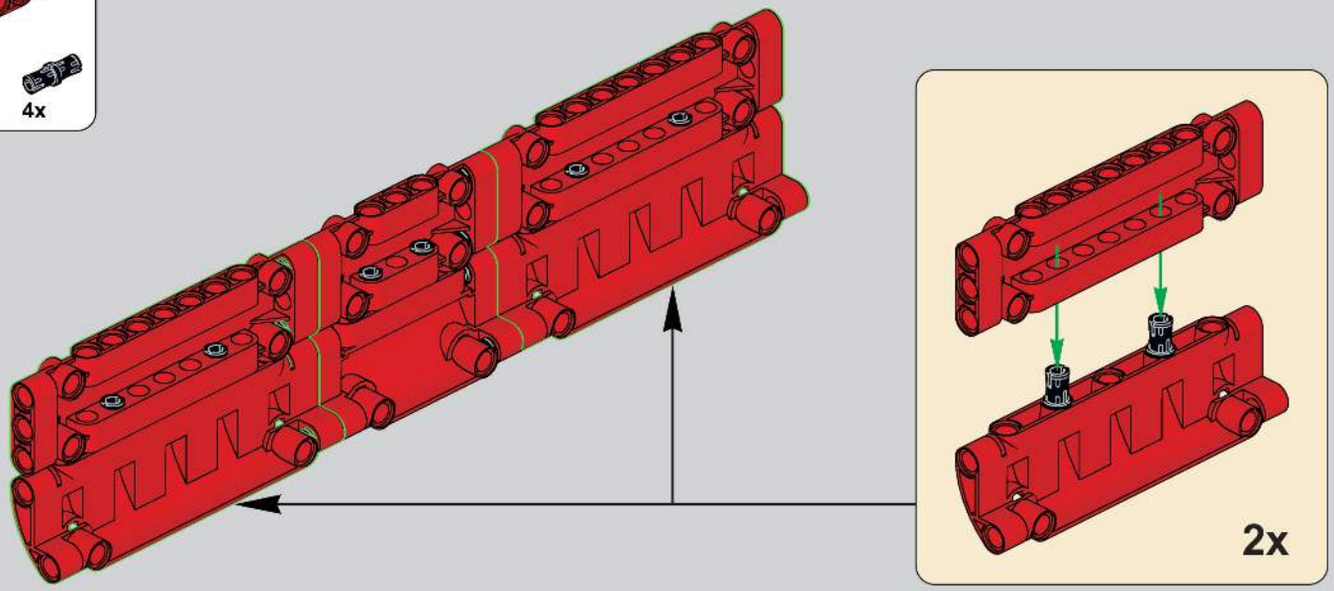

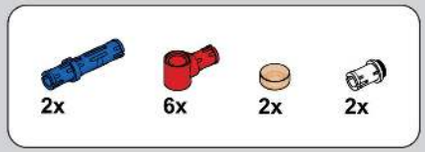

822

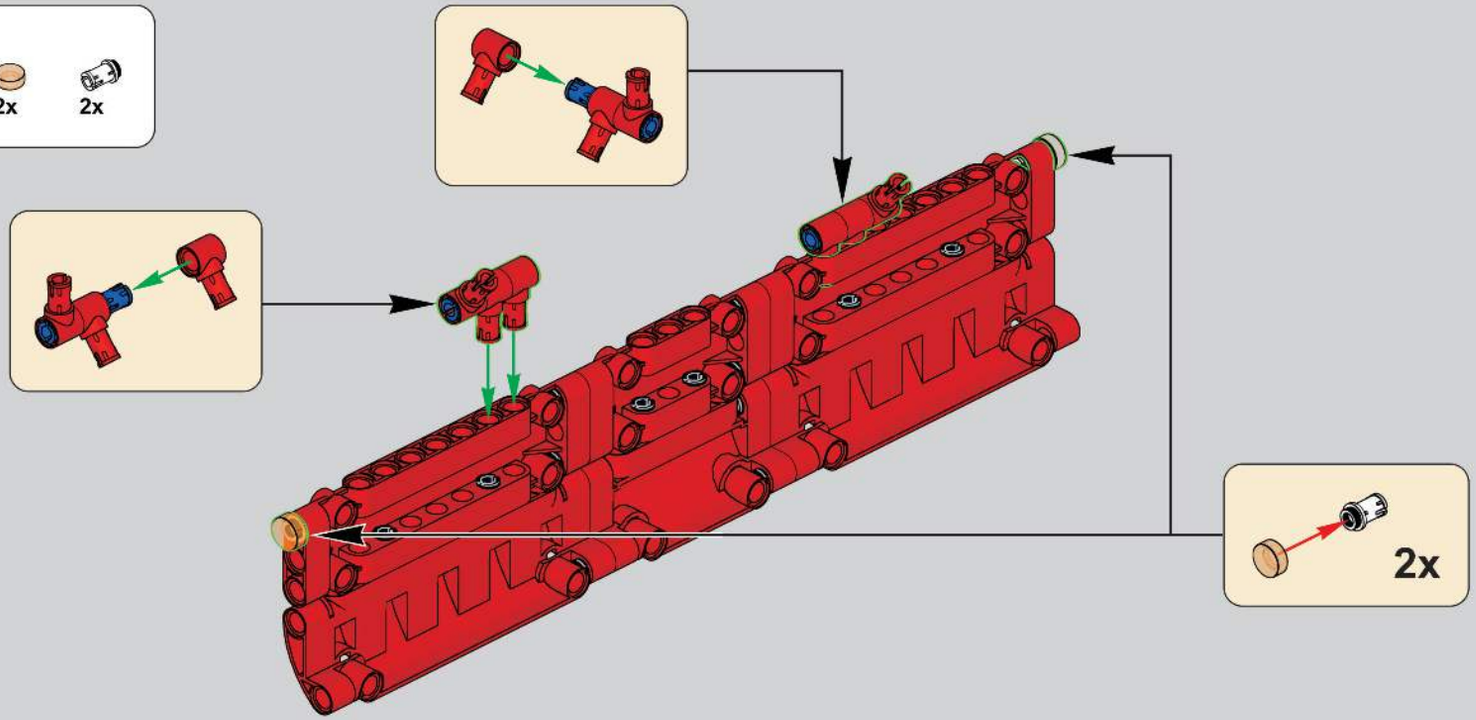

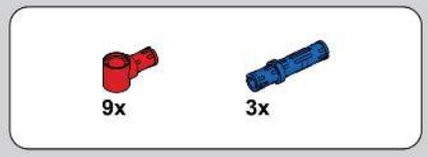

823

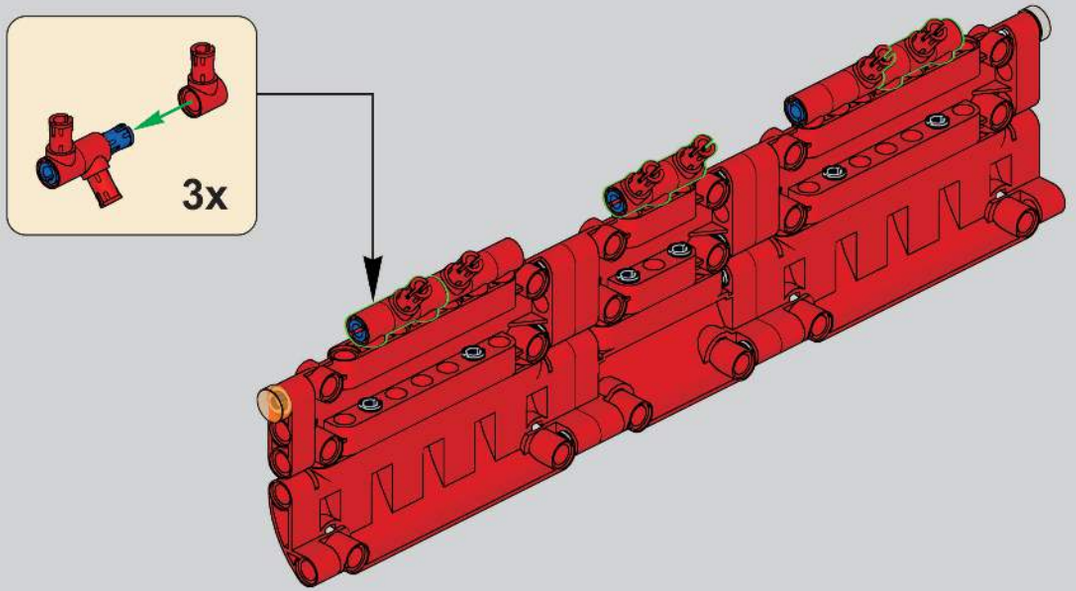

824

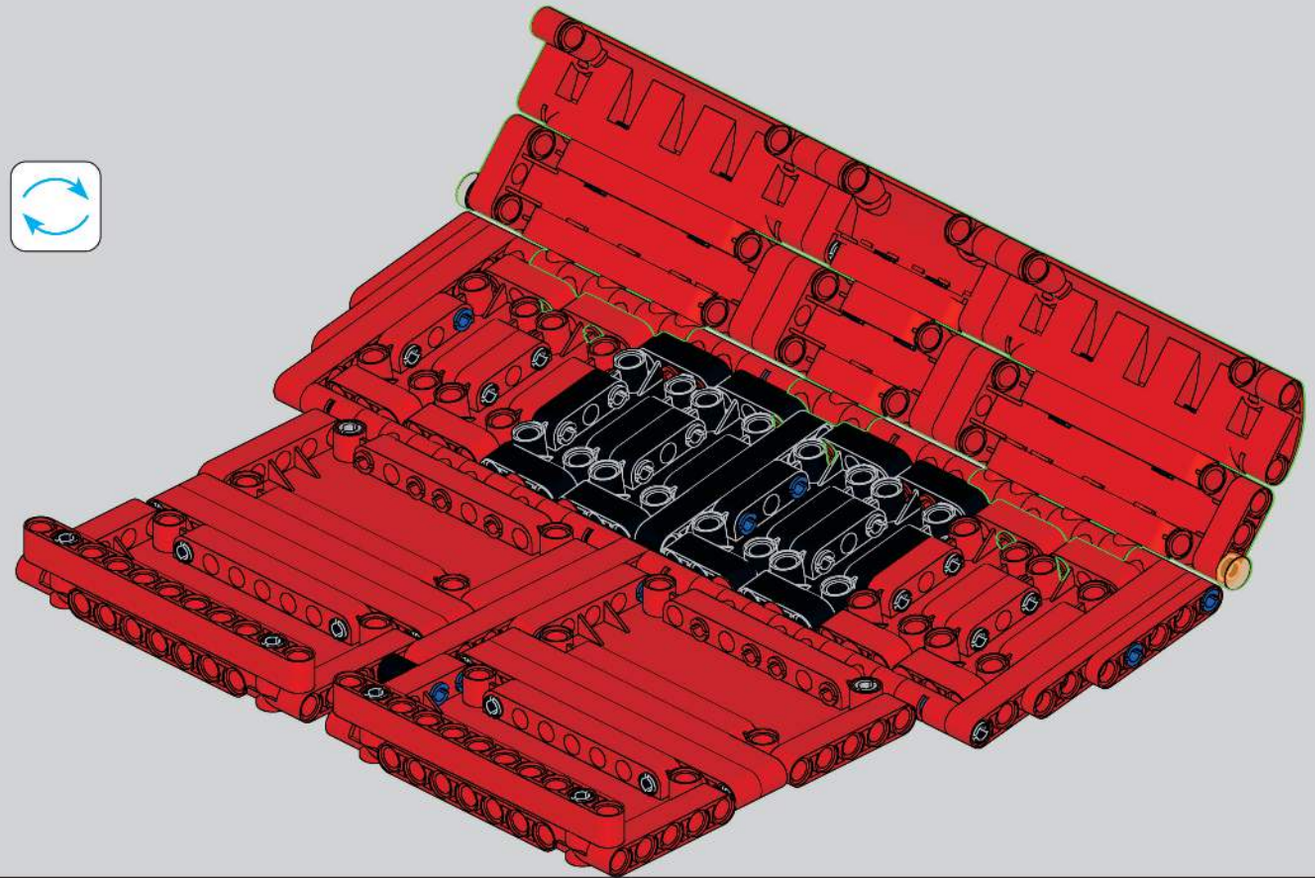

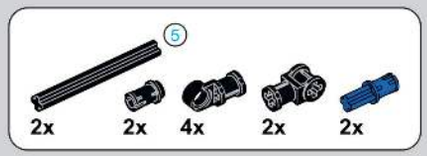

825

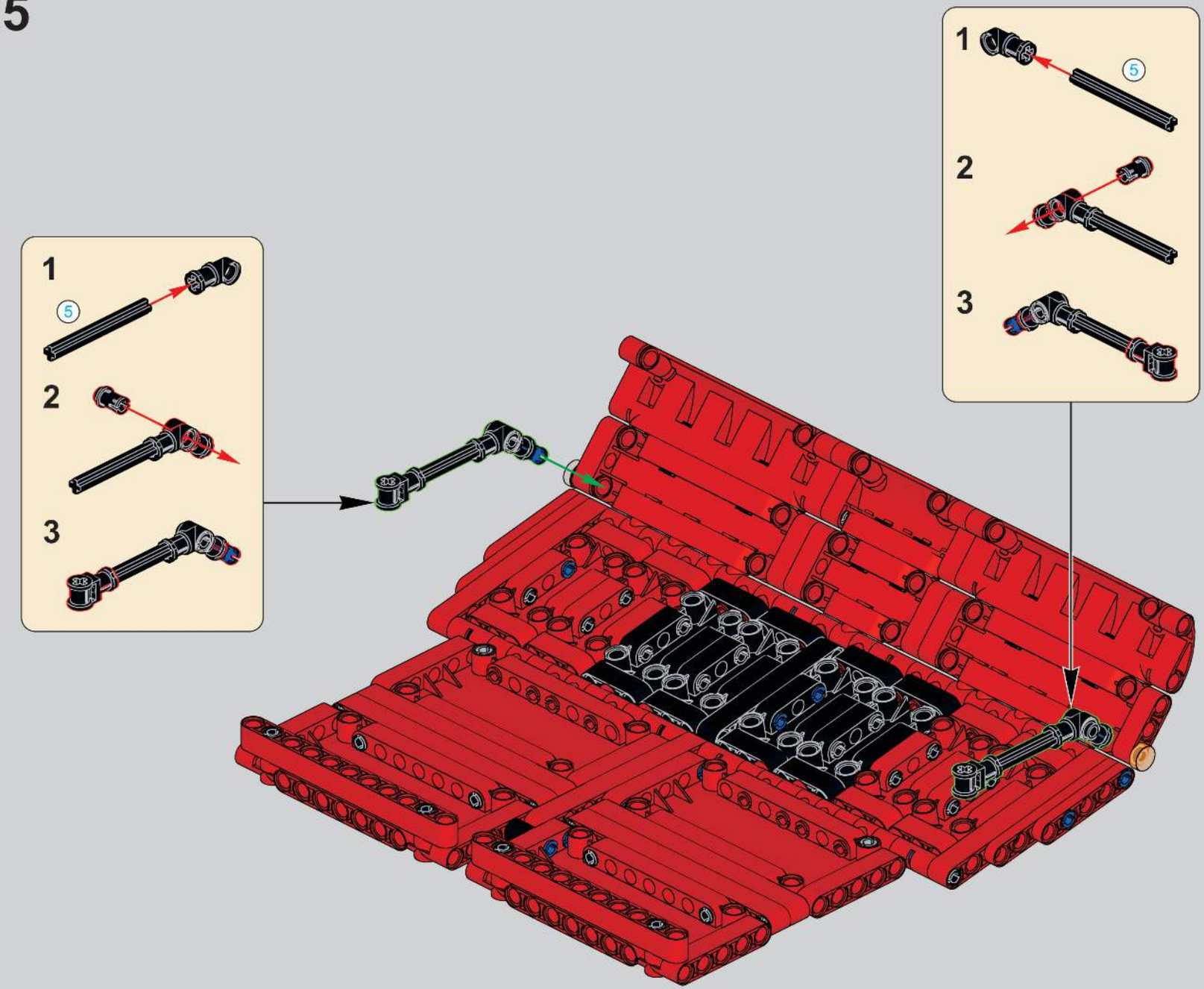

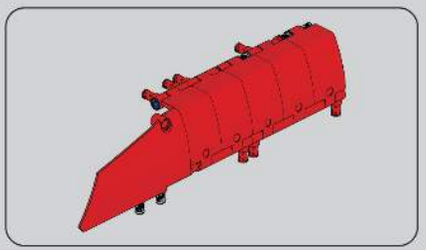

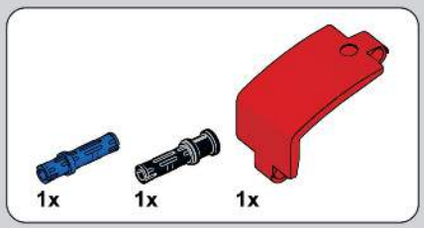

826

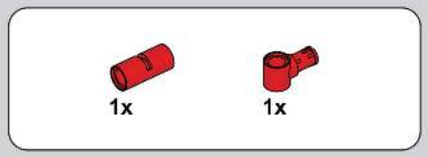

827

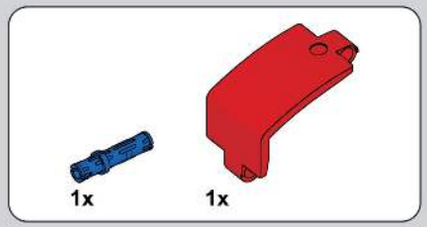

828

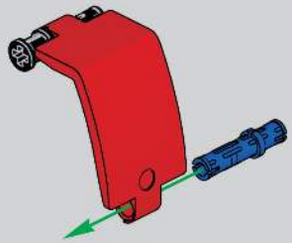

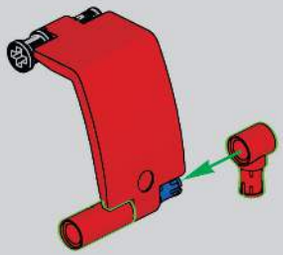

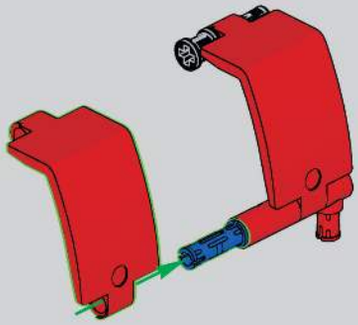

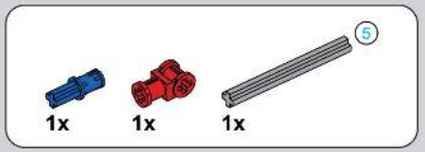

829

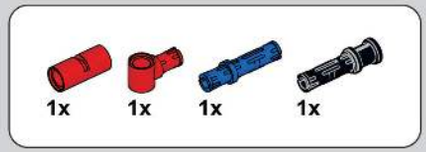

830

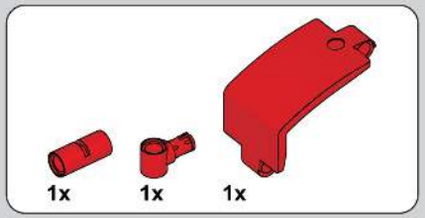

831

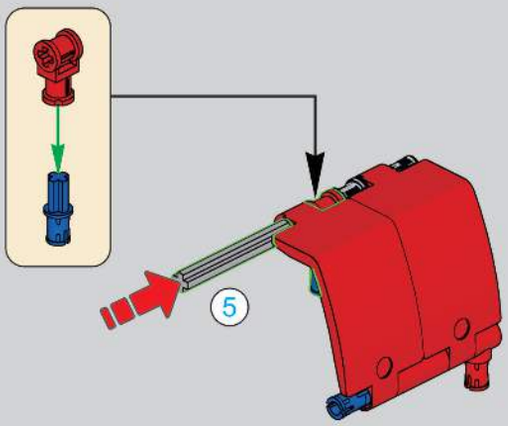

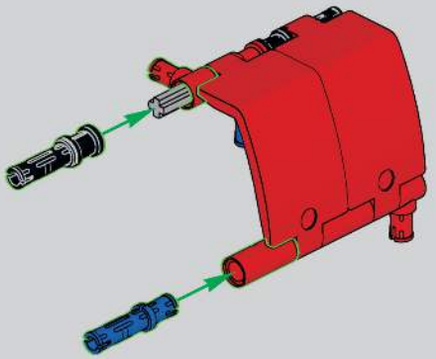

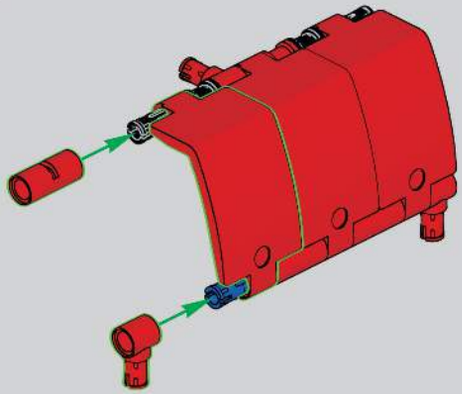

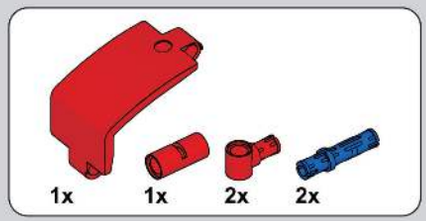

832

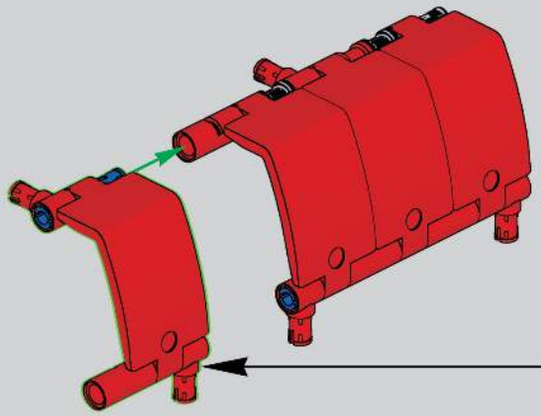

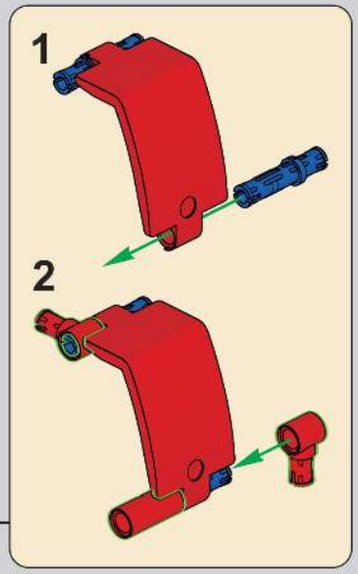

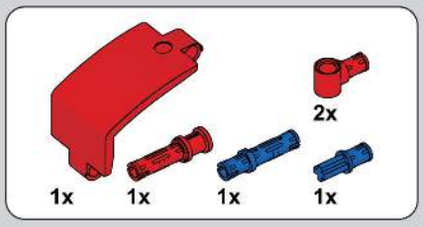

833

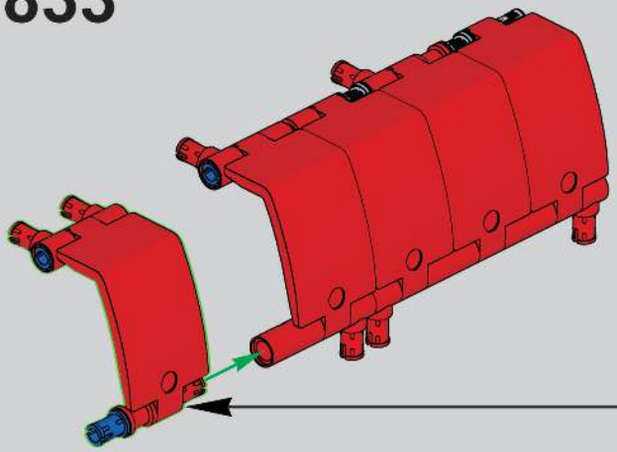

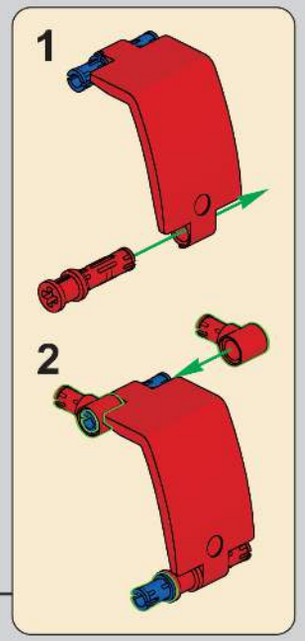

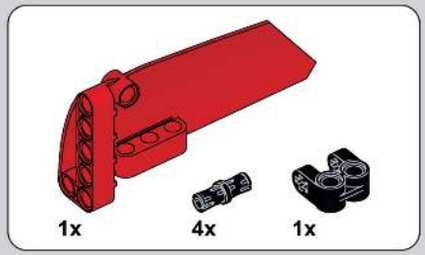

834

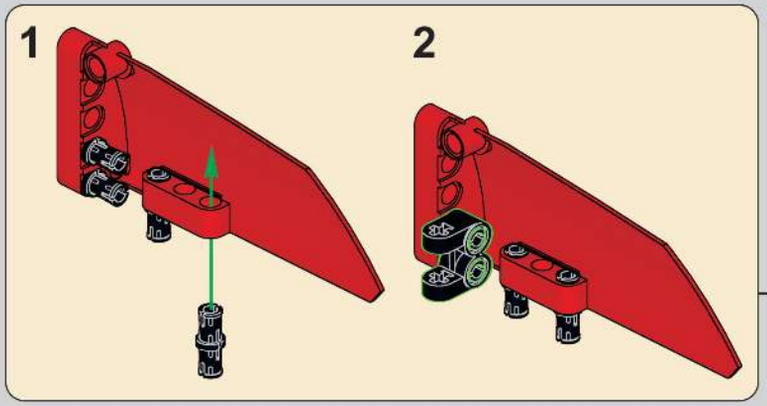

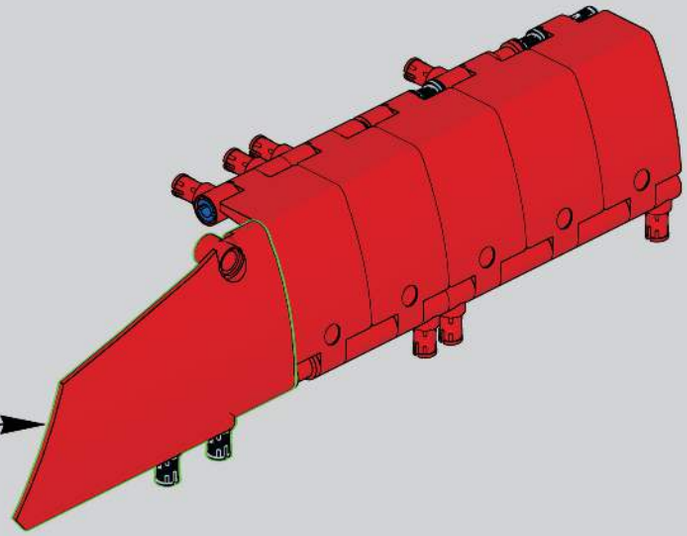

835

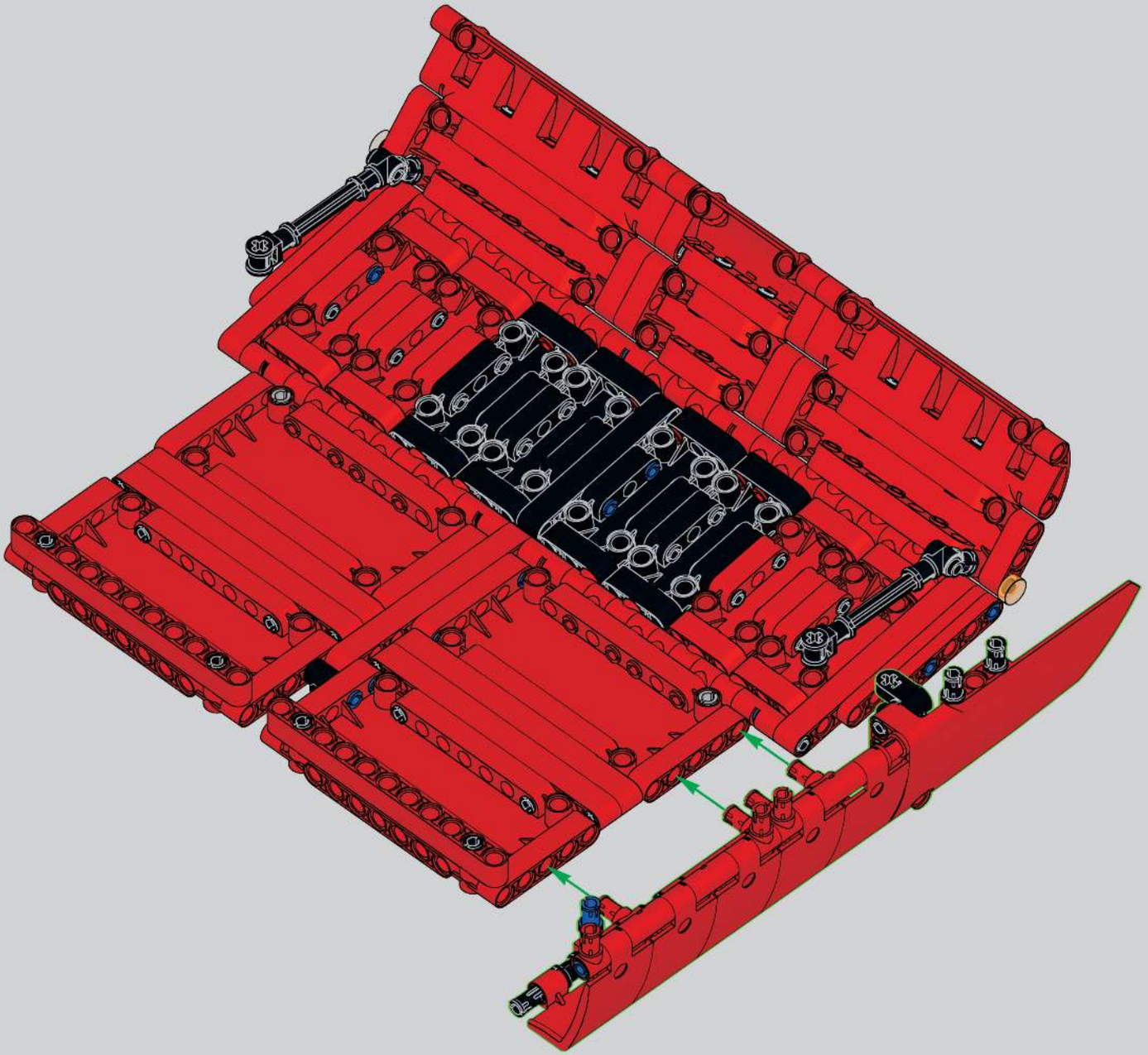

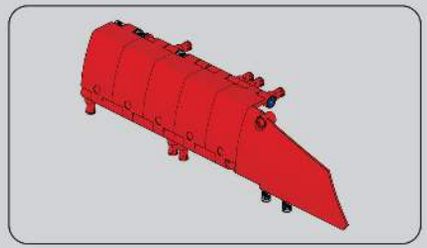

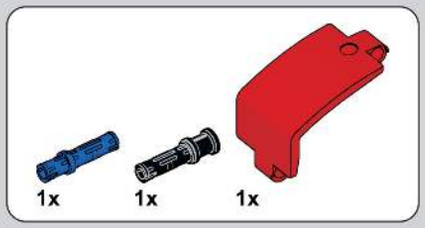

836

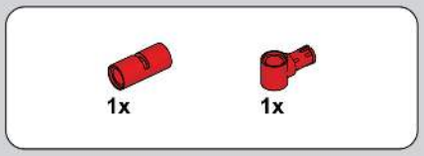

837

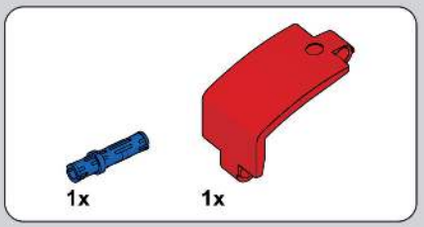

838

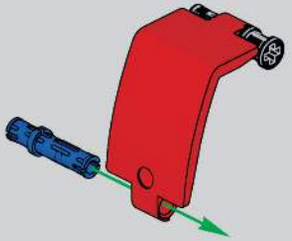

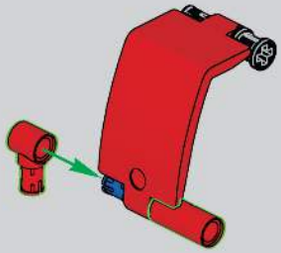

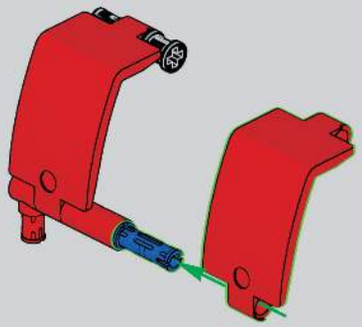

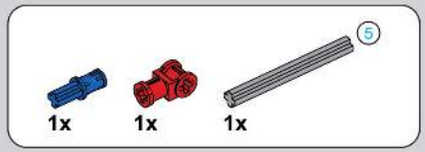

839

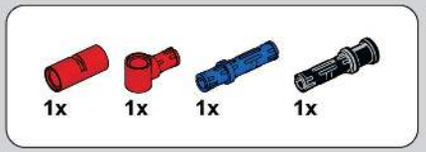

840

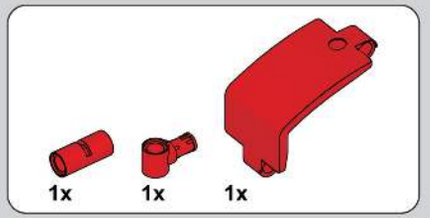

841

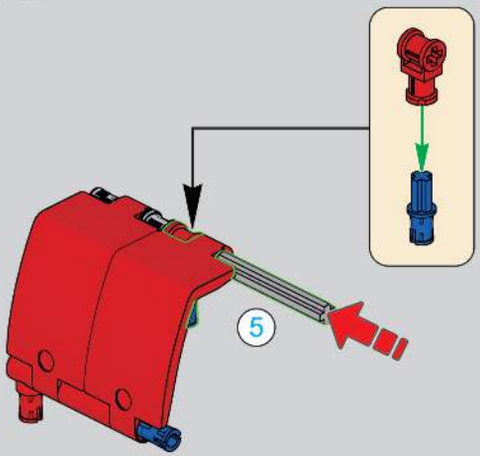

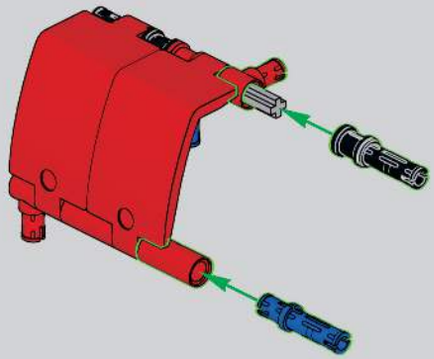

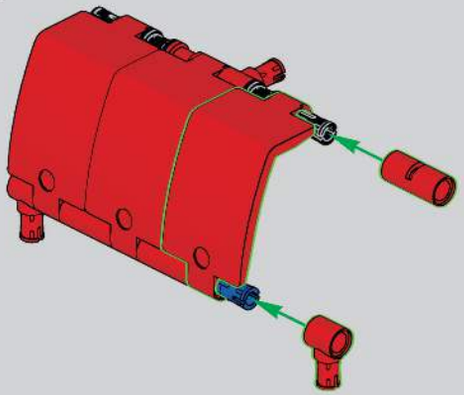

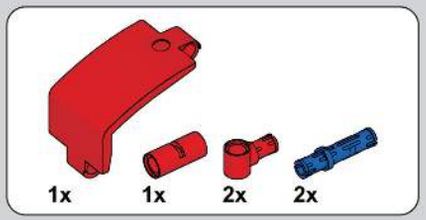

842

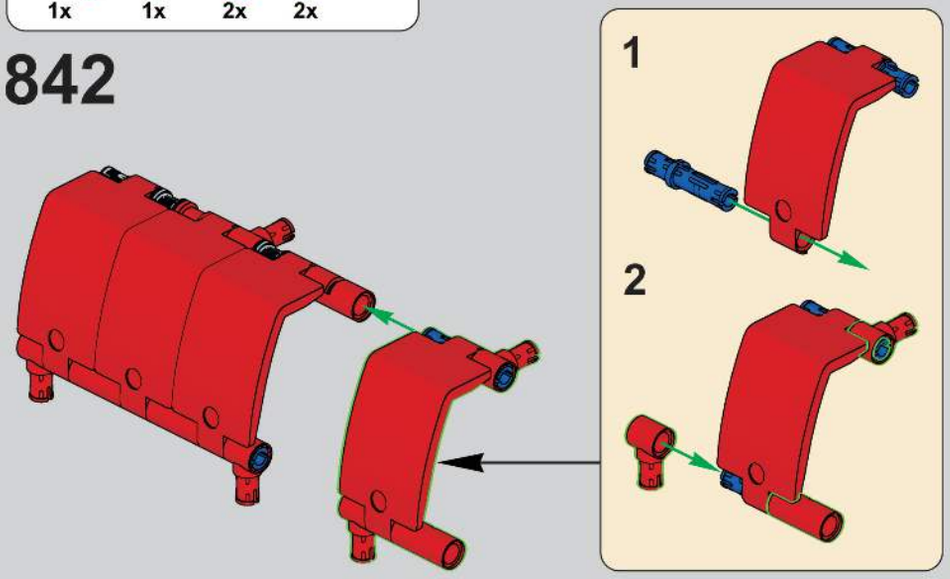

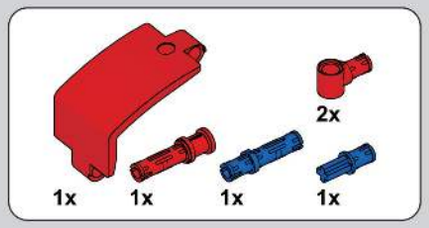

843

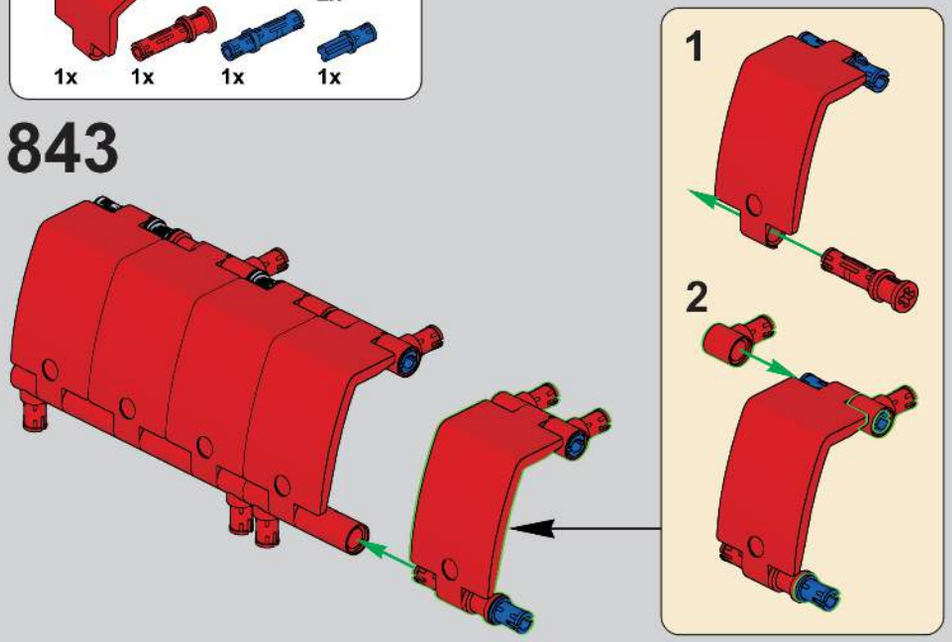

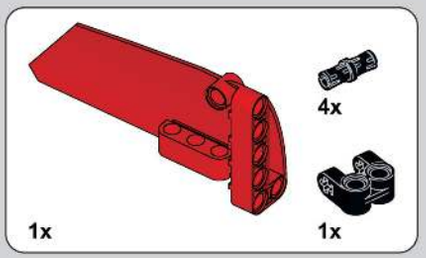

844

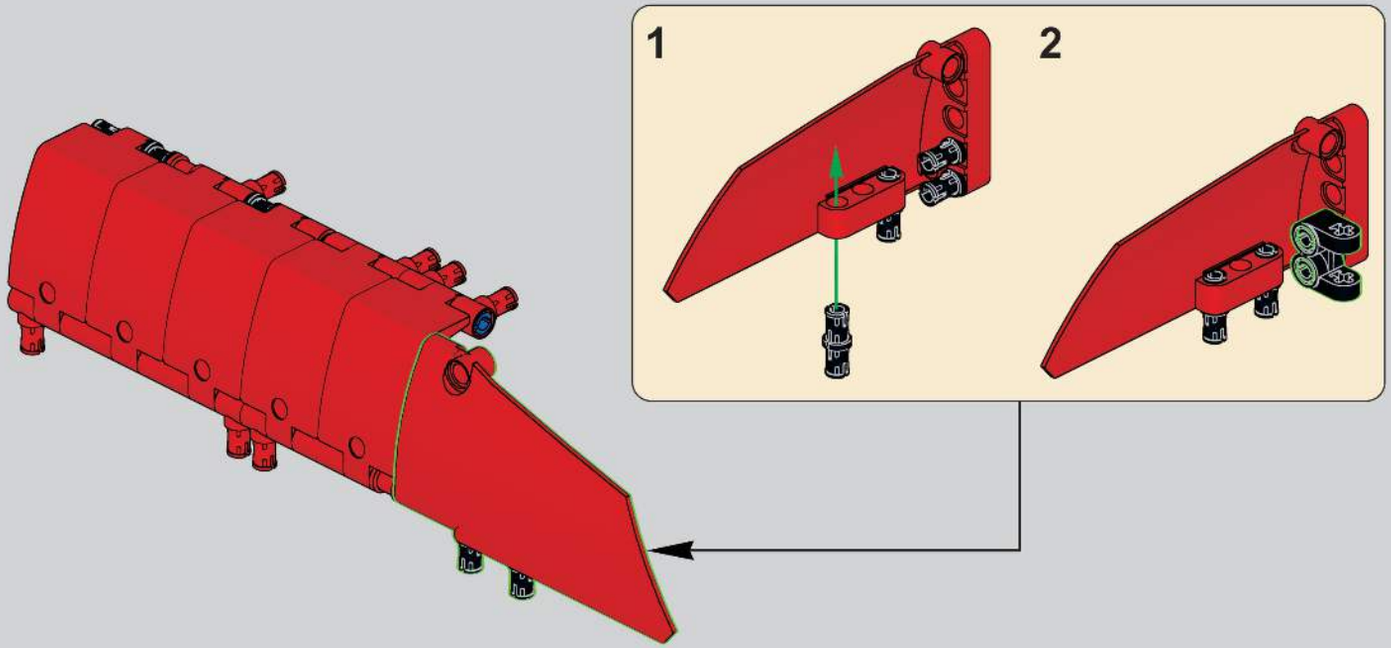

845

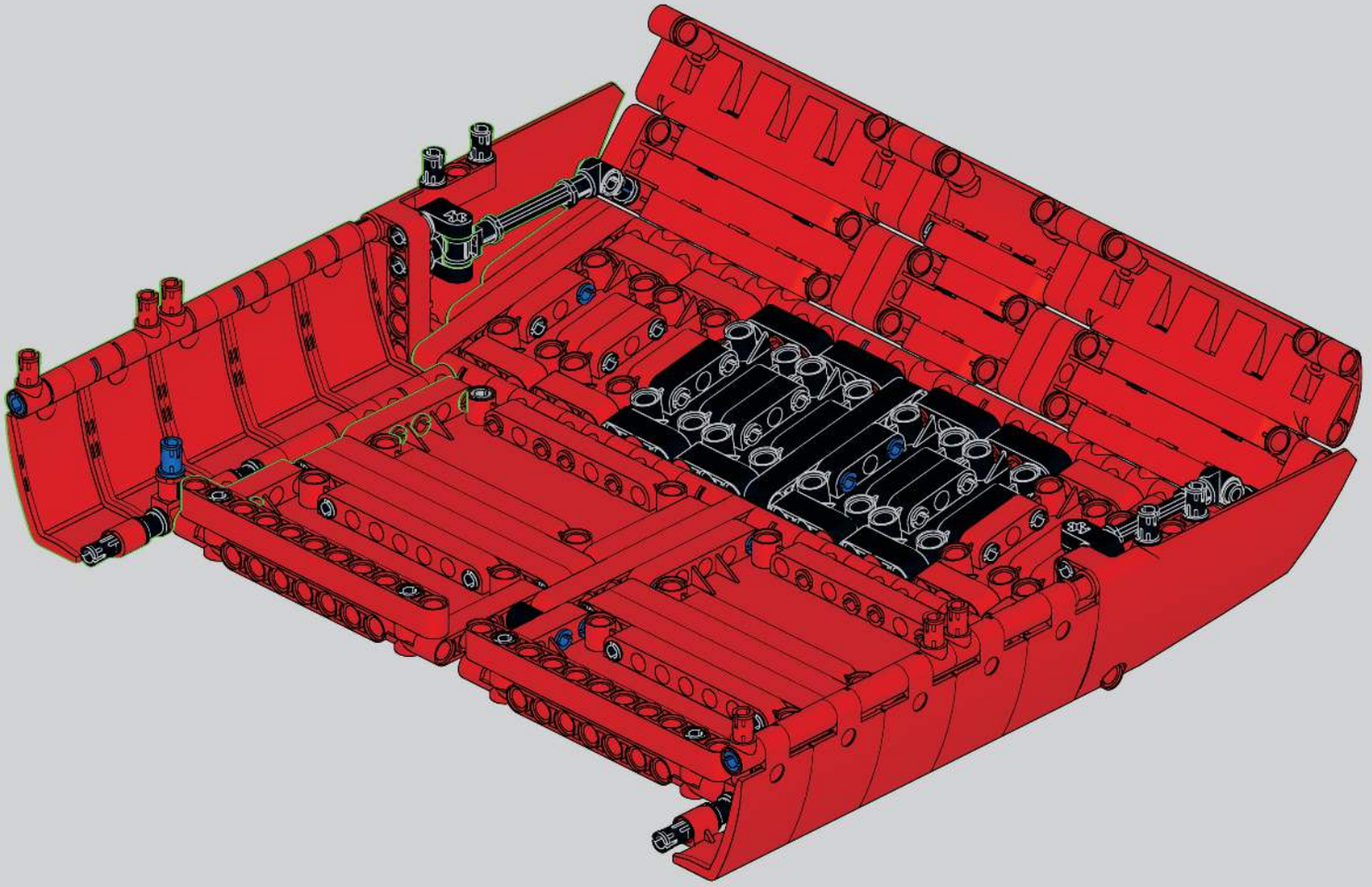

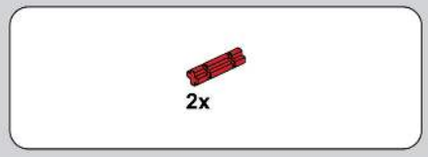

846

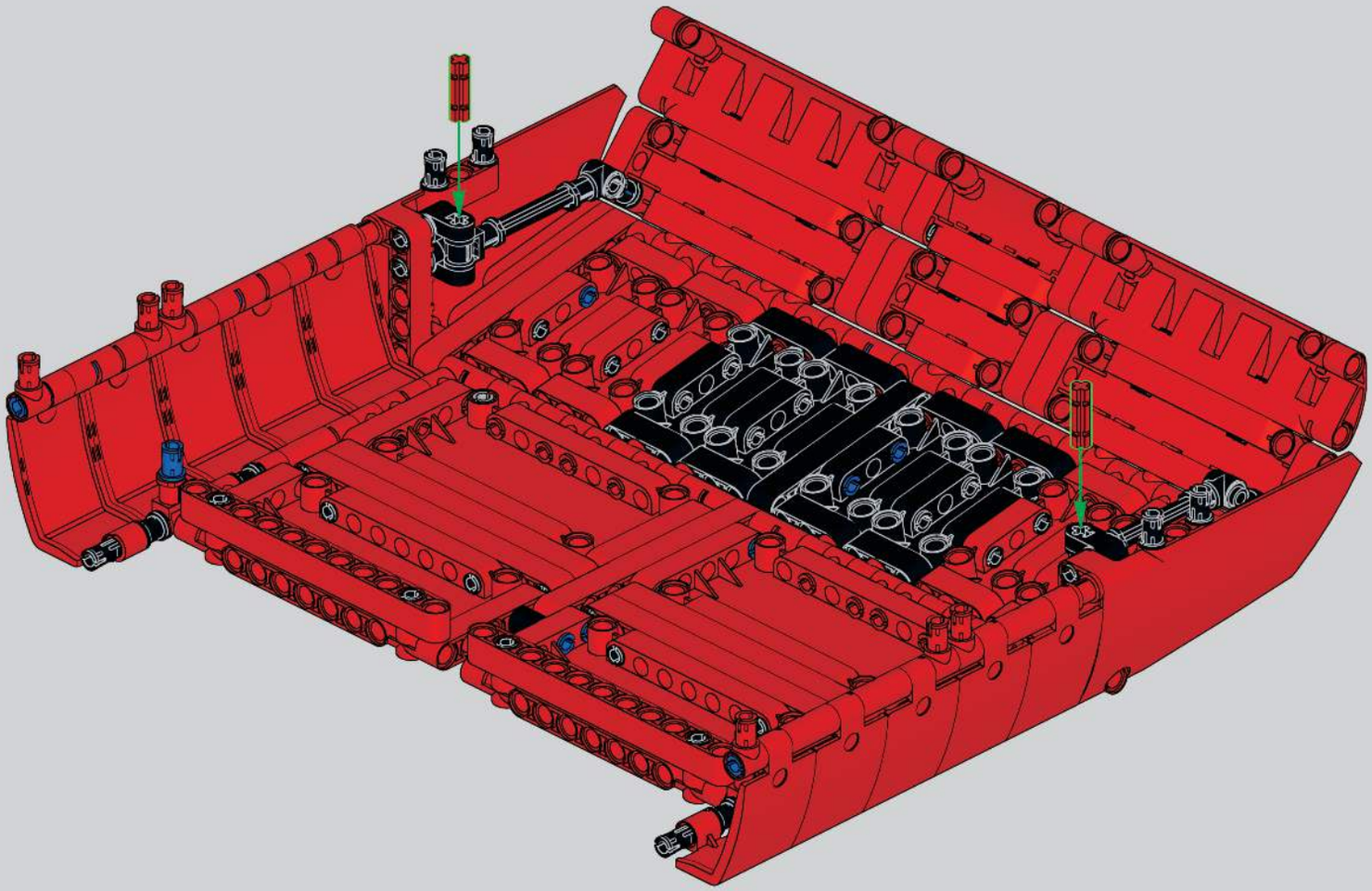

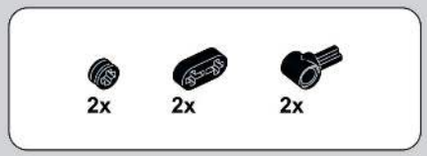

847

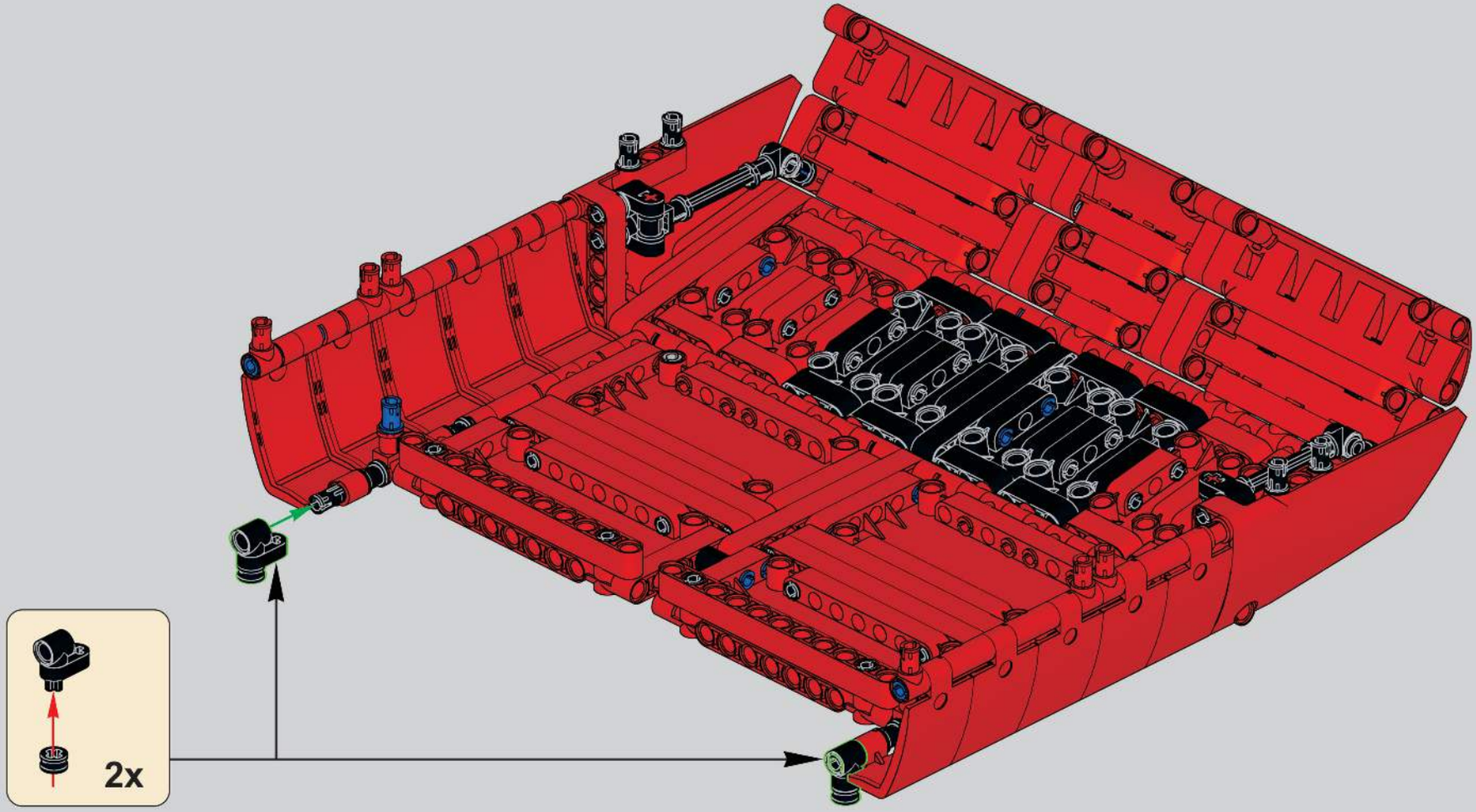

848

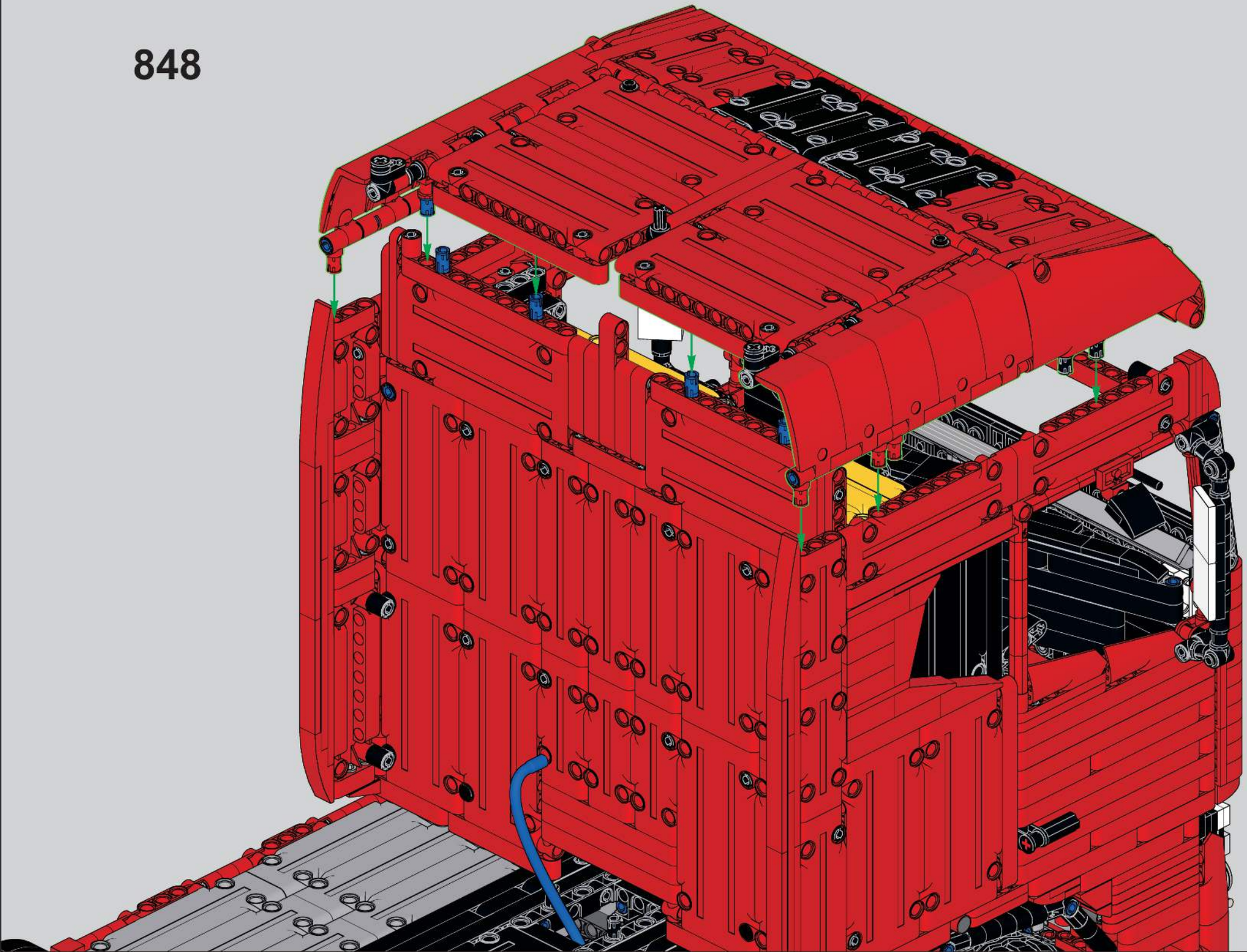

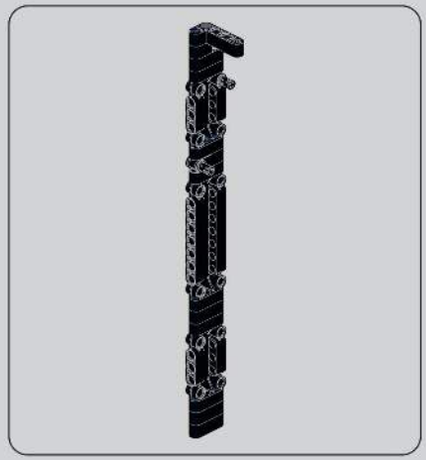

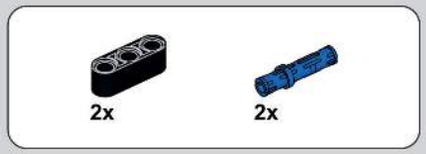

849

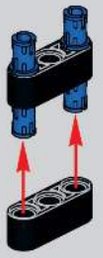

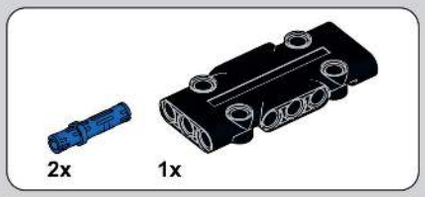

850

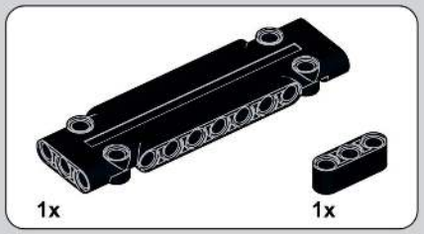

851

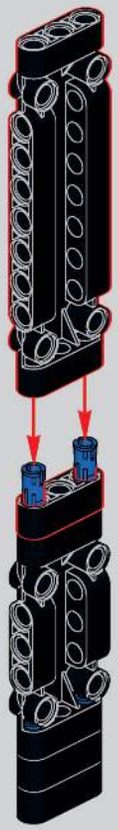

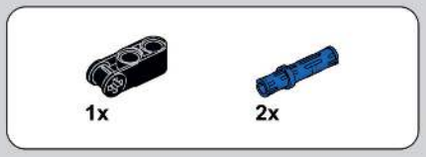

852

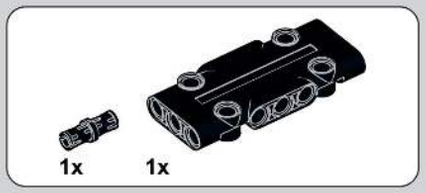

853

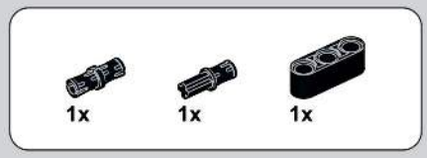

854

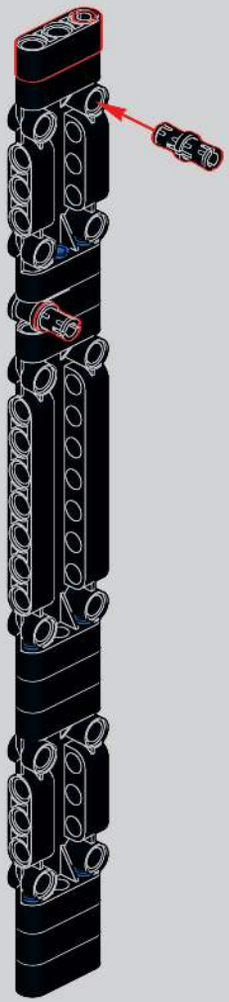

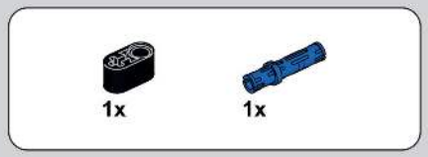

855

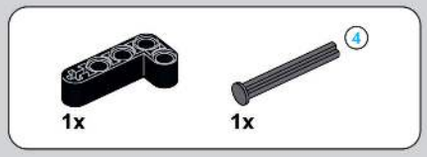

856

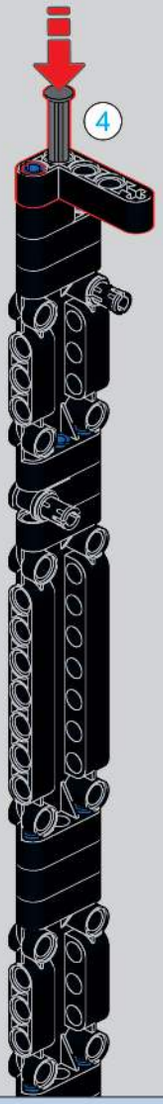

857

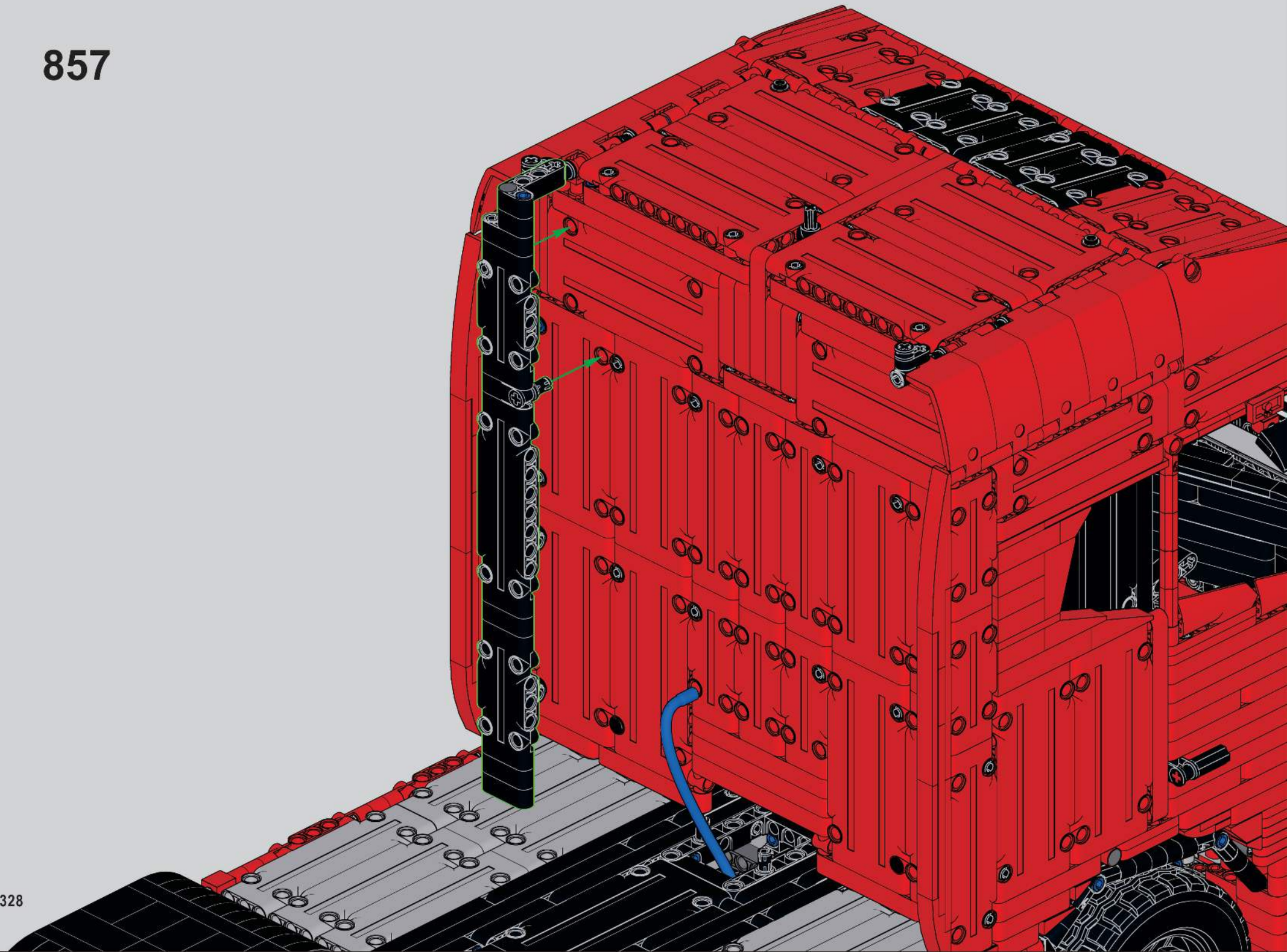

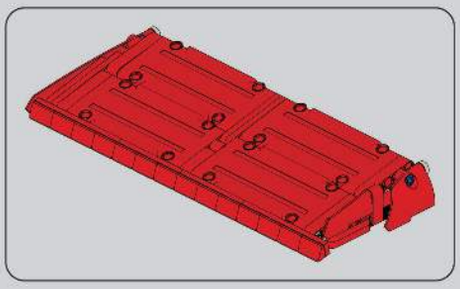

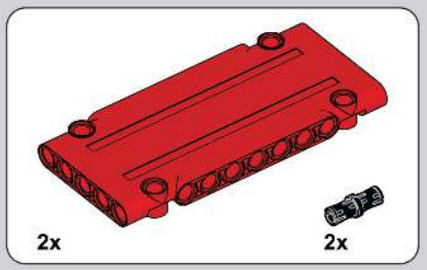

858

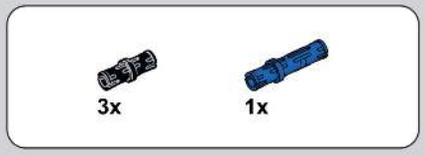

859

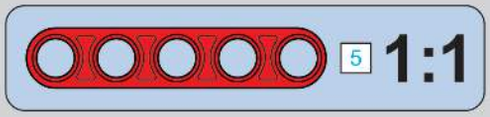

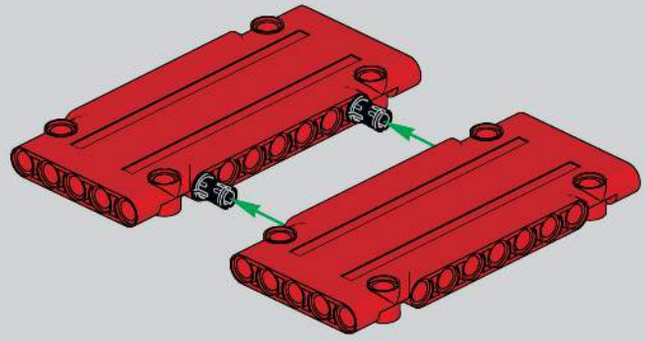

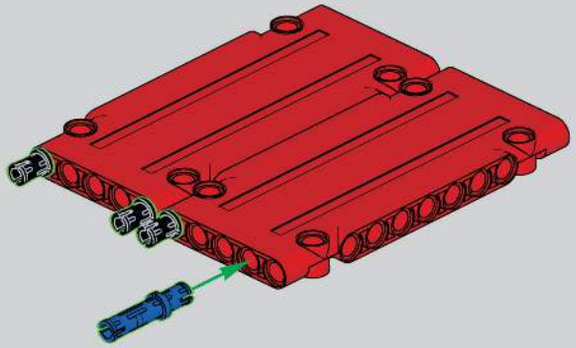

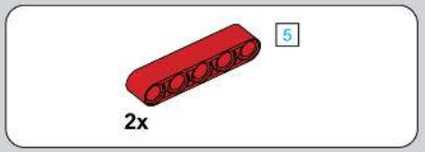

860

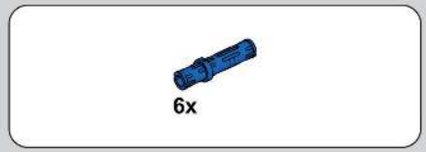

861

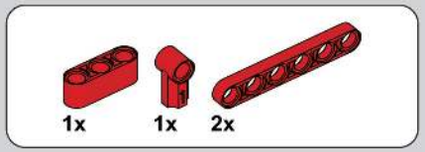

862

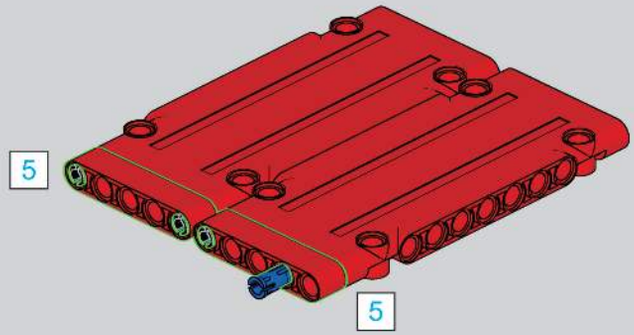

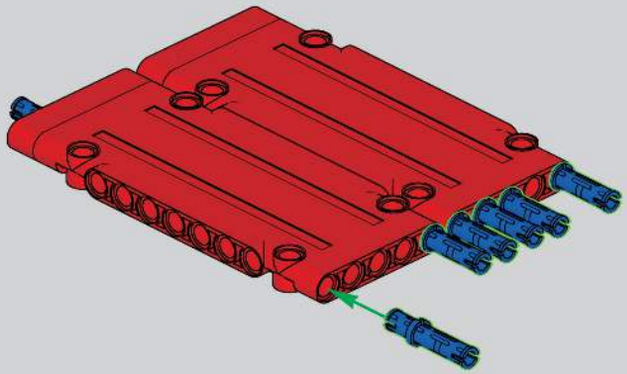

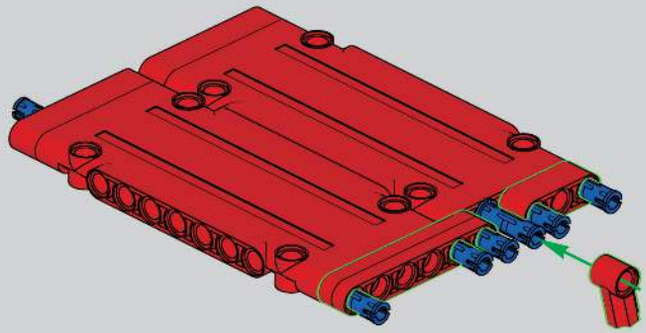

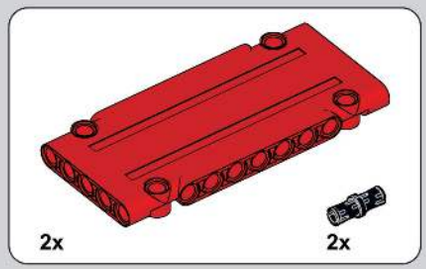

863

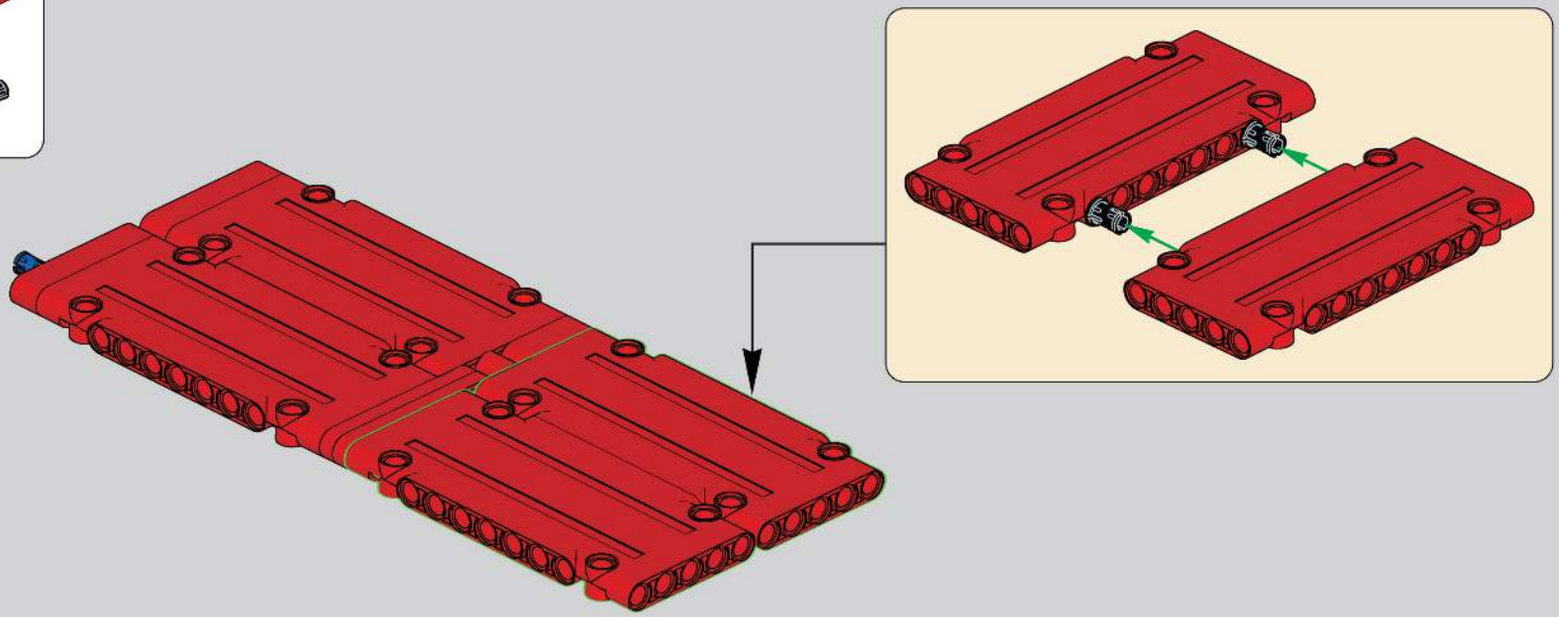

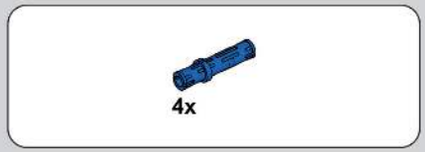

864

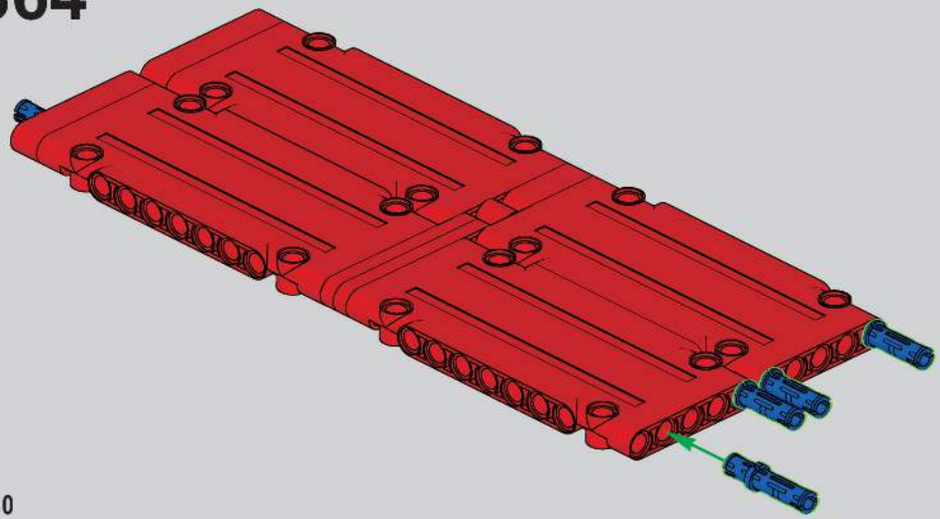

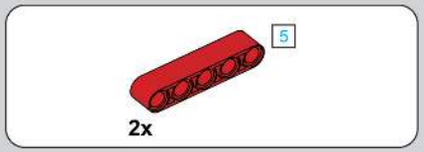

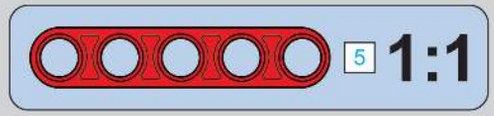

865

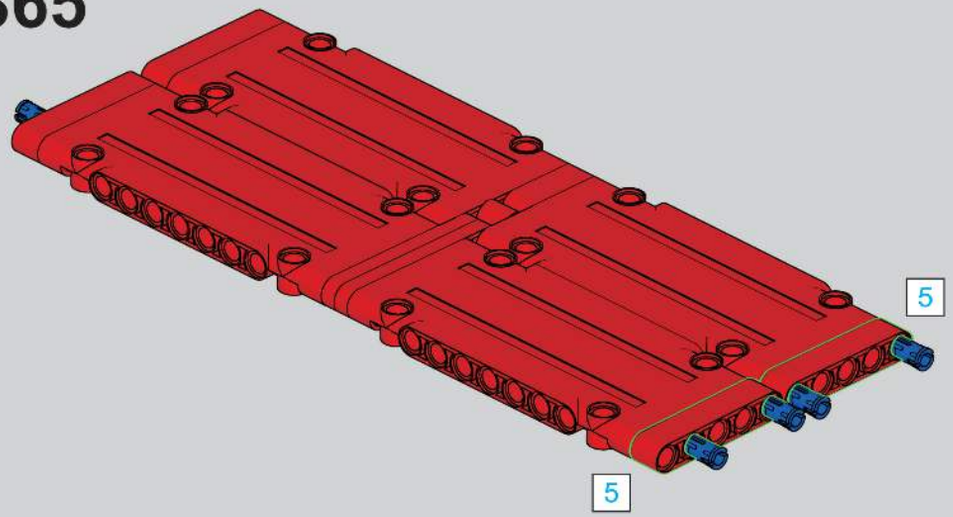

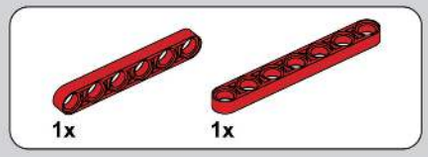

866

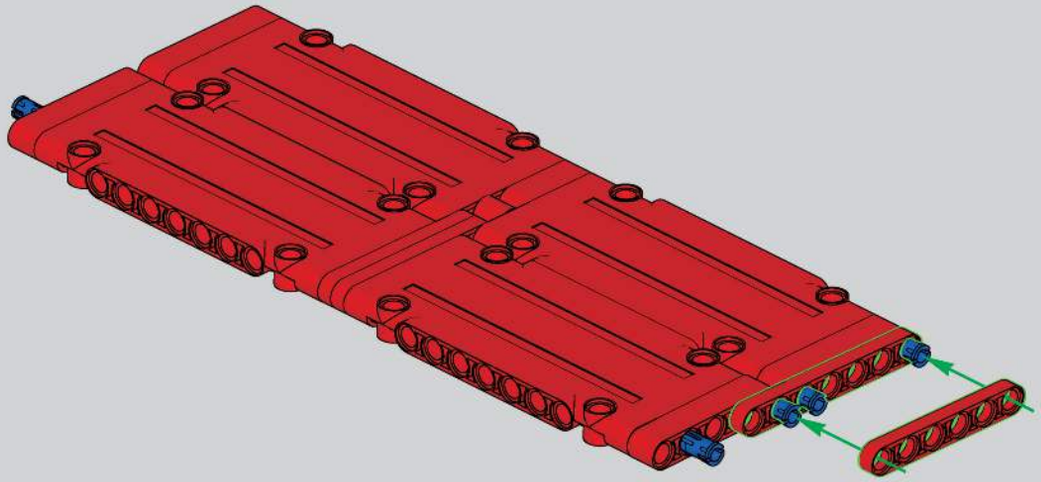

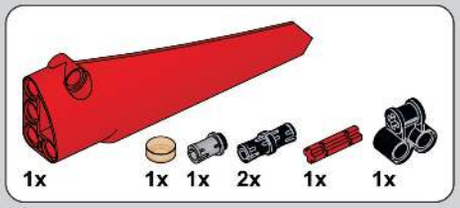

867

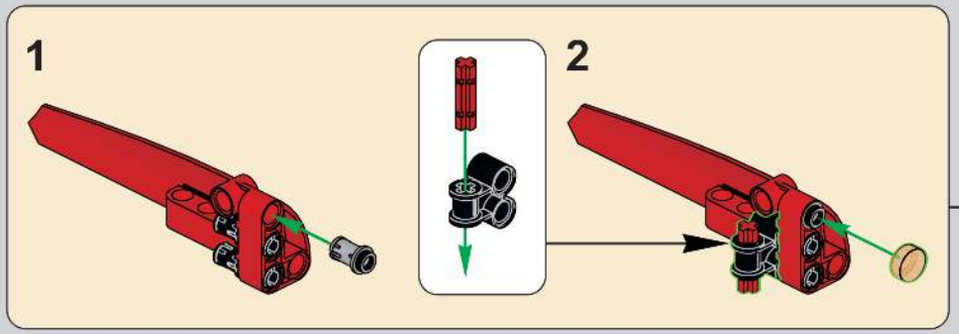

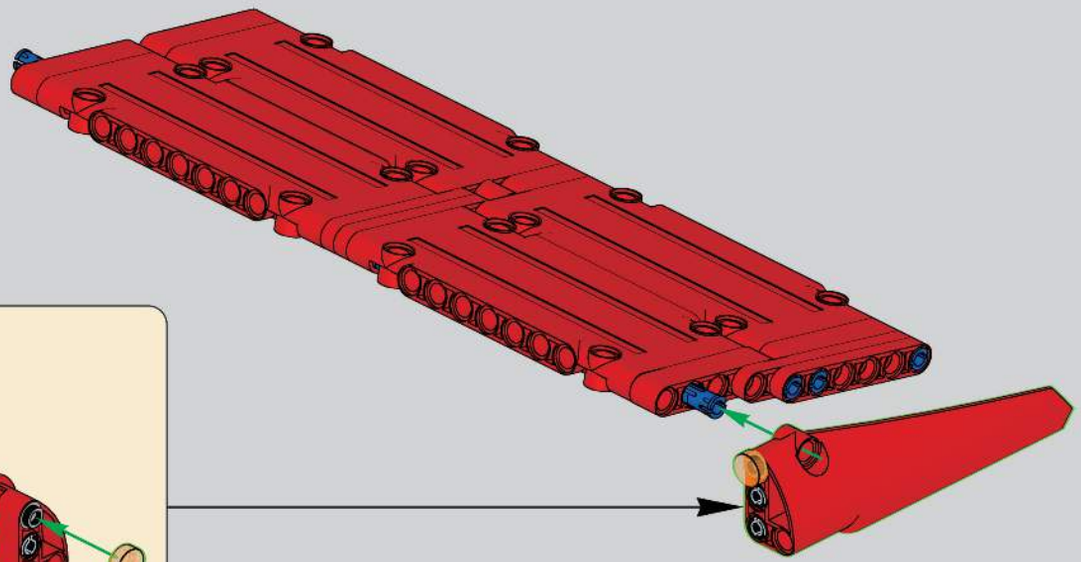

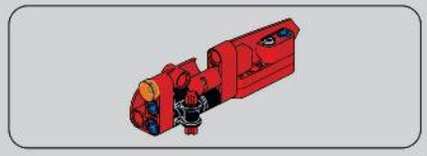

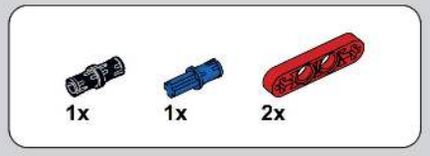

868

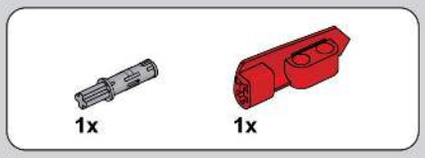

869

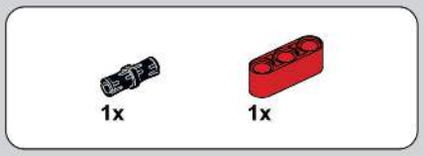

870

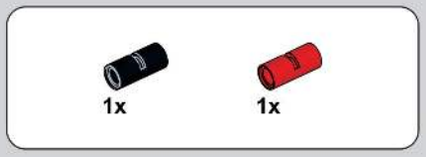

871

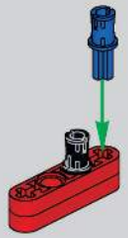

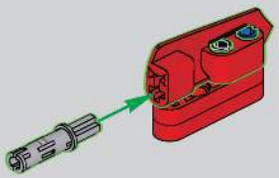

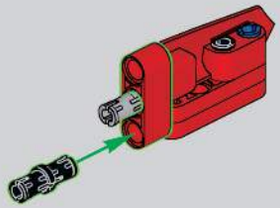

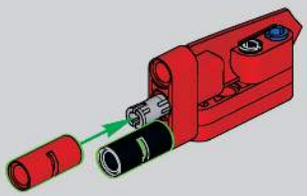

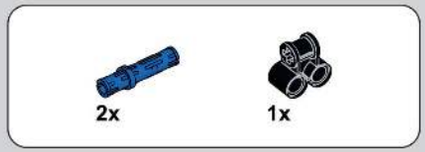

872

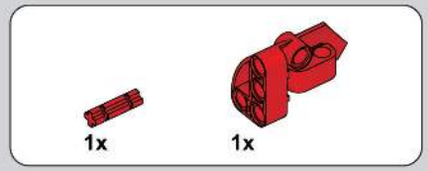

873

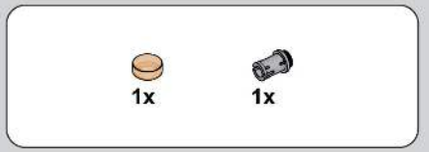

874

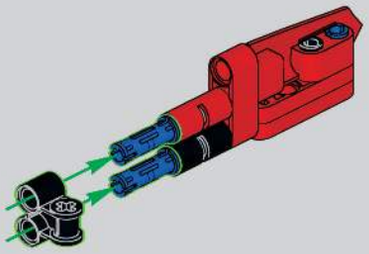

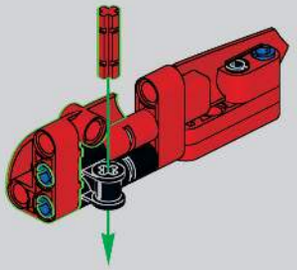

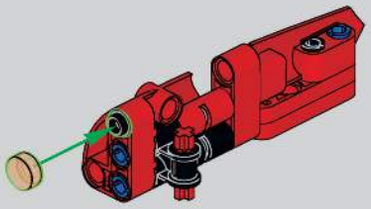

875

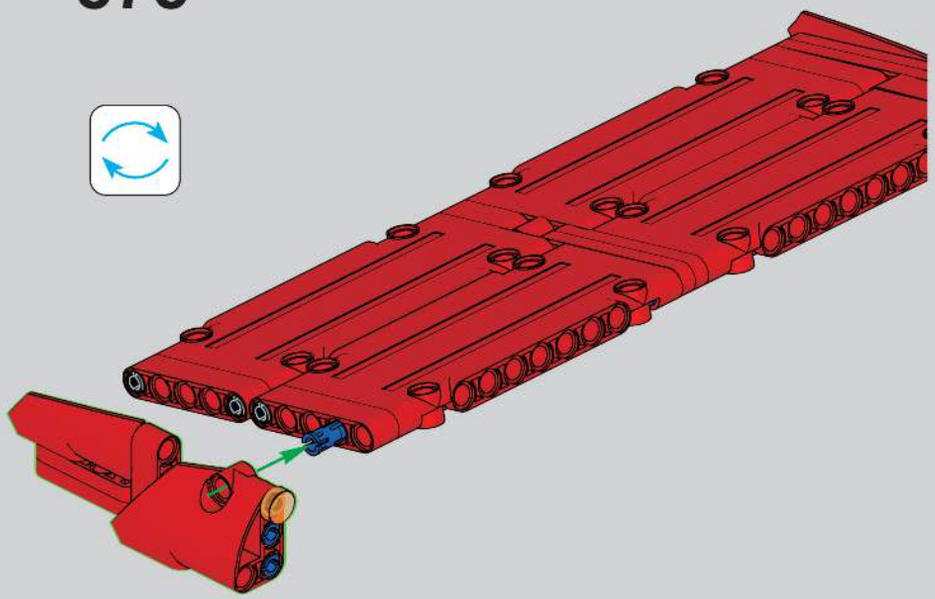

8x

876

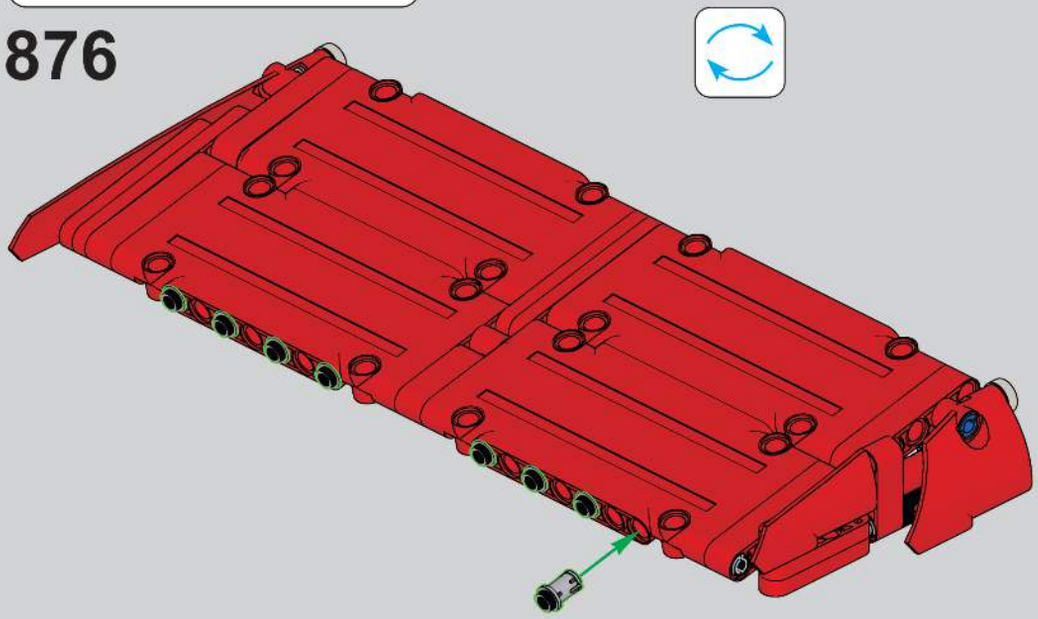

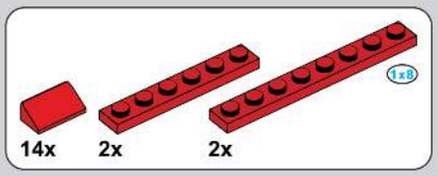

877

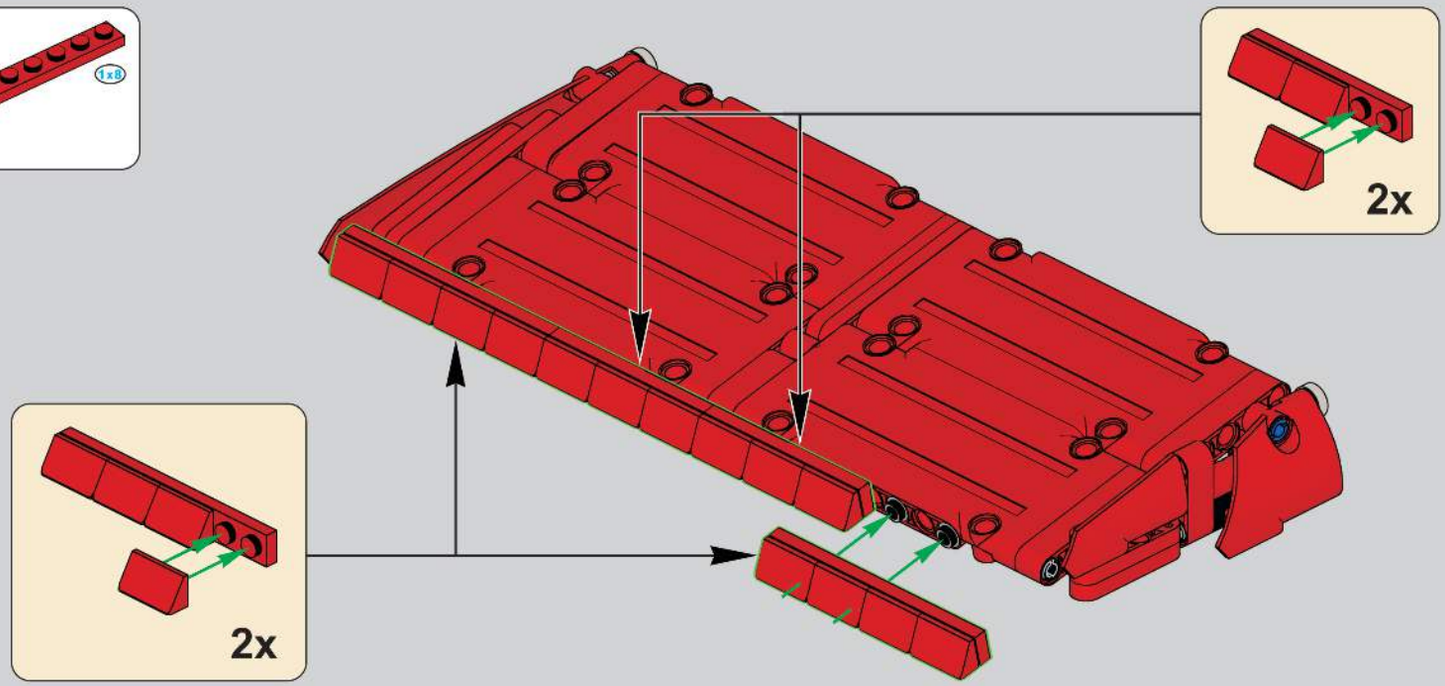

878

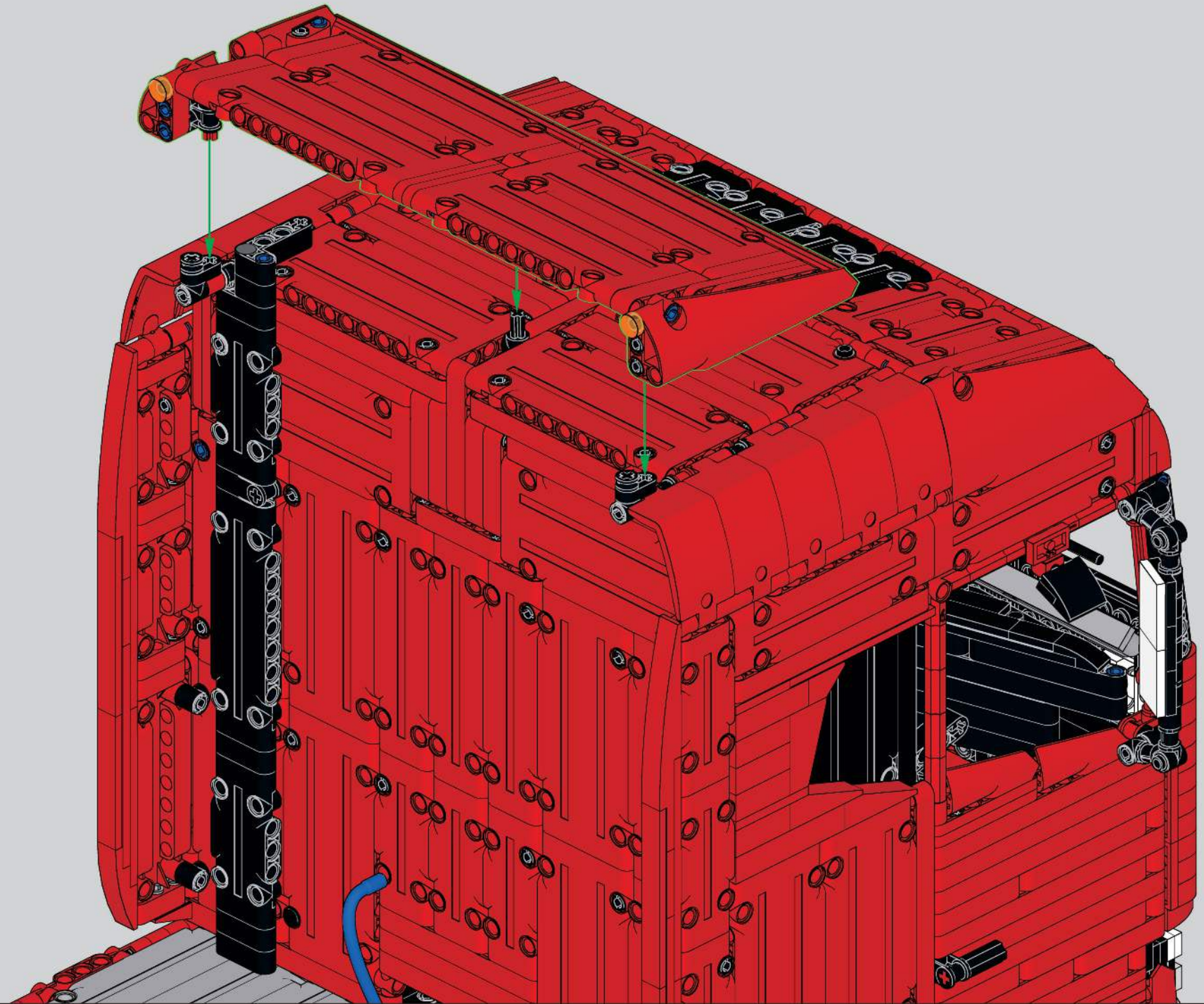

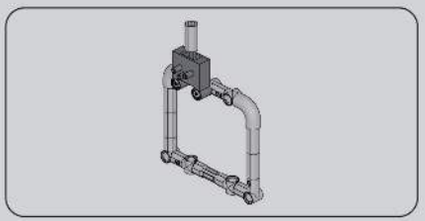

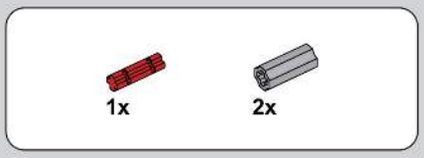

880

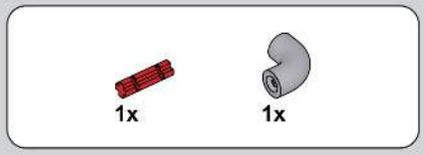

881

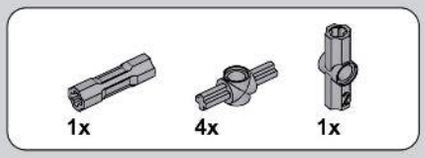

882

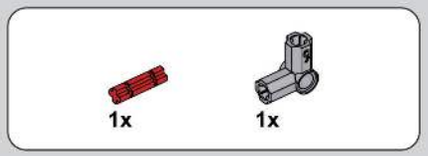

879

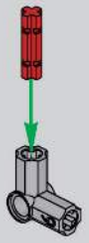

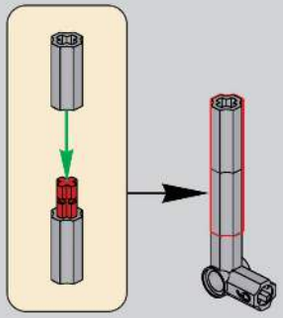

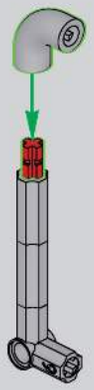

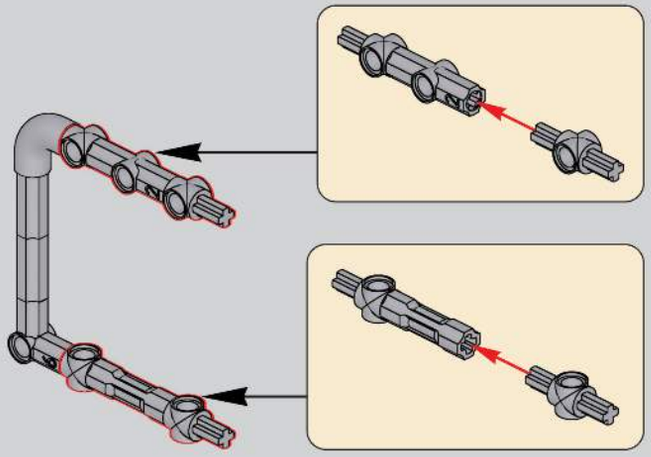

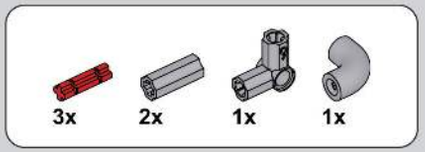

883

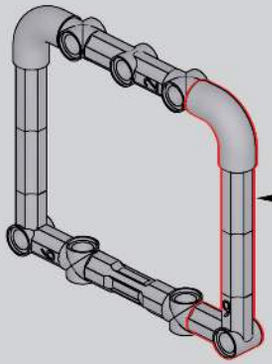

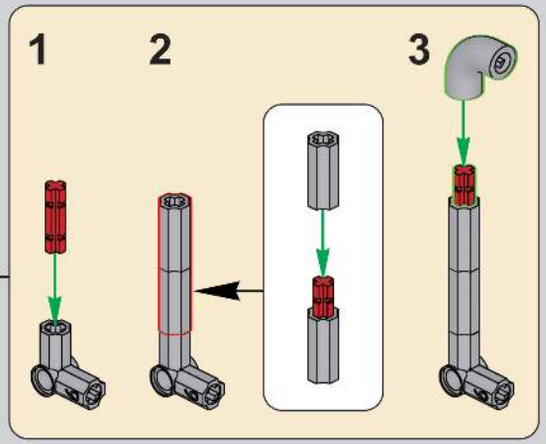

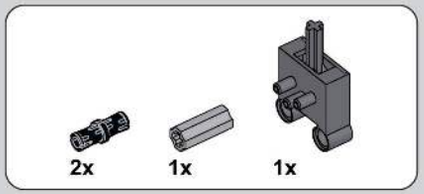

884

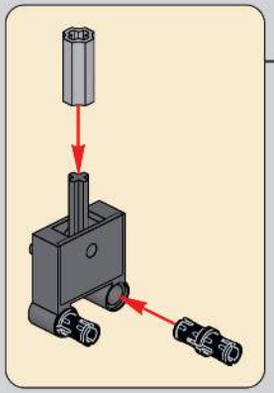

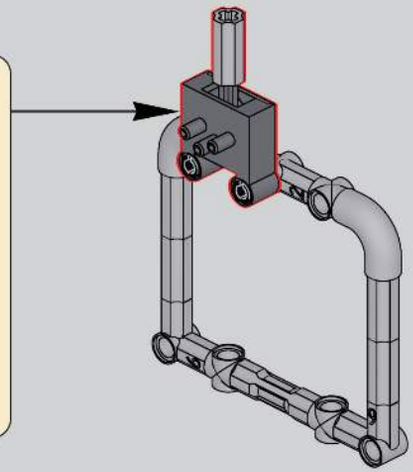

885

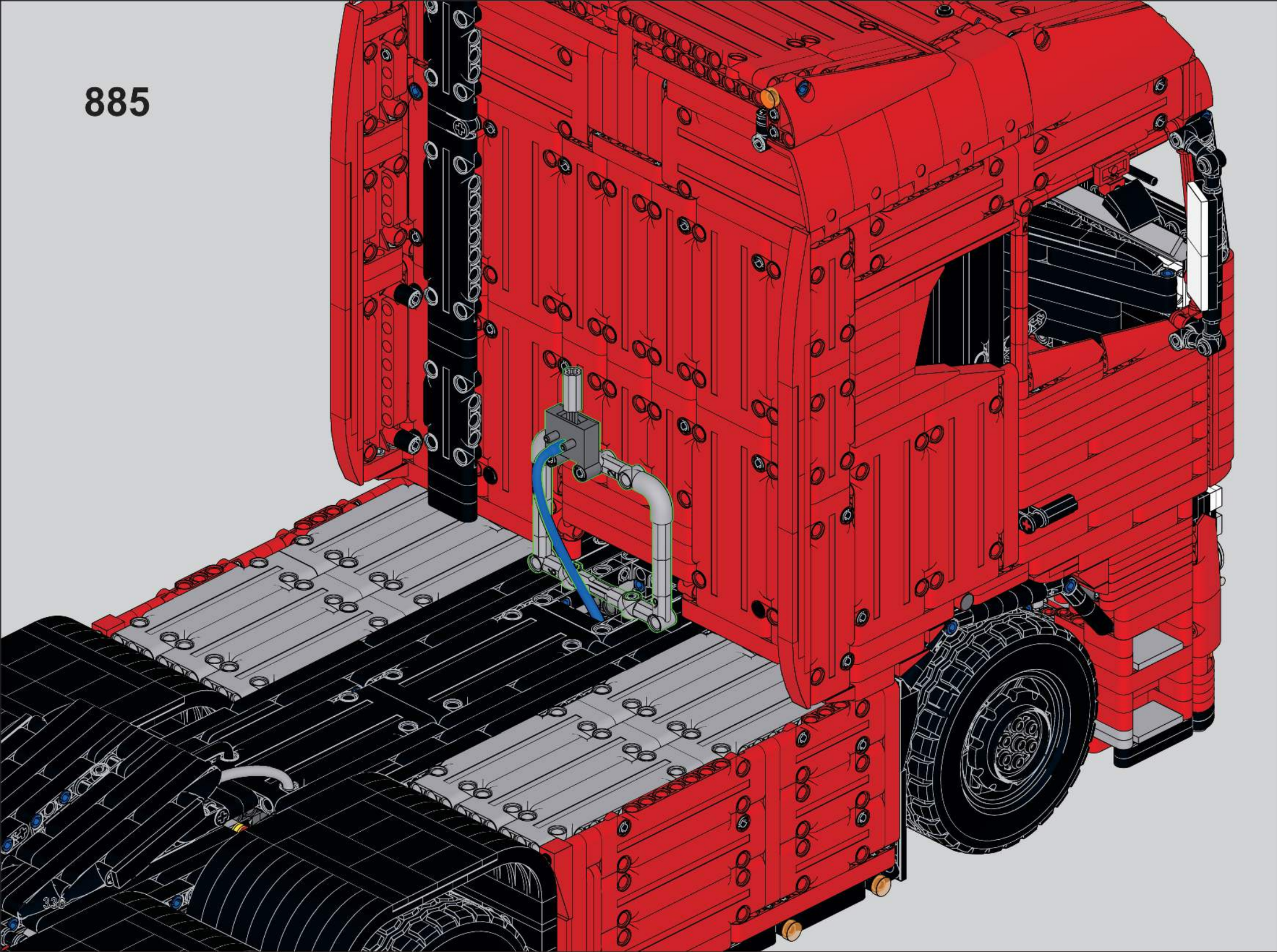

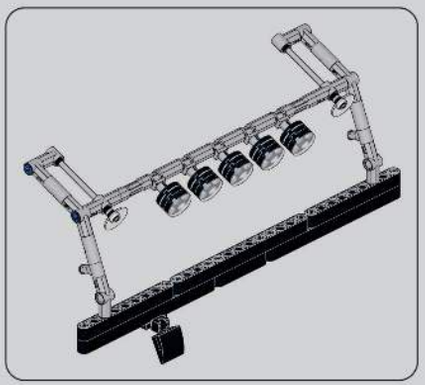

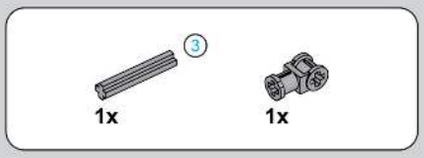

886

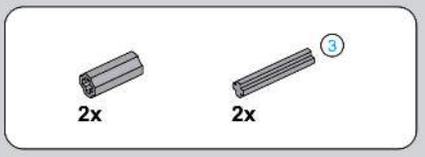

887

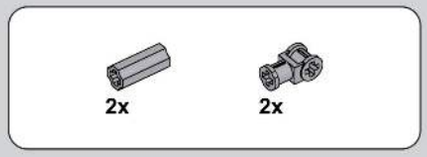

888

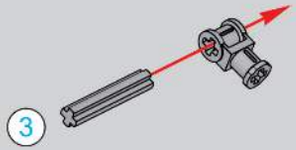

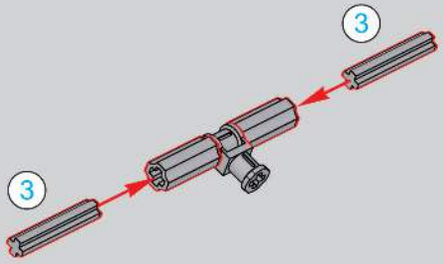

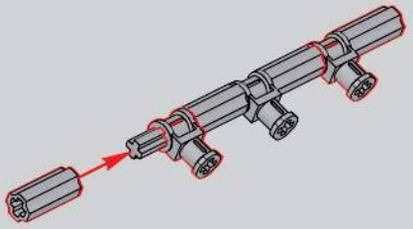

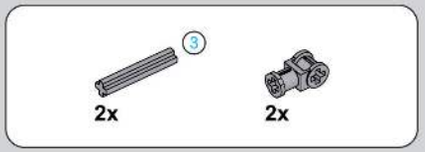

889

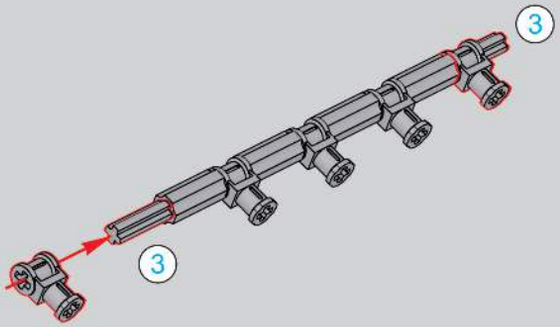

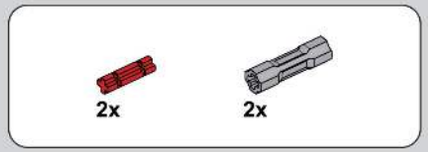

890

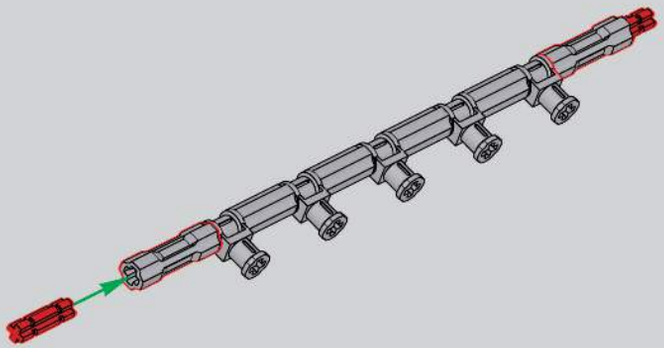

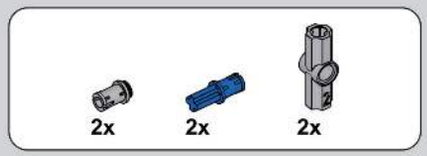

891

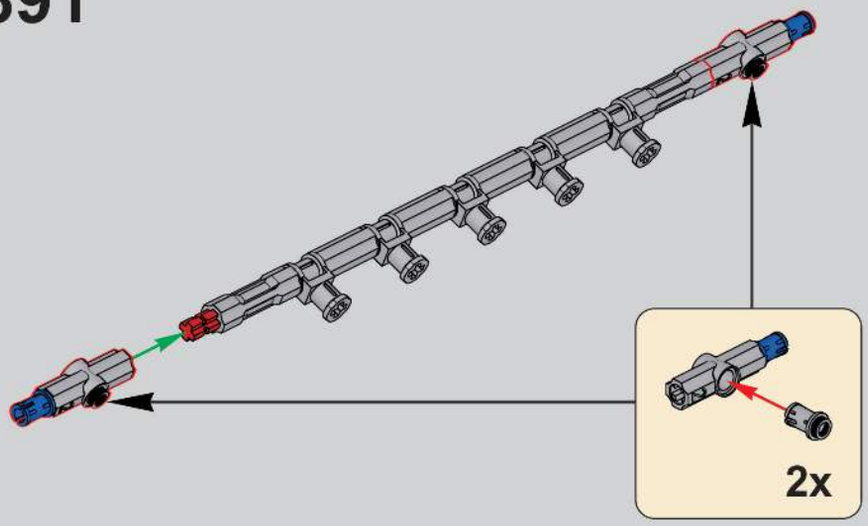

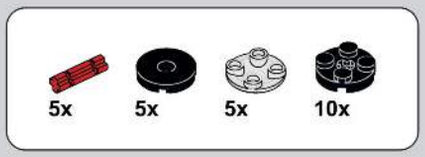

892

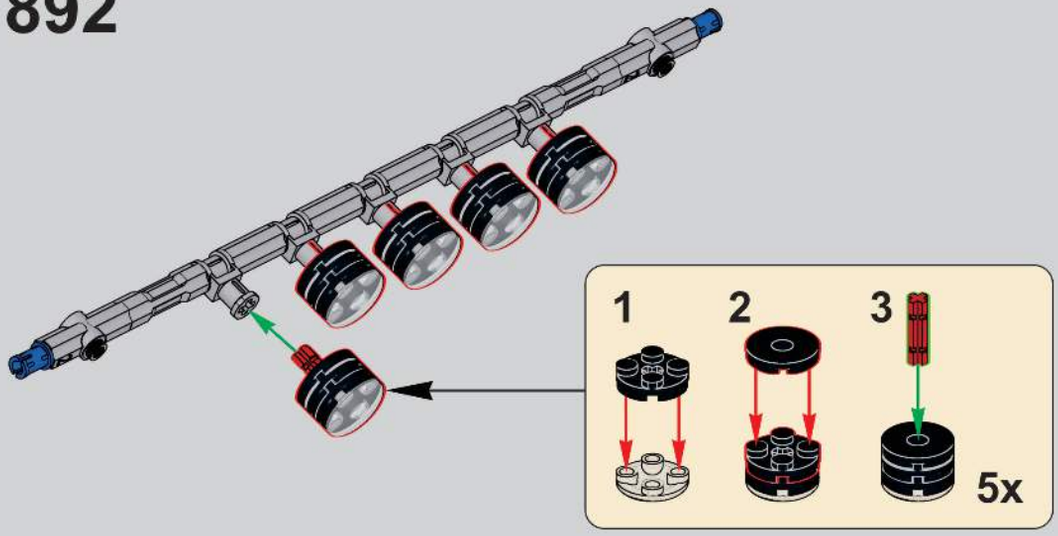

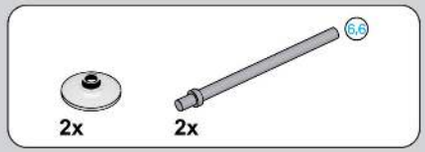

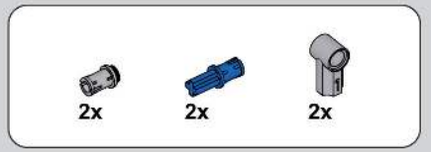

893

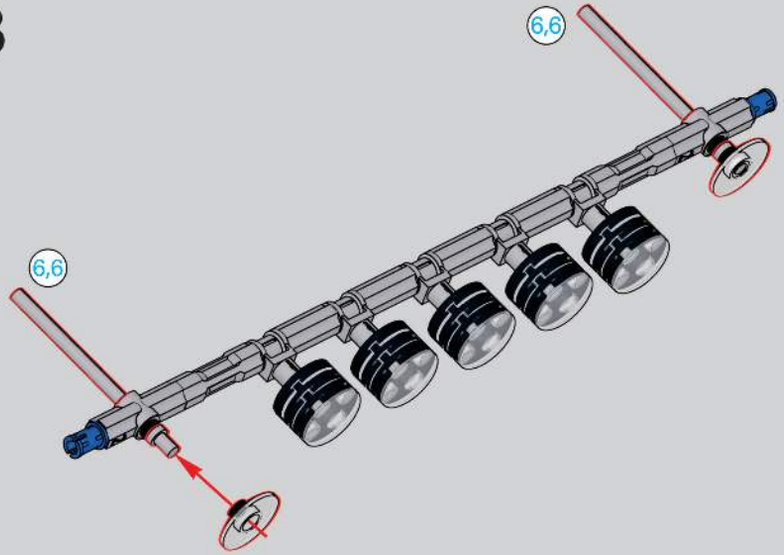

894

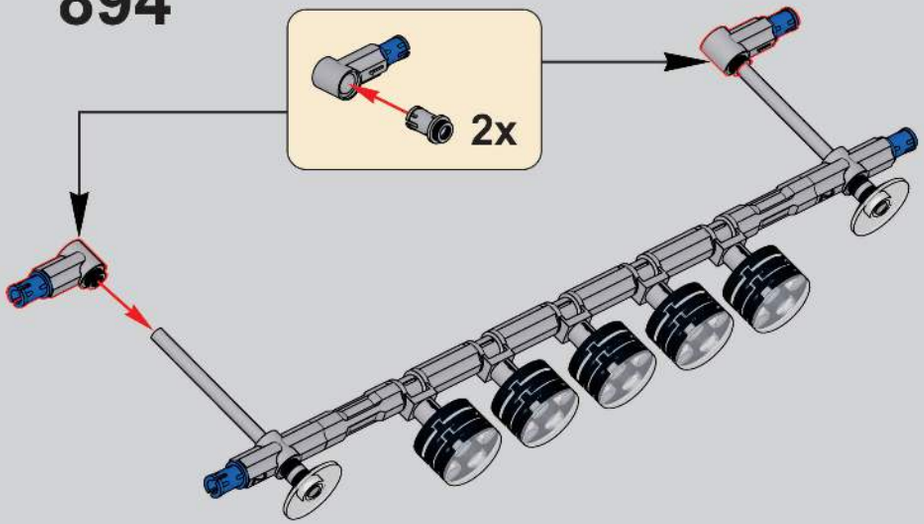

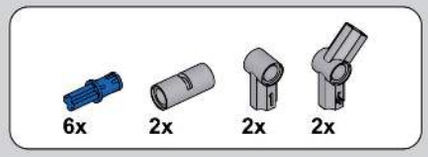

895

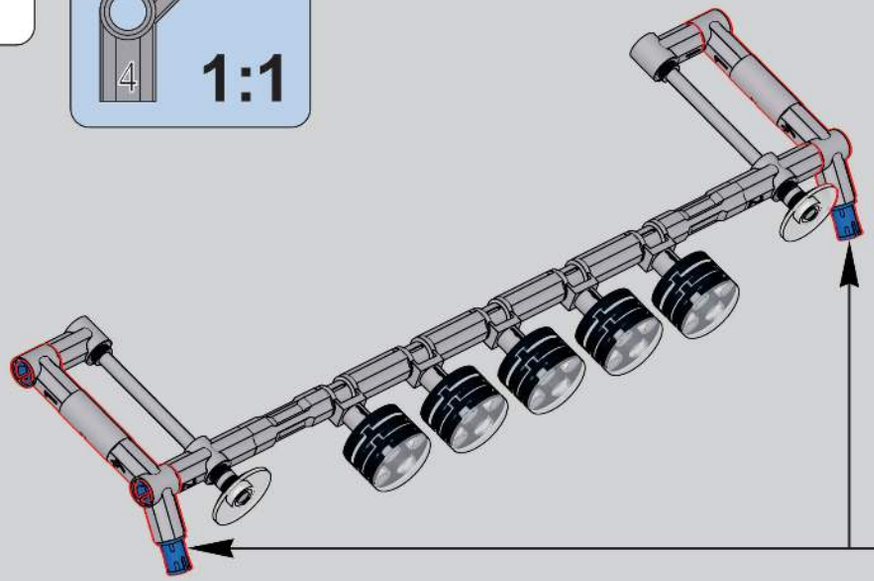

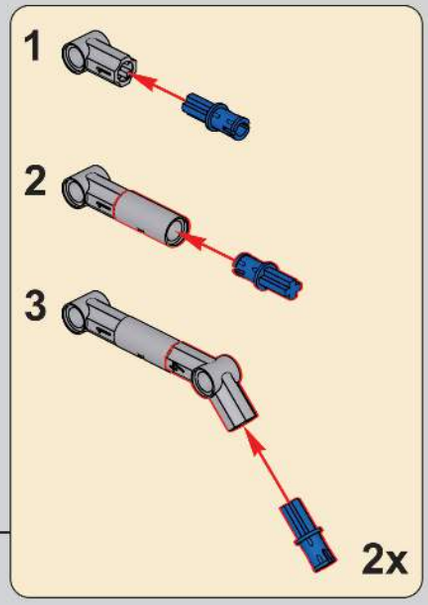

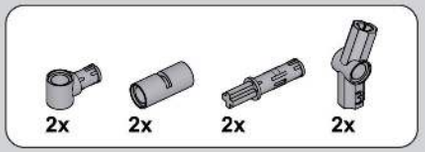

896

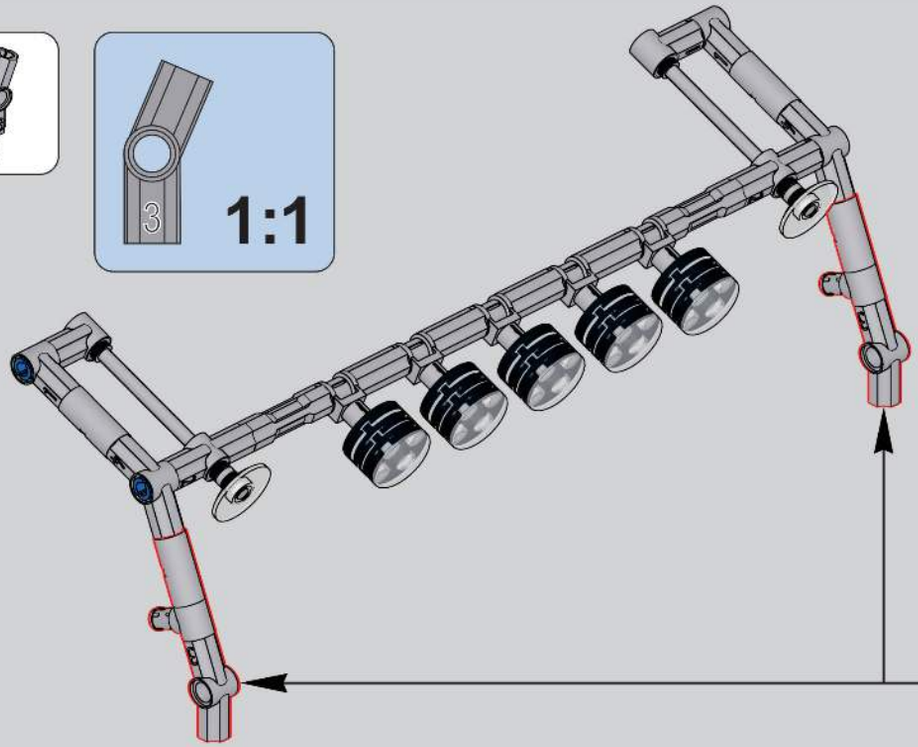

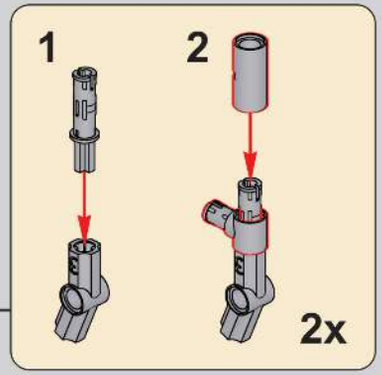

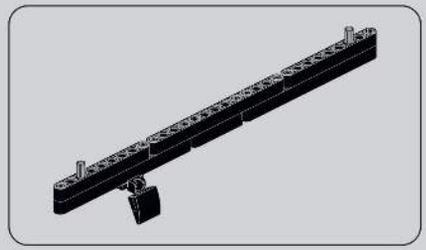

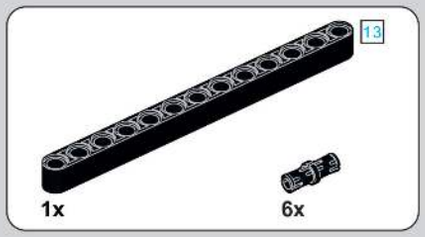

897

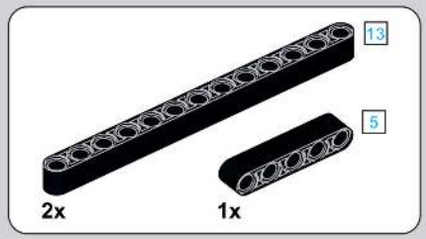

898

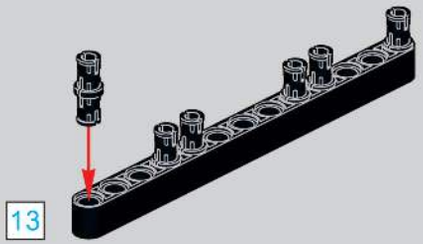

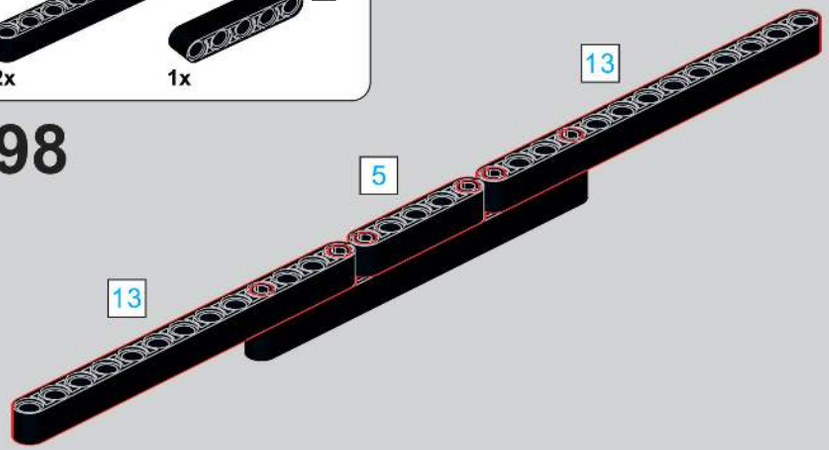

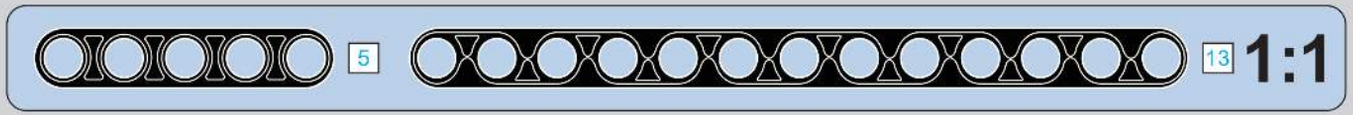

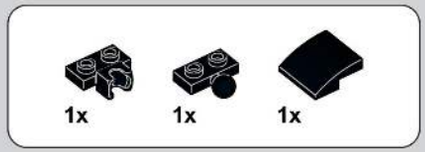

899

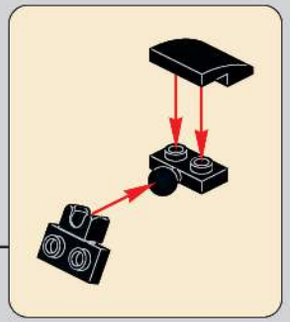

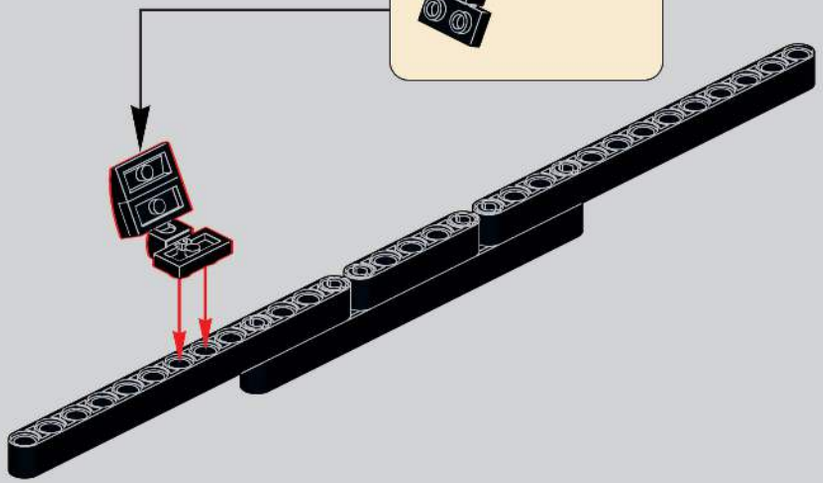

900

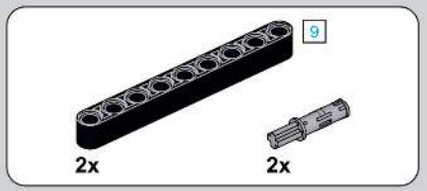

901

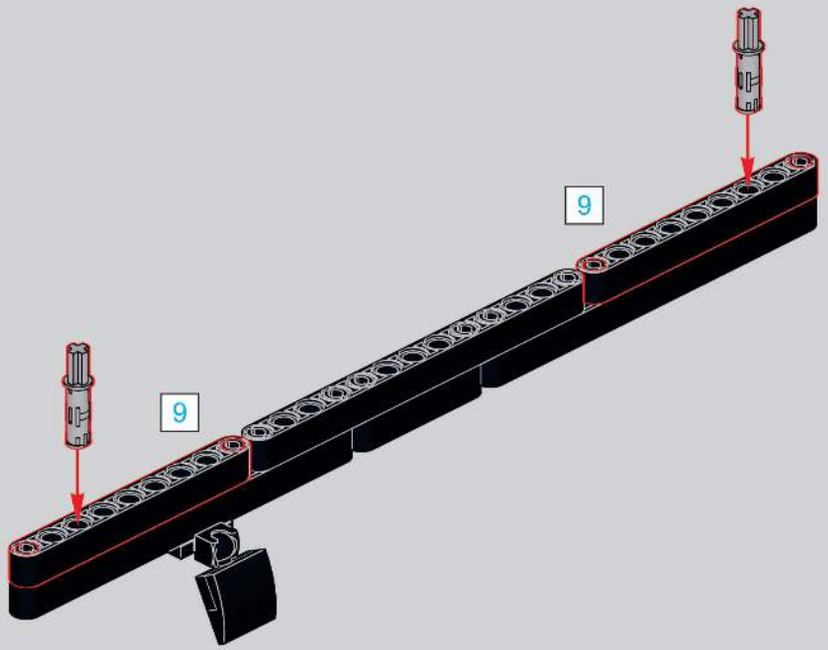

902

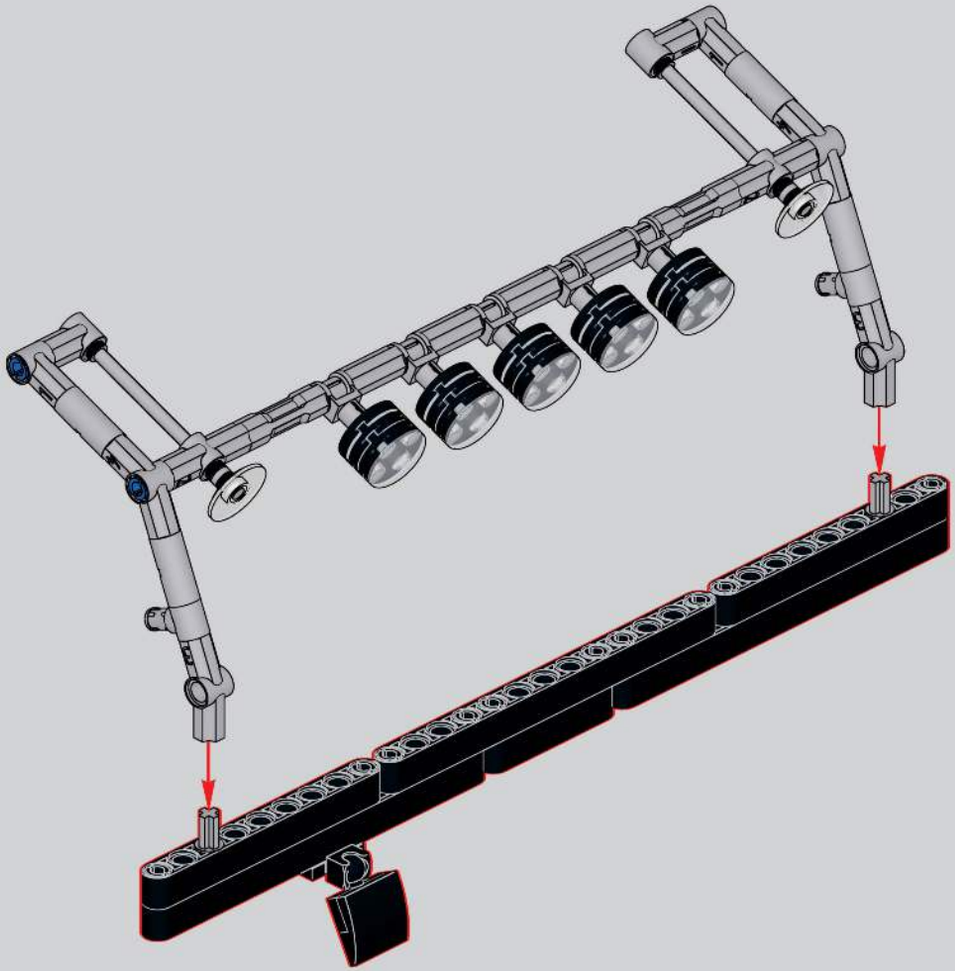

903

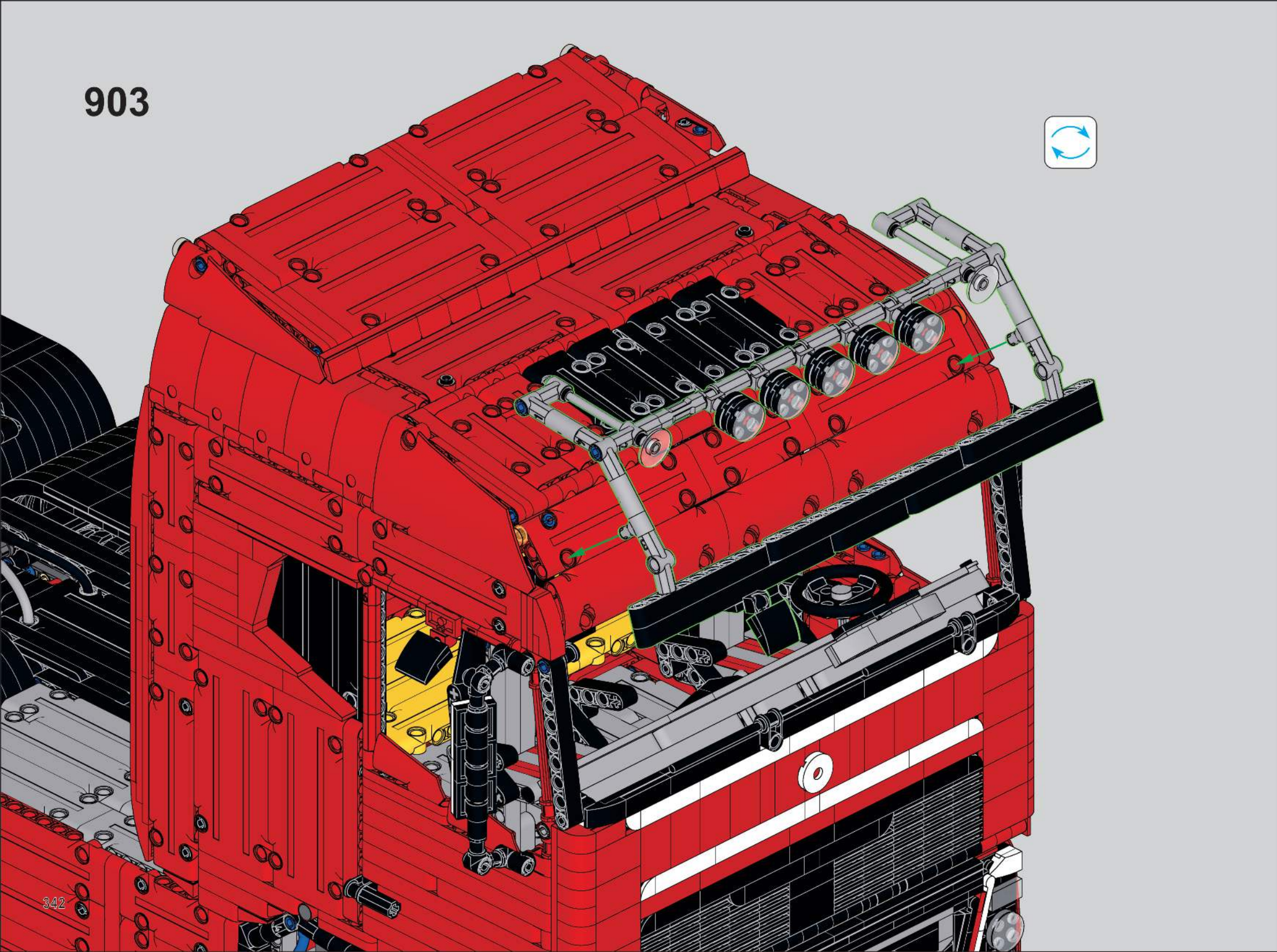

904

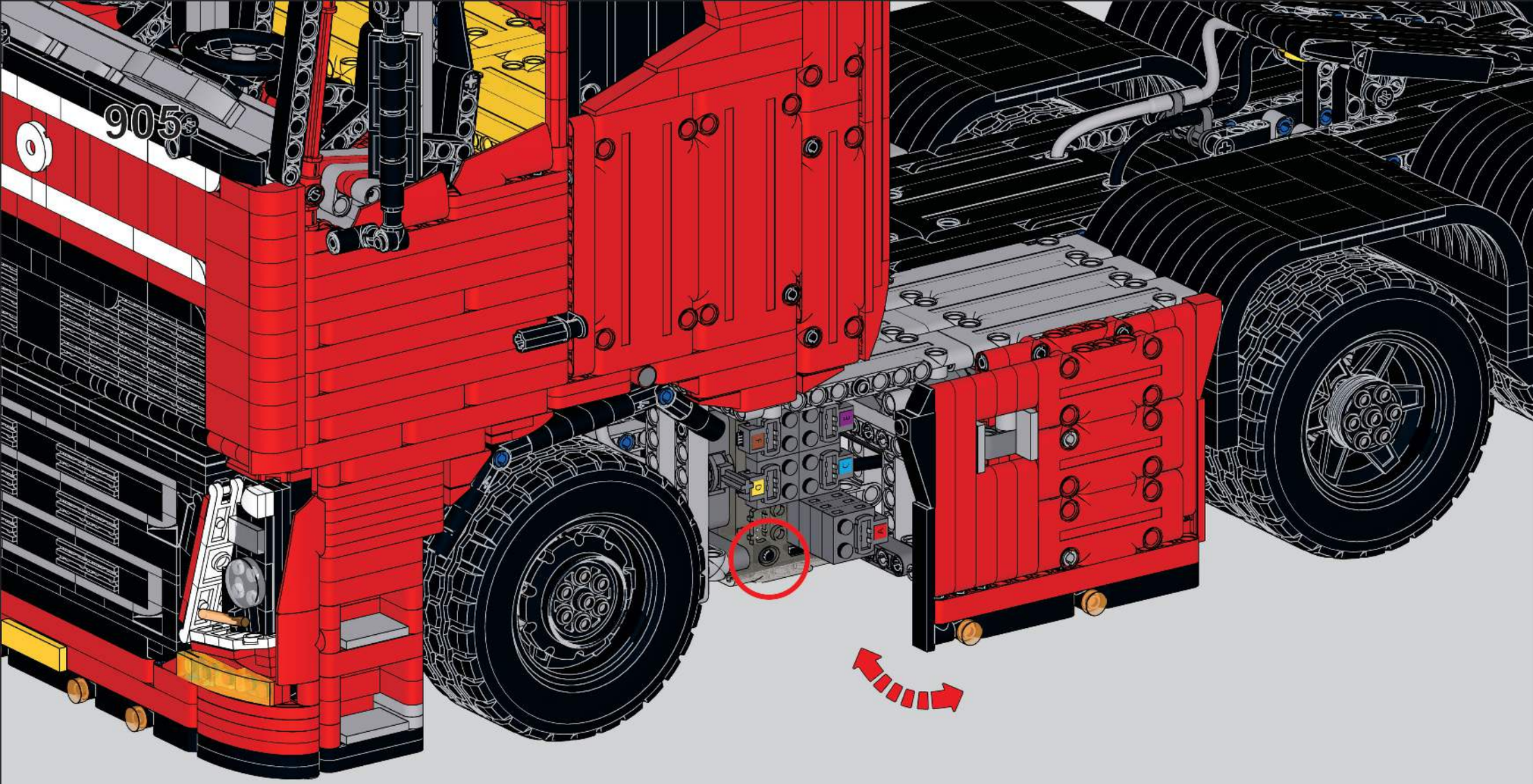

在此处打开模块，并打开遥控器连接

Open the module here and connect the remote control.

请扫描此二维码，获取并仔细查看6.0模块的操作说明书。

Please scan this QR code to obtain and carefully review the operation manual for the 6.0 module.

906

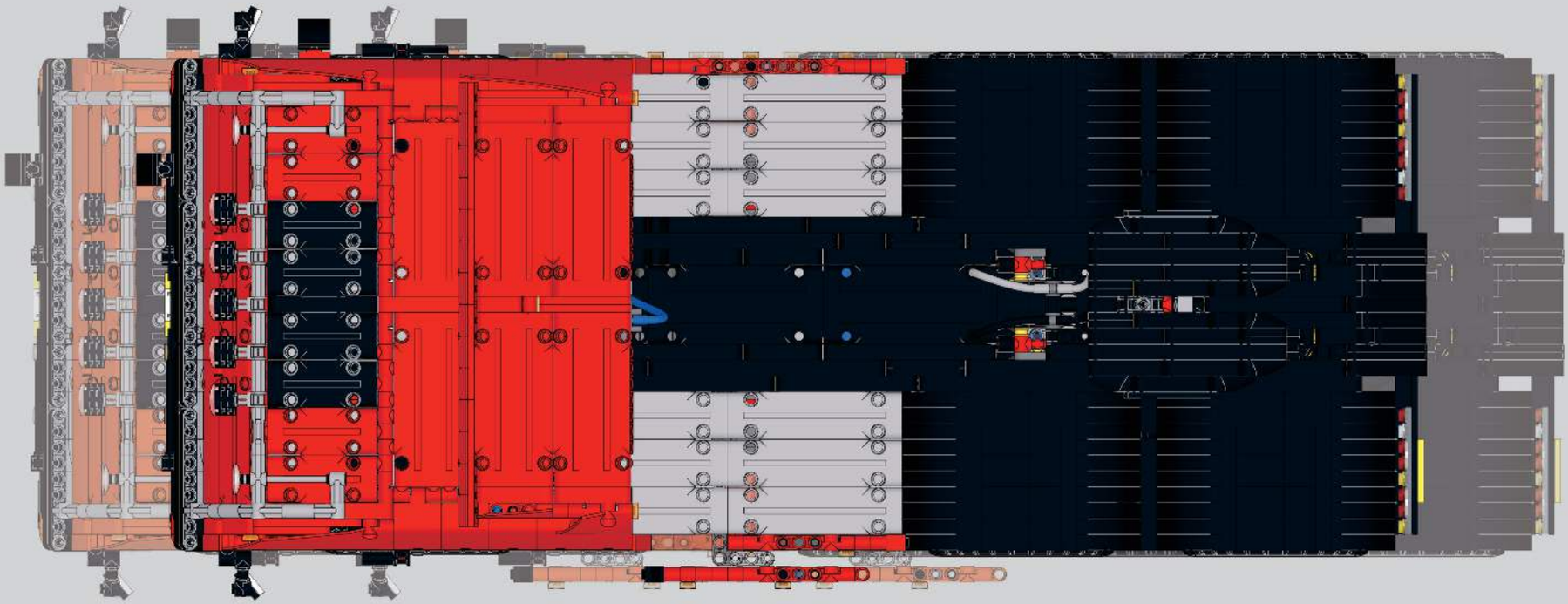

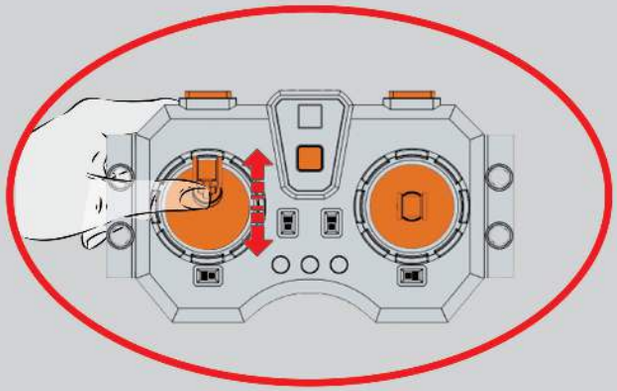

将左摇杆↑↓移动(A通道),控制车辆前进后退

Move the left joystick up and down (Channel A) to control the vehicle's forward and backward movement.

907

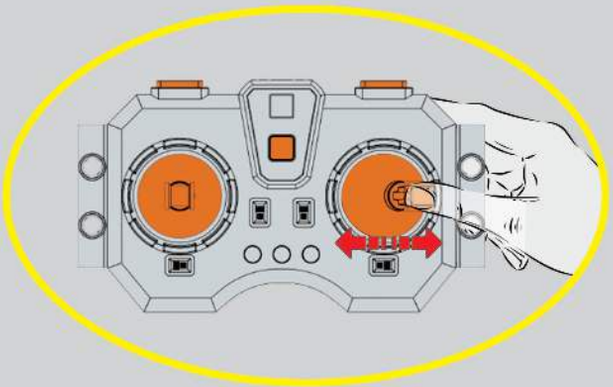

将右摇杆←→移动(D通道),控制车辆左右转向

Move the right joystick left and right (Channel D) to control the vehicle's left and right steering.

908

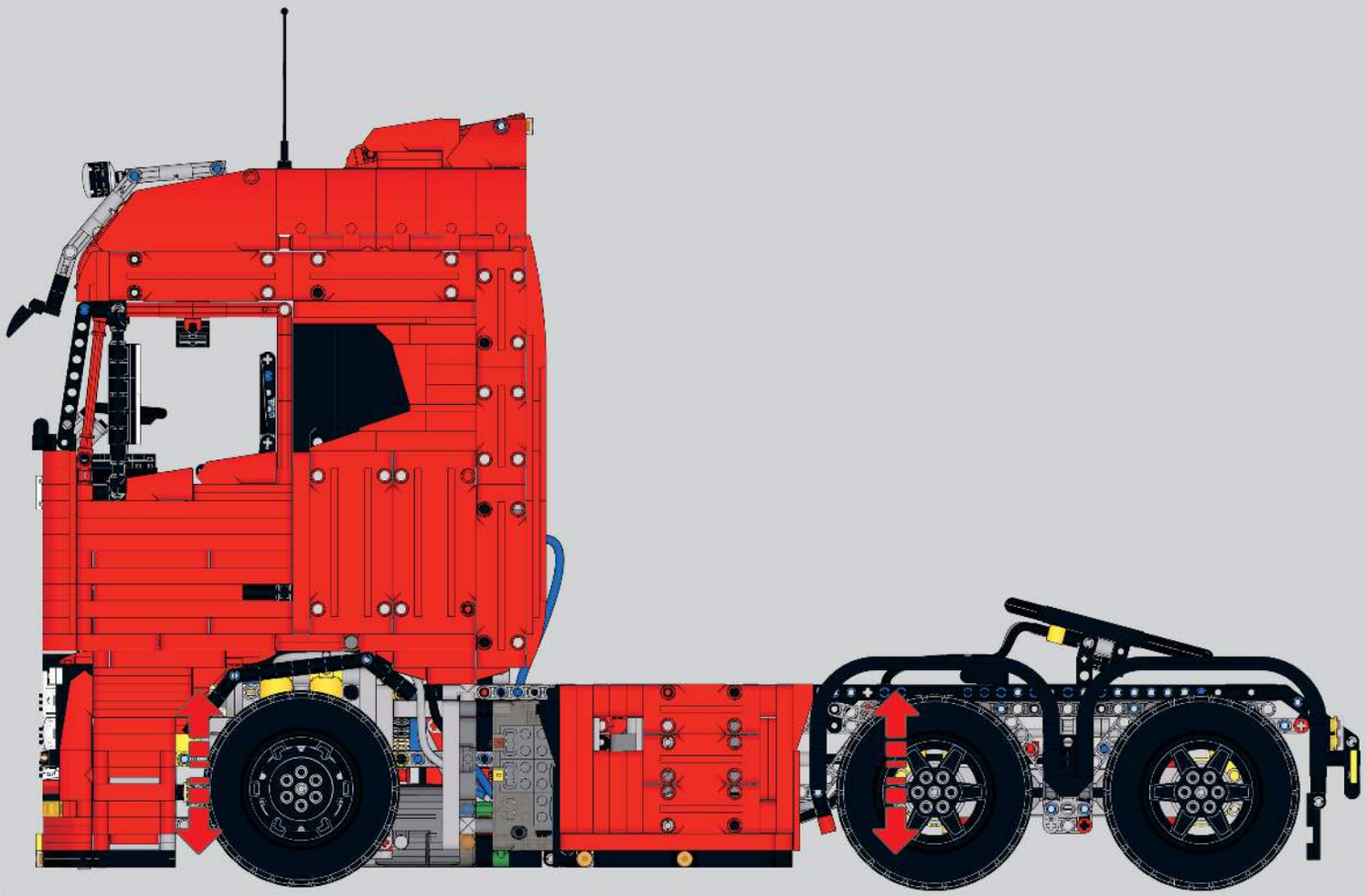

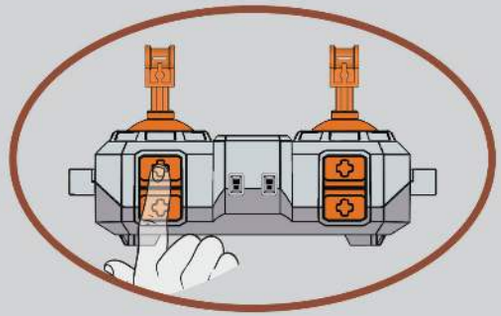

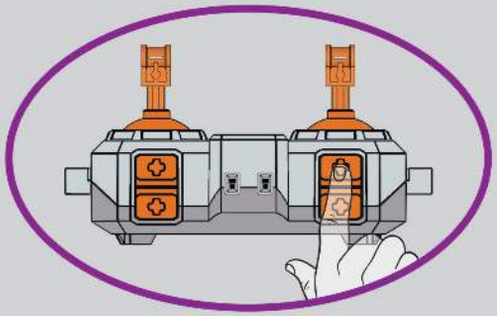

长按遥控器右前端上按键（上F键）保持车桥气阀是打开状态，同时长按遥控器左前端按键（E键）一直打气，控制底盘升起；底盘升起后，反向按下F键，控制底盘下降

Long press the upper F button on the right front of the remote control (upper F key) to keep the vehicle bridge valve open.
At the same time, long press the E button on the left front of the remote control (E key) to continuously pump air, raising the chassis.
After the chassis is raised, press the F button in the opposite direction to lower the chassis.

909

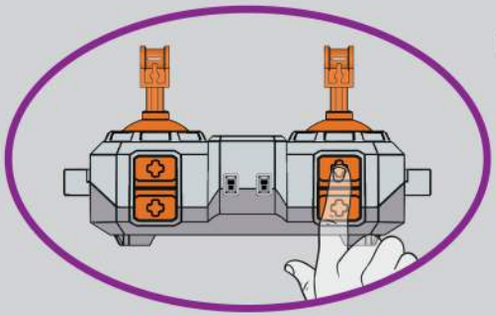

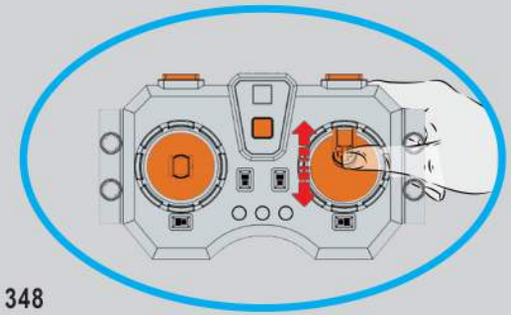

长按遥控器左前端按键(E键)打气,同时将右遥杆(C通道)↑↓移动,
控制牵引车鞍座解锁和锁止

Long press the left front button (E key) on the remote control to inflate, while moving the right remote lever (C channel) ↑↓, Control the unlocking and locking of the tractor saddle

910

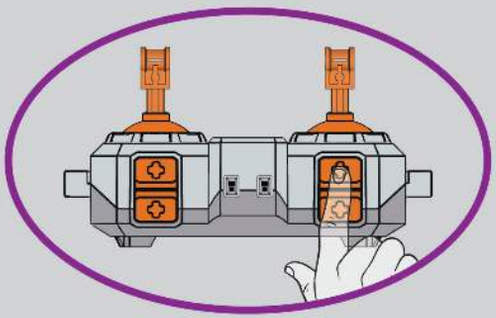

先在红色箭头处手动向下打开气阀开关，然后长按遥控器左前端按键（E键）开始打气，控制车头抬起；抬起后，反向拉气阀开关，车头下放，操作完毕可将气阀开关回正

First, manually open the air valve switch downwards at the red arrow, then long press the E button on the left front of the remote control (E key) to start pumping air, raising the front of the vehicle. After raising, pull the air valve switch in the opposite direction to lower the front of the vehicle. After the operation, return the air valve switch to its original position.

911

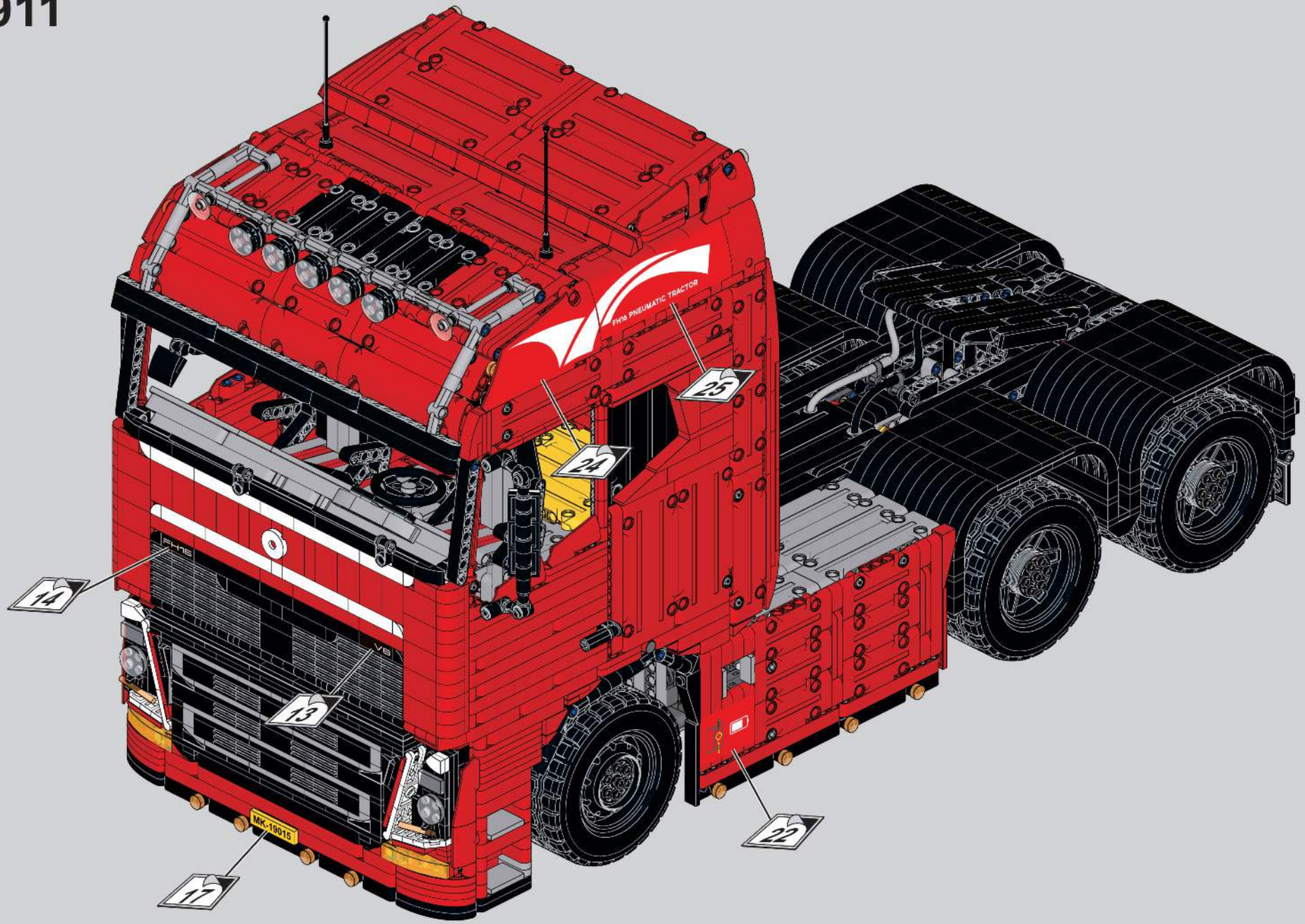

912

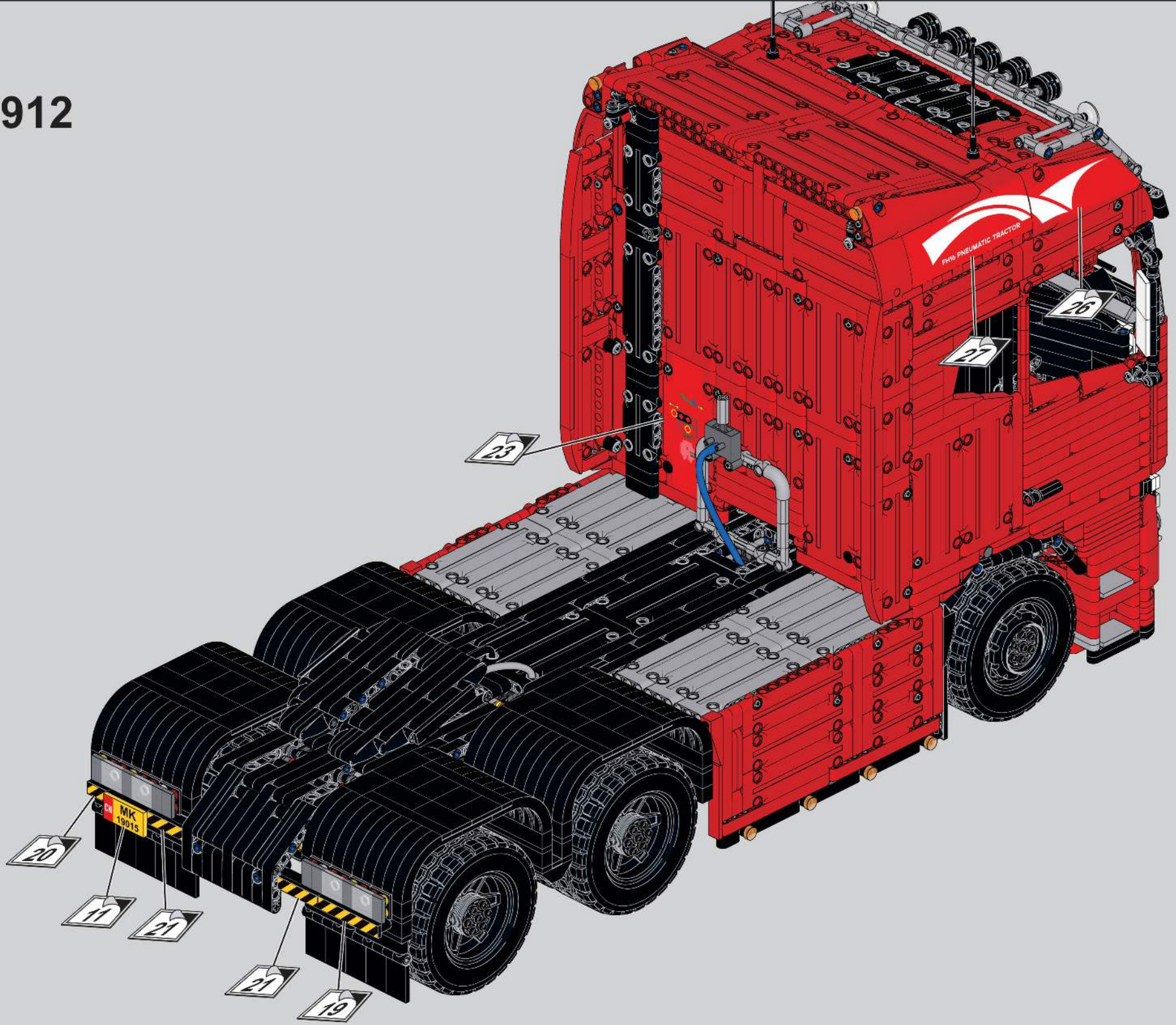

MOULD KING®

宇 星 模 王