MOULD KING®

宇星模王

宇星工程系列

MODELS No. 气动拖板车 TRAILER

19015T

3399+ Pcs/Pza

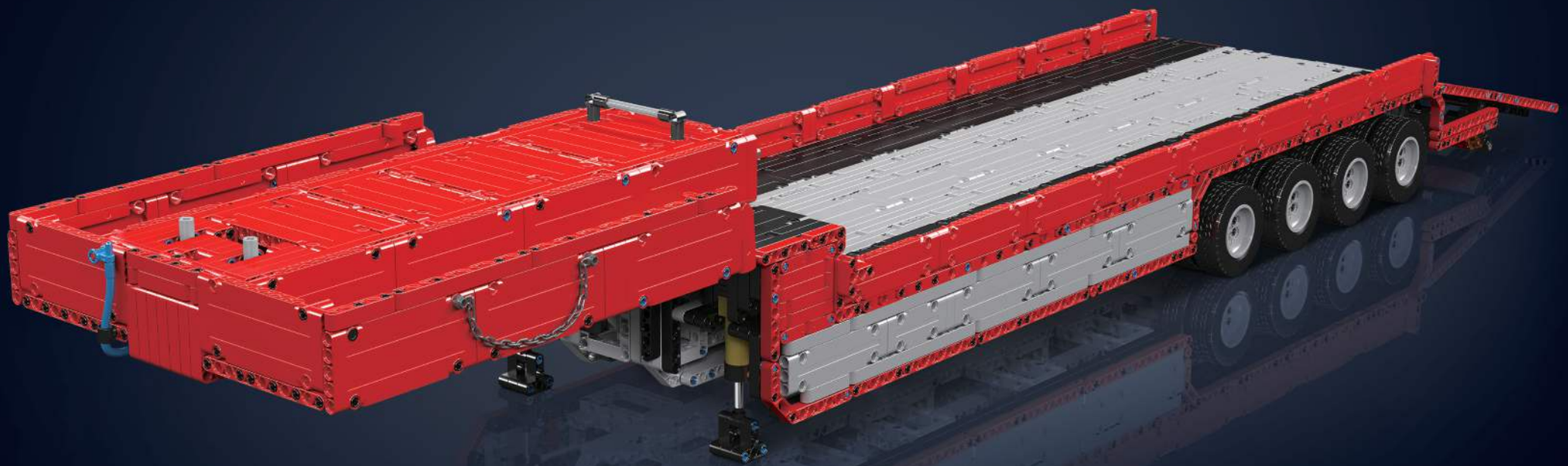

Qr code APP (APP二维码)

Need the apple version 9.0 and above,the android version 5.0 and above.

* This APP supports most of the mainstream Android models on the market, but due to the large number of Android models, different models of systems and hardware reasons, there may be some models do not support, specificaccording to the actual test!

广东宇星科技
Mould King

产品资讯
Product Information

积木补件
Brick Replacement Service

售后服务
After-sales Service

Customer Service
客 户 服 务
www.yx-mk.com

酷砖家
BriXpert

"酷砖家"是宇星模王设立的特殊标识，代表着产品的独特性和原创性。每一款带有"酷砖家"标志的积木套装，都由宇星的原创团队或者与宇星有密切合作的全球顶尖设计师亲自设计或授权。这个标识是我们对消费者的承诺，确保他们可以享受到独一无二且高品质的积木拼搭体验。

“Bri X pert”is a special mark established by MOULD KING, representing the uniqueness and originality of the product. Every building set with the "Bri X pert" logo is personally designed or authorized by MOULD KING's innovative team or world-class designers who work closely with MOULD KING. This logo is our commitment to consumers, ensuring that they can enjoy a unique and high-quality building experience.

OPEN

电子包
electronic
parts
TEST
BAD
GOOD
MOULD KING
TY
1
2
3
4

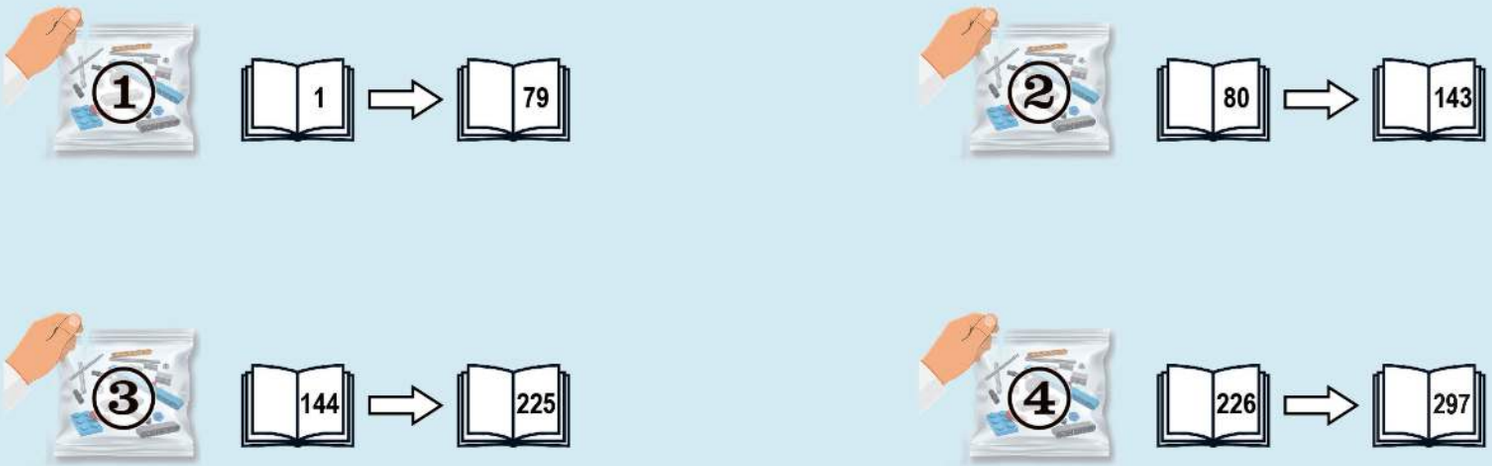
1
1
79
2
80
143
3
144
225
4
226
297

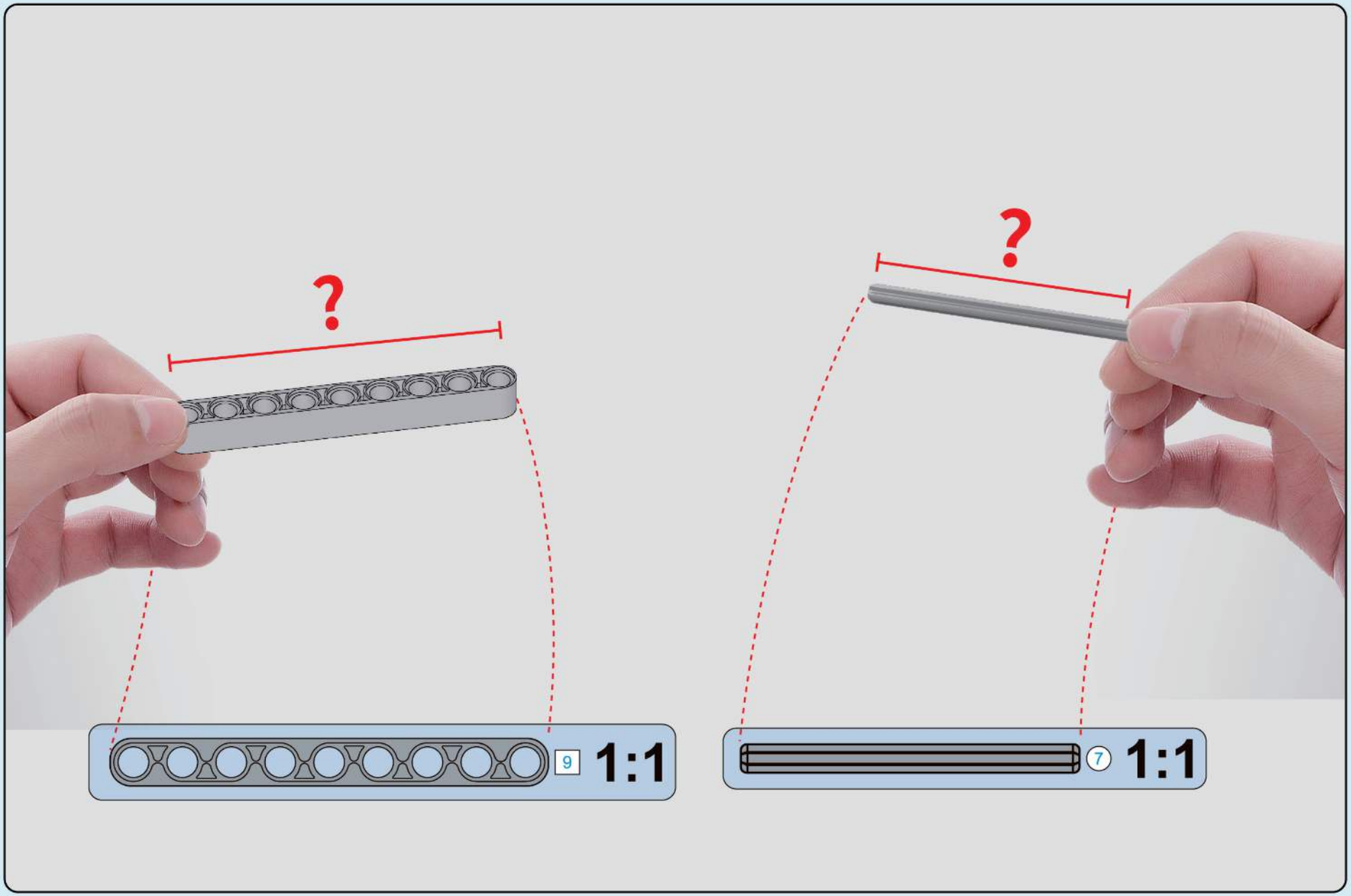
?
9
1:1
?
7
1:1

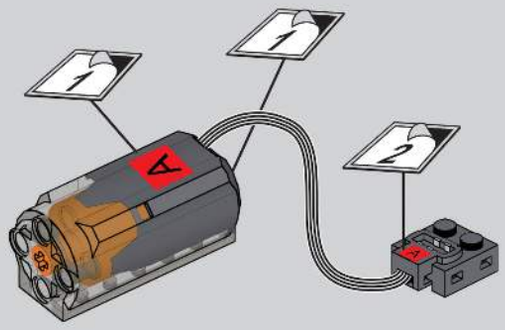

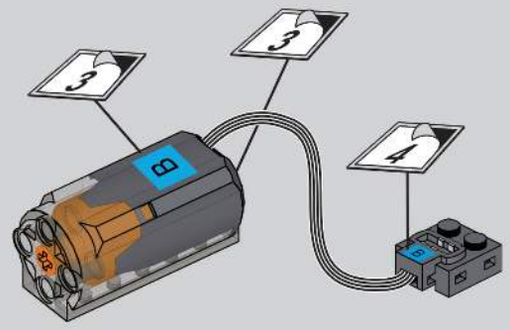

拼装前需测试所有电子件功能是否正常

Test all electronic components for functionality before assembly.

请扫描此二维码，获取并仔细查看4.0模块的操作说明书。

Please scan this QR code to obtain and carefully review the operation manual for the 4.0 module.

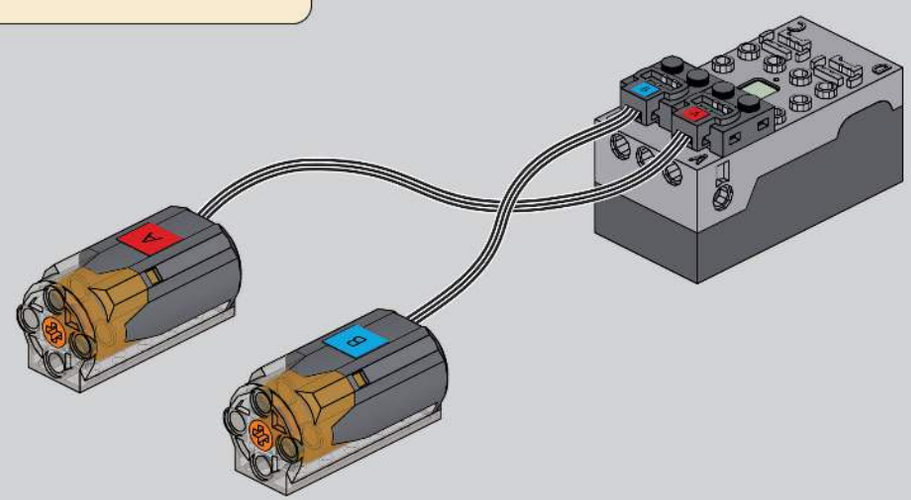

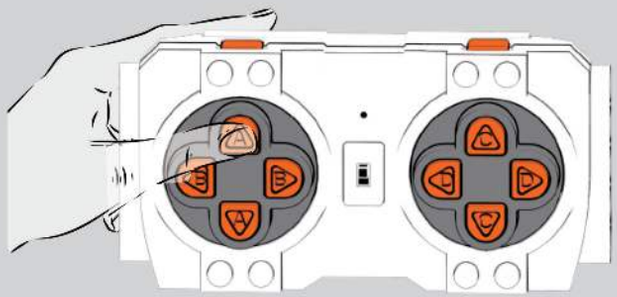

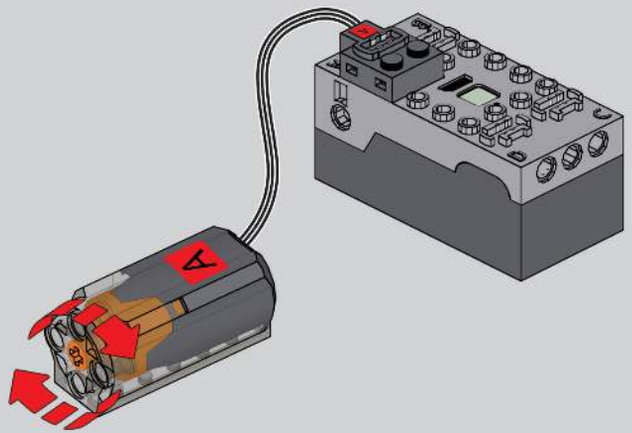

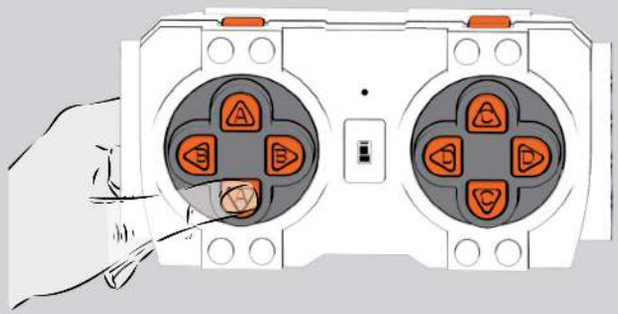

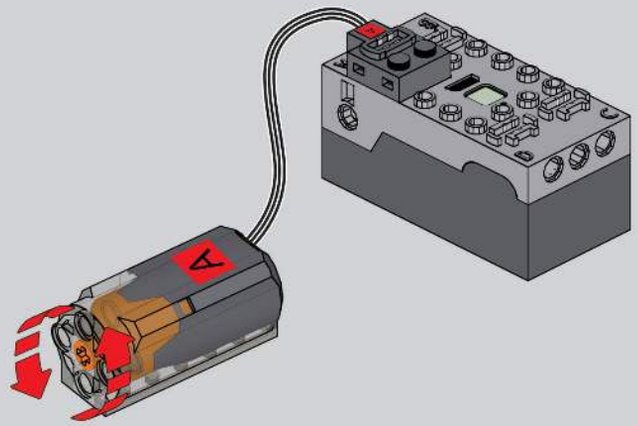

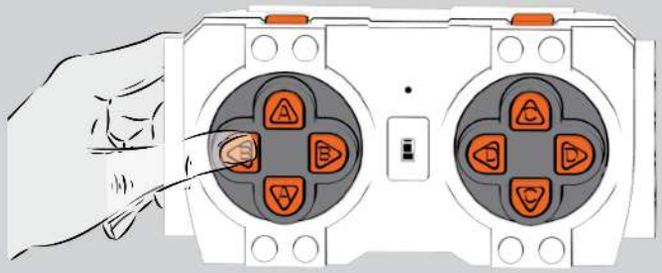

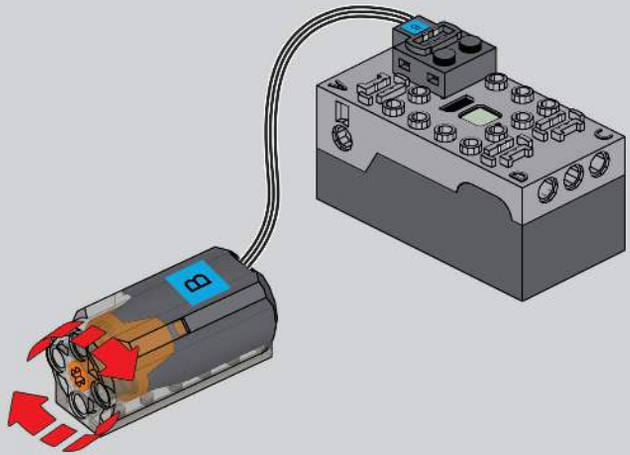
B

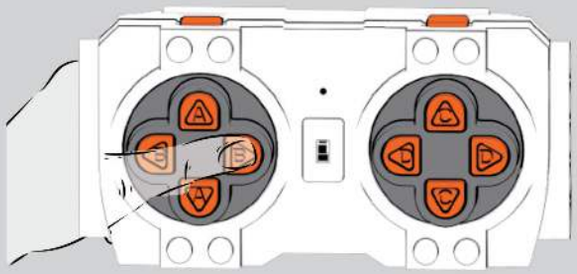

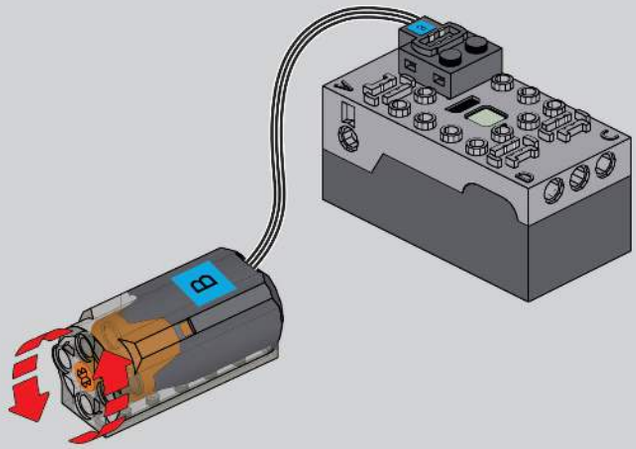
B

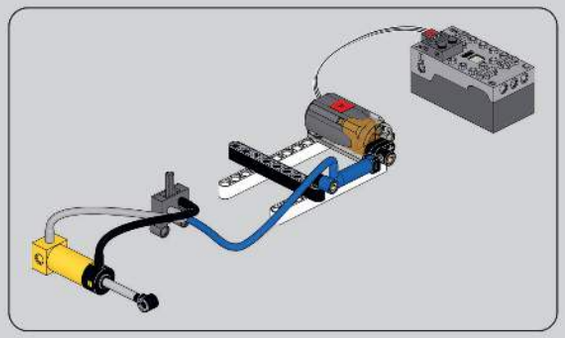

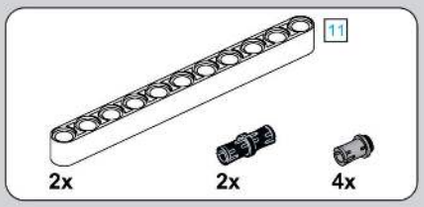
11
2x
2x
4x

0-1

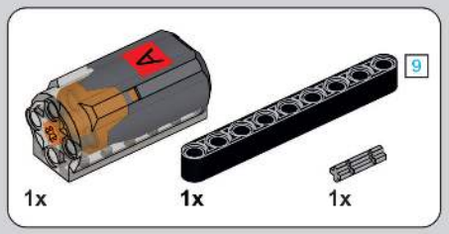
9
1x
1x
1x

0-2

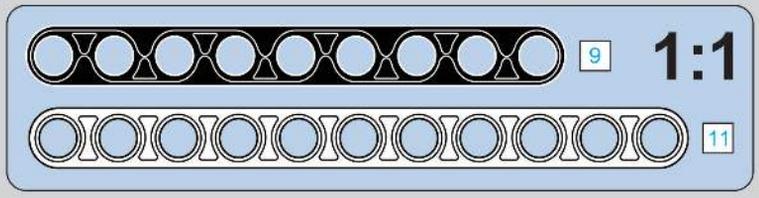
9
1:1
11

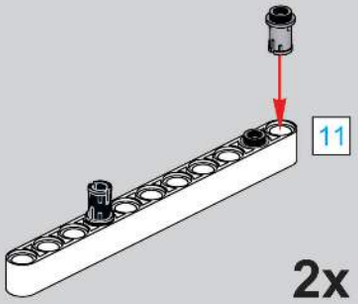
11
2x

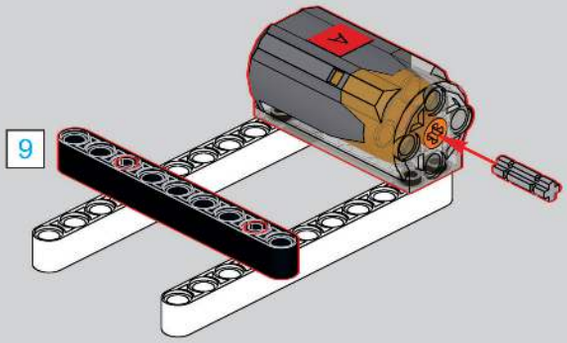
9

1x
2x

0-3

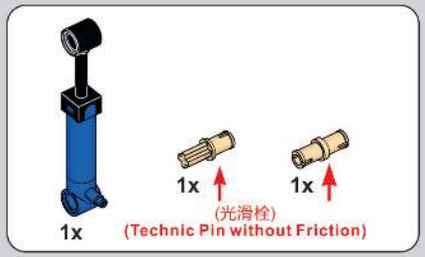
1x
1x
1x
(光滑栓)
(Technic Pin without Friction)

0-4

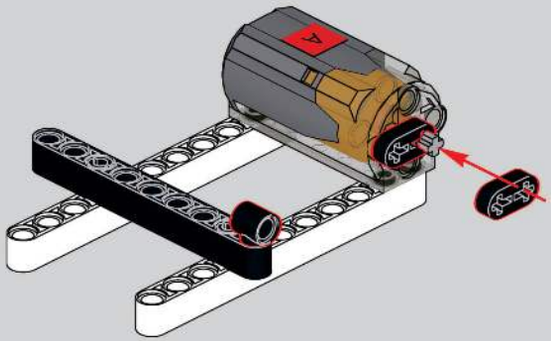

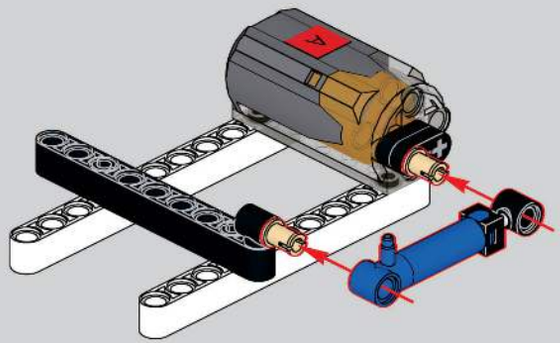

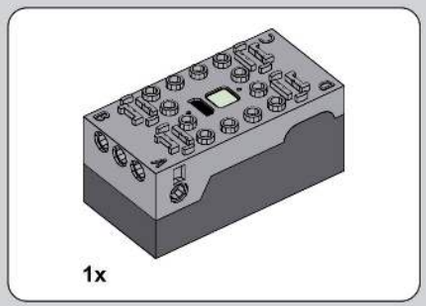

0-5

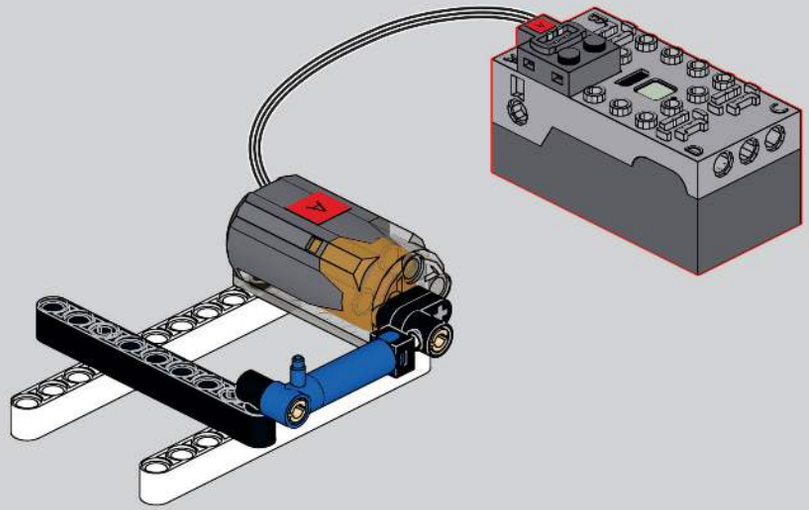

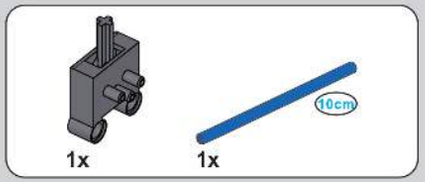

0-6

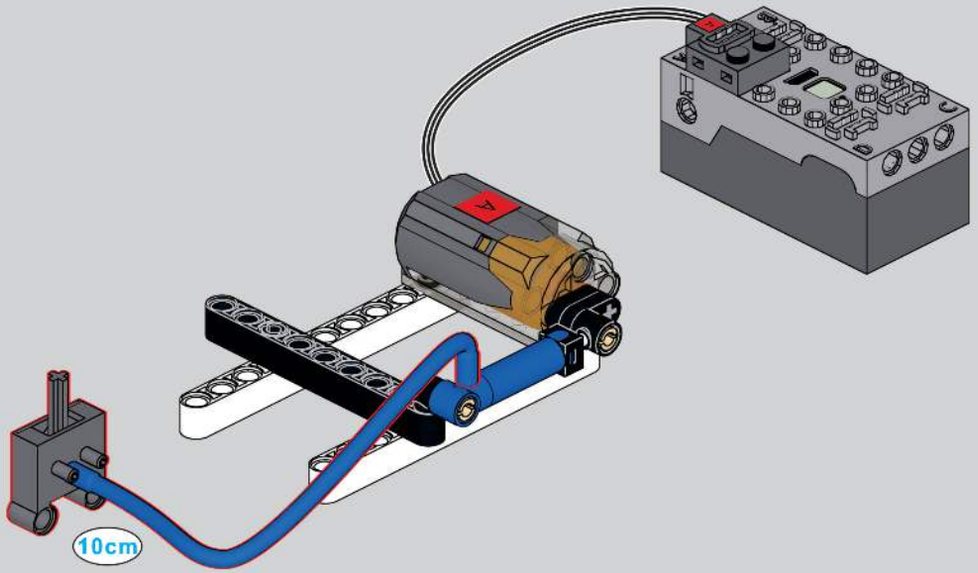

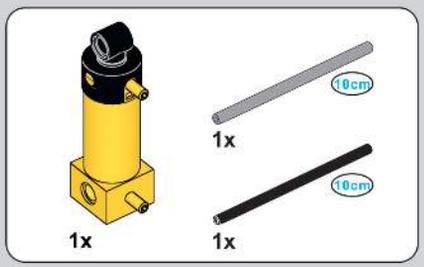

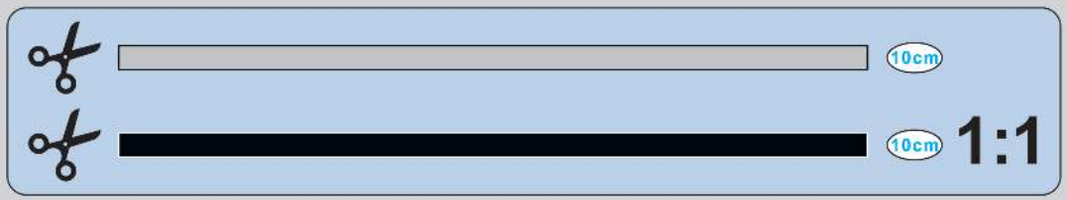

0-7

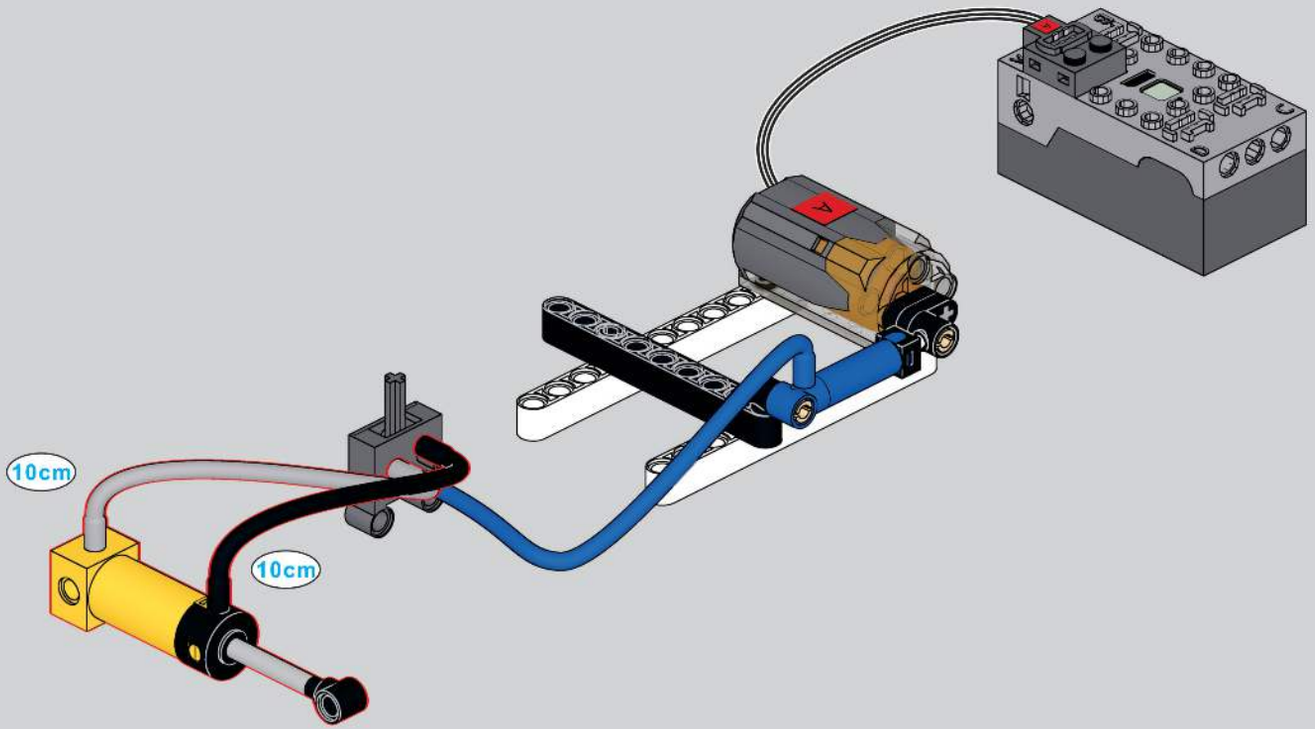

拼装前必须检测确认气泵，气挺杆，控制开关正常工作。测试完请将零件拆开，拼装需要用到。
Before assembly, the air pump, air lifter, and control switch must be checked and confirmed to work normally. Please disassemble the parts after testing.

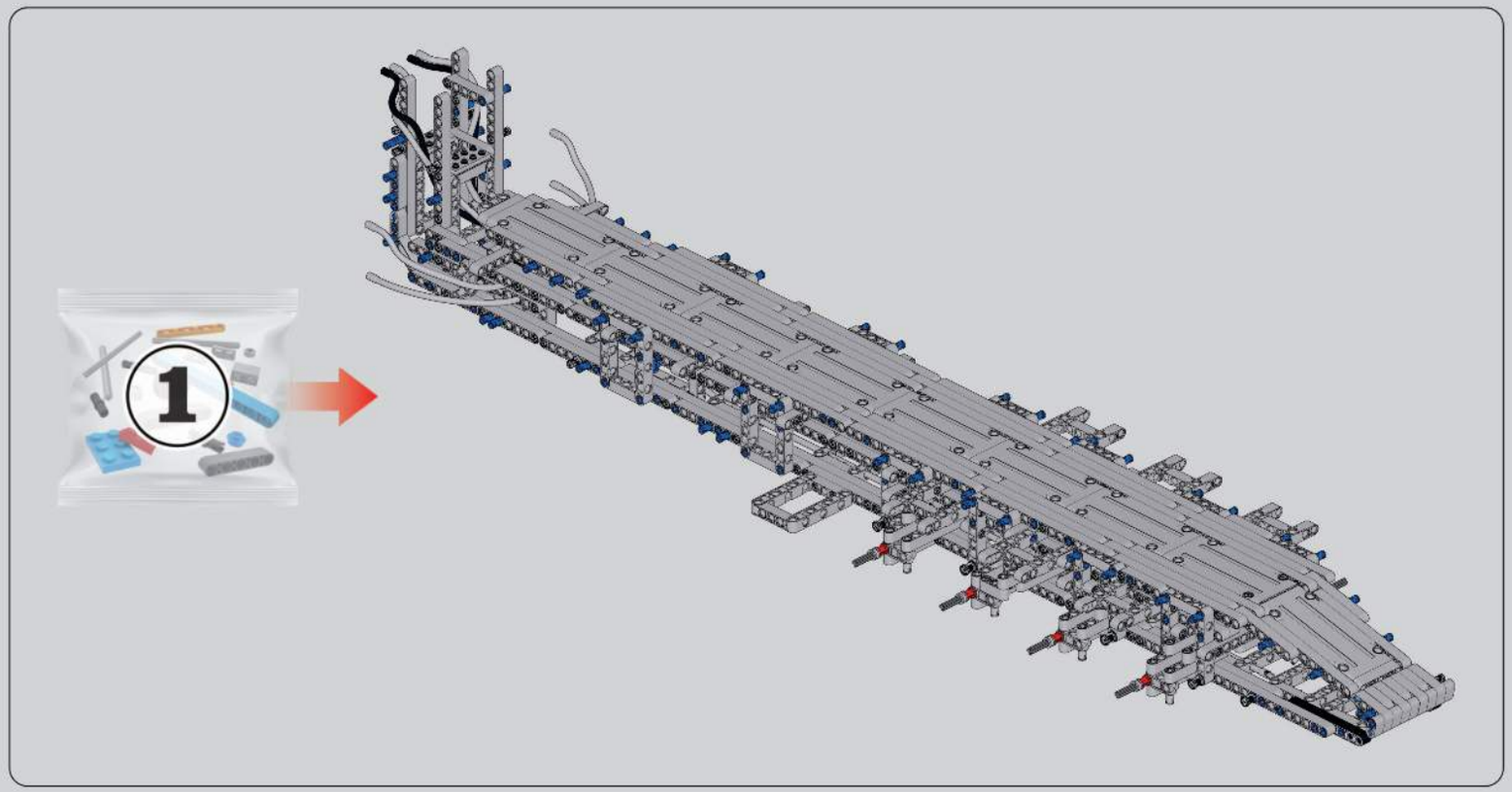

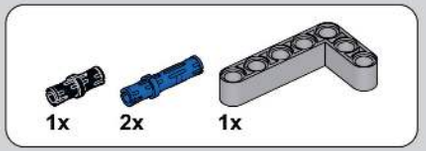

1

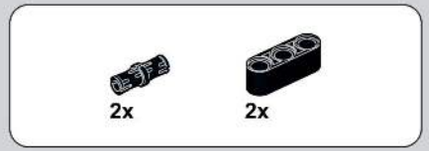

2

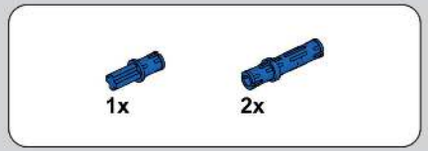

3

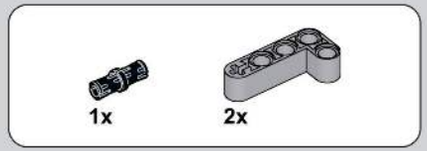

4

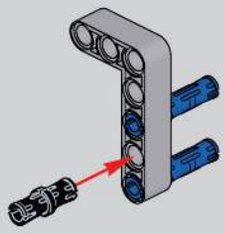

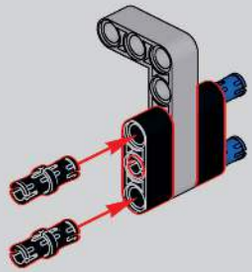

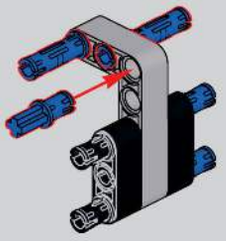

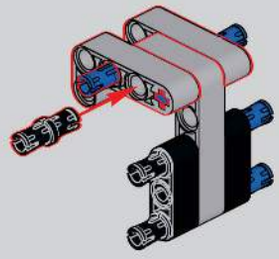

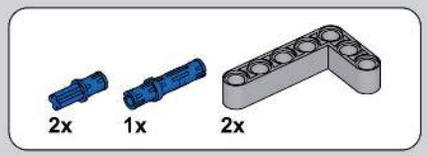

5

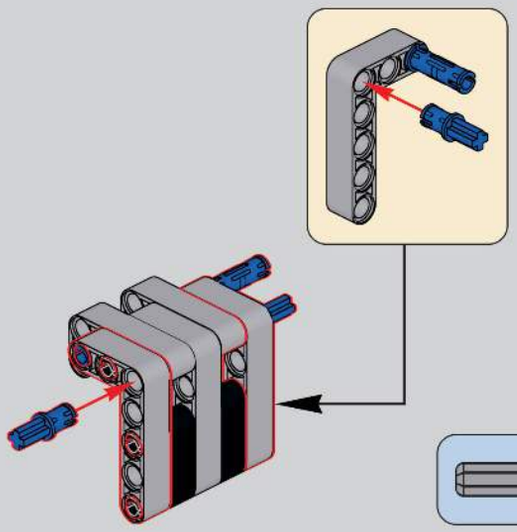

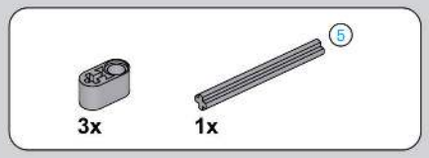

6

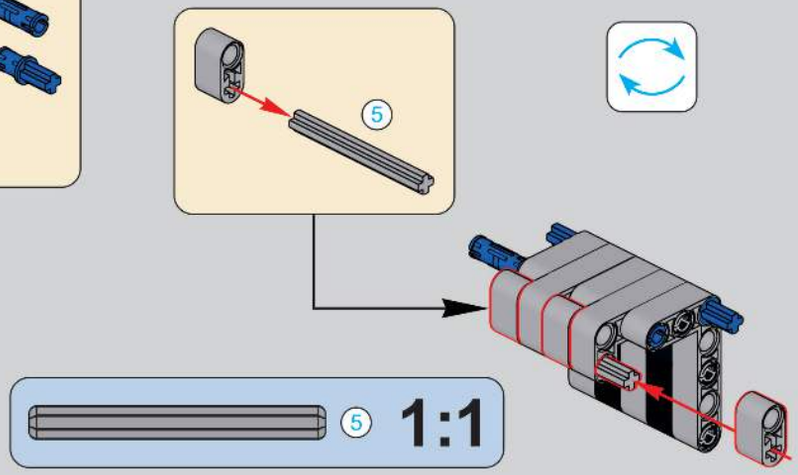

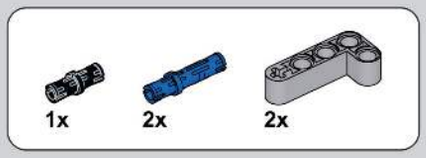

7

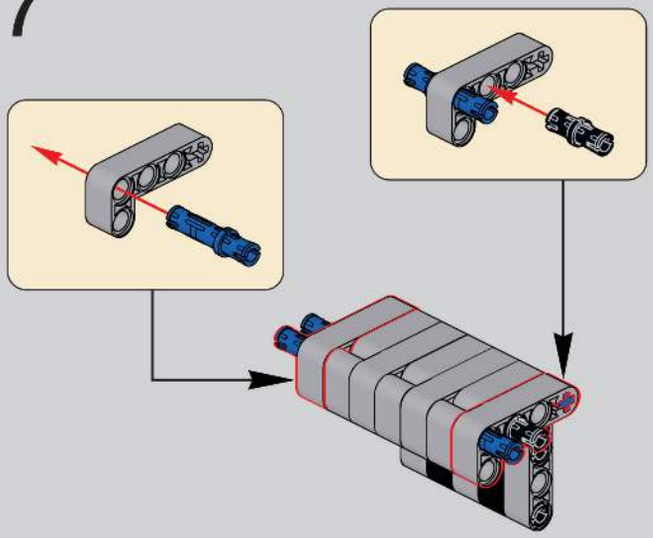

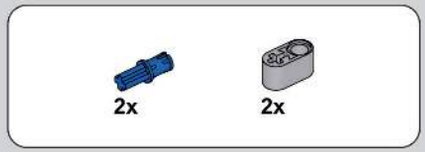

8

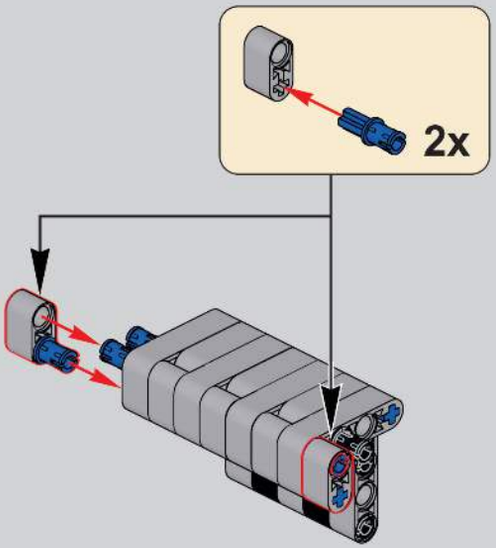

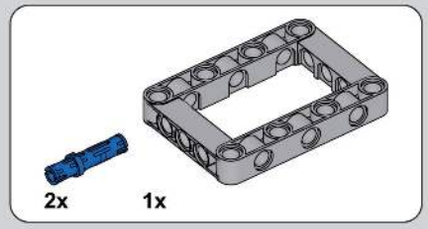

9

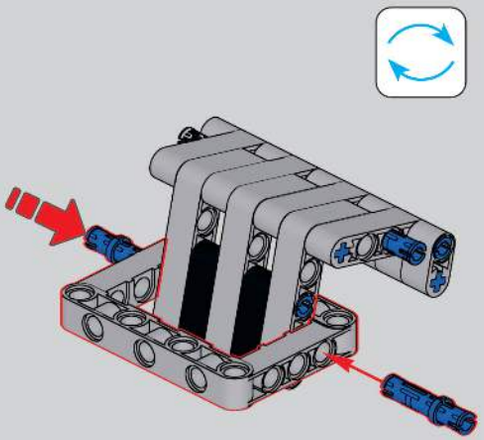

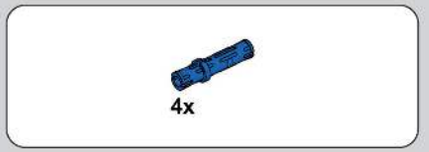

10

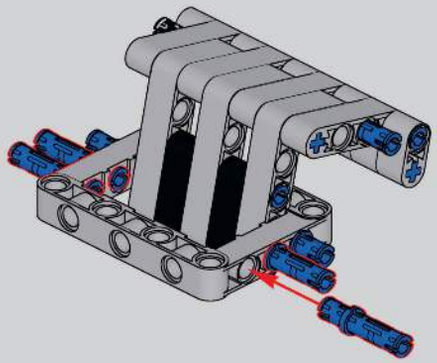

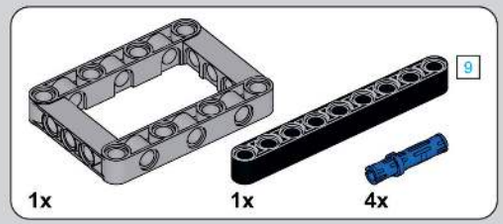

11

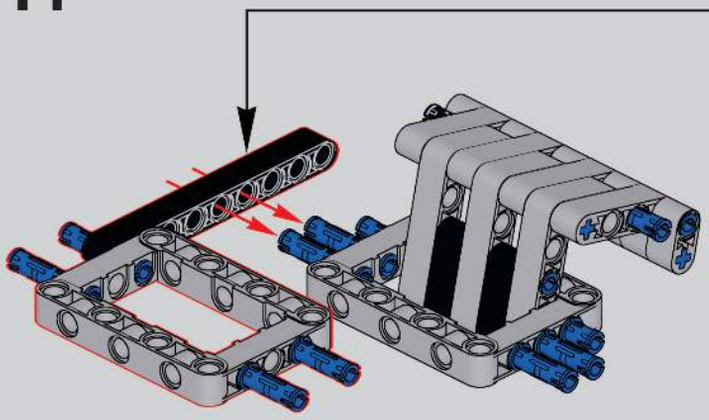

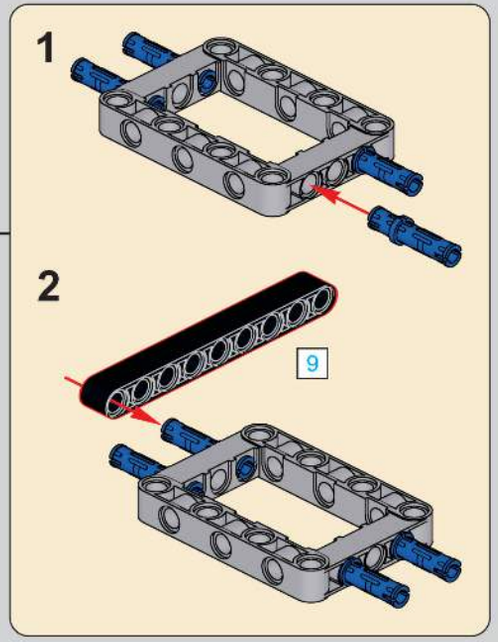

12

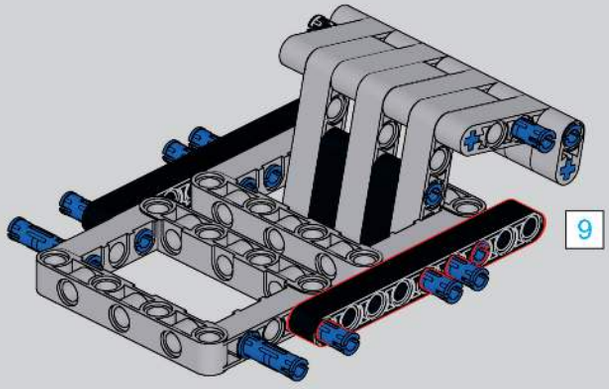

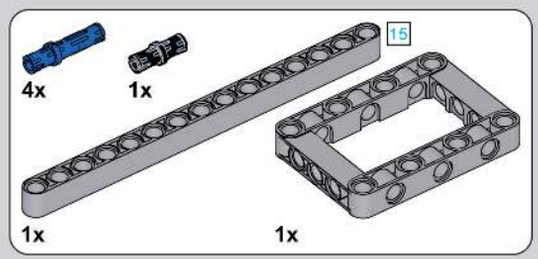

13

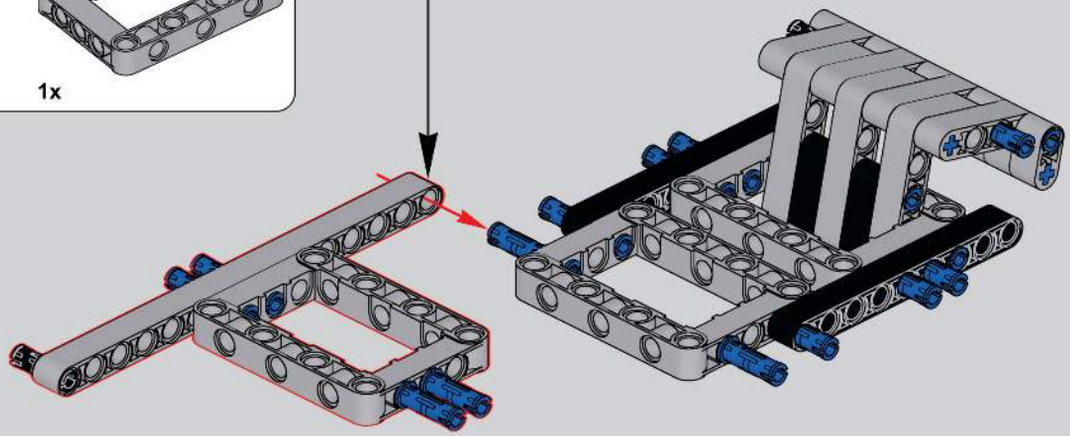

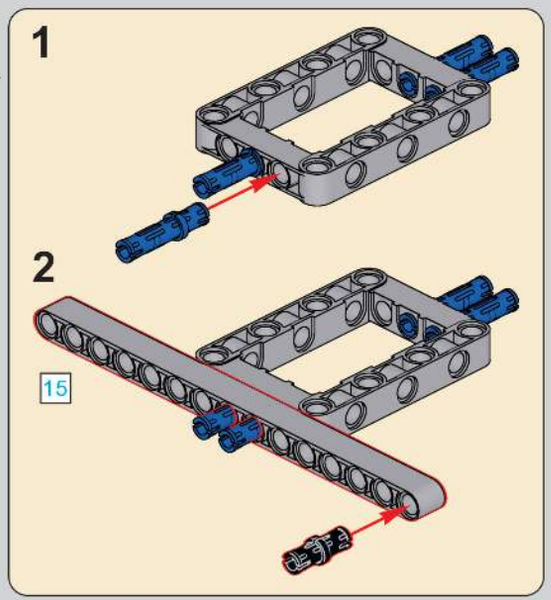

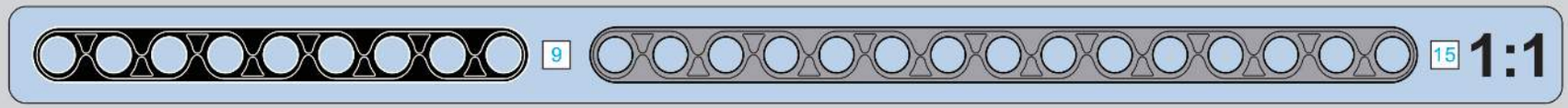

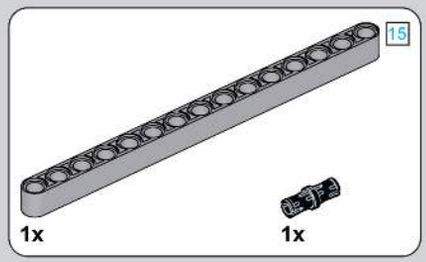

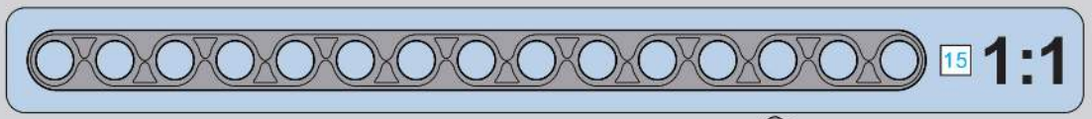

14

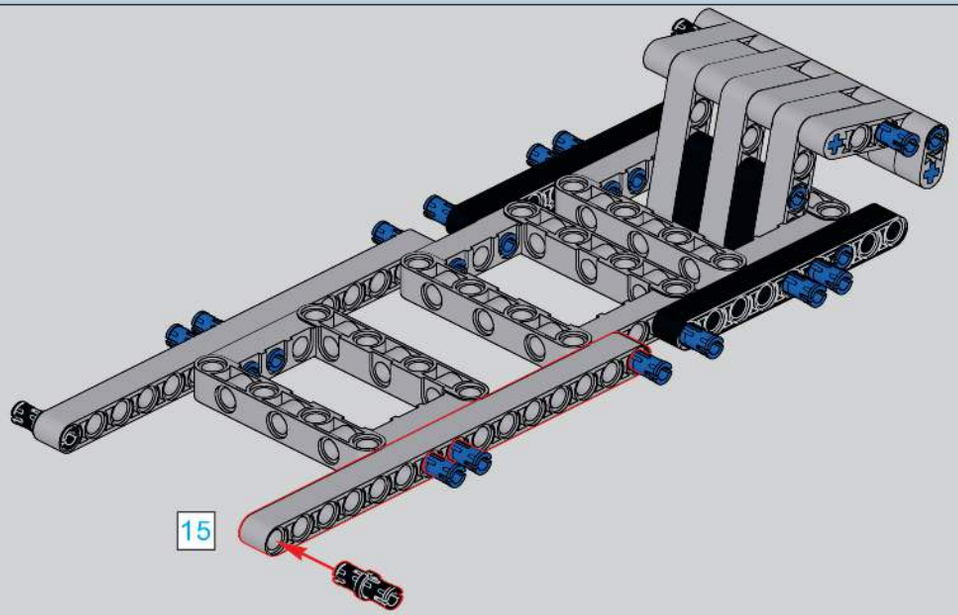

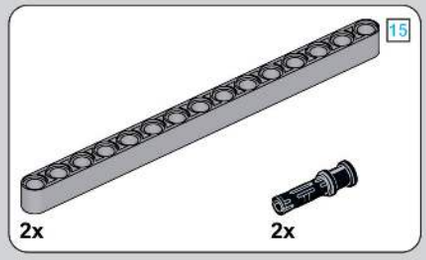

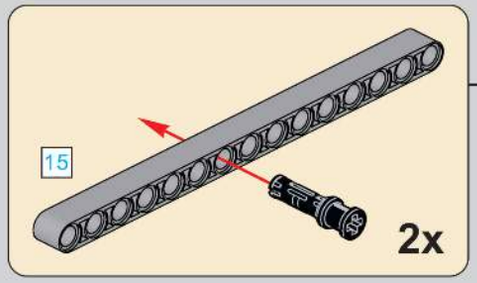

15

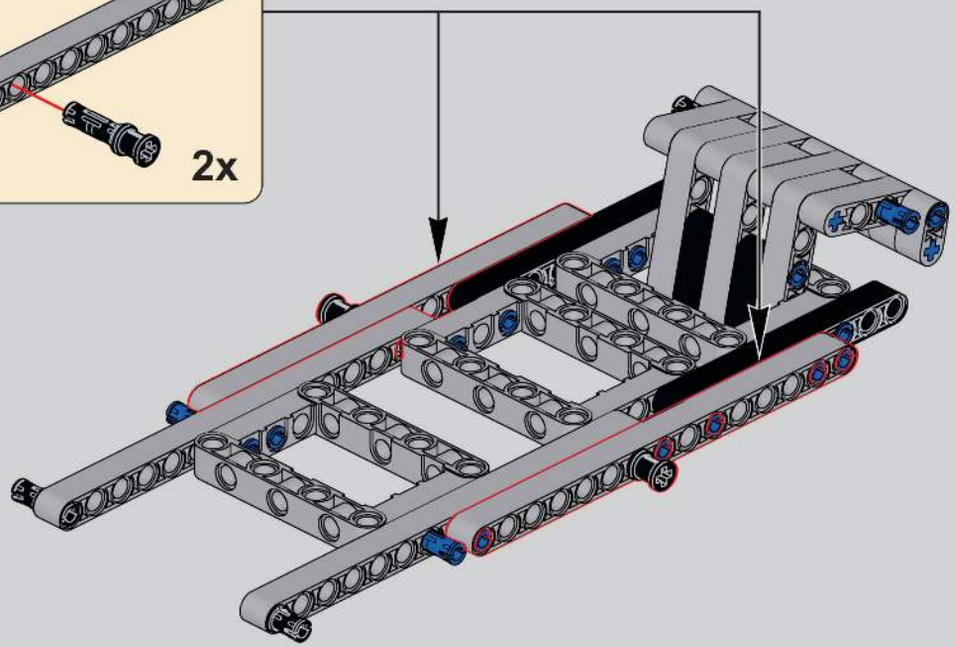

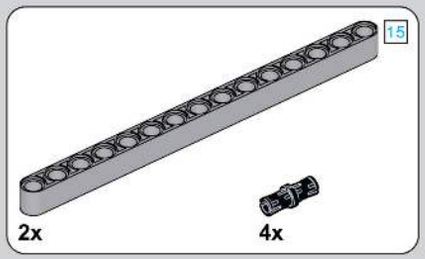

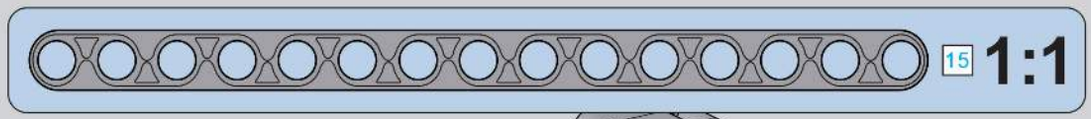

16

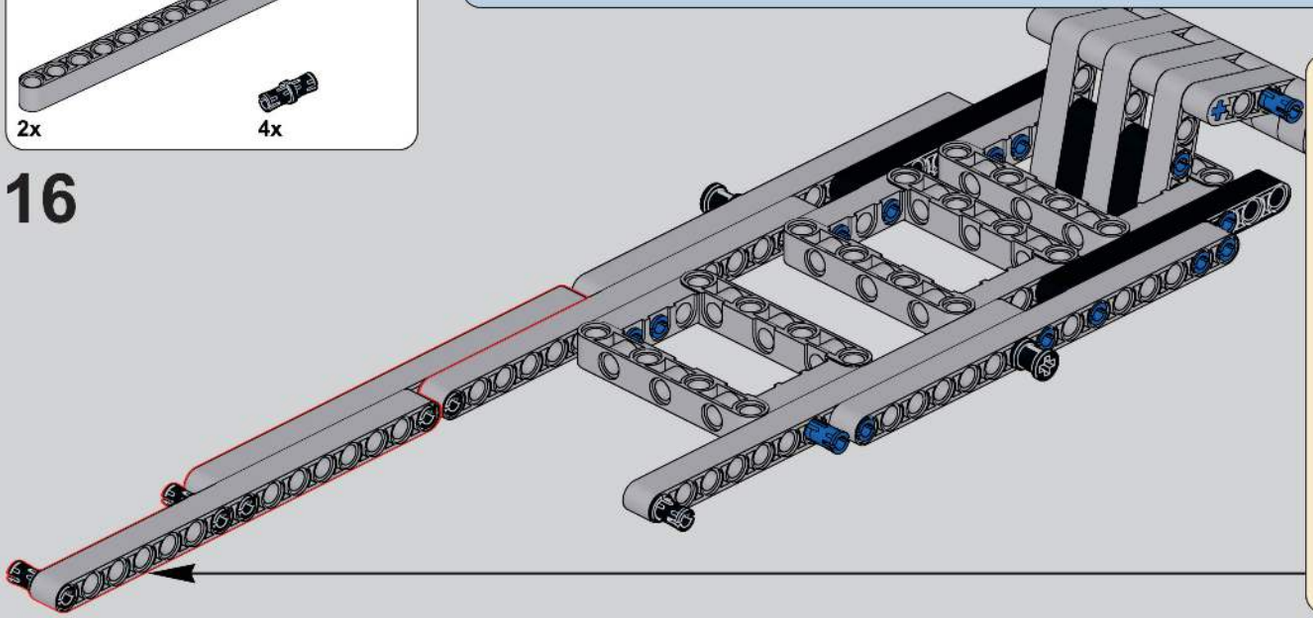

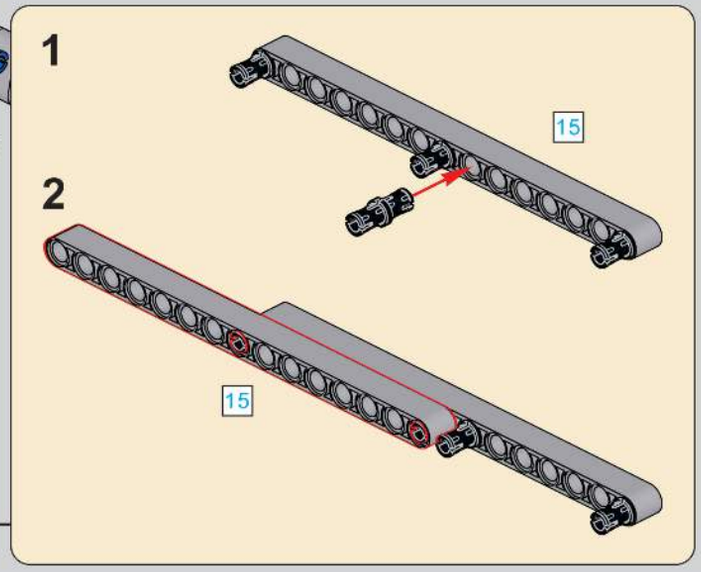

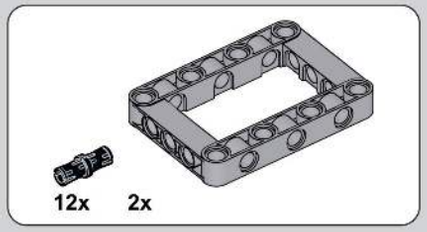

17

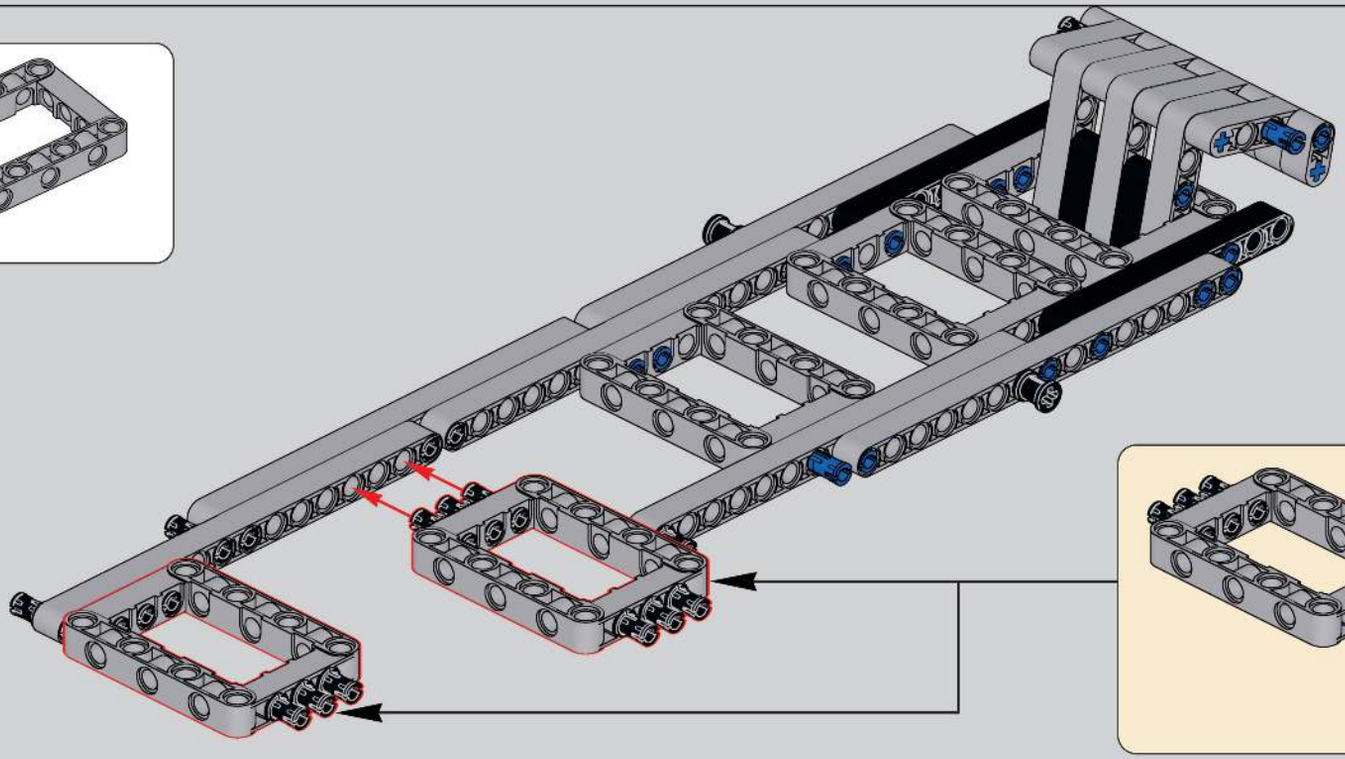

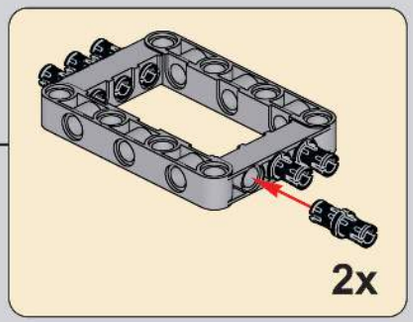

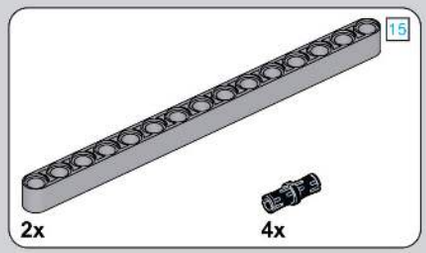

18

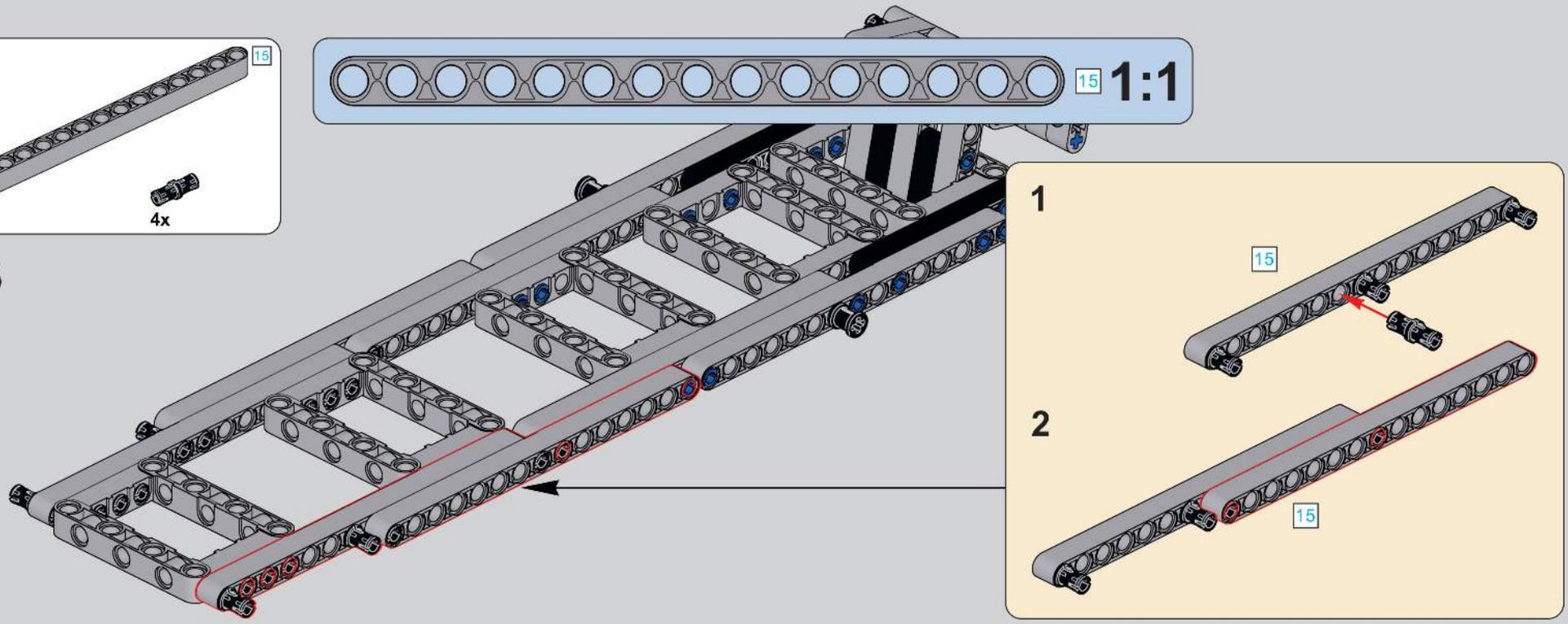

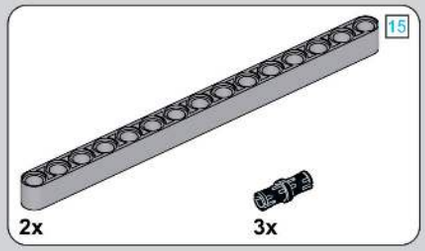

19

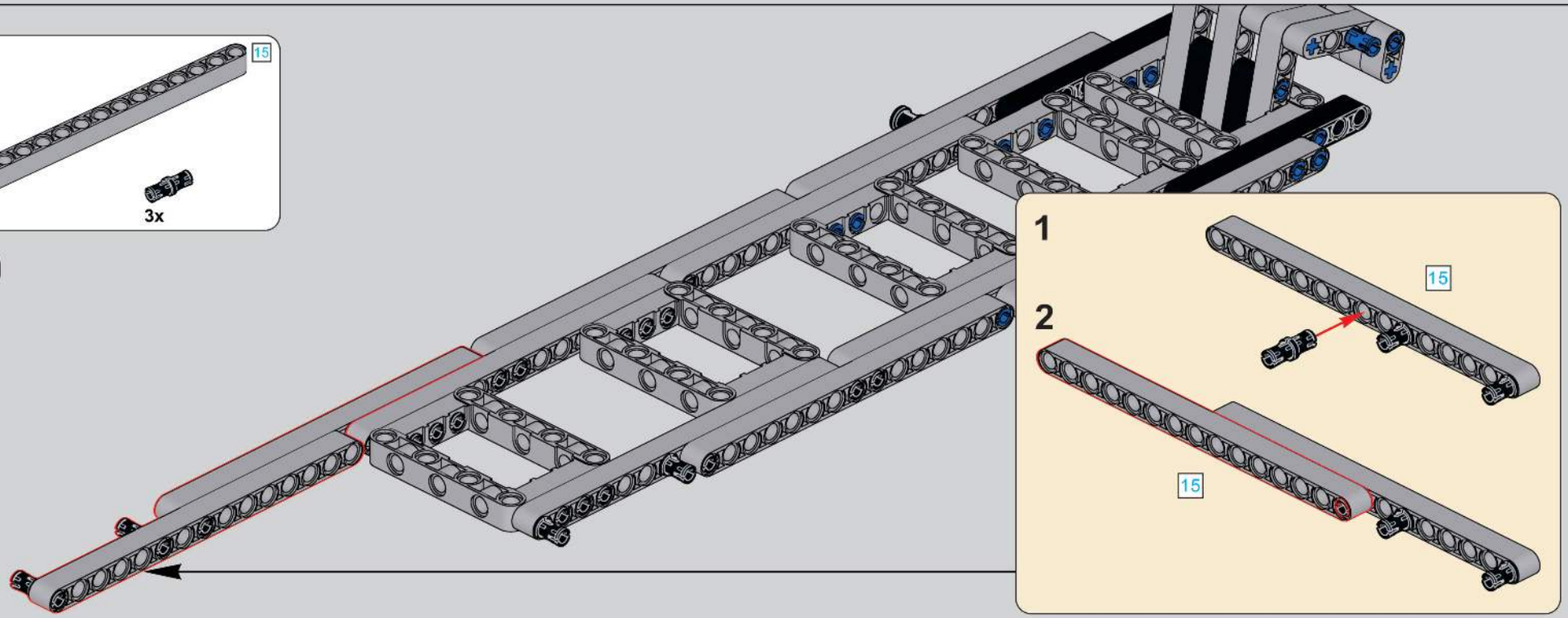

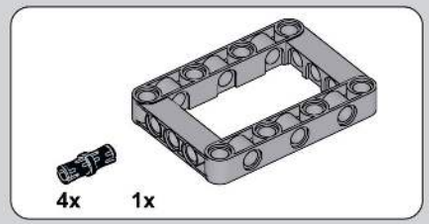

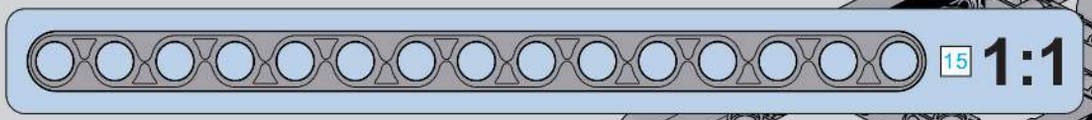

20

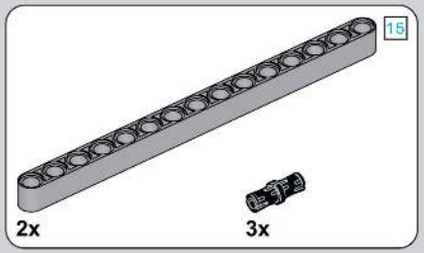

21

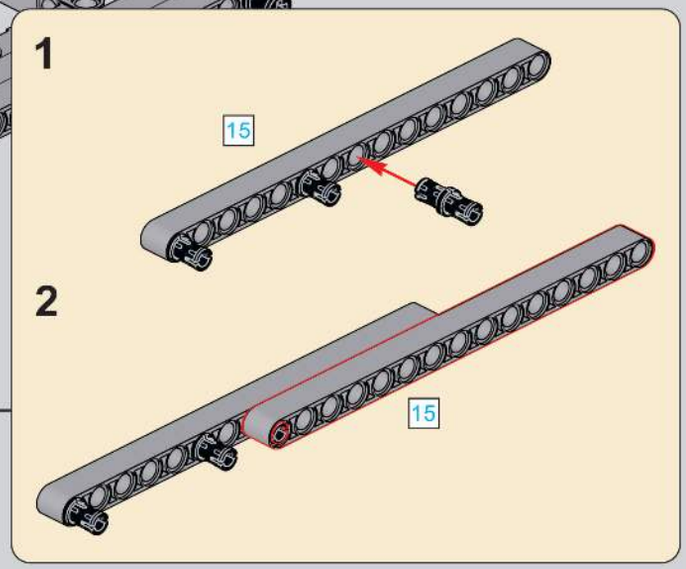

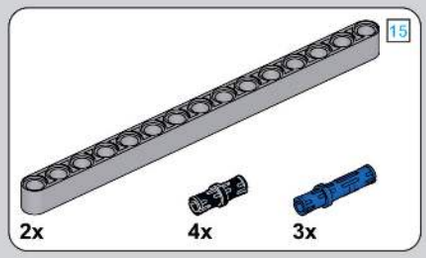

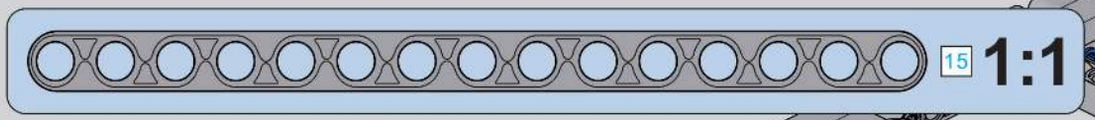

22

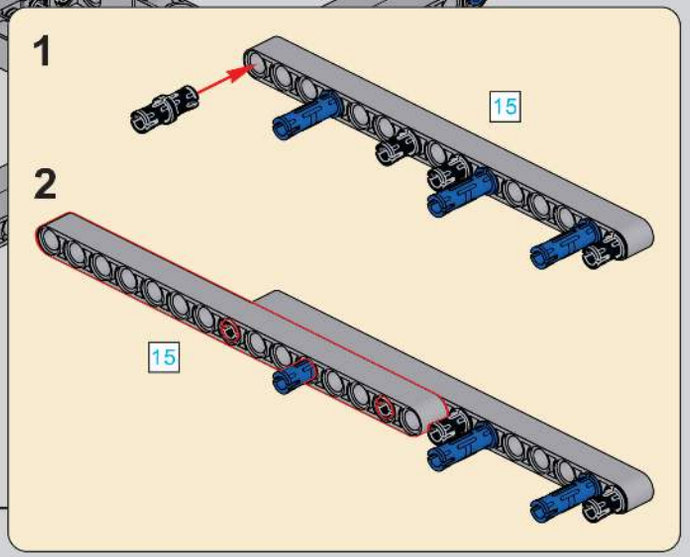

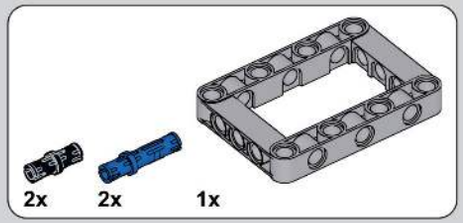

23

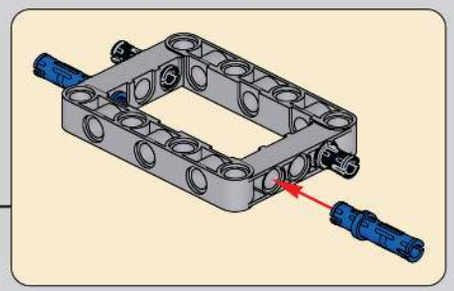

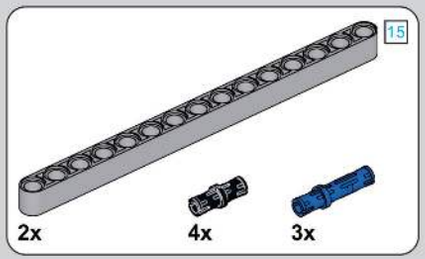

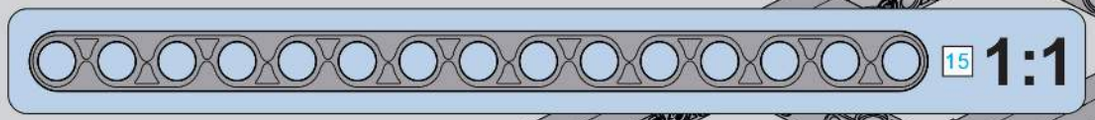

24

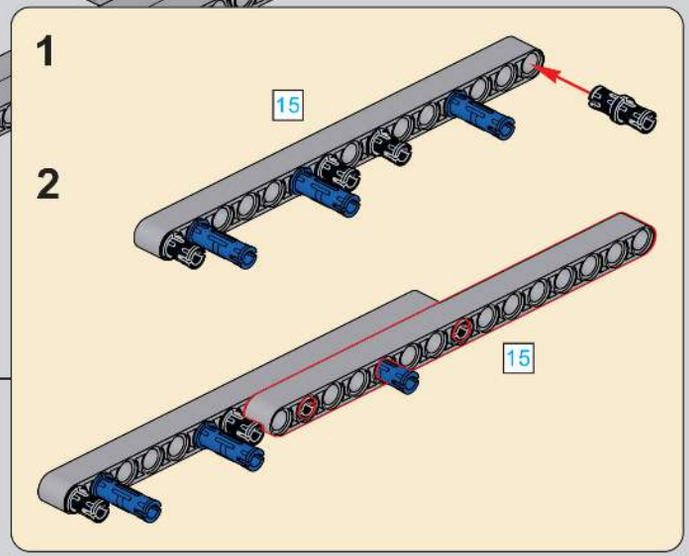

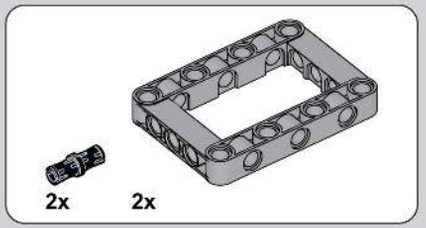

25

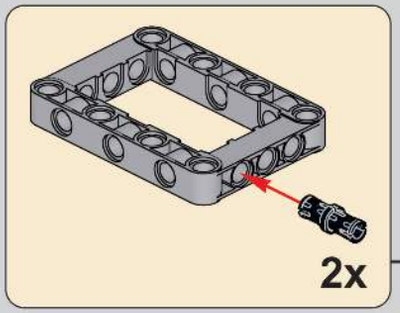

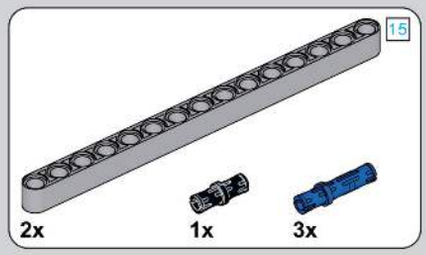

26

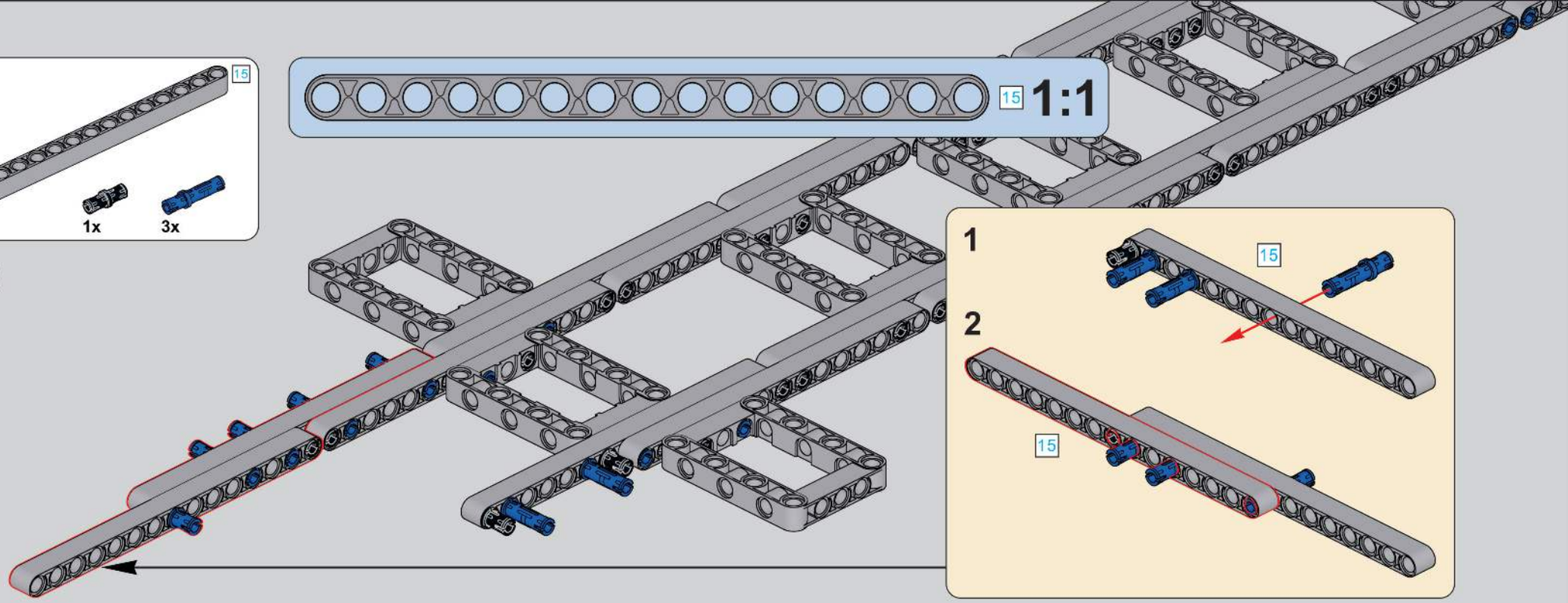

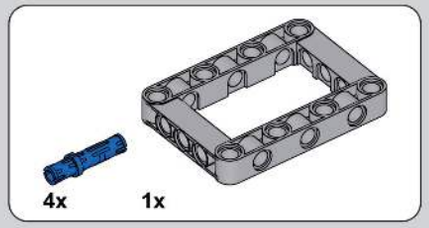

27

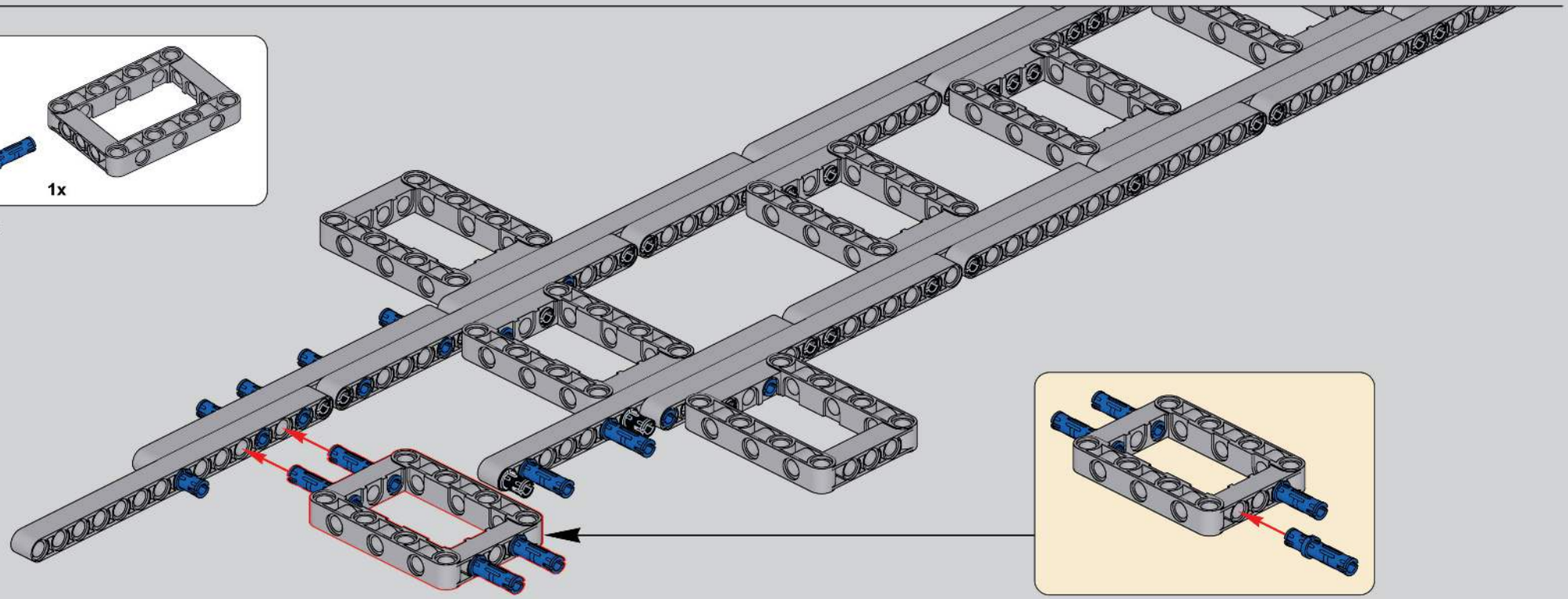

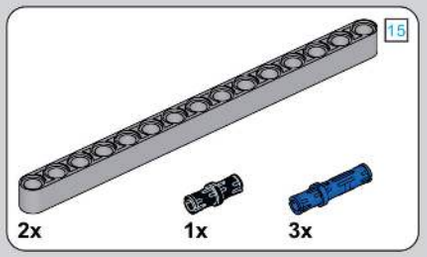

28

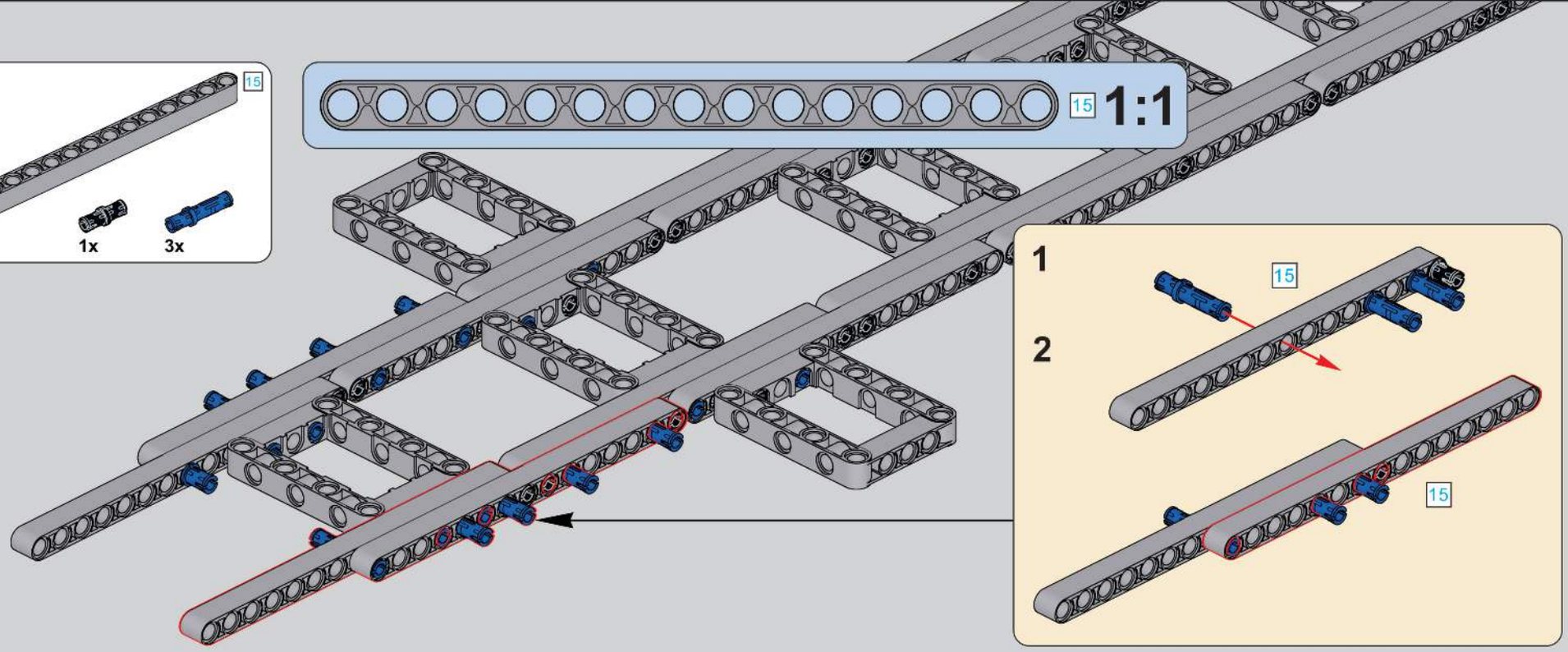

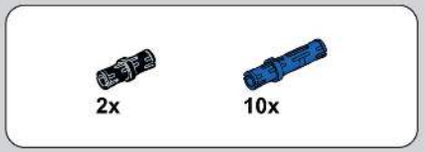

29

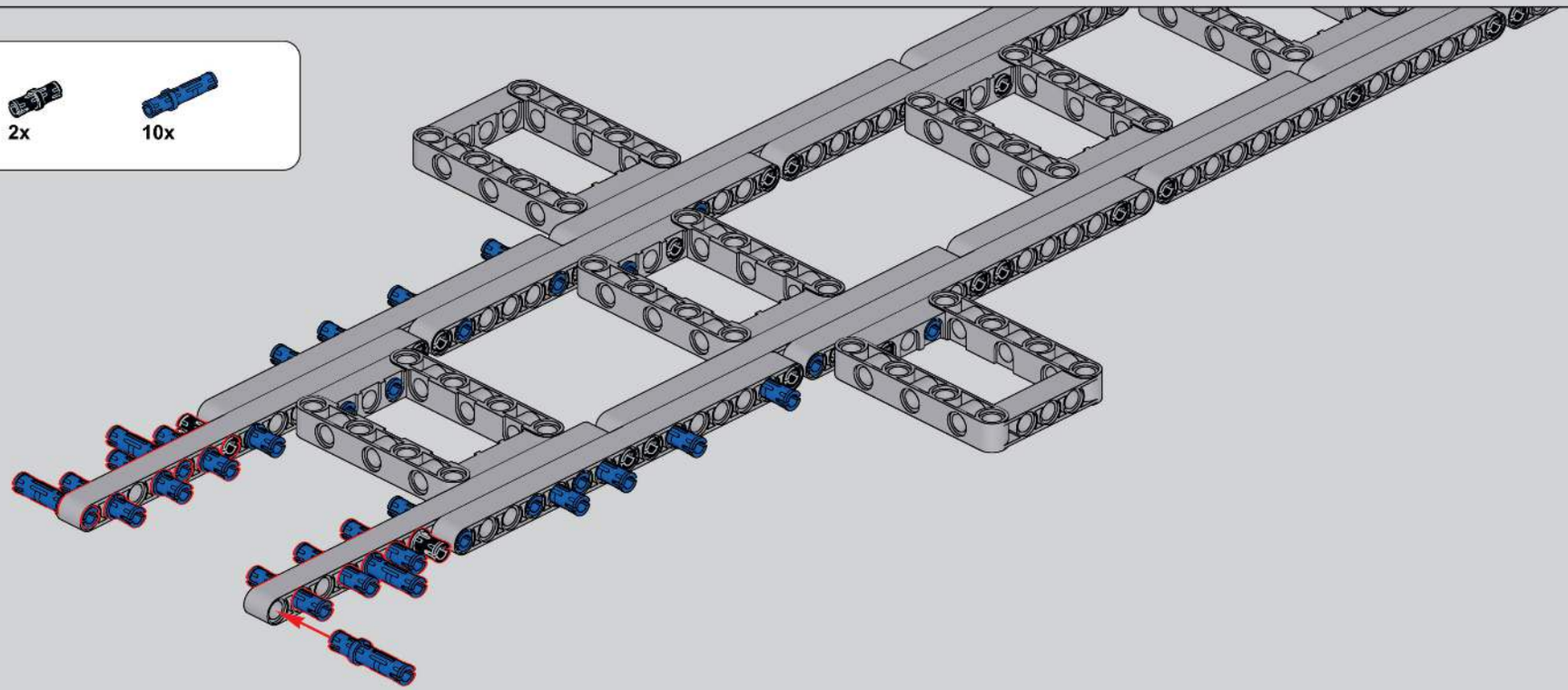

30

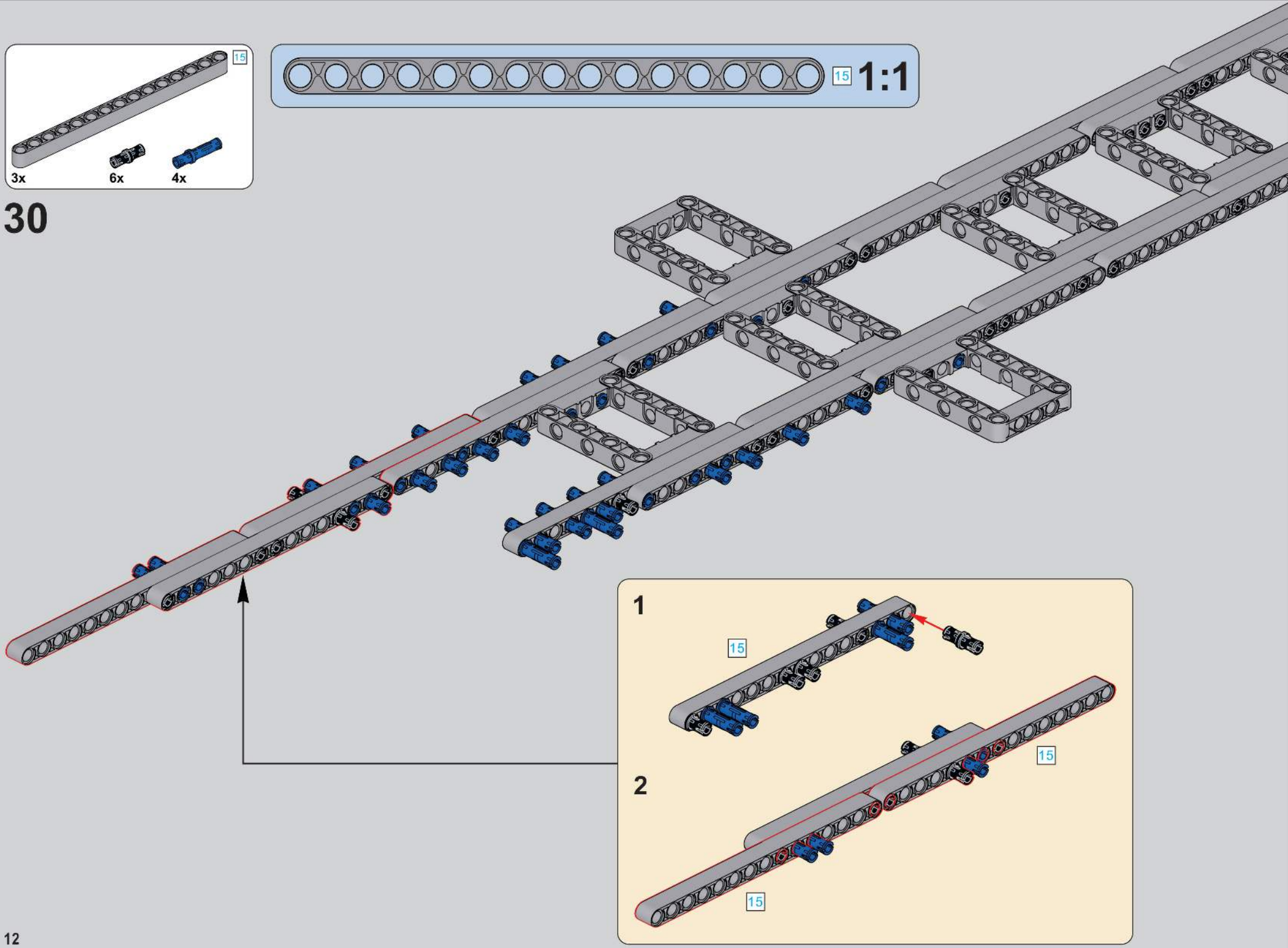

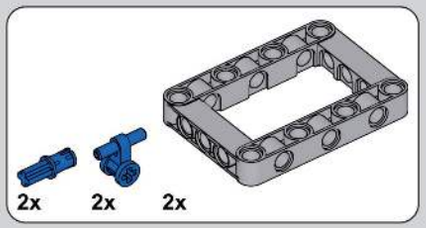

31

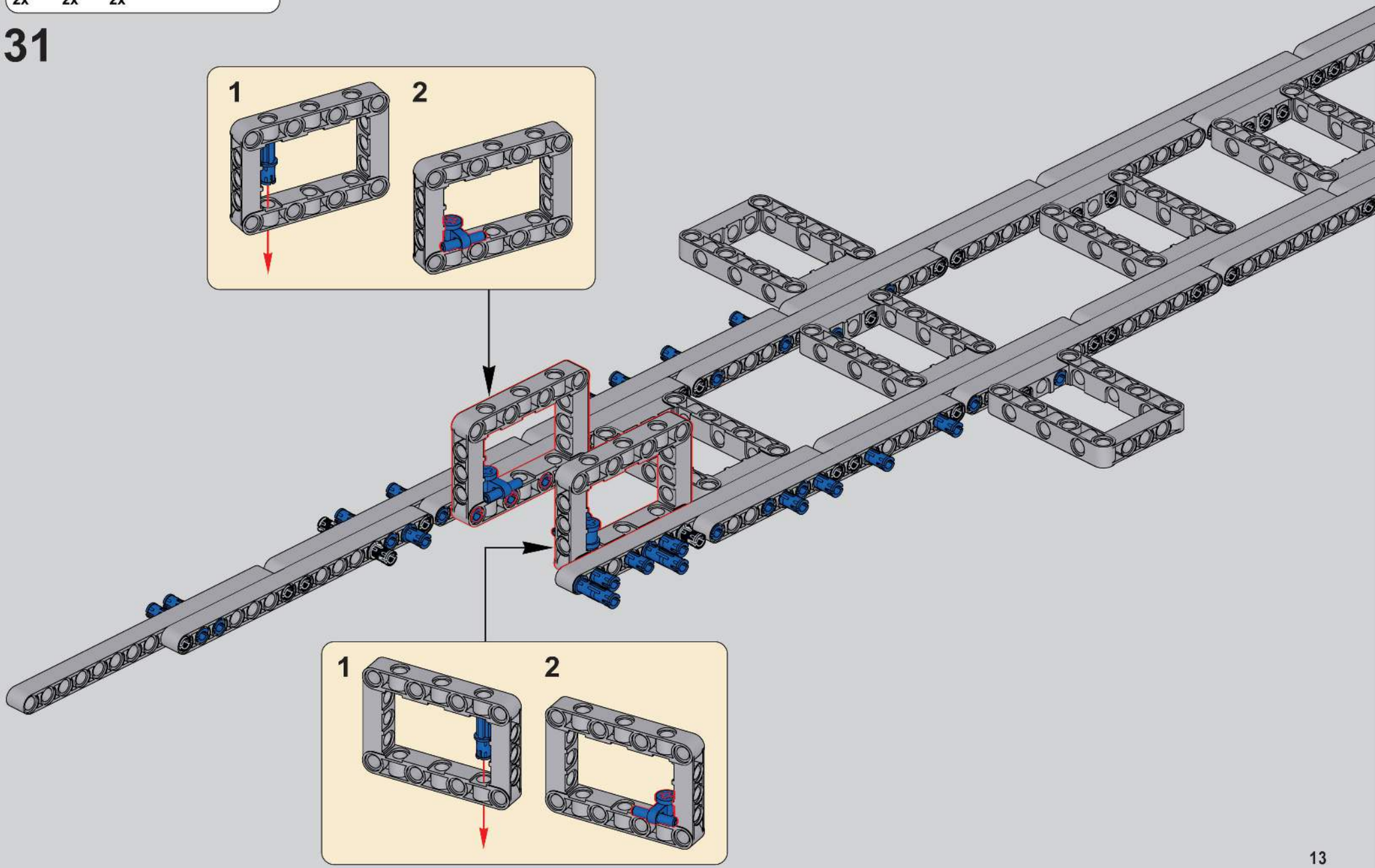

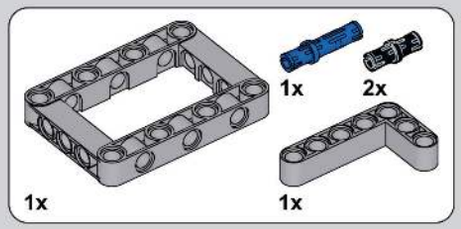

32

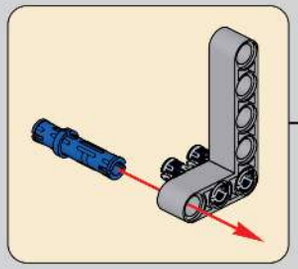

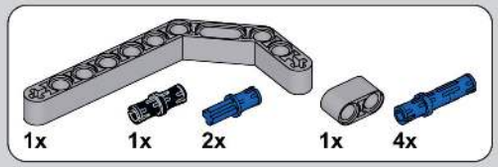

33

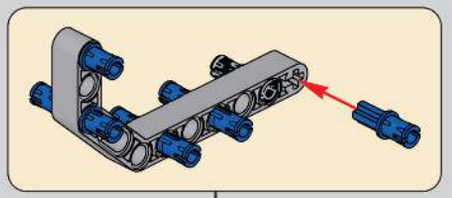

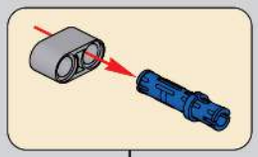

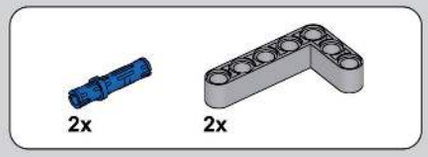

34

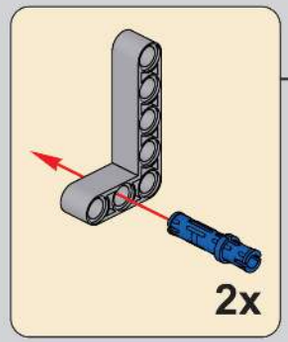

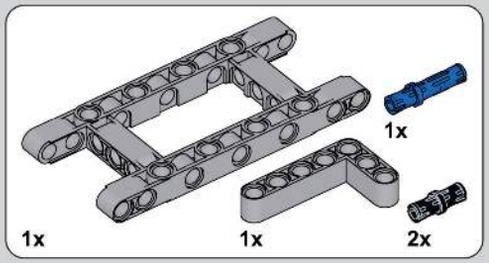

35

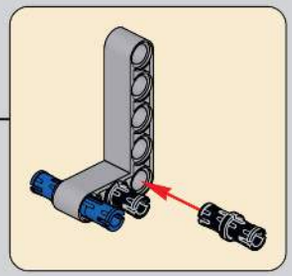

36

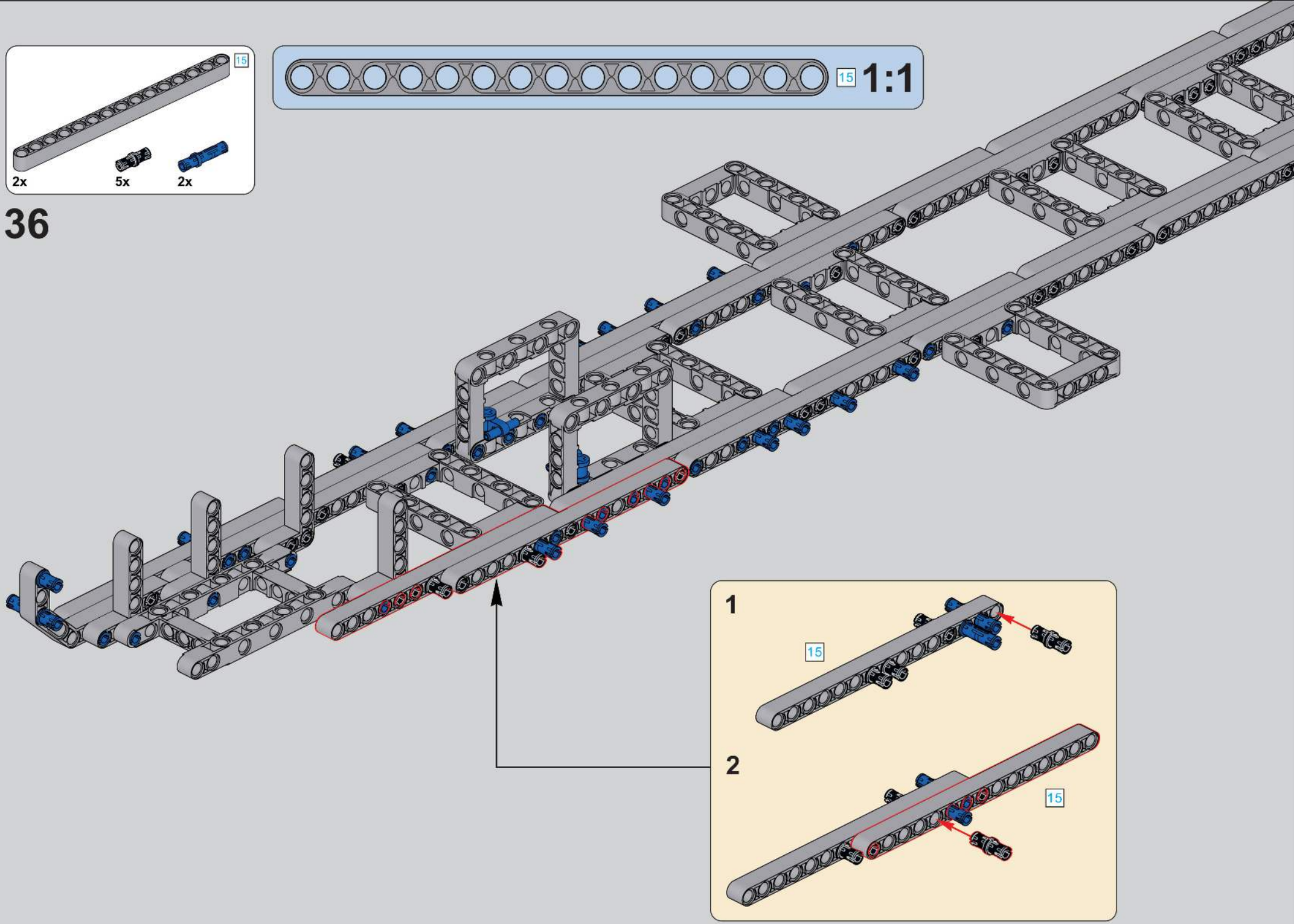

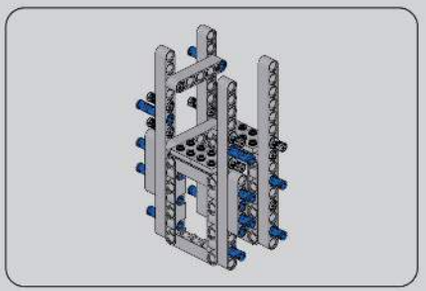

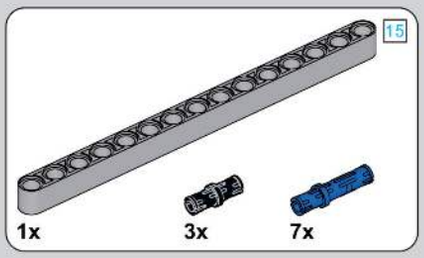

37

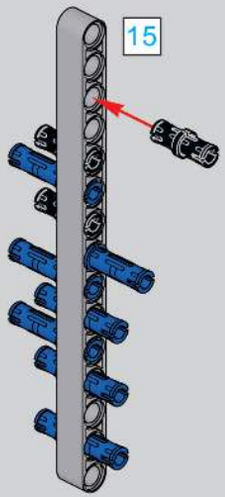

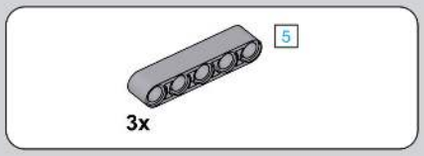

38

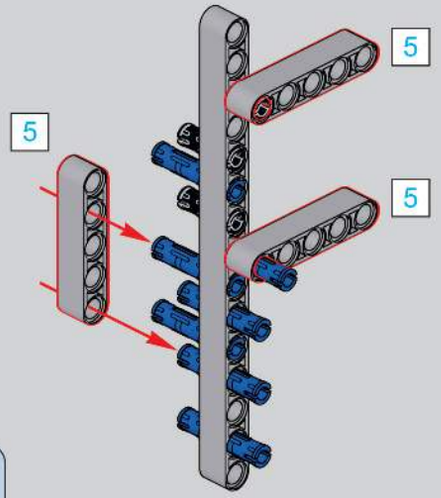

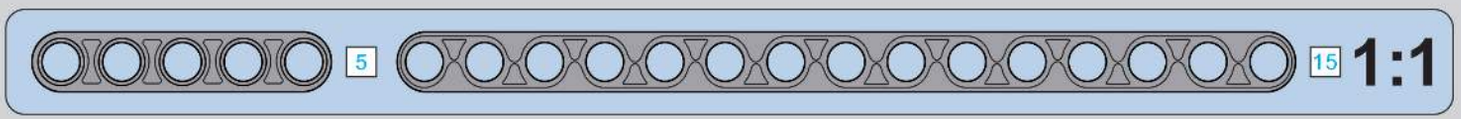

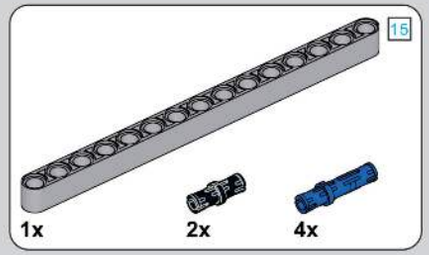

39

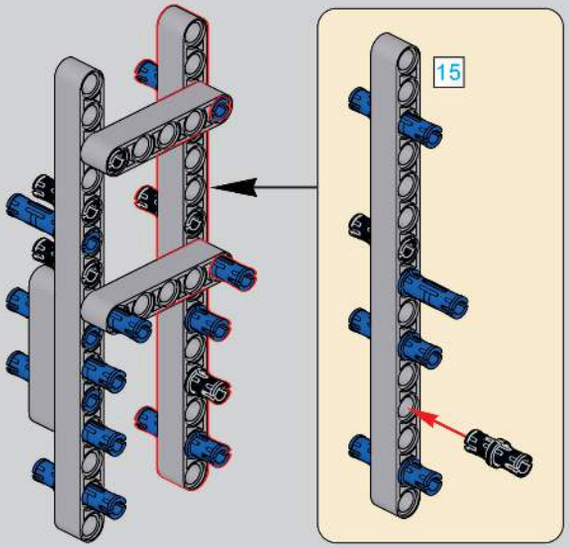

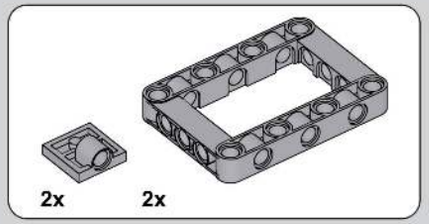

40

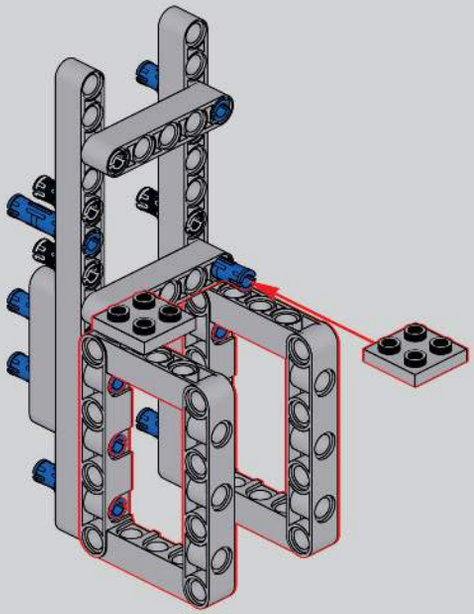

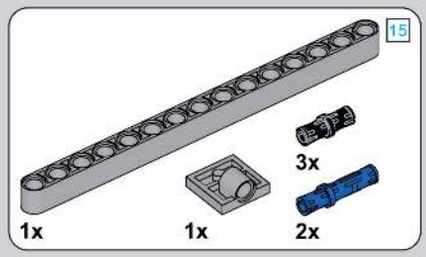

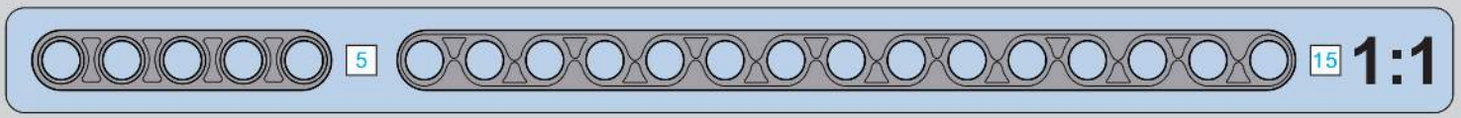

41

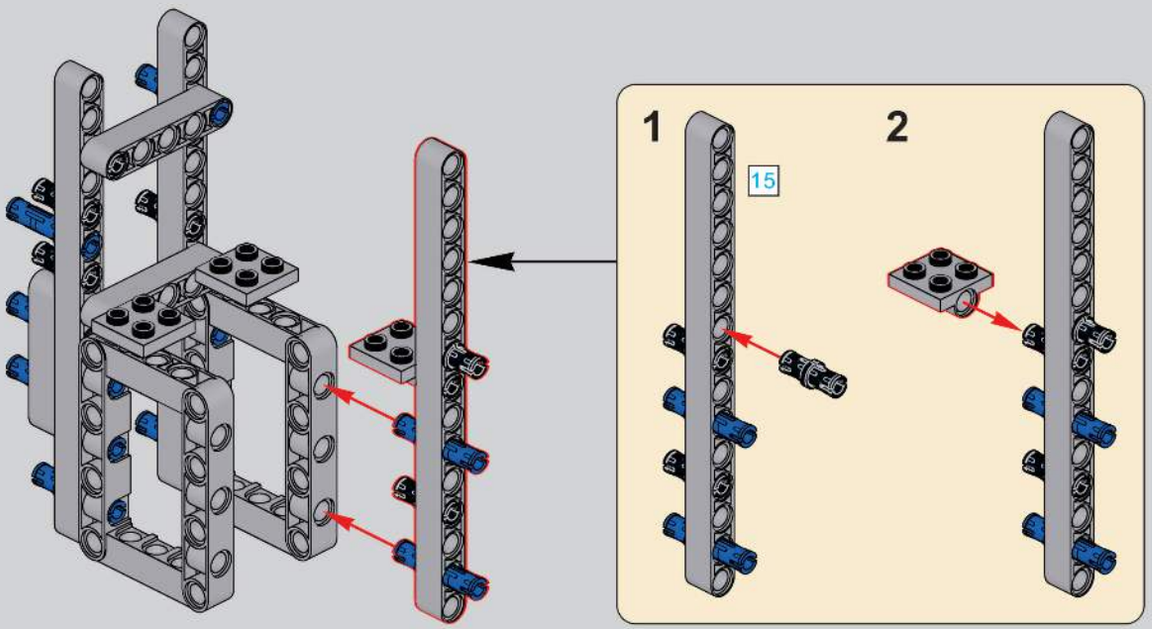

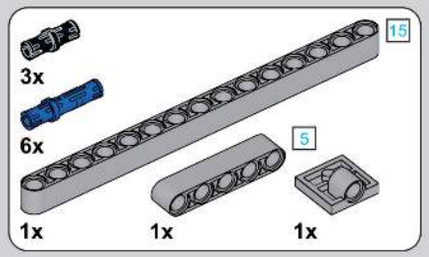

42

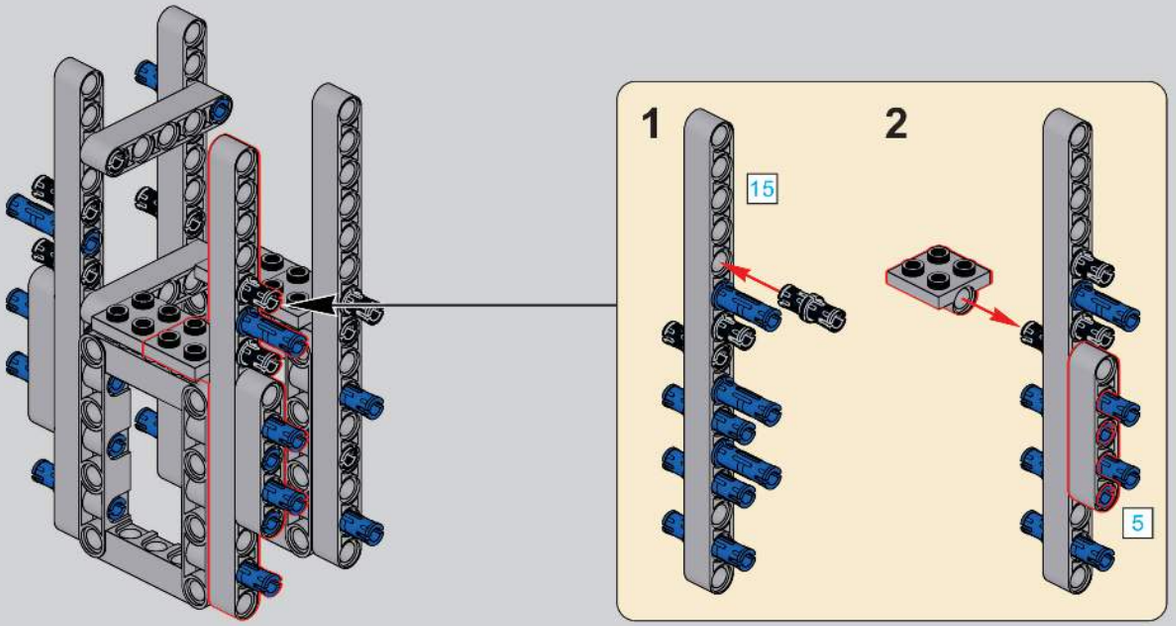

43

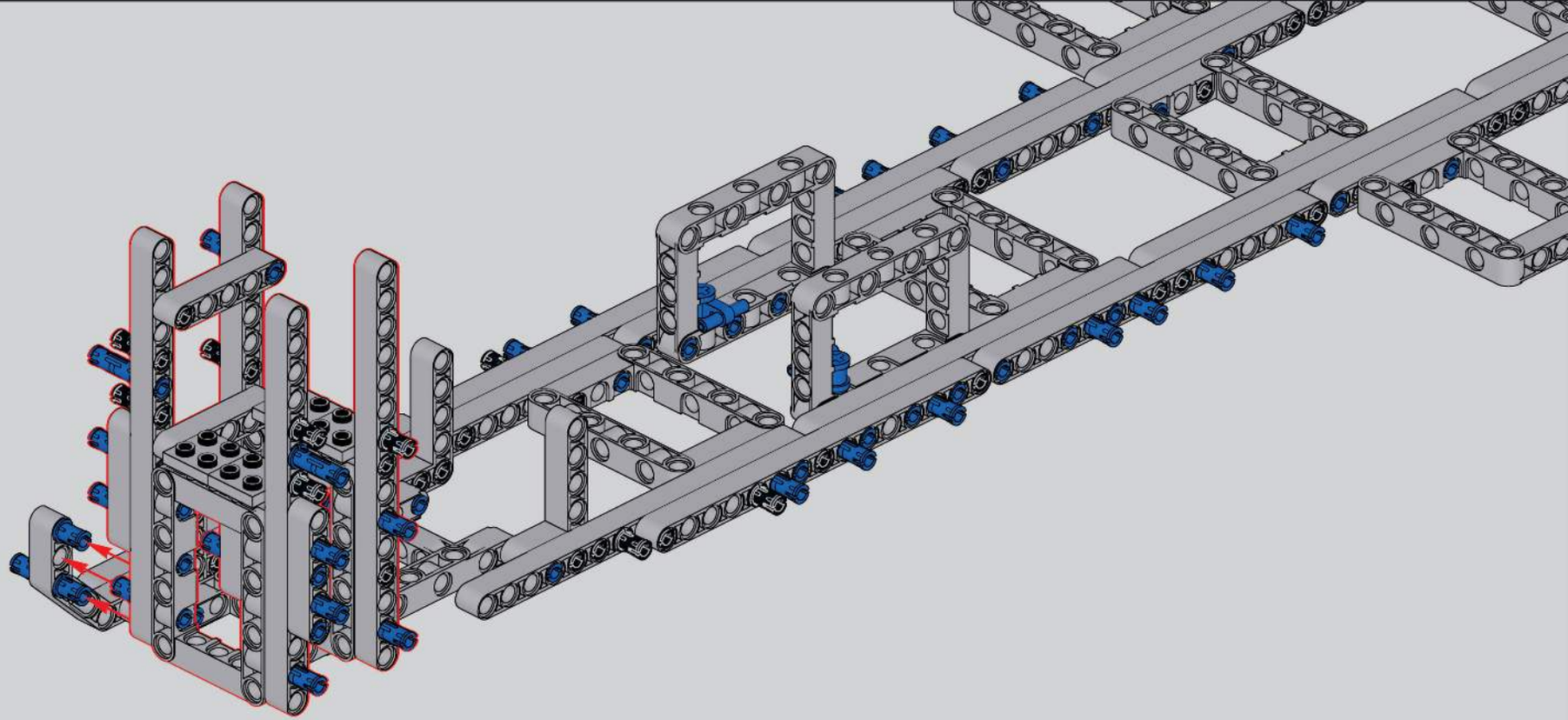

44

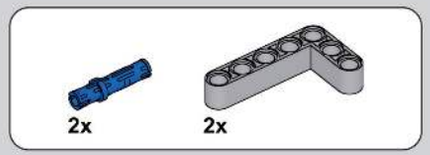

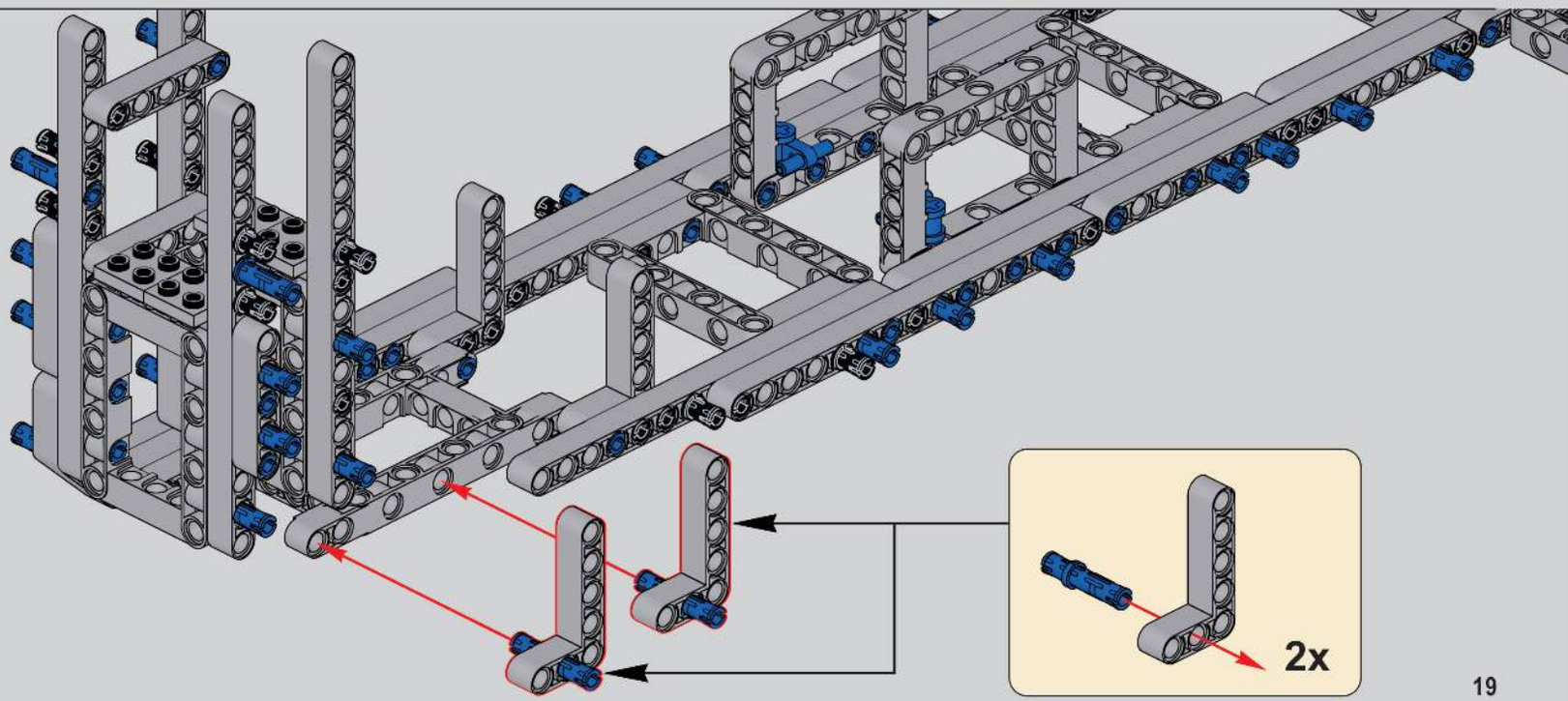

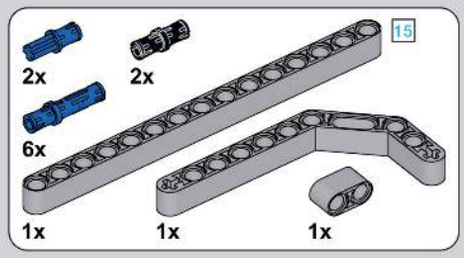

45

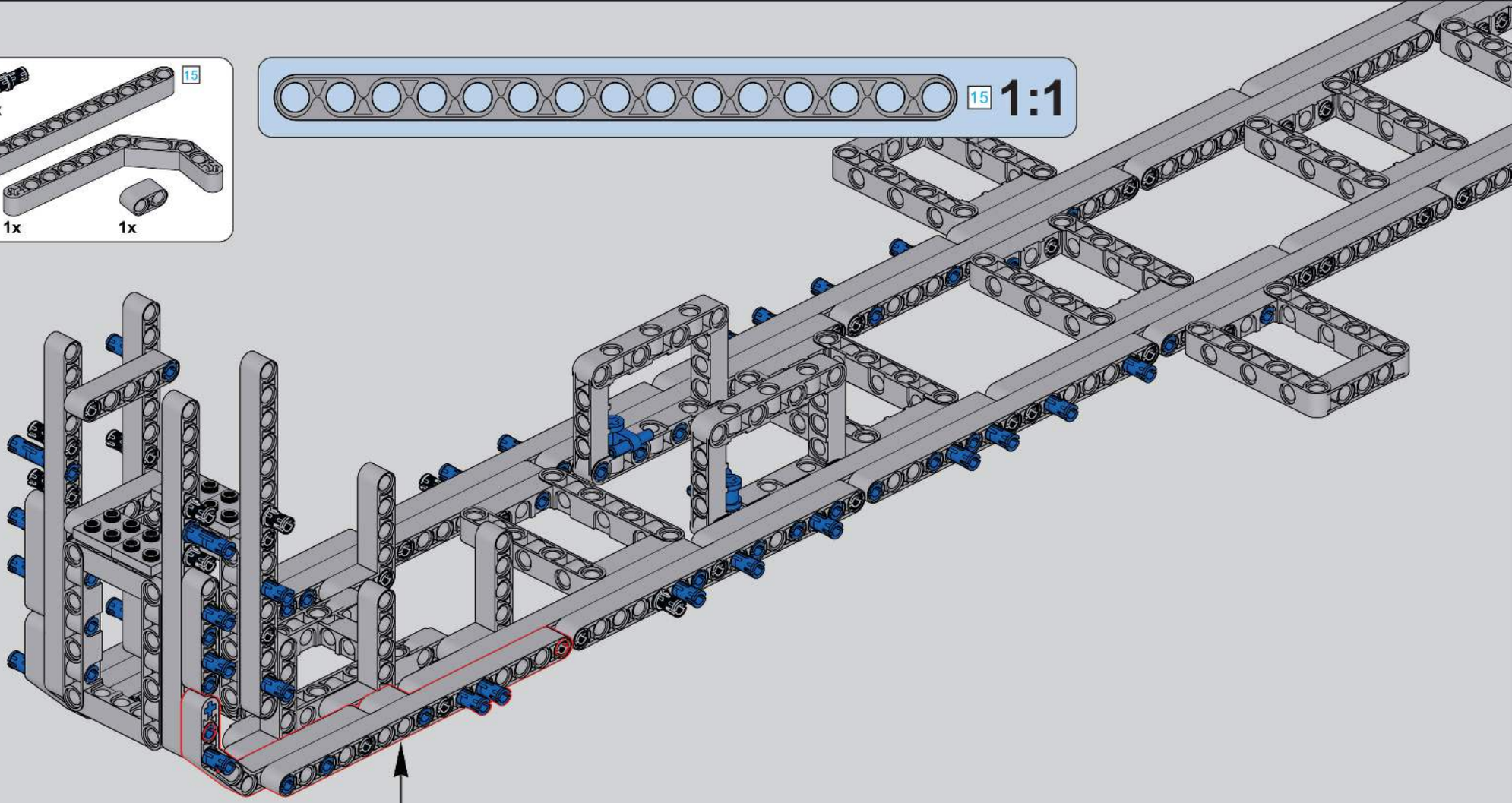

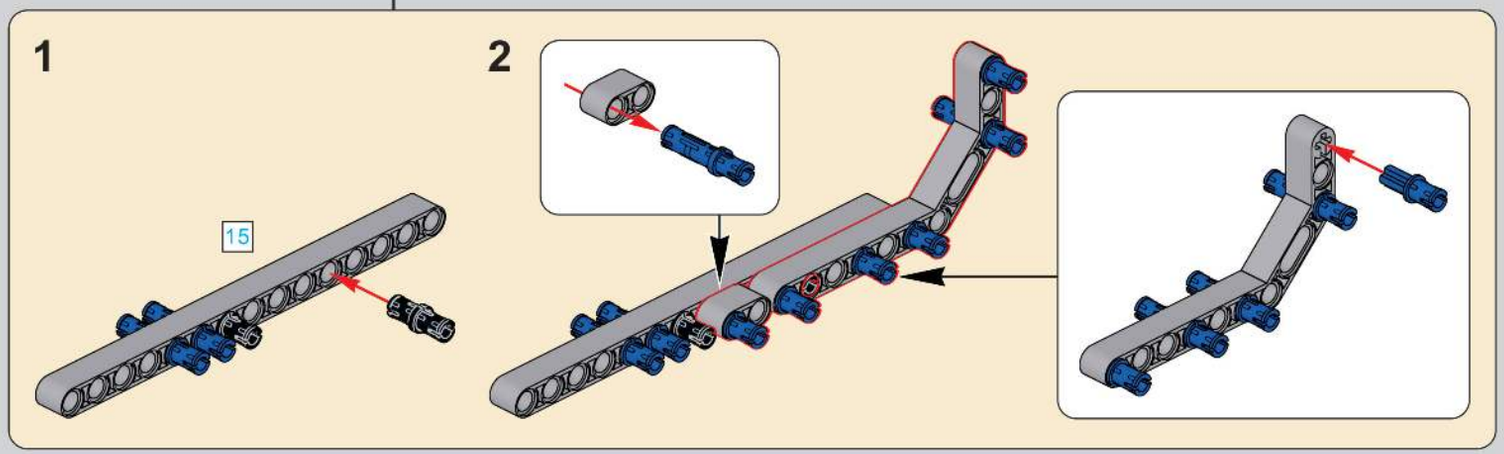

46

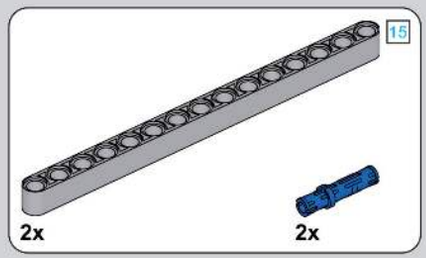

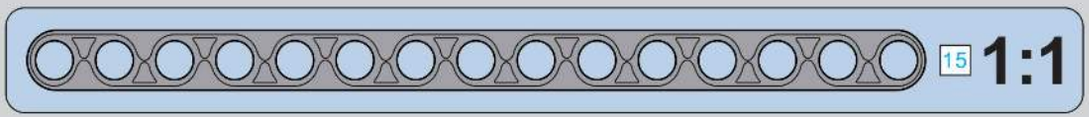

47

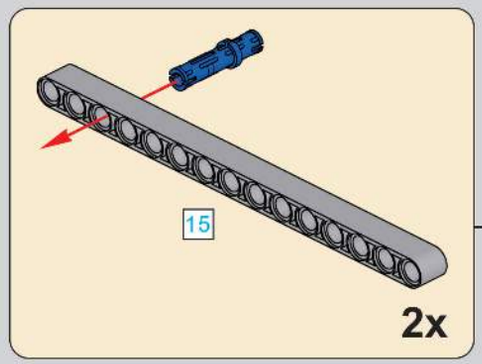

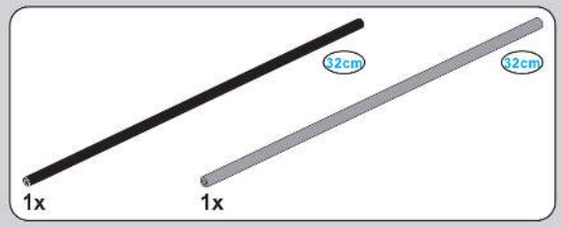

48

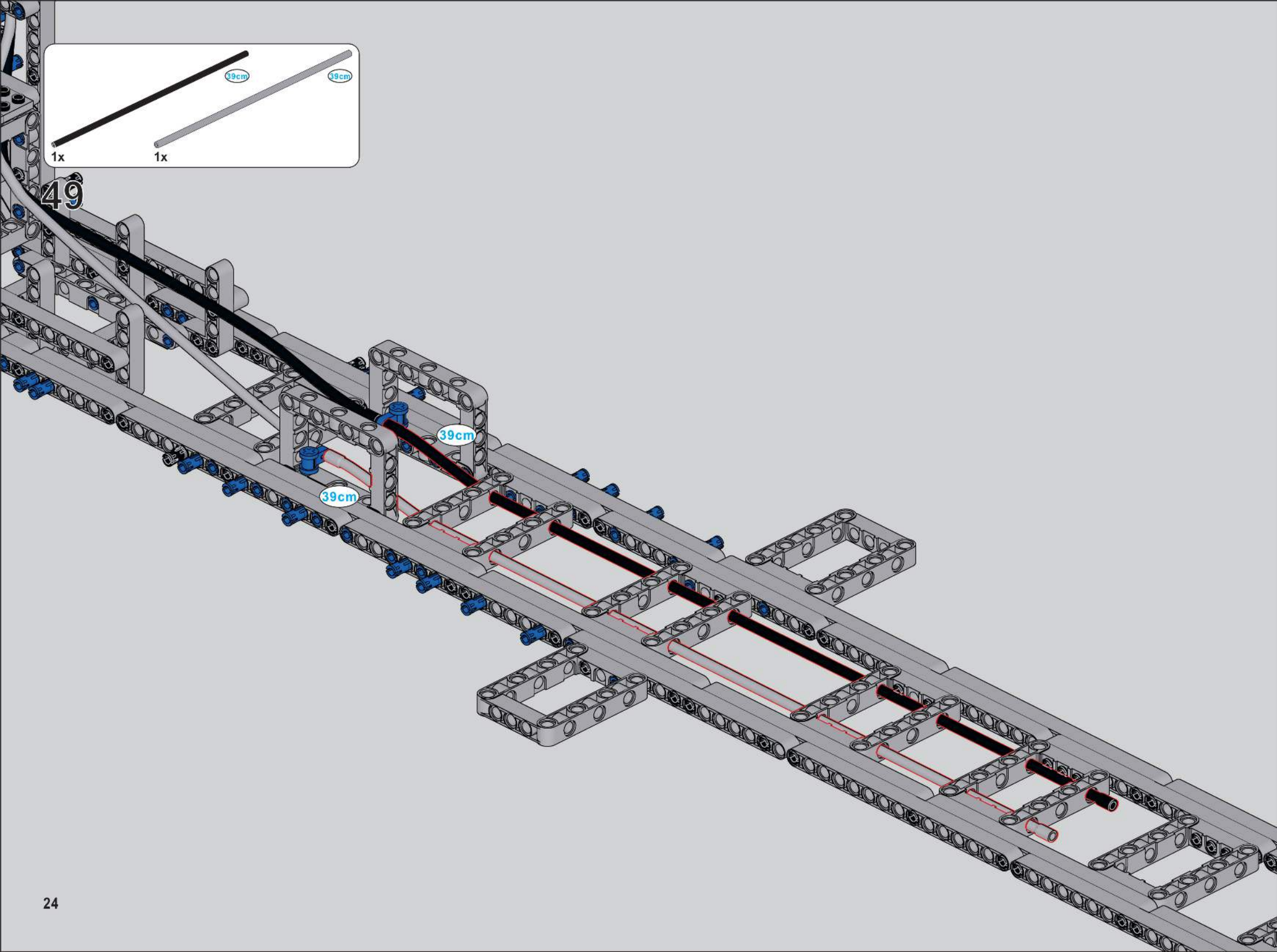
39cm
39cm
1x
1x
49
39cm
39cm

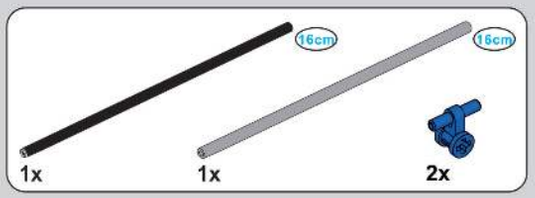

50

16cm

16cm

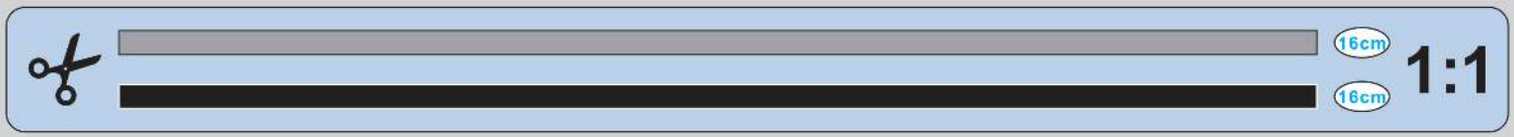

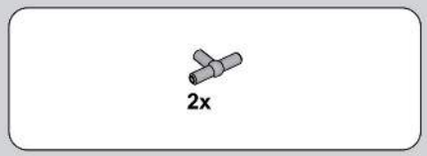

51

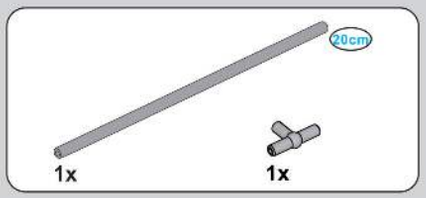

52

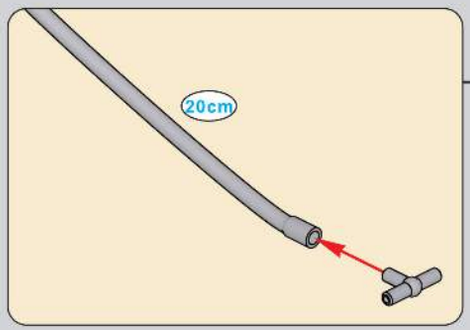

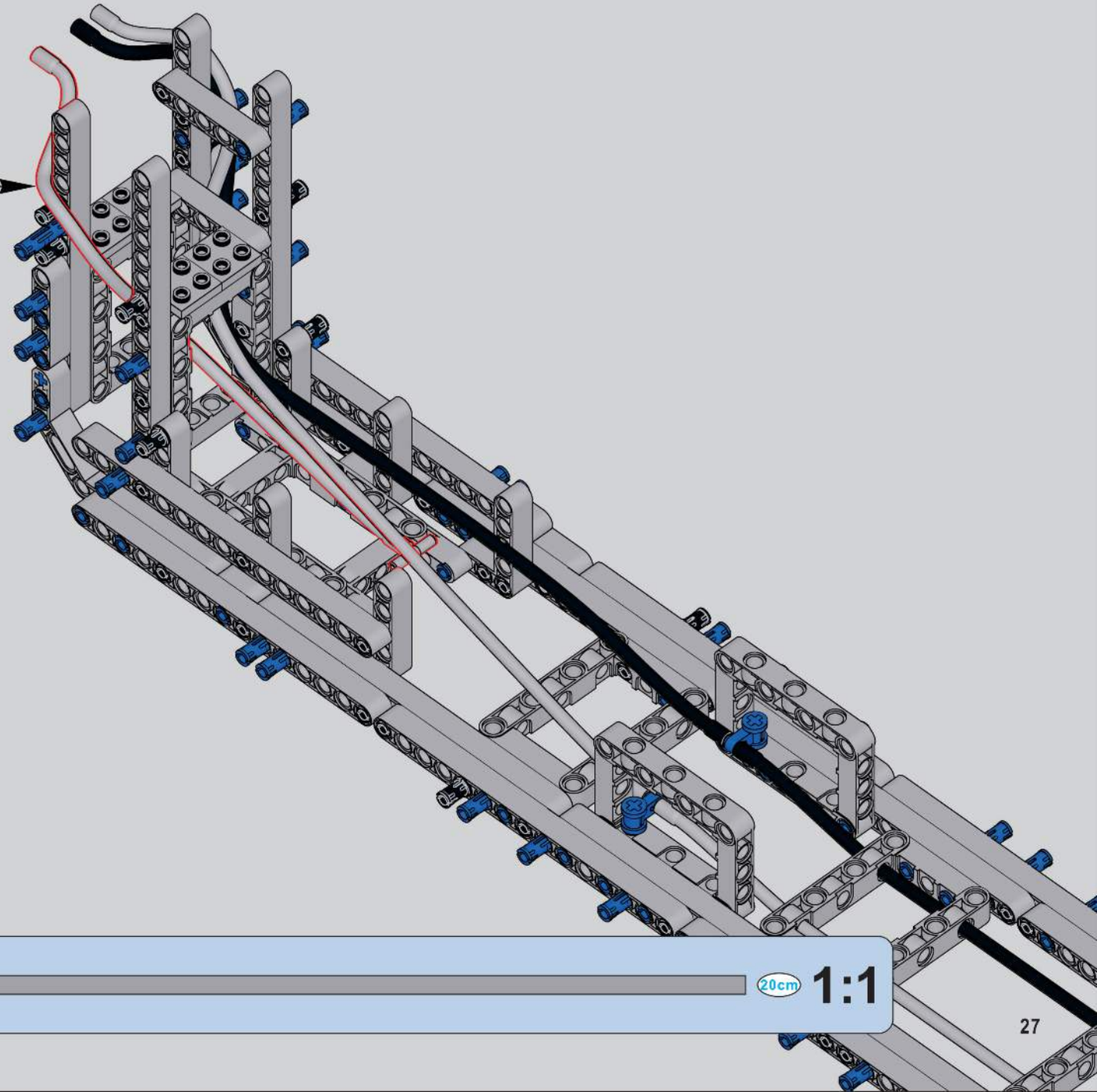

20cm 1:1

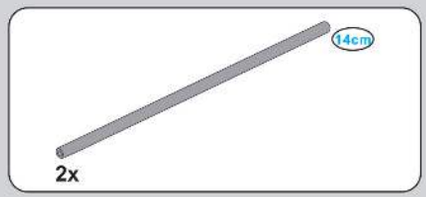

53

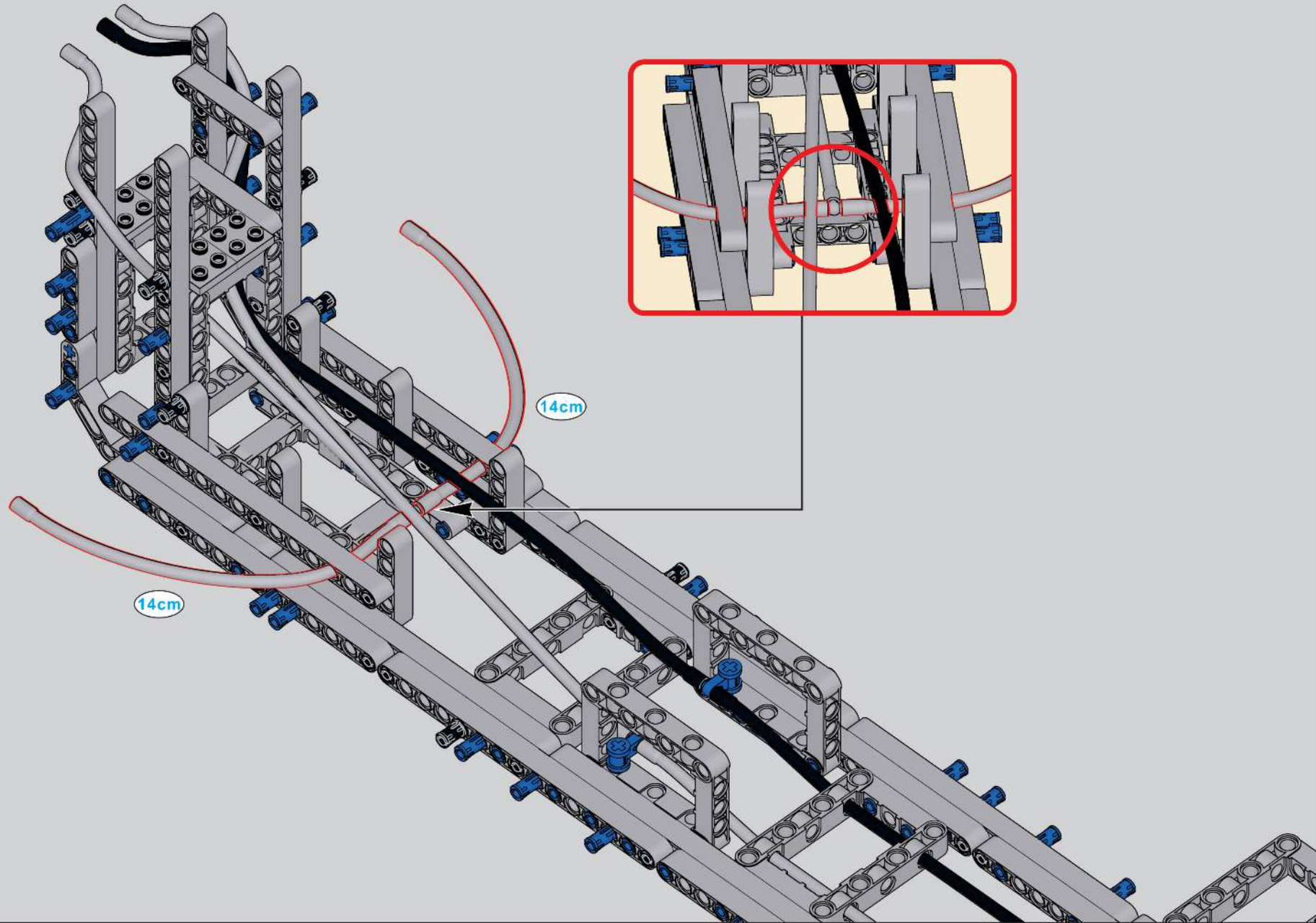

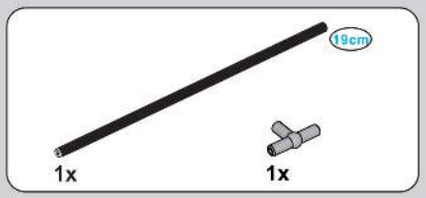

54

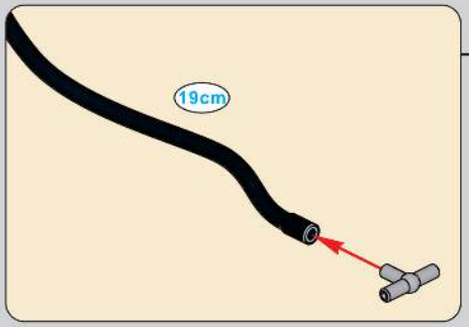

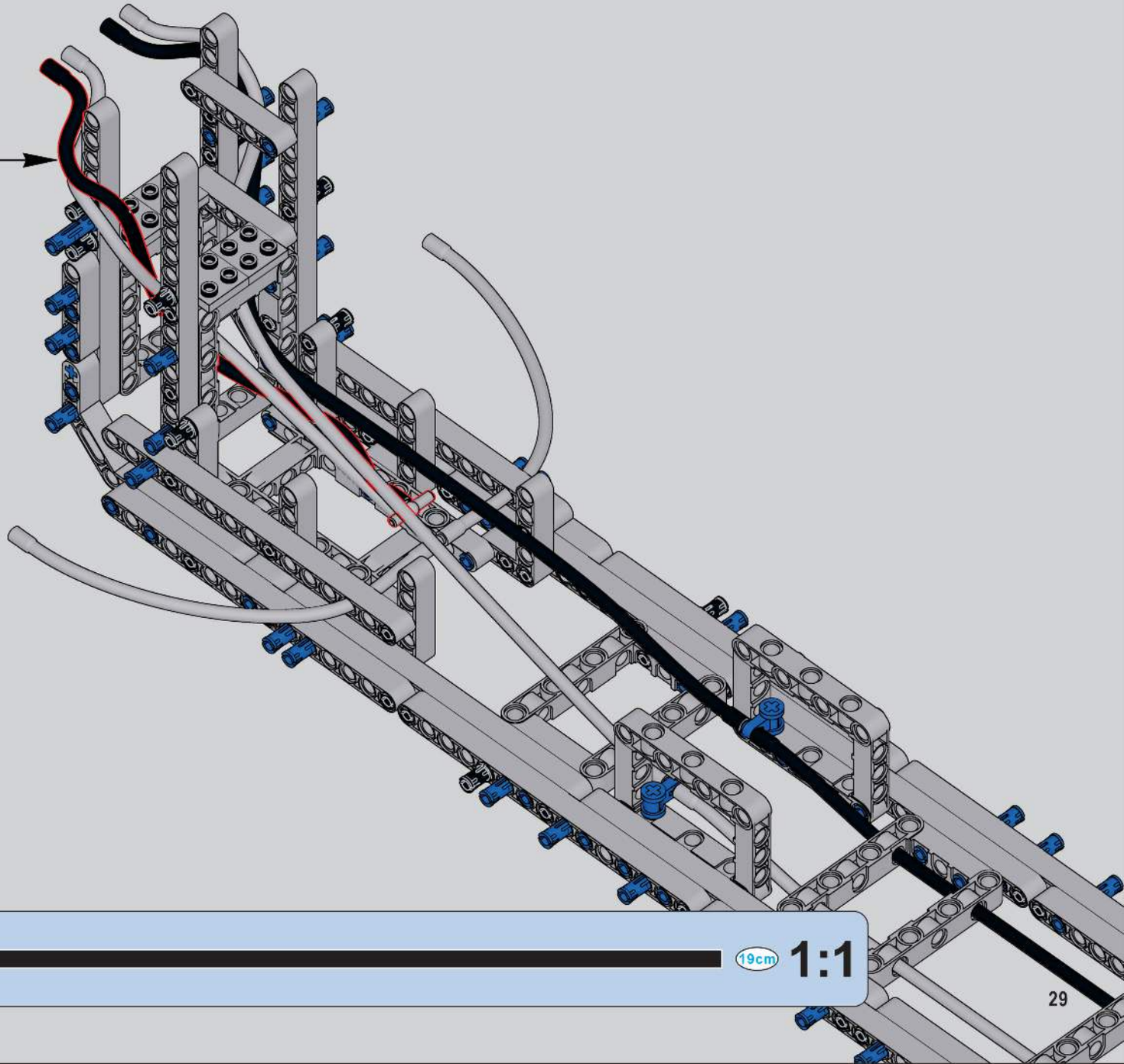

19cm 1:1

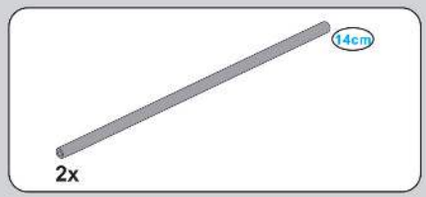

55

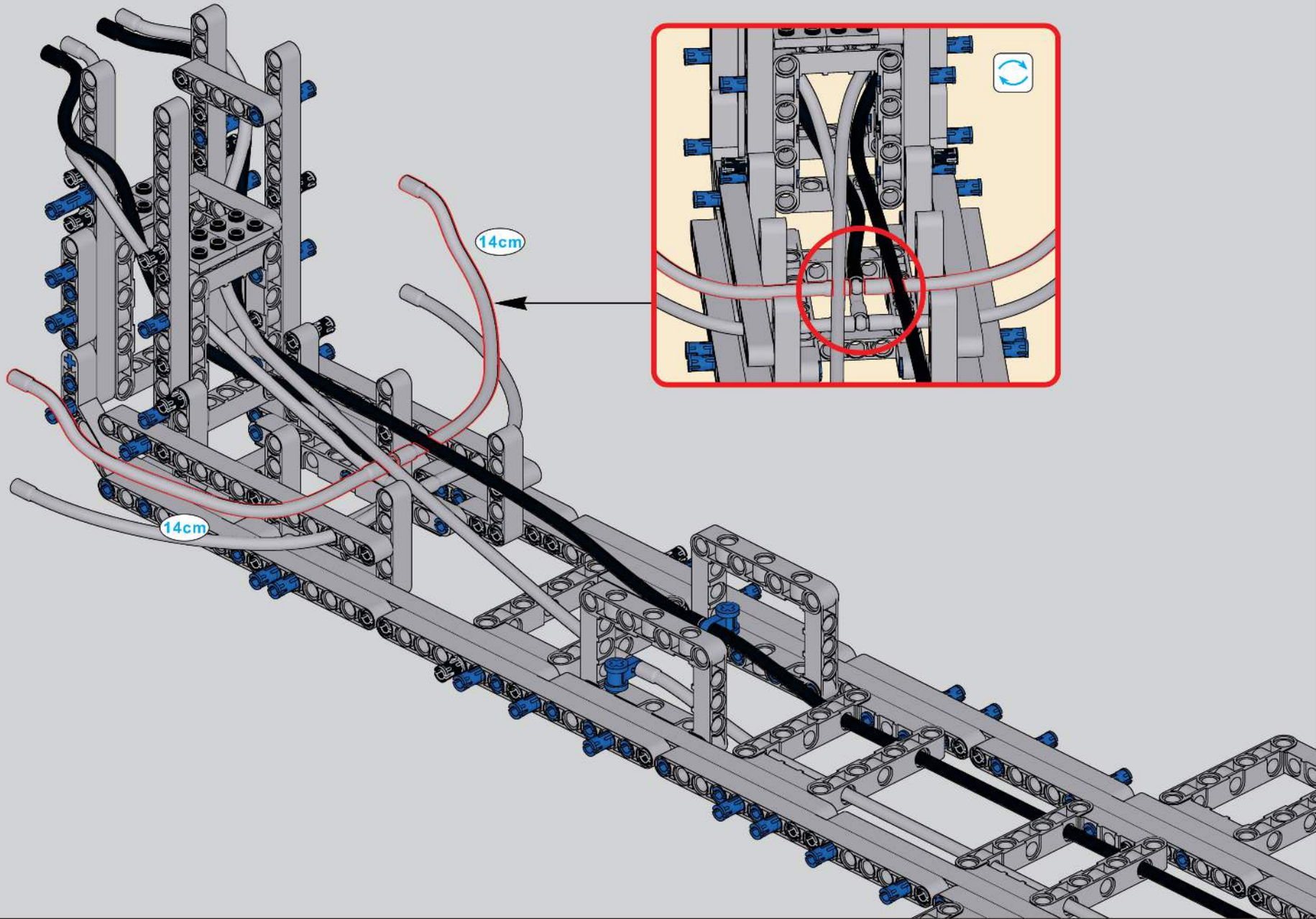

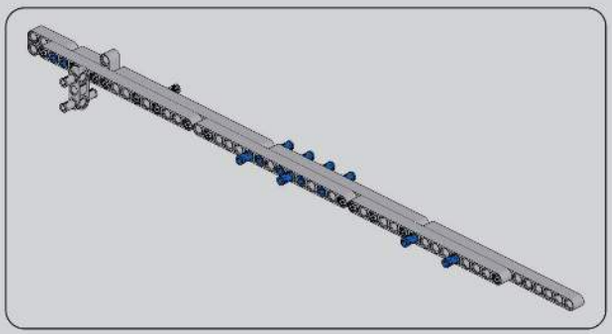

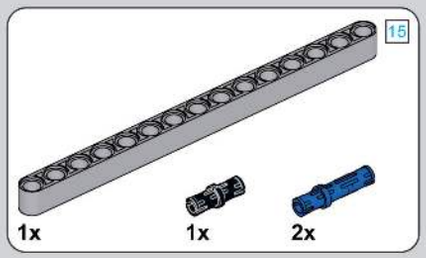

56

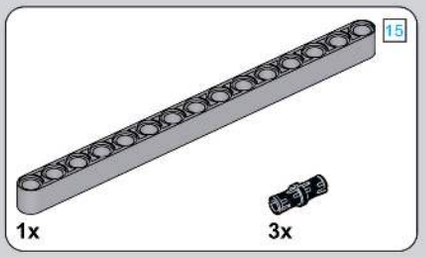

57

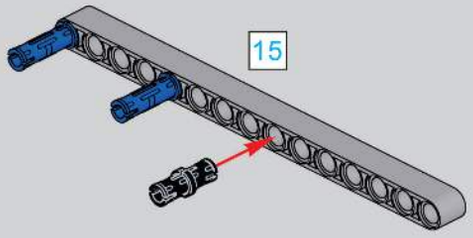

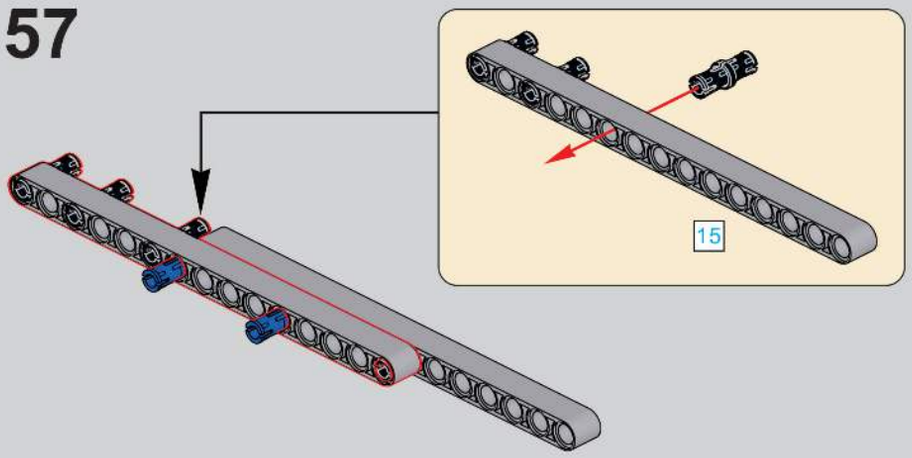

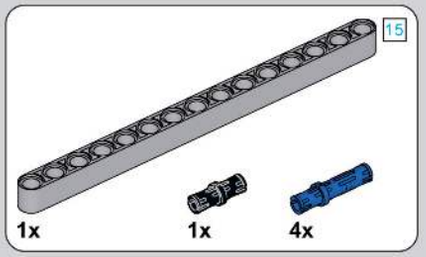

58

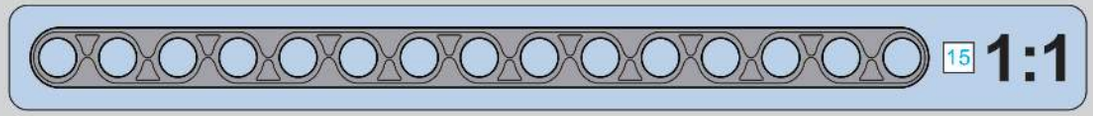

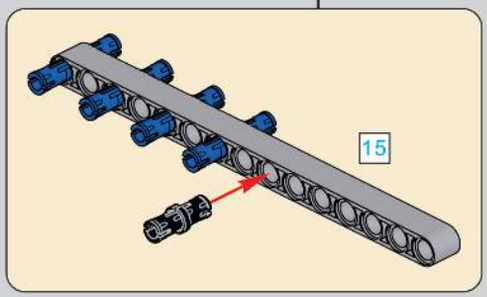

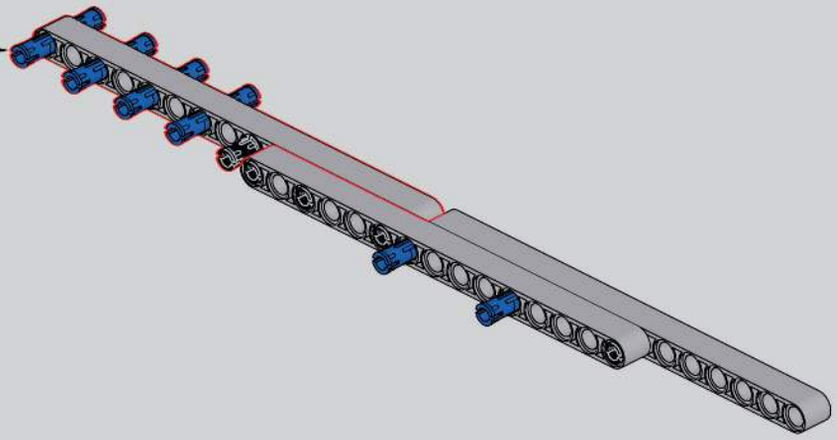

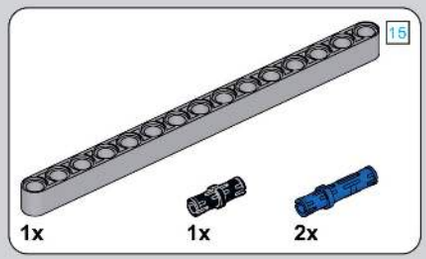

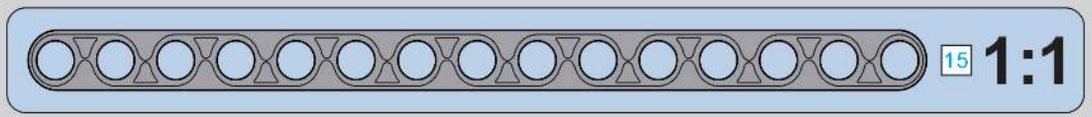

59

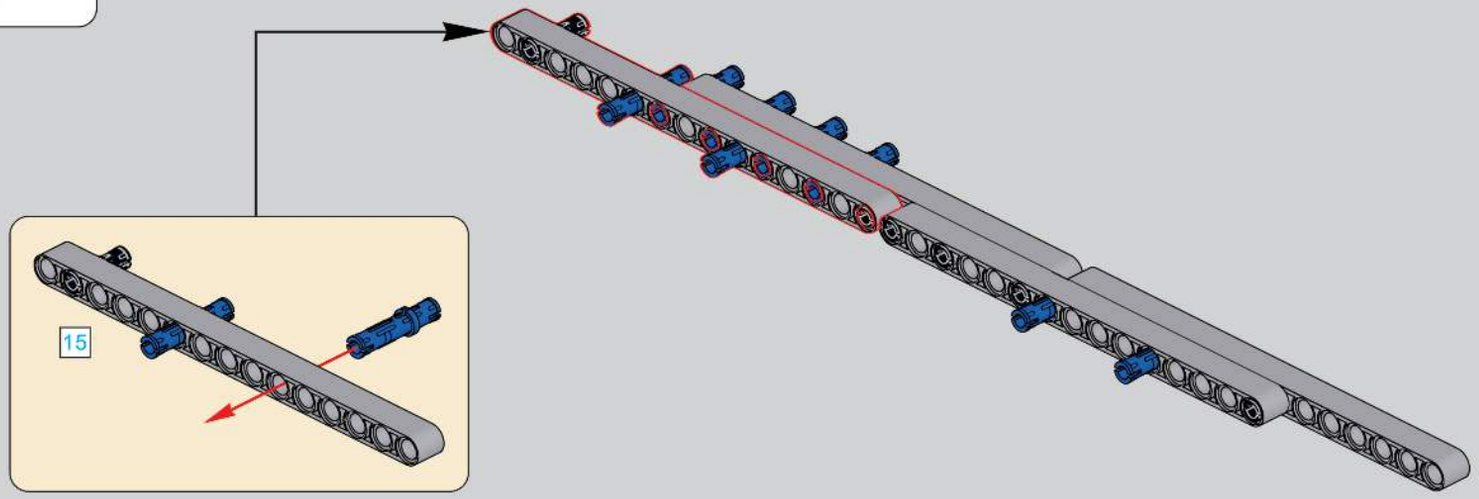

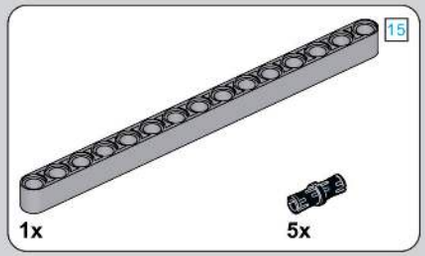

60

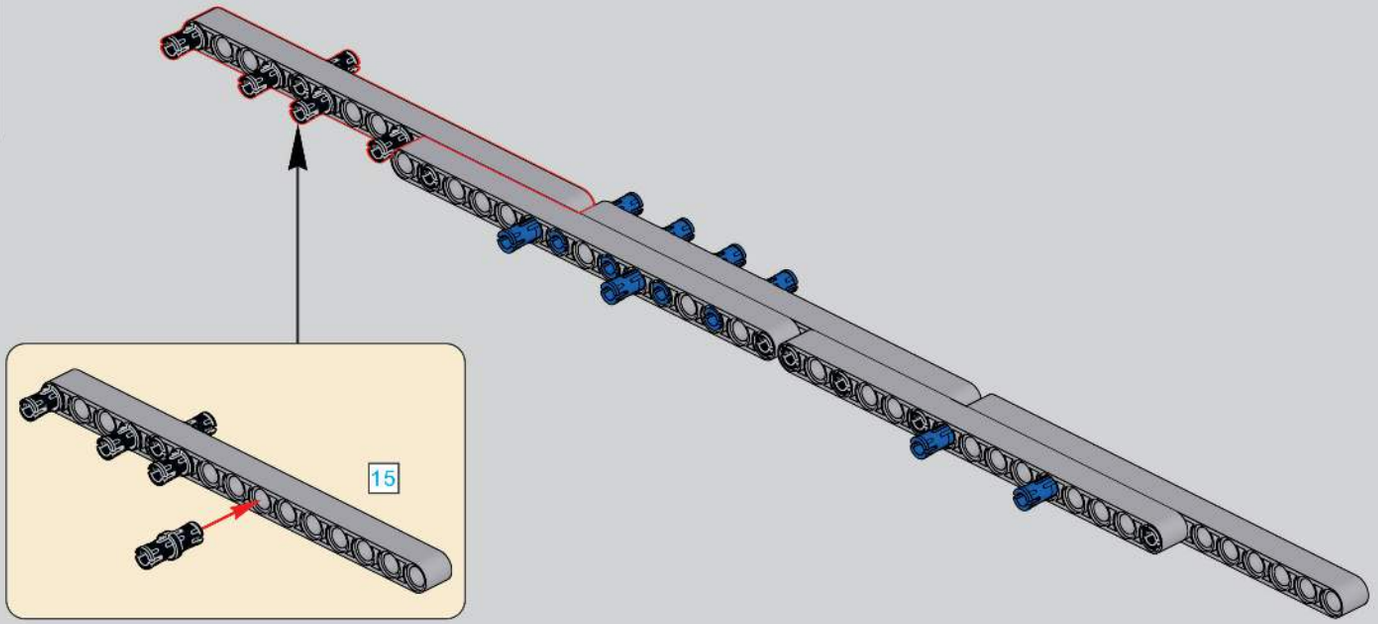

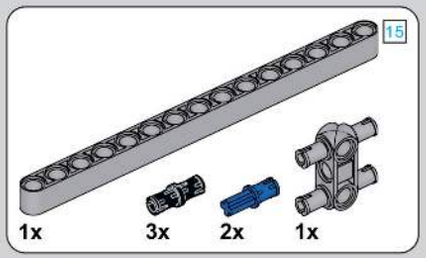

61

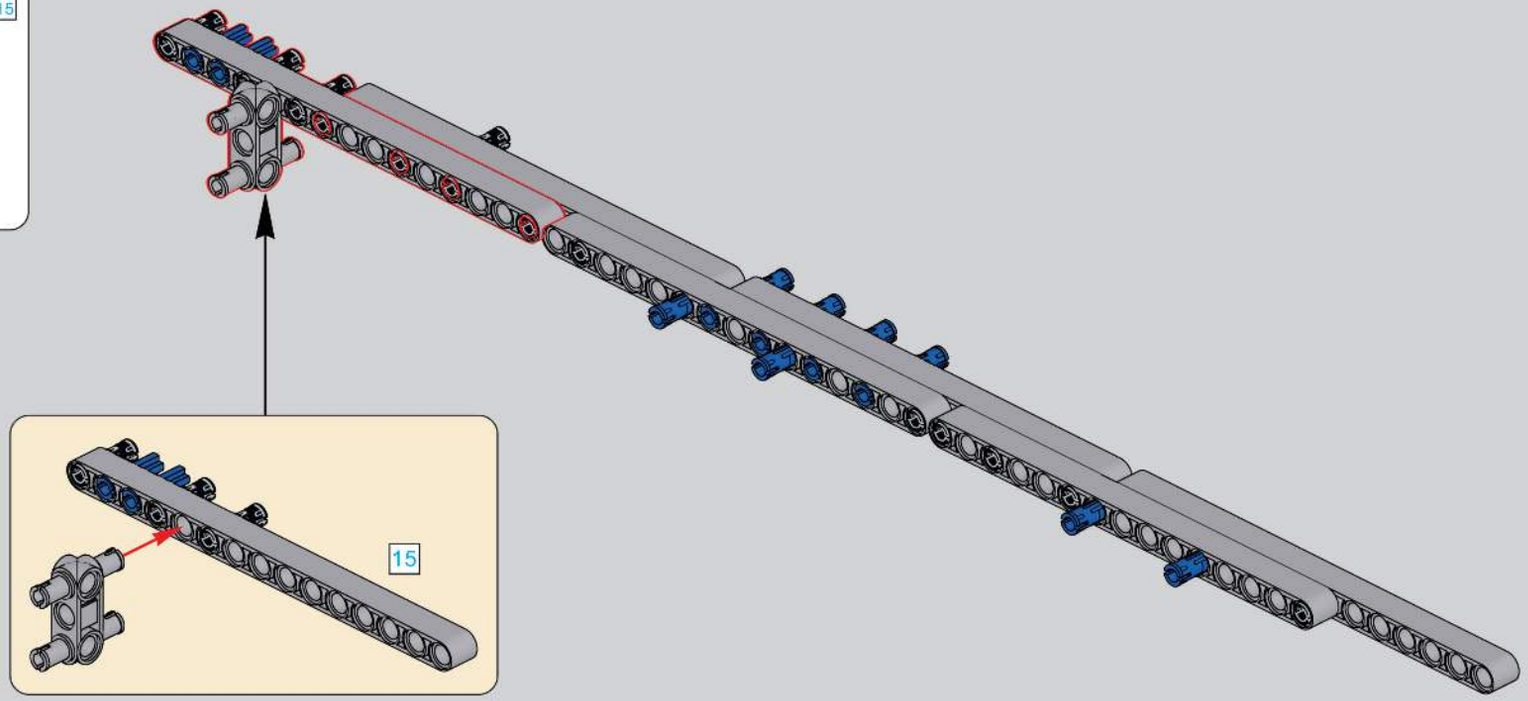

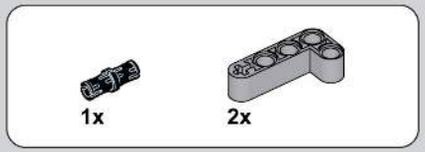

62

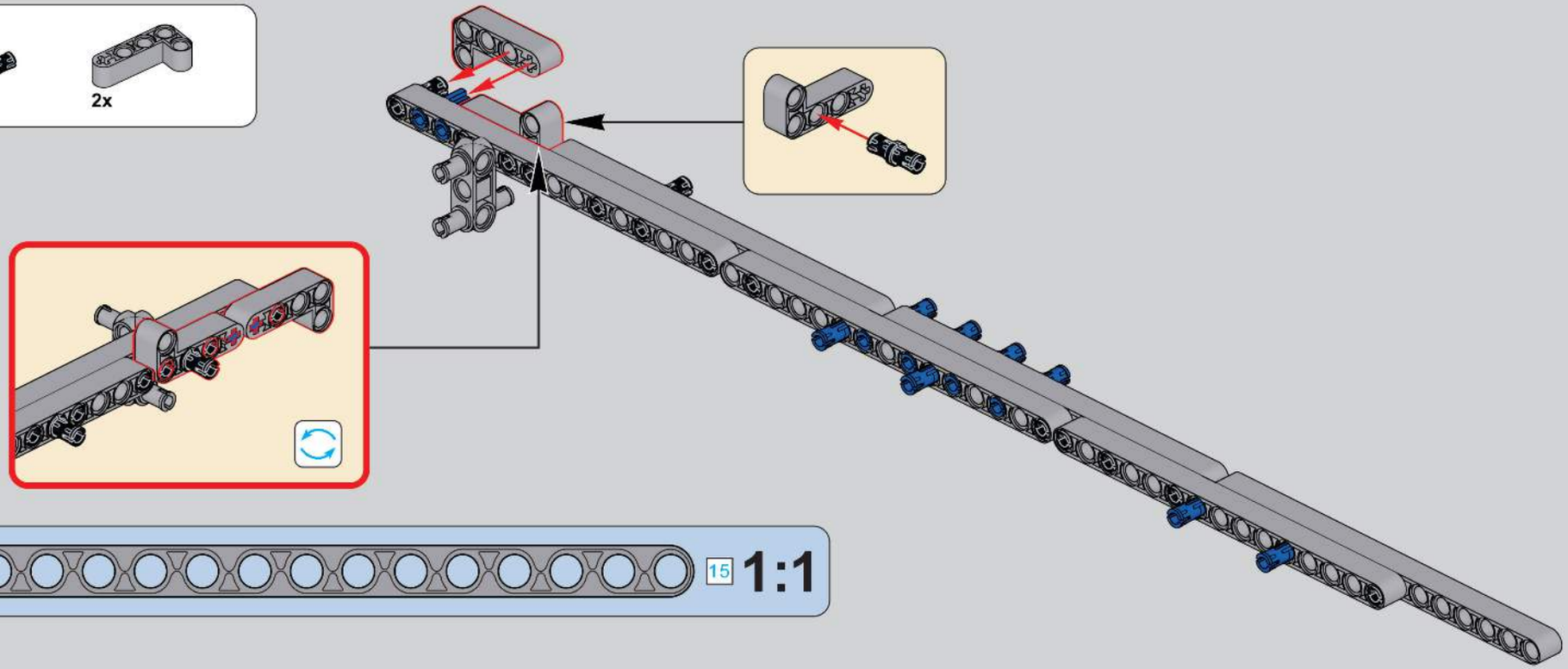

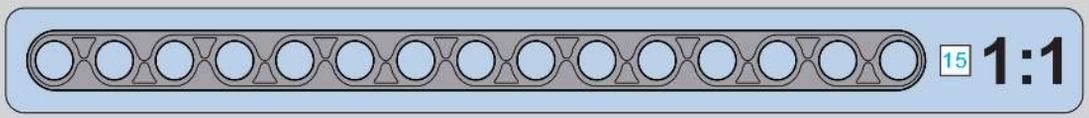

63

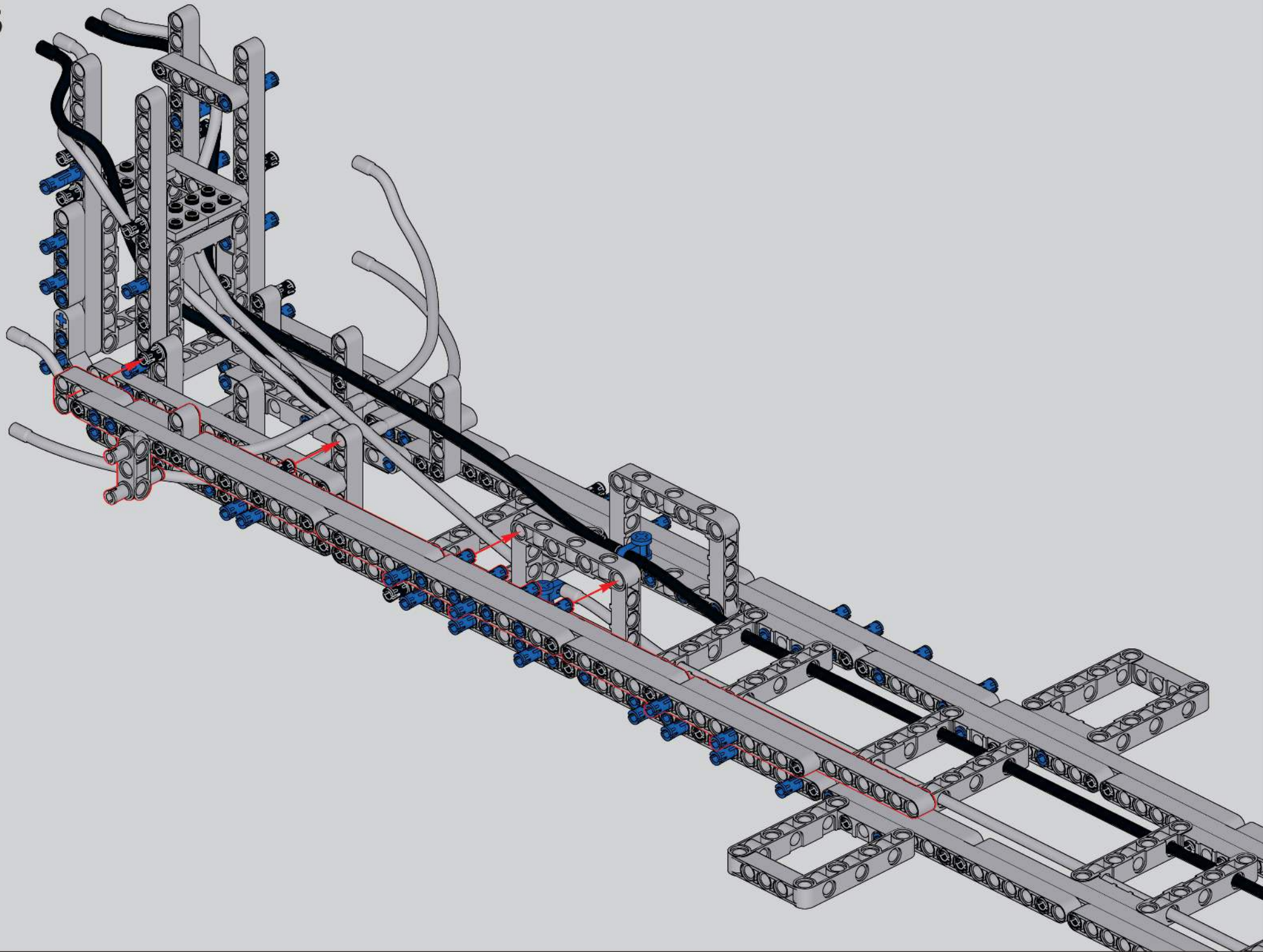

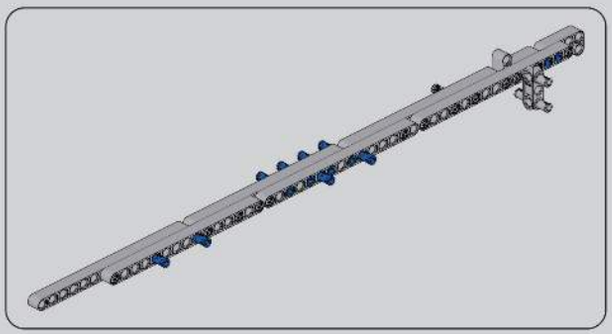

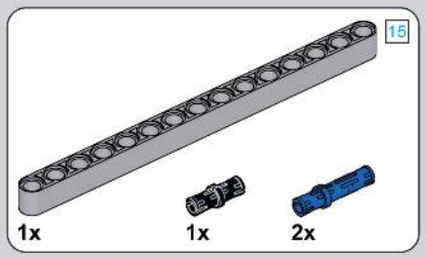

64

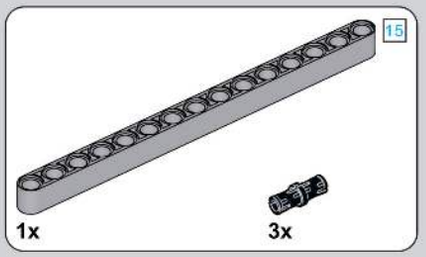

65

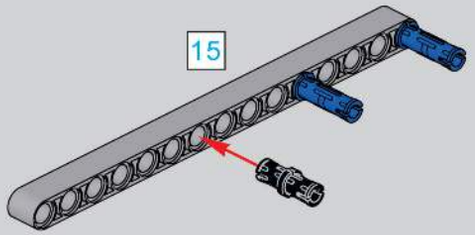

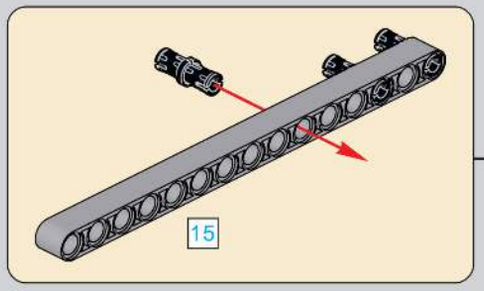

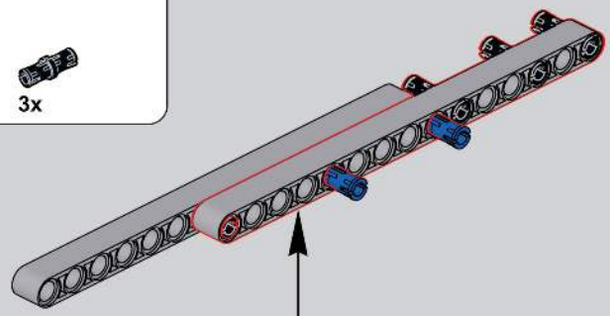

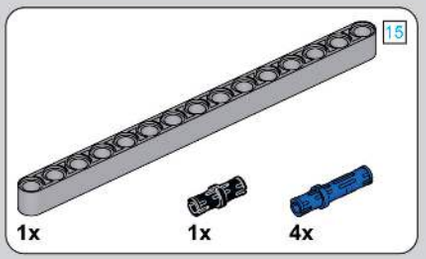

66

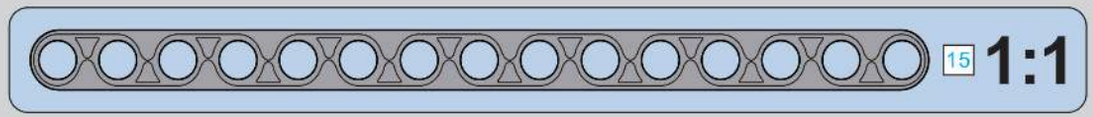

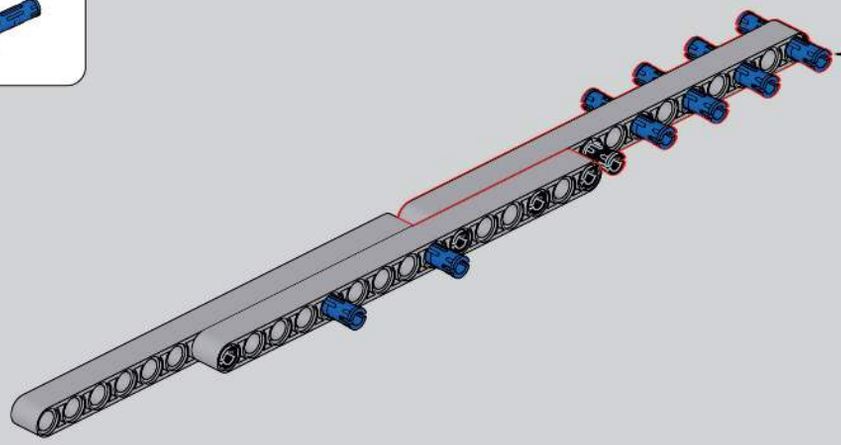

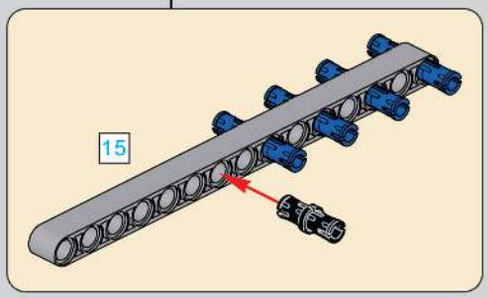

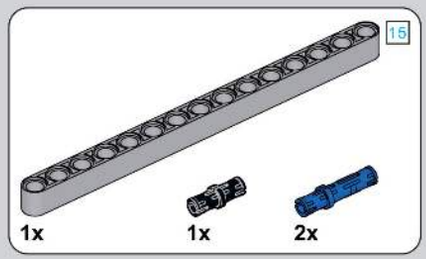

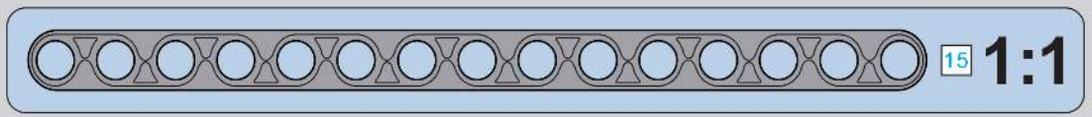

67

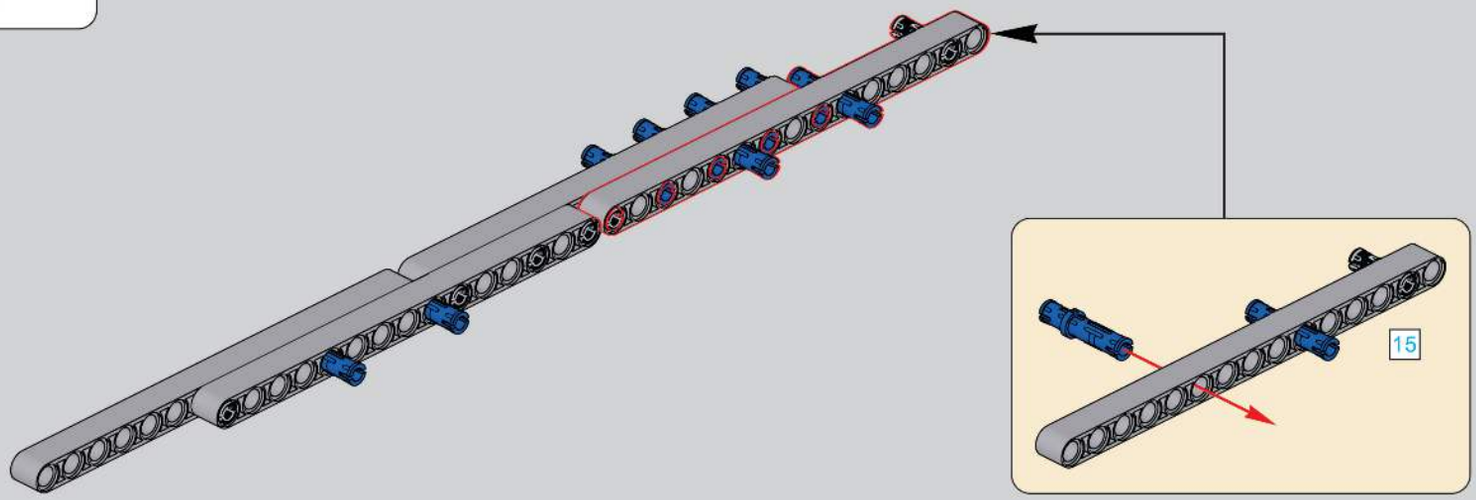

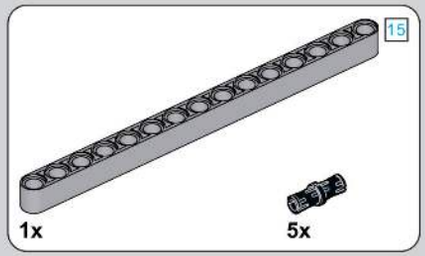

68

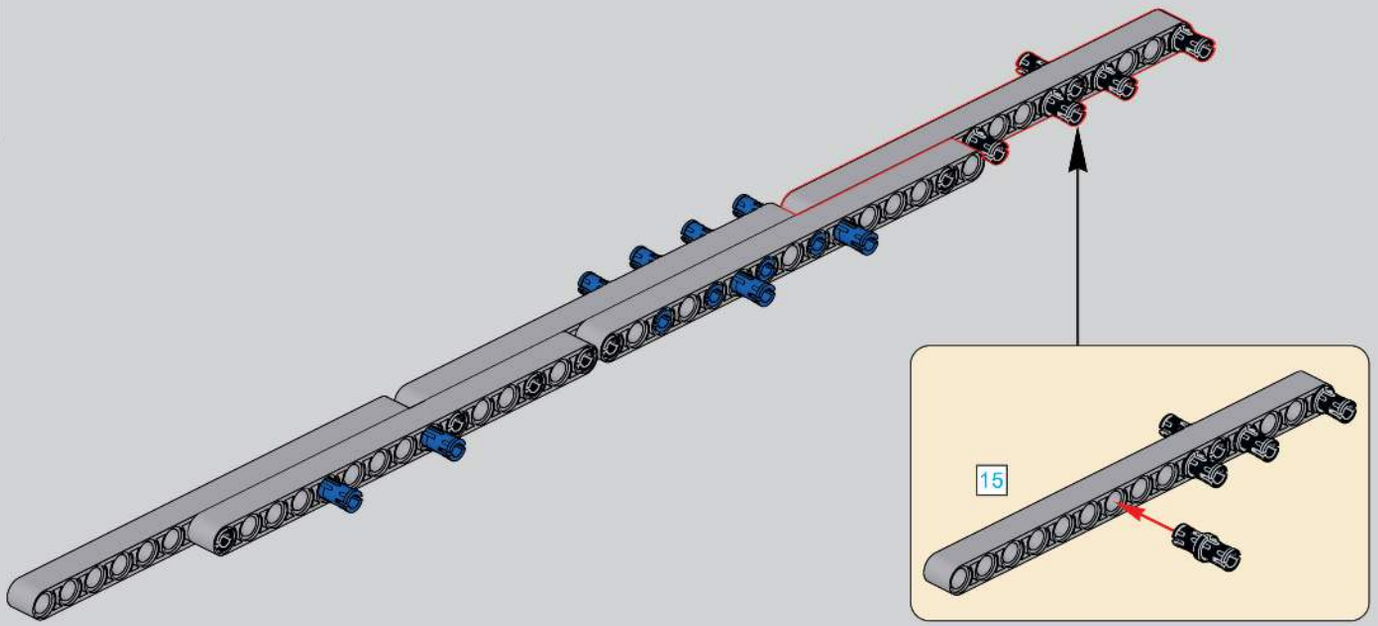

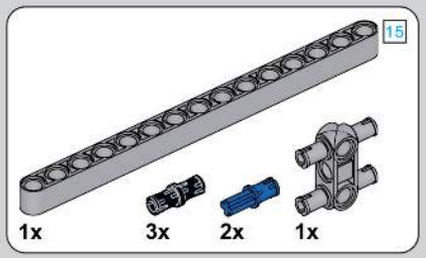

69

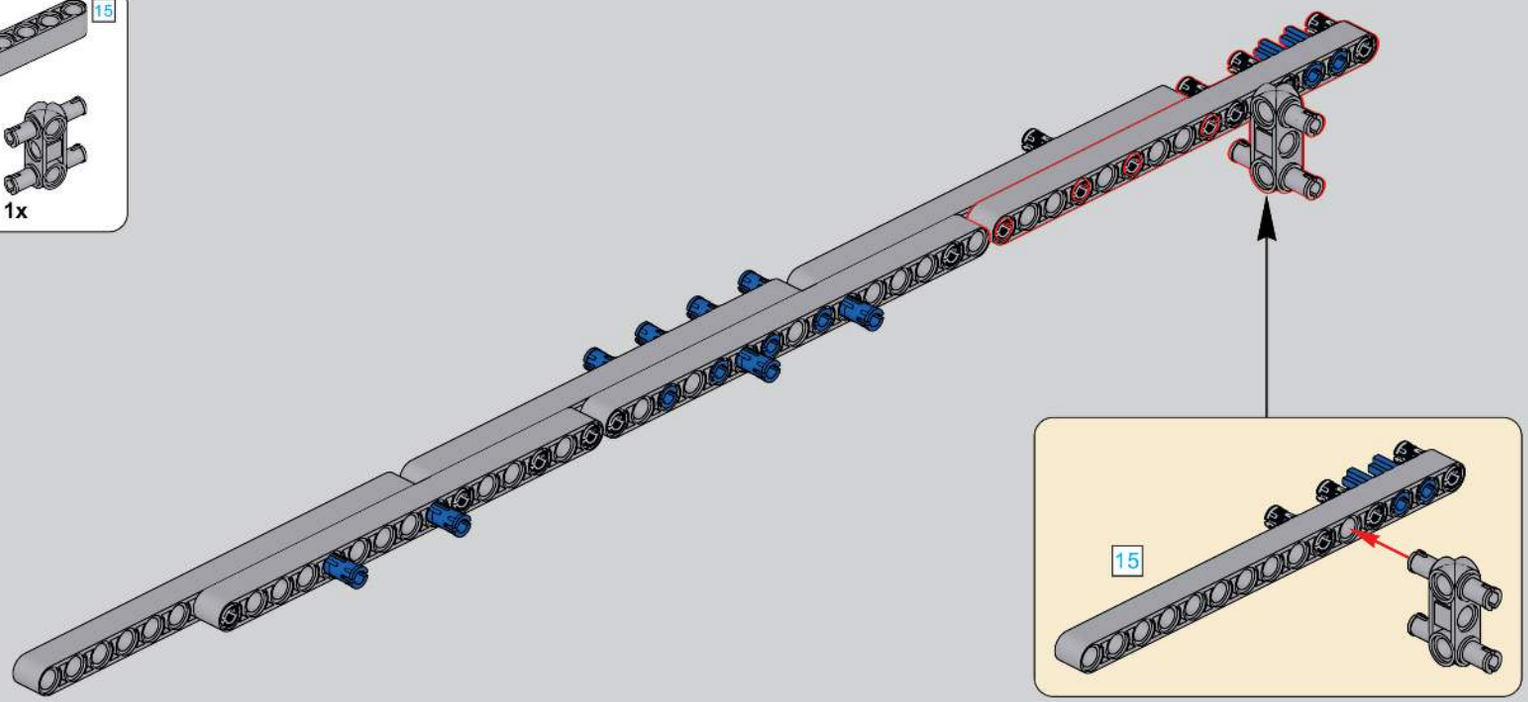

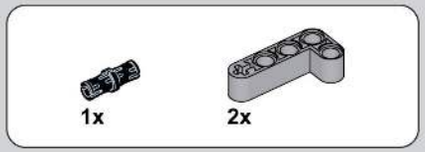

70

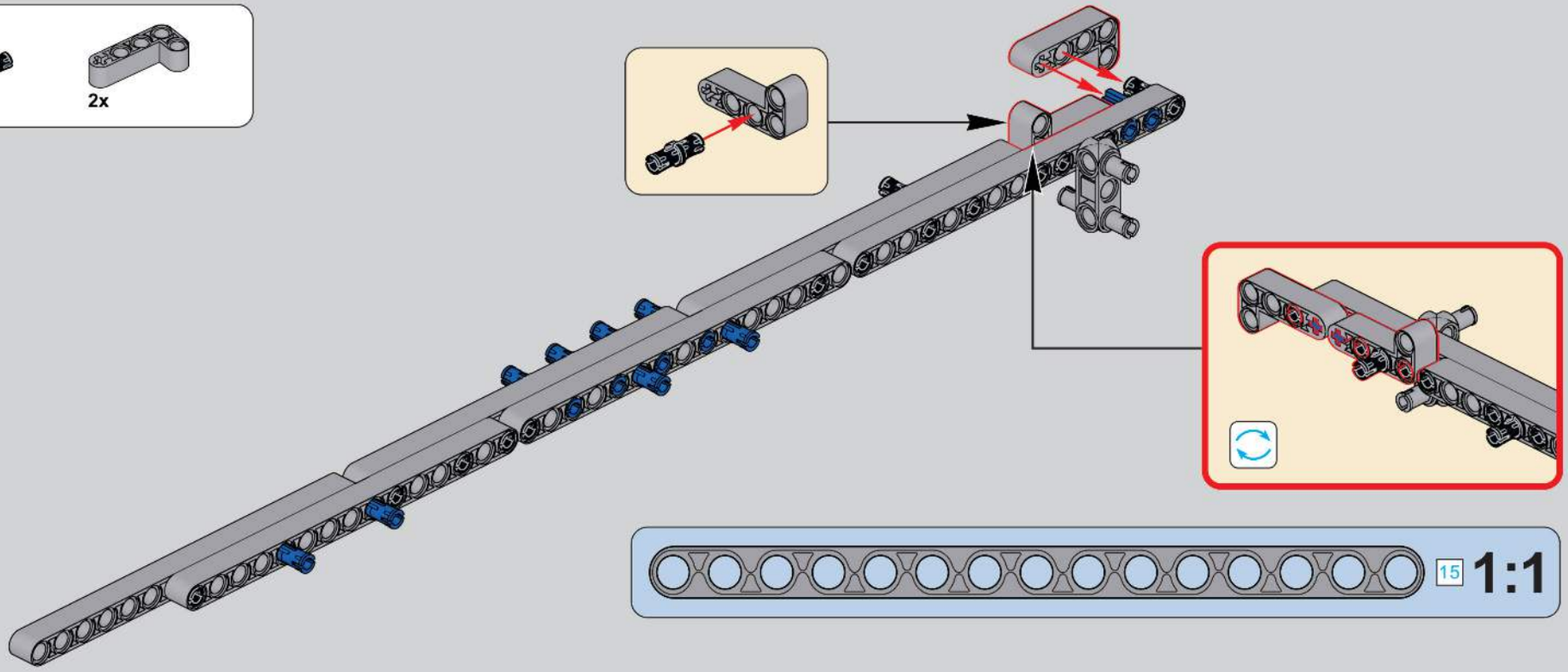

71

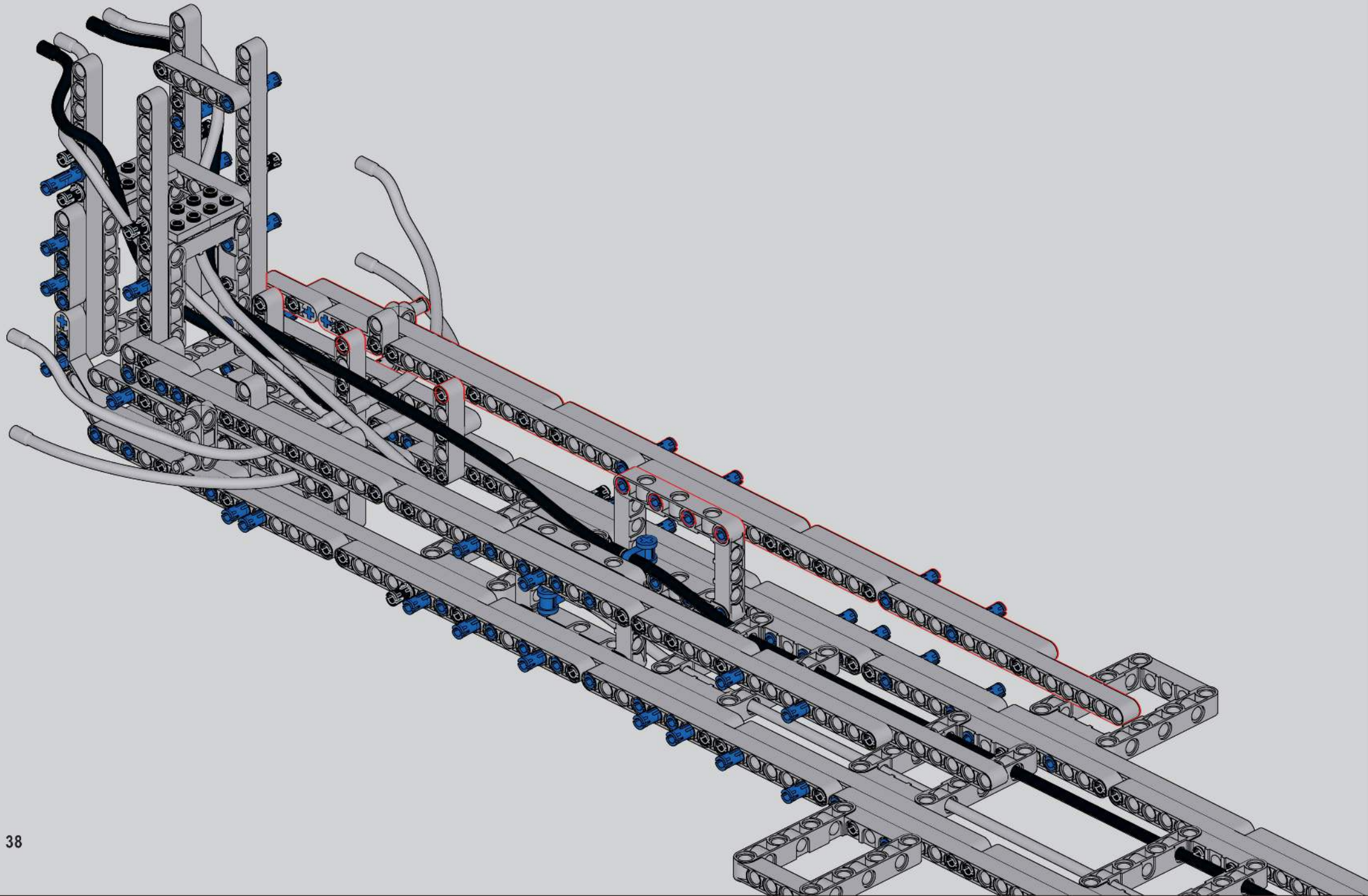

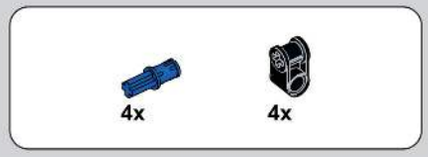

72

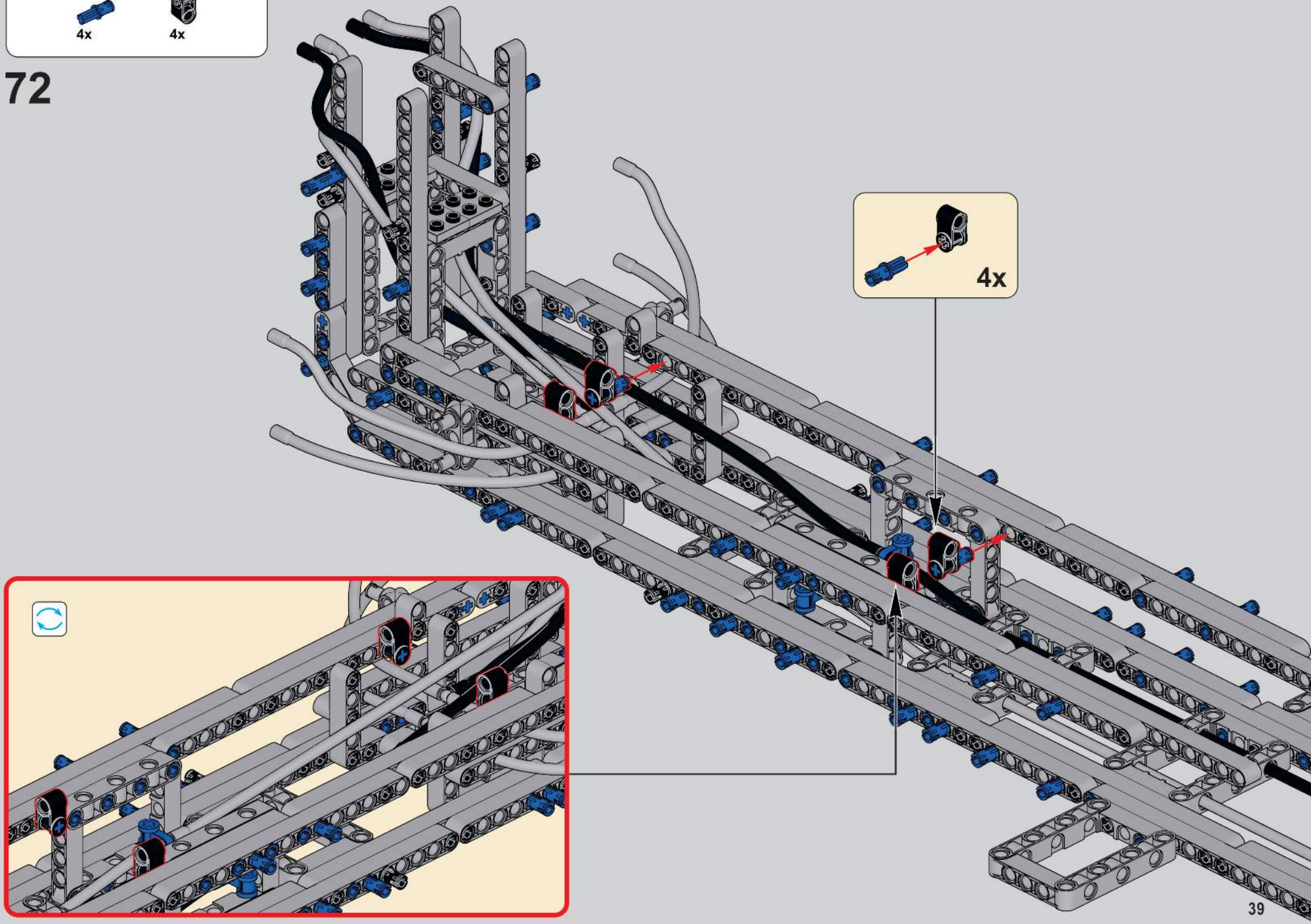

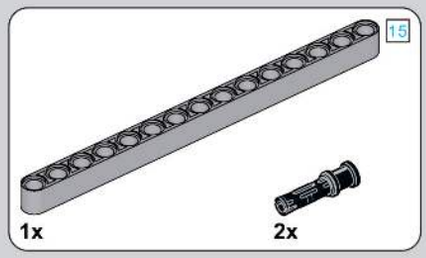

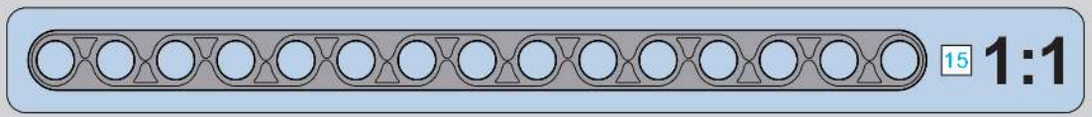

73

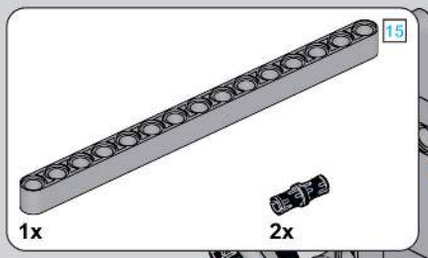

74

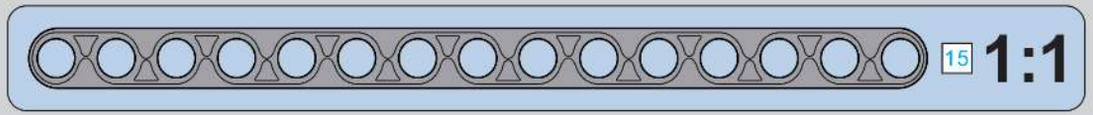

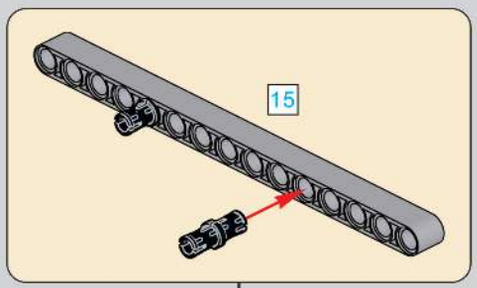

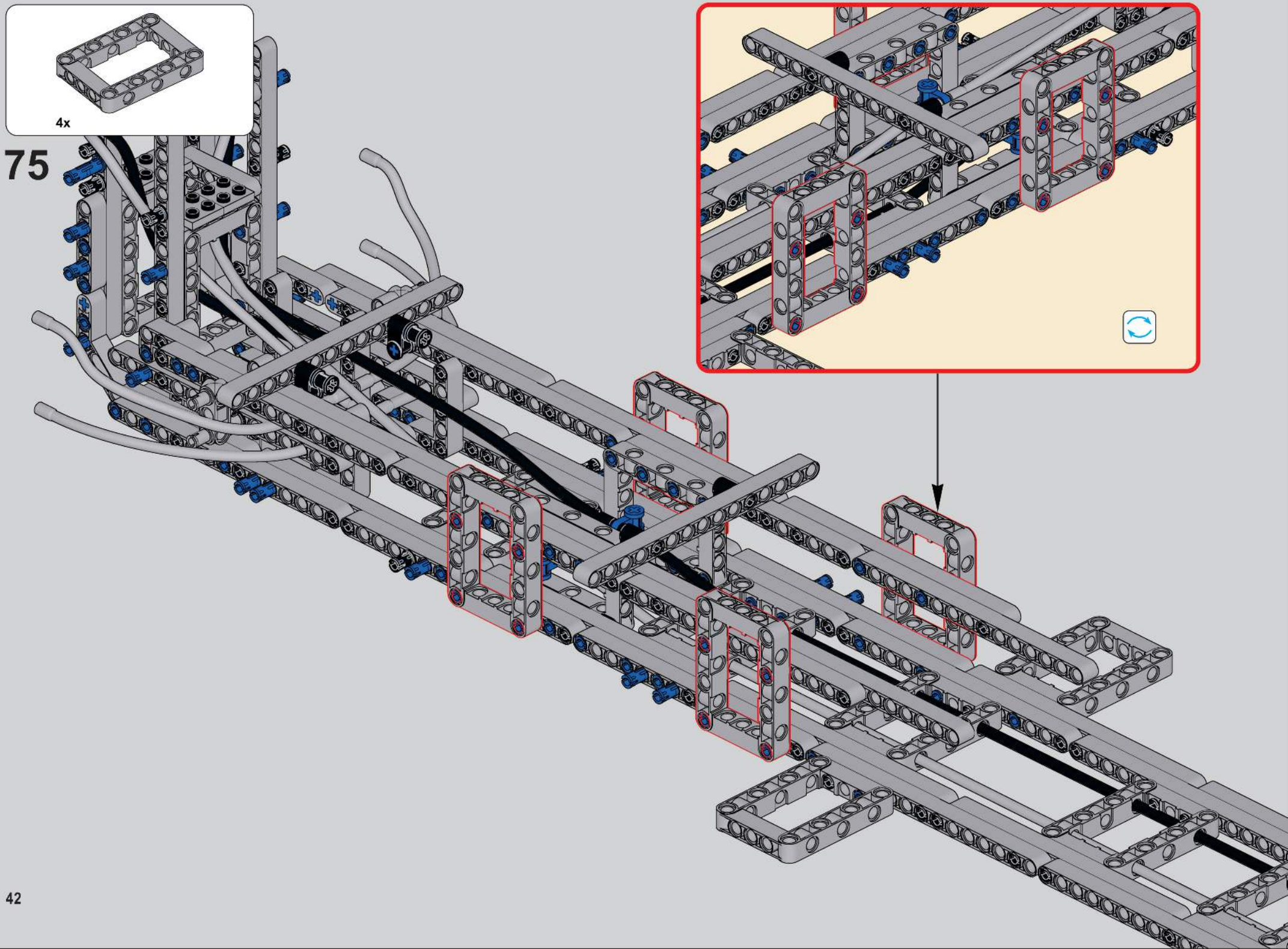
4x
75

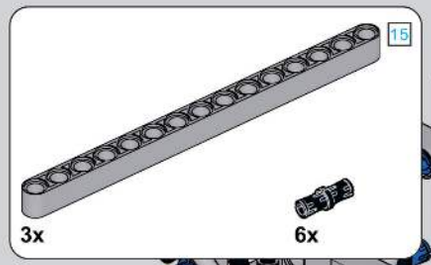

76

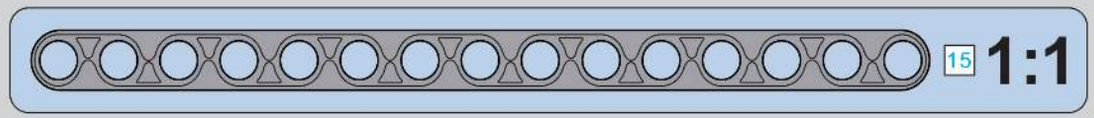

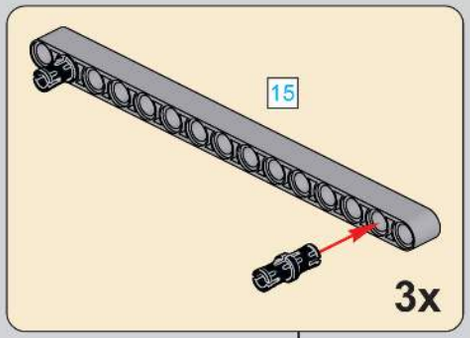

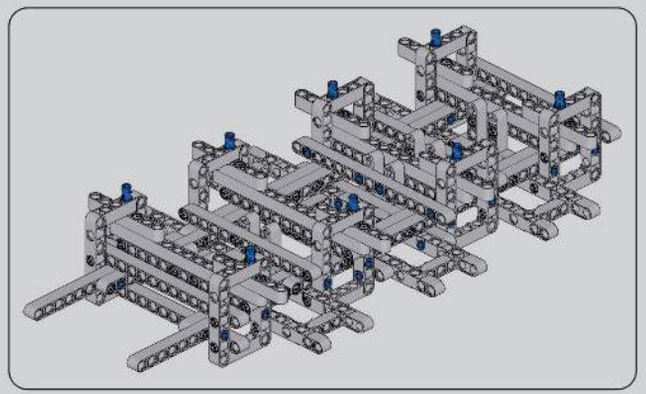

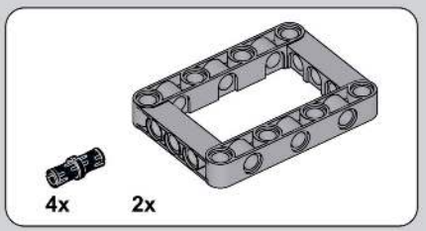

77

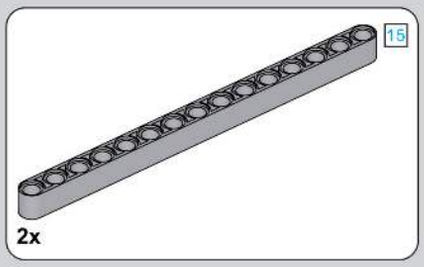

78

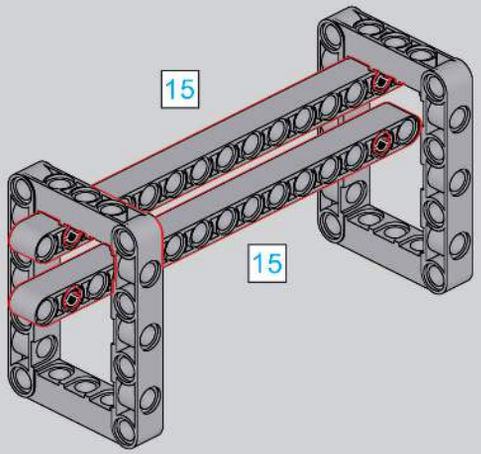

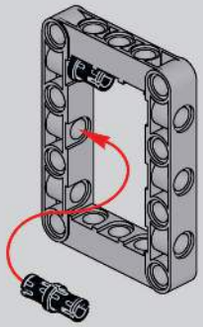

2x

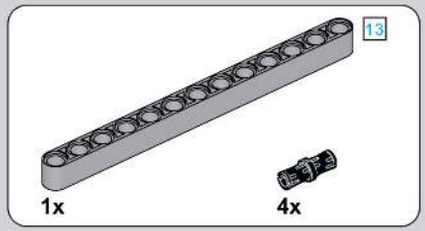

79

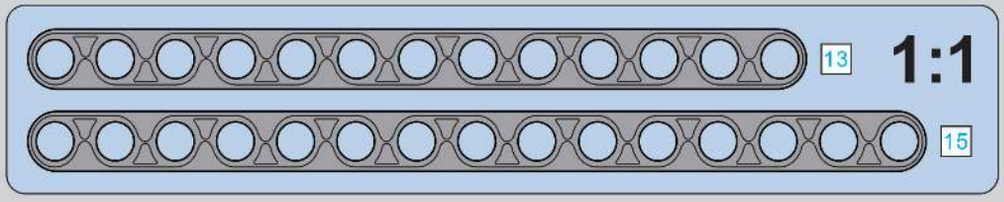

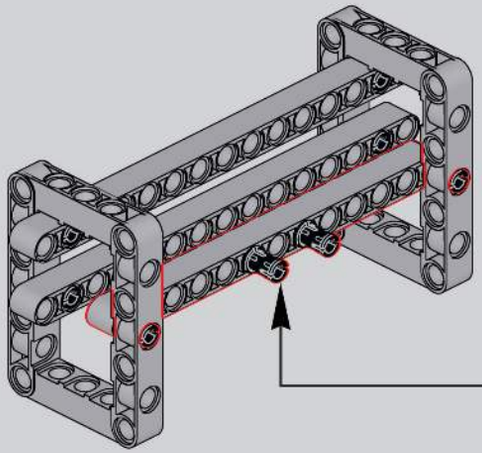

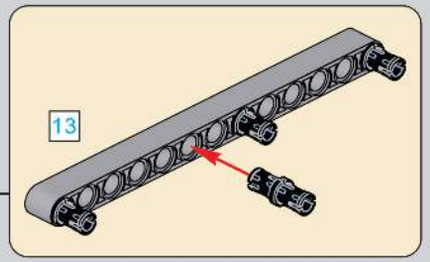

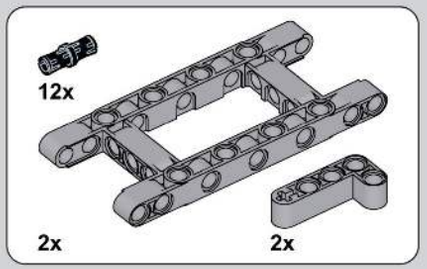

80

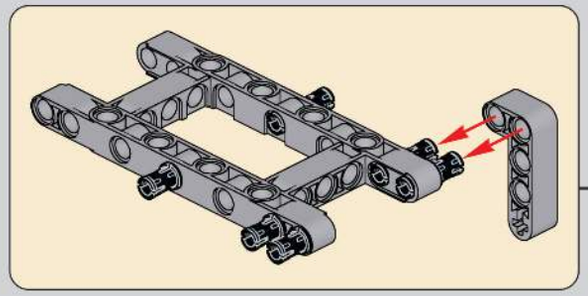

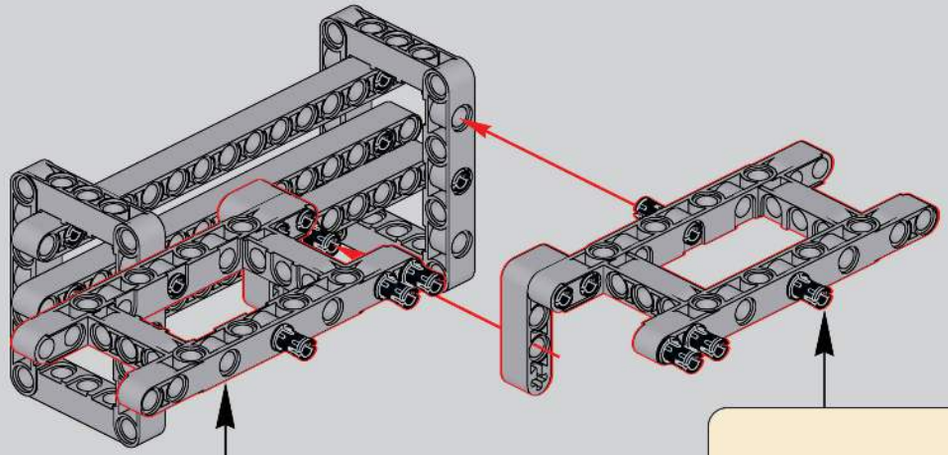

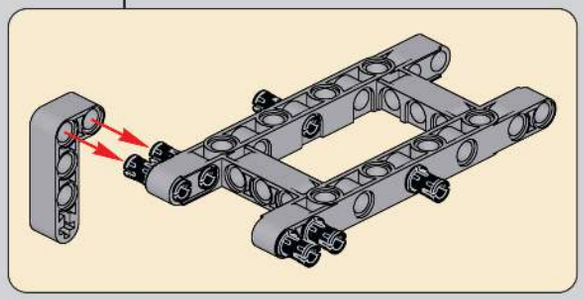

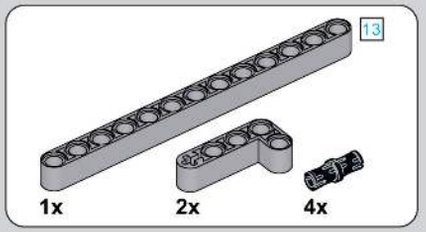

81

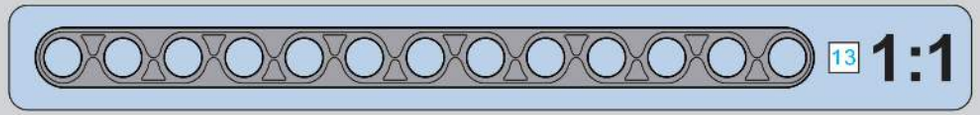

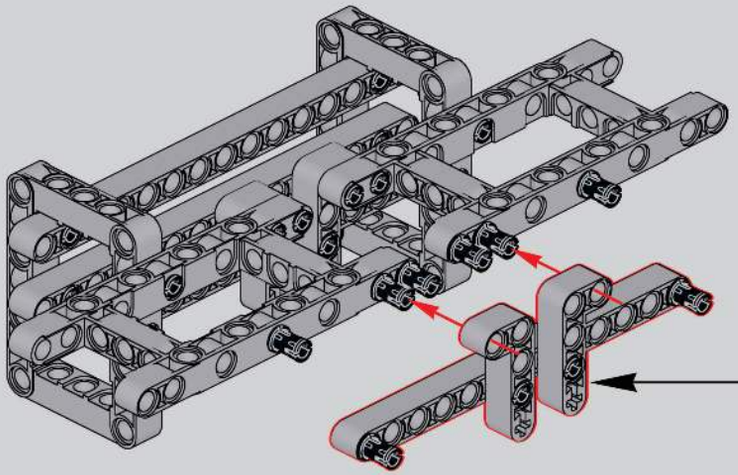

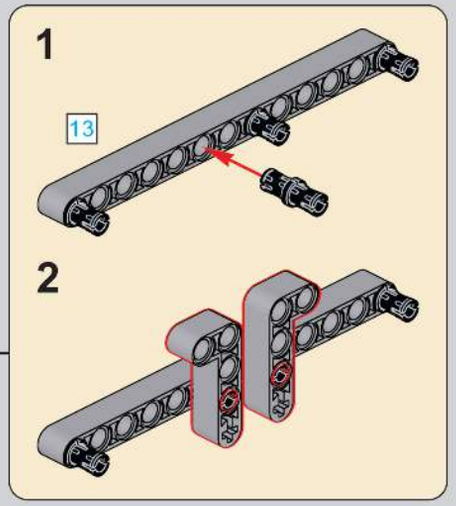

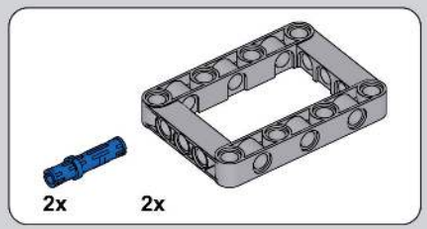

82

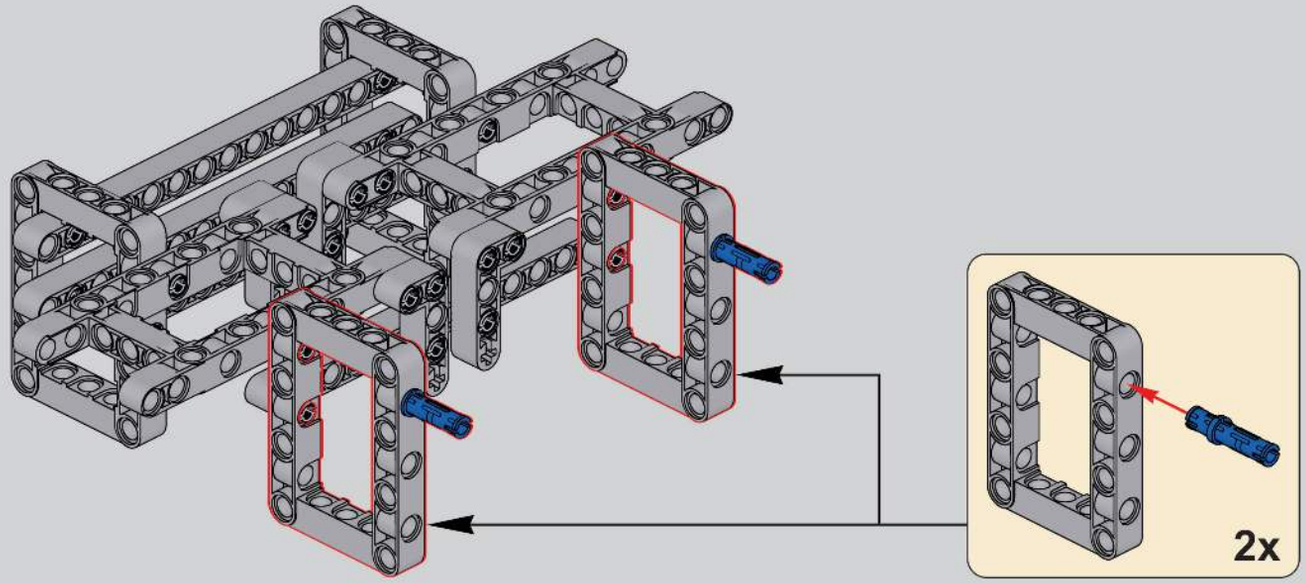

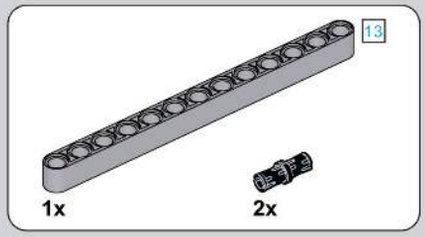

83

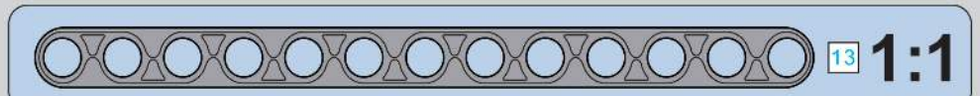

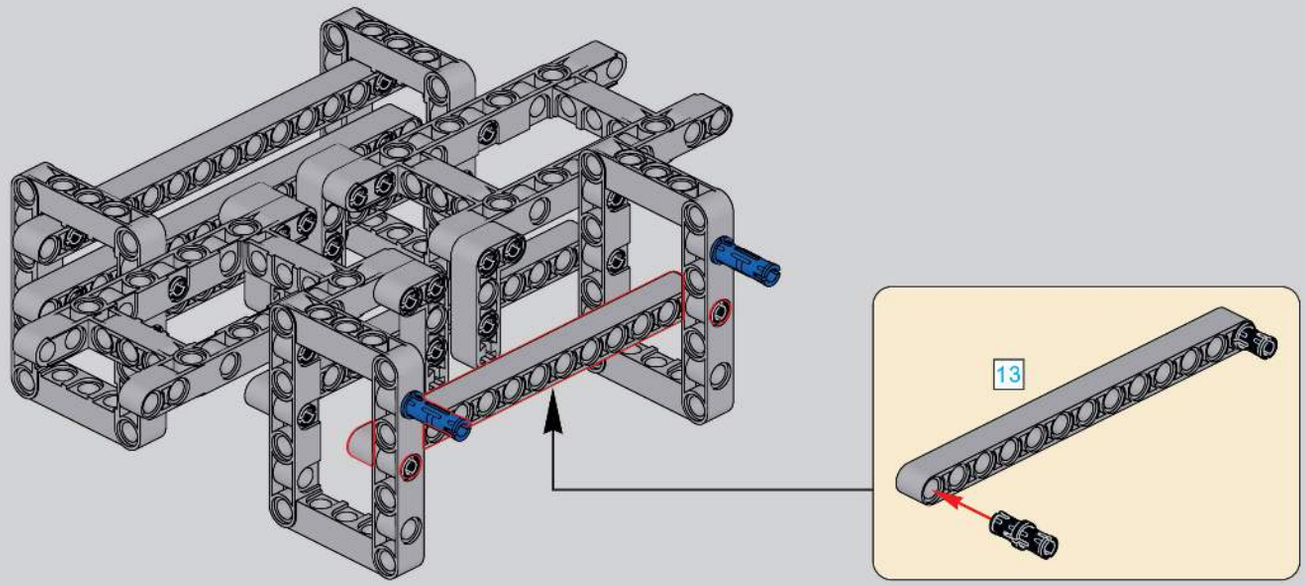

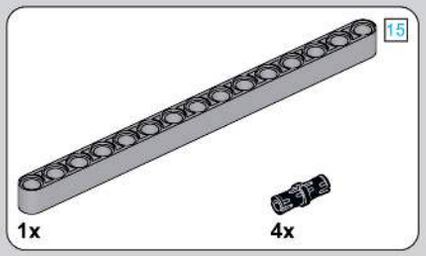

84

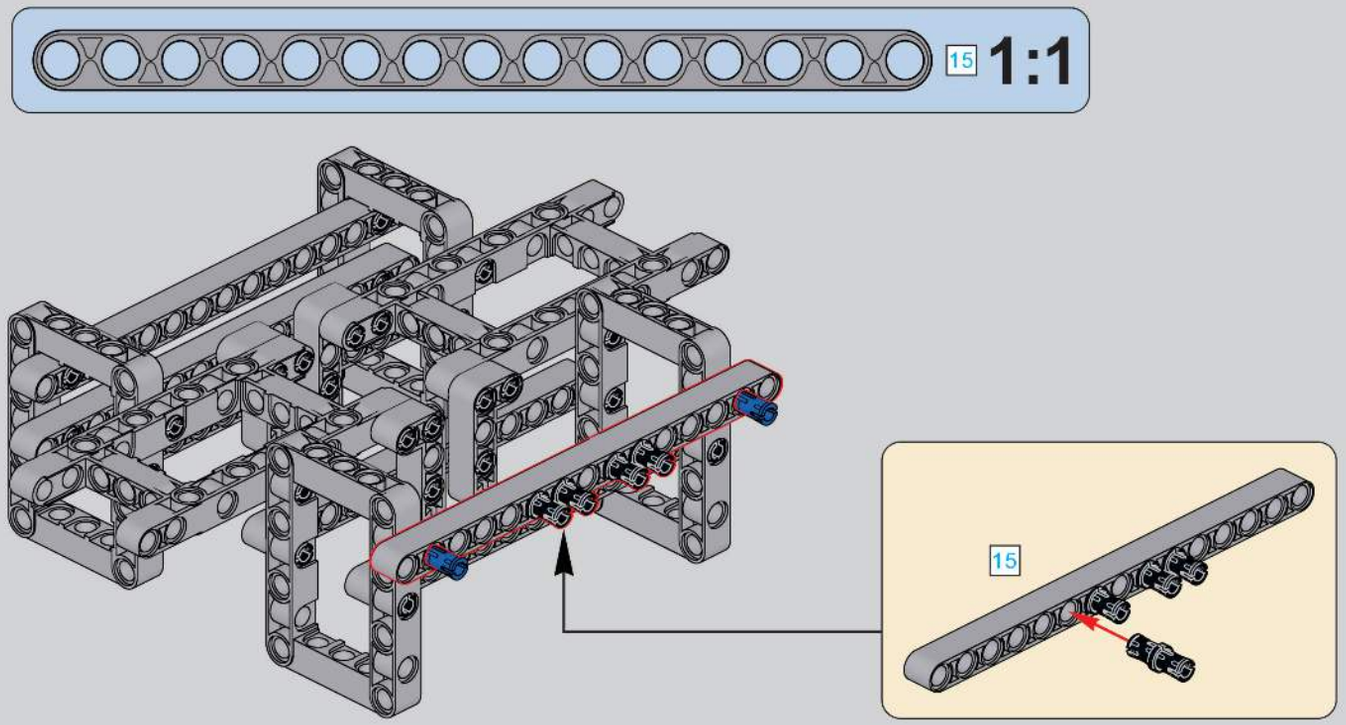

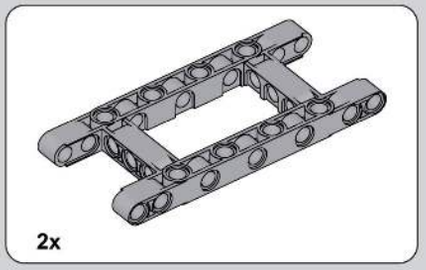

85

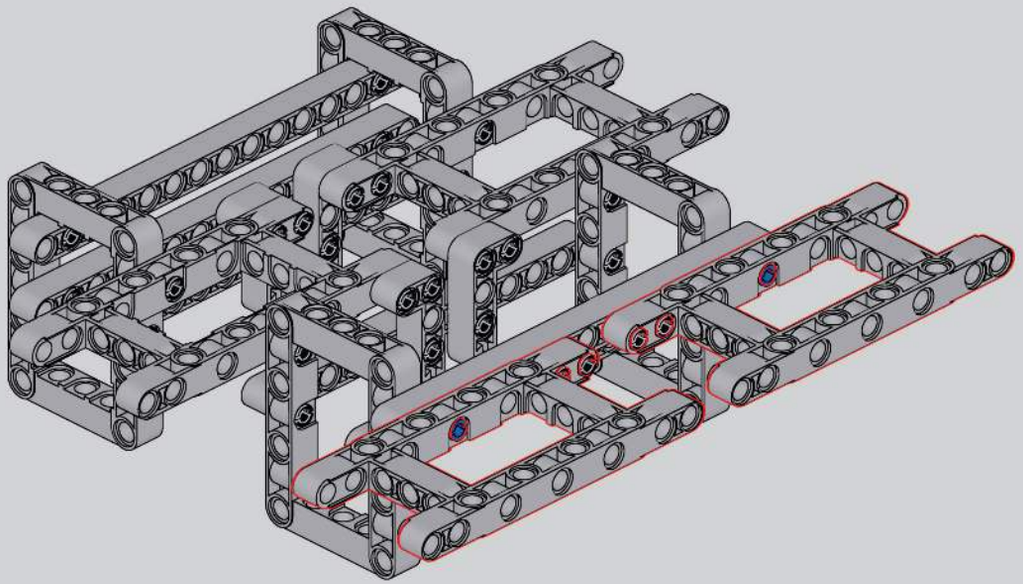

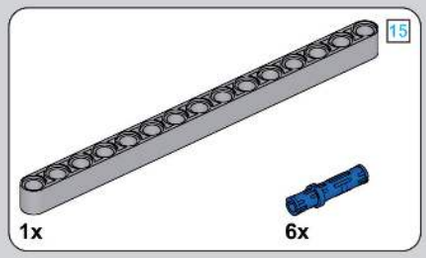

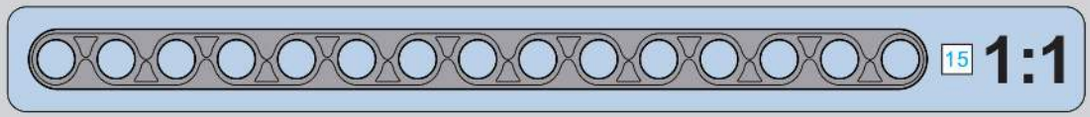

86

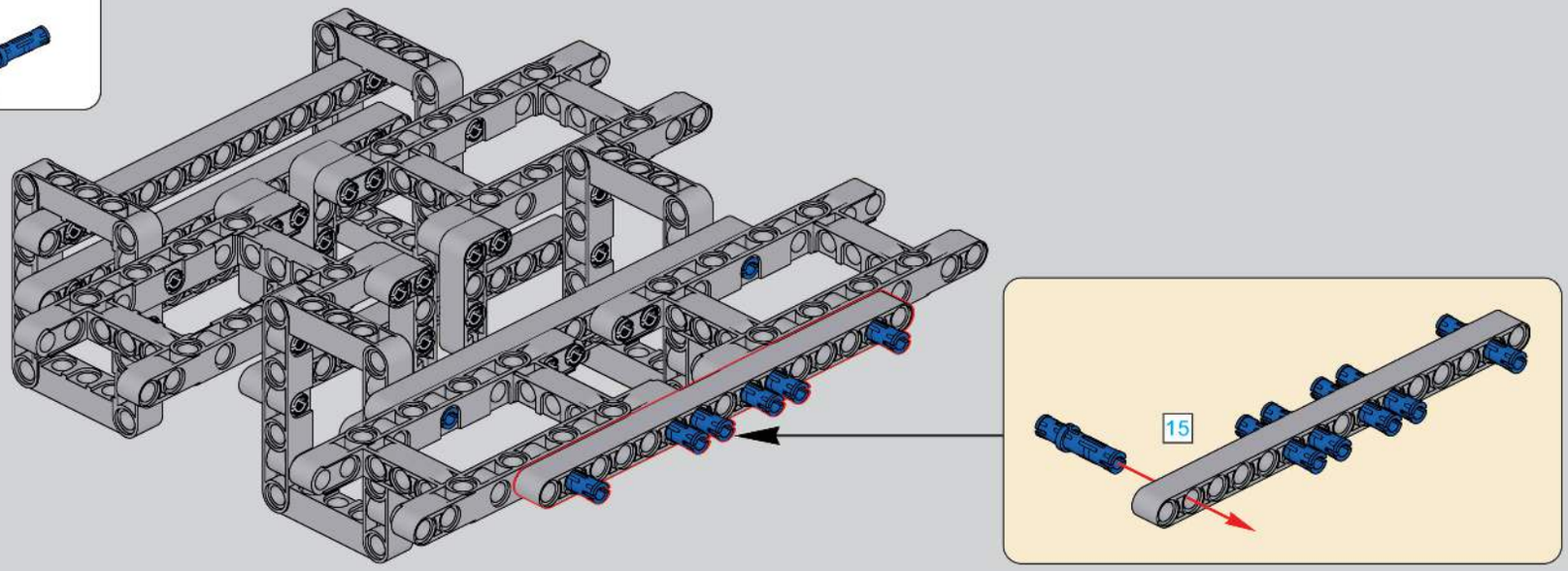

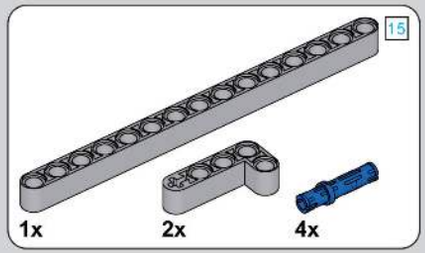

87

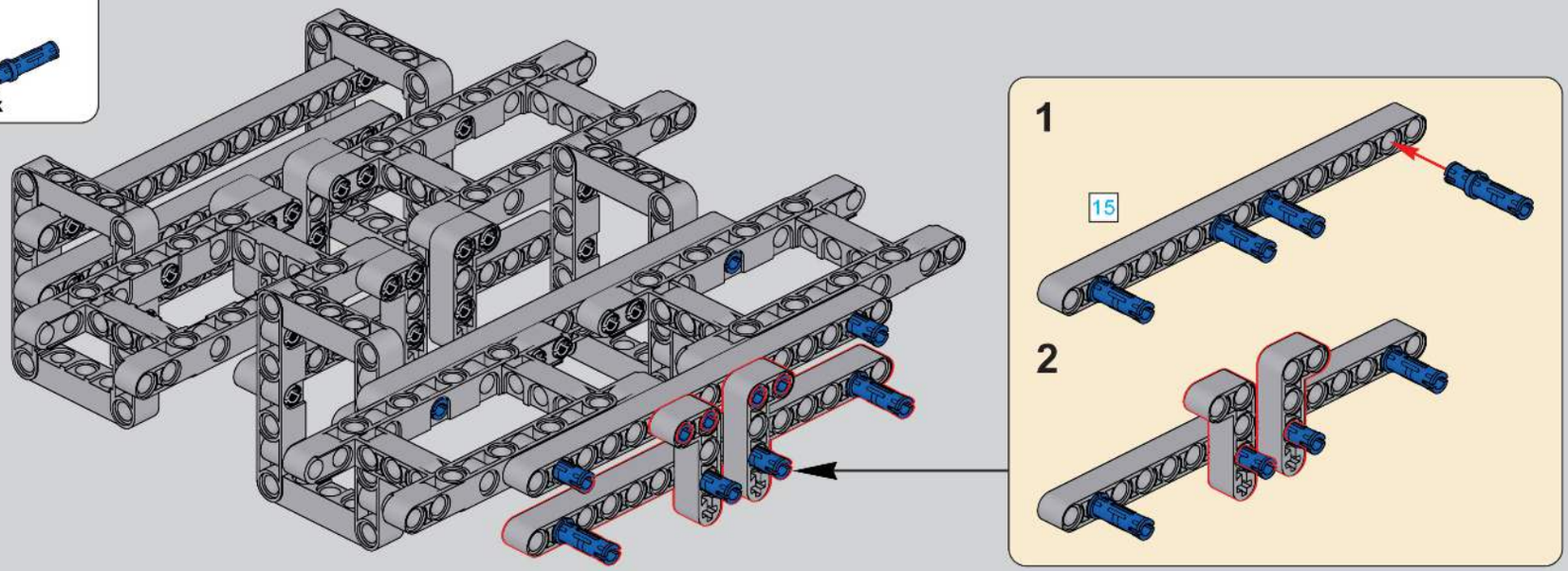

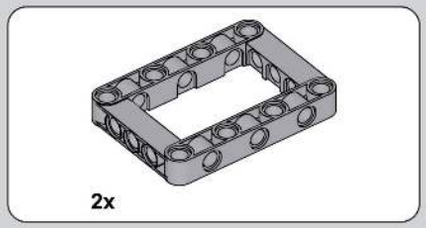

88

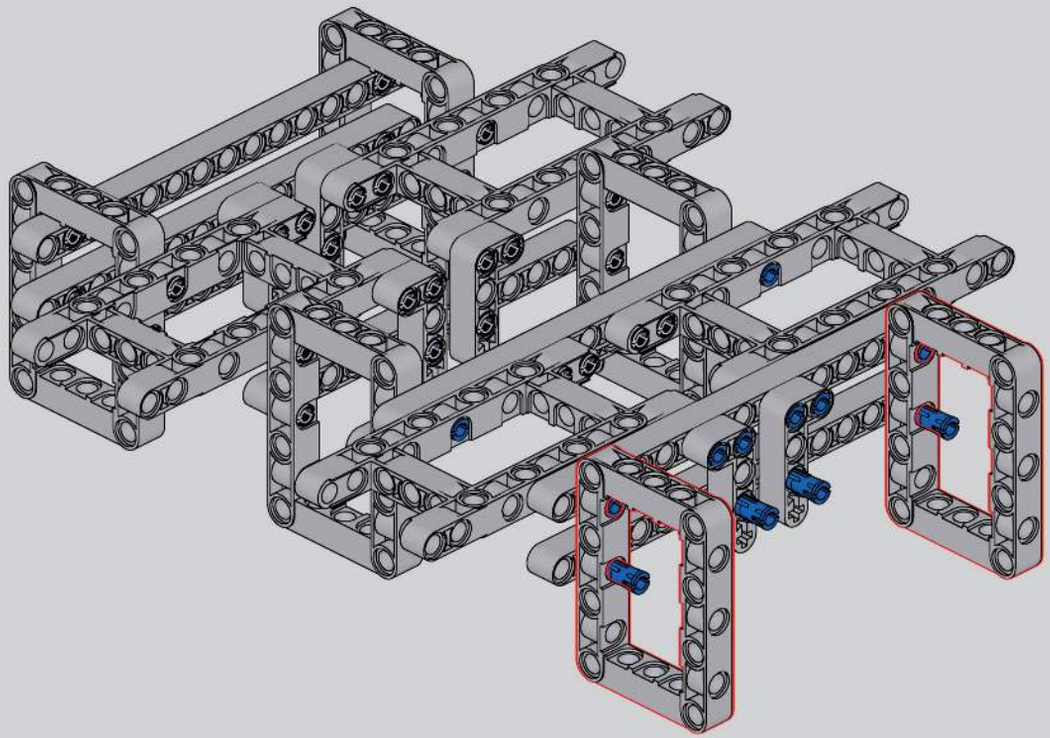

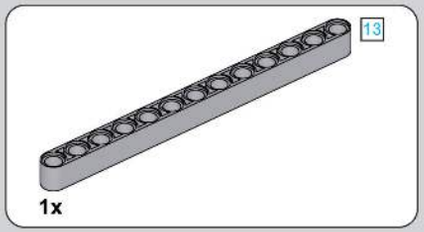

89

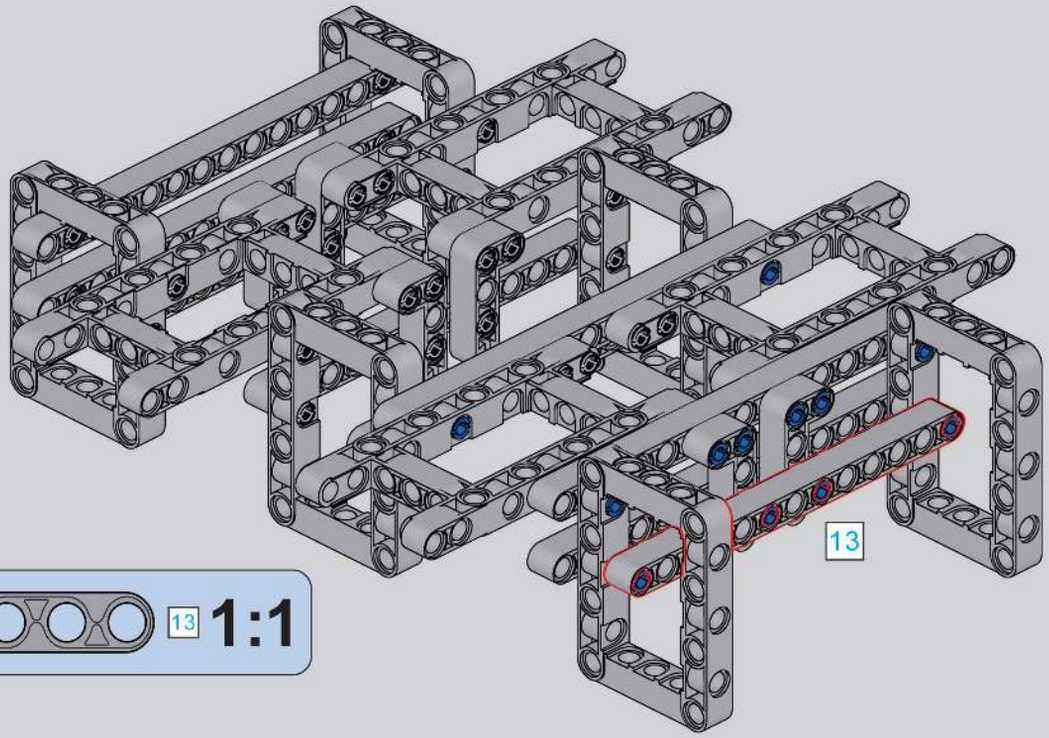

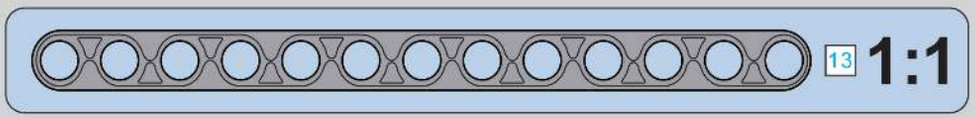

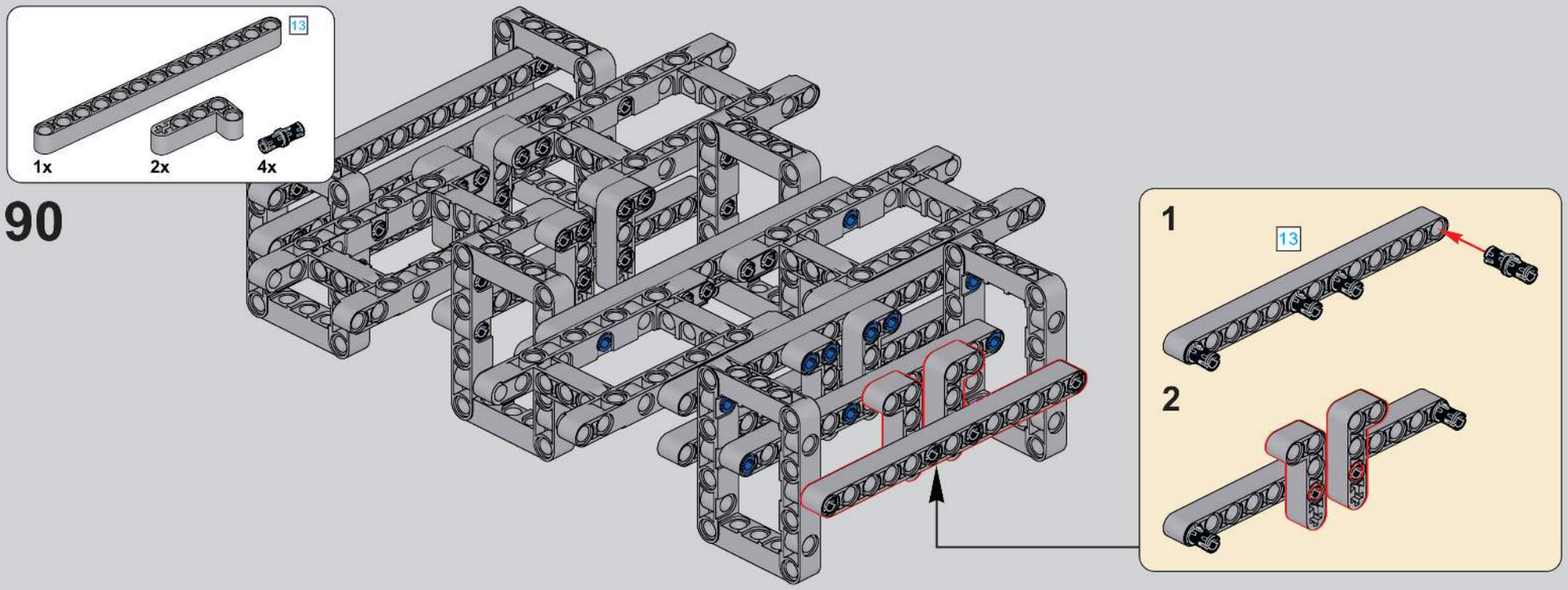
13
1x
2x
4x
90
1
13
2

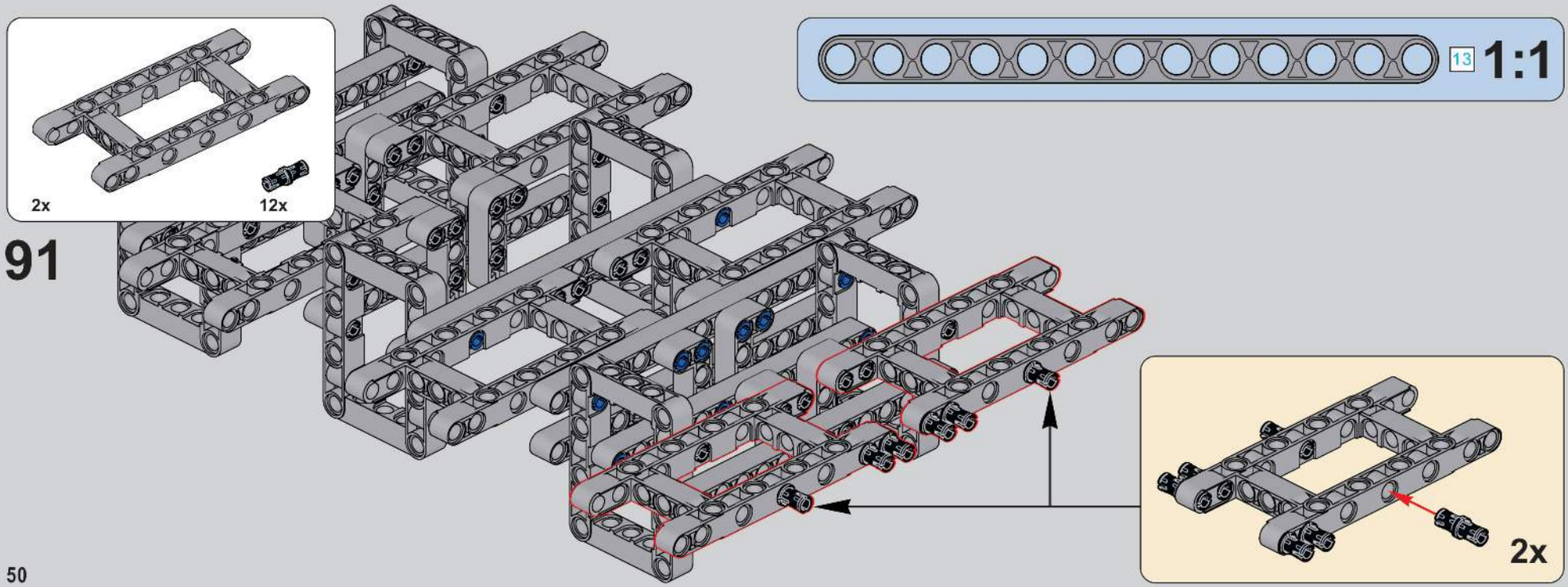
2x
12x
91
13
1:1
2x

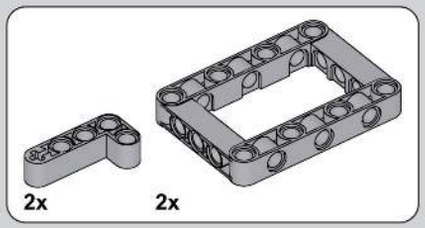

92

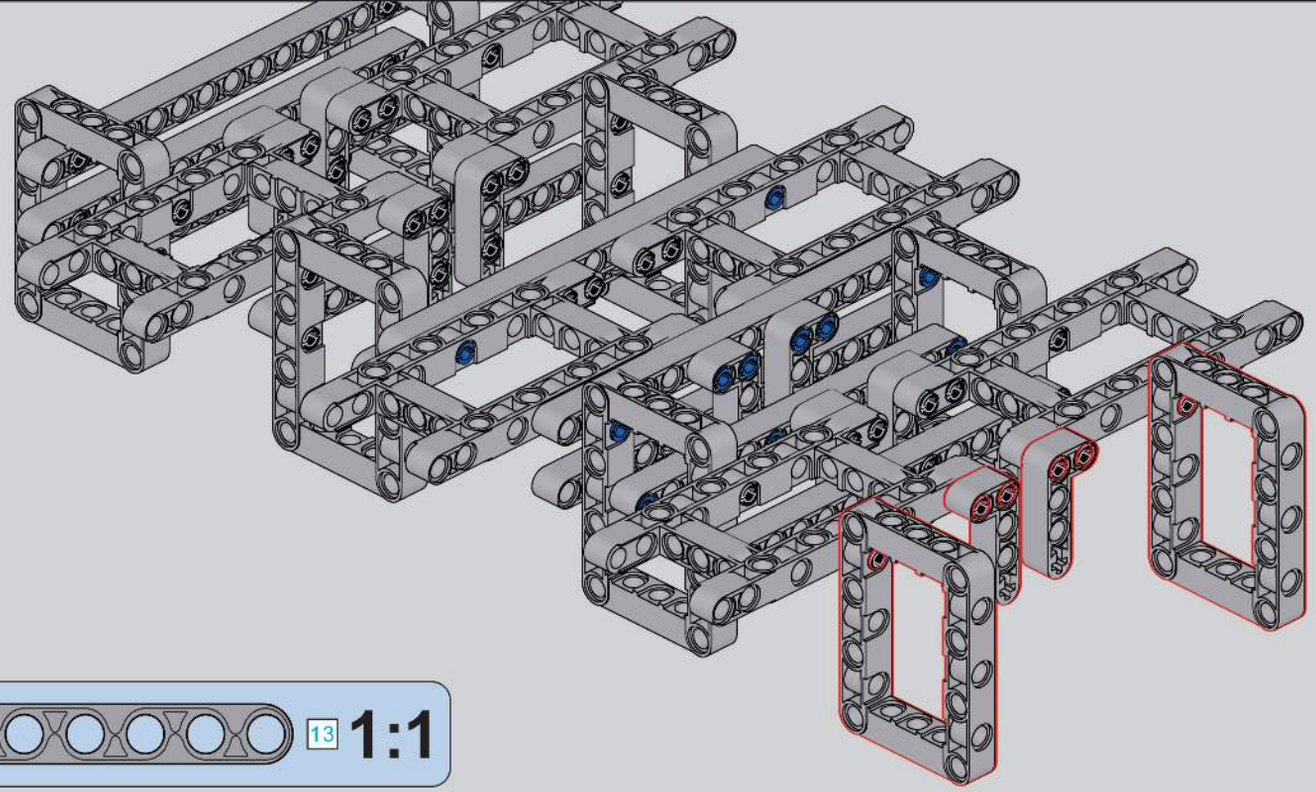

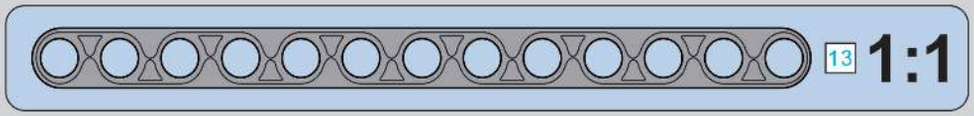

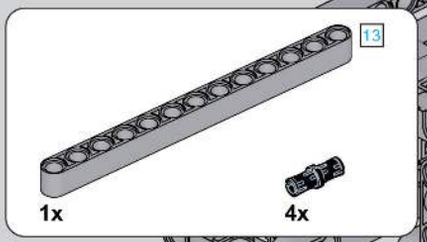

93

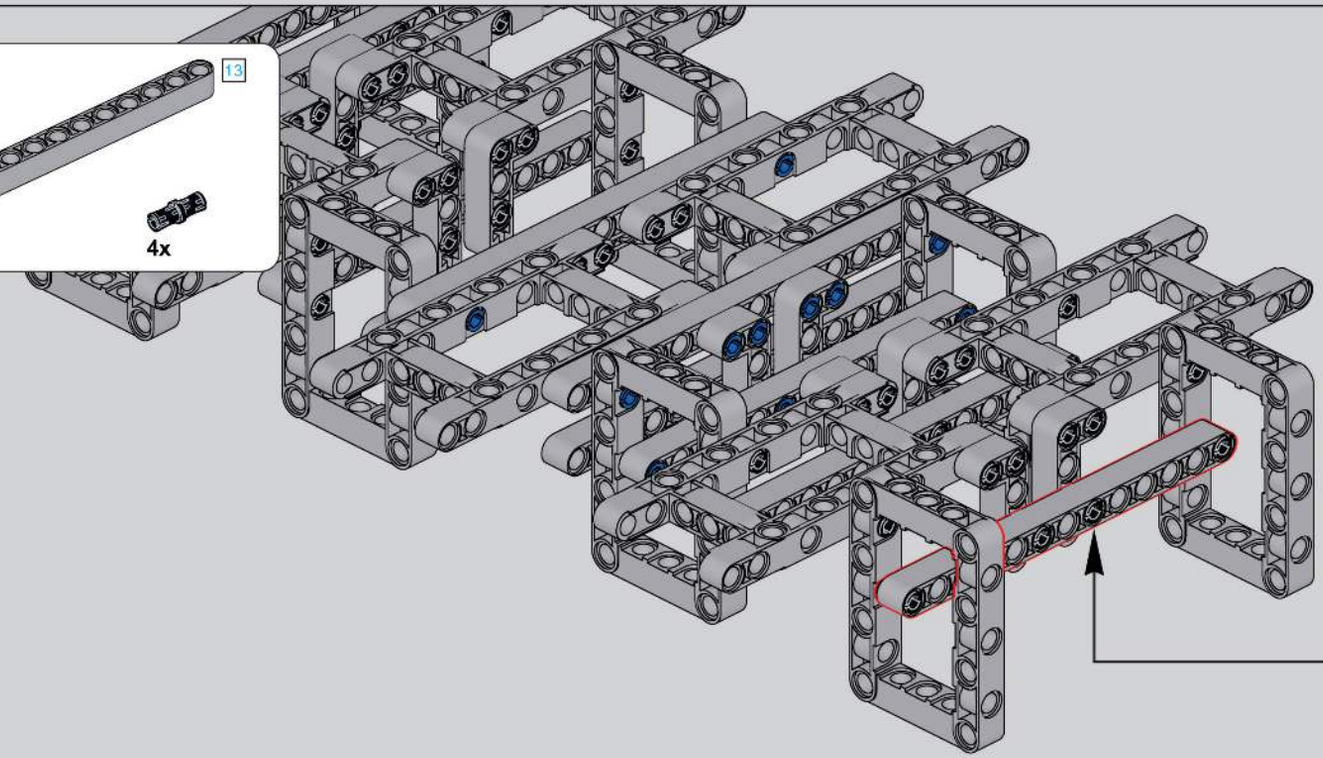

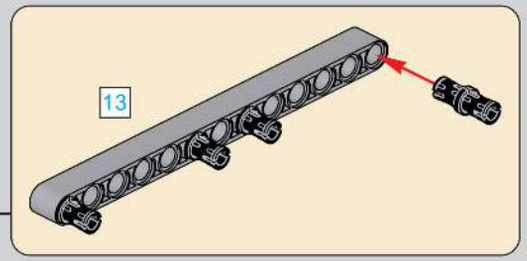

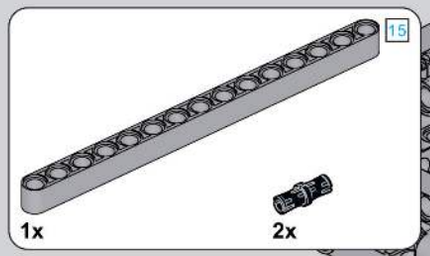

94

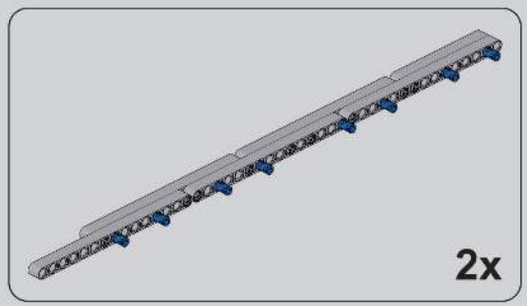

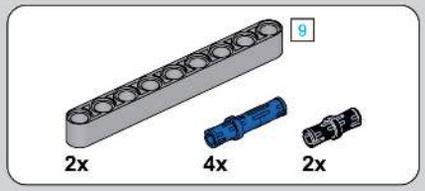

95

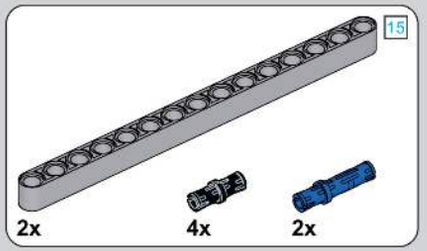

96

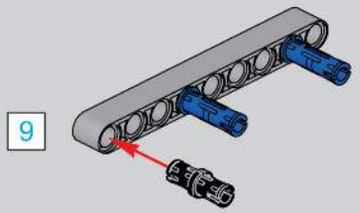

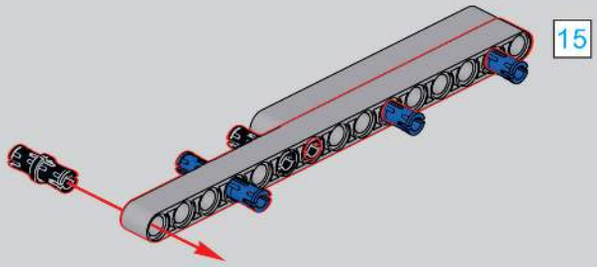

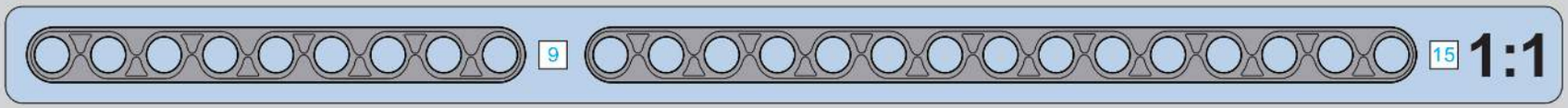

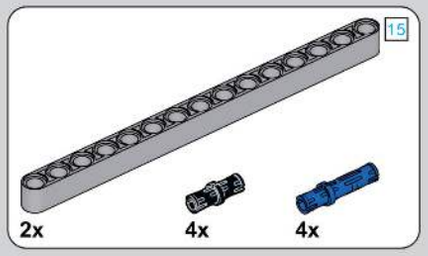

97

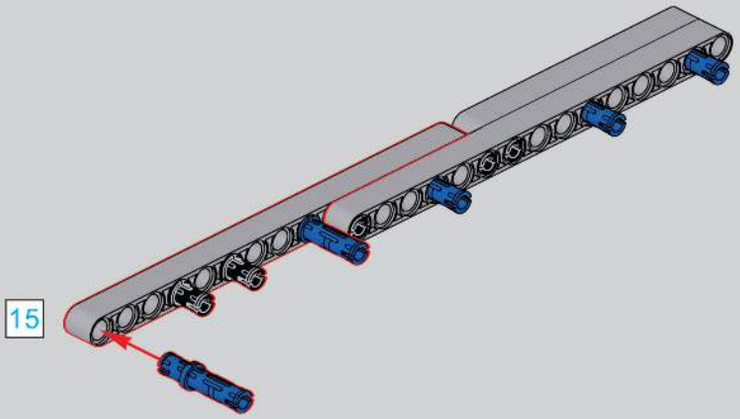

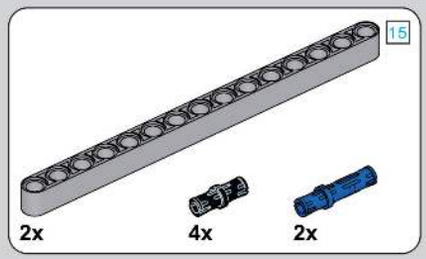

98

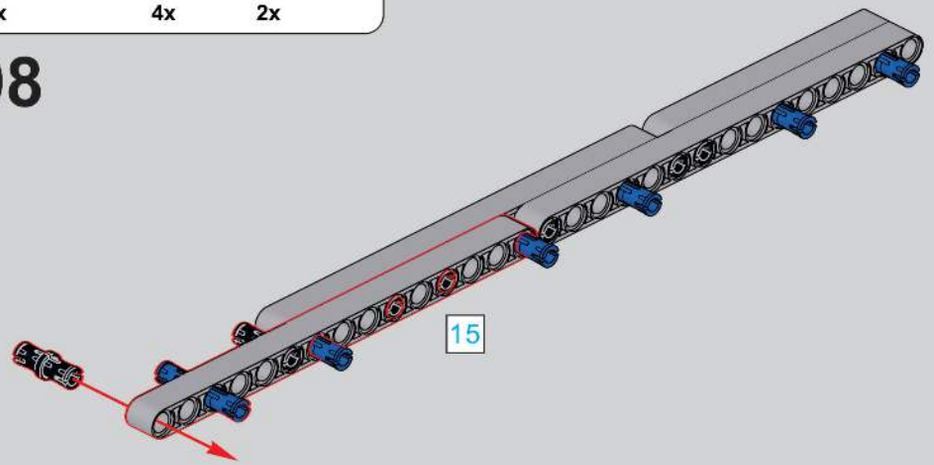

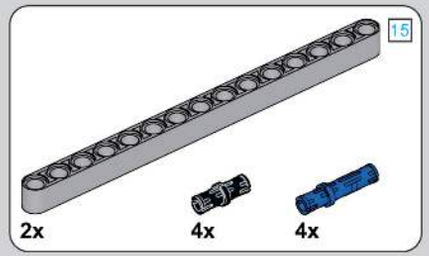

99

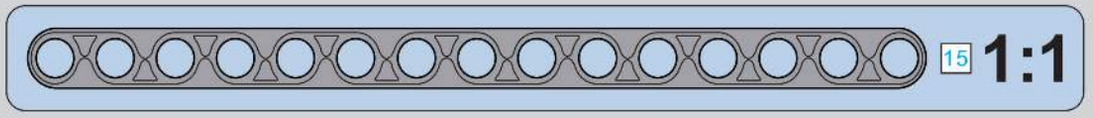

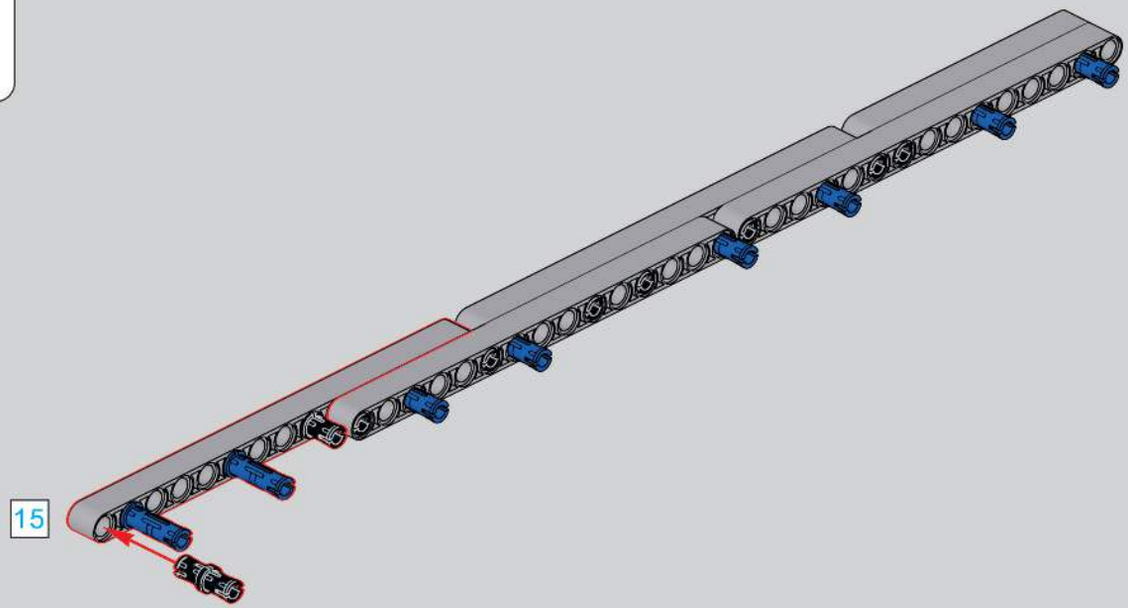

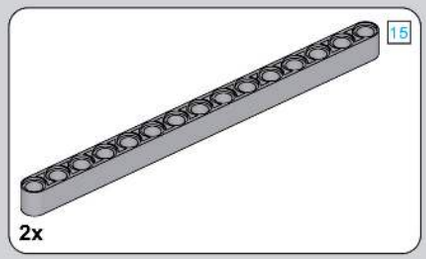

100

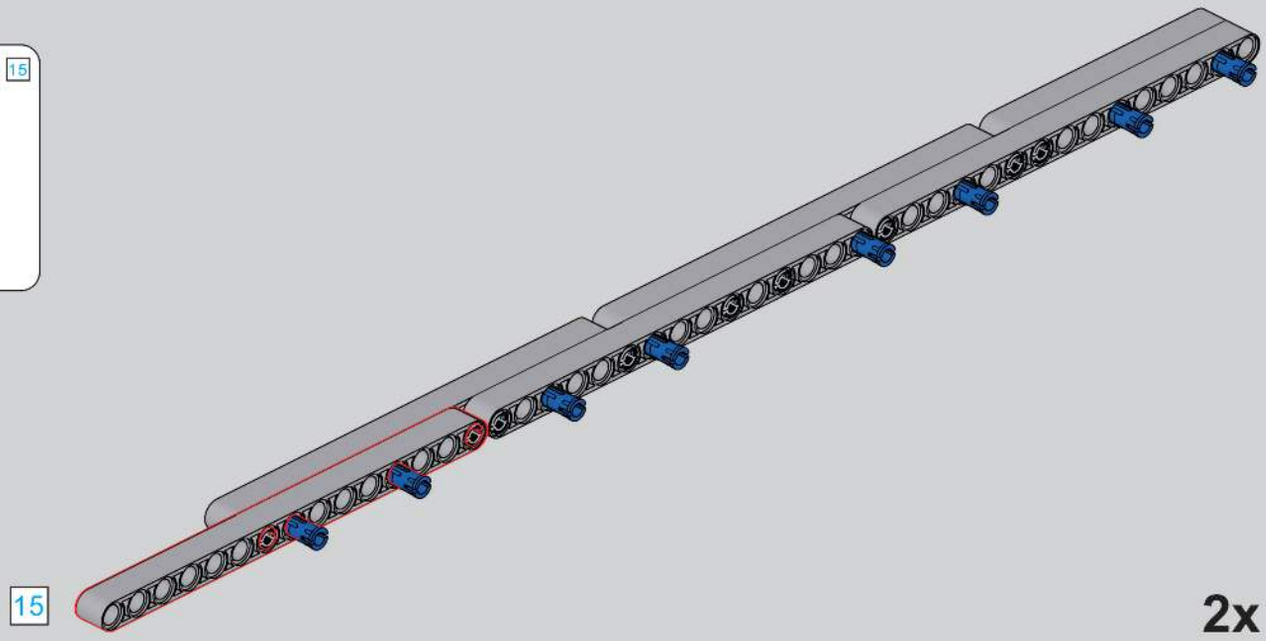

101

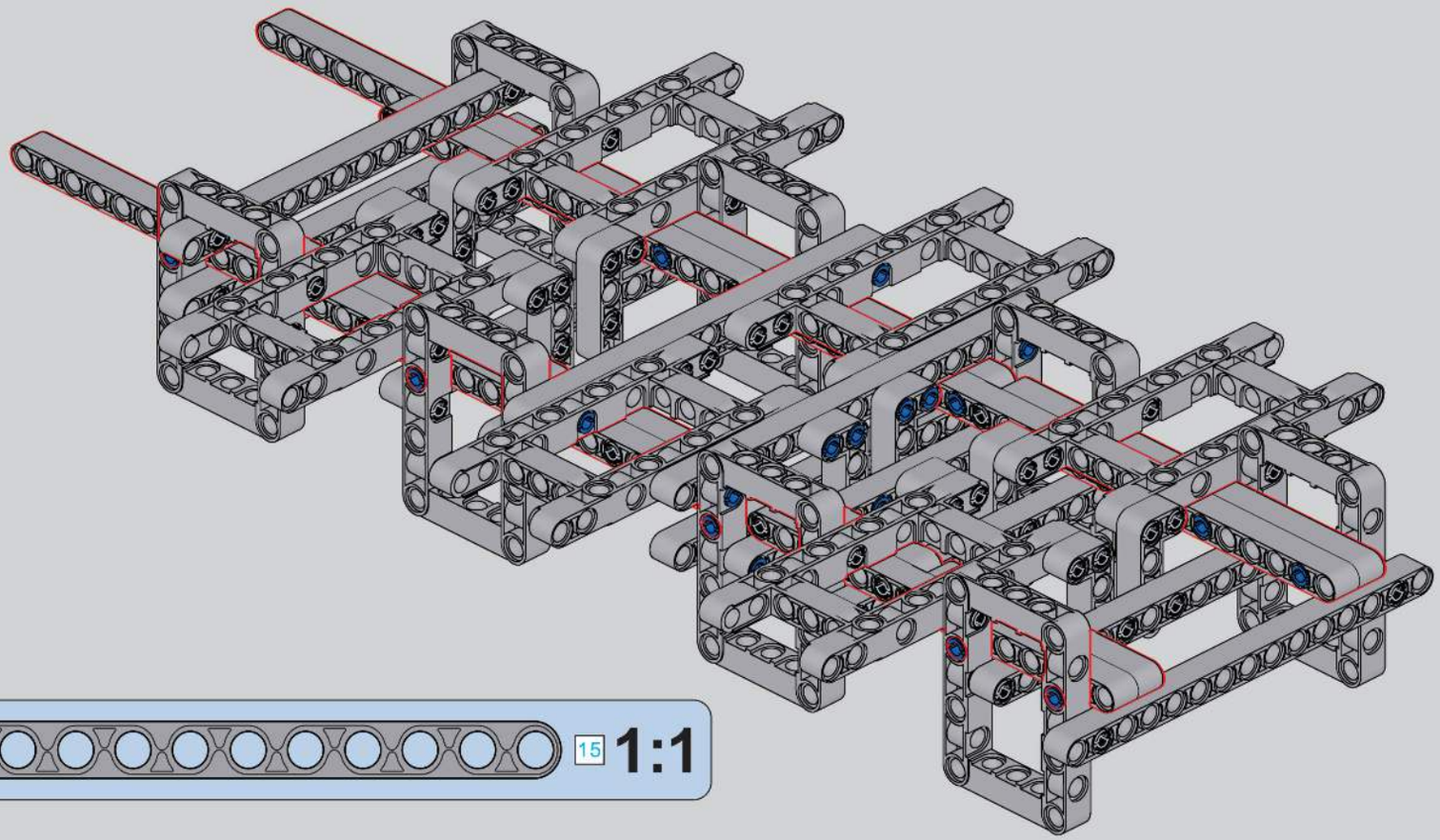

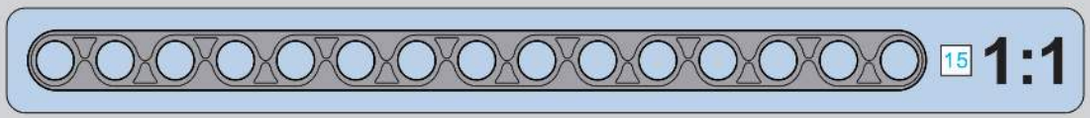

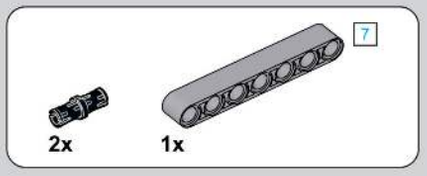

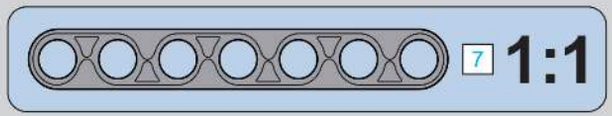

102

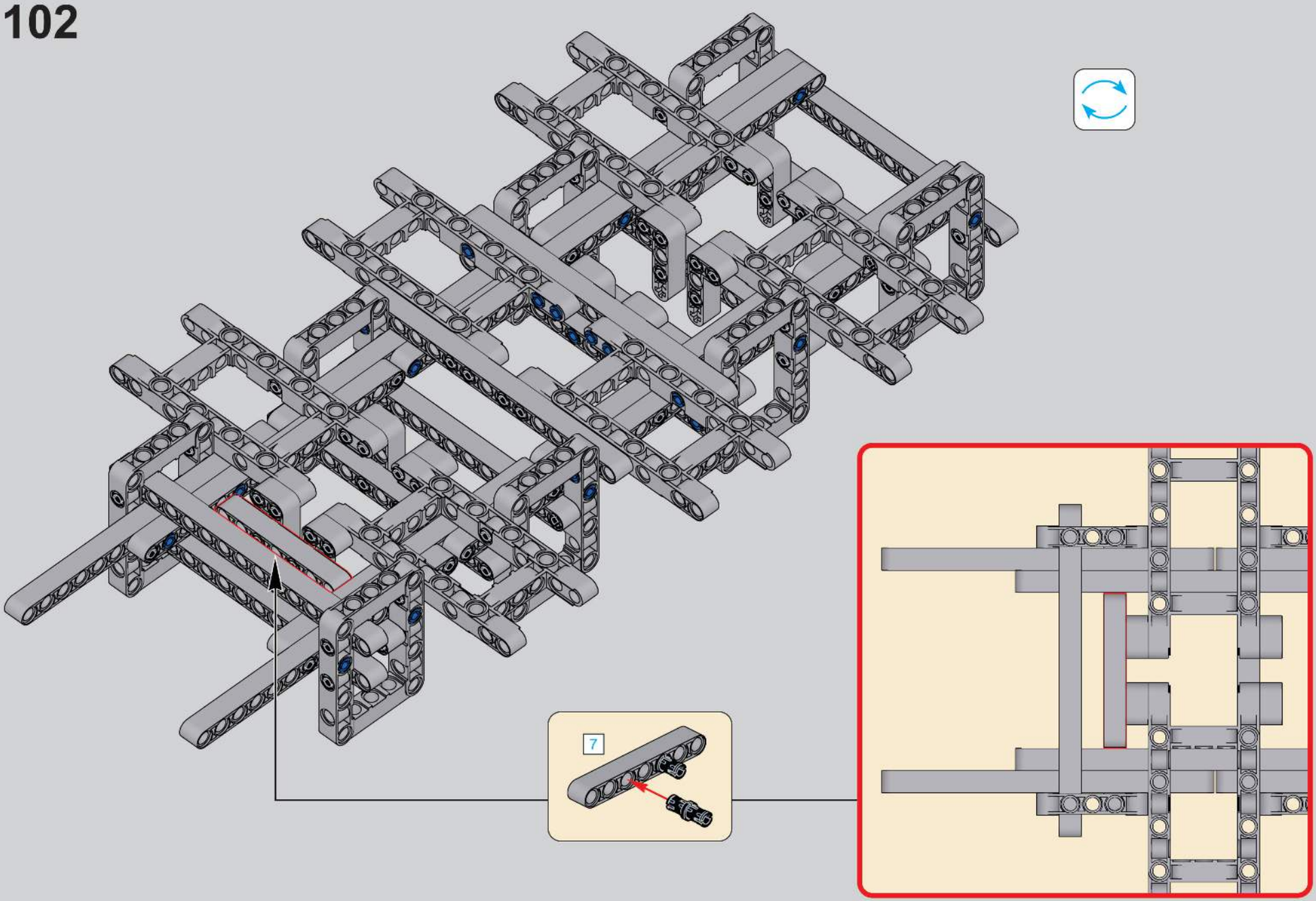

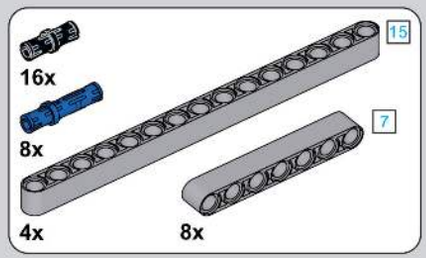

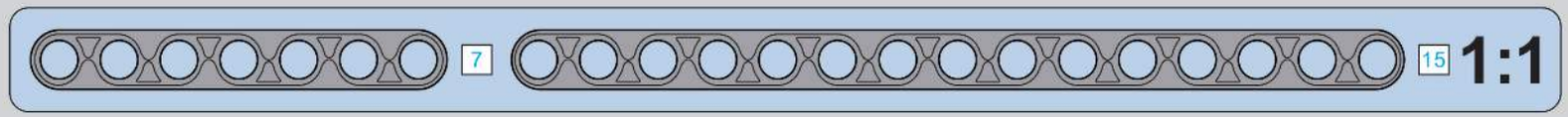

103

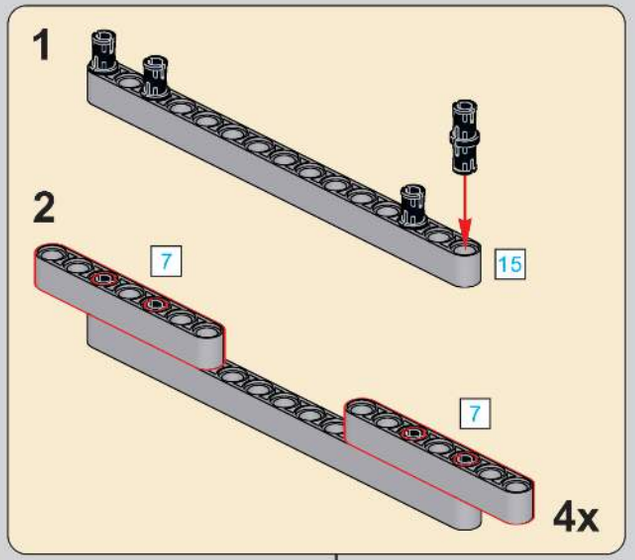

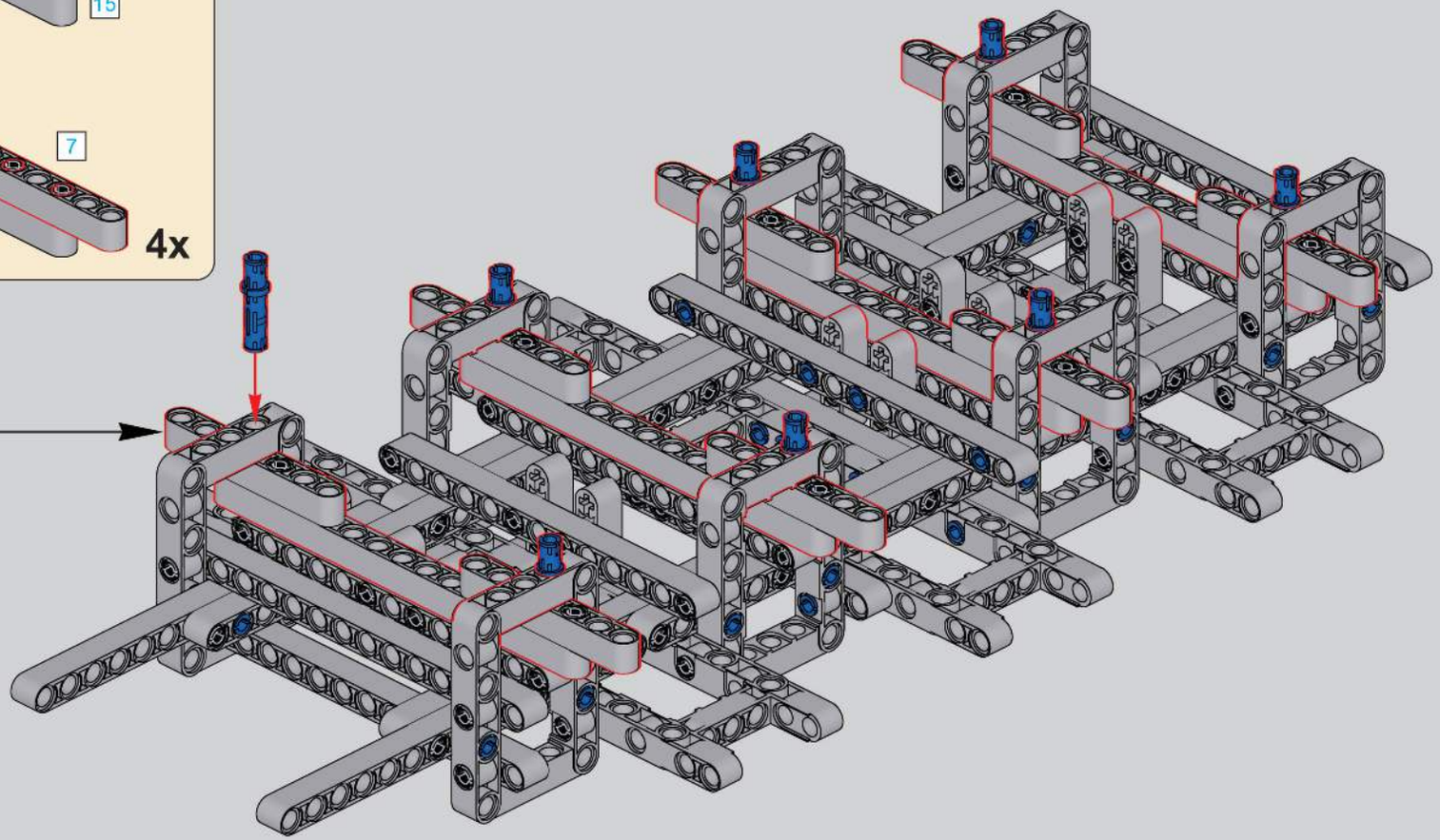

104

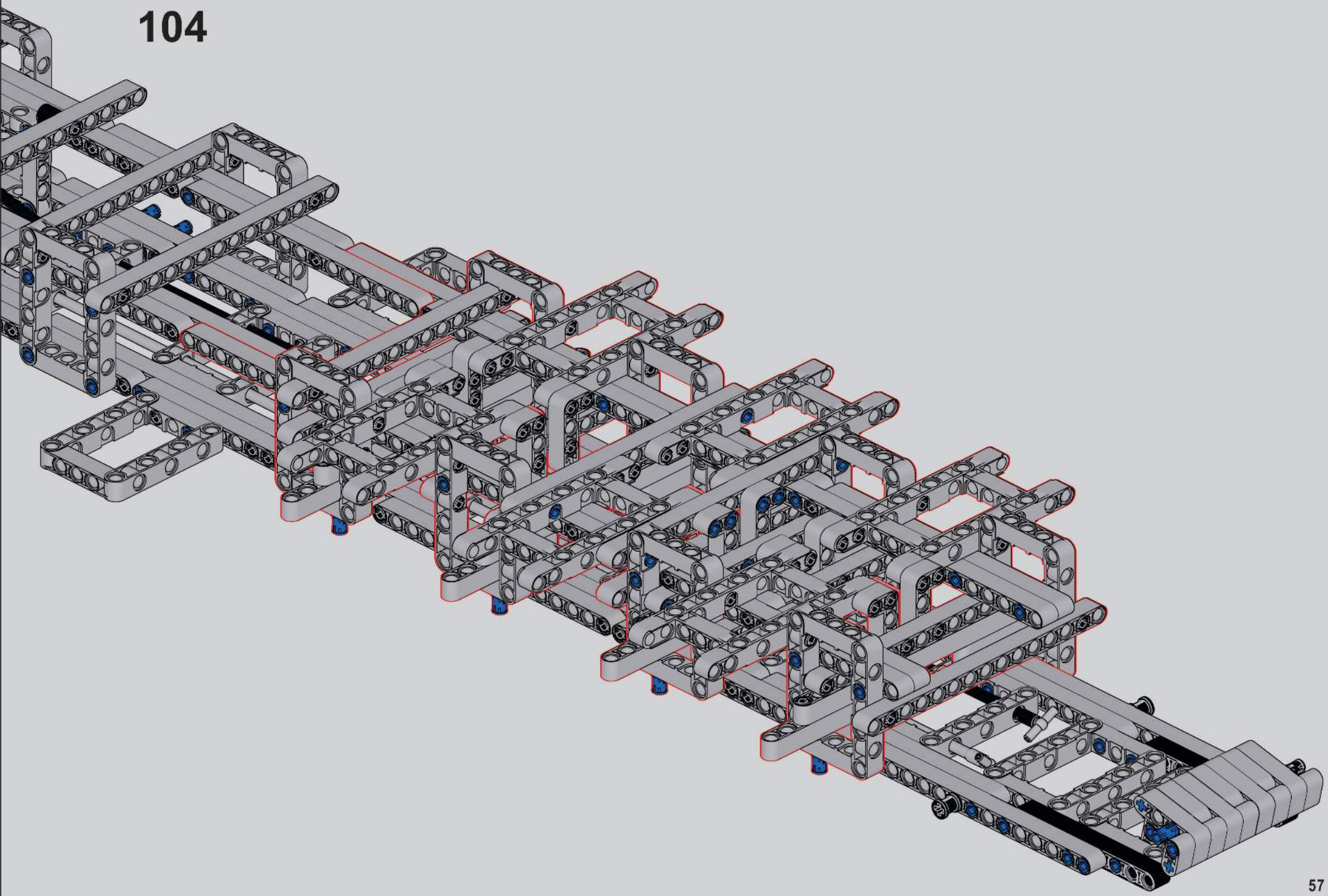

105

106

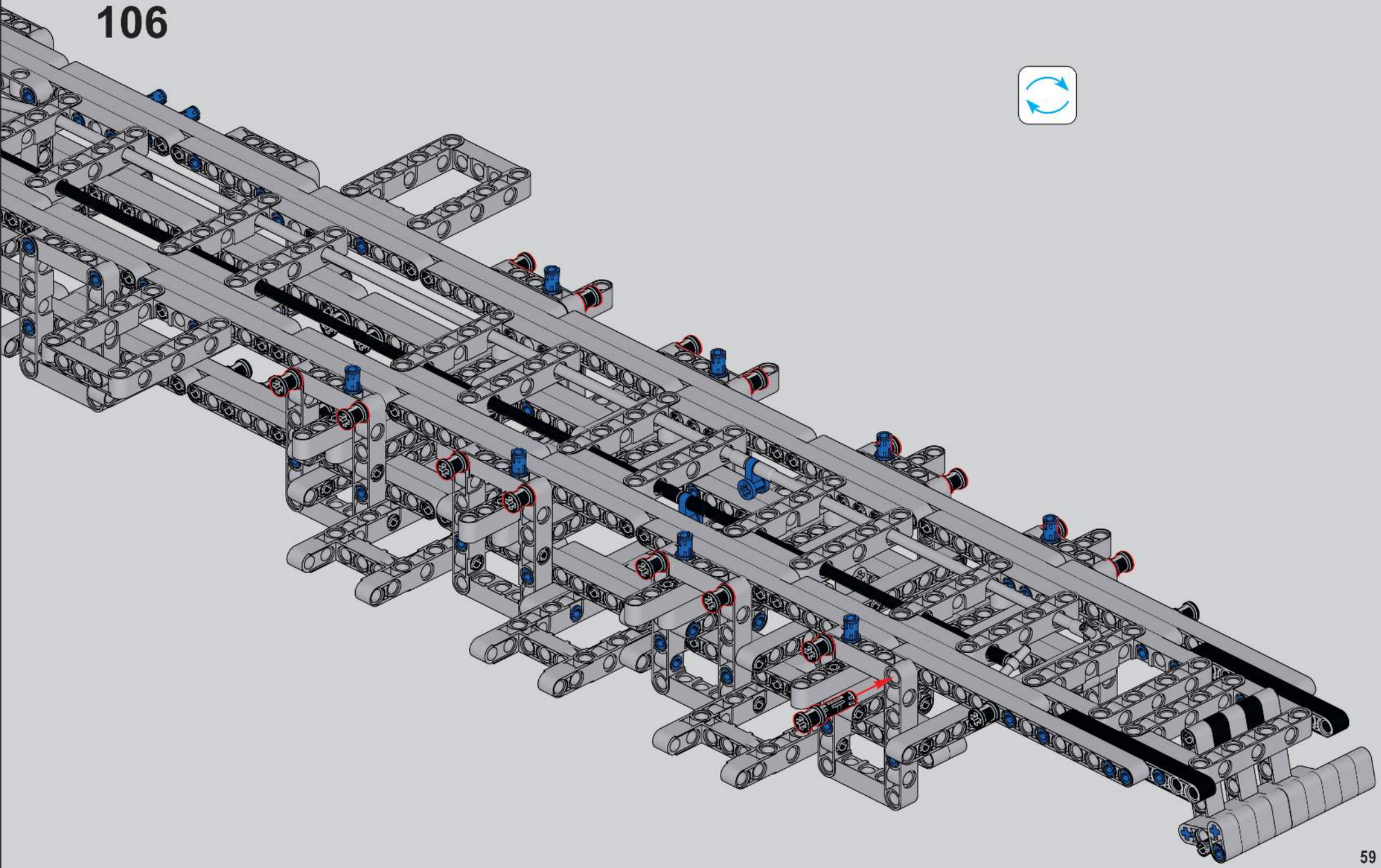

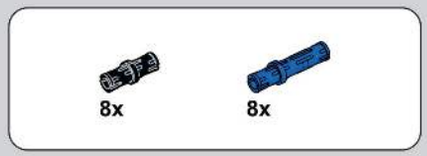

107

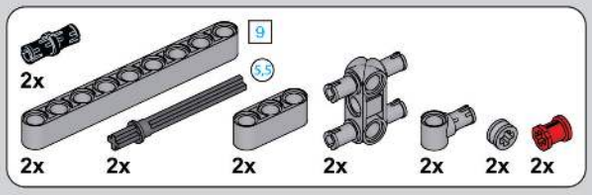

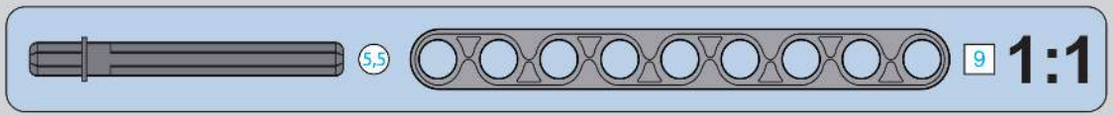

108

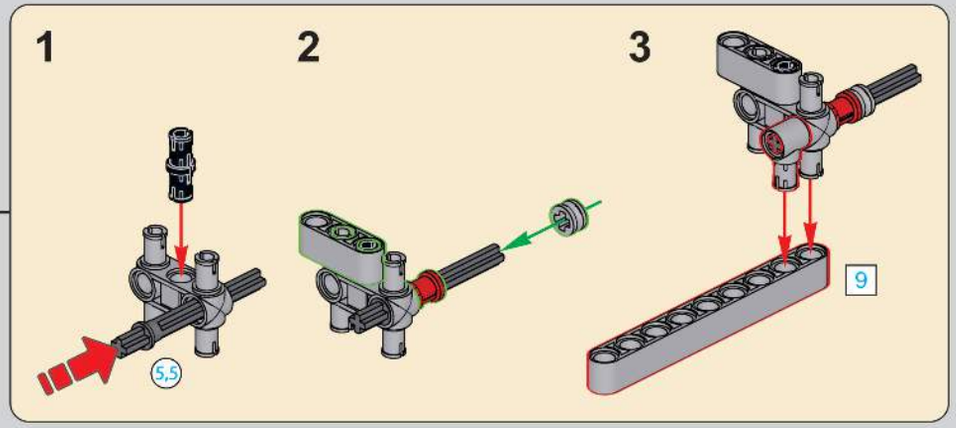

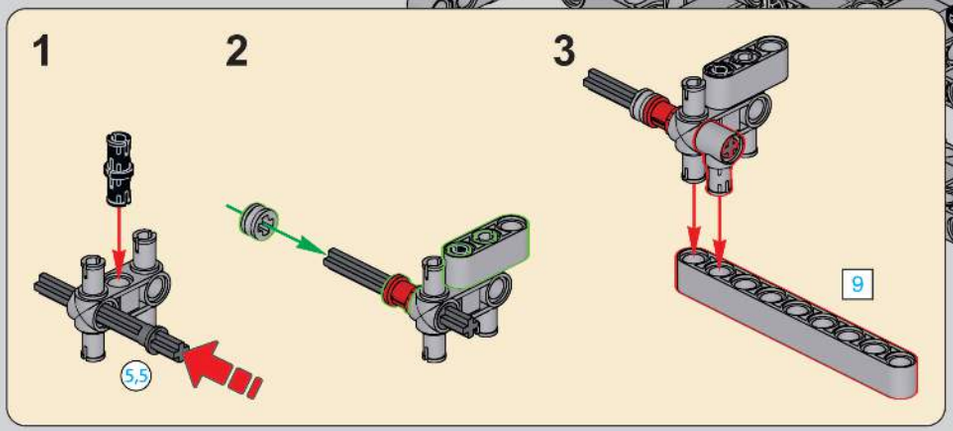

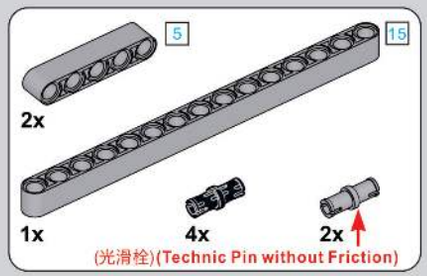
5
15
2x
1x
4x
2x
(光滑栓)(Technic Pin without Friction)

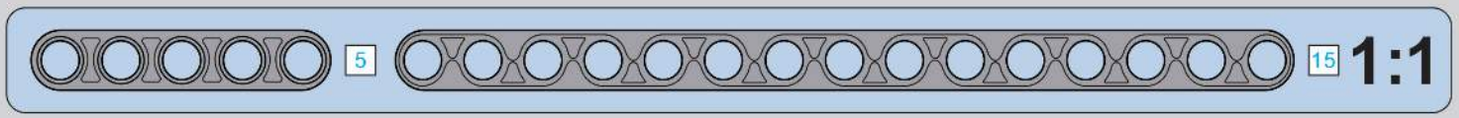
5
15
1:1

109

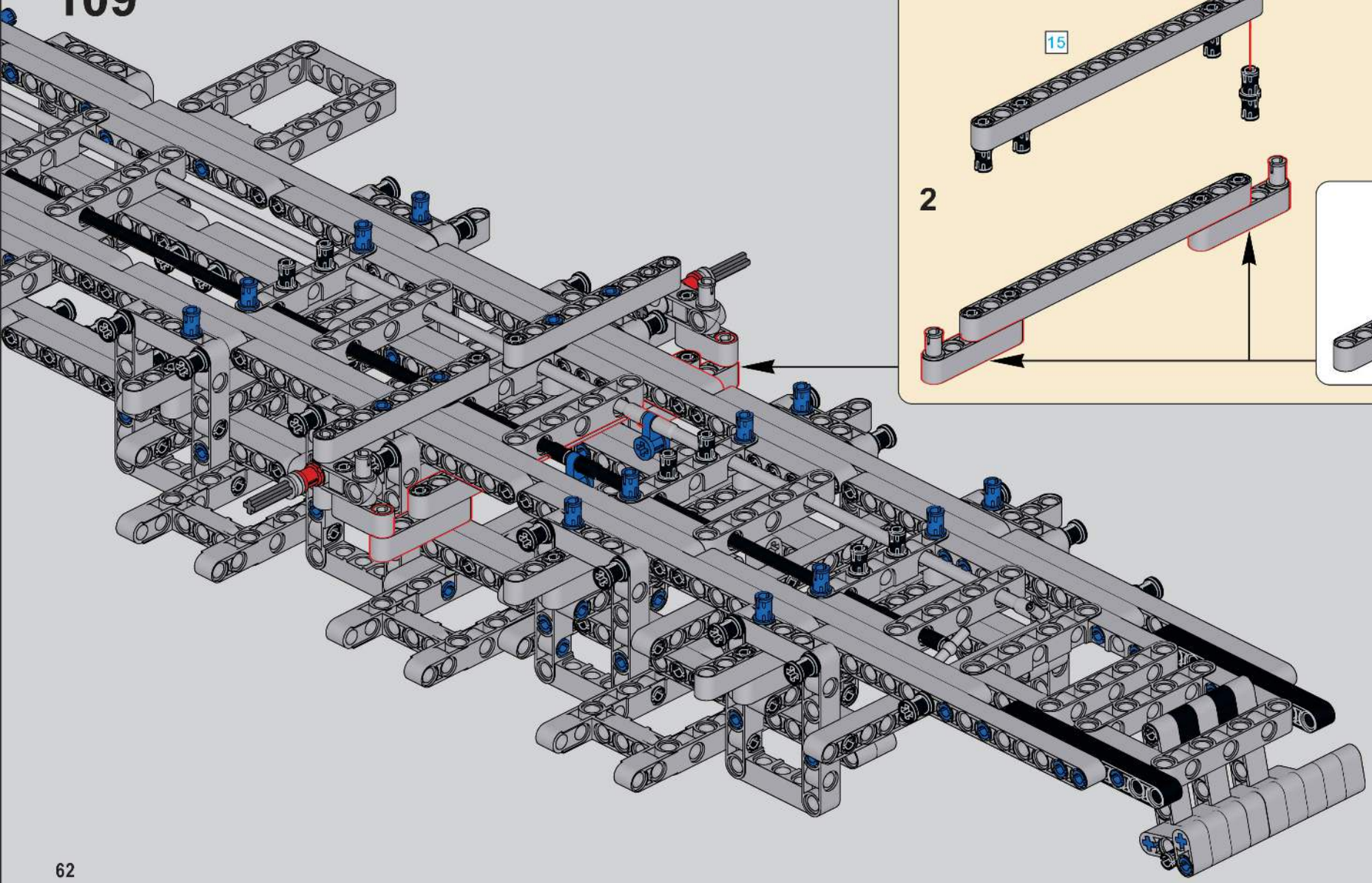
1
15
2
5
2x

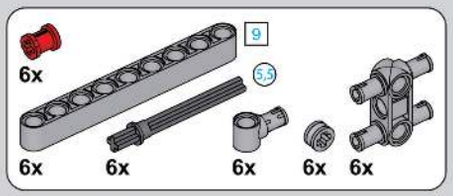

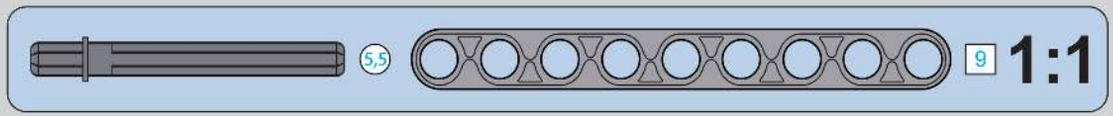

110

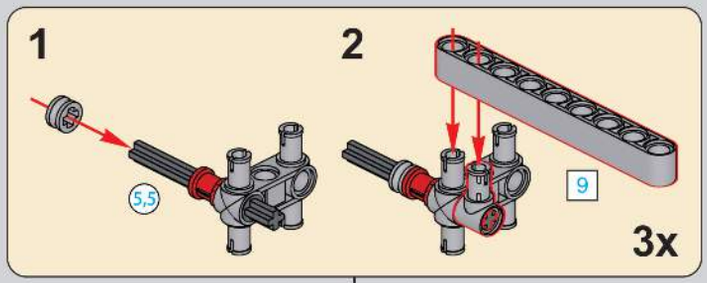

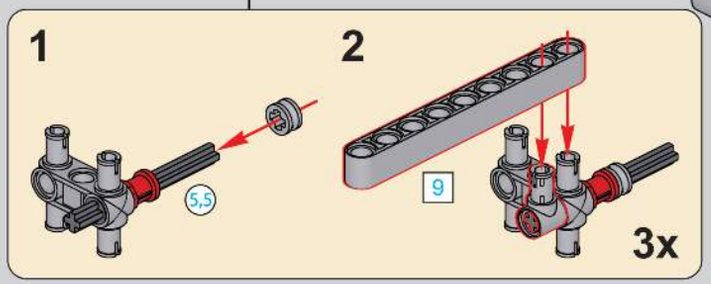

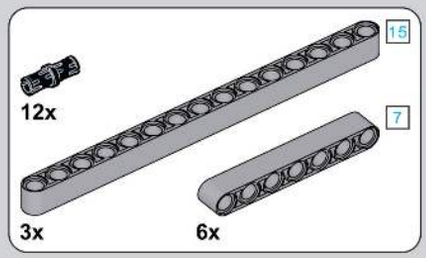

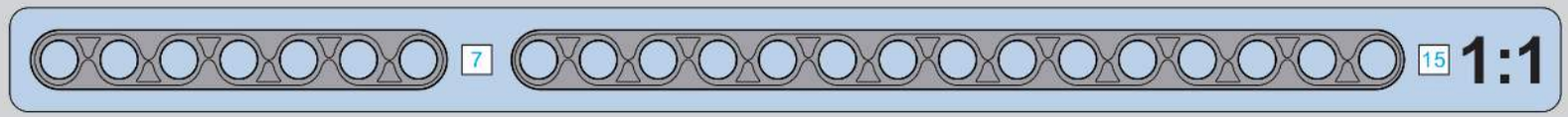

111

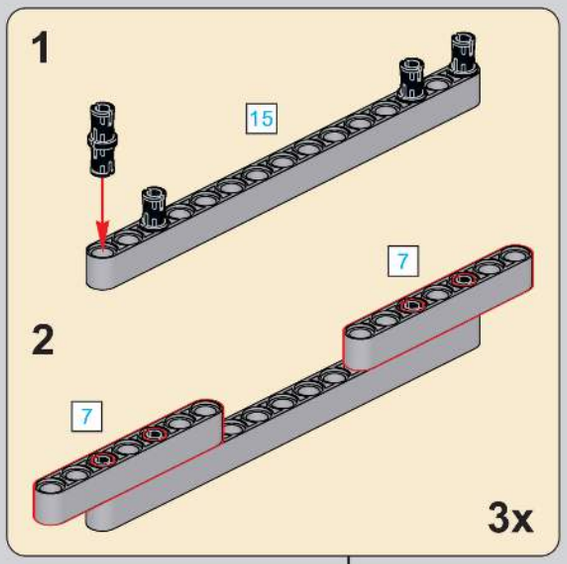

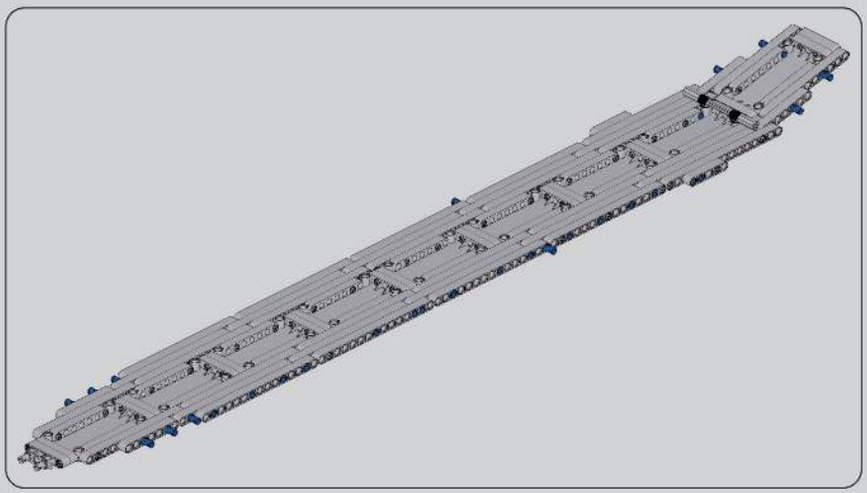

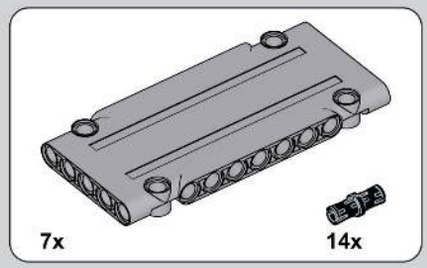

112

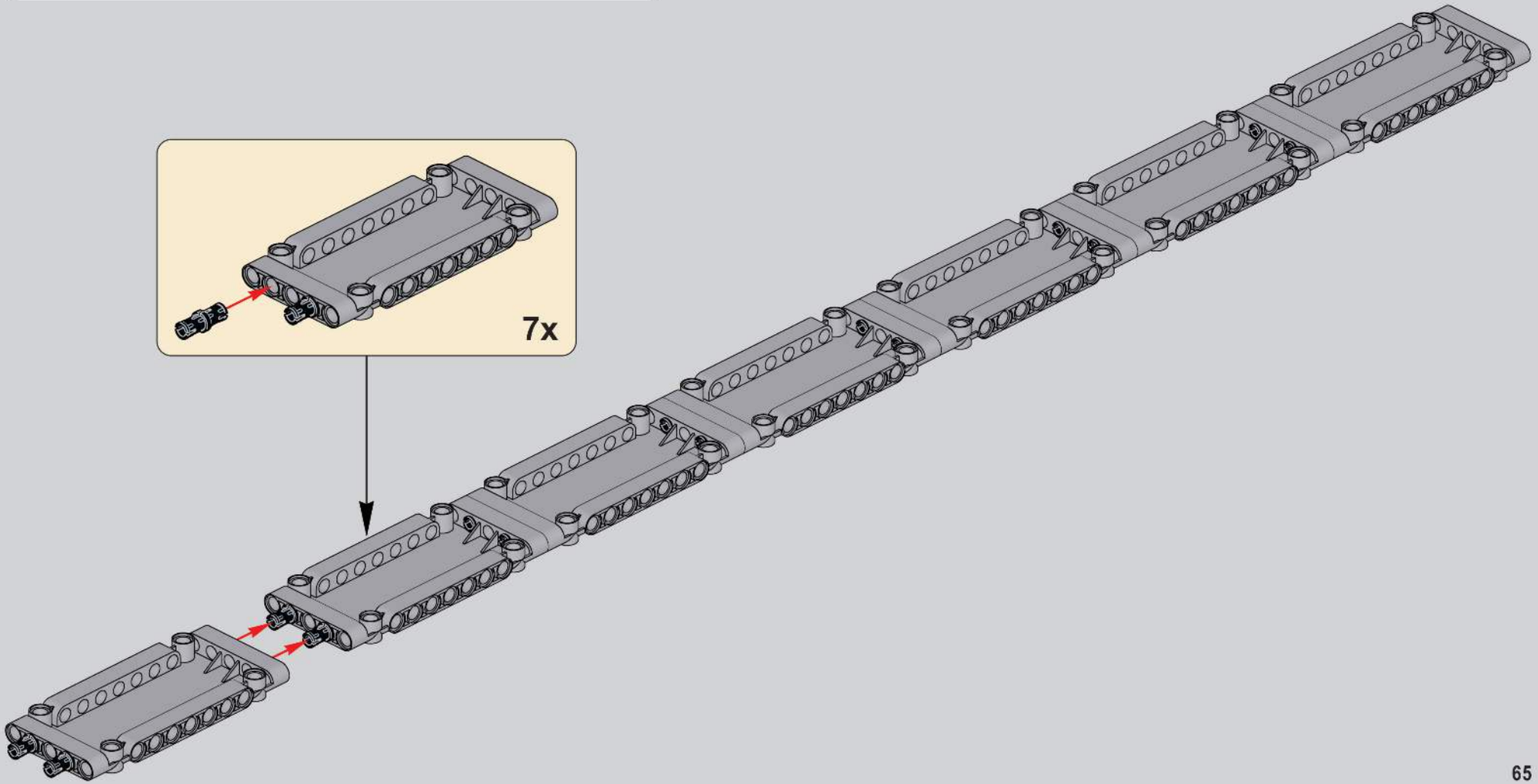

28x

113

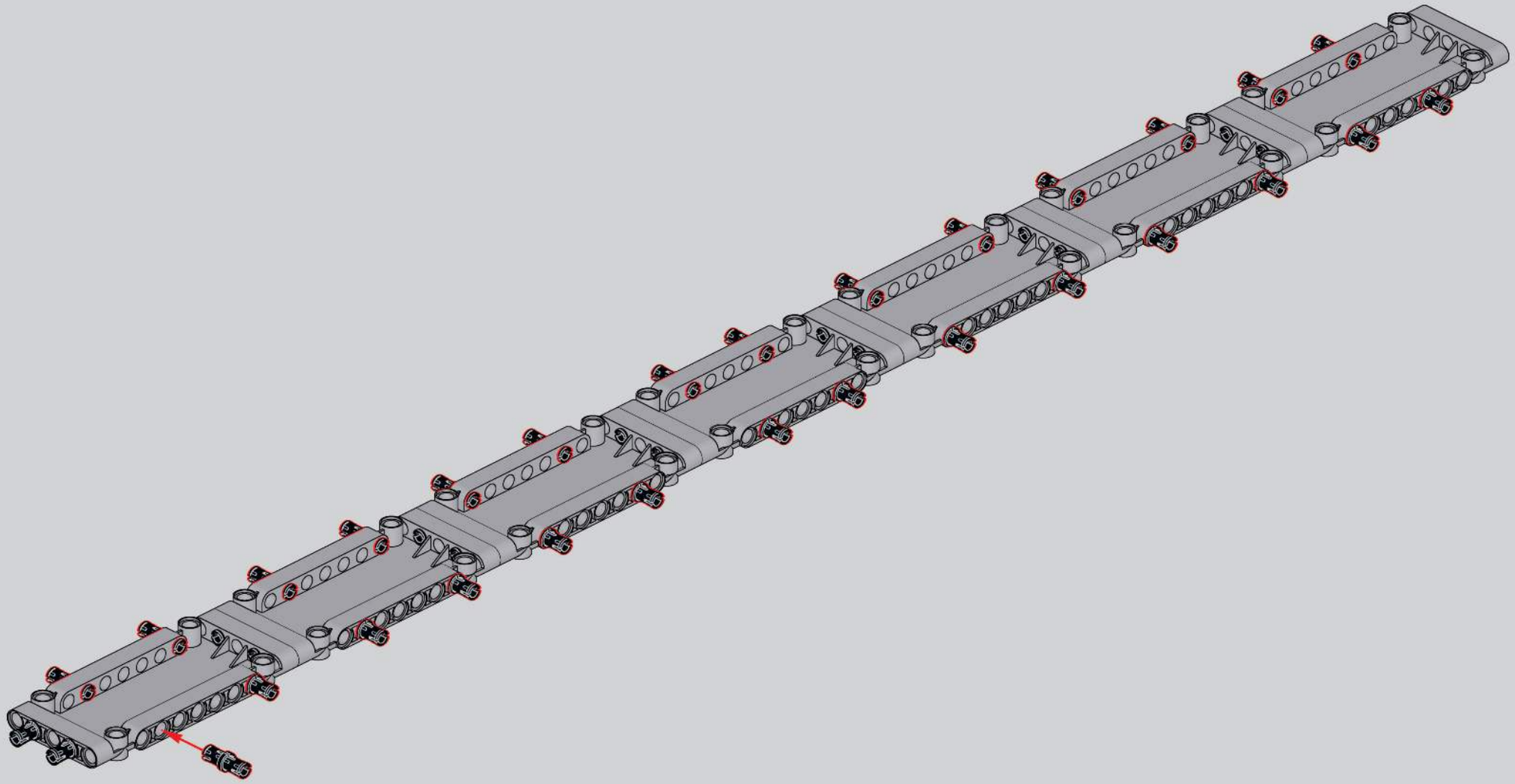

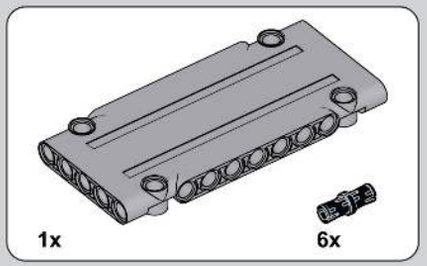

114

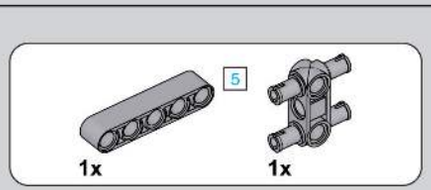

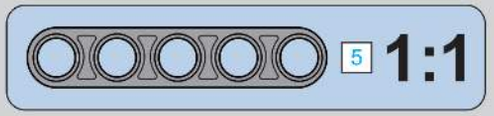

115

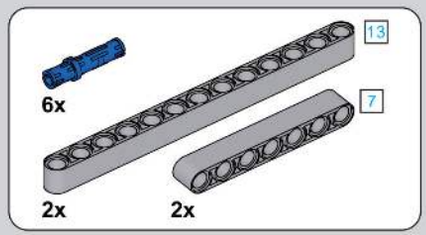

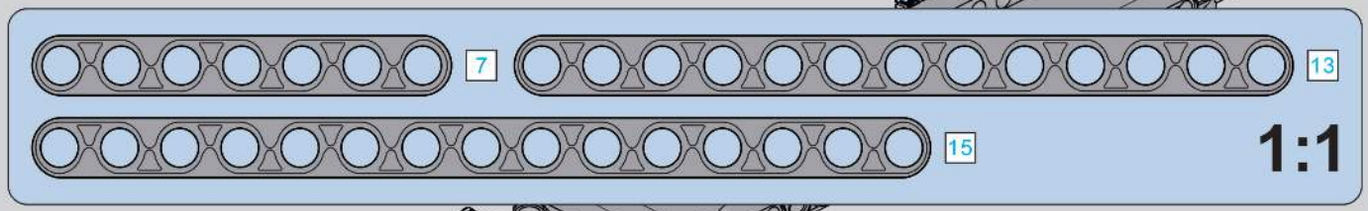

116

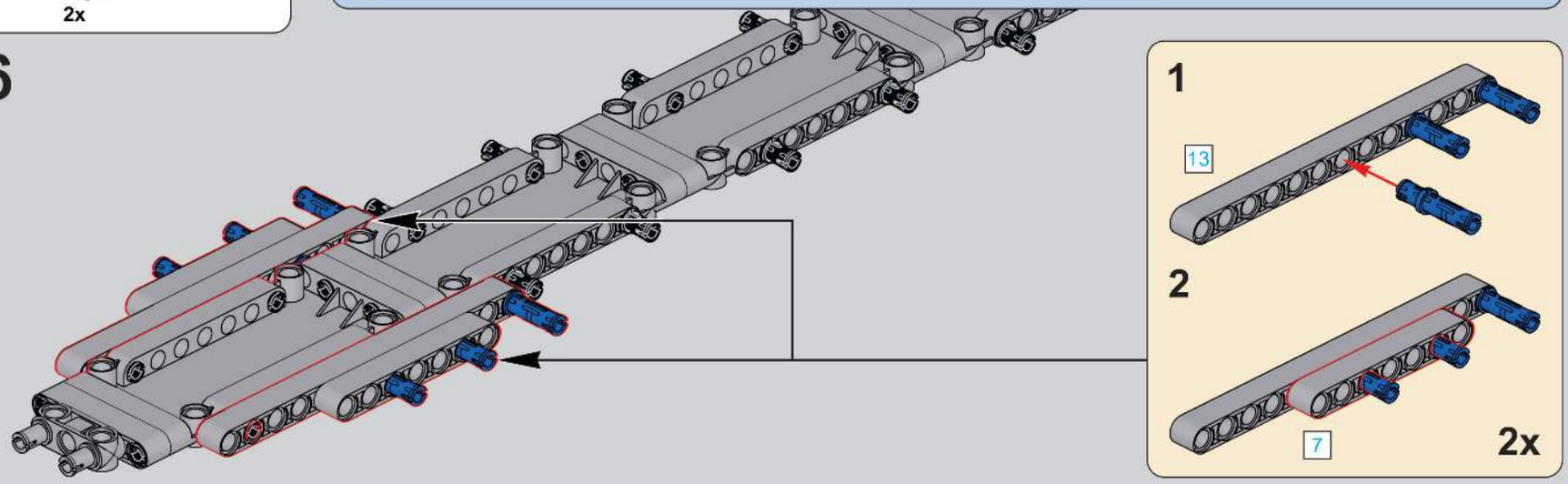

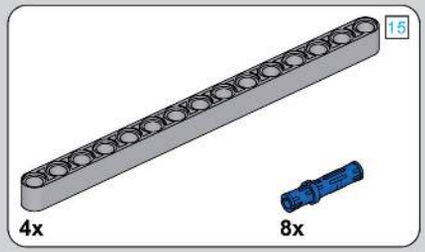

117

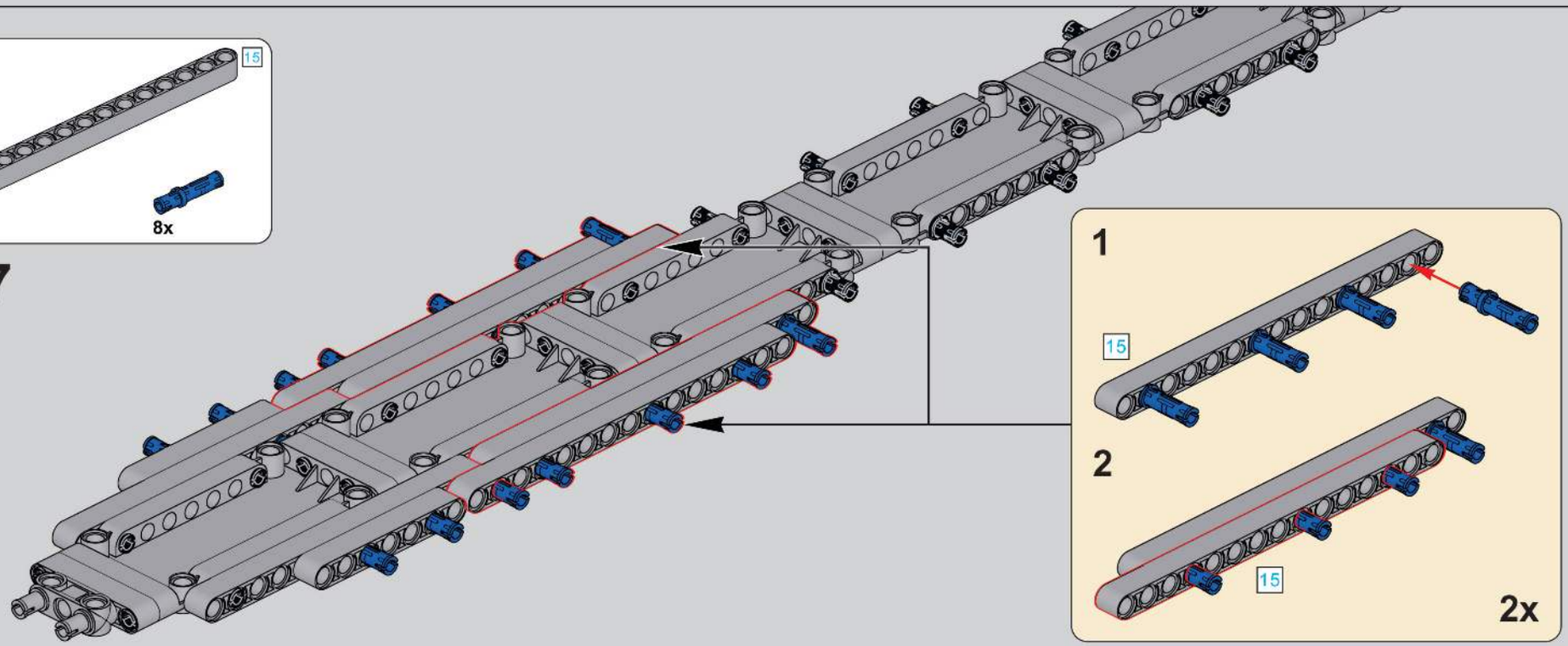

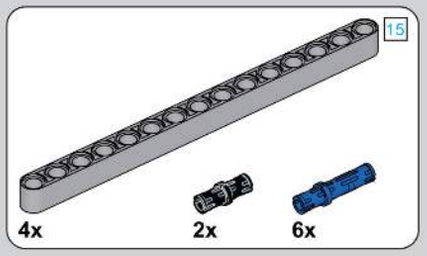

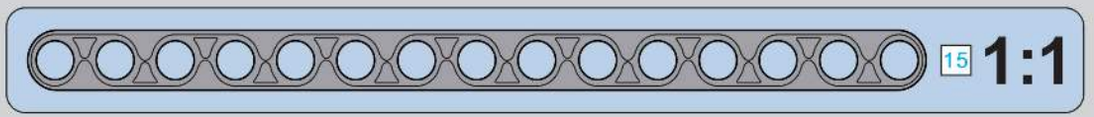

118

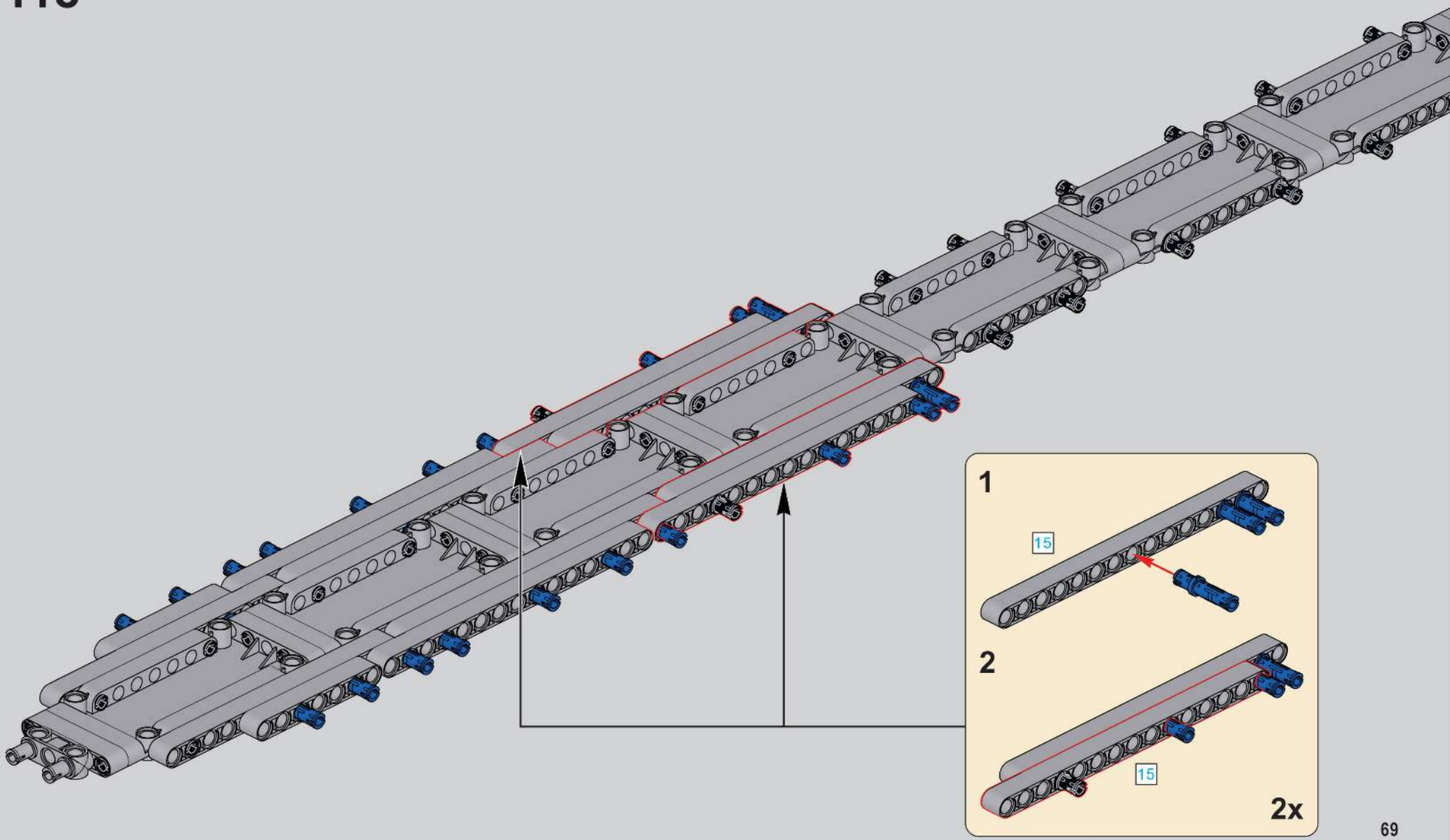

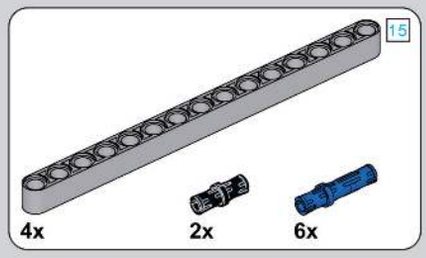

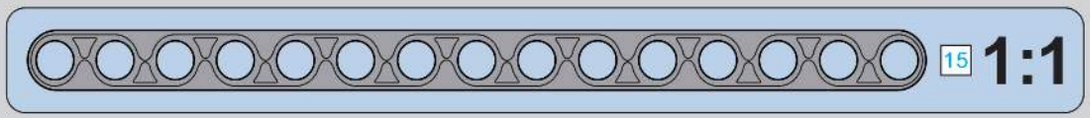

119

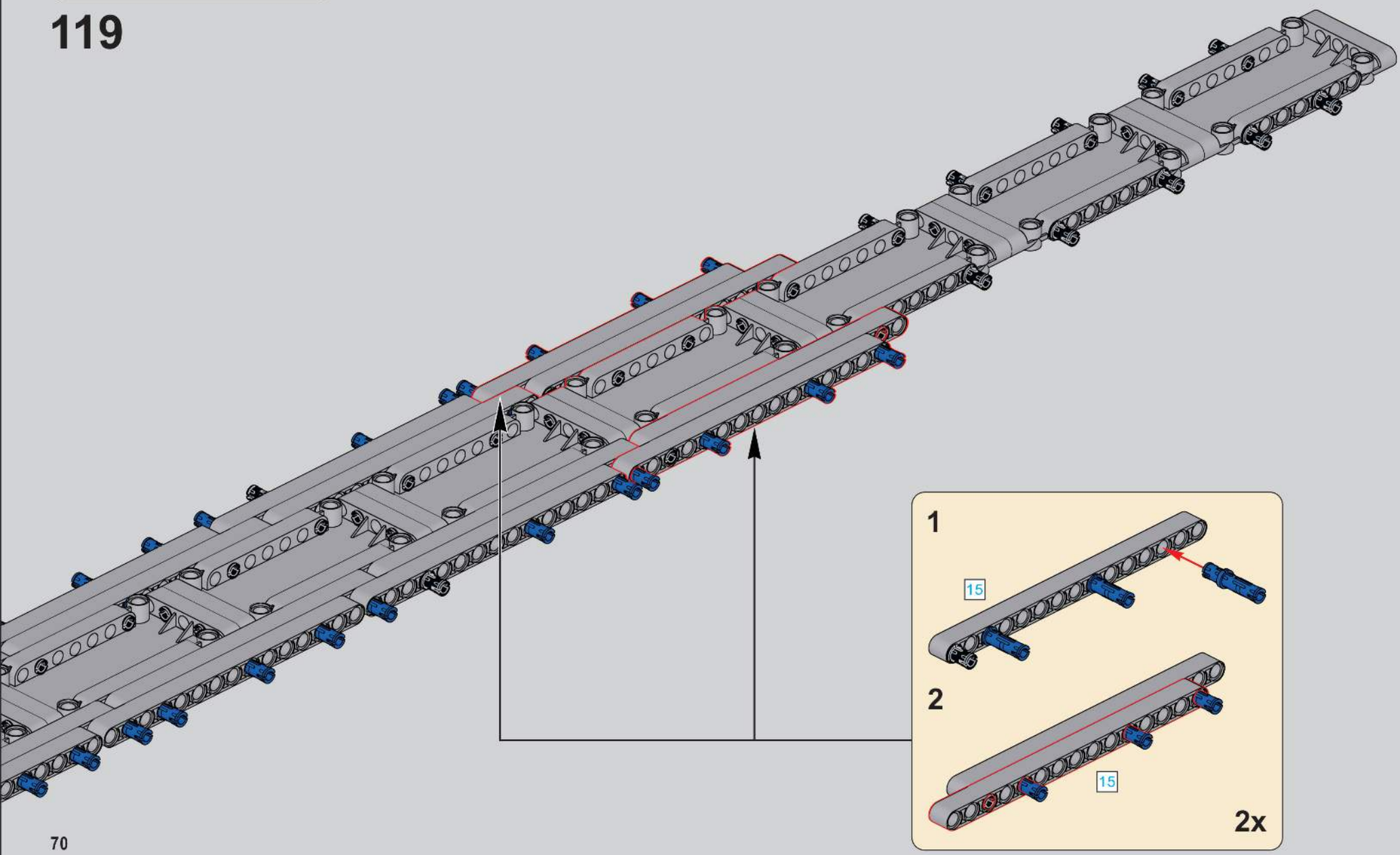

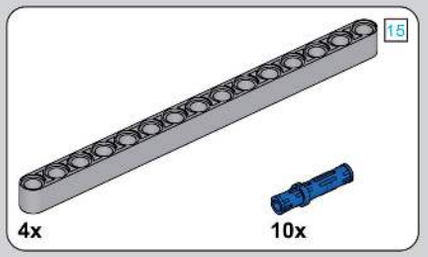

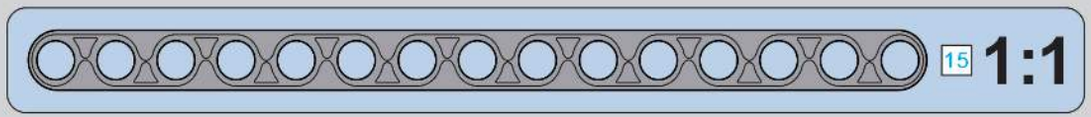

120

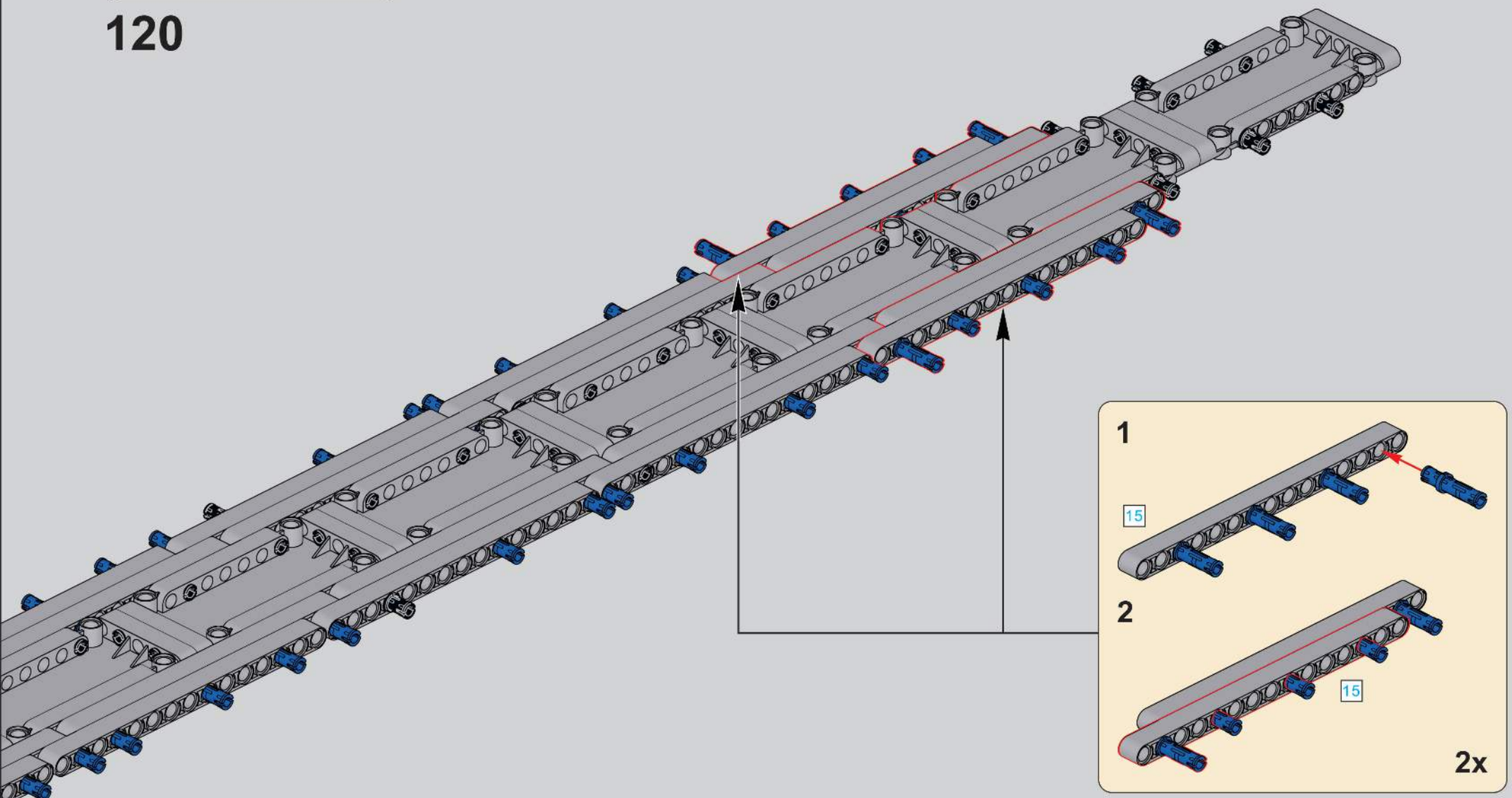

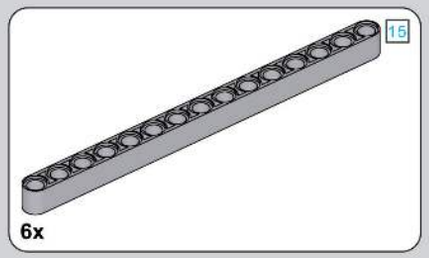

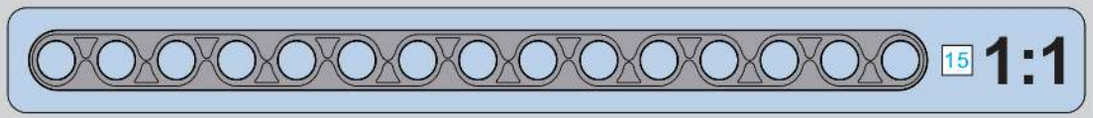

121

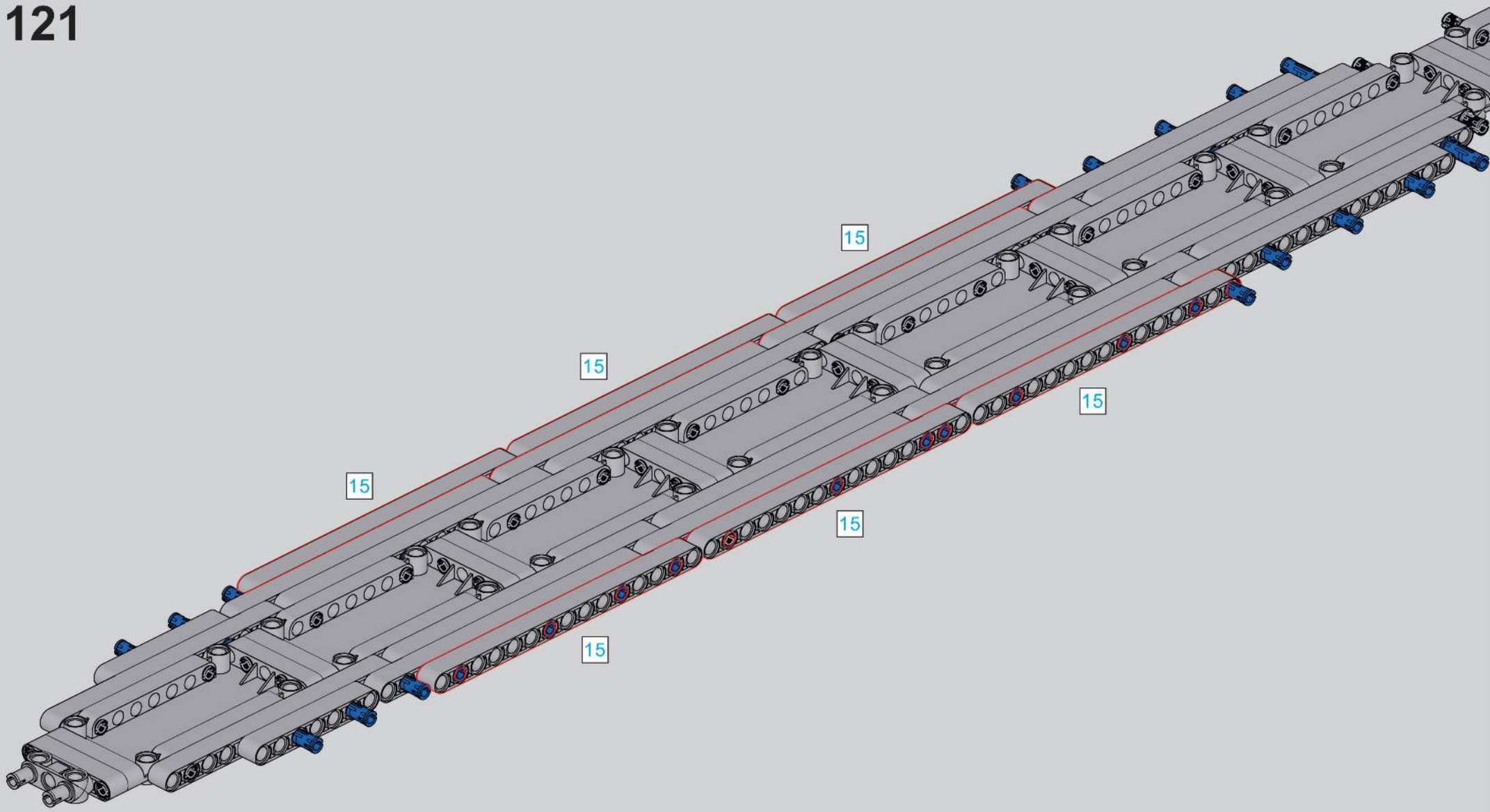

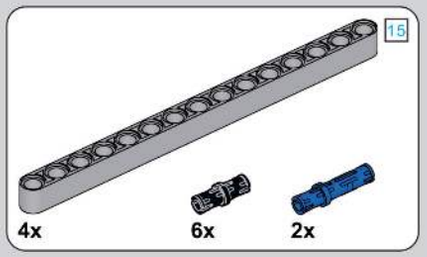

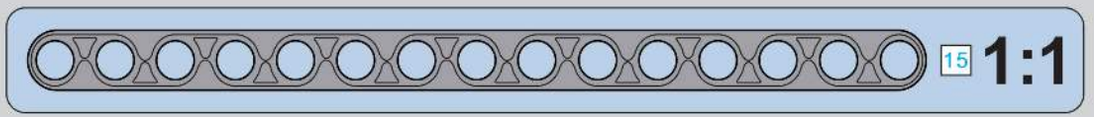

122

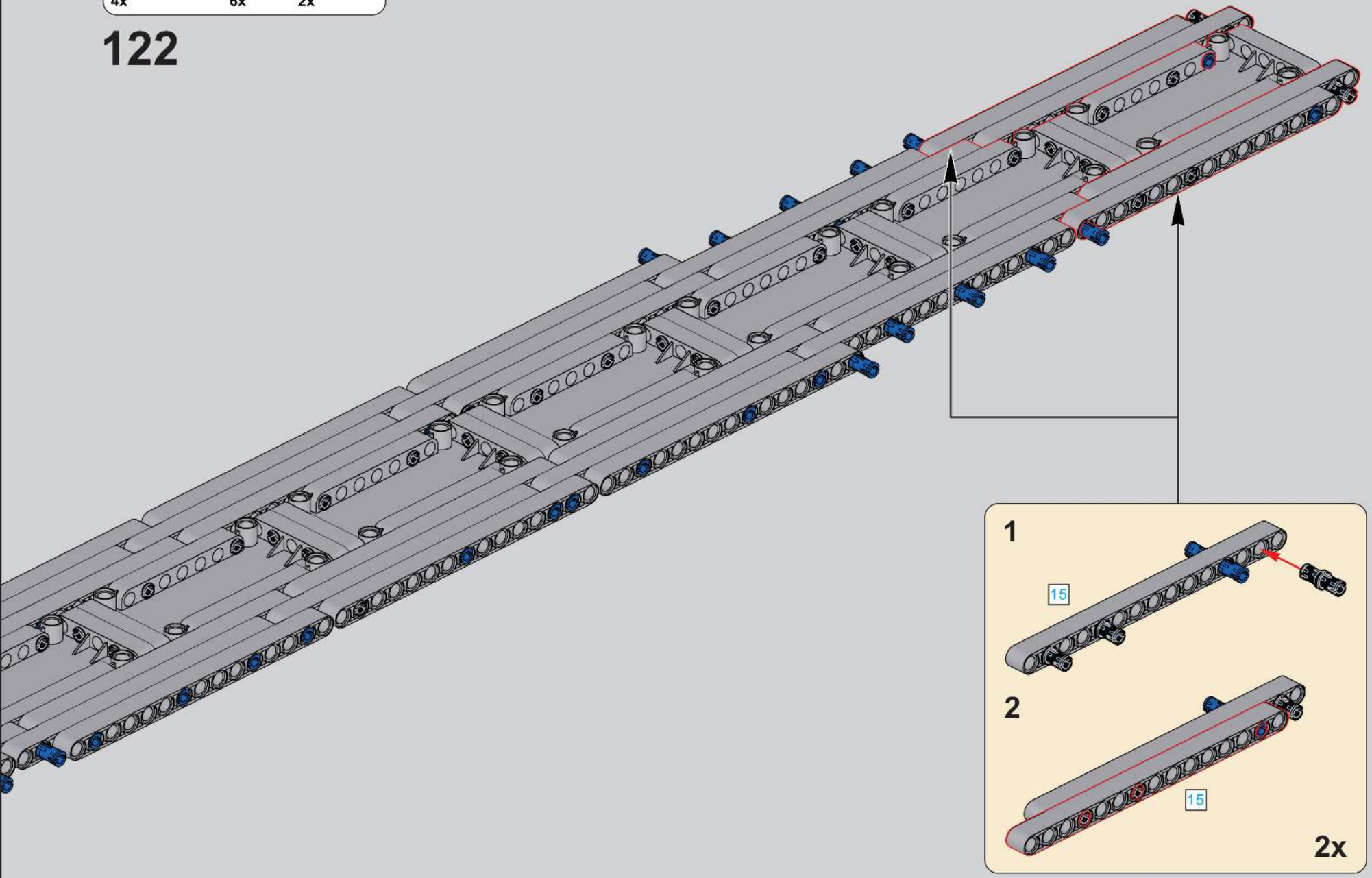

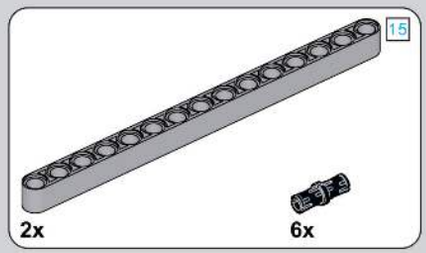

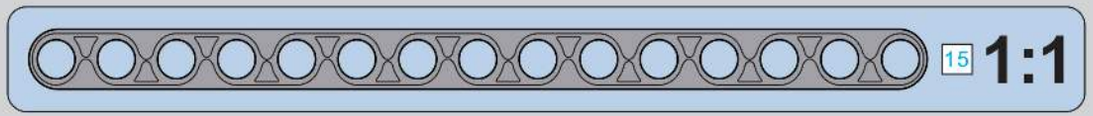

123

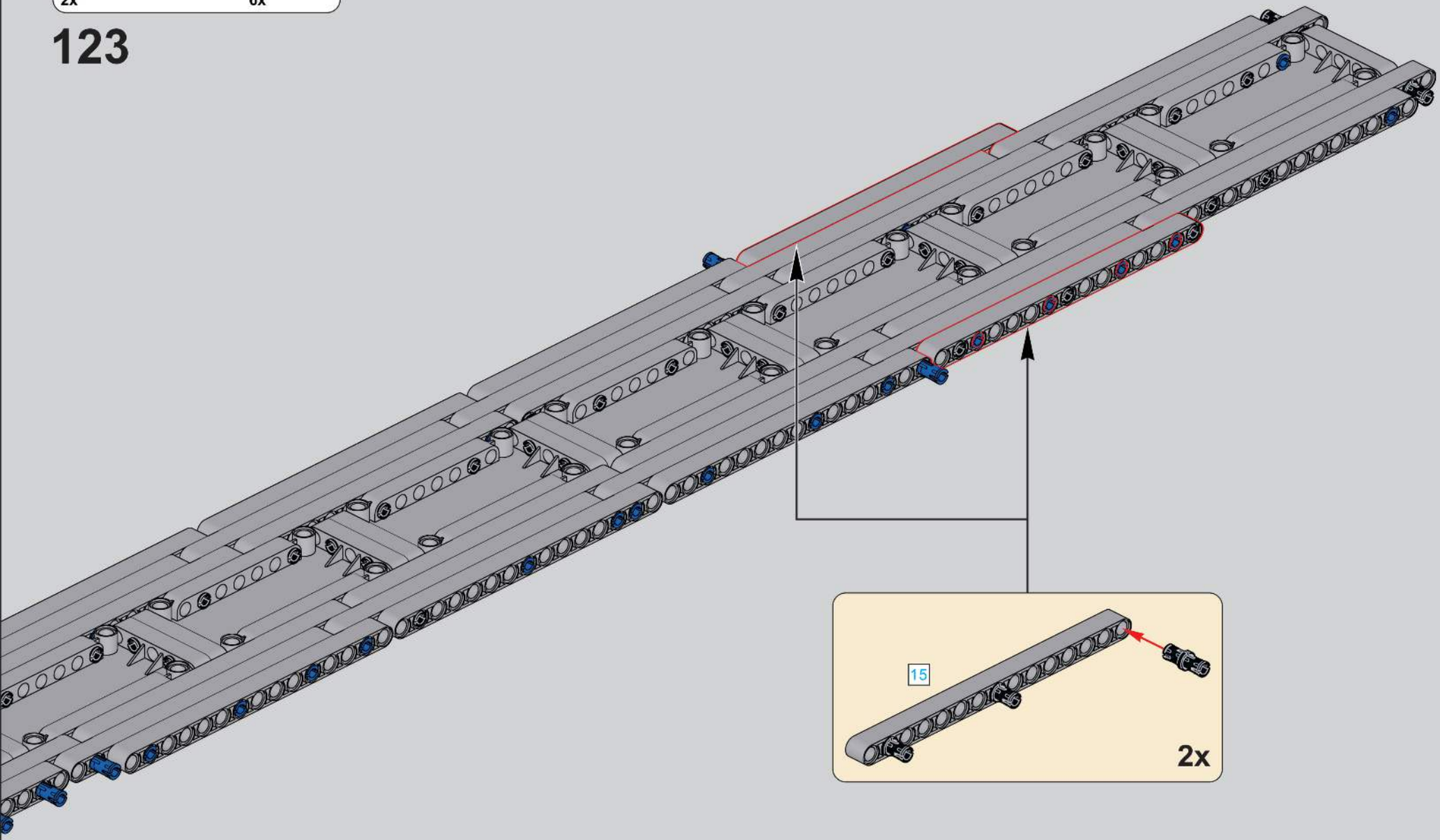

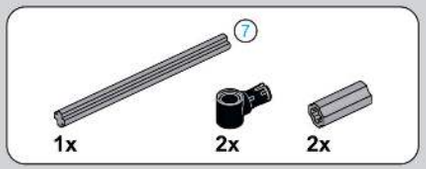

124

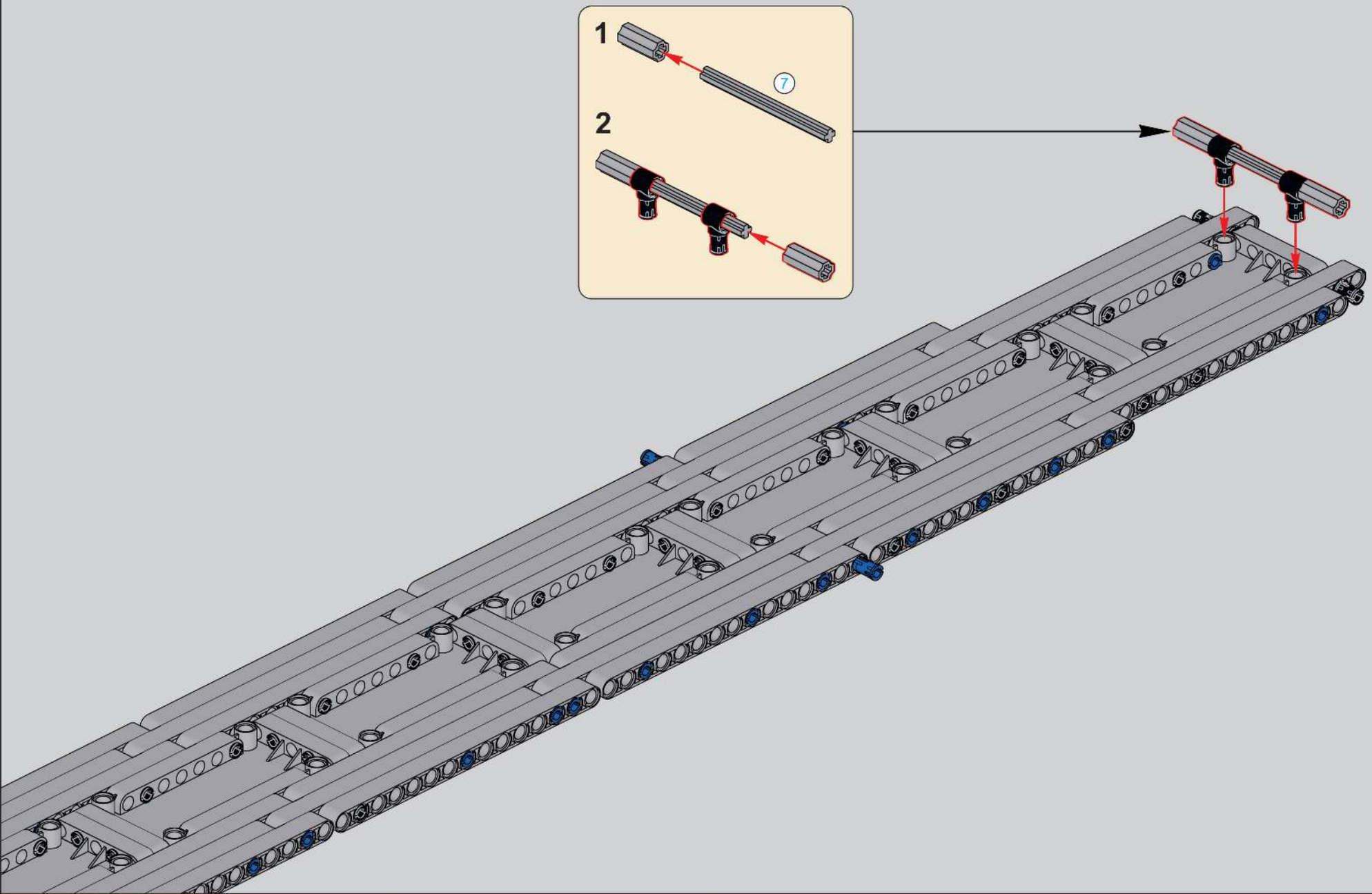

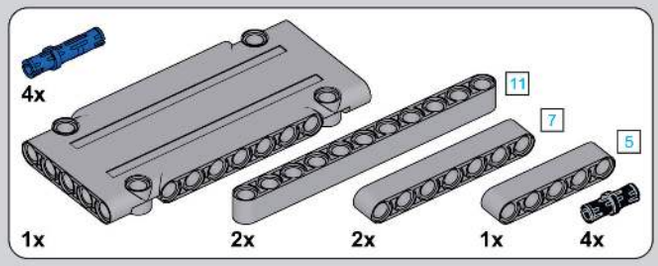

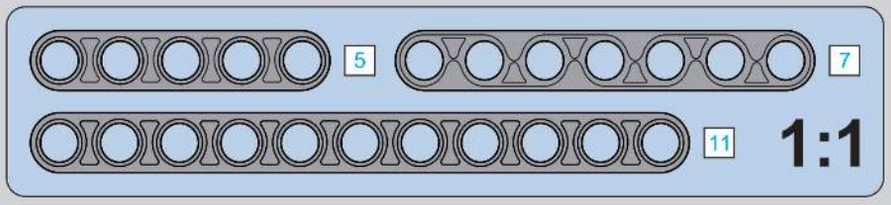

125

7

7

1

2

5

11

11

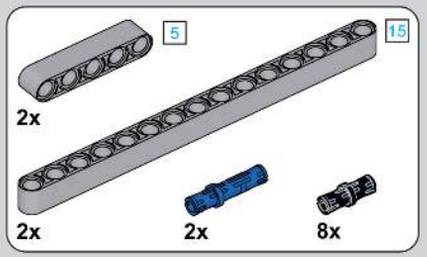

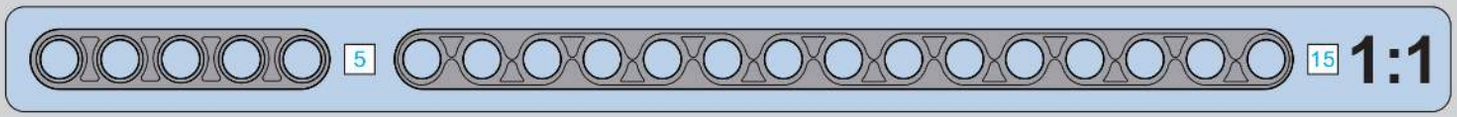

126

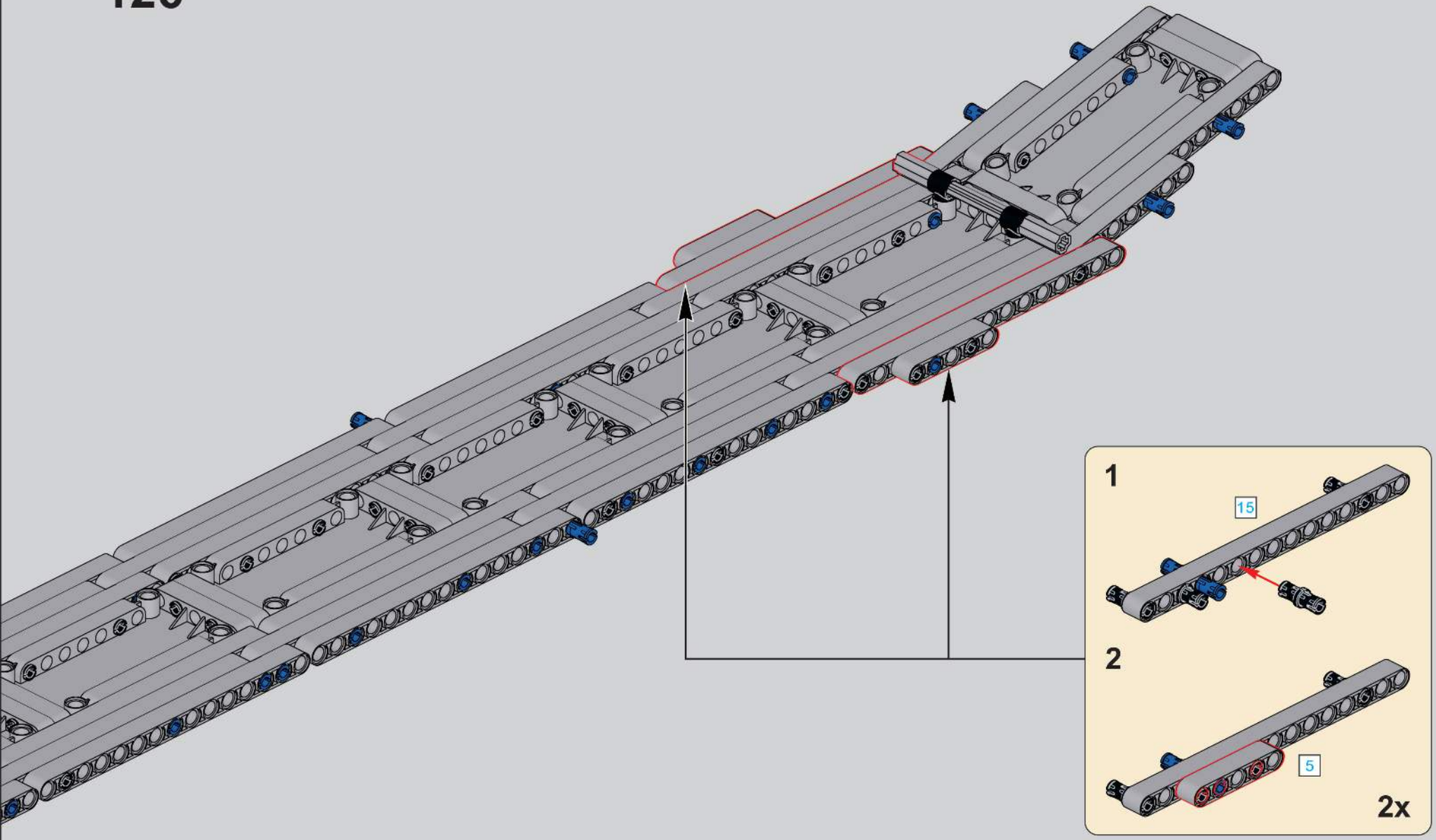

127

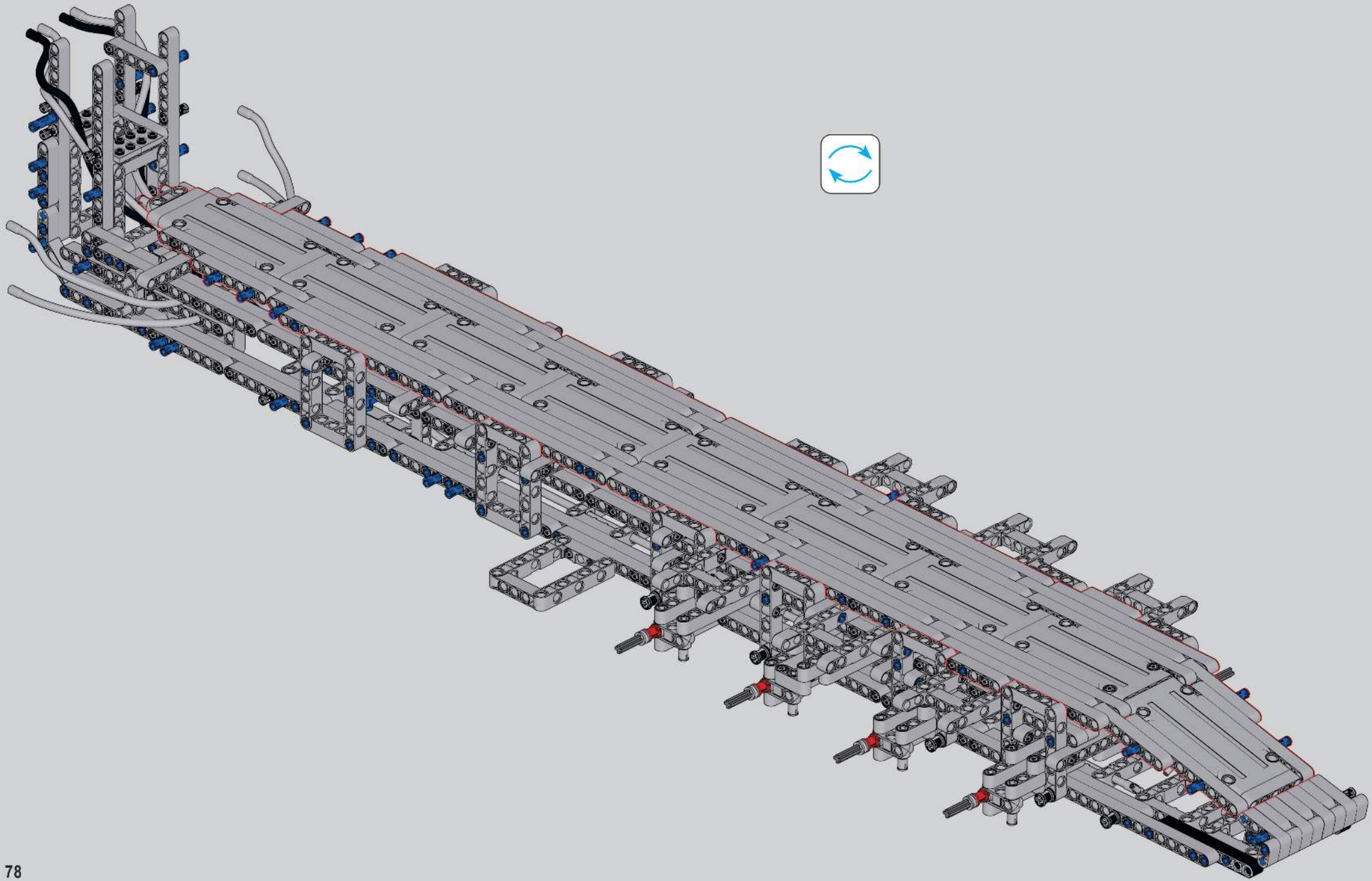

24x
128

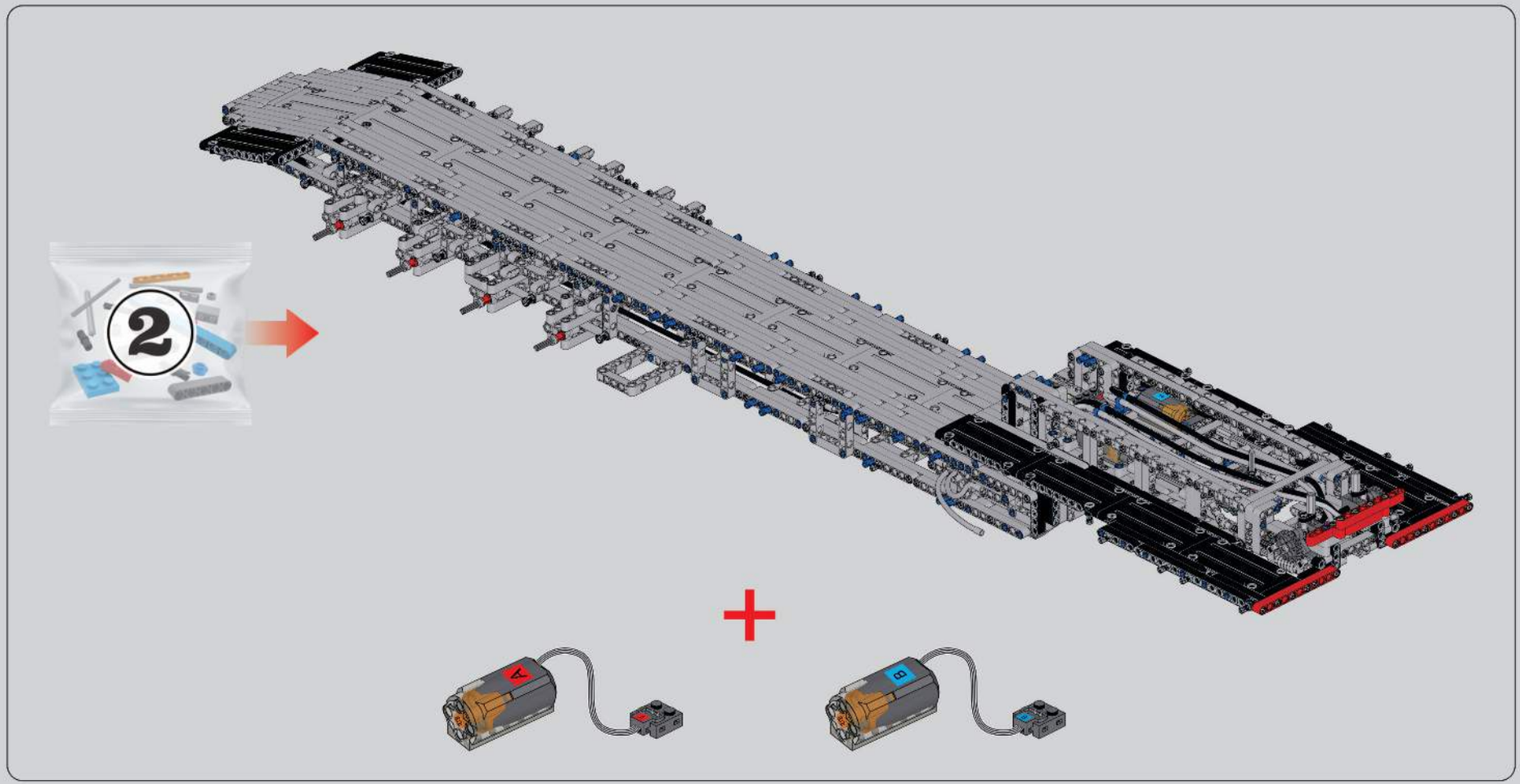
2
A
B

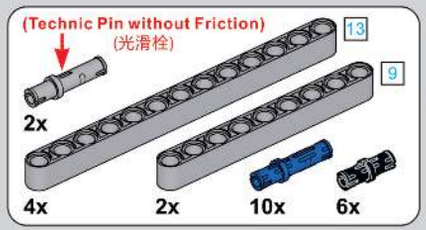
(Technic Pin without Friction)
(光滑栓)
13
9
2x
4x
2x
10x
6x

129

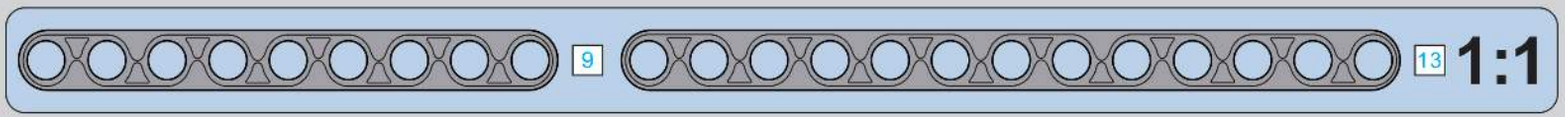
9
13
1:1

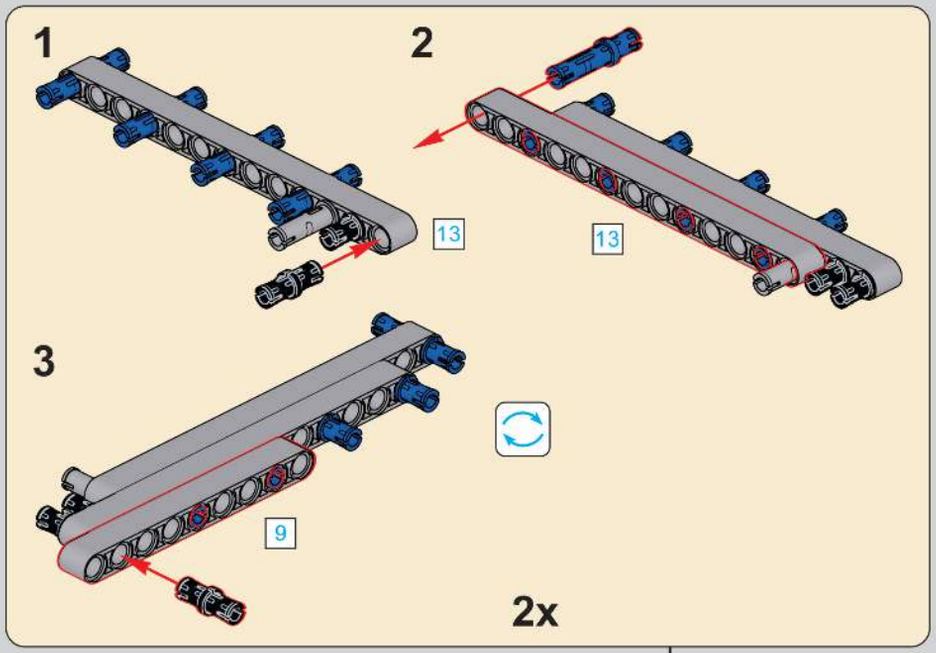
1
2
3
13
13
9
2x

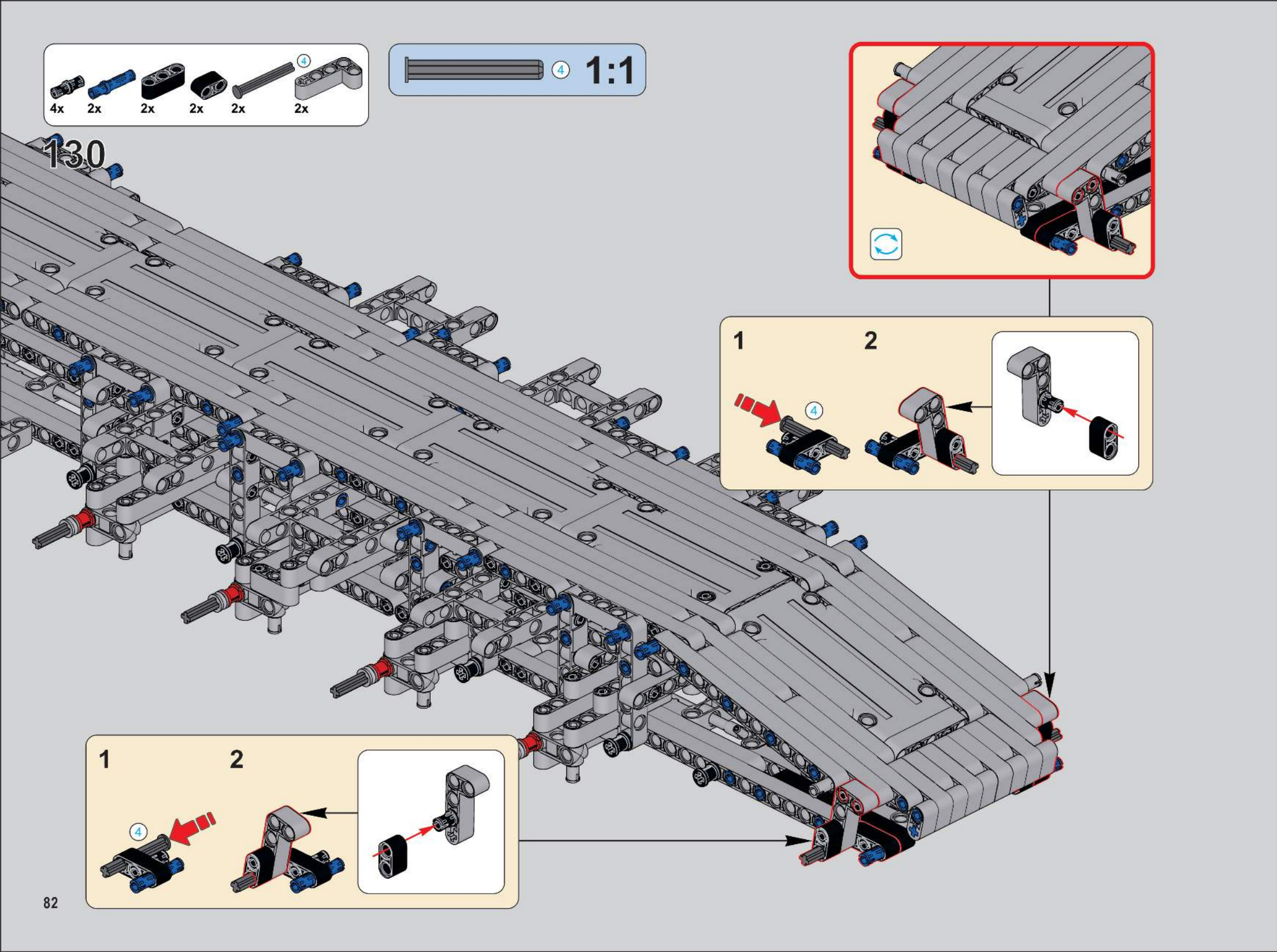
4x
2x
2x
2x
2x
4
2x
4
1:1
130
1
2
4
1
2
4

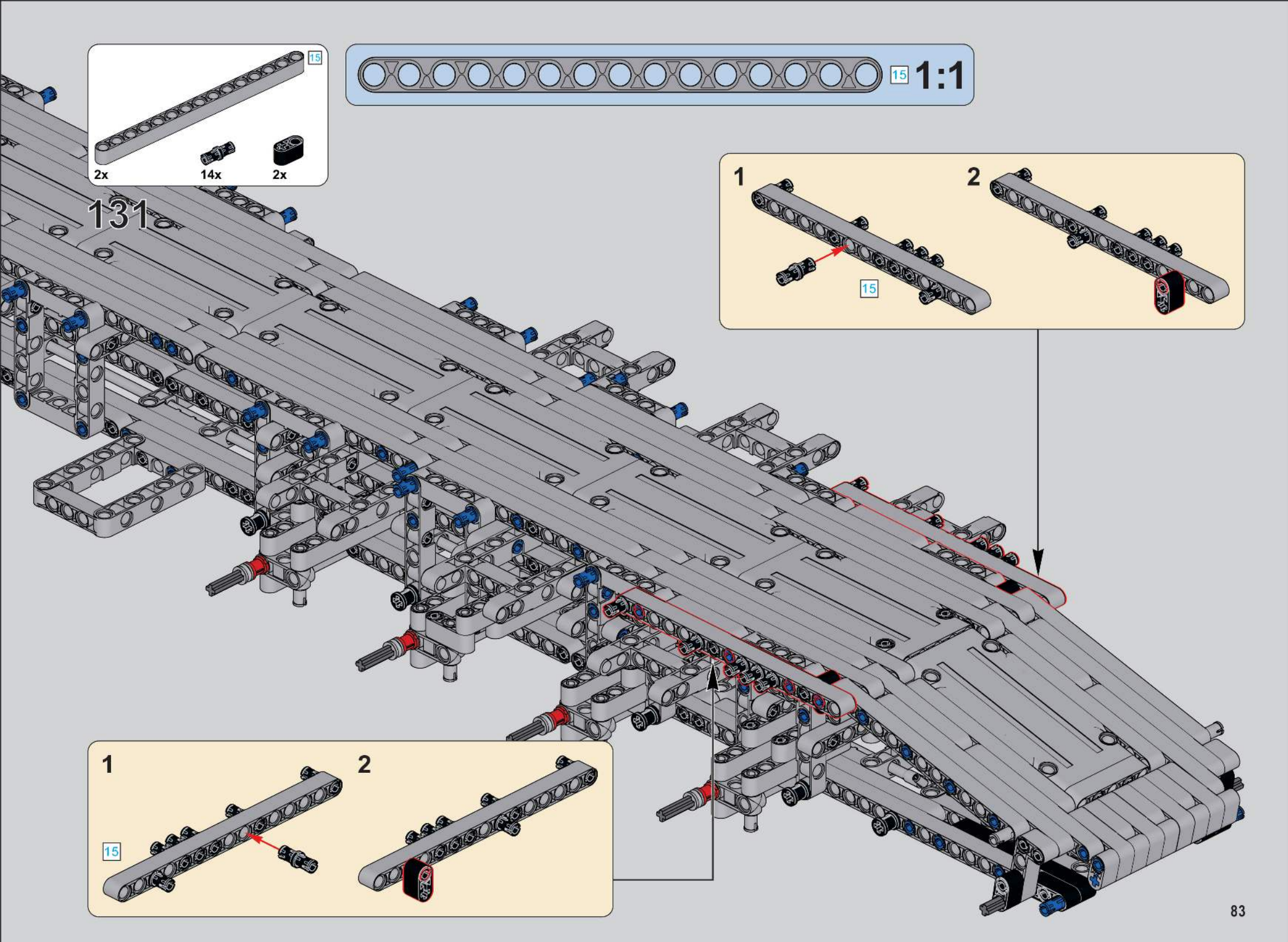
15
2x
14x
2x
131
15
1:1
1
15
2
1
15
2

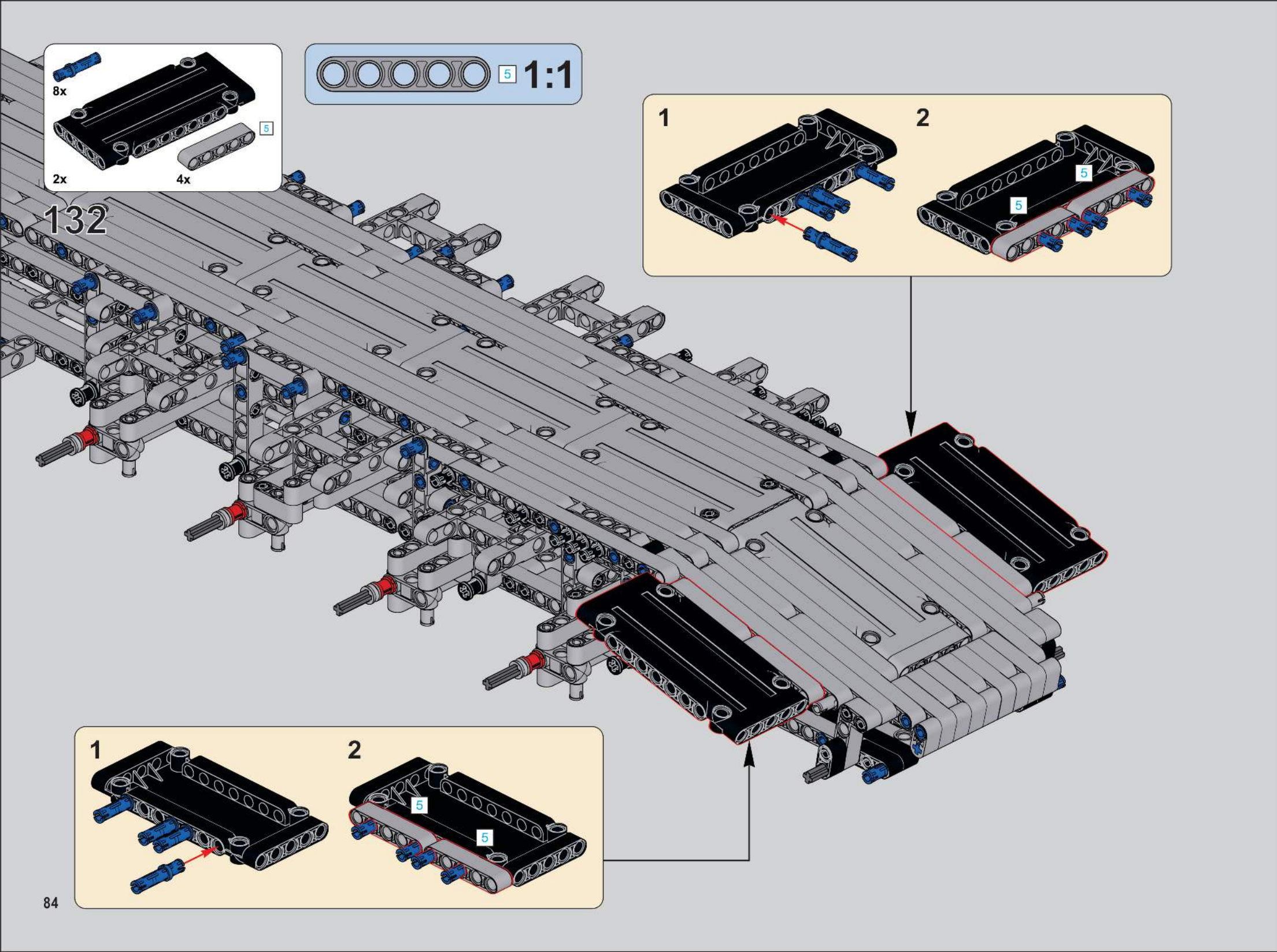
8x
5
2x
4x
132
5 1:1
1
2
5
5
1
2
5
5

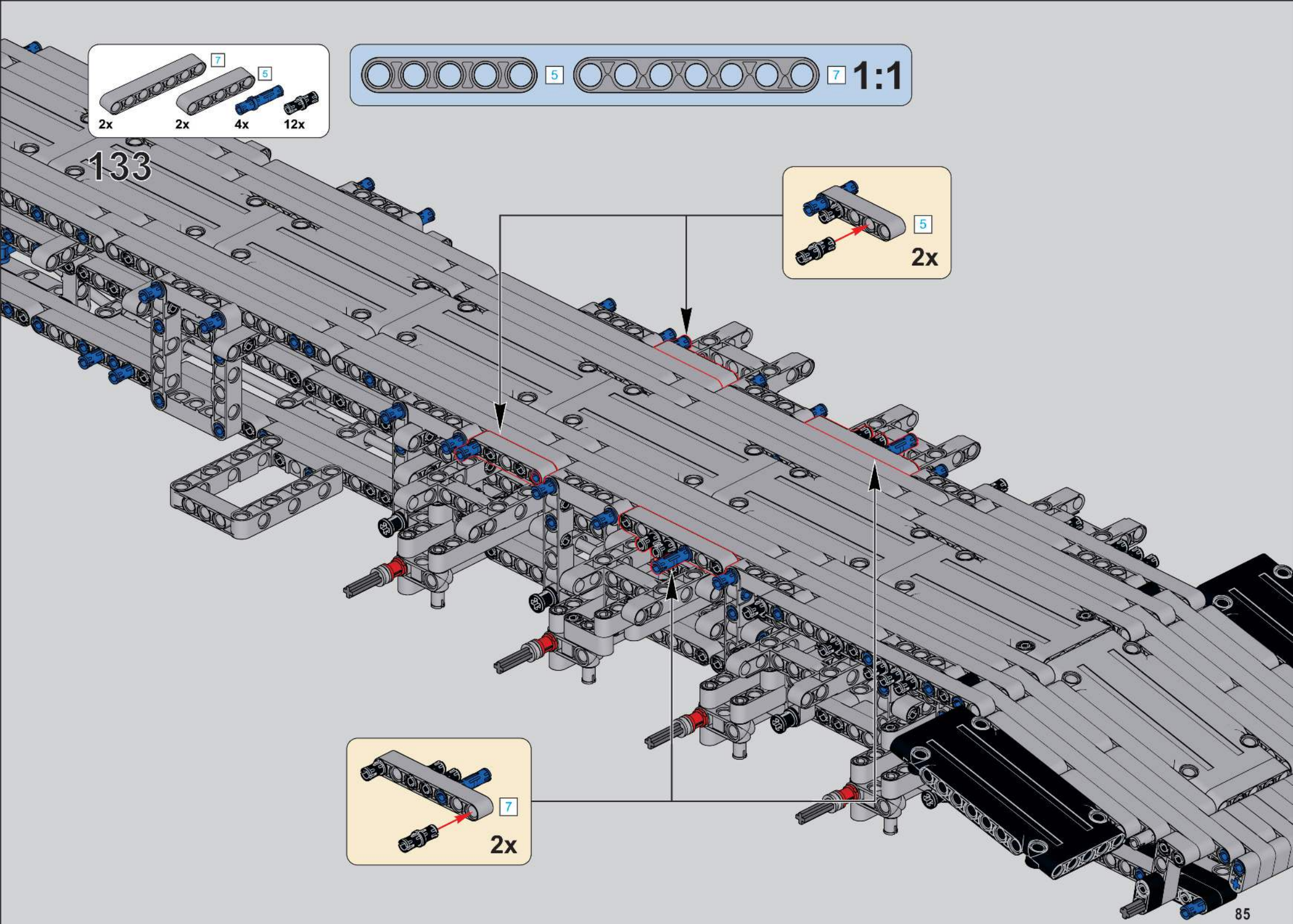
133
7
5
2x
2x
4x
12x
5
7
1:1
5
2x
7
2x

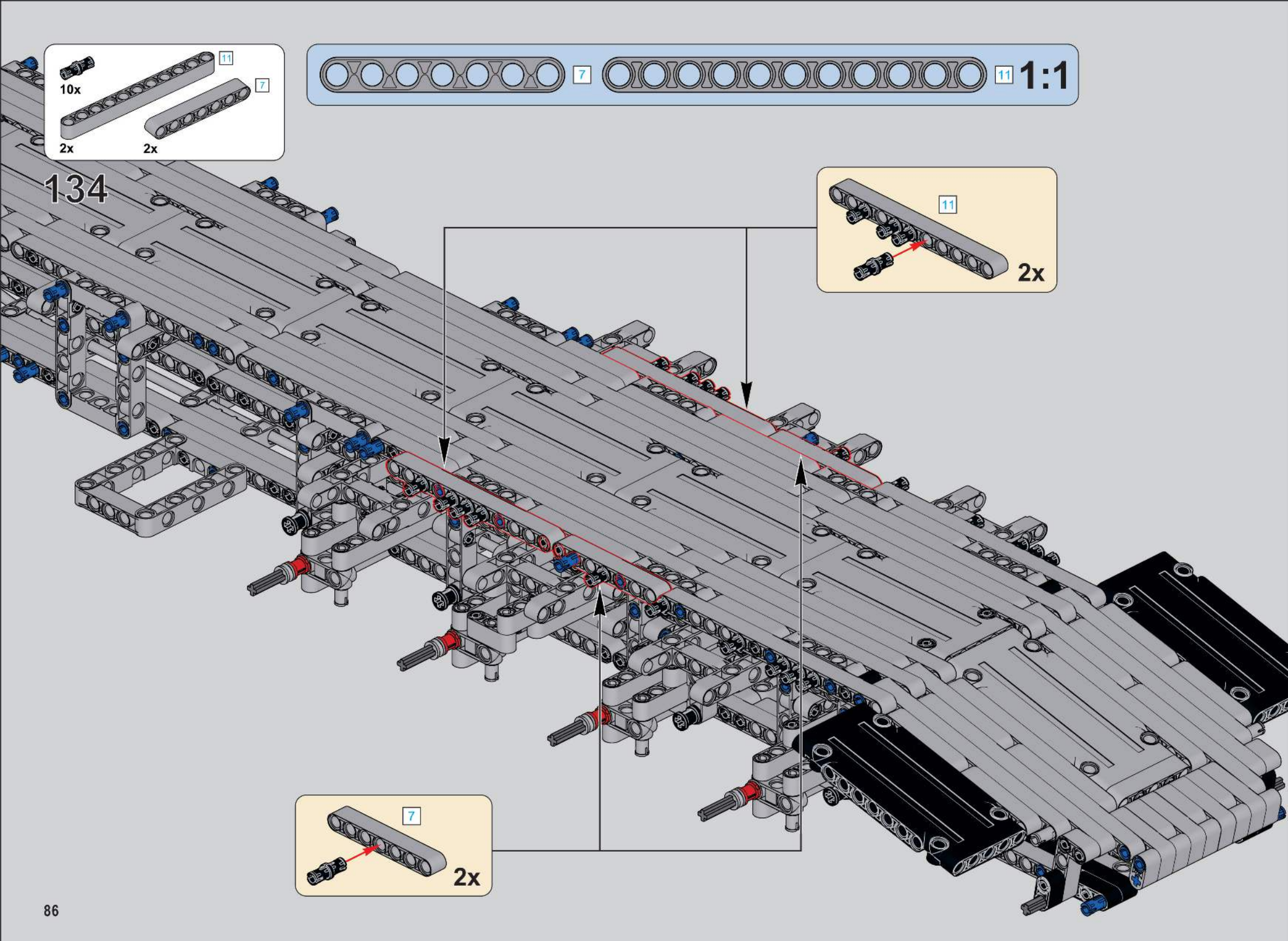
10x
11
7
2x
2x
7
11
1:1
134
11
2x
7
2x

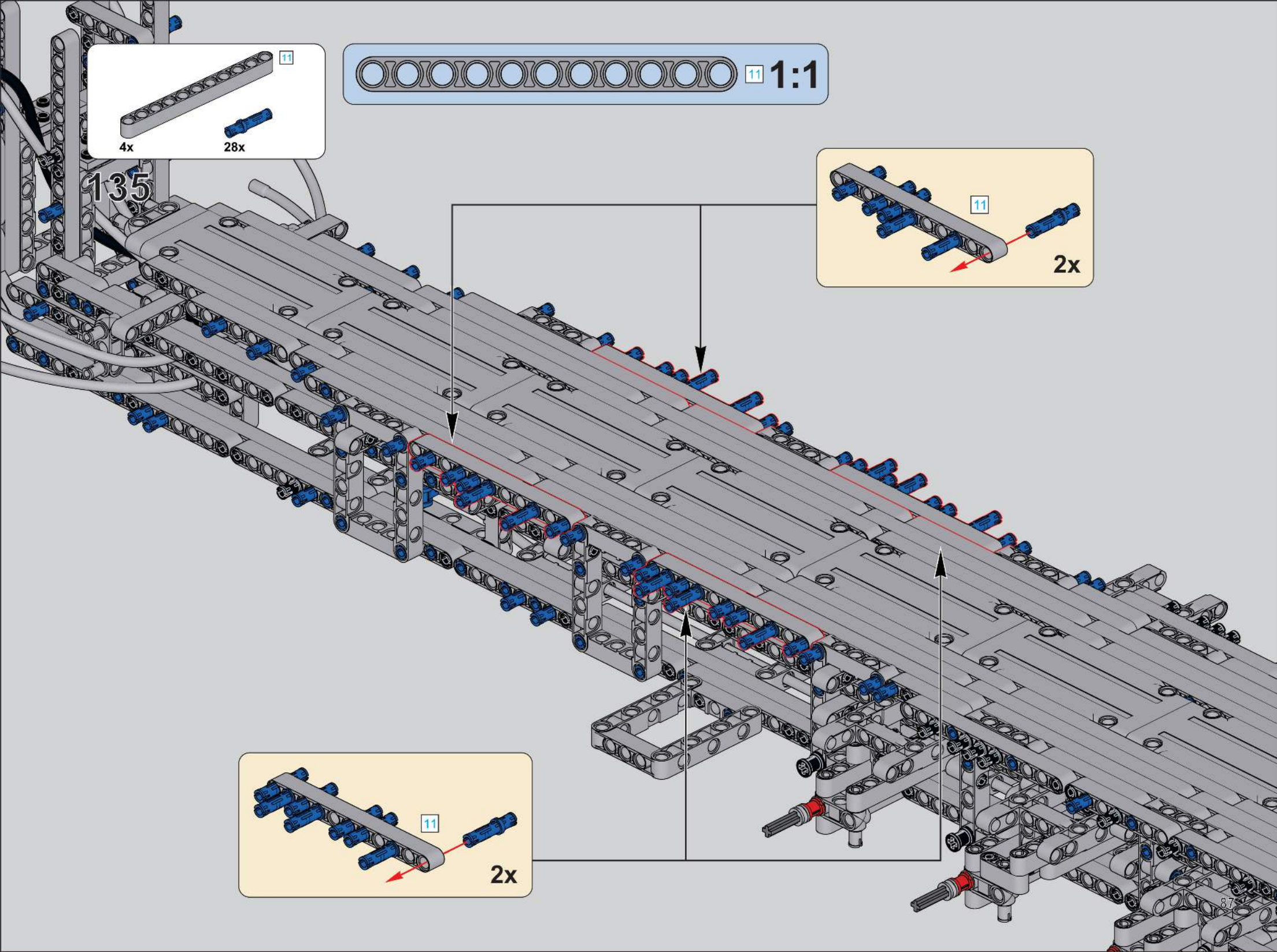
135
11
4x
28x
11 1:1
11
2x
11
2x

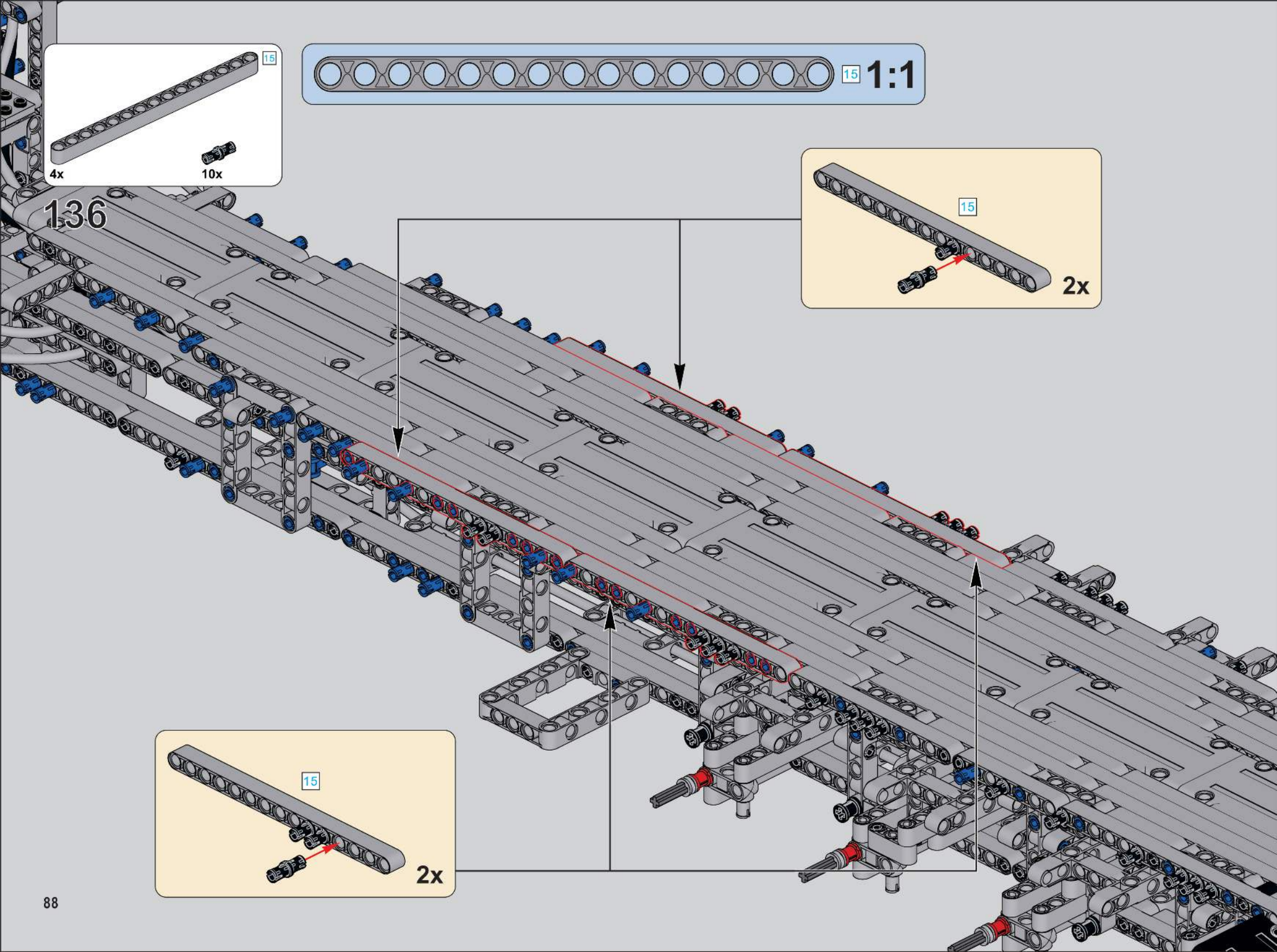
15
4x
10x
15
1:1
136
15
2x
15
2x

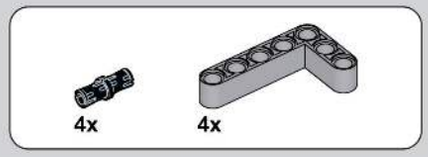

137

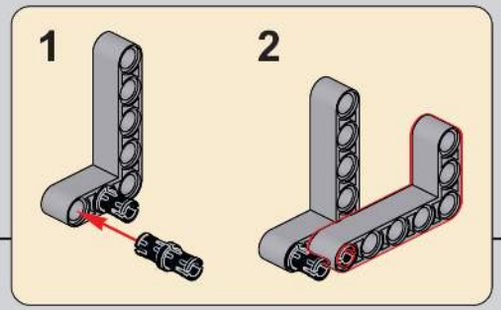

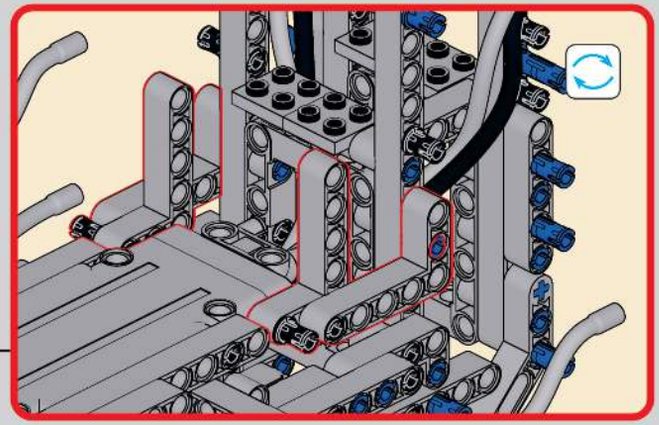

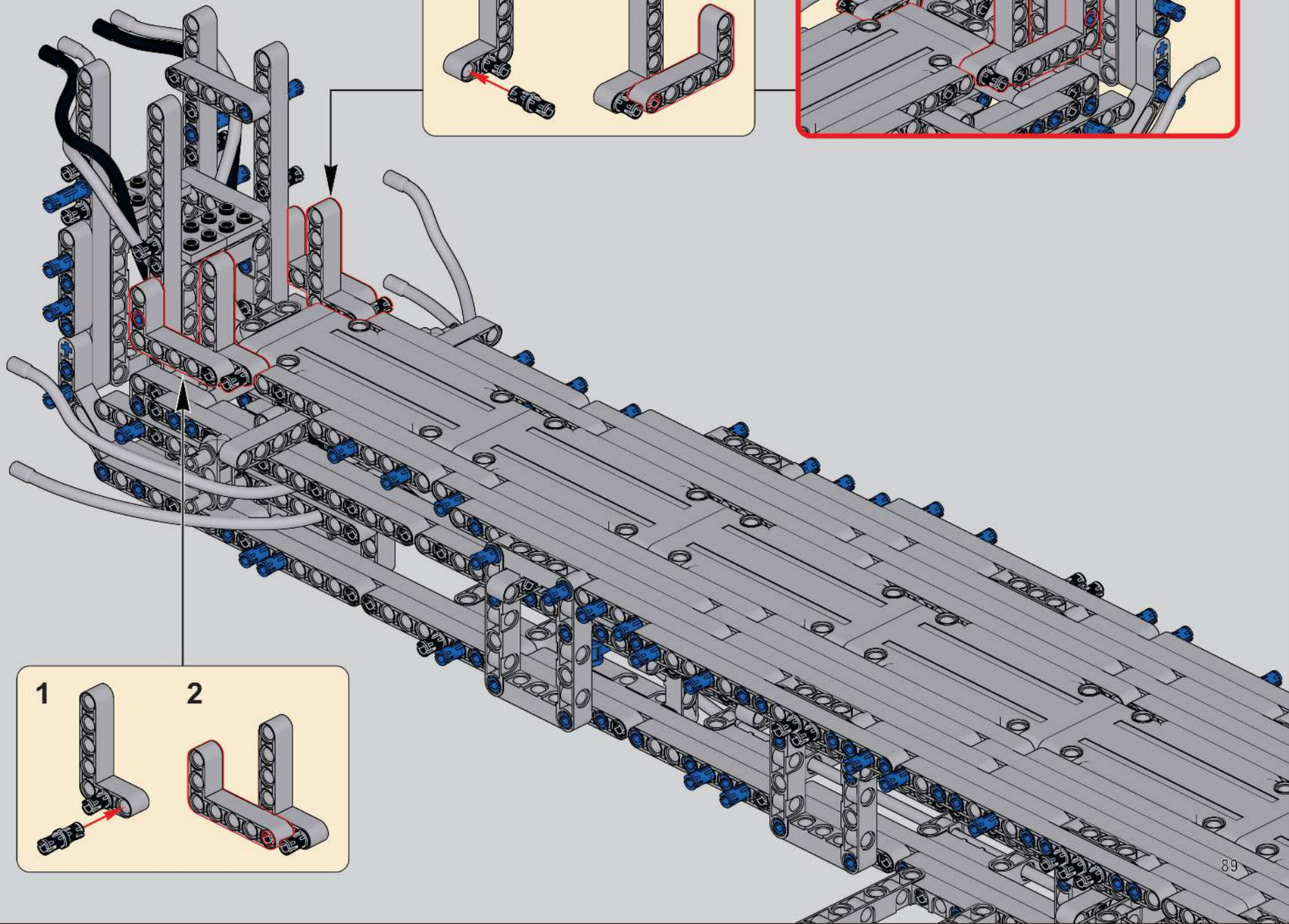

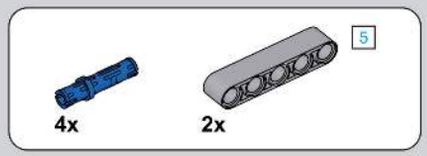

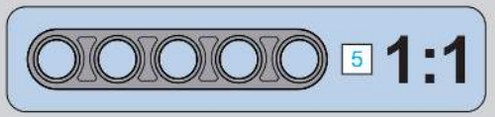

138

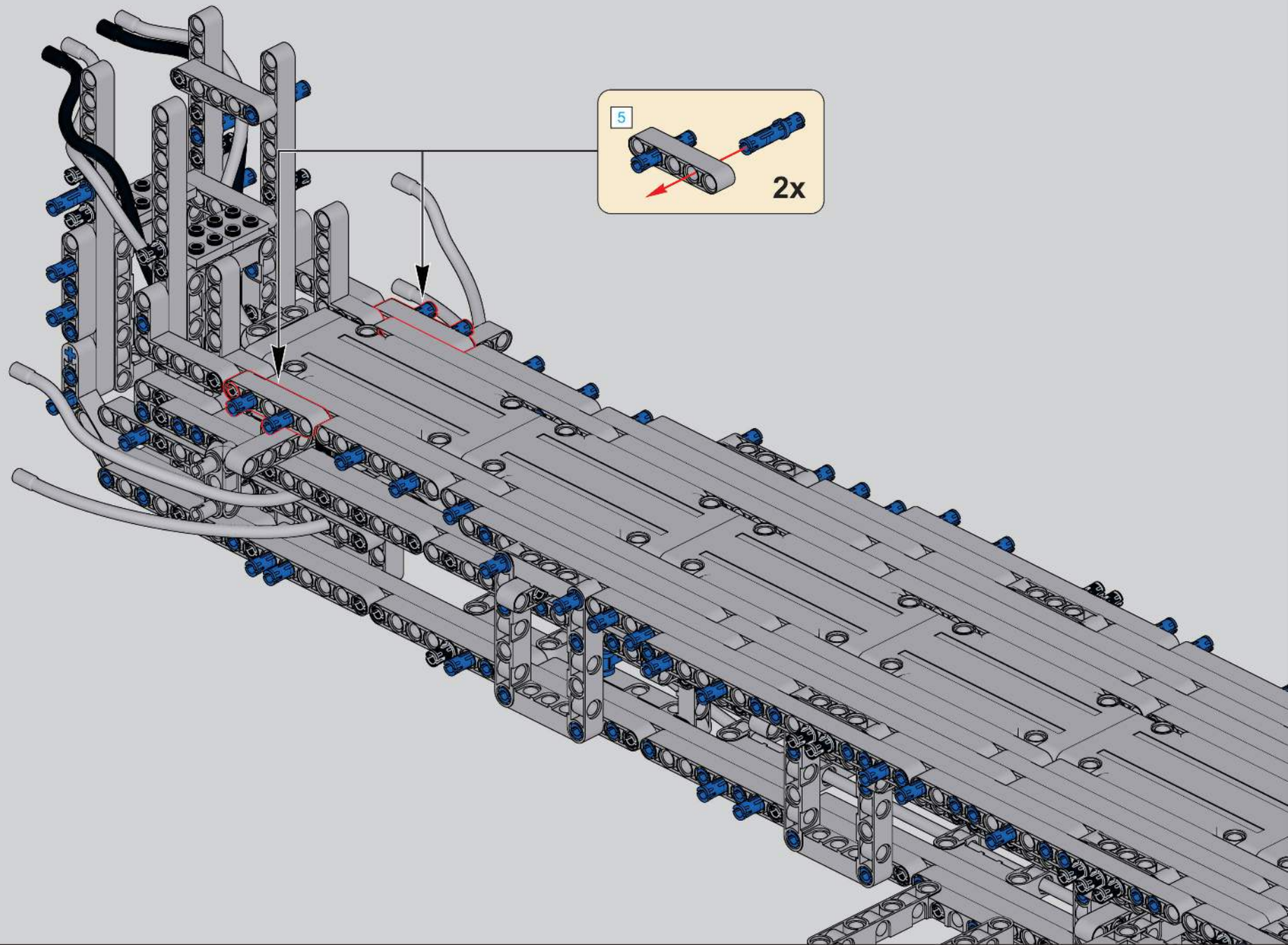

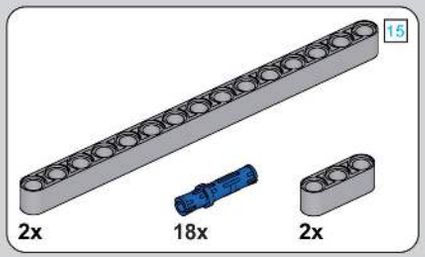

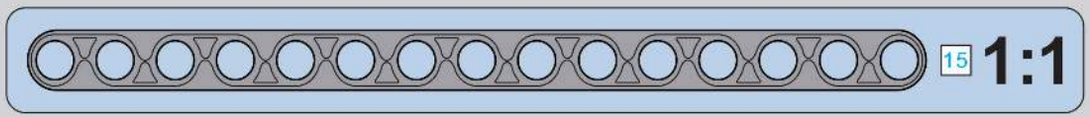

139

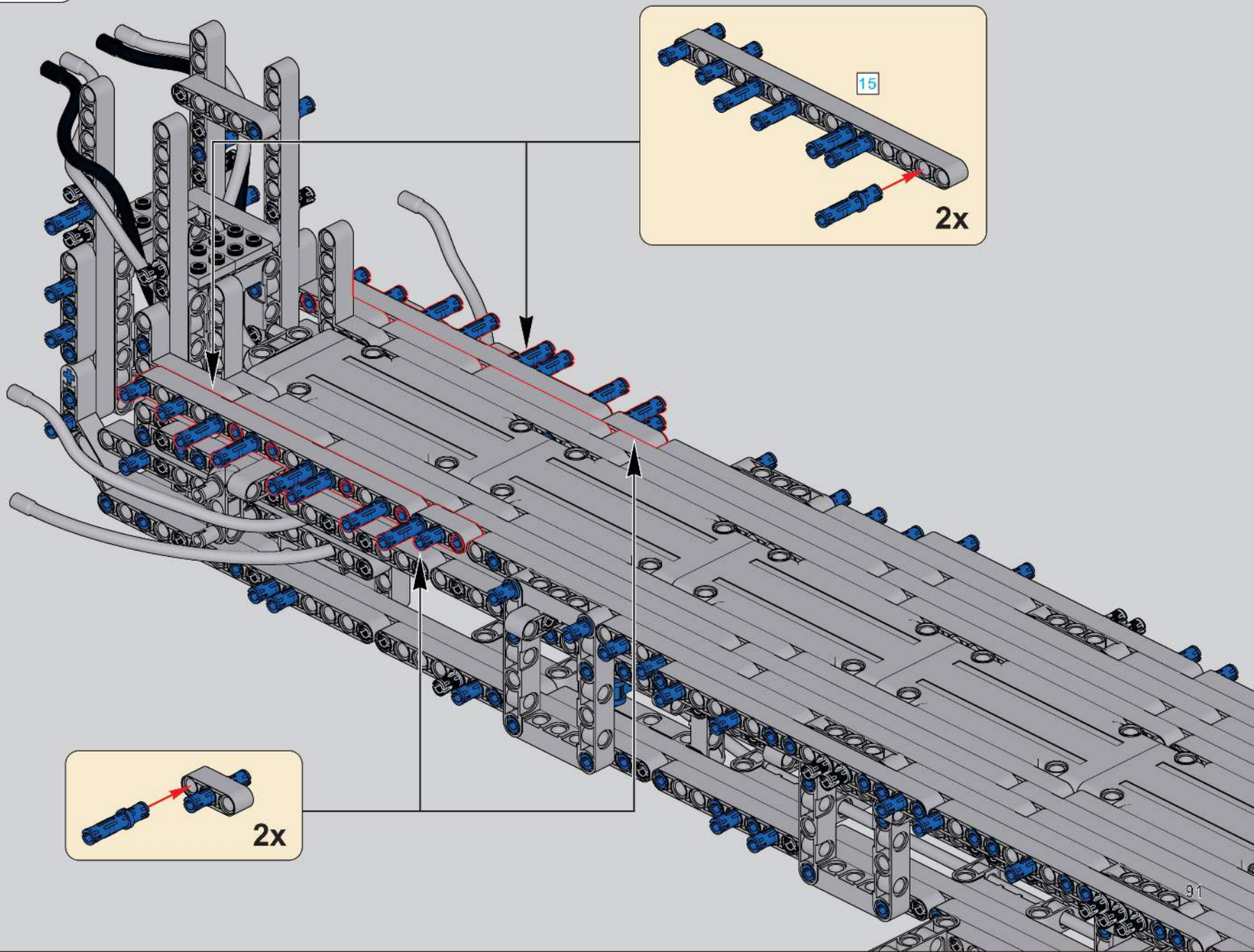

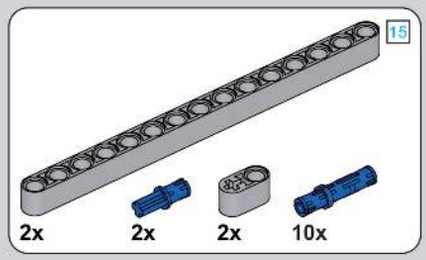

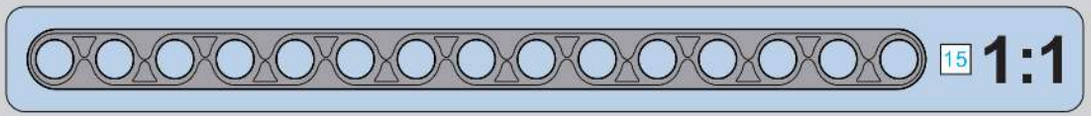

140

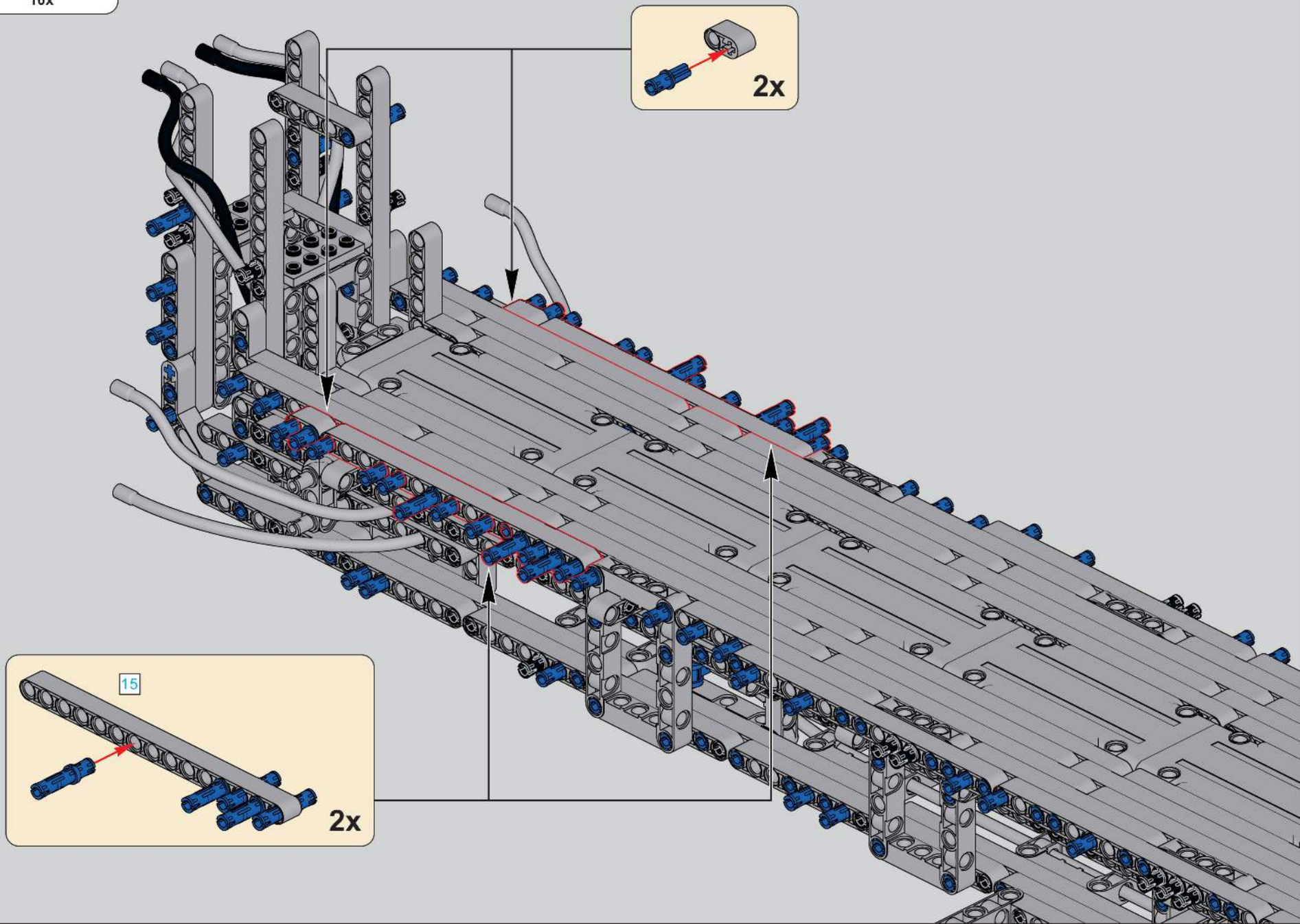

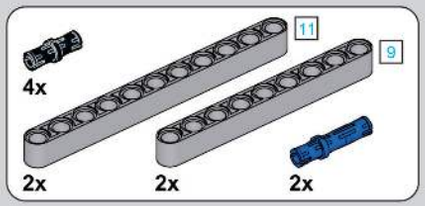

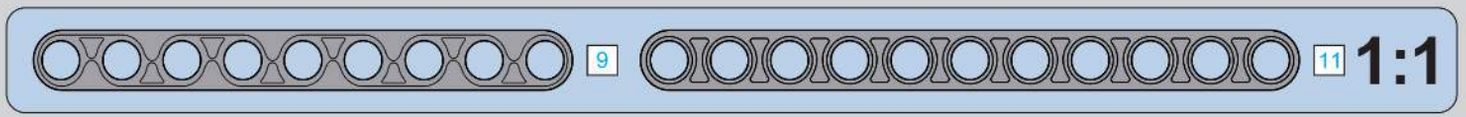

141

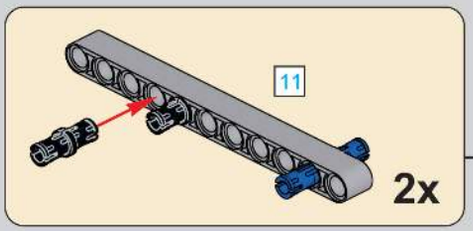

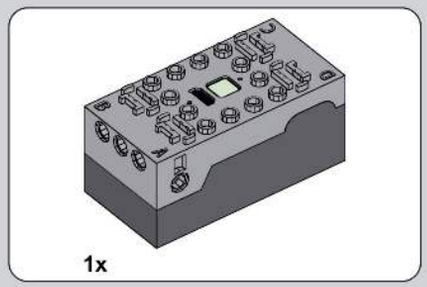

142

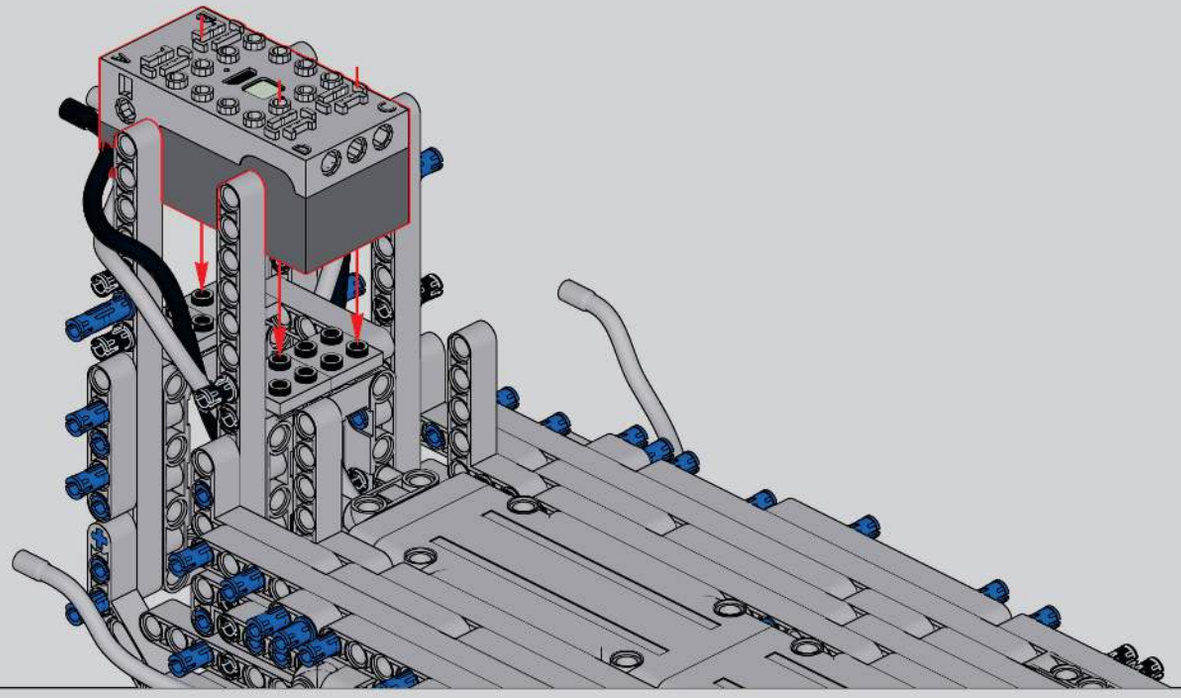

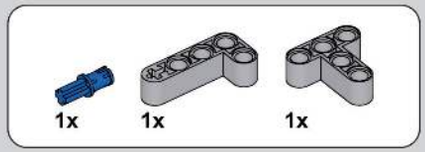

143

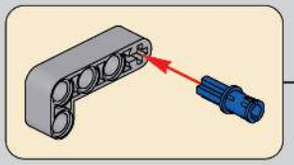

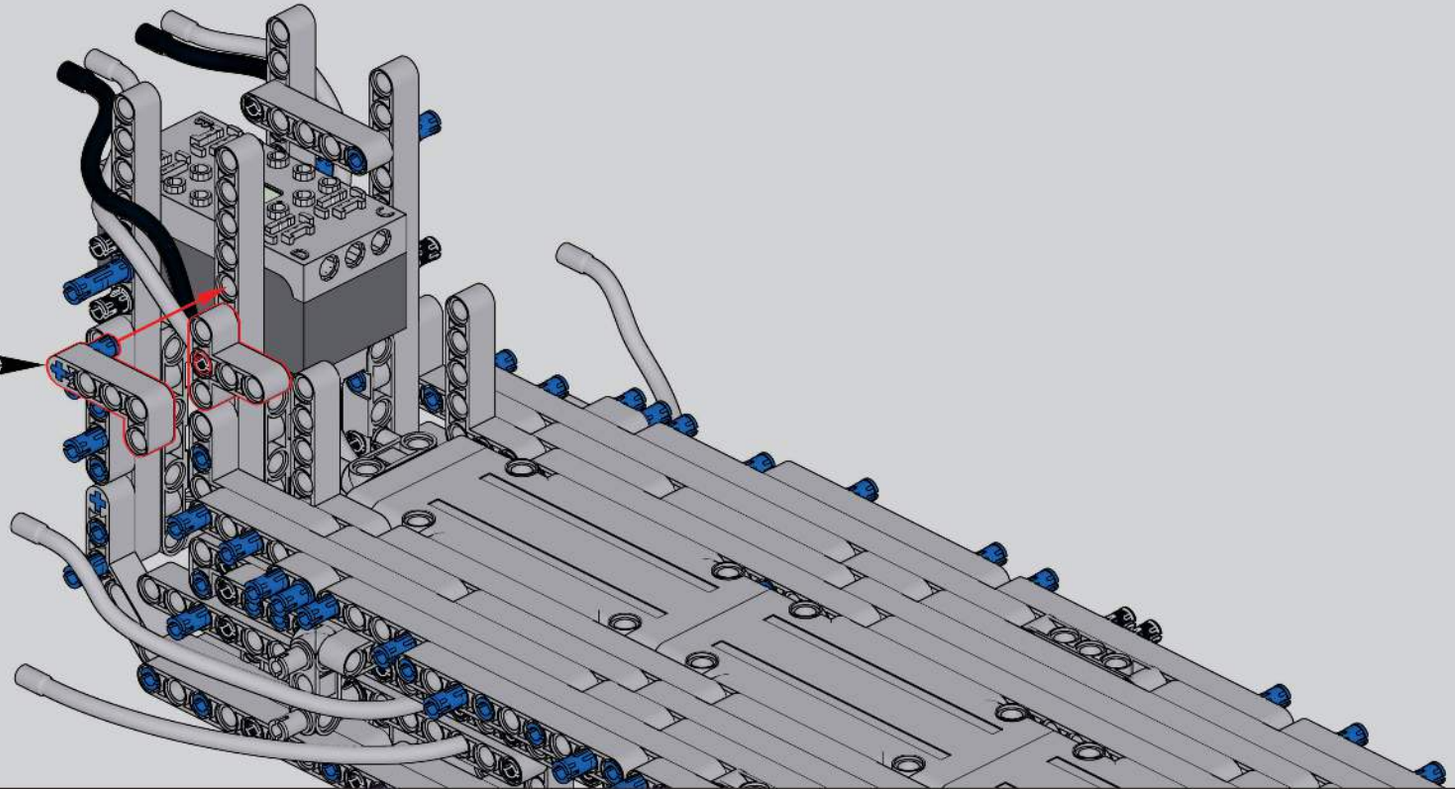

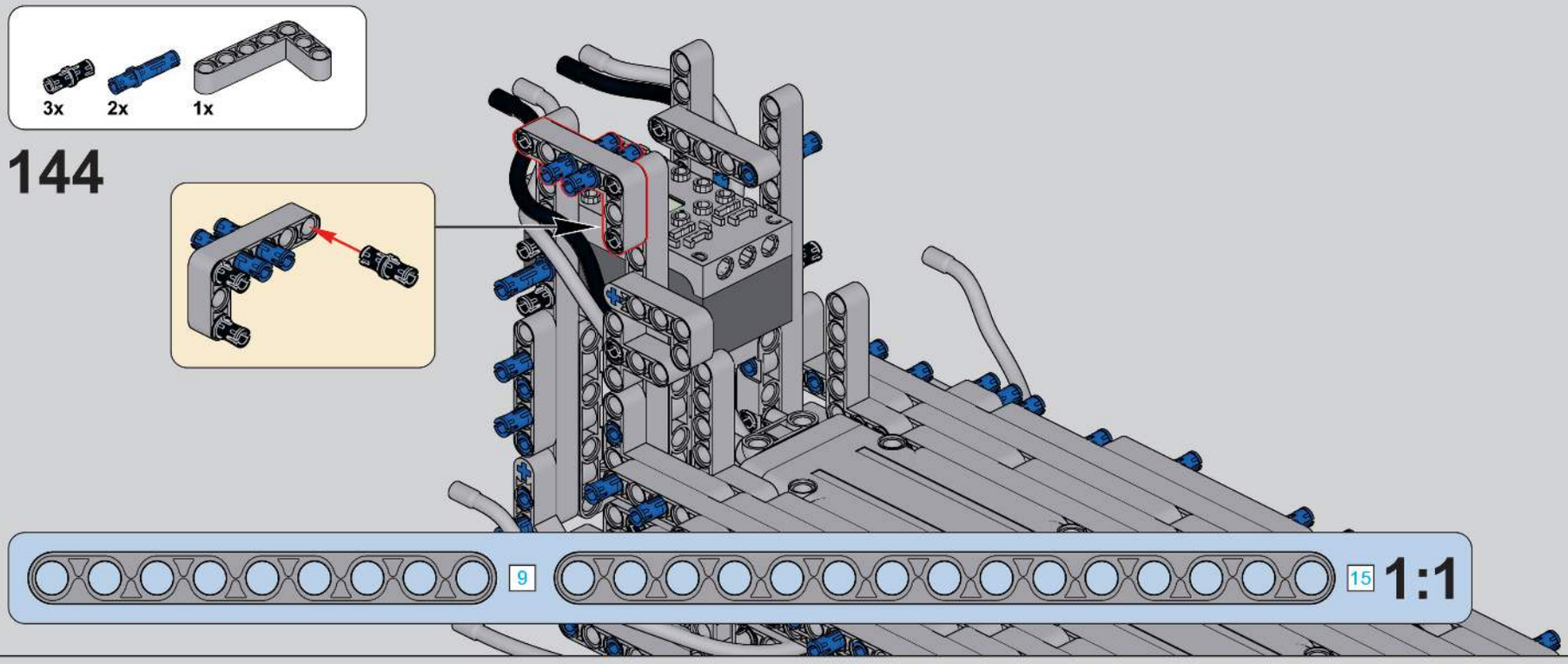
3x
2x
1x
144
9
15
1:1

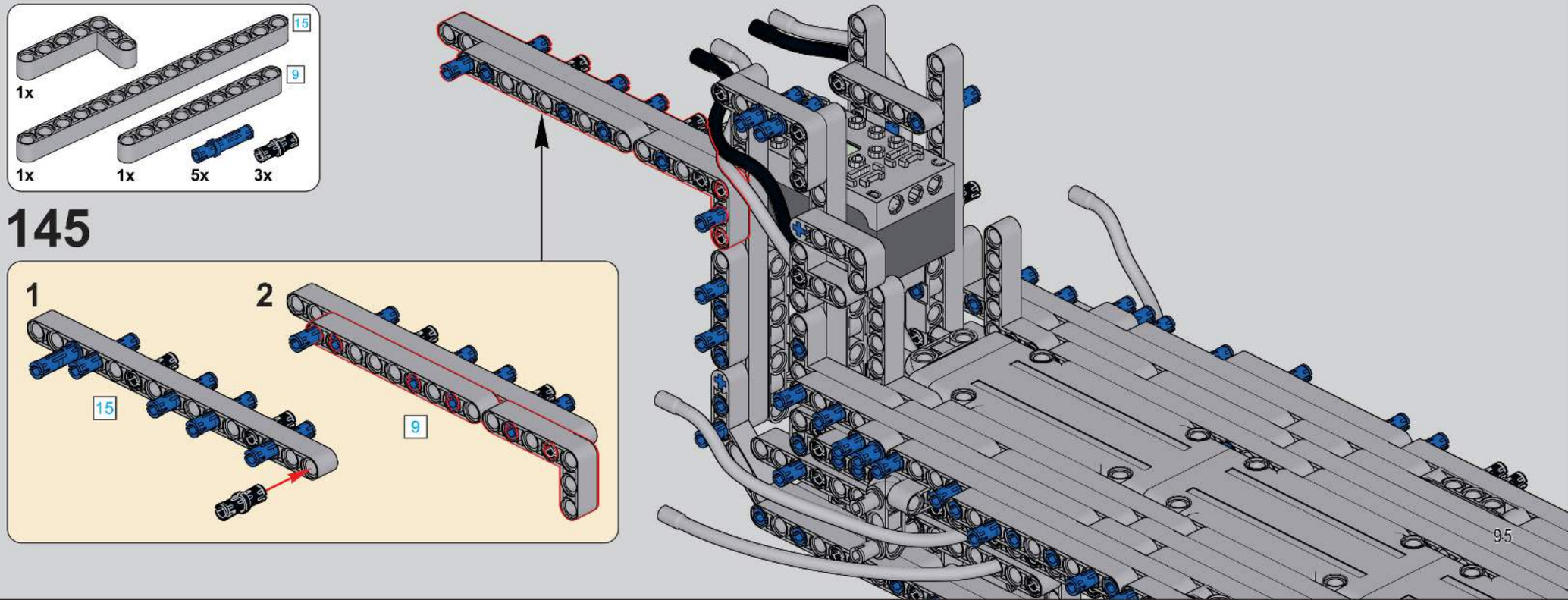
15
9
1x
1x
1x
5x
3x
145
1
2
15
9

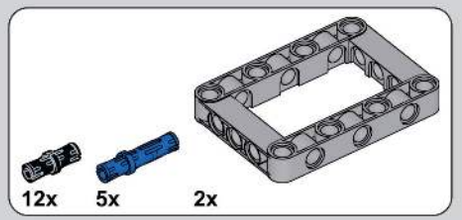

146

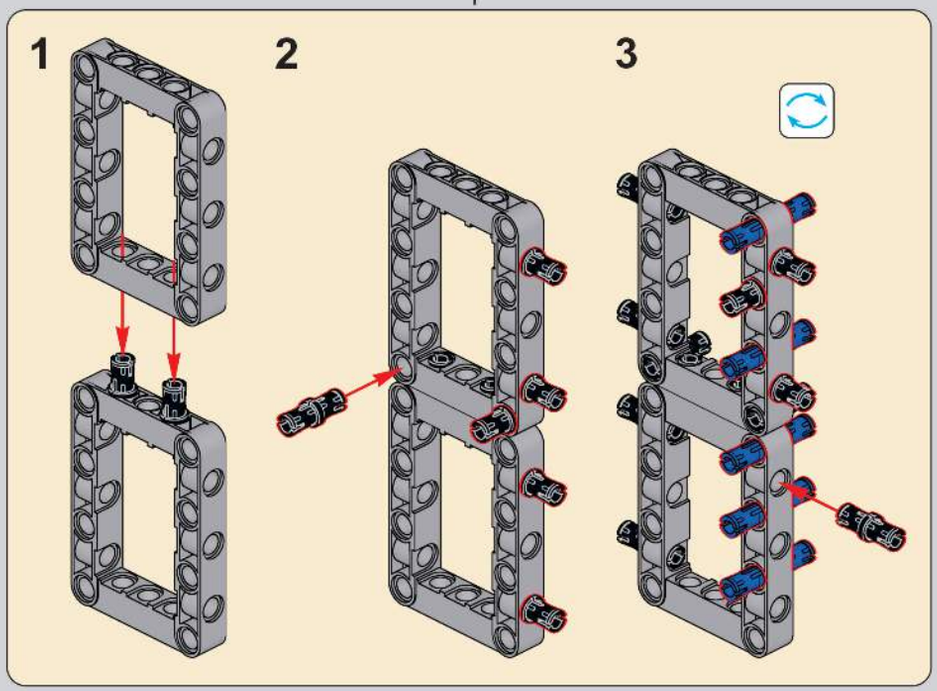

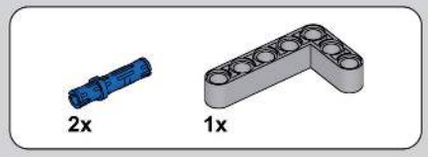

147

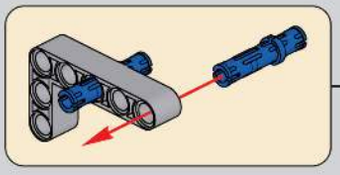

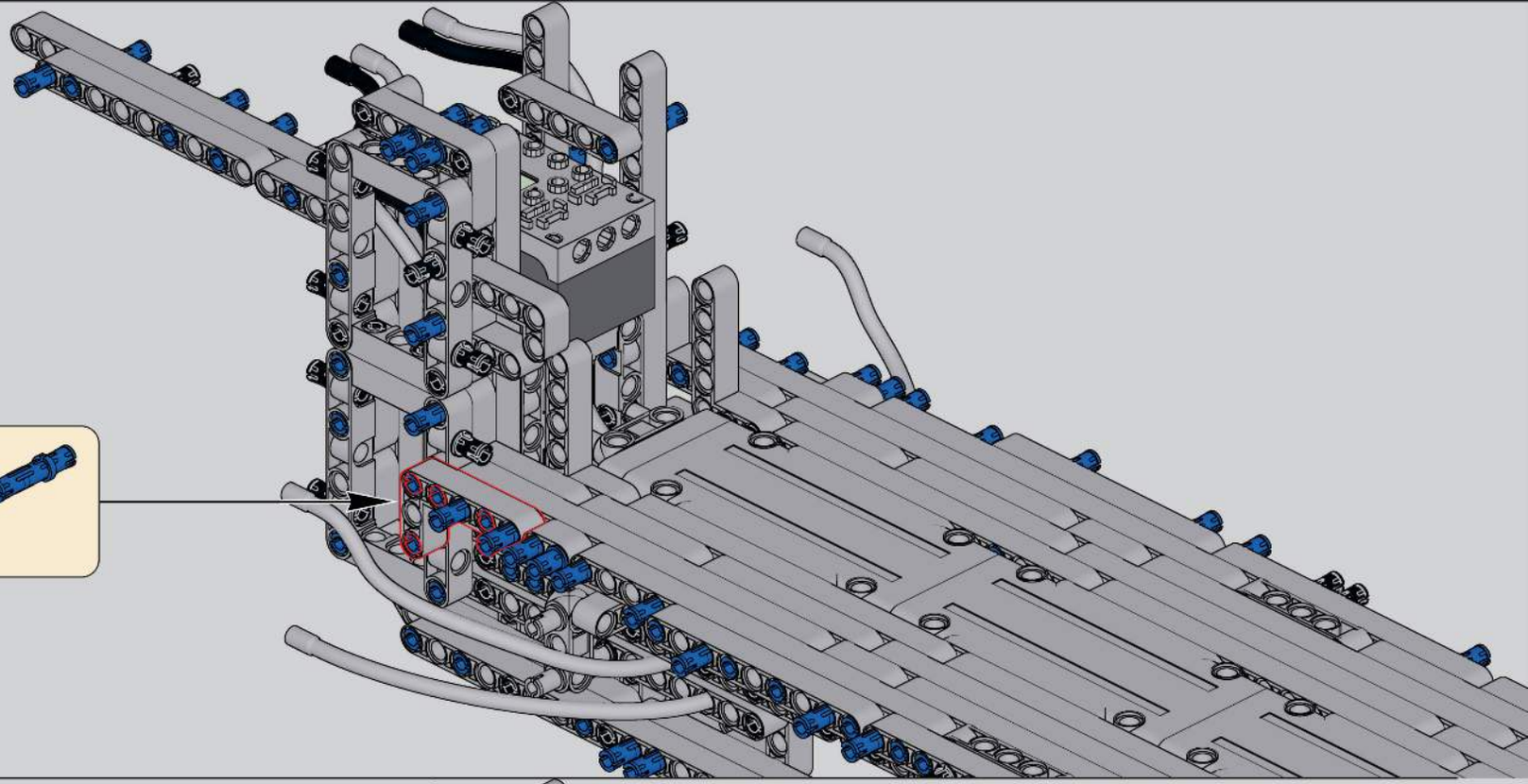

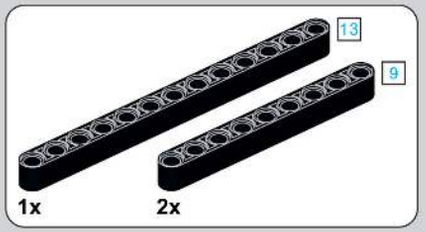

148

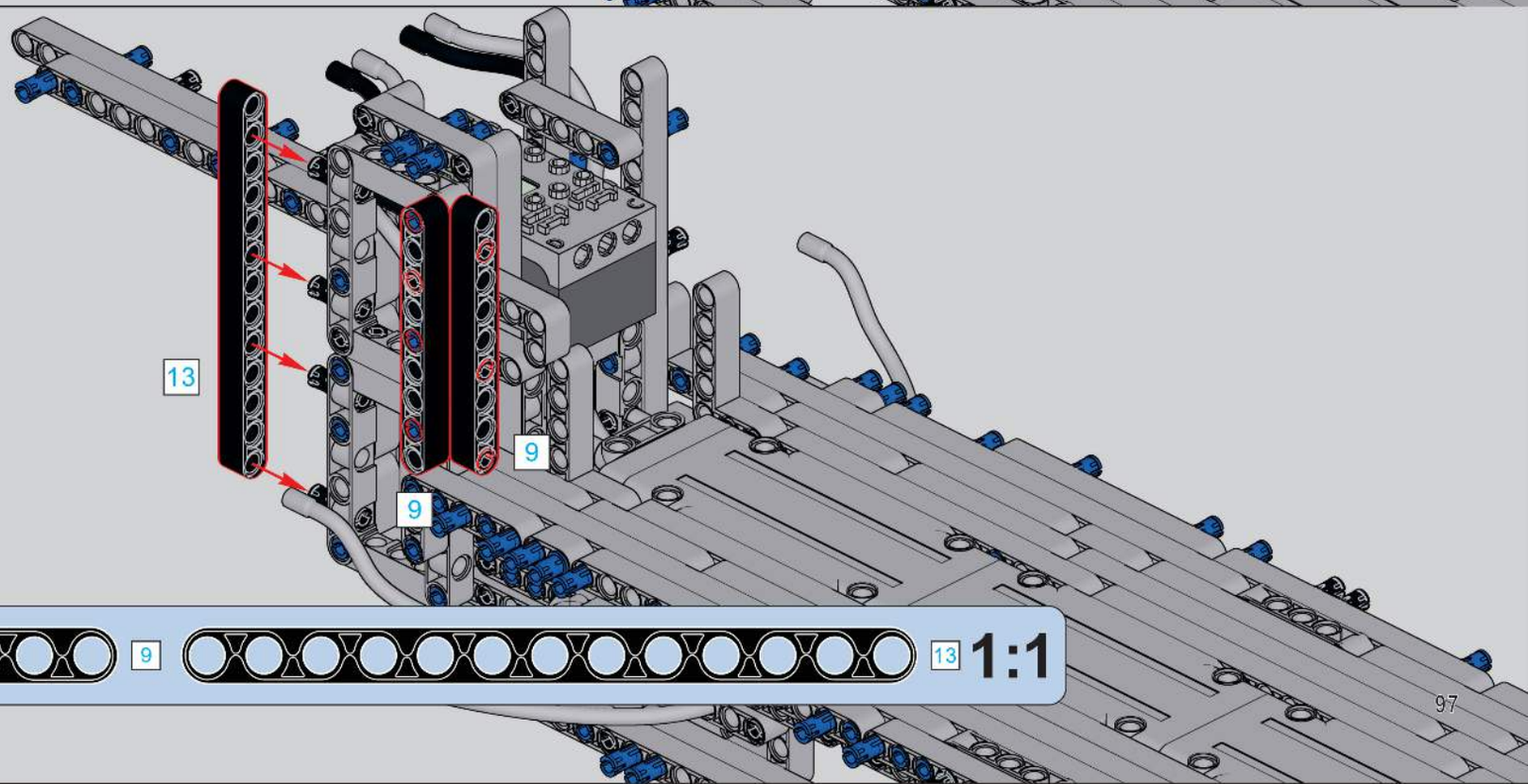

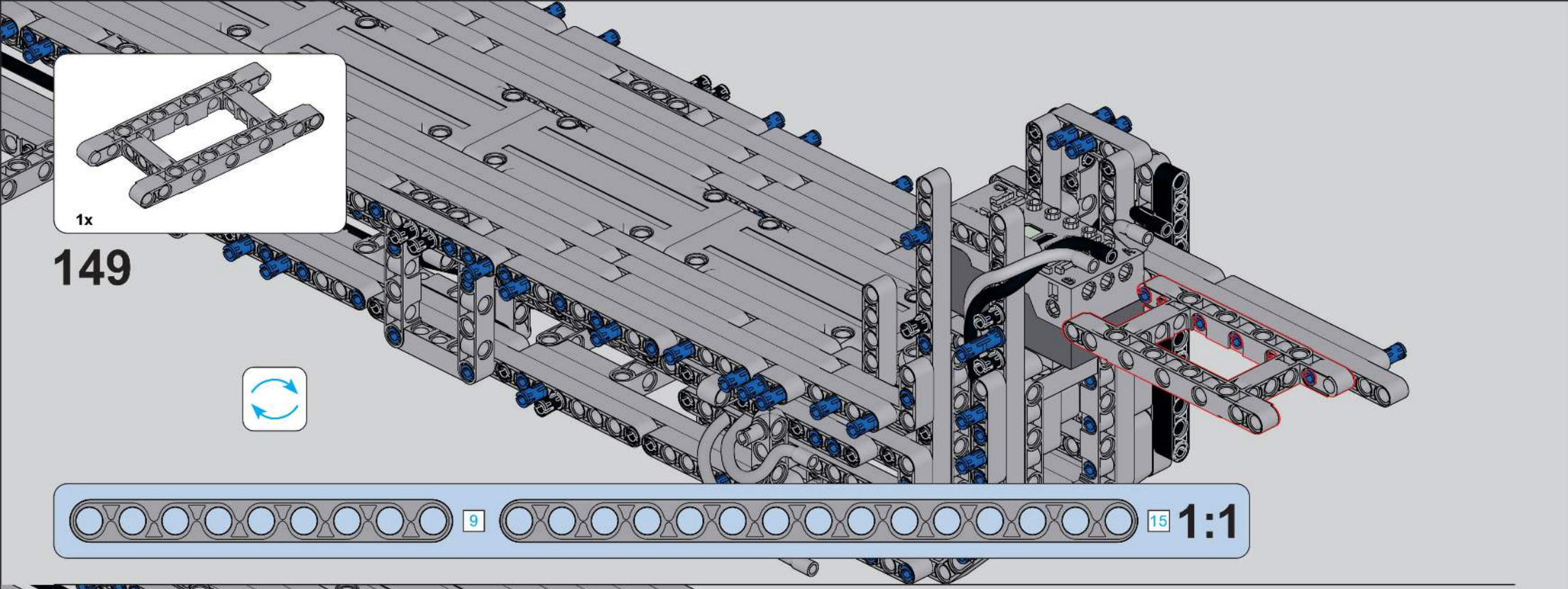
1x
149
9
15
1:1

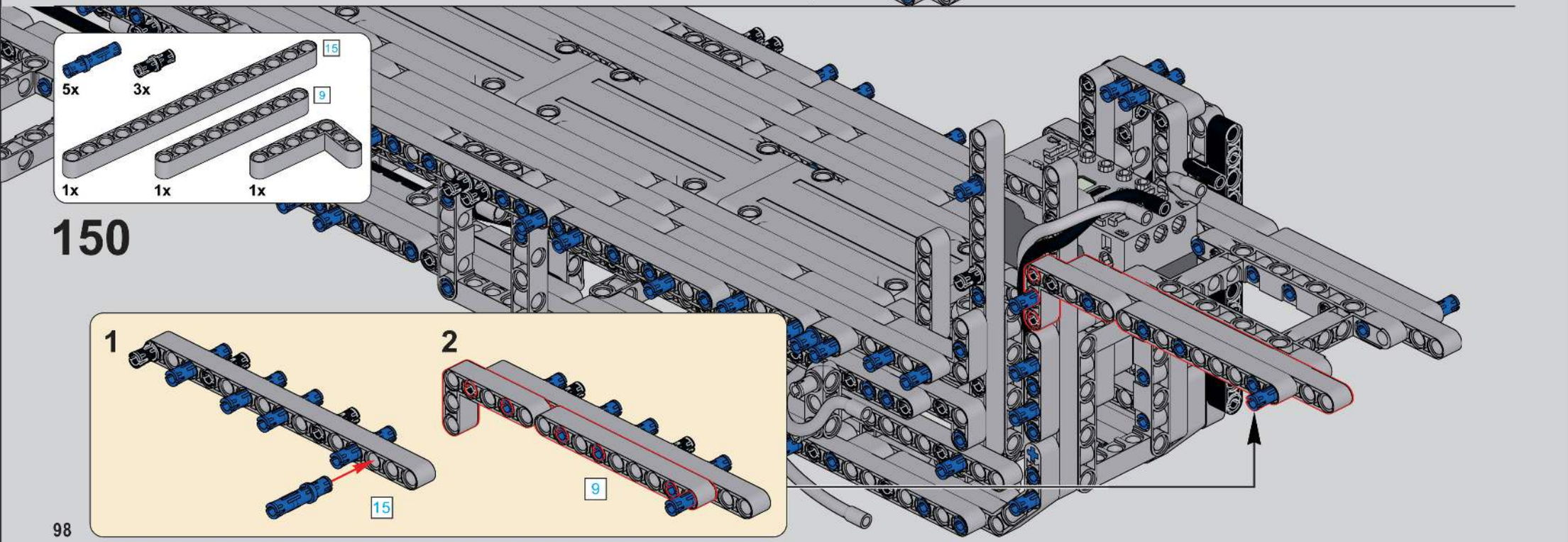
5x
3x
15
9
1x
1x
1x
150
1
15
2
9

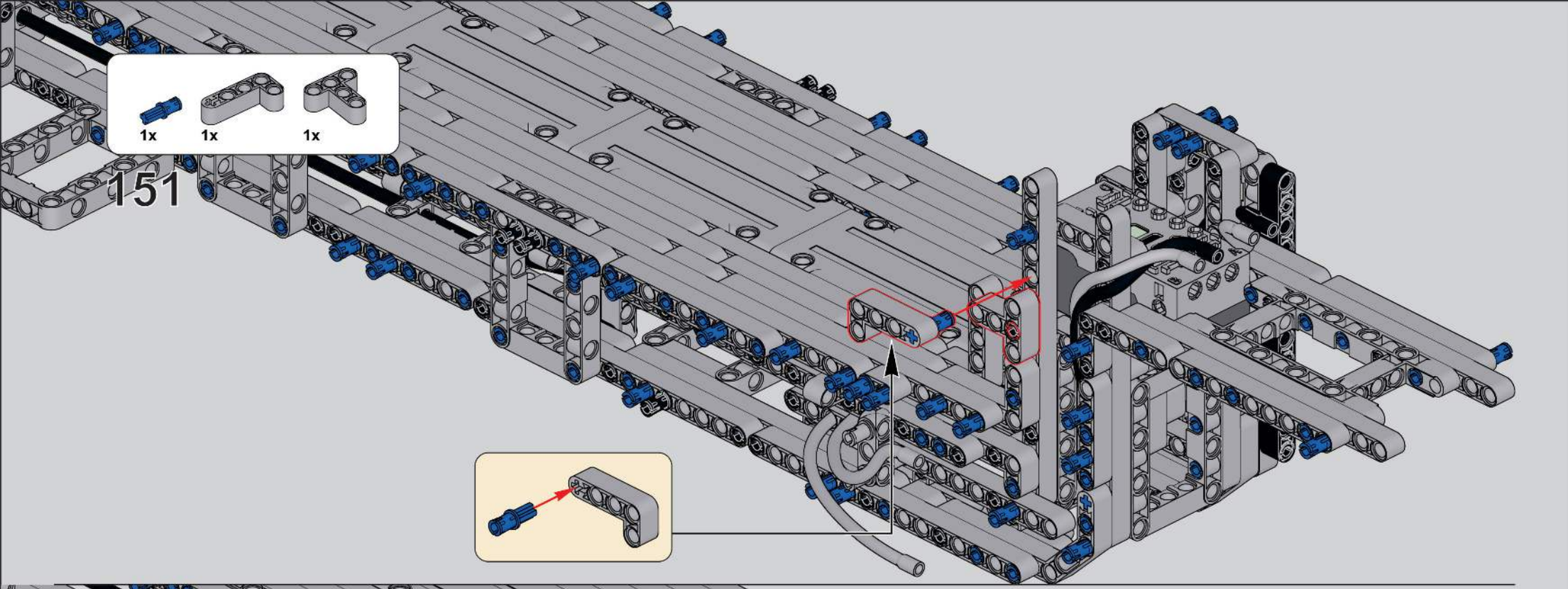
1x
1x
1x
151

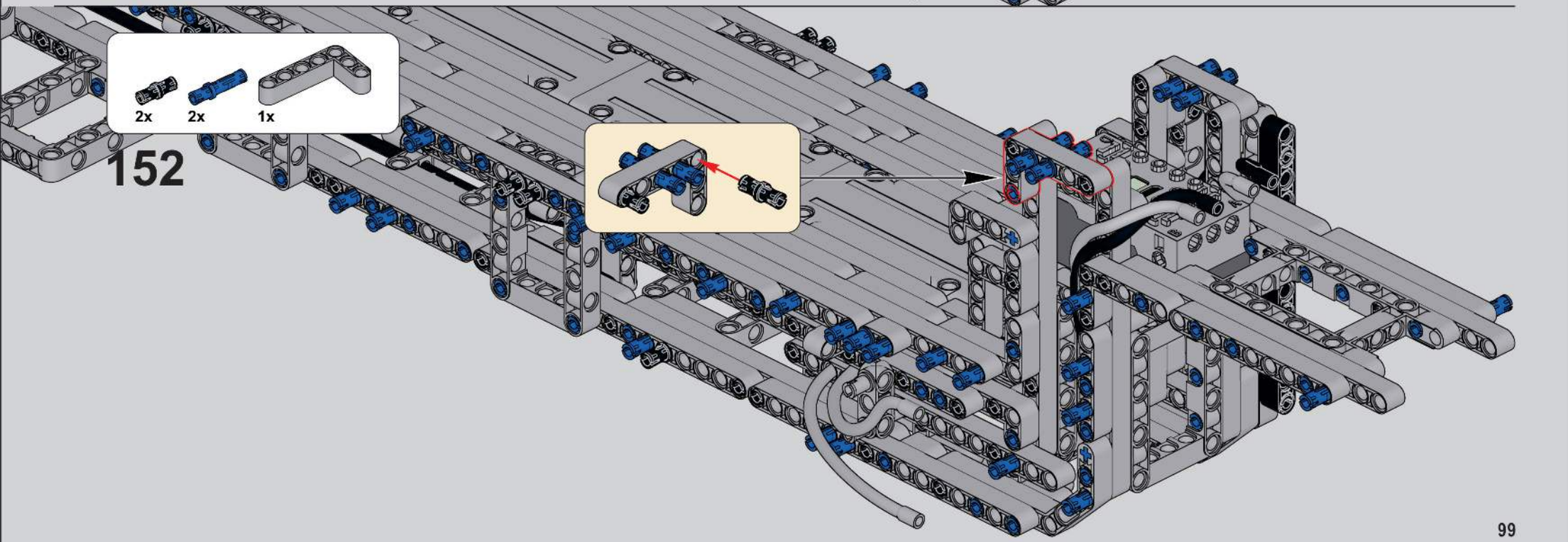
2x
2x
1x
152

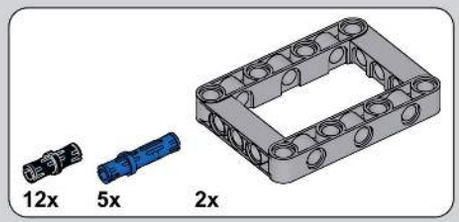

153

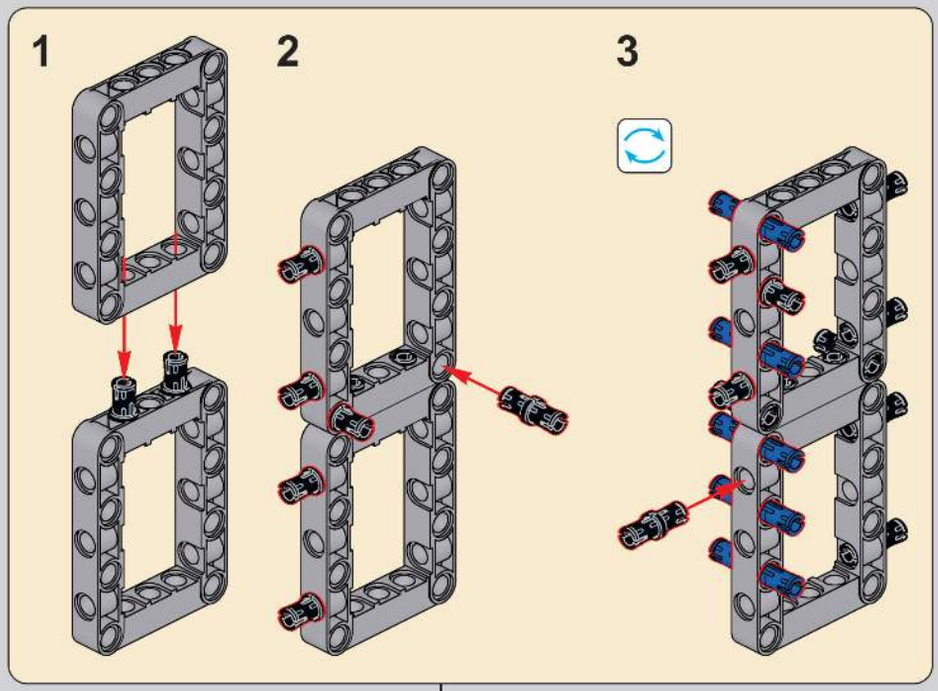

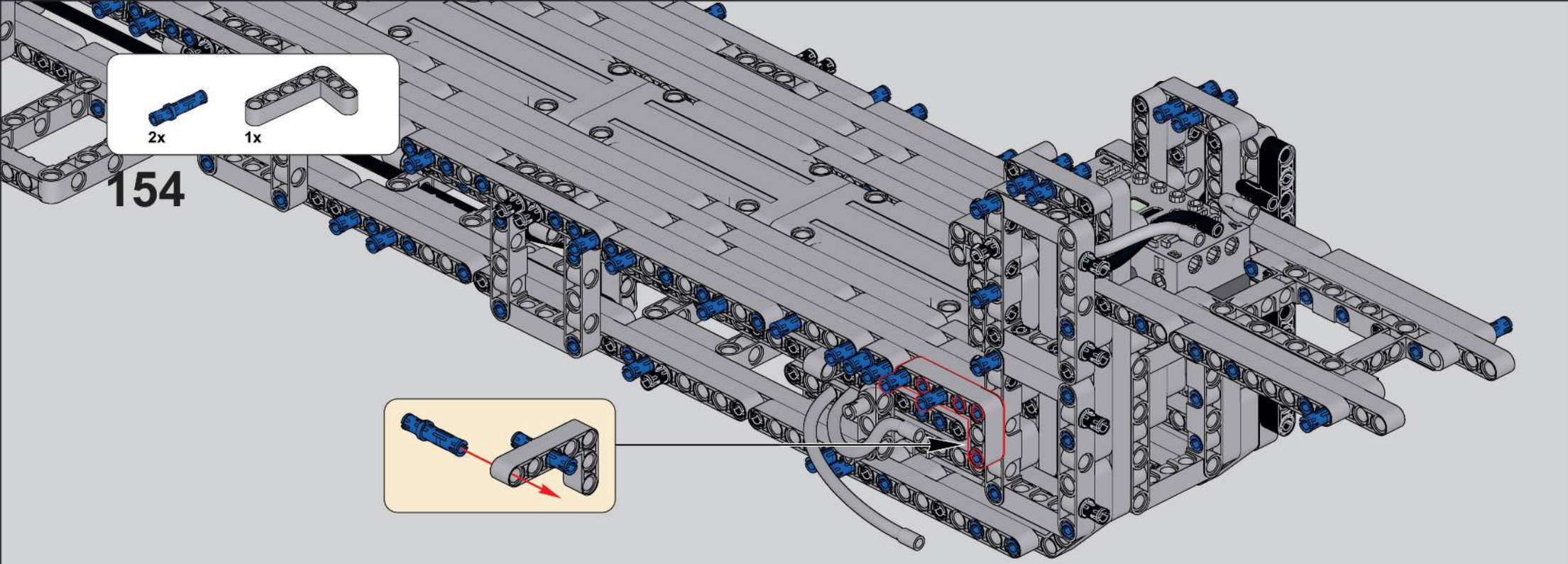
2x
1x
154

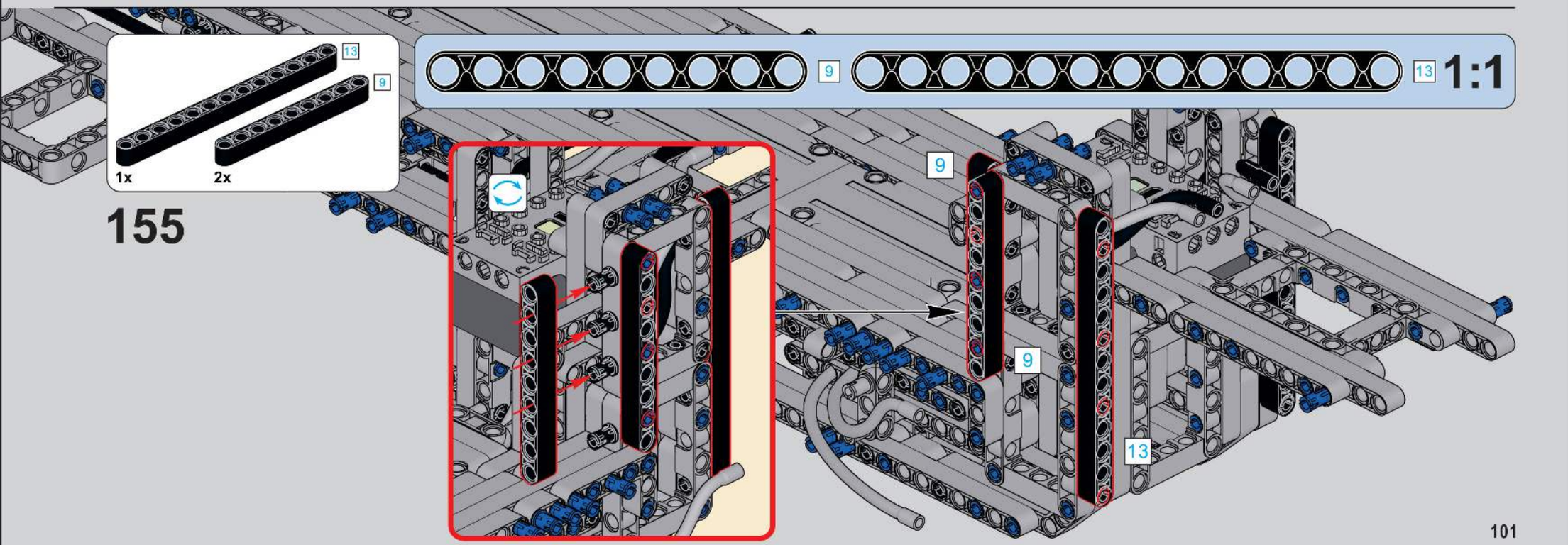
13
9
1x
2x
155
9
13
1:1
9
9
13

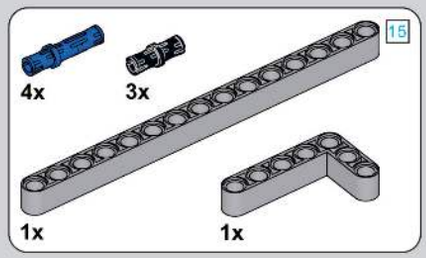

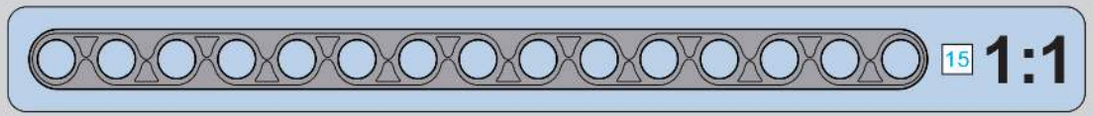

156

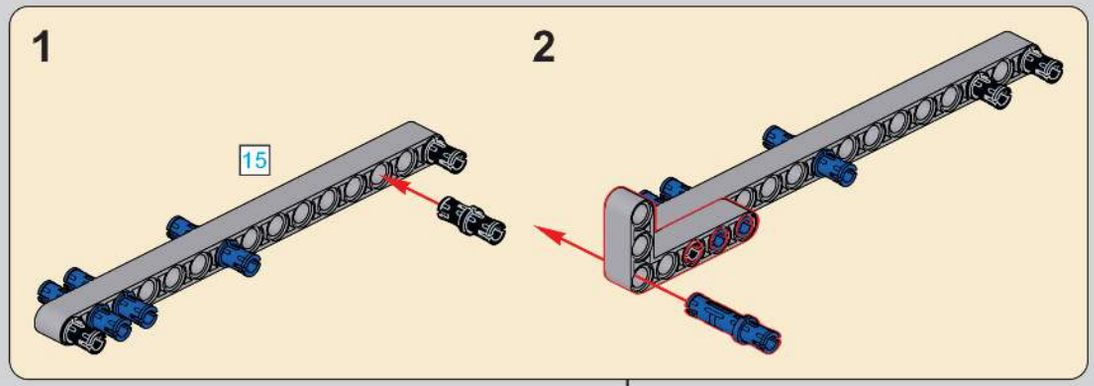

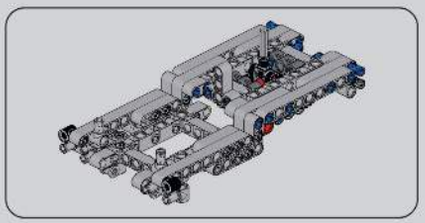

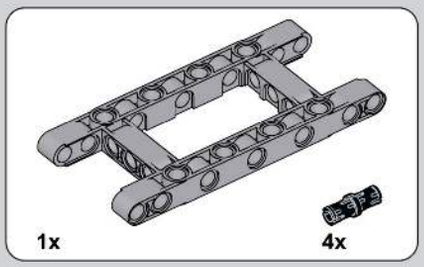

157

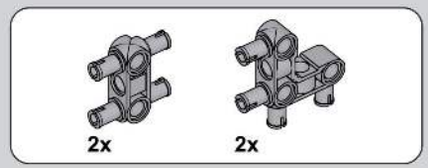

158

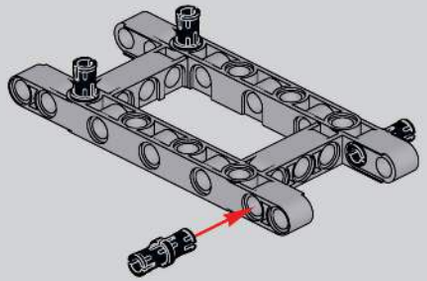

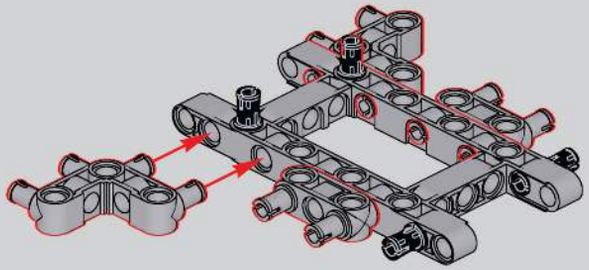

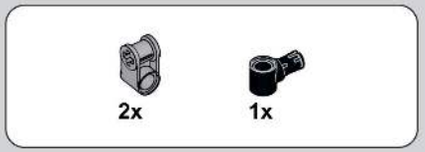

159

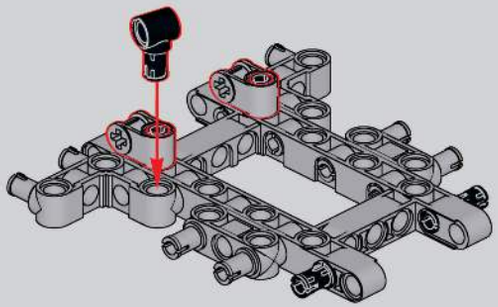

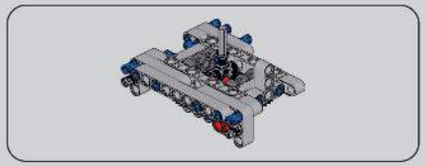

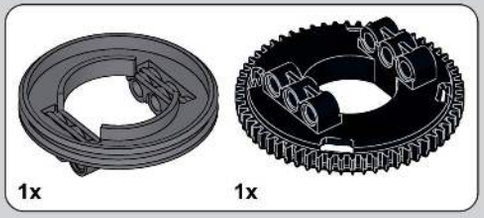

160

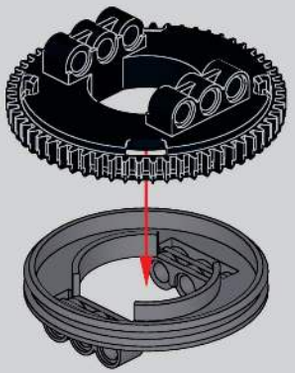

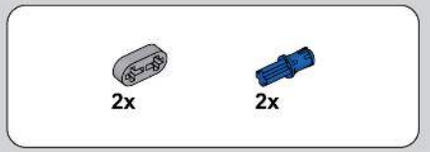

161

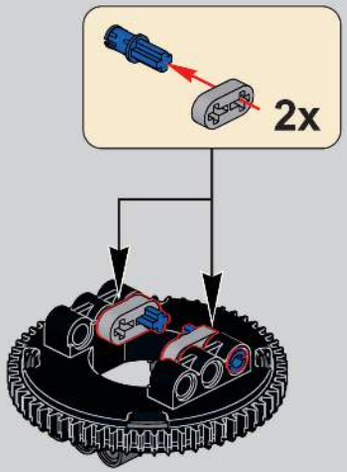

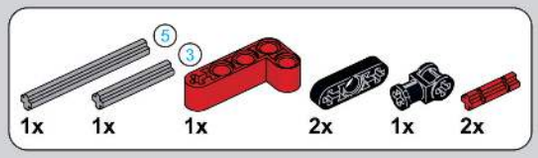

162

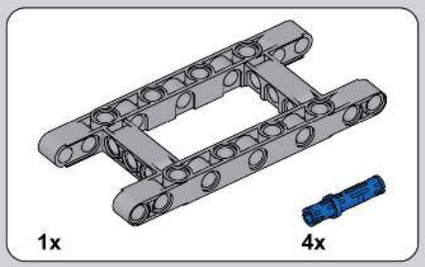

163

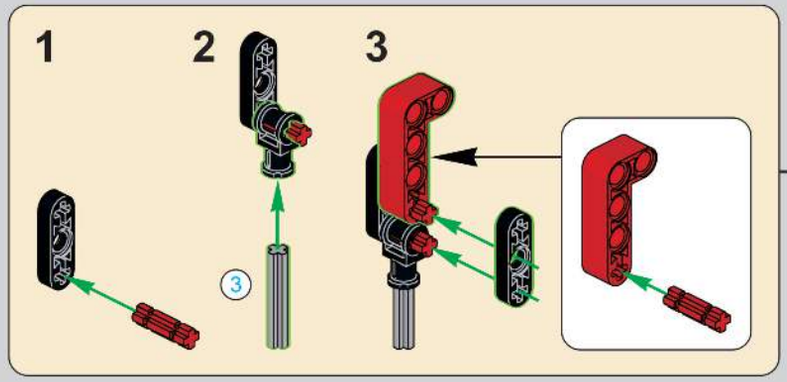

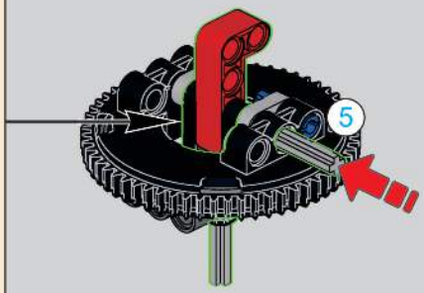

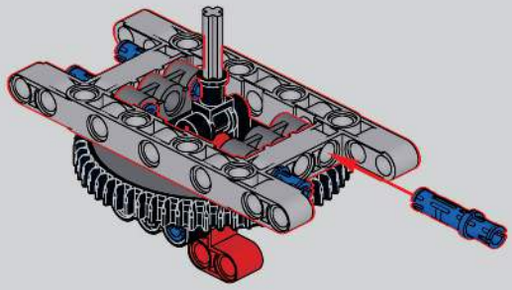

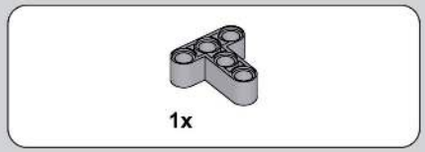

164

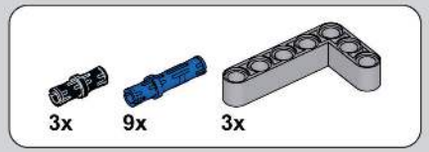

165

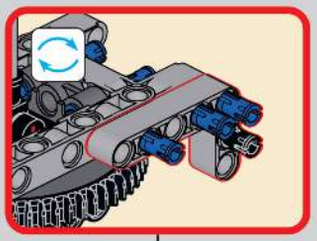

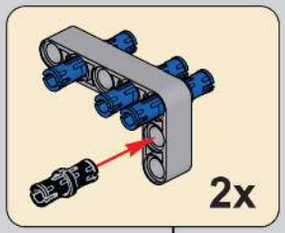

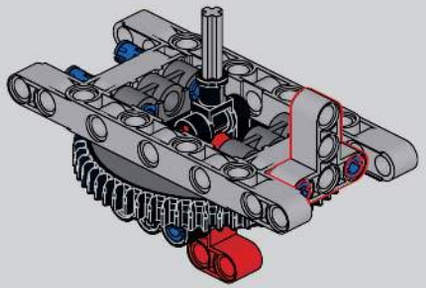

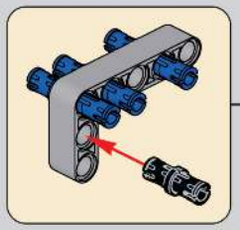

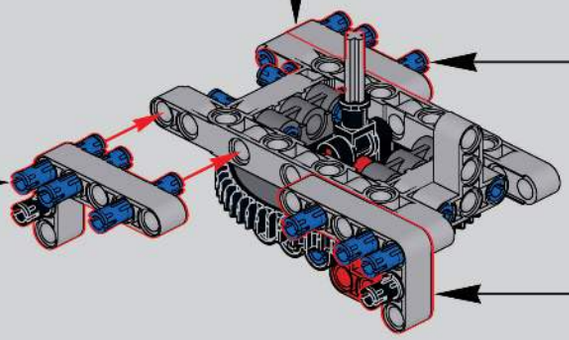

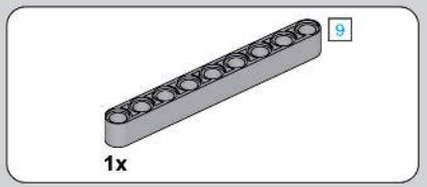

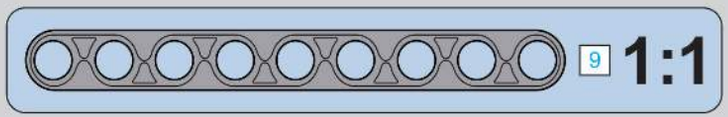

166

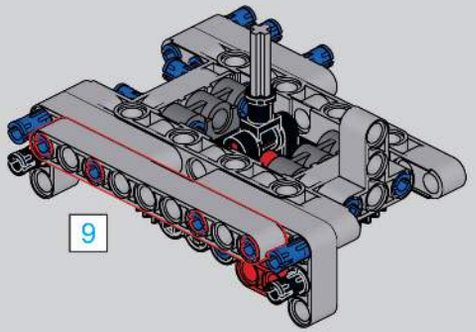

167

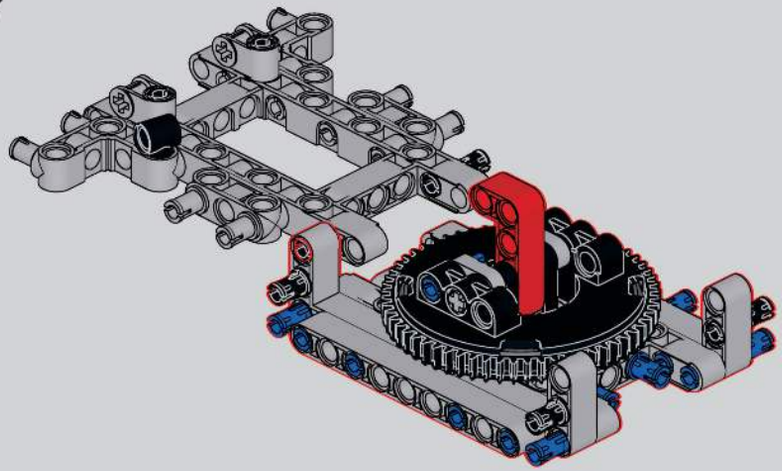

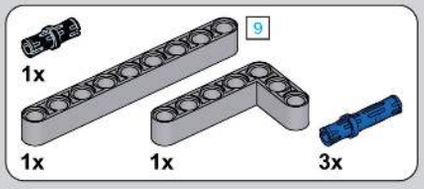

168

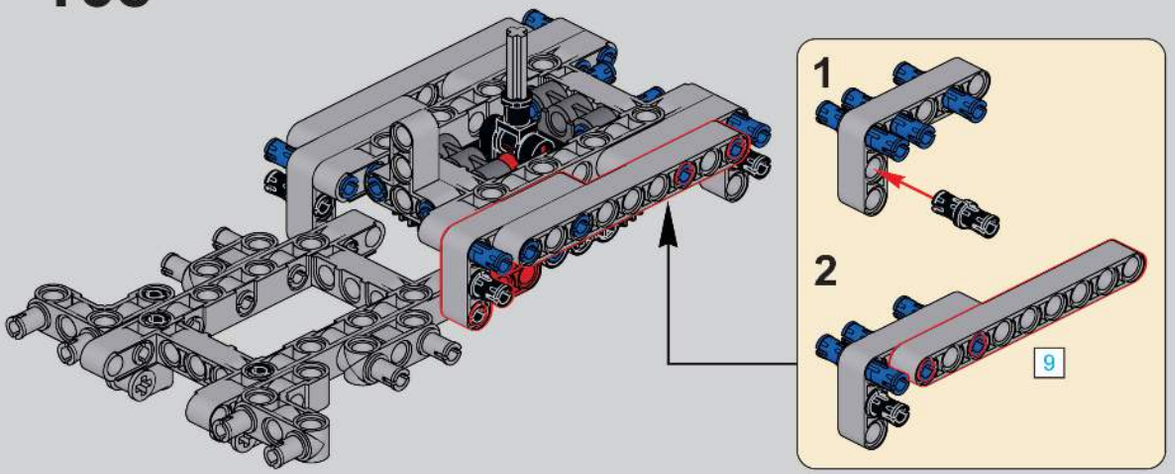

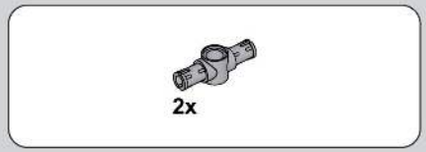

169

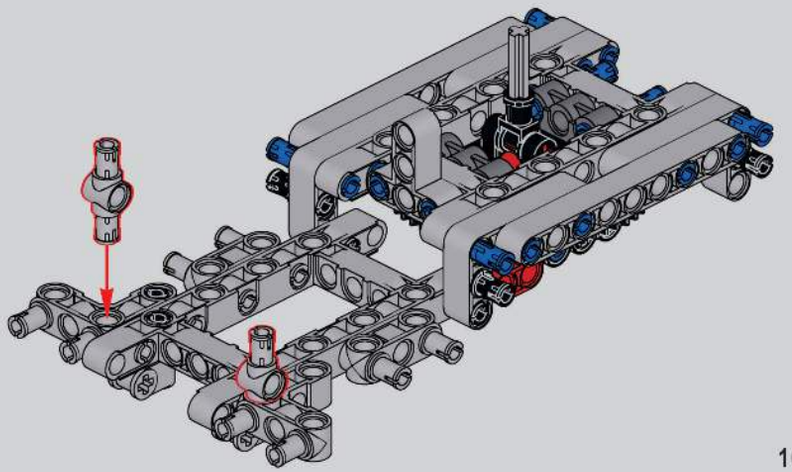

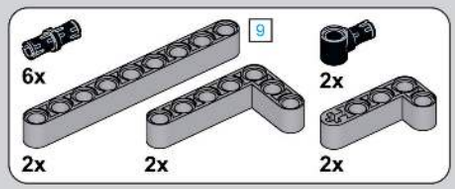

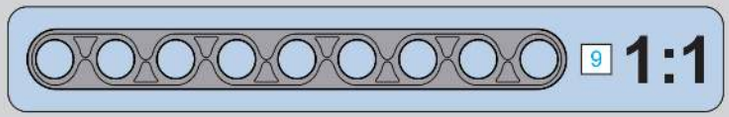

170

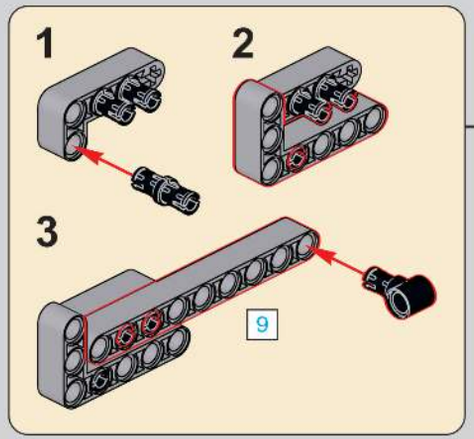

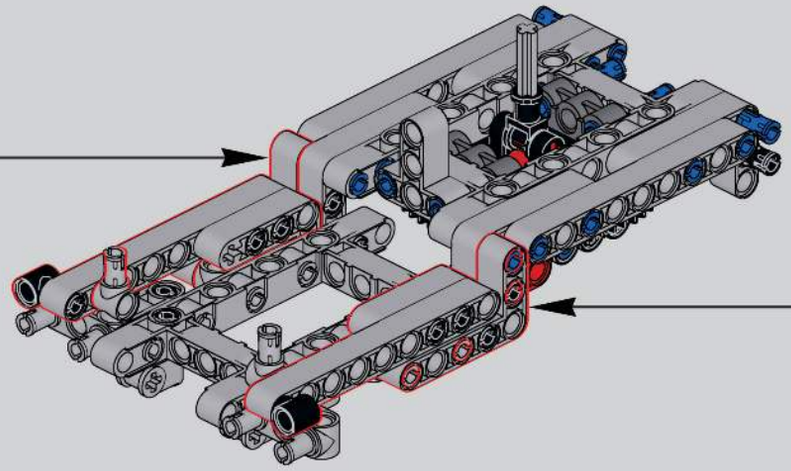

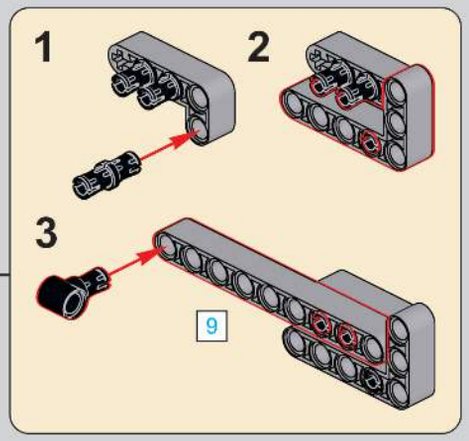

171

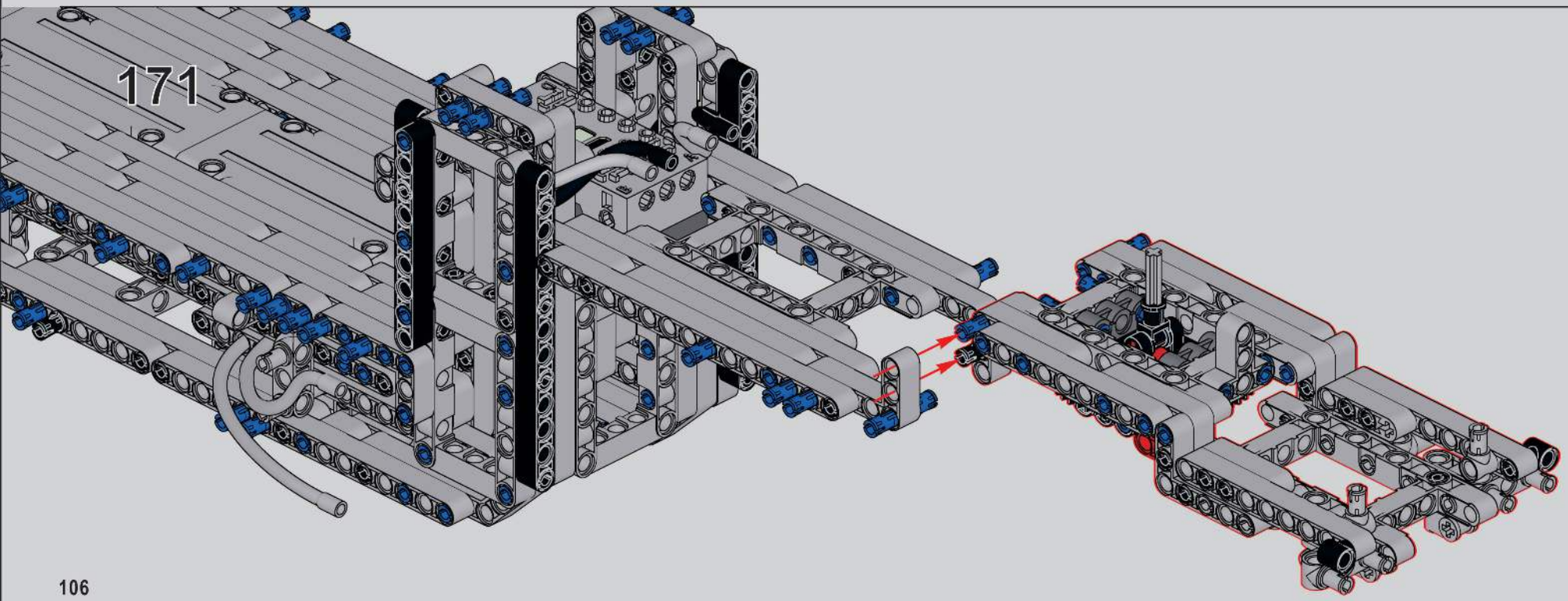

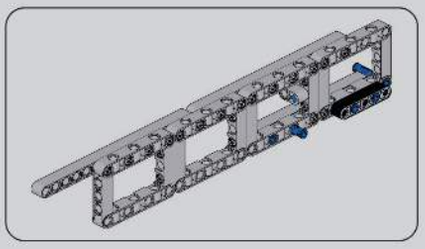

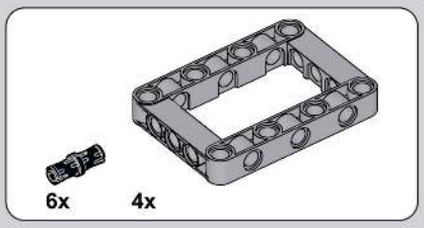

172

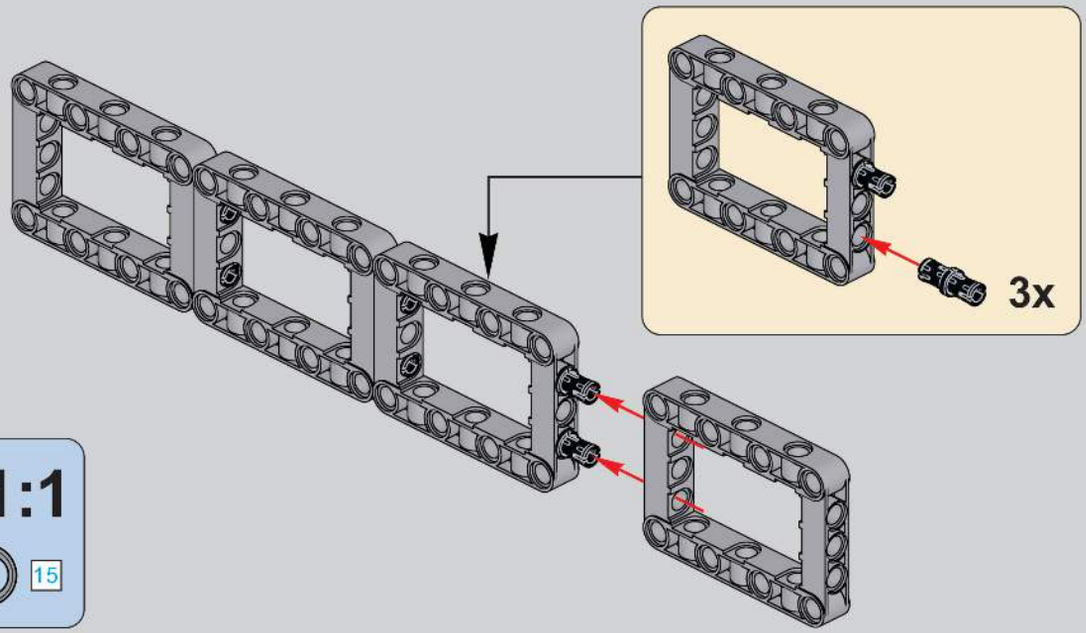

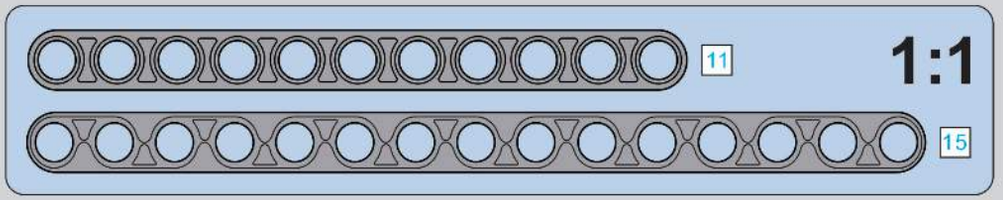

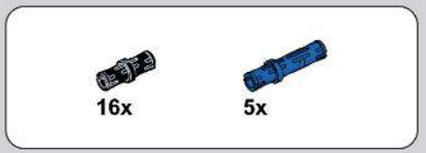

173

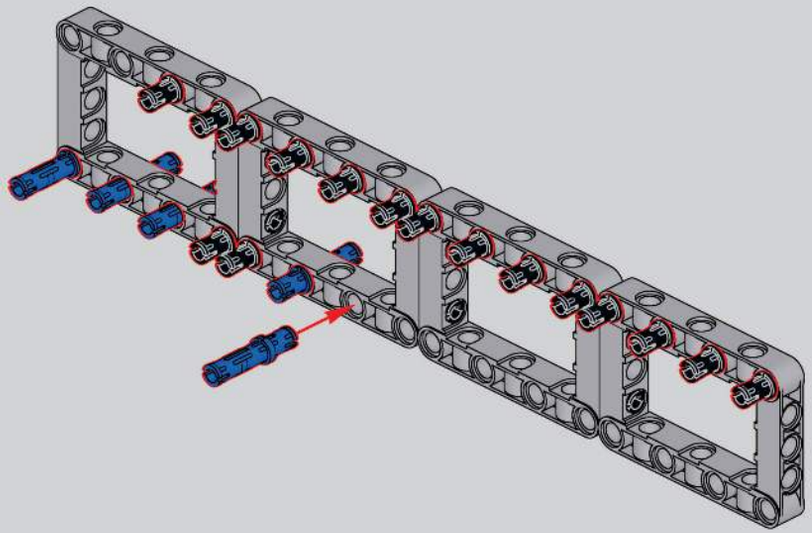

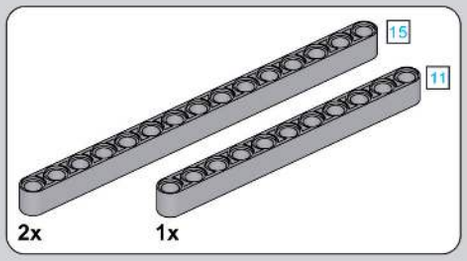

174

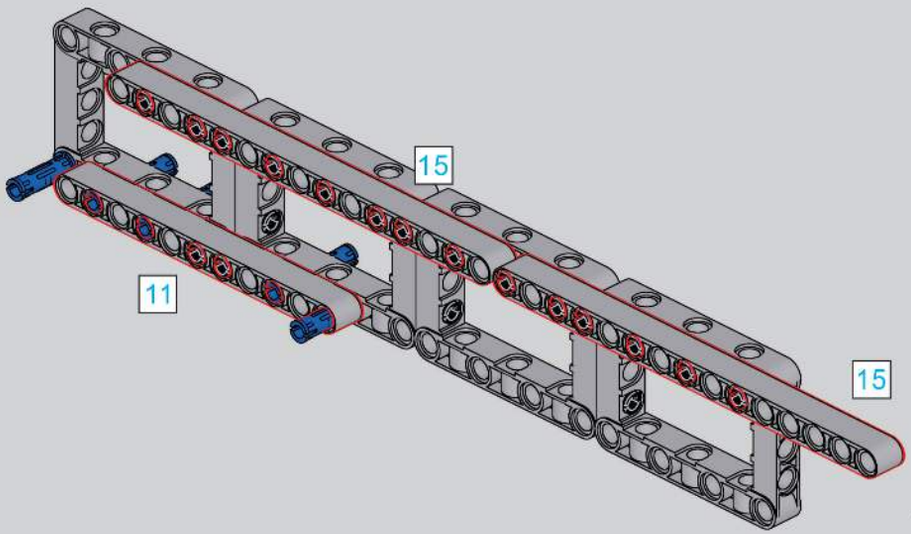

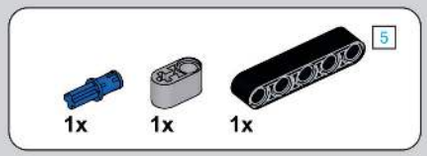

175

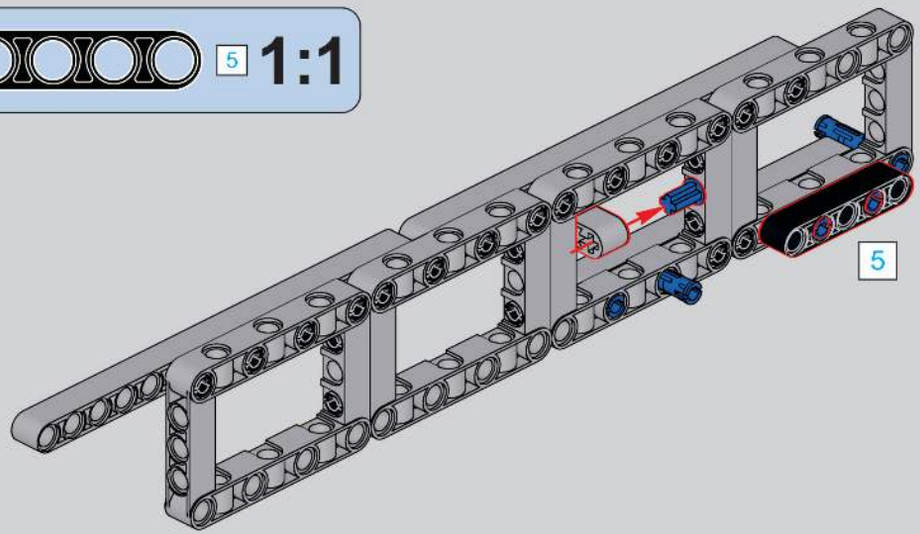

176

177

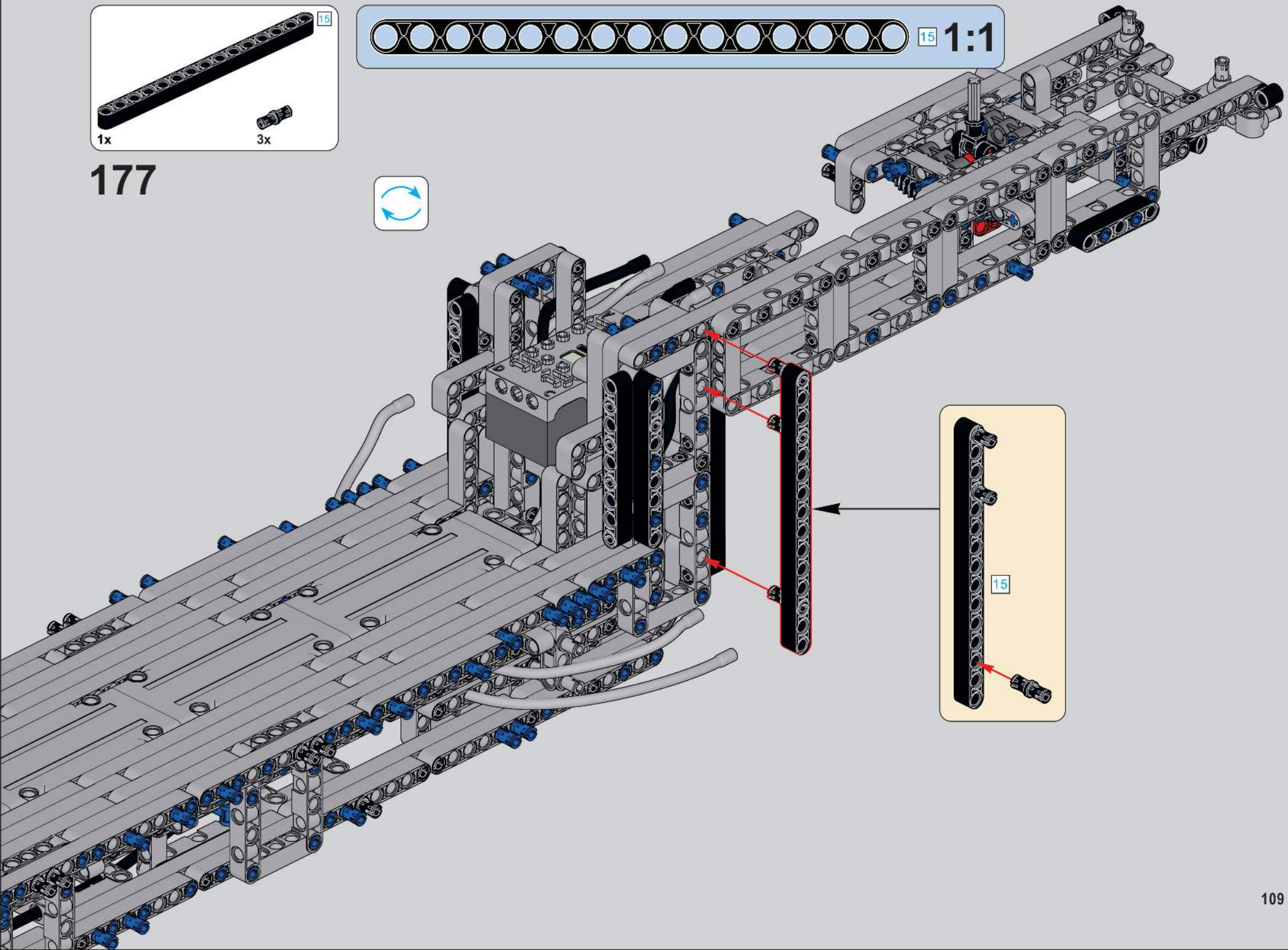

178

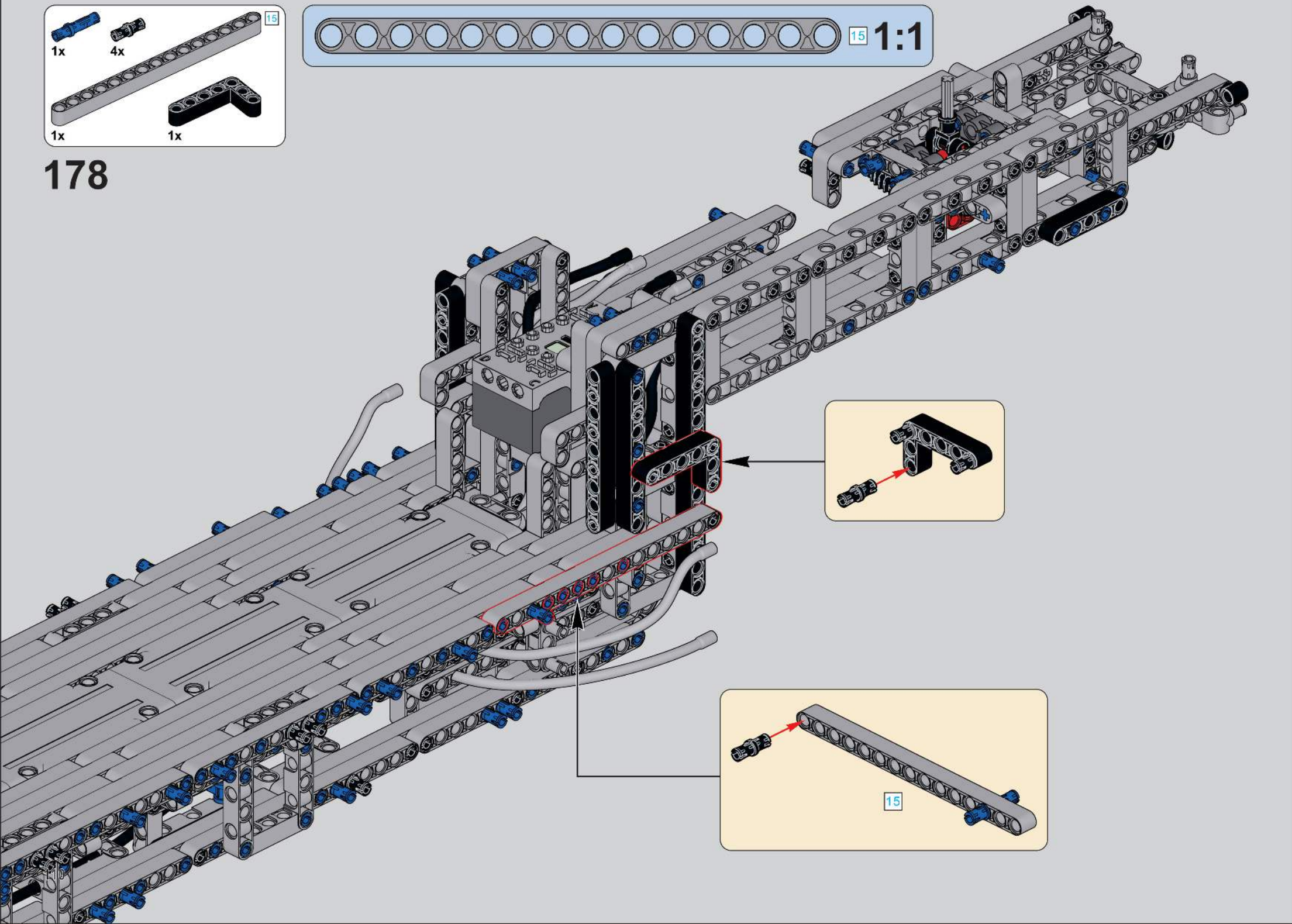

179

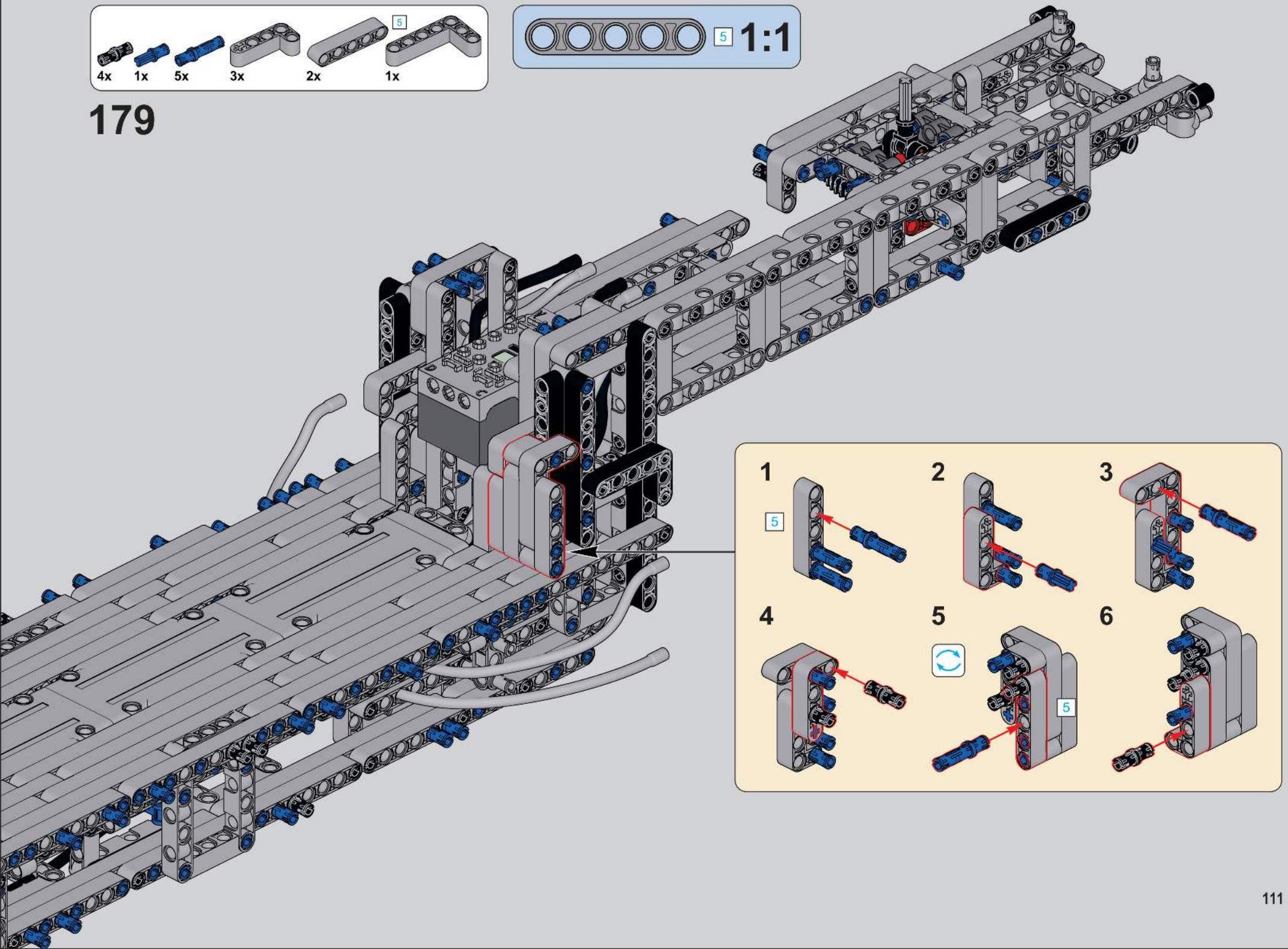

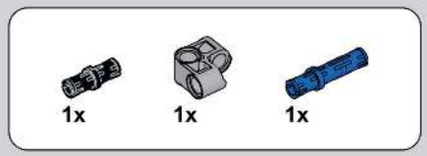

180

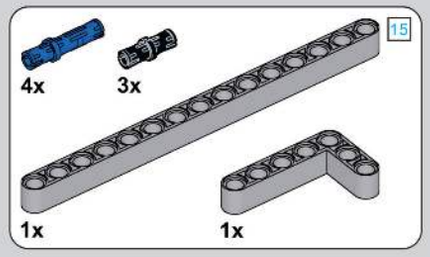

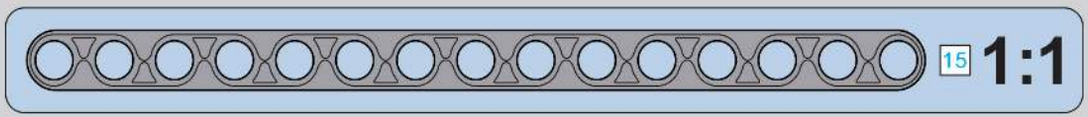

181

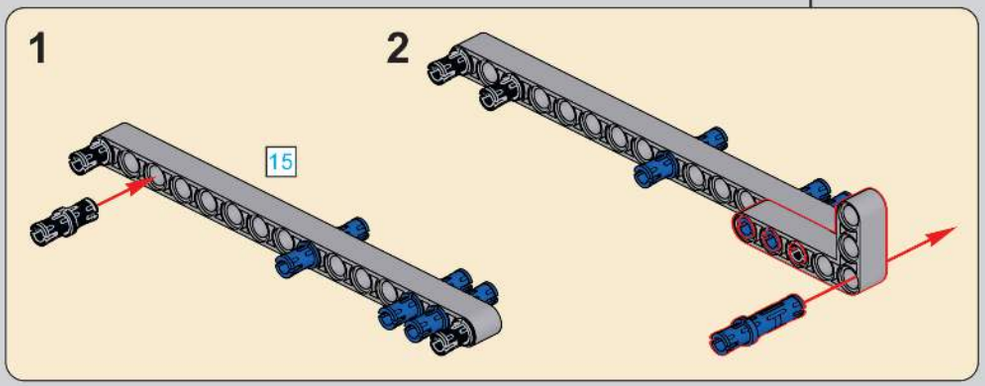

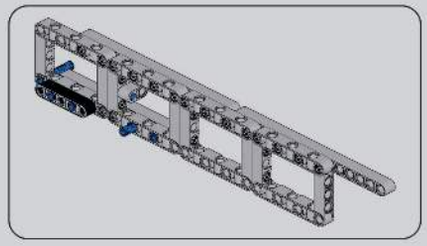

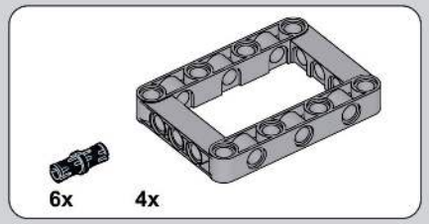

182

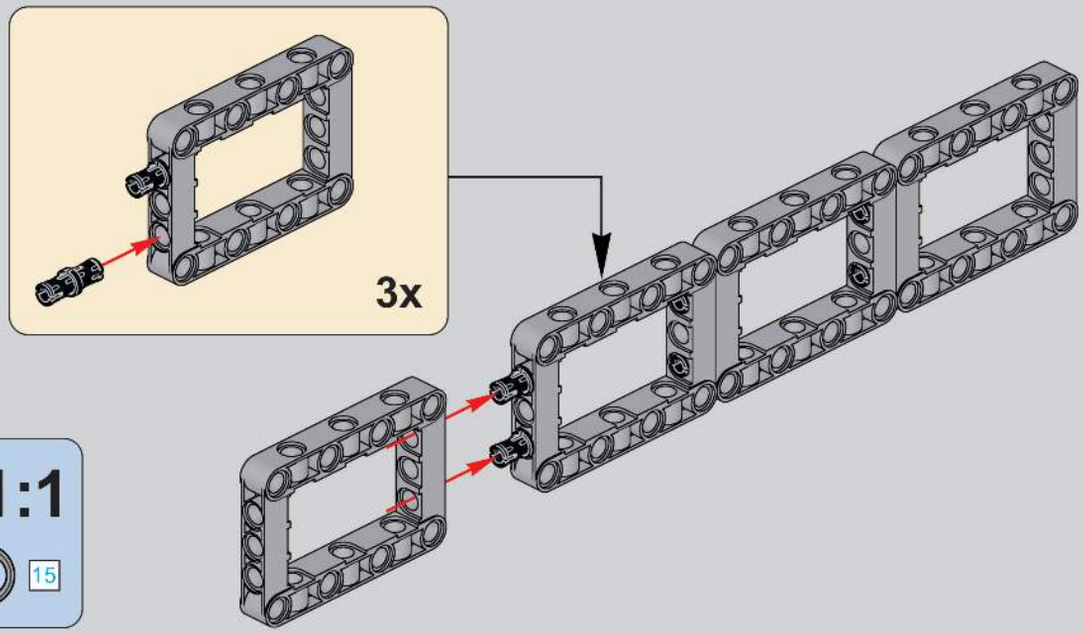

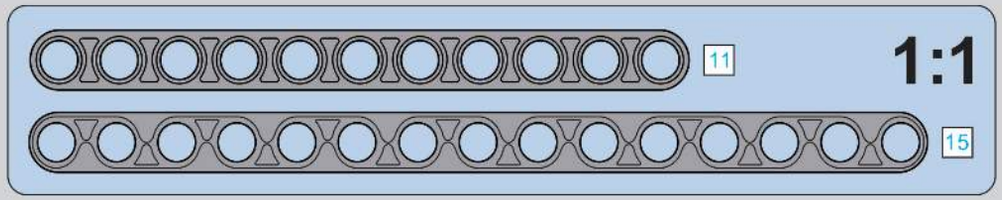

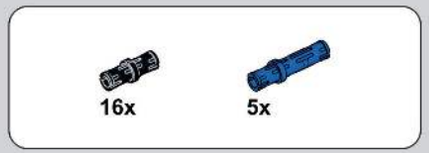

183

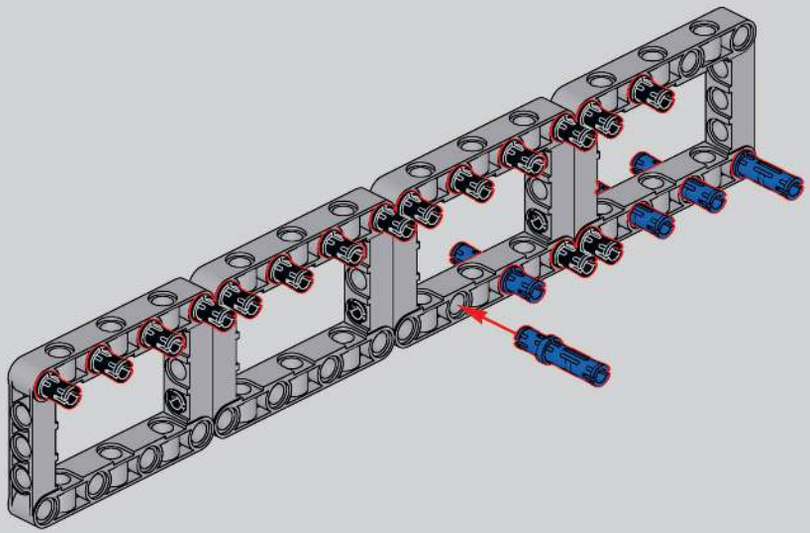

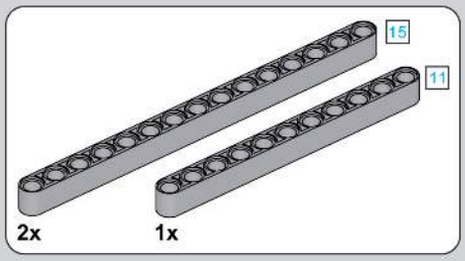

184

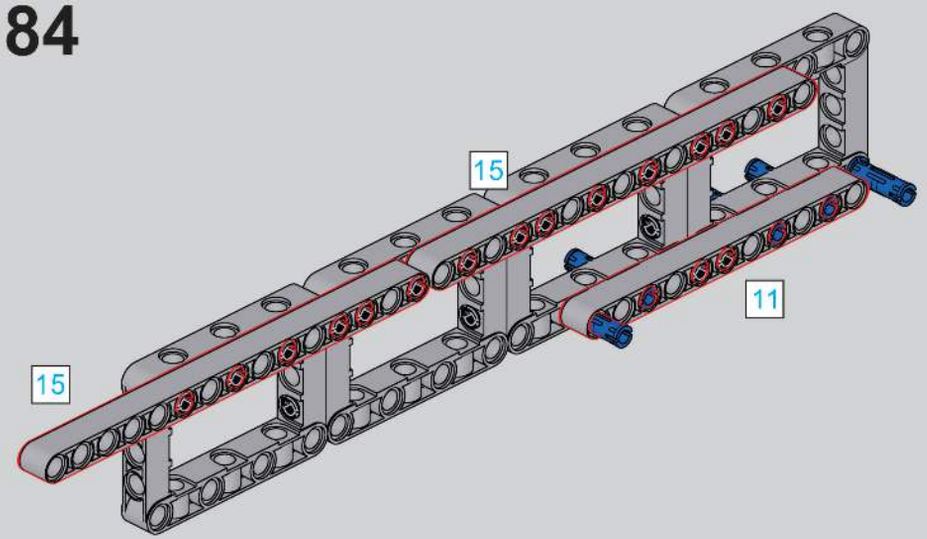

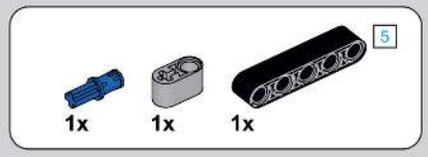

185

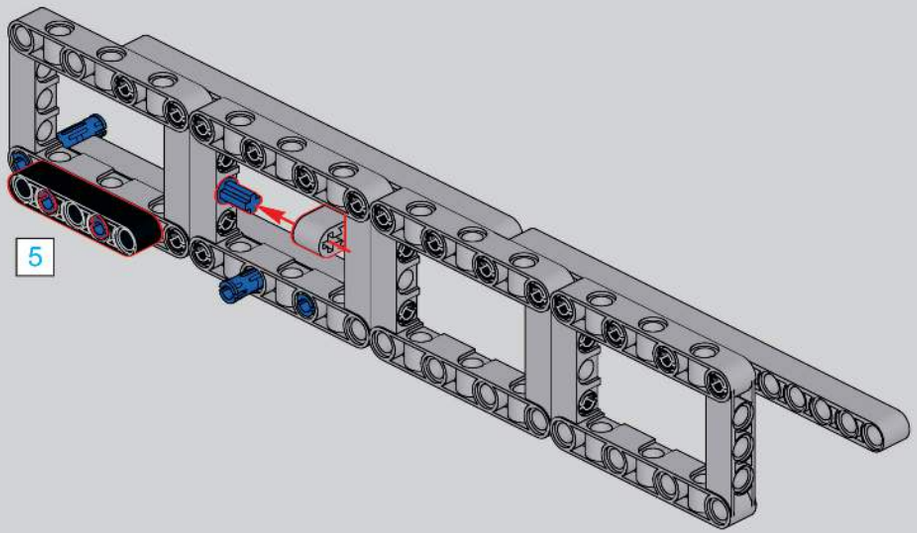

186

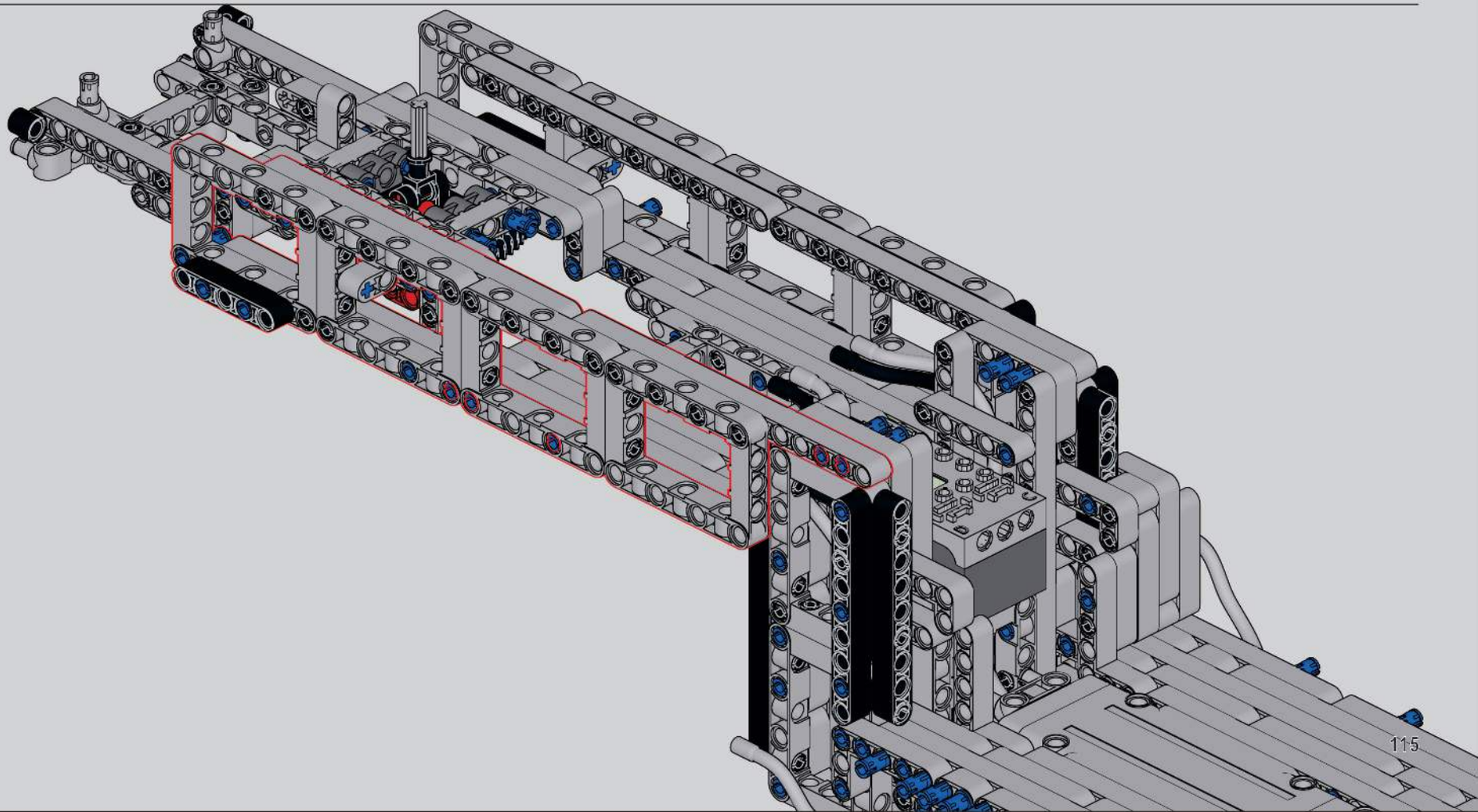

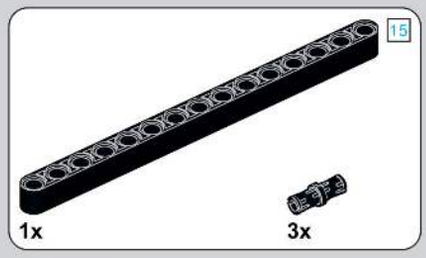

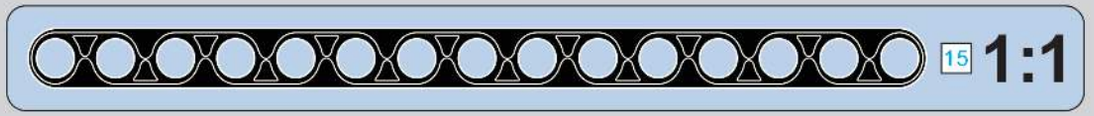

187

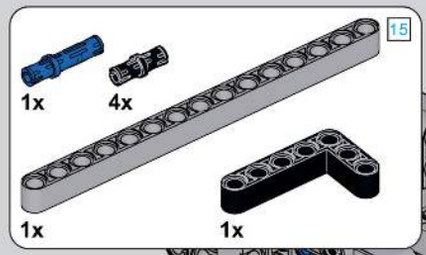

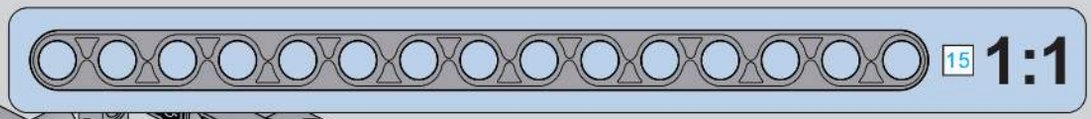

188

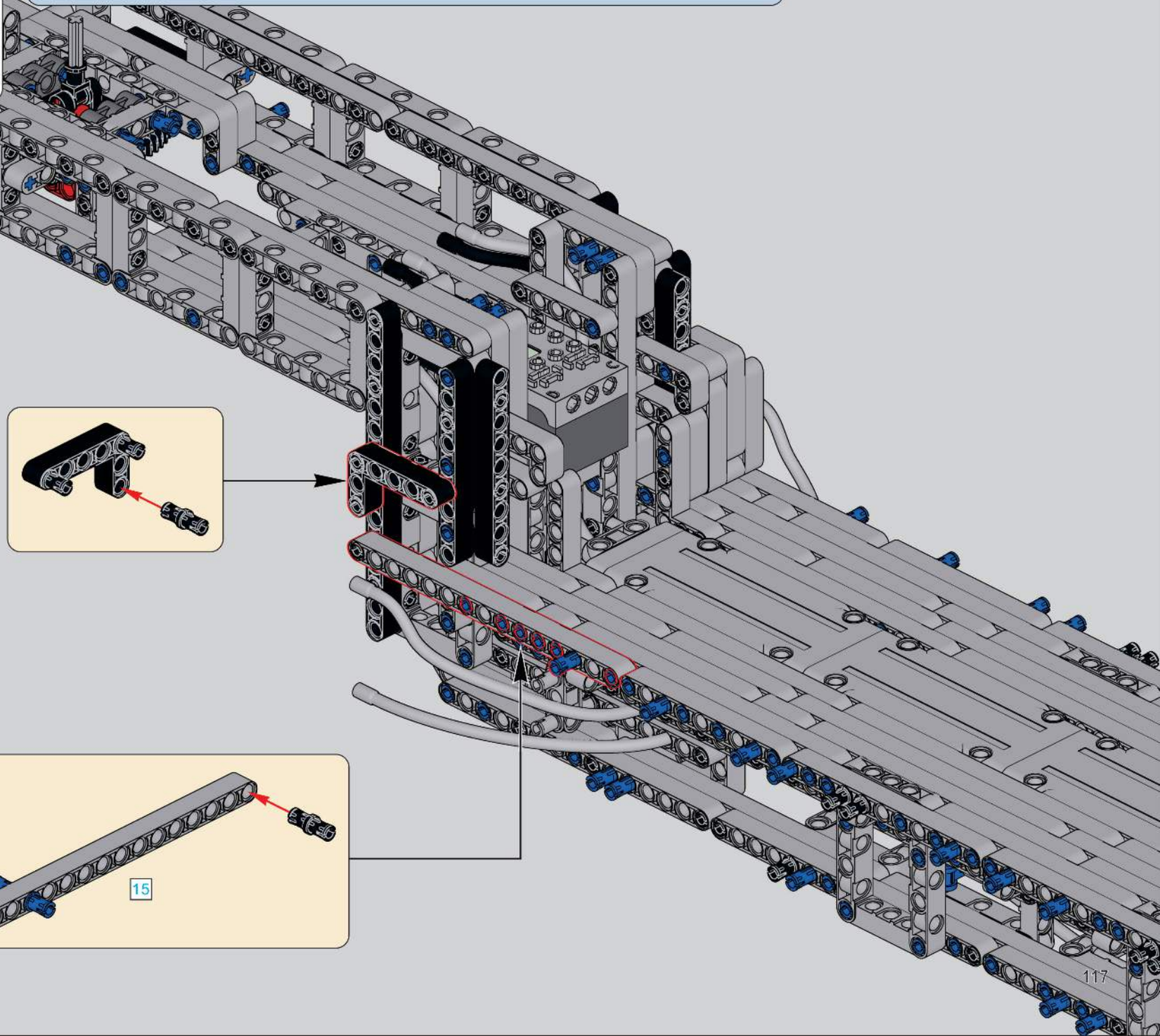

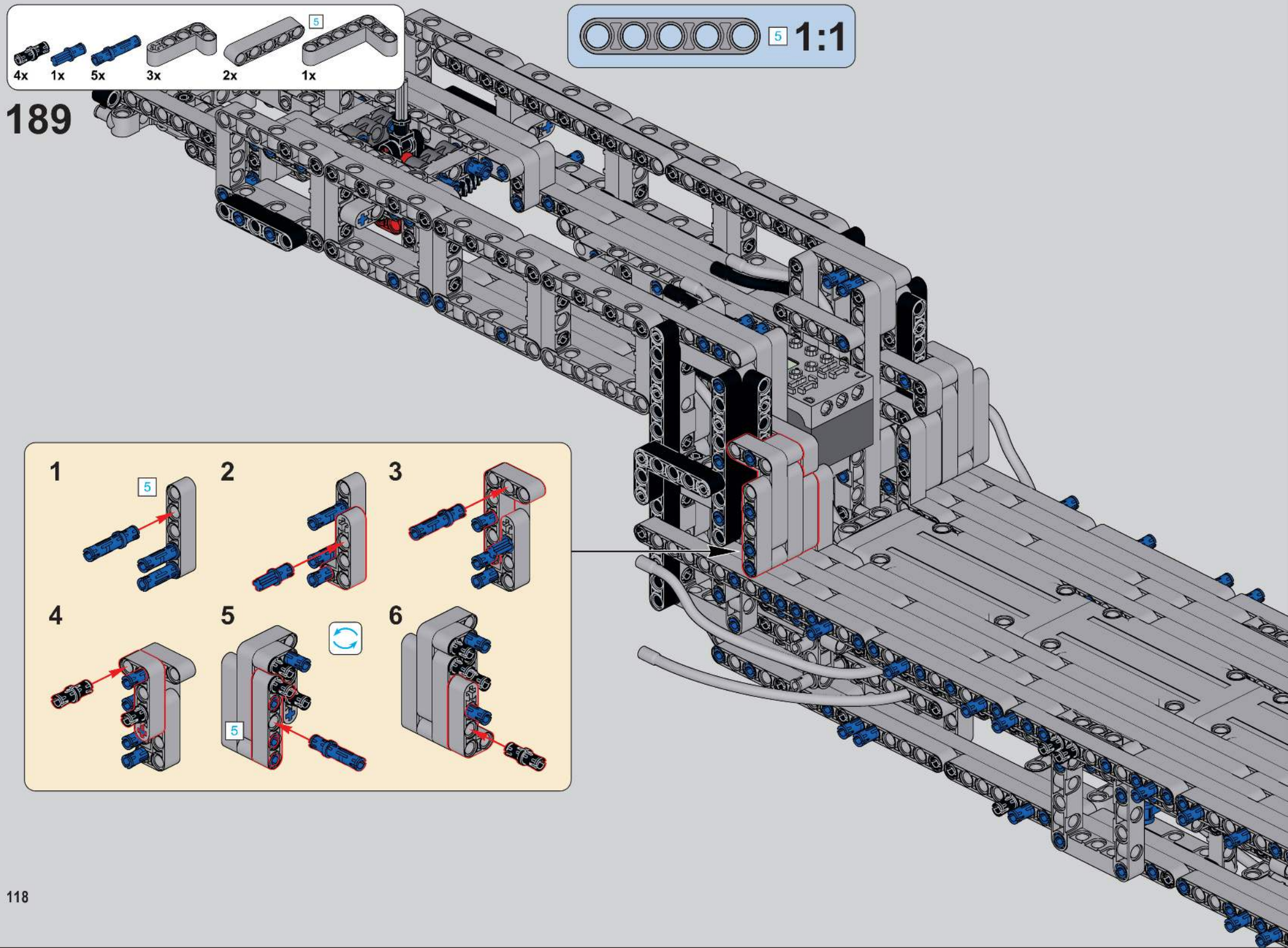
4x
1x
5x
3x
2x
5
1x
5
1:1
189
1
5
2
3
4
5
5
6

190

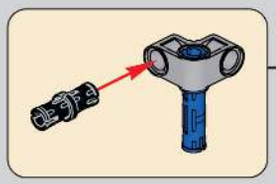

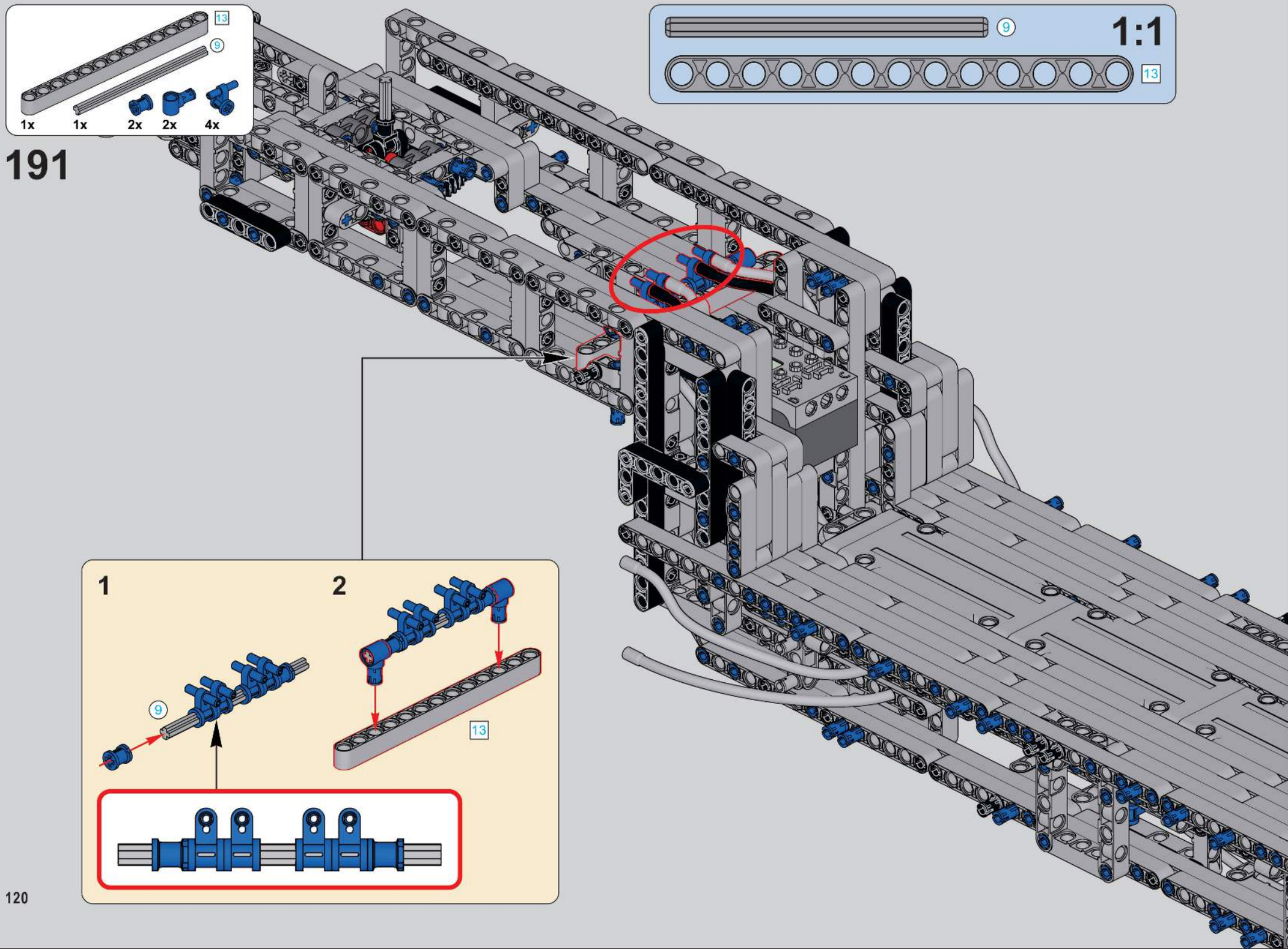
13
9
1x
1x
2x
2x
4x
191
9
1:1
13
1
2
9
13

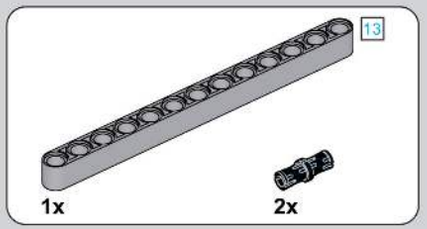

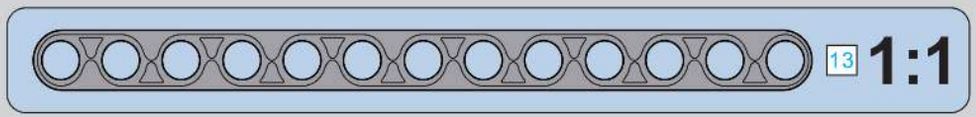

192

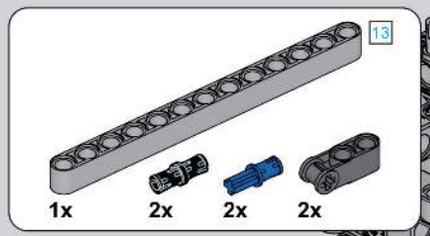

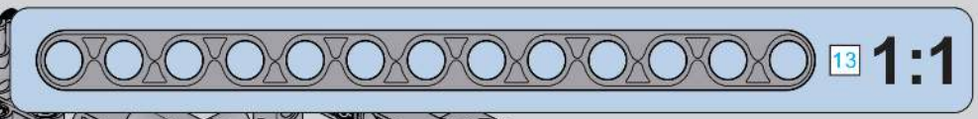

193

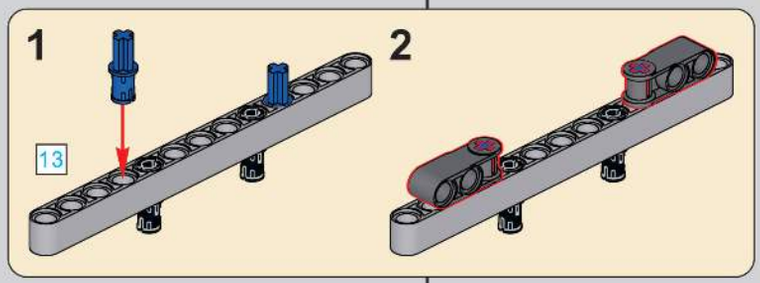

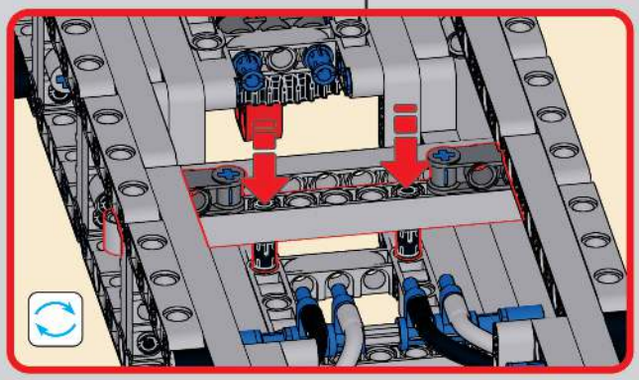

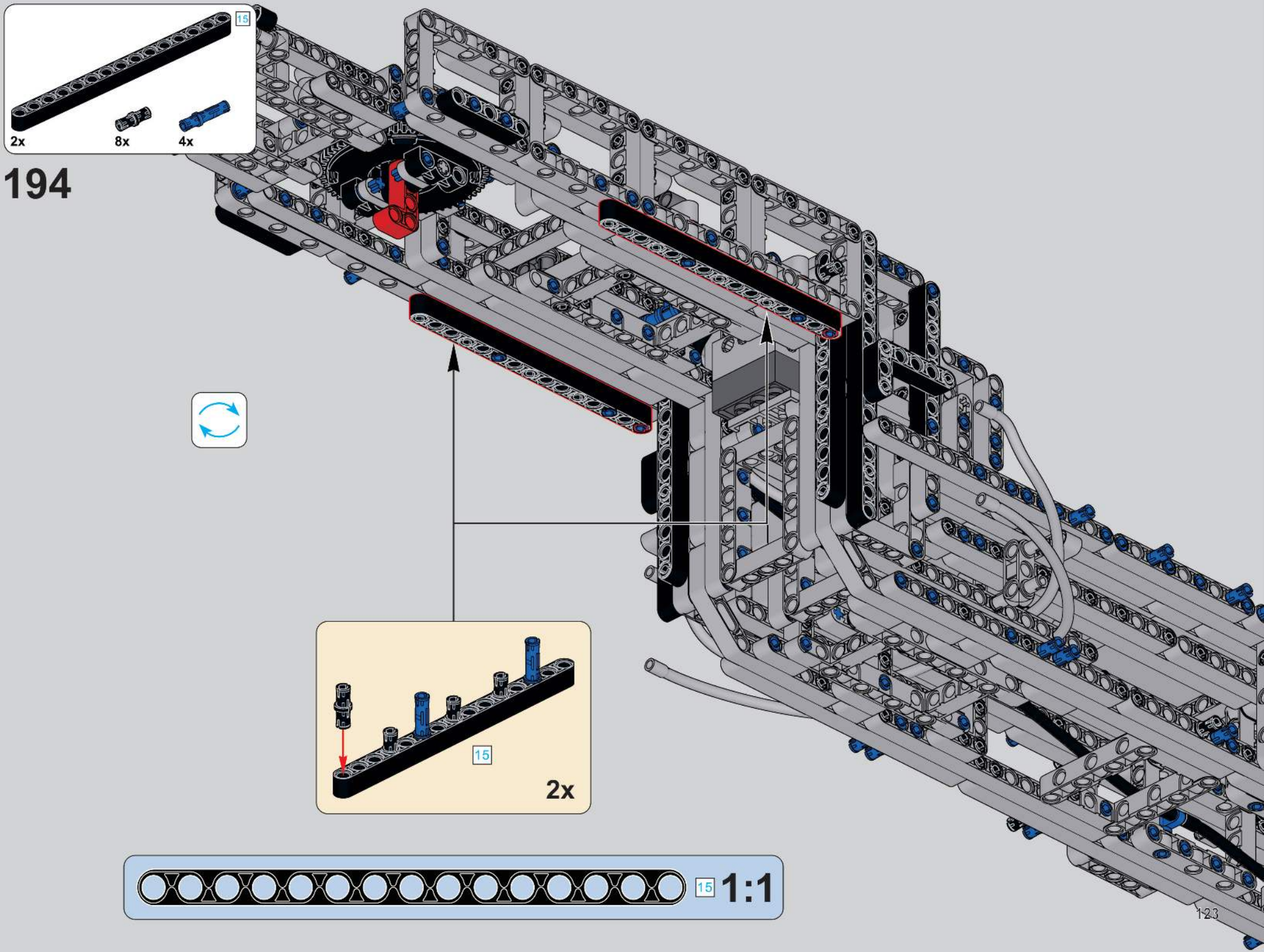
15
2x
8x
4x
194
15
2x
15
1:1

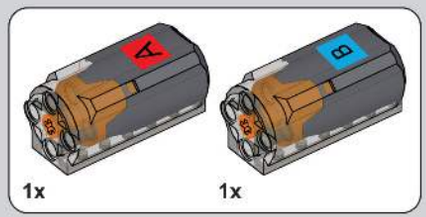

195

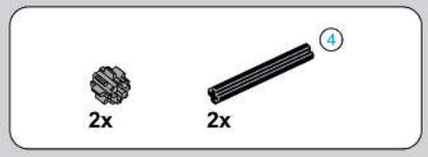

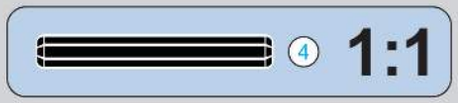

196

197

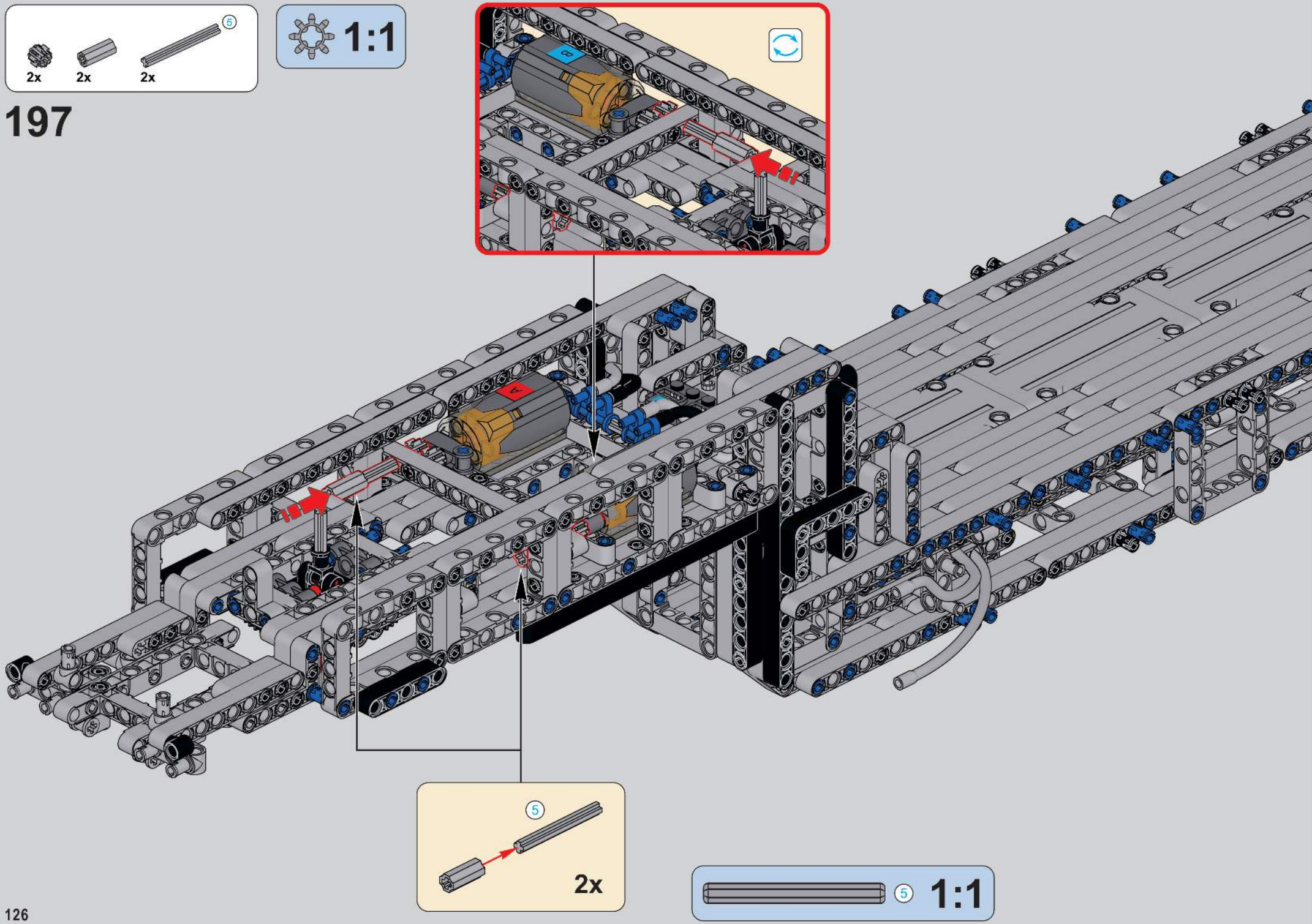

198

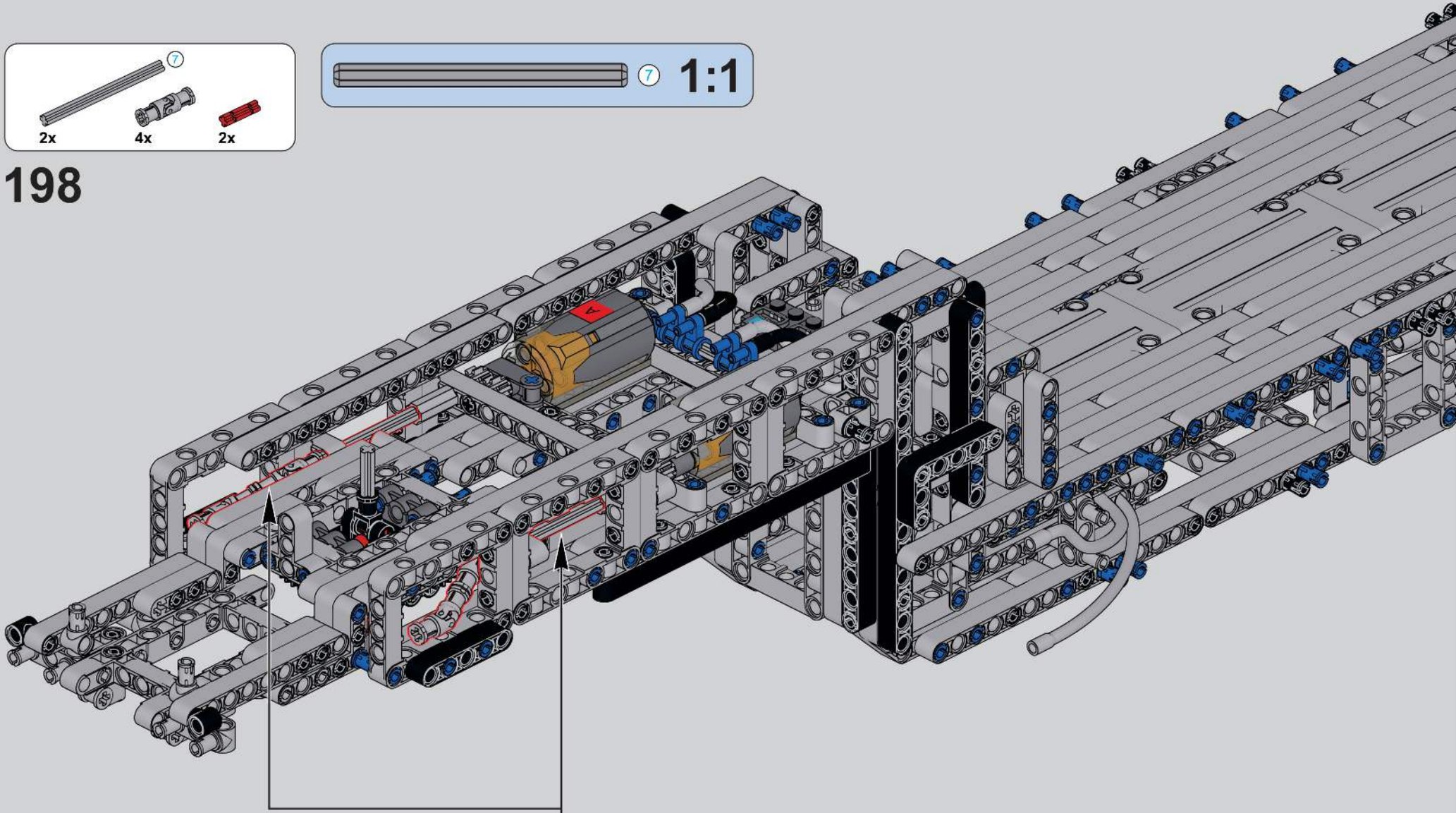

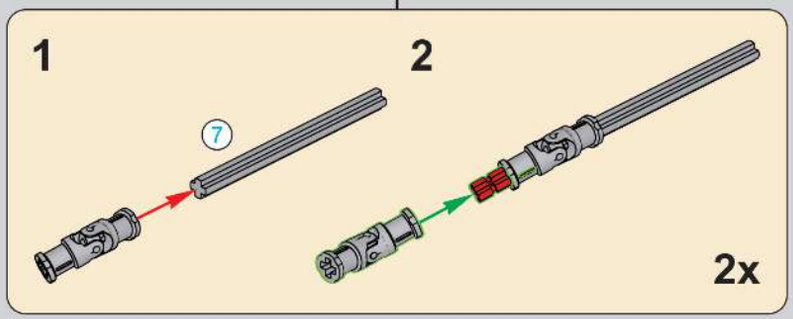

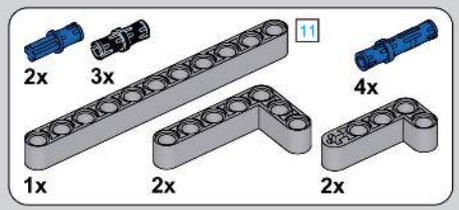

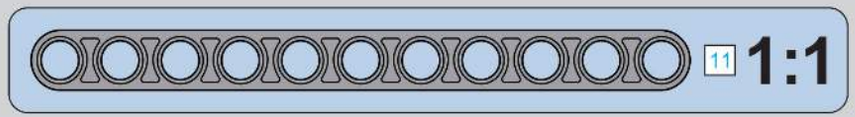

199

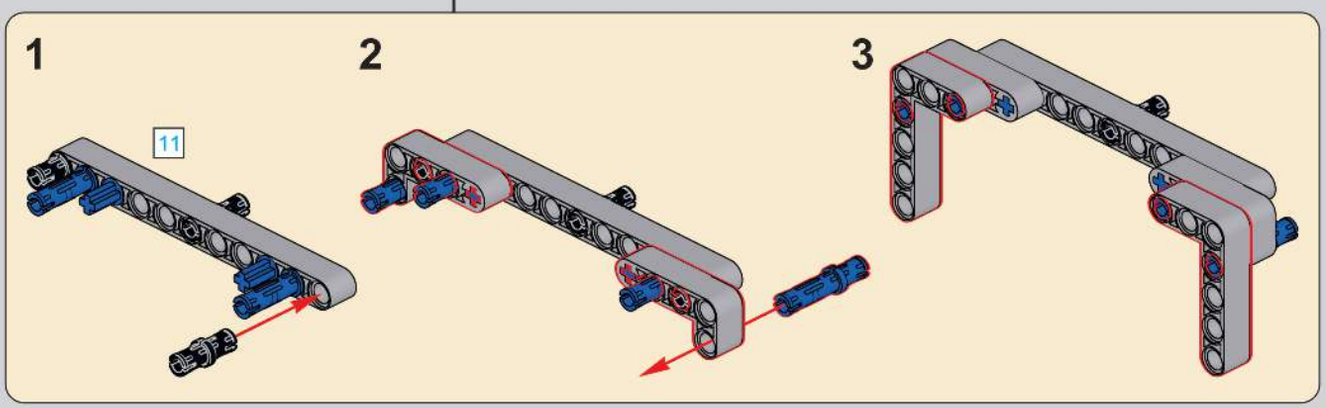

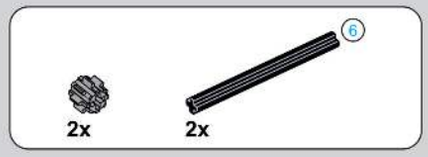

200

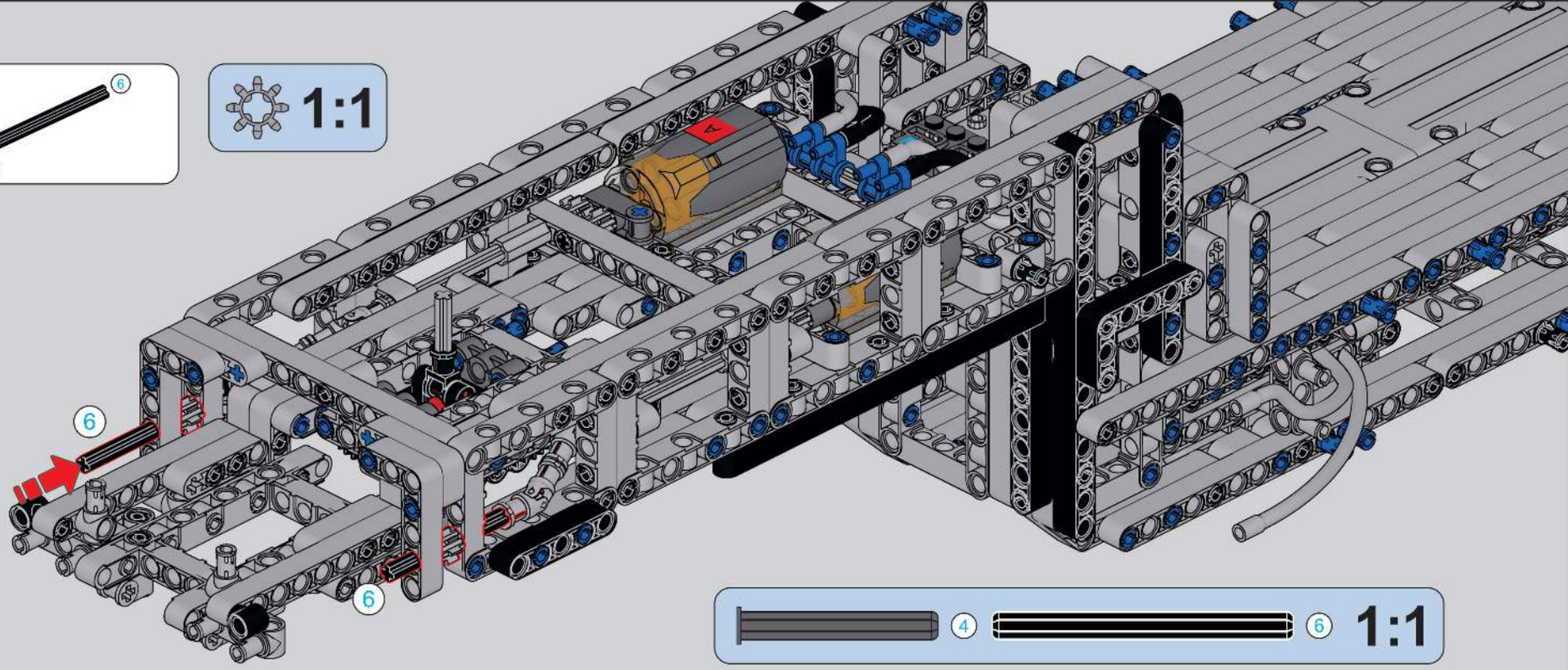

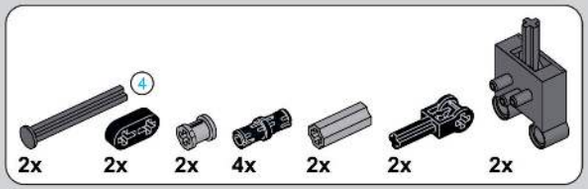

201

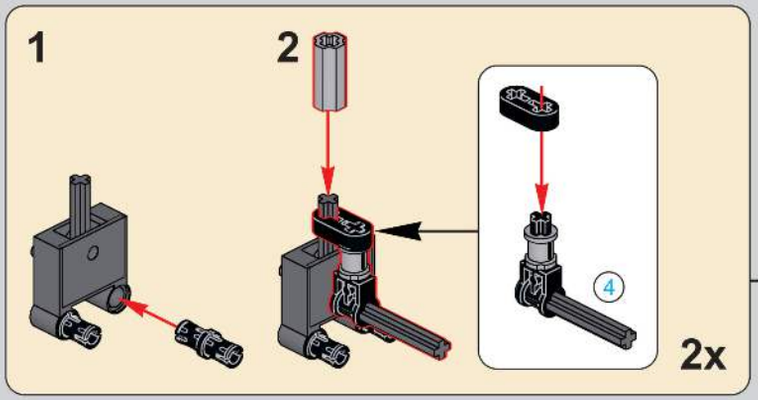

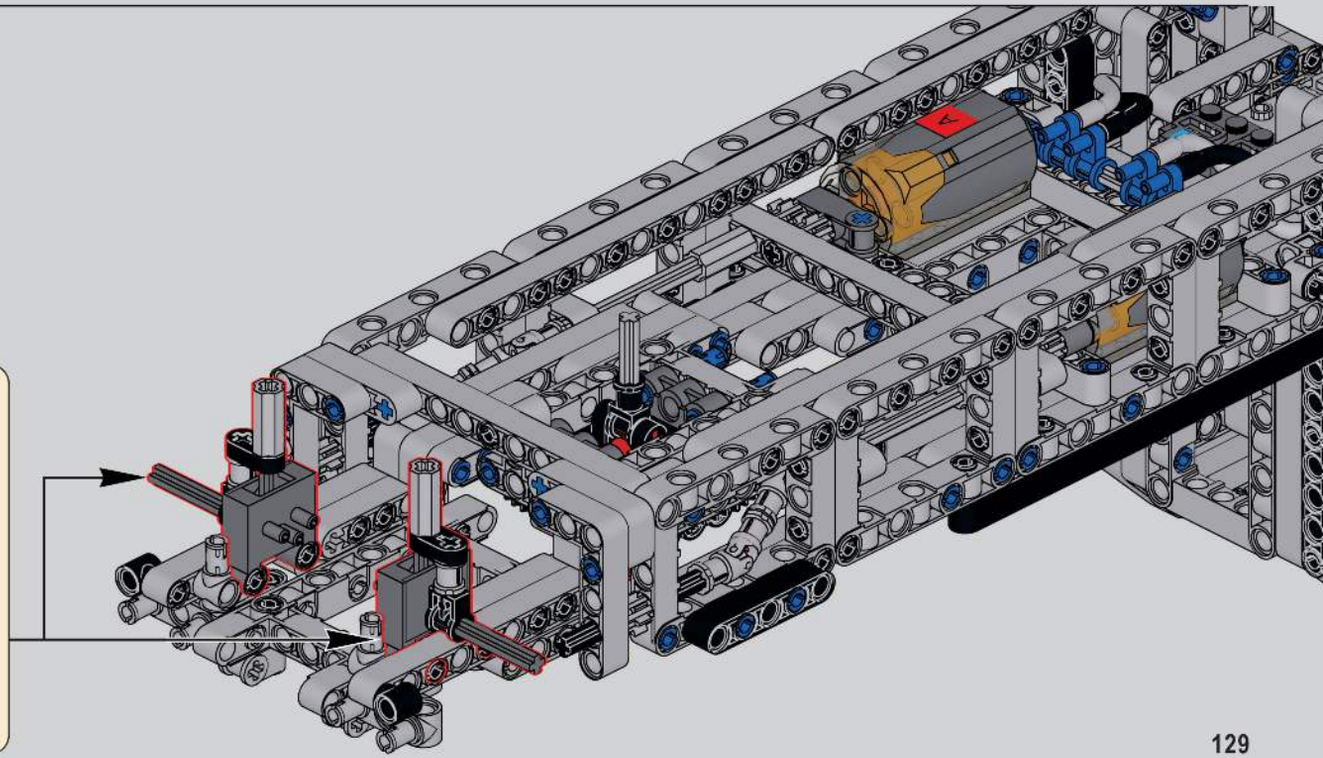

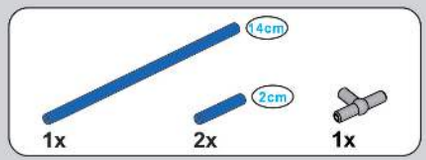

202

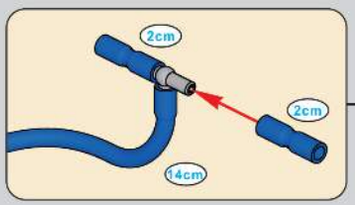

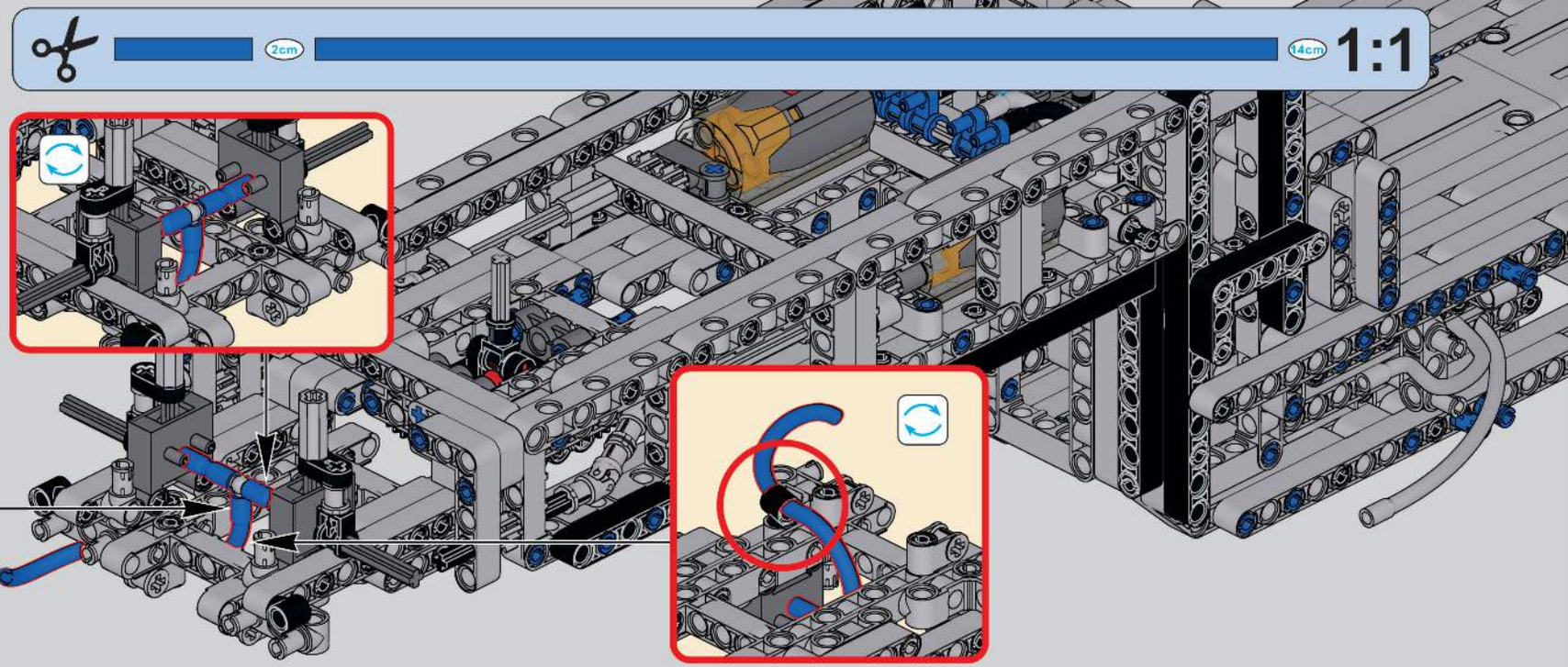

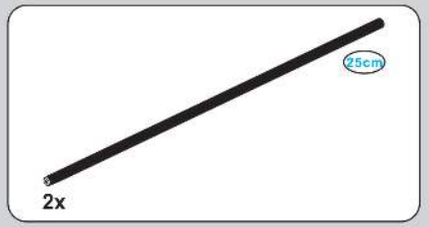

203

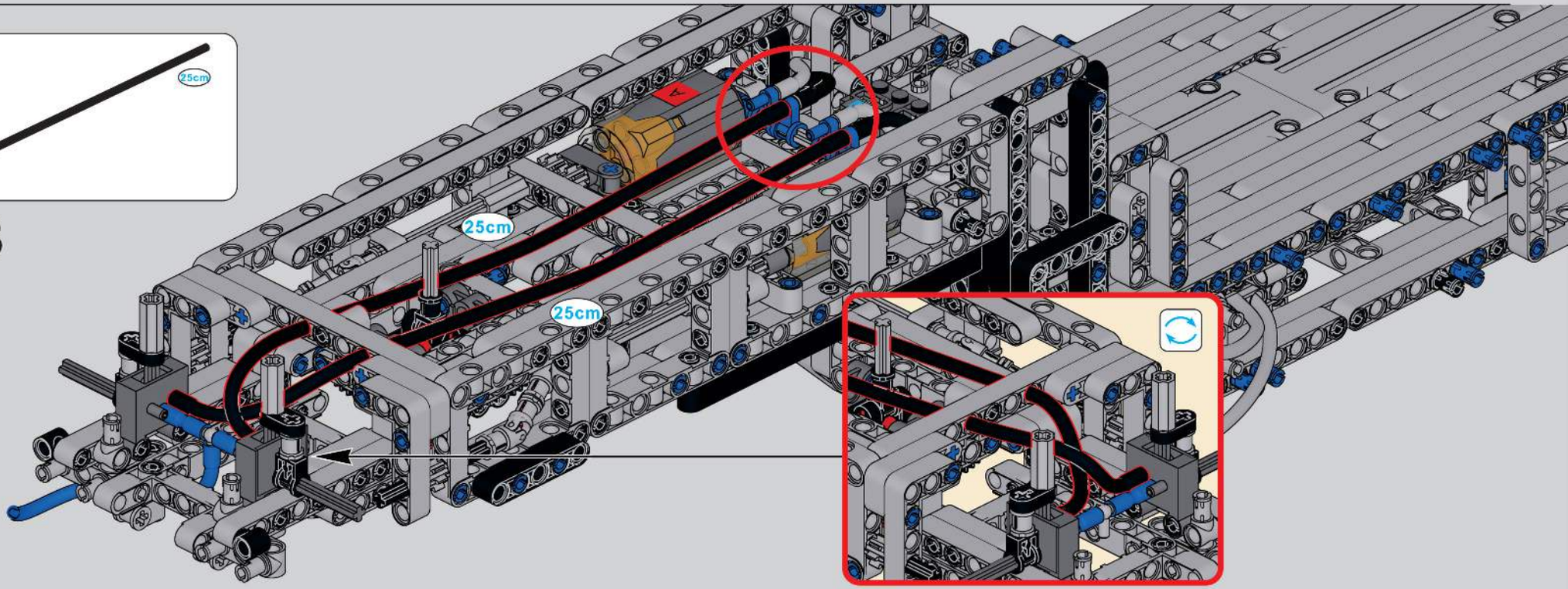

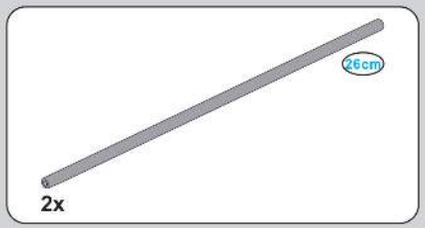

204

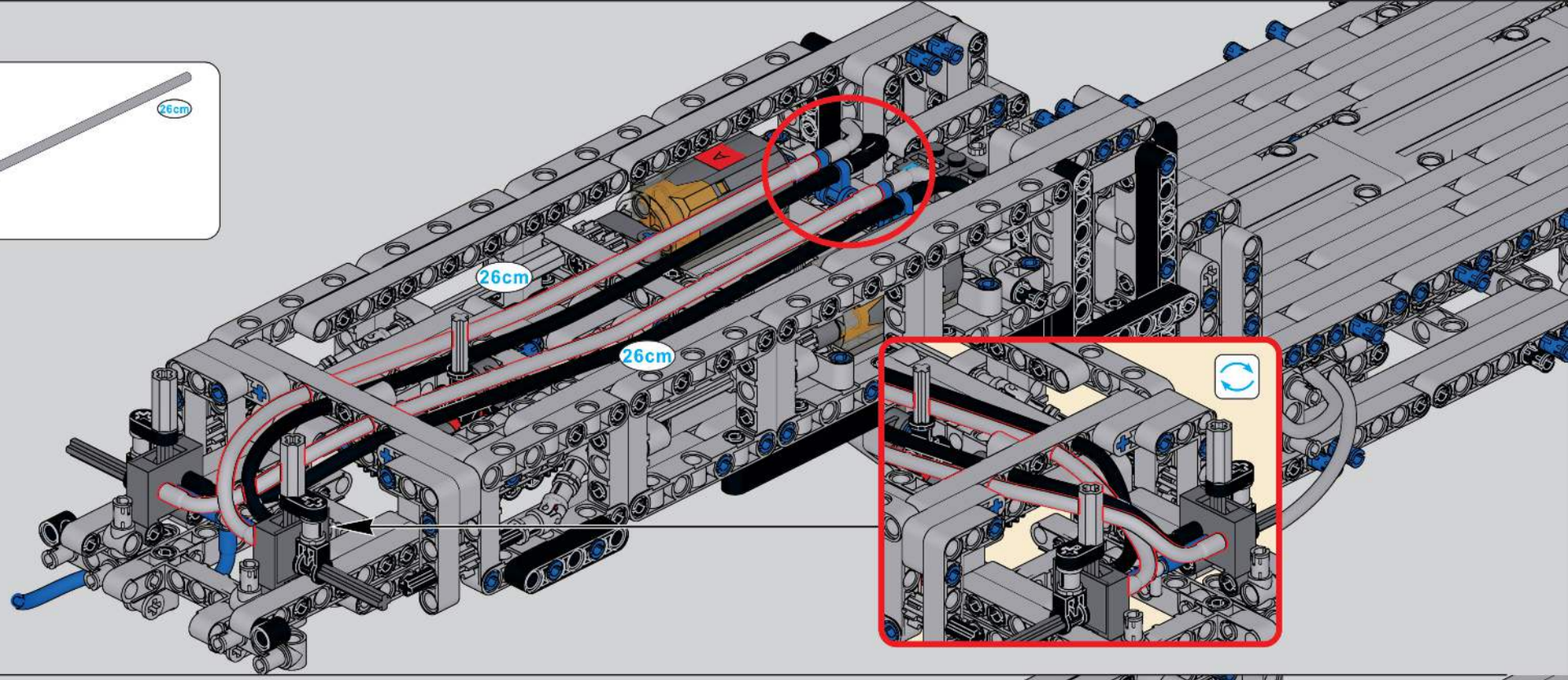

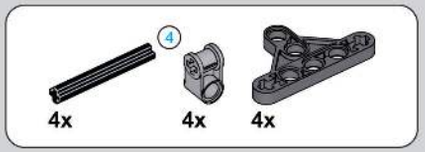

205

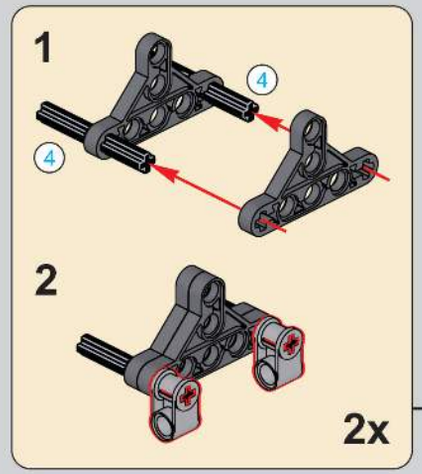

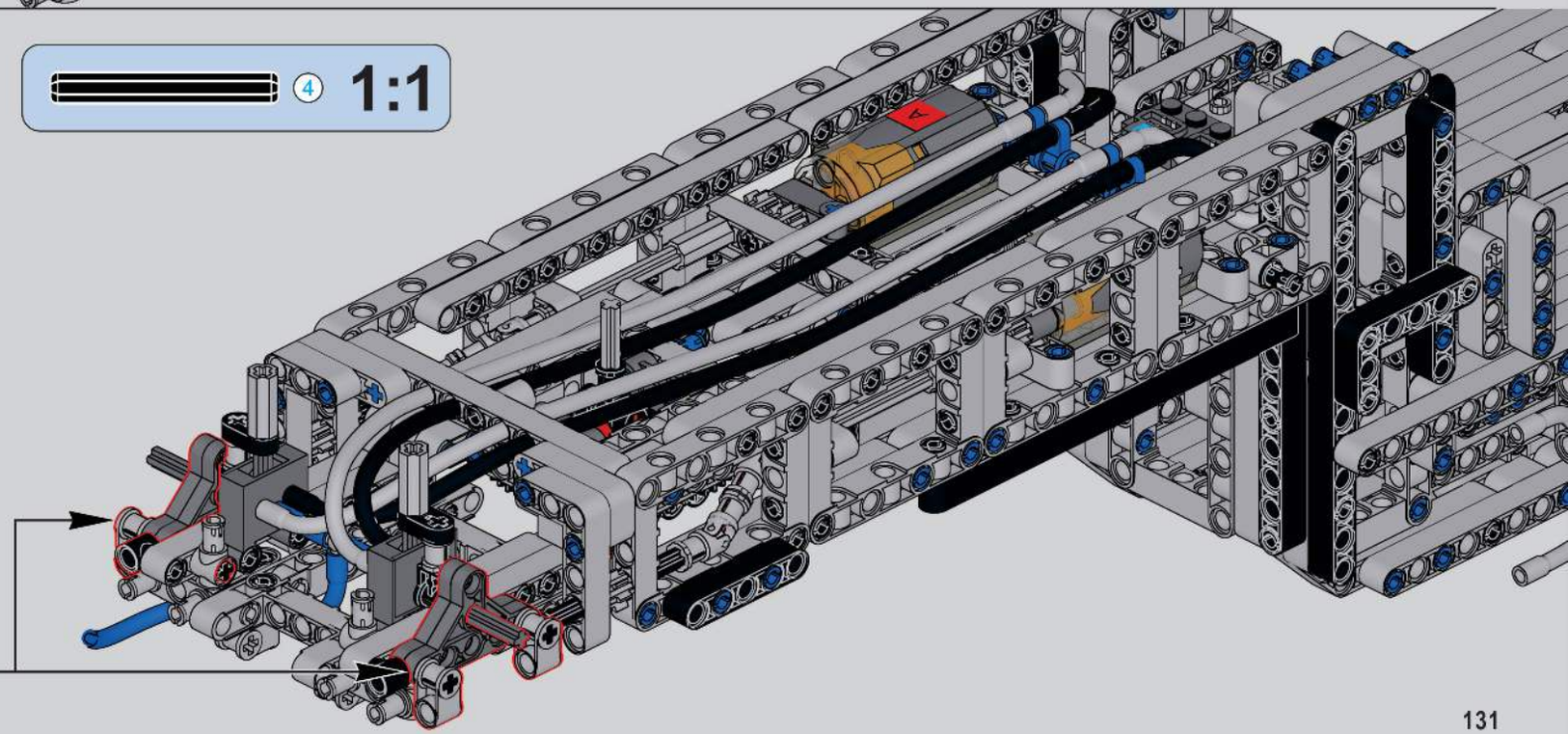

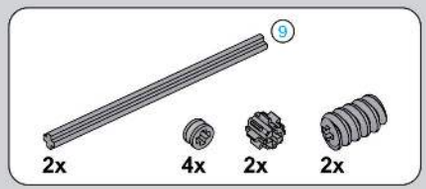

206

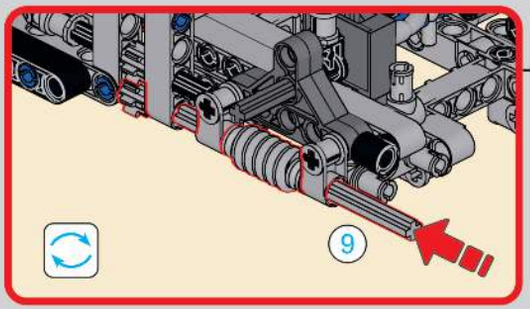

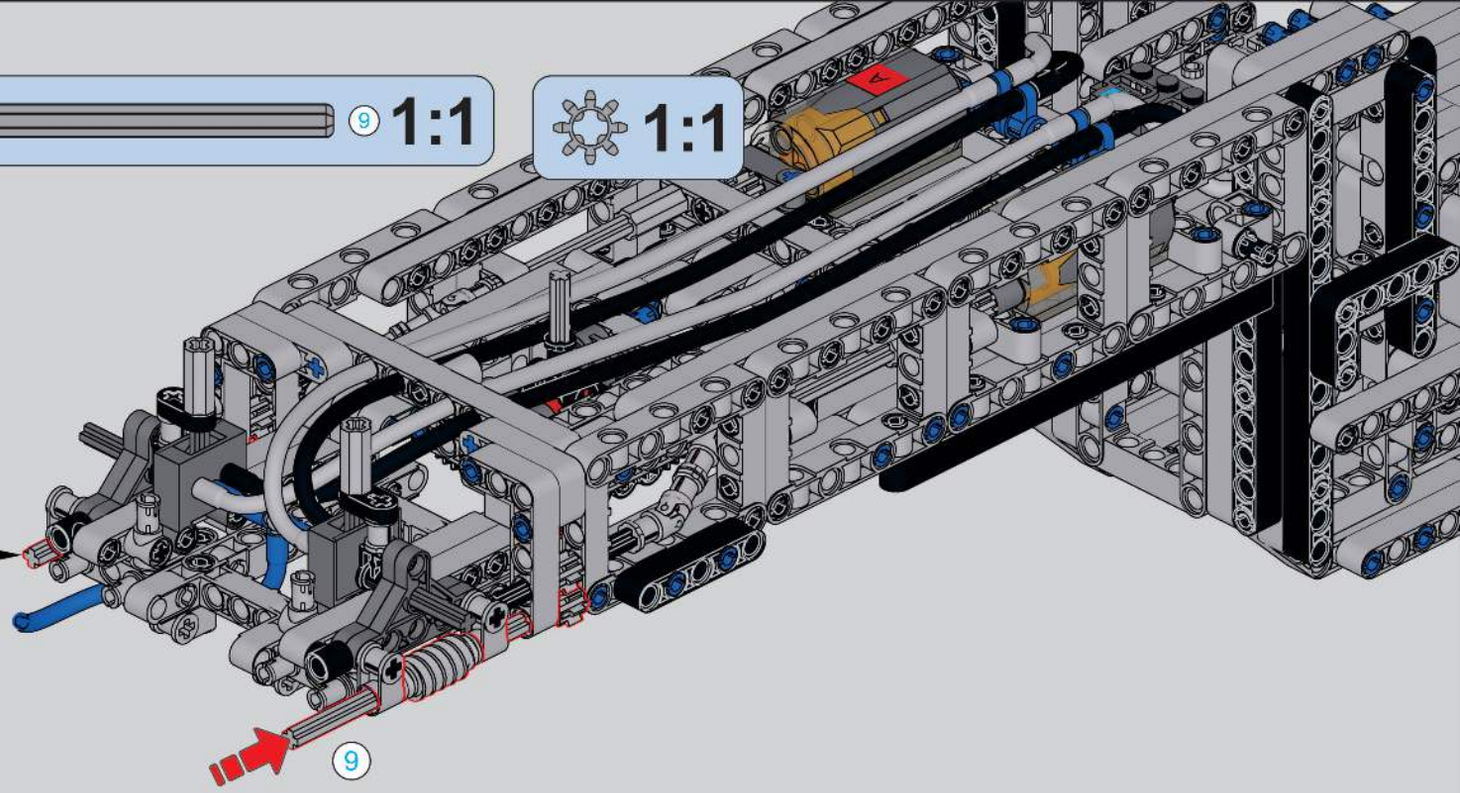

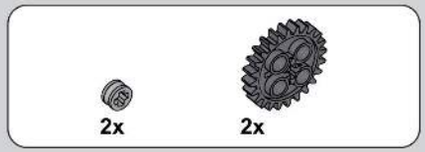

207

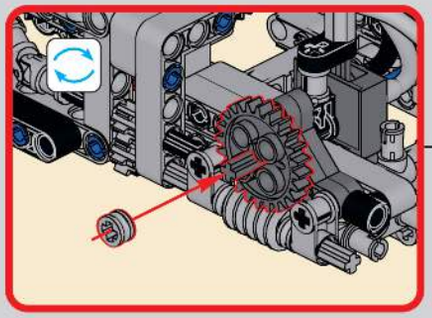

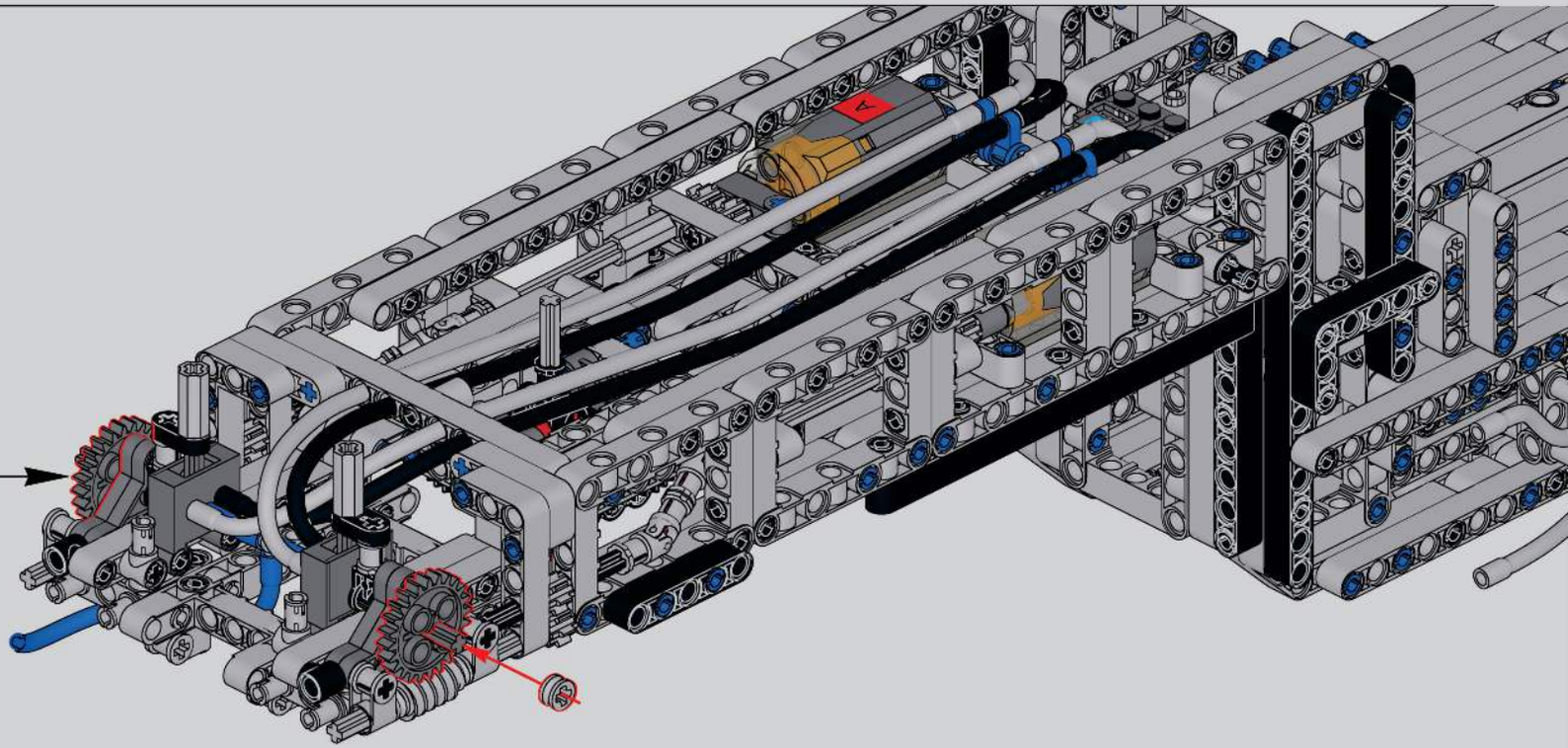

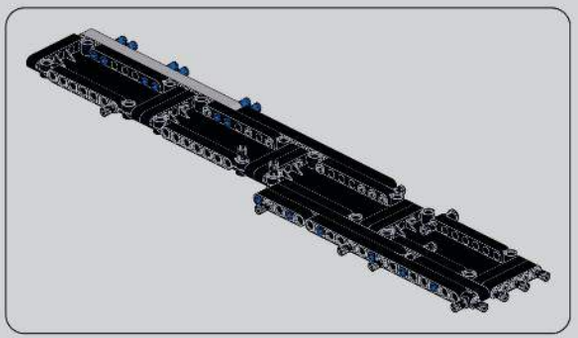

208

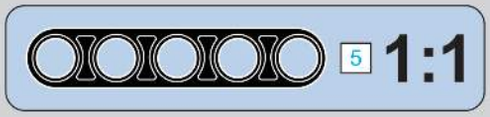

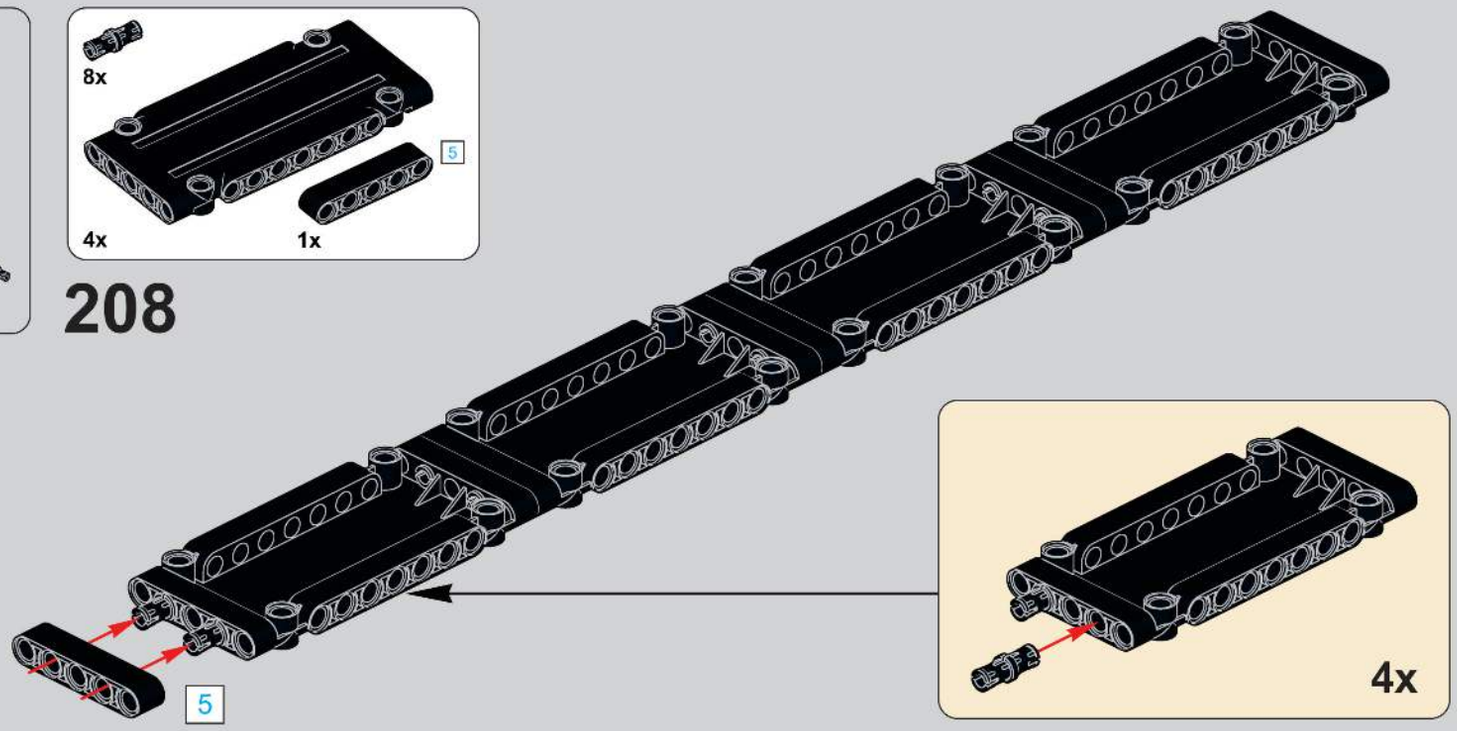

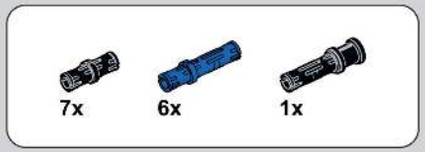

209

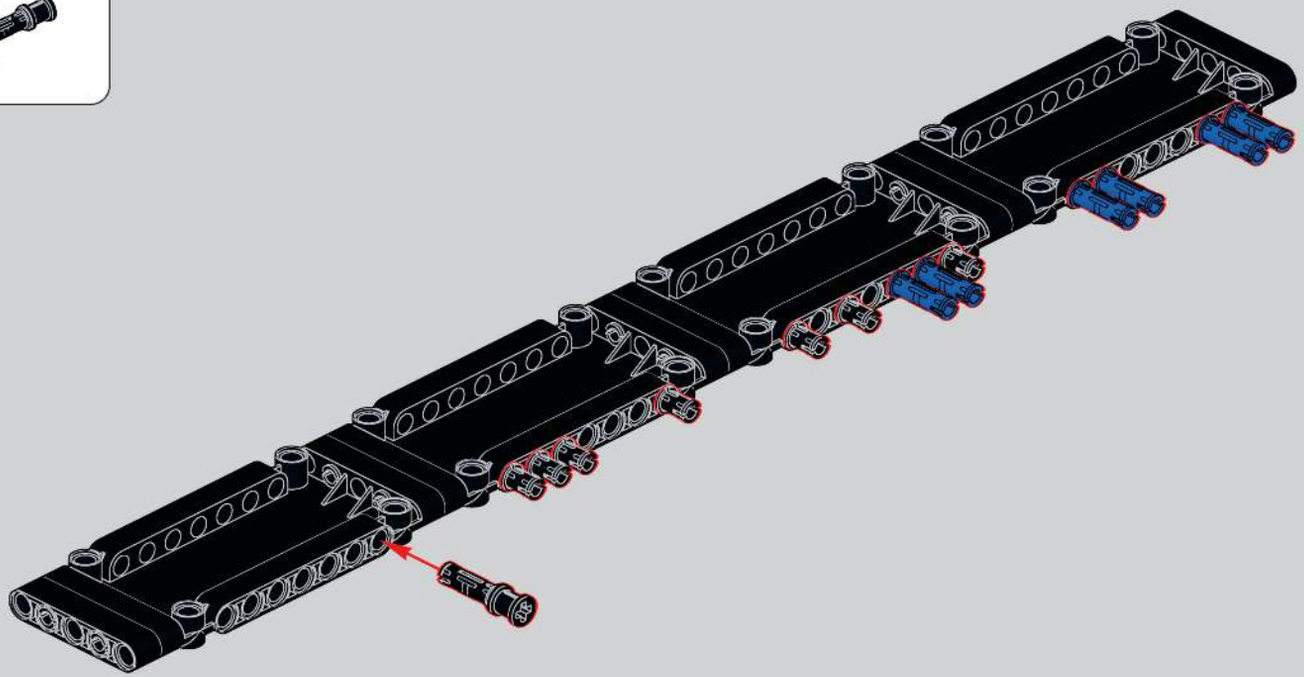

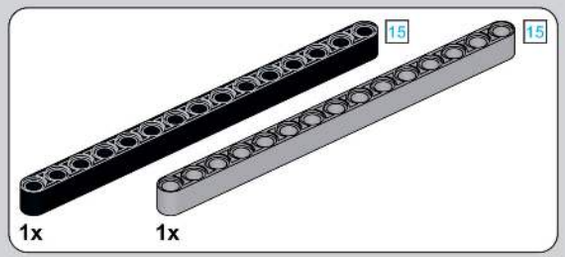

210

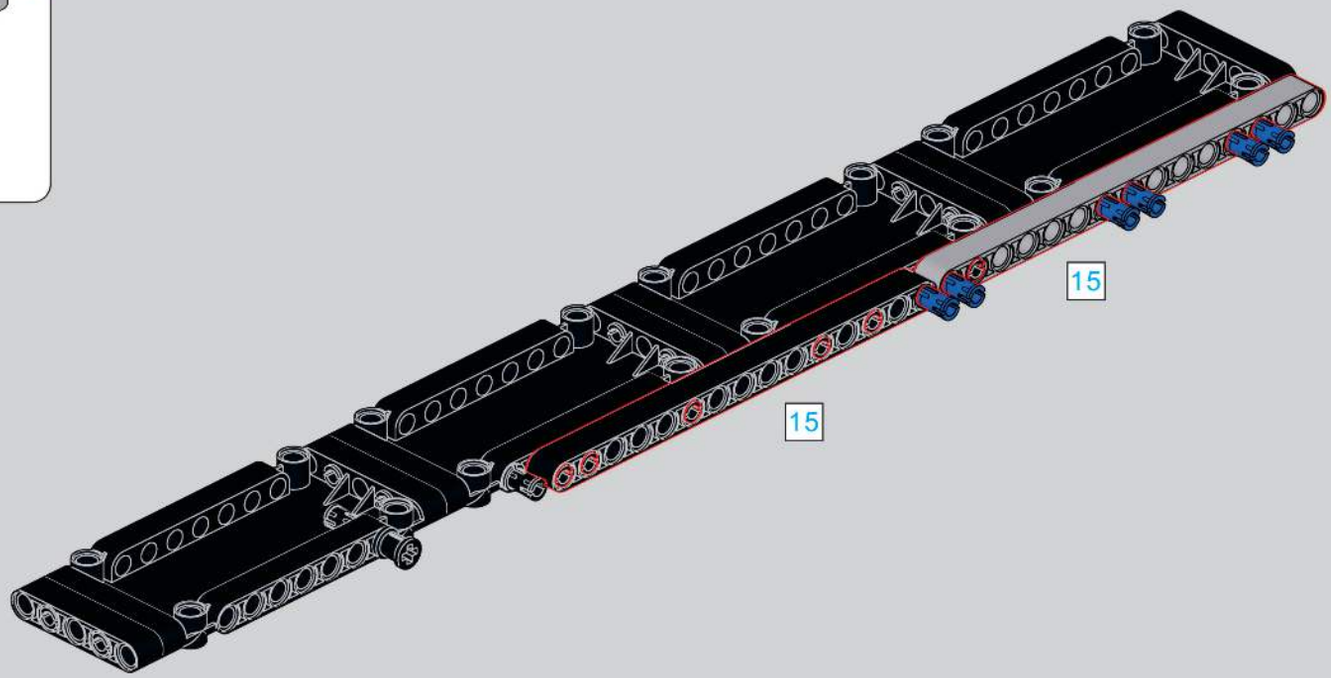

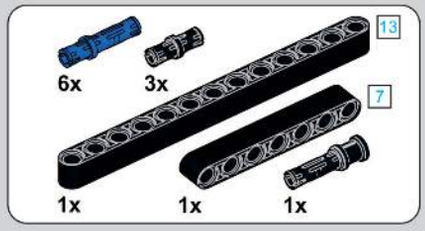

211

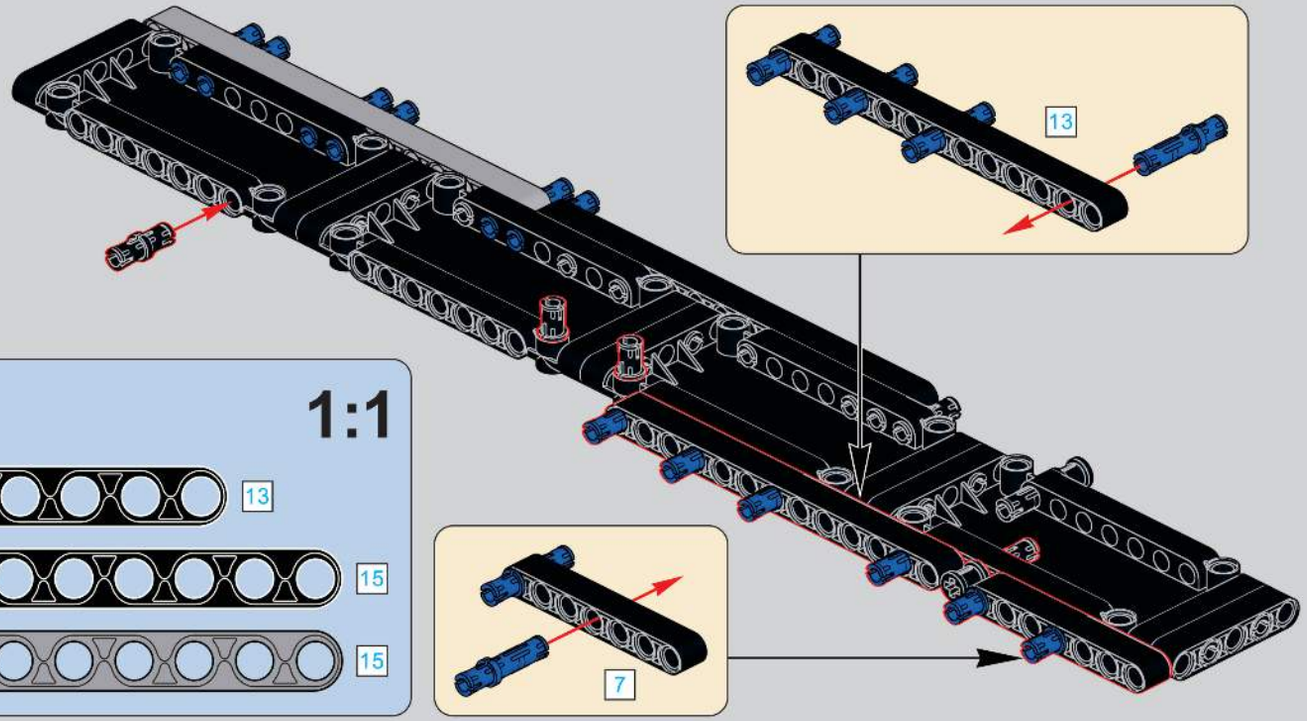

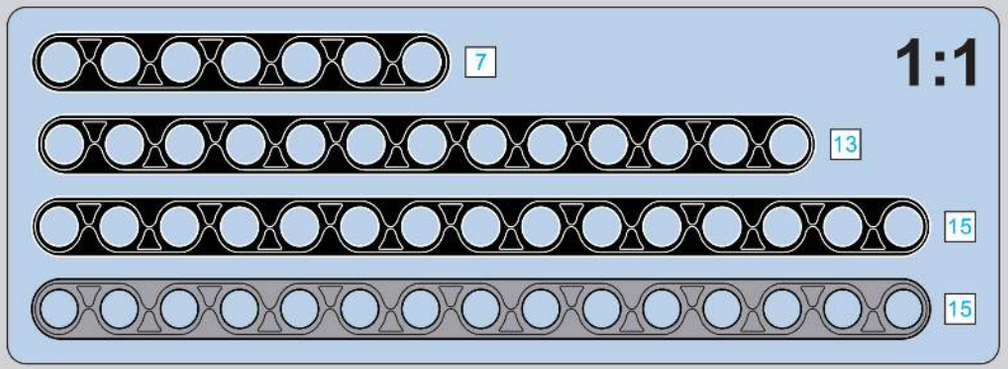

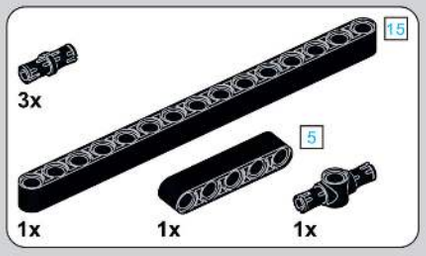

212

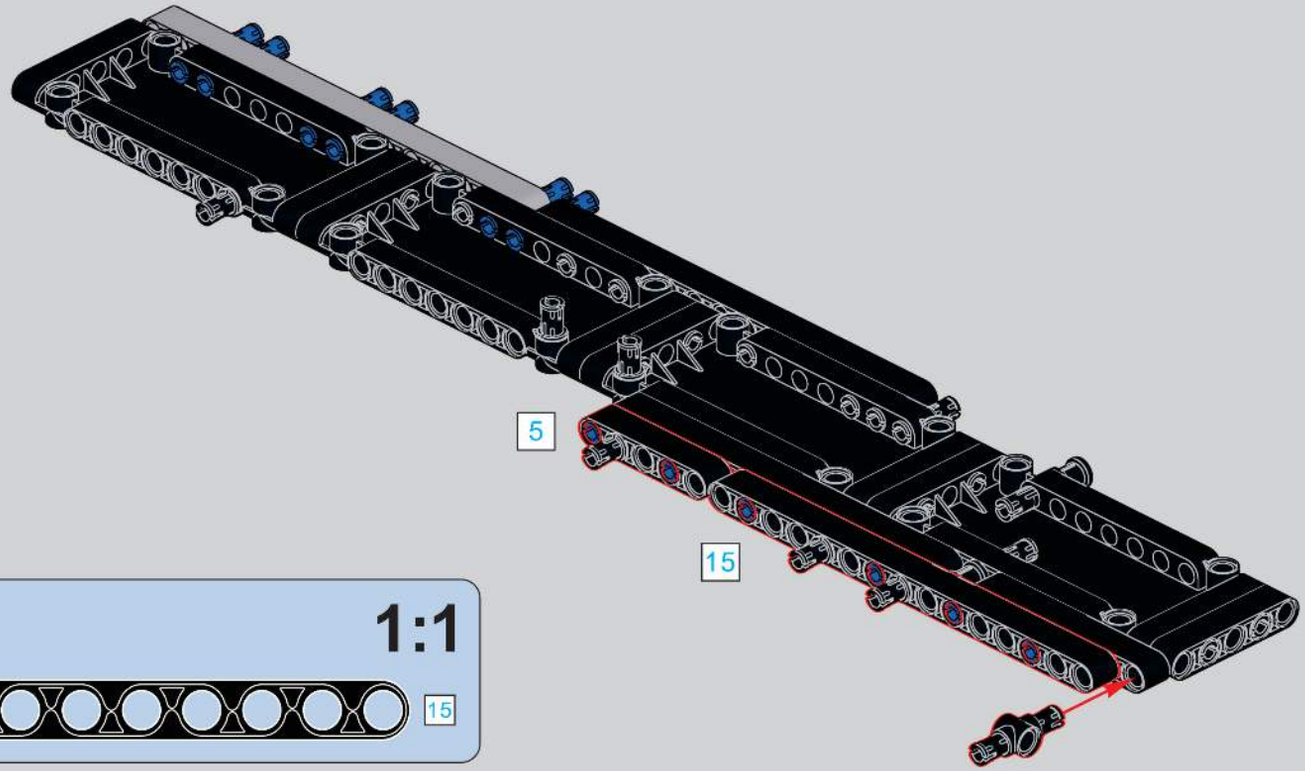

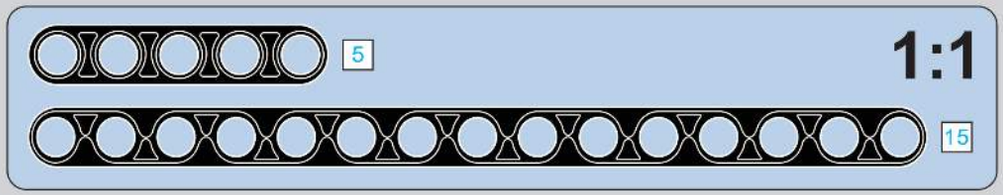

213

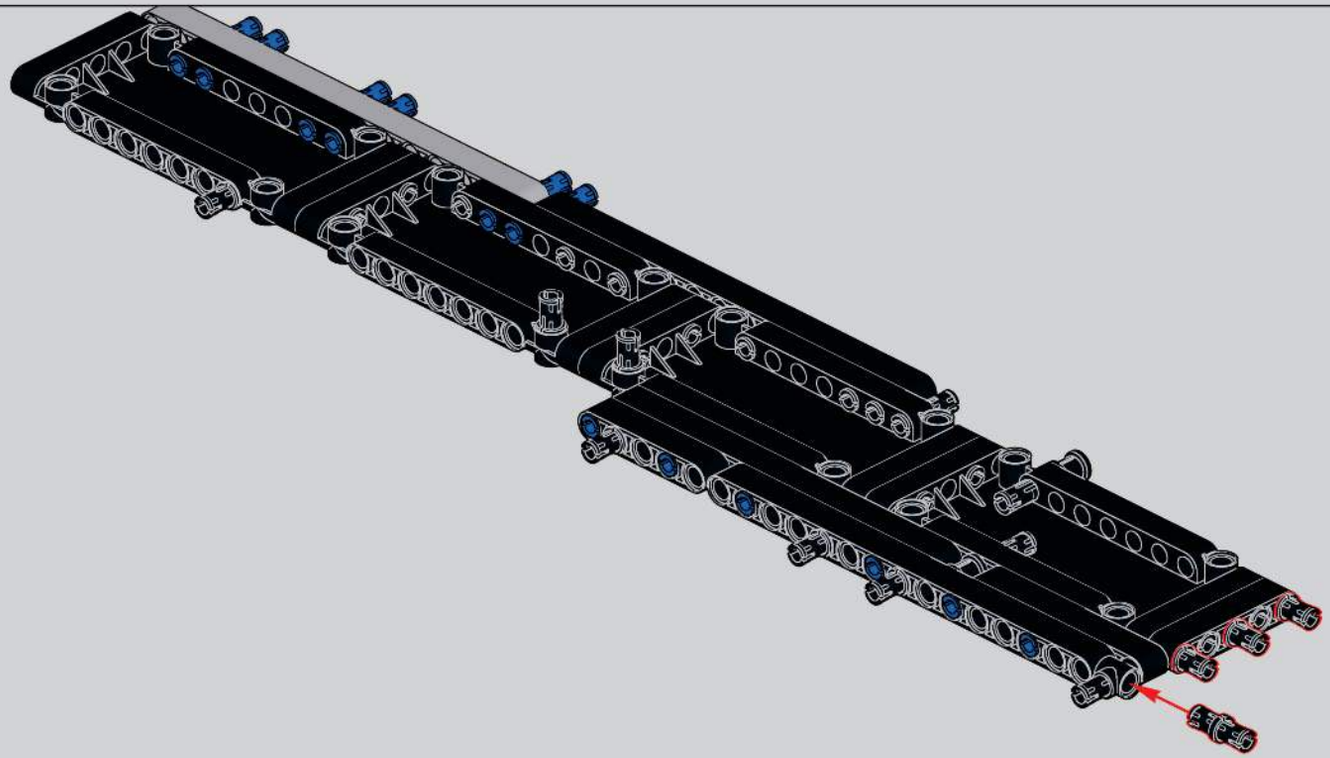

214

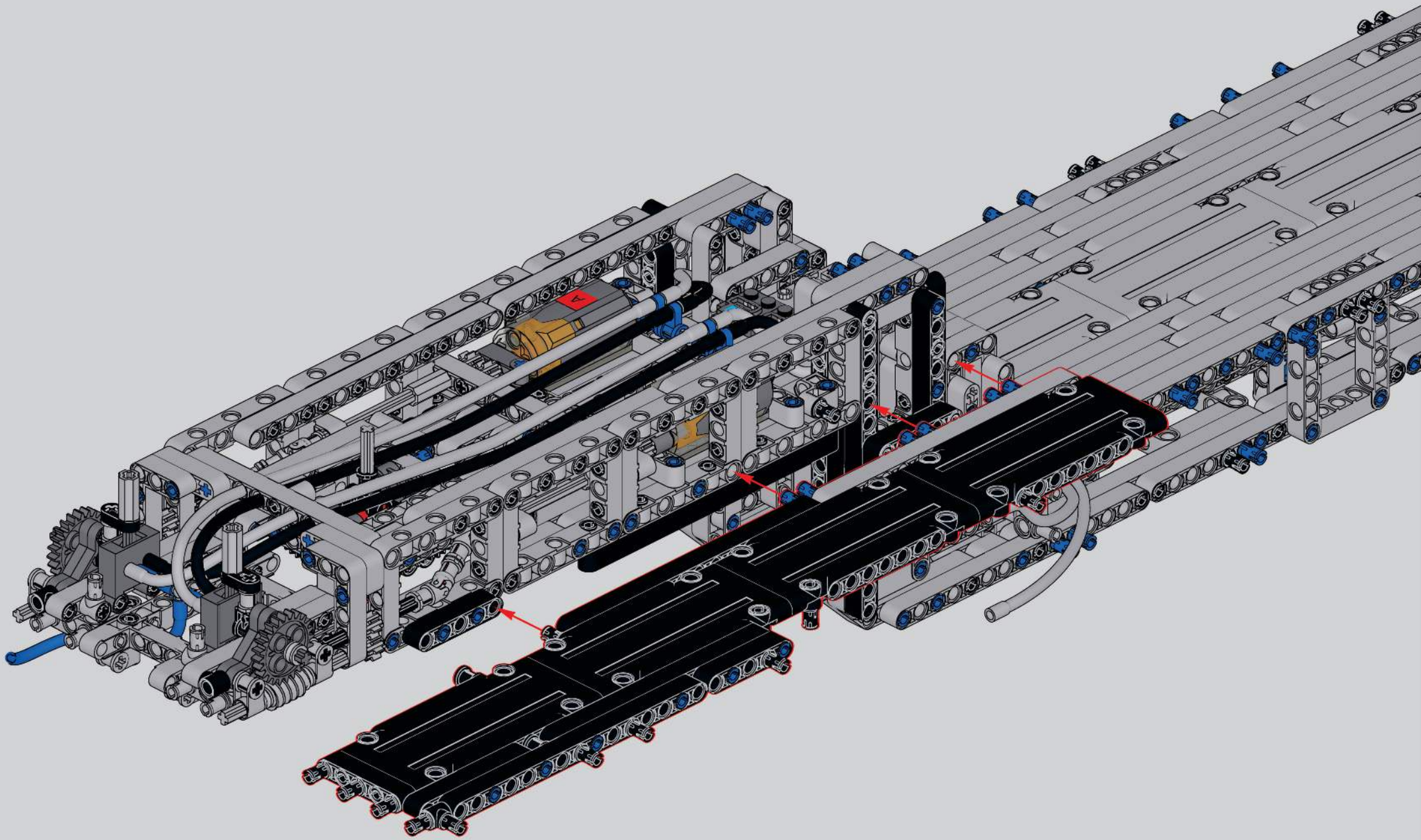

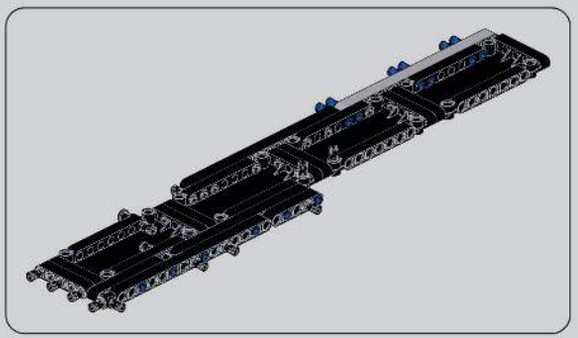

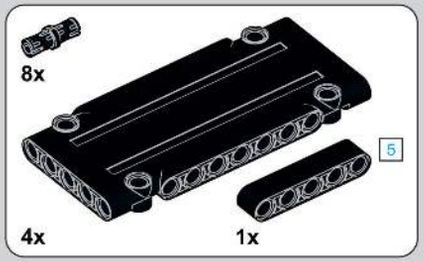

215

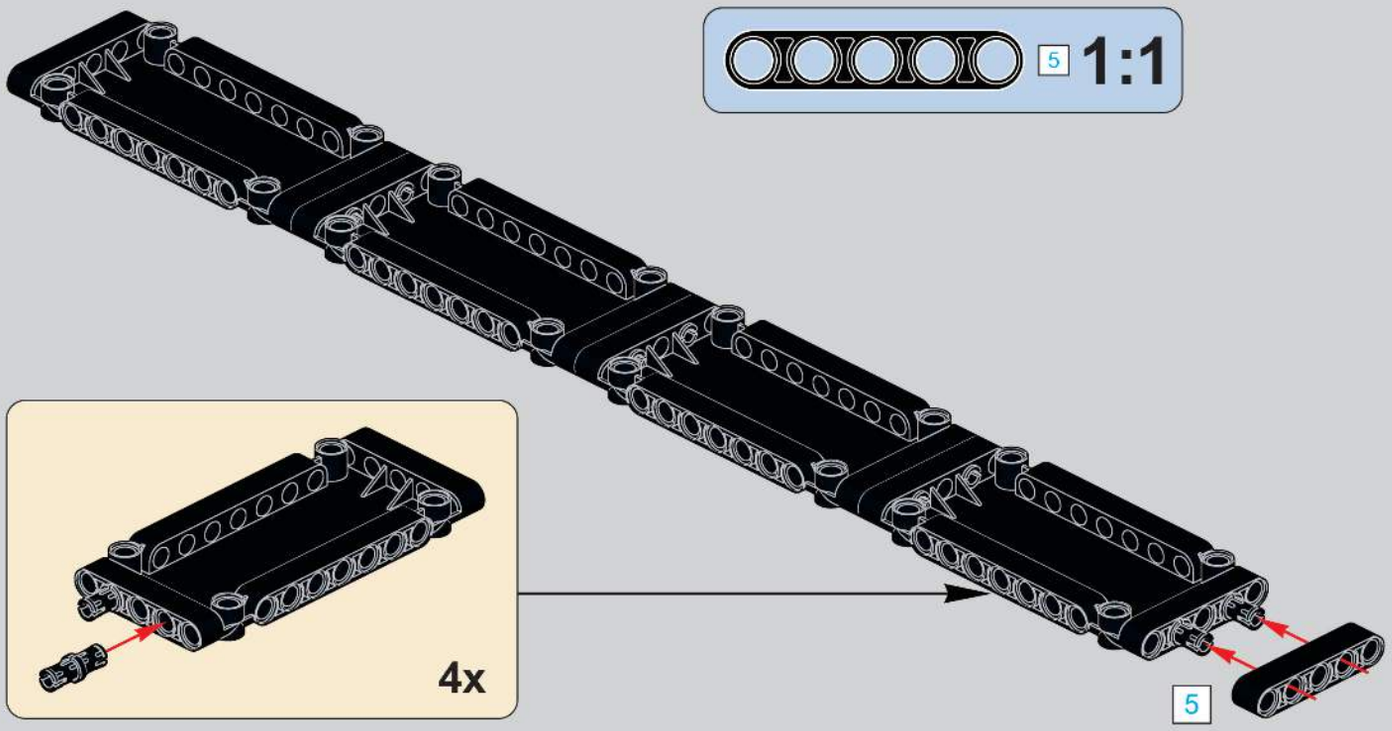

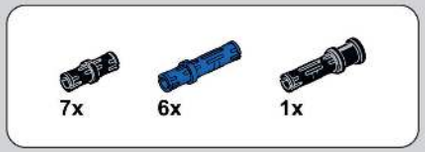

216

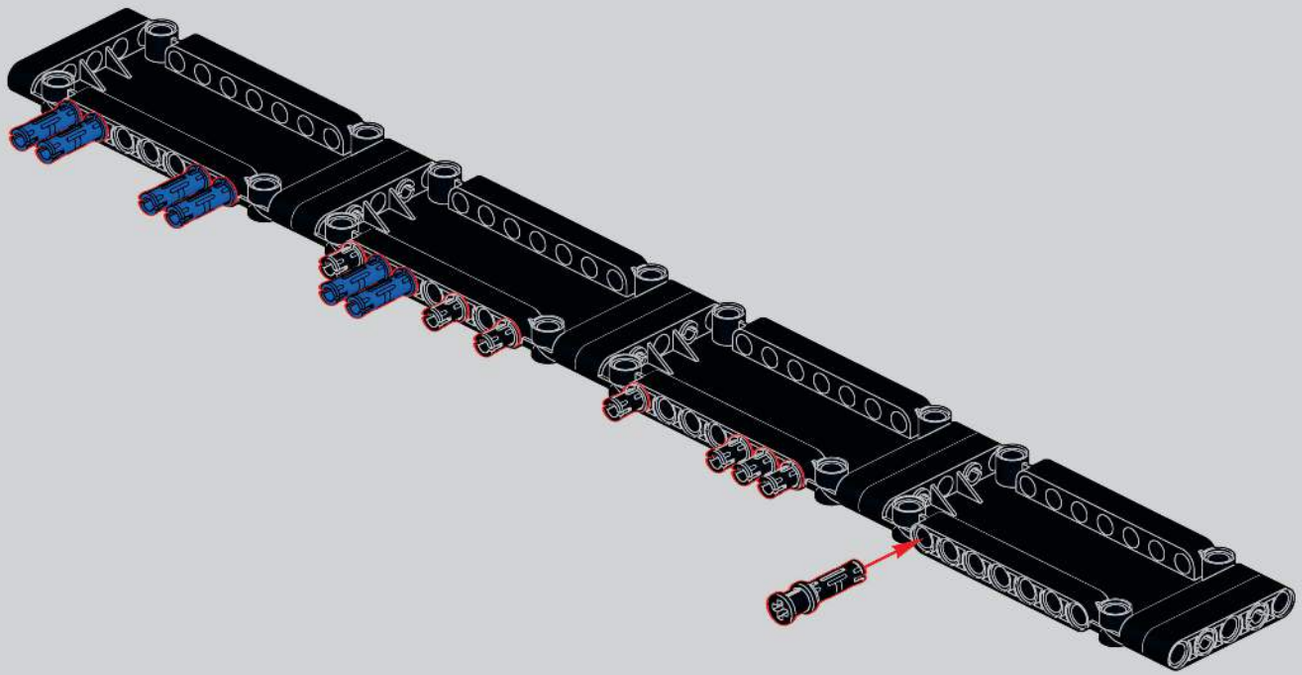

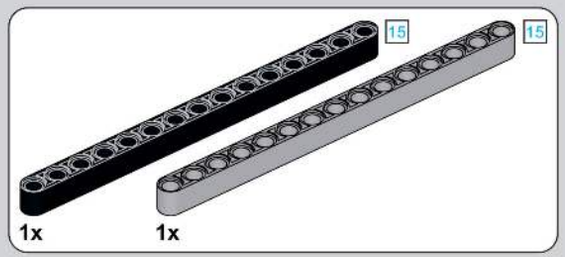

217

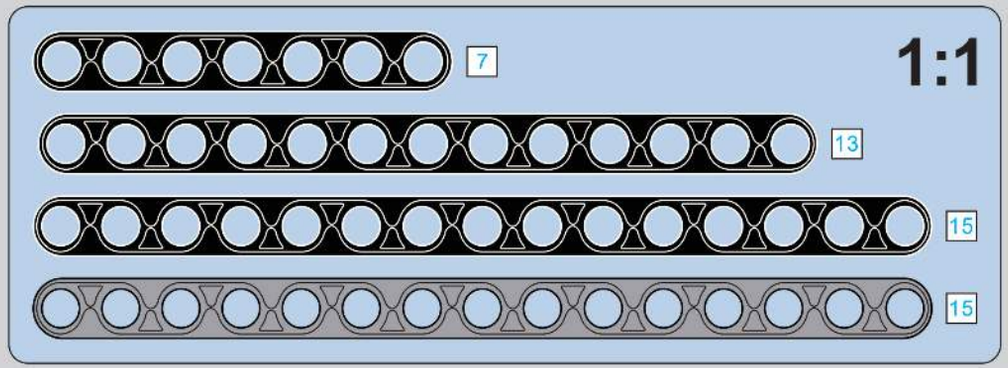

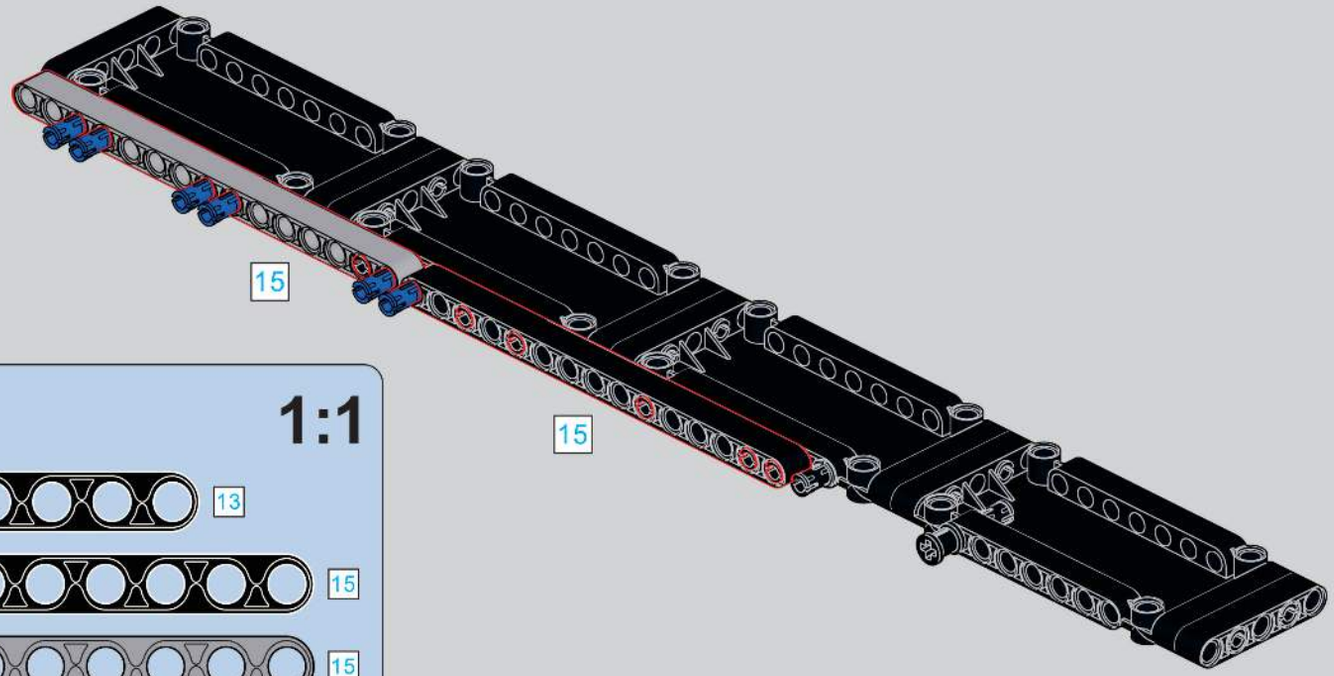

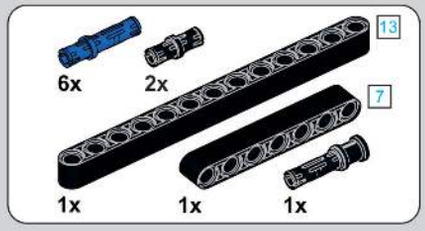

218

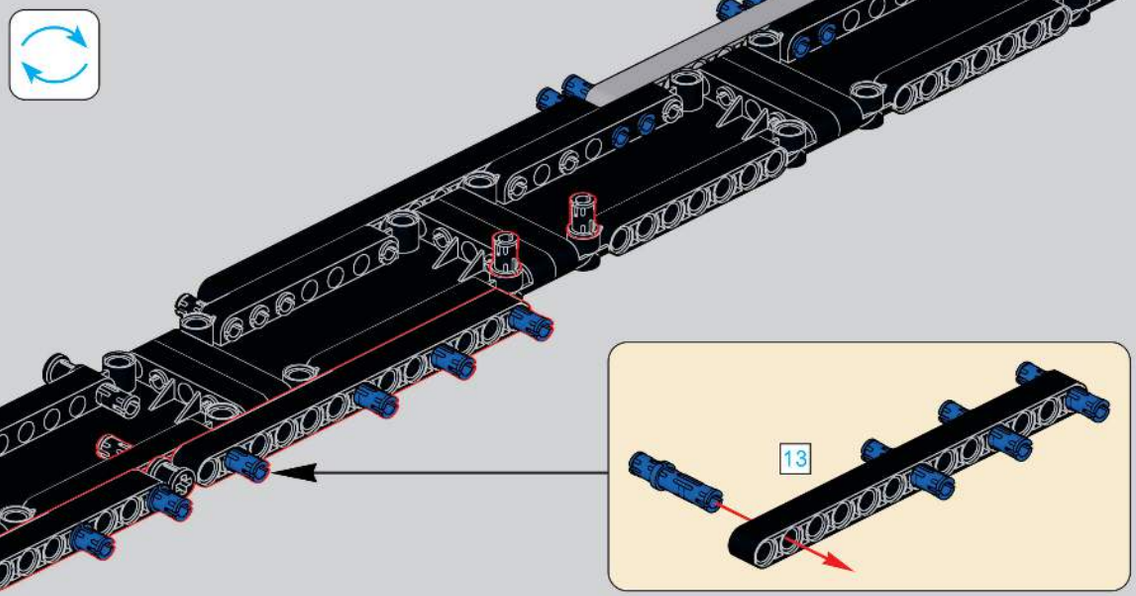

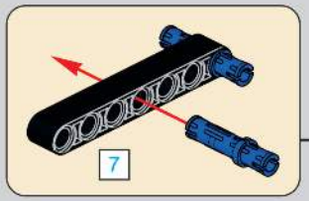

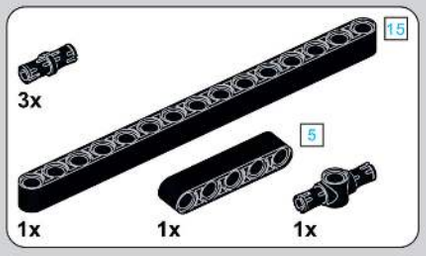

219

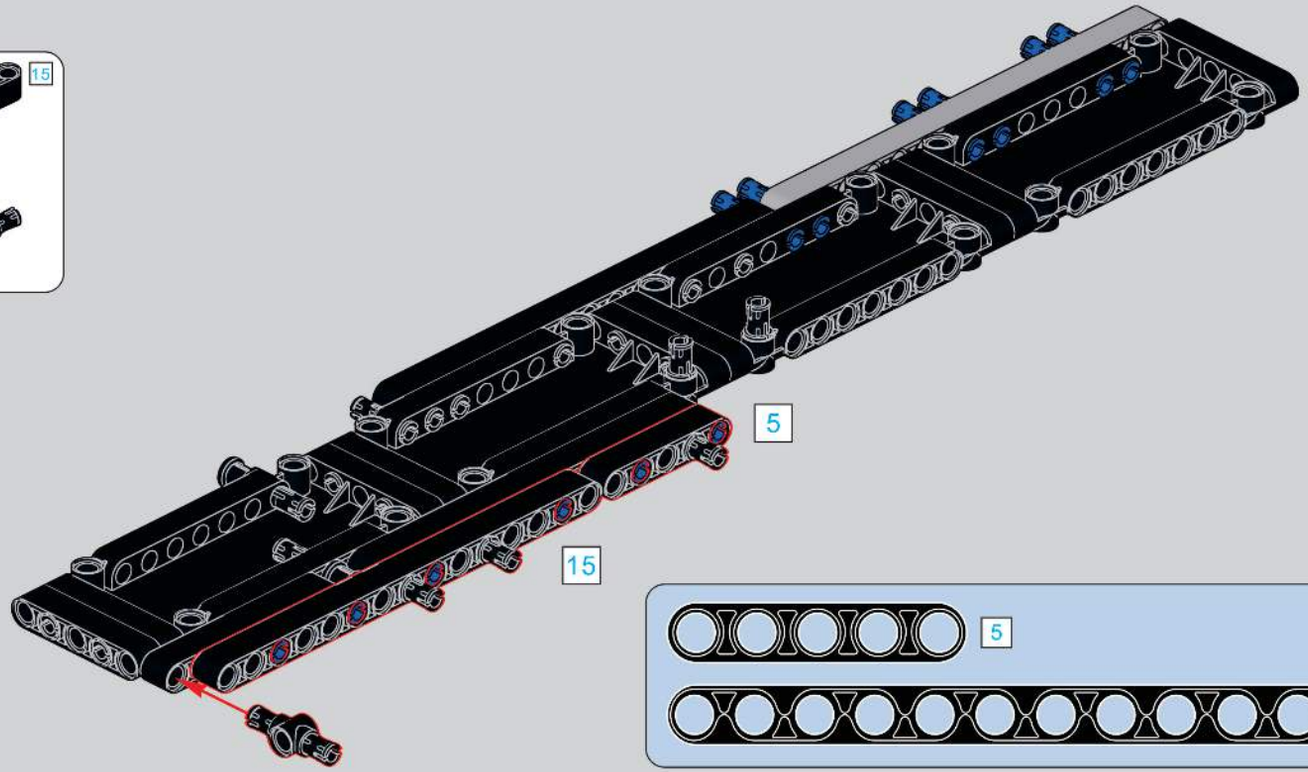

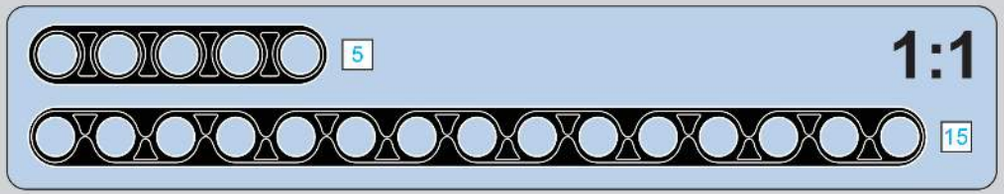

220

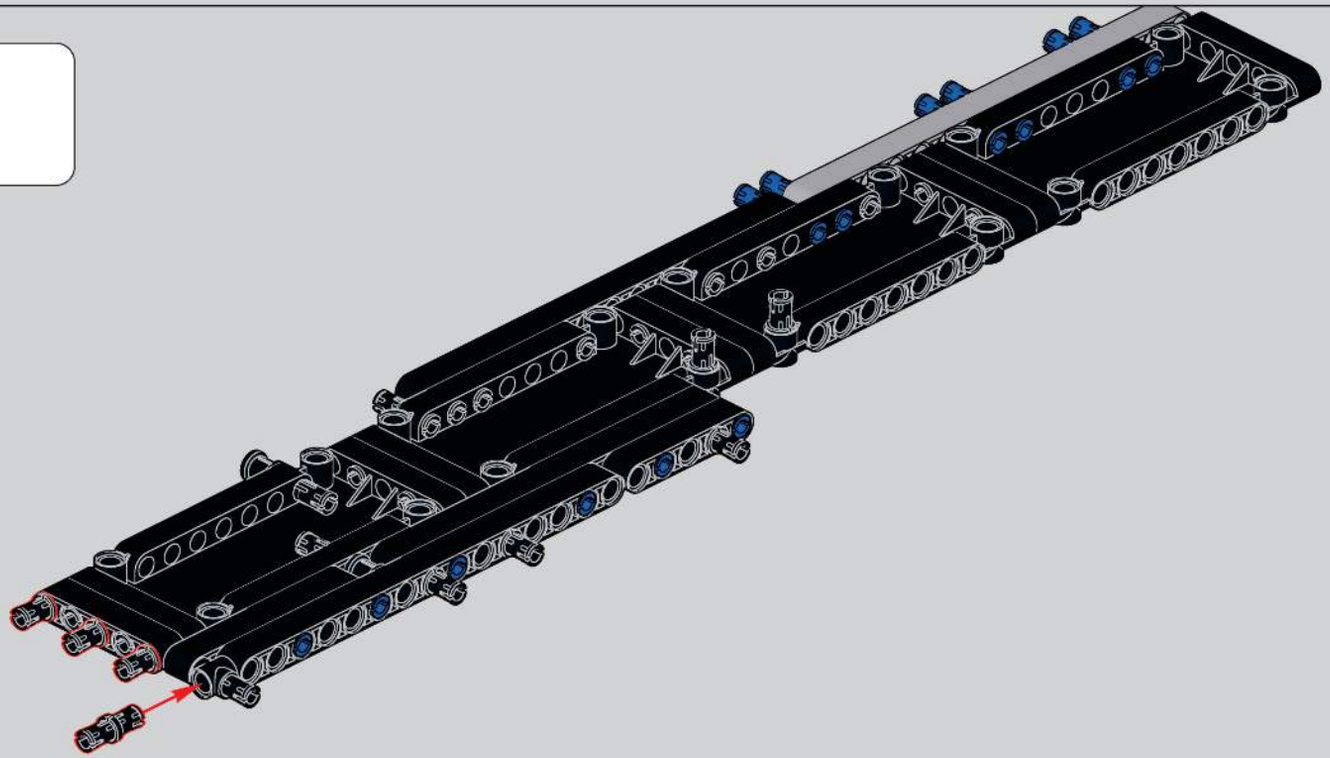

221

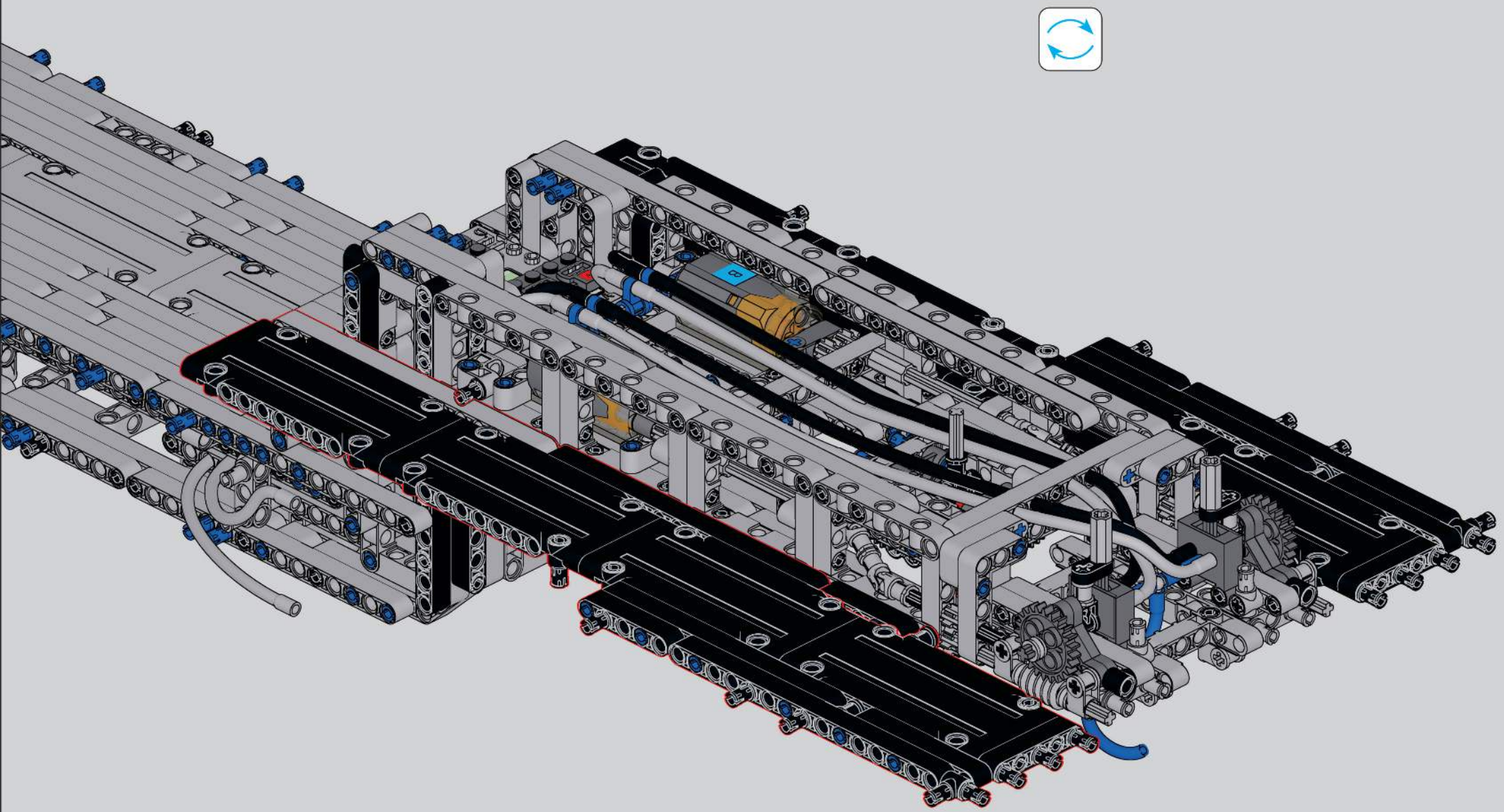

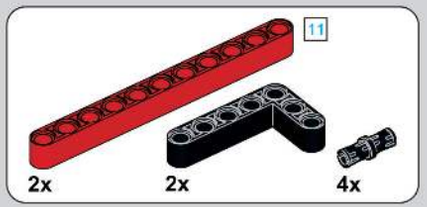

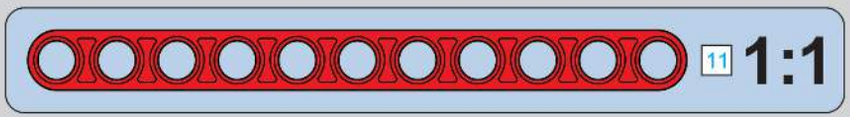

222

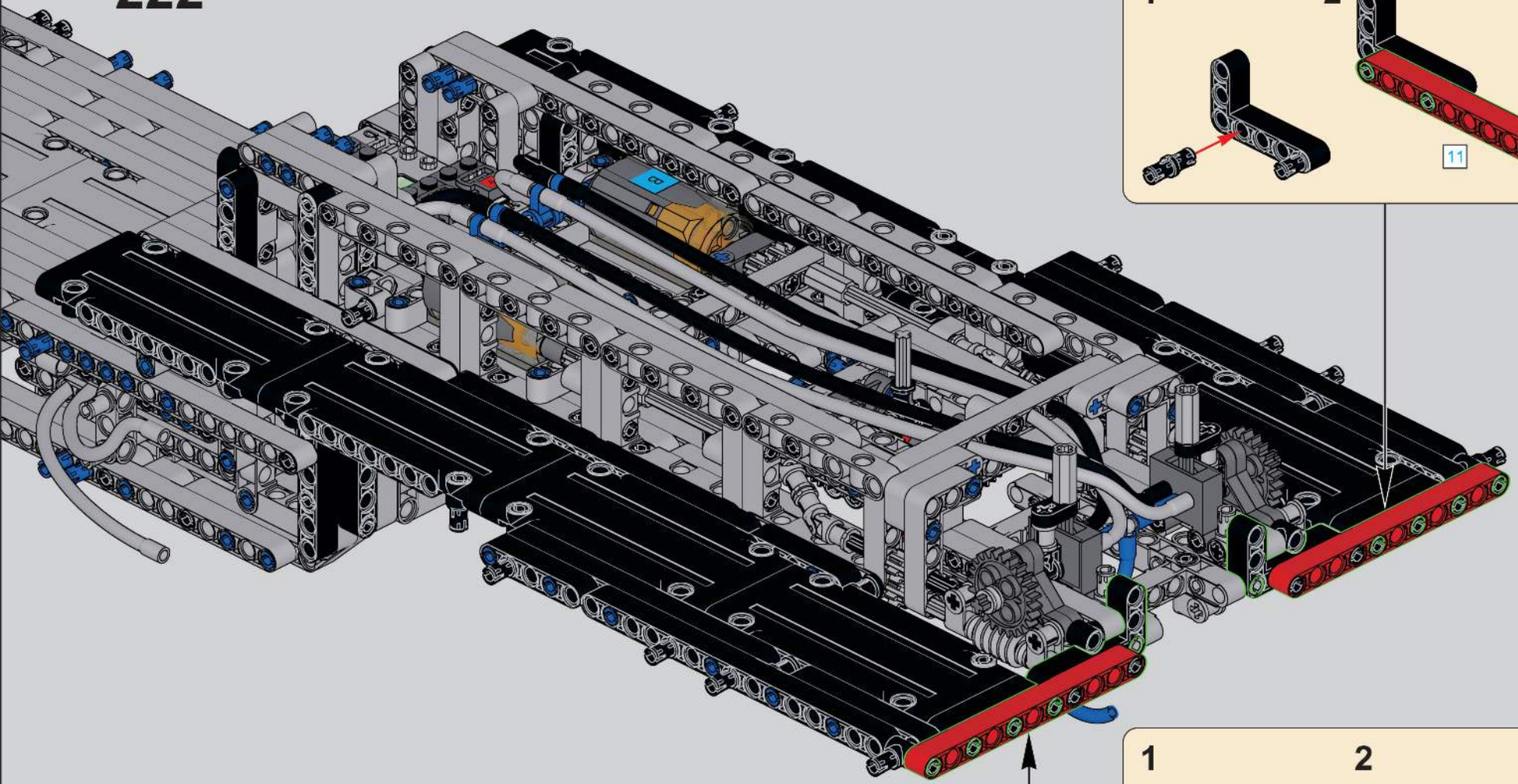

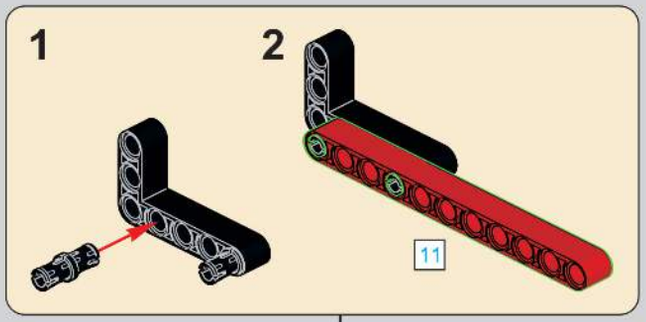

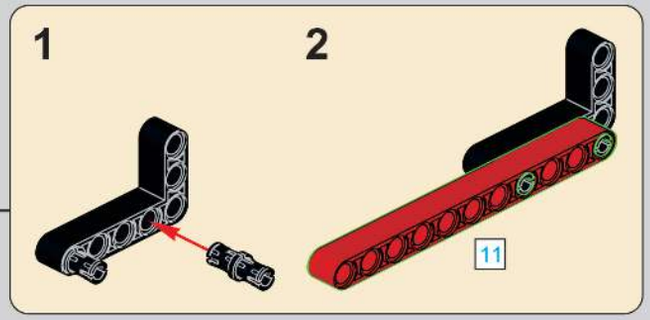

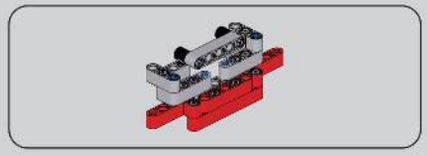

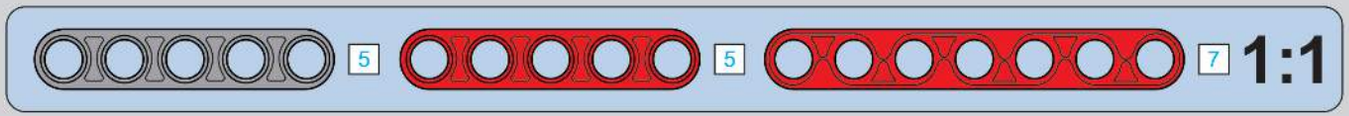

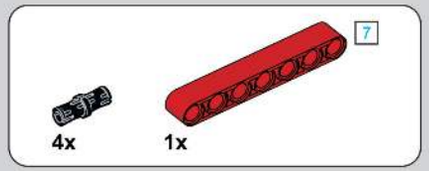

223

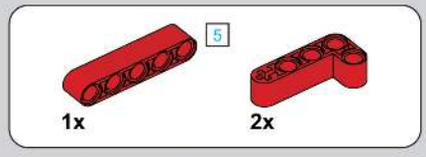

224

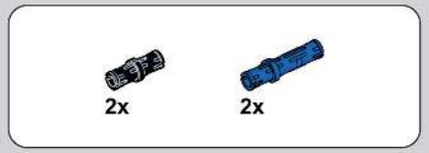

225

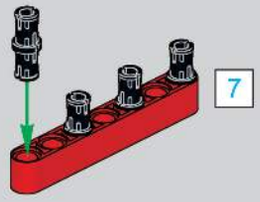

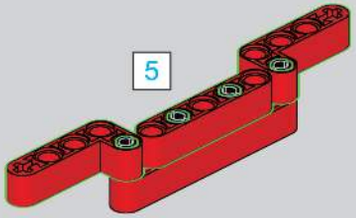

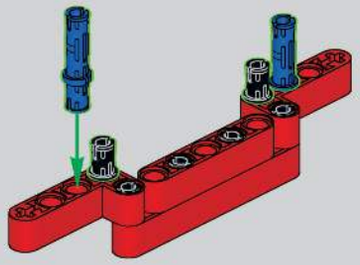

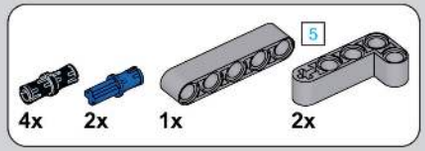

226

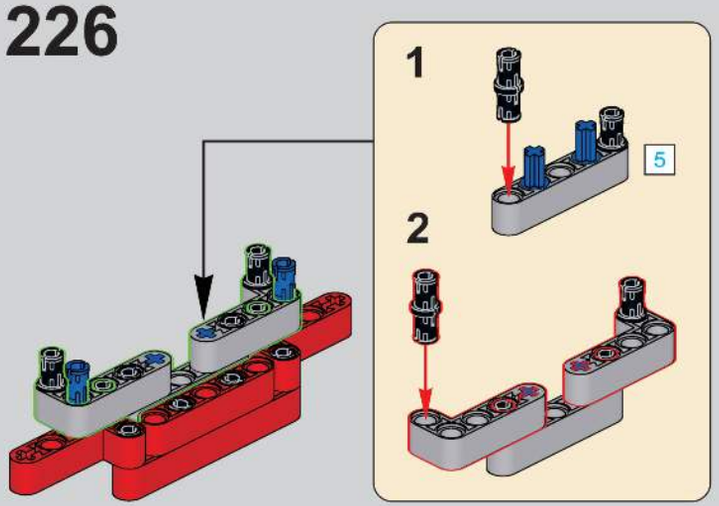

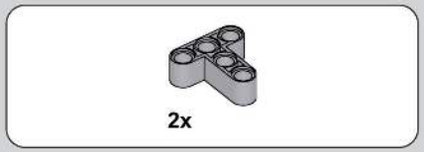

227

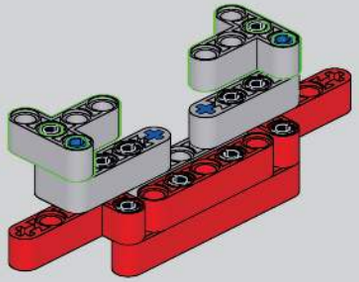

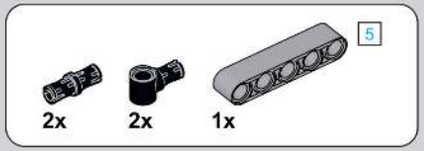

228

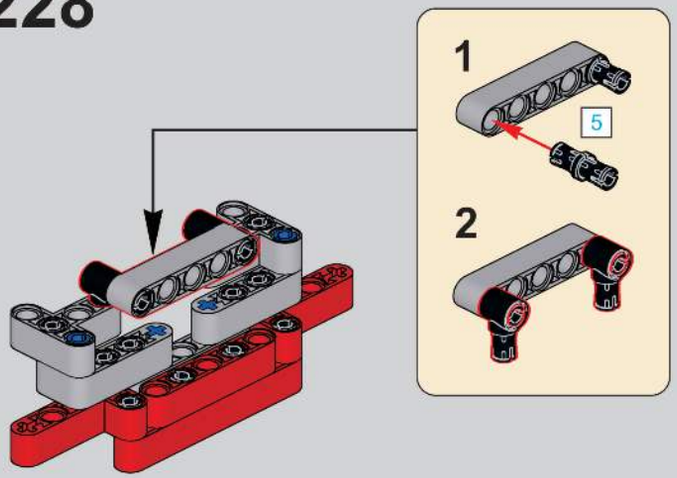

229

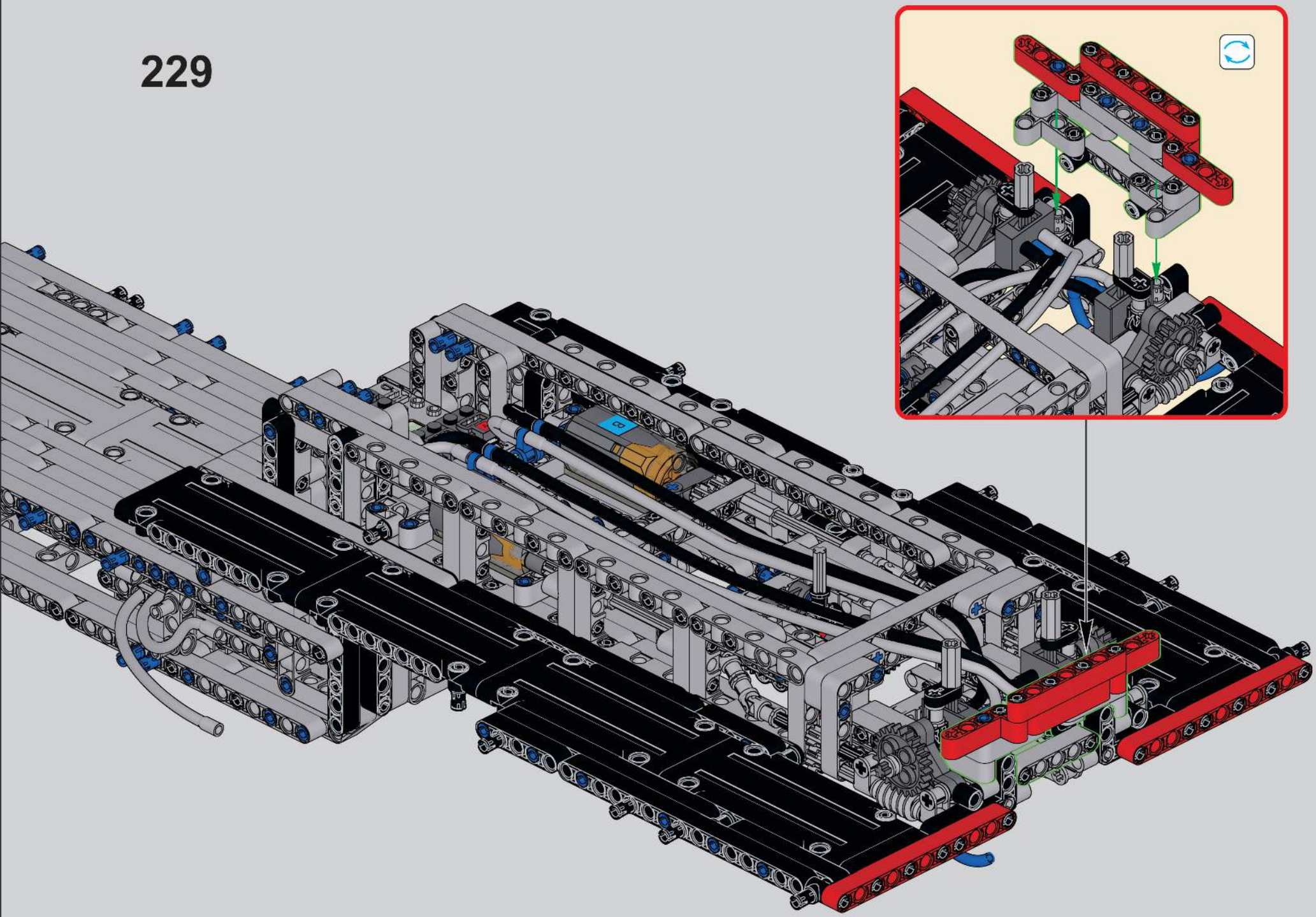

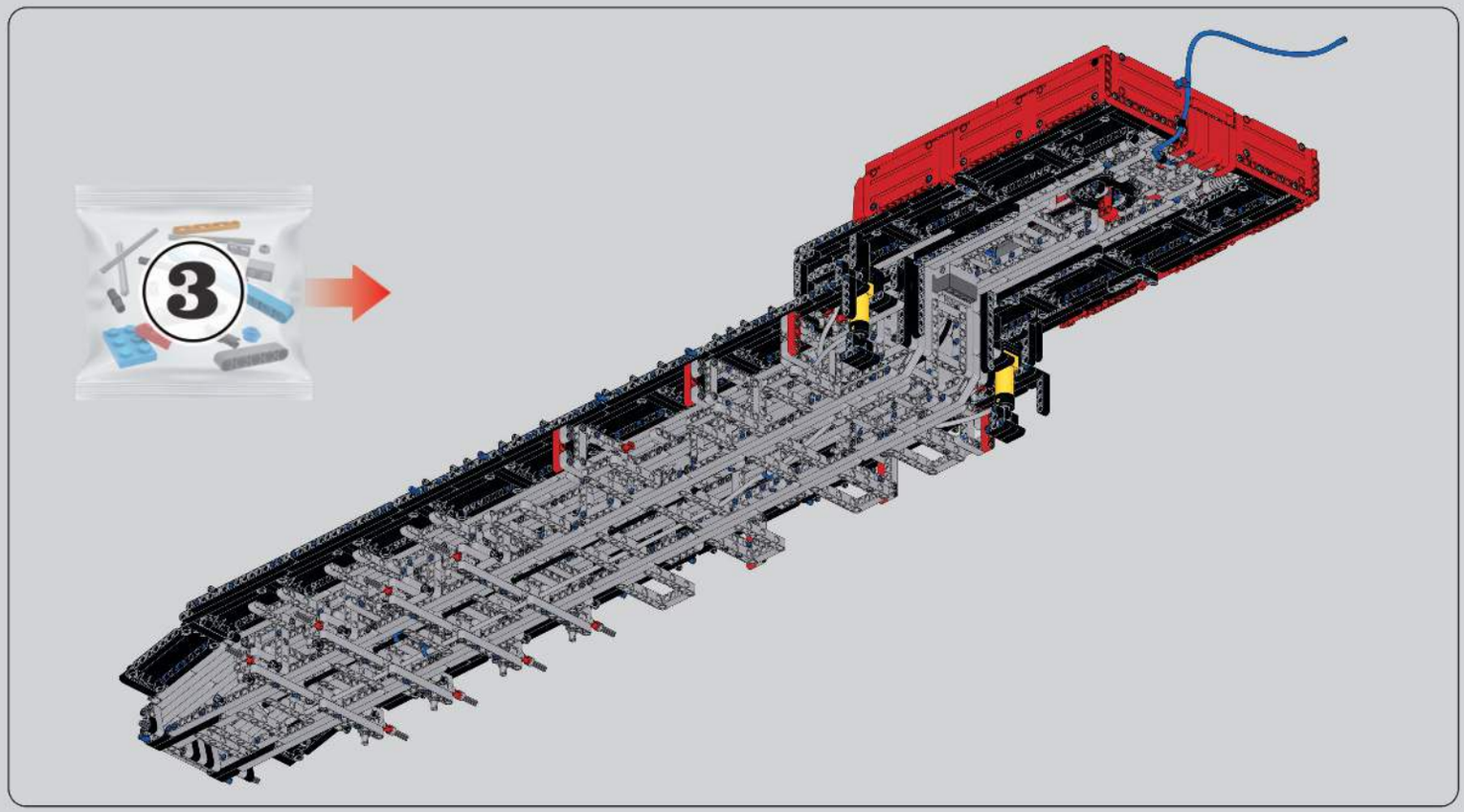

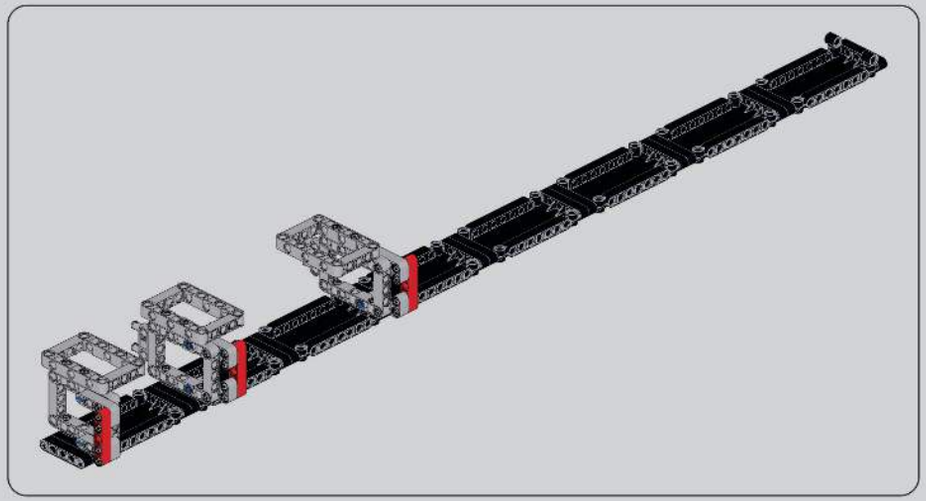

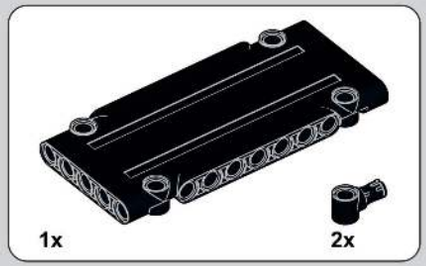

230

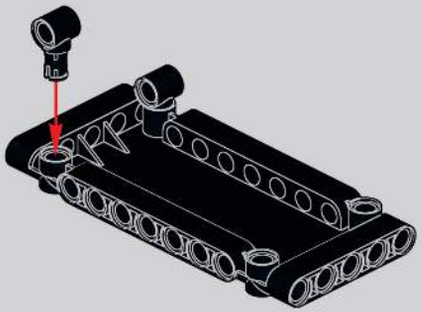

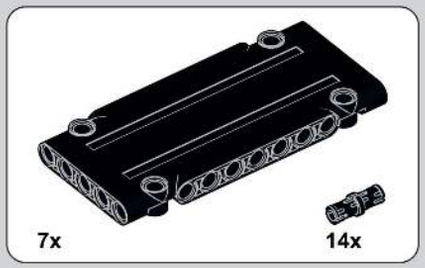

231

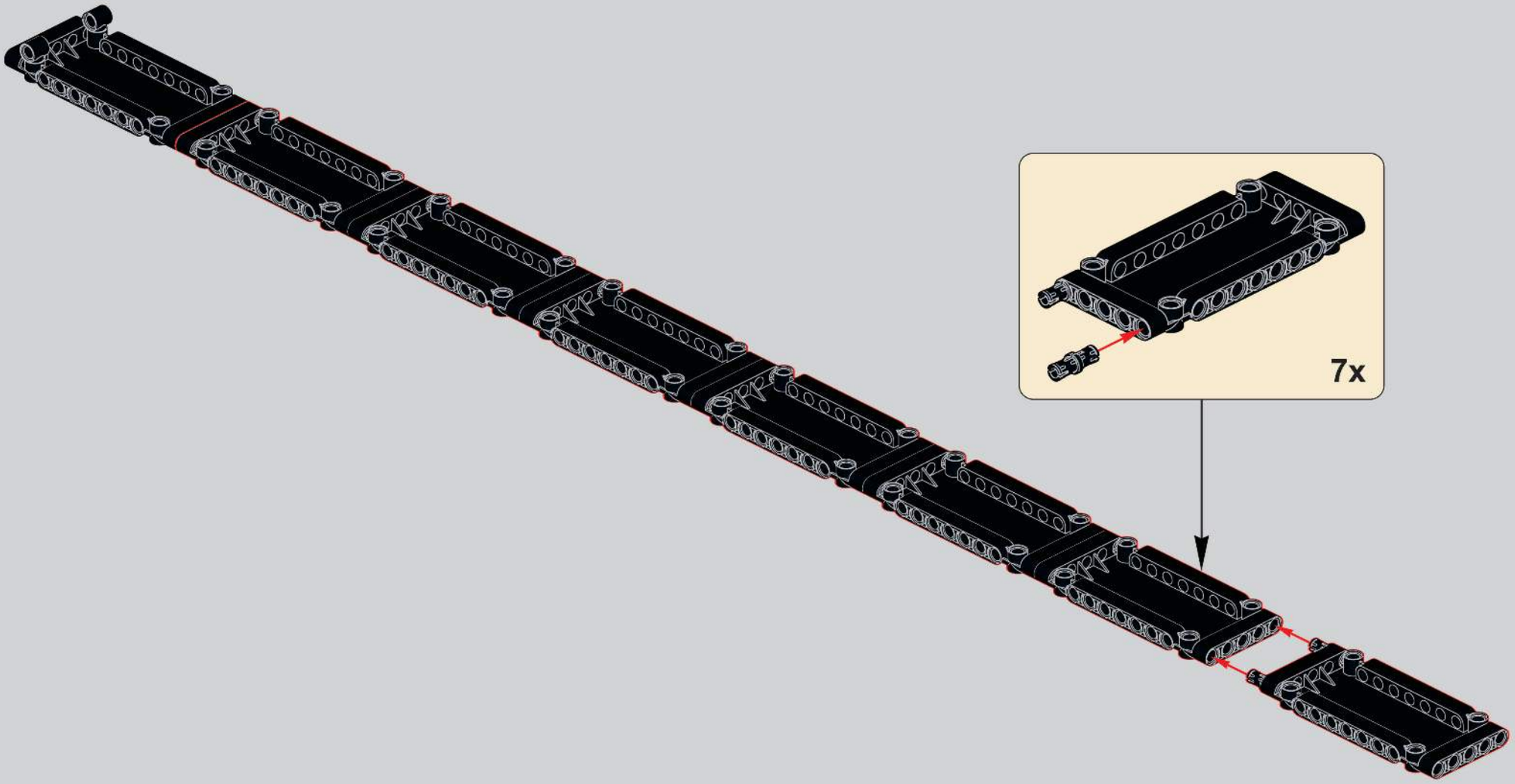

232

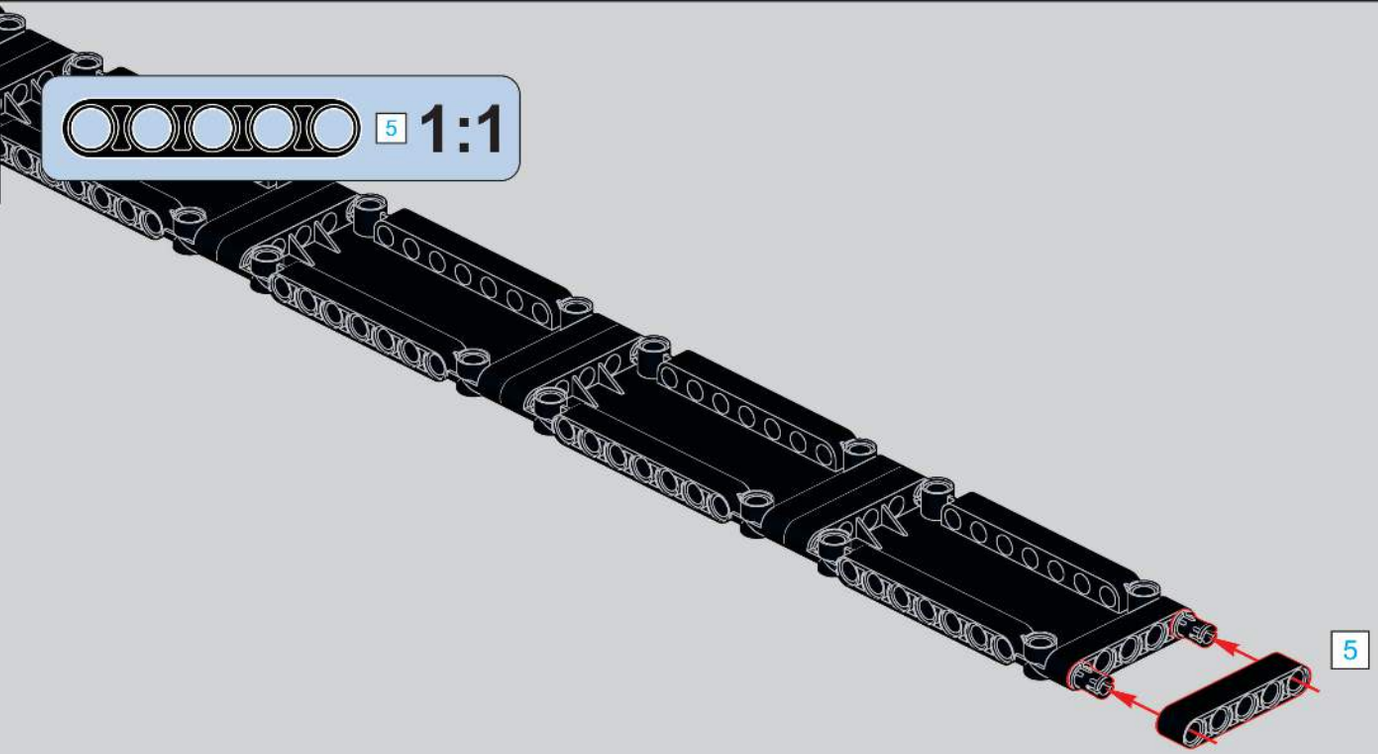

233

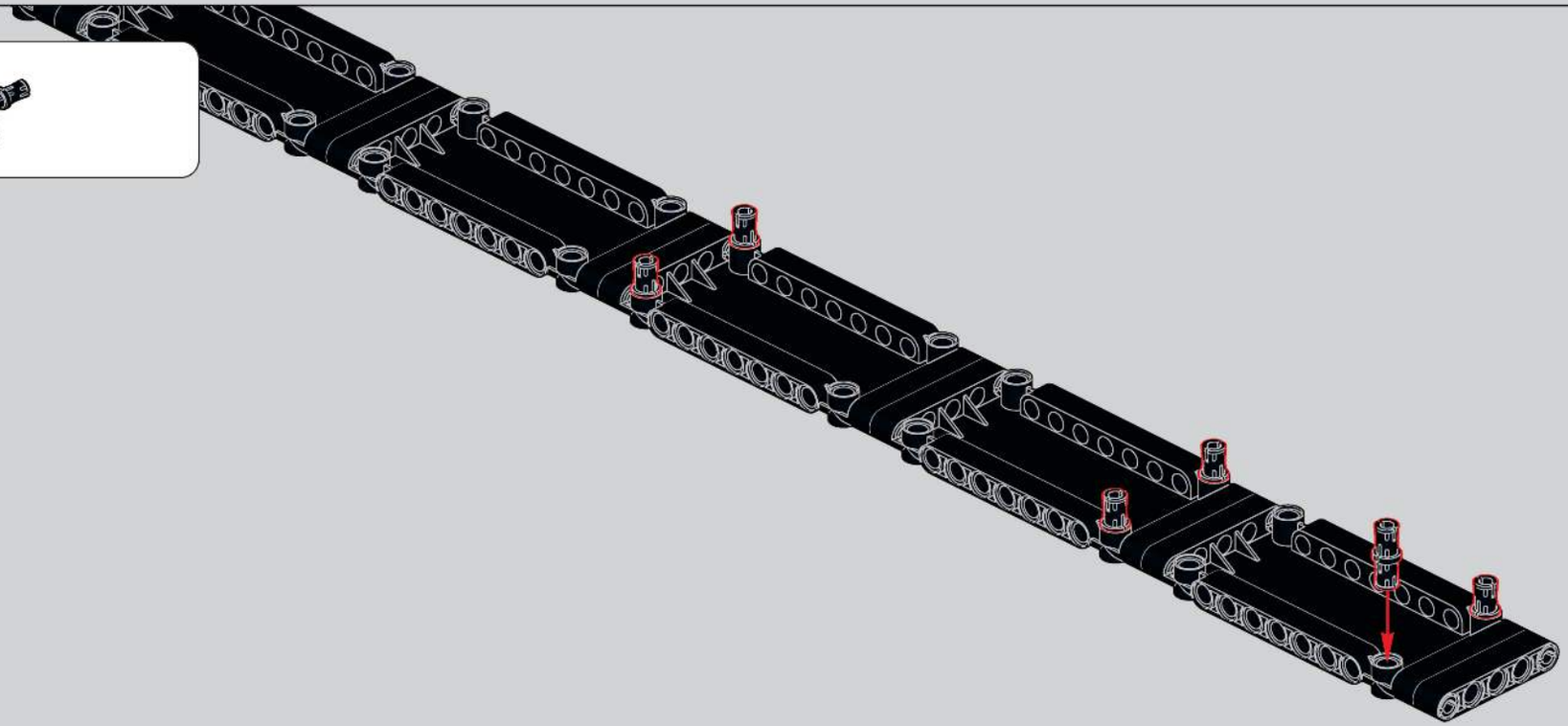

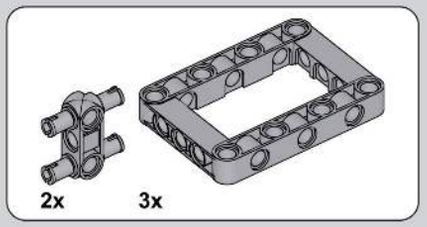

234

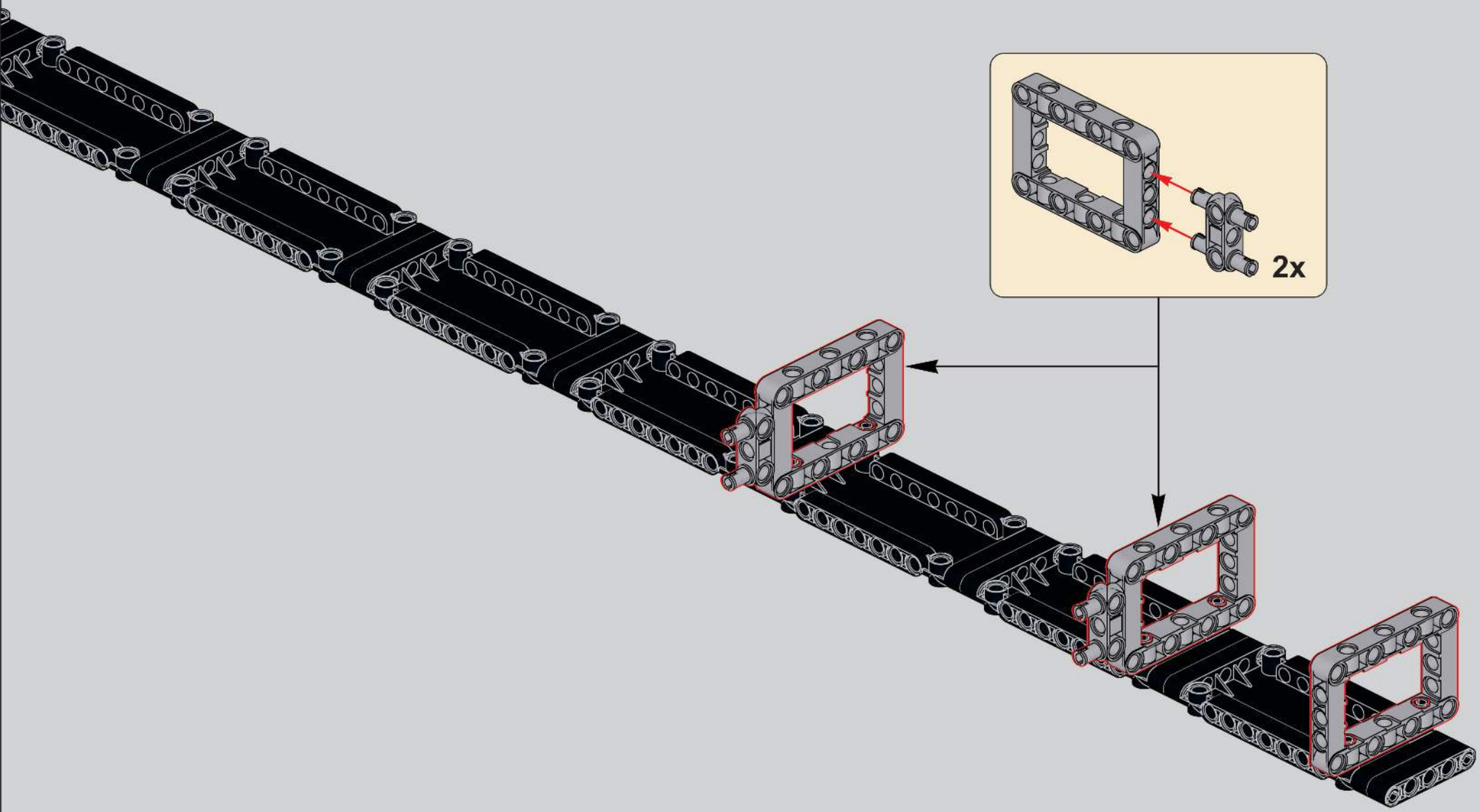

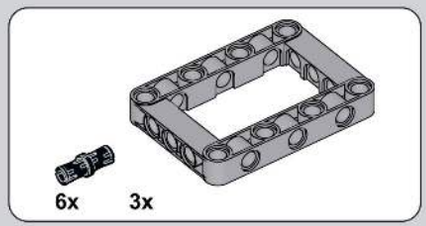

235

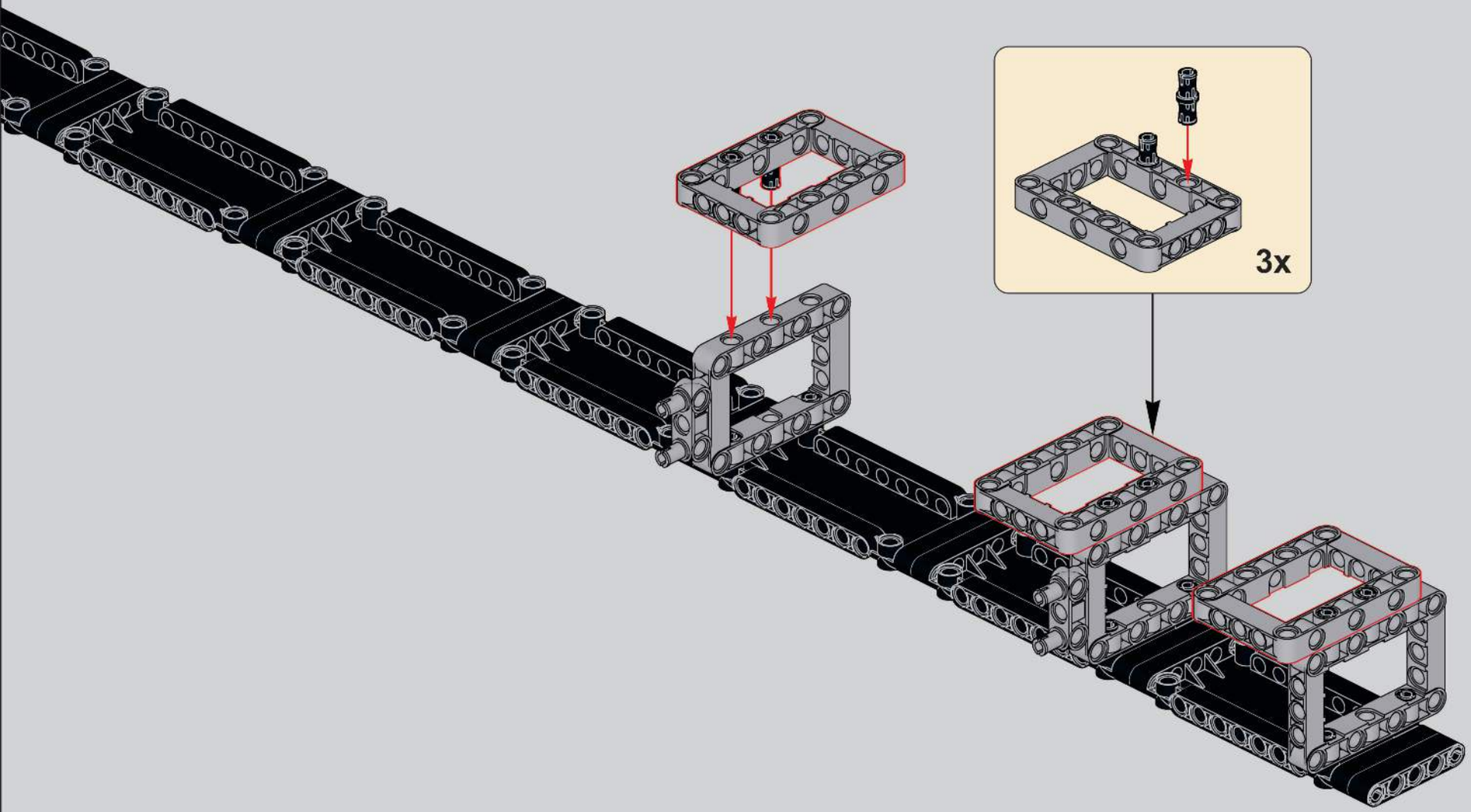

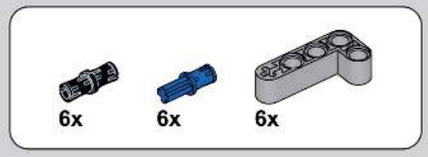

236

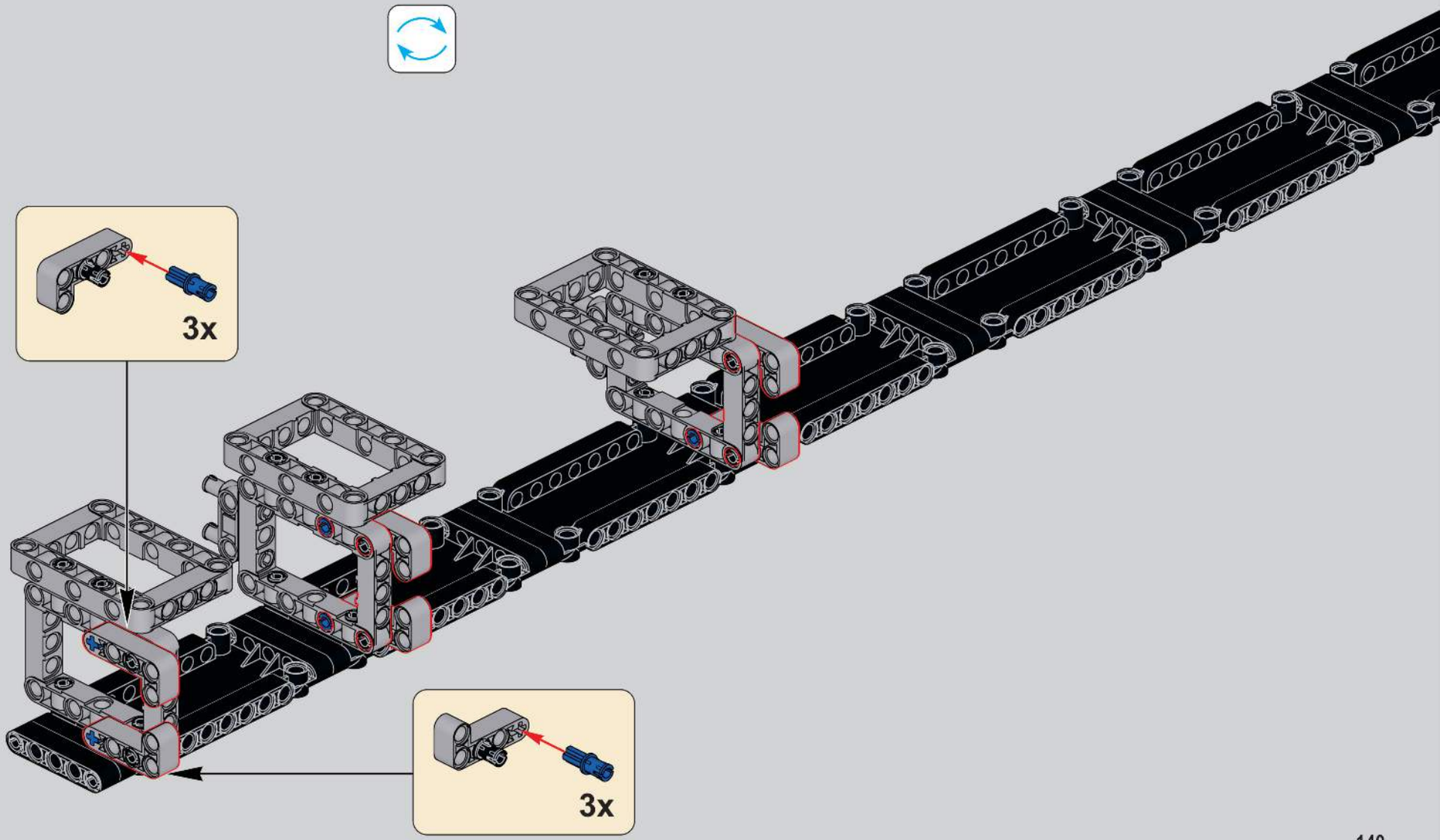

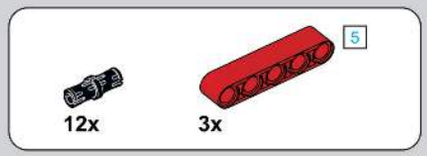

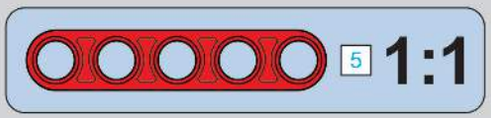

237

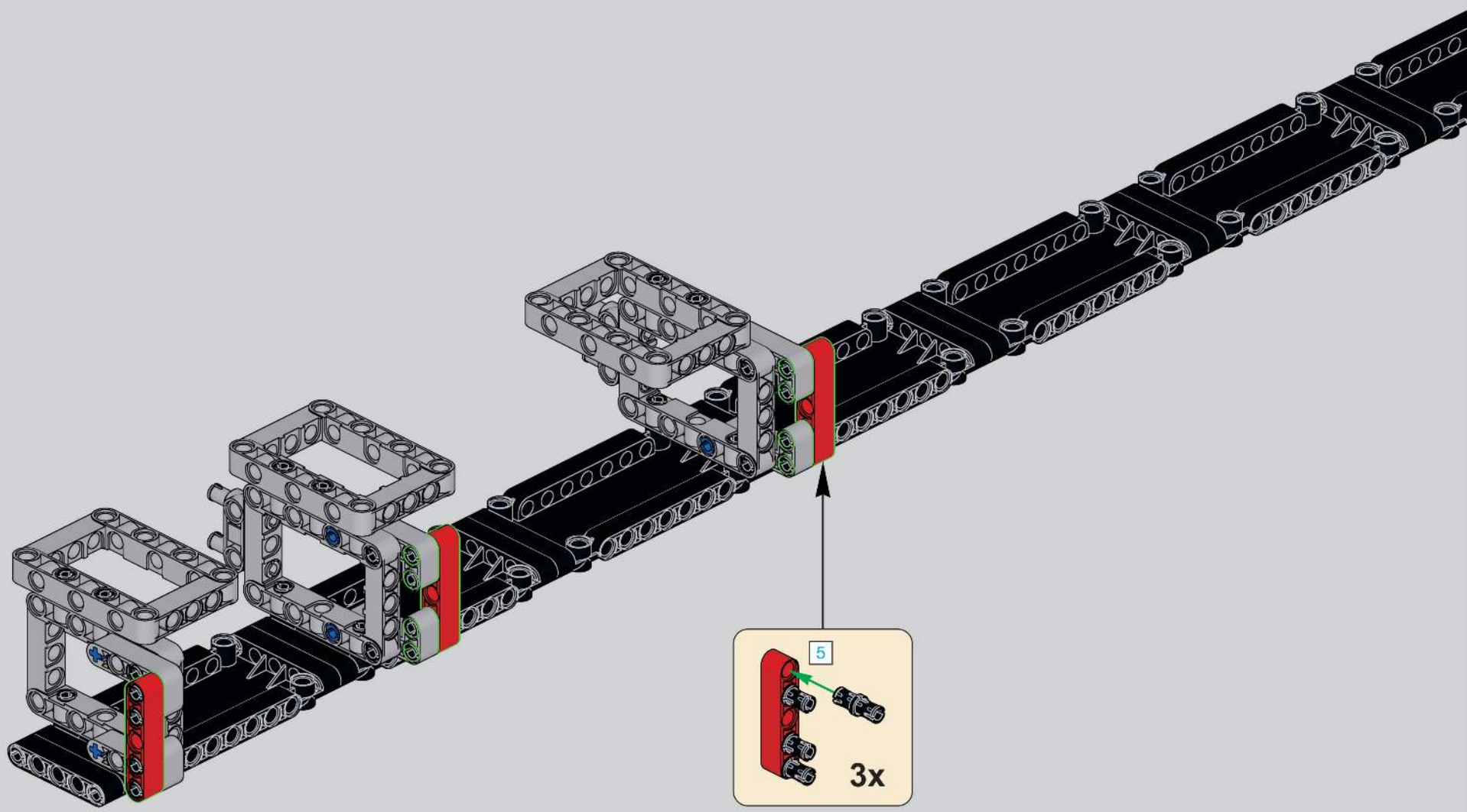

238

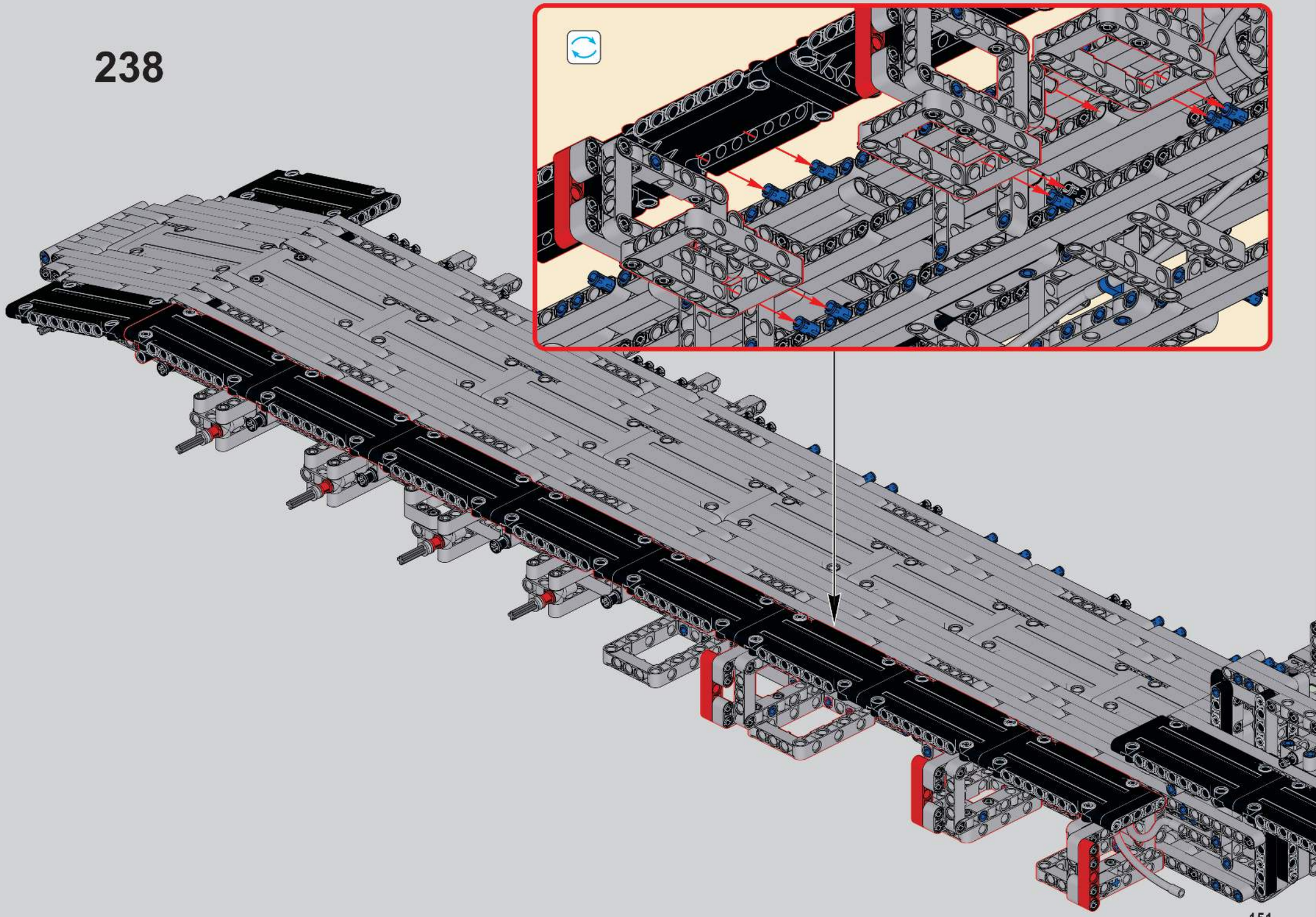

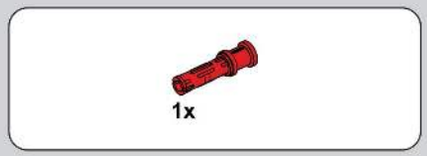

239

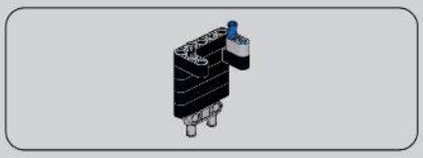

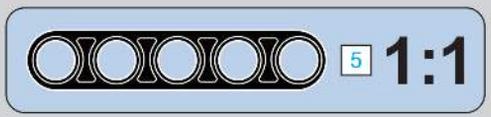

240

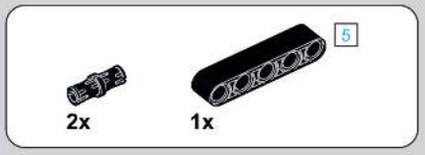

241

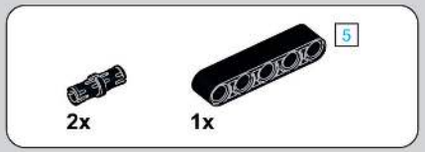

242

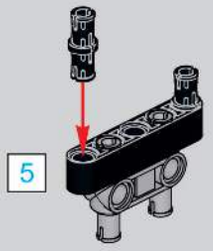

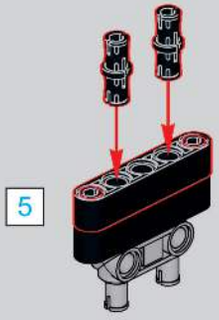

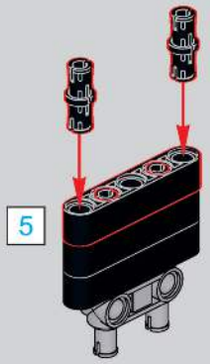

243

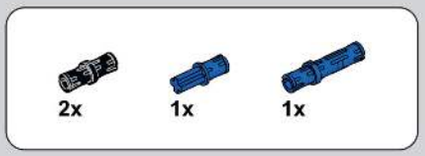

244

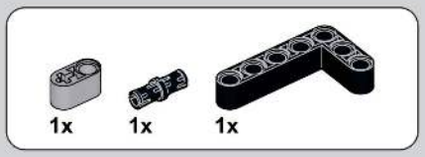

245

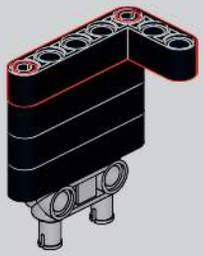

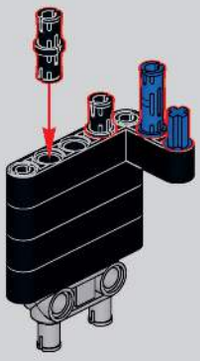

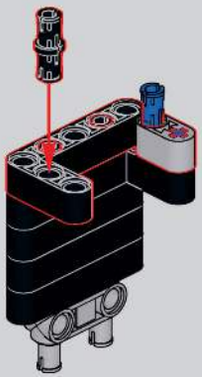

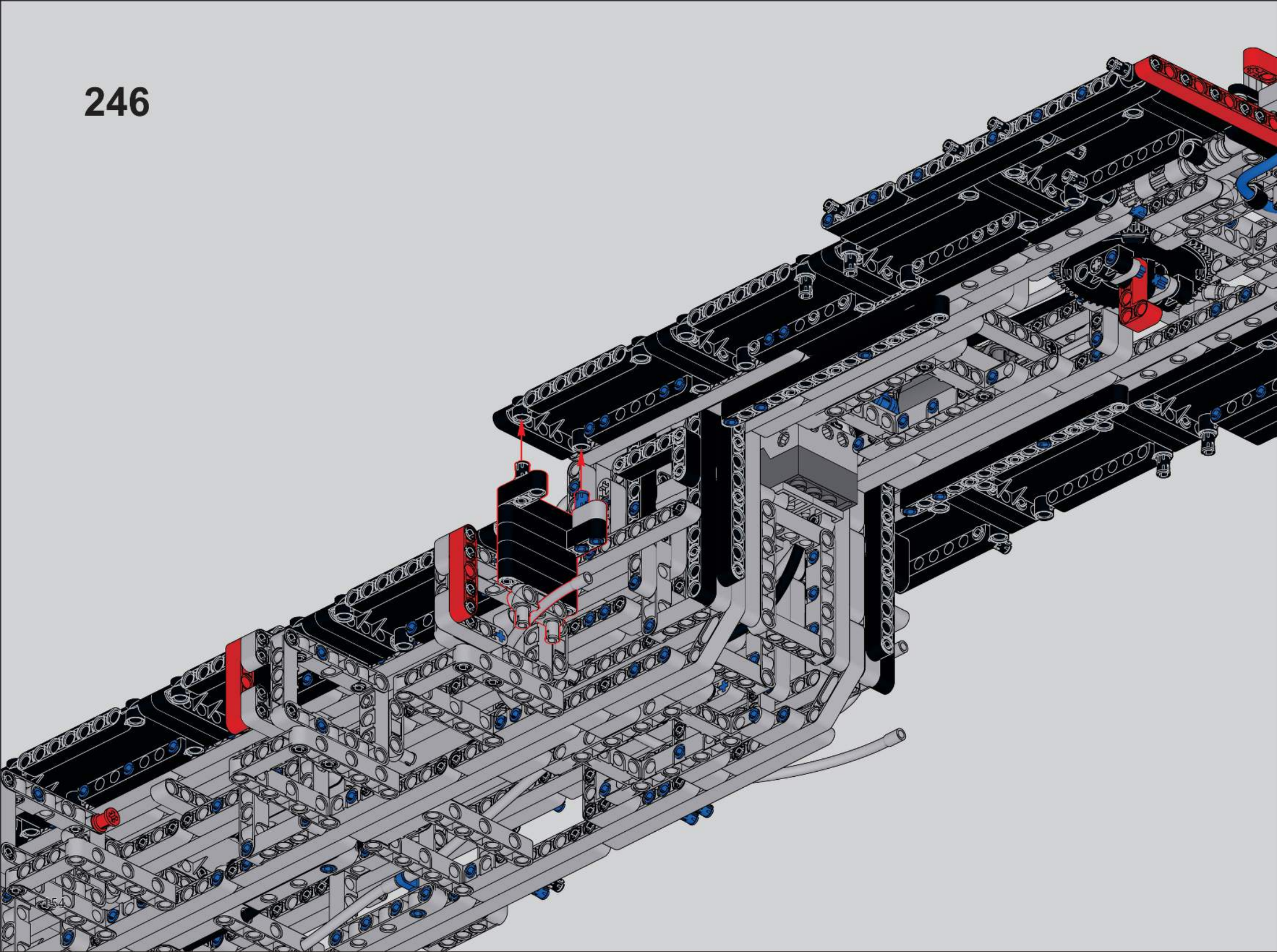

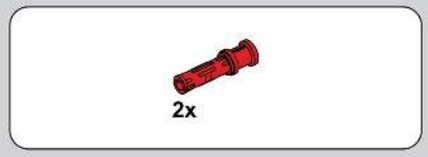

247

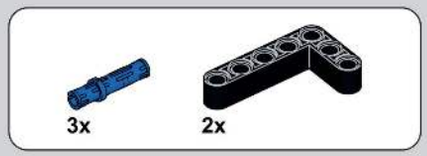

248

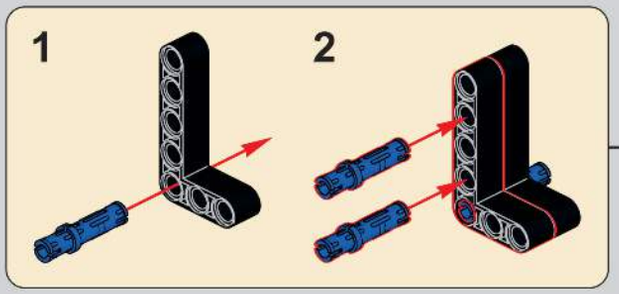

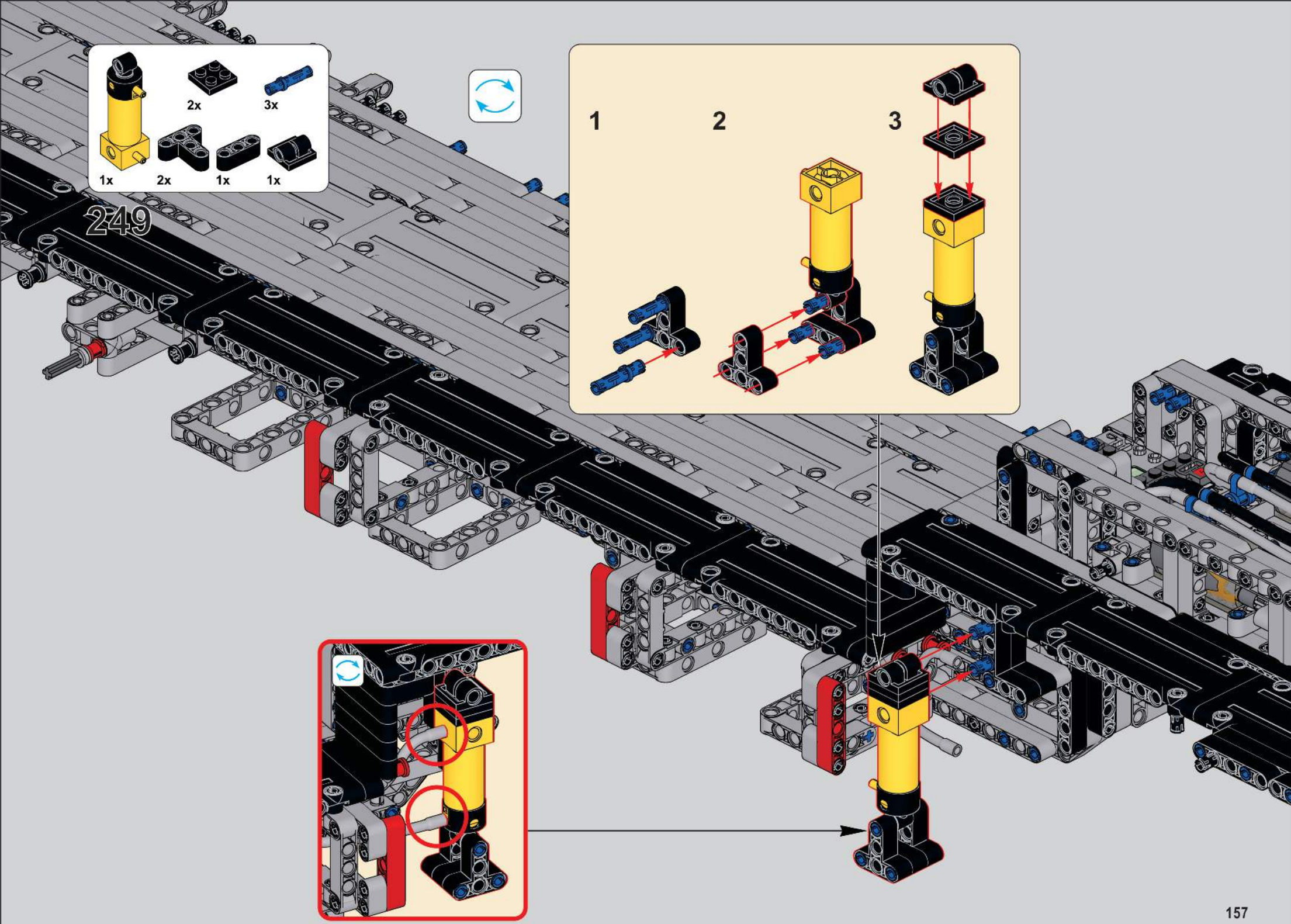
249
1x
2x
2x
3x
1x
1x
1
2
3

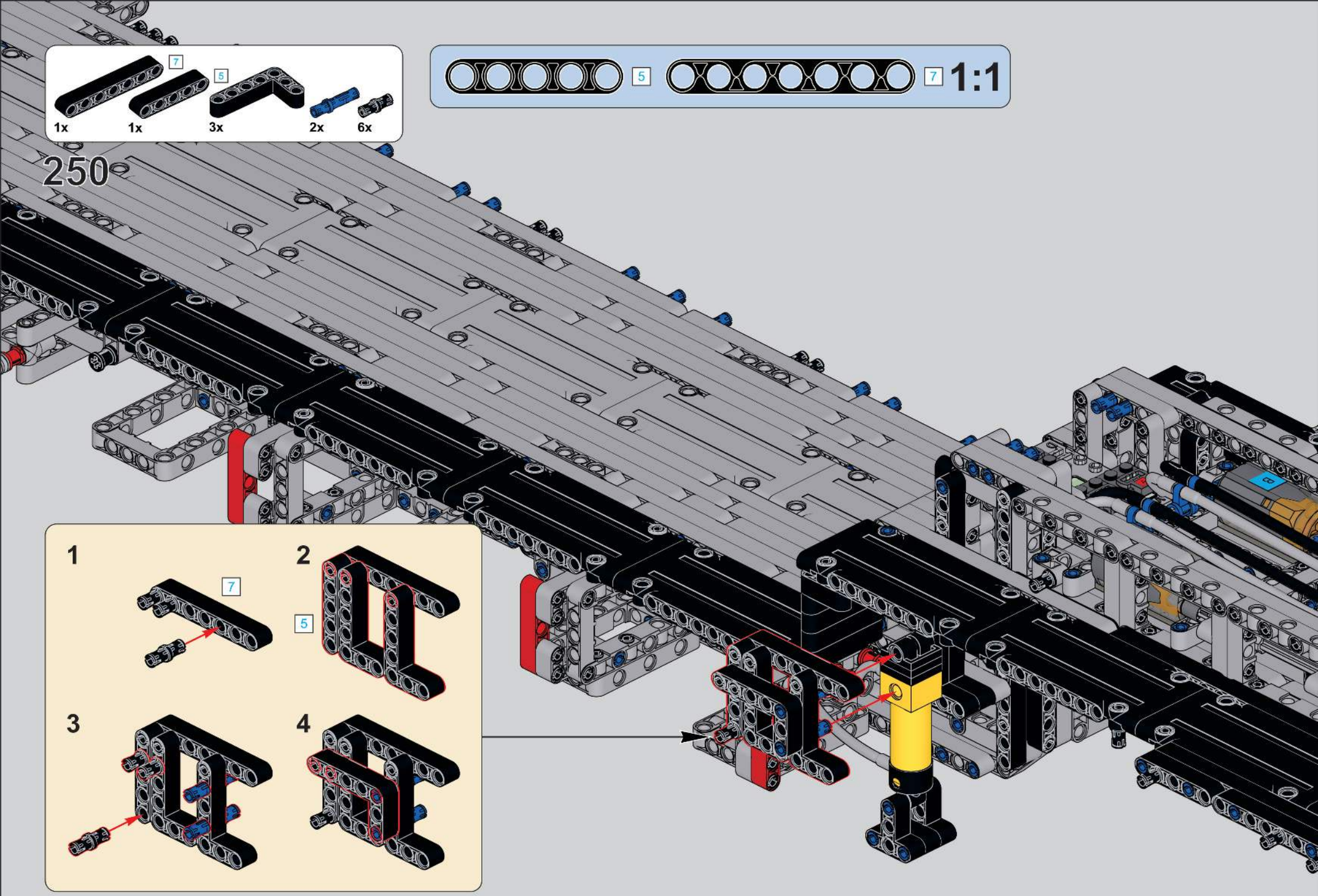
7
5
1x
1x
3x
2x
6x
250
5
7
1:1
1
7
2
5
3
4

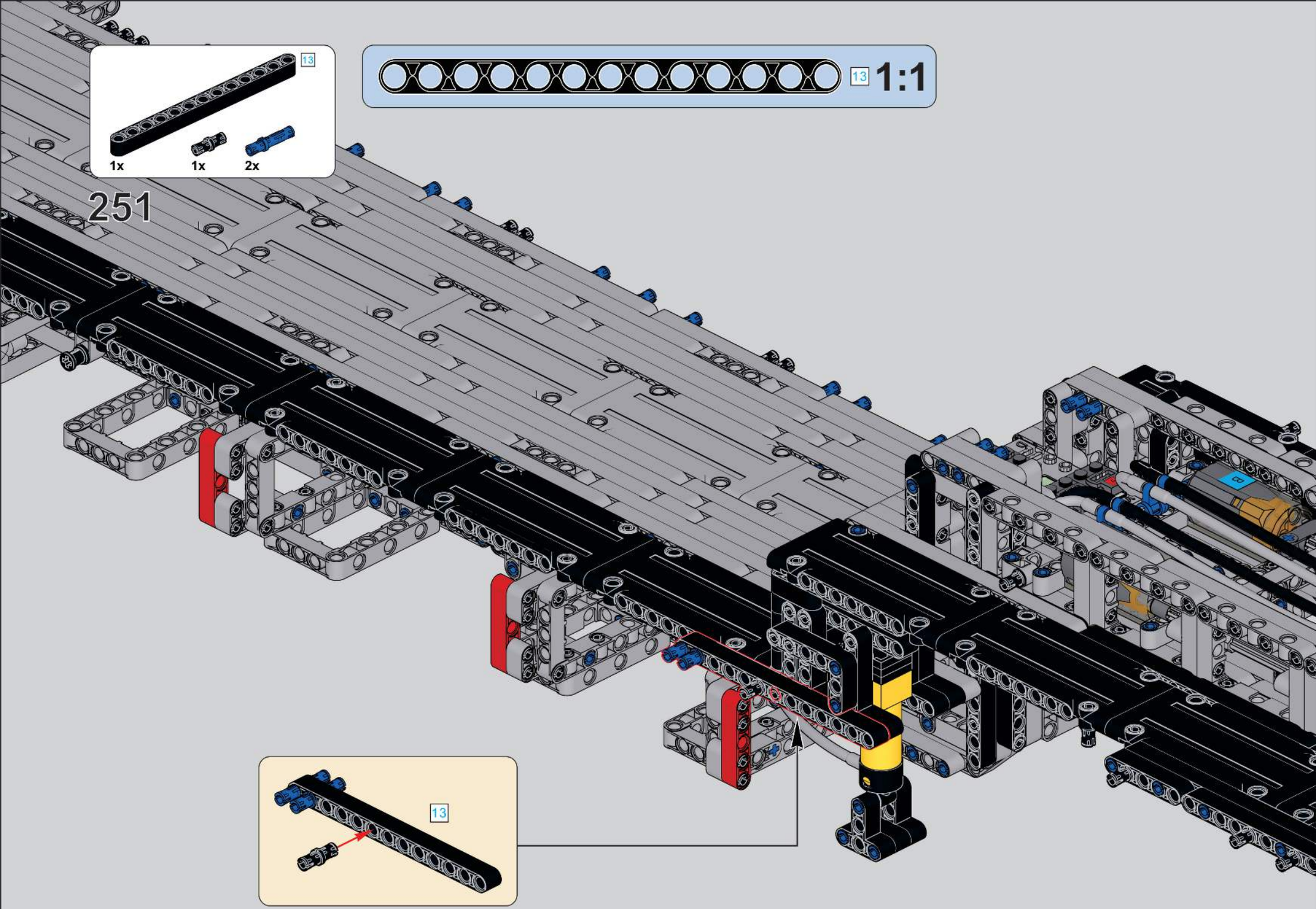
13
1x
1x
2x
251
13
1:1
13

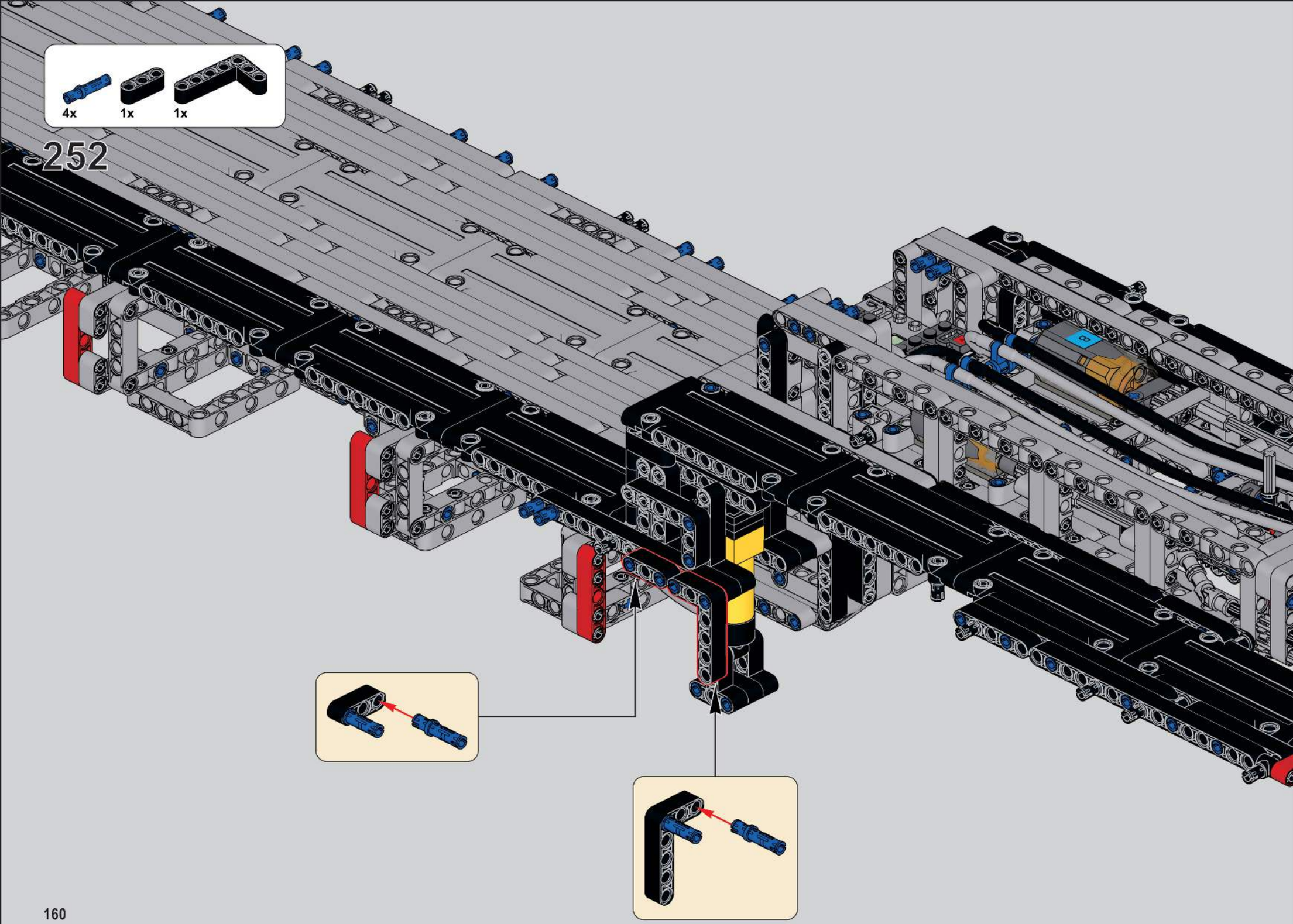
4x
1x
1x
252

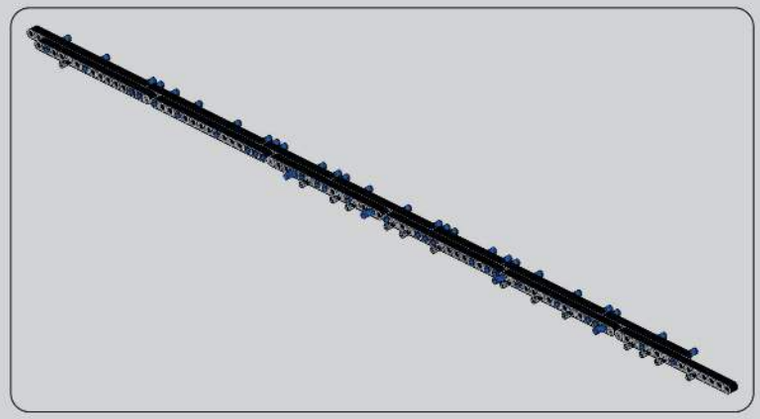

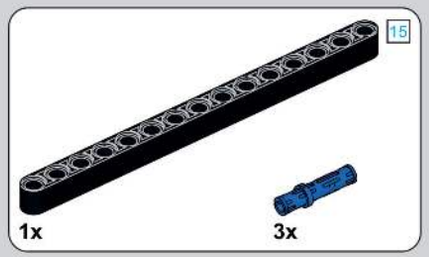

253

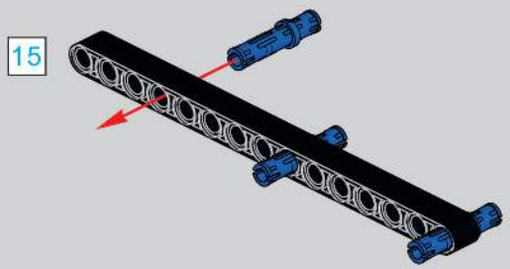

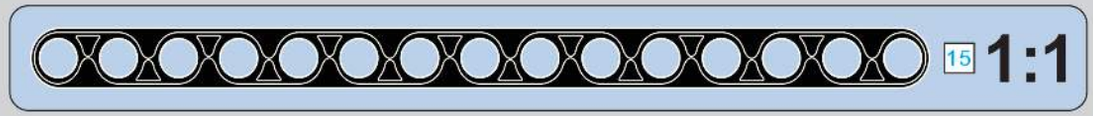

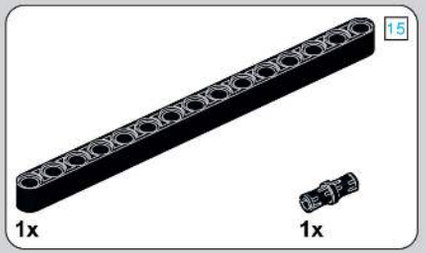

254

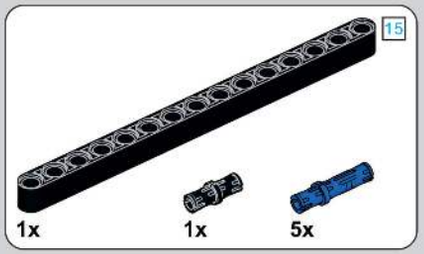

255

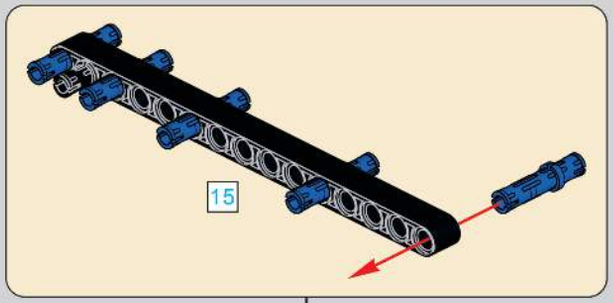

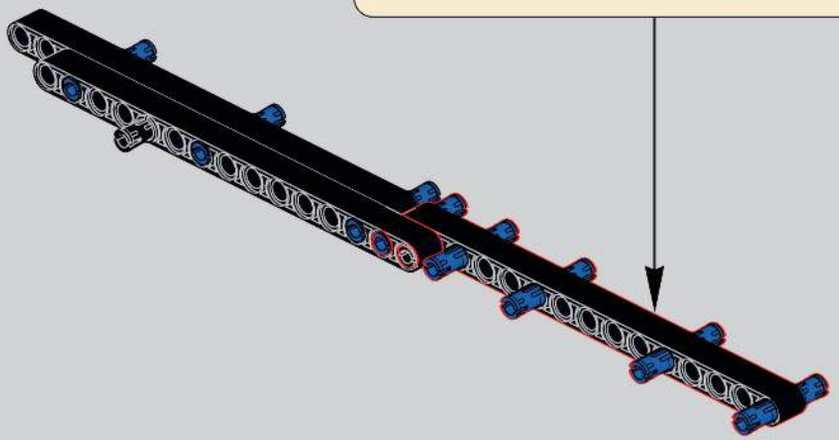

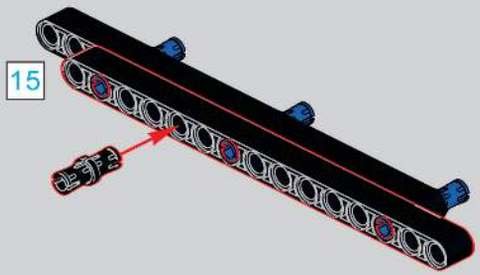

256

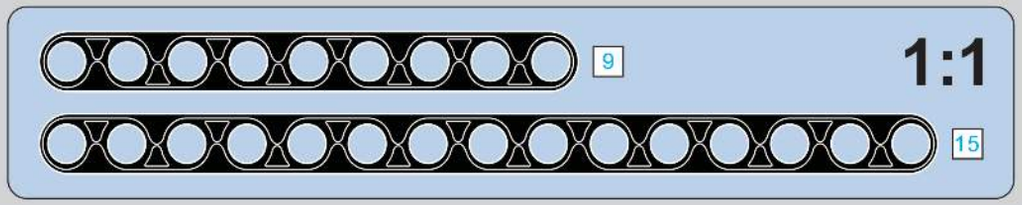

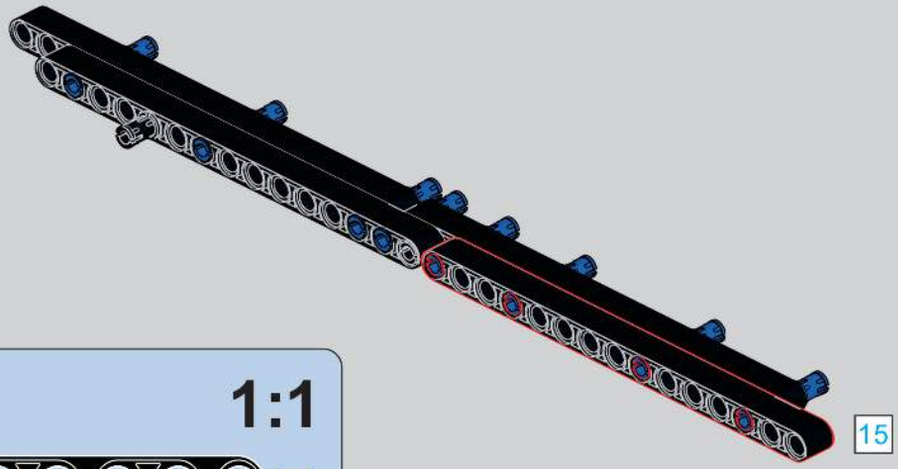

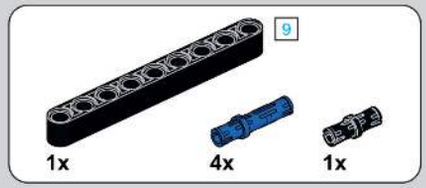

257

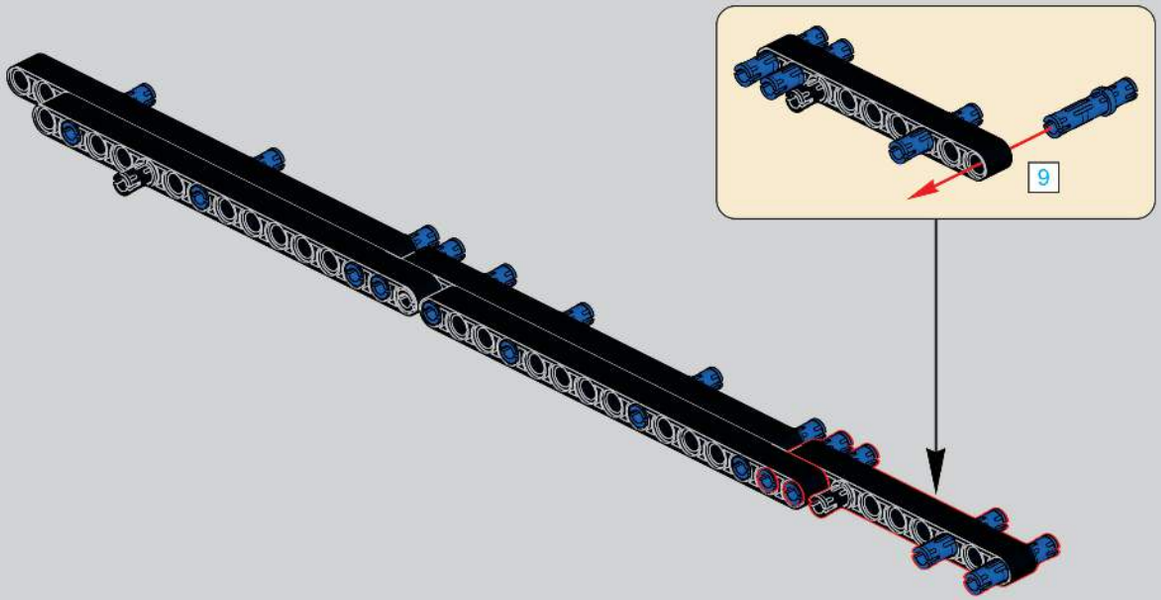

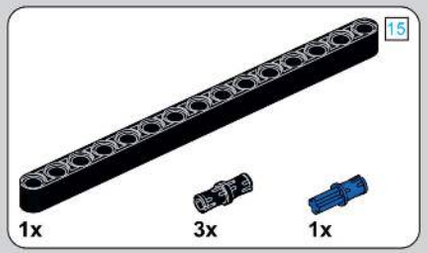

258

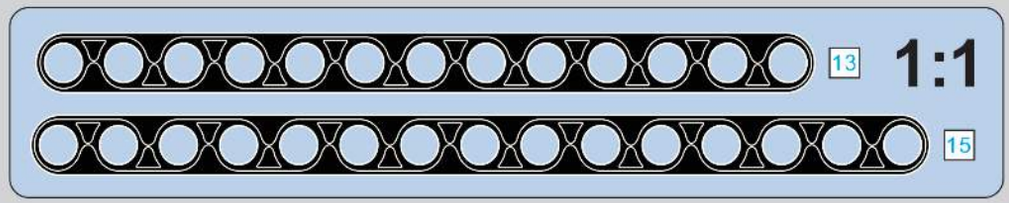

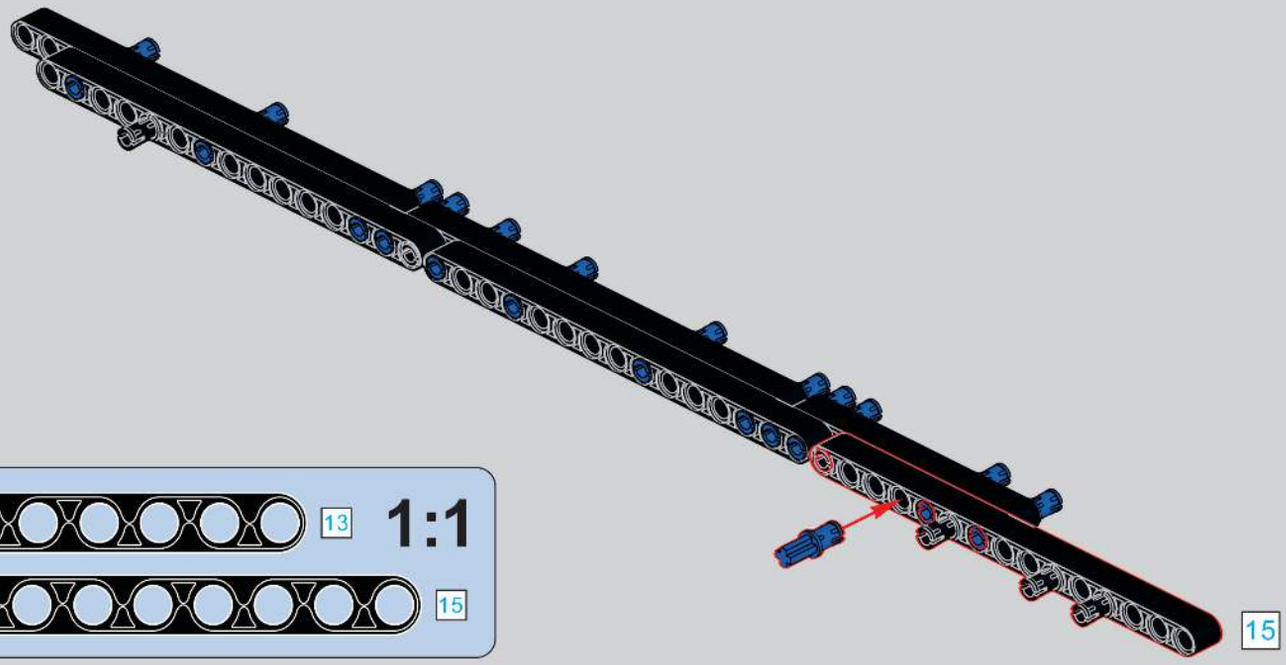

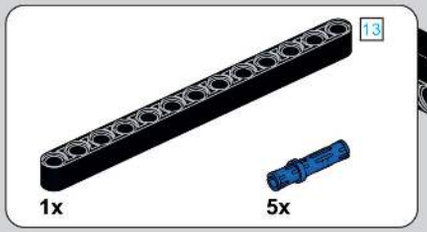

259

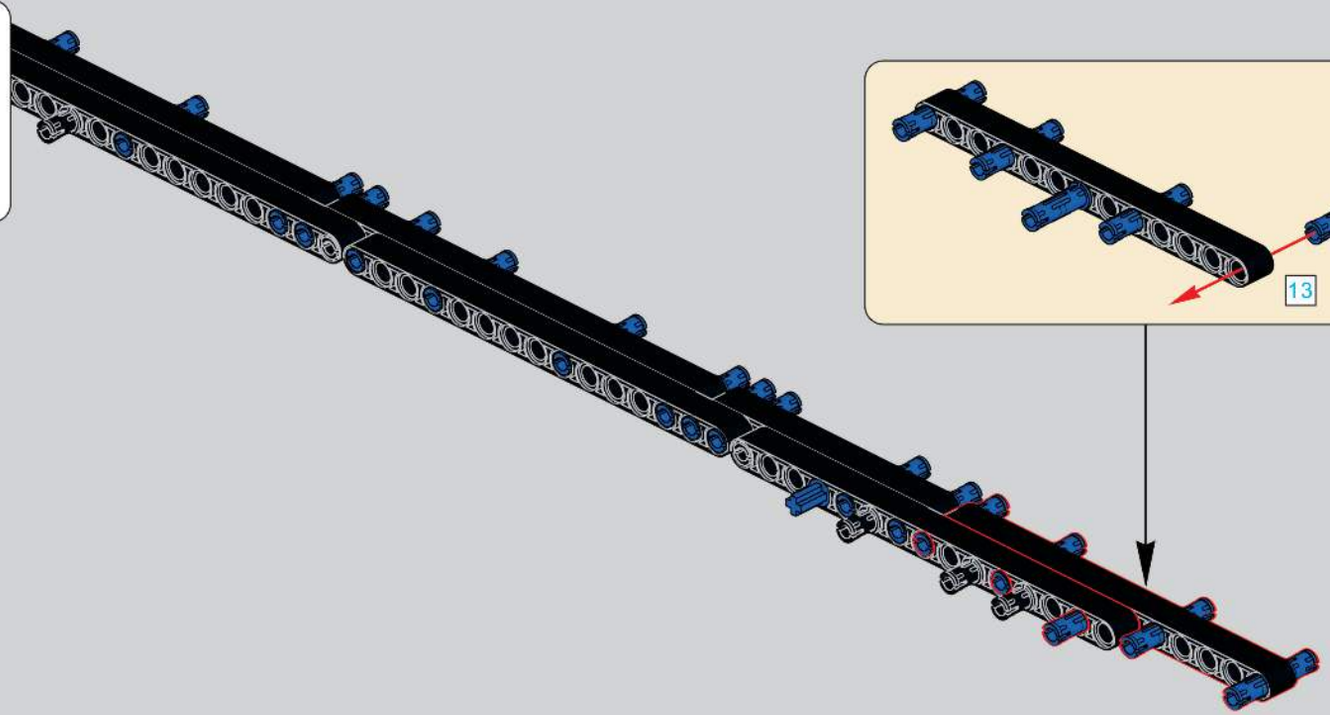

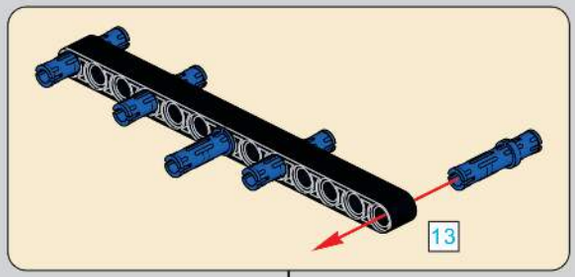

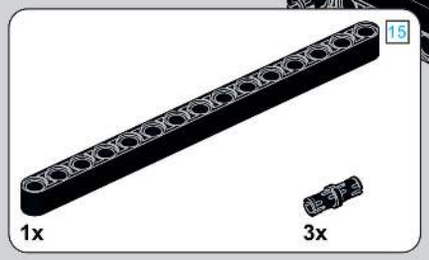

260

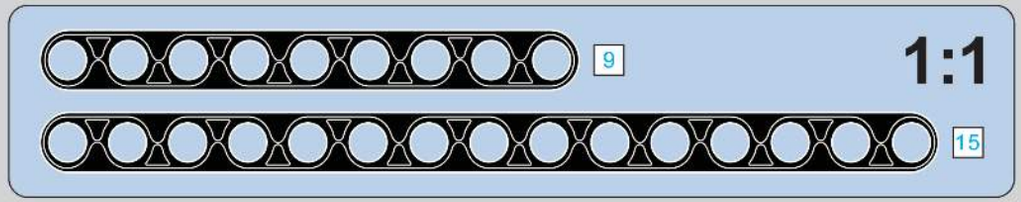

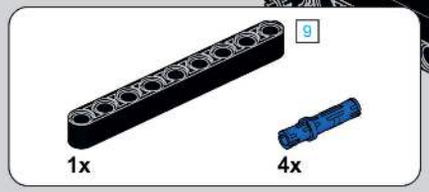

261

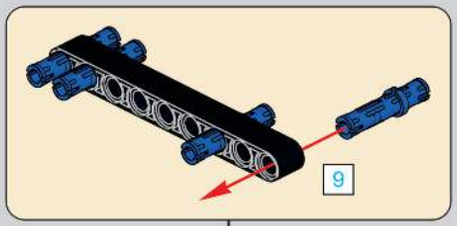

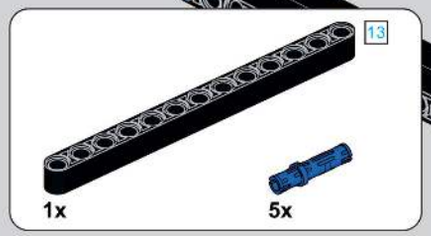

262

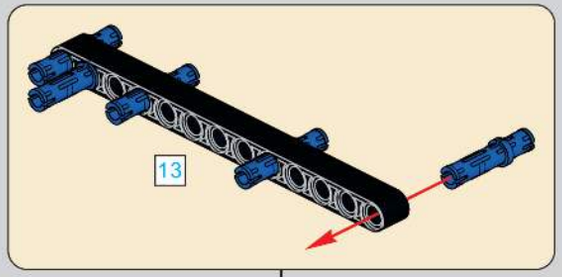

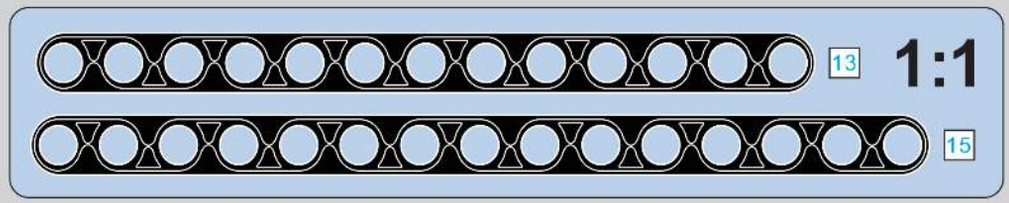

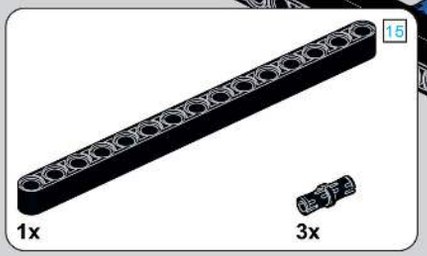

263

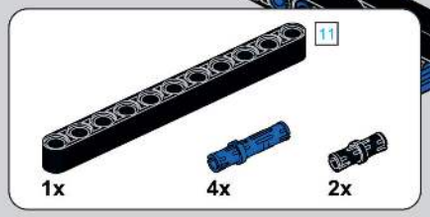

264

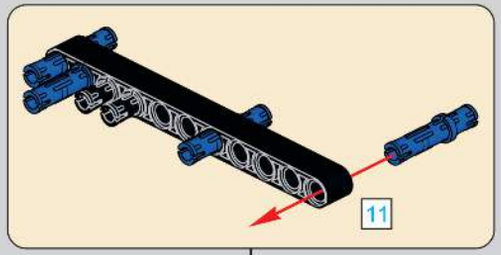

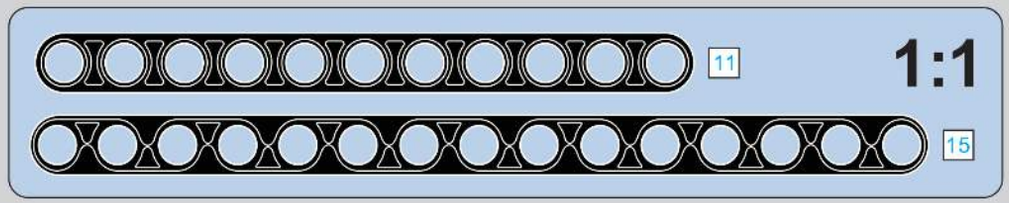

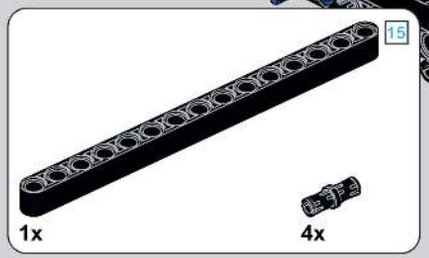

265

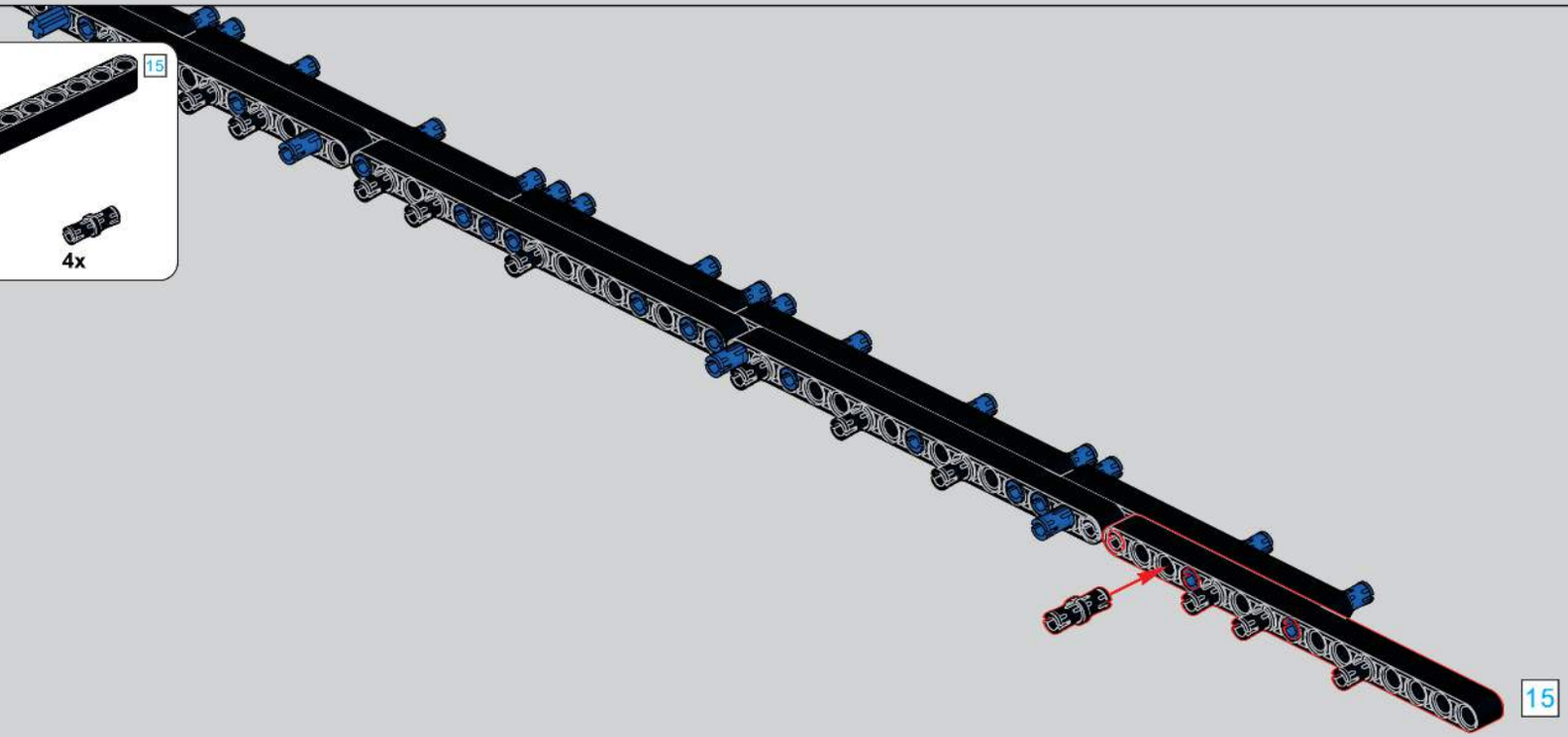

266

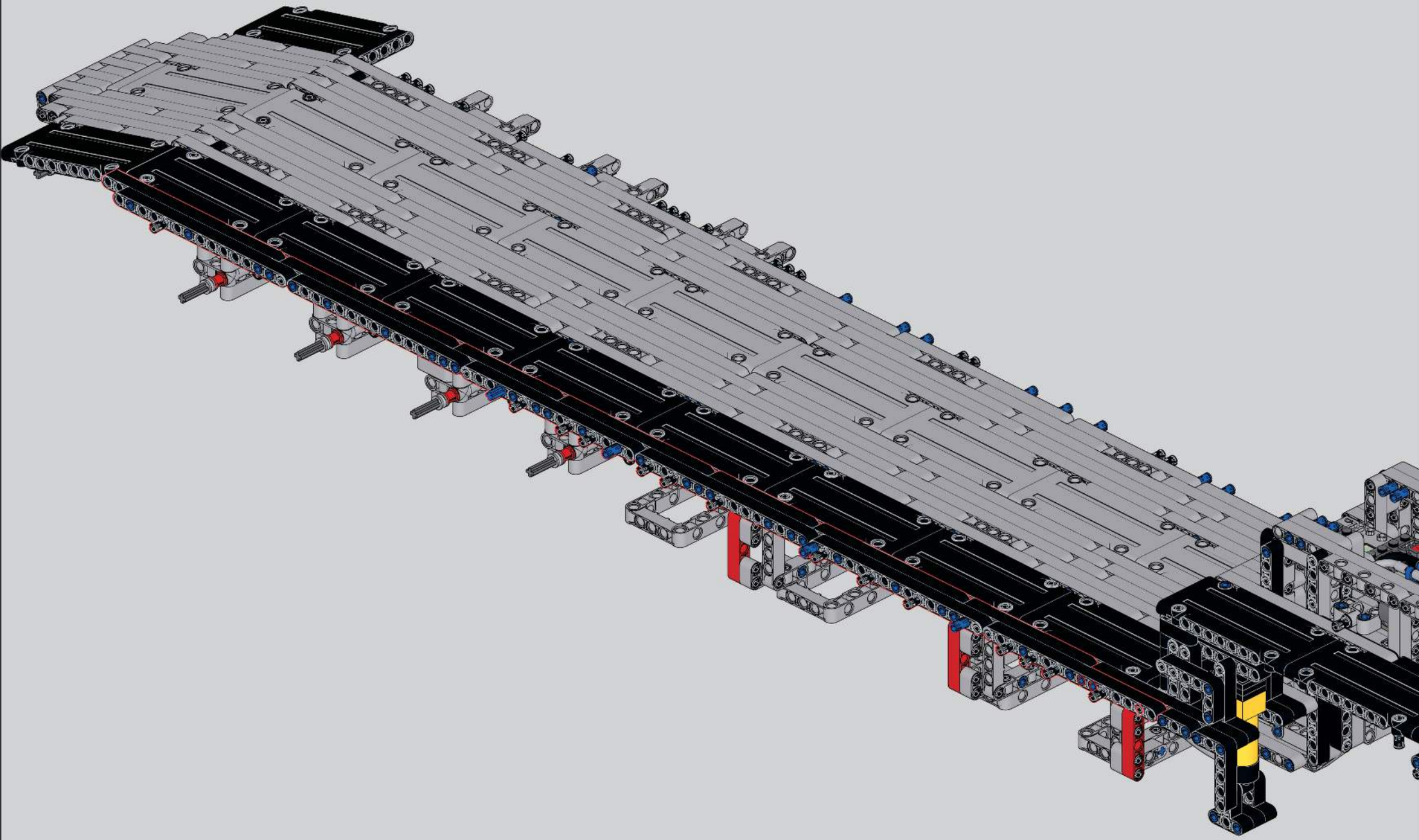

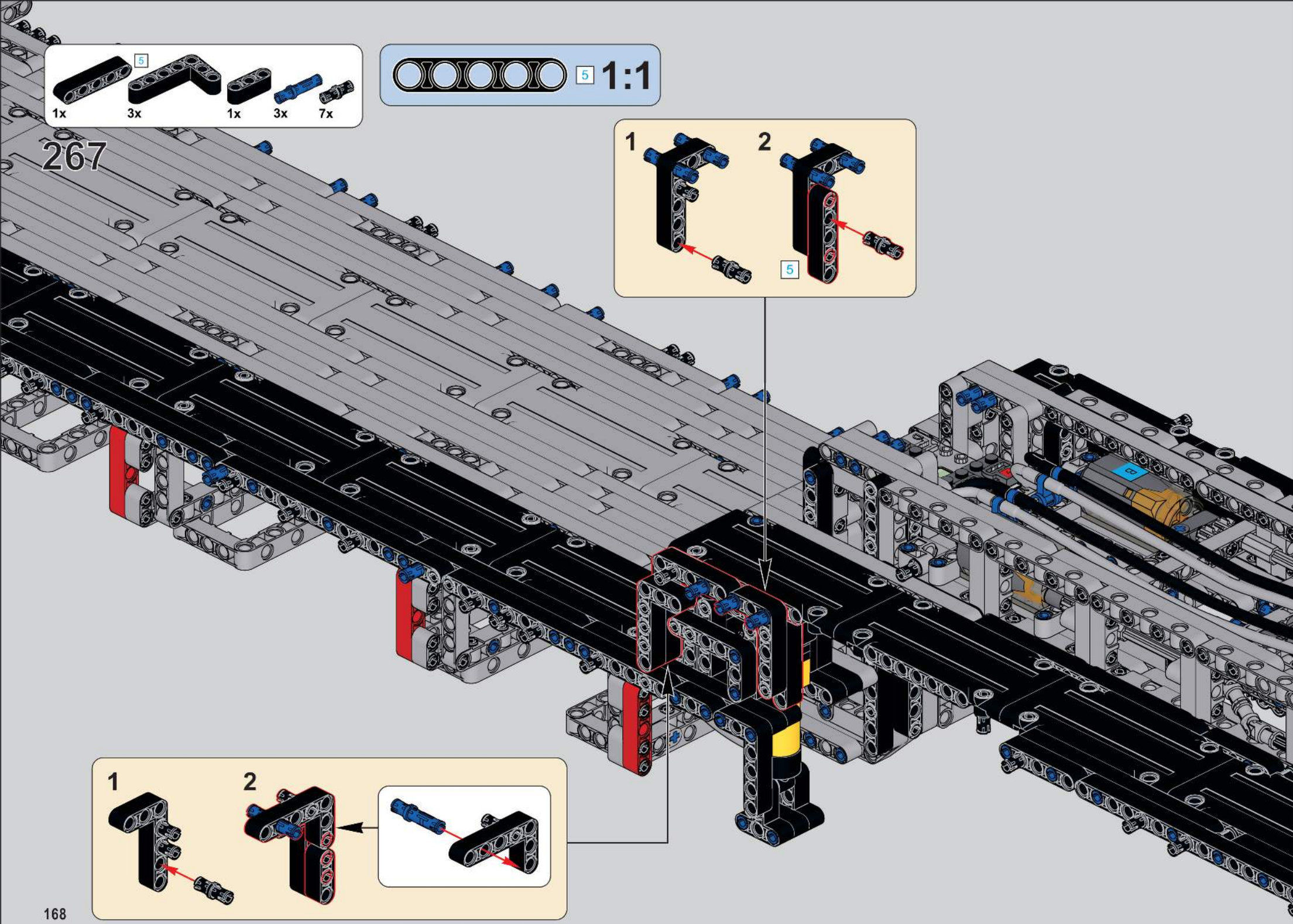
5
1x
3x
1x
3x
7x
267
5
1:1
1
2
5
1
2

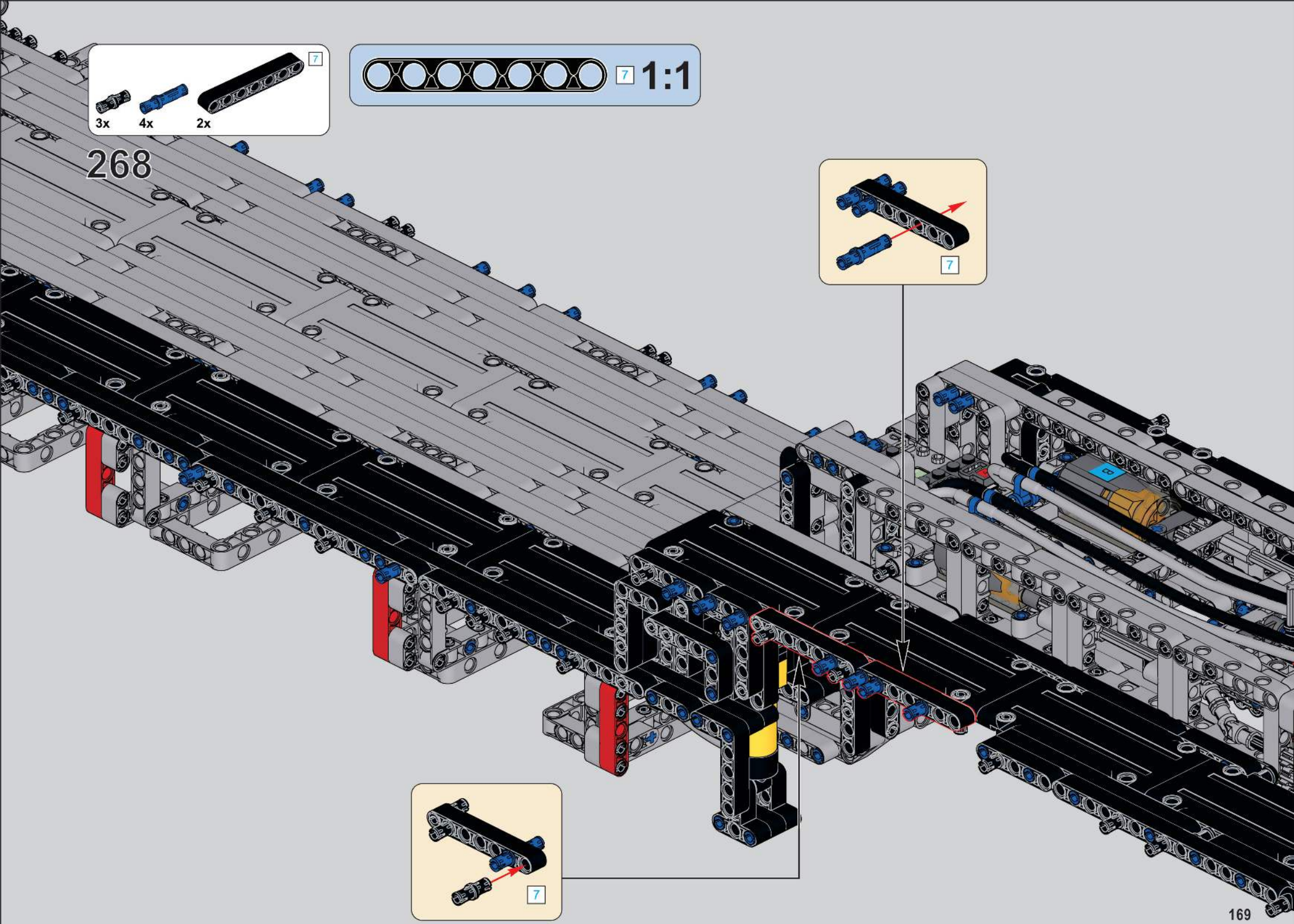
7
3x
4x
2x
7
1:1
268
7
7

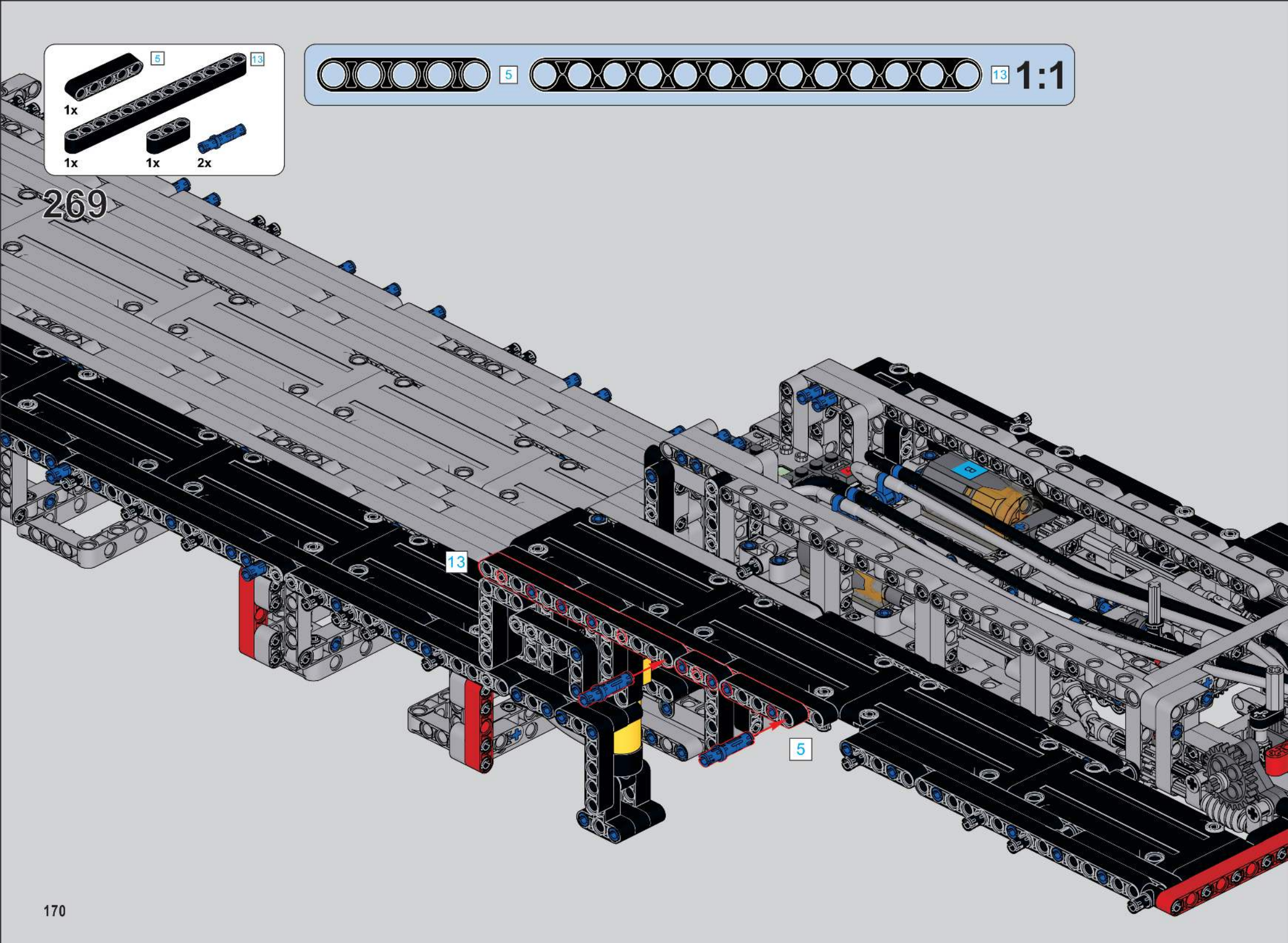
5
13
1x
1x
1x
2x
269
5
13
1:1
13
5

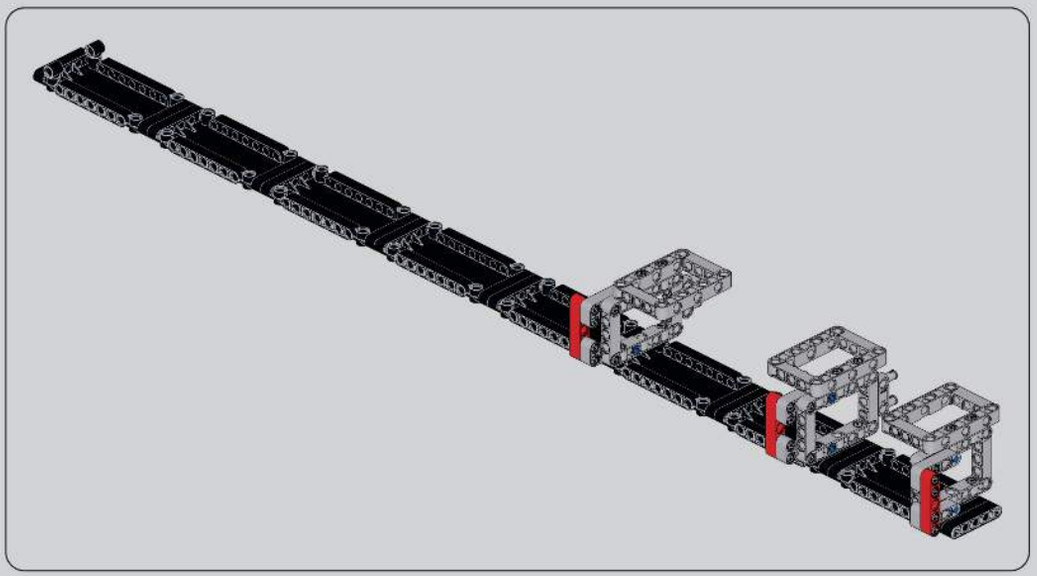

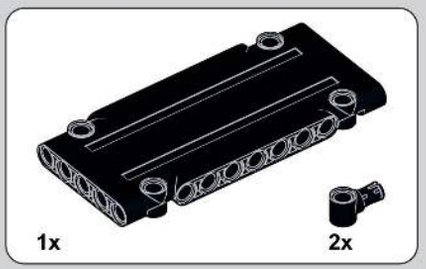

270

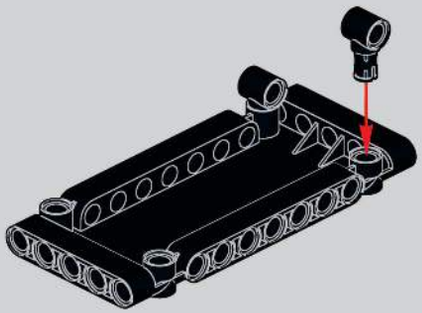

271

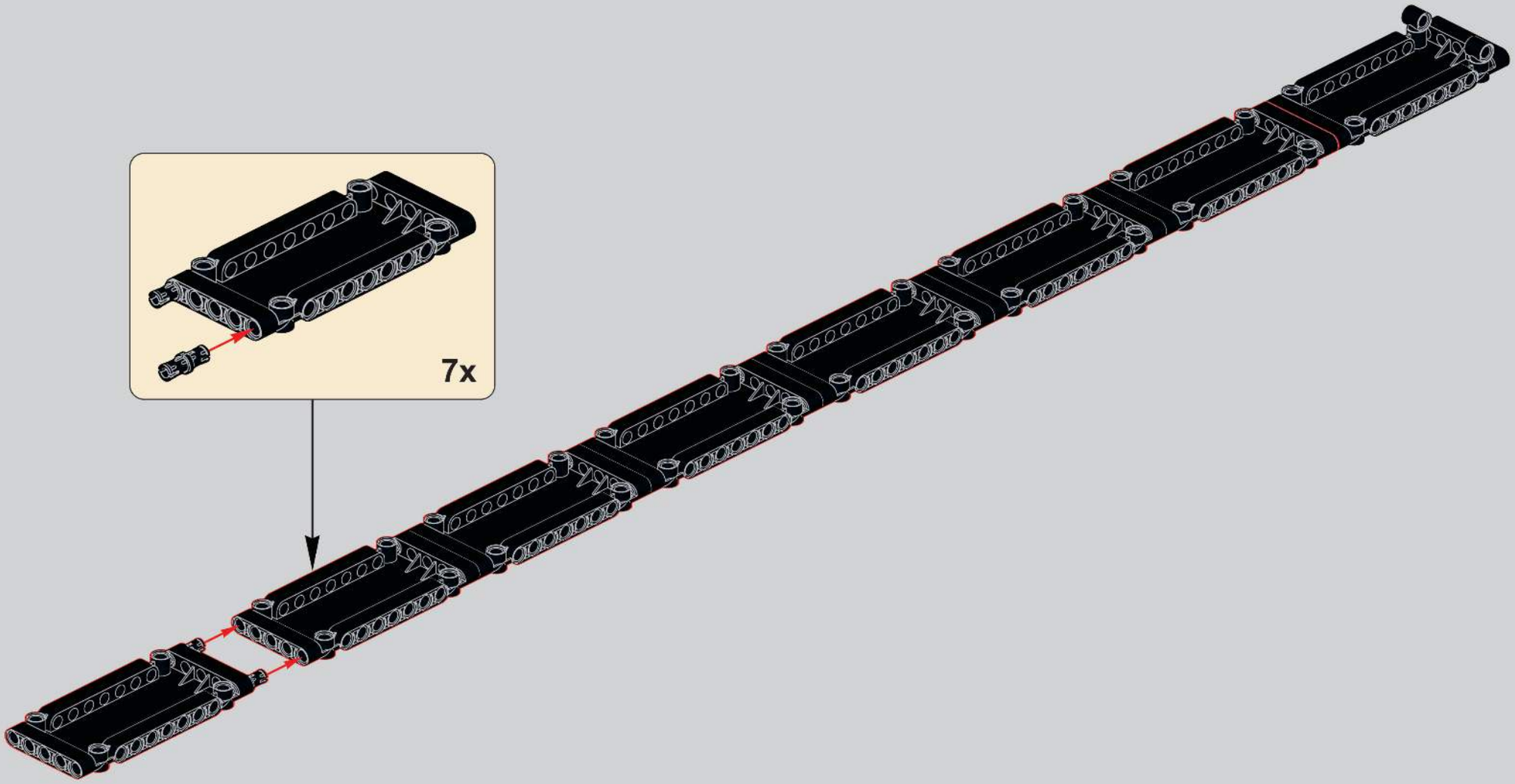

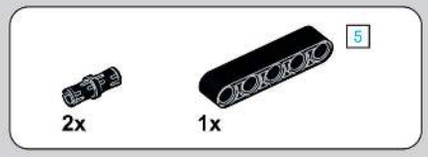

272

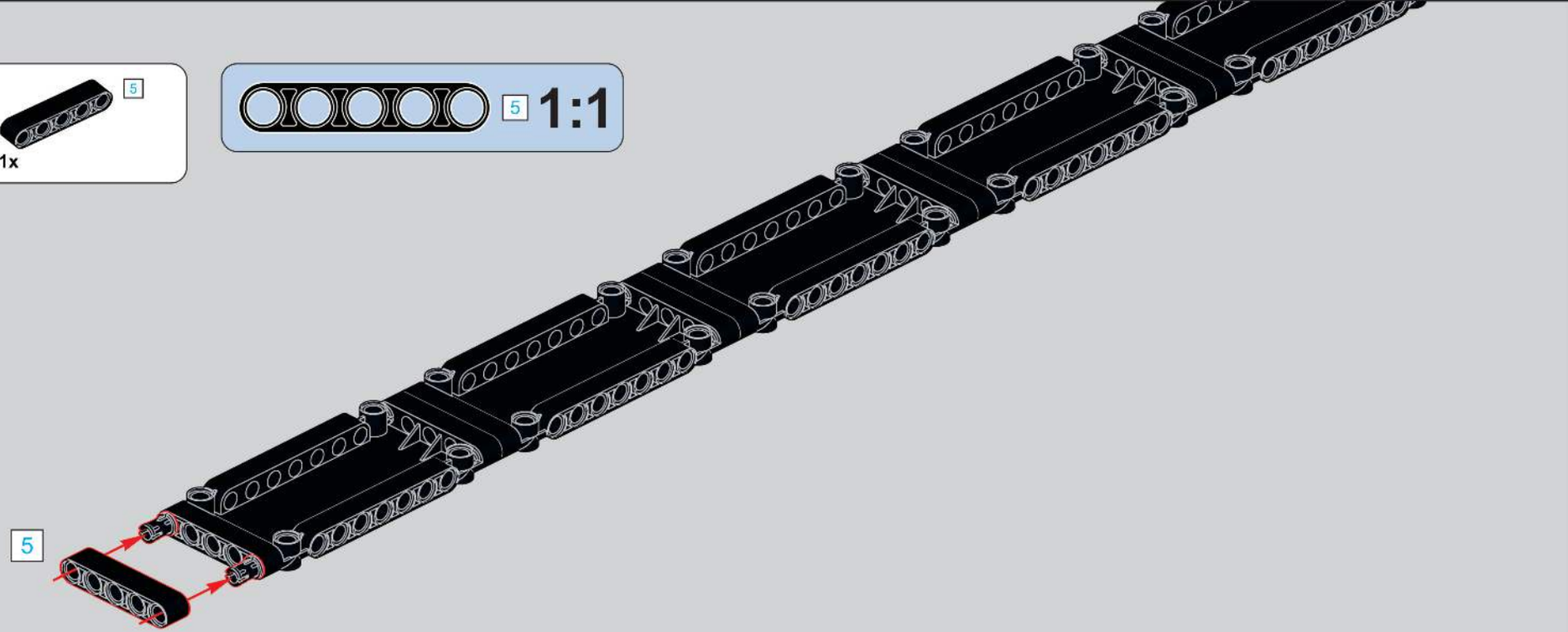

273

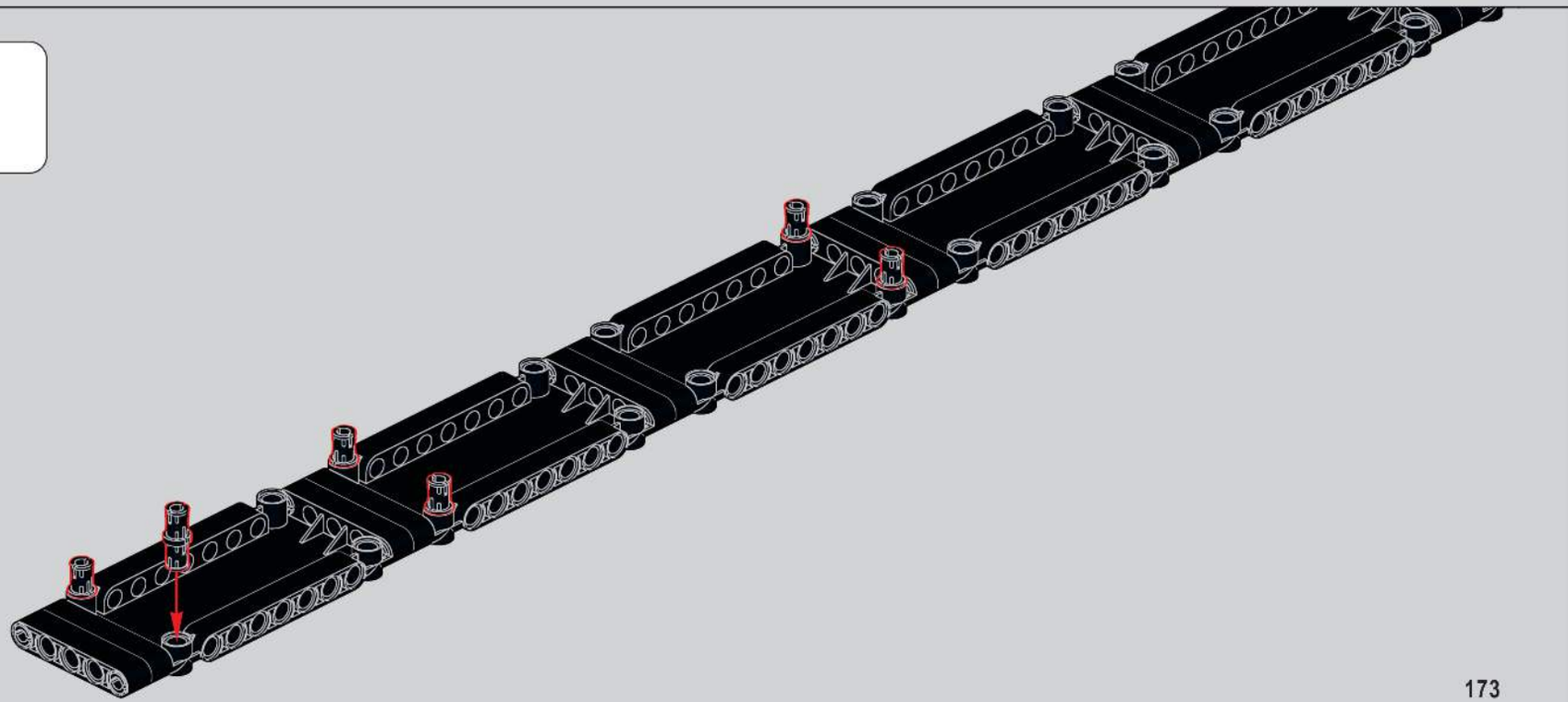

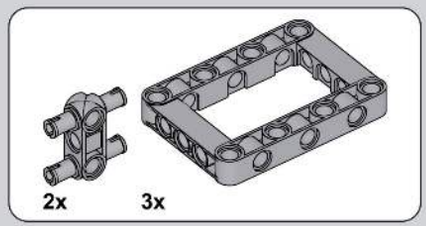

274

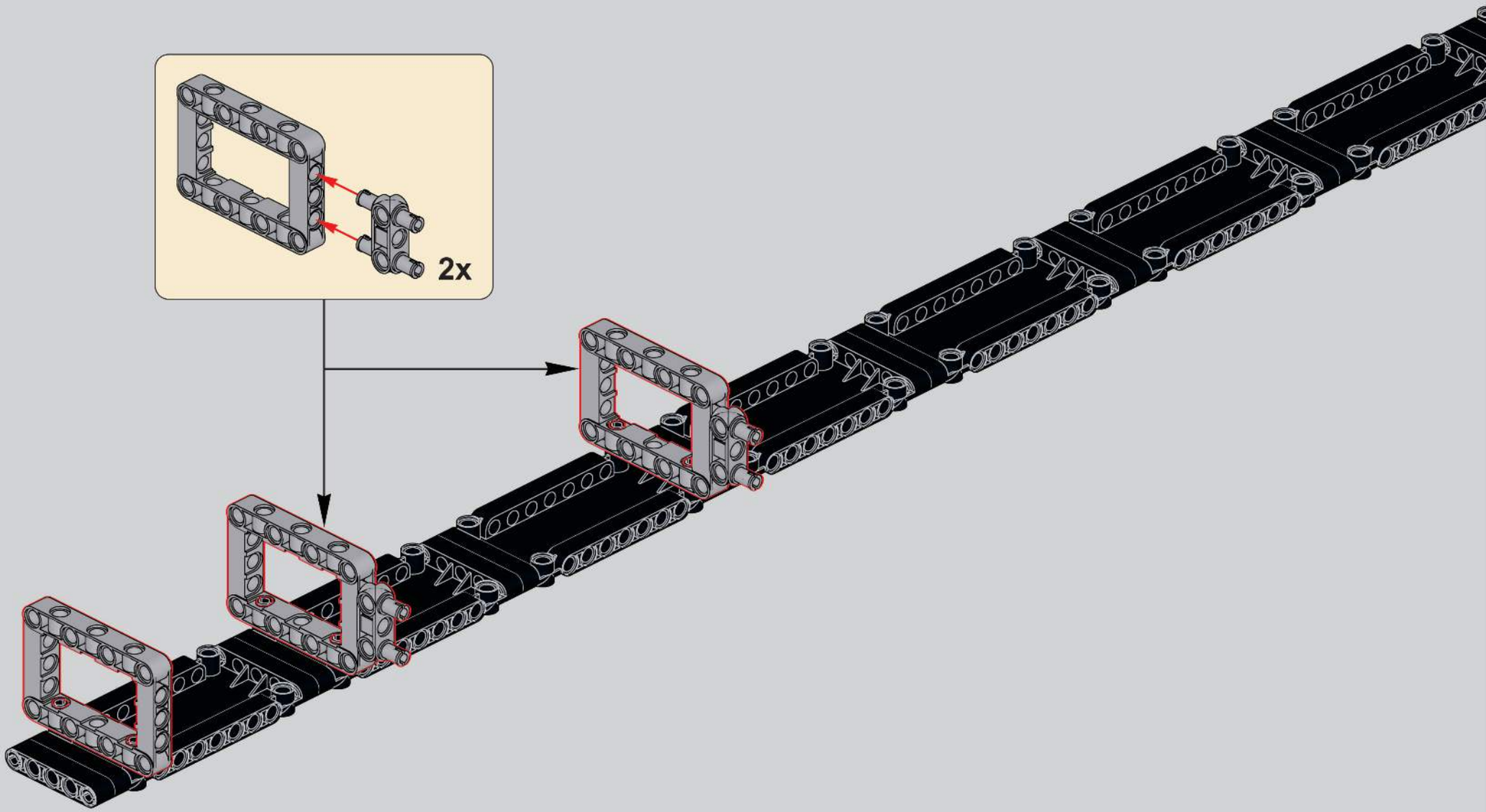

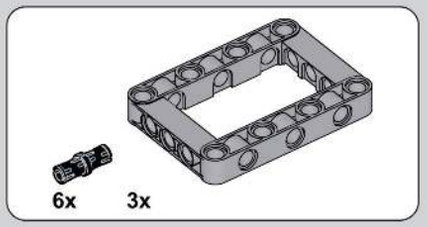

275

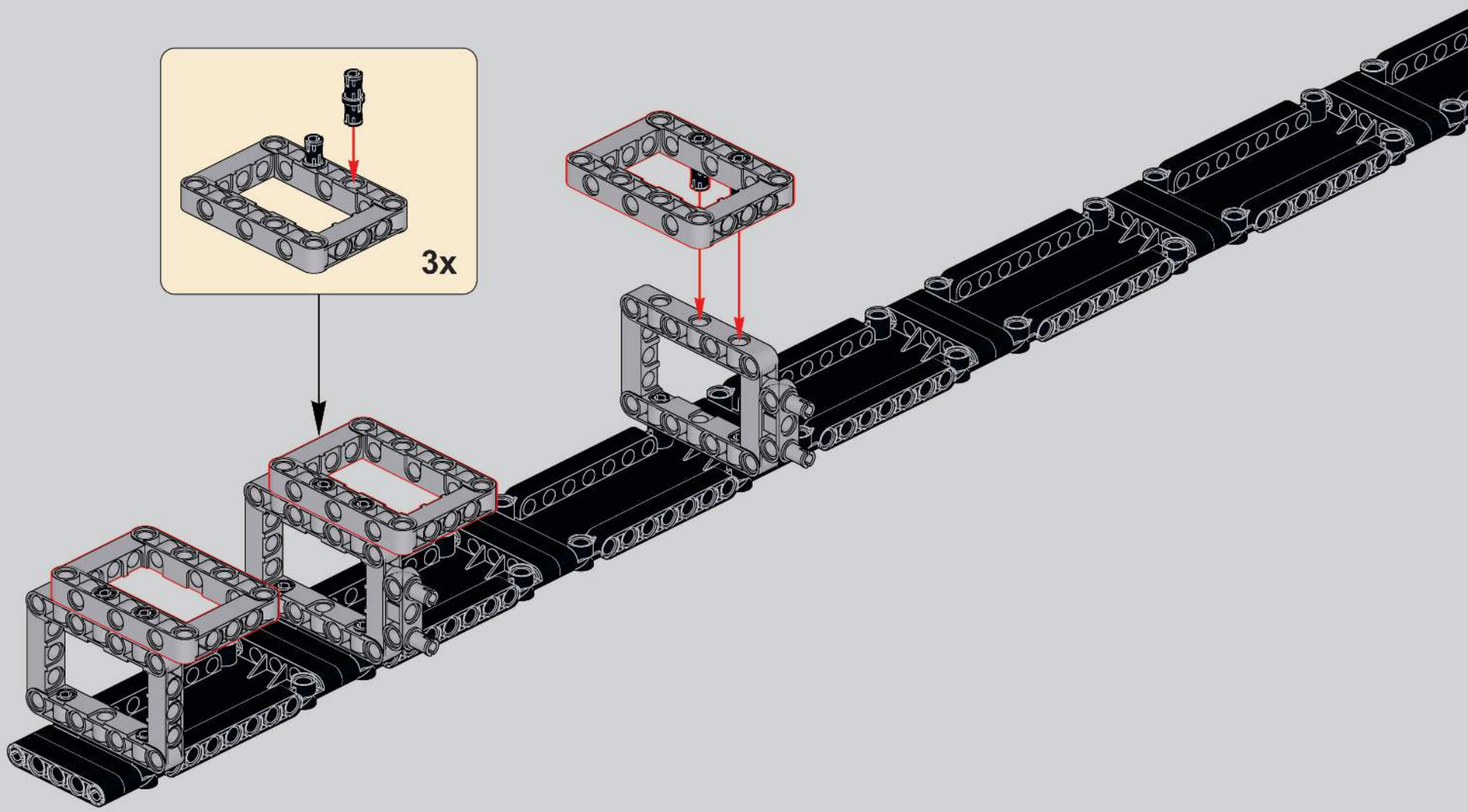

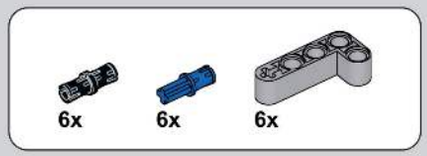

276

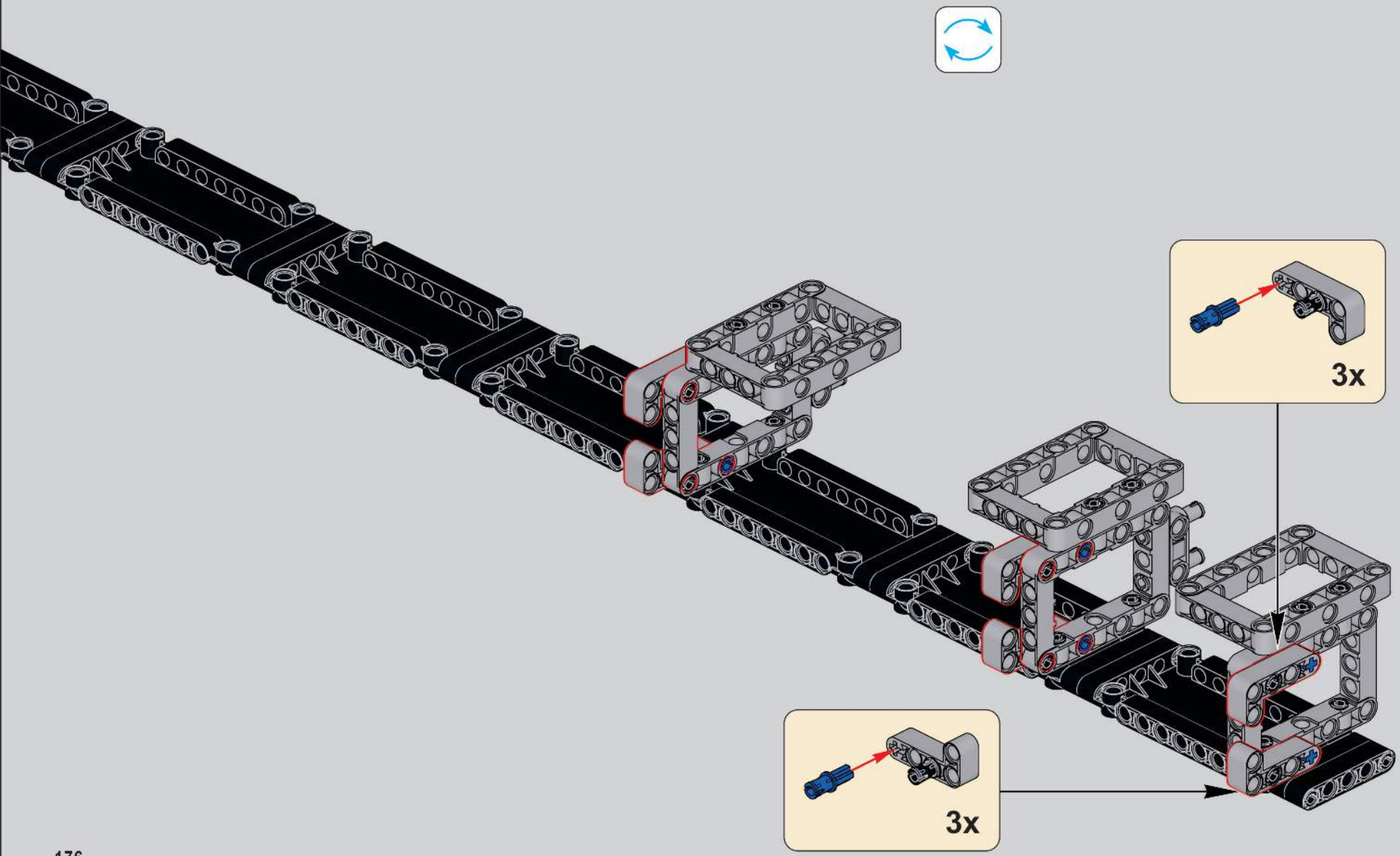

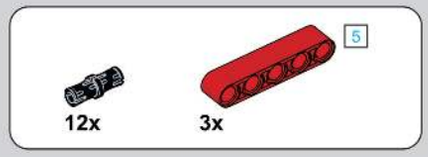

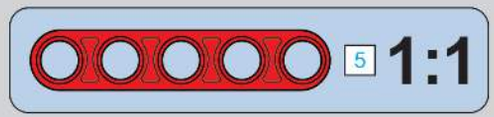

277

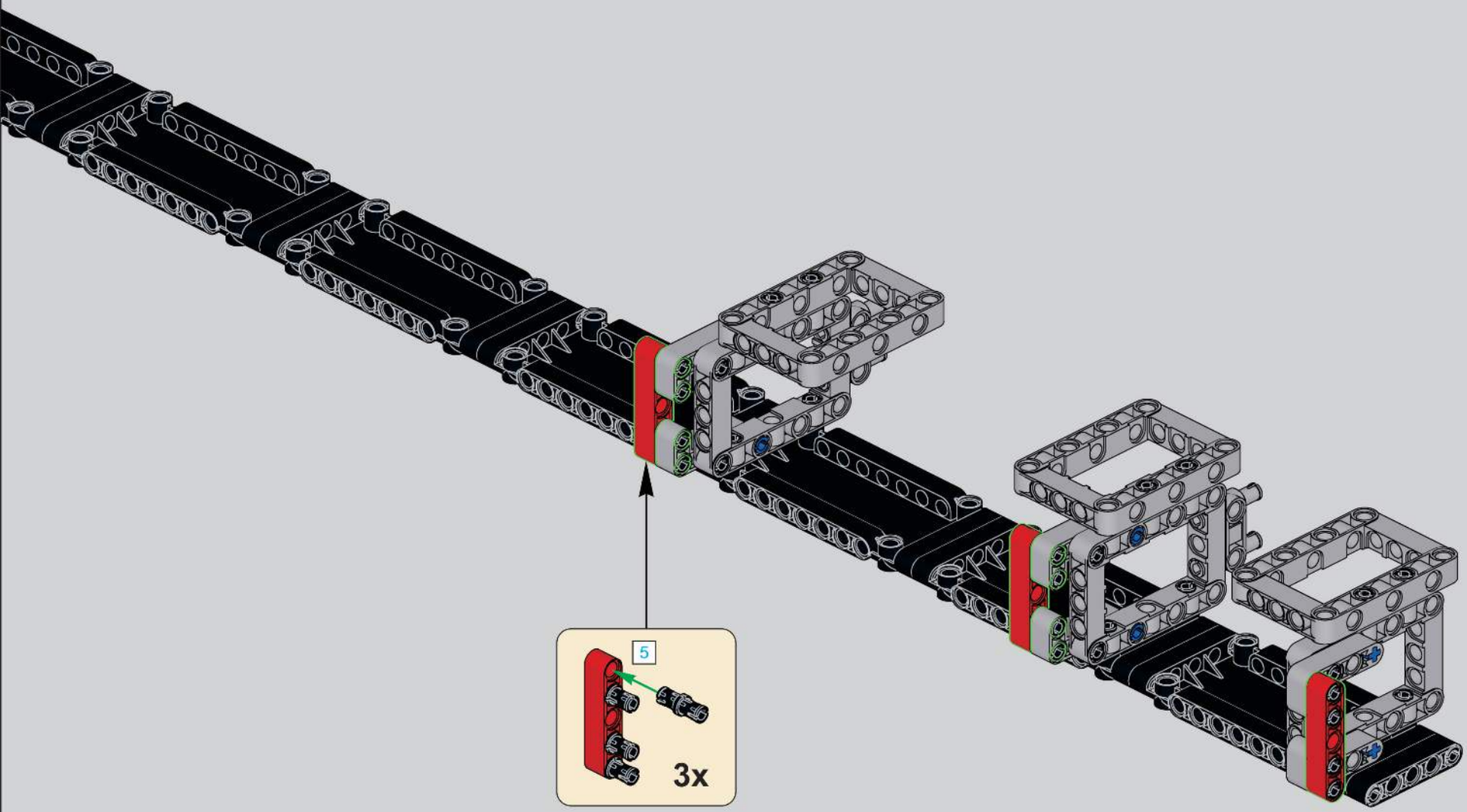

278

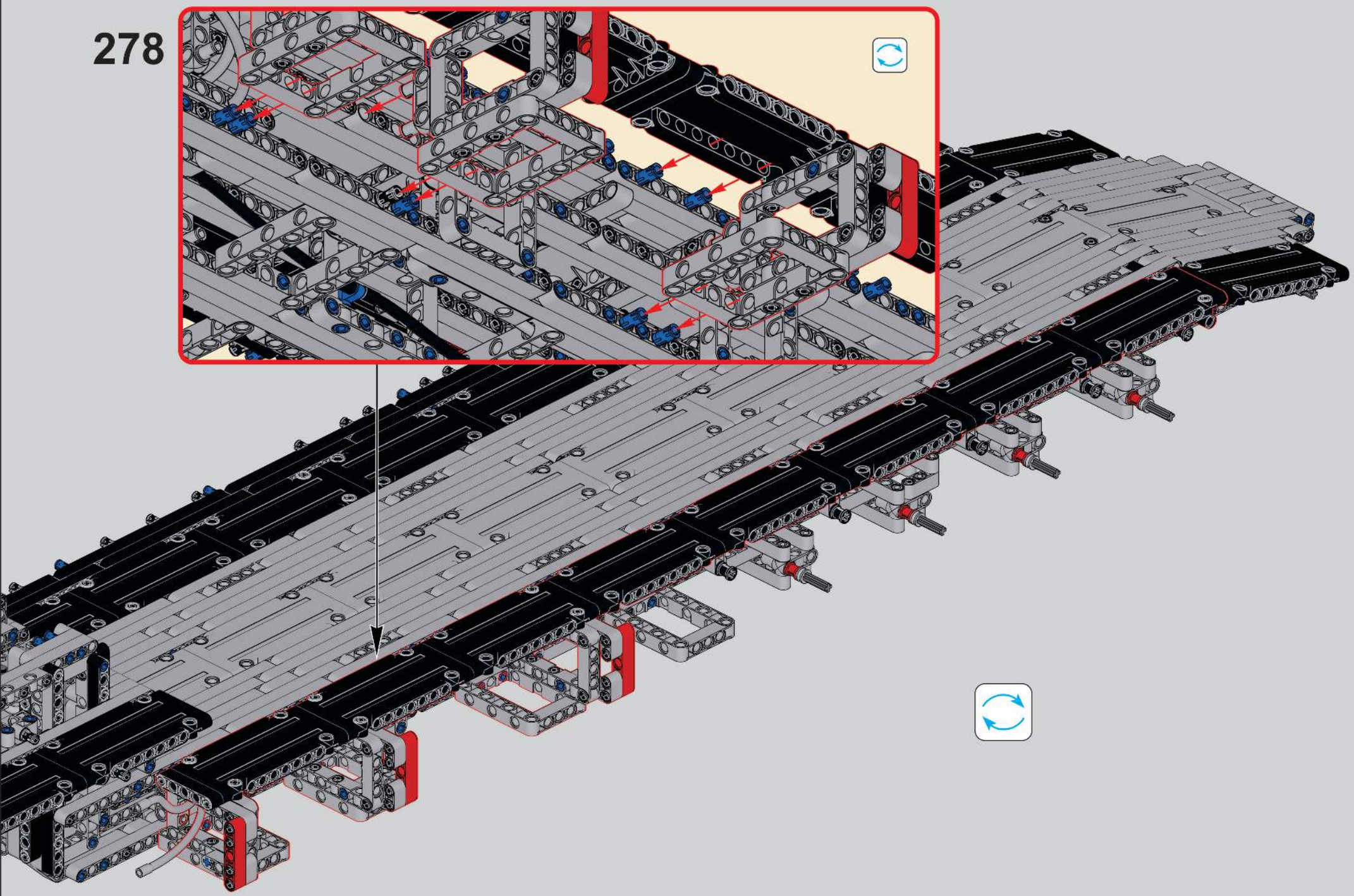

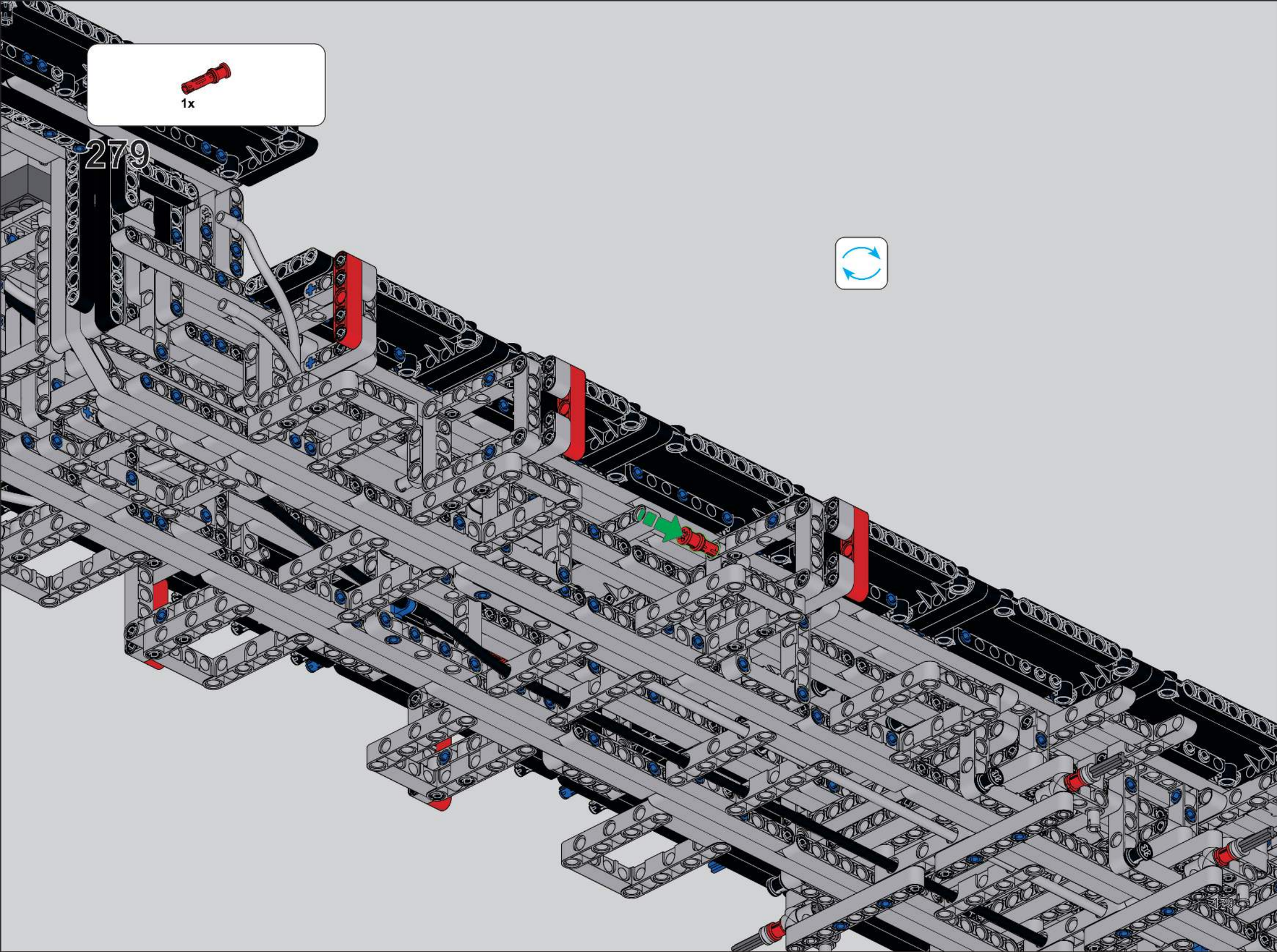
1x
279

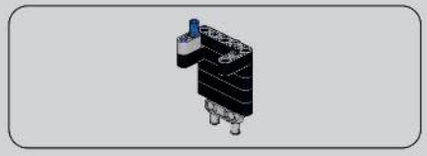

280

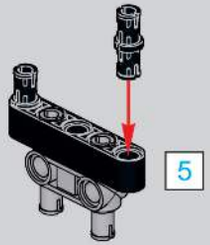

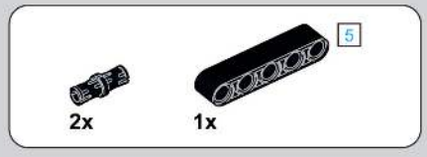

281

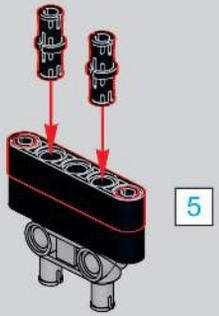

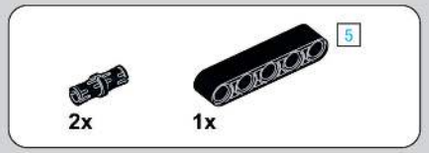

282

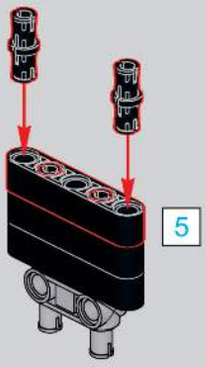

283

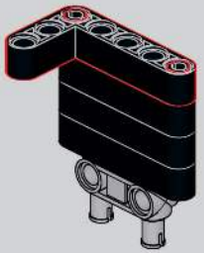

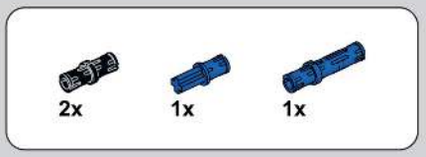

284

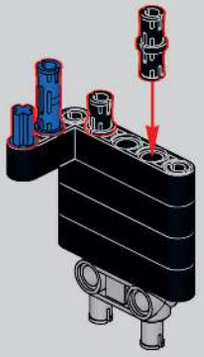

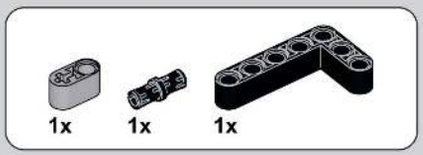

285

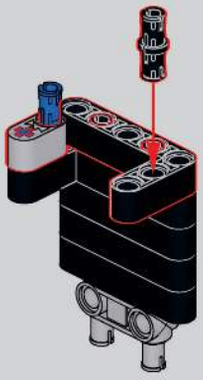

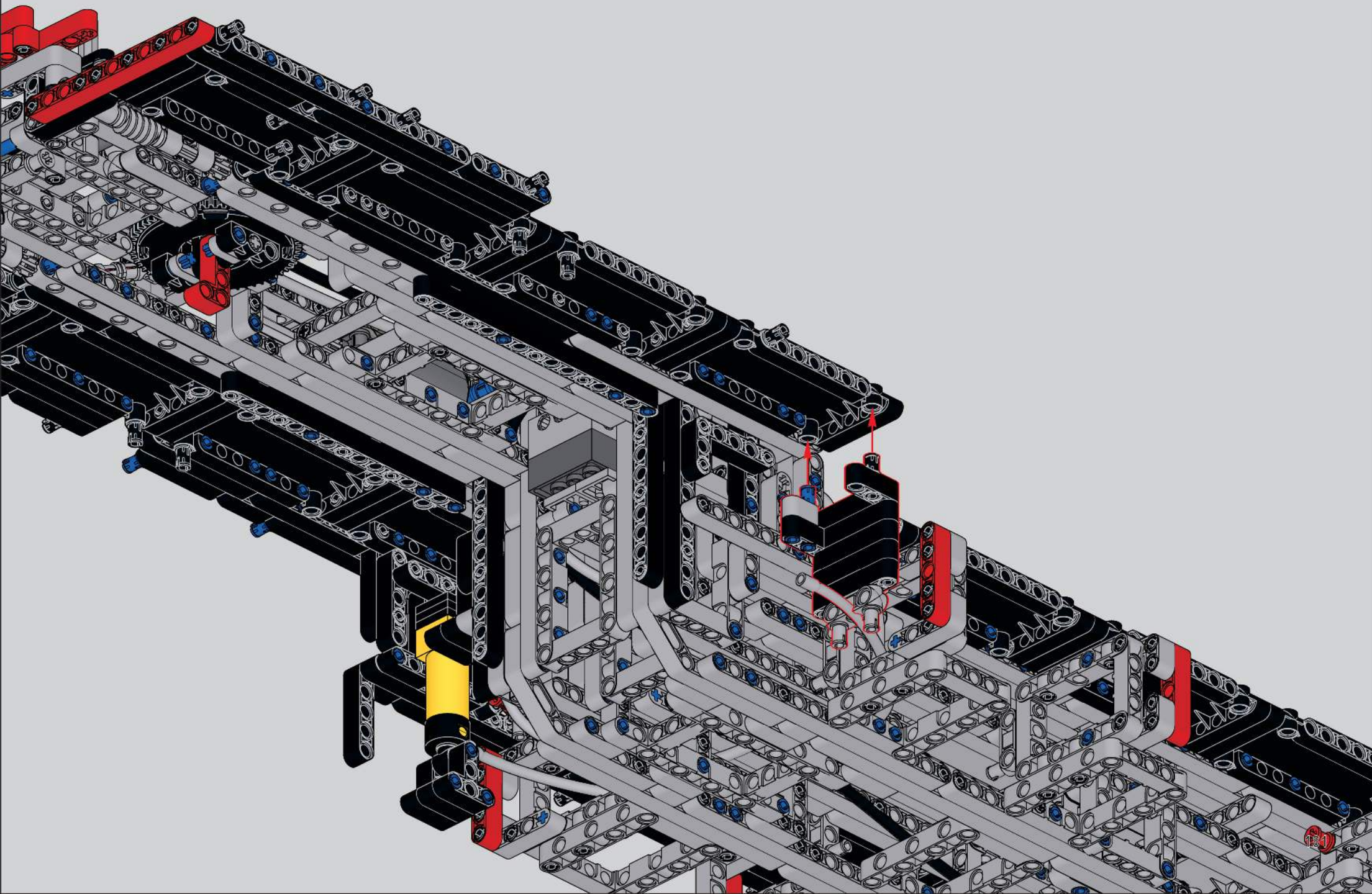

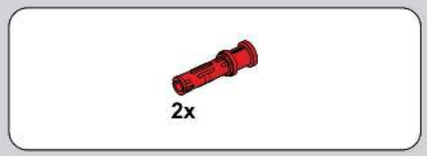

287

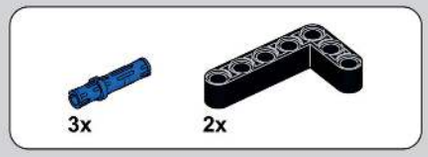

288

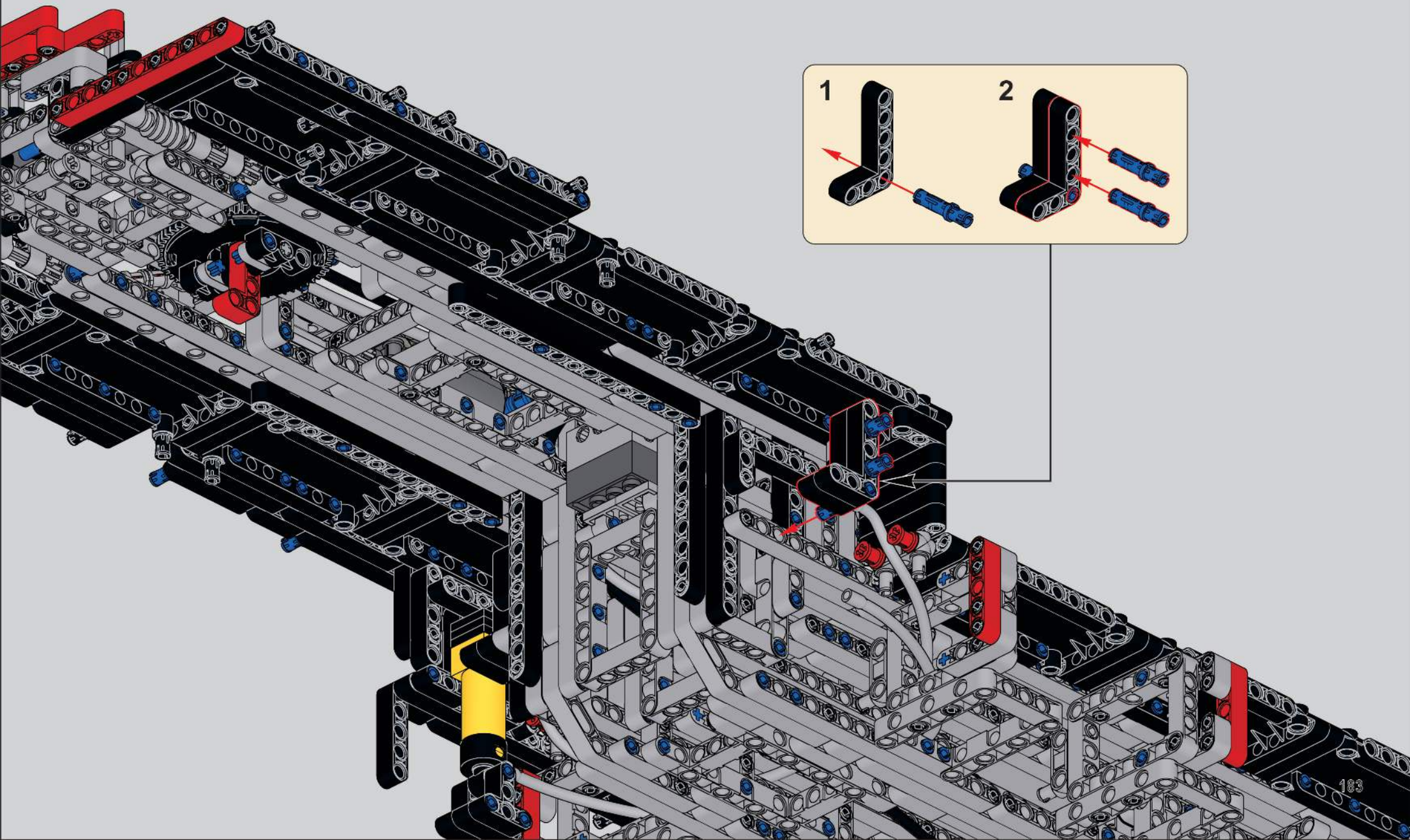

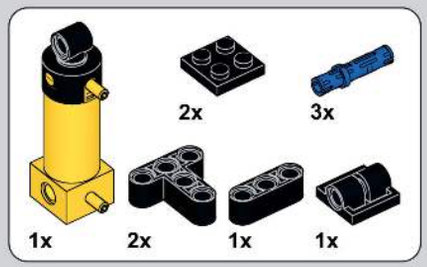

289

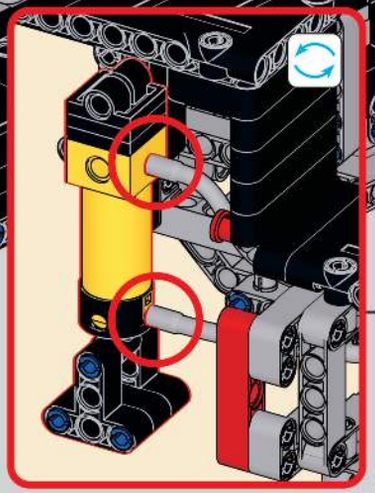

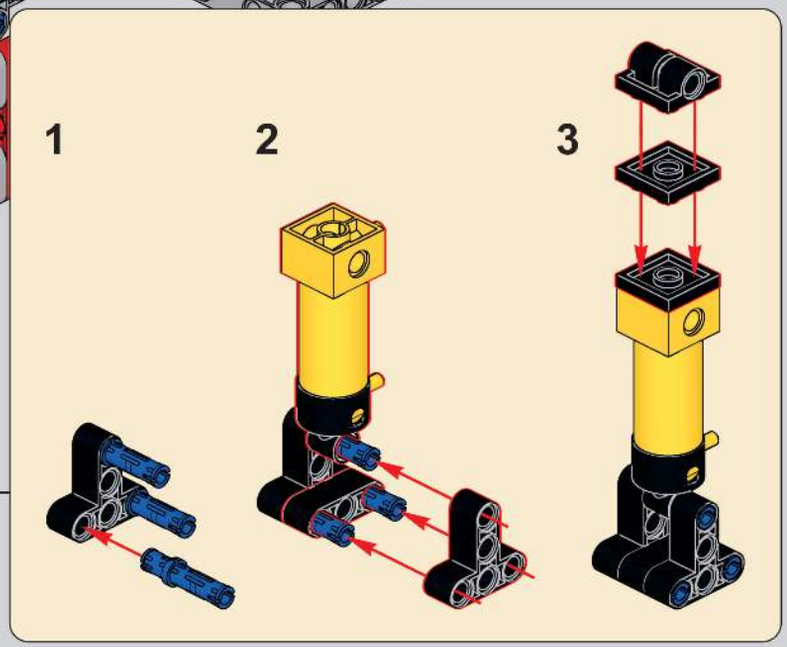

290

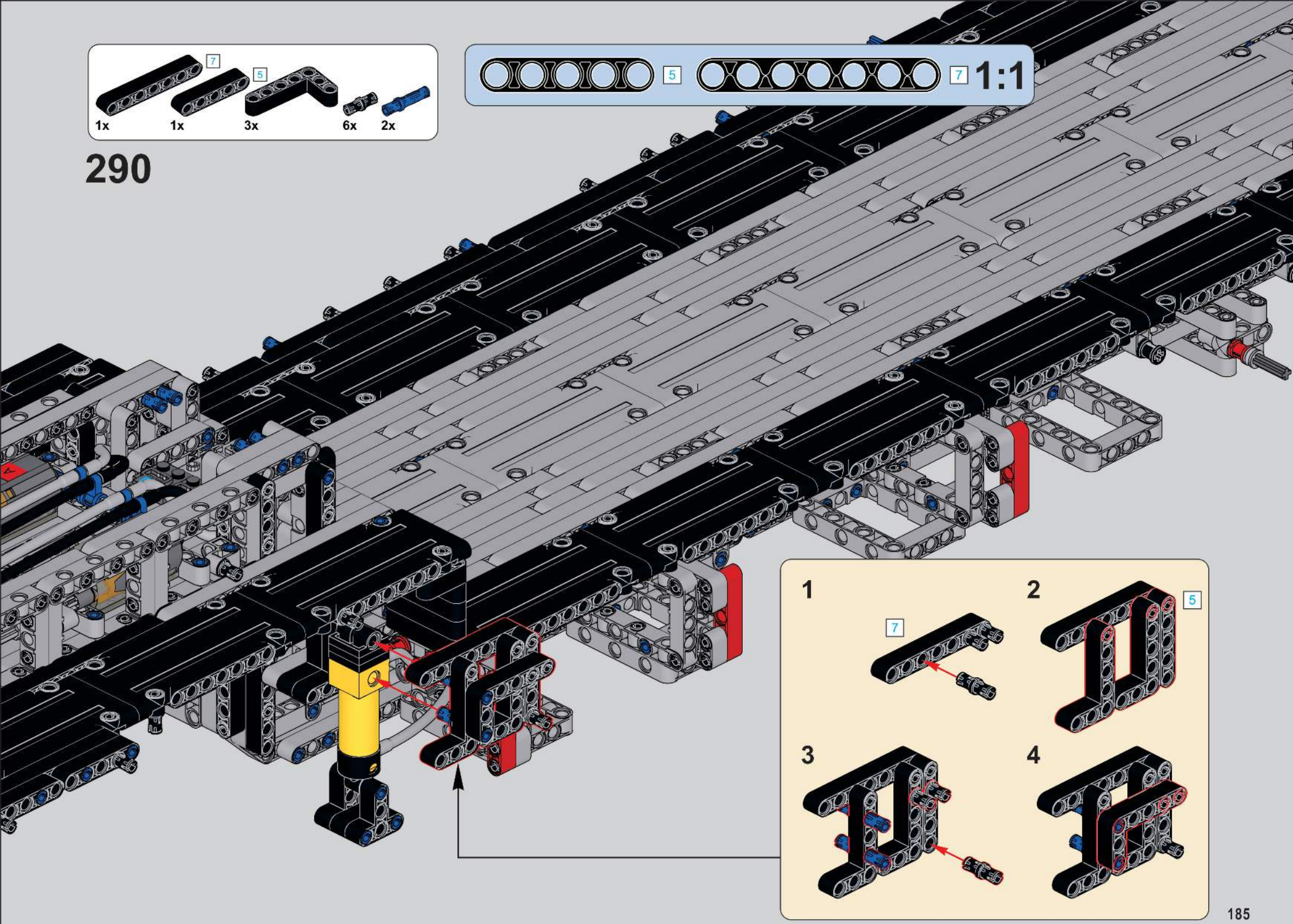

291

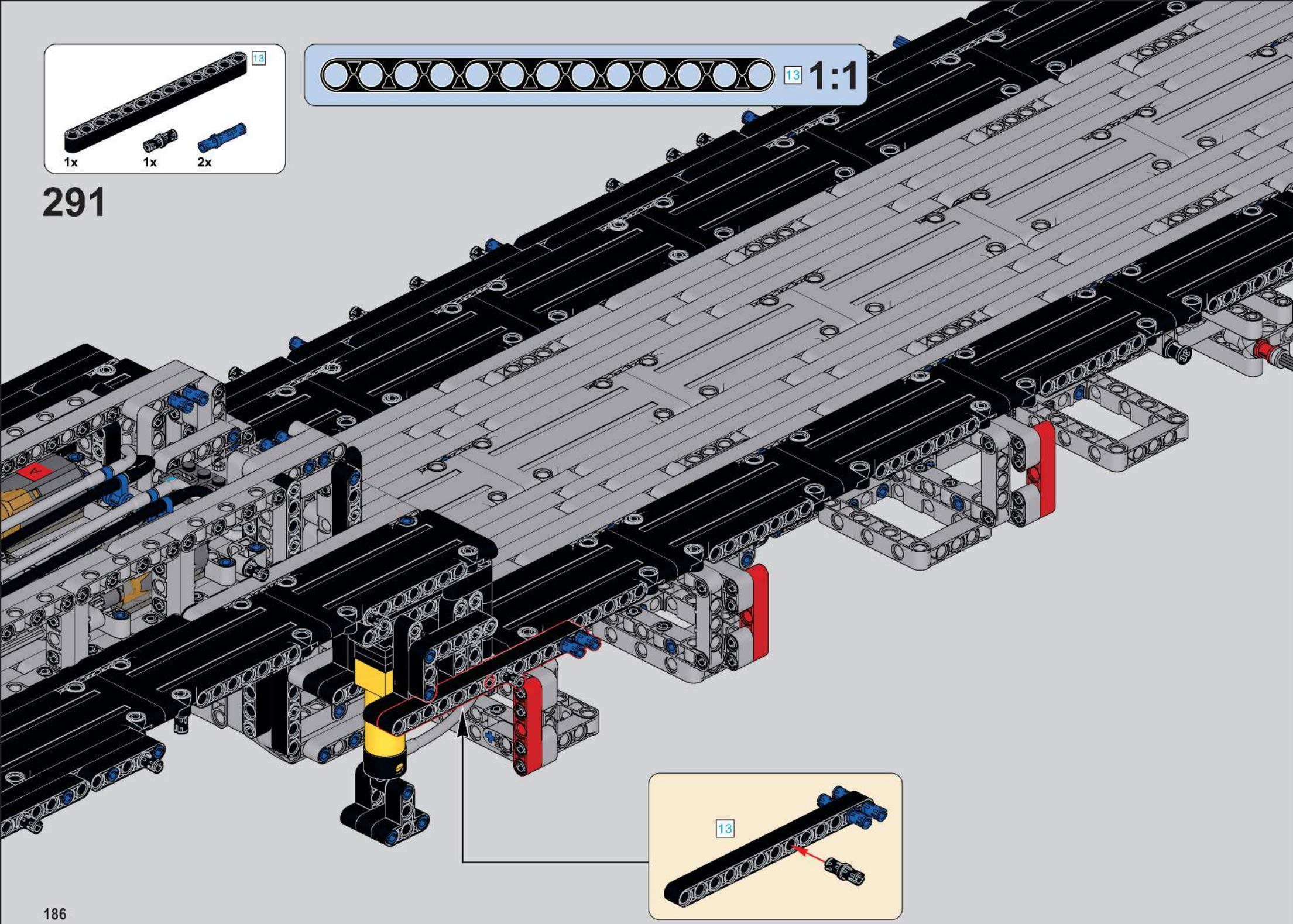

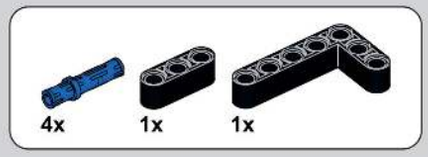

292

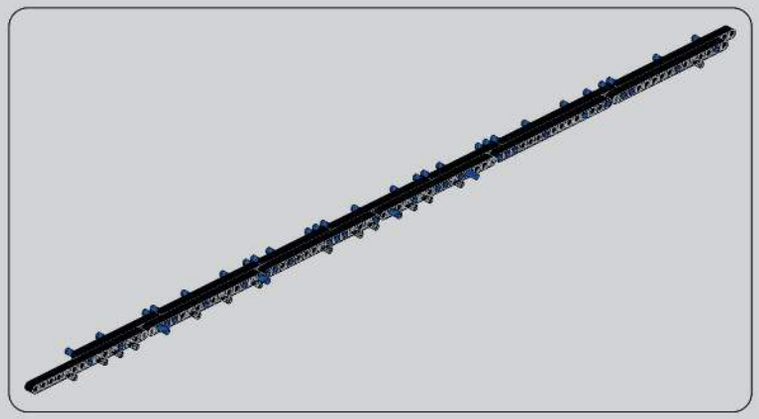

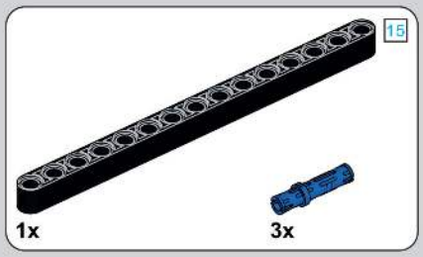

293

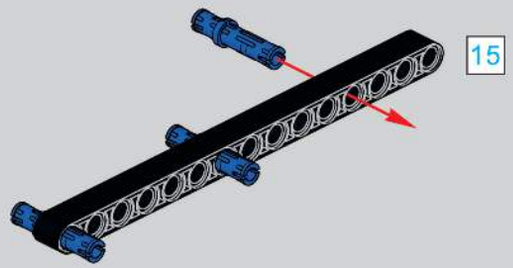

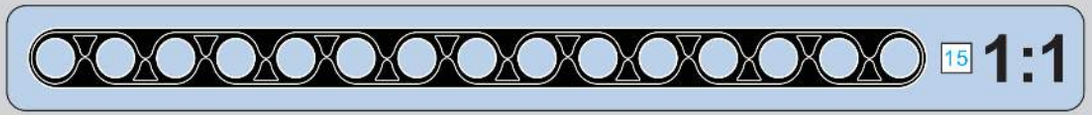

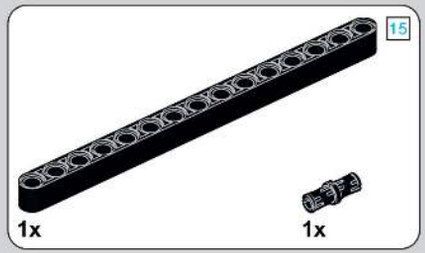

294

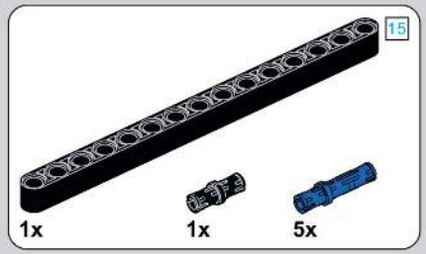

295

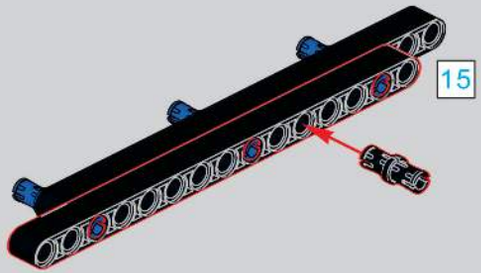

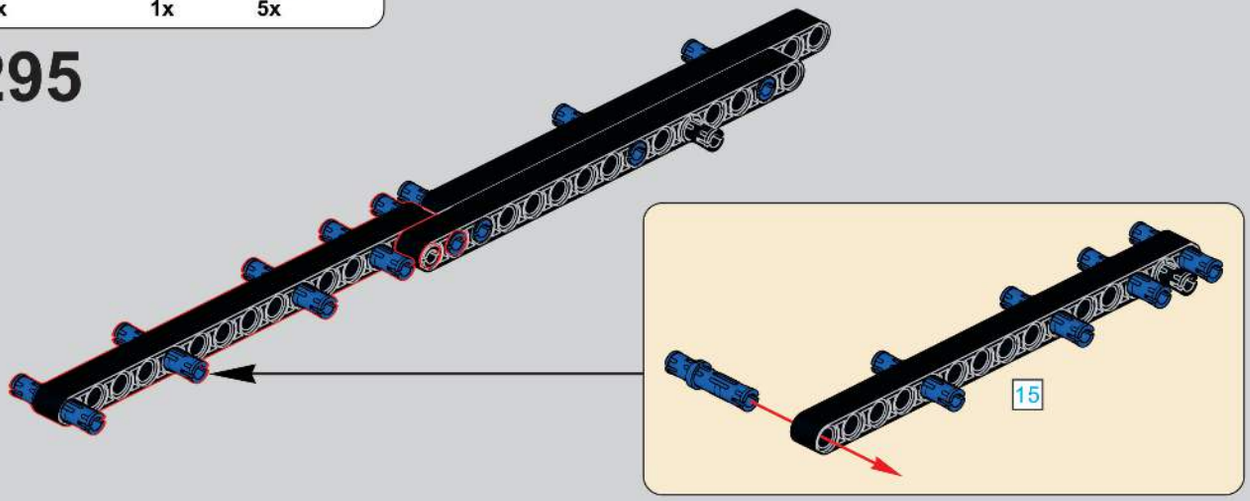

296

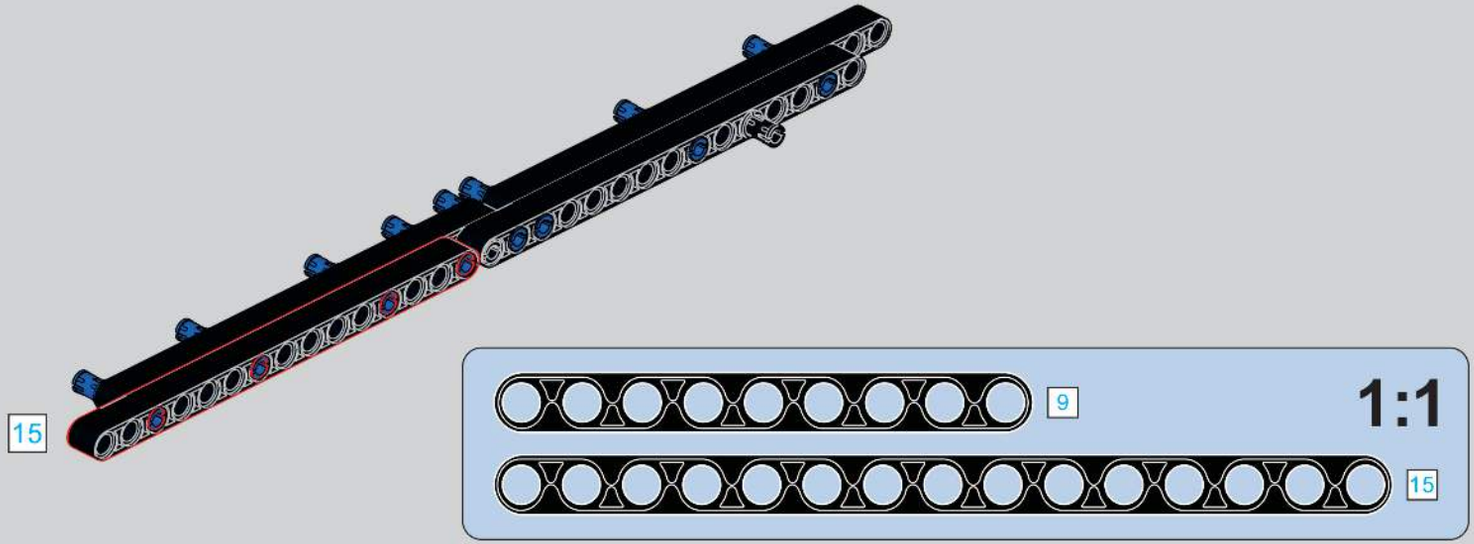

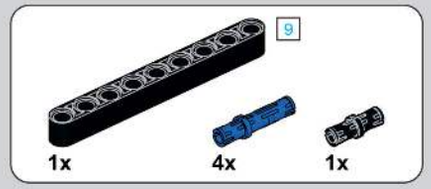

297

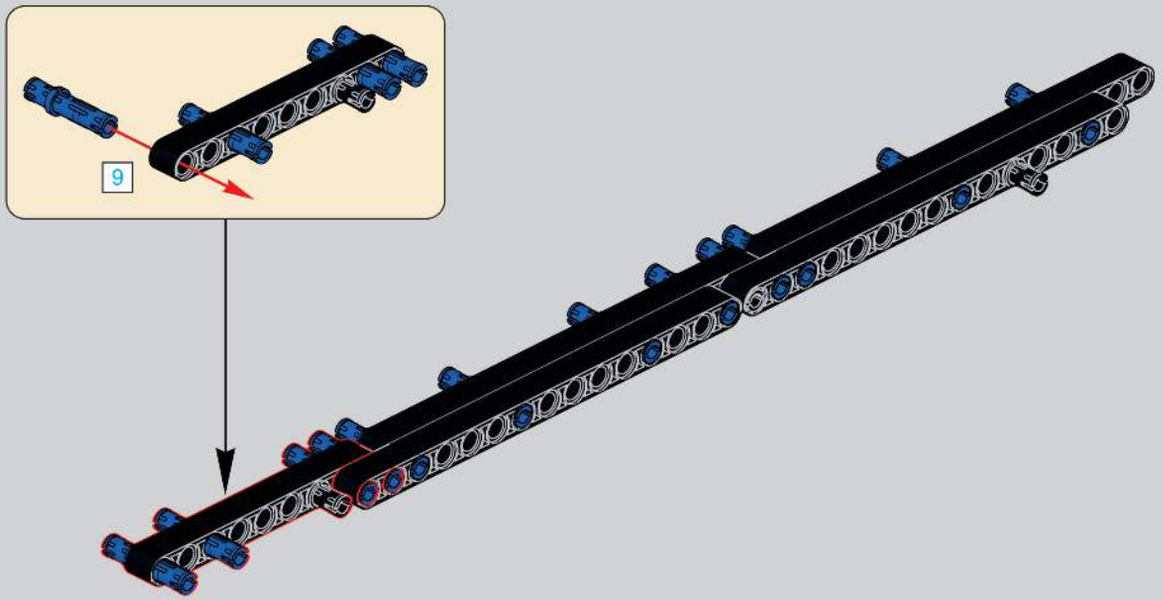

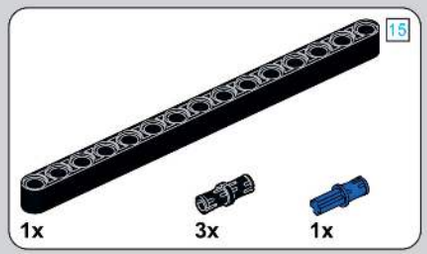

298

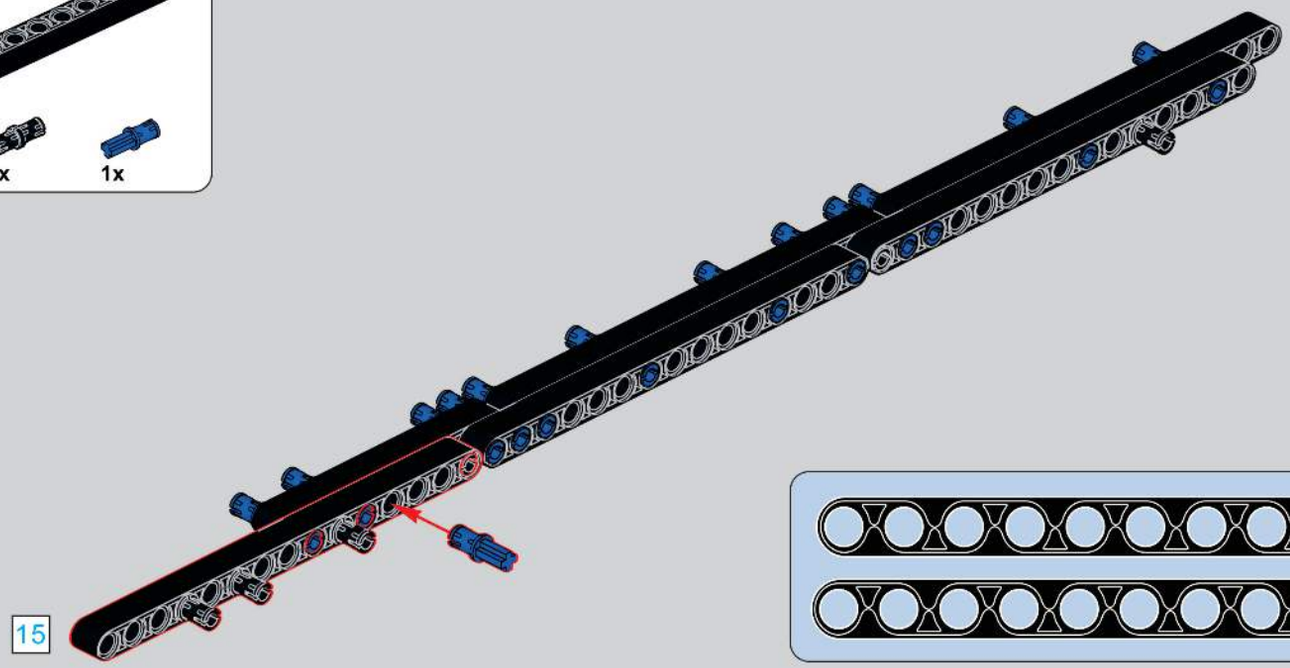

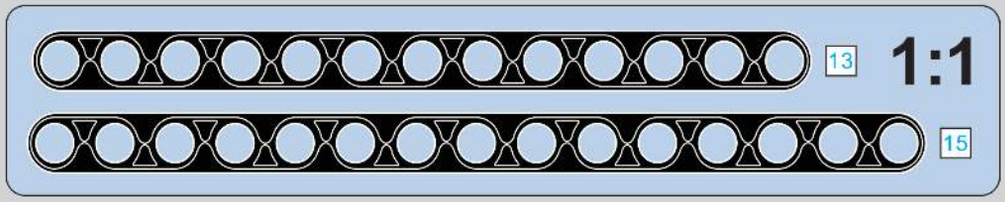

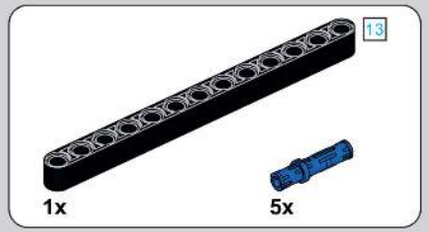

299

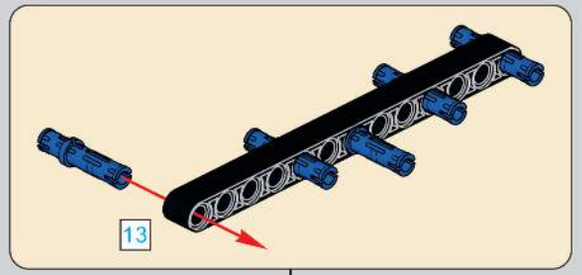

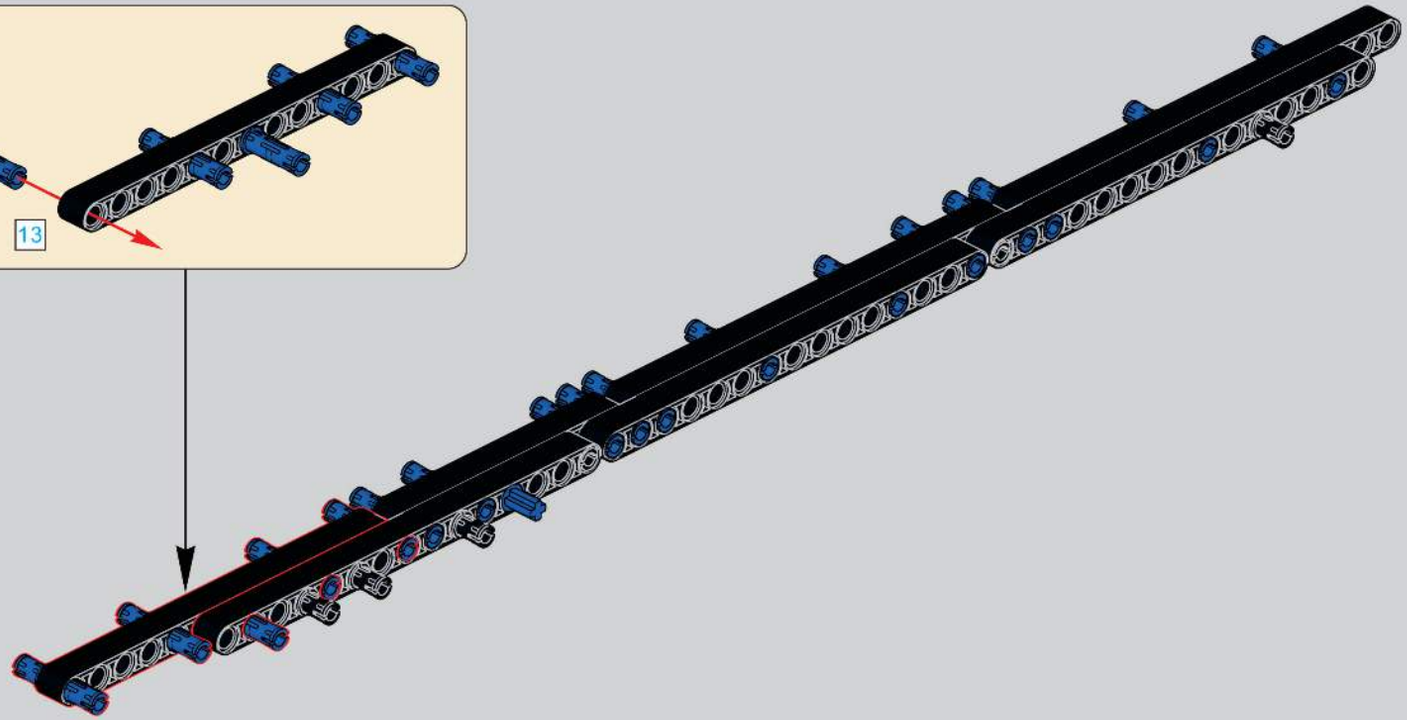

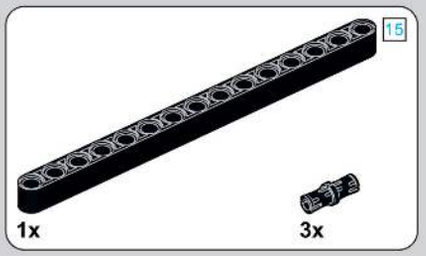

300

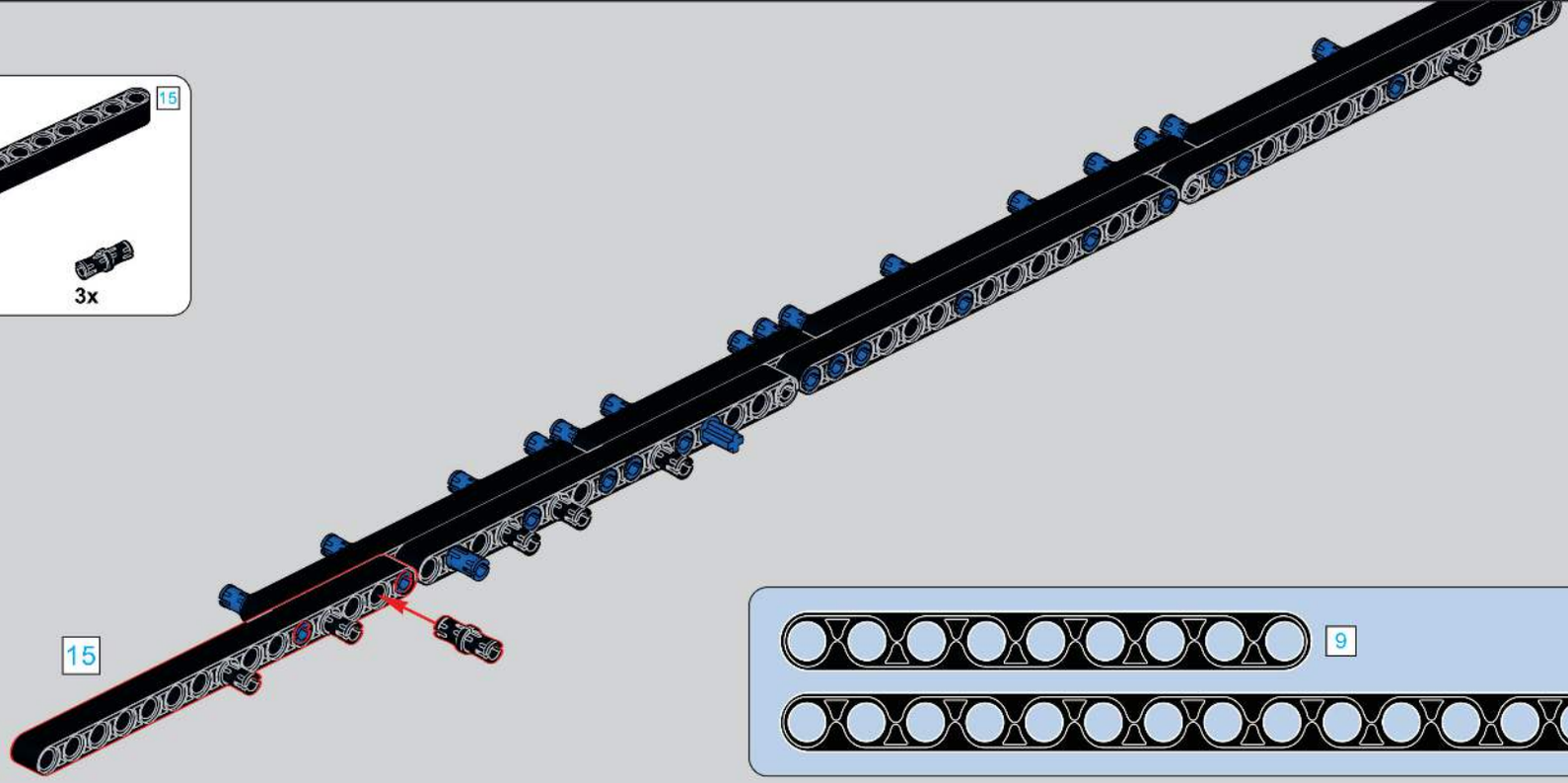

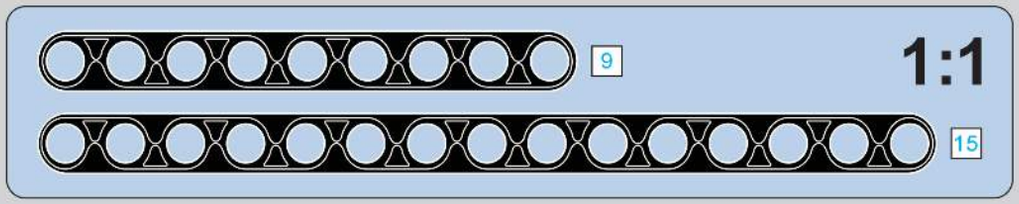

301

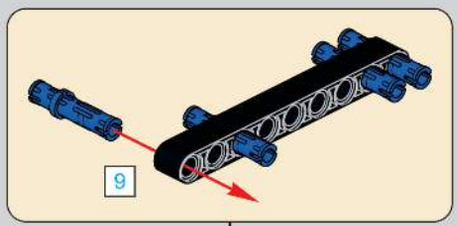

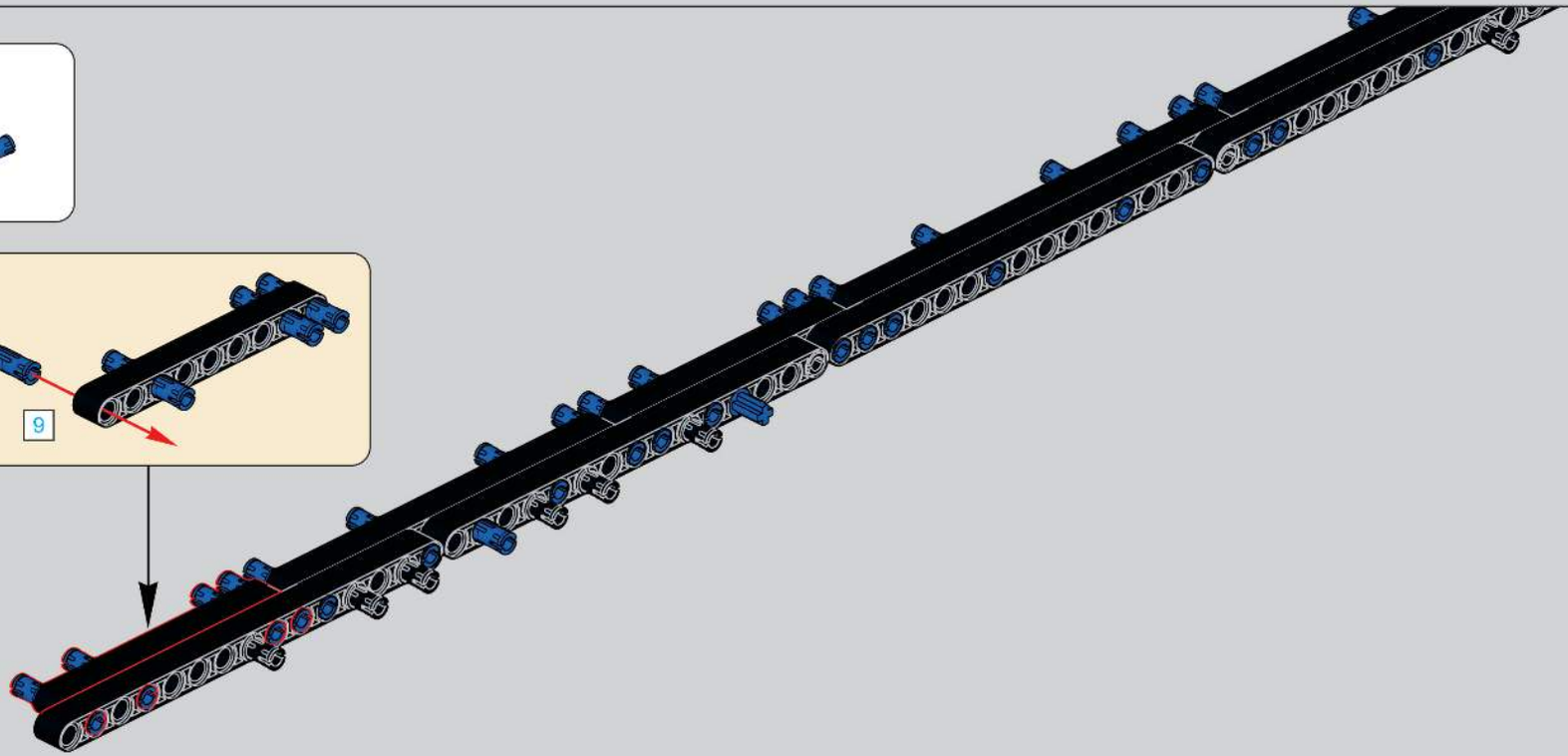

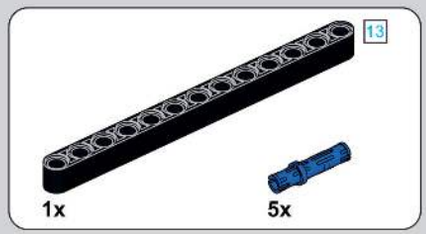

302

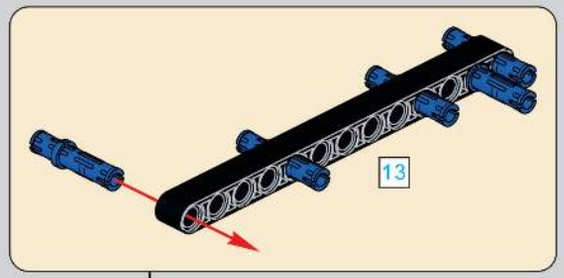

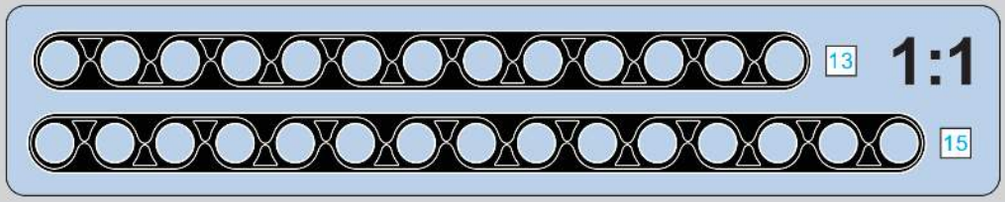

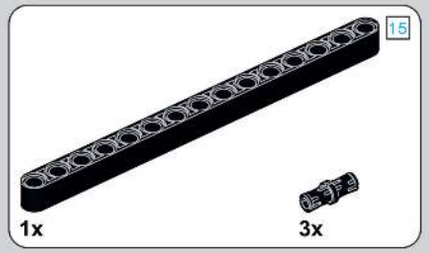

303

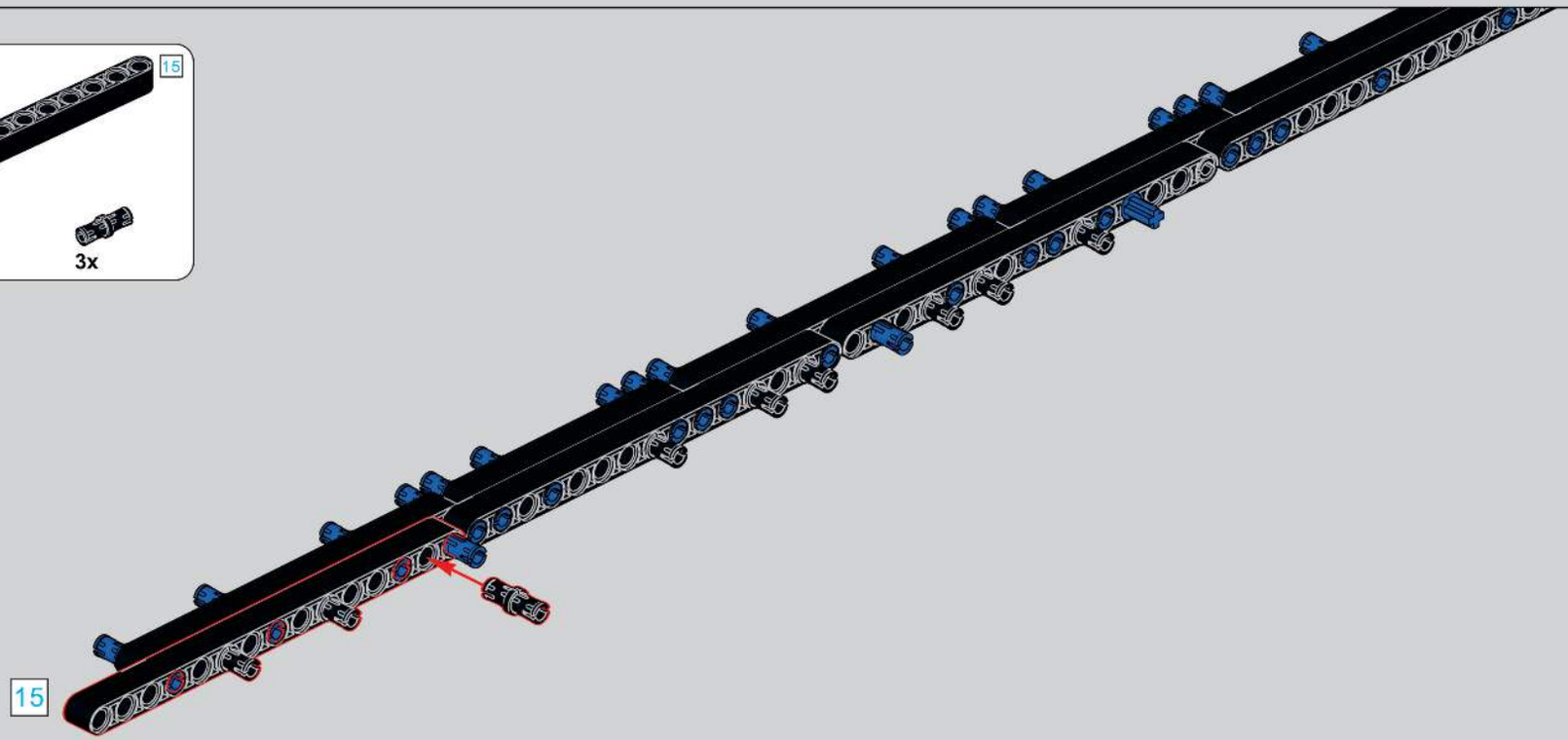

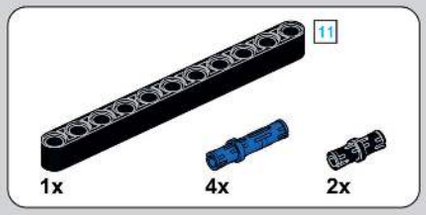

304

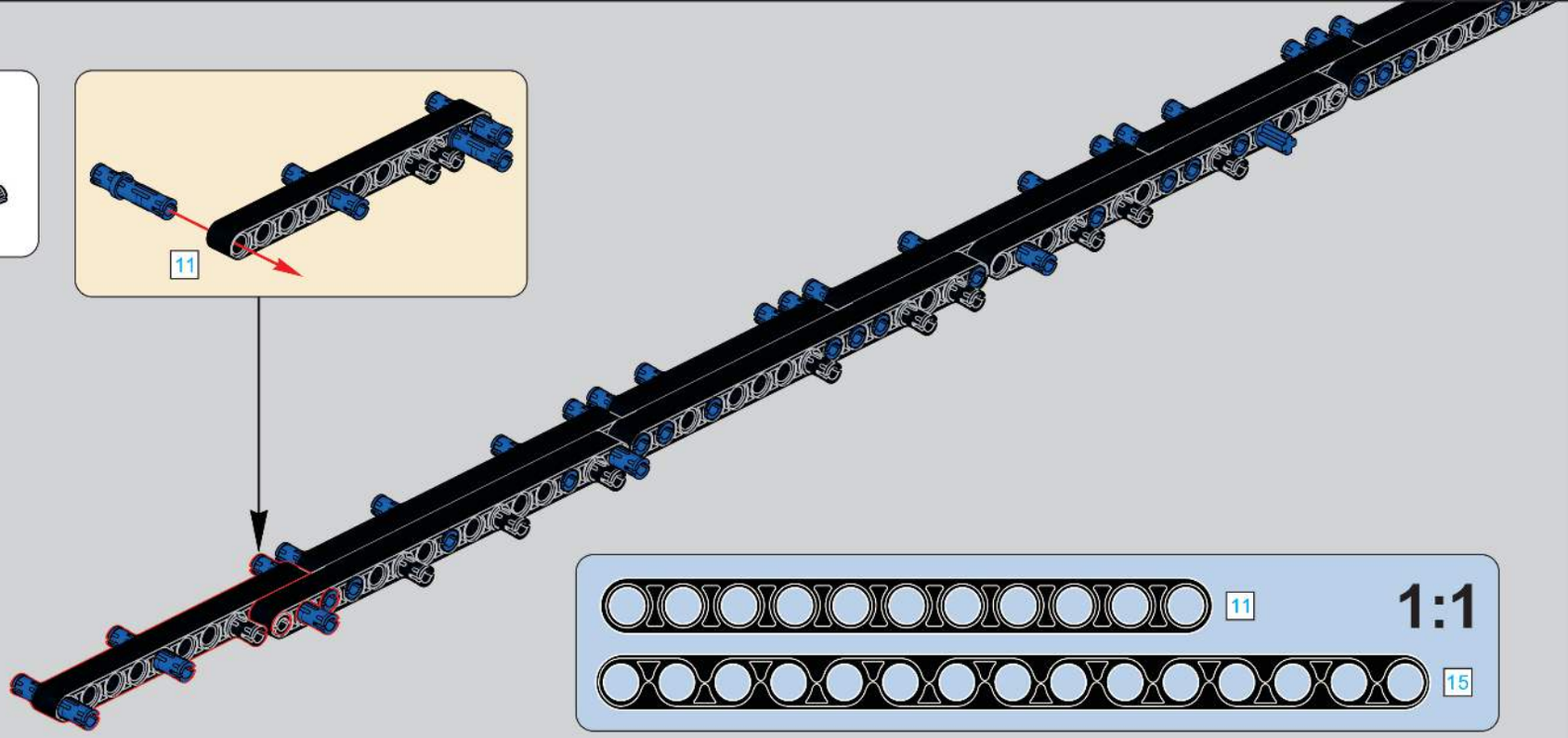

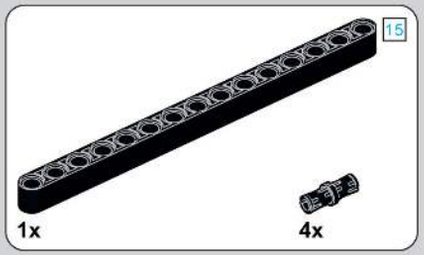

305

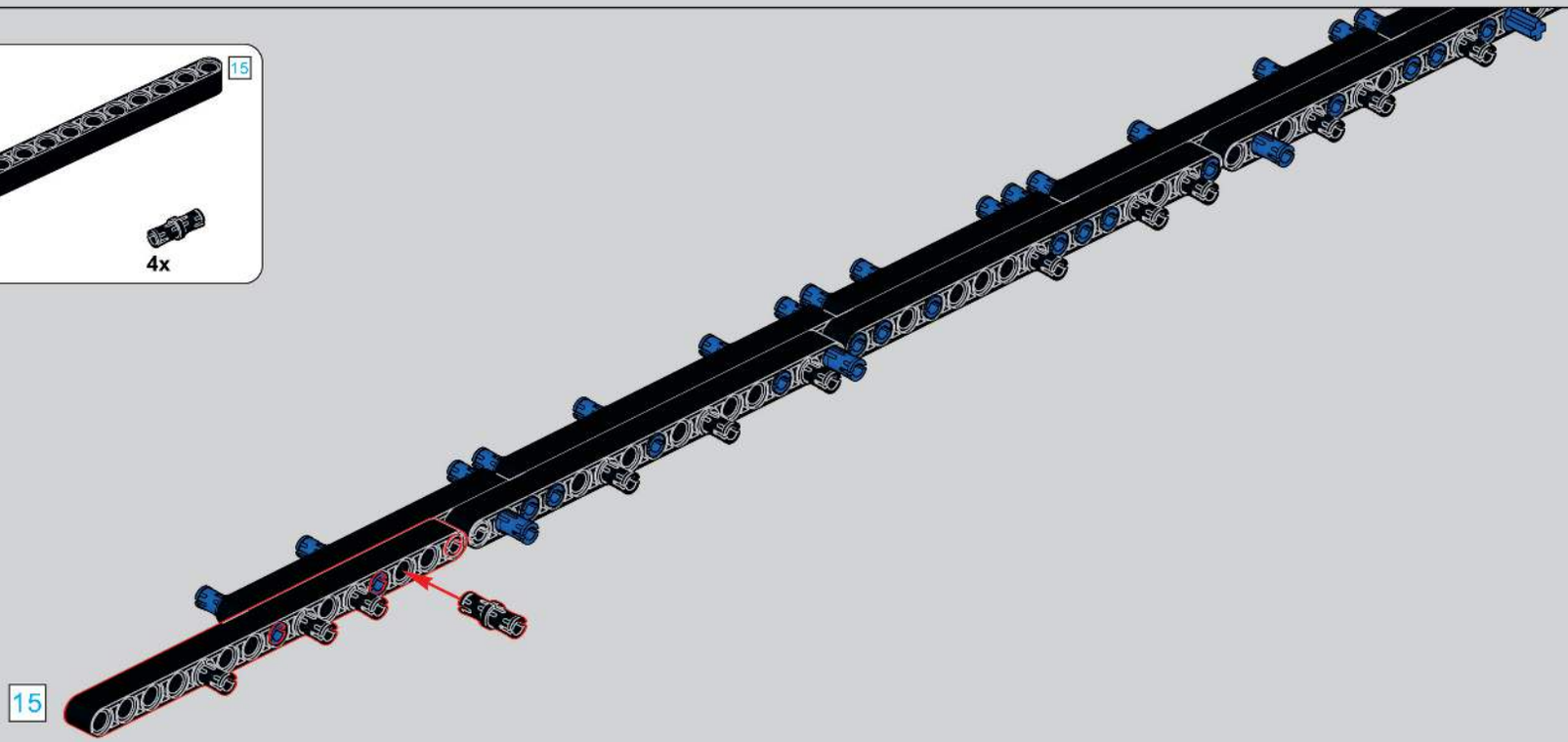

306

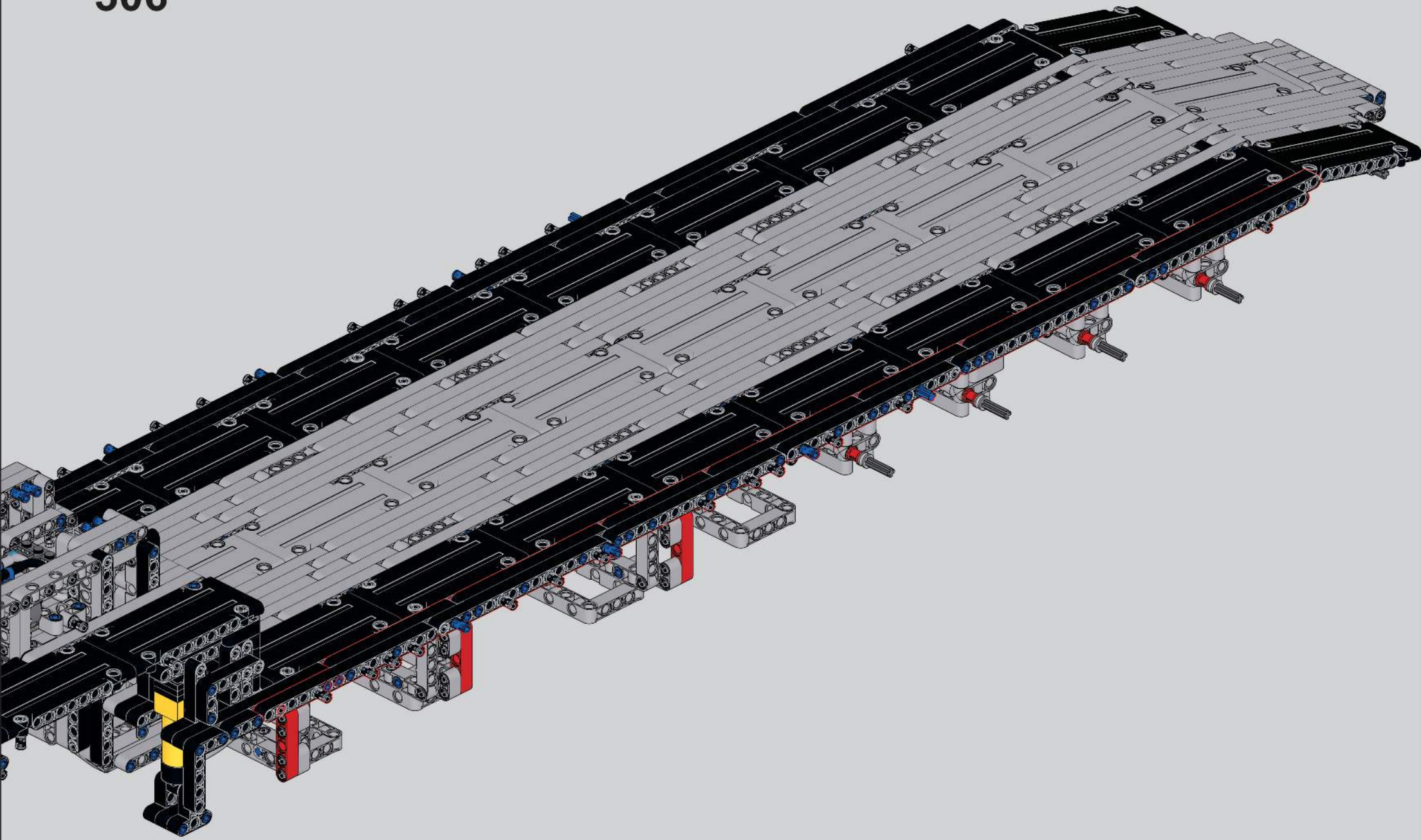

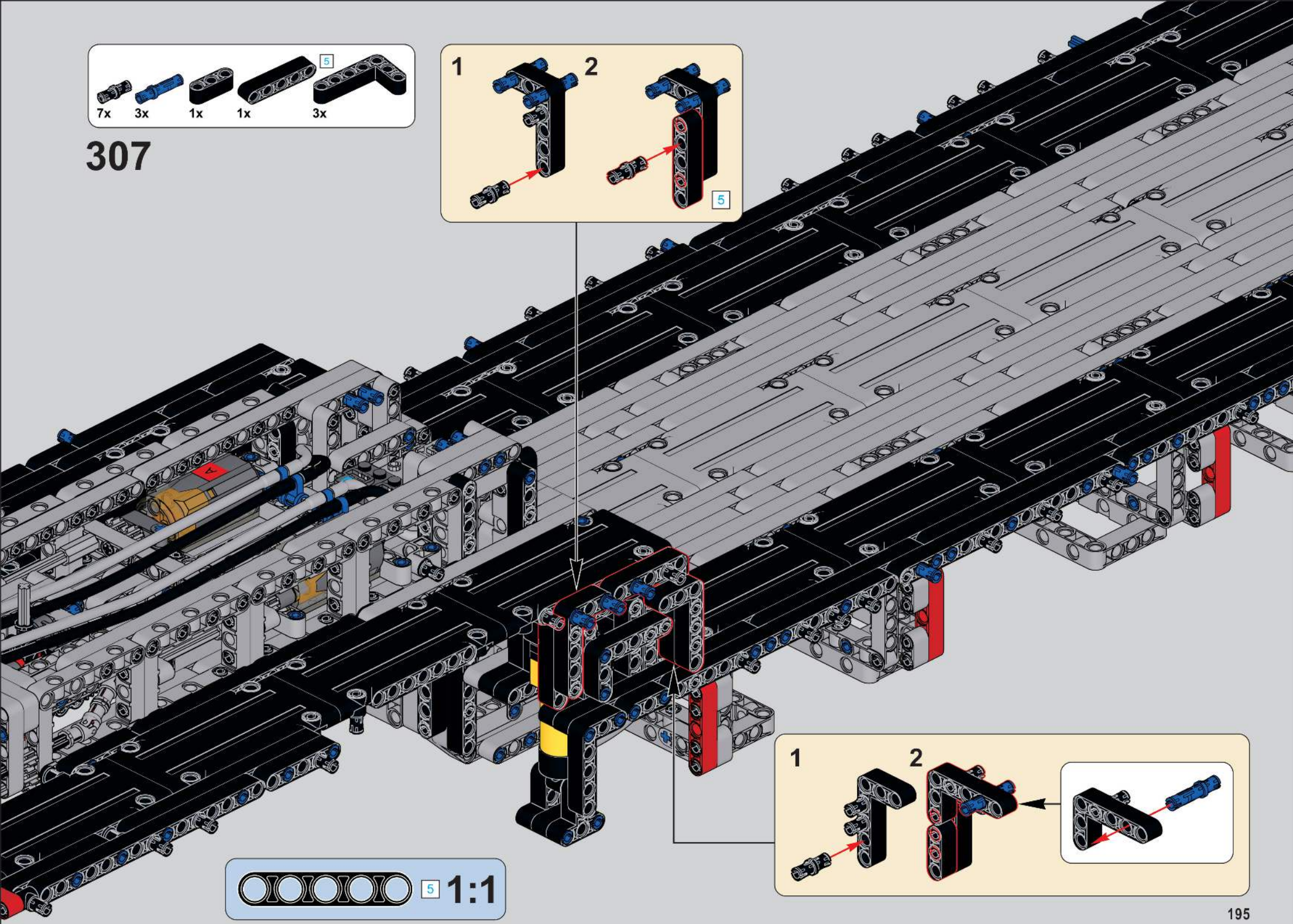
7x
3x
1x
1x
5
3x
307
1
2
5
1
2
5
1:1

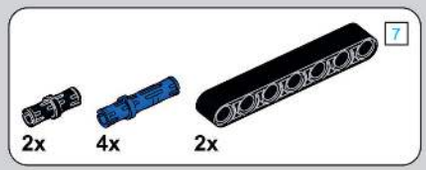

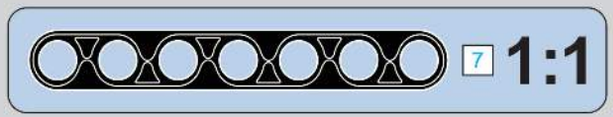

308

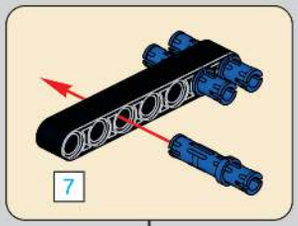

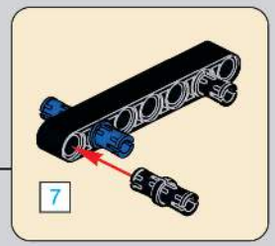

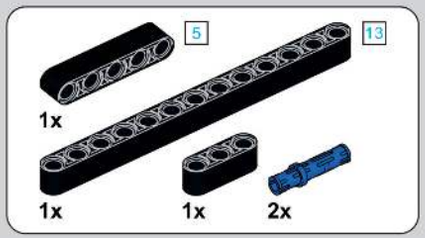

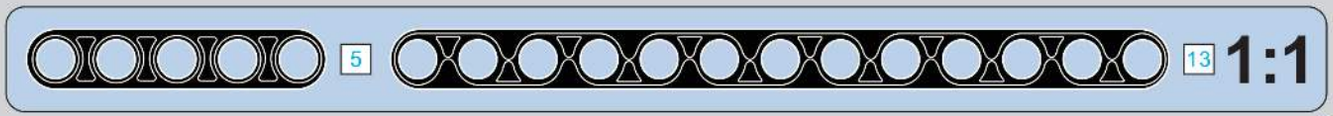

309

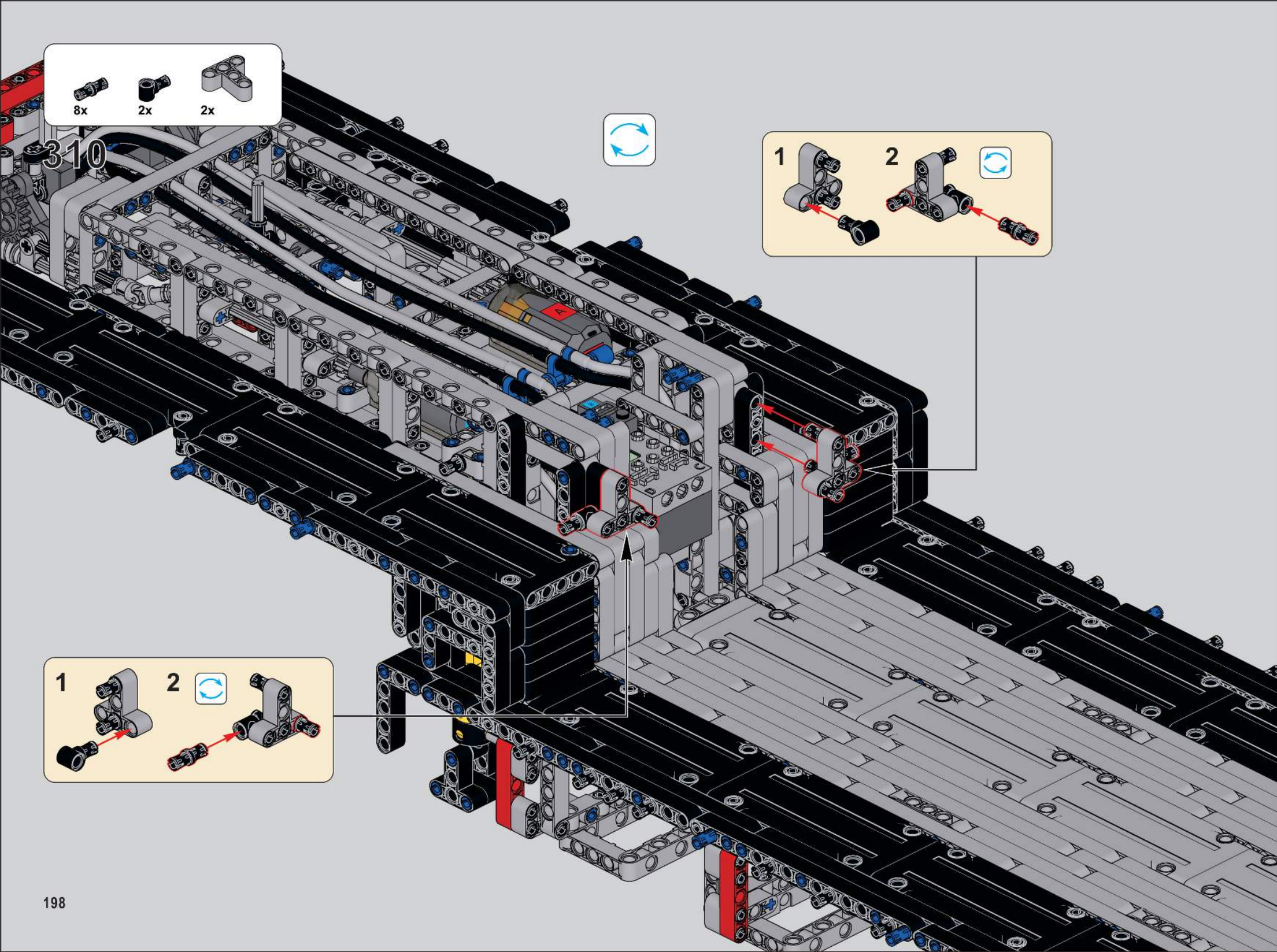
8x
2x
2x
310
1
2
1
2

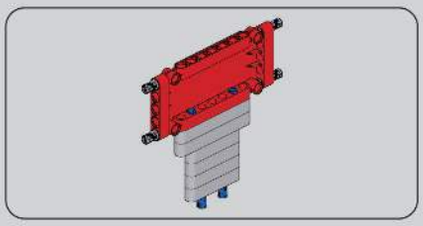

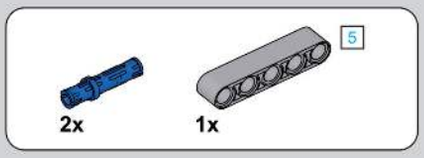

311

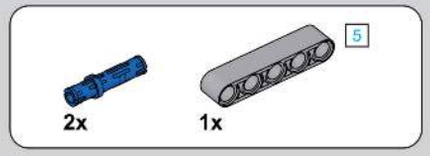

312

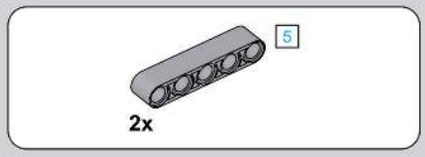

313

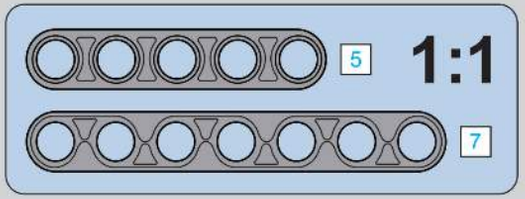

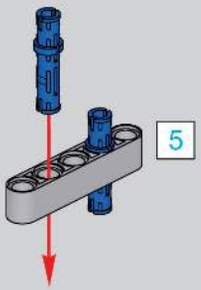

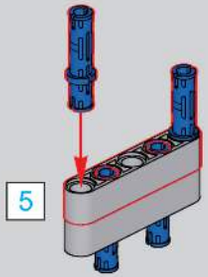

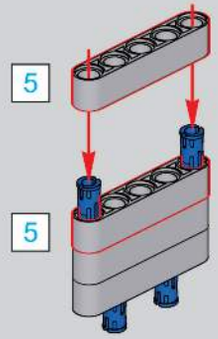

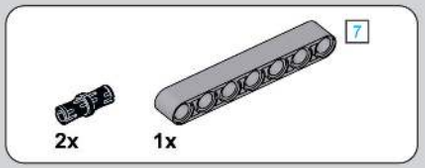

314

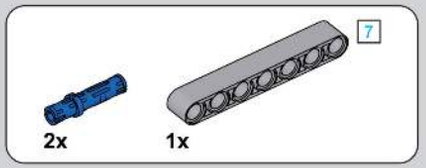

315

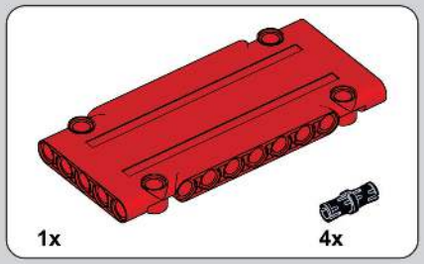

316

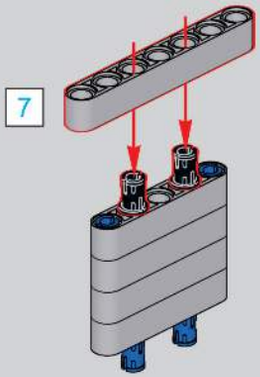

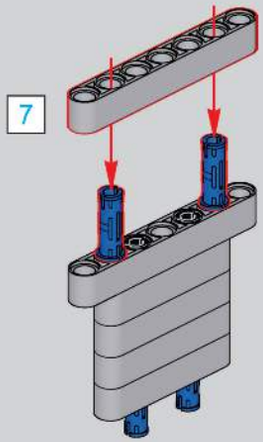

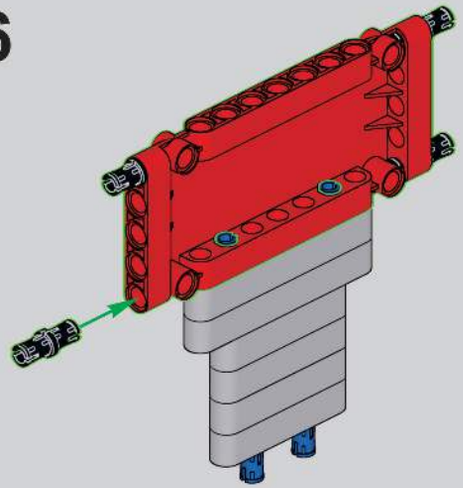

317

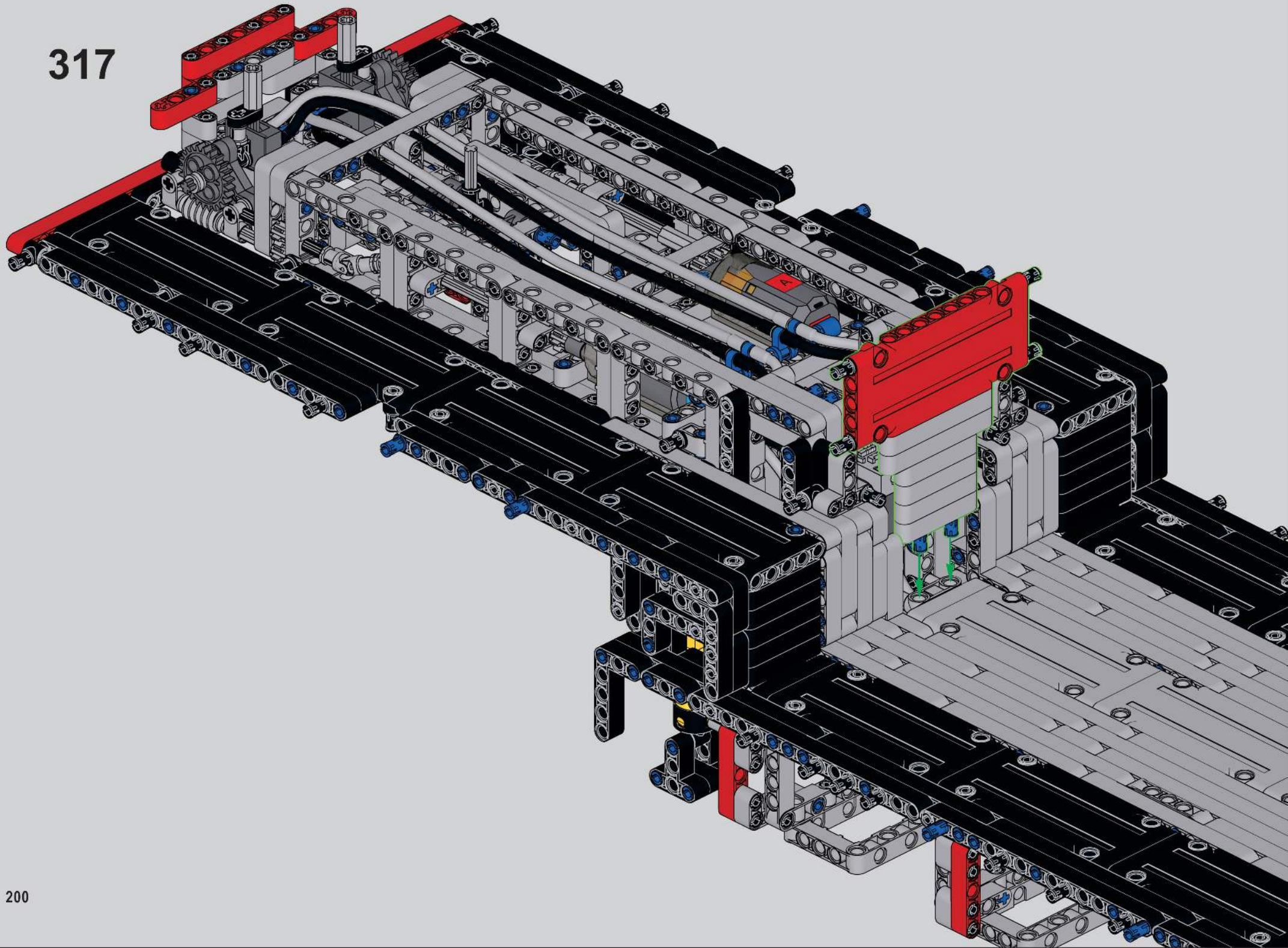

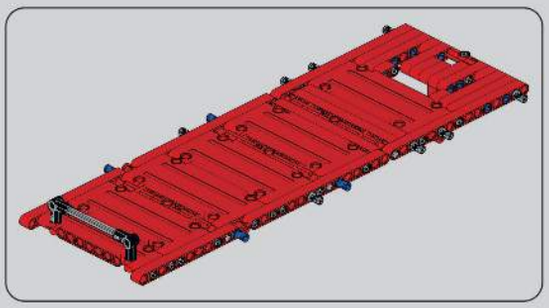

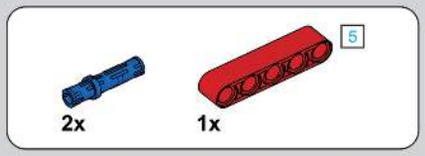

318

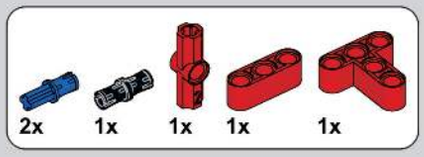

319

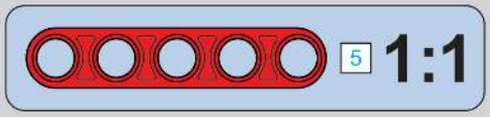

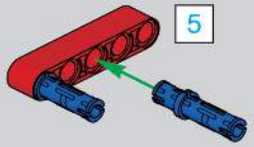

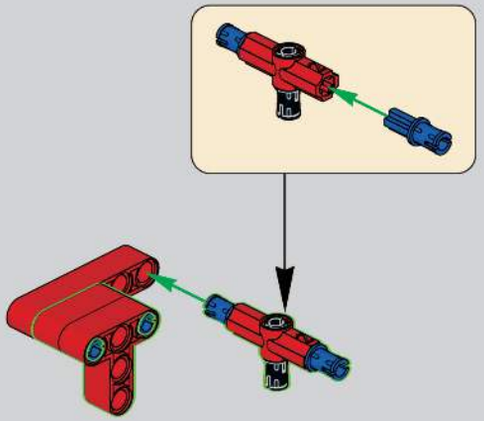

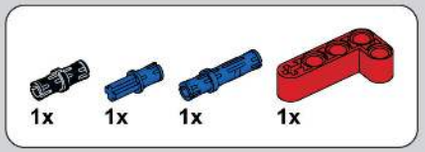

320

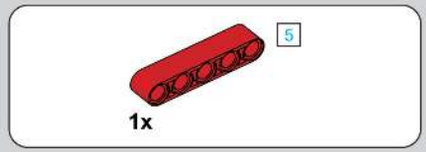

321

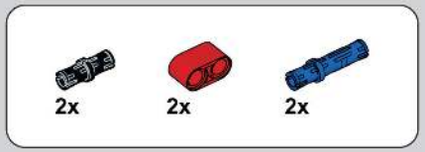

322

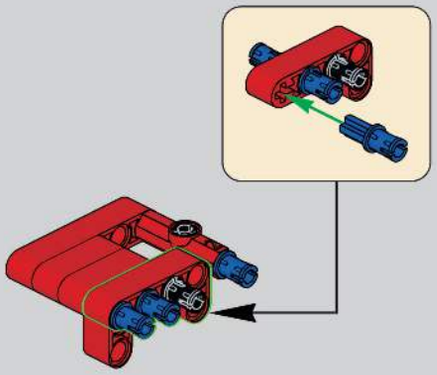

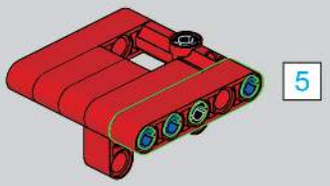

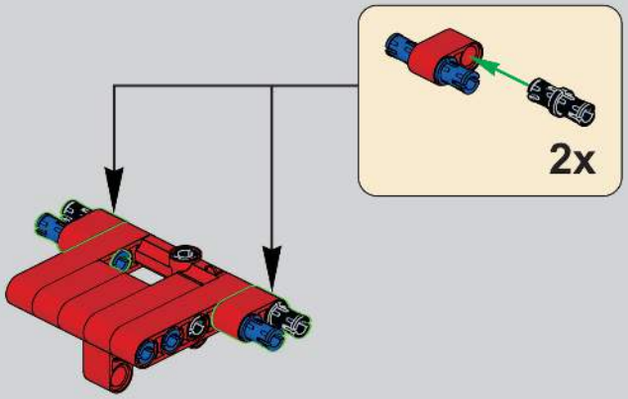

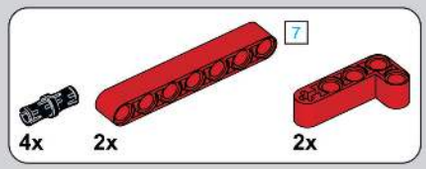

323

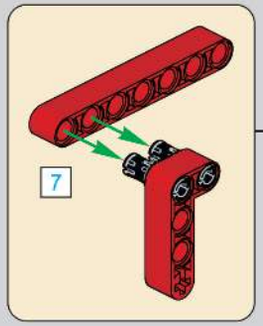

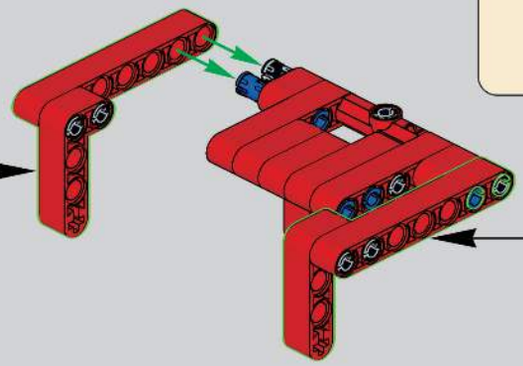

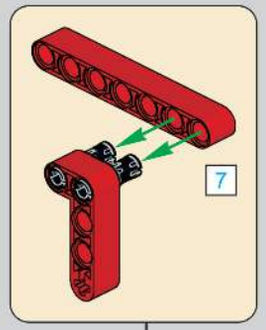

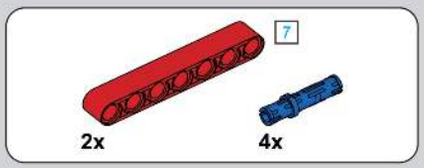

324

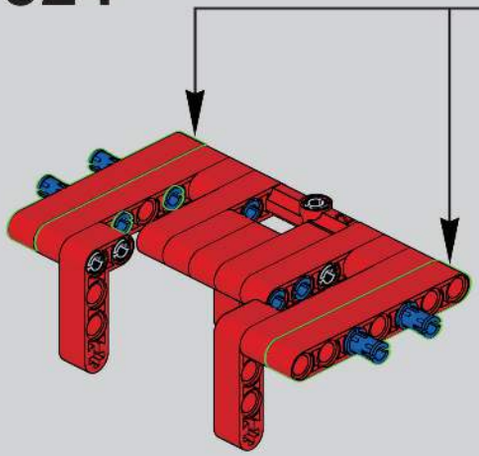

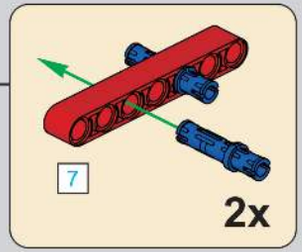

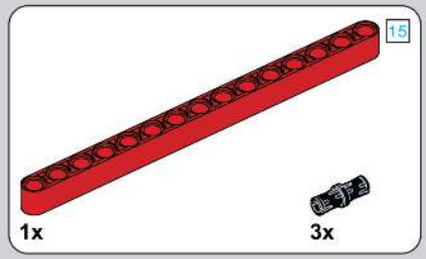

325

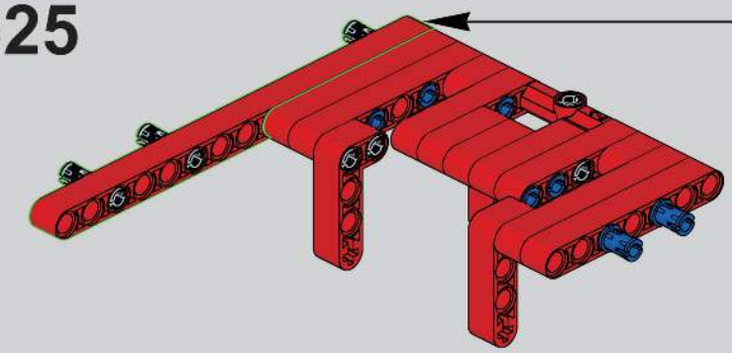

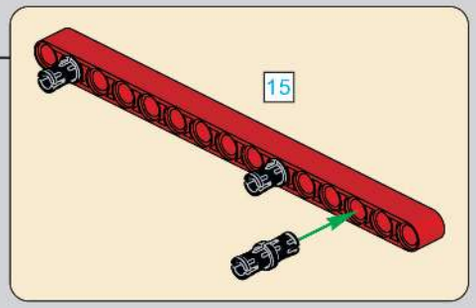

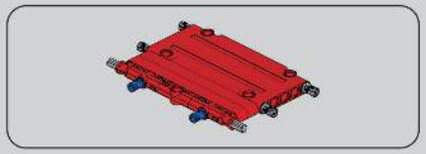

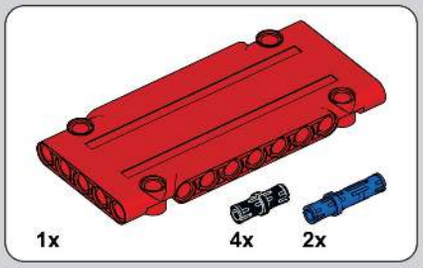

326

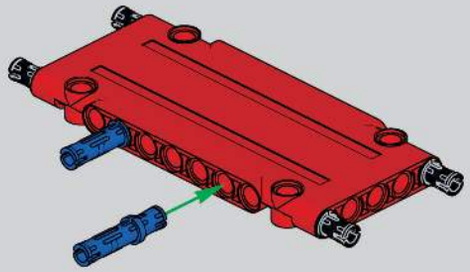

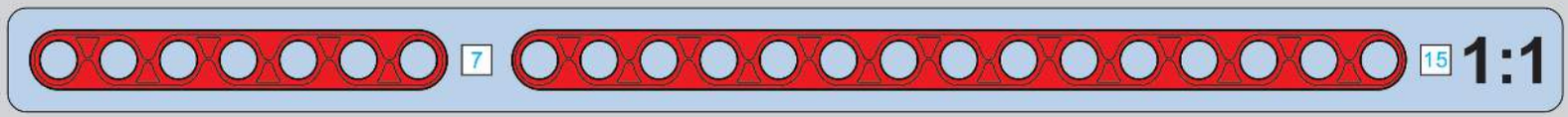

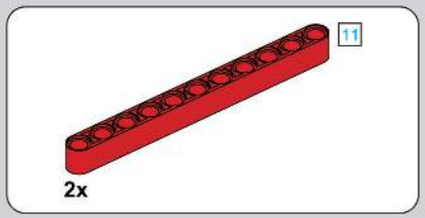

327

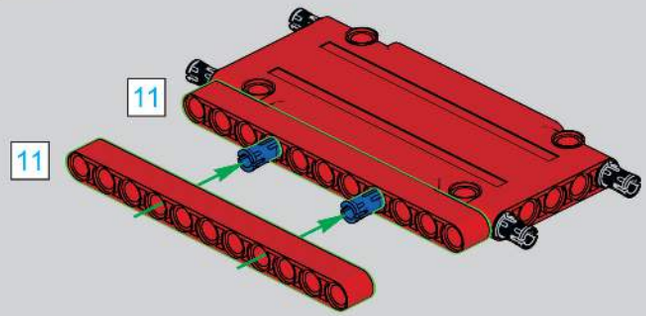

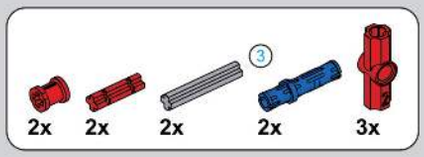

328

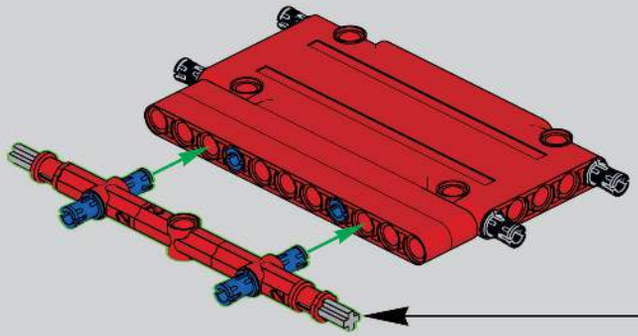

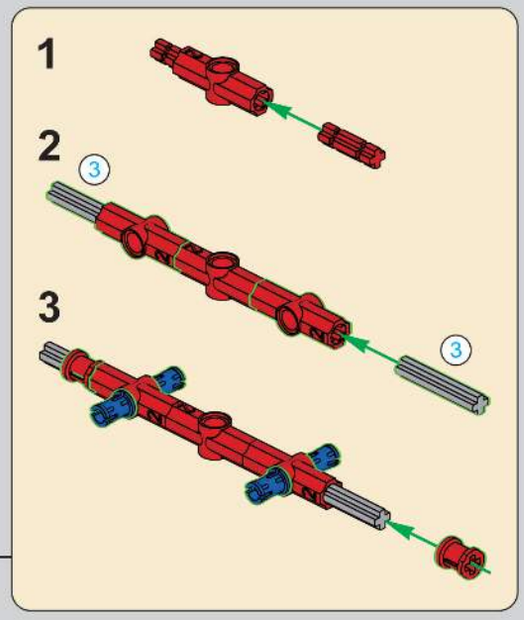

329

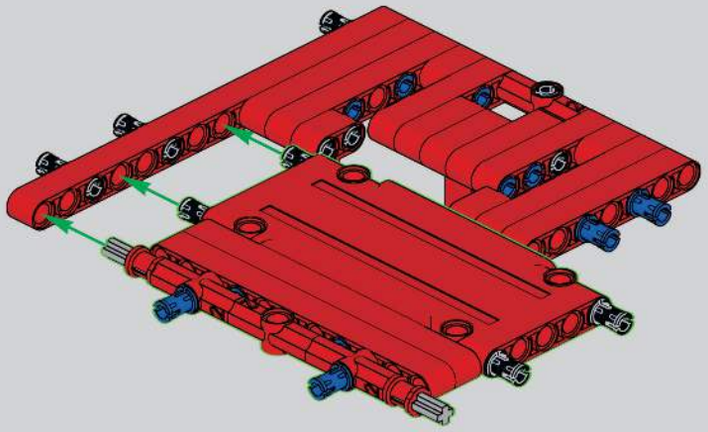

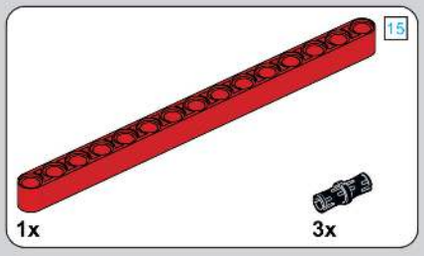

330

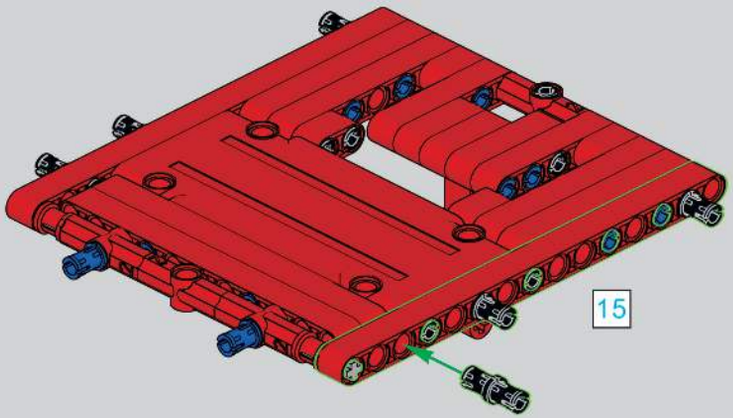

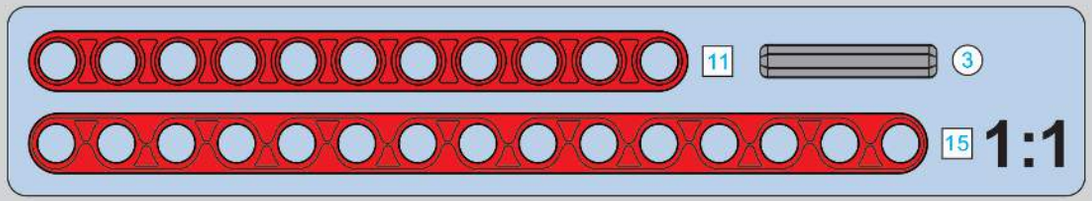

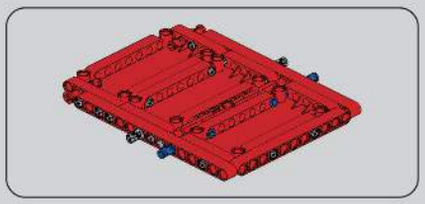

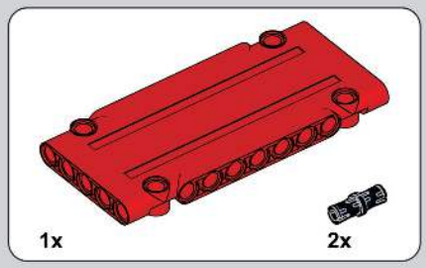

331

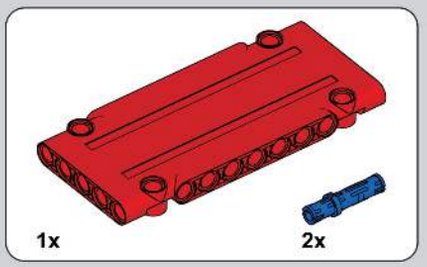

332

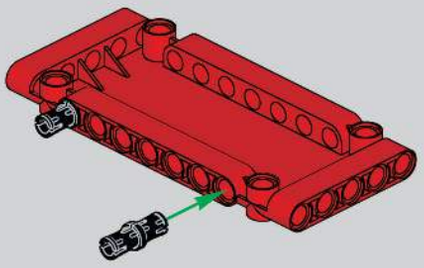

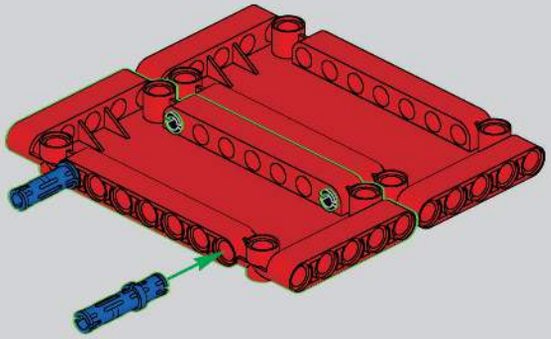

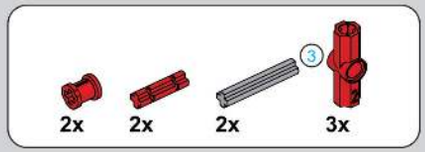

333

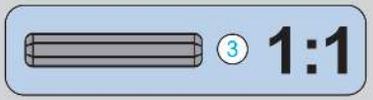

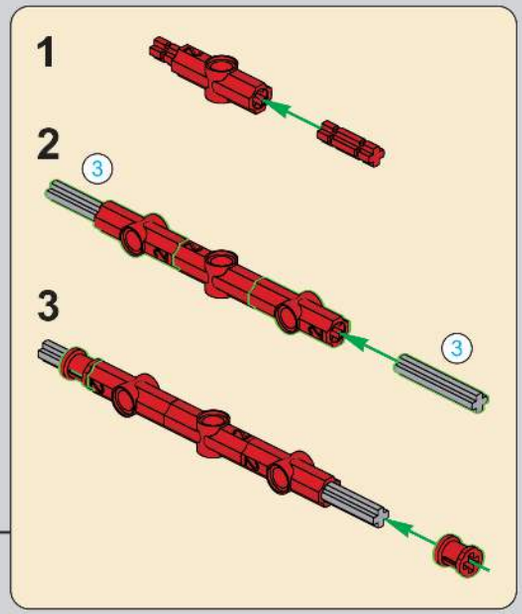

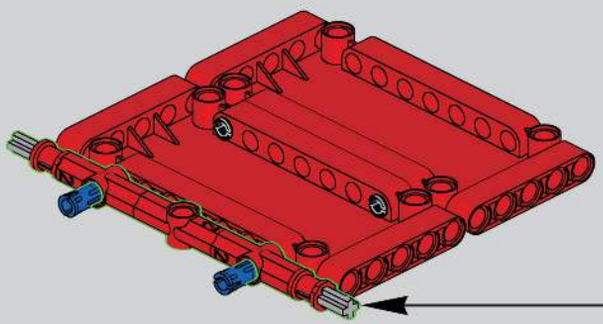

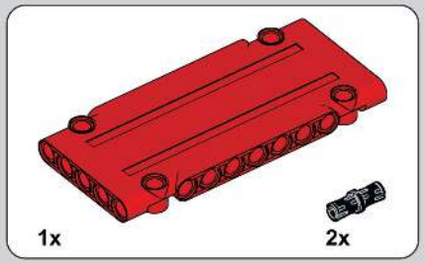

334

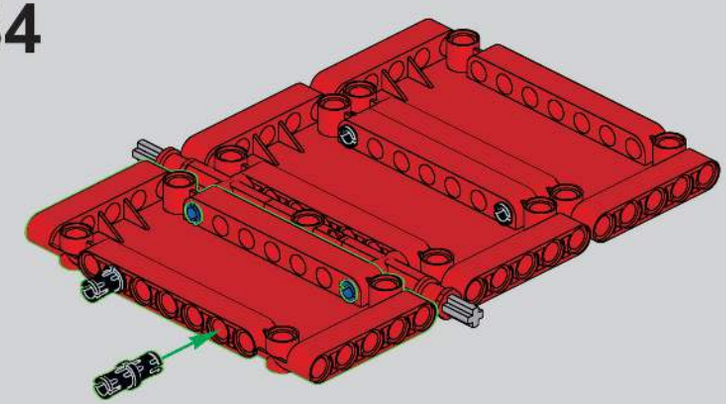

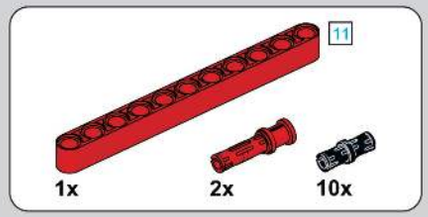

335

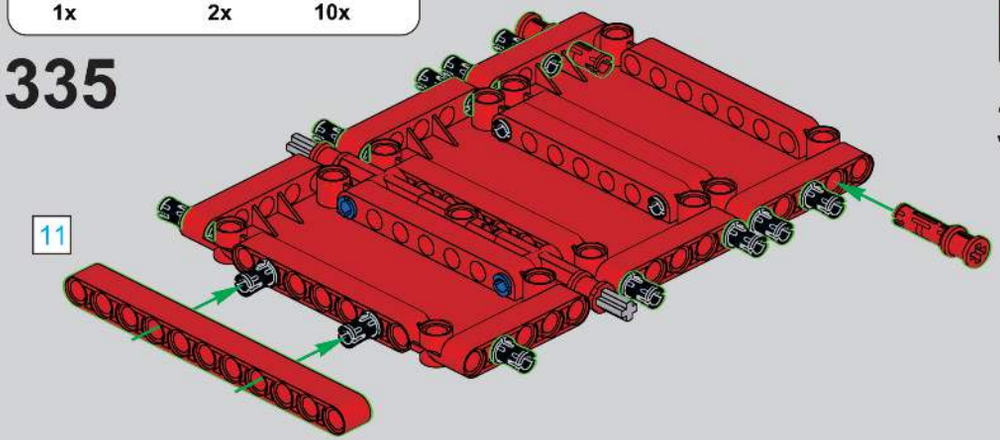

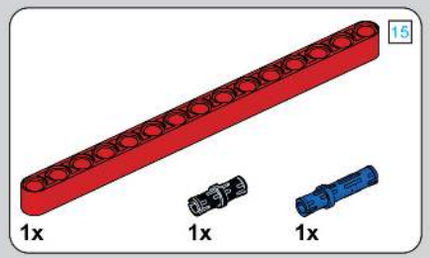

336

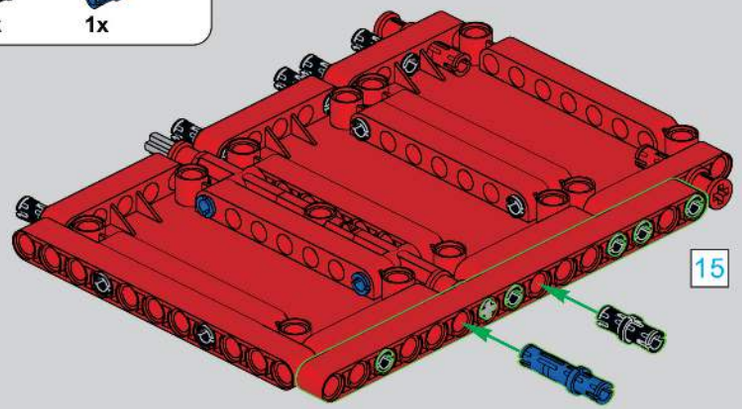

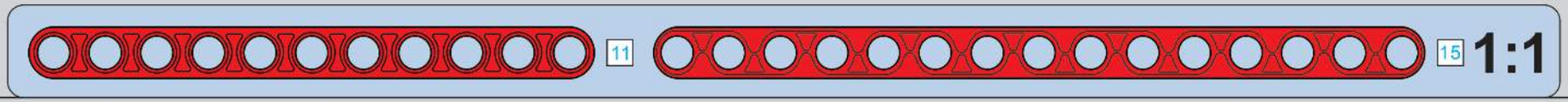

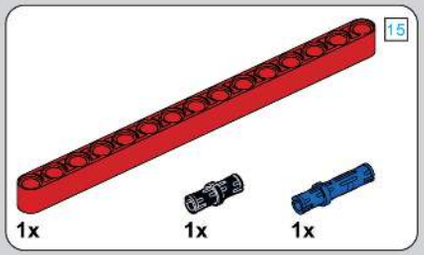

337

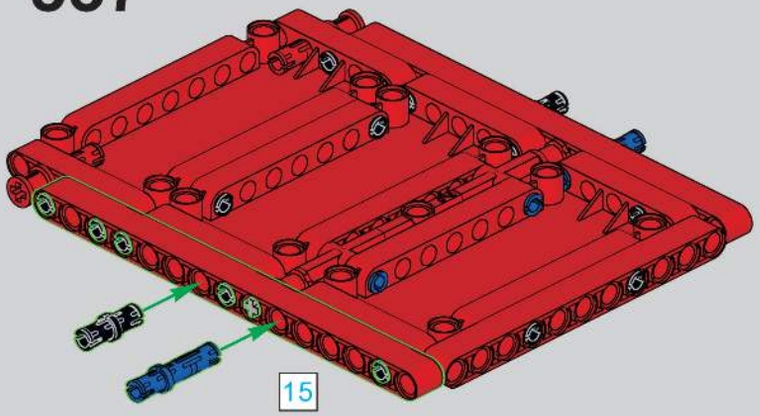

338

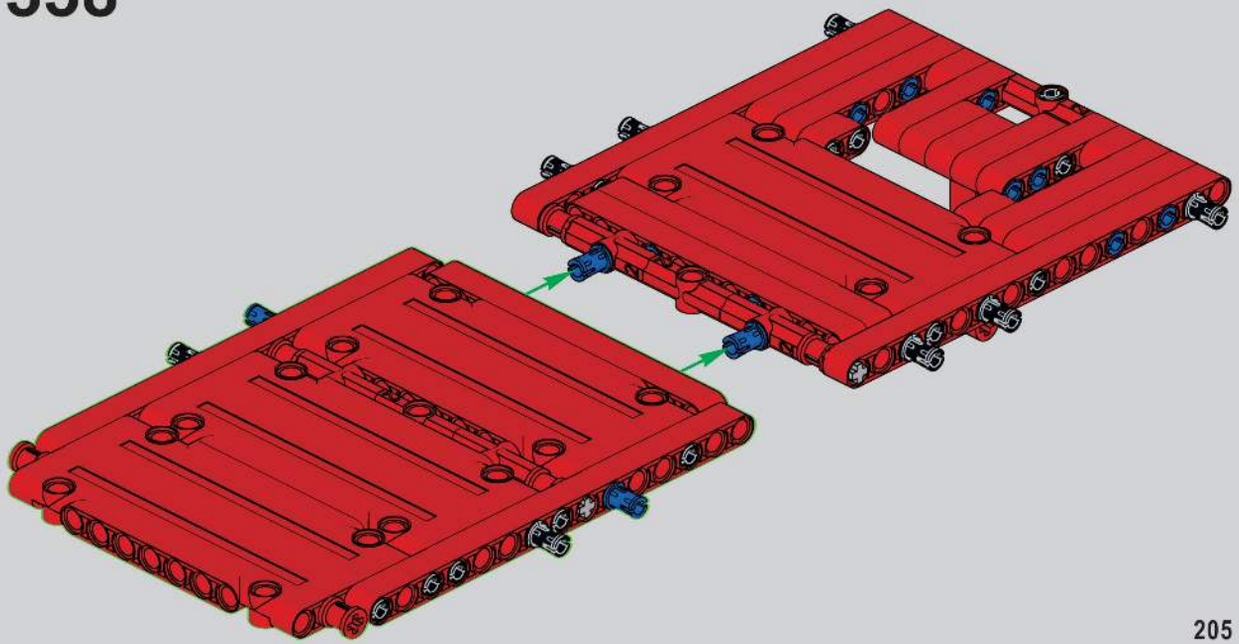

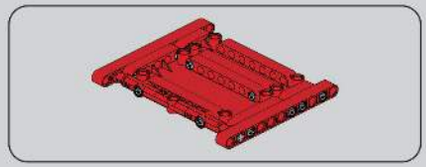

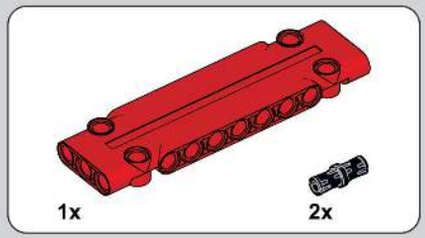

339

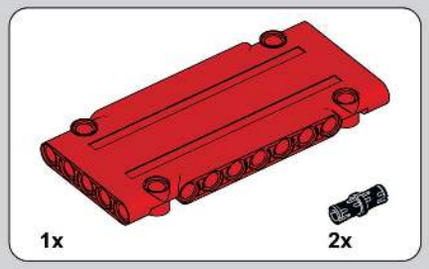

340

341

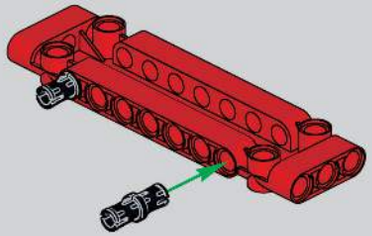

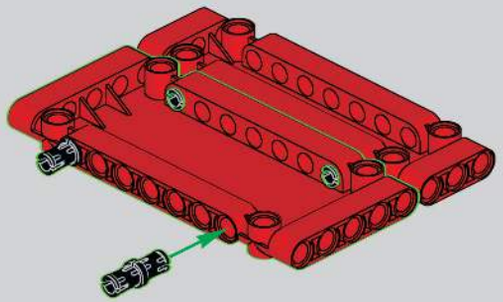

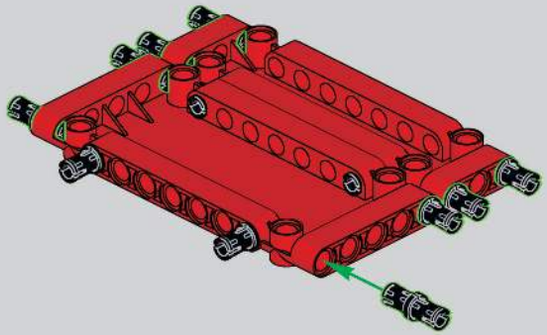

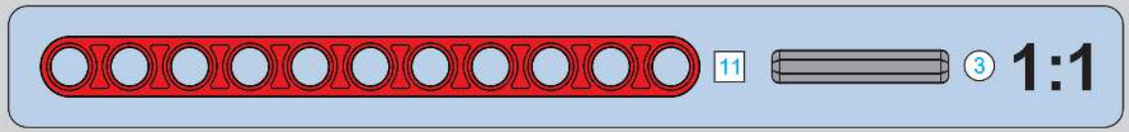

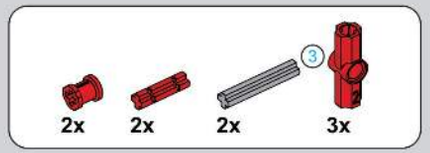

342

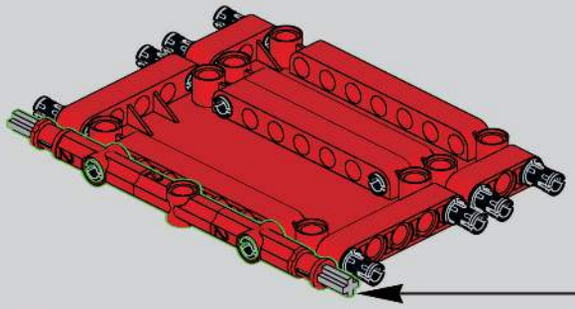

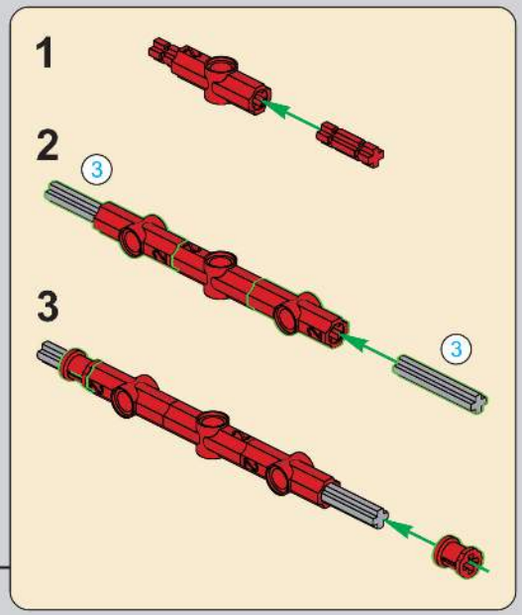

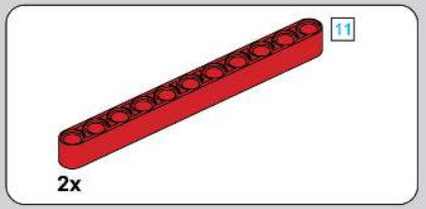

343

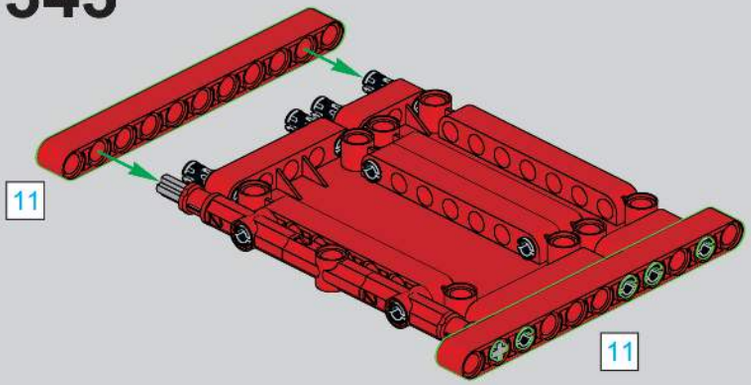

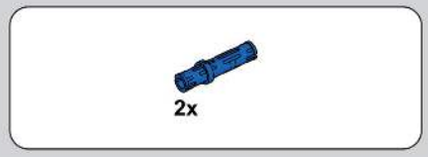

344

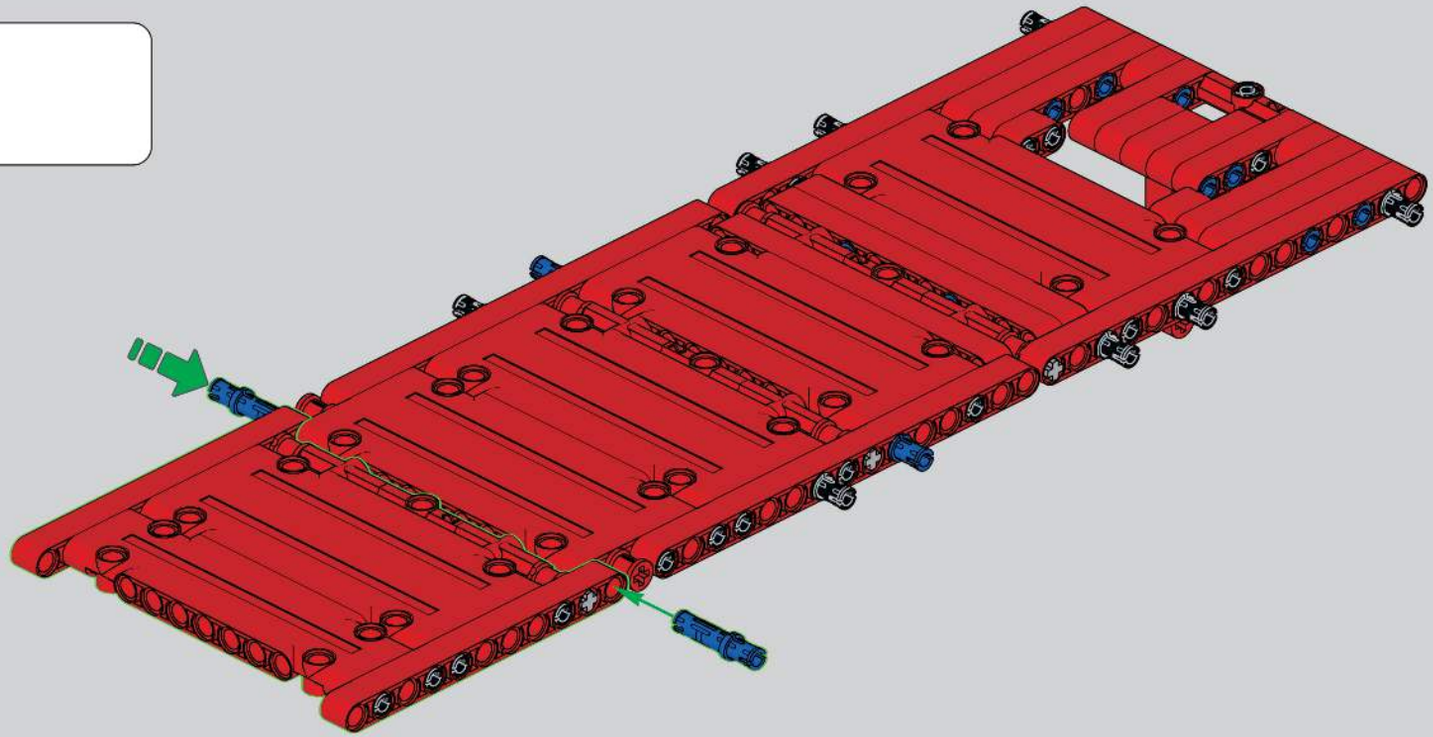

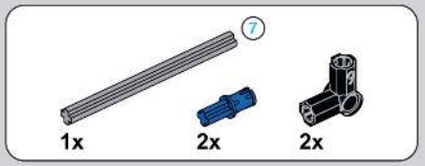

345

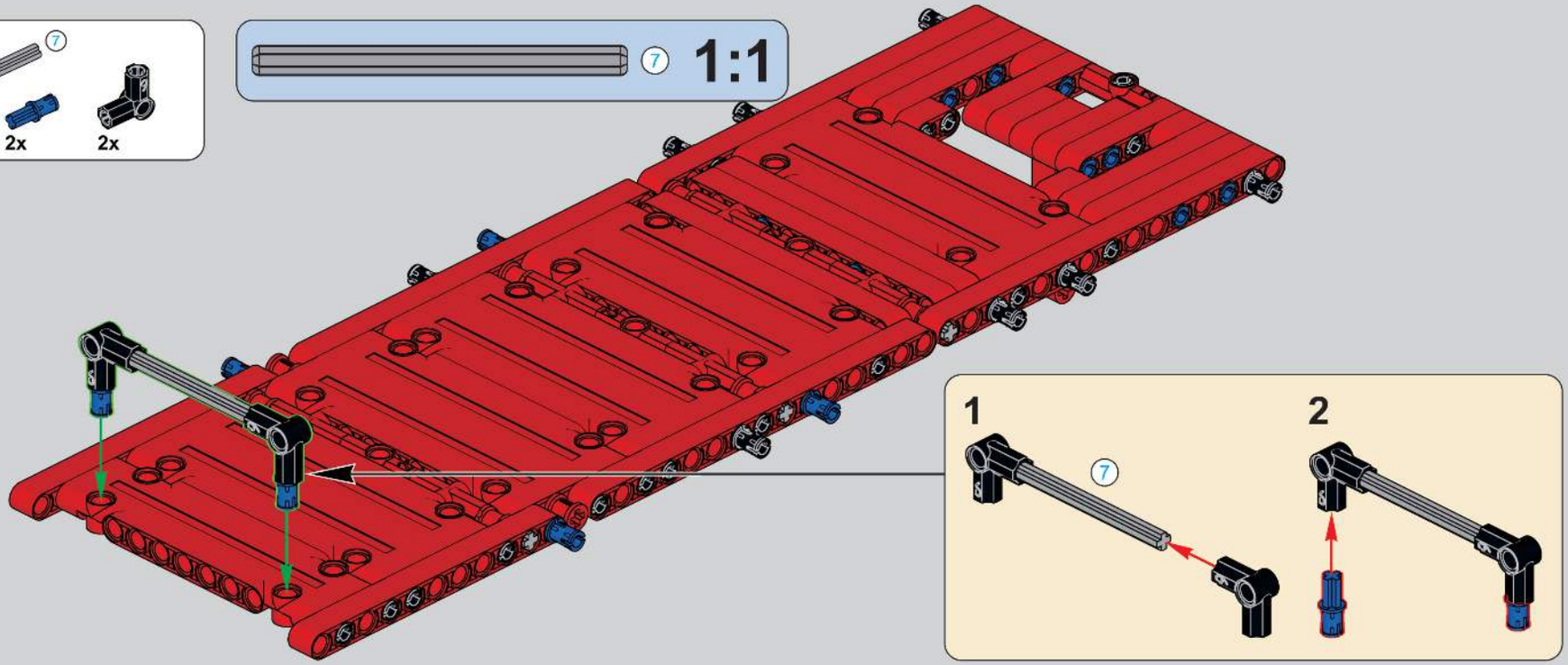

346

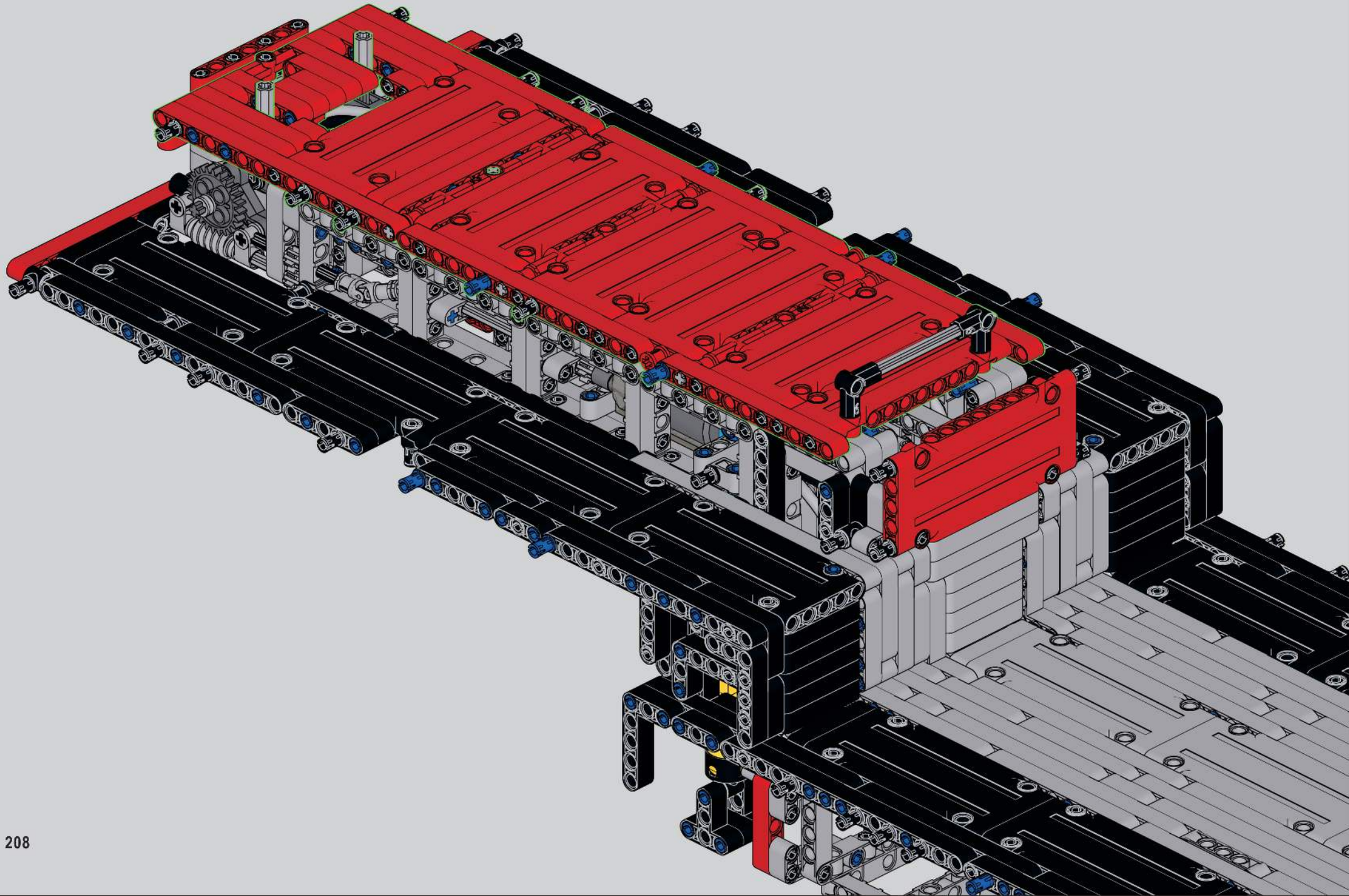

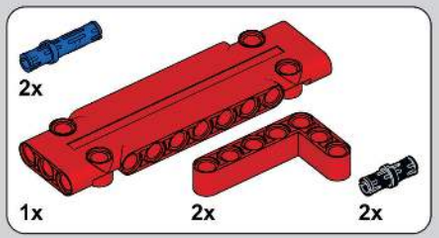

347

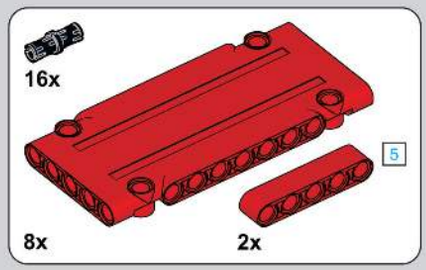

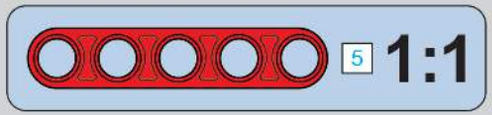

348

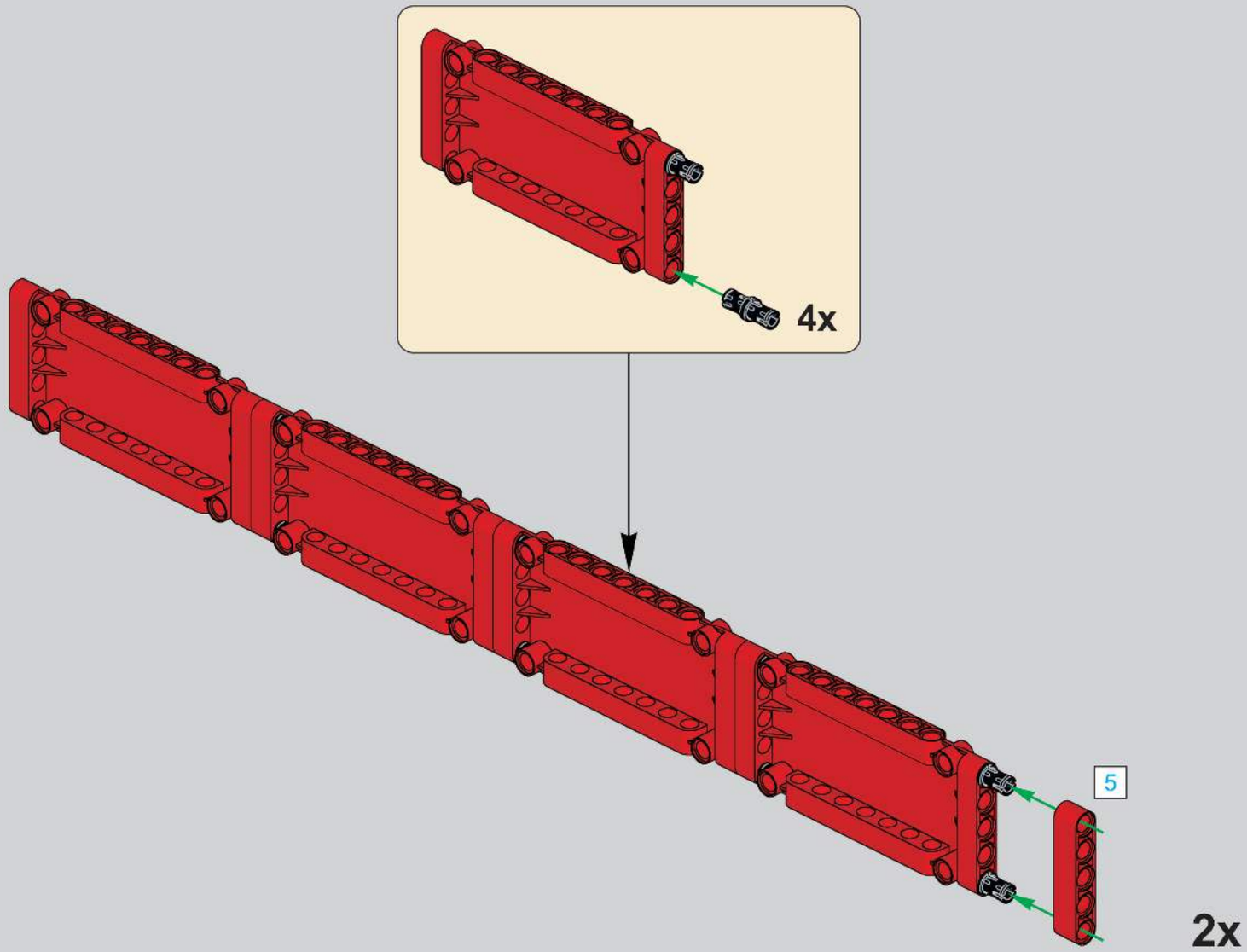

349

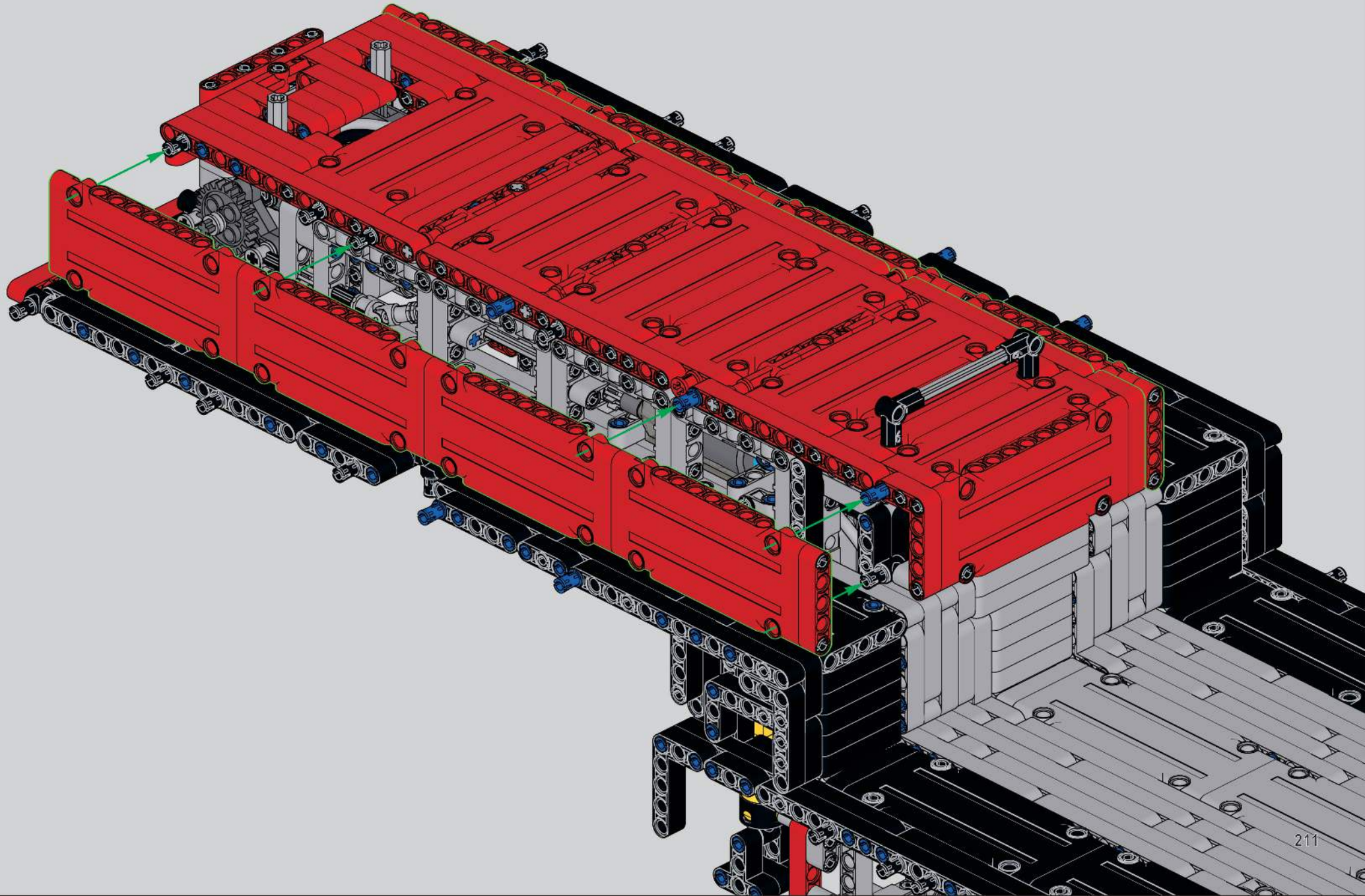

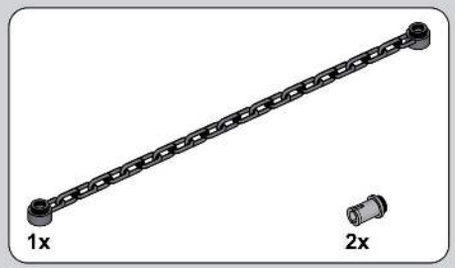

350

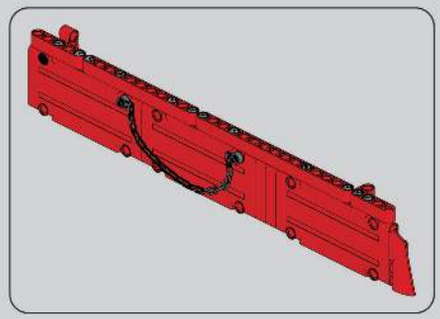

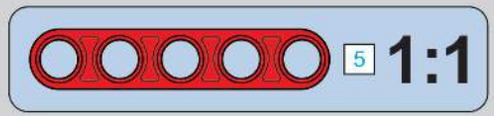

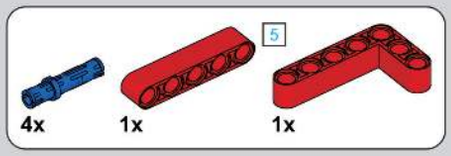

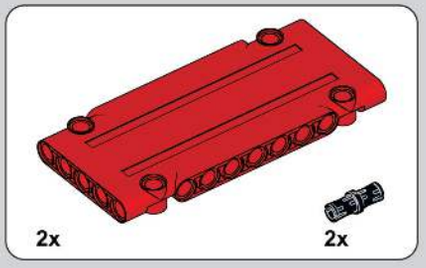

351

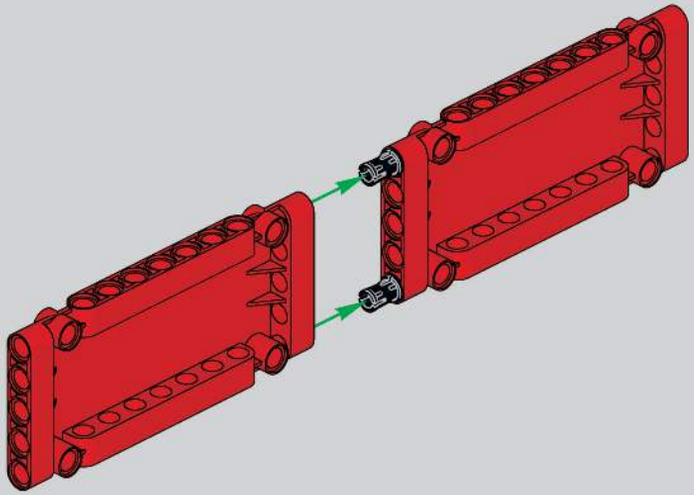

352

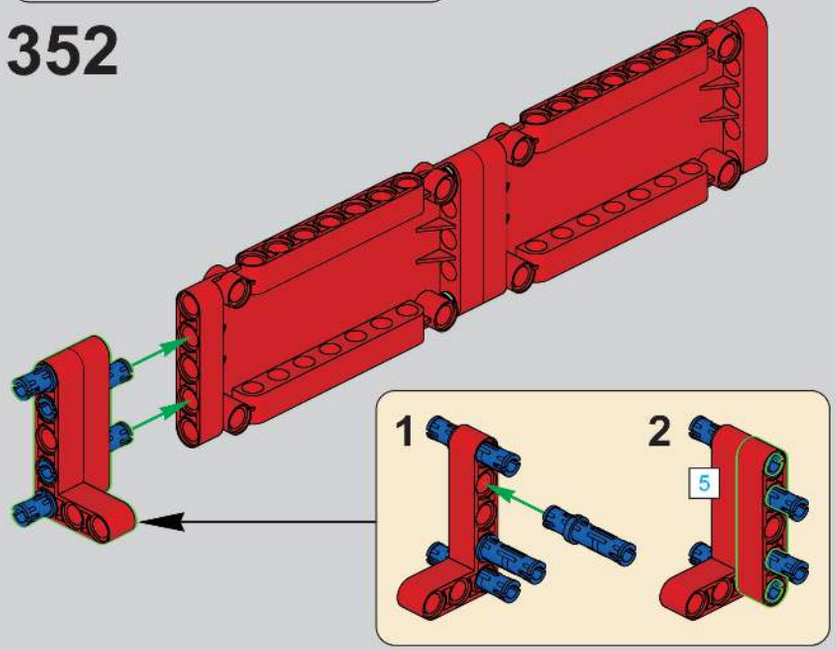

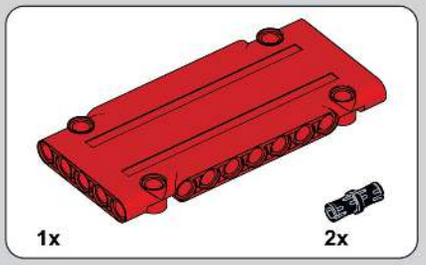

353

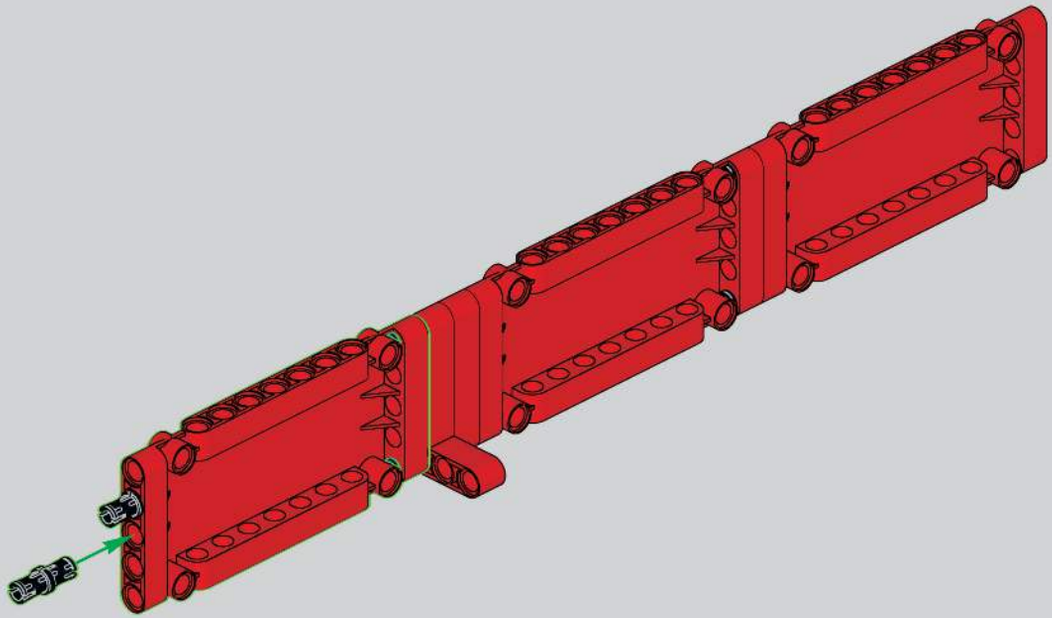

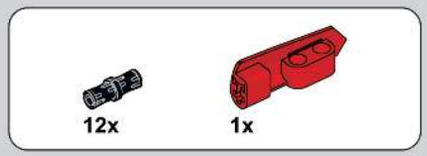

354

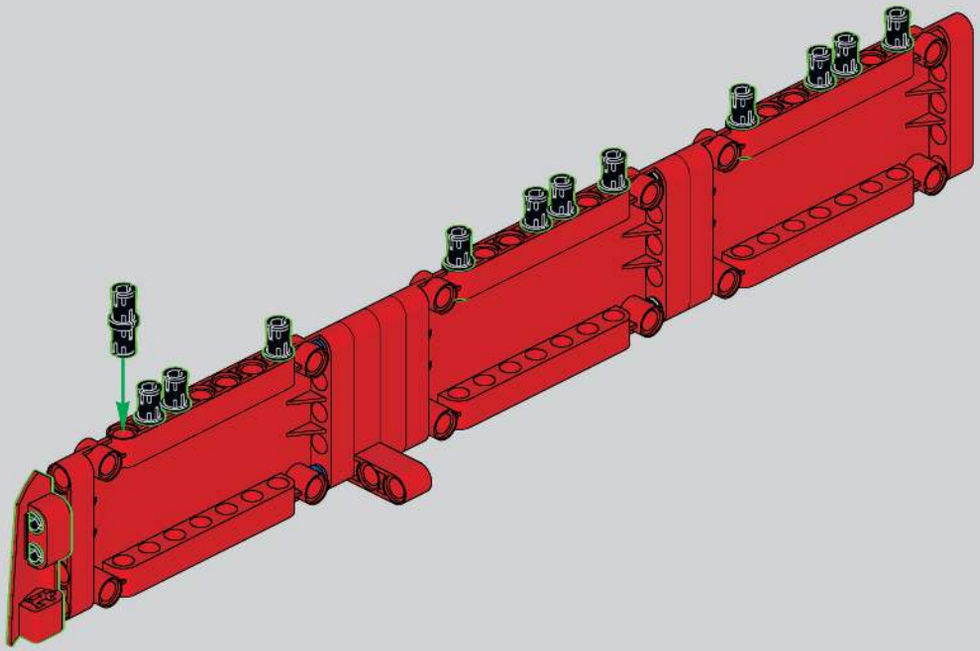

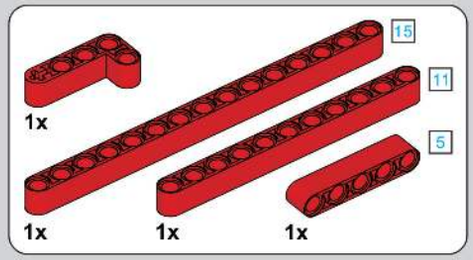

355

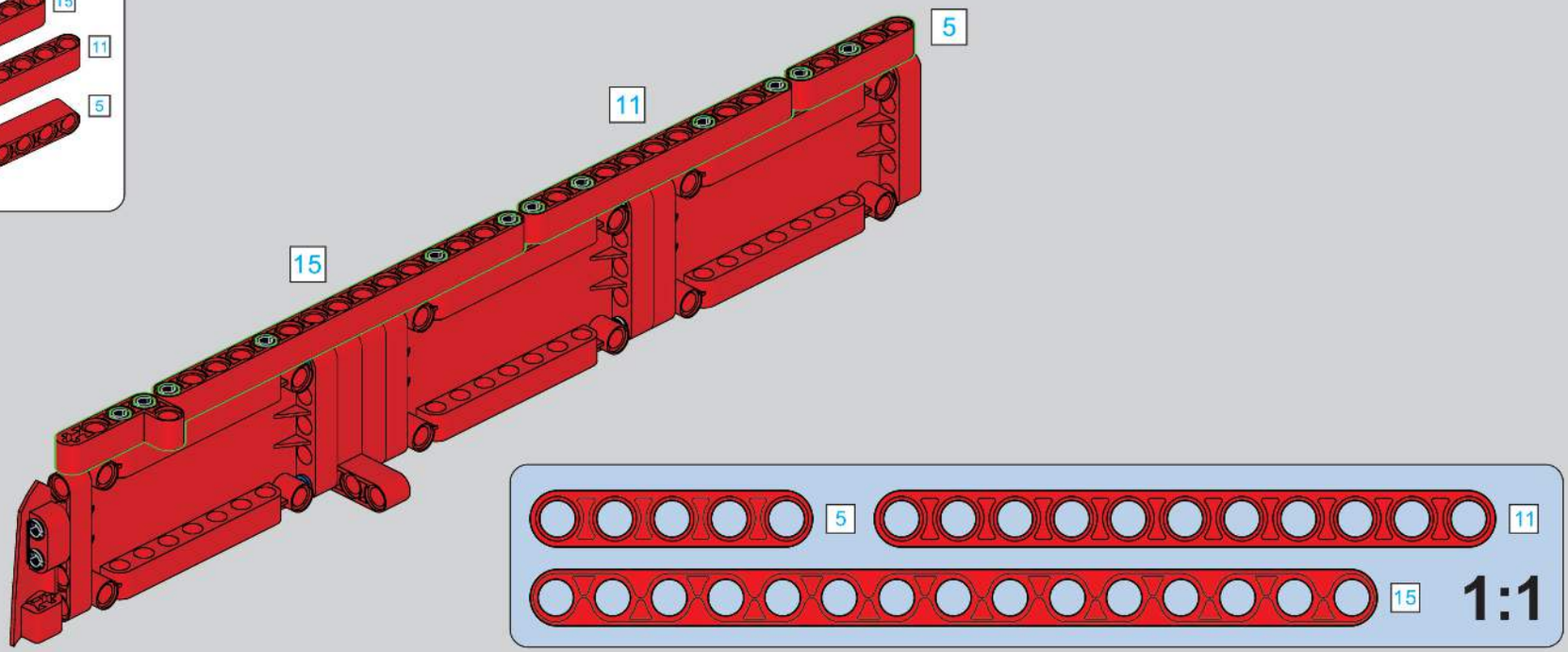

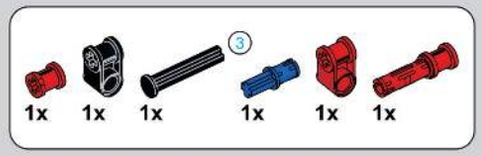

356

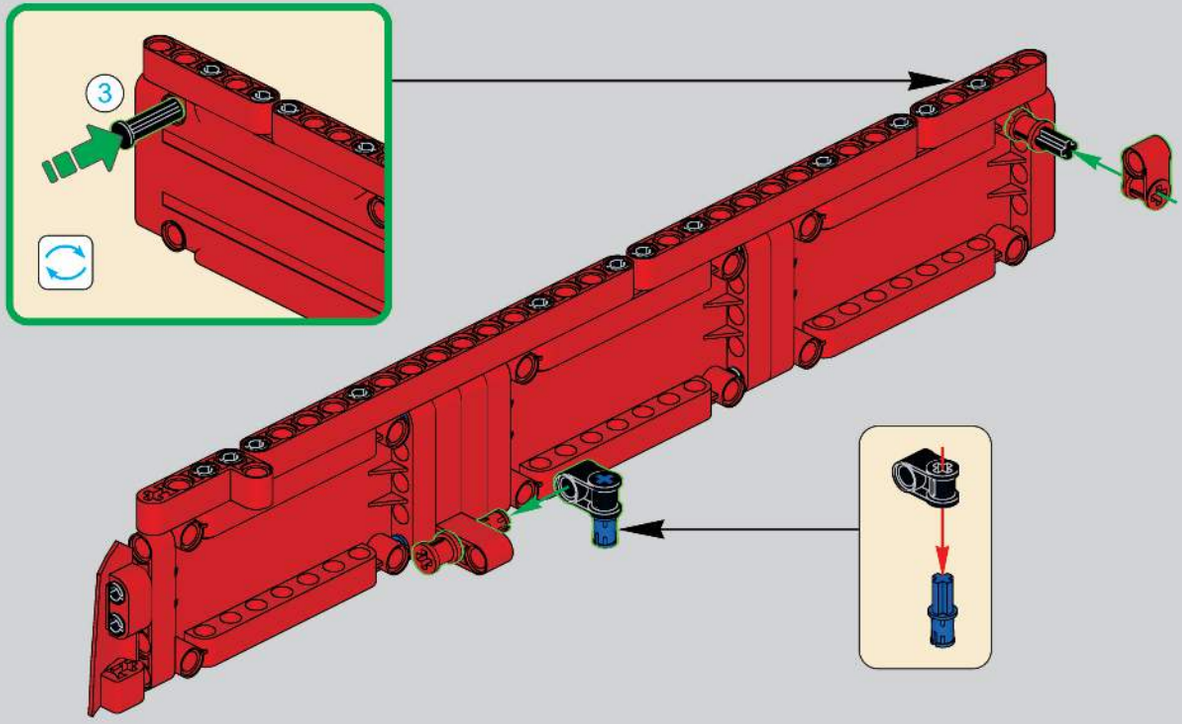

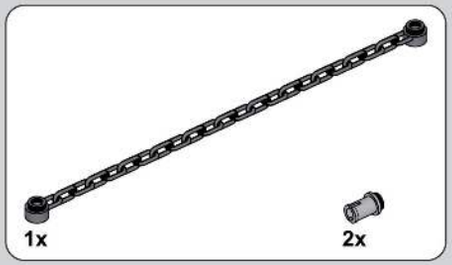

357

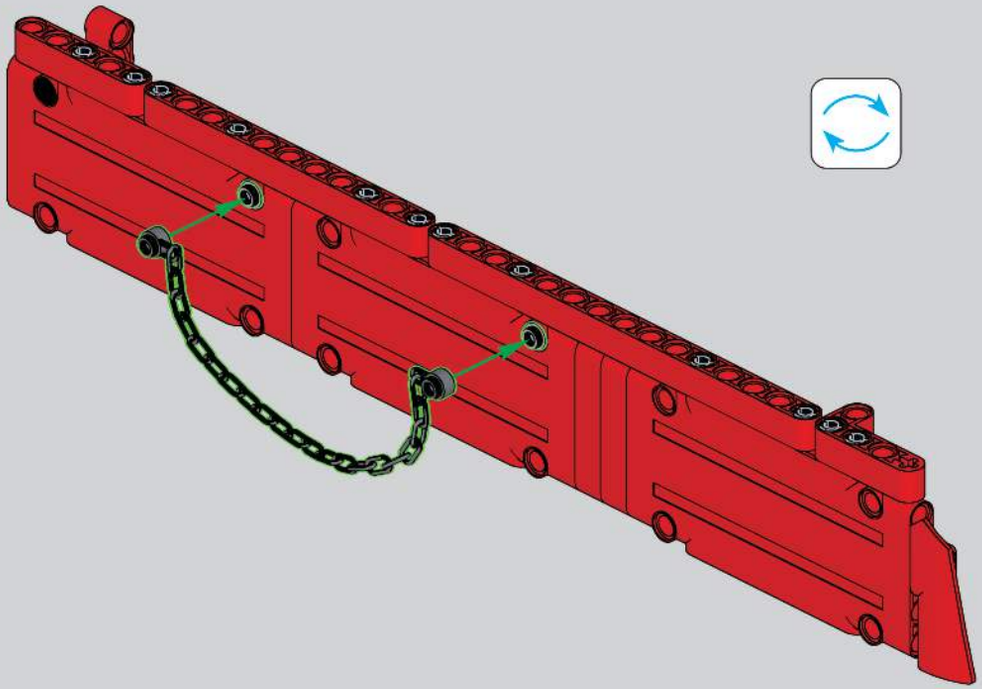

358

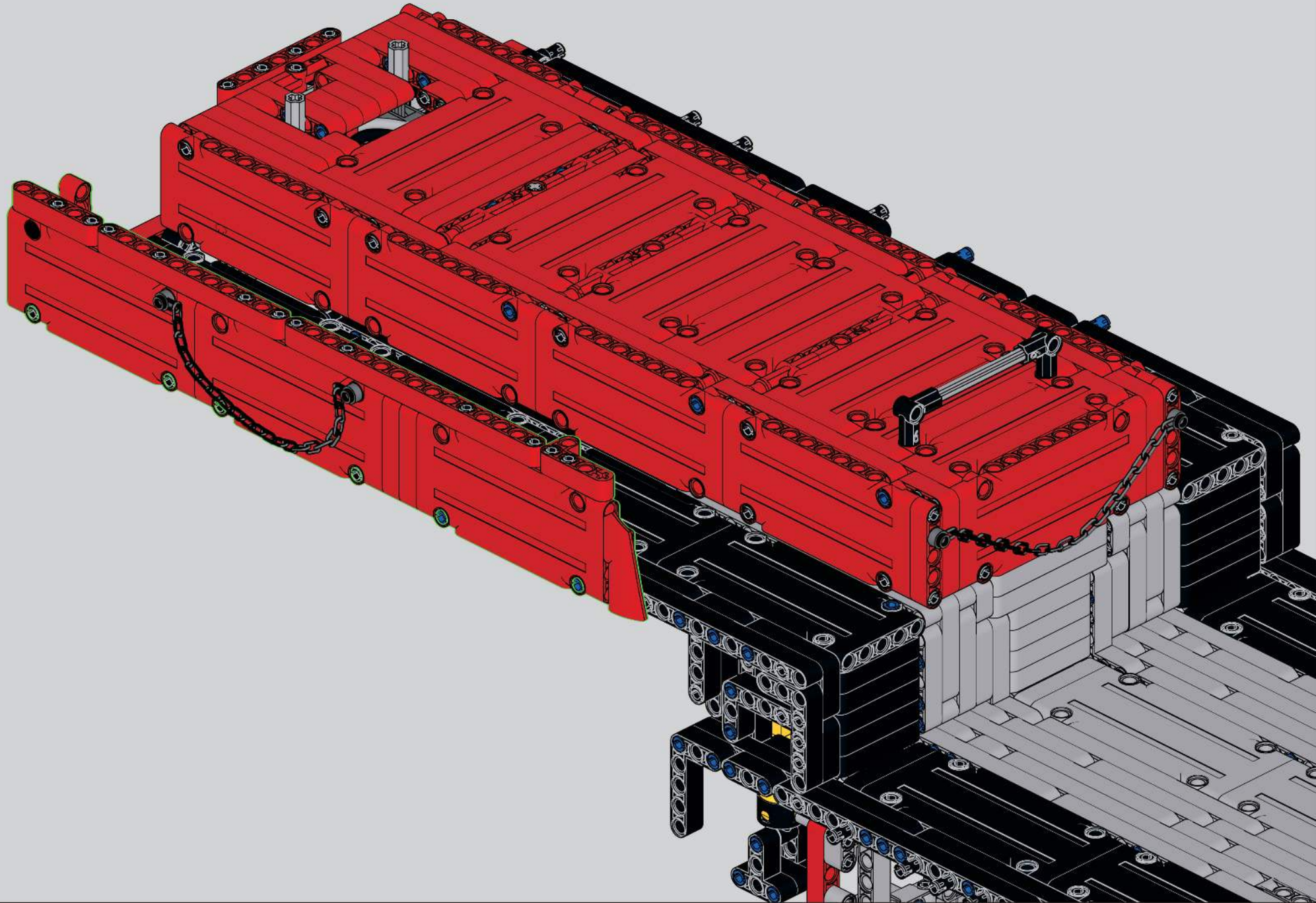

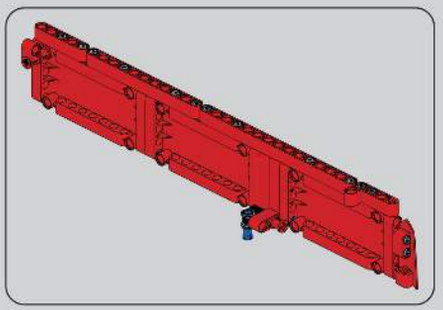

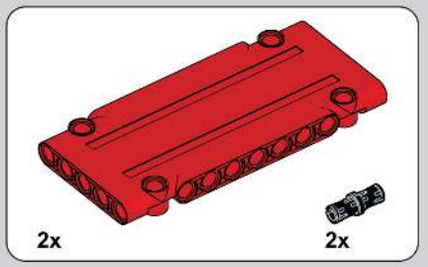

359

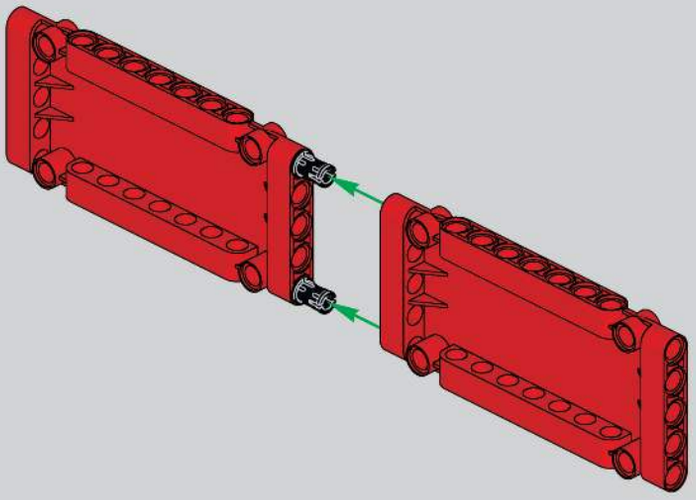

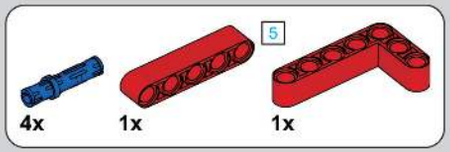

360

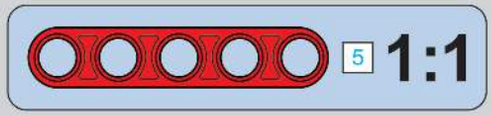

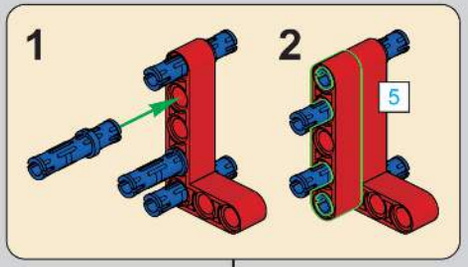

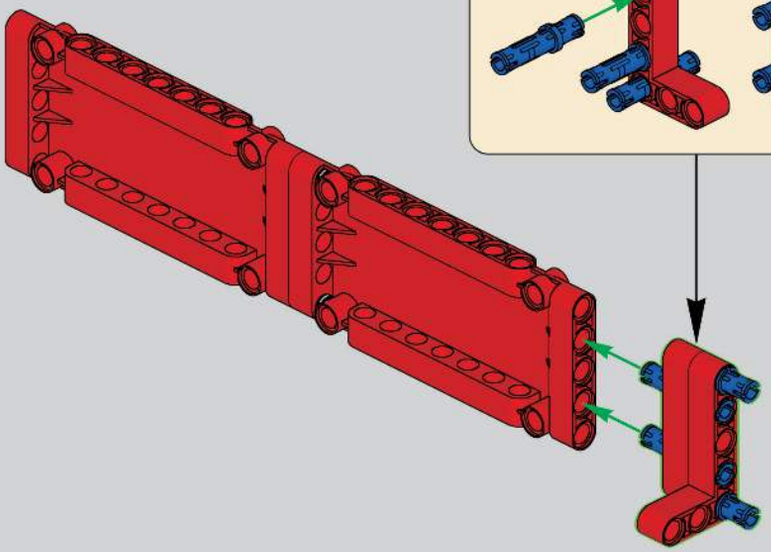

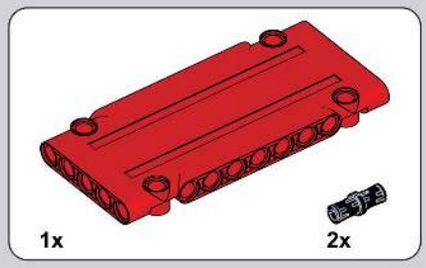

361

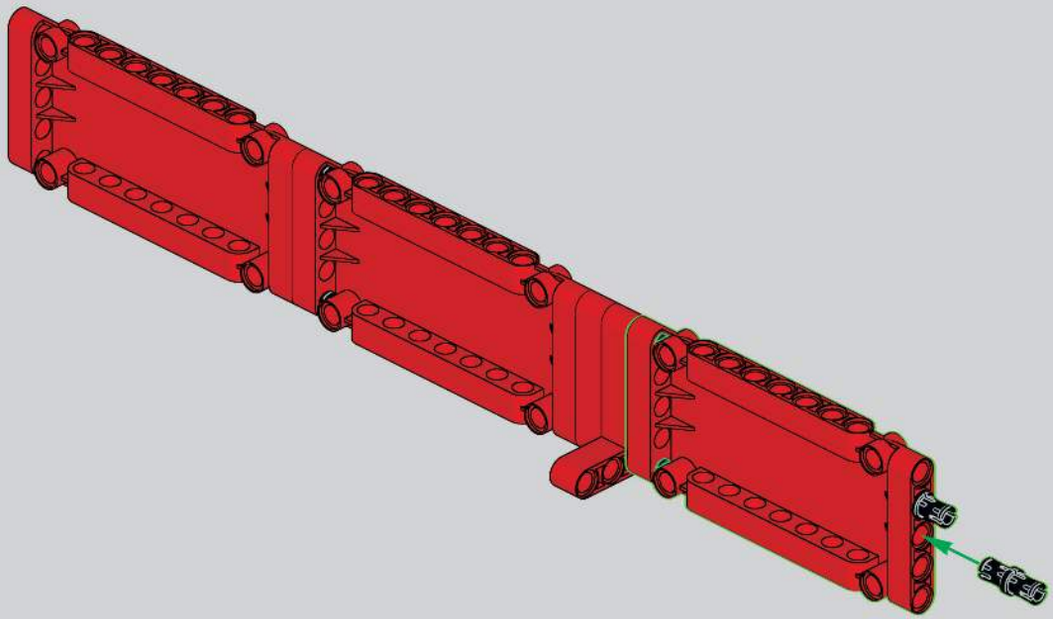

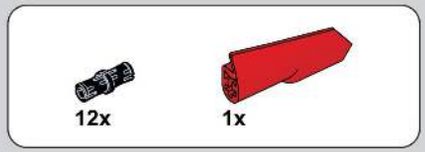

362

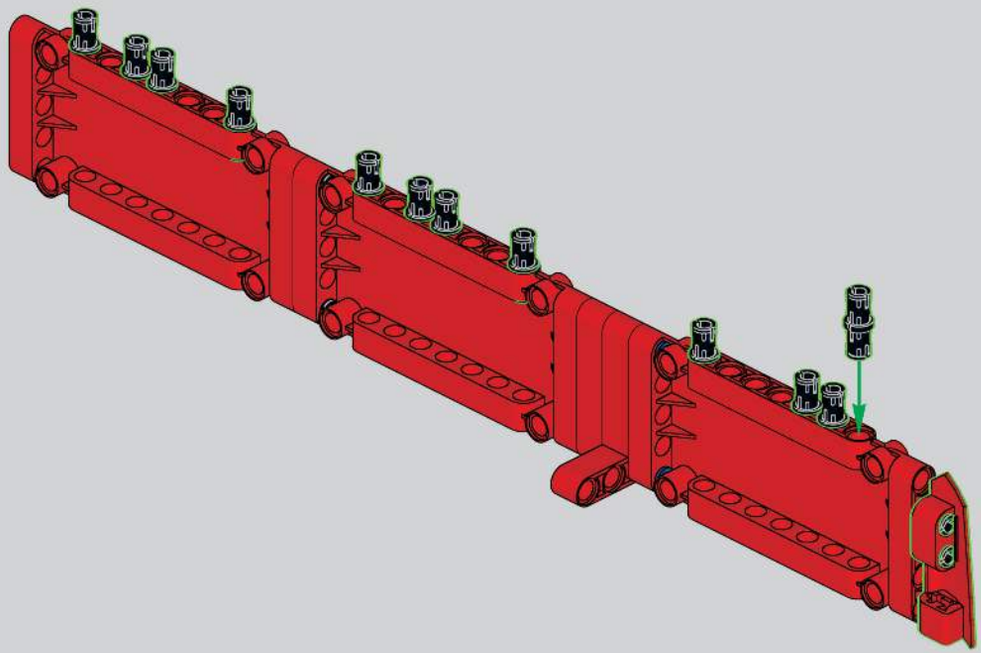

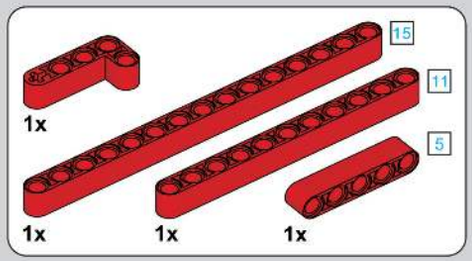

363

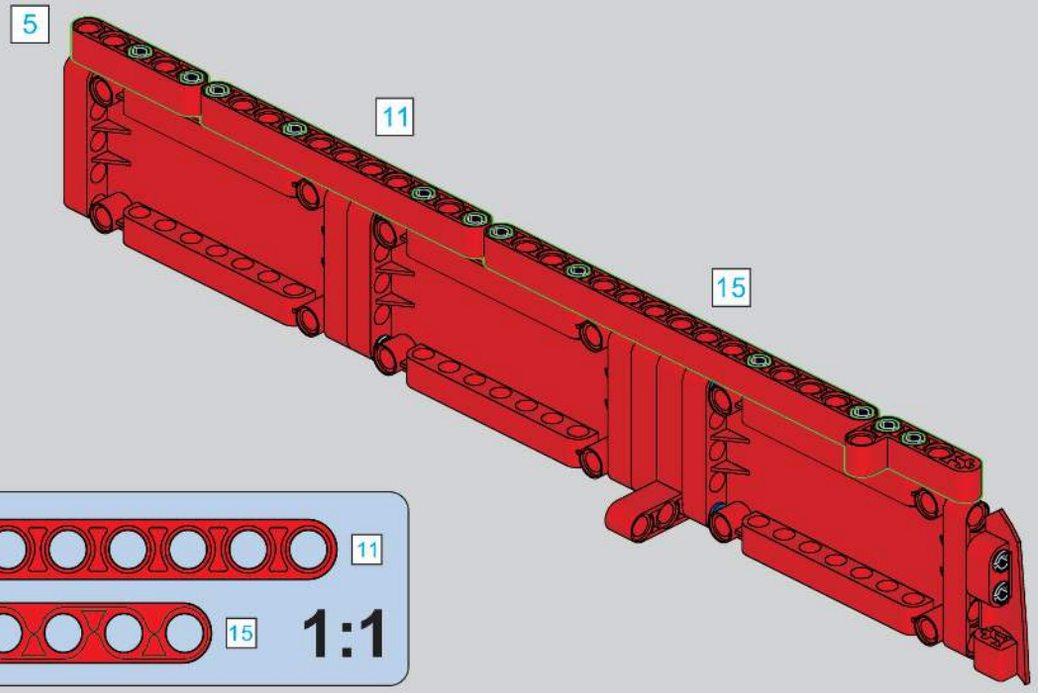

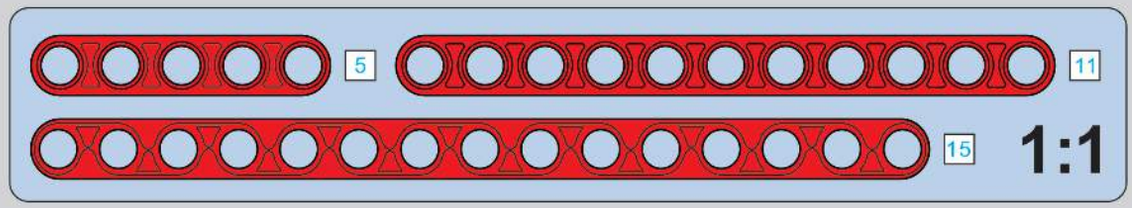

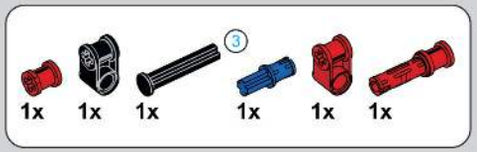

364

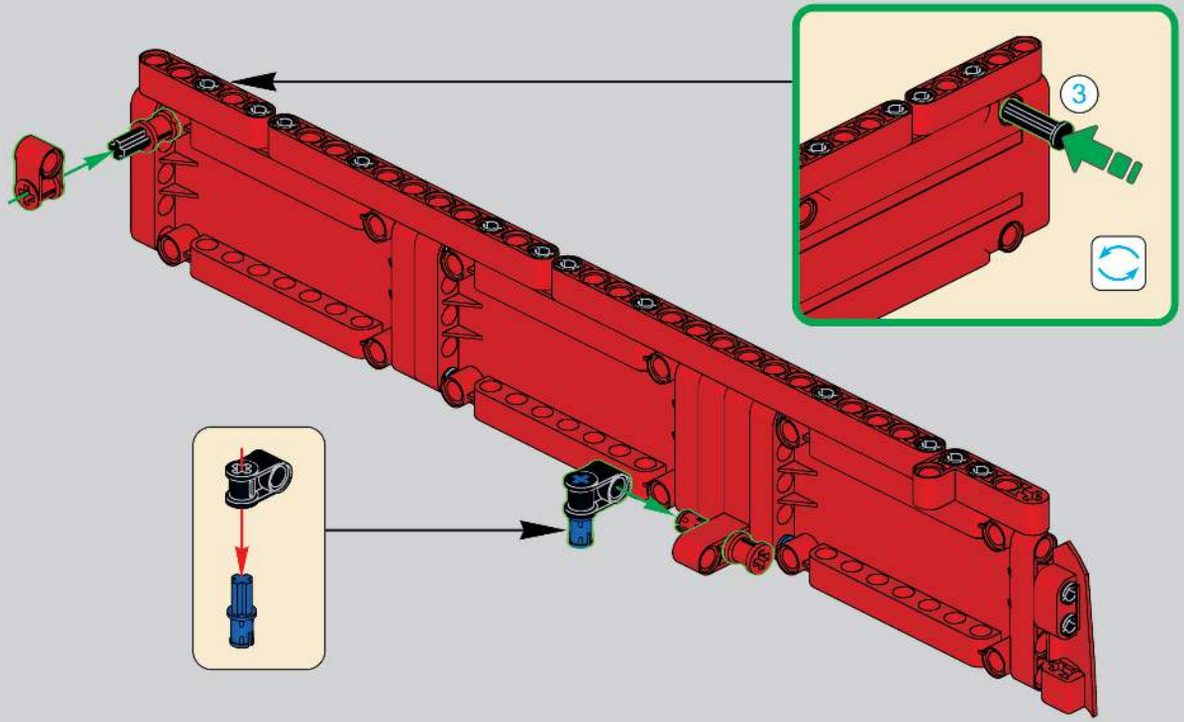

365

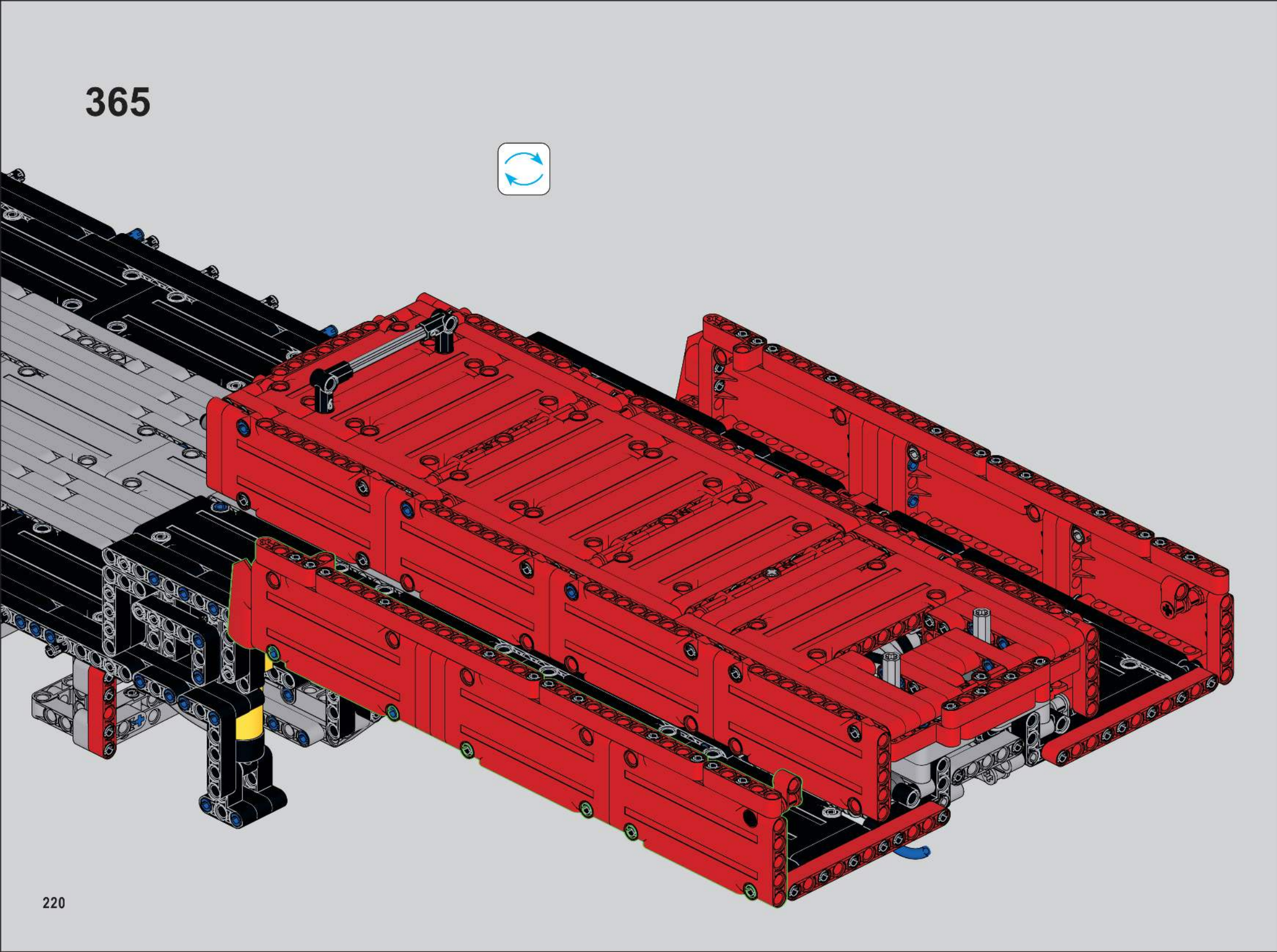

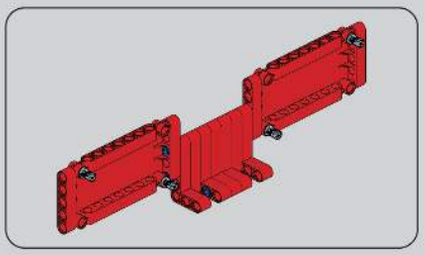

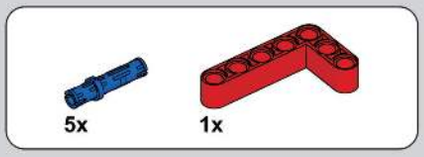

366

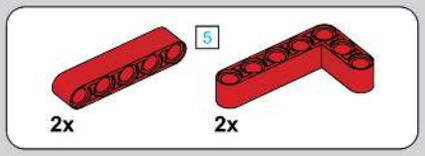

367

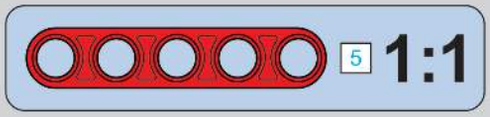

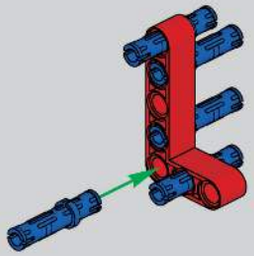

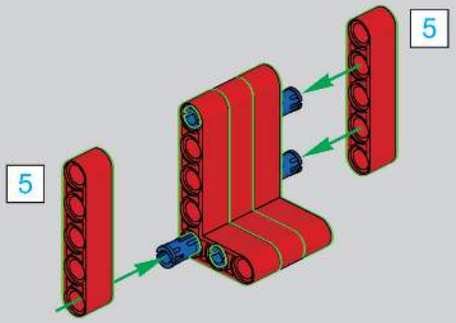

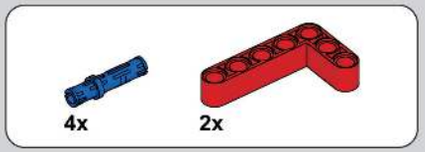

368

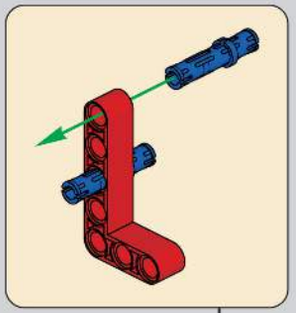

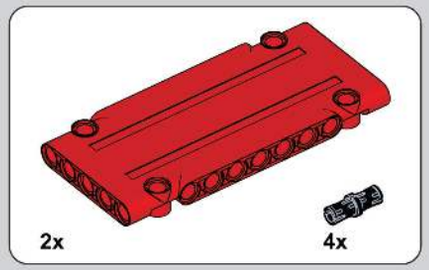

369

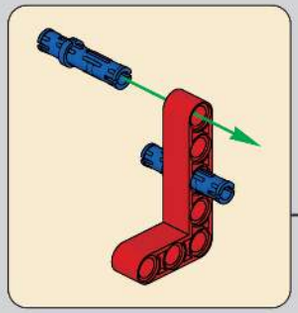

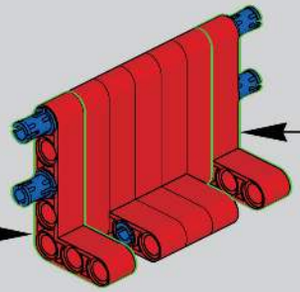

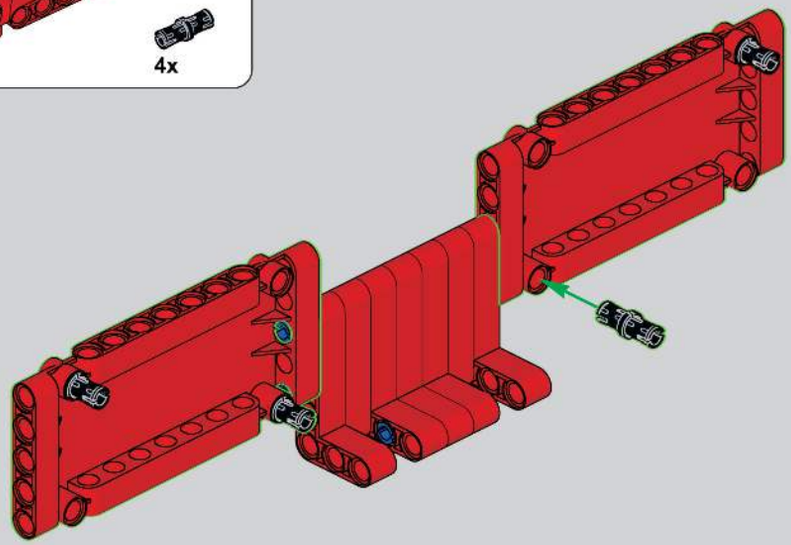

370

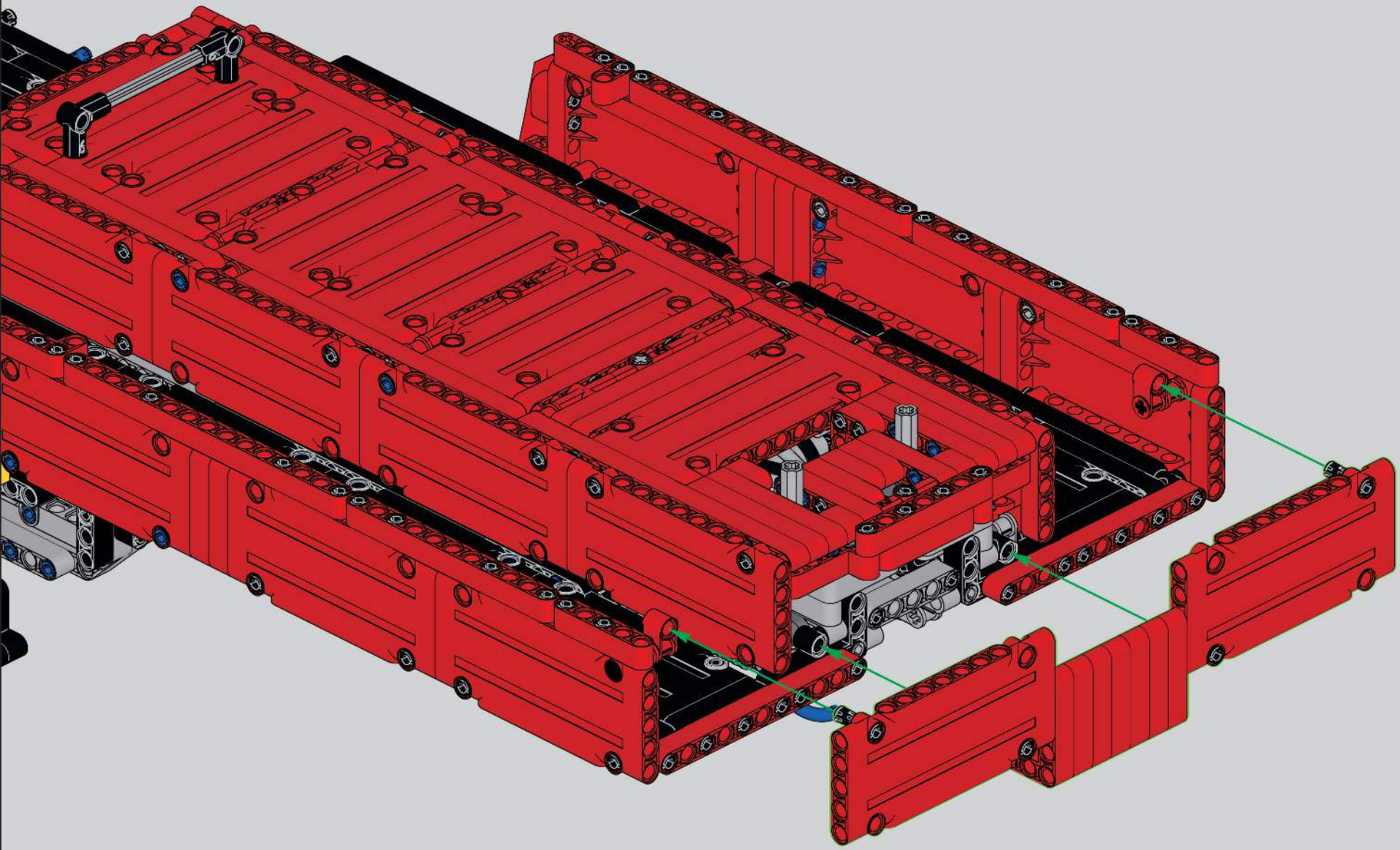

371

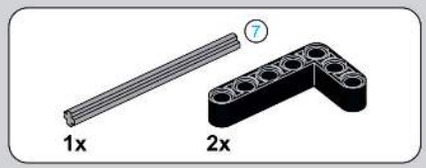

372

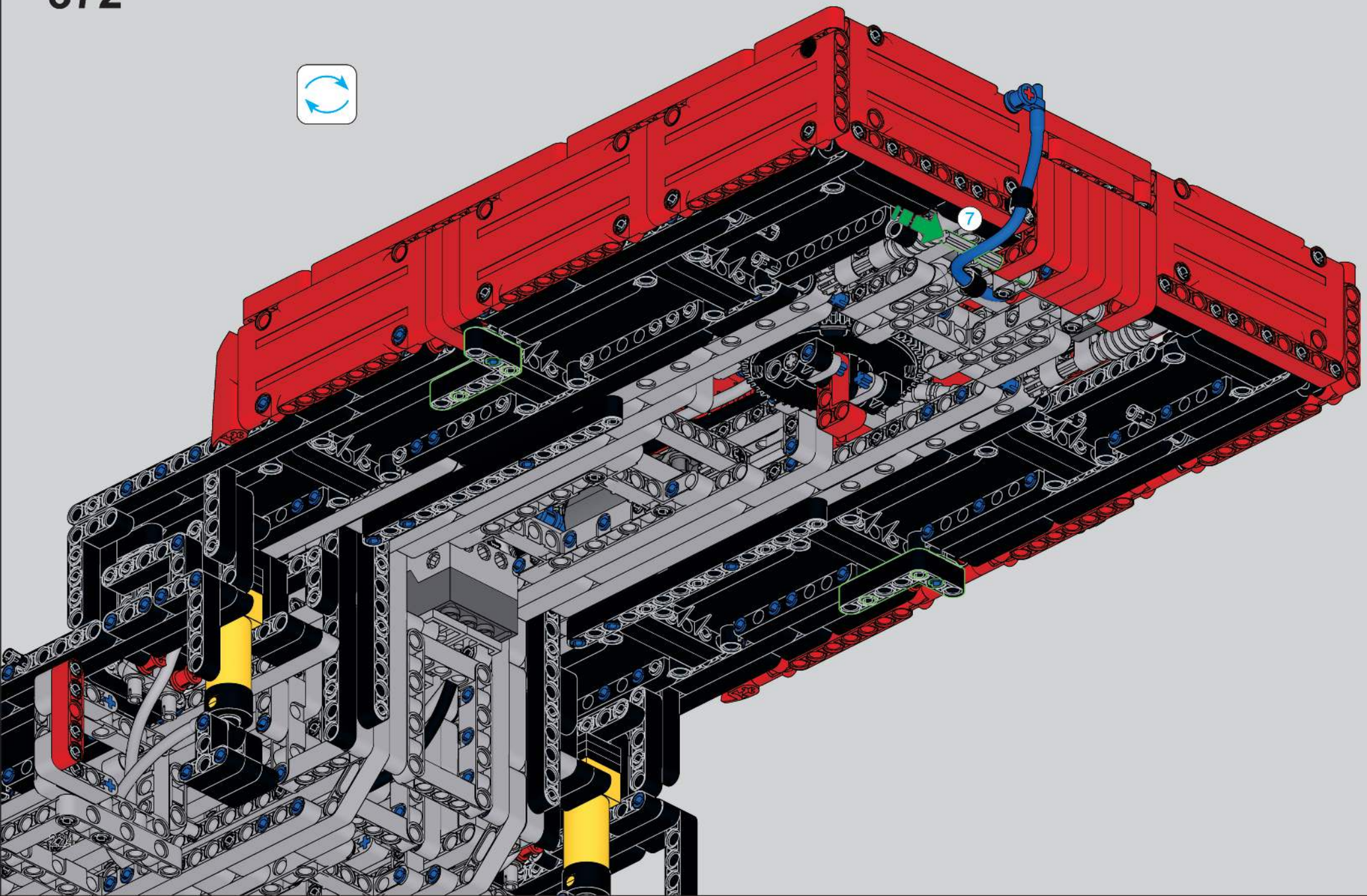

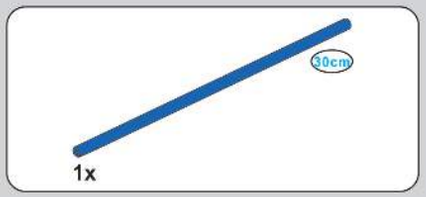

373

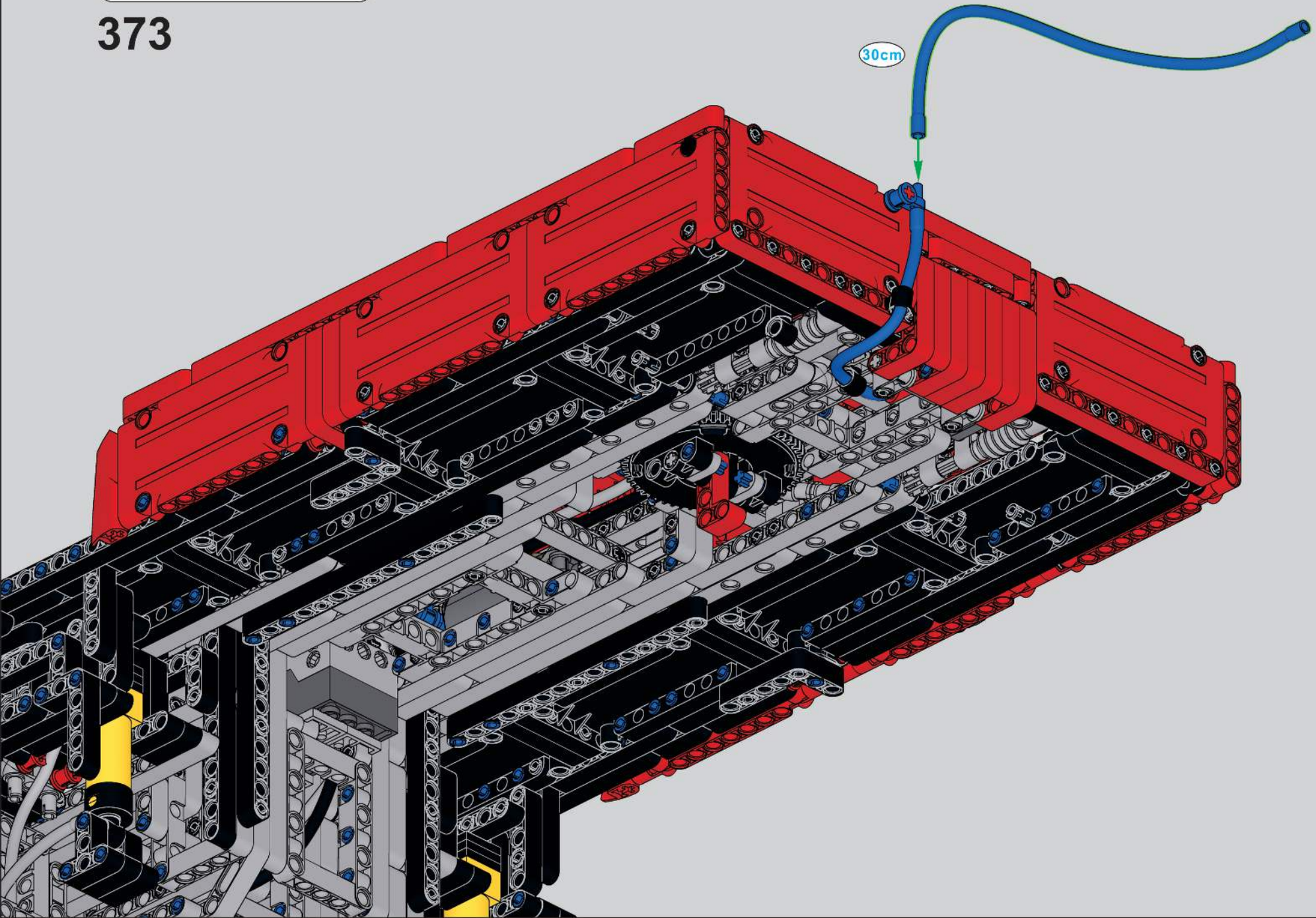

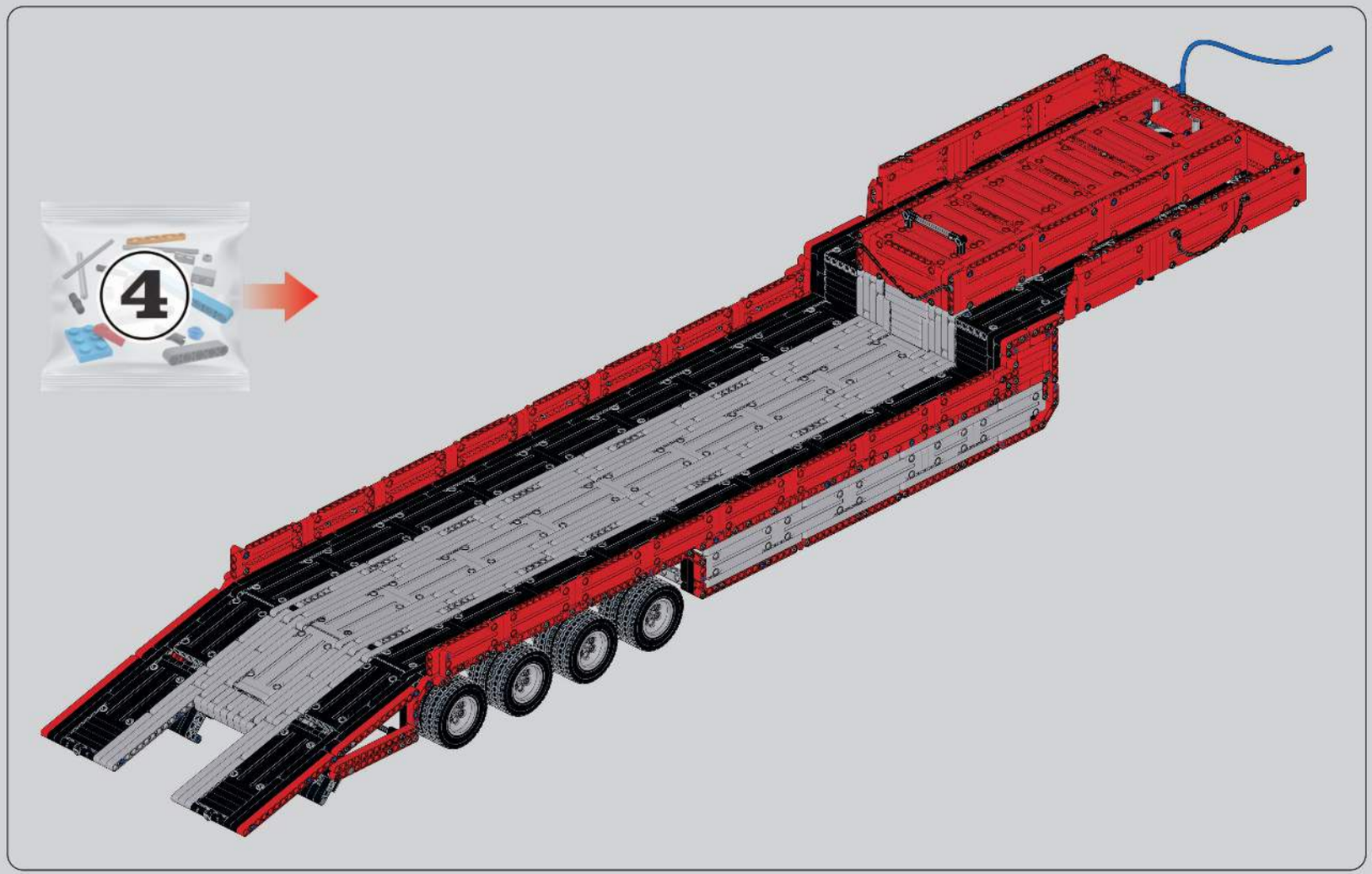
4

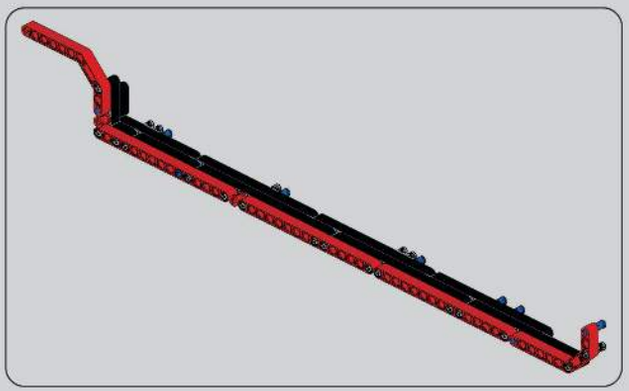

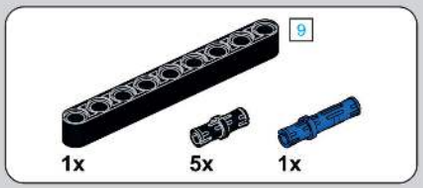

374

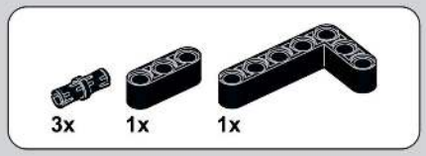

375

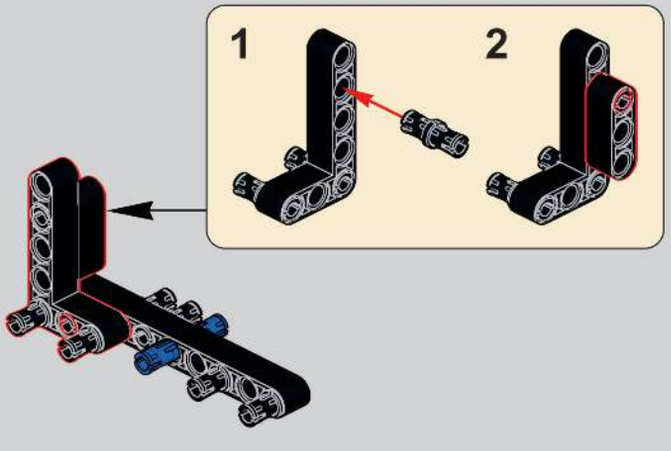

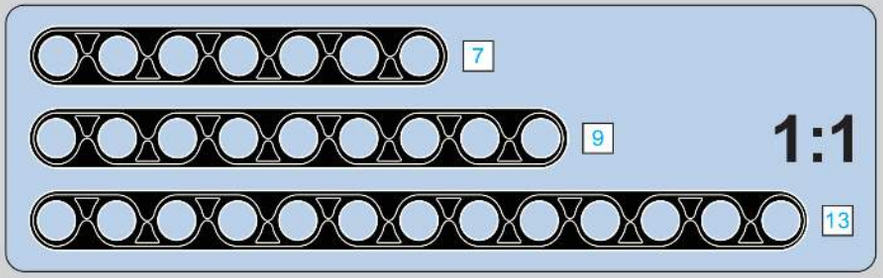

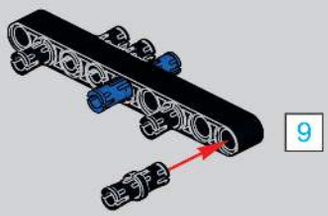

376

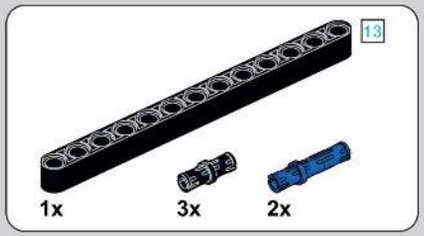

377

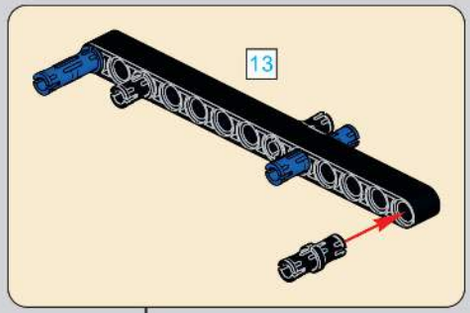

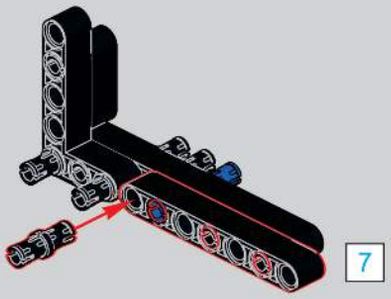

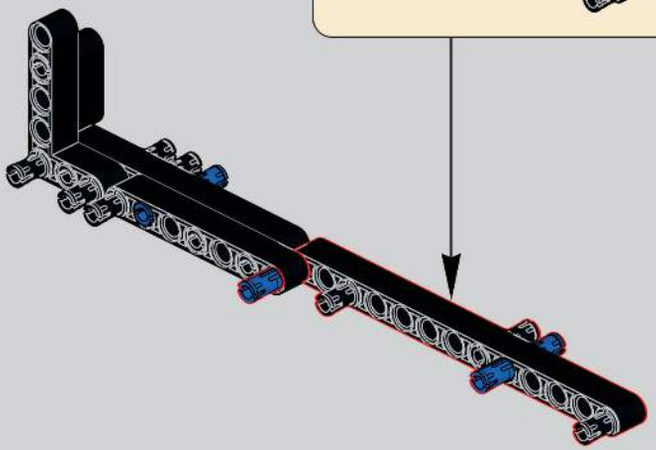

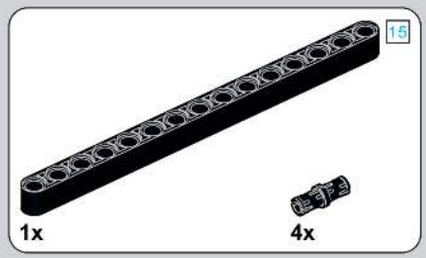

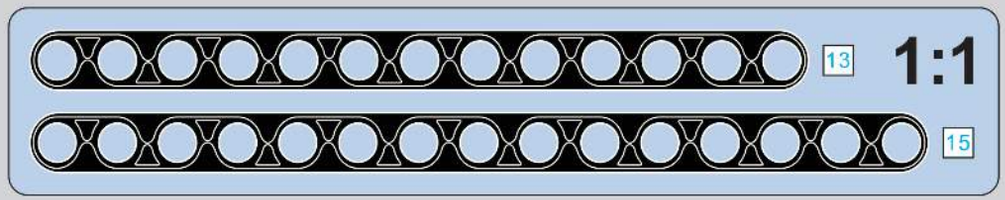

378

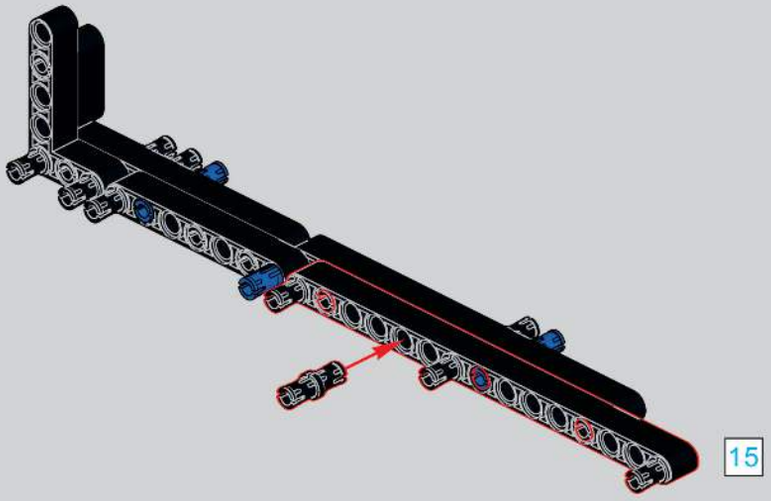

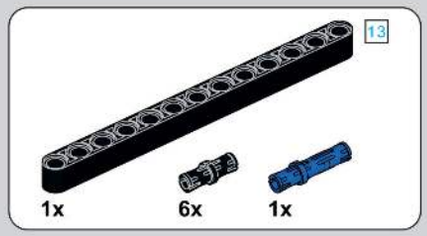

379

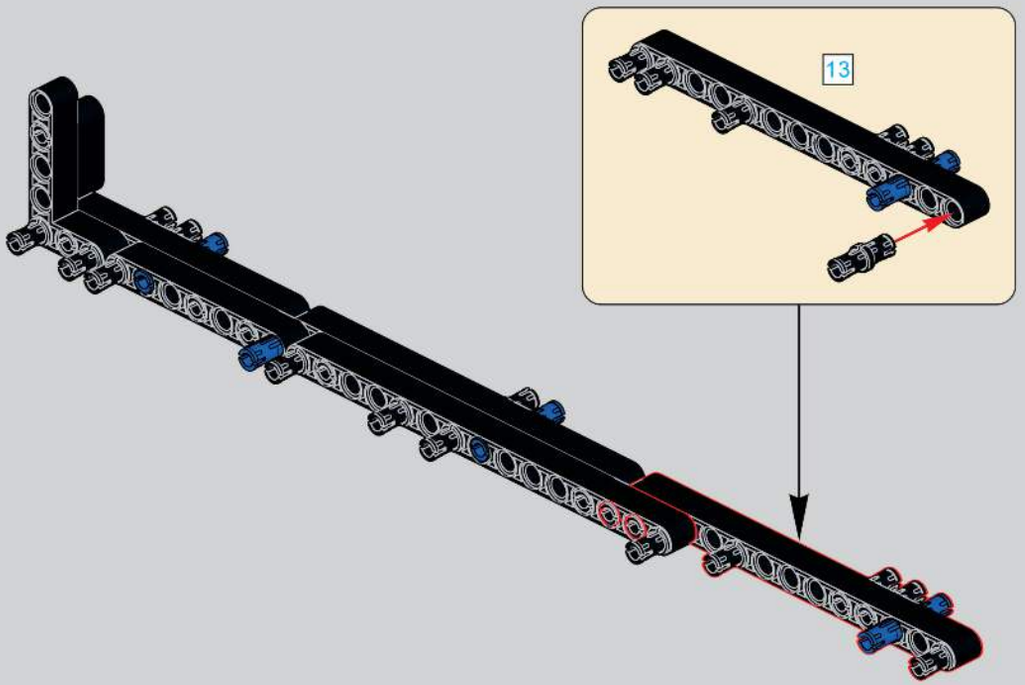

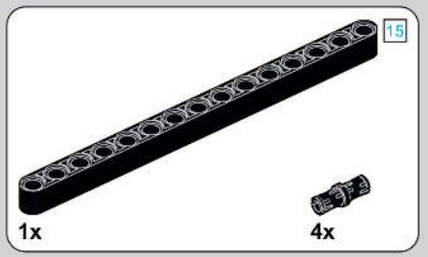

380

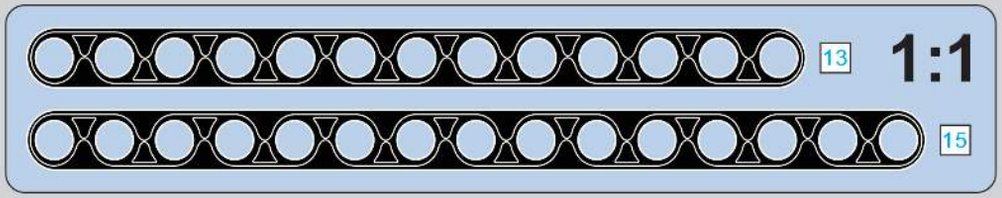

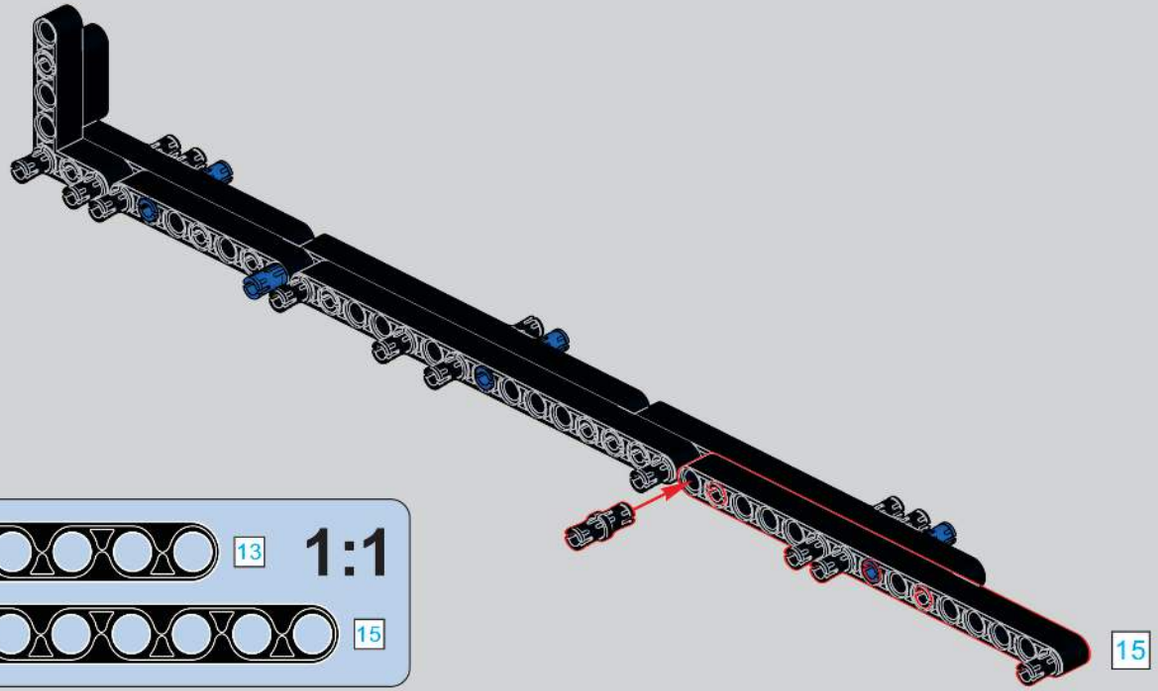

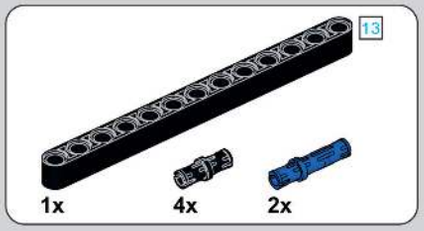

381

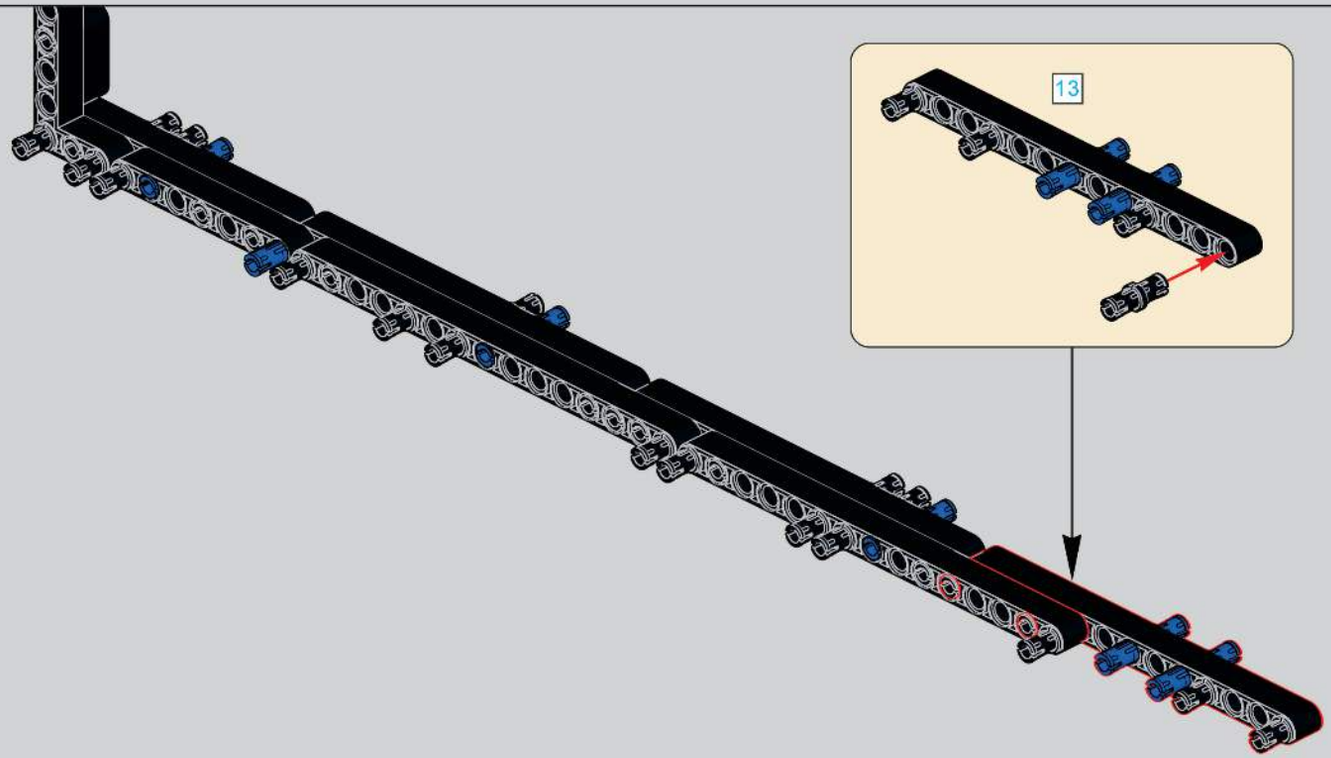

382

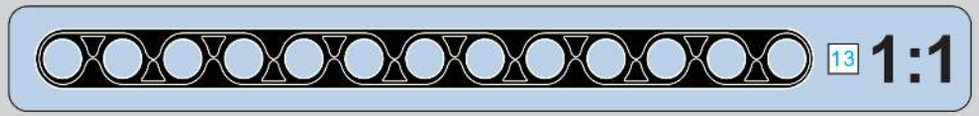

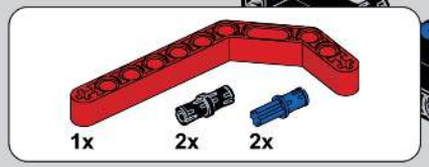

383

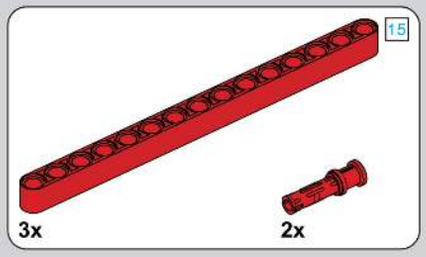

384

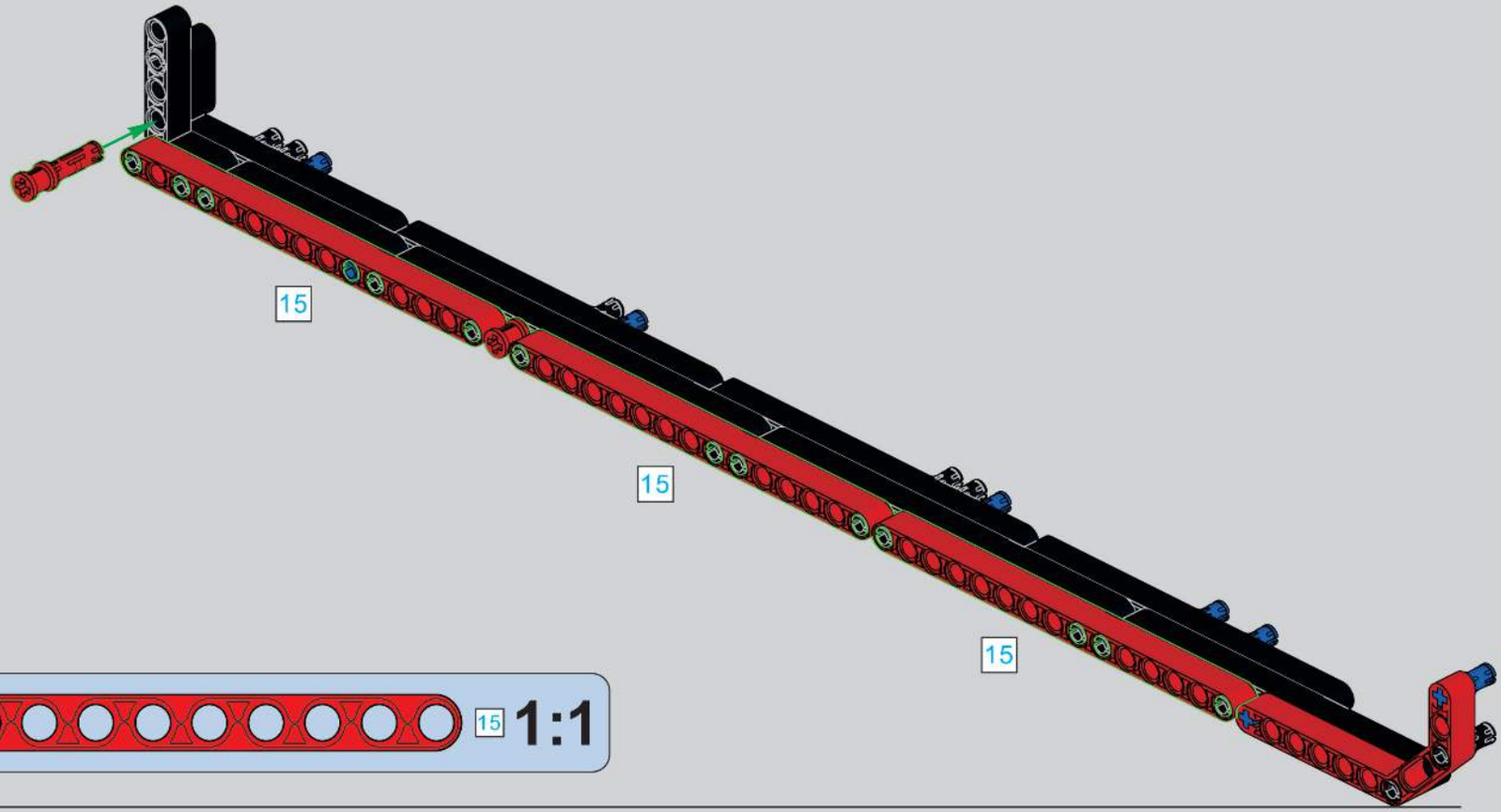

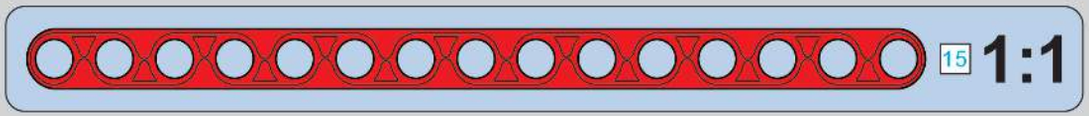

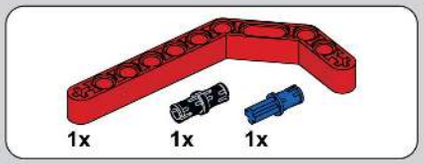

385

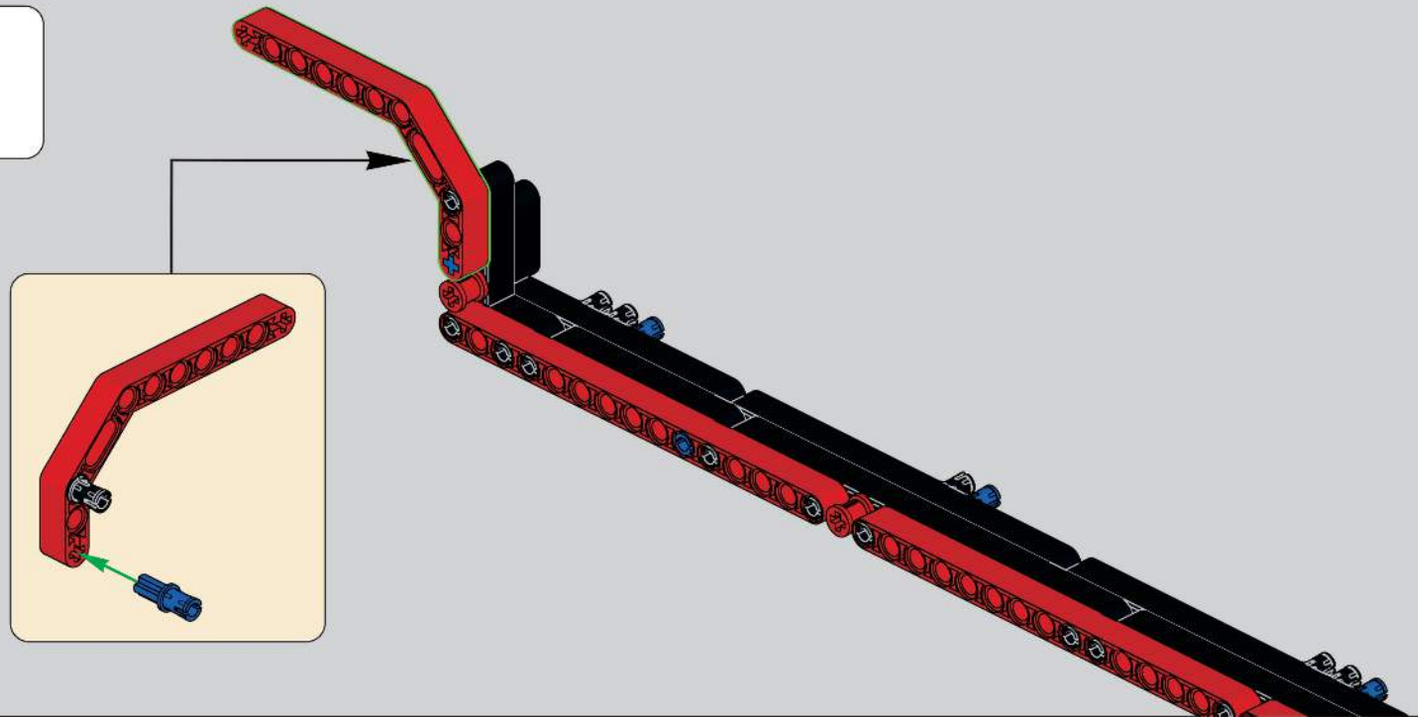

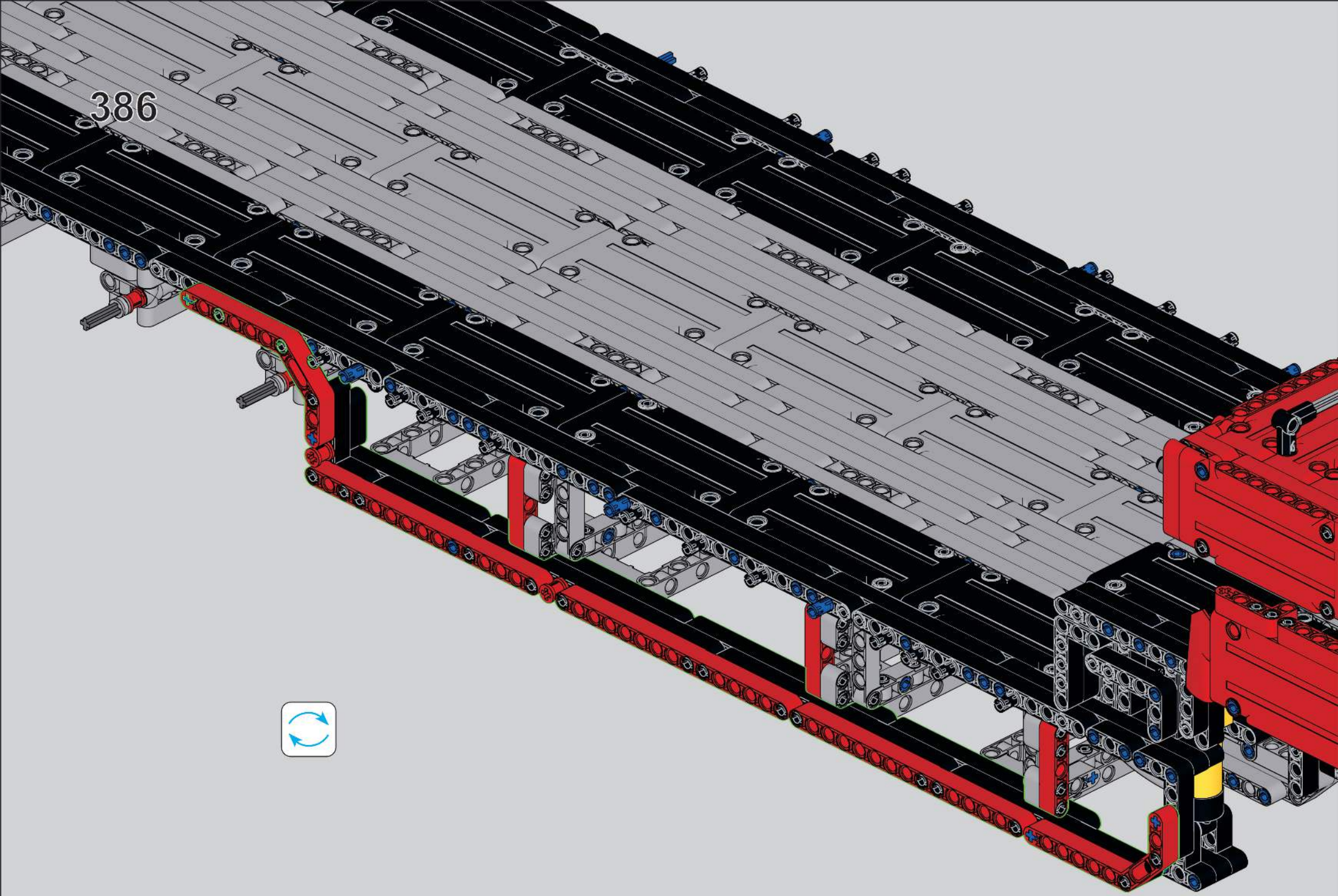
386

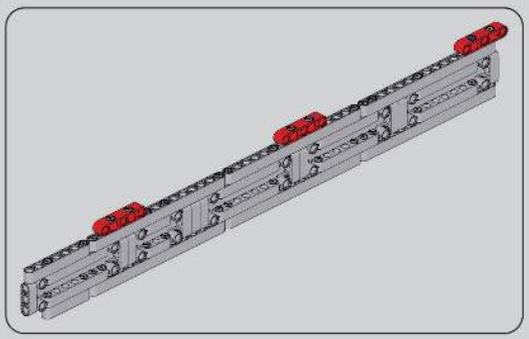

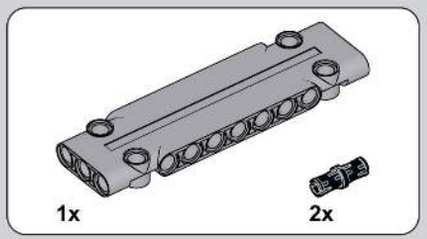

387

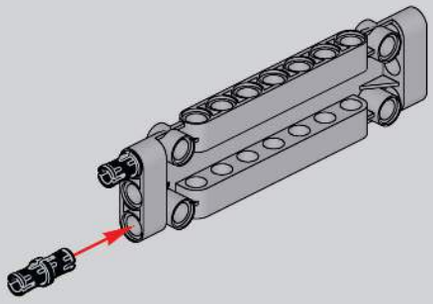

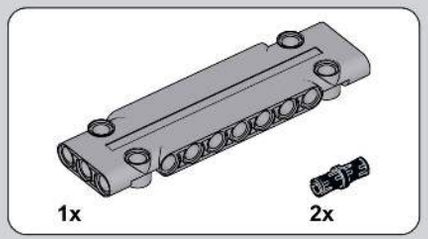

388

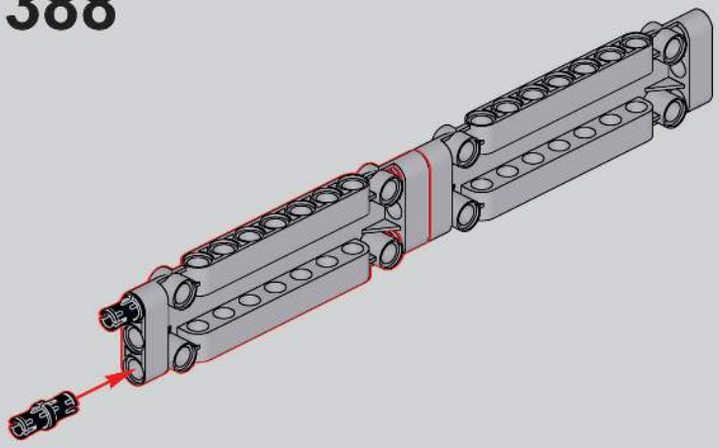

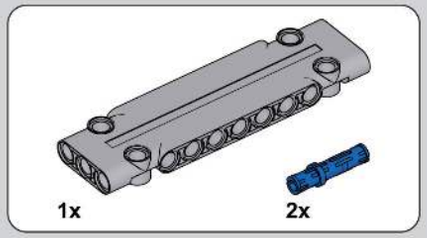

389

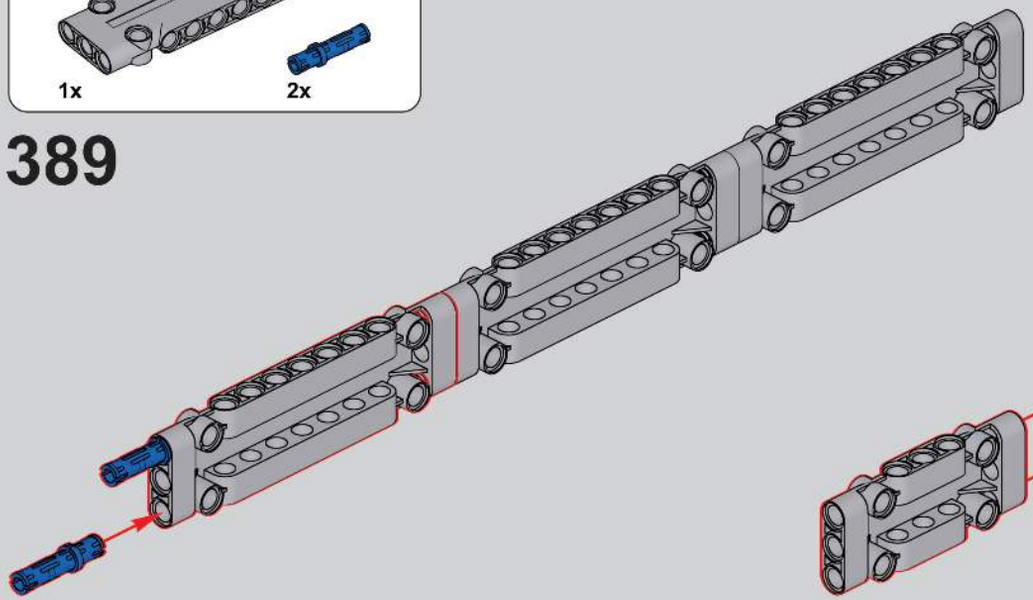

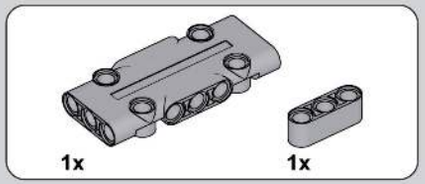

390

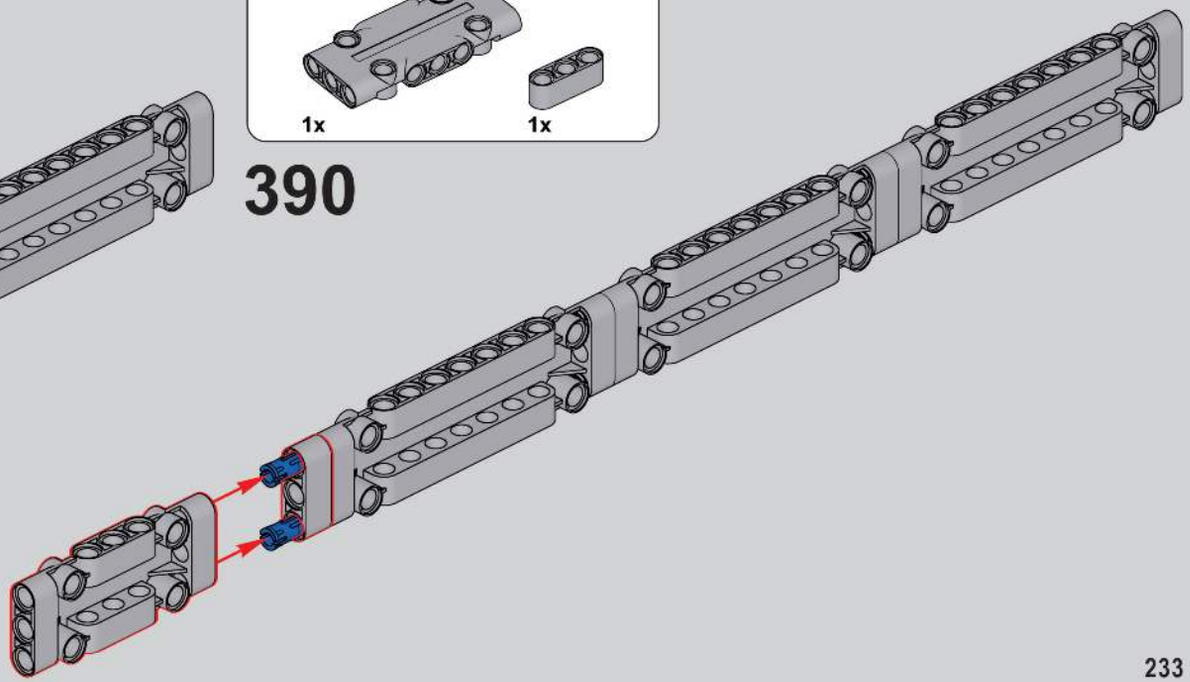

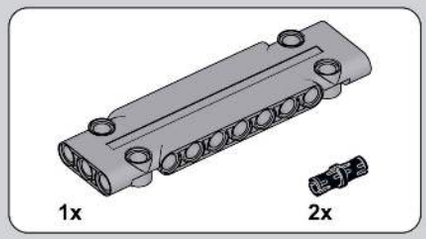

391

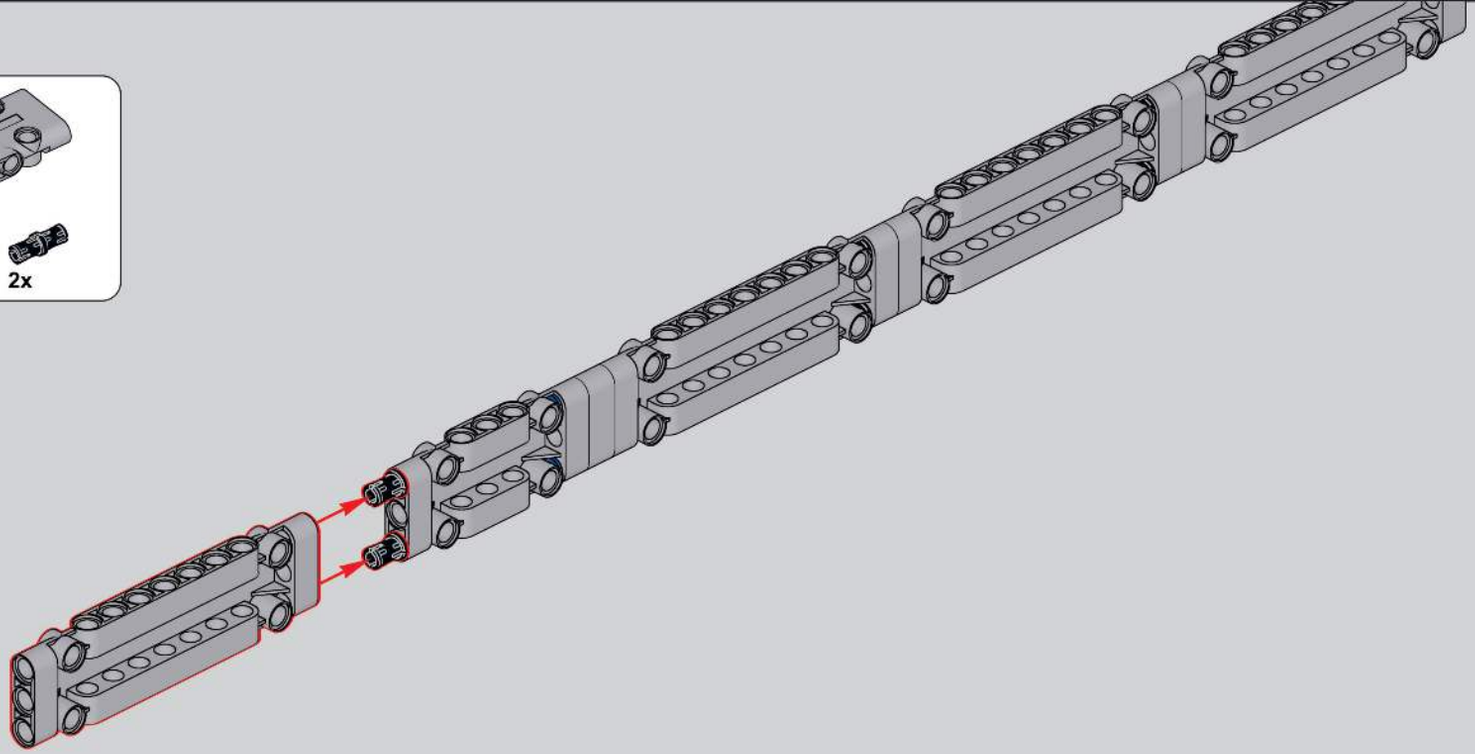

392

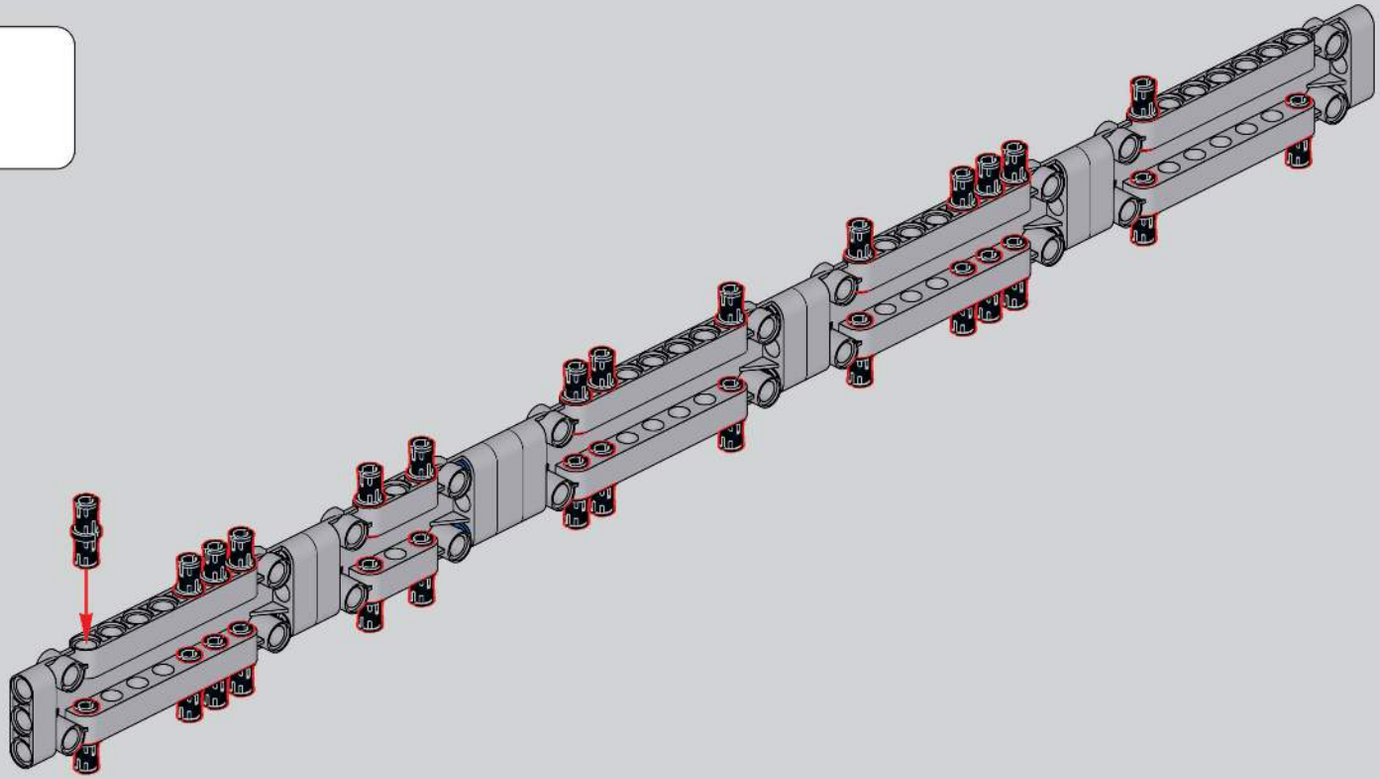

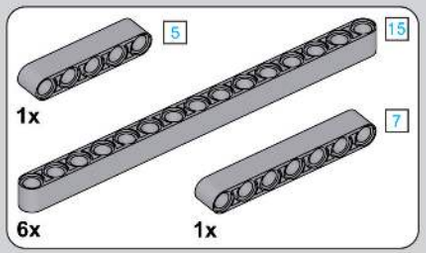

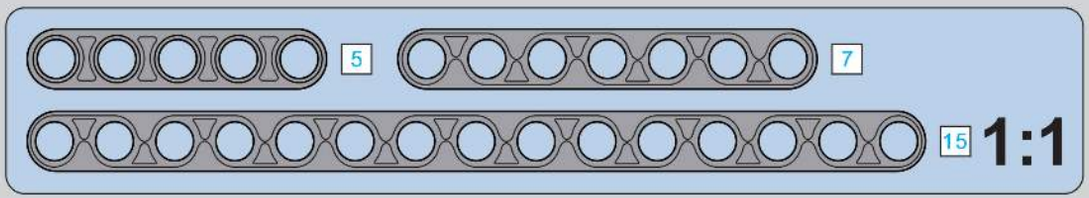

393

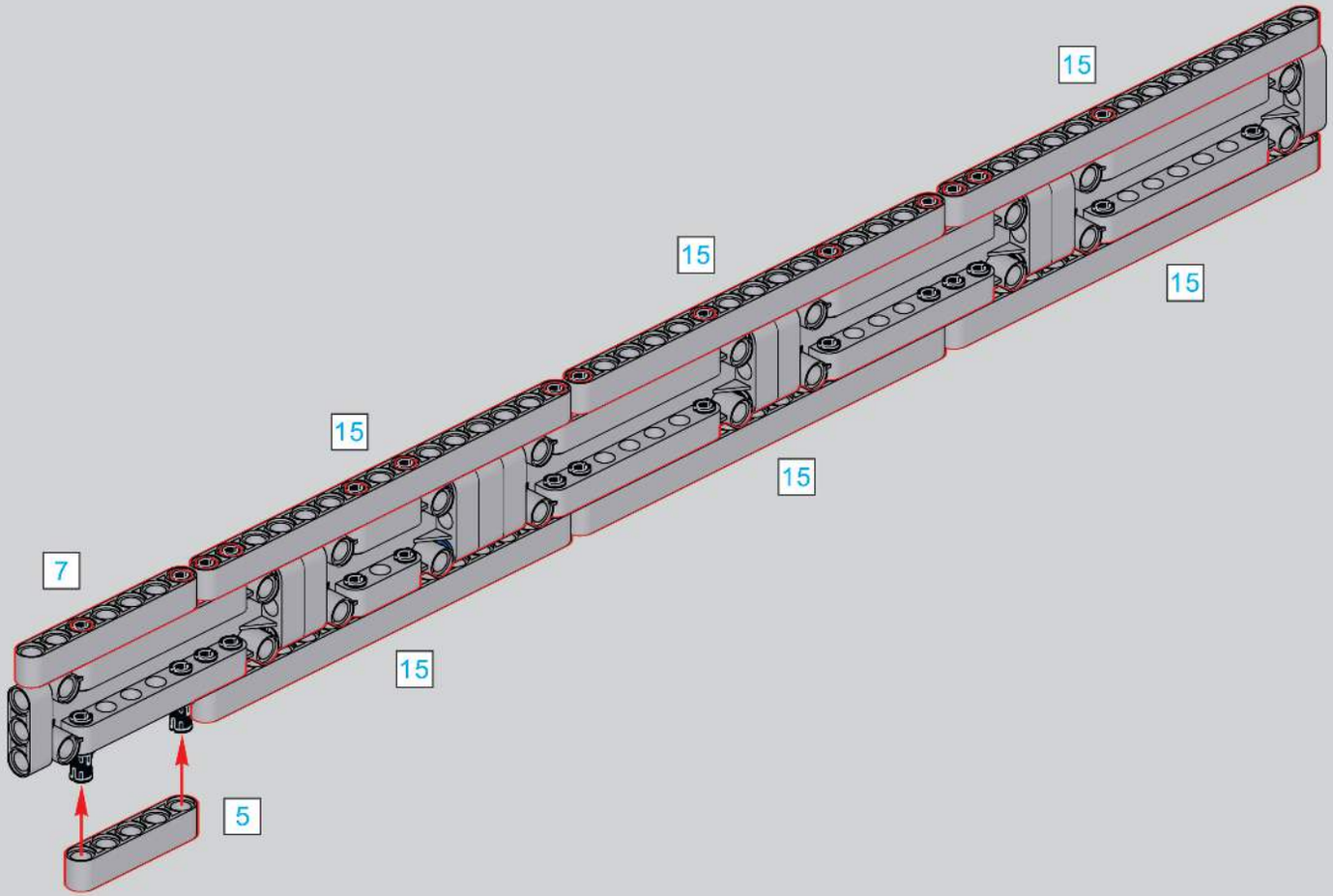

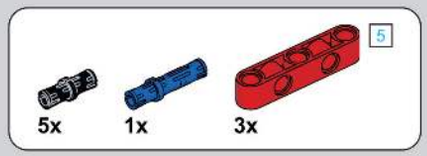

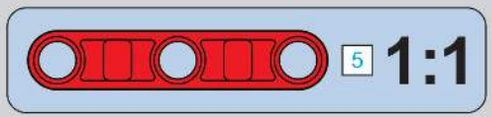

394

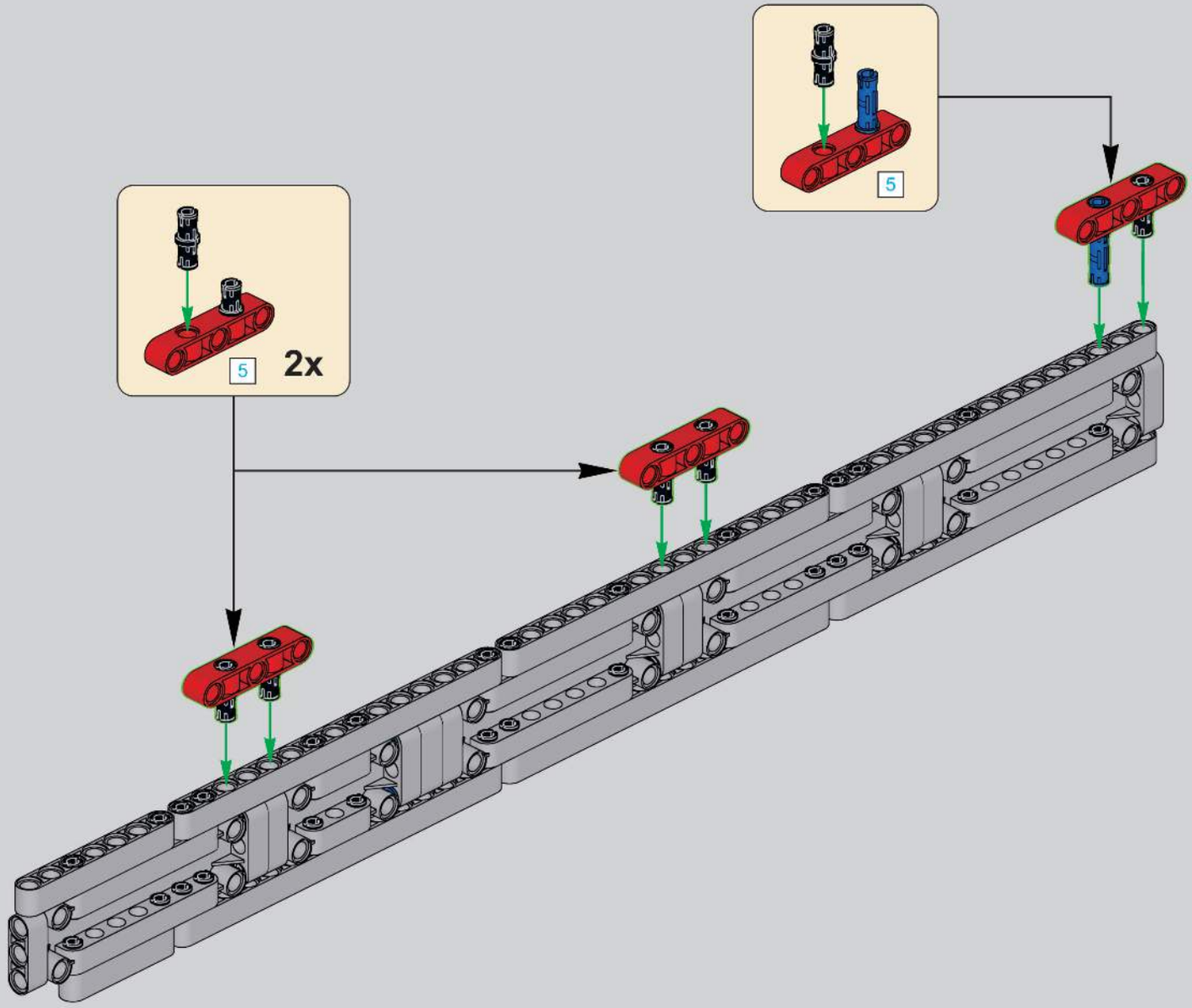

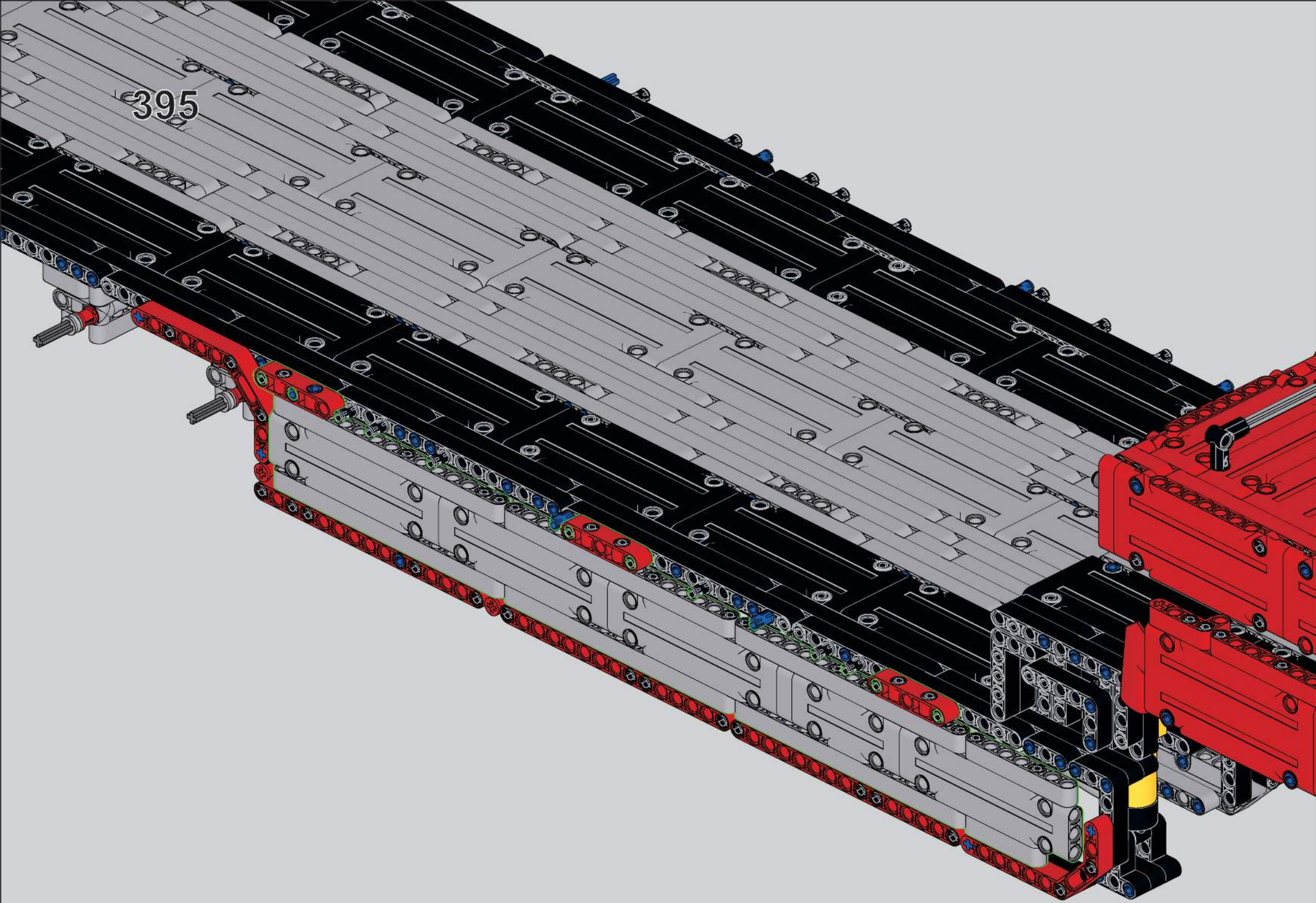
395

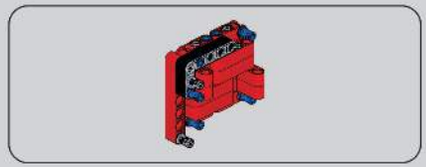

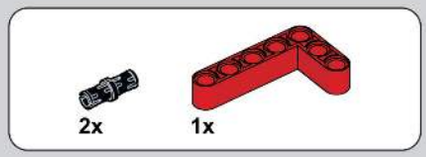

396

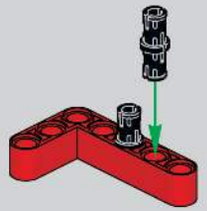

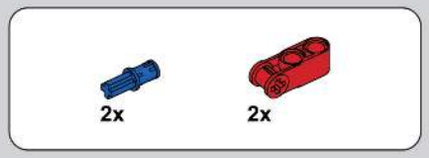

397

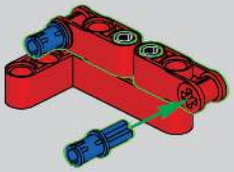

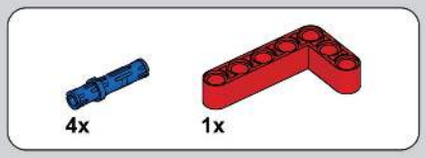

398

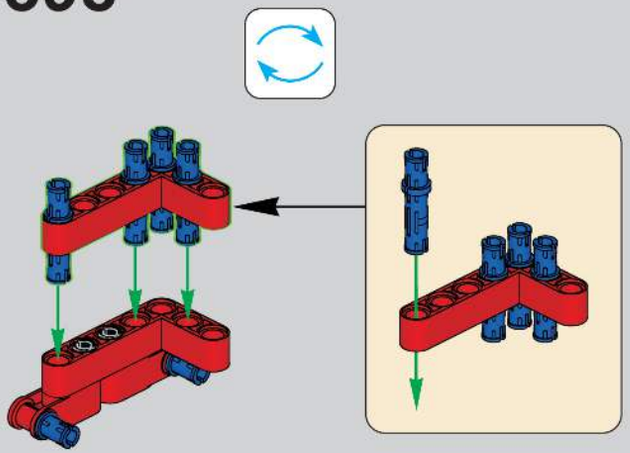

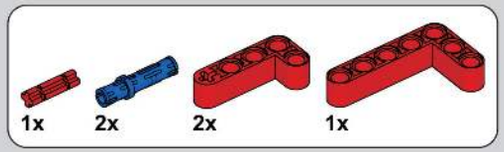

399

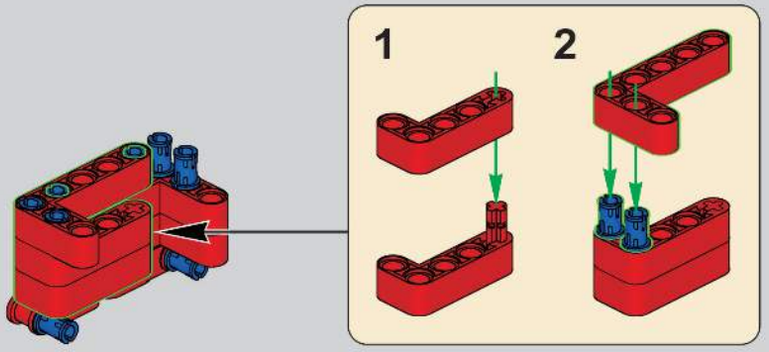

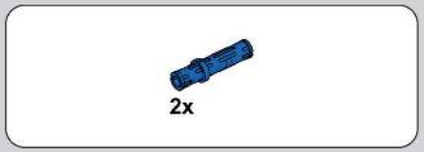

400

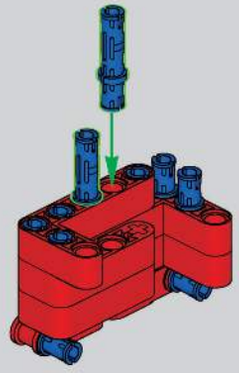

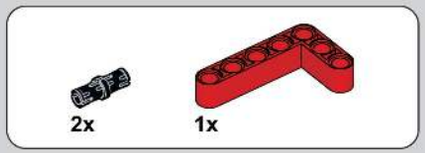

401

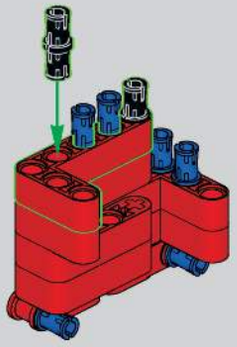

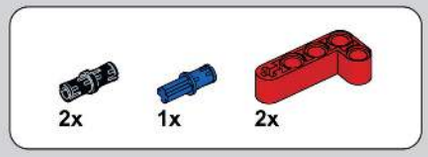

402

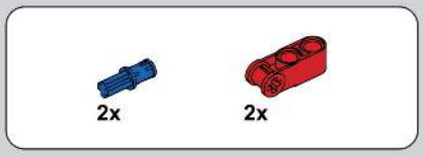

403

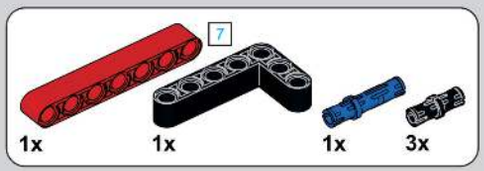

404

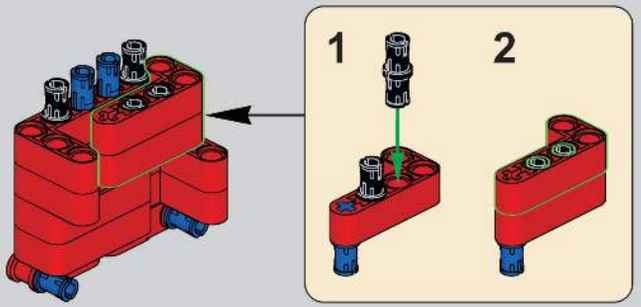

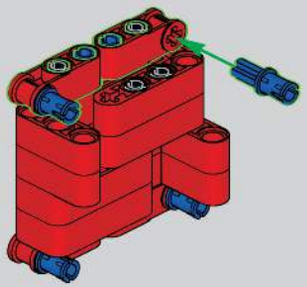

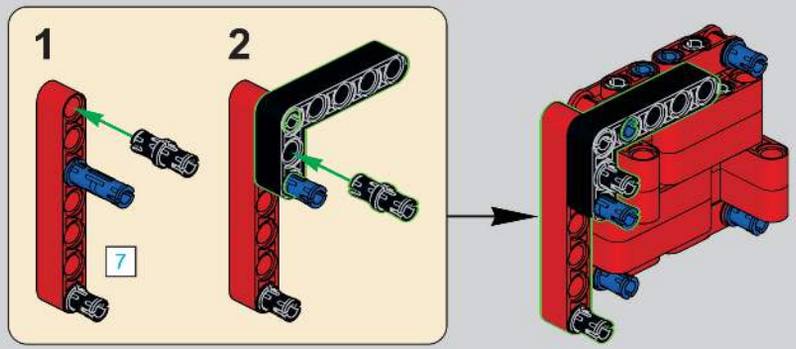

405

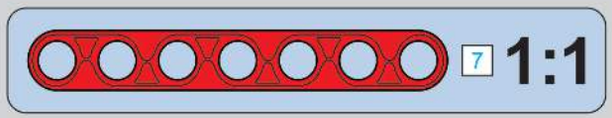

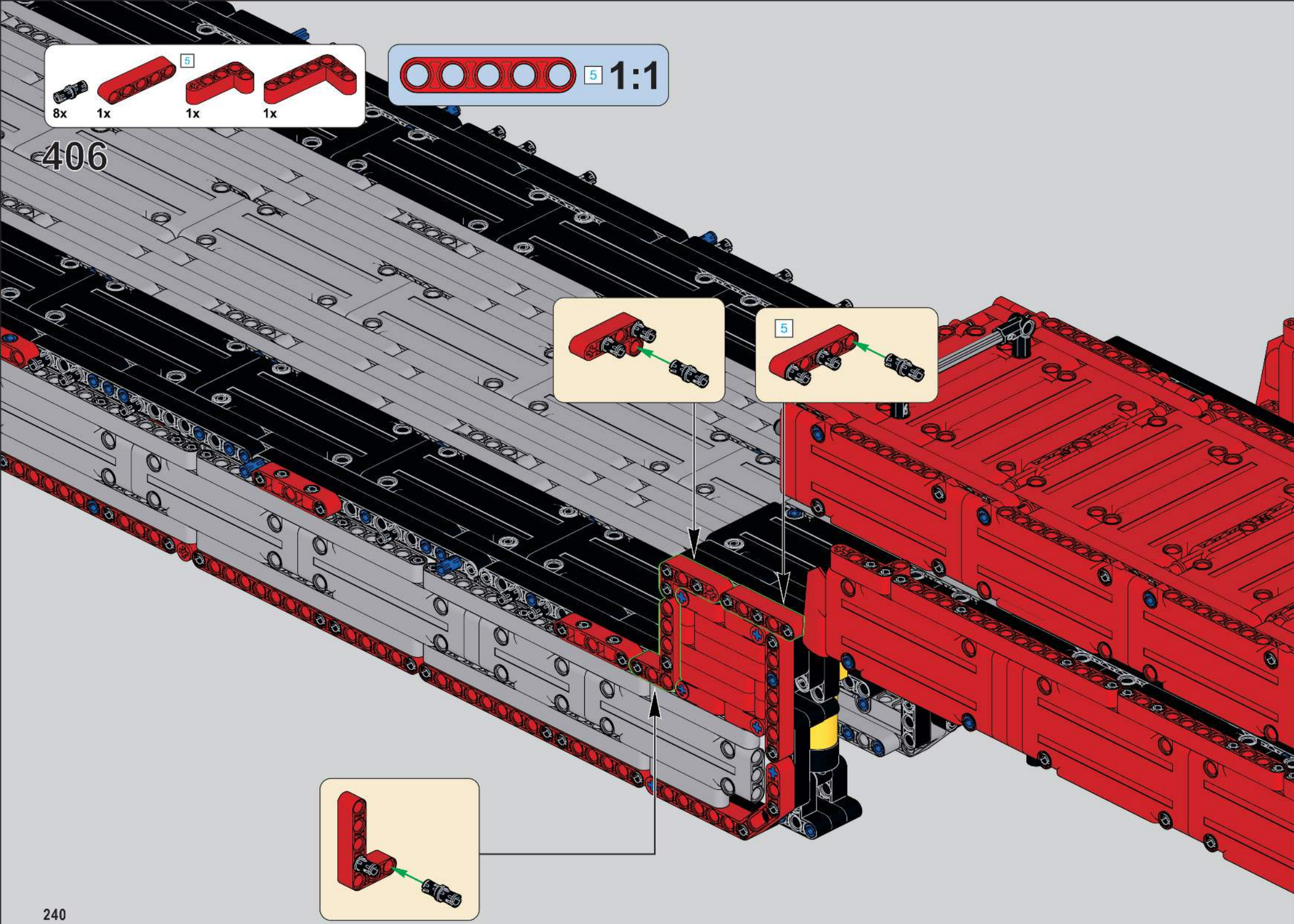
5
8x
1x
1x
1x
5
1:1
406
5

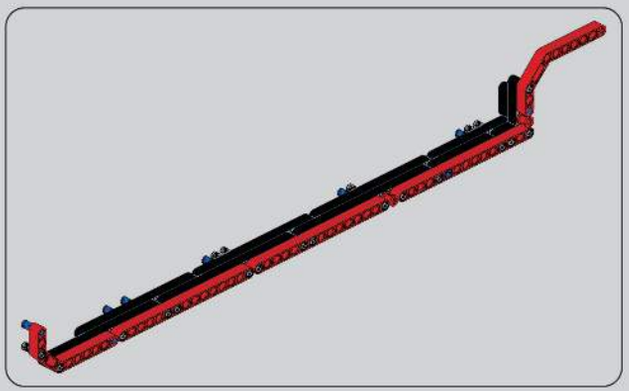

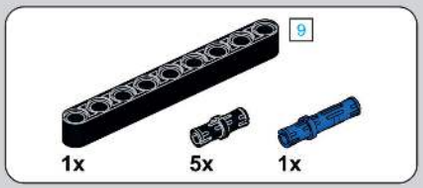

407

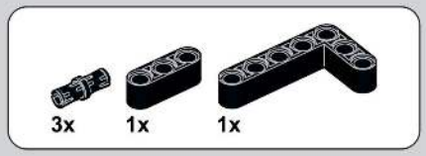

408

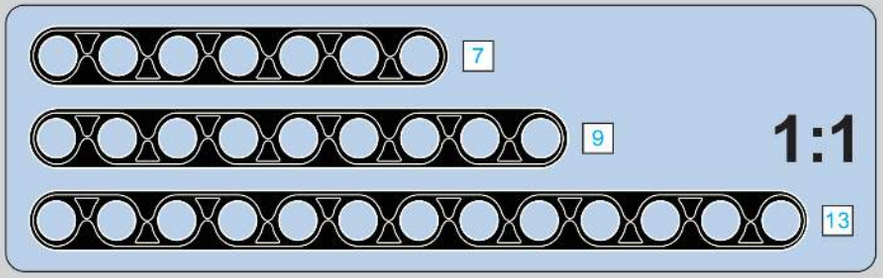

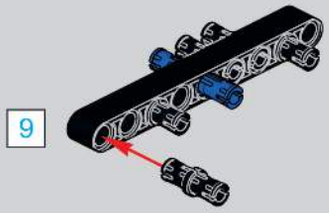

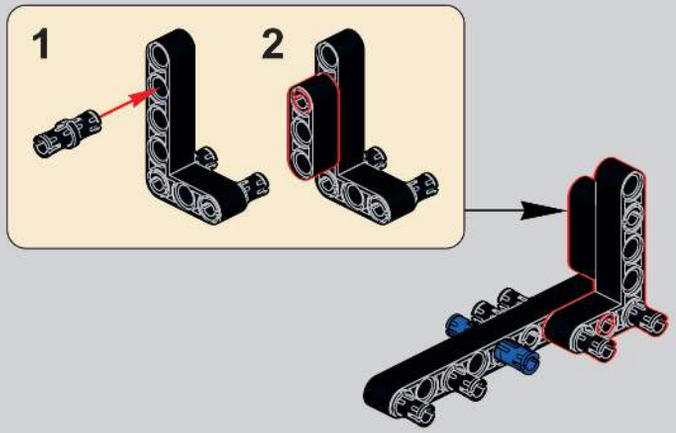

409

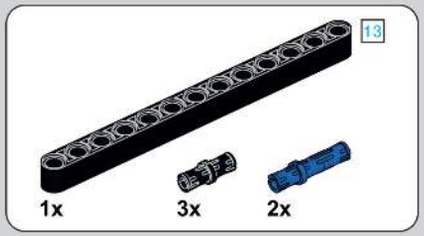

410

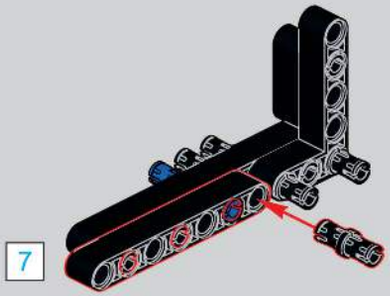

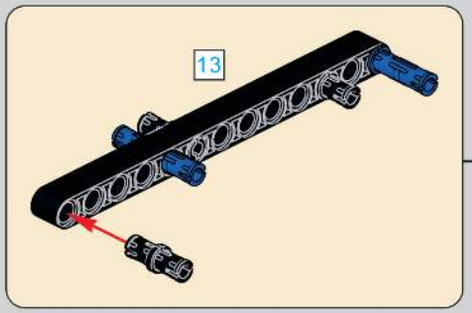

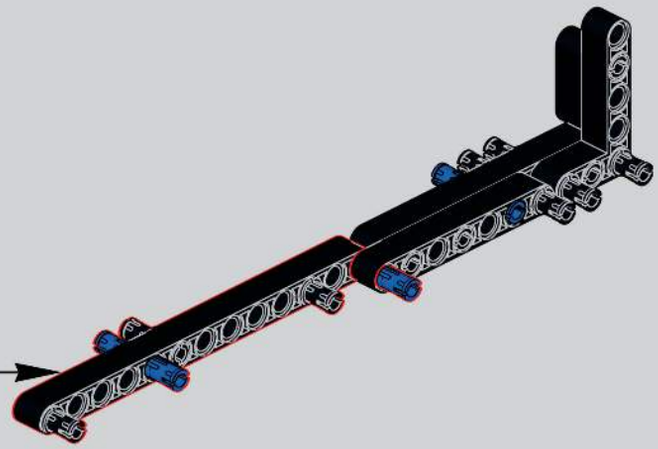

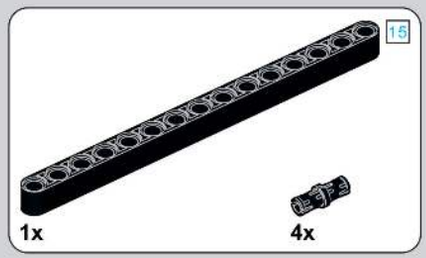

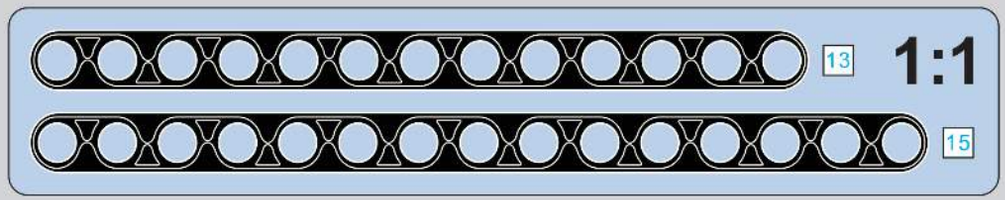

411

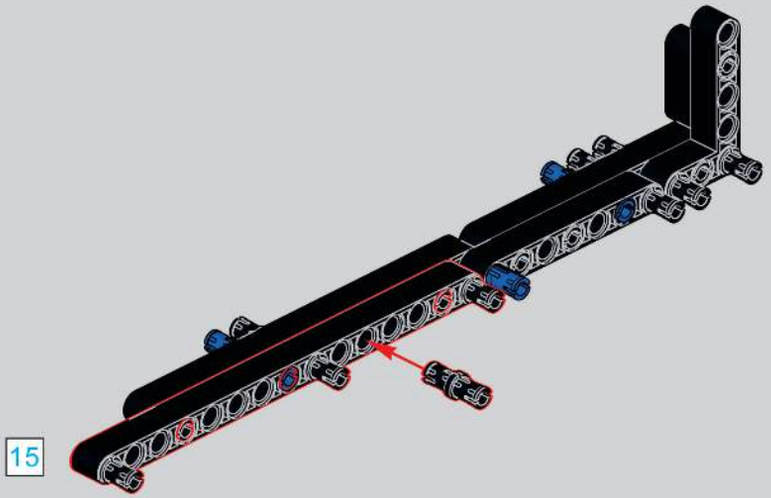

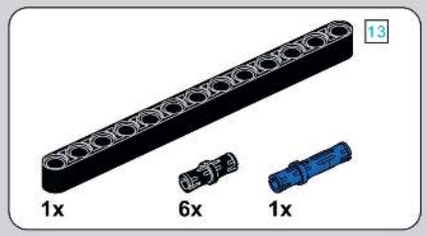

412

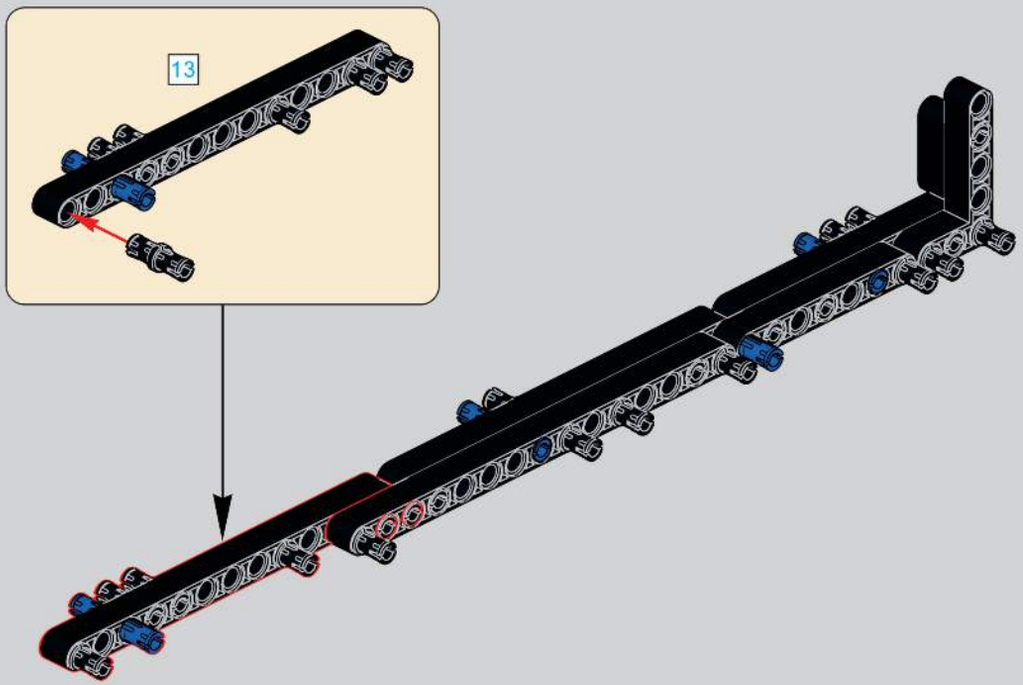

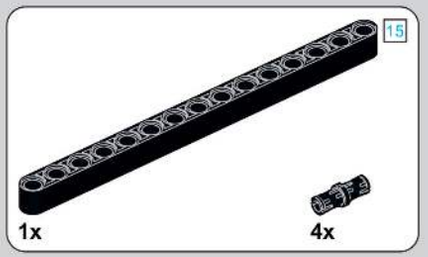

413

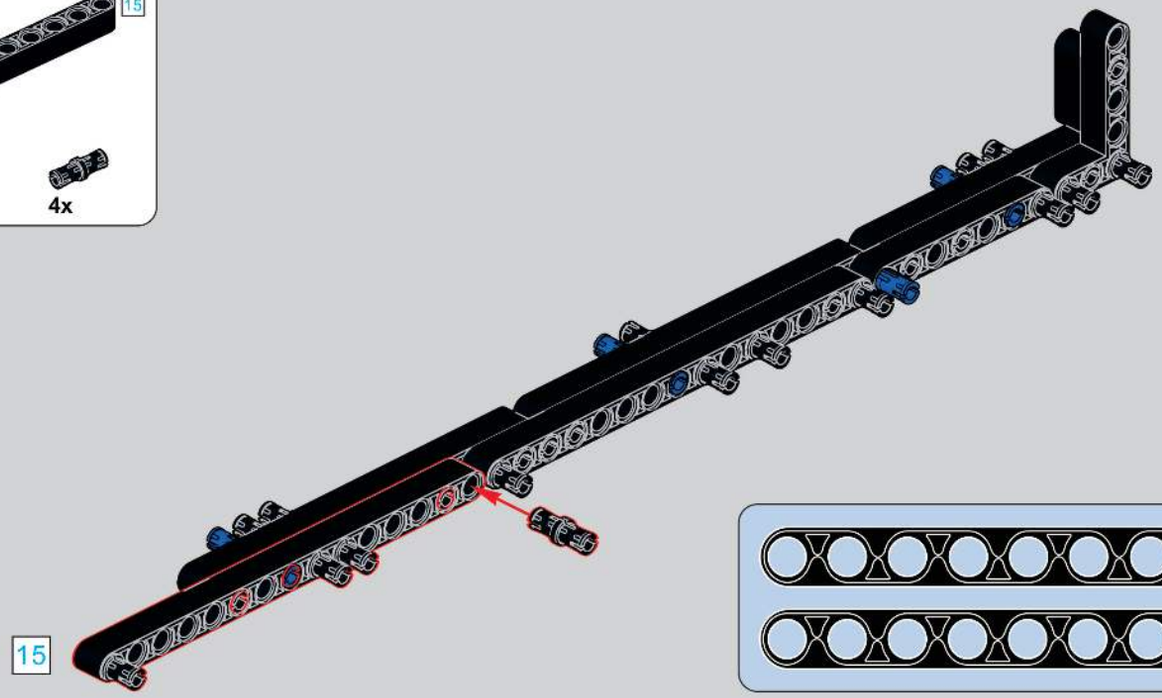

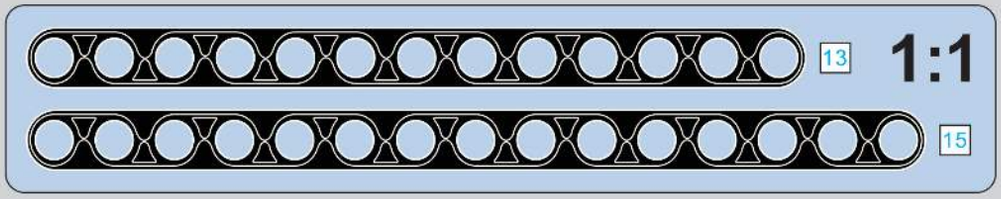

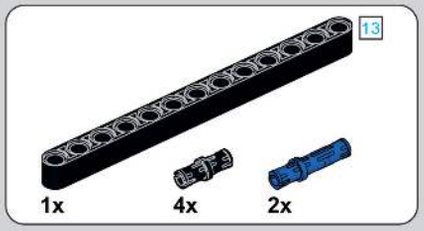

414

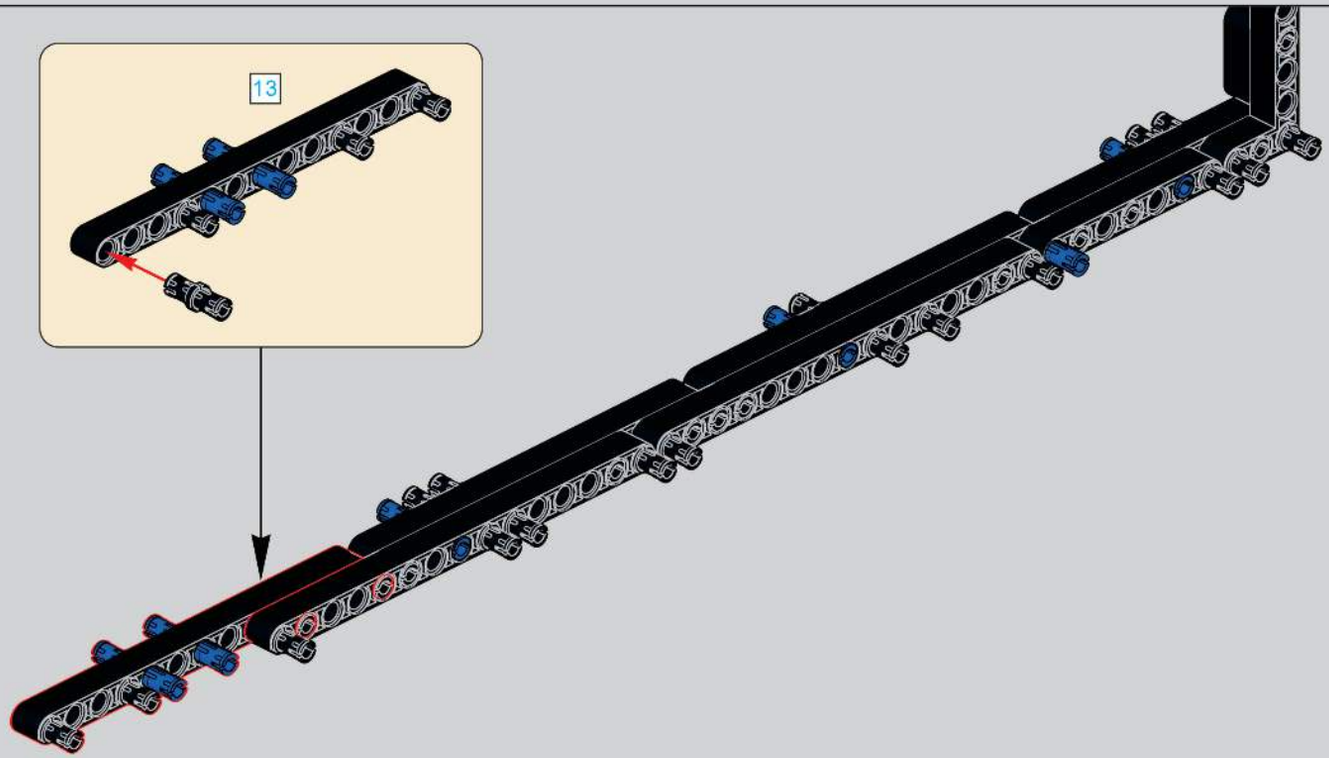

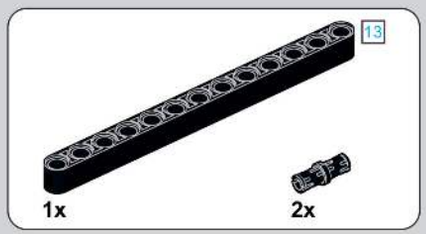

415

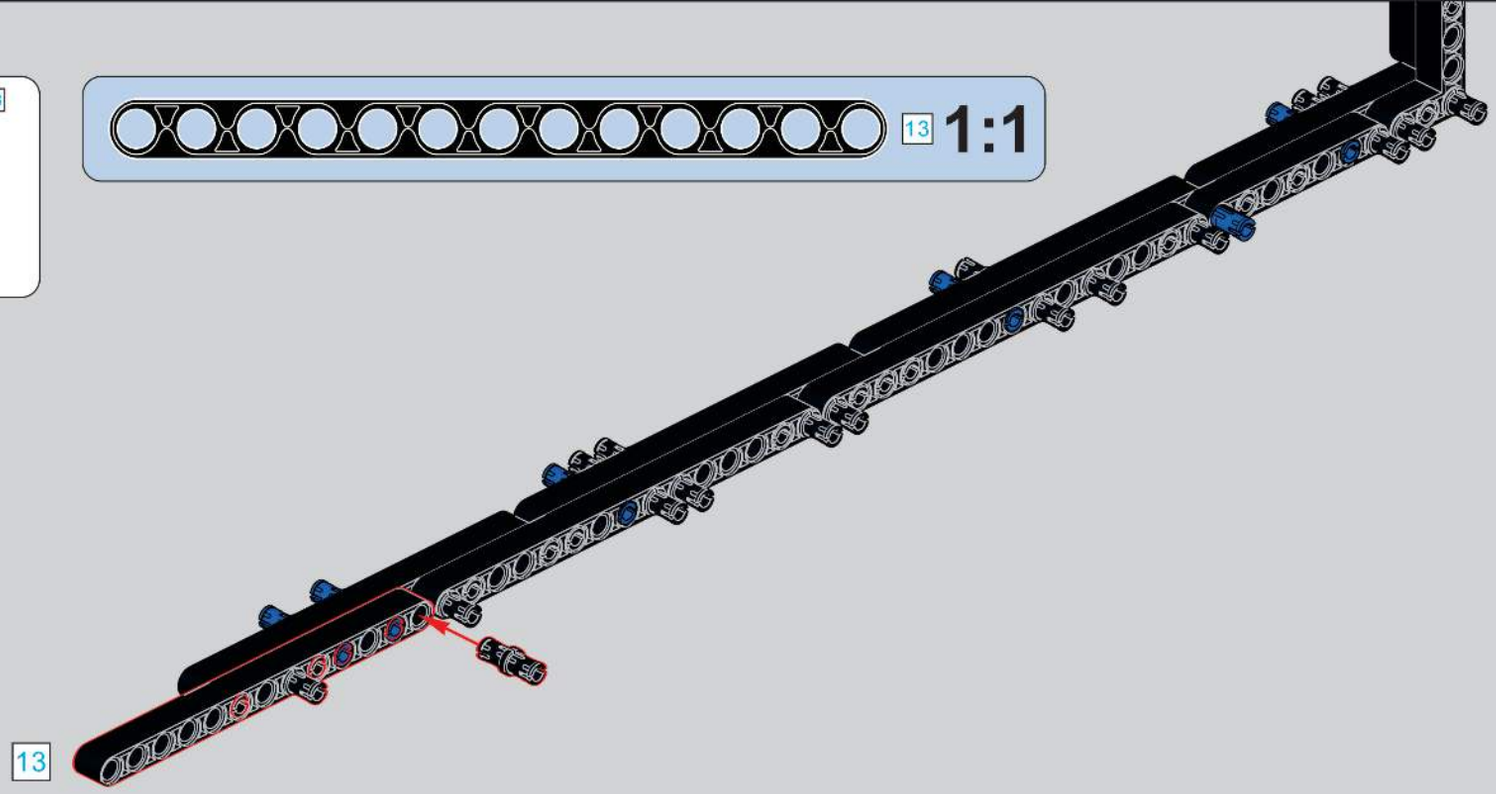

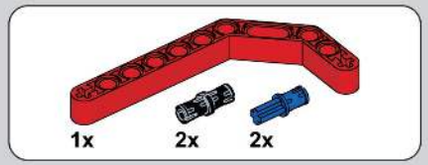

416

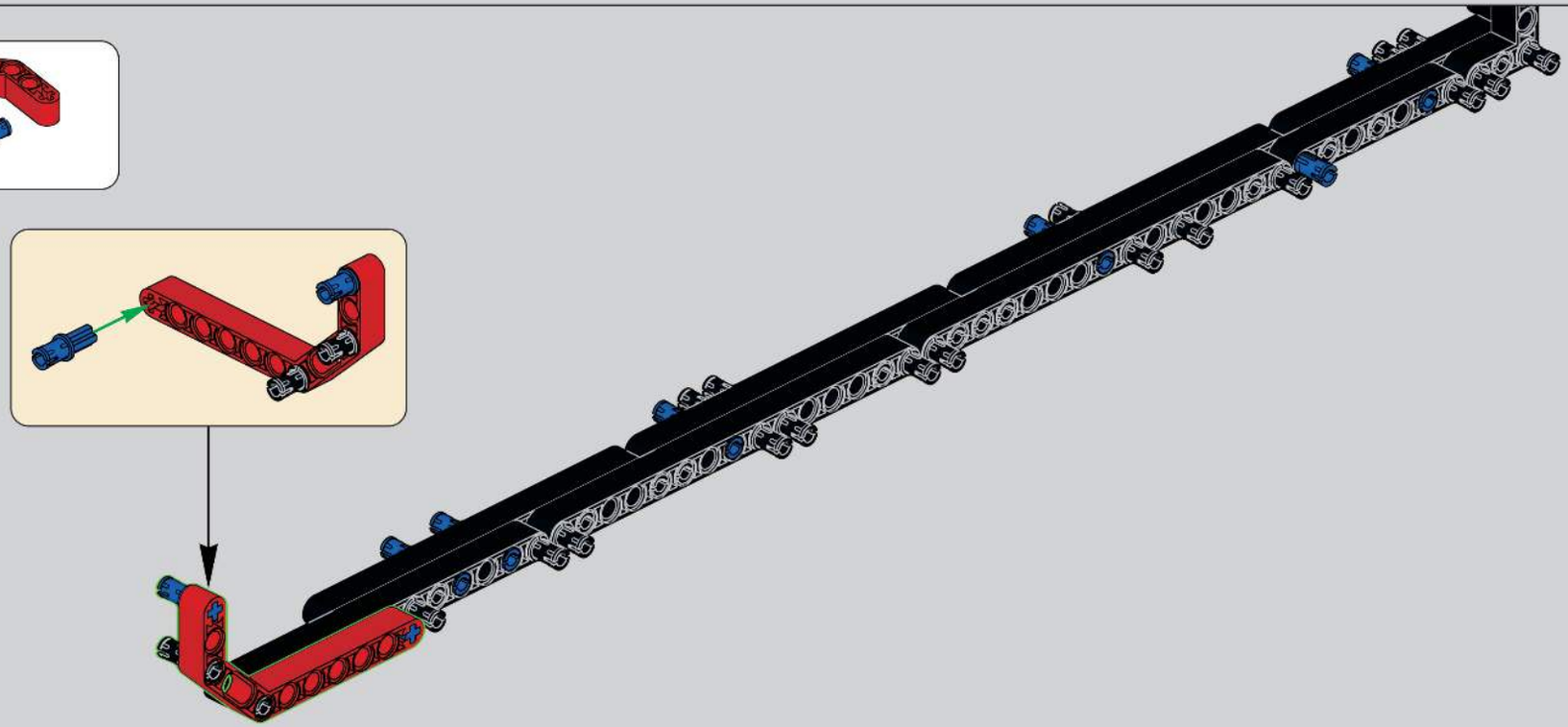

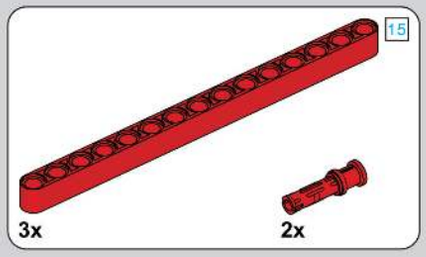

417

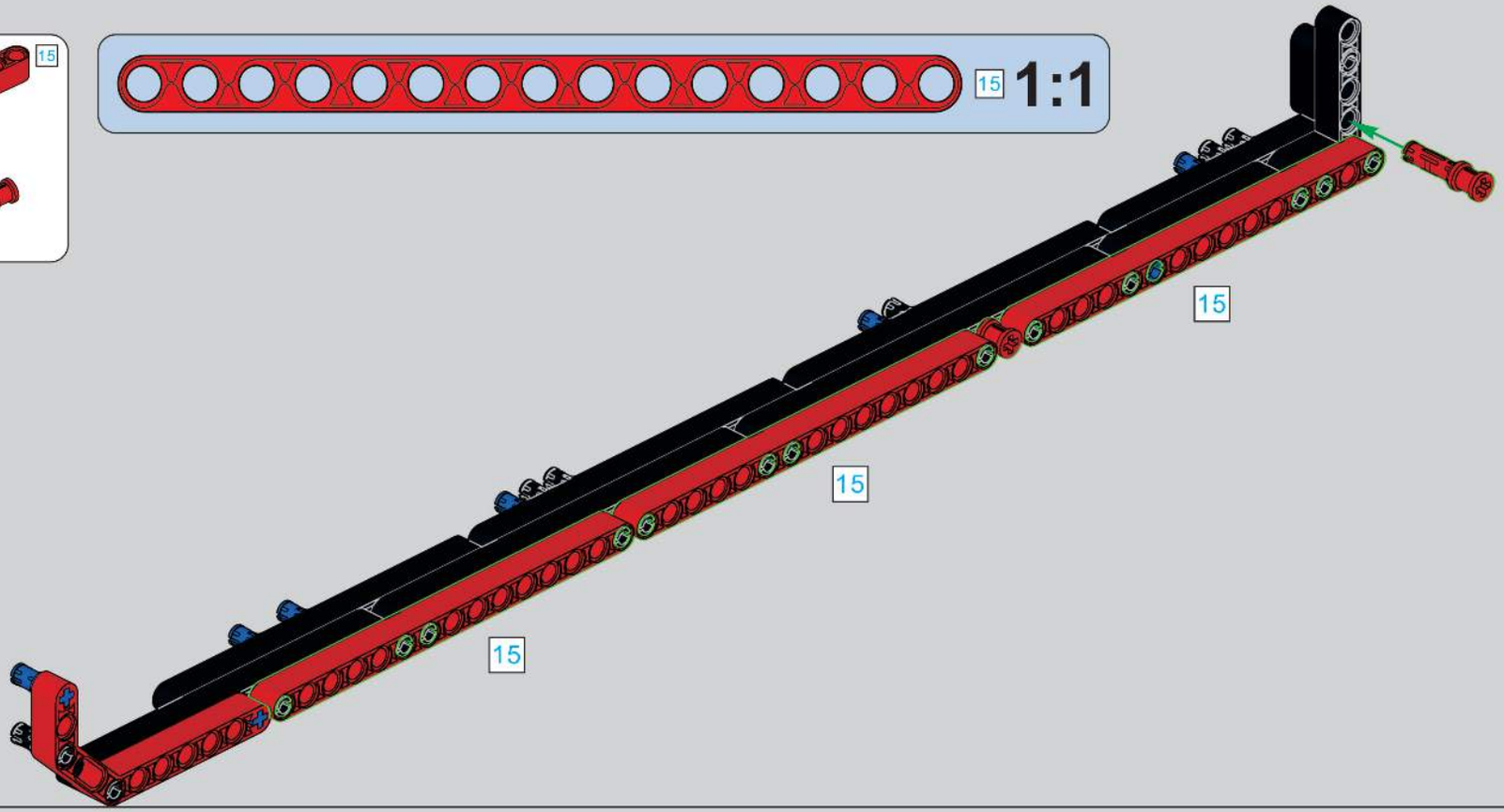

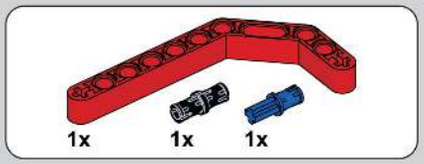

418

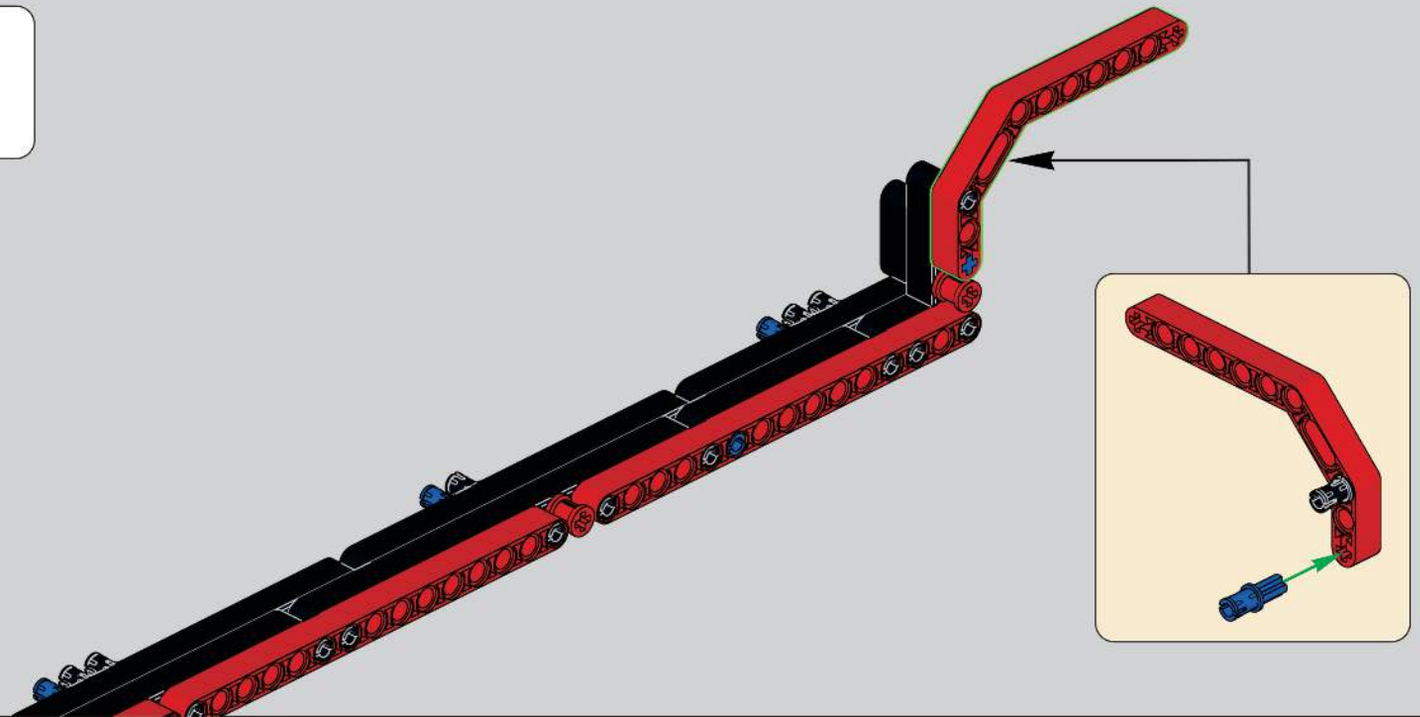

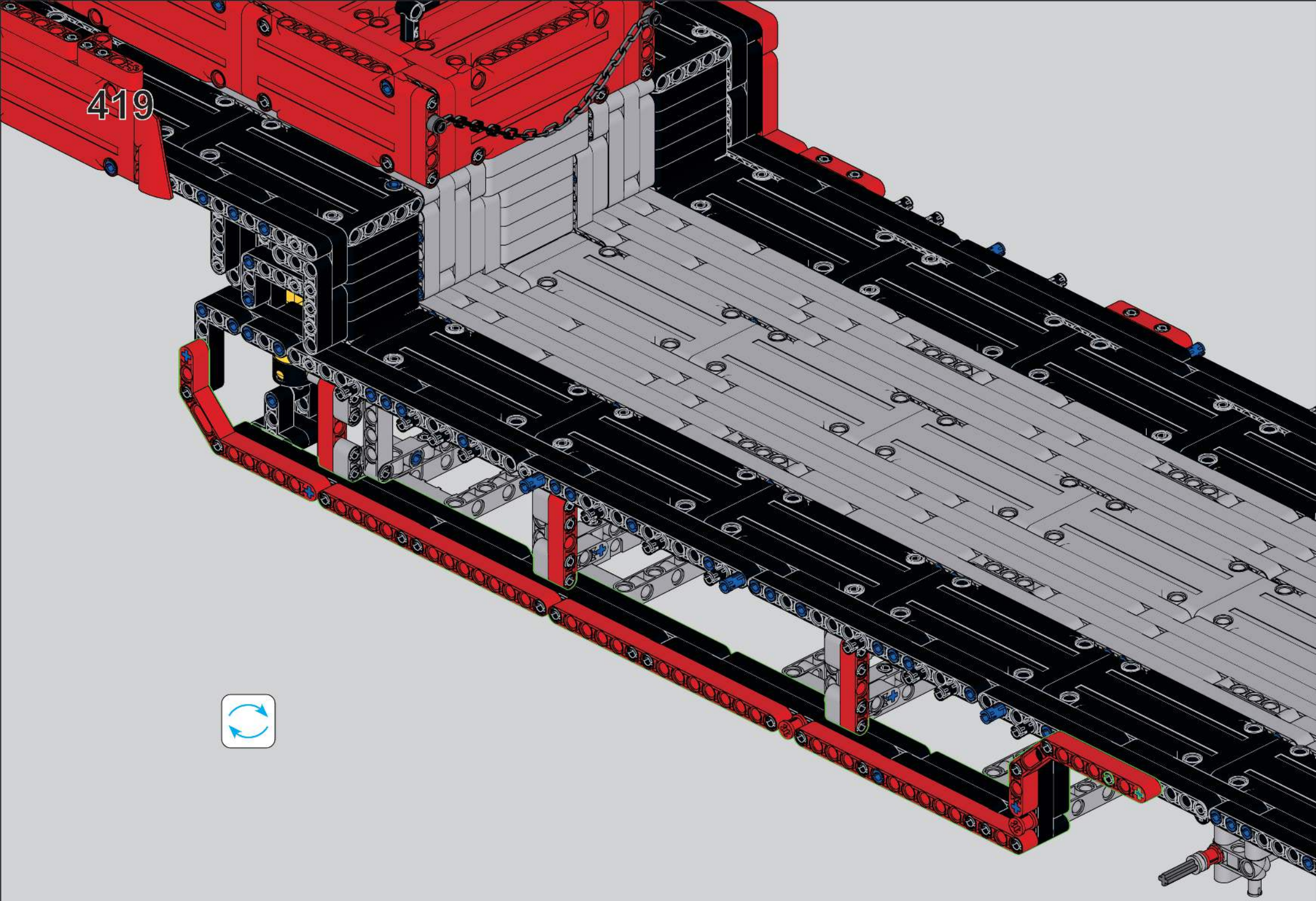
419

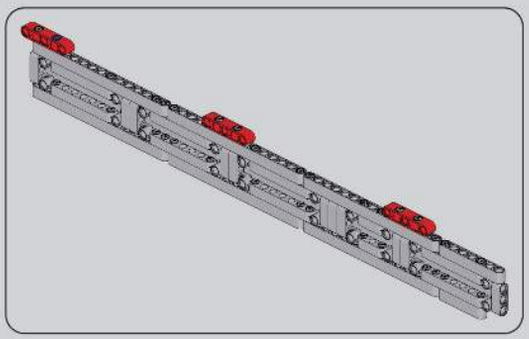

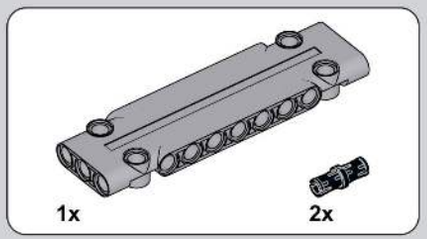

420

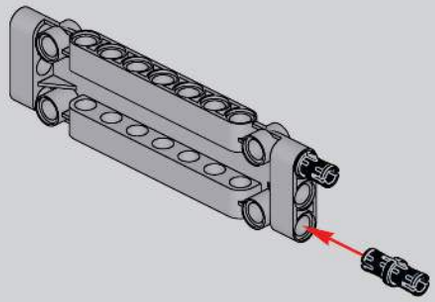

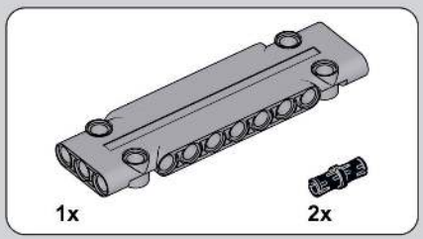

421

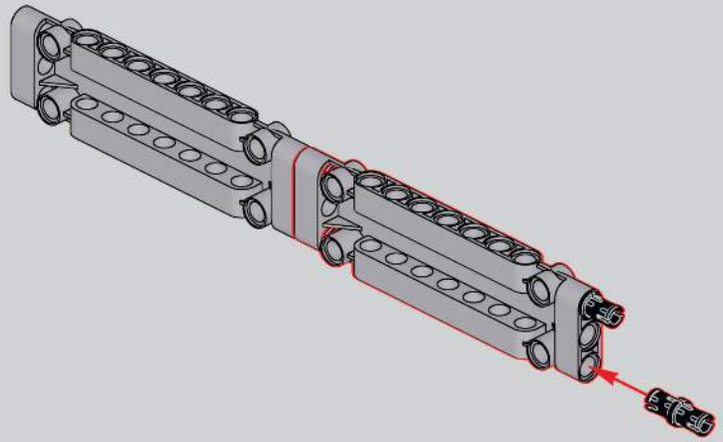

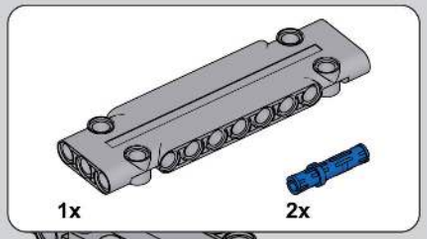

422

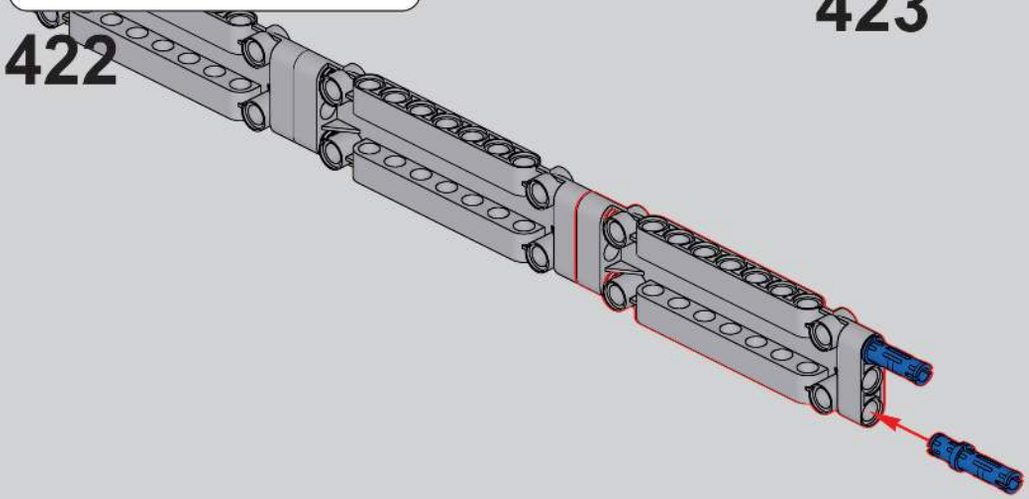

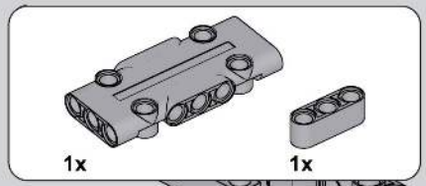

423

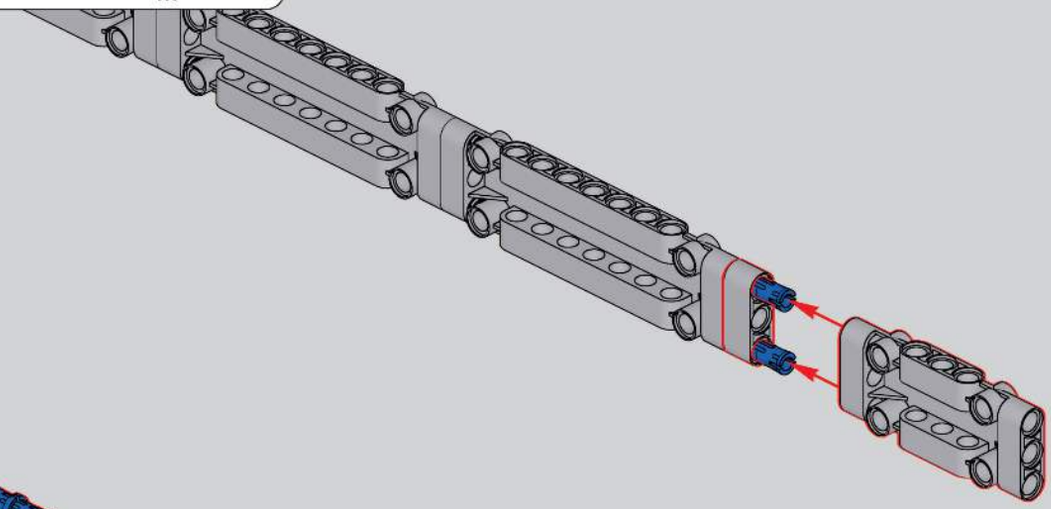

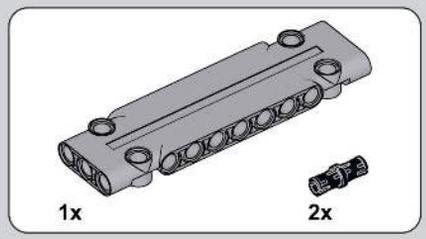

424

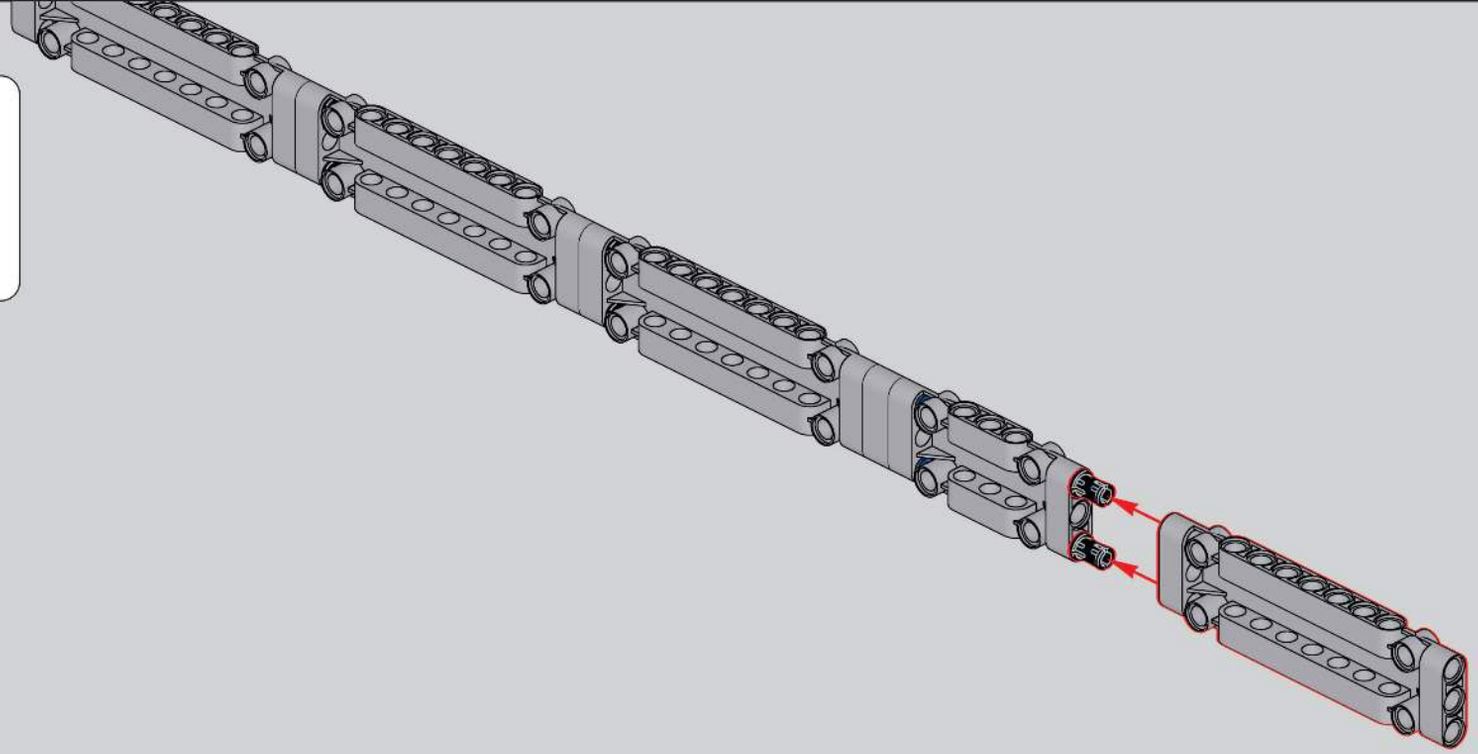

425

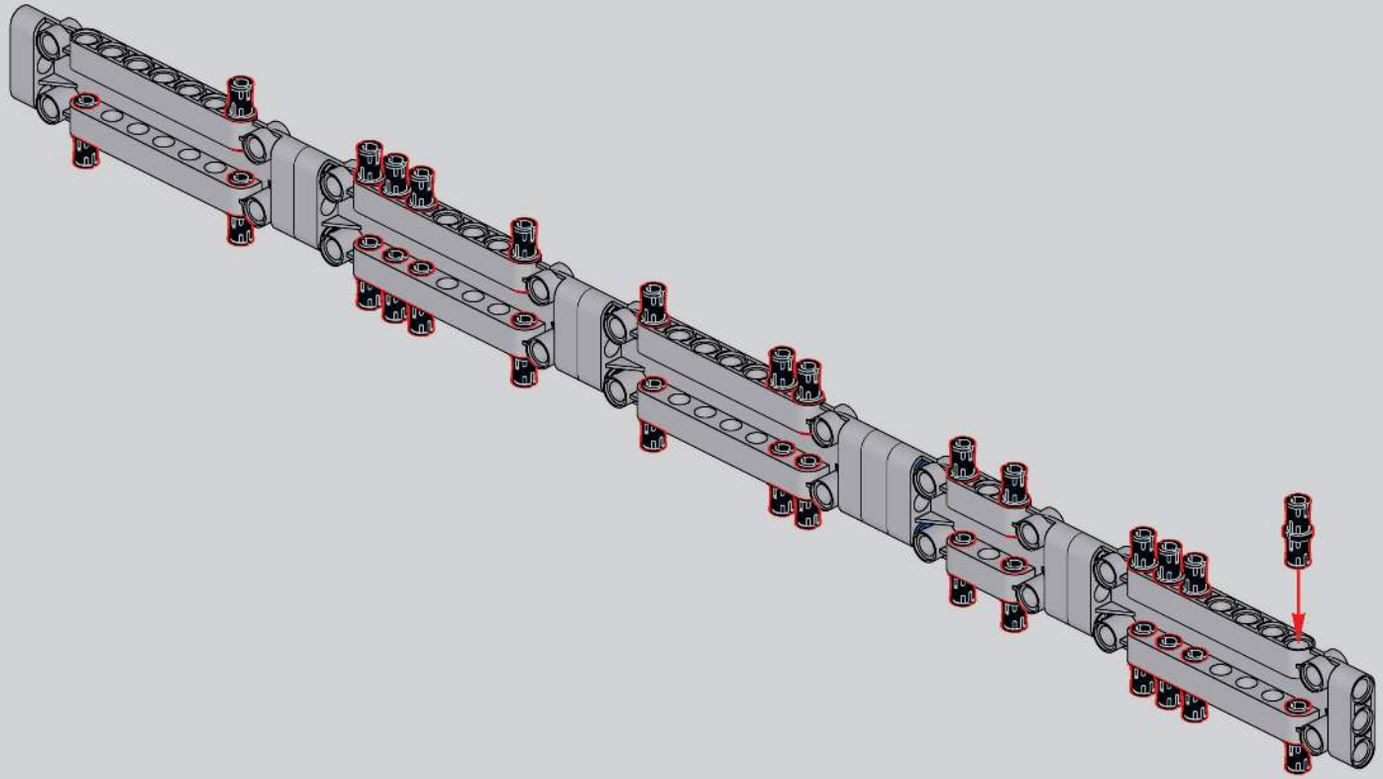

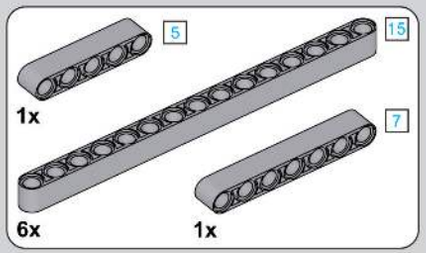

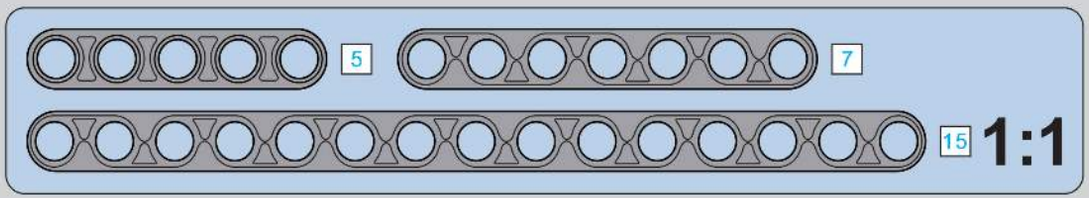

426

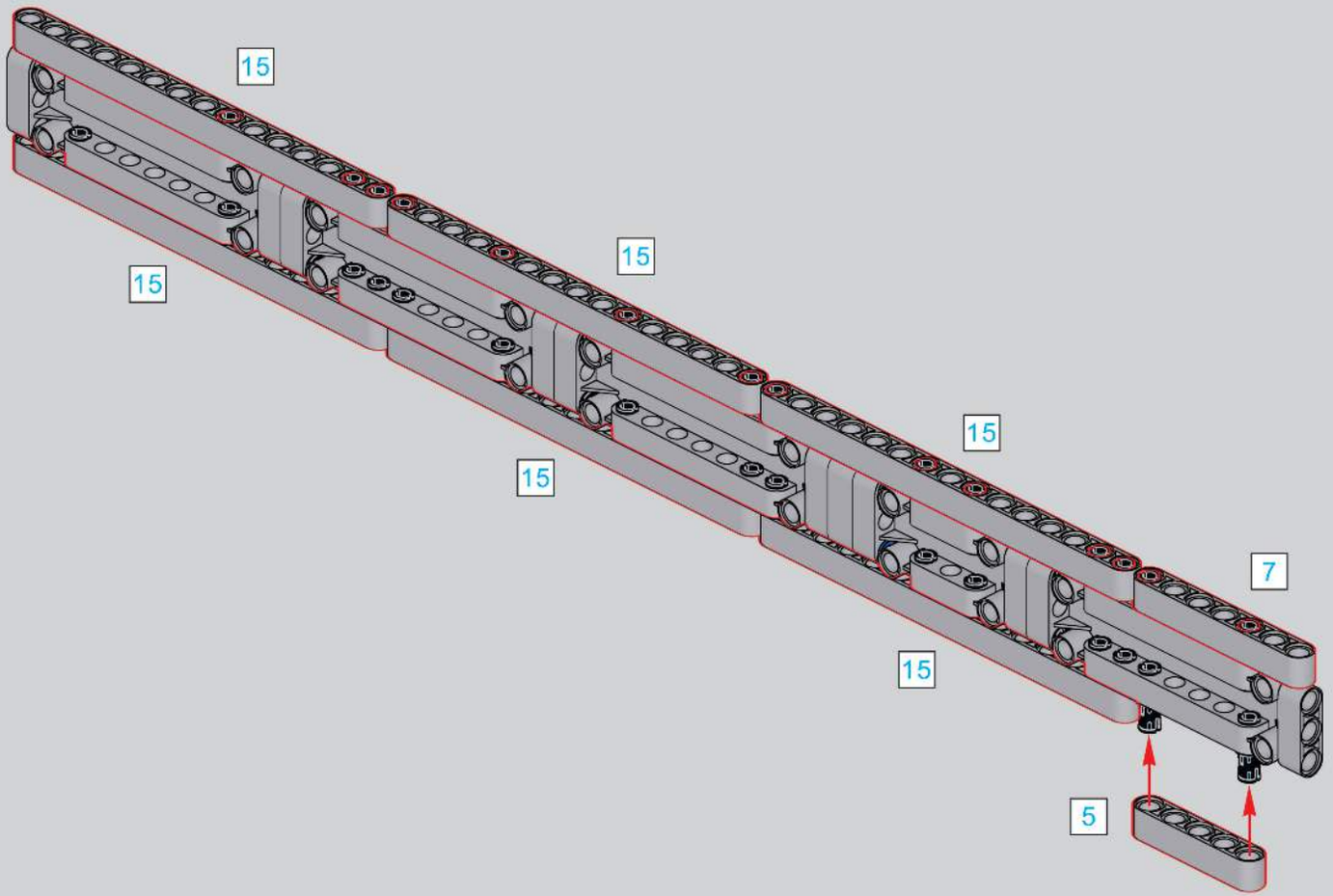

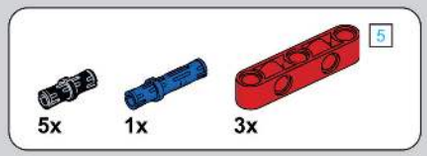

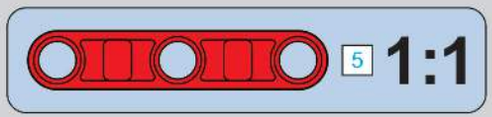

427

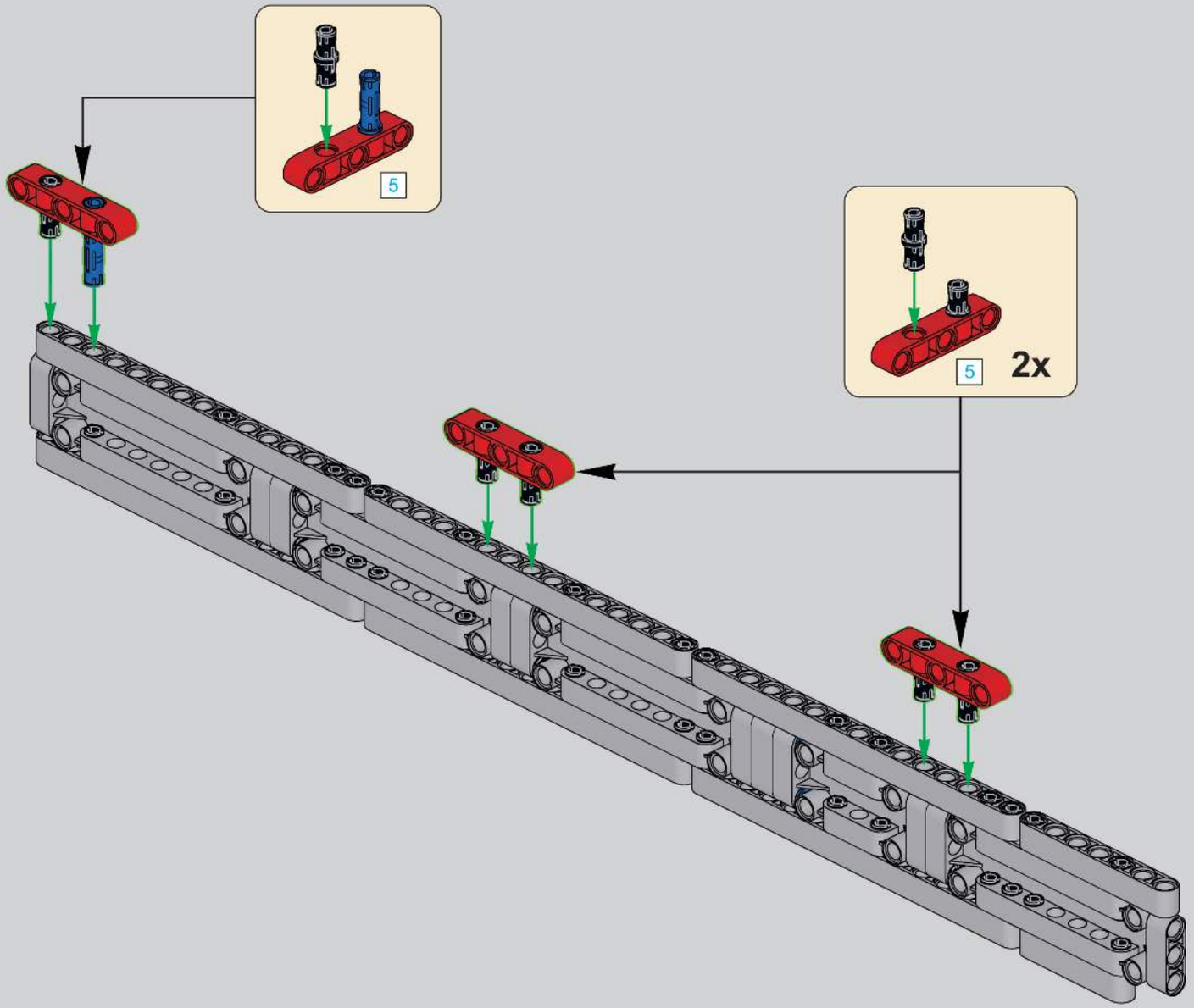

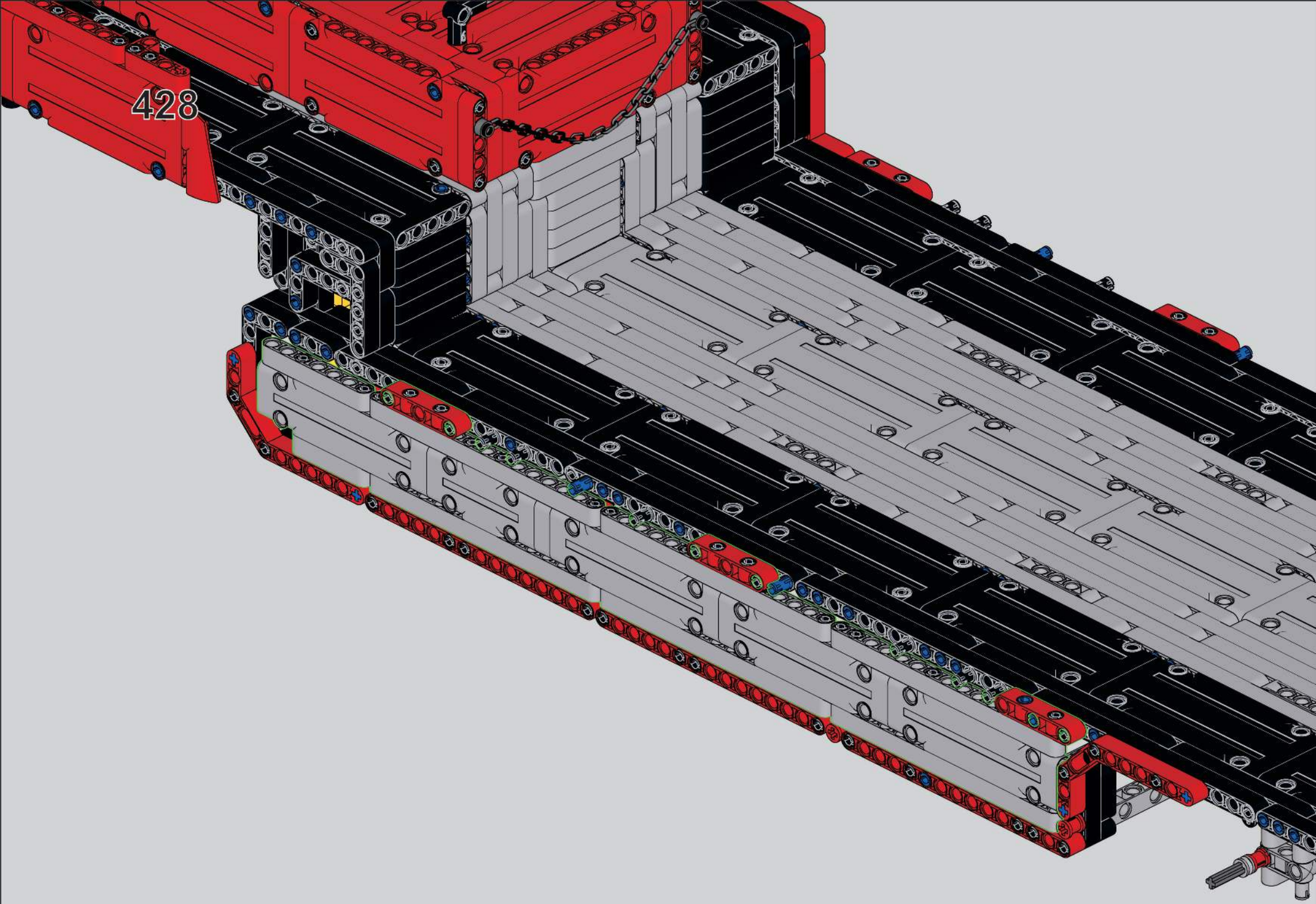
428

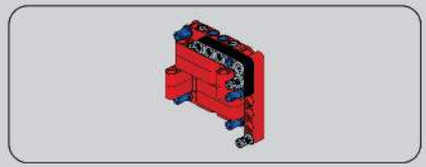

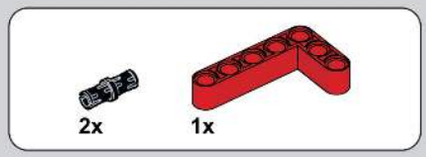

429

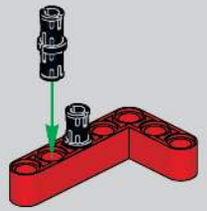

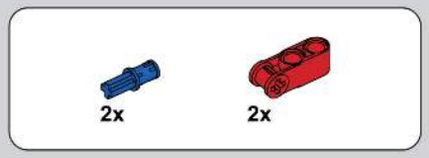

430

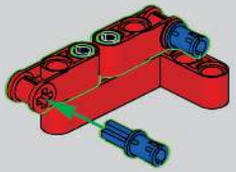

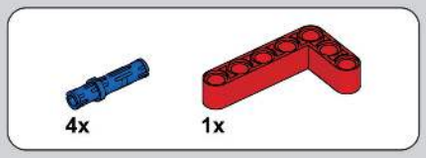

431

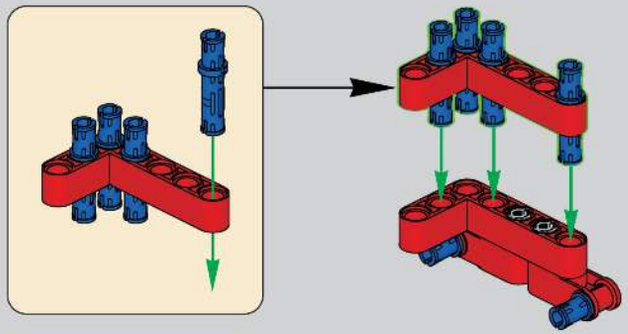

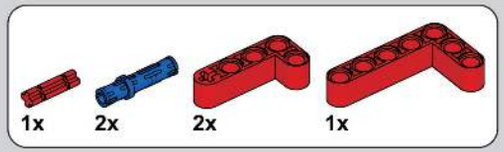

432

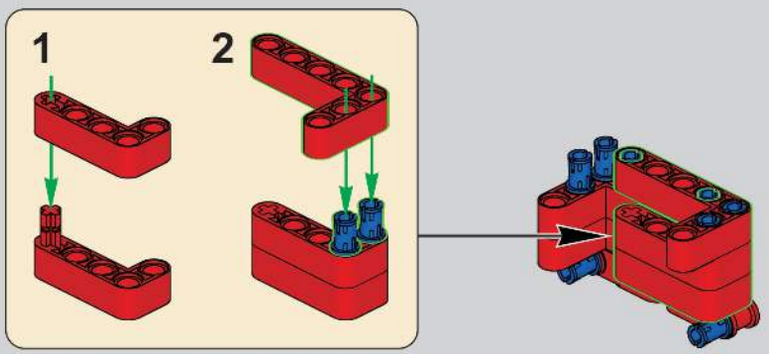

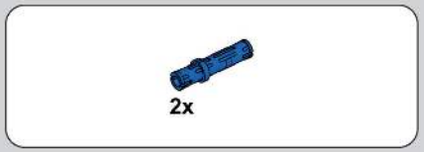

433

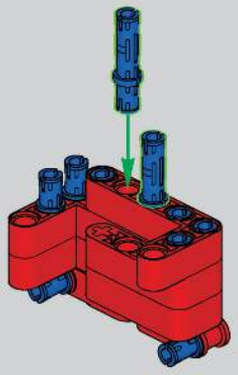

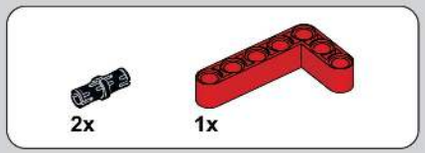

434

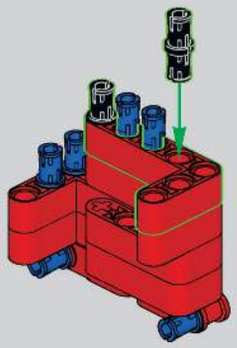

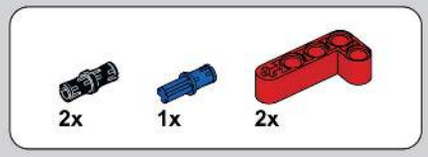

435

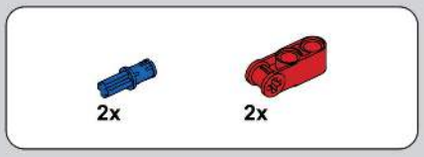

436

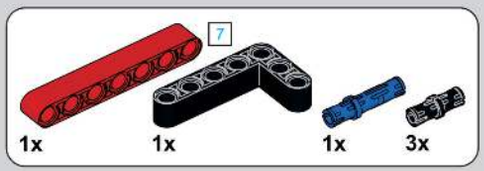

437

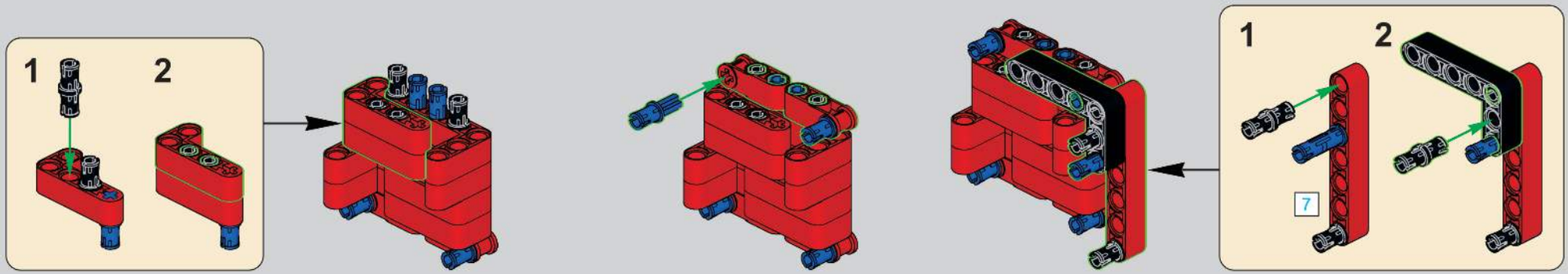

438

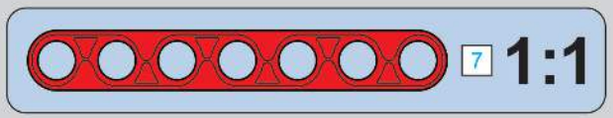

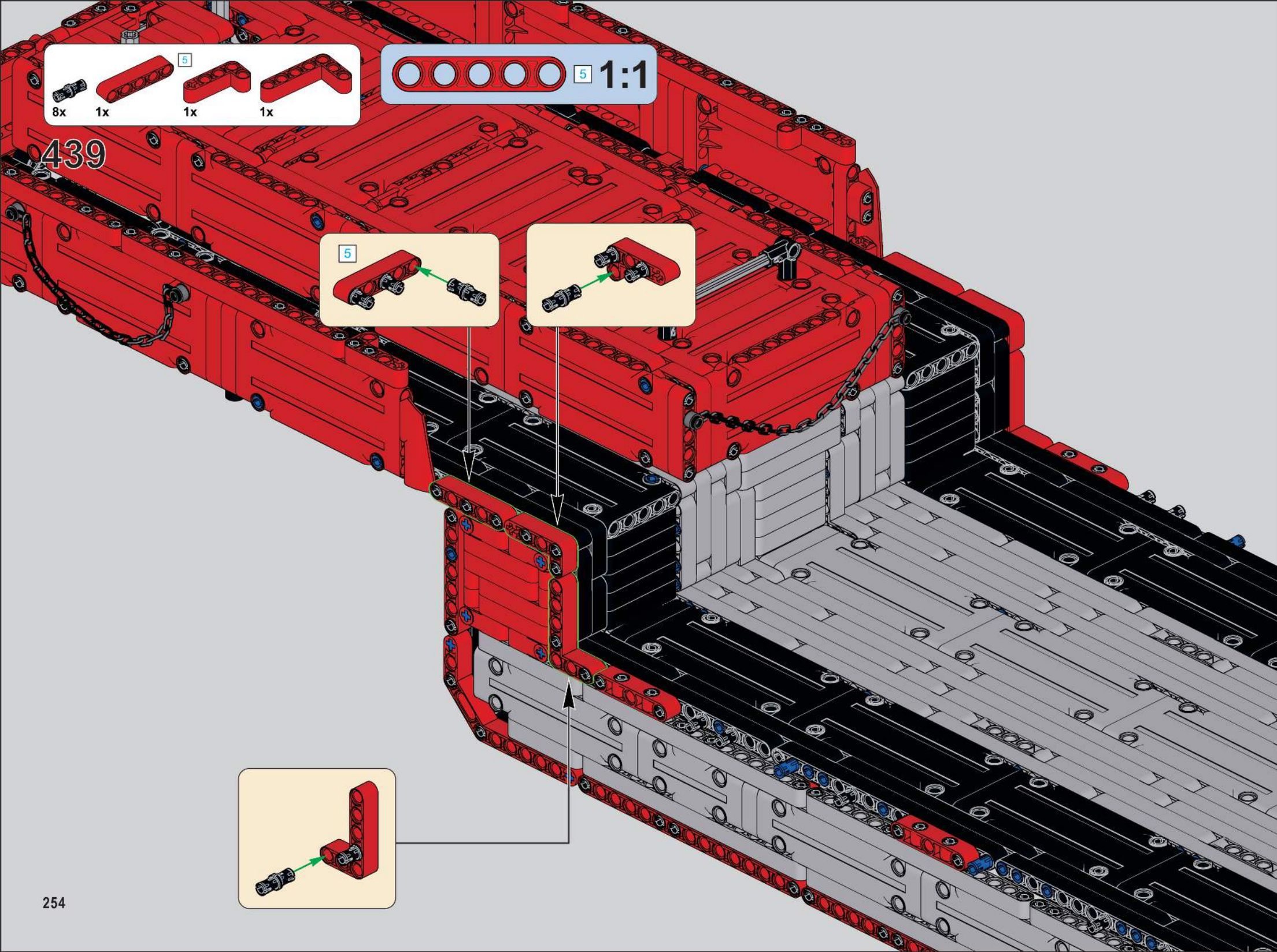
5
8x
1x
5
1x
1x
5
1:1
439
5

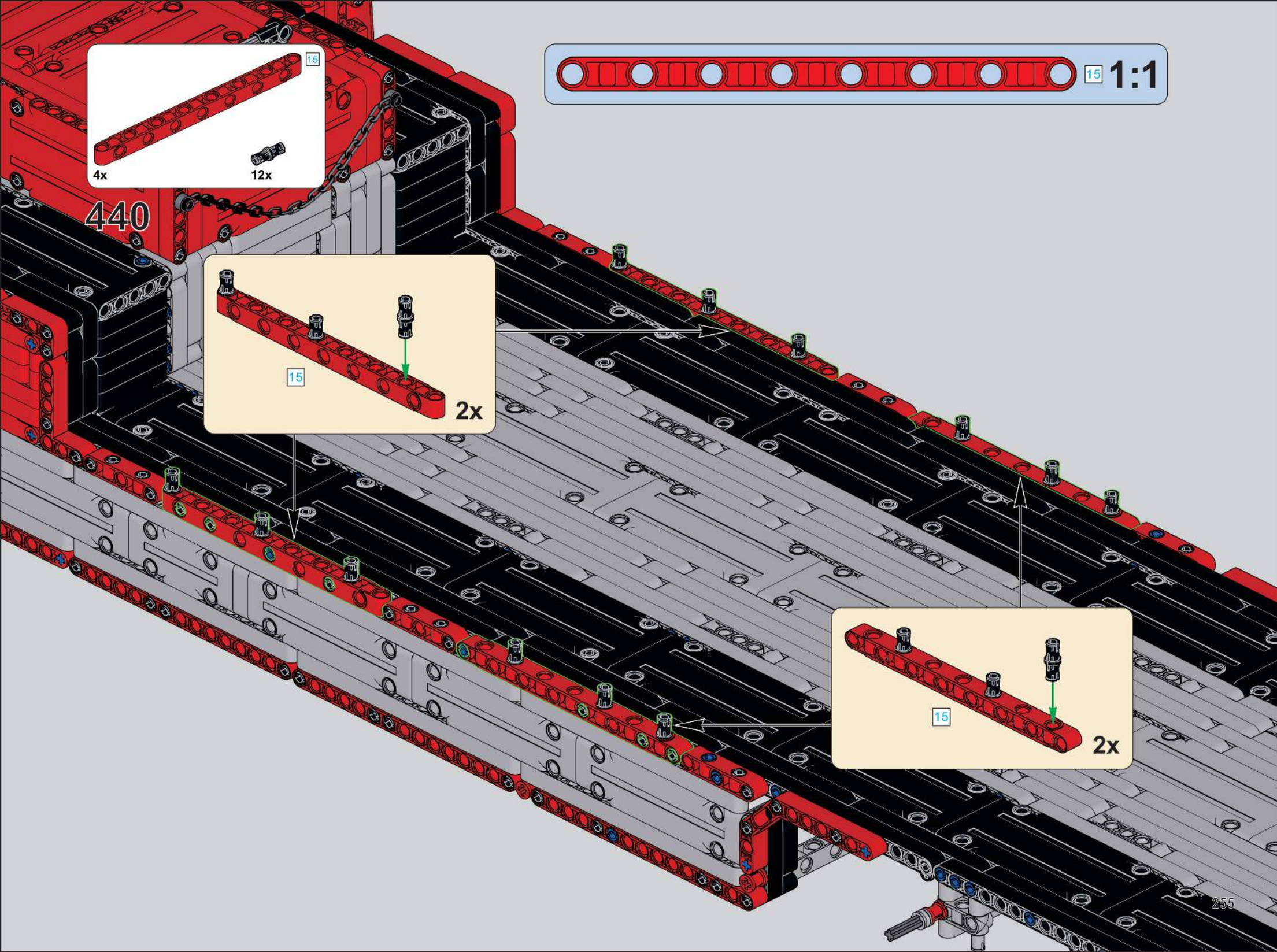
15
4x
12x
440
15
2x
15
1:1
15
2x

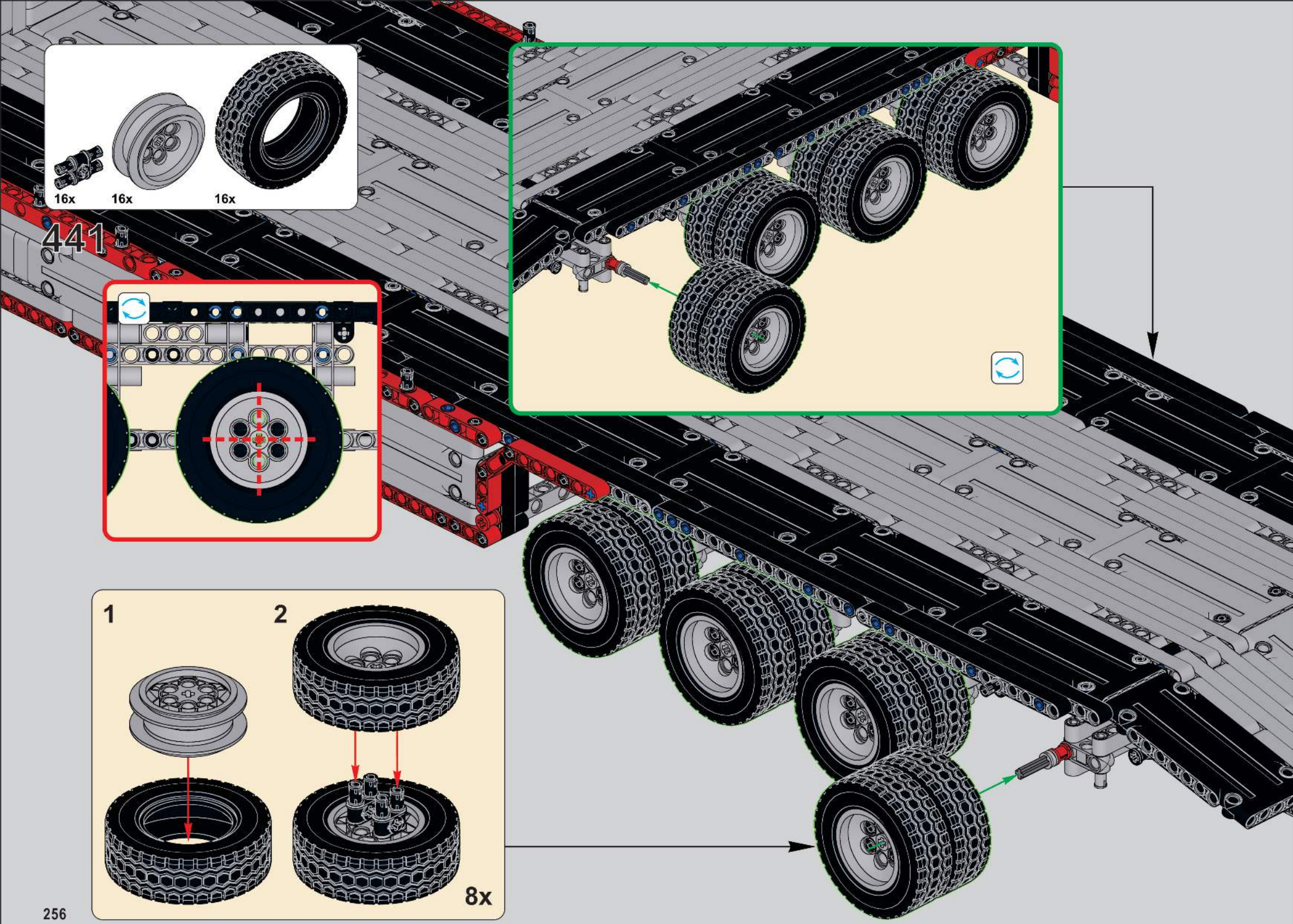
16x
16x
16x
441
1
2
8x

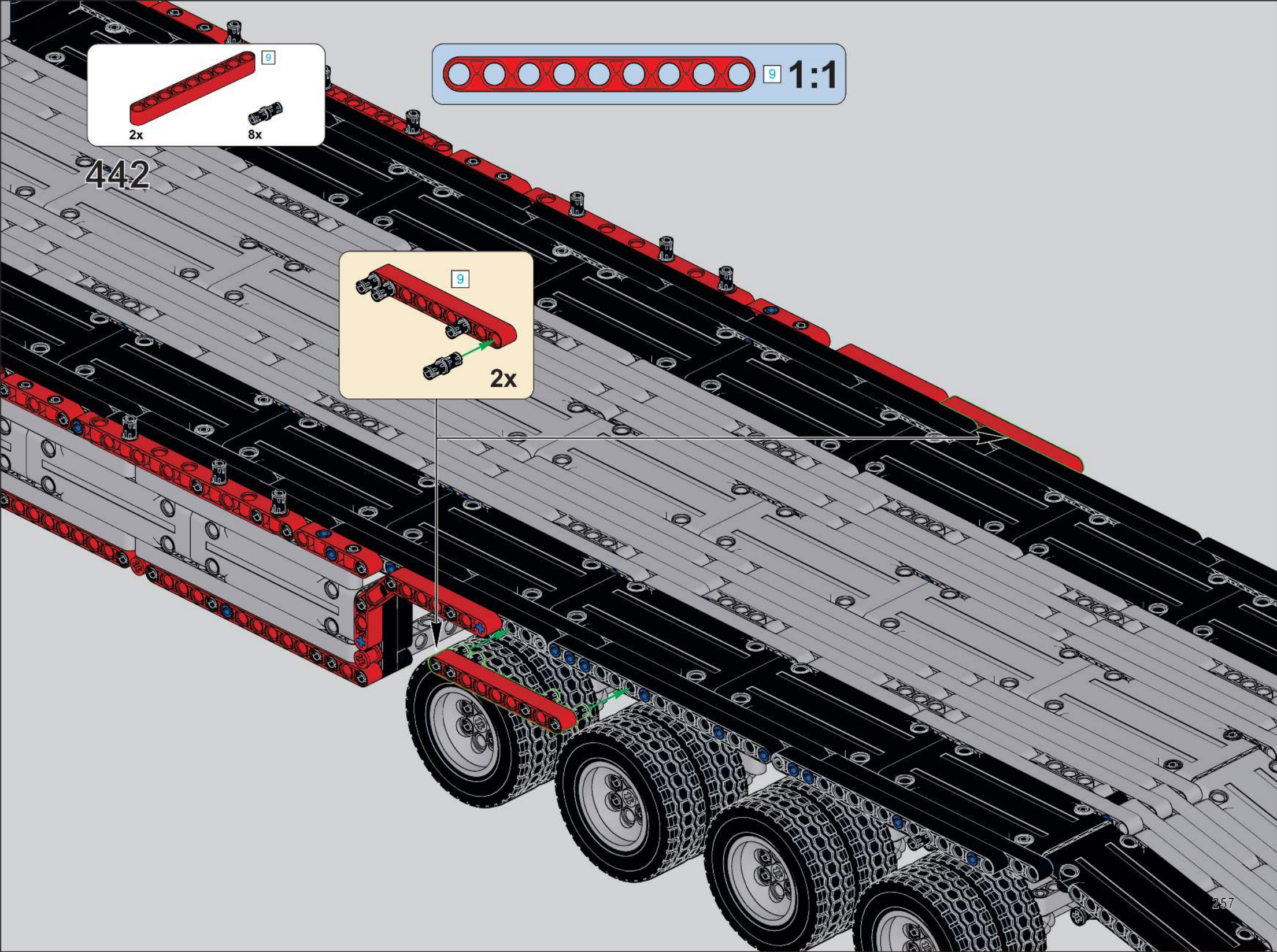
9
2x
8x
442
9
1:1
9
2x

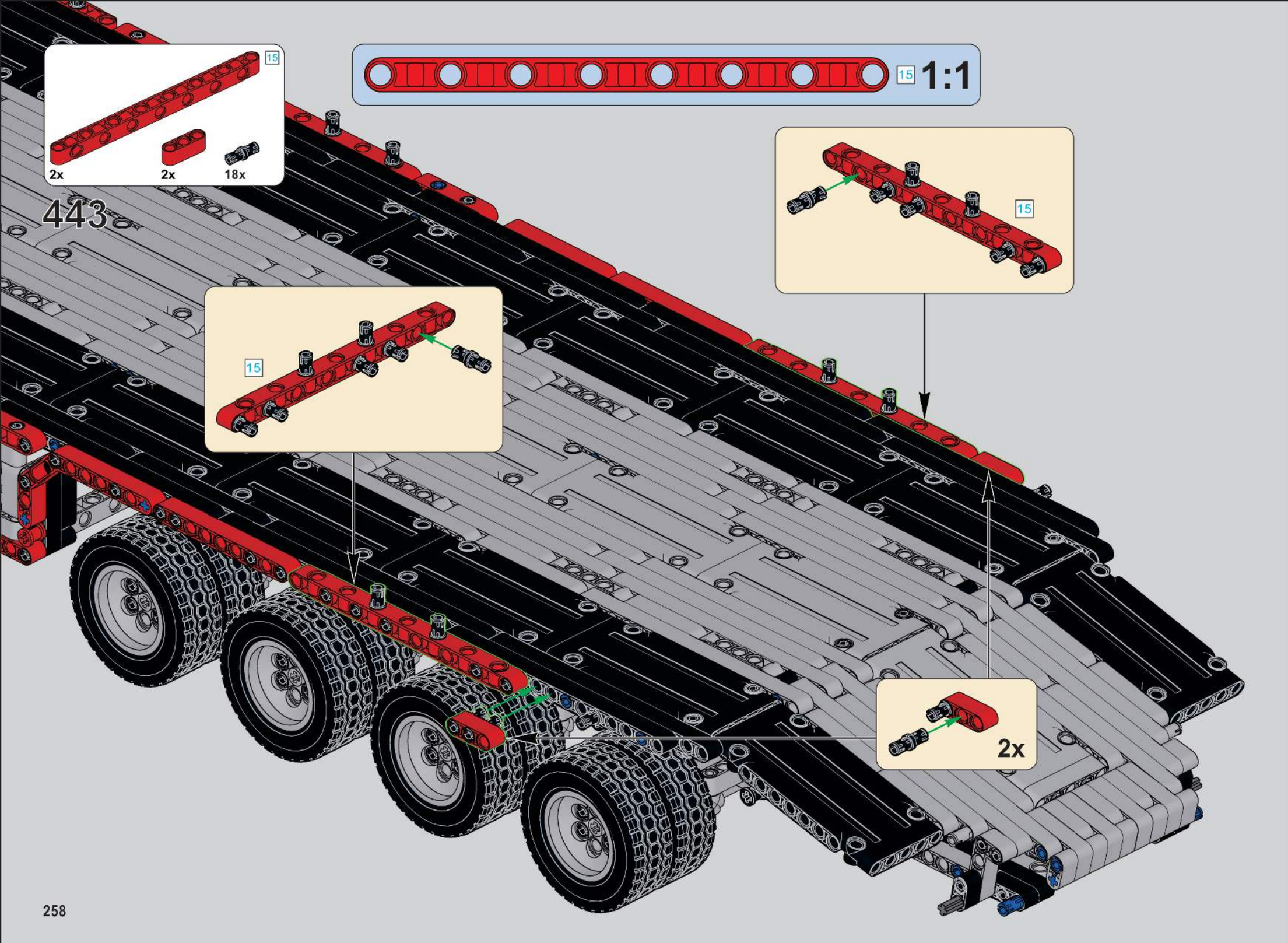
15
2x
2x
18x
443
15
1:1
15
15
2x

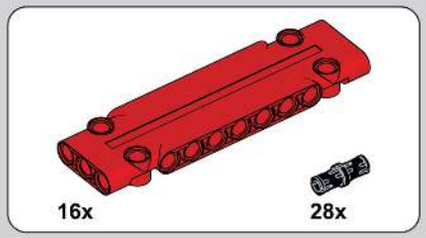

444

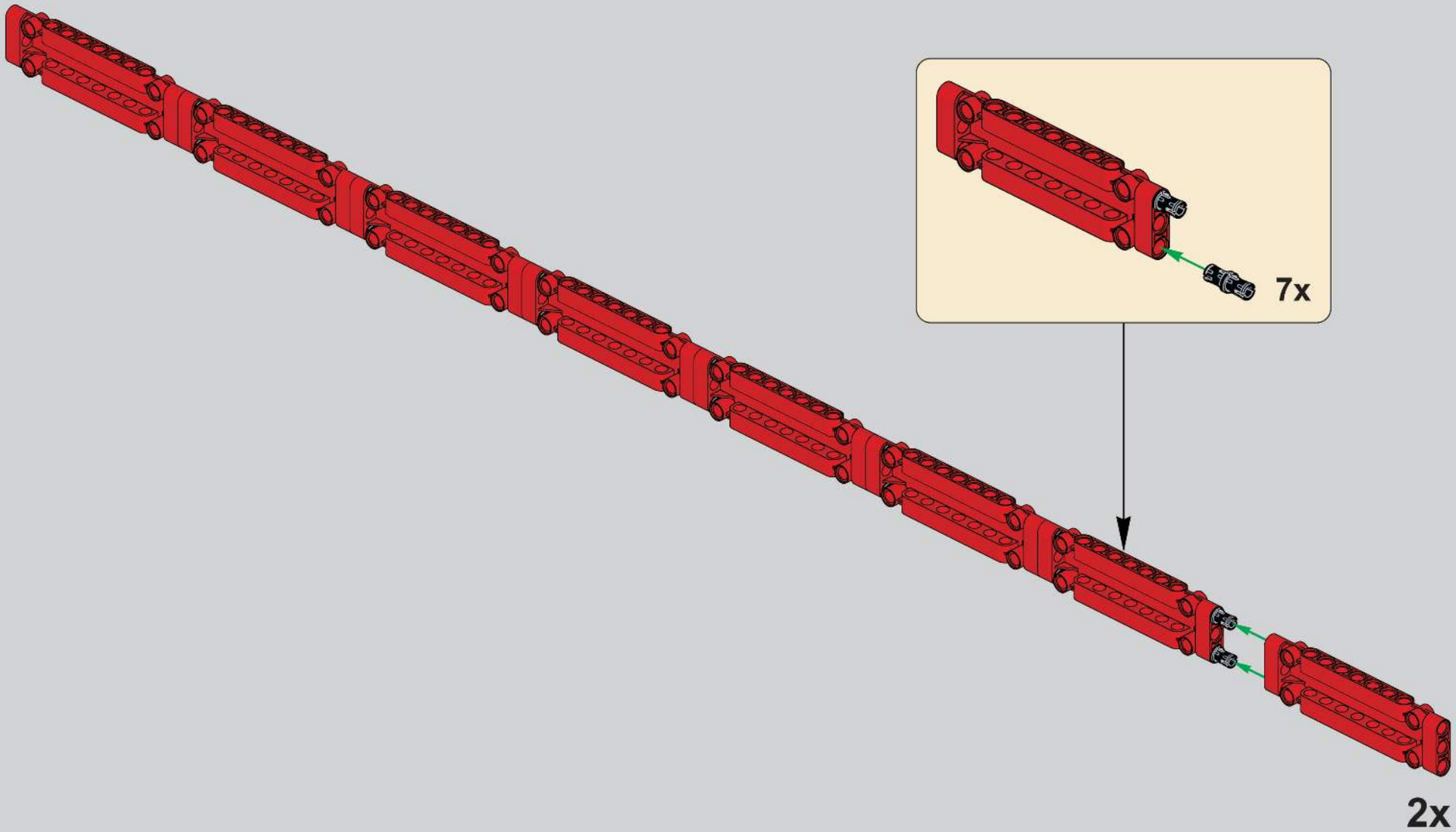

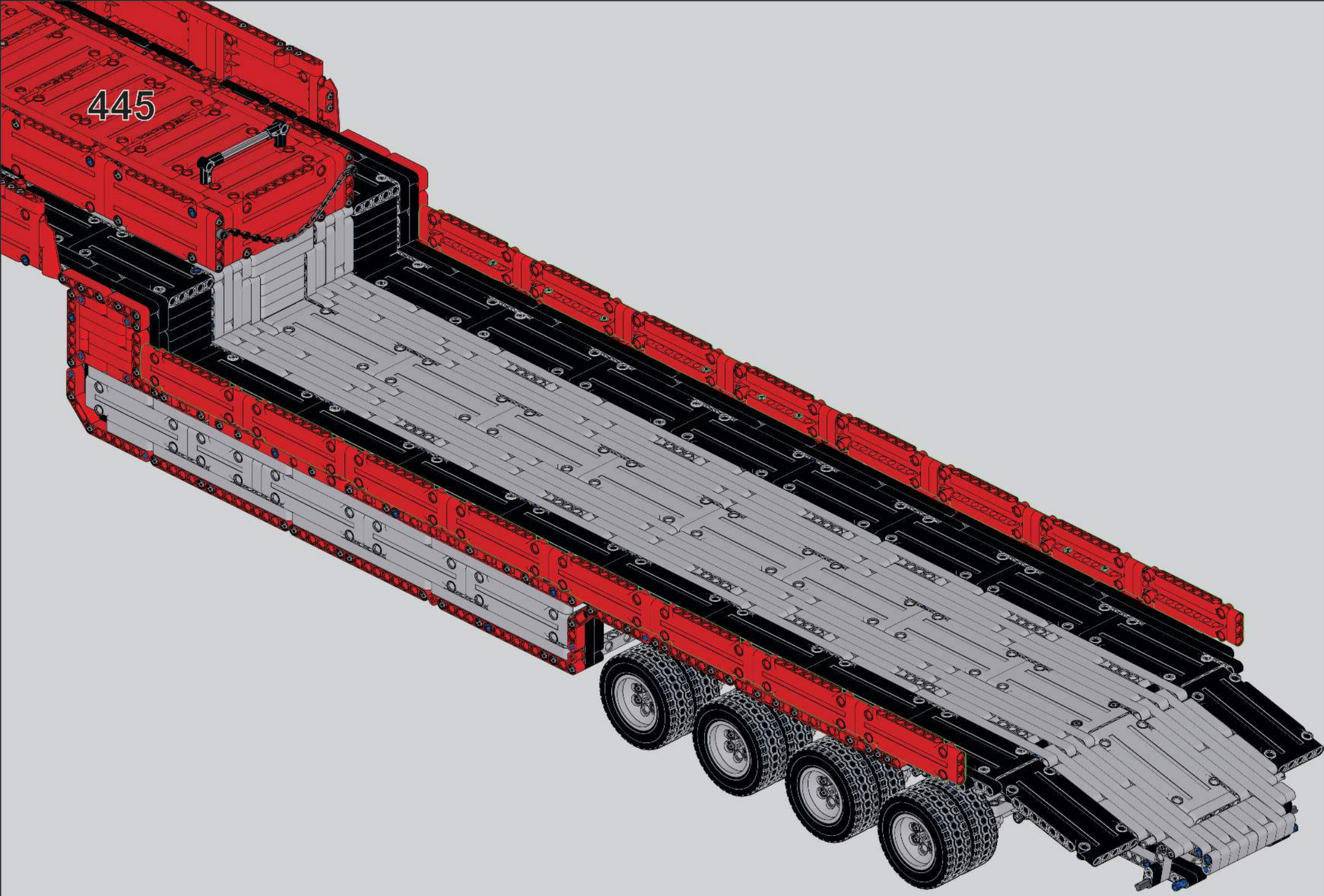
445

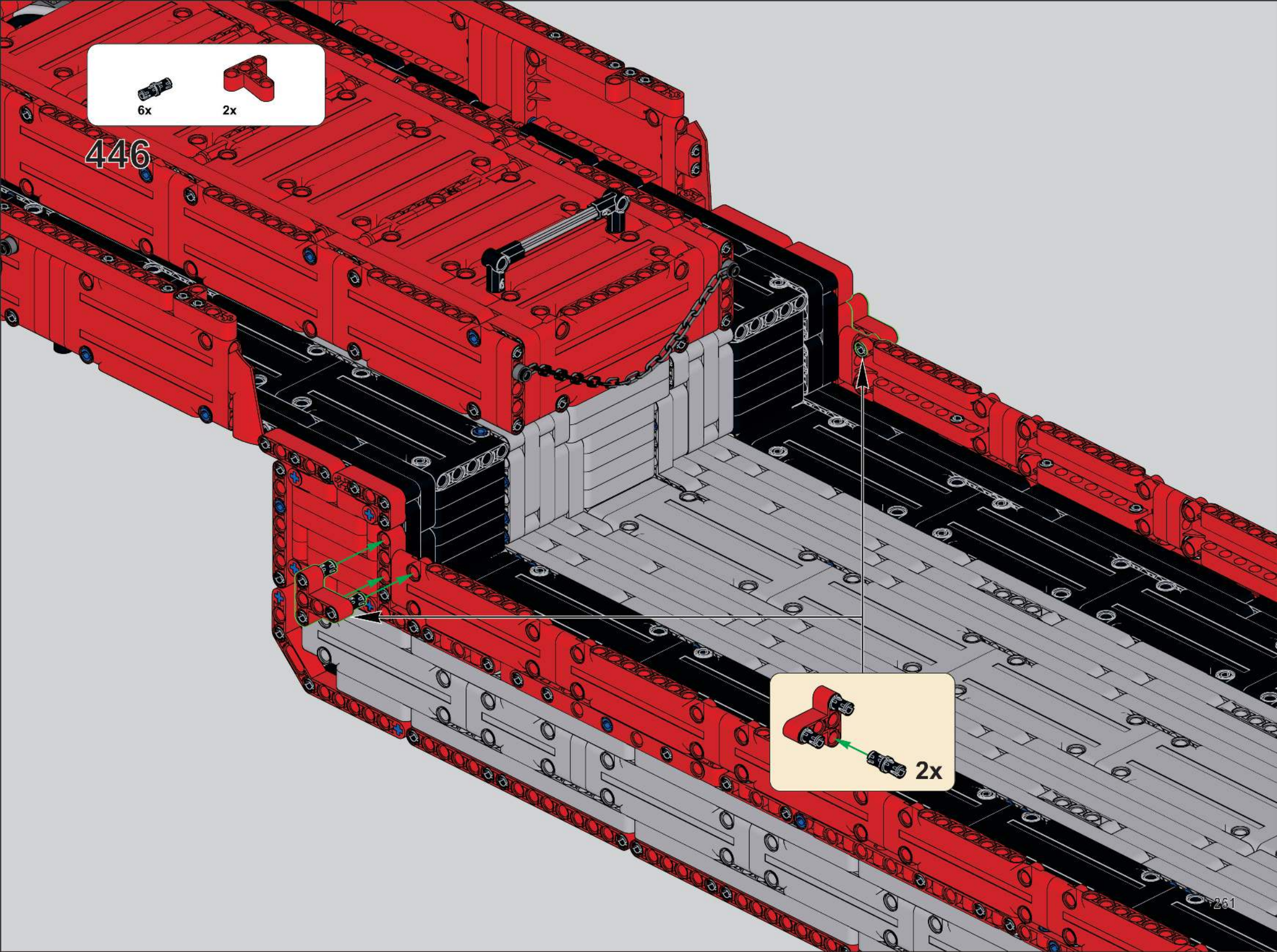
6x
2x
446
2x

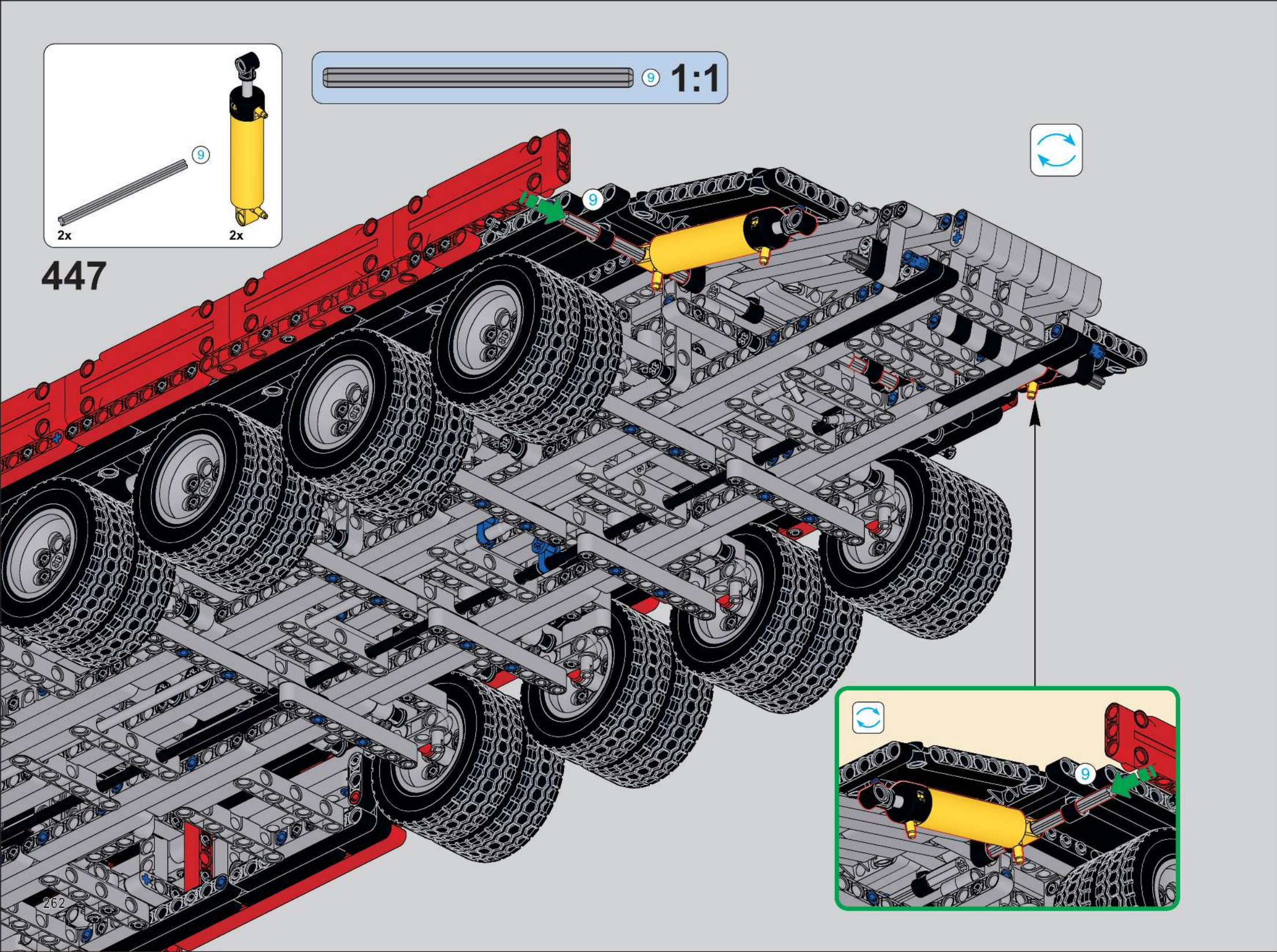
9
2x
2x
9
1:1
447
9
9

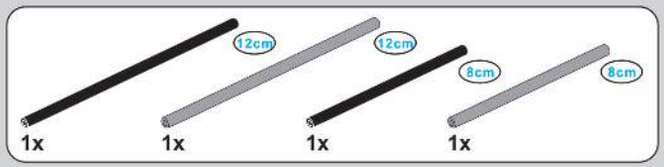
12cm
12cm
8cm
8cm
1x
1x
1x
1x

448

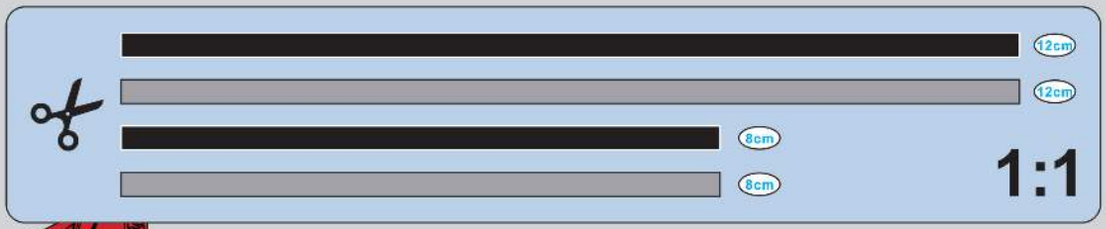
12cm
12cm
8cm
8cm
1:1

8cm
12cm
12cm
8cm

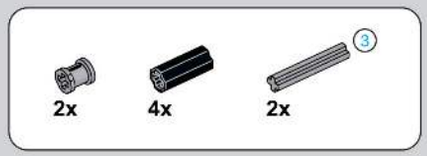

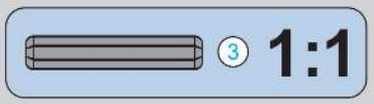

449

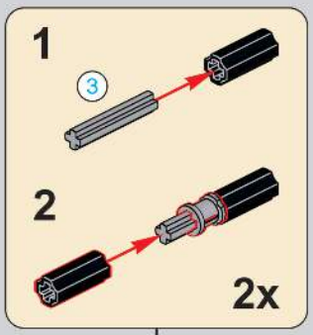

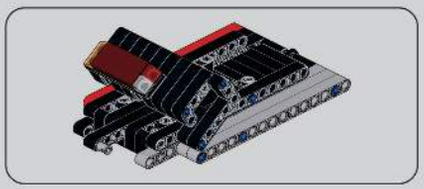

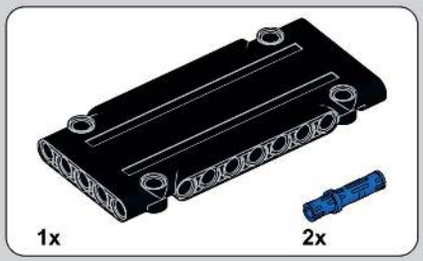

450

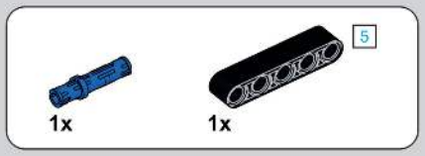

451

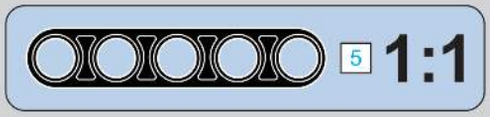

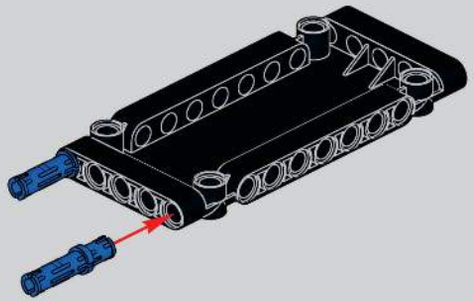

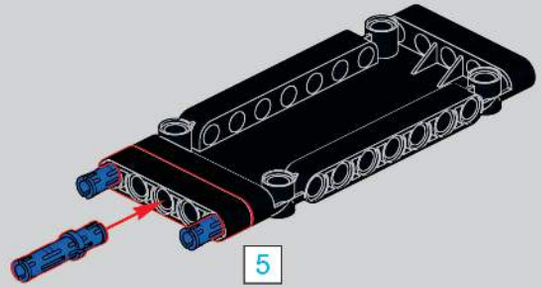

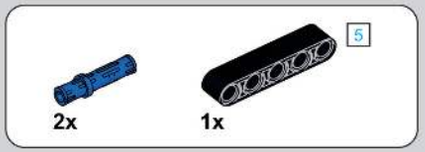

452

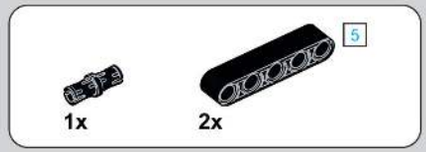

453

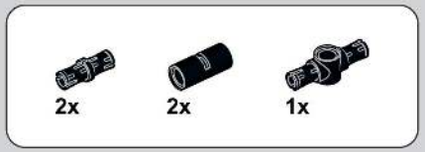

454

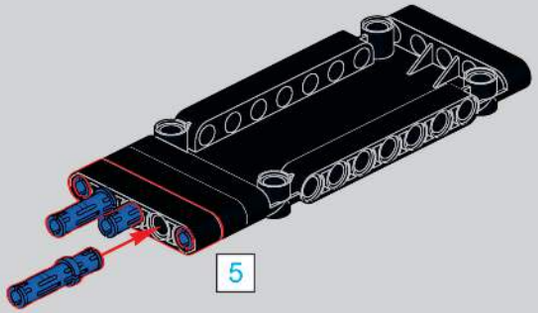

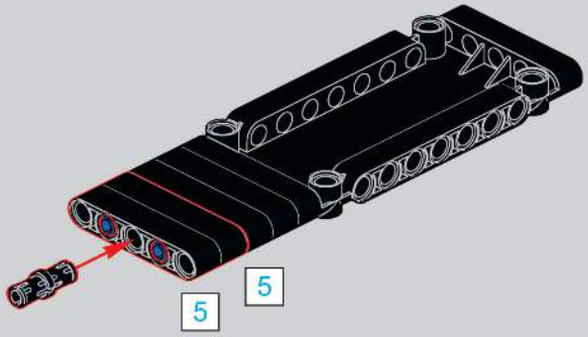

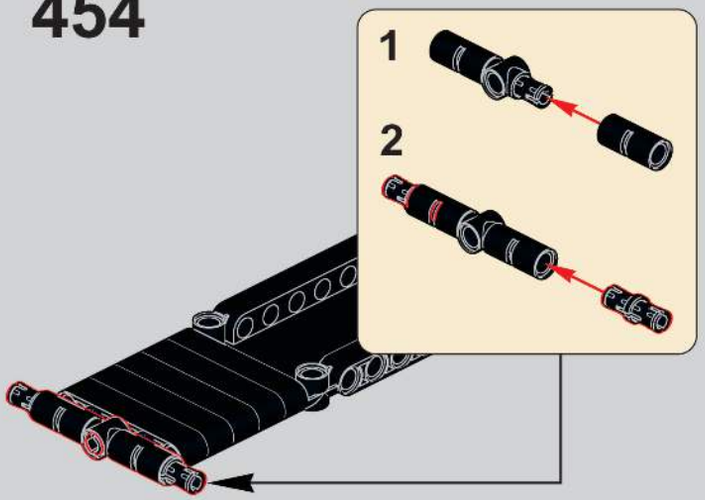

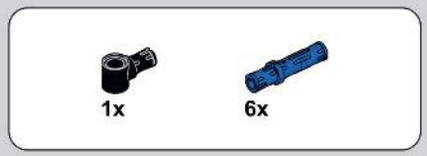

455

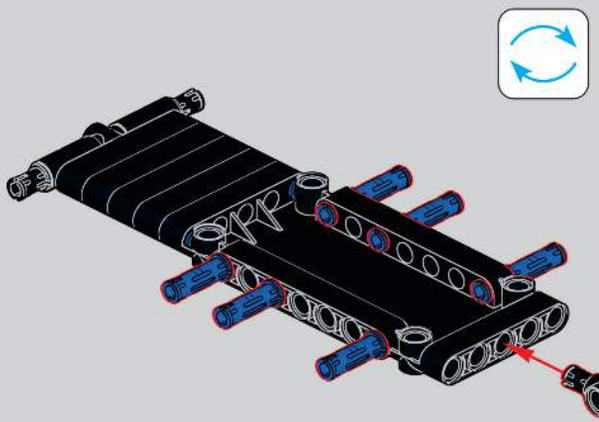

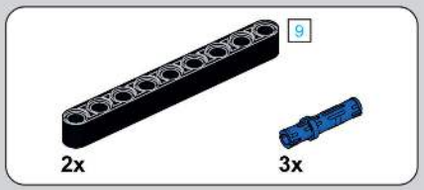

456

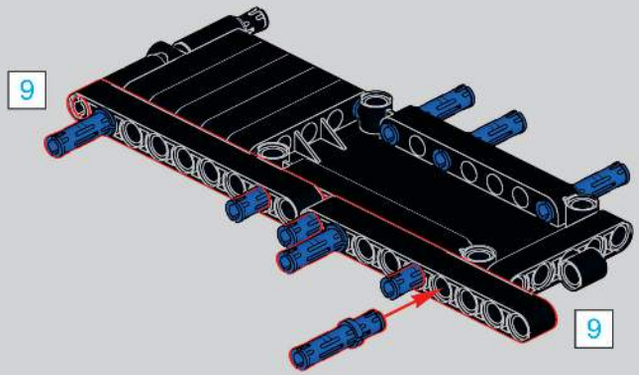

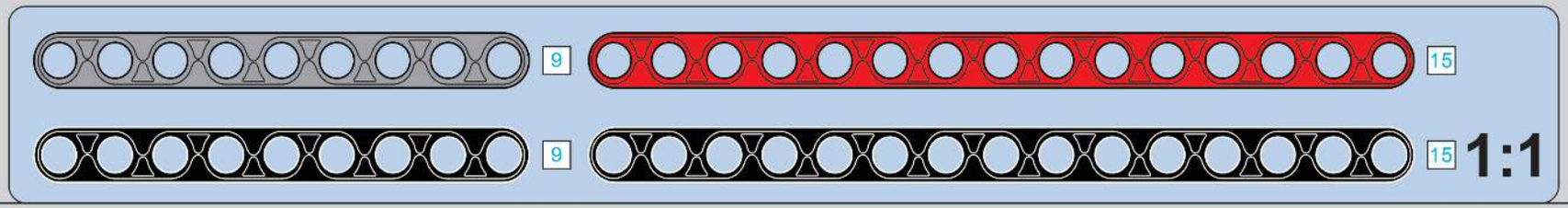

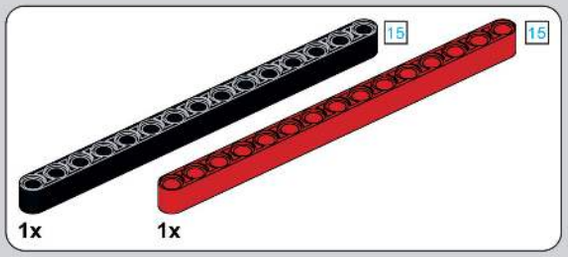

457

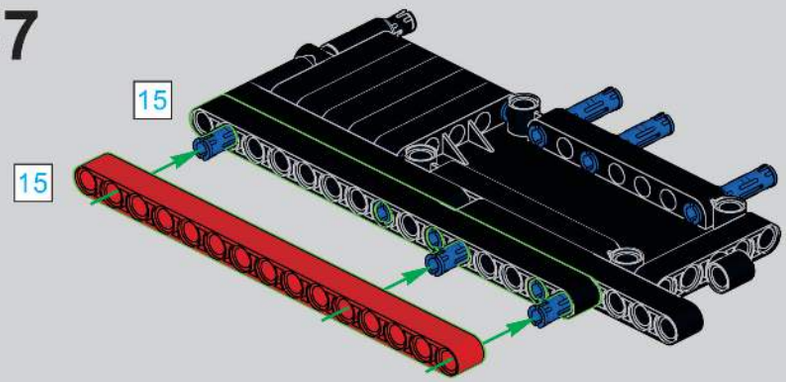

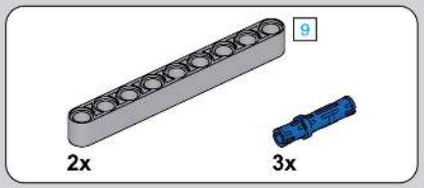

458

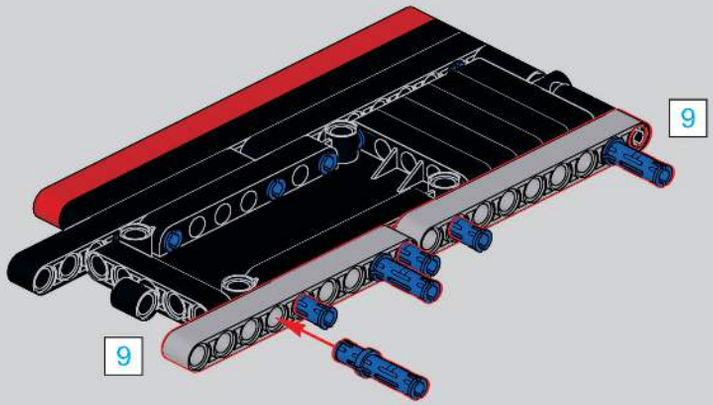

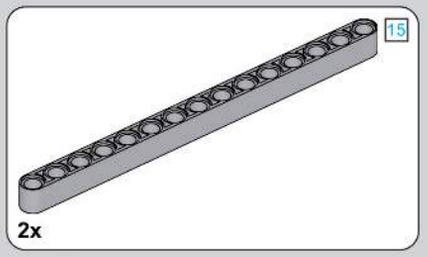

459

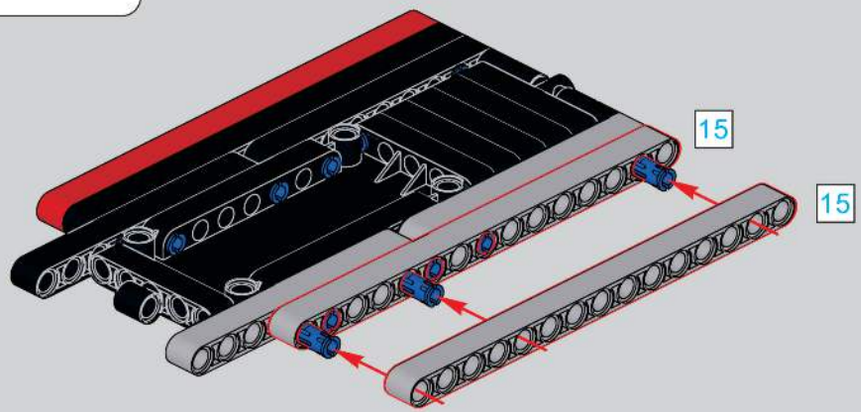

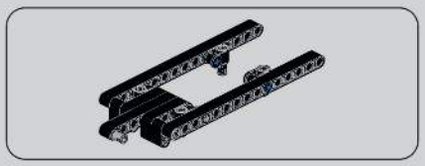

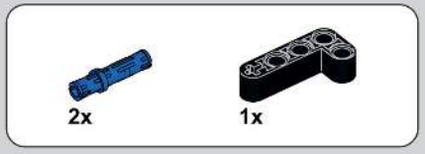

460

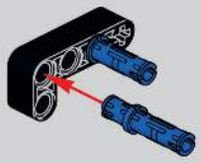

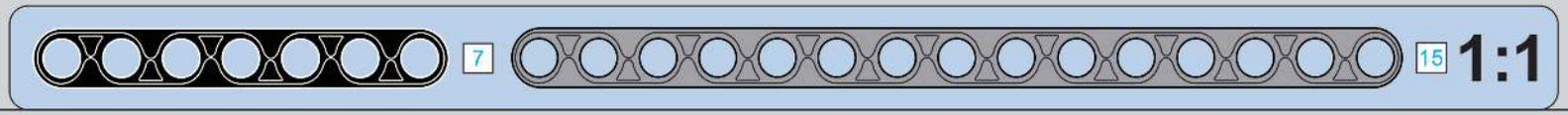

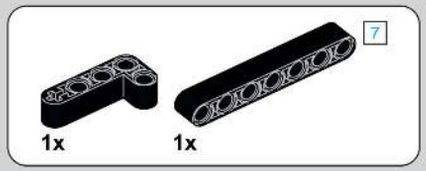

461

462

463

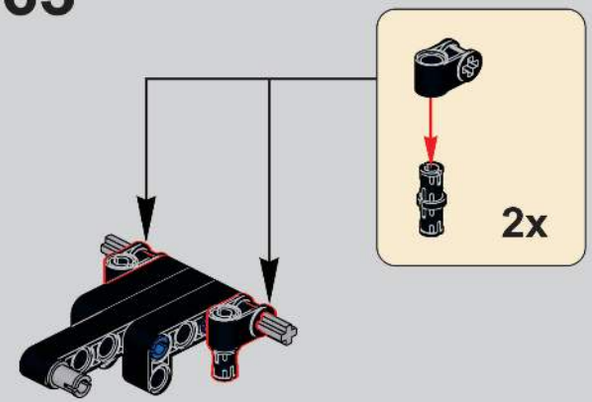

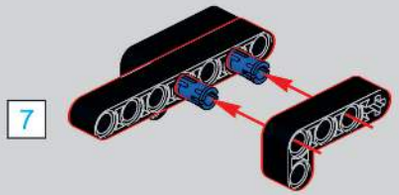

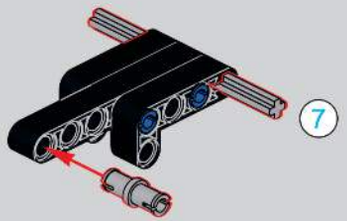

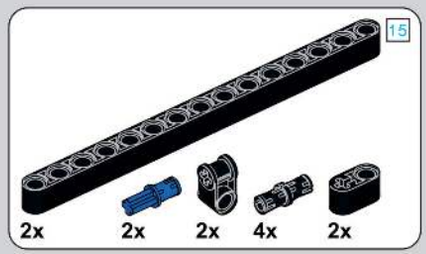

464

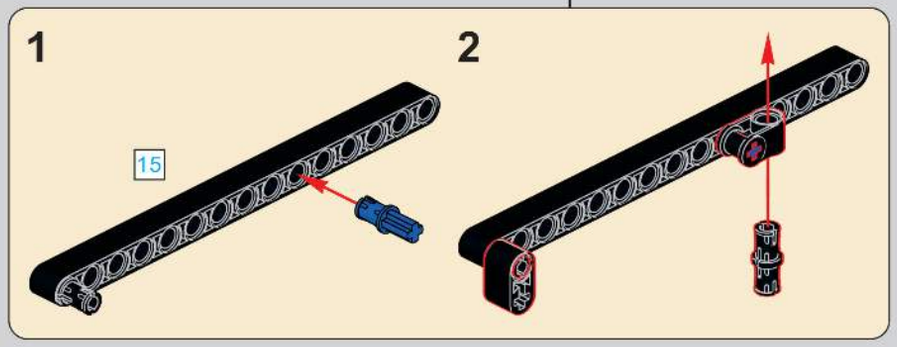

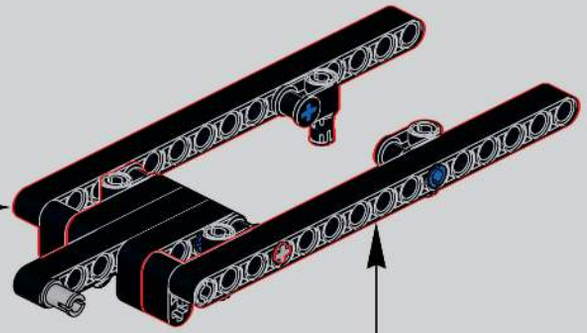

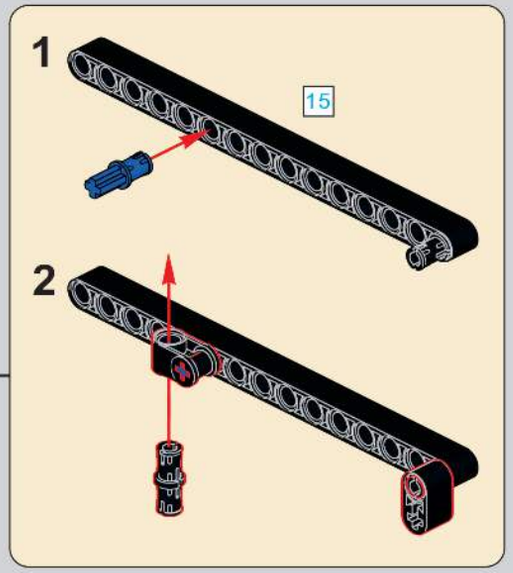

465

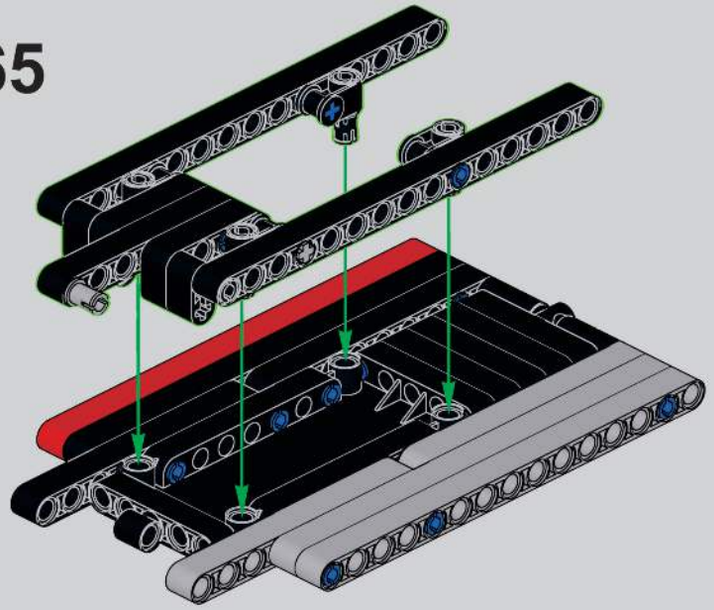

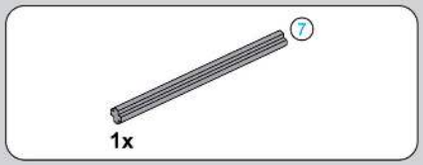

466

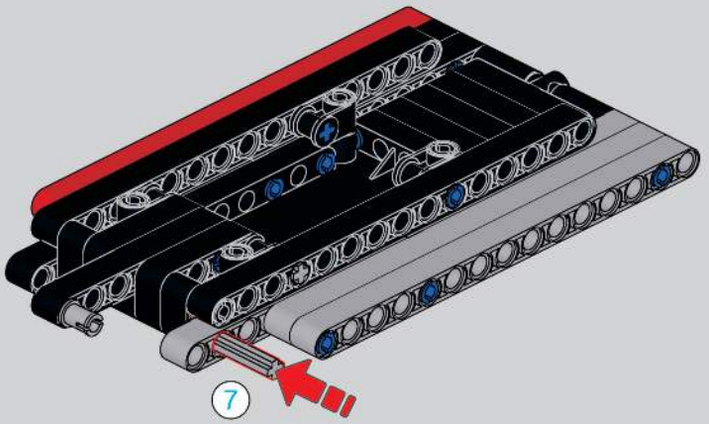

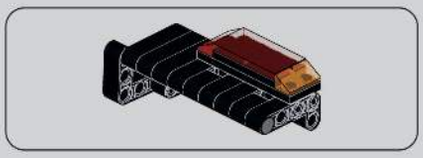

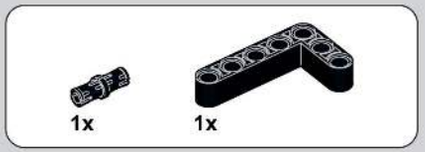

467

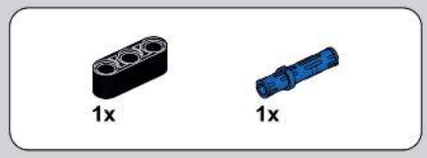

468

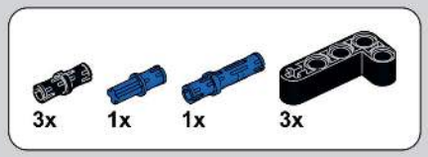

469

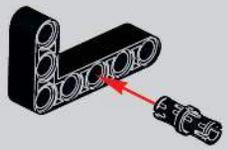

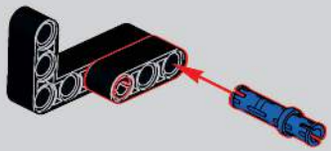

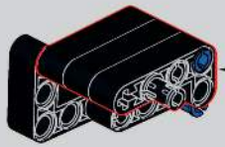

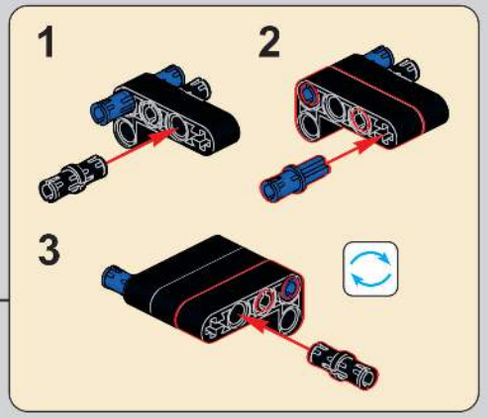

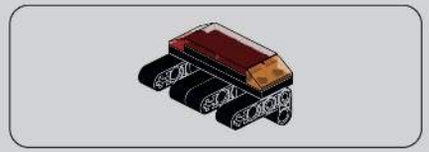

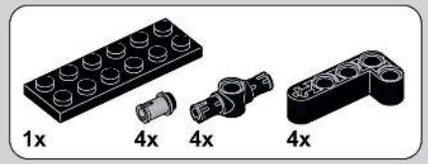

470

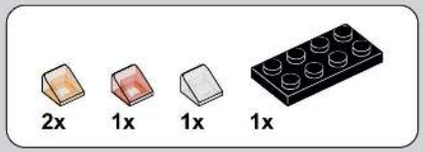

471

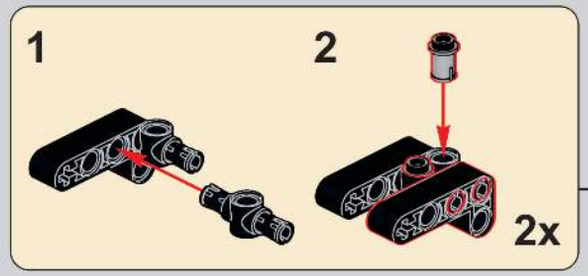

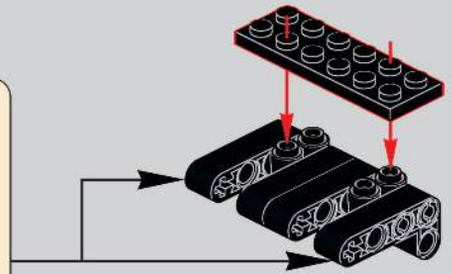

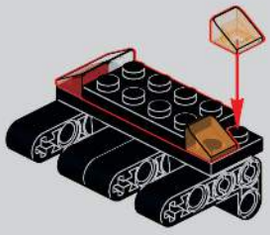

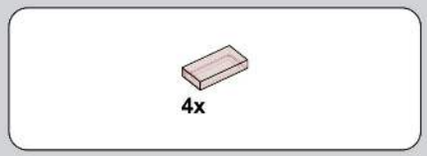

472

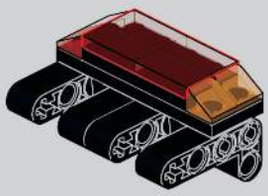

473

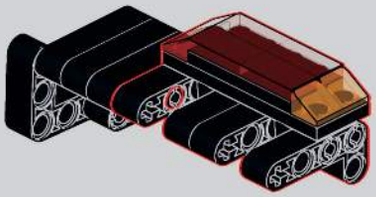

474

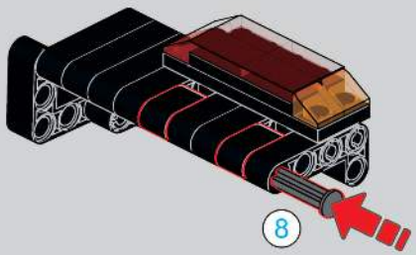

475

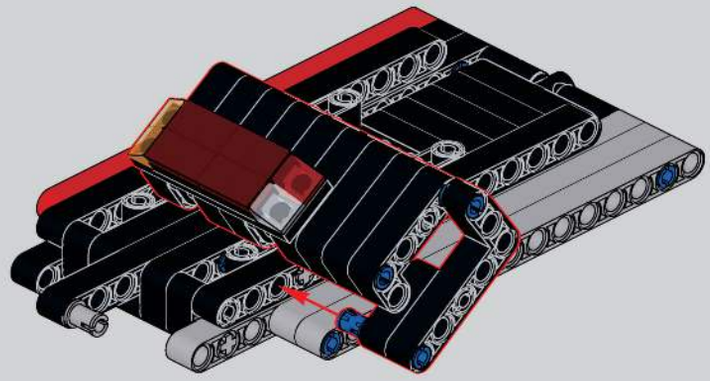

476

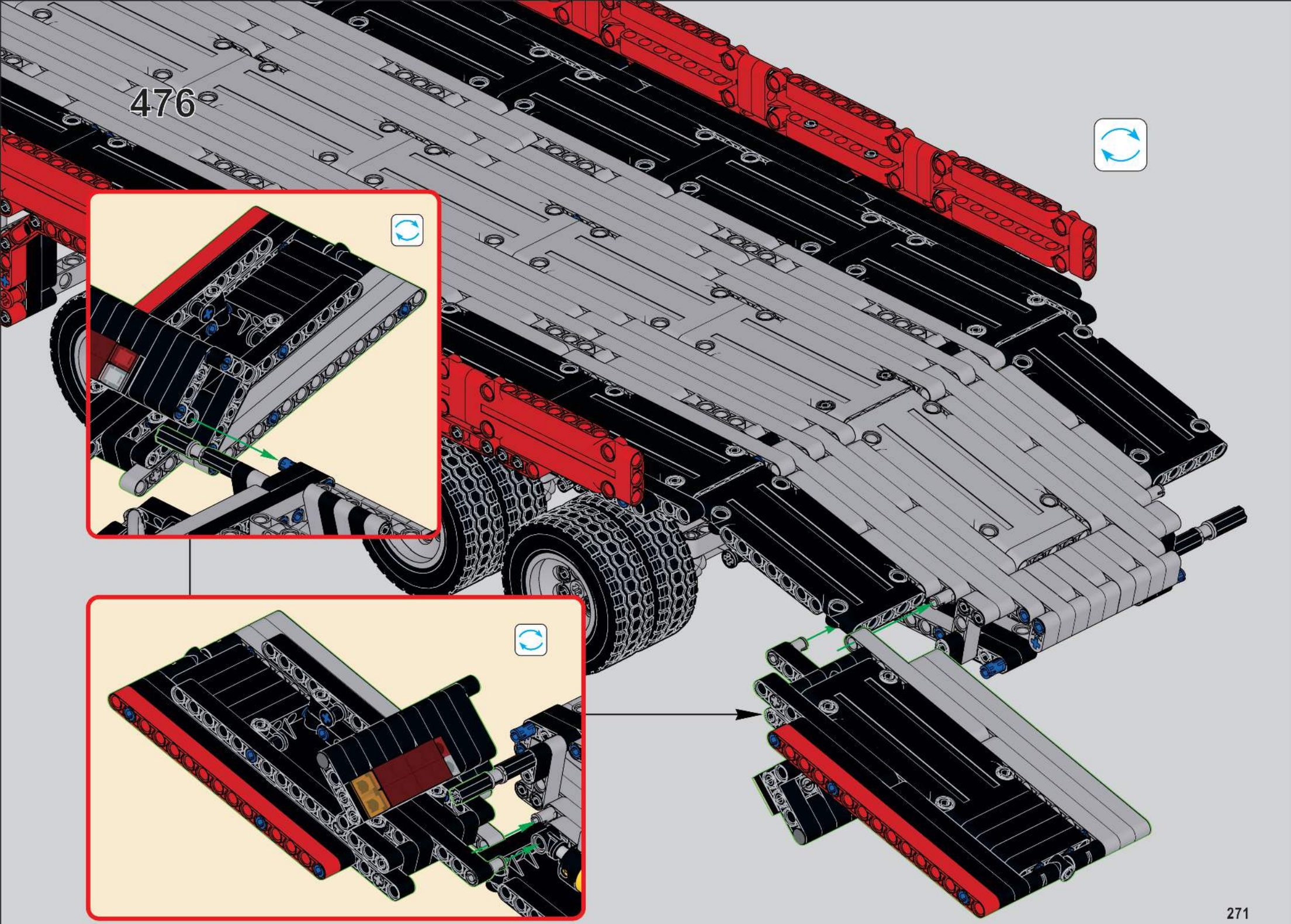

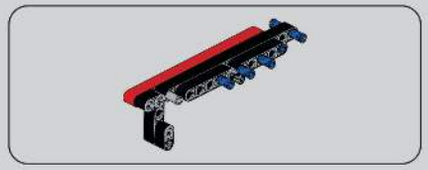

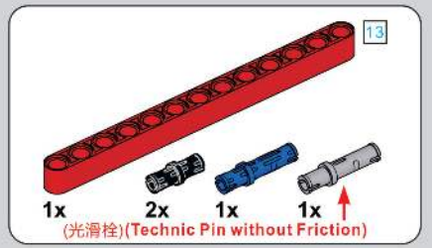

477

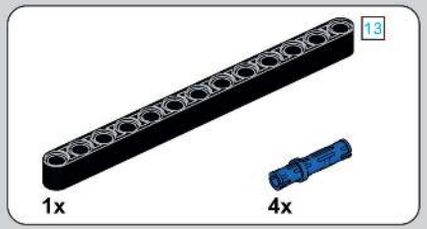

478

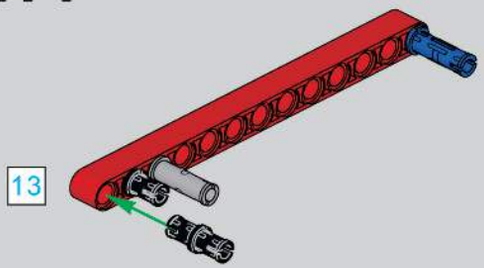

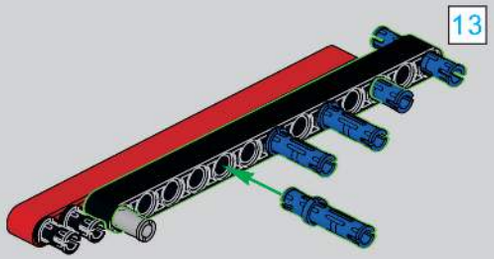

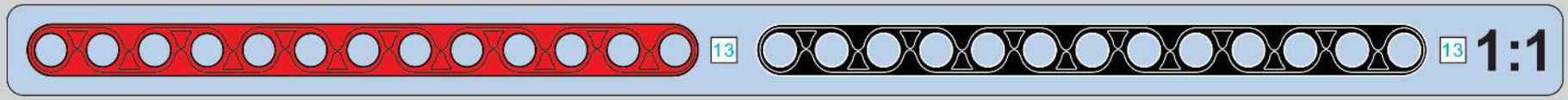

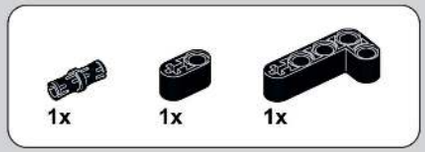

479

480

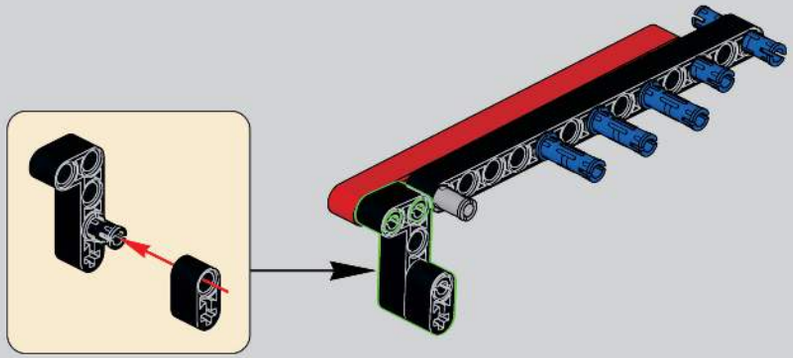

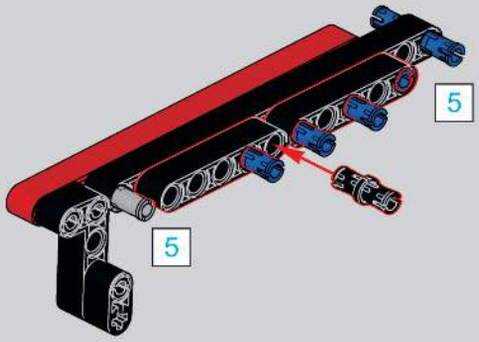

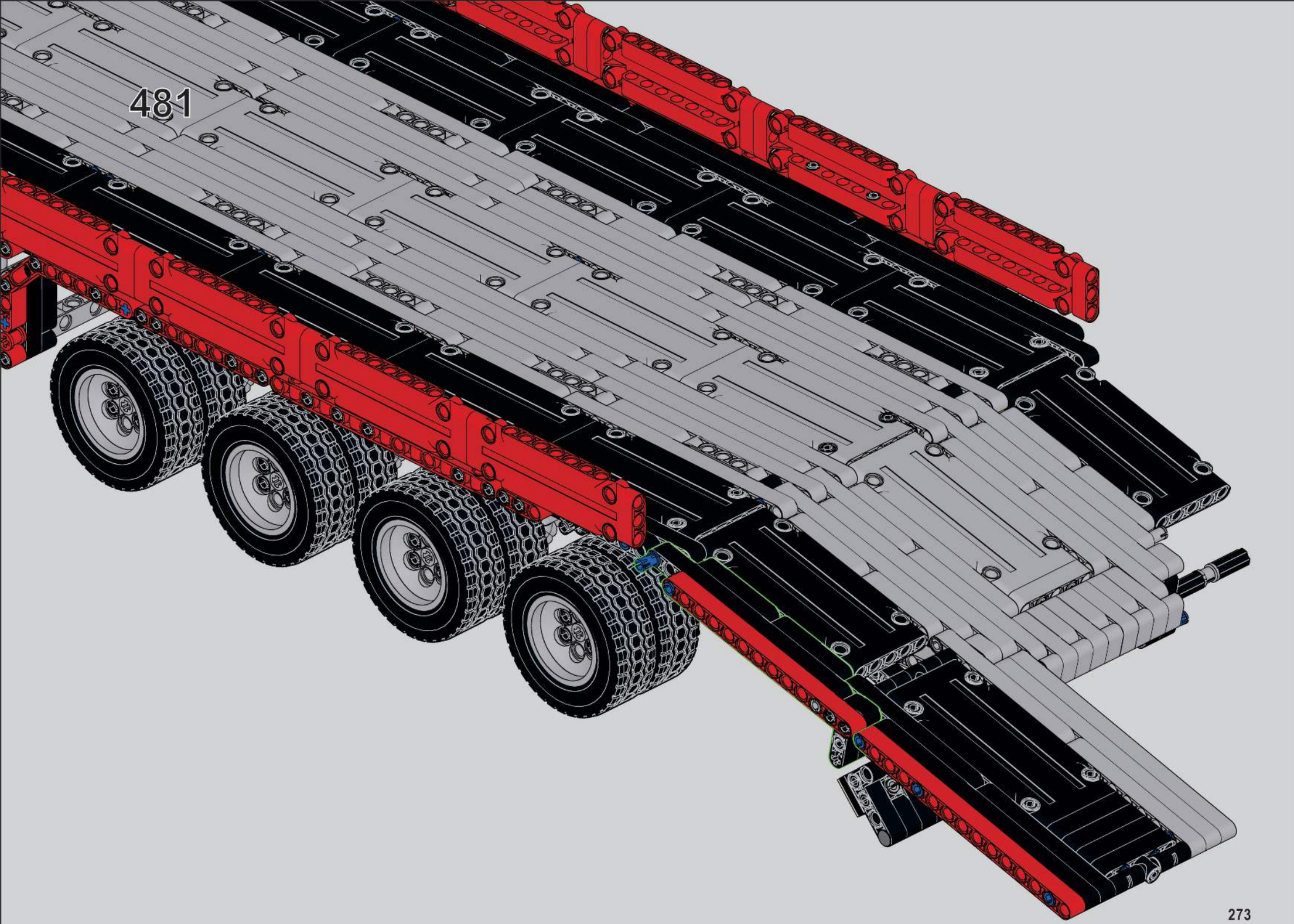
481

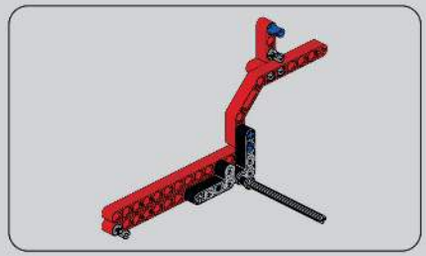

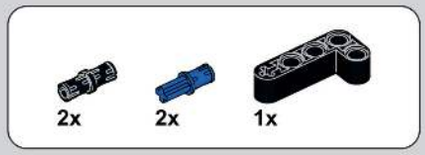

482

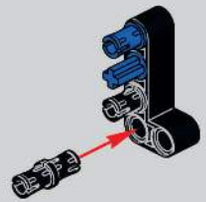

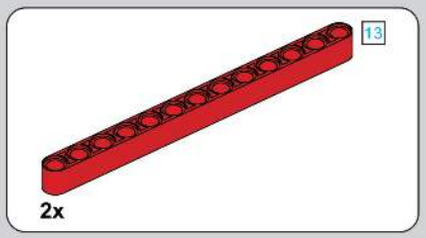

483

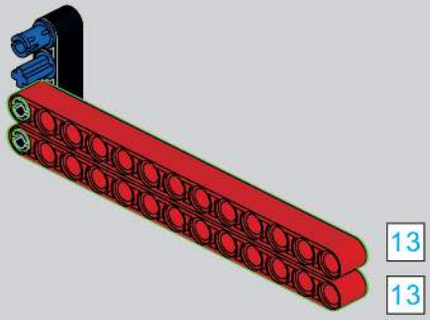

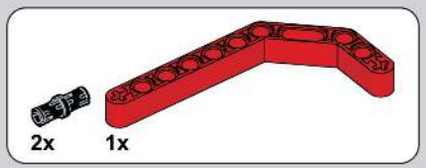

484

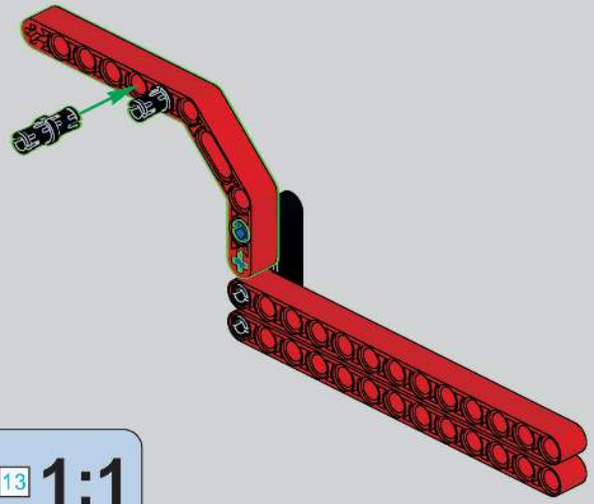

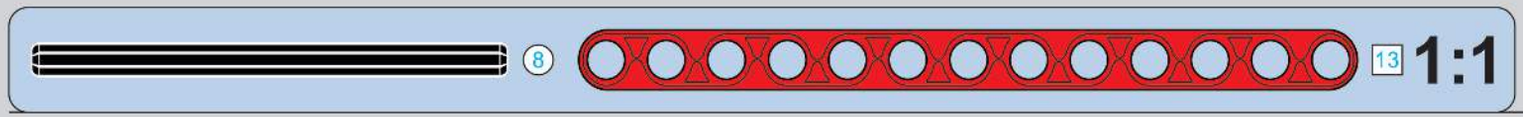

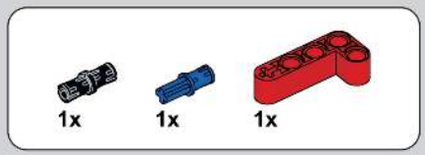

485

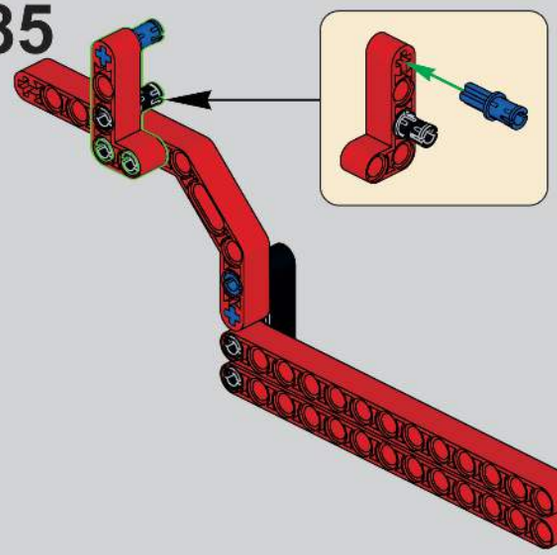

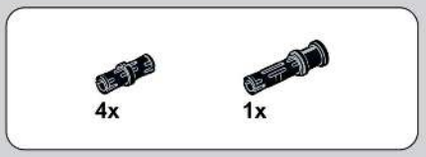

486

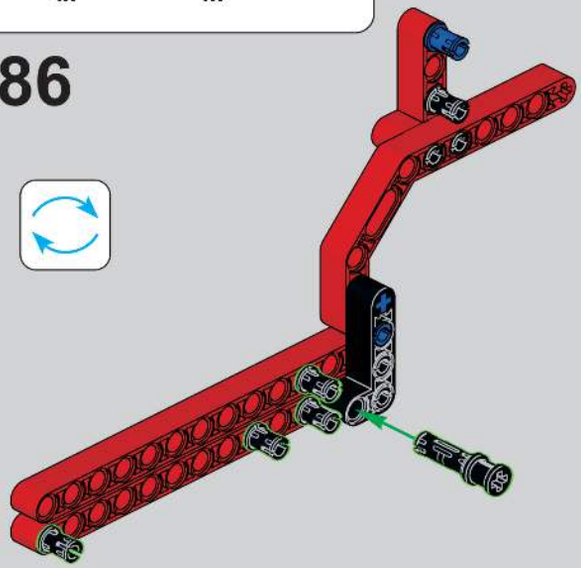

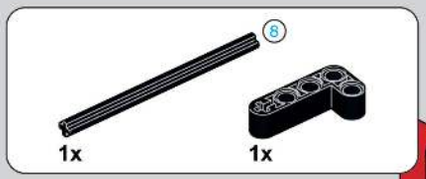

487

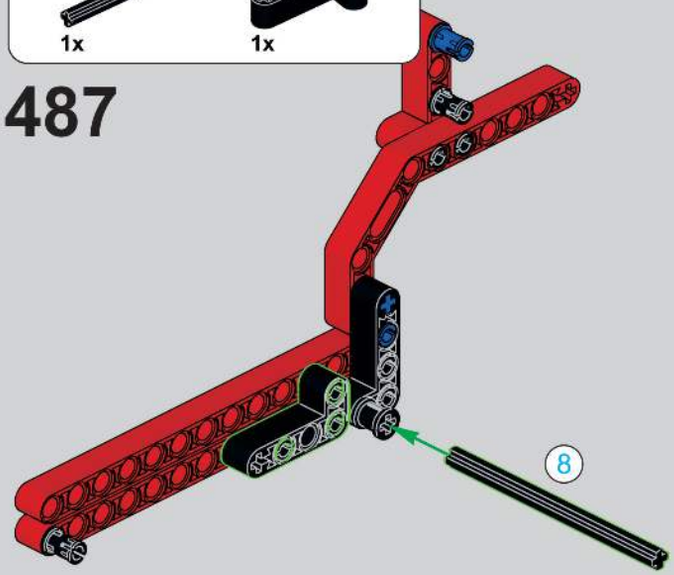

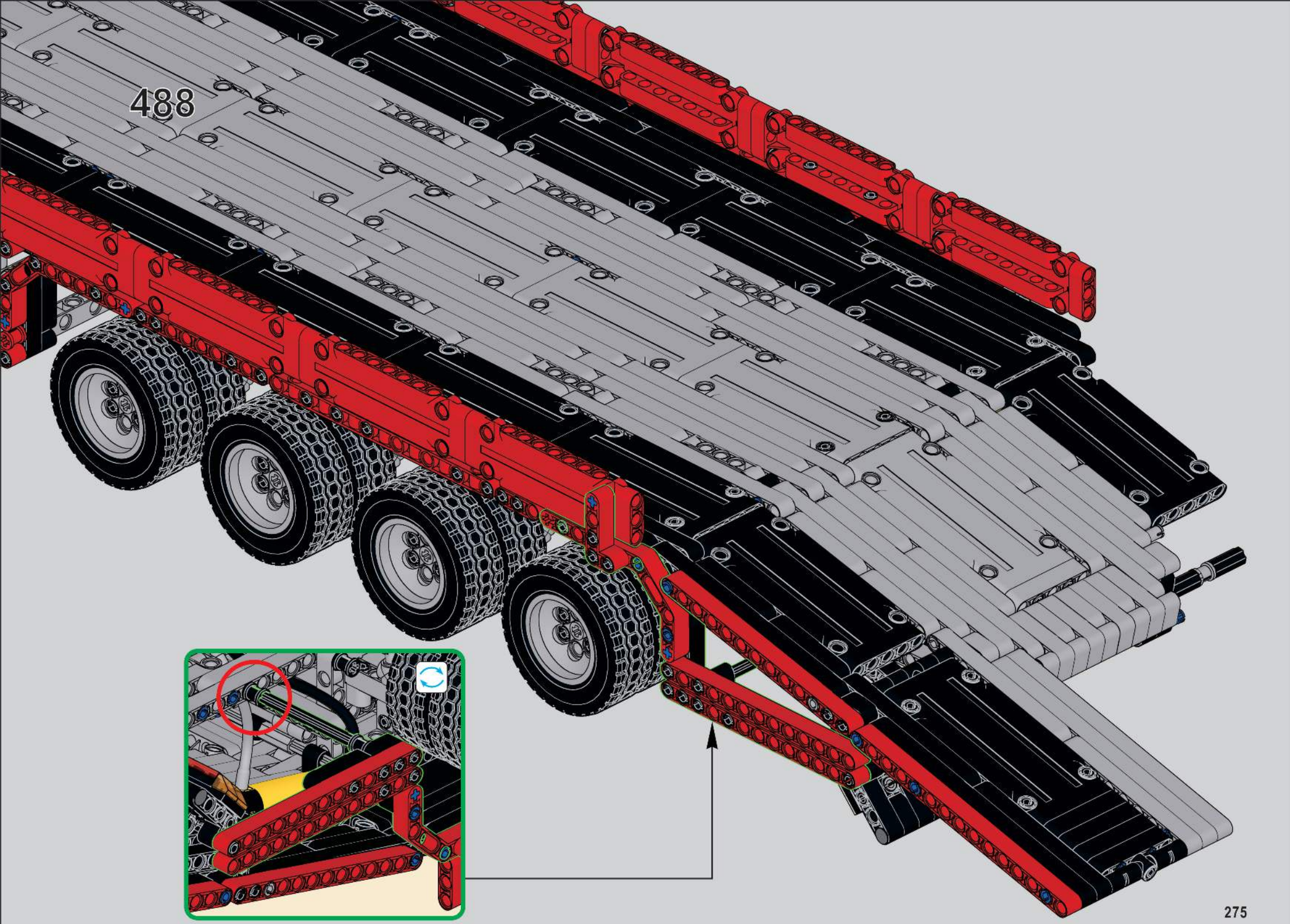
488

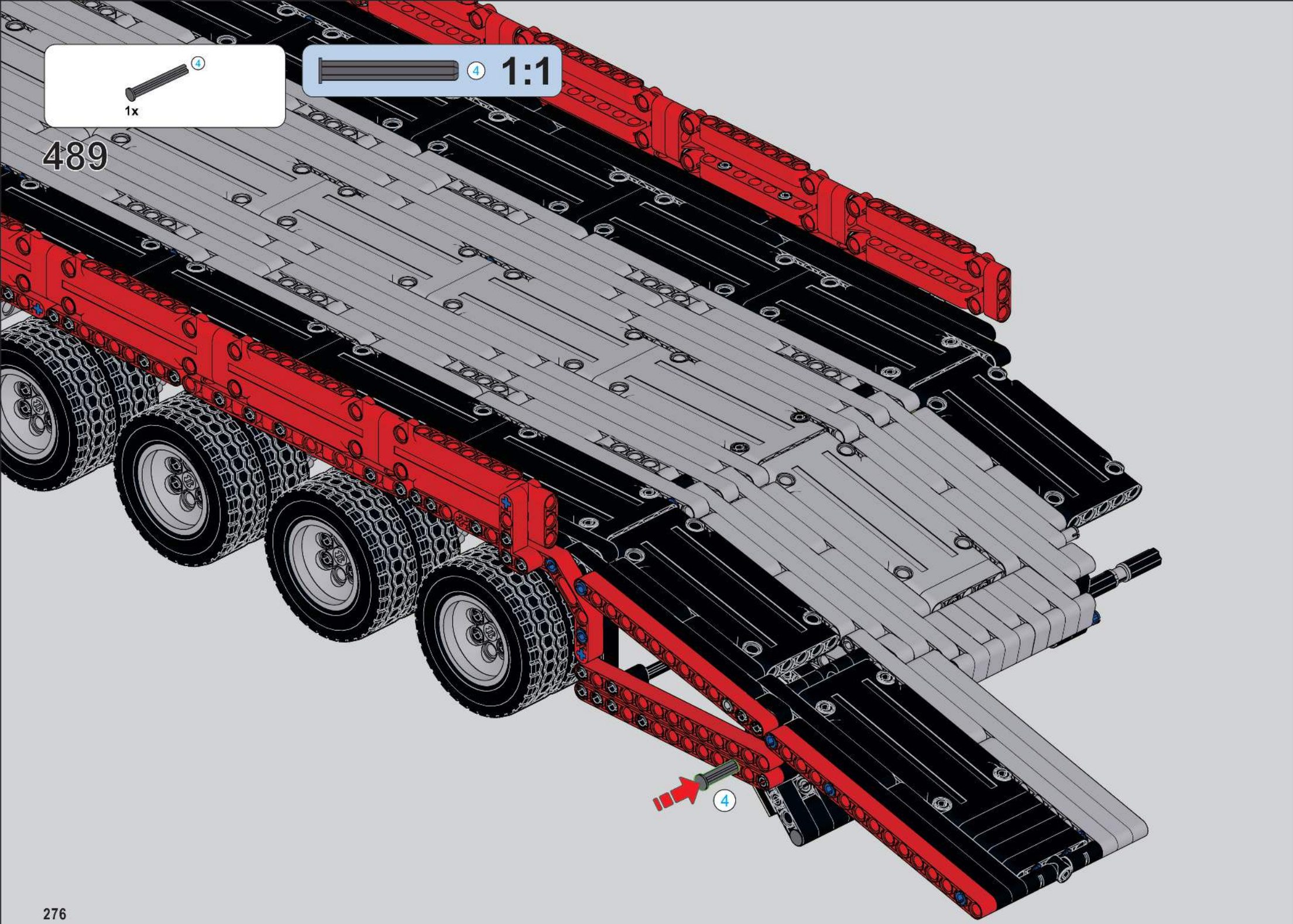
4
1x
4
1:1
489
4

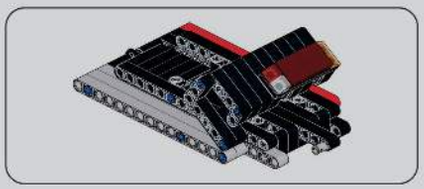

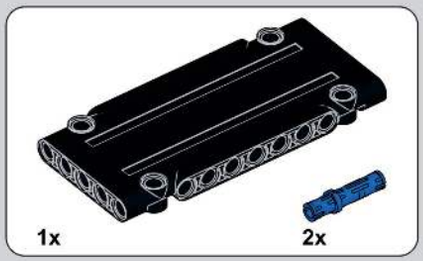

490

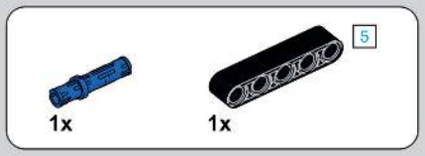

491

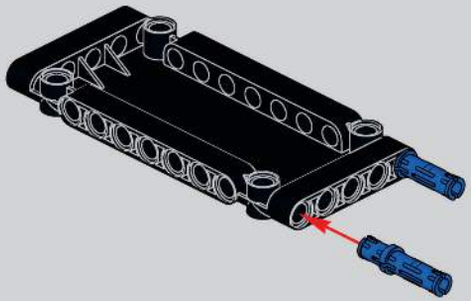

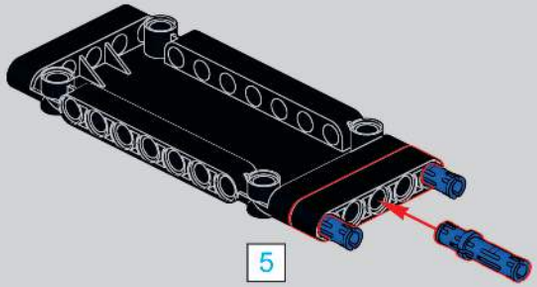

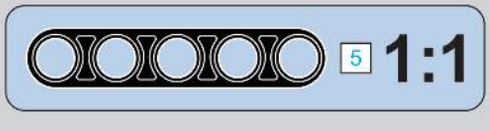

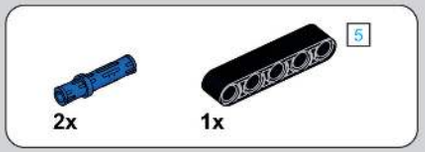

492

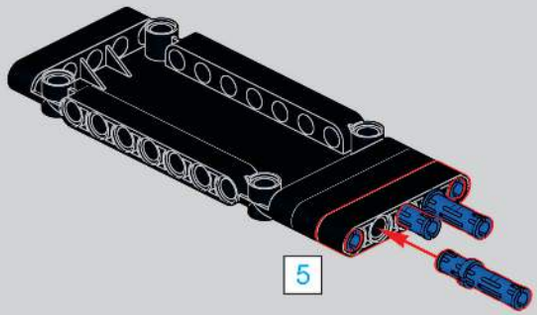

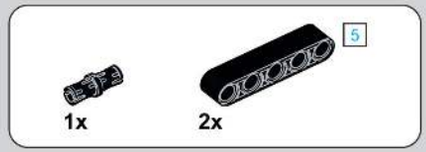

493

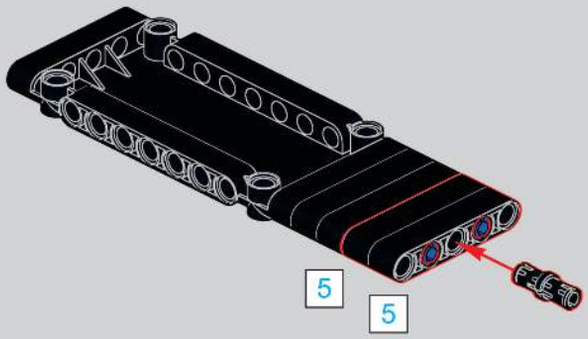

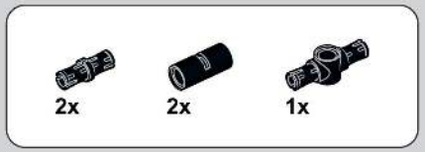

494

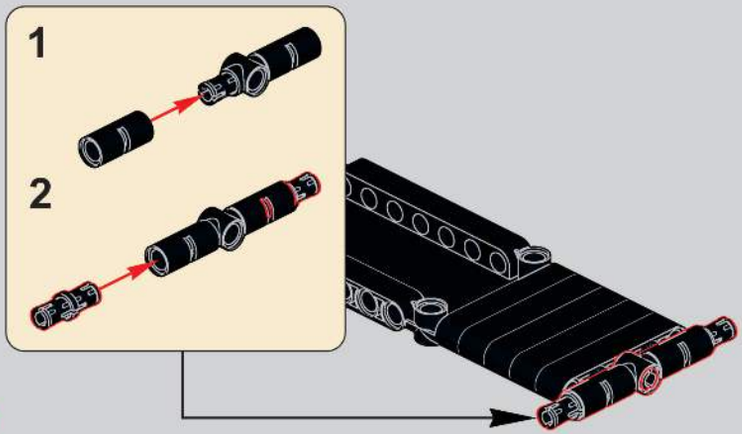

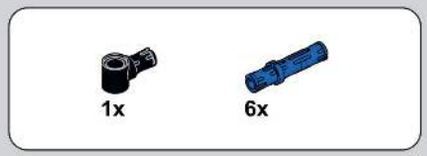

495

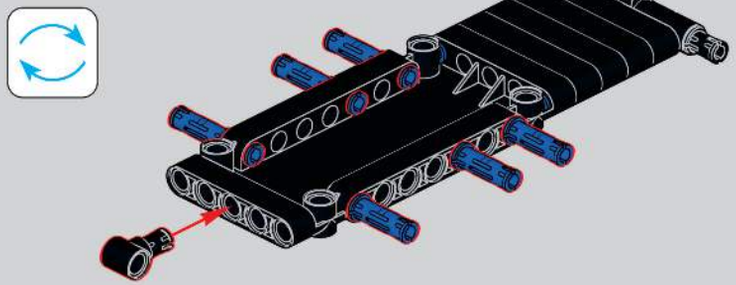

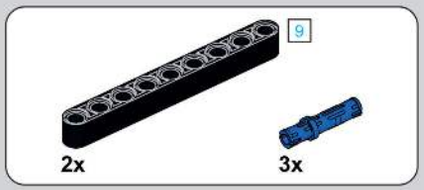

496

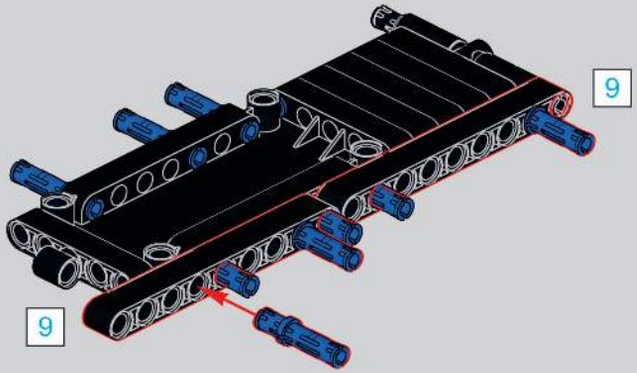

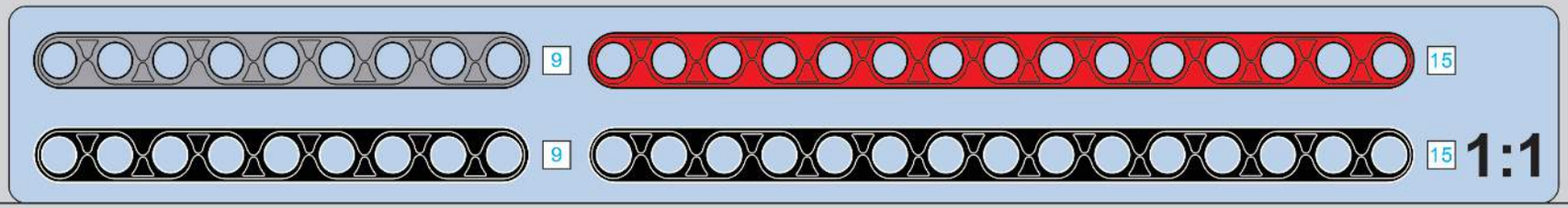

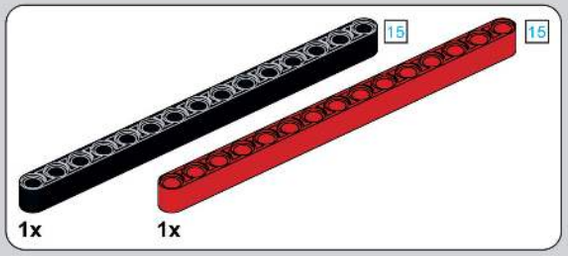

497

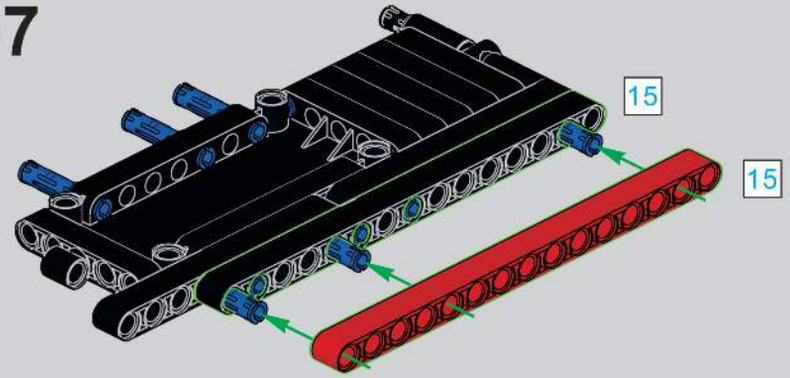

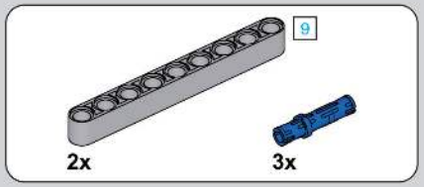

498

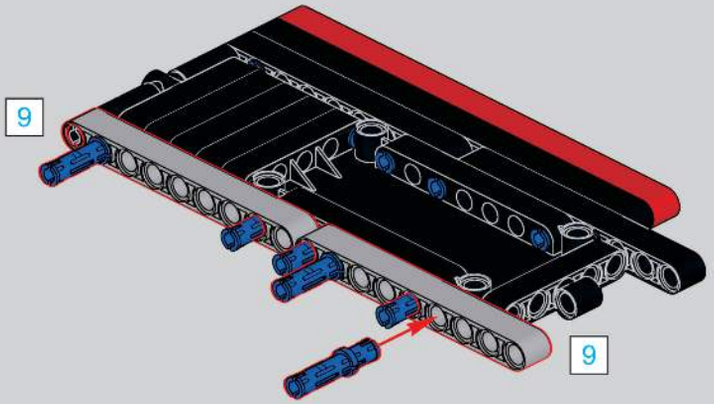

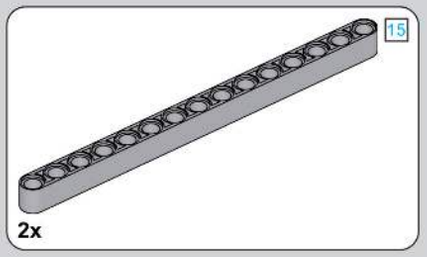

499

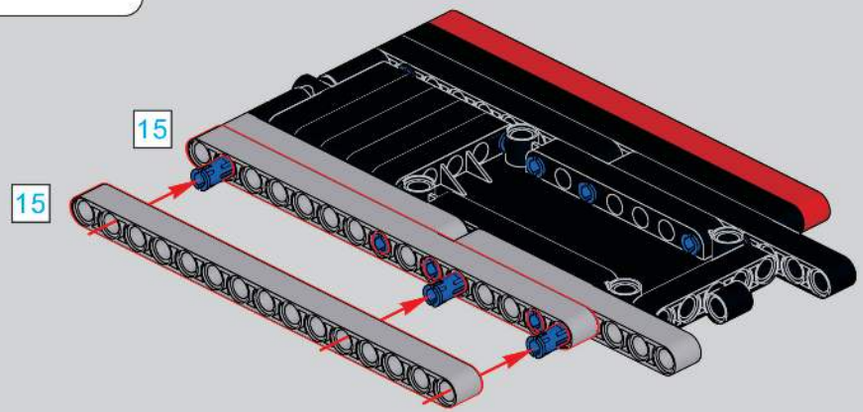

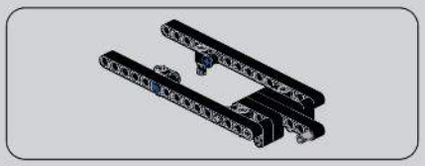

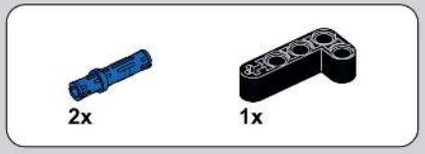

500

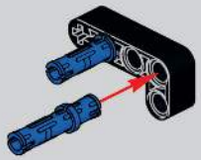

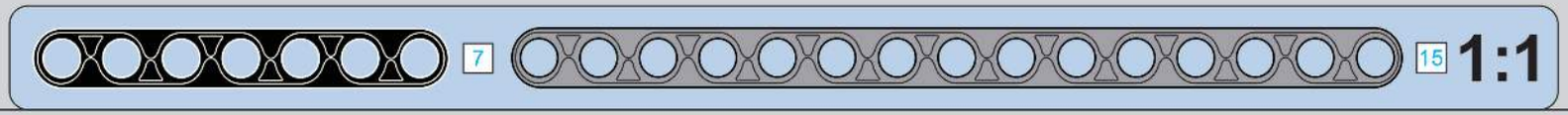

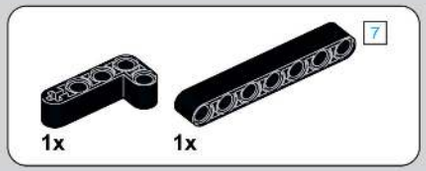

501

502

503

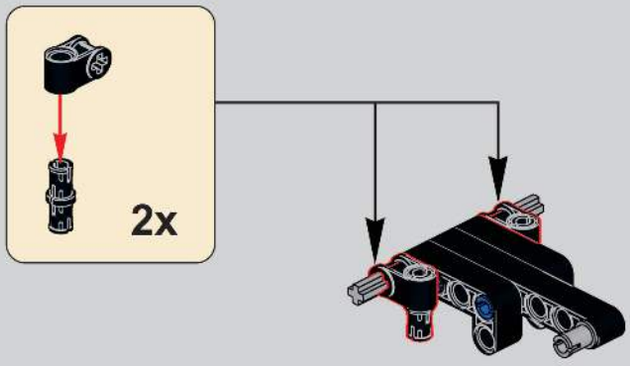

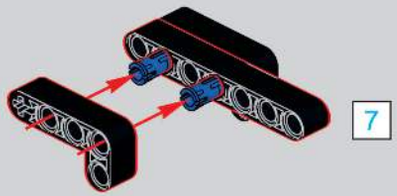

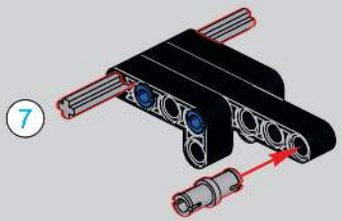

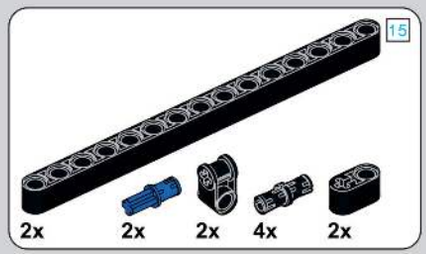

504

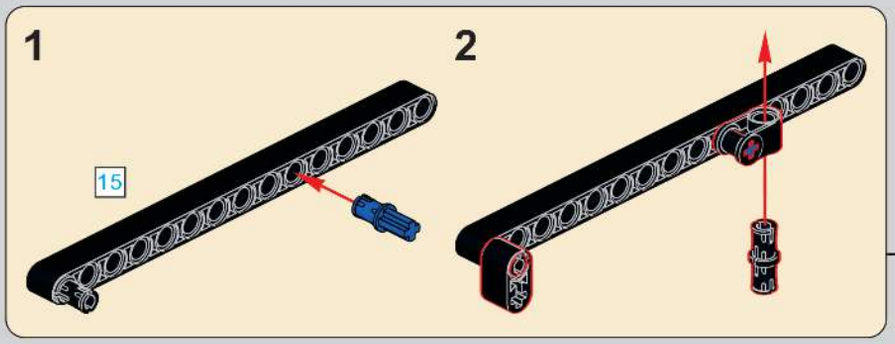

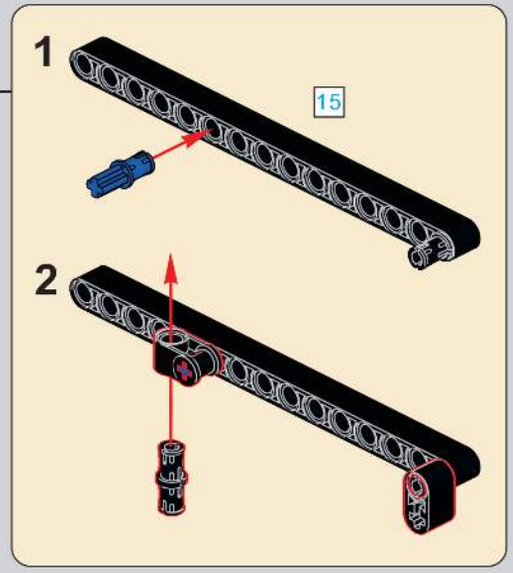

505

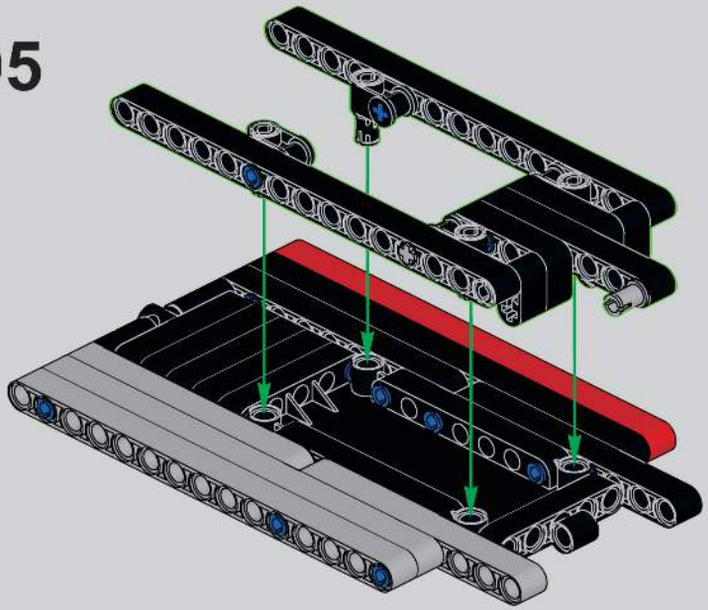

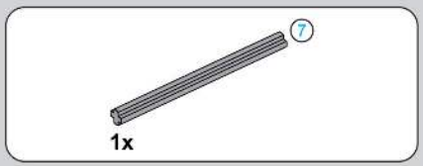

506

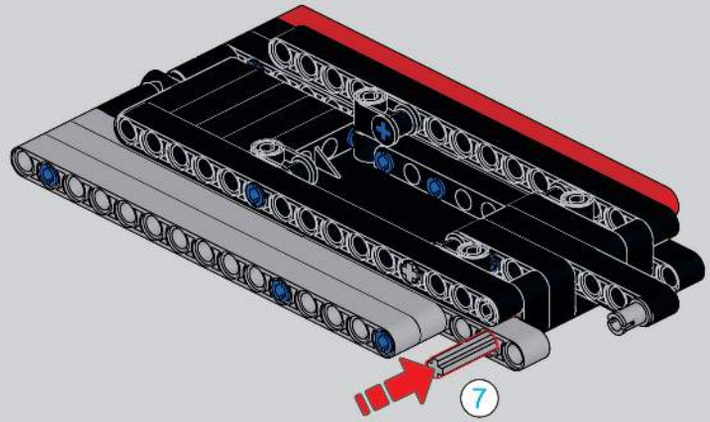

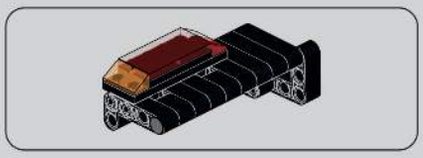

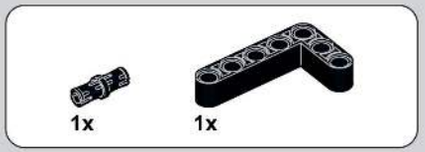

507

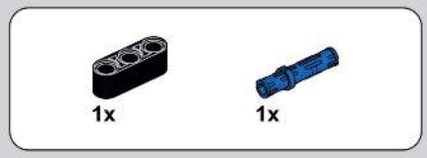

508

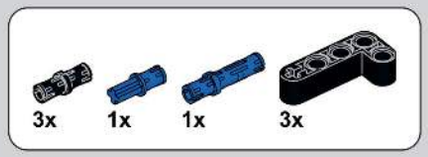

509

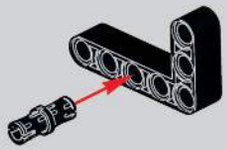

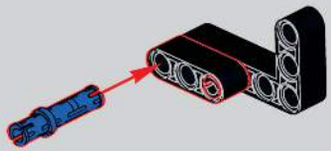

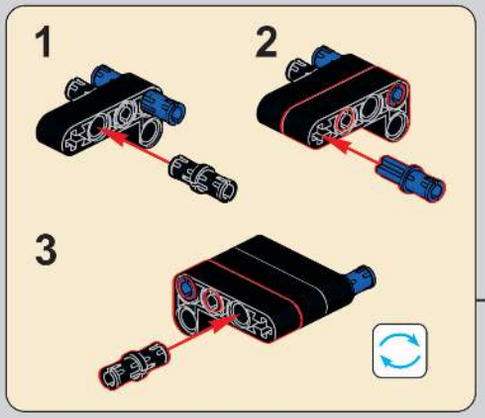

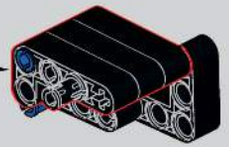

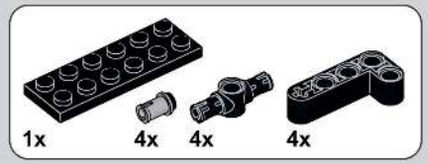

510

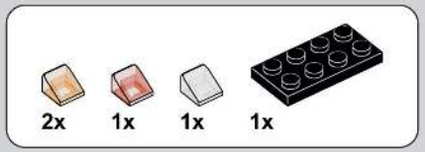

511

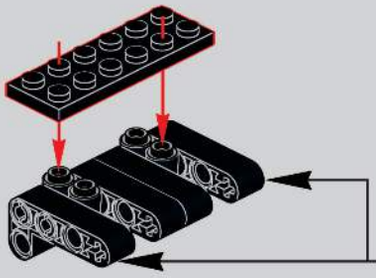

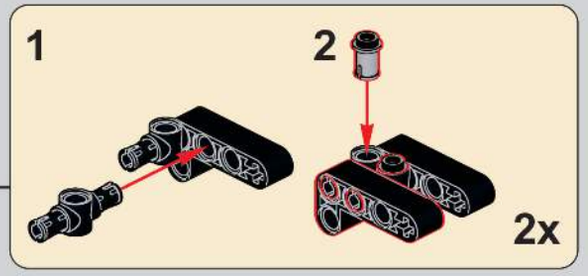

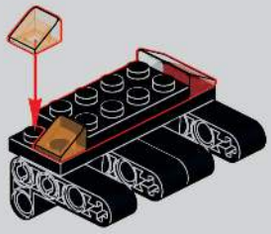

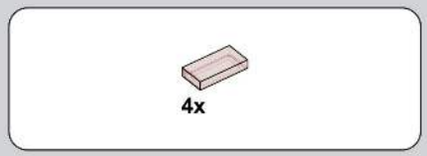

512

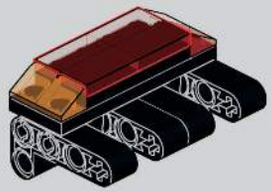

513

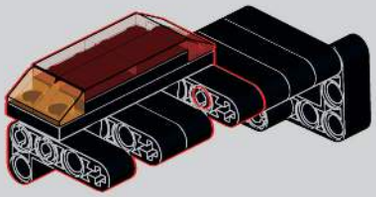

514

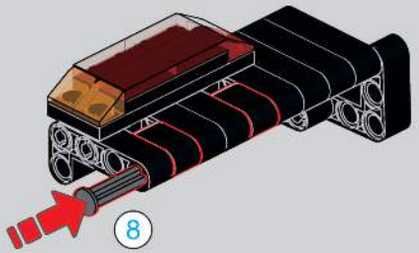

515

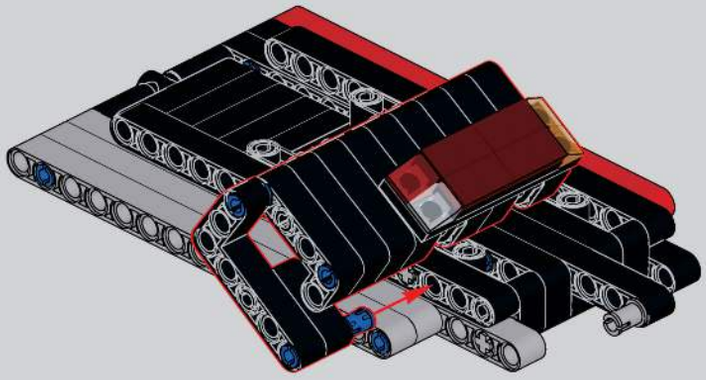

516

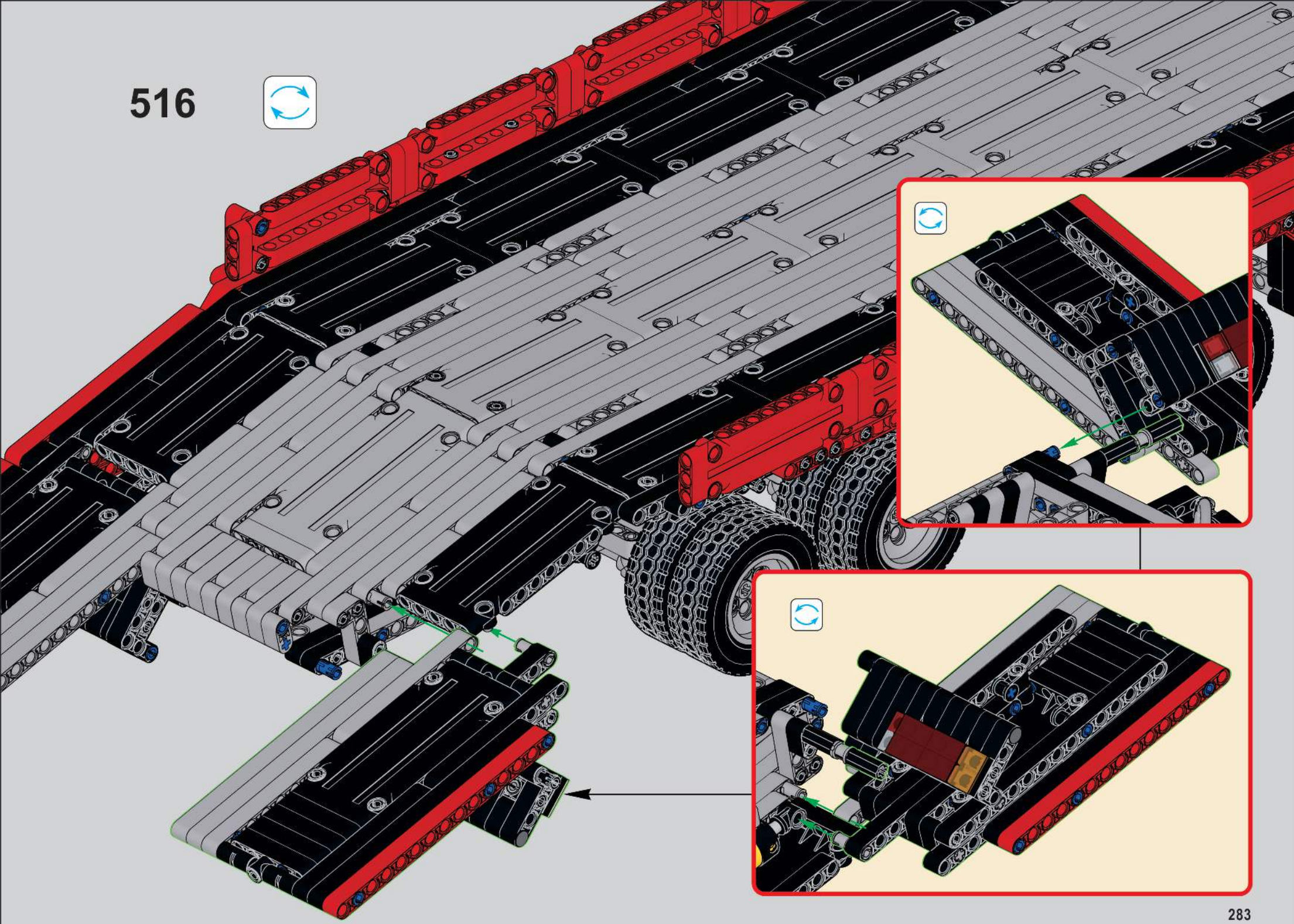

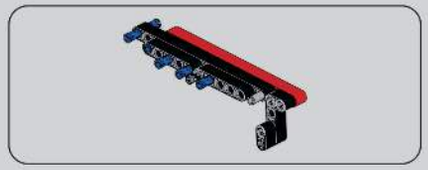

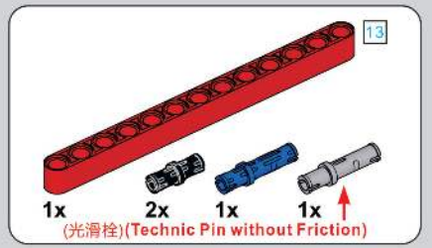

517

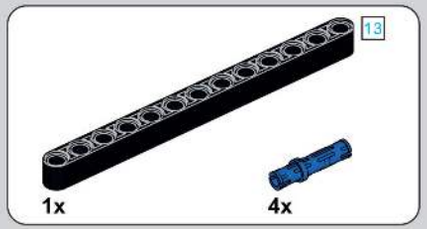

518

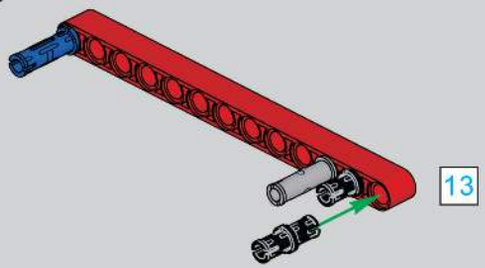

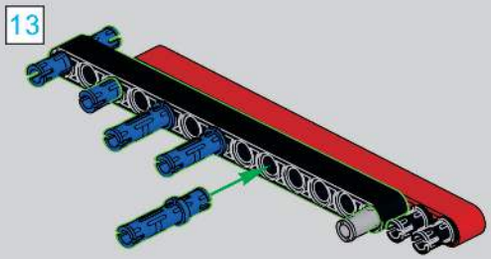

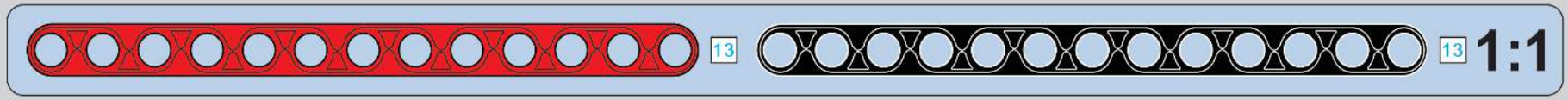

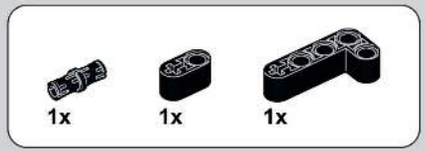

519

520

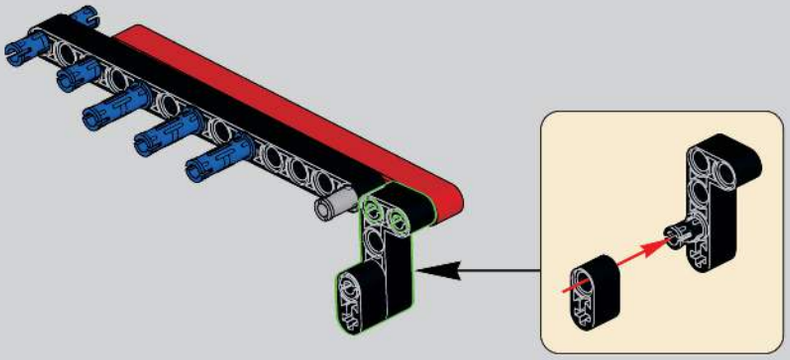

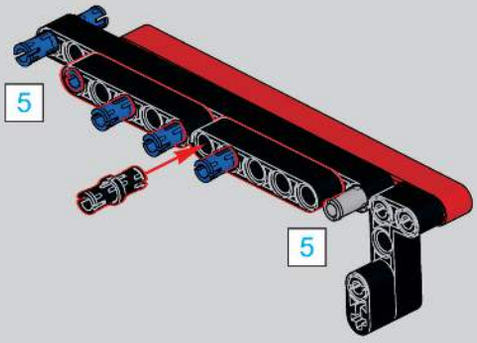

521

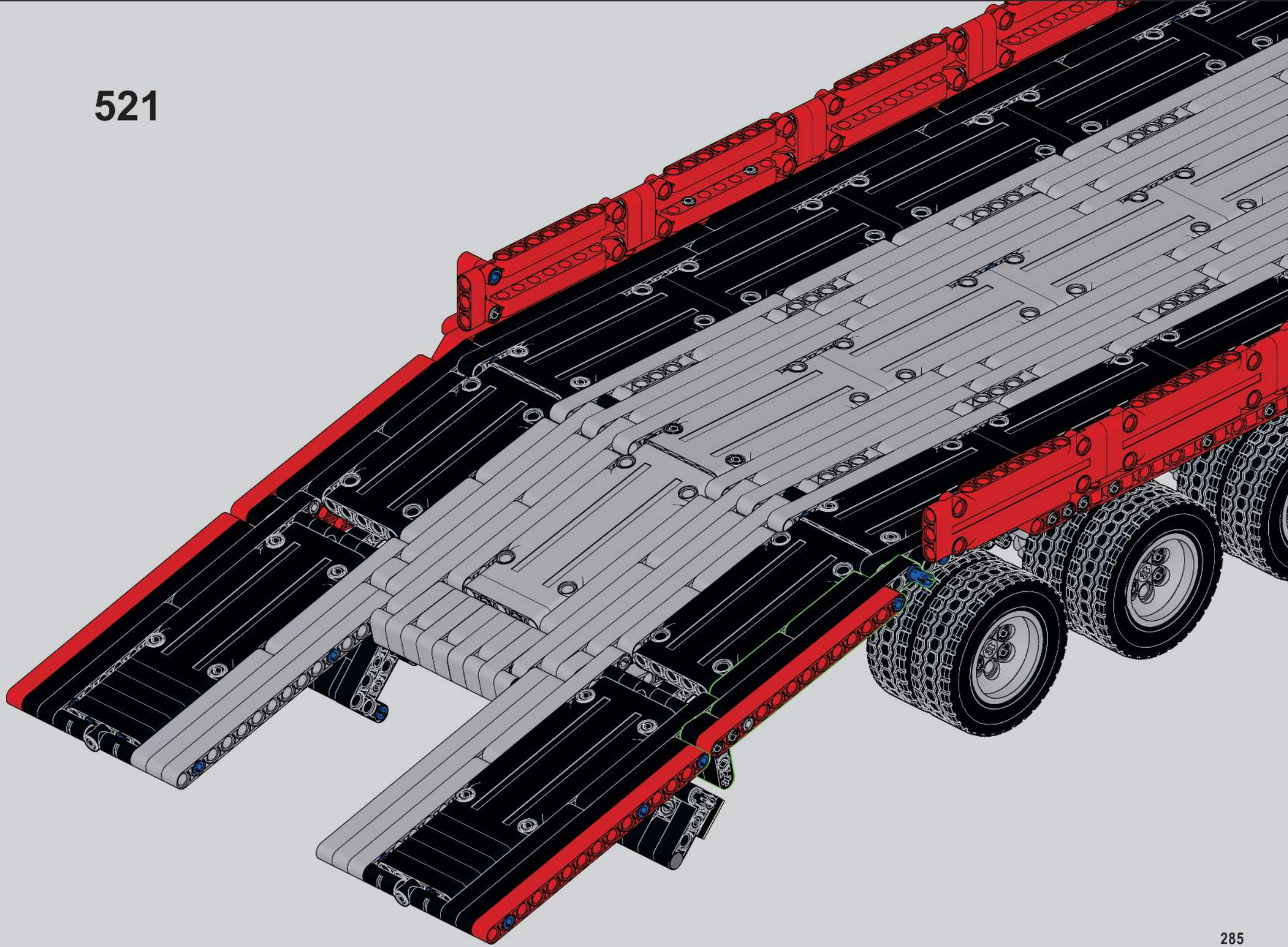

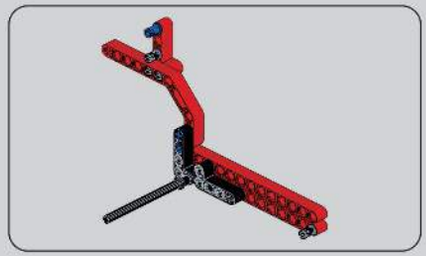

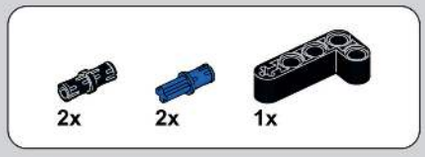

522

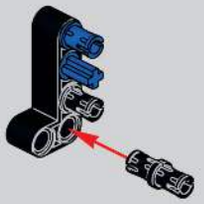

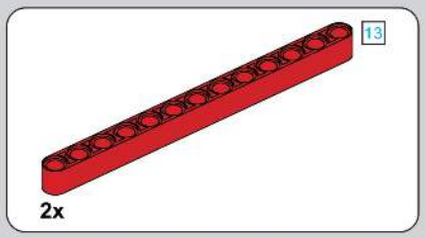

523

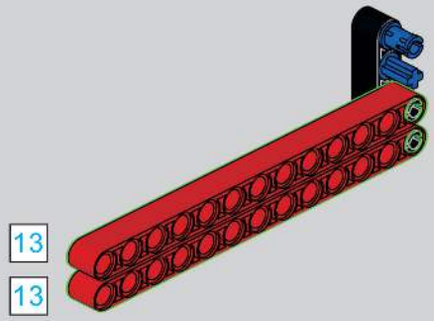

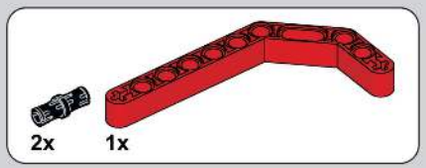

524

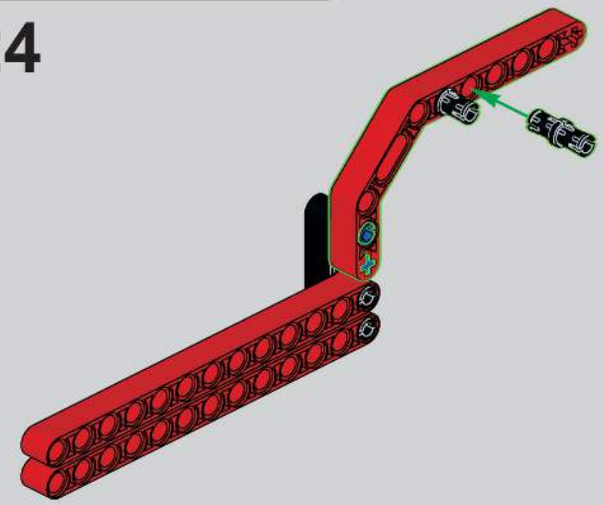

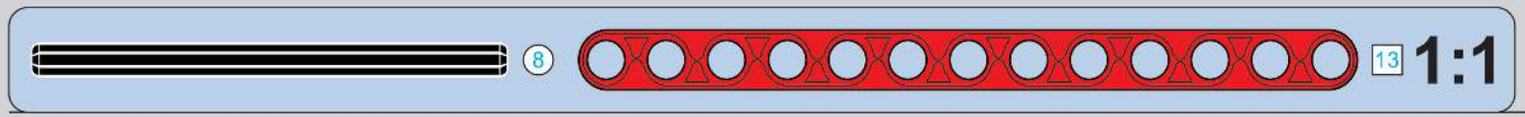

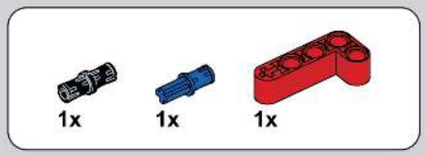

525

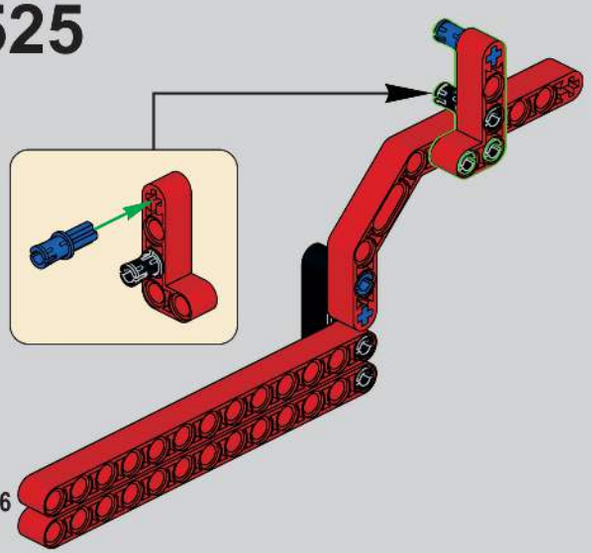

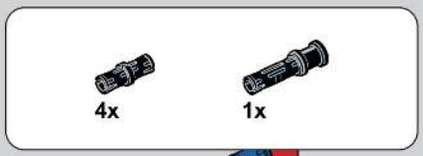

526

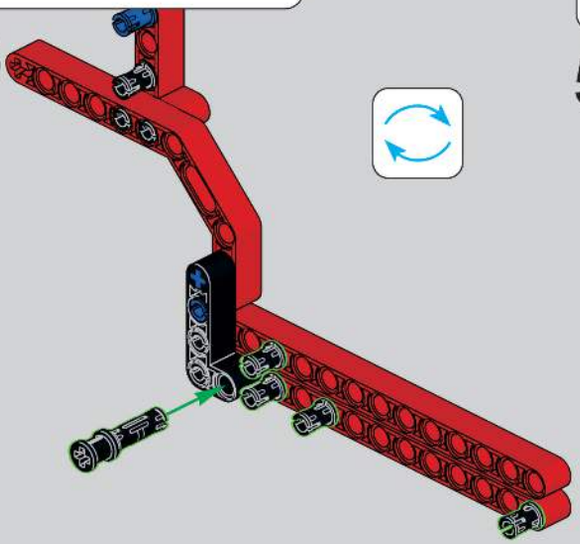

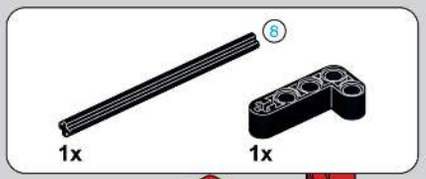

527

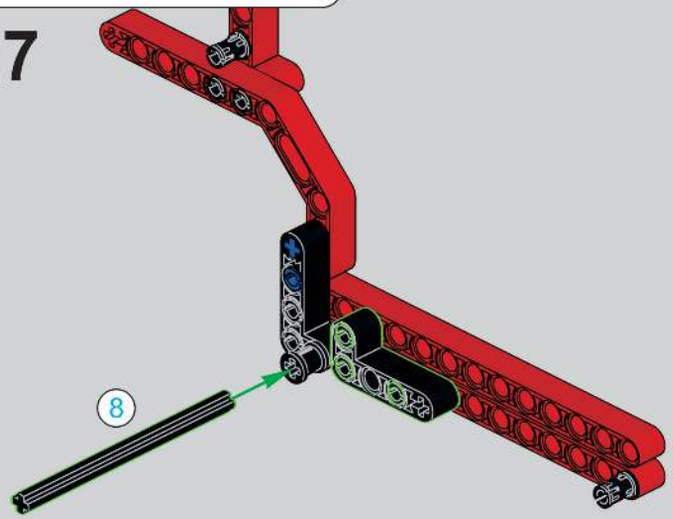

528

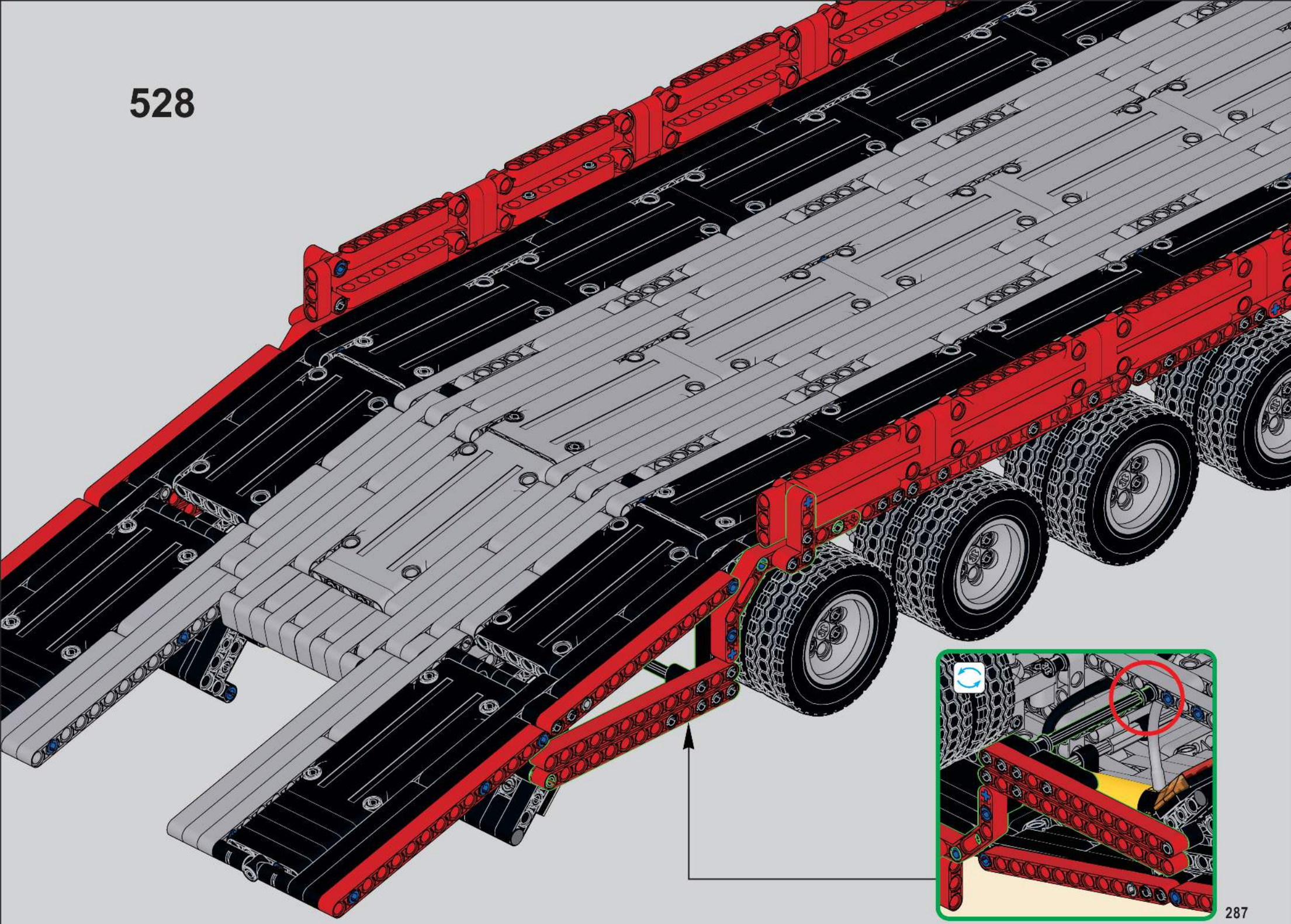

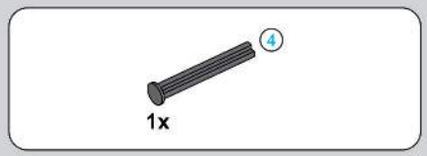

529

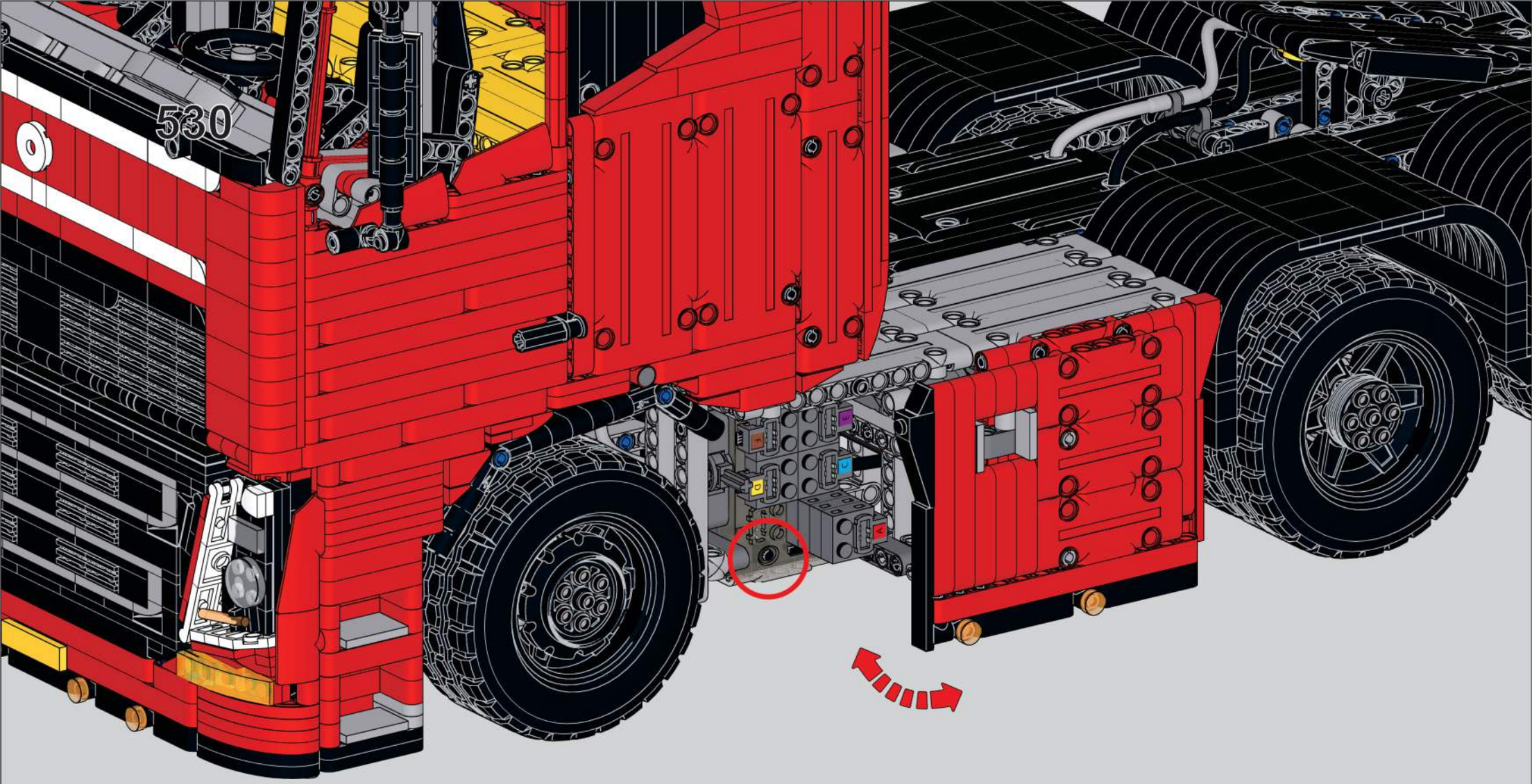

打开19015牵引车的模块，并打开遥控器连接

Activate the module on the 19015 tractor unit and establish a connection with the remote control.

请扫描此二维码，获取并仔细查看6.0模块的操作说明书。

Please scan this QR code to obtain and carefully review the operation manual for the 6.0 module.

531

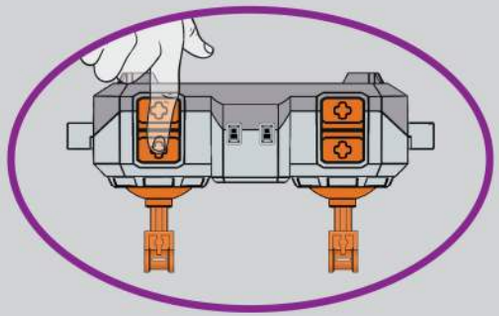

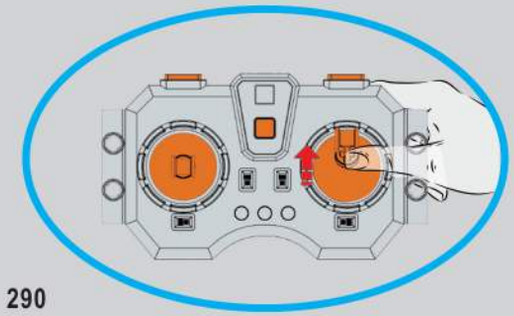

先长按遥控器左前端按键(E键)进行打气,
再将右摇杆↑移动,控制牵引车鞍座解锁

Press and hold the button on the front left side of the remote control (E button) to inflate the system, then move the right joystick up to unlock the tractor unit's saddle.

532

拖板放上鞍座

Place the trailer on the saddle.

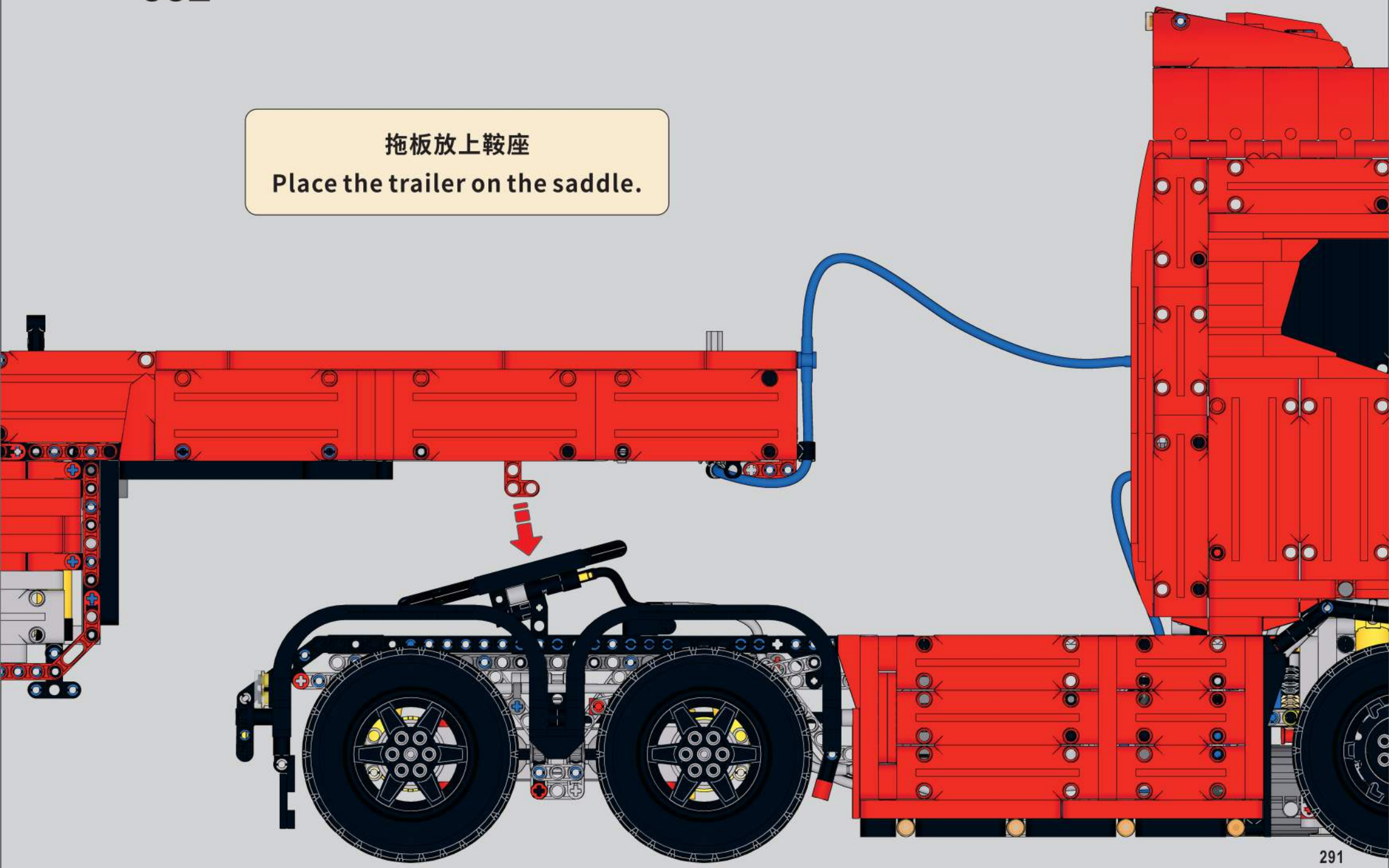

533

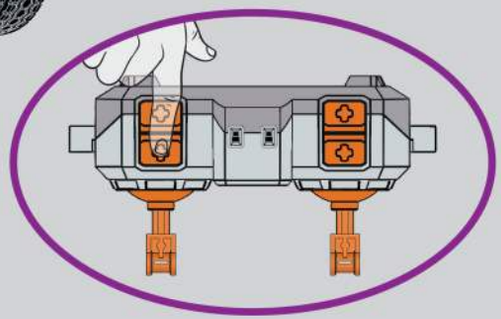

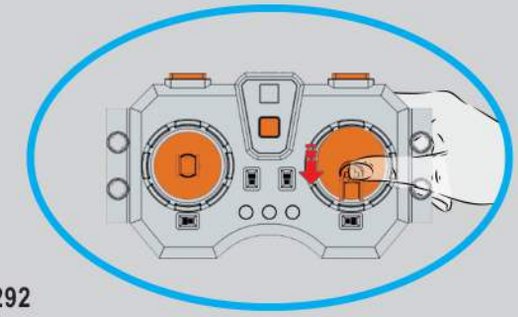

先长按遥控器左前端按键(E键)进行打气,
再将右摇杆↓移动,控制牵引车鞍座锁定

Press and hold the button on the front left side of the remote control (E button) to inflate the system, then move the right joystick down to lock the tractor unit's saddle.

534

连接气管，往左拨动气阀

Connect the air hose and turn the valve to the left.

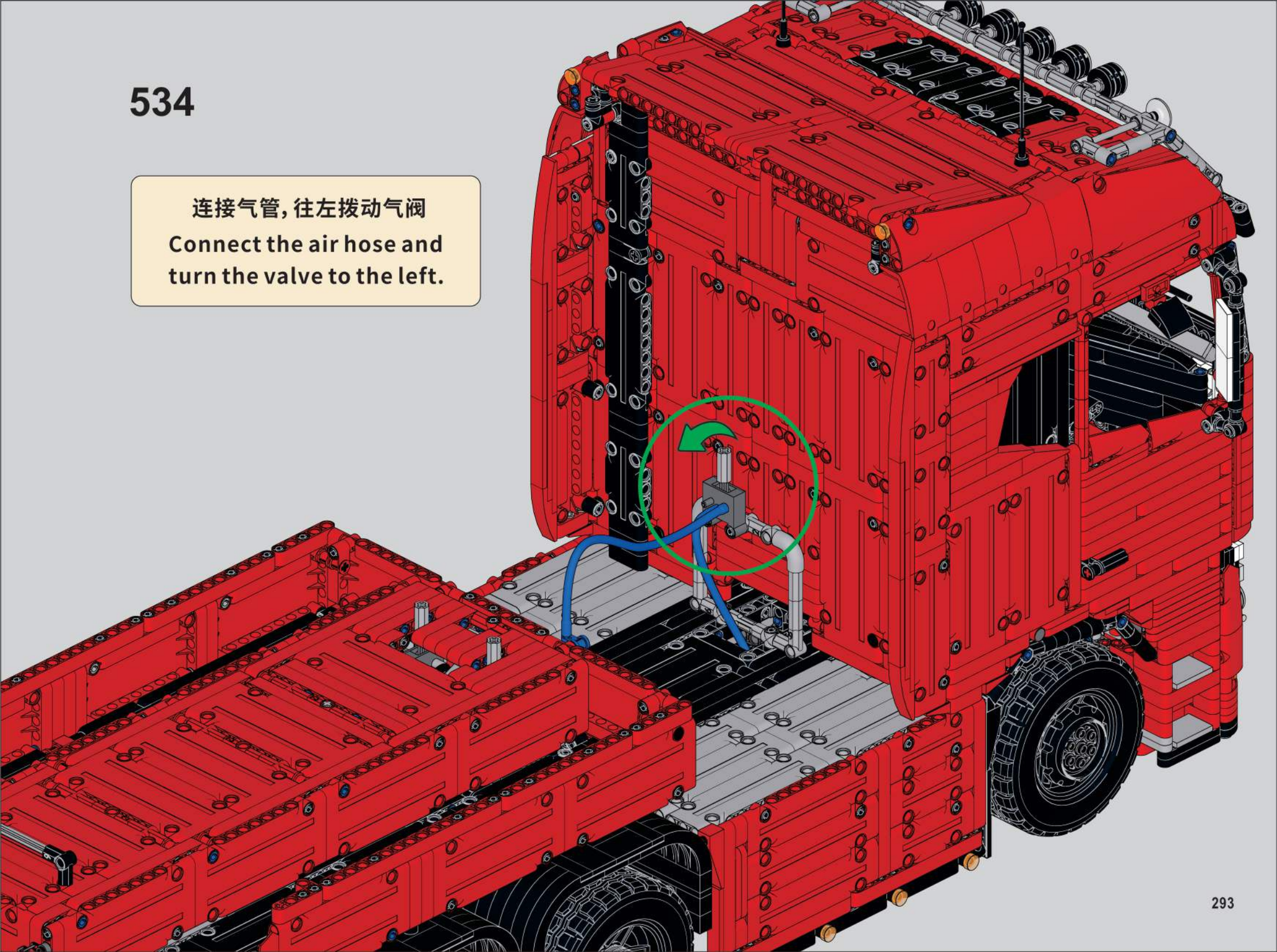

535

打开19015T拖板的模块，并打开遥控器连接

Turn on the module for the 19015T trailer and connect it to the remote control.

请扫描此二维码，获取并仔细查看4.0模块的操作说明书。
Please scan this QR code to obtain and carefully review the operation manual for the 4.0 module.

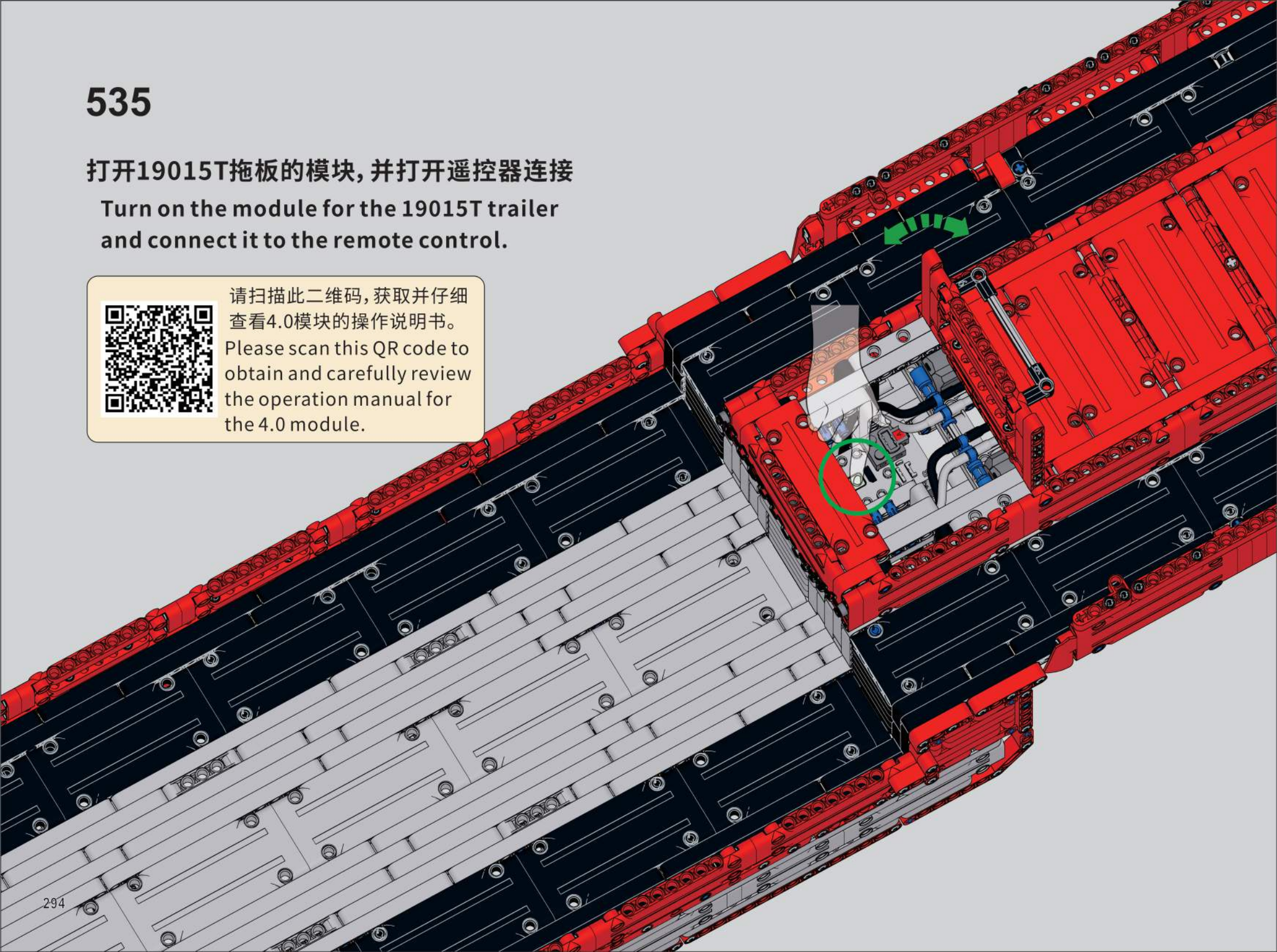

536

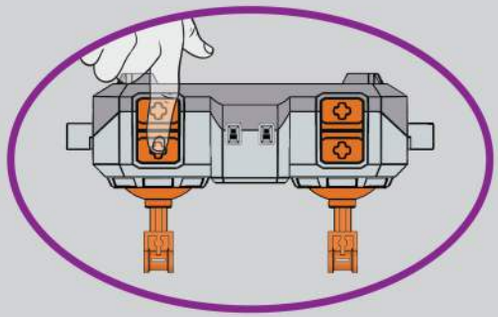

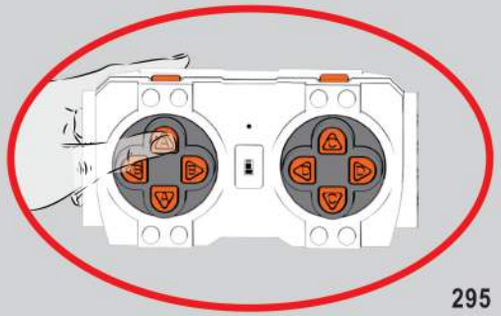

先长按6.0遥控器左前端按键(E键)进行打气，
然后按4.0遥控器A键上下控制支腿上升或下降

Press and hold the button on the front left side of the 6.0 remote control (E button) to inflate the system, then press the A button on the 4.0 remote control up or down to raise or lower the support legs.

537

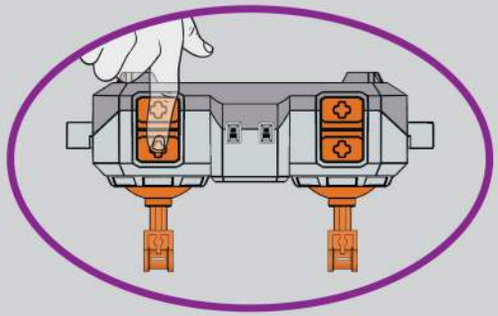

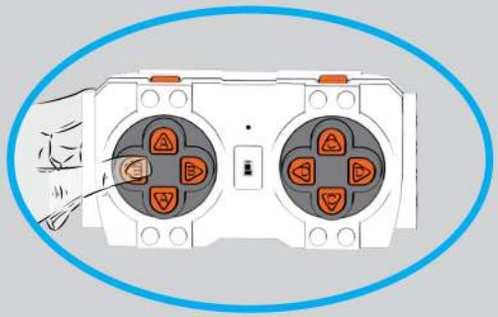

先长按6.0遥控器左前端按键(E键)进行打气，
然后按4.0遥控器B键左右控制尾板抬起或放下

Press and hold the button on the front left side of the 6.0 remote control (E button) to inflate the system, then press the B button on the 4.0 remote control left or right to raise or lower the tailboard.

538

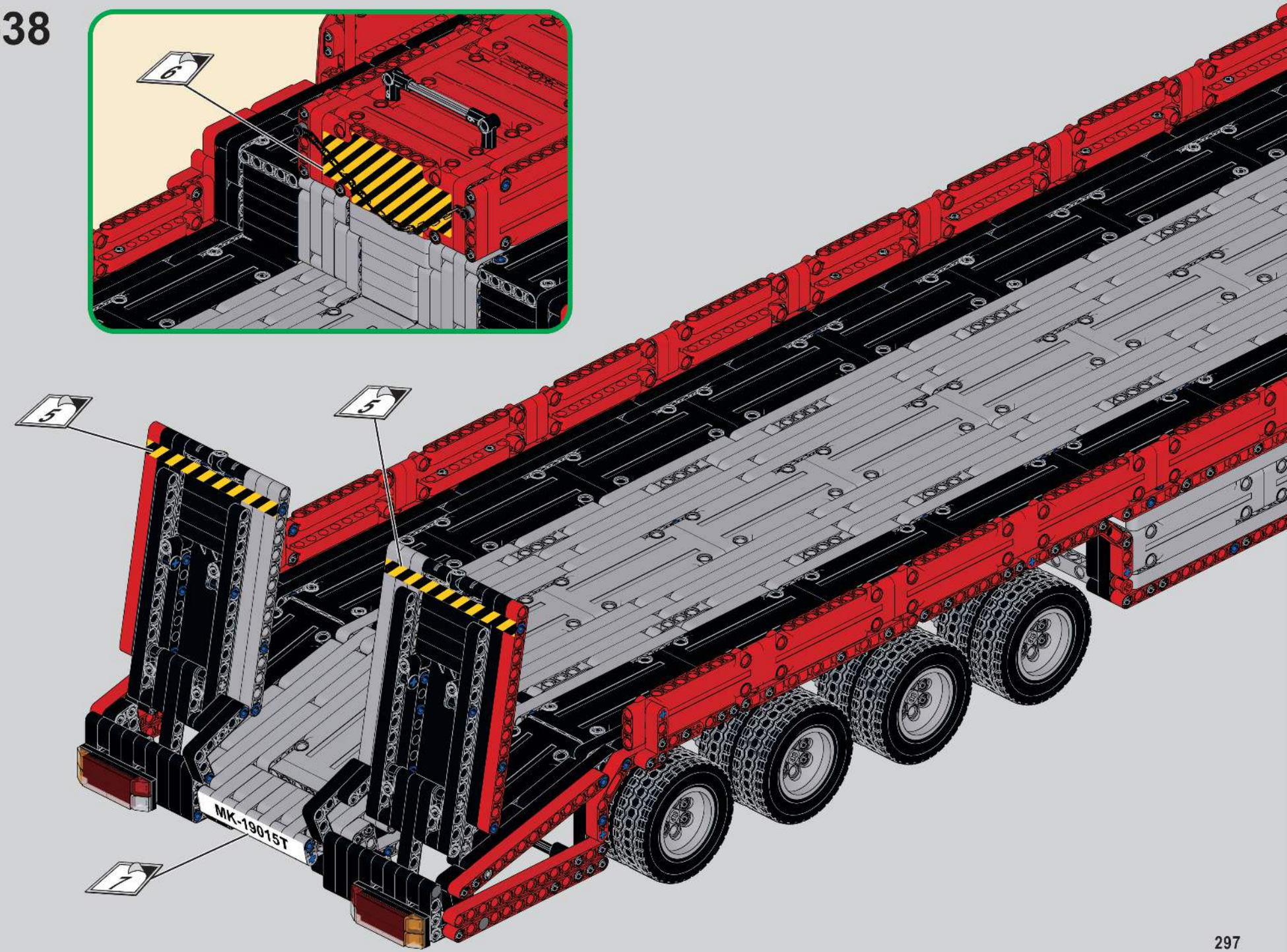

MOULD KING®

宇 星 模 王